ASTON MARTIN

V8 Vantage

Workshop Manual

Issue 6

Workshop Manual

ASTON MARTIN

Aston Martin Lagonda Limited

Banbury Road, Gaydon, WARWICK, Warwickshire,
England, CV35 0DB

Telephone: (01926) 644700 Fax: (01926) 644733

Aston Martin are constantly seeking to improve the specification, design and production of our vehicles and alterations take place accordingly. While every effort has been made to ensure the accuracy of this Manual, it should not be regarded as an infallible guide to current specifications of any particular vehicle.

All rights reserved. No part of this publication may be reproduced, stored in a retrieval system or transmitted, in any form, electronic, mechanical, photocopying, recording or other means without prior written permission from Aston Martin Lagonda Limited.

The manufacturer reserves the right to vary specifications without notice in accordance with its policy of continual product improvement.

Produced by the Technical Publications Department

Aston Martin Lagonda Limited

Issue 6 - March2010

V8 Vantage Workshop Manual

Contents

Introduction

Welcome 0-0-6
Safety Precautions 0-0-7
Lifting and Jacking 0-0-9
Vehicle Recovery 0-0-10
Vehicle Identification Number 0-0-11

Body System (01.00)

Body Structure (01.01) 1-1-4
Front End System (01.02) 1-2-1
Body Closures (01.03) 1-3-1
Interior Trim (01.05) 1-4-1
Exterior Trim (01.08) 1-8-1
Mirrors (01.09) 1-9-1
Seating (01.10) 1-10-1
Glass, Frame and Mechanism (01.11) 1-11-1
Instrument Panel (IP) (01.12) 1-12-1
Handles and Lock Mechanisms (01.14) 1-14-1
Wipers and Washer System (01.16) 1-16-1
Convertible Roof and Roof Opening Subsystem (01.17) 1-17-1
Bumpers (01.19) 1-19-1
Restraining Devices (01.20) 1-20-1

Frame and Mounting (02.00)

Subframes (02.03) 2-1-2

Engine System (03.00)

Engine Assembly 3-0-3
Engine Structure (03.01) 3-1-1
Lubrication System (03.02) 3-2-1
Cooling System (03.03) 3-3-1
Fuel Charging System (03.04) 3-4-1
Accessory Drive System (03.05) 3-5-1
Engine Cranking System (03.06) 3-6-1
Valve Train (03.09) 3-9-1
Engine Sealing (03.10) 3-10-1
Power Conversion (03.11) 3-11-1
Evaporative Emissions (03.13) 3-11-1
Engine Management System (03.14) 3-14-1
Throttle Control (03.16) 3-16-1
Foot Operated Control (03.18) 3-18-1

Suspension (04.00)

Road Wheel Alignment (04.00) 4-0-2
Front Suspension (04.01) 4-1-1
Rear Suspension (04.02) 4-2-1
Shock Absorber System (04.03) 4-3-1
Road Wheels and Tyres (04.04) 4-4-1

Driveline (05.00)

Driveshaft (05.01) 5-1-2
Halfshafts (05.05) 5-2-1

Brake System (06.00)

Front Disc Brake (06.03) 6-3-2
Rear Disc Brakes (06.04) 6-4-1
Hand Brake (06.05) 6-5-1
Brake Actuation System (06.06) 6-6-1
Power Brake System (06.07) 6-7-1
Anti-lock Braking System (06.09) 6-9-1

Transmission (07.00)

Transmission Cooling (07.02) 7-0-2
Manual Transmission (07.03) 7-3-1
Automatic Control System (07.05) 7-5-1
Manual Control System (07.06) 7-6-1
Automatic Shifting Subsytem (07.11) 7-11-1

Clutch (08.00)

Clutch Controls (08.02) 8-1-2

Exhaust (09.00)

Exhaust Overview 9-1-2
Silencer Assembly (09.01) 9-1-3
Pipes and Supports (09.03) 9-2-1
Exhaust Protection (09.04) 9-3-1

Fuel (10.00)

Fuel Tank and Lines (10.01) 10-1-2

Steering (11.00)

Steering Gear (11.01) 11-1-2
Power Steering (11.02) 11-2-1
Steering Column (11.04) 11-4-1
Steering Column Switches (11.05) 11-5-1
Steering Wheel (11.06) 11-6-1

Climate Control (12.00)

Body Ventilation system (12.01) 12-1-2
Heater System (12.02) 12-2-1
Air Conditioning (A/C) System (12.03) 12-3-1

Information, Gauge and Warning (13.00)

Instrument Cluster (13.01) 13-1-2

Power Supply (14.00)

Battery System (14.01) 14-1-2
Alternator and Regulator System (14.02) 14-2-1

Vehicle Entertainment (15.00)

Audio System (15.01) 15-1-2
Antenna (15.02) 15-2-1

Vacuum Distribution (16.00)

Body Vacuum System (16.01) 16-1-2

Lighting (17.00)

Front Lights (17.01) 17-1-2
Interior Lighting (17.02) 17-2-1
Rear Lights (17.03) 17-3-1
Lighting Mechanisms (17.04) 17-4-1

Electric Distribution/Electronic Control (18.00)

Wiring and Circuit Protection (18.01) 18-1-2
Vehicle Control System (18.08) 18-2-1

Electronic Features (19.00)

Active Anti-Theft System (19.01)..... 19-1-2
Electronic Features Modules (19.08).....19-2-1

Appendix & Glossary (20.00)

Diagnostic Ports..... 20-1-2
Fluids/Capacities..... 20-1-3
Special Tools - Pictorial Index..... 20-1-4
Maintenance Schedules..... 20-1-12
Torque Figures 20-1-15

Introduction

Contents **0-3**
Welcome **0-0-6**
Chapters **0-6**
Chapter Navigation 0-6
Page Numbering **0-6**
Systems Classification Coding **0-6**
Special Tools **0-0-6**
Location References **0-6**
Warnings, Cautions and Notes **0-0-6**
Repairs and Replacements **0-6**
Safety Precautions **0-0-7**
Battery Disconnection **0-7**
Air Conditioning (A/C) System **0-7**
Chemical Handling and Storage **0-7**
Electrical Equipment **0-0-7**
Exhaust Fumes **0-7**
Fire Precautions **0-7**
Tools and Equipment **0-0-8**
Used Engine Oil **0-8**
Health protection precautions **0-8**
Environmental Protection **0-8**
Lifting and Jacking **0-0-9**
Safety **0-9**
Jacking Points **0-0-9**
Lifting **0-0-9**
Workshop Hoist 0-9
Workshop Jack 0-9
Stands 0-9
Vehicle Recovery **0-0-10**
General **0-10**
Transporting **0-10**
Suspended Towing 0-10
Adhere to Towing Regulations 0-10
Towing by Another Vehicle 0-10
Vehicle Identification Number **0-0-11**
VIN Number Location 0-11
Engine Number **0-12**
Gearbox Number **0-12**

Welcome

This Workshop Manual is part of a suite of technical manuals provided for V8 Vantage. Other technical manuals include:

- Parts manual
- OBDII Diagnostic manual
- Man hour schedules

Chapters

Each chapter in this workshop manual is associated with a 4 digit number, i.e. Transmission (07.00). Each chapter is then further broken into sections, i.e. Automatic Transmission (07.01).

Chapter Navigation

Example 1:

Older workshop manuals would have Steering and Suspension together in one chapter. The structure now used places Steering and Suspension into their own chapters.

When required references are made out to other chapters.

Page Numbering

The page numbering system used within this workshop manual is as follows:

	3-	2-	5
System, i.e. Engine system			
Subsystem, i.e. Engine lubrication system			
Page Number, i.e. Number within subsystem			

Systems Classification Coding

Alongside the 'System' and 'Subsystem' section titles appear codes. For example Exhaust '**09.00**' or Power Steering '**11.02**'. These codes relate to a Corporate Product Systems Classification (CPSC) and are designed to segregate the parts for engineering release and organise a variety of engineering data.

Special Tools

Where special service tools are required to perform an operation, the tool number is recorded at the point of use within the procedure. Where the operation of a special service tool is complicated or not obvious, refer to Appendix and Glossary for detailed operation procedures. A pictorial list of special service tools available for this vehicle can also be found in Appendix and Glossary.

Location References

References to left, right, front or rear of the vehicle or of a component are referenced from sitting in the drivers seat facing forward. Any such references to assemblies removed from the vehicle are to the normal orientation of the assembly when installed in the vehicle.

The following Warnings, Cautions and Notes are used within this Owner's Guide to call your attention to specific types of information.

Warnings, Cautions and Notes

Warnings

WARNING
IDENTIFIES PROCEDURES WHICH MUST BE FOLLOWED PRECISELY TO HELP AVOID THE RISK OF PERSONAL INJURY.

Cautions

Caution
Provided to indicate procedures which must be followed precisely to reduce the possibility of damage to the vehicle.

Notes

Provided to indicate procedures which will help to avoid difficulties in the operation of the vehicle.

Repairs and Replacements

Where replacement parts are required, it is essential that only genuine Aston Martin parts are used. Your attention is drawn to the following points concerning repairs and the fitting of genuine Aston Martin parts and accessories:

- Safety features embodied in the vehicle may be impaired if other than genuine Aston Martin parts are installed. In certain territories, legislation prohibits the fitting of parts which are not produced to the manufacturers specification
- Adhere to torque wrench settings given in this manual
- Locking devices, where specified, must be installed. If the efficiency of a locking device is impaired during removal, it must be renewed
- The vehicle warranty may be invalidated by the installation of other than genuine Aston Martin parts

Safety Precautions

All service workshops are a source of potential danger and repair work should only be performed by technically trained staff following procedures detailed in this manual. A safety conscious approach to the performance of all service procedures must be observed at all times. Statutory requirements governing all aspects of health and safety at work including directives for the proper use of materials and equipment must be implemented.

The following contains a list of particular safety precautions which should be observed; it is not intended to be exhaustive.

Battery Disconnection

When a service manual procedure requires the vehicle battery to be disconnected - always physically disconnect the vehicle battery earth (Negative) lead.

Do not use the 'Battery Disconnect Switch'.

After reconnecting the vehicle battery the following items will have to be reset or re-learnt:

- Radio pre-sets
- Windows
- DTCs will be lost

Air Conditioning (A/C) System

Do not break into the A/C refrigeration system until the refrigerant has been evacuated using the procedure detailed in this manual. Do not disconnect any A/C refrigerant system pipes unless trained and instructed to do so. The refrigerant used can cause blindness if allowed to contact your eyes.

Chemical Handling and Storage

Chemicals used in the servicing of motor vehicles include acids, adhesives, antifreeze, brake fluids, coolants, grease, oil, paint, resin and solvents. Exposure to certain chemicals through direct contact or inhalation can be fatal.

Potential hazards may also be present through the incorrect use, storage and handling of chemicals causing a fire risk. The following precautions should be observed.

- Strictly adhere to handling and safety information found on containers and labels.
- Do not store chemicals in unlabelled or incorrectly labelled containers.
- Containers used for storing chemicals should not be left open; there is a risk of spilling, or evaporation of fumes which may be inflammable or toxic.
- Do not mix chemicals unless instructed to do so following manufacturers guidelines.
- Do not inhale chemical materials to determine identity, they may be toxic.
- Do not use petrol, kerosene, diesel fuel, gas oil, thinners or solvents for washing skin.
- Containers whose capacity is over 25 litres (5 gallons) require a bund wall in order to contain spillages.
- Chemicals based on solvents such as paint should not be sprayed in a confined space; work areas used for such operations should be well ventilated and fume extraction equipment should be utilised.
- Ensure that adequate ventilation is provided when volatile de-greasing agents are being used.

WARNING
DO NOT SMOKE IN THE VICINITY OF VOLATILE DE-GREASING AGENTS.

WARNING
FUME EXTRACTION EQUIPMENT MUST BE IN OPERATION WHEN SOLVENTS ARE USED E.G. TRICHLOROETHANE, WHITE SPIRIT, SBP3, METHYLENE CHLORIDE, PERCHLORETHYLENE.

- Avoid splashing the skin, eyes and clothing.
- Clean chemicals from the skin and clothing as soon as possible after soiling.
- Wear protective clothing such as goggles, non porous gloves and apron when handling battery acid and other corrosive and toxic substances.

Electrical Equipment

- Ensure that electrical equipment is in safe working order before use.
- Inspect power leads of all mains electrical equipment for damage and security, and check that it is properly earthed.
- Ensure that electrical equipment is protected by a fuse of the correct current rating.
- Disconnect the battery before commencing repair operations to the electrical system, fuel system and engine or when working beneath the vehicle.

Exhaust Fumes

Engines should not be run in confined spaces as exhaust fumes contain harmful and toxic substances including carbon monoxide which can prove fatal if inhaled. Engines must only be run where there is fume extraction equipment in operation or where there is adequate ventilation.

Fire Precautions

- Ensure that a suitable form of fire extinguisher is conveniently located near the work area.
- Keep oils, solvents and combustible materials away from naked flames and other sources of ignition.
- Ensure that NO SMOKING signs are posted around areas where combustible materials and vapour may be present and ensure that the warnings are strictly observed.
- Ensure that dry sand is available to soak up any spillage of fuel or other flammable solutions.
- Fume extraction equipment must be available and in full working order to remove combustible and toxic vapours.
- All personnel should be aware of the fire drill procedures and precautions.

Tools and Equipment

- Do not leave tools, equipment, spilt oil, etc. around or on the work area.
- Ensure that tools and equipment used are in good condition; do not use damaged or defective tools or equipment.
- Do not apply heat in an attempt to free stiff nuts or fittings; as well as causing damage to protective coatings, the stray heat may damage electronic equipment, harnesses and brake lines.
- Use the recommended service tool where instructed to do so.

Used Engine Oil

Prolonged and repeated contact with mineral oil will result in the removal of natural fats from the skin, leading to dryness, irritation and dermatitis. In addition, used engine oil contains potentially harmful contaminants which may cause skin cancer. Adequate means of skin protection and washing facilities should be provided.

Health protection precautions

- Avoid prolonged and repeated contact with oils, particularly used engine oil.
- Wear protective clothing, including impervious gloves where practicable.
- Do not put oily rags in pockets.
- Avoid contaminating clothes with oil.
- Overalls must be cleaned regularly. Discard un-washable clothes and oil impregnated footwear.
- First aid treatment should be obtained immediately for open cuts or wounds.
- Use barrier creams, apply before each work period to help the removal of oil from the skin.
- Wash with soap and water to ensure all oil is removed. Preparations containing lanolin replace the natural skin oils which have been removed.
- Do not use petrol, kerosene, diesel fuel, gas oil, thinners or solvents for washing skin.
- If skin disorders develop, obtain medical advice.
- Where practicable, degrease components prior to handling.
- Where there is a risk of eye contact, eye protection should be worn. In addition, an eye wash facility should be provided.

Environmental Protection

It is illegal to pour used oil on the ground, down sewers or drains, or into water courses. The burning of used engine oil in small space heaters or boilers is not recommended unless emission control equipment is installed; in case of doubt, contact the Local Authority for advice on disposal facilities.

Lifting and Jacking

Safety

- ***Recommended procedures for lifting, jacking and towing must be strictly observed to ensure personal safety.***
- ***Always use a vehicle hoist, ramp or pit for working beneath the vehicle in preference to jacking.***
- ***Never rely on a jack to support a car independently, use axle stands or blocks carefully placed at jacking points to provide rigid support.***
- ***When working beneath a vehicle, chock wheels as well as applying handbrake.***
- ***Ensure vehicle is standing on firm, level ground before jacking or lifting.***
- ***Check lifting equipment has adequate capacity for load being lifted and is in full working order.***

Jacking Points

This vehicle jacking points are at positions shown.

May also be jacked on the front subframe front crossmember

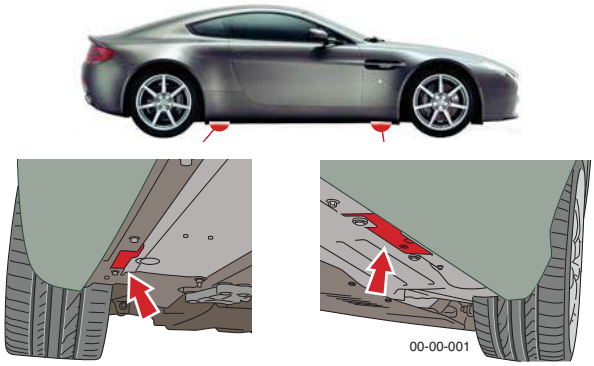

Always use a jack with a rubber contact pad. Avoid use of jacks with sharp contact pads which would damage floor pan Always chock the opposite road wheels as well as applying the handbrake when using a hydraulic jack.

To prevent body distortion, avoid single point or one side jacking with the tunnel shear panel removed.

Lifting

Workshop Hoist

Use of a workshop hoist is recommended for all operations where vehicles must be raised. Follow manufacturers instructions. If using an adjustable arm type, ensure lifting pads are correctly positioned at the four jacking points before lifting.

Workshop Jack

To avoid any danger of bodywork damage when using a hydraulic jack, the vehicle must only be lifted at the jacking points.

Stands

When carrying out work (other than a wheel change) which requires a wheel to be raised, a stand must be used, located at the jacking point, to provide a secure support for the vehicle.

Vehicle Recovery

General

Preferred method of vehicle recovery is by flat bed transporter.

The towing eye is primarily for emergency use when towing for short distances, e.g. removing vehicle if it is causing an obstruction or winching vehicle onto a flatbed transporter.

If moving this vehicle in such a situation, install the towing eye to the bracket in the lower grille aperture.

Caution
Take care to protect the paint work when installing the towing eye. Ensure the towing eye is tight.

Transporting

If vehicle is to be transported on a trailer or flat bed transporter the handbrake must be applied and the road wheels must be chocked.

Suspended Towing

Caution
Do not tow with 'sling' type equipment as this could result in damage to the bodywork.

Take care when using 'spectacle frame' type towing equipment that the towing device is well clear of front or rear apron. Body damage may occur if vehicle passes over uneven road surfaces.

Front Suspended Tow

1. Remove the ignition key from the ignition.
2. Raise the vehicle using a 'spectacle frame' type lifting device with a cradle positioned under each front wheel as indicated below.

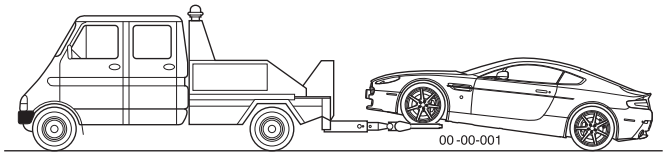

Rear Suspended Tow

1. Set the steering in the 'straight ahead' position.
   Remove the ignition key from the ignition. Ensure the steering is locked in the straight ahead position.
2. Raise the vehicle using a 'spectacle frame' style lifting device where a cradle is positioned under each rear wheel as indicated below.

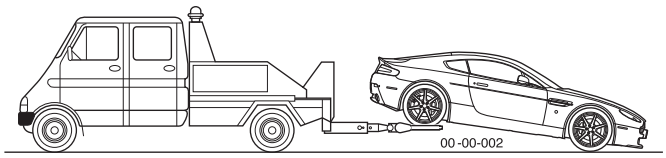

Adhere to Towing Regulations

In certain countries the registration number of towing vehicle and an 'ON TOW' sign or warning triangle must be displayed in a prominent position at the rear of vehicle being towed.

WARNING
WHEN THE ENGINE IS NOT RUNNING, THE STEERING WILL NO LONGER BE POWER-ASSISTED AND THE BRAKE BOOSTER WILL BECOME INEFFECTIVE AFTER A FEW APPLICATIONS OF THE BRAKES. BE PREPARED FOR RELATIVELY HEAVY STEERING AND THE NEED FOR GREATLY INCREASED BRAKE PEDAL PRESSURE.

Towing by Another Vehicle

This vehicle may be towed short distances by another vehicle provided that a speed of 48 km/h (30 mph) is not exceeded. Ensure the towed vehicle gear selection is in 'Neutral' with ignition key turned to position 'II' to release steering lock and to render horn, indicators and brake lights operational.

Vehicle Identification Number

The Vehicle Identification Number (VIN) is a 17 character number which uniquely identifies the vehicle and gives fundamental data on the build site, date and initial configuration of the vehicle.

S	C	F	B	C	3	A	4	5	G	C	0	0	0	0	1

- Code for AML
- Restraint System
- Transmission and Steering
- Body Type
- Engine Type
- Calculated Check Digit
- Model Year
- Manufacturing Plant
- Series Identifier
- Sequential Chassis Number

VIN Number Location

The VIN number is shown on two labels in the vehicle:

1 Under the lower edge of the windscreen.

2 Front of the engine bay.

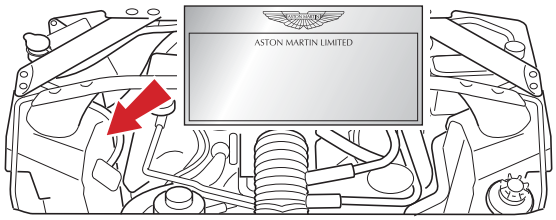

- The VIN number is also stamped into the floorpan in the right-hand front footwell (under the carpet through the foam slot).

Engine Number

The engine number is stamped on the LH side of the engine as shown below.

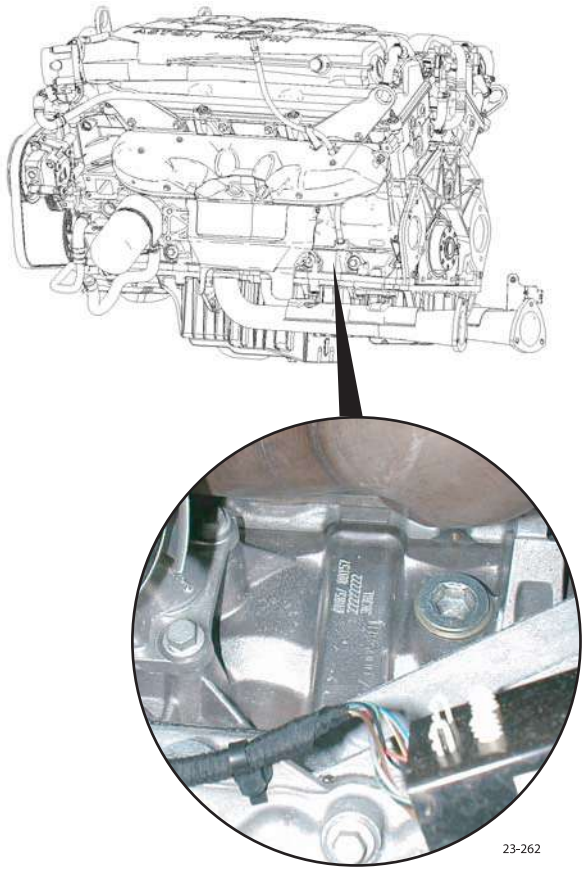

Gearbox Number

The gearbox number is stamped on the under side of the gearbox case.

Body System (01.00)

Contents

Body Structure (01.01) 1-1-4
Overview 1-4
Specifications 1-4
Maintenance 1-5
Right Side Front Crush Bar for the Body Reinforcement - Remove and Install 1-5
Left Side Front Crush Bar for the Body Reinforcement - Remove and Install 1-5
Front Crush Brace - Remove and Install 1-5
Front End (01.02) 1-2-1
Front Wings 2-1
Specifications 2-1
Maintenance 2-1
Radiator Closing Panel - Remove and Install 2-1
Centre Undertray - Remove and Install (Roadster Only) 2-1
Front Undertray-Remove and Install 2-2
Rear Undertray - Renew (Coupe only) 2-2
Rear Undertray - Renew (Roadster only) 2-2
Install 2-2
..... 2-2
Undertray, Vehicle Set - Renew 2-2
RH/LH Front Wheel Arch Liner - Renew 2-2
RH/LH Rear Wheel Arch Liner - Renew 2-3
RH Front Wing Panel Assembly - Renew 2-4
LH Front Wing Panel Assembly - Renew 2-6
Body Closures (01.03) 1-3-1
Specifications 3-1
Doors 3-1
Tailgate 3-1
Bonnet 3-2
Maintenance 3-2
LH/RH Door Assembly-Renew 3-2
RH/LH Door Assembly-Remove/Refit 3-6
Front Door Hinge (One Side) - Renew 3-6
Front Door Check Arm Assembly - Renew 3-7
Boot Lid Assembly - Renew (Roadster Only) 3-7
Boot Lid Hinge Assembly (Pair) - Renew (Roadster Only) 3-10
Boot Gas Strut (Pair) - Renew (Roadster Only) 3-11
Boot Lid Striker Assembly - Renew (Roadster Only) 3-11
Exterior Boot Lid Switch Release - Renew (Roadster Only) 3-12
Tailgate Assembly - Renew 3-12
Tailgate Hinge Assembly (Pair) - Renew 3-13
Hood Assembly - Renew 3-14
Hood Hinge Assembly (Vehicle Set) - Renew 3-14
Interior Trim (01.05) 1-4-1
Maintenance 4-1
Rear Centre Console - Renew 4-1
Headlining - Renew (Roadster Only) 4-1
Header Panel Assembly - Renew (Excluding Roadster) 4-6
Header Panel Assembly - Renew (Roadster Only) 4-7
Front Header Console Assembly - Renew 4-7
RH/LH Upper Rear Pillar Panel Assembly - Renew 4-8
RH Sun Visor - Renew 4-8
LH Sun Visor - Renew 4-8
Door Trimboard Assembly - Renew 4-9
Door Trimboard Assembly - Remove for Access/Refit 4-9
Lower Quarter Trim Panel Assembly - Renew (Roadster Only) 4-9
Side Carpet Kit (RHD) - Renew 4-11
Side Carpet Kit (LHD) - Renew 4-12
Top Rear Console Finisher Panel Assembly - Renew (Roadster Only) 4-14
RH/LH Bodyside Rear Trim Panel Assembly - Renew (Roadster Only) 4-14
Tonneau to Body Weatherstrip Assembly - Renew (Roadster Only) 4-15
Door Trim Weather Strip Assembly - Renew (Roadster Only) 4-16
Exterior Trim (01.08) 1-5-1
Maintenance 5-1
RH/LH Applique Sill - Renew 5-1
RH Wing Side Strake - Renew 5-2
LH Wing Side Strake - Renew 5-2
Channel Assembly Divider Bar - Renew 5-2
Windshield Header Finisher - Renew (Roadster Only) 5-3
Mirrors (01.09) 1-6-1
Specifications 6-1
Maintenance 6-1
RH Door Mirror Assembly - Renew 6-1
LH Door Mirror Assembly - Renew 6-1
Seating (01.10) 1-7-1
Description 7-1
Heated Seats 7-1
Specifications 7-1
Maintenance 7-1
RH/LH Front Seat - Remove and Install 7-1
Front Seat Squab Cover Assembly (Each, Pre-08MY) - Remove and Install 7-1
Front Seat Squab Cover Assembly (Each, from 08MY) - Remove and Install 7-3
Front Seat Cushion Cover Assembly (Each) - Renew 7-3
6-Way Height Adjuster (Inc. Motors) - Renew 7-4
Squab Motor Kit - Renew 7-6
Lumbar Support Kit - Renew 7-7
Side Airbag - Renew 7-8
Front Seat Buckle Assembly - Renew 7-9
Valance Heater and Lumbar Switch Assembly - Renew 7-9
Seat Harness Kit - Renew 7-10

RH/LH Seat Switchpack Assembly - Renew.....7-13
Lumbar Pump for the Front Seat (From 08MY) - Remove and Install.....7-13
Lumbar Valve for the Front Seat (From 08MY) - Remove and Install.....7-14
Lumbar Bladder for the Front Seat (From 08MY) - Remove and Install.....7-14
Glass, Frame and Mechanism (01.11) 1-8-1
Description 8-1
Frameless doors.....8-1
Specifications 8-1
Maintenance 8-1
Glass Regulator - Renew.....8-1
RH/LH Door Glass - Renew.....8-2
Door Glass - Adjust/Reset 8-3
Front Windshield - Renew.....8-3
Rear Windshield - Renew.....8-4
Quarter Window Glass - Renew 8-6
Passenger Window Lift Switch - Renew 8-6
Driver Window Lift Switch - Renew.....8-7
Instrument Panel (IP) (01.12)..... 1-9-1
Specifications 9-1
Maintenance 9-1
Instrument Panel - Renew 9-1
Airbag Panel and Door Assembly - Renew.....9-6
Glovebox Assembly - Renew 9-6
Instrument Centre Panel Assembly - Renew.....9-7
Knee Protector - Renew 9-7
Instrument Panel Assembly - Renew.....9-7
Cluster Bezel Panel - Renew.....9-10
Driver Panel Assembly - Renew.....9-10
Instrument Panel Bezel Assembly (With Sat. Nav.) - Renew 9-11
Instrument Panel Bezel Assembly (Without Sat. Nav.) - Renew.....9-11
Rear Console Panel Assembly - Renew 9-12
Armrest Pad Assembly - Renew 9-13
Console Panel Assembly - Renew 9-13
RH/LH Rear Console Panel Assembly - Renew (Roadster Only) 9-13
Centre Console Panel - Remove and Install (Coupe Only) 9-15
Centre Console Panel - Remove and Install (Roadster Only) 9-19
RH/LH Lower Quarter Panel Assembly - Renew (Roadster Only) 9-29
Handles and Lock Mechanisms (01.14)..... 1-10-1
Description 10-1
Vehicle Key/Remote Transmitter.....10-1
Central Locking System 10-1
Remote Transmitter.....10-1
Fuel Filler Assembly.....10-1
Boot Emergency Release 10-1
Specifications 10-2
Maintenance 10-2
Ignition Cylinder Lock - Renew.....10-2
RH/LH Front Door Latch Assembly - Renew 10-2
Bonnet Latch Assembly - Renew.....10-3
Hood Release Cable Assembly - Renew (Roadster Only) 10-3
Bonnet Secondary Latch Assembly - Renew 10-4
Tailgate Latch and Cable Assembly - Renew 10-4
Fuel Filler Actuator Assembly - Renew (Roadster Only) 10-4
Fuel Filler Release Cable - Renew (Roadster Only) 10-5
Fuel Flap Release Switch - Renew 10-6
RH/LH Tonneau Latch Motor - Renew (Roadster Only) 10-7
RH/LH Tonneau Latch - Renew (Roadster Only)...10-7
RH/LH Tonneau Cover Striker Assembly - Renew (Roadster Only) 10-8
Tailgate Latch Assembly-Renew (Roadster Only)...10-8
Wipers and Washer System (01.16) 1-11-1
Headlamp Washing 11-1
Specifications.....11-2
Maintenance 11-2
Windscreen Wiper Motor Assembly - Renew 11-2
Wiper Linkage Assembly - Renew 11-2
Windshield Wash Tube - Renew 11-2
Windscreen Reservoir and Motor Assembly - Remove and Install 11-3
Low Level Water Sensor - Remove and Install 11-4
Headlamp Wash Motor and Pump Assembly - Renew 11-5
Headlamp Wash Tube Assembly - Renew 11-5
Washer Fluid Reservoir - Renew.....11-6
Convertible Roof and Roof Opening Subsystem (01.17).....1-12-1
System Description 12-1
Maintenance 12-2
Hood Assembly-Renew.....12-2
Canopy Cover - Renew 12-5
Header Latch Motor - Renew.....12-9
Hydraulic Main Actuator Cylinder - Renew 12-9
Hydraulic Tensrod Cylinder - Renew.....12-10
Hydraulic Tonneau Cylinder - Renew.....12-11
Convertible Top ECU - Renew 12-13
Hydraulic Pump - Renew 12-13
Hydraulic Lock Valve - Renew.....12-16
RH/LH Front Cantrail Seal - Spare Part - Renew 12-18
RH/LH Front Cantrail Seal Spare Part Kit - Renew 12-18
RH/LH Middle Cantrail Seal Spare Part - Renew 12-18
RH/LH Middle Cantrail Seal Spare Part Kit - Renew 12-19
Rear Seal Spare Part Assembly Kit - Renew.....12-20
LH Fully Automatic Latching Kit - Renew.....12-21
RH Fully Automatic Latching Kit - Renew 12-22
Convertible Roof Hydraulic Pump - Check Fluid Level 12-23
Cantrail Cover Trim - Renew.....12-25
B-Post Trim Cover - Renew 12-25
Tonneau Cover - Renew 12-27
LH Front Main Hydraulic Cylinder Pipe - Renew 12-29
LH Rear Main Hydraulic Cylinder Pipe

- Renew 12-33
RH Front Main Hydraulic Cylinder Pipe
- Renew 12-37
RH Rear Main Hydraulic Cylinder Pipe
- Renew 12-40
LH Front Hydraulic Cylinder Pipe - Renew 12-43
LH Rear Hydraulic Cylinder Pipe - Renew 12-46
RH Front Hydraulic Cylinder Pipe - Renew 12-50
RH Rear Hydraulic Cylinder Pipe - Renew 12-53
RH/LH Rear Hydraulic Tonneau Cylinder Pipe
- Renew 12-56
LH/RH Front Hydraulic Tonneau Cylinder Pipe
- Renew 12-60
Hydraulic Cylinder Valve to Pump Pipe
- Renew 12-63
Wind Deflector - Renew 12-66
Tonneau Well Liner - Renew 12-67
RH/LH Flex Shaft - Renew 12-69
Bumpers (01.19) 1-13-1
Front Bumper 13-1
Rear Bumper 13-1
Specifications 13-2
Maintenance 13-2
Front Bumper Cover - Renew 13-2
Rear Bumper Cover - Renew 13-3
Restraining Devices (01.20) 1-14-1
Seat Belts 14-1
Emergency Locking Retractor (ELR) 14-2
Airbag System 14-3
Maintenance 14-4
Driver's Airbag Module - Renew 14-4
LH Front Seat Belt - Renew 14-4
RH Front Seat Belt - Renew 14-5
Passenger Airbag - Renew 14-6
ARS Side Impact Sensor Assembly - B Pillar
- Renew 14-6
Side Impact Door ARS Sensor Assembly
- Renew 14-6
Front Impact Sensor Assembly - Renew 14-7
Occupant Restraint Control Module Assembly
- Renew 14-7
RH/LH Roll Over Protection System - Renew 14-8

Body System (01.00)

Body Structure (01.01)

Overview

The all aluminium body underframe is bonded using an immensely strong hot-cured XD4600 red adhesive.

The rear quarter panels, roof and side mouldings are bonded to the structure using cold-cured 2810 MV adhesive. The curing cycle is improved by using a hot air impingement system.

The composite front wings are bolted to the structure.

At no time should the body structure be subjected to temperatures in excess of 120°C (248°F).

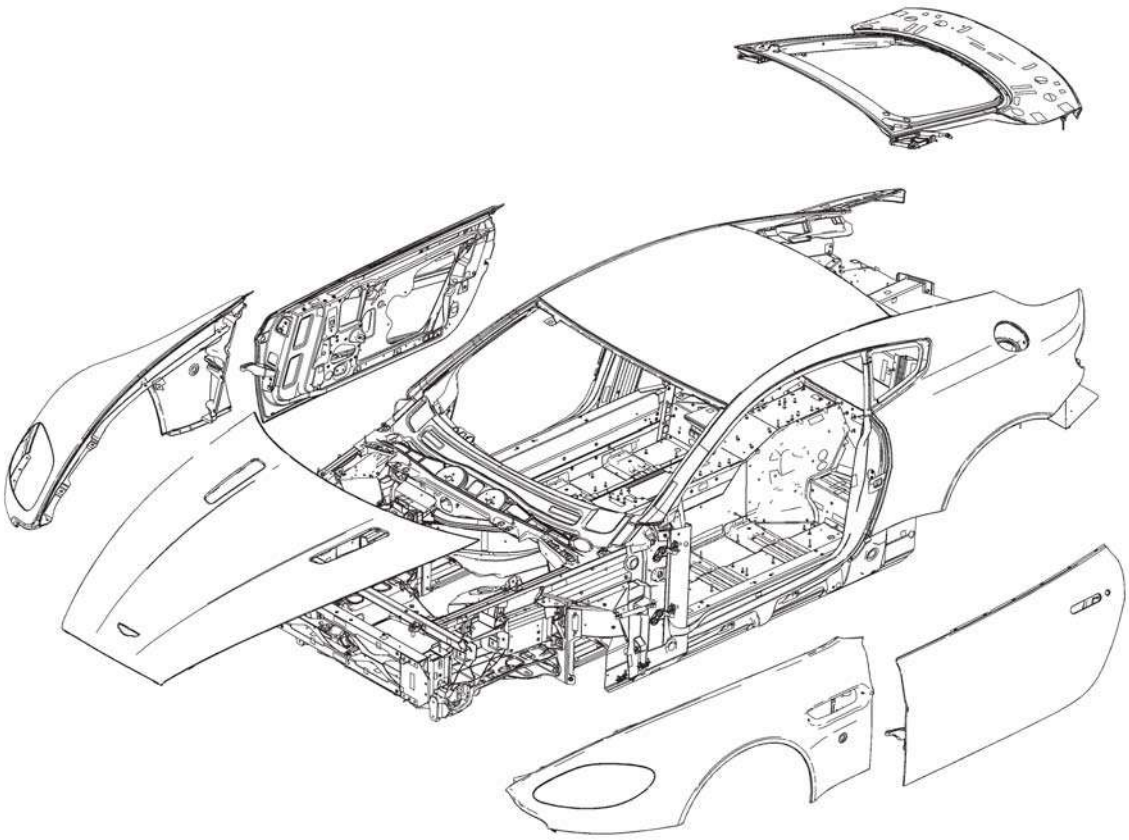

01-01-001

Specifications

Torque Figures	
Description	Nm.
Crush Brace	
Crush Bar (Left and Right)	

Maintenance

Right Side Front Crush Bar for the Body Reinforcement - Remove and Install

Repair Operation Time (ROT)	
Item	**Code**
Right Side Front Crush Bar for the Body Reinforcement - Remove and Install	**01.01.AB**

Removal

1. Remove the two nuts that attach the washer bottle neck and bracket to the crush bar.
2. Release the washer bottle neck and bracket from the crush bar.
3. Remove the four Torx screws and two nuts that attach the crush bar to the body.
4. Remove the crush bar.

Install

1. Put the crush bar into position.
2. Install and torque tighten the four Torx screws and two nuts that attach the crush bar to the body.
3. Install the washer bottle neck and bracket to the crush bar.
4. Install and tighten the two nuts that attach the washer bottle neck and bracket to the crush bar.

Left Side Front Crush Bar for the Body Reinforcement - Remove and Install

Repair Operation Time (ROT)	
Item	**Code**
Left Side Front Crush Bar for the Body Reinforcement - Remove and Install	**01.01.AC**

Removal

1. Remove the four Torx screws and two nuts that attach the crush bar to the body.
2. Remove the crush bar.

Install

1. Put the crush bar into position.
2. Install and torque tighten the four Torx screws and two nuts that attach the crush bar to the body.

Front Crush Brace - Remove and Install

Repair Operation Time (ROT)	
Item	**Code**
Front Crush Brace - Remove and Install	**01.01.LC**

Removal

1. Remove the four Torx screws that attach the crush brace to the left side and right side crush brace brackets.
2. Remove the crush brace.

Install

1. Put the crush brace in position.
2. Install and torque tighten the four Torx screws that attach the crush brace to the left side and right side crush brace brackets.

ASTON MARTIN
ASTON MARTIN

Body System (01.00)

Front End (01.02)

Front Wings

Specifications

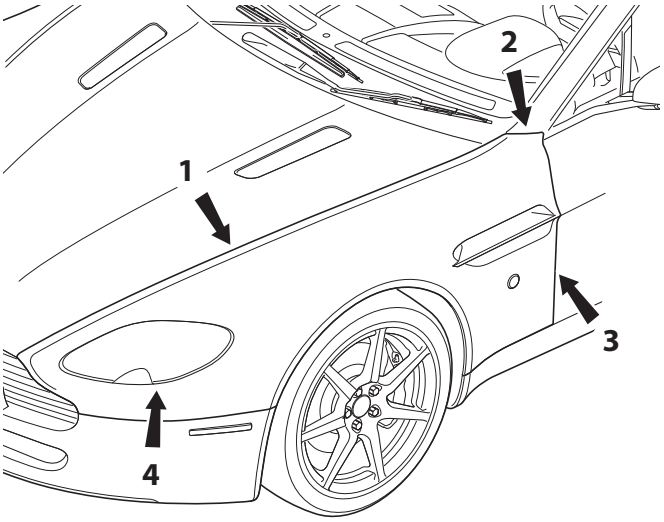

01-01-002

Wing Standard (mm)				
Item	1	2	3	4
Nominal gap	3.5	2.0	3.75	3.0
Tolerance	±0.75	+0.5 / -0.0	± 0.75	±0.5
Flush	-0.0	0.0	0.0	-0.5
Tolerance	±1.5	+0.0 / -0.5	±1.5	±0.5
Taper	N/A			
Symmetry	N/A			

Torque Figures	
Description	Nm
Wing Top	8
Wing Top Single nut	Tight with 'Threadlock'
Lower Rear	8
Slam panel	8
PCM Bracket	10
Bonnet Damper	25

Maintenance

Radiator Closing Panel - Remove and Install

Repair Operation Time (ROT)	
Item	**Code**
Radiator Closing Panel - Remove and Install	**01.02.AA**

Removal

1. Remove the 12 Torx screws that attach the radiator closing panel.

S-01-02-AA-01

2. Remove the radiator closing panel.

S-01-02-AA-02

Install

1. Install the radiator closing panel (refer to Figure S-01-02-AA-01).
2. Install and tighten the 12 Torx screws that attach the radiator closing panel.

Centre Undertray - Remove and Install (Roadster Only)

Repair Operation Time (ROT)	
Item	**Code**
Centre Undertray - Remove and Install	**01.02.MB**

Removal

1. Use the applicable equipment to lift the vehicle and make it safe.

WARNING
THE CENTRE UNDERTRAY IS HEAVY. GET THE HELP OF ANOTHER PERSON WHEN YOU MOVE THE REAR UNDERTRAY. IF YOU DO NOT YOU CAN BE INJURED.

2. Remove the 17 screws that attach the centre undertray to the body.
3. Remove the centre undertray.

Install

WARNING
THE CENTRE UNDERTRAY IS HEAVY. GET THE HELP OF ANOTHER PERSON WHEN YOU MOVE THE REAR UNDERTRAY. IF YOU DO NOT YOU CAN BE INJURED.

1. Put the rear undertray in positon.
2. Install and torque the 17 Torx screws that attach the rear undertray.

Front Undertray-Remove and Install

Repair Operation Time (ROT)	
Item	**Code**
Front Undertray - Remove and Install	**01.02.NB**

Removal

1. Use the applicable equipment to lift the vehicle and make it safe.
2. Remove the 14 Torx screws that attach the front undertray to the body.
3. Remove the front undertray.

Install

1. Put the front undertray in position.
2. Install and torque tighen the 14 Torx screws trhat attach the front undertray to the vehicle.
3. Lower the vehicle.

Rear Undertray - Renew (Coupe only)

Repair Operation Time (ROT)	
Item	**Code**
Rear Undertray - Renew	**01.02.PB**

Removal

1. Raise the vehicle and make it safe.
2. Remove the 10 screws that attach the rear undertray to the body.

S-01-02-PB-01

3. Remove rear undertray.

S-01-02-PB-02

Installation

1. Put the rear undertray in posiiton.
2. Install and tighten the 10 screws that attach the rear undertray to the vehicle.

S-01-02-PB-01

3. Lower the vehicle.

Rear Undertray - Renew (Roadster only)

Repair Operation Time (ROT)	
Item	**Code**
Rear Undertray - Renew	**01.02.PB**

Removal

1. Use the applicable equipment to lift the vehicle and make it safe.
2. Remove the 18 of the 21 screws that attach the rear undertray to the body.
3. Lower the vehicle wheels onto blocks to get access to the remaining screws that attach the rear undertray to the body.

WARNING
THE REAR UNDERTRAY IS HEAVY. GET THE HELP OF ANOTHER PERSON WHEN YOU MOVE THE REAR UNDERTRAY. IF YOU DO NOT YOU CAN BE INJURED.

4. Remove the remaining three screws that attach the rear undertray to the body.
5. Remove the rear undertray.

Install

WARNING
THE REAR UNDERTRAY IS HEAVY. GET THE HELP OF ANOTHER PERSON WHEN YOU MOVE THE REAR UNDERTRAY. IF YOU DO NOT YOU CAN BE INJURED.

1. Put the rear undertray in position.
2. Install and tighten the 21 scrwes that attach the rear undertray to the body.
3. Lift the vehicle.
4. Remove the blocks.
5. Lower the vehicle.

Undertray, Vehicle Set - Renew

Repair Operation Time (ROT)	
Item	**Code**
Undertray Vehicle Set-Renew	**01.02.PD**

Removal

1. Raise vehicle on ramp.
2. Remove front undertray (see Workshop Manual 01.02.NB - Front undertray - Renew).
3. Remove rear undertray (see Workshop Manual 01.02.PB - Rear undertray - Renew).
4. Remove centre undertray (see Workshop Manual 01.02.MB - Centre undertray - Renew).

Installation

1. With assistance, install centre undertray (see Workshop Manual 01.02.MB - Centre undertray - Renew).
2. With assistance, install front undertray (see Workshop Manual 01.02.NB - Front undertray - Renew).
3. With assistance, install rear undertray (see Workshop Manual 01.02.PB - Rear undertray - Renew).
4. Lower vehicle on ramp.

RH/LH Front Wheel Arch Liner - Renew

Repair Operation Time (ROT)		
Item		**Code**
Wheel Arch Liner-Renew	RH	**01.02.GB**
Wheel Arch Liner-Renew	LH	**01.02.FB**

Removal

1. Remove centre undertray, **Roadster only** (see Workshop Manual procedure 01.02.MB Undertray - Centre - Renew).
2. Raise vehicle on ramp.
3. Remove road wheel(s).

4. Remove screws (x23), wheel arch liner to body (see Figure 1).

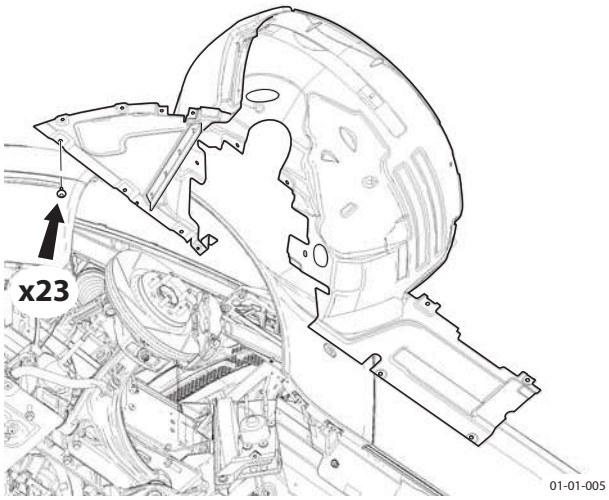

Figure 1

5. Release and remove wheel arch liner.
6. Remove inner pad from liner.

Installation

1. Install inner pad to wheel arch liner.
2. Install wheel arch liner, fit and tighten screws (x23).
3. Install road wheel(s).
4. Install centre undertray, **Roadster only** (see Workshop Manual procedure 01.02.MB Undertray - Centre - Renew)
5. Lower vehicle on ramp.

RH/LH Rear Wheel Arch Liner - Renew

Repair Operation Time (ROT)		
Item		**Code**
Rear Wheel Arch Liner-Renew	RH	**01.02.HB**
Rear Wheel Arch Liner-Renew	LH	**01.02.JB**

Removal

1. Raise vehicle on ramp.
2. Remove rear undertray, **Roadster only** (see Workshop Manual procedure 01.02.PB Undertray - Centre - Renew).
3. Remove road wheel(s).
4. Release vent pipe clips (x2) - Right-hand side only.
5. Remove screws (11), wheel arch liner to body (see Figure 1).

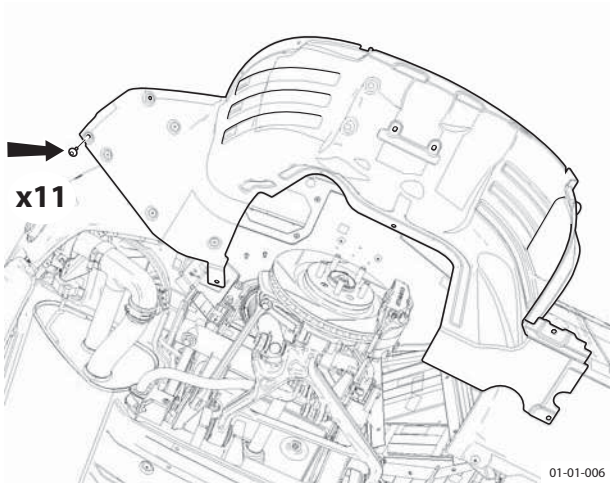

Figure 1

6. Release fuel filler aperture drain hose from clips (x2) (see Figure 2).

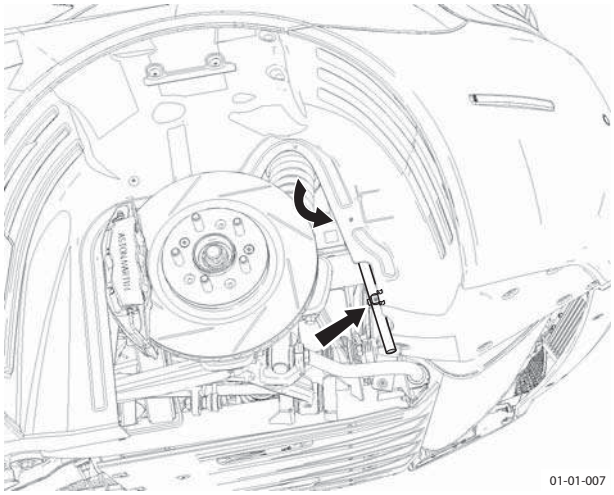

Figure 2

7. Release and remove wheel arch liner, remove inner pad from liner.

Installation

1. Install inner pad to wheel arch liner.
2. Install wheel arch liner, fit and tighten screws (x11).
3. Install fuel filler aperture drain hose in clips (x2).
4. Install vent pipe to liner, clips (x2) - Right-hand side only.
5. Install road wheel(s).
6. Install rear undertray, **Roadster only** (see Workshop Manual procedure 01.02.PB Undertray - Centre - Renew).
7. Lower vehicle on ramp.

RH Front Wing Panel Assembly - Renew

Repair Operation Time (ROT)		
Item		**Code**
Front Wing Panel Assembly-Renew	RH	**01.02.KB**

Removal

1. Remove Cover Assembly - Front Bumper (see Workshop Manual procedure 01.19.AA Cover Assembly - Front Bumper - Renew).
2. Remove door (see Workshop Manual procedure 01.03.EA Door Assembly - RH - Remove for Access and Refit).
3. Remove slam panel (screws x12) (Figure 1).

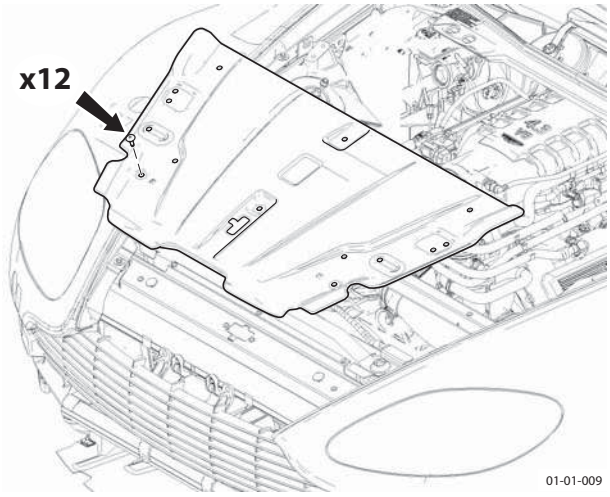

Figure 1

4. Remove bolts and spacers (x4) wing to body-top fixings (see Figure 2).

Figure 2

5. Remove bolt and spacer (A-post top) (see Figure 3).

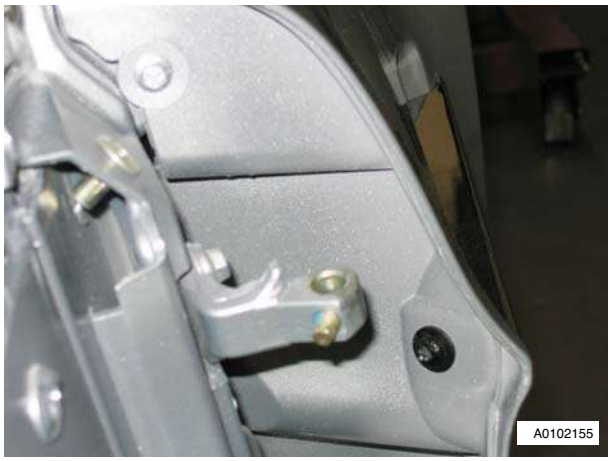

Figure 3

6. Disconnect side repeater lamp multiplug (see Figure 4).

Figure 4

7. Remove bolts and spacers (x2) under wing (see Figure 5).

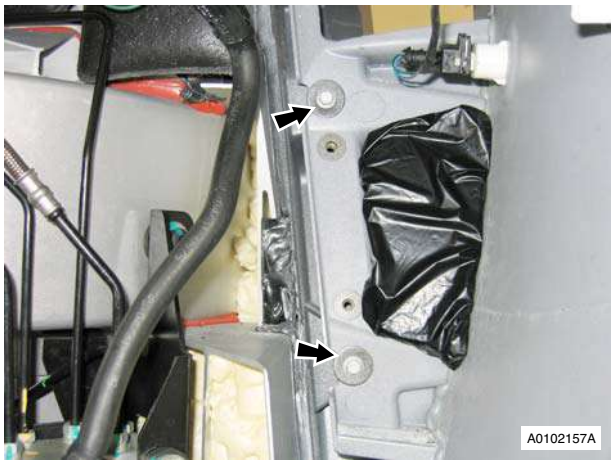

Figure 5

8. Remove nut and bolt, wing to sill (see Figure 6).

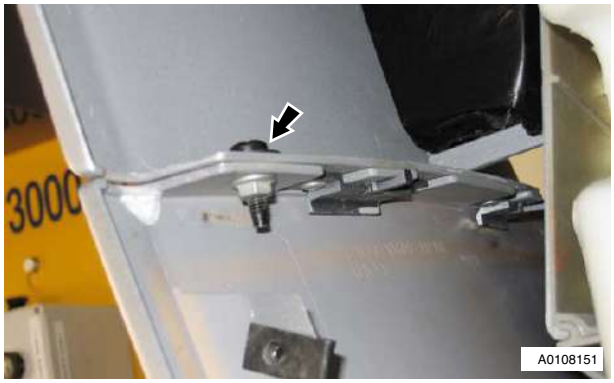

Figure 6

9. Remove screw, wing to sill (see Figure 7).

Figure 7

10. Release clips (x2) wing to sill and remove wing (see Figure 8).

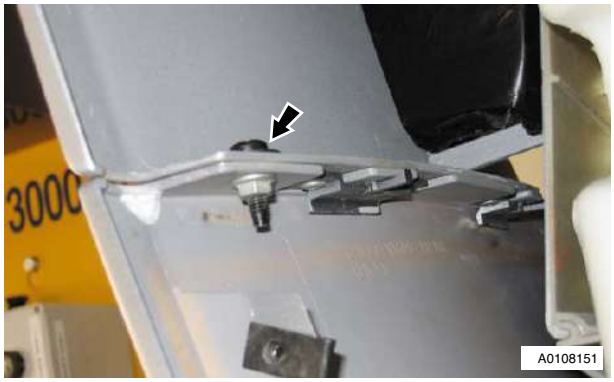

Figure 8

11. Remove side repeater lamp body from wing.

12. Remove side strake screw (x1) A-post (see Figure 9).

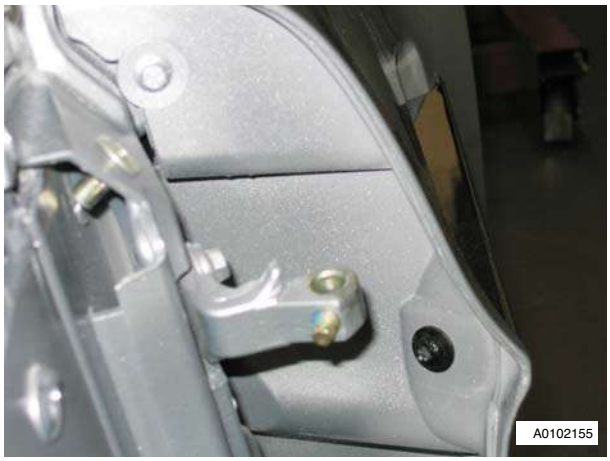

Figure 9

13. Remove vent mesh (nuts x3) (see Figure 10)).

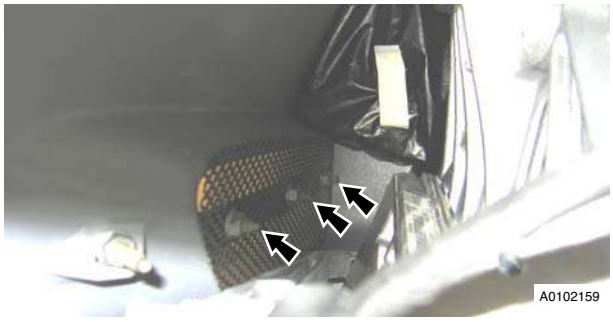

Figure 10

14. Remove side strake (nut x1) glued (see Figure 11).

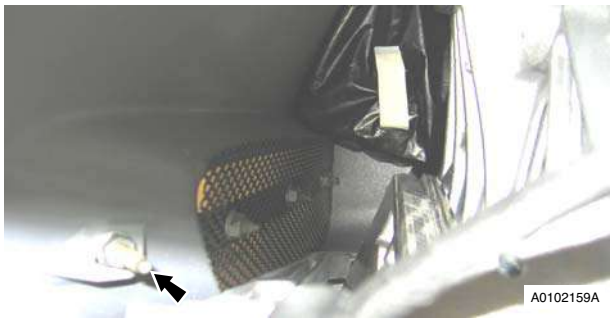

Figure 11

15. Remove sound deadening pads (x2).

16. Remove hood/wing weatherstrip (see Figure 12).

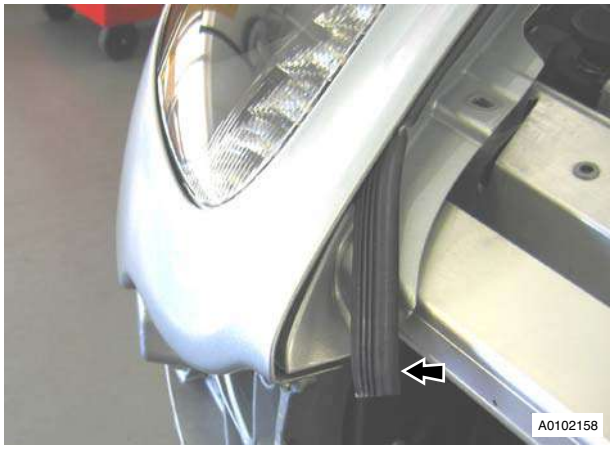

Figure 12

Installation

1. Install hood/wing weatherstrip.
2. Install sound deadening pads.
3. Install side strake (screw x1, nut x1) - glued.
4. Install vent mesh (nuts x3).
5. Install side repeater lamp body.
6. Install wing and refit clips (x2) wing to sill.
7. Install screw, wing to sill.
8. Install nut and bolt, wing to sill.
9. Install bolts and spacers (x2) under wing.
10. Connect side repeater lamp.
11. Install bolt and spacer (A-post top).
12. Install bolts and spacers (x4) wing to body top fixings.
13. Install slam panel (screws x12).
14. Install door (see Workshop Manual procedure 01.03.EA Door Assembly - RH - Remove for Access and Refit).
15. Install Cover Assembly - Front Bumper (see Workshop Manual procedure 01.19.AA Cover Assembly - Front Bumper - Renew).

LH Front Wing Panel Assembly - Renew

Repair Operation Time (ROT)		
Item		**Code**
Front Wing Panel Assembly-Renew	LH	**01.02.LB**

Removal

1. Remove Cover Assembly - Front Bumper (see Workshop Manual procedure 01.19.AA Cover Assembly - Front Bumper - Renew).
2. Remove door (see Workshop Manual procedure 01.03.FA Door Assembly - LH - Remove for Access and Refit).
3. Remove slam panel (screws x12).
4. Unclip hood ground lead (clips x2).
5. Remove bolts and spacers (x4) wing to body top fixings (see Figure 1).

Figure 1

6. Remove bolt and spacer (A-post top) (see Figure 2).

Figure 2

7. Move coolant catch tank aside (bolts x2 and sound deadening) (see Figure 3).

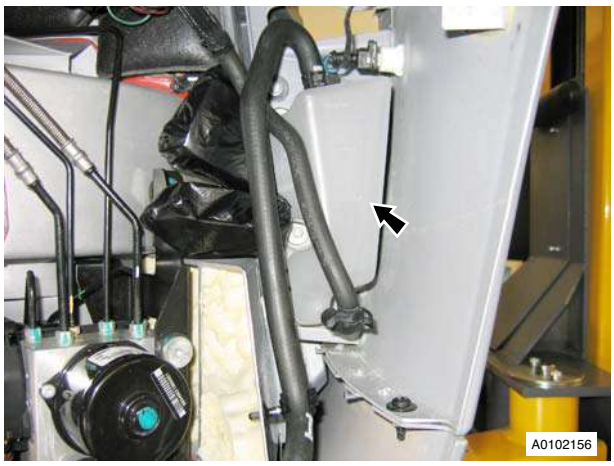

Figure 3

8. Disconnect side repeater lamp multiplug (see Figure 4).

Figure 4

9. Remove bolts and spacers (x2) under wing (see Figure 5).

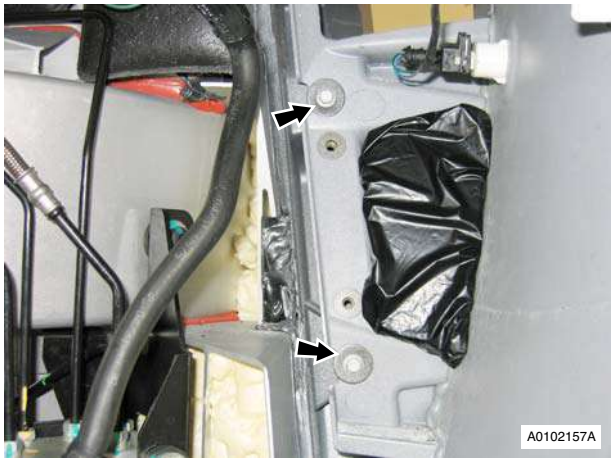

Figure 5

10. Remove nut and bolt, wing to sill (see Figure 6).

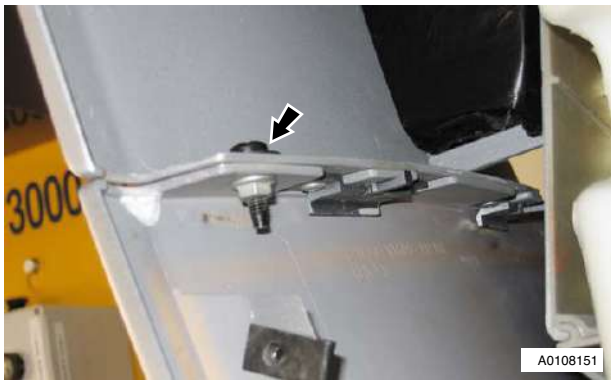

Figure 6

11. Remove screw, wing to sill (see Figure 7).

Figure 7

12. Release clips (x2) wing to sill and remove wing (see Figure 8).

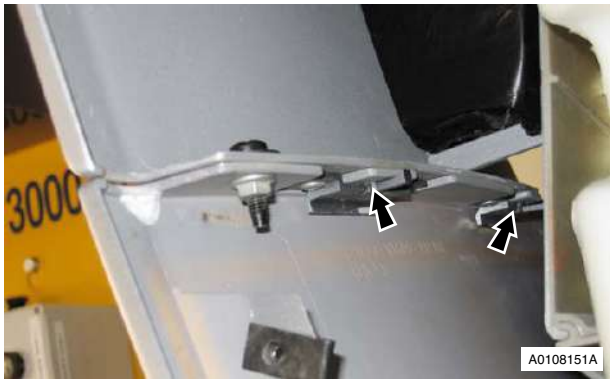

Figure 8

13. Remove side repeater lamp body from wing.
14. Remove side strake screw (x1) A-post (see Figure 9).

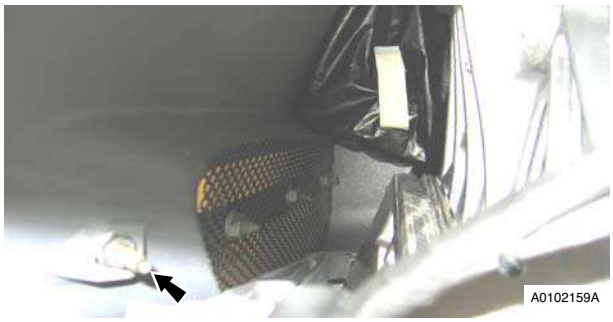

Figure 9

15. Remove vent mesh (nuts x3) (see Figure 10).

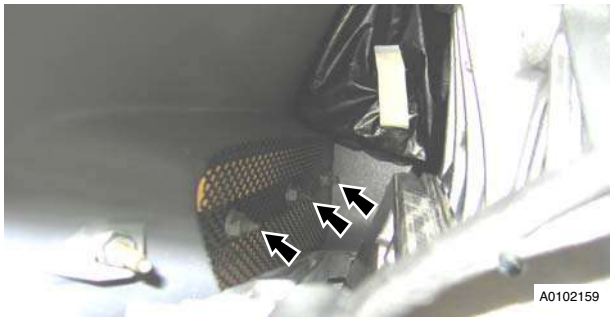

Figure 10

16. Remove side strake (nut x1) glued (see Figure 11).

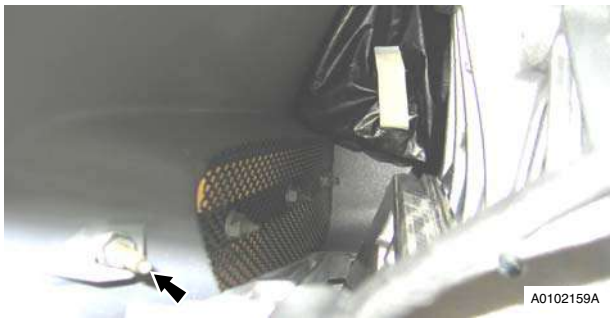

Figure 11

17. Remove sound deadening pads (x2).
18. Remove hood/wing weatherstrip (see Figure 12).

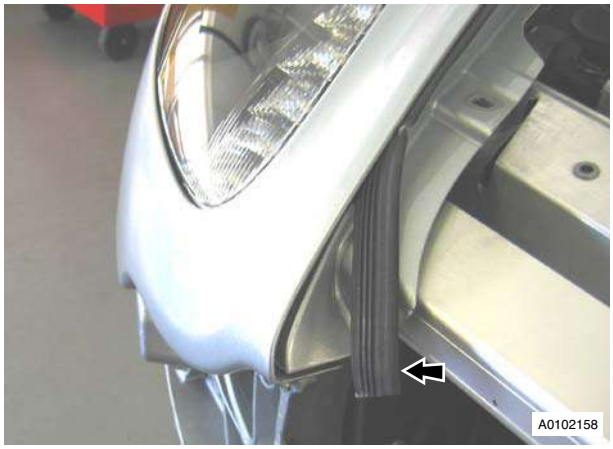

Figure 12

Installation

1. Install hood/wing weatherstrip.
2. Install sound deadening pads.
3. Install side strake (screw x1, nut x1) - glued.
4. Install vent mesh (nuts x3).
5. Install side repeater lamp body.
6. Install wing and refit clips (x2) wing to sill.
7. Install screw, wing to sill.
8. Install nut and bolt, wing to sill.
9. Install bolts and spacers (x2) under wing.
10. Connect side repeater lamp.
11. Install coolant catch tank (bolts x2 and sound deadening).
12. Install bolt and spacer (A-post top).
13. Install bolts and spacers (x4) wing to body top fixings.
14. Clip hood ground lead.
15. Install slam panel (screws x12).
16. Install door (see Workshop Manual procedure 01.03.FA Door Assembly - LH - Remove for Access and Refit).
17. Install Cover Assembly - Front Bumper (see Workshop Manual procedure 01.19.AA Cover Assembly - Front Bumper - Renew).

Body System (01.00)

Body Closures (01.03)

Specifications

Doors

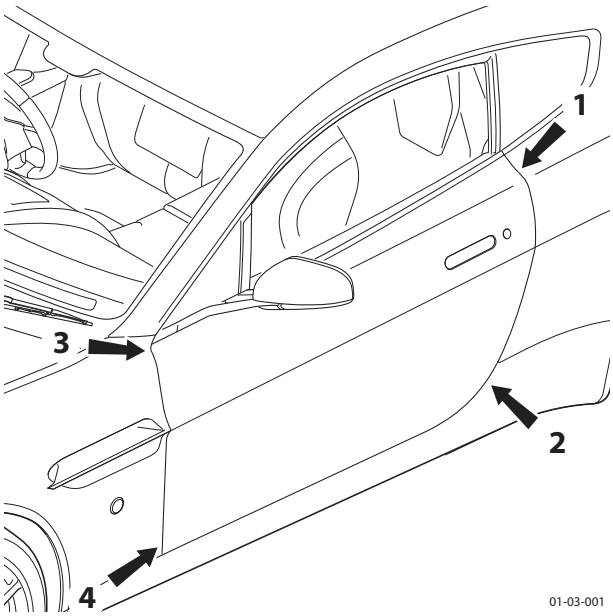

Door Standard (mm)				
Item	1	*2	3	4
Nominal gap	3.5	3.00	3.00	3.75
Tolerance	±0.75	±1.0	±1.0	± 0.75
Flush	0.0	-1.0	-1.0	0.0
Tolerance	±1.5 / 0.0	+0.0 / -1.0	±1.0	±1.5

* Flushness blends to 0.0 at the rear quarter
* Gap blends to 3.5 at rear quarter

Torque Figures	
Description	Nm.
Hinge to Door	47.5
Hinge to Body	36

Tailgate

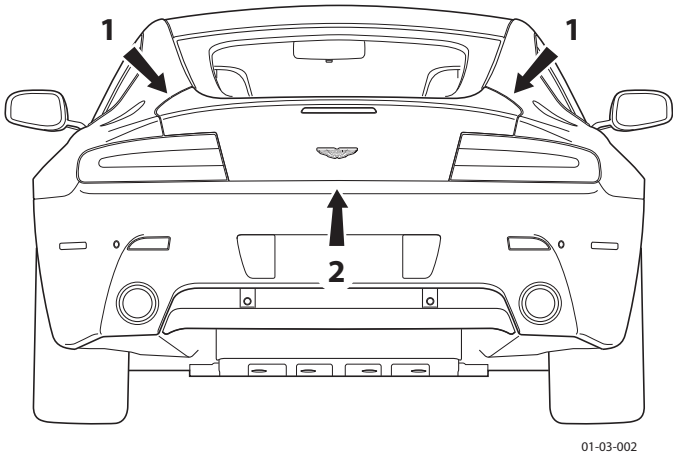

Tailgate Standard (mm)		
Item	1	2
Nominal gap	3.5	3.5
Tolerance	±0.75	±1.0
Flush	-0.5	N/A
Tolerance	+0.5 / -1.0	N/A
Taper	1 mm Max. across the length	
Symmetry	1 mm Max. difference LH to RH	

Torque Figures	
Description	Nm
Hinge to Body	25

Bonnet

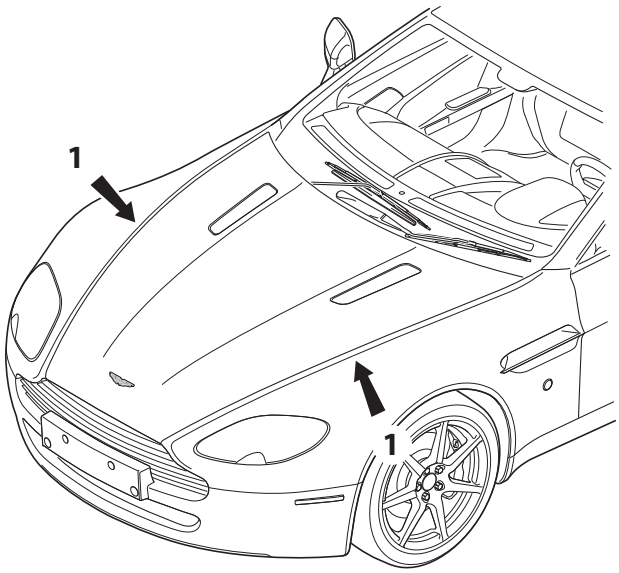

01-03-003

Bonnet Standard (mm)	
Item	1
Nominal gap	3.5
Tolerance	±0.75
Flush	-0.0
Tolerance	±1.5

Torque Figures	
Description	Nm.
Hinge to Body	25

Maintenance

LH/RH Door Assembly-Renew

Repair Operation Time (ROT)		
Item		**Code**
Door Assembly-Renew	LH	**01.03.DB**
Door Assembly-Renew	RH	**01.03.CB**

Removal

1. Battery isolation switch 'OFF'.
2. Remove LH door assembly (see Workshop Manual procedure 01.03.FA Door Assembly - LH - Remove for Access and Refit).
3. Remove bolts (x2) securing door handle assembly to door panel (see Figure 1).

Figure 1

4. Remove door handle trim plate, disconnect door catch inner release cable from handle and outer cable from retaining plate.
5. Remove handle assembly.
6. Remove access plugs from door frame.
7. Remove screw securing trimboard to upper front of door frame.
8. Remove bolts (x5) securing trimboard to door frame.
9. Raise trimboard out and up to release from door frame clips, disconnect multiplugs (x2).

10. Disconnect door speaker multiplug (see Figure 2).

Figure 2

11. Remove bolts (x3), remove door speaker assembly.
12. Remove bolts (x4) securing door control module to door panel (see Figure 3).

Figure 3

13. Disconnect multiplugs (x3), remove door control module.
14. Remove bolts (x3) securing side impact sensor mounting plate, disconnect multiplug, remove plate assembly (see Figure 4).

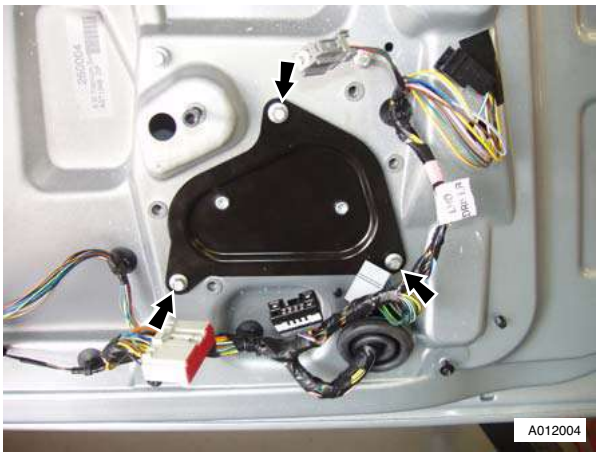

Figure 4

15. Pull fixed glass upwards and away from cheater panel, releasing rubber surround at top. Remove fixed glass.
16. Mark door glass around rear glass clamp.
17. Remove glass clamp bolts (x2), raise and remove door glass from door frame.
18. Disconnect multiplug from door glass regulator motor (see Figure 5).

Figure 5

19. Remove nuts (x4) and Torx screws (x3) securing door glass regulator to door frame (see Figure 6).

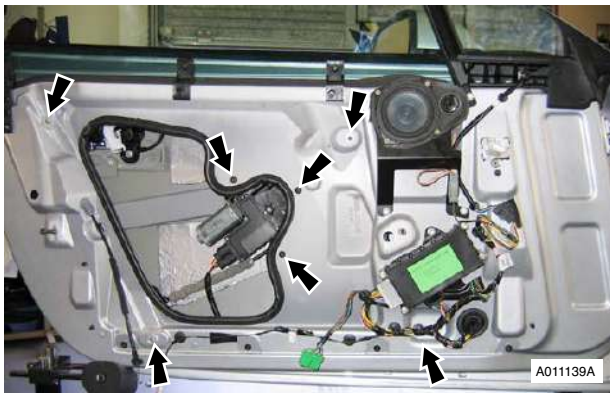

Figure 6

20. Carefully remove regulator mechanism through the larger door frame aperture.
21. Remove door mirror rubber cheater (see Figure 7).

Figure 7

22. Disconnect door mirror multiplug, release harness fir tree clips (x2) and self adhesive clip (see Figure 8).

Figure 8

23. Remove Torx Bolts (x3) and screw from door glass channel. Remove door mirror assembly.
24. Remove aperture seal from inner door frame.
25. Remove fir tree trim pins (x3), release/remove rear weatherstrip from door frame/glass channel.
26. Disconnect door latch multiplug.
27. Release inner and outer cable from external door handle (see Figure 9).

Figure 9

28. Remove nuts (x3) securing external door handle, remove door handle (see Figure 10).

Figure 10

29. Loosen upper nut, remove lower nut securing keylock mechanism to door frame.

30. Remove Torx screws (x3) securing latch assembly to door frame (see Figure 11).

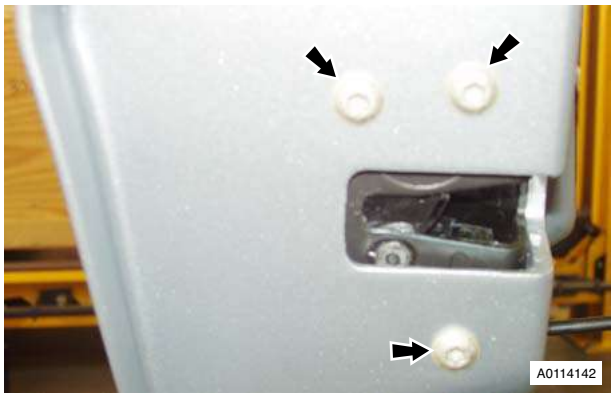

Figure 11

31. Manoeuvre internal latch handle cable through inner door skin into door aperture.
32. Carefully remove latch and keylock mechanisms through door aperture.
33. Remove Torx screws (x4) securing trimboard support brackets to door frame, remove brackets.
34. Drill out pop rivets (x2) securing rear trimboard support bracket, remove bracket.
35. Release door harness from inner door casing clips (x10) (see Figure 12).

Figure 12

36. Release door harness from outer door casing clips (x8) (see Figure 13).

Figure 13

37. Release harness grommets (x2) from door casing.
38. Manoeuvre and remove harness from door casing.
39. With assistance, remove door from trolley (501 - F111).
40. Remove bolts (x2) securing hinges to door, remove hinges (x2). Note fitted positions of shims (if fitted).

Installation

1. Carry out preliminary hinge setup.
2. Install hinges and shims (if fitted) on door, install bolts (x2). Do not torque tighten at this stage.
3. With assistance, install door on vehicle.
4. Place a weight of 16 kg (to compensate weight of door fixings) hanging from inner door skin as illustrated.
5. Gently close door and check for an acceptable initial installation.
6. Align the door, manoeuvre the door to achieve correct gaps and flush fit (add / remove shims as required). Open door, tighten bolts. Do not torque tighten bolts at this stage.
7. Close door, re-check fitment and alignment.
8. Open door, torque tighten hinge bolts. Remove the door weight.
9. With assistance, remove door and install on door trolley (501 - F111).
10. Manoeuvre and install harness in door, install grommets (x2).
11. Secure harness in door casing with clips (x18).
12. Position rear trimboard support bracket, secure with pop rivets (x2).
13. Position trimboard support brackets (x2), install and tighten Torx screws (x4).
14. Install latch and keylock mechanisms in door.
15. Manoeuvre internal latch handle cable into position
16. Install and torque tighten latch Torx screws (x3).
17. Position keylock mechanism to door frame, install lower nut, torque tighten nuts (x2).
18. Install external door handle, install and torque tighten nuts (x3).

19. Install inner and outer cable to external door handle.
20. Connect multiplug to door latch.
21. Install rear weatherstrip to glass channel and door frame. Install fir tree trim pins (x3)
22. Install seal to inner door aperture.
23. Position door mirror, install and torque tighten Torx bolts (x3) and screw (glass channel).
24. Connect door mirror multiplug, secure harness with fir tree clips (x2) and adhesive clip.
25. Install rubber cheater to door frame, secure with fir tree trim pins (x3).
26. Install glass regulator assembly into door frame.
27. Install and torque tighten nuts (x4) and Torx screws (x3) securing regulator assembly to door frame.
28. Connect multiplug to glass regulator.
29. Install door glass, install clamp bolts (x2), align marks on glass to rear clamp. Do not torque tighten at this stage.
30. Install fixed glass, ensure rubber surround is correctly installed.
31. Connect multiplug to side impact sensor, position mounting plate, install and torque bolts (x3).
32. Position door control module, connect multiplugs (x3). Install and torque tighten bolts (x4).
33. Position door speaker, install and torque tighten screws (x3). Connect multiplug to speaker.
34. Position door trimboard, connect multiplugs (x2).
35. Install trimboard to door frame, secure in clips.
36. Install and tighten screws (x5).
37. Install LH door assembly (see Workshop Manual procedure 01.03.FA Door Assembly - LH - Remove for Access and Refit).
38. Battery isolation switch 'ON'.
39. Glass front door - LH - Adjust and reset (see Workshop Manual procedure 01.11.BD Glass - Front Door - LH - Adjust and Reset).

RH/LH Door Assembly-Remove/Refit

Repair Operation Time (ROT)		
Item		**Code**
Door Assembly-Remove/Refit	RH	**01.03.EA**
Door Assembly-Remove/Refit	LH	**01.03.FA**

Removal

1. Switch on ignition, set door glass to half-way down position (this is to access door glass screw clamps on door renew - 01.05.CB).
2. Battery isolation switch 'OFF'.
3. Raise vehicle on ramp.
4. Remove road wheel(s),
5. Release rear part of wheel arch liner, screws (x7), disconnect door check rod.
6. Pull back sealing boot and disconnect door multiplug.
7. Loosen the door hinge Torx screws (x2).
8. With assistance, lift door off support studs.
9. Withdraw the door from the vehicle and install on Door Service Trolley (501 - F111).
10. Remove and discard hinge Torx screws (Patchlok).

Installation

1. Protect vehicle bodywork.
2. Install new hinge Torx screws.
3. With assistance, remove door from trolley (501 - F111), position door to vehicle.
4. Align door to upper and lower hinges and install on hinge studs.
5. Connect the door check rod and install wheel arch liner, screws (x7).
6. Tighten hinge Torx screws (x2) (torque).
7. Connect multiplug and install boot.
8. Battery isolation switch 'ON'.
9. Install road wheel(s).
10. Lower vehicle on ramp.

Front Door Hinge (One Side) - Renew

Repair Operation Time (ROT)	
Item	**Code**
Front Door Hinge (One Side) Renew	**01.03.FB**

Removal

1. Remove LH/RH door assembly (see Workshop Manual procedure 01.03.FA/01.03.EA Door Assembly - LH/RH - Remove for Access and Refit).
2. Remove bolts (x4) securing upper and lower door hinges to body.
3. Remove hinges, note position of shims (if fitted) collect rubber seals (x2).
4. Remove bolts (x2) securing upper and lower hinges to door, remove hinges (x2). Note fitted position of shims (if fitted).

Installation

1. Position hinges to body, install rubber seals (x2) and shims (if fitted).
2. Install bolts (x4) securing hinges to body. Do not torque tighten bolts at this stage.
3. Position hinges (x2) to door. Install bolts (x2). Do not torque tighten at this stage.
4. Install LH/RH door assembly (see Workshop Manual procedure 01.03.FA/01.03.EA Door Assembly - LH/RH - Remove for Access and Refit).
5. Carry out preliminary hinge set-up.
6. Gently close door and check for acceptable initial installation.
7. Align the door, manoeuvre the door to achieve correct gaps and flush fit; (add/remove shims as required).
8. Open door, tighten bolts. Do not torque tighten at this stage.
9. Close door, re-check fitment and alignment.

10. Open door, torque tighten bolts.

Front Door Check Arm Assembly - Renew

Repair Operation Time (ROT)	
Item	**Code**
Front Door Check Arm Assembly-Renew	**01.03.FC**

Removal

1. Remove door assembly (see Workshop Manual procedure 01.03.EA/01.03.FA Door Assembly - RH/LH - Remove for Access and Refit).
2. Disconnect door check arm from door.

Installation

1. Connect door check strap to door.
2. Install door assembly (see Workshop Manual procedure 01.03.EA/01.03.FA Door Assembly - RH/LH - Remove for Access and Refit).

Boot Lid Assembly - Renew (Roadster Only)

Repair Operation Time (ROT)	
Item	**Code**
Boot Lid Assembly-Renew	**01.03.GA**

Removal

1. Open boot lid.
2. Remove bolt securing strap to boot lid and remove strap (see Figure 1).

Figure 1

3. Remove clip securing cable to release lever and remove cable.
4. Release clips (x8) and remove boot lid trim panel.
5. Release clip securing harness to interior panel (see Figure 2).

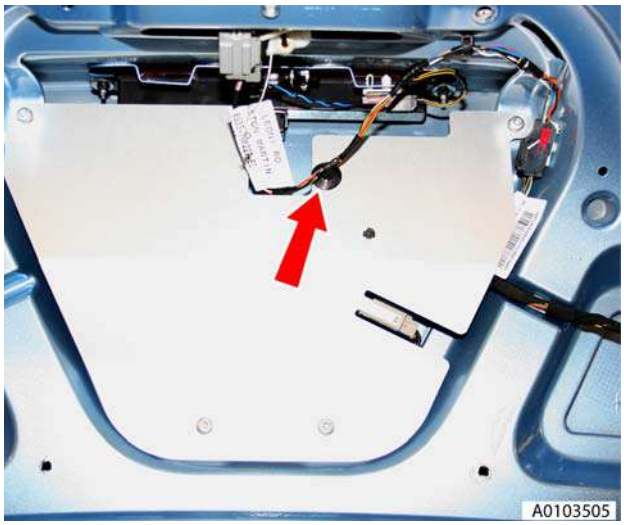

Figure 2

6. Remove bolts (x4) securing panel to boot lid.
7. Release multiplug from panel, disconnect multiplug from antenna and remove panel (see Figure 3).

Figure 3

8. Disconnect multiplugs from latch, boot lid release switch, release solenoid and stop light (see Figure 4).

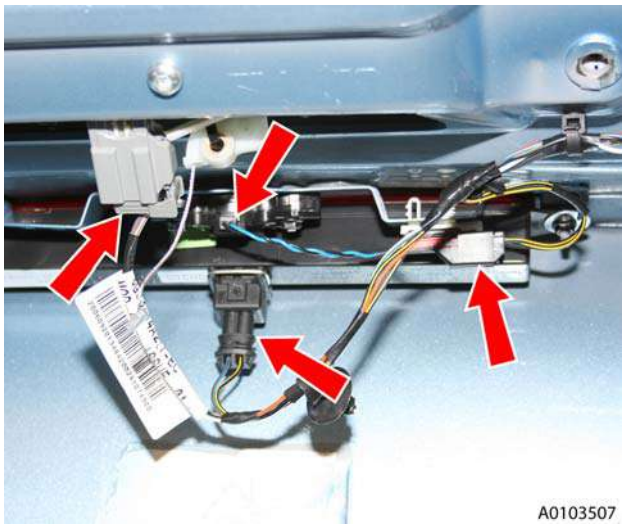

Figure 4

9. Release clips securing harness to boot lid, release grommet and remove harness (see Figure 5).

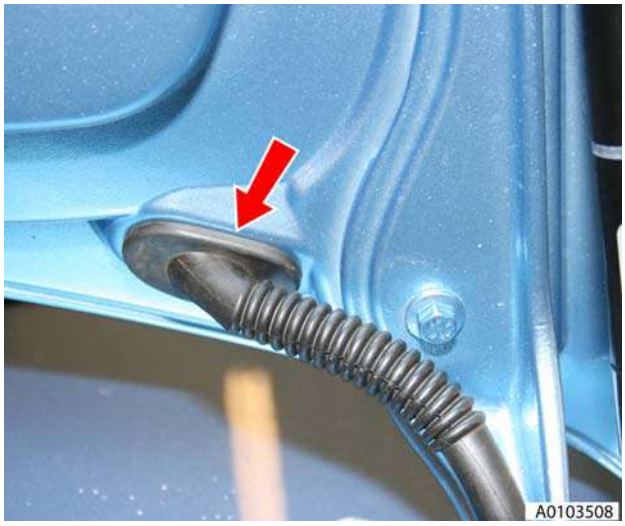

Figure 5

10. Remove bolts (x2) securing harness to hinge and release harness (see Figure 6).

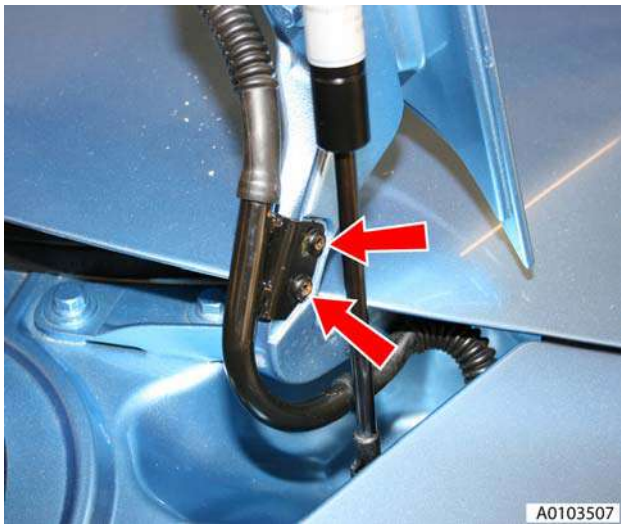

Figure 6

11. Remove cable tie, remove bolts (x3) securing latch to boot lid and remove latch (see Figure 7).

Figure 7

12. Remove nuts (x2) securing stop light to boot lid and remove stop light and recover washers (x2).

13. Remove nuts (x2) securing release switch to boot lid and remove switch (see Figure 8).

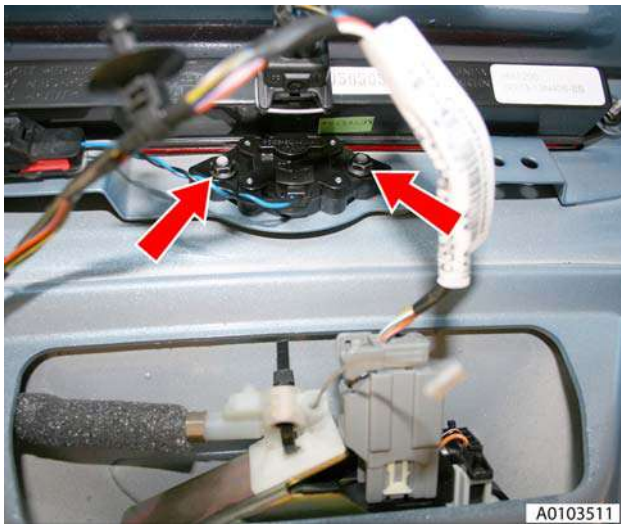

Figure 8

14. Remove boot lid buffers (x2) from boot lid (see Figure 9).

Figure 9

15. Remove badge from boot lid.

Caution
Protect surrounding paintwork using suitable tape.

16. Mark outline of hinges on boot lid using a suitable marker to aid installation (see Figure 10).

Figure 10

17. Release clips (x2) securing gas struts to boot lid, release struts and support boot lid (see Figure 11).

Figure 11

18. Using assistance, support boot lid, remove bolts (x4) securing hinges to boot lid and remove.

Installation

1. Using assistance, position trunk lid to body, fit bolts (x4) securing hinges to boot lid.
2. Position gas struts to boot lid and secure with clips.
3. Install tailgate buffers (x2) to boot lid.
4. Install release switch and secure with nuts.
5. Install stop light and secure with nuts and washers.
6. Install latch and secure with bolts and cable tie.
7. Position harness to hinge and secure with bolts.
8. Install harness in boot lid, secure grommet and clips.

9. Connect multiplugs to boot lid latch, boot lid release switch, release solenoid and stop light.
10. Connect multiplug to antenna and fit to panel.
11. Install interior panel and secure with bolts.
12. Secure harness to interior panel using clip.
13. Install boot lid trim panel and secure with clips.
14. Connect cable to release lever and secure with clip.
15. Install strap and secure with bolt.
16. Close boot lid and check profile against body, adjust buffers as necessary.
17. Fit boot lid badge.

Boot Lid Hinge Assembly (Pair) - Renew (Roadster Only)

Repair Operation Time (ROT)	
Item	**Code**
Boot Lid Hinge Assembly (Pair)-Renew	**01.03.GB**

Removal

1. Open boot lid.
2. Mark outline of hinge on boot lid using a suitable marker (see Figure 1).

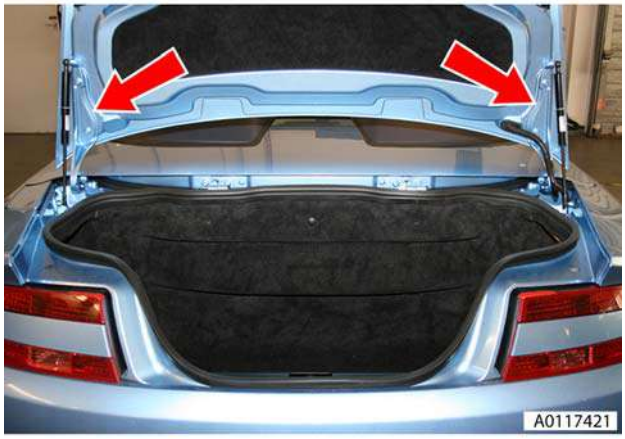

Figure 1

3. Mark outline of hinge on body using a suitable marker (see Figure 2).

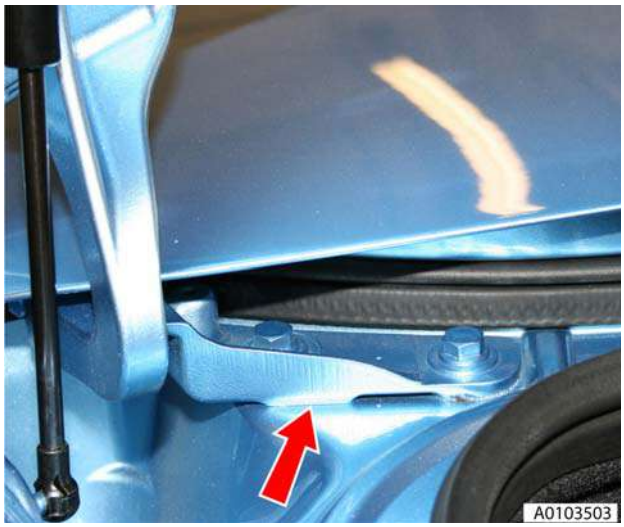

Figure 2

4. Using assistance, support boot lid and remove bolts (x2) securing hinge to boot lid and bolts (x2) securing hinge to body and remove hinge.

Installation

1. Install hinge, align to marked outline and secure to body and boot lid with bolts.
2. Open boot lid.
3. Mark outline of hinge on boot lid using a suitable marker.
4. Mark outline of hinge on body using a suitable marker.
5. Remove clip securing gas strut to boot lid and release gas strut.
6. Using assistance, support boot lid and remove bolts (x2) securing hinge to boot lid and bolts (x2) securing hinge to body and remove hinge.
7. Install hinge, align to marked outline and secure to body and boot lid with bolts.
8. Close boot lid.

Boot Gas Strut (Pair) - Renew (Roadster Only)

Repair Operation Time (ROT)	
Item	**Code**
Boot Gas Strut (Pair)-Renew	**01.03.GD**

Removal

1. Open boot lid.
2. Release clip securing LH gas strut to boot lid and release gas strut (see Figure 1).

Figure 1

3. Release clip securing LH gas strut to body and remove gas strut (see Figure 2).

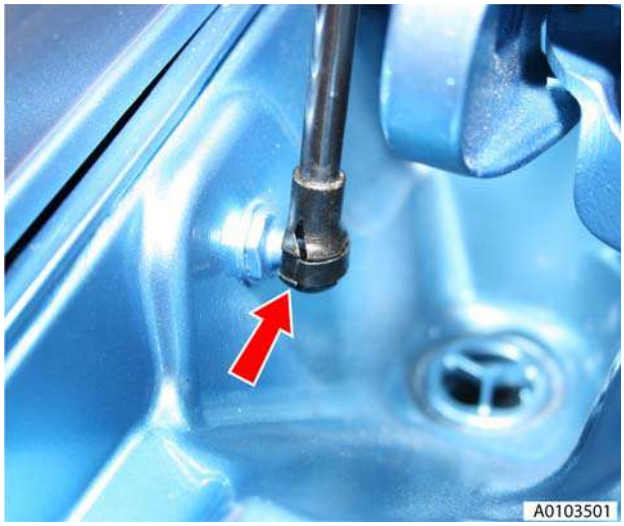

Figure 2

Installation

1. Clean gas strut, install and secure with clips.
2. Release clip securing RH gas strut to boot lid and release gas strut.
3. Release clip securing RH gas strut to body and remove gas strut.
4. Clean gas strut, install and secure with clips.
5. Close boot lid.

Boot Lid Striker Assembly - Renew (Roadster Only)

Repair Operation Time (ROT)	
Item	**Code**
Boot Lid Striker Assembly-Renew	**01.03.GE**

Removal

1. Access luggage compartment and remove floor carpet.
2. Release clips securing warning triangle in place and remove (see Figure 1).

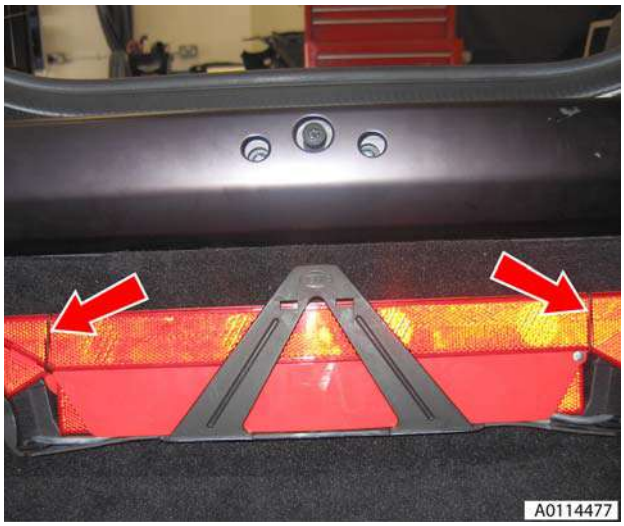

Figure 1

3. Remove 2 bolts securing warning triangle bracket to body and remove (see Figure 2).

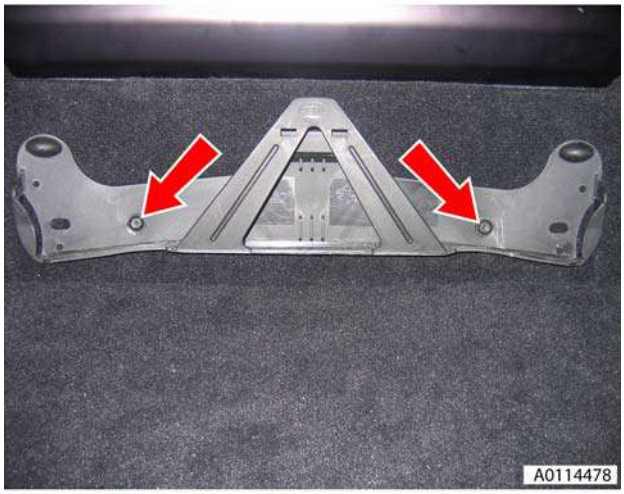

Figure 2

4. Remove 2 bolts either side of striker pin securing striker panel to body.
5. Pull up rear carpet and secure in place.
6. Remove 2 lower bolts securing striker panel to body (see Figure 3).

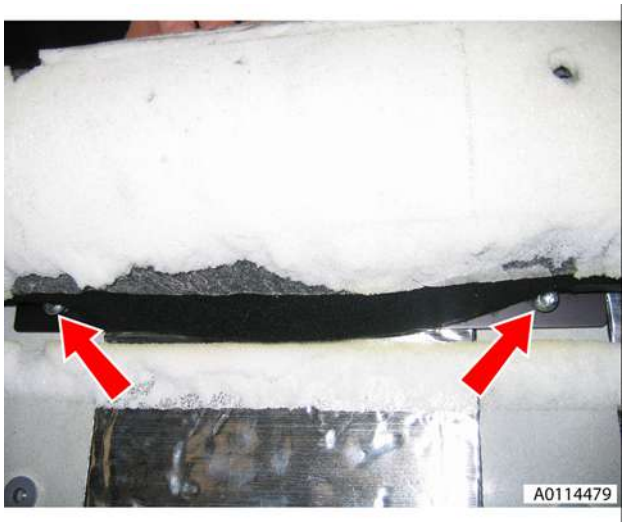

Figure 3

7. Release centre of luggage compartment seal, remove striker panel and rear carpet (see Figure 4).

Figure 4

8. Release striker assembly from rear carpet and remove.

Installation

1. Attach rear carpet to striker panel and install, secure with lower bolts.
2. Release and install rear carpet.
3. Secure striker panel with upper bolts.
4. Install luggage compartment seal.
5. Install warning triangle bracket and secure with bolts.
6. Install warning triangle and secure with clips.
7. Install floor carpet and close luggage compartment.

Exterior Boot Lid Switch Release - Renew (Roadster Only)

Repair Operation Time (ROT)	
Item	**Code**
Exterior Boot Lid Release Switch-Renew	**01.03.GF**

Removal

1. Open boot lid.
2. Remove bolt securing strap to boot lid and remove strap.
3. Remove clip securing cable to release lever and remove cable.
4. Release 8 clips and remove boot lid trim panel.
5. Disconnect multiplug release switch.
6. Remove nuts (x2) securing release switch to boot lid and remove switch (see Figure 1).

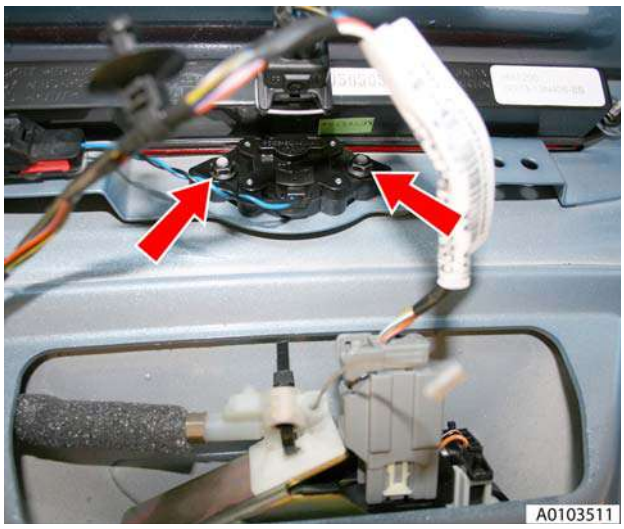

Figure 1

Installation

1. Install release switch and secure with nuts.
2. Connect multiplug release switch.
3. Install boot lid trim panel and secure with clips.
4. Connect cable to release lever and secure with clip.
5. Install strap and secure with bolt.
6. Close boot lid.

Tailgate Assembly - Renew

Repair Operation Time (ROT)	
Item	**Code**
Tailgate Assembly-Renew	**01.03.GG**

Removal

1. Battery isolation switch 'OFF'.
2. Remove RH quarter upper trim panel (see Workshop Manual procedure 01.05.CX Moulding Assembly - Quarter Trim Upper - RH - Renew).

3. Remove LH quarter upper trim panel (see Workshop Manual procedure 01.05.CY Moulding Assembly - Quarter Trim Upper - LH - Renew).
4. Remove rear header trim panel (see Workshop Manual procedure 01.05.BK Panel Assembly - Rear Header - Renew).
5. Disconnect LH and RH tailgate harnesses in cabin
6. Remove LH and RH harness grommets from body.
7. Remove tailgate trim panel (see Workshop Manual procedure 01.05.EF Trim - Tailgate Lid Assembly - Renew).
8. Disconnect GPS antenna multiplug, remove bolts (x3), remove GPS antenna.
9. Disconnect multiplug form central high stop lamp, remove nuts (x2), remove central high stop lamp.
10. Disconnect multiplug from tailgate release switch, remove nuts (x2), remove tailgate release switch.
11. Remove tailgate buffer stops (x2).
12. Install protection between tailgate corners and bodywork.
13. Release clips, disconnect gas struts (x2) from tailgate.
14. With assistance, remove bolts (x4) securing tailgate to hinges, remove tailgate assembly.

Installation

1. With assistance, install and align tailgate to hinges, install bolts (x4). Do not torque tighten at this stage.
2. Adjust alignment of tailgate and torque tighten hinge bolts.
3. Connect gas struts to tailgate and secure with clips.
4. Install tailgate buffers and adjust height as necessary
5. Install tailgate release switch, install and tighten nuts (x2), connect multiplug.
6. Install central high level stop lamp assembly, install and tighten nuts (x2), connect multiplug.
7. Install GPS antenna, install and tighten bolts (x3), connect multiplug.
8. Install tailgate trim panel (see Workshop Manual procedure 01.05.EF Trim - Tailgate Lid Assembly - Renew).
9. Install rear header trim panel (see Workshop Manual procedure 01.05.BK Panel Assembly - Rear Header - Renew).
10. Install LH upper quarter trim panel (see Workshop Manual procedure 01.05.CY Moulding Assembly - Quarter Trim Upper - LH - Renew).
11. Install RH upper quarter trim panel (see Workshop Manual procedure 01.05.CX Moulding Assembly - Quarter Trim Upper - RH - Renew).
12. Remove protection from tailgate and body.
13. Battery isolation switch 'ON'.

Tailgate Hinge Assembly (Pair) - Renew

Repair Operation Time (ROT)	
Item	**Code**
Tailgate Hinge Assembly (Pair)-Renew	**01.03.GK**

Removal

1. Protect bodywork.
2. Mark position of hinges.
3. With assistance support and hold tailgate.
4. Disconnect tailgate gas strut to hinge (see Figure 1).

Figure 1

5. Remove torx screws hinge to tailgate (x2) and body (x2) and remove hinge (see Figure 2).

Figure 2

Installation

1. Install hinge, but do not fully tighten screws.
2. Connect tailgate gas strut.

3. Repeat remove and installation procedure for opposite hinge (see Figure 1).

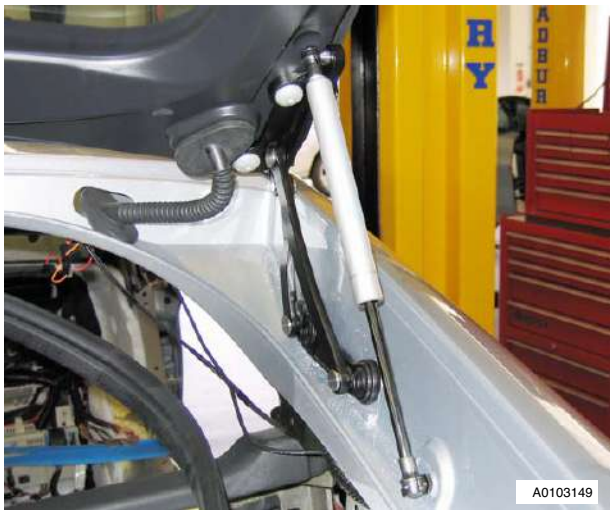

Figure 1

4. Check alignment of tailgate and adjust as necessary.
5. Fully tighten screws (x8) tailgate hinges.
6. Remove bodywork protection.

Hood Assembly - Renew

Repair Operation Time (ROT)	
Item	**Code**
Hood Assembly-Renew	**01.03.AB**

Removal

1. Open hood.
2. Disconnect windscreen wash pipe.
3. Remove cap nut, nut and release earth lead from hood.
4. Remove buffers from hood.
5. Remove Torx screws (x2) securing striker plate to hood, remove striker plate.
6. Remove Torx screws (x2) securing safety catch to hood, remove safety catch.
7. Remove hood sound insulation.
8. Remove cap nuts (x12) securing air intake grilles (x2) to hood, remove grilles.
9. Disconnect screen washer hose, reservoir to non-return valve.
10. Loosen hood hinge bolts (4).
11. Disconnect gas struts and remove hinge bolts
12. With assistance, remove bolts (x4) and hood.
13. Remove ball studs from bonnet.
14. Remove screen washer jets (x2) and hoses from hood.

Installation

1. Install and torque tighten ball studs (x2).
2. Install screen washer hoses and jets (x2).
3. With assistance, position hood to hinges, install bolts (x4). Do not torque tighten at this stage.
4. Install safety catch, install and torque tighten Torx screws (x2).
5. Install striker plate, install and torque tighten Torx screws (x2).
6. Install air intake grilles (x2), install and tighten cap nuts (x12).
7. Install Buffers to hood.
8. Install sound insulation.
9. Align hood to aperture.
10. Raise hood and tighten up one hinge bolt either side.
11. Lower hood and check alignment
12. Raise hood and torque tighten hinge bolts (x4).
13. Install gas struts.
14. Install earth lead to hood, install and tighten nut and cap nut.
15. Connect screen washer hose.
16. Close hood to check engagement of latch assembly, adjust if necessary
17. Close hood and check operation of hood release lever.

Hood Hinge Assembly (Vehicle Set) - Renew

Repair Operation Time (ROT)	
Item	**Code**
Hood Hinge Assembly (Vehicle Set)-Renew	**01.03.AE**

Removal

1. Remove LH wing (see Workshop Manual procedure 01.02.LB Panel Assembly - Front Wing - LH - Renew).
2. Remove RH wing (see Workshop Manual procedure 01.02.KB Panel Assembly - Front Wing - RH - Renew).
3. Protect bodywork.
4. Mark position of hinges (see Figure 1).

Figure 1

5. Remove hood ground strap (see Figure 2).

Figure 2

6. With assistance support and hold hood.
7. Remove bolts hinge to hood (x2) and body (x2) and remove hinge and collect shims (see Figure 3).

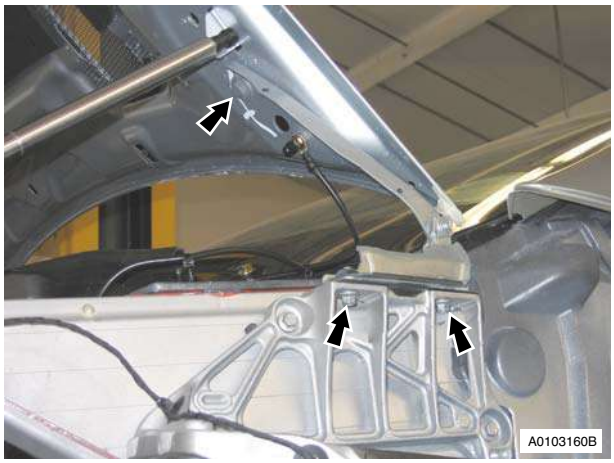

Figure 3

Installation

1. Install hinge (to markings) and shims (quantity as removed), but do not fully tighten bolts.
2. Repeat remove and installation procedure for opposite hinge.
3. Install LH wing (see Workshop Manual procedure 01.02.LB Panel Assembly - Front Wing - LH - Renew).
4. Install RH wing (see Workshop Manual procedure 01.02.KB Panel Assembly - Front Wing - RH - Renew).
5. Check alignment of hood and adjust installing or removing shims as necessary.
6. Fully tighten bolts (x8) on hinges.
7. Install hood ground strap
8. Remove bodywork protection.

ASTON MARTIN
ASTON MARTIN

Body System (01.00)

Interior Trim (01.05)

This section covers removal and installation of the interior mouldings and trim panels. In many instances, one component overlaps another component. If this condition is found, it will be necessary to loosen or remove the overlapping component before removal, to prevent damage to either component.

Maintenance

Rear Centre Console - Renew

Repair Operation Time (ROT)	
Item	**Code**
Rear Centre Console-Renew	**01.04.BB**

Removal

1. Battery isolation switch 'OFF'.
1. Remove storage compartment door.
2. Remove bolt and screws (x5) from support rail to body and remove support rail.
3. Remove screw (x1) centre arm rest to rear console panel assembly and remove arm rest (see Figure 1).

Figure 1

4. Remove nuts (x3), screws (x4) from panel assembly rear console (see Figure 2).

Figure 2

5. Remove screws (x2) ashtray console panel assembly to floor.
6. Remove rear console panel assembly.

Installation

1. Position rear console panel, install and tighten nuts (x3) and screws (x4).
2. Install screws (x2) ashtray console panel to floor.
3. Install centre arm rest.
4. Install support rail, install and tighten screws (x5) and bolt.
5. Install stowage compartment door.

Headlining - Renew (Roadster Only)

Repair Operation Time (ROT)	
Item	**Code**
Headlining-Renew	**01.05.BA**

Removal

1. Remove header trim (see Workshop Manual procedure 01.05.BB Panel Assembly - Header - Renew).
2. Remove screws (x28) securing rear seal to tension bow, release seal and springs, collect brackets and rest seal on tonneau (see Figure 1).

Figure 1

3. Release headlining from double sided tape secured to tension bow (see Figure 2).

Figure 2

4. Disconnect heated rear screen connectors (x2) (see Figure 3).

Figure 3

5. Pass connectors through securing loops (see Figure 4).

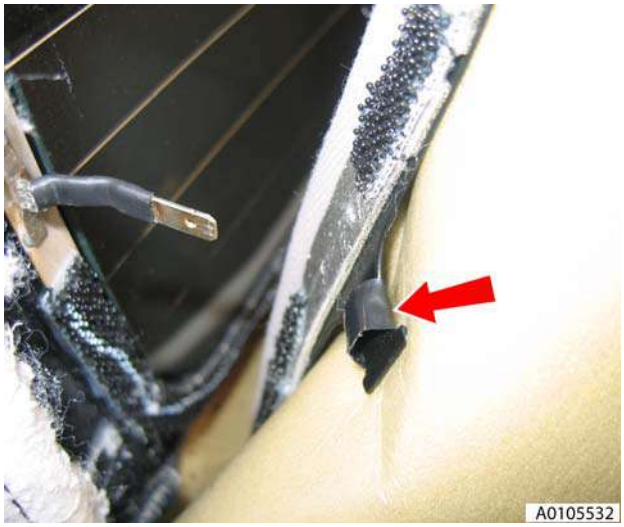

Figure 4

6. Release water pockets from B-post seal (see Figure 5).

Figure 5

7. Release rear of canopy cover from tension bow and release velcro securing rear screen to headlining to gain access to headlining screws (see Figure 6).

Figure 6

8. Position seat back rests in forward position.
9. Remove screws (x5) securing headlining to third cross bar and release headlining (see Figure 7).

Figure 7

10. Remove screw securing tension string to front of third cross bar (see Figure 8).

Figure 8

11. Remove screws (x2) securing tension strings underside of third cross bar (see Figure 9).

Figure 9

12. Remove screws (x2) securing tension strings to hinges (see Figure 10).

Figure 10

13. Position hood to gain access to B-post fixing screws.
14. Mark position of screws (x4) to aid installation.
15. Remove screws (x4) securing trims to hood mechanism and release trims (see Figure 11).

Figure 11

16. Un-hook B-post tension springs from hood mechanism (see Figure 12).

Figure 12

17. Remove screws (x2) securing straps to hood mechanism and remove trims (see Figure 13).

Figure 13

18. Remove screws (x5) securing headlining to second cross bar (see Figure 14).

Figure 14

19. Remove screws (x2) securing headlining straps and tension strings to hood mechanism (see Figure 15).

Figure 15

20. Remove screws (x5) securing headlining to first cross bar.

21. Remove screws (x2) securing tension strings to underside of header rail (see Figure 16).

Figure 16

22. Release front of headlining from mounting rail and remove headlining (see Figure 17).

Figure 17

23. Remove headlining bows from pockets.

Installation

1. Install headlining bows to pockets.
2. Install headlining and mount to front rail. Ensure an equal amount of overhang on each side.
3. Secure tension strings to underside of header rail using screws.
4. Secure headlining to first cross bar using screws (start with the middle screw and work outboard).
5. Secure headlining straps and tension strings to hood mechanism with screws.
6. Secure headlining to second cross bar using screws (start with the middle screw and work outboard).

7. Position B-post trims, pass straps through and secure to hood mechanism using screws.
8. Pass tension springs through B-post trims and secure to hood mechanism using hooks.
9. Position hood to gain access to B-post fixing locations.
10. Install B-post trims to hood mechanism, align using marks and secure with screws.
11. Position tension strings and secure to hinges using screws.
12. Position tension strings underside of third cross bar and secure with screws.
13. Position tension string to front of third cross bar and secure with screw.
14. Secure headlining to third cross bar and secure with screws (start with the middle screw and work outboard).
15. Position seat back rests in upright position.
16. Install rear of canopy cover to tension bow and secure headlining velcro to rear screen surround (centre velcro on top and bottom of screen and continue to corners pressing outer canopy and headlining together).
17. Ensure headlining velcro is installed centrally to rear screen.
18. Feed heated rear screen connectors through securing loops.
19. Connect heated rear screen Lucars.
20. Insert water pocket to seal, place a drop of super glue at each end of water pockets.
21. Crimp seal to secure water pocket in place.
22. Secure headlining to tension bow using double sided tape.
23. Position rear seal to tension bow, fit brackets, springs and secure with screws. Ensure carrier ends are flush with tension bow.
24. Fit header trim (see Workshop Manual procedure 01.05.BB Panel Assembly - Header - Renew).

Header Panel Assembly - Renew (Excluding Roadster)

Repair Operation Time (ROT)	
Item	**Code**
Header Panel Assembly-Renew	**01.05.BB**

Removal

1. Remove front header console assembly (see Workshop Manual procedure 01.05.BC Console Assembly - Front Header - Renew).
2. Remove RH front pillar upper trim panel (see Workshop Manual procedure 01.05.BD Trim - Upper Panel - Front Pillar - RH - Renew).
3. Remove LH front pillar upper trim panel (see Workshop Manual procedure 01.05.BE Trim - Upper Panel - Front Pillar - LH - Renew).
4. Remove sun visor Allen screws (x2 (see Figure 1).

Figure 1

5. Remove sunvisor (see Figure 2).

Figure 2

6. Remove screws (x2) front header to body.
7. Remove front header panel.
8. Remove mass movement sensor from front header.

Installation

1. Install mass movement sensor.
2. Install front header panel.
3. Position sun visors and install screws (x4).
4. Install RH front pillar upper trim panel (see Workshop Manual procedure 01.05.BD Trim - Upper Panel - Front Pillar - RH - Renew).
5. Install LH front pillar upper trim panel (see Workshop Manual procedure 01.05.BE Trim - Upper Panel - Front Pillar - LH - Renew).
6. Install front header console assembly (see Workshop Manual procedure 01.05.BC Console Assembly - Front Header - Renew).

Header Panel Assembly - Renew (Roadster Only)

Repair Operation Time (ROT)	
Item	**Code**
Header Panel Assembly-Renew	**01.05.BB**

Removal

1. Operate roof to halfway position.
2. Support roof when hydraulic pressure drops with suitable straps (see Figure 1).

WARNING

APPROXIMATELY 20 SECONDS AFTER THE OPEN/ CLOSE OPERATION HAS BEEN INTERRUPTED THE ROOF MAY SUDDENLY DROP DUE TO LOSS OF HYDRAULIC PRESSURE. IF THIS HAPPENS ENSURE NO BODY PARTS ARE CLOSE TO THE ROOF MECHANISM. IF THE ROOF REQUIRES MAINTENANCE, SUPPORT PROPERLY USING SUITABLE PROPS AND STRAPS.

Figure 1

3. Remove 8 screws securing front of header assembly to roof (see Figure 2).

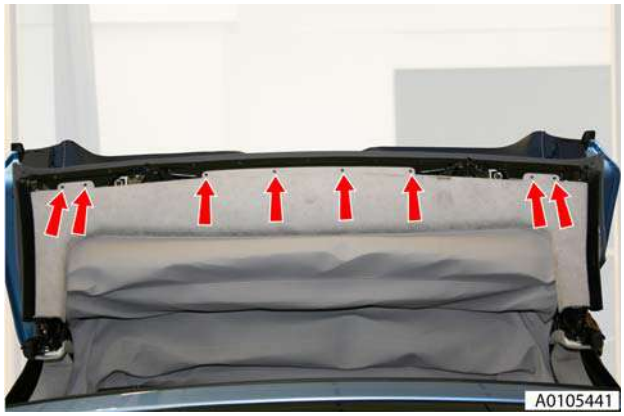

Figure 2

4. Remove 2 screws securing rear of header assembly to roof (see Figure 3).

Figure 3

5. Release 4 clips securing header assembly to roof and remove.

Installation

1. Install header assembly to roof and secure with clips.
2. Secure rear of header assembly to roof with screws.
3. Secure front of header assembly to roof with screws.
4. Return roof to original position.

Front Header Console Assembly - Renew

Repair Operation Time (ROT)	
Item	**Code**
Front Header Console Assembly-Renew	**01.05.BC**

Removal

1. Remove rear view mirror (see Workshop Manual procedure 01.08.FA Mirror Assembly - Rear Dipping - Renew).
2. Remove grille from front header map lamp console.
3. Remove screw securing map lamp console to header.
4. Release map lamp console from header.
5. Turn bulb holders anticlockwise and release bulb holders. Remove console.
6. Depress clips and press out map lamps.

Installation

1. Install map lamps.
2. Position console, install bulb holders.
3. Install map lamp console, install and tighten screw.
4. Install grille.
5. Install interior mirror (see Workshop Manual procedure 01.08.FA Mirror Assembly - Rear Dipping - Renew).

RH/LH Upper Rear Pillar Panel Assembly - Renew

Repair Operation Time (ROT)		
Item		**Code**
Upper Rear Pillar Panel Assembly-Renew	RH	**01.05.BF**
Upper Rear Pillar Panel Assembly-Renew	LH	**01.05.BG**

Removal

1. Open tailgate.
2. Remove rear header.
3. Release boot compartment lamp from rear pillar panel. Disconnect multiplug (see Figure 1).

Figure 1

4. Remove nut securing rear pillar panel assembly to body.
5. Release panel from fir tree clip.
6. Remove panel.
7. Remove fir tree clip from panel.

Installation

1. Install fir tree clip in panel.
2. Install panel and secure with nut and fir tree clip.
3. Connect multiplug, install boot compartment lamp in panel.
4. Install rear header.
5. Close tailgate.

RH Sun Visor - Renew

Repair Operation Time (ROT)		
Item		**Code**
Sun Visor-Renew	RH	**01.05.BH**

Removal

1. Remove rear view mirror (see Workshop Manual procedure 01.08.FA Mirror Assembly - Rear Dipping - Renew).
2. Remove grill from front header courtesy light console
3. Remove screw (x1) courtesy light console to front header.
4. Remove courtesy light console from header.
5. Remove sun visor Allen screws (x2)
6. Remove sun visor.

Installation

1. Position sun visor and install screws (x2).
2. Install courtesy light console.
3. Install grill.
4. Install rear view mirror (see Workshop Manual procedure 01.08.FA Mirror Assembly - Rear Dipping - Renew).

LH Sun Visor - Renew

Repair Operation Time (ROT)		
Item		**Code**
Sun Visor-Renew	LH	**01.05.BJ**

Removal

1. Remove rear view mirror (see Workshop Manual procedure 01.08.FA Mirror Assembly - Rear Dipping - Renew).
2. Remove grill from front header courtesy light console.
3. Remove screw securing courtesy light console to header (see Figure 1).

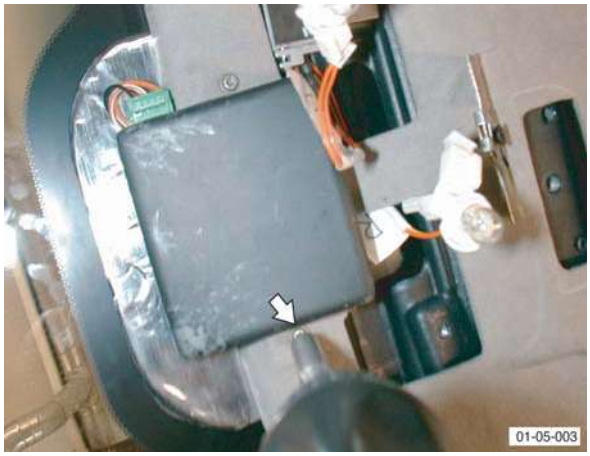

Figure 1

4. Remove courtesy light console from header.

5. Remove sun visor allen screws (x2) (see Figure 2).

Figure 2

6. Remove sunvisor.

Installation

1. Position sun visor and install screws (x2).
2. Install courtesy light console.
3. Install grille.
4. Install rear view mirror (see Workshop Manual procedure 01.08.FA Mirror Assembly - Rear Dipping - Renew).

Door Trimboard Assembly - Renew

Repair Operation Time (ROT)	
Item	**Code**
Door Trimboard Assembly-Renew	**01.05.CA**

Removal

1. Remove trimboard (see Workshop Manual procedure 01.05.CB Trimboard Assembly - Door - Remove for Access and Refit).
2. Remove switch pack (screws x4).
3. Remove puddle lamp.
4. Remove door pocket (nuts x10).
5. Remove centre trim (velcro x6).
6. Remove top trim and speaker grille (screws x12).
7. Remove demist duct (screws x3).

Installation

1. Install demist duct.
2. Install top trim and speaker grille.
3. Install centre trim (velcro x6).
4. Install door pocket.
5. Install puddle lamp.
6. Install switch pack.
7. Install trimboard (see Workshop Manual procedure 01.05.CB Trimboard Assembly - Door - Remove for Access and Refit).

Door Trimboard Assembly - Remove for Access/Refit

Repair Operation Time (ROT)	
Item	**Code**
Door Trimboard Assembly-Remove/ Refit	**01.05.CB**

Removal

1. Lower door glass fully.
2. Battery isolation switch 'OFF'.
3. Remove Allen bolts (x2) securing door handle assembly to door panel.
4. Remove trim insert, disconnect door catch inner and outer cable from handle and retaining plate. Remove handle assembly.
5. Remove screw securing trimboard to upper front of door frame.
6. Remove screws (x4) securing trimboard to door frame.
7. Raise trimboard out and up to release from door frame clips, disconnect multiplugs (x2).

Installation

1. Position door trim panel, connect multiplugs (x2). Place trimboard over top of retaining clips and pull out and down to install trimboard.
2. Install and tighten trimboard screws (x4).
3. Install and tighten screw, trimboard to upper front of door frame.
4. Position handle assembly, connect release cable, install handle trim insert.
5. Install and tighten Allen bolts (x2), handle assembly to door frame.
6. Battery isolation switch 'ON'.

Lower Quarter Trim Panel Assembly - Renew (Roadster Only)

Repair Operation Time (ROT)		
Item		**Code**
Lower Quarter Trim Panel Assembly-Renew	RH	**01.05.CR**
Lower Quarter Trim Panel Assembly-Renew	LH	**01.05.CS**

Removal

1. Remove Wind deflector (see Workshop Manual procedure 01.17.DA Wind Deflector - Renew).
2. Remove Panel centre (see Workshop Manual procedure 01.05.FS/01.05.FR Panel Assembly - Centre - Rear Bulkhead - RH/LH - Renew).
3. Remove Speaker grille (see Workshop Manual procedure 01.05.CN/01.05.CP Grille - Speaker Rear Quarter - RH/LH - Renew).

4. Remove screw (x1) securing quarter trim to body (under speaker grille) (see Figure 1).

Figure 1

5. Remove screw (x1) securing bottom centre of quarter trim (see Figure 2).

Figure 2

6. Remove bolt securing body side trim to quarter panel via B-post roof aperture (see Figure 3).

Figure 3

7. Remove nuts (x2) securing panel quarter trim to body side trim (see Figure 4).

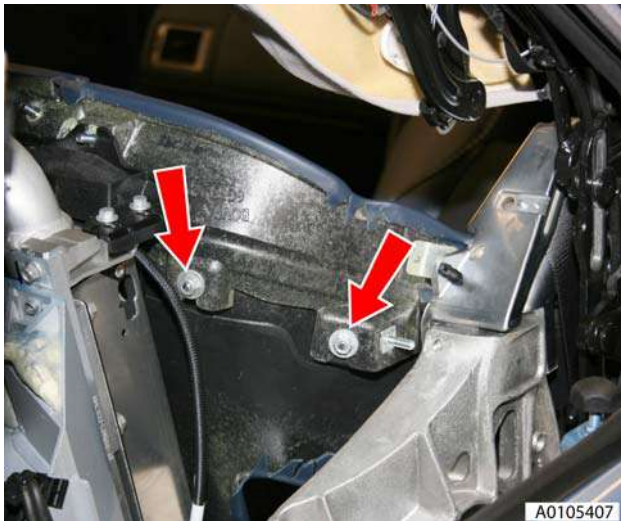

Figure 4

8. Release fir tree clip securing quarter trim to body (see Figure 5).

Figure 5

9. Release quarter trim from heal board and remove quarter trim (see Figure 6).

Figure 6

10. Remove nut (x2) securing lower panel to quarter panel.

Removal

1. Install nut (x2) securing lower panel to quarter panel.
2. Install quarter trim and secure under heal board.
3. Install fir tree clip securing quarter trim to body.
4. Install nuts (x2) securing panel quarter trim to body side trim.
5. Install bolt securing body side trim to quarter panel via B-post roof aperture.
6. Install screw (x1) securing bottom centre of quarter trim.
7. Install screw (x1) securing quarter trim to body (under speaker grille)
8. Remove Speaker grille (see Workshop Manual procedure 01.05.CN/01.05.CP Grille - Speaker Rear Quarter - RH/LH - Renew).
9. Remove Panel centre (see Workshop Manual procedure 01.05.FS/01.05.FR Panel Assembly - Centre - Rear Bulkhead - RH/LH - Renew).
10. Install Wind deflector (see Workshop Manual procedure 01.17.DA Wind Deflector - Renew).

Side Carpet Kit (RHD) - Renew

Repair Operation Time (ROT)	
Item	**Code**
Side Carpet Kit (RHD)-Renew	**01.05.DL**

Removal

1. Remove handbrake gaiter (see Workshop Manual procedure 01.05.DK Gaiter - Handbrake - Renew).
2. Remove passenger seat (see Workshop Manual procedure 01.10.AA Seat Assembly - Front - RH - Remove for Access and Refit
3. Remove drivers seat (see Workshop Manual procedure 01.10.AB Seat Assembly - Front - LH - Remove for Access and Refit).
4. Remove LH quarter panel assembly (see Workshop Manual procedure 01.05.CM Panel Assembly - Quarter - LH - Remove for Access and Refit).
5. Remove RH quarter panel assembly (see Workshop Manual procedure 01.05.CL Panel Assembly - Quarter - RH - Remove for Access and Refit).
6. Pull back RH front centre carpet for access (press stud x1).
7. Remove LH rear centre (press stud x2) and seat runner carpets for access.
8. Remove RH sill carpet, pull from around, handbrake lever and A-post trim.
9. Remove LH tunnel carpet, pull from under centre console and footrest.
10. Pull back LH front centre carpet for access.
11. Remove RH rear centre (press stud x2) and seat runner carpets for access.
12. Remove LH sill carpet, pull from around A-post trim.
13. Remove RH tunnel carpet, pull from under centre console.

Installation

1. Install RH sill carpet around handbrake lever and A-post trim.
2. Install LH tunnel carpet, push under centre console and footrest.
3. Install RH front centre carpet (ensure good fit around pedals).
4. Install LH rear centre (ensure end tucked into sub woofer) and seat runner carpets.
5. Install LH sill carpet, ensure fit around A-post trim.
6. Install RH tunnel carpet, push under centre console.

7. Install LH front centre carpet.
8. Install RH rear centre (ensure end tucked into heel board) and seat runner carpets.
9. Install LH quarter panel assembly (see Workshop Manual procedure 01.05.CM Panel Assembly - Quarter - LH - Remove for Access and Refit).
10. Install RH quarter panel assembly (see Workshop Manual procedure 01.05.CL Panel Assembly - Quarter - RH - Remove for Access and Refit).
11. Install passenger seat (see Workshop Manual procedure 01.10.AA Seat Assembly - Front - RH - Remove for Access and Refit).
12. Install drivers seat (see Workshop Manual procedure 01.10.AB Seat Assembly - Front - LH - Remove for Access and Refit).
13. Install handbrake gaiter (see Workshop Manual procedure 01.05.DK Gaiter - Handbrake - Renew).

Side Carpet Kit (LHD) - Renew

Repair Operation Time (ROT)	
Item	**Code**
Side Carpet Kit (LHD)-Renew	**01.05.DM**

Removal

1. Remove handbrake gaiter (see Workshop Manual procedure 01.05.DK Gaiter - Handbrake - Renew).
2. Remove passenger seat (see Workshop Manual procedure 01.10.AA Seat Assembly - Front - RH - Remove for Access and Refit).
3. Remove drivers seat (see Workshop Manual procedure 01.10.AB Seat Assembly - Front - LH - Remove for Access and Refit).
4. Remove LH quarter panel assembly (see Workshop Manual procedure 01.05.CM Panel Assembly - Quarter - LH - Remove for Access and Refit).
5. Remove RH quarter panel assembly (see Workshop Manual procedure 01.05.CL Panel Assembly - Quarter - RH - Remove for Access and Refit).
6. Pull back LH front centre carpet for access (press stud x1) (see Figure 1).

Figure 1

7. Remove LH rear centre (press stud x2) and seat runner carpets for access (see Figure 2).

Figure 2

8. Remove scuff plate (screws x4).
9. Remove LH sill carpet, pull from around footrest, handbrake lever and A-post trim (see Figure 3).

Figure 3

10. Remove LH tunnel carpet, pull from under centre console.

11. Pull back RH front centre carpet for access (see Figure 4).

Figure 4

12. Remove RH rear centre (press stud x2) and seat runner carpets for access (see Figure 5).

Figure 5

13. Remove RH sill carpet, pull from around A-post trim (see Figure 6).

Figure 6

14. Remove RH tunnel carpet, pull from under centre console (see Figure 7).

Figure 7

Installation

1. Install LH sill carpet around footrest, handbrake lever and A-post trim.
2. Install LH tunnel carpet, push under centre console.
3. Install scuff plate (screws x4).
4. Install LH front centre carpet (ensure good fit around pedals).
5. Install LH rear centre (ensure end tucked into sub woofer) and seat runner carpets.
6. Install RH sill carpet, ensure fit around A-post trim.
7. Install RH tunnel carpet, push under centre console.
8. Install RH front centre carpet.
9. Install RH rear centre (ensure end tucked into heel board) and seat runner carpets.
10. Install LH quarter panel assembly (see Workshop Manual procedure 01.05.CM Panel Assembly - Quarter - LH - Remove for Access and Refit).
11. Install RH quarter panel assembly (see Workshop Manual procedure 01.05.CL Panel Assembly - Quarter - RH - Remove for Access and Refit).
12. Install passenger seat (see Workshop Manual procedure 01.10.AA Seat Assembly - Front - RH - Remove for Access and Refit).
13. Install drivers seat (see Workshop Manual procedure 01.10.AB Seat Assembly - Front - LH - Remove for Access and Refit).
14. Install handbrake gaiter (see Workshop Manual procedure 01.05.DK Gaiter - Handbrake - Renew).

Top Rear Console Finisher Panel Assembly - Renew (Roadster Only)

Repair Operation Time (ROT)	
Item	**Code**
Top Rear Console Finisher Panel Assembly-Renew	**01.05.DR**

Removal

1. Remove Wind deflector (see Workshop Manual procedure 01.17.DA Wind Deflector - Renew).
2. Remove Console panel assembly rear LH (see Workshop Manual procedure 01.12.DE Console Panel Assembly - Rear - Roadster - LH - Renew).
3. Remove Console panel assembly rear RH (see Workshop Manual procedure 01.12.DF Console Panel Assembly - Rear Roadster - RH - Renew).
4. Remove screws (x2), collect washers and remove trim.

Installation

1. Install trim, washers and screws.
2. Install Console panel assembly rear RH (see Workshop Manual procedure 01.12.DF Console Panel Assembly - Rear Roadster - RH - Renew).
3. Install Console panel assembly rear LH (see Workshop Manual procedure 01.12.DE Console Panel Assembly - Rear - Roadster - LH - Renew).
4. Install Wind deflector (see Workshop Manual procedure 01.17.DA Wind Deflector - Renew).

RH/LH Bodyside Rear Trim Panel Assembly - Renew (Roadster Only)

Repair Operation Time (ROT)		
Item		**Code**
Bodyside Rear Trim Panel Assembly-Renew	RH	**01.05.DX**
Bodyside Rear Trim Panel Assembly-Renew	LH	**01.05.DY**

Removal

1. Remove Quarter panel trim (see Workshop Manual procedure 01.05.CR/01.05.CS Panel Assembly - Quarter Trim Lower - RH/LH - Renew).
2. Remove Wind stop hook (see Workshop Manual procedure 01.05.CZ Hook - Windstop - Renew).
3. Remove nut securing body side trim to console panel (see Figure 1).

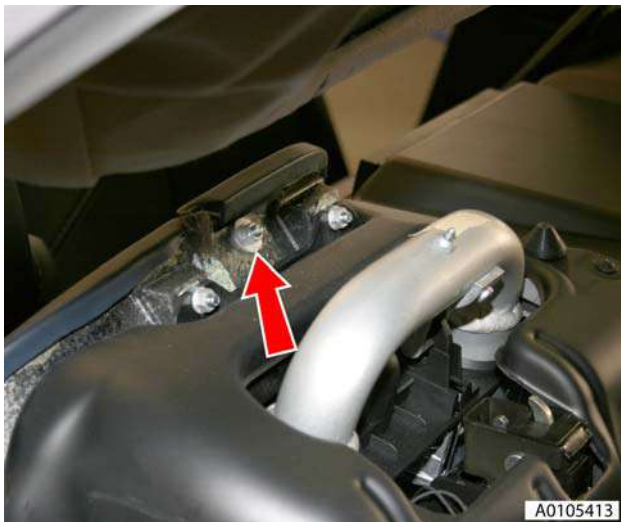

Figure 1

4. Remove nuts securing trim to ROPS bracket (see Figure 2).

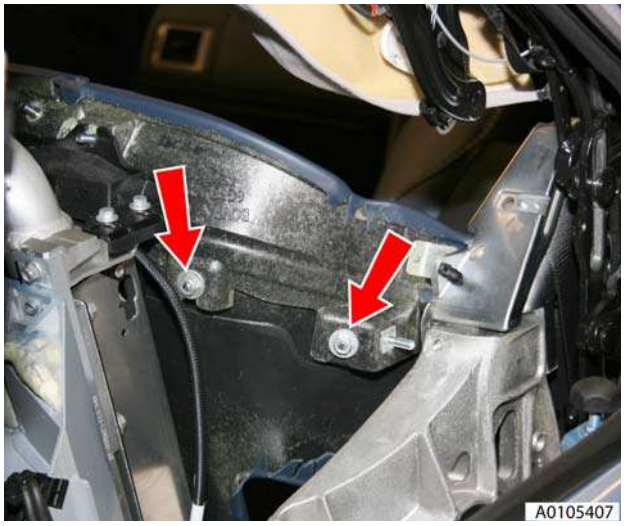

Figure 2

5. Remove bolt securing trim to B-post (see Figure 3).

Figure 3

6. Release fir tree clip and remove trim.

Installation

1. Install trim and secure fir tree clip.
2. Install bolt securing trim to B-post.
3. Install nut securing trim to Roll Over Protection System (ROPS) bracket.
4. Install nut securing body side trim to console panel.
5. Install Wind stop hook (see Workshop Manual procedure 01.05.CZ Hook - Windstop - Renew).
6. Install Quarter panel trim (see Workshop Manual procedure 01.05.CR/01.05.CS Panel Assembly - Quarter Trim Lower - RH/LH - Renew).

Tonneau to Body Weatherstrip Assembly - Renew (Roadster Only)

Repair Operation Time (ROT)	
Item	**Code**
Tonneau to Body Weatherstrip Assembly-Renew	**01.07.AR**

Removal

1. Remove panel assembly body side LH (see Workshop Manual procedure 01.05.DY Panel Assembly - Bodyside Trim - Rear - LH - Renew).
2. Remove panel assembly body side RH (see Workshop Manual procedure 01.05.DX Panel Assembly - Bodyside Trim - Rear - RH - Renew).
3. Mark fitted position of seal on B-post (both sides).
4. Remove nuts (x2) from seal retaining bar and remove bar (both sides) (see Figure 1).

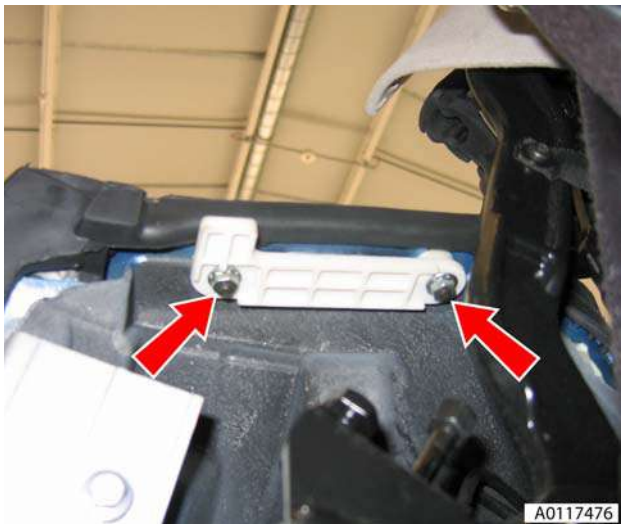

Figure 1

5. Remove retaining clip from B-post (both sides) (see Figure 2).

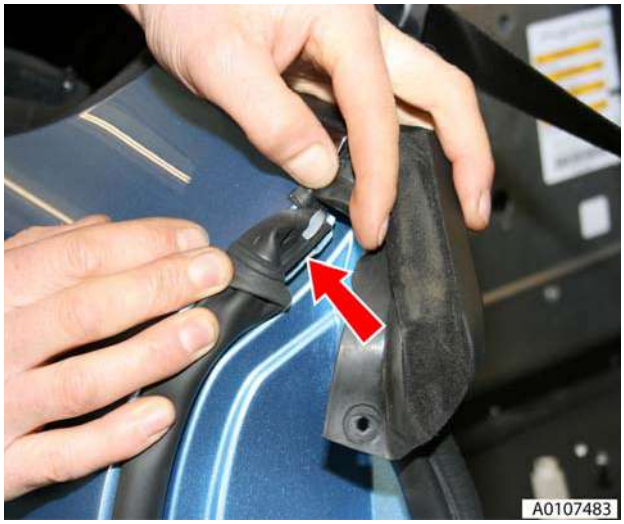

Figure 2

6. Remove margin seal retaining clip from B-post (both sides).

7. Release seal from B-post adhesive (see Figure 3).

Figure 3

8. Release inner part of seal from tonneau (see Figure 4).

Figure 4

9. Release outer seals from body (both sides) and remove seal.
10. Remove chrome trims and clips from seal.

Installation

1. Clean adhesive from B-posts.
2. Install chrome trims and clips to seal.
3. Apply suitable adhesive to B-post part of seal.
4. Align and install seal to fitted position on B-posts (both sides).
5. Position retaining bar and install nuts (both sides).
6. Install outer seals to body (both sides).
7. Install inner part of seal to tonneau.
8. Install margin seal retaining clip from B-post (both sides).
9. Install retaining clip to B-post (both sides).
10. Install panel assembly body side RH (see Workshop Manual procedure 01.05.DX Panel Assembly - Bodyside Trim - Rear - RH - Renew).
11. Install panel assembly body side LH (see Workshop Manual procedure 01.05.DY Panel Assembly - Bodyside Trim - Rear - LH - Renew).

Door Trim Weather Strip Assembly - Renew (Roadster Only)

Repair Operation Time (ROT)	
Item	**Code**
Door Trim Weather Strip Assembly-Renew	**01.07.AX**

Removal

1. Remove LH door assembly (see Workshop Manual procedure 01.03.FA Door Assembly - LH - Remove for Access & Refit).
2. Remove RH door assembly (see Workshop Manual procedure 01.03.EA Door Assembly - RH - Remove for Access & Refit).
3. Remove LH front sill plate (see Workshop Manual procedure 01.05.AK Plate - Front Sill - LH - Renew).
4. Remove RH front sill plate (see Workshop Manual procedure 01.05.AJ Plate - Front Sill - RH - Renew).
5. Remove header rail finisher (see Workshop Manual procedure 01.08.JA Finisher - Header - Windshield - Renew).
6. Remove screw and retaining stud seal retainer to A-post (both sides).
7. Release seal from under tonneau seal and to top of A-posts (both sides) (see Figure 1).

Figure 1

8. Release locating section from above A-post chrome trims (both sides) (see Figure 2).

Figure 2

9. Release seal from under A-post chrome trims (both sides) (see Figure 3).

Figure 3

10. Release seal from header rail and remove.

Installation

1. Clean adhesive from header rail.
2. Apply suitable adhesive to header rail and secure seal to header rail.
3. Secure seal under chrome trims (both sides).
4. Secure locating section from over chrome trims (both sides).
5. Secure seal from top of A-posts to under tonneau seal (both sides) (see Figure 4).

Figure 4

6. Install screw and retaining stud seal retainer to A-post (both sides).
7. Install RH front sill plate (see Workshop Manual procedure 01.05.AJ Plate - Front Sill - RH - Renew).
8. Install LH front sill plate (see Workshop Manual procedure 01.05.AK Plate - Front Sill - LH - Renew).
9. Install RH door assembly (see Workshop Manual procedure 01.03.EA Door Assembly - RH - Remove for Access & Refit).
10. Install LH door assembly (see Workshop Manual procedure 01.03.FA Door Assembly - LH - Remove for Access & Refit).
11. Install header rail finisher (see Workshop Manual procedure01.08.JA Finisher - Header - Windshield - Renew).
12. Perform water leak test (see Workshop Manual procedure 01.17.XX Water Test).

ASTON MARTIN
ASTON MARTIN

Body System (01.00)

Exterior Trim (01.08)

Maintenance

RH/LH Applique Sill - Renew

Repair Operation Time (ROT)		
Item		**Code**
Applique Sill-Renew	LH	**01.08.CC**
Applique Sill-Renew	RH	**01.08.CD**

Removal

1. Raise vehicle on ramp.
2. Remove road wheel/s.
3. Release rear of front wheel arch liner (screws x7) for access.
4. Remove nut and bolt, sill to front fender (see Figure 1).

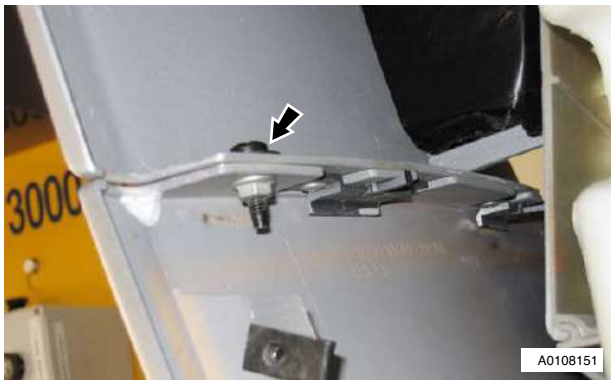

Figure 1

5. Release front of rear wheel arch liner (screws x5) for access.
6. Remove nut and bolts (x2), sill to rear body (see Figure 2).

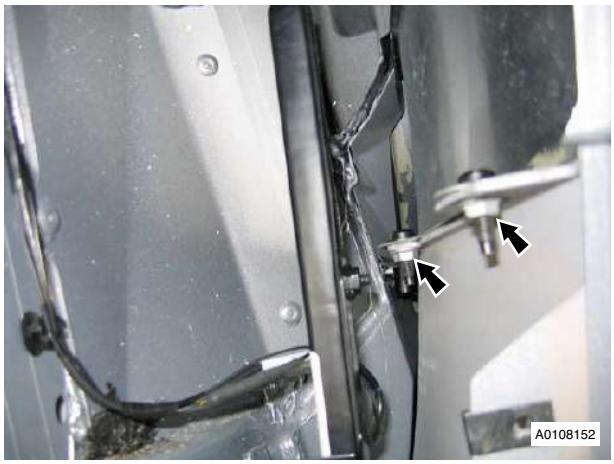

Figure 2

7. Remove screws (x5) sill to body (see Figure 3).

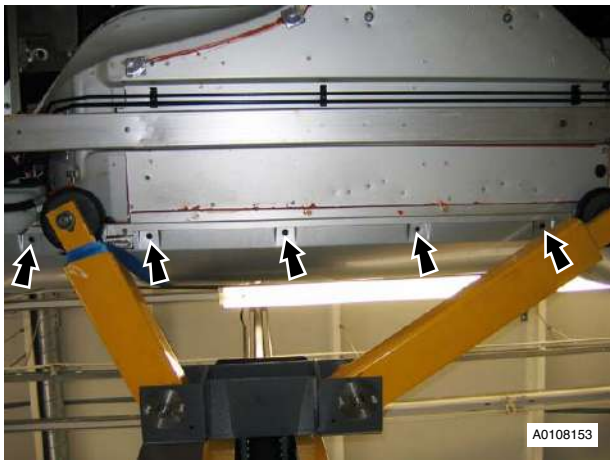

Figure 3

8. Remove margin seal (see Workshop Manual procedure 01.07.AM Seal - Front Door Margin - Lower - RH - Renew).
9. Remove screws (x4) from sill top (see Figure 4).

Figure 4

10. Refit wheels with 3 nuts and lower vehicle to floor.
11. Release clips (x2) wing to sill and remove sill.

Installation

1. Install sill.
2. Install screws (x4) to sill top.
3. Install margin seal (see Workshop Manual procedure 01.07.AM Seal - Front Door Margin - Lower - RH - Renew).
4. Remove wheels and raise vehicle.
5. Install screws (x5) sill to body.
6. Install nut and bolt, sill to front wing.
7. Position front of rear wheel arch liner (screws x5).
8. Install nut and bolts (x2), sill to rear body.
9. Position rear of front wheel arch liner (screws x7).
10. Install road wheel/s.
11. Lower vehicle on ramp.

RH Wing Side Strake - Renew

Repair Operation Time (ROT)		
Item		**Code**
Wing Side Strake-Renew	RH	**01.08.CG**

Removal

1. Disconnect vehicle battery.
2. Raise vehicle on ramp.
3. Remove mesh - RH side strake (see Workshop Manual procedure 01.08.CE Mesh - Side Strake - RH - Renew).
4. Remove Torx screw, (inside A-post) securing side strake to body.
5. Remove nut securing side strake to RH inner fender.
6. Remove side strake.

Installation

1. Install side strake, install and tighten nut and Torx screw.
2. Install mesh - RH side strake (see Workshop Manual procedure 01.08.CE Mesh - Side Strake - RH - Renew).
3. Lower vehicle on ramp.
4. Connect vehicle battery.

LH Wing Side Strake - Renew

Repair Operation Time (ROT)		
Item		**Code**
Wing Side Strake-Renew	LH	**01.08.CH**

Removal

1. Raise vehicle on ramp.
2. Remove mesh - LH side strake (see Workshop Manual procedure 01.08.CF Mesh - Side Strake - LH - Renew).
3. Remove nuts (x3) mesh to side strake.
4. Remove mesh.
5. Remove screw inside A-post side strake to body.
6. Remove nut side strake to wheel arch.
7. Remove side strake.

Installation

1. Install side strake, nut and screw.
2. Position mesh to side strake and install nuts (x3).
3. Install mesh - LH side strake (see Workshop Manual procedure 01.08.CF Mesh - Side Strake - LH - Renew).
4. Lower vehicle on ramp.

Channel Assembly Divider Bar - Renew

Repair Operation Time (ROT)	
Item	**Code**
Channel Assembly Divider Bar-Renew	**01.08.HA**
Channel Assembly Divider Bar-Renew	**01.08.HB**

Removal

1. Remove window regulator (see Workshop Manual procedure 01.11.DA Regulator - Door Glass - RH - Renew).
2. Remove fixed glass (see Workshop Manual procedure 01.11.BG Glass - Front Door - Fixed RH - Renew).
3. Remove seal.
4. Remove screw, divider bar to mirror (see Figure 1).

Figure 1

5. Remove nut (hold stud with Allen key) divider bar to door and remove (see Figure 2).

Figure 2

Installation

1. Install bar and nut (hold stud with Allen key).
2. Install screw, divider bar to mirror (Do not tighten at this point).
3. Install seal.
4. Adjust bar. Rotate Allen stud in centre in/out until desired alignment of bar is achieved, then torque fixings.
5. Install fixed glass (see Workshop Manual procedure 01.11.BG Glass - Front Door - Fixed RH - Renew).
6. Install window regulator (see Workshop Manual procedure 01.11.DA Regulator - Door Glass - RH - Renew).

Windshield Header Finisher - Renew (Roadster Only)

Repair Operation Time (ROT)	
Item	**Code**
Windshield Header Finisher-Renew	**01.08.JA**

Removal

1. Operate roof to halfway position and support roof when hydraulic pressure drops using suitable straps (see Figure 1).

WARNING
APPROXIMATELY 20 SECONDS AFTER THE OPEN/ CLOSE OPERATION HAS BEEN INTERRUPTED THE ROOF MAY SUDDENLY DROP DUE TO LOSS OF HYDRAULIC PRESSURE. IF THIS HAPPENS ENSURE NO BODY PARTS ARE CLOSE TO THE ROOF MECHANISM. IF THE ROOF REQUIRES MAINTENANCE, SUPPORT PROPERLY USING SUITABLE PROPS AND STRAPS.

Figure 1

2. Release header seal from trim buttons (x2) to access retaining screw and remove screws (both sides) (see Figure 2).

Figure 2

3. Remove screws (x2) securing finisher to windscreen frame and remove finisher (see Figure 3).

Figure 3

Installation

1. Position finisher and install screws (x2).
2. Install screws under header seal (both sides).
3. Clean trim buttons, apply suitable adhesive and affix seal (both sides).
4. Restore roof to original position.

ASTON MARTIN
ASTON MARTIN

Body System (01.00)

Mirrors (01.09)

Specifications

Torque Figures	
Description	Nm
Mirror Mounting	**20-25**

Maintenance

RH Door Mirror Assembly - Renew

Repair Operation Time (ROT)		
Item		**Code**
Door Mirror Assembly-Renew	RH	**01.08.GC**

Removal

1. Remove door trimboard (see Workshop Manual procedure 01.05.CB Trimboard Assembly - Door - Remove for Access and Refit).
2. Lift rear of fixed window, remove rubber surround at top and pull out window.
3. Remove the door mirror rubber cheater panel.
4. Disconnect multiplug and release harness from fir tree clips (x2) (see Fig 1).

Figure 1

5. Remove bolts (x4) and remove mirror assembly (see Fig 2).

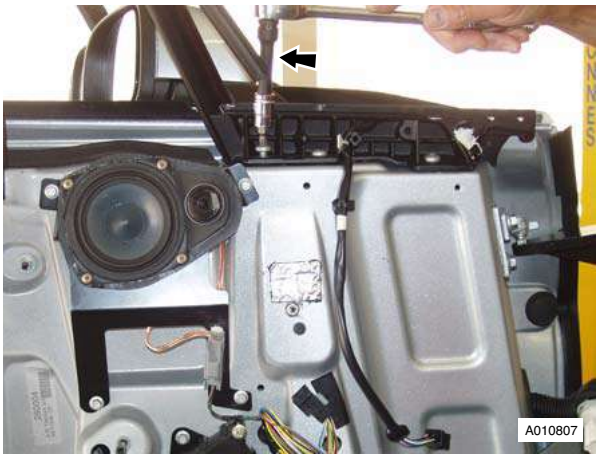

Figure 2

Installation

1. Position mirror and install and torque tighten bolts (x4).
2. Connect multiplug and secure harness fir tree clips (x2).
3. Install rubber mirror cheater panel and insert rubber guttering.
4. Install fixed window, ensure rubber surround is correctly installed.
5. Install door trimboard (see Workshop Manual procedure 01.05.CB Trimboard Assembly - Door - Remove for Access and Refit).

LH Door Mirror Assembly - Renew

Repair Operation Time (ROT)		
Item		**Code**
Door Mirror Assembly-Renew	LH	**01.08.GD**

Removal

1. Remove door trimboard (see Workshop Manual procedure 01.05.CB Trimboard Assembly - Door - Remove for Access and Refit).

2. Lift rear of fixed window, remove rubber surround at top and pull out window (see Fig 1).

Figure 1

3. Remove the door mirror rubber cheater panel (see Fig 2).

Figure 2

4. Disconnect multiplug and release harness from fir tree clips (x2) and self adhesive clip (see Fig 3).

Figure 3

5. Remove Torx bolts (x3) and screw from glass channel, remove mirror assembly (see Fig 4).

Figure 4

Installation

1. Position mirror, install and torque tighten Torx bolts (x3) and screw (glass channel).
2. Connect multiplug and secure harness fir tree clips (x2) and self adhesive clip.
3. Install rubber mirror cheater panel and insert rubber guttering.
4. Refit fixed window, ensure rubber surround is correctly installed.
5. Install door trimboard (see Workshop Manual procedure 01.05.CB Trimboard Assembly - Door - Remove for Access and Refit).

Body System (01.00)

Seating (01.10)

Description

The front seats are installed with the following features:

- Integral side airbags
- Head restraints
- Safety belt reel pretensioner
- Electrically adjustable seat positioning and lumbar support
- Heated seat (optional)

Heated Seats

The heated seat system comprises:

- Heated seat switches
- Backrest heater element
- Cushion heater element and thermostat

The heated seat function permits the electrical heating of the seat back and cushion on the driver and front passenger seats. The heating system of each seat is selected by separate switches located on the inside of each seat base.

Once the heated seat function has been activated, it will operate until one of the following conditions have been satisfied:

- A fixed period of time has expired (10 minutes)
- If the engine is not running and the ignition key is removed
- A malfunction is detected by the heated seat module

Confirmation that the heated seat function is active is indicated by the illumination of an amber light on the switch.

Specifications

Torque Figures	
Description	Nm
Seat mountings	20-25
Seatbelt	15-20

Maintenance

RH/LH Front Seat - Remove and Install

Repair Operation Time (ROT)		
Item		**Code**
Front Seat - Remove and Install	RH	**01.10.AA**
Front Seat - Remove and Install	LH	**01.10.AB**

Remove

1. Power seat fully forward.
2. Remove bolts (x2), securing rear of seat to seat rails.
3. Power seat fully rearwards.
4. Disconnect vehicle battery.
5. Remove bolt securing seat belt to seat frame.
6. Remove bolts (x2), securing front of seat to seat rails.
7. Tip the seat forwards and disconnect multiplugs (x4).
8. Protect sill plate and trim prior to seat removal.
9. With assistance, remove seat assembly.

Install

1. With assistance, Install seat in the vehicle.
2. Position seat belt to seat frame, install and torque tighten bolt.
3. Tip the seat forwards and connect multiplugs (x4).
4. Position seat onto seat rails.
5. Remove sill plate protection.
6. Connect vehicle battery.
7. Install front bolts (x2. Power seat forward and install rear bolts (x2). Torque tighten bolts (x4).

To power the drivers seat the ignition switch must be in the 'II' position

Front Seat Squab Cover Assembly (Each, Pre-08MY) - Remove and Install

Repair Operation Time (ROT)	
Item	**Code**
Front Seat Squab Cover Assembly - Remove and Install	**01.10.AC**

Remove

1. Remove seat (see Workshop Manual procedure 01.10.AB Seat Assembly - Front - LH - Remove for Access and Refit).

2. Remove release lever (see Figure 1).

Figure 1

3. Remove lever cover (see Figure 2).

Figure 2

4. Disconnect airbag multiplug and release from bracket (see Figure 3).

Figure 3

5. Remove fixing multiplug bracket, move aside (see Figure 4).

Figure 4

6. Remove (slide down) airbag module (bolt x1) (see Figure 5).

Figure 5

7. Release cover from seat back shell (studs x2 velcrox2) (see Figure 6).

Figure 6

8. Release cover from seat back shell (strip x2 /clips x9) (see Figure 7).

Figure 7

9. Release cover from bottom of seat back shell (see Figure 8).

Figure 8

10. Push cover through to front of seat, release strip, ease from foam (velcro strips) and remove cover (see Figure 9).

Figure 9

Installation

1. Install cover over foam attach to velcro, secure strip and push through seat.
2. Secure cover to seat back shell.
3. Secure cover to bottom of seat back shell.
4. Secure cover to seat back shell (studs and velcro).
5. Install airbag module (bolt x1) (torque).
6. Install multiplug bracket fixing.
7. Connect airbag multiplug and secure to bracket.
8. Install lever cover.
9. Install release lever.
10. Install seat (see Workshop Manual procedure 01.10.AB Seat Assembly - Front - LH - Remove for Access and Refit).

Front Seat Squab Cover Assembly (Each, from 08MY) - Remove and Install

Repair Operation Time (ROT)	
Item	**Code**
Front Seat Squab Cover Assembly (from 08MY) - Remove and Install	**01.10.AC**

Remove

Information to follow

Front Seat Cushion Cover Assembly (Each)-Renew

Repair Operation Time (ROT)	
Item	**Code**
Front Seat Cushion Cover Assembly-Renew	**01.10.AD**

Removal

1. Remove 6 way height adjuster (see Workshop Manual procedure 01.10.AE 6 Way Height Adjuster - Including Motors - Renew).
2. Remove screws (x3) heater and lumbar switch assembly (see Figure 1).

Figure 1

3. Release switch assembly and disconnect multiplug
4. Release cover from cushion frame assembly (see Figure 2).

Figure 2

5. Pull seat cushion cover from between squab and cushion frames and remove cover (see Figure 3).

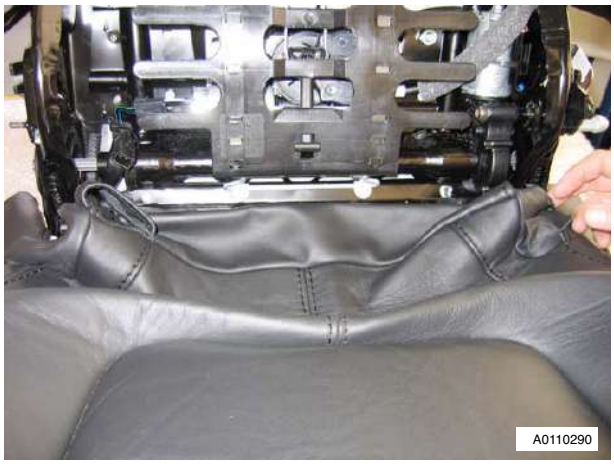

Figure 3

Installation

1. Connect multiplugs (x2) heater and lumber switch assembly.
2. Install switch assembly to seat
3. Ease cover over cushion foam attach to velcro.
4. Push cushion flap between cushion and squab and secure to cushion frame assembly.
5. Secure cushion cover to sides and front edge of seat cushion frame assembly.
6. Install 6 way height adjuster (see Workshop Manual procedure 01.10.AE 6 Way Height Adjuster - Including Motors - Renew).

6-Way Height Adjuster (Inc. Motors) - Renew

Repair Operation Time (ROT)	
Item	**Code**
6-Way Height Adjuster-Renew	**01.10.AE**

Removal

1. Power seat fully forward.
2. Remove bolts (x2) securing rear of seat to seat rails.
3. Power seat fully rearwards.
4. Remove bolts (x2) securing front of seat to seat rails.
5. Battery isolation switch ‘OFF’.
6. Remove bolt securing seat belt to seat frame.
7. Tip the seat forwards and disconnect multiplugs (x4).
8. With assistance, remove seat assembly.
9. Remove screw (x1) relay to seat cushion base.

10. Disconnect multiplugs (x3) seat motors (see Figure 1).

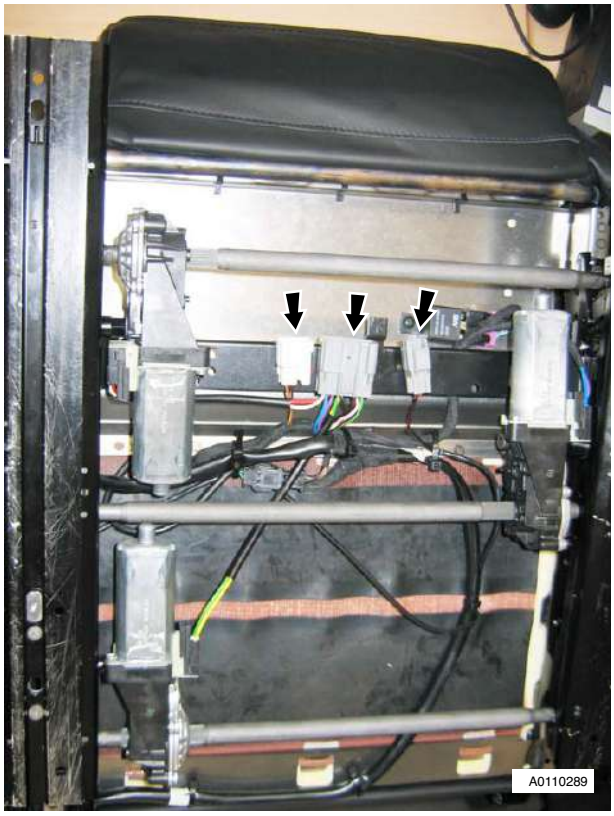

Figure 1

11. Release multiplugs (3) from 6 way seat adjuster frame assembly.
12. Remove bolt (x1) seat belt buckle to frame (see Figure2).

Figure 2

13. Release cable ties (x4) securing seat belt buckle harness to 6 way seat adjuster frame assembly (see Figure 3).

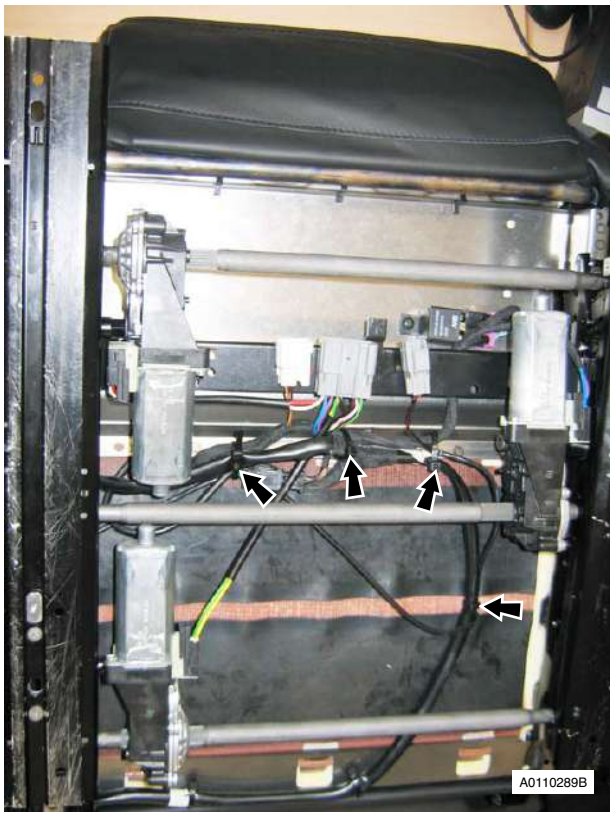

Figure 3

14. Remove seat belt buckle assembly.
15. Remove screws (x4) 6 way height adjuster to seat cushion frame (see Figure 4).

Figure 4

16. Slide 6 way height adjuster to release and remove adjuster from seat assembly (see Figure 5).

Figure 5

Installation

1. Install relay to seat cushion base.
2. Connect multiplugs (x3) and secure to 6 way adjuster frame.
3. Secure seat belt buckle harness (cable ties x4) to 6 way seat adjuster frame assembly.
4. Install a new bolt that attaches the seat belt buckle.
5. Position 6 way height adjuster to seat cushion frame assembly and install screws (x4).
6. With assistance, install seat in the vehicle.
7. Position seat belt to seat frame, install and torque tighten bolt.
8. Tip seat forwards and connect multiplugs (x4).
9. Position seat onto seat rails.
10. Battery isolation switch 'ON'.
11. Install front bolts (x2), Power seat forward and install rear bolts (x2). Torque tighten bolts (x 4).

Squab Motor Kit - Renew

Repair Operation Time (ROT)	
Item	**Code**
Squab Motor Kit-Renew	**01.10.AF**

Removal

1. Remove squab cover (see Workshop Manual procedure 01.10.AC Cover Assembly - Front Seat Squab - Each - Renew).
2. Disconnect heater multiplug and remove squab foam (see Figure 1).

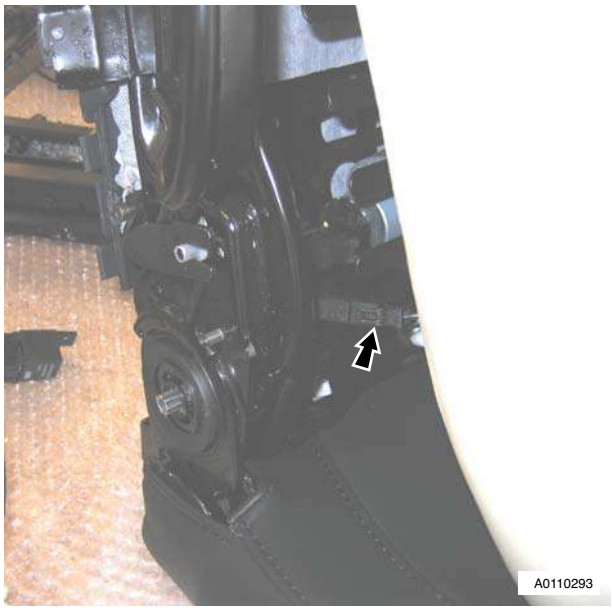

Figure 1

3. Release top mountings of lumbar adjust frame and move to access squab motor (see Figure 2).

Figure 2

4. Remove clip from adjust rod and pull through to clear motor (see Figure 3).

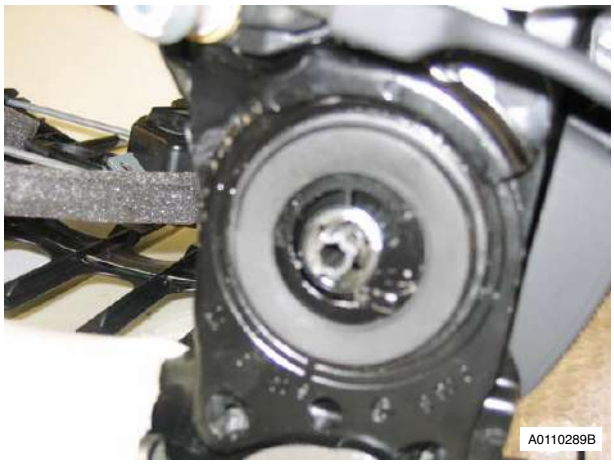

Figure 3

5. Remove motor from seat frame (bolt x1 and multiplug x1). (see Figure 4)

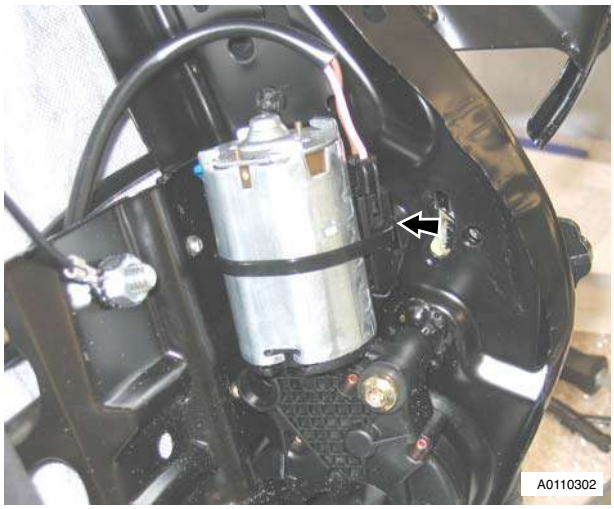

Figure 4

Installation

1. Install motor to seat frame, push adjust rod through motor (key splined) and install clip.
2. Position motor and install bolt (x1) and multiplug (x1).
3. Install top mountings of lumbar adjust frame.
4. Connect heater multiplug and install squab foam.
5. Install squab cover (see Workshop Manual procedure 01.10.AC Cover Assembly - Front Seat Squab - Each - Renew).

Lumbar Support Kit - Renew

Repair Operation Time (ROT)	
Item	**Code**
Lumbar Support Kit-Renew	**01.10.AG**

Removal

1. Remove squab cover (see Workshop Manual procedure 01.10.AC Cover Assembly - Front Seat Squab - Each - Renew).
2. Disconnect heater multiplug and remove squab foam (see Figure 1).

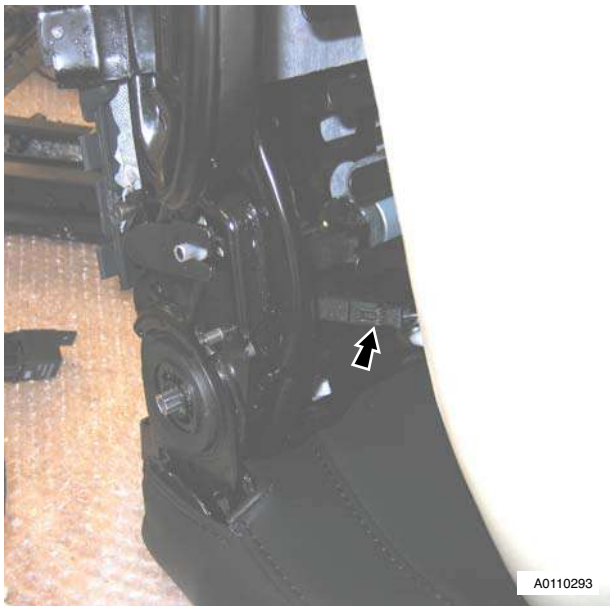

Figure 1

3. Remove seat back shell (rivets x4) (see Figure 2).

Figure 2

4. Disconnect lumbar motor multiplug (see Figure 3).

Figure 3

5. Remove lumbar support from seat frame (screws x2) (see Figure4).

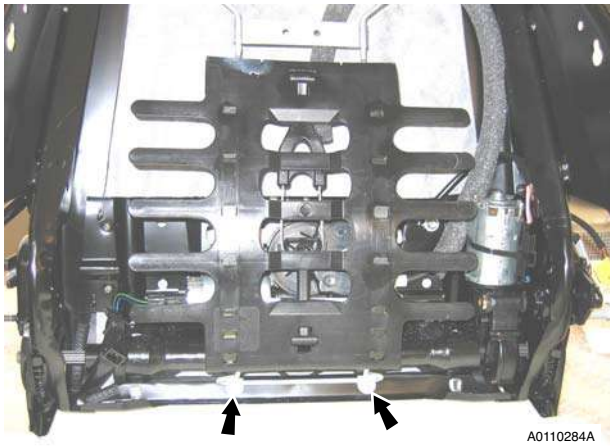

Figure 4

Installation

1. Install lumbar support to seat frame (screws x2).
2. Connect lumbar motor multiplug.
3. Install seat back shell (rivets x4).
4. Connect heater multiplug and install squab foam.
5. Install squab cover (see Workshop Manual procedure 01.10.AC Cover Assembly - Front Seat Squab - Each - Renew).

Side Airbag - Renew

Repair Operation Time (ROT)		
Item		**Code**
Side Airbag-Renew	RH	**01.10.AH**
Side Airbag-Renew	LH	**01.10.AJ**

Removal

1. Remove seat (see Workshop Manual procedure 01.10.AB Seat Assembly - Front - LH - Remove for Access and Refit).
2. Remove lever cover (manoeuvre over lever).
3. Disconnect airbag multiplug and release from bracket (see Figure 1).

Figure 1

4. Remove fixing multiplug bracket, move aside (see Figure 2).

Figure 2

5. Remove (slide down) airbag module (bolt x1).

Installation

1. Install airbag module (bolt x1) (torque).
2. Install multiplug bracket fixing.
3. Connect airbag multiplug and secure to bracket.
4. Install lever cover (manoeuvre over lever).
5. Install seat (see Workshop Manual procedure 01.10.AB Seat Assembly - Front - LH - Remove for Access and Refit).

Front Seat Buckle Assembly - Renew

Repair Operation Time (ROT)	
Item	**Code**
Front Seat Buckle Assembly-Renew	**01.10.AM**

Removal

1. Power seat fully forward.
2. Remove bolts (x2) securing rear of seat to seat rails.
3. Power seat fully rearwards.
4. Remove bolts (x2) securing front of seat to seat rails.
5. Battery isolation switch 'OFF'.
6. Remove bolt securing seat belt to seat frame.
7. Tip the seat forwards and disconnect multiplugs (x4).
8. With assistance, remove seat assembly.
9. Release multiplug (x1) seat belt buckle harness to 6 way seat adjuster frame assembly.
10. Release cable ties (x4) securing seat belt buckle harness to 6 way seat adjuster frame assembly (see Figure 1).

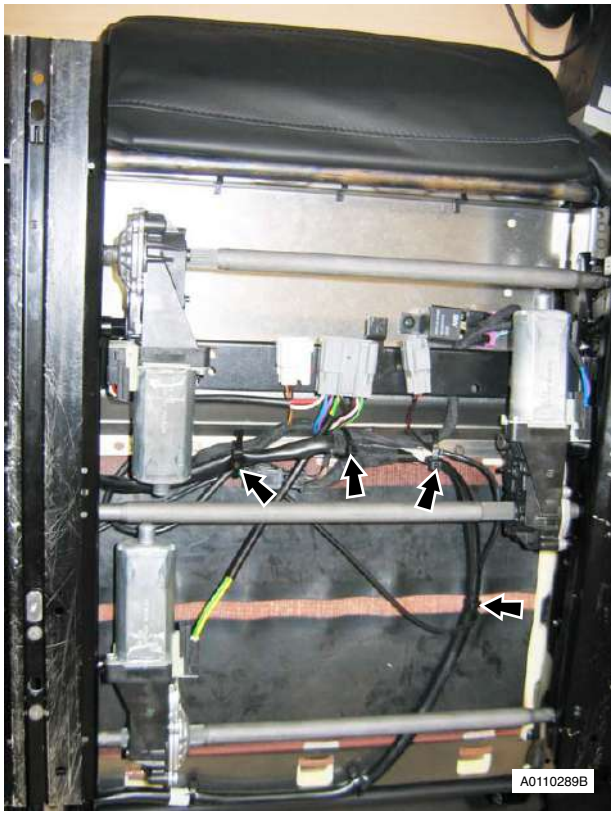

Figure 1

11. Remove bolt (x1) seat belt buckle to frame (see Figure 2).

Figure 2

12. Remove seat belt buckle assembly.

Installation

1. Secure harness and multiplug to 6 way seat adjuster frame assembly.
2. Install seat belt buckle.
3. With assistance, install seat in the vehicle.
4. Position seat belt to seat frame, install and torque tighten bolt.
5. Tip seat forwards and connect multiplugs (x4).
6. Position seat onto seat rails.
7. Battery isolation switch 'ON'.
8. Install front bolts (x2), Power seat forward and install rear bolts (x2). Torque tighten bolts (x 4).

Valance Heater and Lumbar Switch Assembly - Renew

Repair Operation Time (ROT)	
Item	**Code**
Valance Heater and Lumbar Switch Assembly-Renew	**01.10.AN**

Removal

1. Power seat fully forward.
2. Remove bolts (x2) securing rear of seat to seat rails.
3. Power seat fully rearwards.
4. Remove bolts (x2) securing front of seat to seat rails.
5. Disconnect vehicle battery.

6. Tip the seat backwards and remove screws (x3) heater and lumbar switch assembly to seat (see Figure 1).

Figure 1

7. Release switch assembly from seat.
8. Disconnect multiplug (x2) and remove switch assembly (see Figure 2).

Figure 2

Installation

1. Connect multiplugs (x2) switch assembly.
2. Install switch assembly (screws x3).
3. Position seat onto seat rails.
4. Connect vehicle battery
5. Install front bolts (x2), Power seat forward and install rear bolts (x2). Torque tighten bolts (x 4).

Seat Harness Kit - Renew

Repair Operation Time (ROT)	
Item	**Code**
Seat Harness Kit-Renew	**01.10.AV**

Removal

1. Remove seat 6 way height adjuster (see Workshop Manual procedure 01.10.AE 6 Way Height Adjuster - Inc. Motors - Renew).
2. Remove release lever (see Figure 1).

Figure 1

3. Remove lever cover (see Figure 2).

Figure 2

4. Disconnect airbag multiplug and release from bracket (see Figure 3).

Figure 3

5. Remove fixing multiplug bracket, move aside.
6. Remove (slide down) airbag module (bolt x1).
7. Release cover from seat back shell (studs x2 velcrox2).
8. Release cover from seat back shell (strip x2 /clips x9).
9. Release cover from bottom of seat back shell.
10. Push cover through to front of seat, release strip and ease from foam (velcro strips).
11. Disconnect heater multiplug and remove squab foam (see Figure 4).

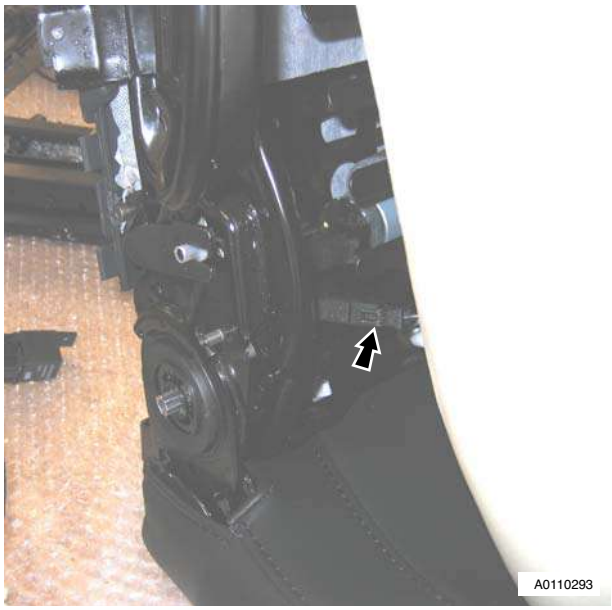

Figure 4

12. Remove seat back shell (rivets x4) (see Figure 5).

Figure 5

13. Disconnect lumbar and squab motor multiplugs (see Figure 6).

Figure 6

14. Remove earth header (nut and bolt) and release harness from clips (x2) (see Figure 7).

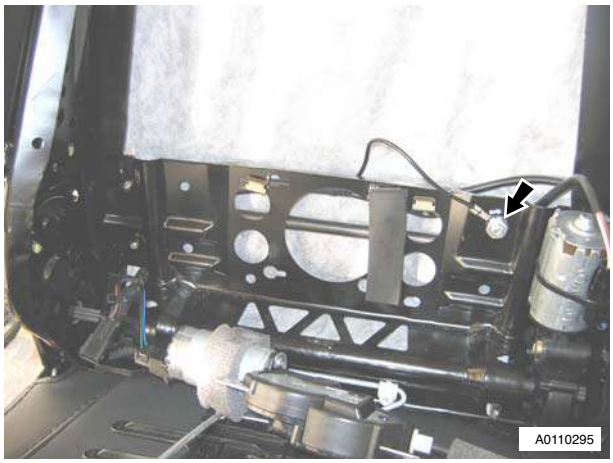

Figure 7

15. Drill out pop rivets from release rod support, and feed harness past rod (see Figure 8).

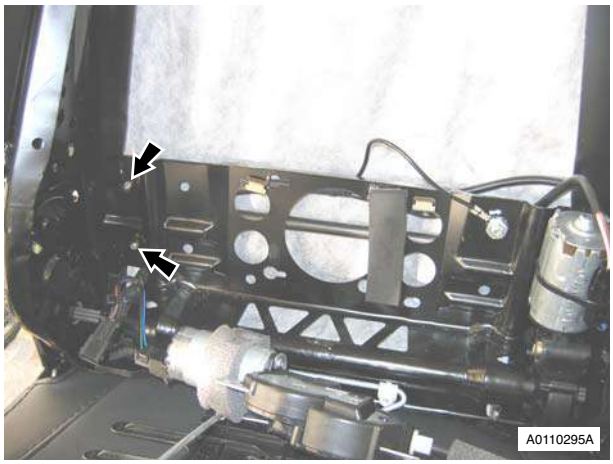

Figure 8

16. Release harness from clips (x3) and seat cover loop, feed through seat frame (see Figure 9).

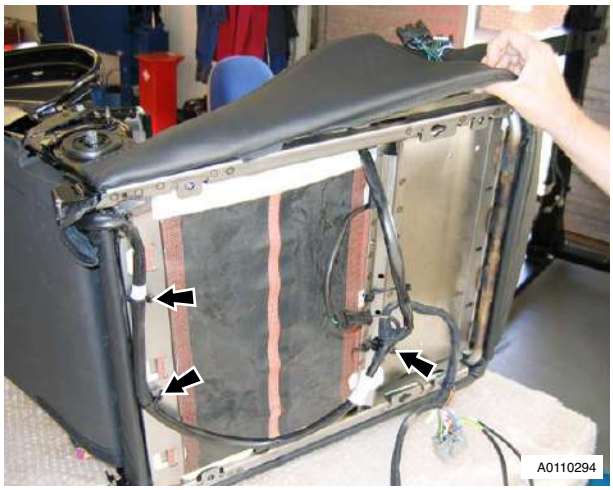

Figure 9

17. Disconnect cushion heater multiplug (see Figure 10).

Figure 10

18. Release cushion cover from frame, feed harness through cover and foam (see Figure 11).

Figure 11

Installation

1. Feed harness through cushion cover and foam, secure cover to frame,
2. Connect cushion heater multiplug.
3. Feed harness through seat frame, secure to clips (x3) and seat cover loop.
4. Feed harness past rod and install pop rivets to release rod support.
5. Install earth header (nut and bolt) and secure harness to clips (x2).
6. Connect lumbar and squab motor multiplugs.
7. Install seat back shell (rivets x4).
8. Connect heater multiplug and install squab foam.
9. Ease cover over foam attach to velcro, secure strip and push through seat.
10. Secure cover to seat back shell.

11. Secure cover to bottom of seat back shell.
12. Secure cover to seat back shell (studs and velcro).
13. Install airbag module (bolt x1) (torque).
14. Install multiplug bracket fixing.
15. Connect airbag multiplug and secure to bracket.
16. Install lever cover.
17. Install release lever.
18. Install seat 6 way height adjuster (see Workshop Manual procedure 01.10.AE 6 Way Height Adjuster - Inc. Motors - Renew).

RH/LH Seat Switchpack Assembly - Renew

Repair Operation Time (ROT)		
Item		**Code**
Seat Switchpack Assembly-Renew	RH	**01.10.CA**
Seat Switchpack Assembly-Renew	LH	**01.10.CB**

Removal

1. Remove instrument panel bezel assembly (see Workshop Manual procedure 01.12.AV Bezel Assembly - Instrument Panel - Remove for Access and Refit).
2. Remove console panel assembly (see Workshop Manual procedure 01.12.DB Panel Assembly Console - Renew).
3. Remove instrument cluster hood (6 clips)
4. Remove passenger upper outer panel assembly (see Workshop Manual procedure 01.12.AE Panel Assembly - IP - Upper - Passenger - Renew).
5. Remove passenger panel assembly (4 clips and 4 screws)
6. Remove driver's upper inner panel assembly (5 clips)
7. Remove driver's upper outer panel assembly (4 clips)
8. Remove driver's panel assembly (4 clips and 3 screws)
9. Remove receiver and audio media system panel screws (x4), disconnect multiplugs (x12).
10. Pull back carpet and disconnect seat adjust switch multiplugs (x6), release harness clip (x2)
11. Remove instrument centre panel assembly
12. Remove seat adjust switch (screws x4) (see Figure 1).

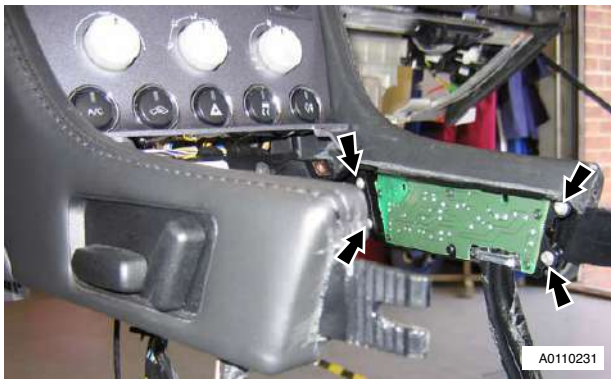

Figure 1

Installation

1. Install seat adjust switch.
2. Install instrument centre panel assembly
3. Connect seat adjust switch multiplugs (x6), install harness clip (x2) and carpet.
4. Install receiver and audio media systems panel (12 multiplugs and 4 screws)
5. Install driver's panel assembly (4 clips and 3 screws)
6. Install driver's upper outer panel assembly (4 clips)
7. Install driver's upper inner panel assembly (5 clips)
8. Install passenger's panel assembly (4 clips and 4 screws)
9. Install passenger's upper outer panel assembly (see Workshop Manual procedure 01.12.AE Panel Assembly - IP - Upper - Passenger - Renew).
10. Install instrument cluster hood (6 clips)
11. Install console panel assembly (see Workshop Manual procedure 01.12.DB Panel Assembly Console - Renew).
12. Install instrument panel bezel assembly (see Workshop Manual procedure 01.12.AV Bezel Assembly - Instrument Panel - Remove for Access and Refit).

Lumbar Pump for the Front Seat (From 08MY) - Remove and Install

Repair Operation Time (ROT)	
Item	**Code**
Lumbar Pump for the Front Seat (From 08MY) - Remove and Install	**01.10.EF**

Remove

1. Remove the applicable front seat (Refer to 'RH/LH Front Seat - Remove and Install', page 1-7-1).
2. Remove the cover for the squab from the seat (Refer to 'Front Seat Squab Cover Assembly (Each, from 08MY) - Remove and Install', page 1-7-3).
3. Move the lumbar inlay to give access.
4. Remove the tape that attaches the air hoses for the bladder into the lumbar inlay.
5. Move the air pump out of the lumbar inlay.
6. Disconnect the air hoses from the pump.
7. Disconnect the electrical connector for the pump.
8. Remove the pump assembly.

Install

1. Connect the the air hose to the pump.
2. Put the air valve in position into the inlay.
3. Connect the electrical connector for the pump.
4. Put the pump into the correct position in the lumbar inlay.
5. Use applicable tape to hold the hoses into the lumbar inlay.
6. Put the lumbar inlay into the correct position.

7. Install the cover for the seat squab (Refer to 'Front Seat Squab Cover Assembly (Each, from 08MY) - Remove and Install', page 1-7-3).
8. Install the seat (Refer to 'RH/LH Front Seat - Remove and Install', page 1-7-1).

Lumbar Valve for the Front Seat (From 08MY) - Remove and Install

Repair Operation Time (ROT)	
Item	**Code**
Lumbar Valve for the Front Seat (From 08MY) - Remove and Install	**01.10.EH**

Remove

1. Remove the applicable seat (Refer to 'RH/LH Front Seat - Remove and Install', page 1-7-1).
2. Remove the cover for the squab from the seat (Refer to 'Front Seat Squab Cover Assembly (Each, from 08MY) - Remove and Install', page 1-7-3).
3. Remove the tape that attaches the air hoses for the bladder into the lumbar inlay.
4. Record the air-hose connections to the air valve.
5. Move the air valve out of the lumbar inlay.
6. Disconnect the air hoses from the valve.
7. Disconnect the electrical connector for the valve.
8. Remove the valve assembly.

Install

1. Connect the the air hoses to the valve at the positions recorded during removal.
2. Connect the electrical connector to the valve assembly.
3. Put the valve into the correct position in the lumbar inlay.
4. Use applicable tape to hold the pipes into the lumbar inlay.
5. Put the lumbar inlay into the correct position.
6. Install the cover for the seat squab (Refer to 'Front Seat Squab Cover Assembly (Each, from 08MY) - Remove and Install', page 1-7-3).
7. Install the seat (Refer to 'RH/LH Front Seat - Remove and Install', page 1-7-1).

Lumbar Bladder for the Front Seat (From 08MY) - Remove and Install

Repair Operation Time (ROT)	
Item	**Code**
Lumbar Bladder for the Front Seat (From 08MY) - Remove and Install	**01.10.EK**

Remove

1. Remove the applicable front seat (Refer to 'RH/LH Front Seat - Remove and Install', page 1-7-1).
2. Remove the cover for the squab from the seat (Refer to 'Front Seat Squab Cover Assembly (Each, from 08MY) - Remove and Install', page 1-7-3).
3. Release the clips that attach the lumbar bladder.
4. move the bladder to give access.
5. Release and remove the clips that attach the lumbar inlay.
6. Remove the tape that attaches the air hoses for the bladder into the lumbar inlay.
7. Record the air-hose connections to the air valve.
8. Move the air valve out of the lumbar inlay.
9. Disconnect the air hoses from the valve.
10. Remove the bladder assembly.

Install

1. Put the bladder in position on the seat.
2. Connect the the air hoses to the valve at the positions recorded during removal.
3. Put the air valve in position into the inlay.
4. Use applicable tape to hold the hoses into the lumbar inlay.
5. Put the lumbar inlay into the correct position.
6. Put the bladder into the correct position.
7. Install the bladder attachment clips.
8. Install the cover for the seat squab (Refer to 'Front Seat Squab Cover Assembly (Each, from 08MY) - Remove and Install', page 1-7-3).
9. Install the seat (Refer to 'RH/LH Front Seat - Remove and Install', page 1-7-1).

Body System (01.00)

Glass, Frame and Mechanism (01.11)

Description

Power to the door window regulator motor is available when the ignition switch is at position '0' and is supplied, through a thermal cut-out, to the left and right window switches. The switches are double pole earth so that the current through a window regulator motor may be switched in either direction to raise or lower the glass.

Frameless doors

To avoid damaging the body seals during door opening, the door glass must be lowered before the door can be opened. This function is controlled by the door modules.

The door module senses the rotation of the latch claw as the door opens, the door module then drives the door window regulator motor briefly to lower the door glass until it clears the glass seals. After closing a door, the window regulator motor operates to raise the door glass to seat against the body seals.

⚠ WARNING ⚠
PUT ON PROTECTIVE GLOVES AND EYE PROTECTION WHEN YOU HOLD THE GLASS COMPONENTS.
THE GLASS CAN BREAK EASILY AND CAUSE INJURY.

Specifications

Torque Figures	
Description	Nm
Regulator mountings	9.0 (M6)
	10-15 (M10)
Glass grip screws	5.0 - 6.0

Maintenance

Glass Regulator - Renew

Repair Operation Time (ROT)		
Item		**Code**
Door Glass Regulator-Renew	RH	**01.11.DA**
Door Glass Regulator-Renew	LH	**01.11.DB**

Removal

1. Remove door trimboard assembly (see Workshop Manual procedure 01.05.CB Trimboard Assembly - Door - Remove for Access and Refit).
2. Remove screws (x4) securing switchpack to trimboard assembly, remove switchpack.
3. Connect switchpack to door cable harness multiplug (x1).
4. With power on raise/lower glass to access glass clamping bolts (x2).
5. Battery isolation switch 'OFF'.
6. Mark the glass around the rear clamp.

⚠ WARNING ⚠
PUT ON PROTECTIVE GLOVES AND EYE PROTECTION WHEN YOU HOLD THE GLASS COMPONENTS.
THE GLASS CAN BREAK EASILY AND CAUSE INJURY.

7. Remove clamping bolts (x2) and lift glass out of door (see Figure 1).

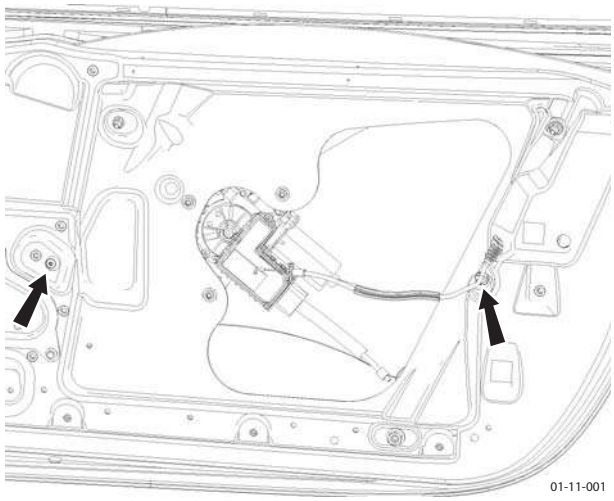

Figure 1

8. Remove nuts (x4) securing door glass regulator mechanism (see Figure 2).

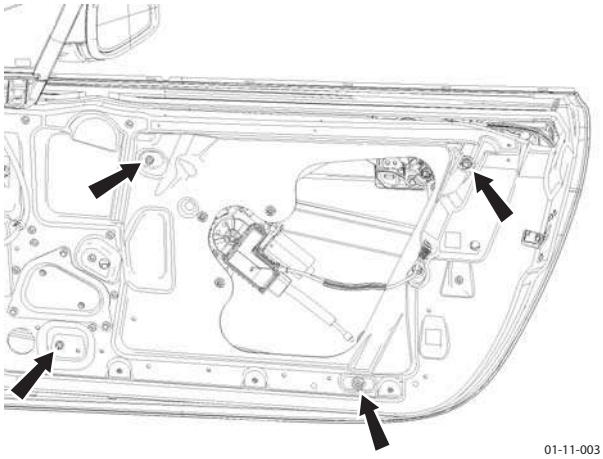

Figure 2

9. Disconnect multiplug from regulator motor.

10. Remove screws (x3) securing regulator motor to door frame (see Figure 3).

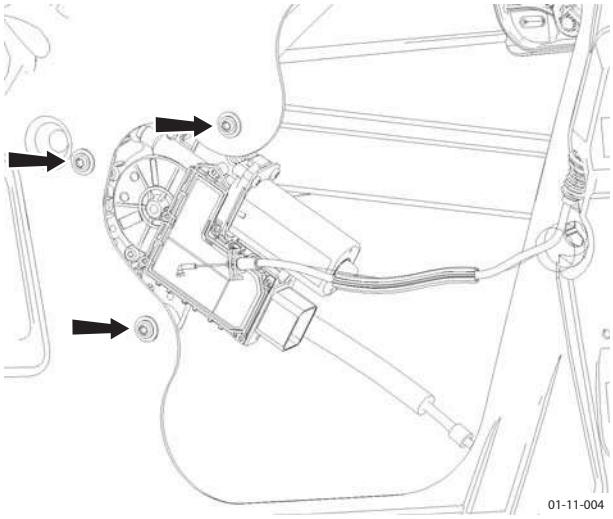

Figure 3

11. Carefully remove regulator mechanism and regulator motor out through the larger door frame aperture (see Figure 4).

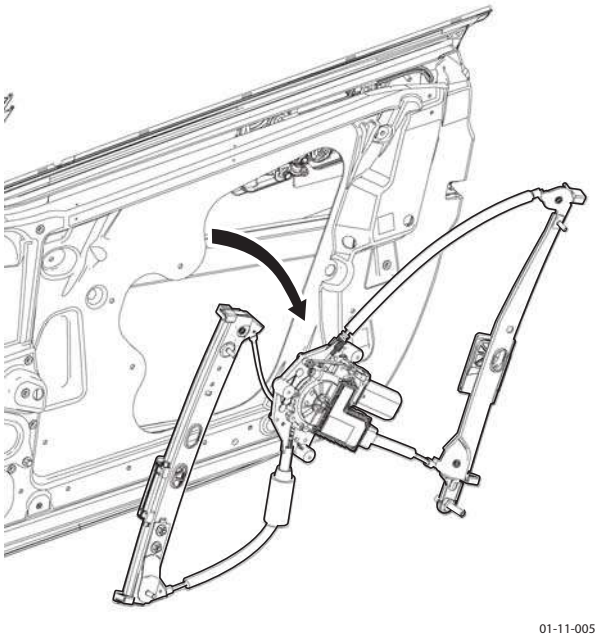

Figure 4

Installation

1. Install regulator mechanism and motor, install and torque tighten nuts (x4) and screws (x3).
2. Connect multiplug to regulator motor.

⚠ WARNING ⚠
PUT ON PROTECTIVE GLOVES AND EYE PROTECTION WHEN YOU HOLD THE GLASS COMPONENTS.
THE GLASS CAN BREAK EASILY AND CAUSE INJURY.

3. Fit glass into door and engage the clamping brackets to the marked position, install clamping bolts and partially tighten.
4. Battery isolation switch 'ON'.
5. Raise glass to fully up and adjust alignment, lower fully and check alignment, repeat until alignment is correct, finally torque tighten clamping bolts (x2).
6. Disconnect switchpack multiplug, install switchpack on trimboard, install and tighten screws (x4).
7. Install door trimboard assembly (see Workshop Manual procedure 01.05.CB Trimboard Assembly - Door - Remove for Access and Refit).

RH/LH Door Glass - Renew

Repair Operation Time (ROT)		
Item		**Code**
Door Glass-Renew	RH	**01.11.BA**
Door Glass-Renew	LH	**01.11.BC**

Removal

1. Remove door trimboard assembly (see Workshop Manual procedure 01.05.CB Trimboard Assembly - Door - Remove for Access and Refit).
2. Set glass position to access clamping bolts (x2) through apertures in door frame (see Figure 1).

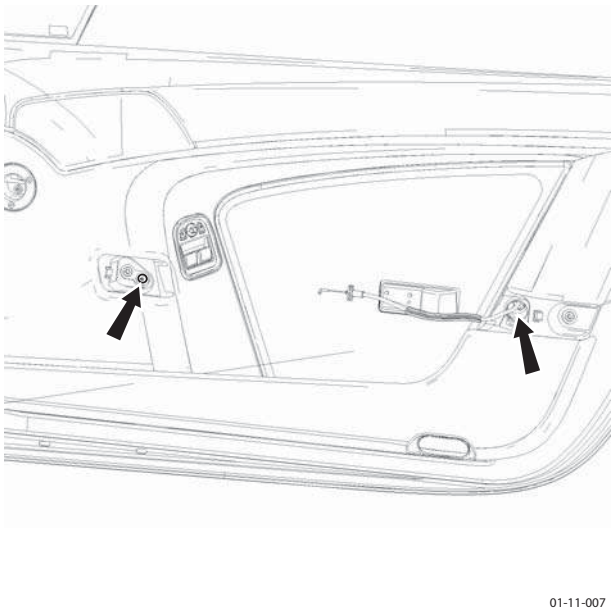

Figure 1

3. Remove clamping bolts (x2) (see Figure 2).

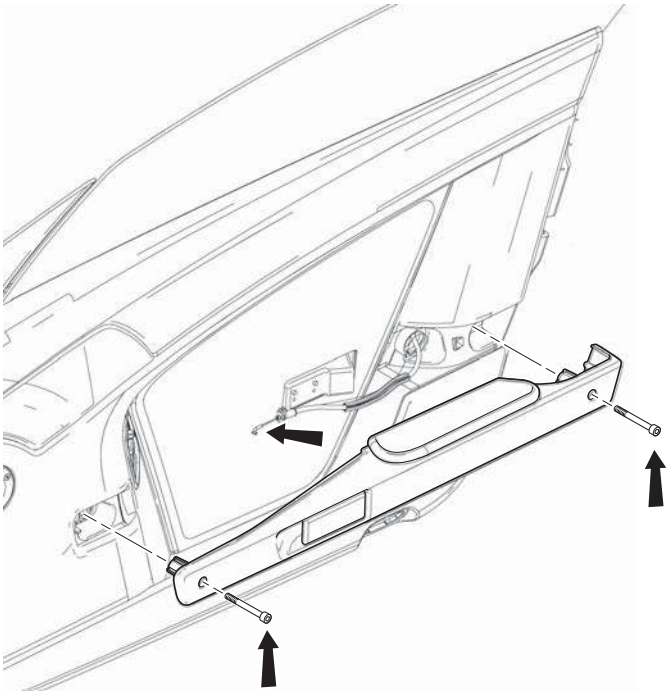

Figure 2

⚠ WARNING ⚠
PUT ON PROTECTIVE GLOVES AND EYE PROTECTION WHEN YOU HOLD THE GLASS COMPONENTS.
THE GLASS CAN BREAK EASILY AND CAUSE INJURY.

4. Hold glass firmly and lift out of door, place on protective material in a safe place (see Figure 3).

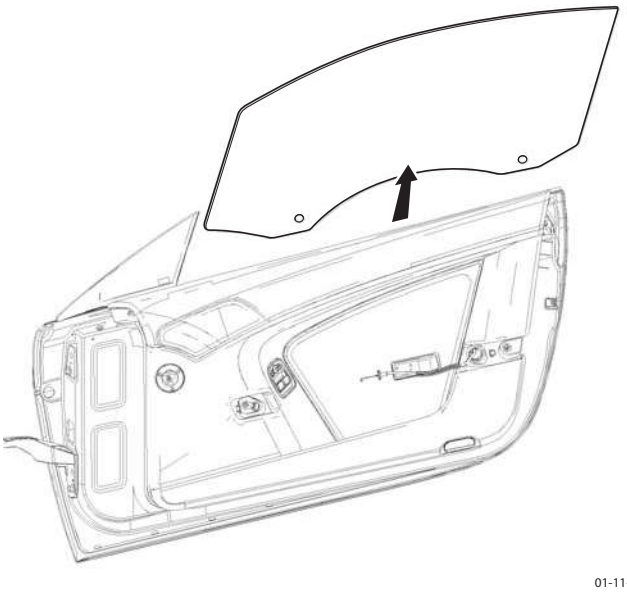

Figure 3

Installation

⚠ WARNING ⚠
PUT ON PROTECTIVE GLOVES AND EYE PROTECTION WHEN YOU HOLD THE GLASS COMPONENTS.
THE GLASS CAN BREAK EASILY AND CAUSE INJURY.

1. Install door glass with front edge into the channel, and position in clamps, install clamping bolts (x2) and lightly tighten.
2. With power on, raise glass fully up and adjust position, drop glass fully down and readjust, when aligned raise to access clamping bolts and tighten bolts to recommended torque. Repeat until aligned.
3. Install door trimboard assembly (see Workshop Manual procedure 01.05.CB Trimboard Assembly - Door - Remove for Access and Refit).
4. Install door trimboard assembly (see Workshop Manual procedure 01.05.CB Trimboard Assembly - Door - Remove for Access and Refit).

Door Glass - Adjust/Reset

Repair Operation Time (ROT)		
Item		**Code**
Door Glass-Adjust/Reset	RH	**01.11.BB**
Door Glass-Adjust/Reset	LH	**01.11.BD**

1. Open door.
2. Remove interior door handle securing bolts (x2).
3. Remove inner handle trim and disconnect door latch inner cable and remove securing bolts for the outer cable.
4. Remove access plugs (x2), door trimboard.
5. Set glass to position to access clamping bolts (x2) through apertures in the trim panel.
6. Slightly loosen clampbolts (x2), raise glass and align, lower glass and check alignment. Raise and lower until correct alignment is achieved.
7. Position glass for access to clamp bolts and tighten bolts.
8. Reset upper glass limit.
9. Reset lower glass limit.

Installation

1. Reconnect door latch inner and outer cable, refit inner handle trim.
2. Install door handle.
3. Reset lower glass limit.
4. Install plugs (x2), door trimboard.

Front Windshield - Renew

Repair Operation Time (ROT)	
Item	**Code**
Front Windshield-Renew	**01.11.AA**

1. Open bonnet.

2. Remove wiper arm drivers side (see Workshop Manual procedure 01.16.AD Arm Assembly - Wiper - Driver - Renew).
3. Remove wiper arm passengers side (see Workshop Manual procedure 01.16.AE Arm Assembly - Wiper - Passenger - Renew).
4. Remove plate and disconnect multiplug (x1) windshield (see Figure 1).

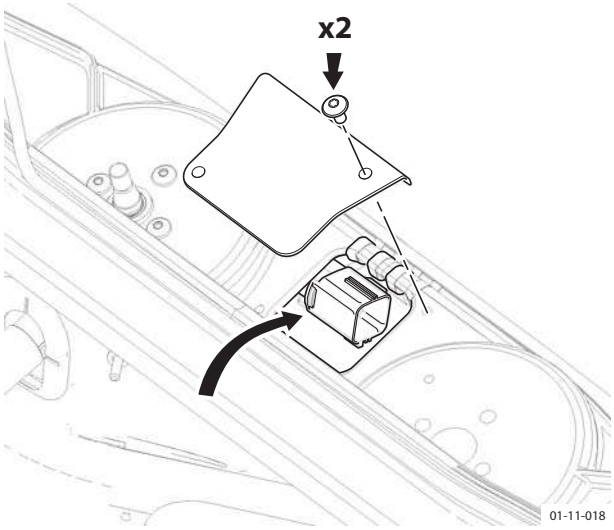

Figure 1

5. Close bonnet.
6. Remove interior mirror (see Workshop Manual procedure 01.08.FA Mirror Assembly - Rear Dipping - Renew).
7. Protect external body work and internal trim adjacent to glass.
8. Place suitable covers over trim and bodywork.
9. Make hole in sealer and assemble cutting knife.

⚠ WARNING ⚠
PUT ON PROTECTIVE GLOVES AND EYE PROTECTION WHEN YOU HOLD THE GLASS COMPONENTS.
THE GLASS CAN BREAK EASILY AND CAUSE INJURY.

10. Cut out windshield and remove (see Figure 2).

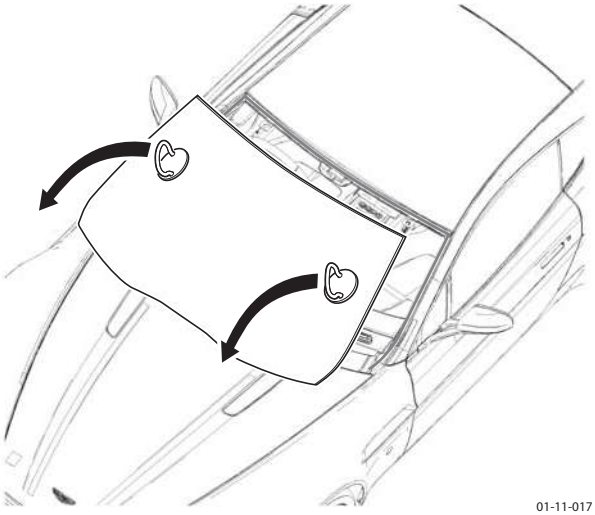

Figure 2

11. Remove sealer from body and original screen if refitting.
12. Clean and polish windshield.
13. Apply etch primer around windshield aperture.
14. Assemble applicator.
15. Attach suction handles to windshield.
16. Apply sealer to glass.

⚠ WARNING ⚠
PUT ON PROTECTIVE GLOVES AND EYE PROTECTION WHEN YOU HOLD THE GLASS COMPONENTS.
THE GLASS CAN BREAK EASILY AND CAUSE INJURY.

17. With assistance, lift windshield into place and align in aperture. Lightly press glass to sealer.
18. Remove suction handles from windshield.
19. Remove all protective covers and tape.
20. Check screen for leaks.
21. Connect multiplug (x1) to windshield and install plate.
22. Install wiper arm passengers side (see Workshop Manual procedure 01.16.AE Arm Assembly - Wiper - Passenger - Renew).
23. Install wiper arm drivers side (see Workshop Manual procedure 01.16.AD Arm Assembly - Wiper - Driver - Renew).
24. Install interior mirror (see Workshop Manual procedure 01.08.FA Mirror Assembly - Rear Dipping - Renew).

Rear Windshield - Renew

Repair Operation Time (ROT)	
Item	**Code**
Rear Windshield-Renew	**01.11.BE**

1. Remove tailgate trim (see Workshop Manual procedure 01.05.EF Trim - Tailgate Lid Assembly - Renew).

2. Disconnect lucar connectors (x2) from rear windshield (see Figure 1).

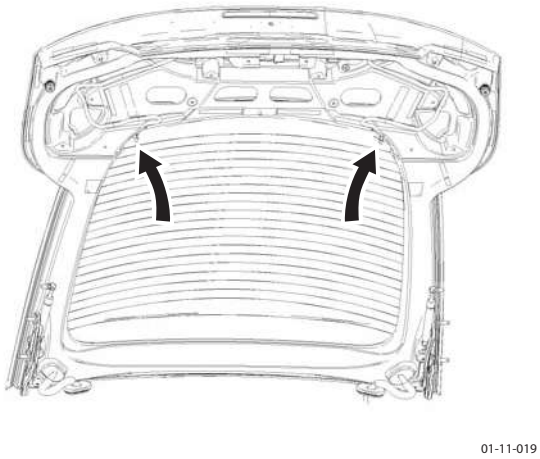

Figure 1

3. Protect external bodywork and internal trim adjacent to glass.
4. Place suitable covers over trim and bodywork.
5. Make hole in sealer and assemble cutting knife.

⚠ WARNING ⚠
PUT ON PROTECTIVE GLOVES AND EYE PROTECTION WHEN YOU HOLD THE GLASS COMPONENTS.
THE GLASS CAN BREAK EASILY AND CAUSE INJURY.

6. Cut out rear windshield and remove (see Figure 2).

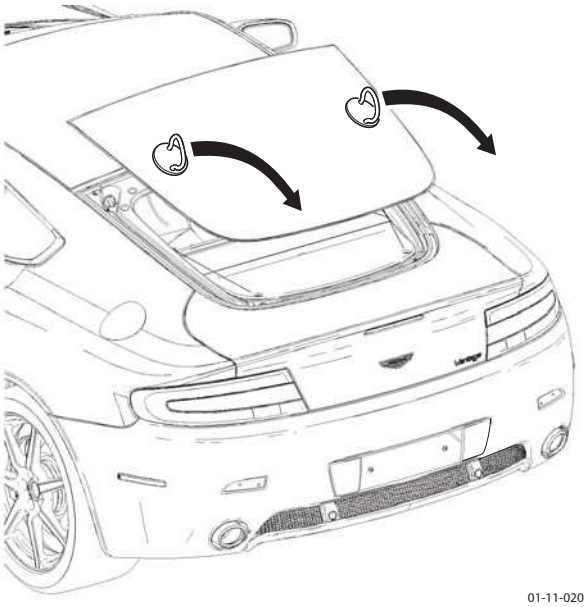

Figure 2

7. Remove sealer from body and original windshield if refitting.
8. Clean and polish rear windshield.
9. Apply etch primer around rear windshield aperture.
10. Attach suction handles to rear windshield.
11. Assemble applicator.
12. Apply sealer to rear windshield.

⚠ WARNING ⚠
PUT ON PROTECTIVE GLOVES AND EYE PROTECTION WHEN YOU HOLD THE GLASS COMPONENTS.
THE GLASS CAN BREAK EASILY AND CAUSE INJURY.

13. With assistance lift rear windshield into place and align in aperture. Lightly press glass to sealer.
14. Remove suction handles from rear windshield.
15. Remove all protective covers and tape.
16. Check rear windshield for leaks.
17. Connect lucar connectors (x2) rear windshield.
18. Install tailgate trim (see Workshop Manual procedure 01.05.EF Trim - Tailgate Lid Assembly - Renew).

Quarter Window Glass - Renew

Repair Operation Time (ROT)		
Item		**Code**
Quarter Window Glass-Renew	RH	**01.11.BF**
Quarter Window Glass-Renew	LH	**01.11.CA**

Removal

1. Partially remove door aperture seal.

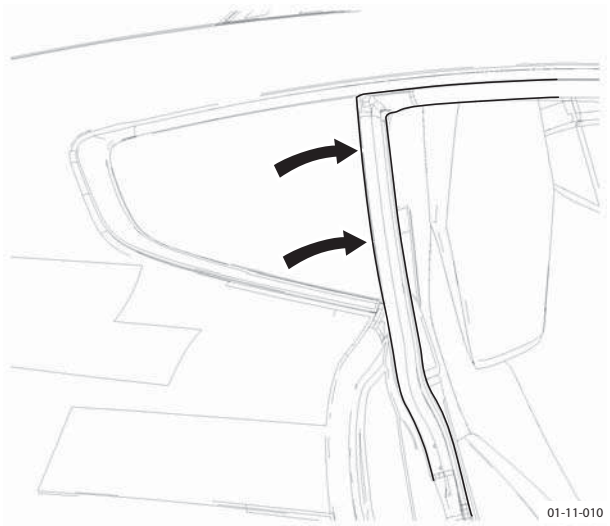

Figure 1

2. Protect external body work and internal trim adjacent to glass.
3. Remove the lower finisher around the fixed quarter glass. Pull items 1, 2 and 3 and slide item 4 (see Fig 2).

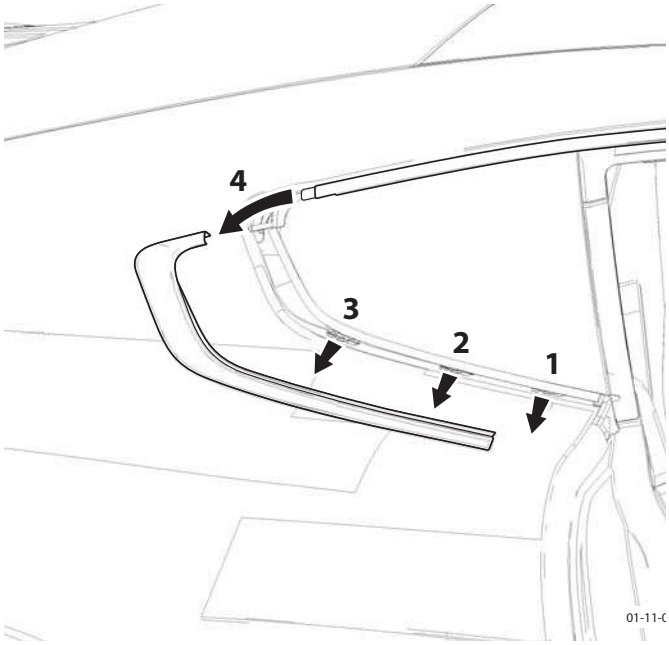

Figure 2

4. Place suitable covers over trim and bodywork.
5. Make hole in sealer and assemble cutting knife.

> ⚠ WARNING ⚠
> PUT ON PROTECTIVE GLOVES AND EYE PROTECTION WHEN YOU HOLD THE GLASS COMPONENTS.
> THE GLASS CAN BREAK EASILY AND CAUSE INJURY.

6. Cut out glass and remove (see Figure 3).

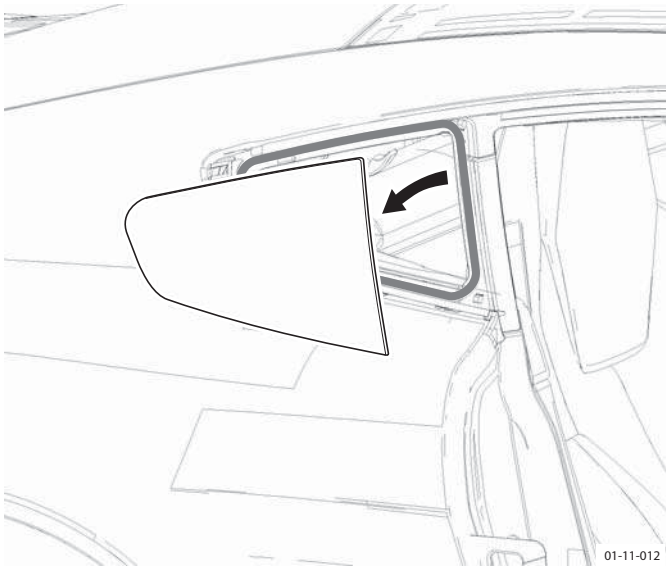

Figure 3

7. Remove sealer from aperture.

Installation

> ⚠ WARNING ⚠
> PUT ON PROTECTIVE GLOVES AND EYE PROTECTION WHEN YOU HOLD THE GLASS COMPONENTS.
> THE GLASS CAN BREAK EASILY AND CAUSE INJURY.

1. Clean and polish glass.
2. Apply etch primer around aperture.
3. Assemble applicator.
4. Apply sealer to glass.
5. Position glass in aperture and lightly press glass to sealer.
6. Remove all protective covers and tape.
7. Install the lower finisher around the fixed quarter glass.
8. Install door aperture seal.
9. Check for leaks.

Passenger Window Lift Switch - Renew

Repair Operation Time	
Item	**Code**
Passenger Window Lift-Renew	**01.11.FA**

Removal

1. Remove door trim board (see Workshop Manual procedure 01.05.CB Trimboard Assembly - Door - Remove for Access and Refit).

2. Remove screws (x4) window lift switch to door trim board and remove switch (see Figure 1).

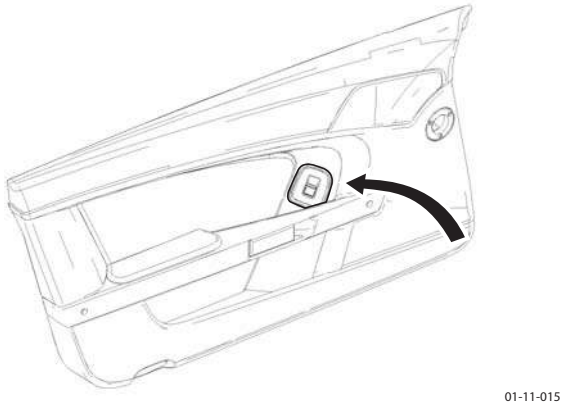

Figure 1

Installation

1. Install window lift switch to door trim board.
2. Install door trim board (see Workshop Manual procedure 01.05.CB Trimboard Assembly - Door - Remove for Access and Refit).

Driver Window Lift Switch - Renew

Repair Operation Time	
Item	**Code**
Driver Window Lift-Renew	**01.11.FB**

Removal

1. Remove door trim board (see Workshop Manual procedure 01.05.CB Trimboard Assembly - Door - Remove for Access and Refit).
2. Remove screws (x4) window lift switch to door trim board and remove switch (see Figure 1).

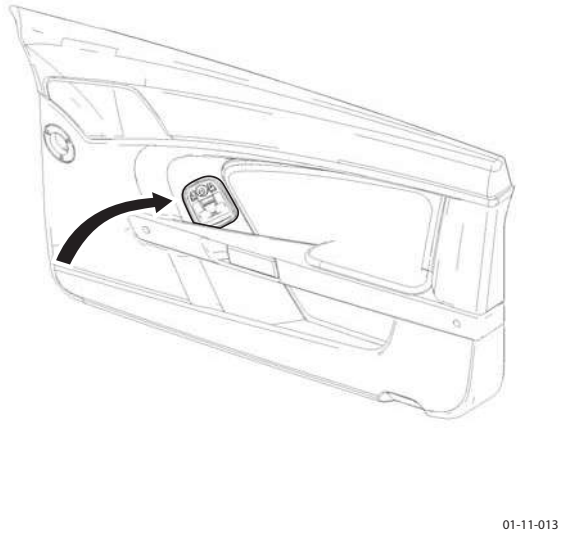

Figure 1

Installation

1. Install window lift switch to door trim board.
2. Install door trim board (see Workshop Manual procedure 01.05.CB Trimboard Assembly - Door - Remove for Access and Refit).

ASTON MARTIN
ASTON MARTIN

Body System (01.00)

Instrument Panel (IP) (01.12)

Specifications

Torque Figures	
Description	Nm
IP Mountings	22.5
Glue pot bolts	8
Blower motor to bulkhead	10-14

Maintenance

Instrument Panel - Renew

Repair Operation Time (ROT)	
Item	**Code**
Instrument Panel-Renew	**01.12.AB**

Removal

1. Disconnect vehicle battery.
2. Drain cooling system (see Workshop Procedure 03.03.AD Coolant - Drain and Refill).
3. Evacuate air conditioning system (see Workshop Procedure 12.03.FA Tank - Receiver Drier - Renew).
4. Remove RH door (see Workshop Procedure 01.03.EA Door Assembly - RH - Remove for Access and Refit).
5. Remove LH front seat (see Workshop Manual 01.10.AB Seat Assembly - Front - LH - Remove for Access and Refit).
6. Remove RH front seat (see Workshop Manual 01.10.AA Seat Assembly - Front - RH - Remove for Access and Refit).
7. Remove tread plate badges - screws x2 (see Figure1).

Figure 1

8. Remove screws (x12) 6 each side and remove LH and RH side tread plates.
9. Release door seal from door aperture (see Figure 2).

Figure 2

10. Remove screw/release fir tree securing door seal plate to A-post (see Figure 3 and Figure 4).

Figure 3

Figure 4

11. Remove LH and RH A-post trim panels.
12. Disconnect fuel filler flap release switch.
13. Disconnect multiplugs (x5) from instrument panel RH side.
14. Disconnect multiplugs (x6) from instrument panel LH side.
15. Release both door seals from body.
16. Remove trim finishers (x4) and screws (x4) (see Figure 5).

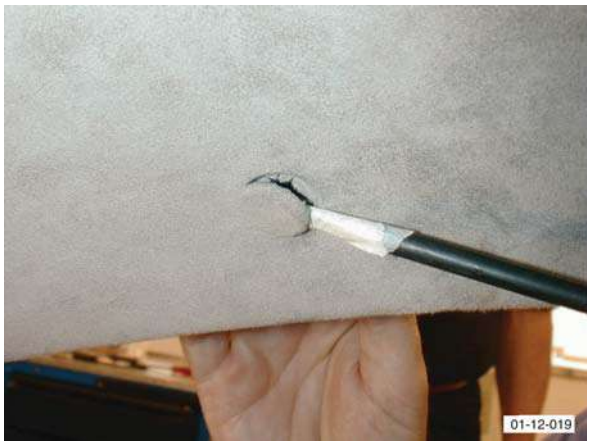

Figure 5

17. Remove LH and RH A-post cant rail trim panels (see Figure 6).

Figure 6

18. Remove rear centre console (see Workshop Manual procedure 01.04.BB Centre Console Rear Renew).

19. Disconnect multiplugs (x8) and remove centre column switch panel (see Figure 7 and Figure 8).

Figure 7

Figure 8

20. Using special tool, release selector cable ball joints from gear lever mechanism.
21. Remove screws (x6) and remove gear lever mechanism.
22. Remove Allen bolts (x4) from securing carpet retaining plate to bulkhead drivers side (see Figure 9).

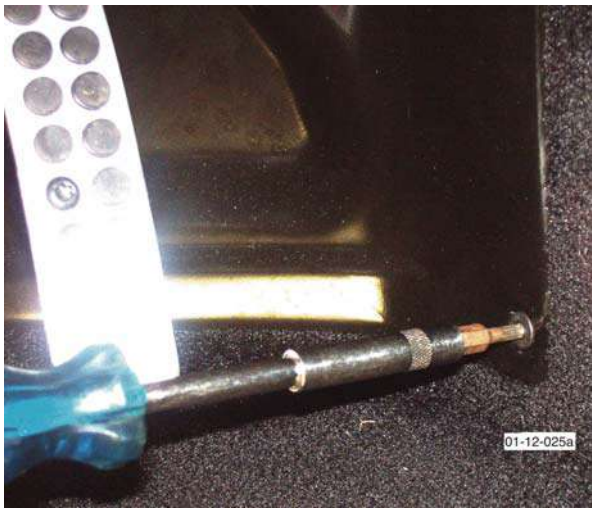

Figure 9

23. Pull back footwell carpets and remove bolts (x2) that secure instrument panel to tunnel (see Figure 10).

Figure 10

24. Remove bolt securing heater fan to bulkhead (see Figure 11).

Figure 11

25. Remove steering wheel (see Workshop Manual 11.06.AB Steering Wheel Renew).

26. Remove screws (x7) from steering column upper and lower shrouds (see Figure 12).

Figure 12

27. Remove lower and upper column shrouds (see Figure 13).

Figure 13

28. Release and remove drivers side lower instrument panel clips (x7) and disconnect air temperature pipe (see Figure 14).

Figure 14

29. Pull back steering column bulkhead gaiter.
30. Remove and discard pinch bolt from upper column to intermediate shaft.
31. Disconnect multiplugs (x14) from instrument panel to main body harness.
32. Remove instrument panel upper air vents (x2) (see Figure 15).

Figure 15

33. Remove screws from instrument panel to bulkhead (x4).
34. Remove bolts securing instrument panel to both A-posts (x6).
35. With assistance, position tool (501-F116) to instrument panel (see Figure 16).

Figure 16

36. Attach and tighten brackets (x2) to instrument panel.

37. Manoeuvre and remove instrument panel sufficient to gain access to heater hose (see Figure 17).

Figure 17

38. Position container to collect coolant.
39. Release clip and disconnect hose from heater unit.
40. Disconnect condenser hose from heater unit.
41. Manoeuvre and remove instrument panel from vehicle (see Figure 18).

Figure 18

42. Remove container.

Installation

1. With assistance, manoeuvre instrument panel into vehicle.
2. Connect condenser hose to heater unit.
3. Connect hose to heater and secure with clip.
4. With assistance, manoeuvre instrument panel into position aligning upper column to intermediate shaft.
5. Install new upper column pinch bolt (do not torque at this stage).
6. Install bolts (x6) through instrument panel to both A-posts (do not torque at this stage).
7. Install screws (x4) through instrument panel to bulkhead (do not torque at this stage).
8. Ensure instrument panel is correctly aligned and tighten screws (x4) and bolts (x6) to correct torque.
9. Loosen and release attachments from instrument panel and with assistance, remove tool (501-F116) from vehicle.
10. Tighten upper column pinch bolt to correct torque.
11. Install gaiter to bulkhead.
12. Connect multiplugs (x14) from instrument panel to main body harness.
13. Apply adhesive and install instrument panel upper air vents and secure in clips.
14. Position drivers side lower instrument panel and connect air temperature pipe.
15. Install panel in clips (x7).
16. Install steering column upper and lower shrouds and install and tighten screws (x7).
17. Install steering wheel (see Workshop Manual 11.06.AB Steering Wheel Renew).
18. Install and tighten bolt from heater fan to bulkhead.
19. Install and torque tighten bolts (x2) from instrument panel to tunnel.
20. Install footwell carpet.
21. Install drivers side carpet retaining plate to bulkhead.
22. Install and torque tighten Allen bolts (x4).
23. Install gear lever mechanism and install and tighten screws (x6).
24. Install selector cable ball joints to gear lever mechanism.
25. Install centre column switch panel and connect multiplugs (x8).
26. Install rear centre console (see Workshop Manual 01.04.BB Centre Console Rear Renew).
27. Install LH and RH cant rail trim panels and install and tighten screws (x4).
28. Install trim finishers (x4) and install seals to door aperture.
29. Connect multiplugs (x11) from LH and RH A-post to instrument panel.
30. Connect fuel filler flap release switch.
31. Install LH and RH A-post trim panels.
32. Install LH and RH A-post door trim plates.
33. Install rivets (x2), install and tighten screws (x2).
34. Install seal to door aperture.
35. Install LH and RH side tread plates and tighten screws (x12).
36. Install LH and RH side tread plate badges and tighten screws (x4).
37. Install RH door (see Workshop Manual 01.03.EA Door Assembly - RH - Remove for Access and Refit).
38. Install RH front seat (see Workshop Manual 01.10.AA Seat Assembly - Front - RH - Remove for Access and Refit).

39. Install LH front seat (see Workshop Manual 01.10.AB Seat Assembly - Front - LH - Remove for Access and Refit).
40. Fill cooling system (see Workshop Manual 03.03.AD Coolant - Drain and Refill).
41. Re-charge air conditioning system (see Workshop Manual 12.03.FA Tank - Receiver Drier - Renew).
42. Connect vehicle battery.

Airbag Panel and Door Assembly - Renew

Repair Operation Time (ROT)	
Item	**Code**
Airbag Panel and Door Assembly-Renew	**01.12.AJ**

Removal

1. Remove glovebox assembly (see Workshop Manual procedure 01.12.AL Glovebox Assembly - Renew).
2. Remove glovebox shield (see Figure 1).

Figure 1

3. Remove the bolts (x3) that secure the airbag panel and door assembly plate to the chassis (see Figure 2).

Figure 2

4. Remove airbag panel and door assembly (5 clips) (see Figure3).

Figure 3

Installation

1. Install airbag panel and door assembly (5 clips).
2. Through glovebox aperture, install support right-angled bar and secure bolts (x3).
3. Remove and clean double-sided taped from glovebox shield, apply new tape and install.
4. Install glovebox assembly (see Workshop Manual procedure 01.12.AL Glovebox Assembly - Renew).

Glovebox Assembly - Renew

Repair Operation Time (ROT)	
Item	**Code**
Glovebox Assembly-Renew	**01.12.AL**

Removal

1. Remove passenger lower panel assembly (5 clips and multiplug).
2. Remove the securing screws holding the glove box hinge to the chassis (x2).
3. Support the glove box and locate the latch mechanism.
4. Using a suitable tool press the latch mechanism to release the glove box.
5. Support the glove box and detach the buffer cord from the glove box.

Installation

1. Support glovebox and attach the buffer cord (ensure the cord is through correct aperture).
2. Install glovebox into aperture and press top to latch.
3. Align the glovebox hinge and secure with screws (x2) including spacers between the hinge and chassis.
4. Install passenger lower panel assembly (5 clips and 1 multiplug).

Instrument Centre Panel Assembly - Renew

Repair Operation Time (ROT)	
Item	**Code**
Instrument Centre Panel Assembly-Renew	**01.12.AM**

1. Remove instrument panel bezel assembly (see Workshop Manual procedure 01.12.AV Bezel Assembly - Instrument Panel - Remove for Access and Refit).
2. Remove console panel assembly (see Workshop Manual procedure 01.12.DB Panel Assembly Console - Renew).
3. Remove instrument cluster hood (6 clips)
4. Remove passenger upper outer panel assembly (see Workshop Manual procedure 01.12.AE Panel Assembly - IP - Upper - Passenger - Renew).
5. Remove passenger panel assembly (4 clips and 4 screws)
6. Remove driver's upper inner panel assembly (5 clips)
7. Remove driver's upper outer panel assembly (4 clips)
8. Remove driver's panel assembly (4 clips and 3 screws)
9. Remove receiver and audio media system panel screws (x4), disconnect multiplugs (x12).
10. Pull back carpet and disconnect seat adjust switch multiplugs (x6), release harness clip (x2)
11. Remove instrument centre panel assembly
12. Remove seat adjust switches (screws x8).

Installation

1. Install seat adjust switches (screws x8).
2. Install instrument centre panel assembly
3. Connect seat adjust switch multiplugs (x6), install harness clip (x2) and carpet.
4. Install receiver and audio media systems panel (12 multiplugs and 4 screws)
5. Install driver's panel assembly (4 clips and 3 screws)
6. Install driver's upper outer panel assembly (4 clips)
7. Install driver's upper inner panel assembly (5 clips)
8. Install passenger's panel assembly (4 clips and 4 screws)
9. Install passenger's upper outer panel assembly (see Workshop Manual procedure 01.12.AE Panel Assembly - IP - Upper - Passenger - Renew).
10. Install instrument cluster hood (6 clips)
11. Install console panel assembly (see Workshop Manual procedure 01.12.DB Panel Assembly Console - Renew).
12. Install instrument panel bezel assembly (see Workshop Manual procedure 01.12.AV Bezel Assembly - Instrument Panel - Remove for Access and Refit).

Knee Protector - Renew

Repair Operation Time (ROT)	
Item	**Code**
Knee Protector-Renew	**01.12.AN**

Removal

1. Remove driver's lower panel assembly (7 clips) and disconnect air temperature pipe.
2. Disconnect footwell light and remove unit from panel.
3. Mark one socket for relocation and remove diagnostic sockets (x2) from panel.
4. Remove pop-rivets (x5), screws (x4) and remove panel.

Installation

1. Align knee protector panel in position and secure with screws (x4).
2. Install pop-rivets (x5).
3. Install diagnostic sockets (x2) (ensure marked socket is in correct location).
4. Install footwell light and reconnect multiplug.
5. Install driver's lower panel assembly (7 clips) and connect air temperature pipe.

Instrument Panel Assembly - Renew

Repair Operation Time (ROT)	
Item	**Code**
Instrument Panel Assembly-Renew	**01.12.AR**

Removal

1. Remove Instrument panel assembly (see Workshop Manual procedure 01.12.AB Instrument Panel - Facia Assembly - Remove for Access and Refit).
2. Remove steering column (bolts x4, multiplugs x5).
3. Remove passenger air bag module (screws x4).
4. Remove centre speaker (screws x2) and unclip harness (see Figure 1).

Figure 1

5. Remove lighting switch (screws x3) (see Figure 2).

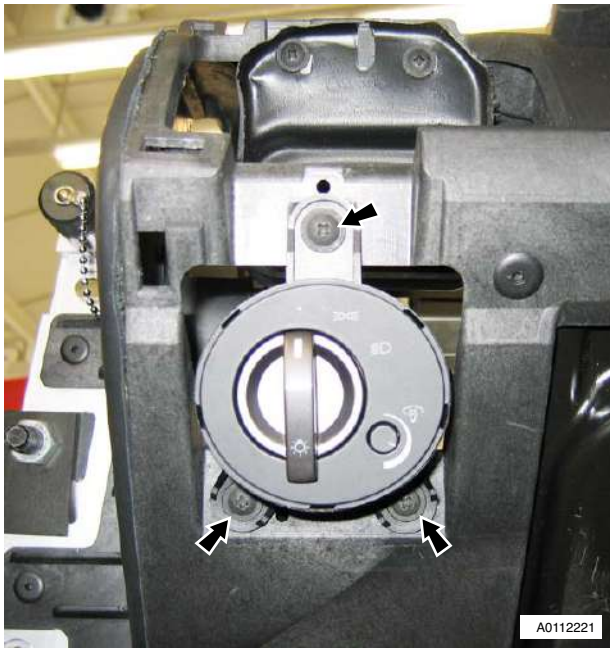

Figure 2

6. Disconnect Passenger airbag inhibit switch (see Figure 3).

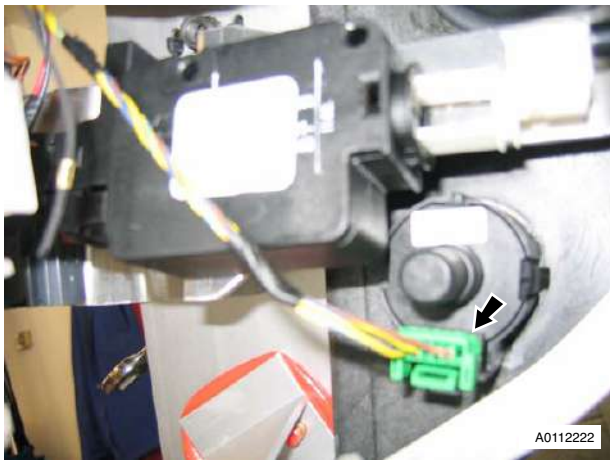

Figure 3

7. Disconnect interior guard switch (see Figure 4).

Figure 4

8. Remove RKE module (screws x2).
9. Remove side demist ducts (see Figure 5).

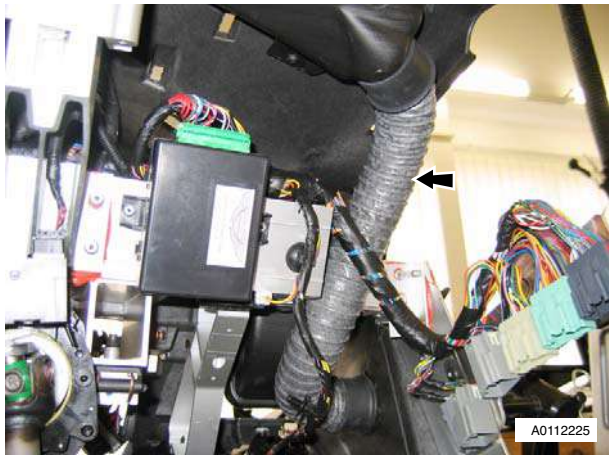

Figure 5

10. Remove RH footwell lamp (see Figure 6).

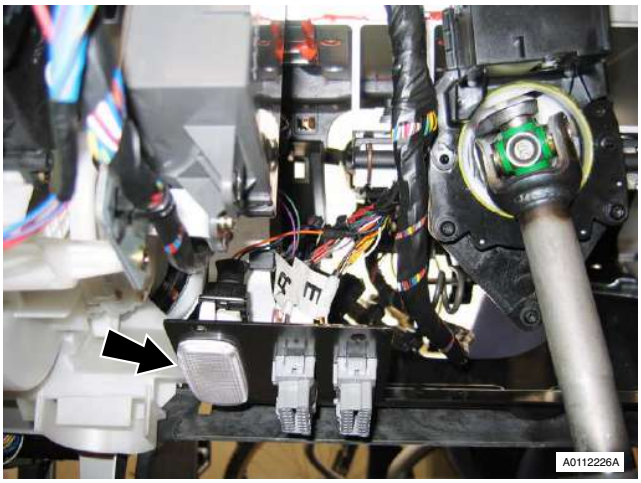

Figure 6

11. Unclip diagnostic plugs (x2) (see Figure 7).

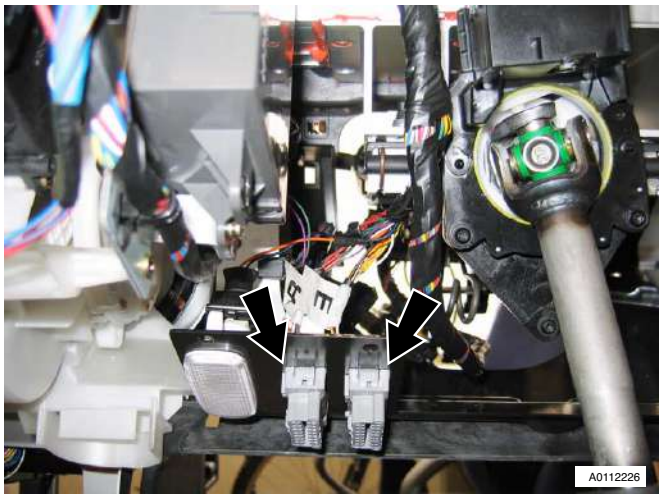

Figure 7

12. Remove CD unit (screws x2) (see Figure 8).

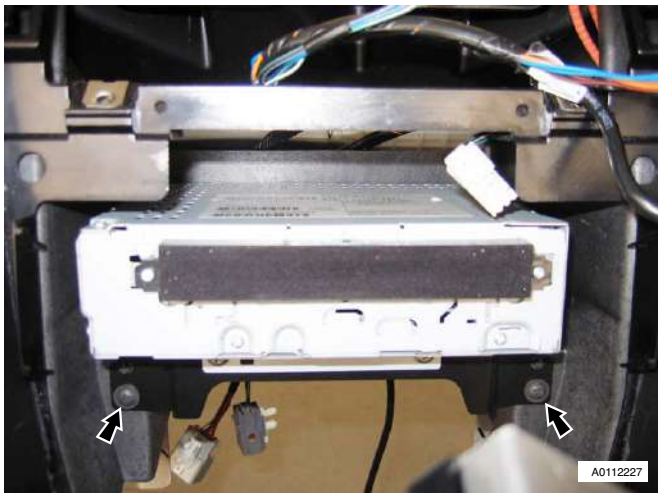

Figure 8

13. Remove screws (x4) panel to reinforcement.
14. Drill out rivets (x11).
15. Pull back IP panel, disconnect solar sensor and speaker multiplugs, unclip harness (x2) and remove IP.
16. Remove Interior guard and Airbag inhibit switch.
17. Drill out rivets (x5) plate to IP panel (see Figure 9).

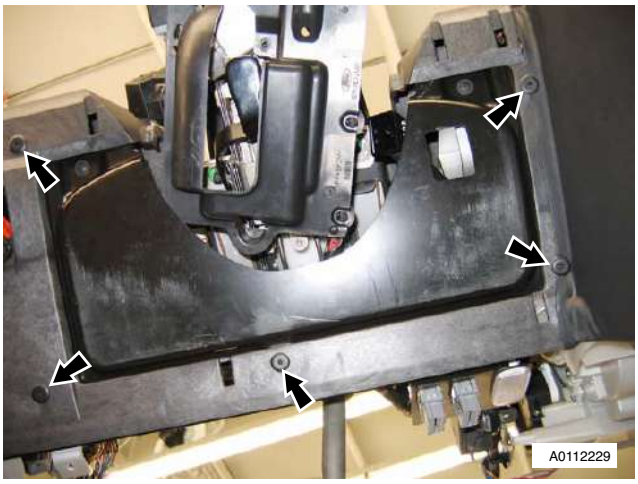

Figure 9

Installation

1. Install rivets (x5) plate to IP panel.
2. Install Interior guard and Airbag inhibit switch
3. Before positioning IP panel, connect solar sensor and speaker multiplugs and clip harness (x2).
4. Install panel rivets (x11).
5. Install screws (x4) panel to reinforcement.
6. Install diagnostic plugs (x2).
7. Install footwell lamp
8. Install side demist ducts.
9. Install RKE module (screws x2).
10. Connect interior guard switch.
11. Connect Passenger airbag inhibit switch.
12. Install lighting switch
13. Install centre speaker.
14. Install passenger air bag module.
15. Install steering column.
16. Install Instrument panel assembly (see Workshop Manual procedure 01.12.AM Panel Assembly - Instrument Centre - Renew).

Cluster Bezel Panel - Renew

Repair Operation Time (ROT)	
Item	**Code**
Cluster Bezel Panel-Renew	**01.12.AT**

Removal

1. Remove instrument cluster hood assembly (6 clips) (see Figure 1).

Figure 1

2. Remove driver's upper outer panel assembly (4 clips) (see Figure 2).

Figure 2

3. Remove driver's upper inner panel assembly (5 clips) (see Figure 3).

Figure 3

4. Remove instrument cluster bezel panel (5 screws) and remove steering column cover (2 screws).

Installation

1. Install steering column cover to instrument cluster bezel panel (2 screws) and then install bezel to instrument cluster (5 screws).
2. Install driver's upper inner panel assembly (5 clips).
3. Install driver's upper outer panel assembly (4 clips).
4. Install instrument cluster hood (6 clips).

Driver Panel Assembly - Renew

Repair Operation Time (ROT)	
Item	**Code**
Driver Panel Assembly-Renew	**01.12.AU**

Removal

1. Remove instrument panel hood assembly (6 clips) (see Figure 1)

Figure 1

2. Remove driver's upper outer panel assembly (4 clips) (see Figure 2).

Figure 2

3. Remove driver's upper inner panel assembly (5 clips) (see Figure 3).

Figure 3

4. Remove driver's panel assembly (3 screws and 4 clips).

Installation

1. Install driver's panel assembly (3 screws and 4 clips).
2. Install driver's upper inner panel assembly (5 clips).
3. Install driver's upper outer panel assembly (4 clips).
4. Install instrument cluster hood assembly (6 clips).

Instrument Panel Bezel Assembly (With Sat. Nav.) - Renew

Repair Operation Time (ROT)	
Item	**Code**
Instrument Panel Bezel Assembly-Renew	**01.12.AY**

Removal

1. Using tool (501 - 108), release instrument panel bezel assembly clips (x4) from IP (restrain panel movement).
2. Disconnect multiplug (x1) starter button and remove panel assembly (see Figure 1).

Figure 1

3. Remove starter button from instrument panel bezel assembly.
4. Remove screws (x6) air vents (x2) to bezel assembly and remove air vents.
5. Remove screws (x11) satellite navigation screen panel from instrument panel bezel assembly.
6. Remove Satellite screen panel.

Installation

1. install satellite screen panel (screws x 11) to bezel assembly.
2. Install air vents (x2).
3. Install starter button.
4. Position panel assembly, connect multiplug (x1) starter button.
5. Install panel and secure in clips (x4).

Instrument Panel Bezel Assembly (Without Sat. Nav.) - Renew

Repair Operation Time (ROT)	
Item	**Code**
Instrument Panel Bezel Assembly-Renew	**01.12.AZ**

Removal

1. Using tool (501 - 108), release instrument panel bezel assembly clips (x4) from IP (restrain panel movement).

2. Disconnect multiplug (x1) starter button and remove panel assembly (see Figure 1).

Figure 1

3. Remove starter button from instrument panel bezel assembly (see Figure 2).

Figure 2

4. Remove screws (x6) air vents (x2) to bezel assembly and remove air vents (see Figure 3).

Figure 3

Installation

1. Install air vents (x2).
2. Install starter button.
3. Position panel assembly, connect multiplug (x1) starter button.
4. Install panel and secure in clips (x4).

Rear Console Panel Assembly - Renew

Repair Operation Time (ROT)	
Item	**Code**
Rear Console Panel Assembly-Renew	**01.12.CA**

Removal

1. Battery isolation switch 'OFF'
2. Remove stowage compartment door.
3. Remove bolt and screws (x5), support rail to body. Remove support rail.
4. Remove screw (x1) centre arm rest to rear console panel assembly.
5. Release/remove centre arm rest.
6. Remove nuts (x3), screws (x4), panel assembly rear console.
7. Remove screws (x2) ashtray console panel assembly to floor.
8. Remove rear console panel assembly.

Installation

1. Position rear console panel, install and tighten nuts (x3) and screws (x4).
2. Install screws (x2) ashtray console panel to floor.
3. Install centre arm rest.
4. Install support rail, install and tighten screws (x5) and bolt.
5. Install stowage compartment door.
6. Battery isolation switch 'ON'.

Armrest Pad Assembly - Renew

Repair Operation Time (ROT)	
Item	**Code**
Armrest Pad Assembly-Renew	**01.12.DA**

Removal

1. Battery isolation switch 'OFF'.
2. Remove stowage compartment door.
3. Remove bolt (x1) and screws (x5) support rail to body.
4. Remove screw (x1) centre arm rest to rear console panel assembly.
5. Release and remove arm rest

Installation

1. Install arm rest assembly.
2. Install rear support rail
3. Install stowage compartment door.
4. Battery isolation switch 'ON'.

Console Panel Assembly - Renew

Repair Operation Time (ROT)	
Item	**Code**
Console Panel Assembly-Renew	**01.12.DB**

Removal

1. Battery isolation switch 'OFF'.
2. Remove stowage compartment door.
3. Remove bolt (x1) and screws (x5) support rail to body.
4. Remove screw (x1) centre arm rest to rear console panel assembly.
5. Release and remove arm rest
6. Release gear lever gaiter.
7. Remove screws (x2) ashtray console panel assembly to floor.
8. Release switch panel and disconnect multiplugs (x6) and Lucar connectors (x2).
9. Remove switch panel.
10. Remove boot release and central locking switch.
11. Remove switches below ashtray (x4)
12. Remove Ashtray from panel assembly. (Allen screws x4)

Installation

1. Install ashtray to panel
2. Install switches (x4)
3. Install switch panel screws (x2).
4. Install boot release and central locking switch to panel assembly console.
5. Position switch panel and connect multiplugs and Lucar connectors.
6. Install gear lever gaiter.
7. Install arm rest assembly.
8. Install rear support rail
9. Install stowage compartment door.
10. Battery isolation switch 'ON'.

RH/LH Rear Console Panel Assembly - Renew (Roadster Only)

Repair Operation Time (ROT)		
Item		**Code**
Rear Console Panel Assembly	RH	**01.12.DE**
Rear Console Panel Assembly	LH	**01.12.DF**

Removal

1. Remove panel assembly centre (see Workshop Manual procedure 01.05.FR/01.05.FS Panel Assembly - Centre - Rear Bulkhead - LH/RH - Renew).
2. Remove screw (x1) trim to body lower (see Figure 1).

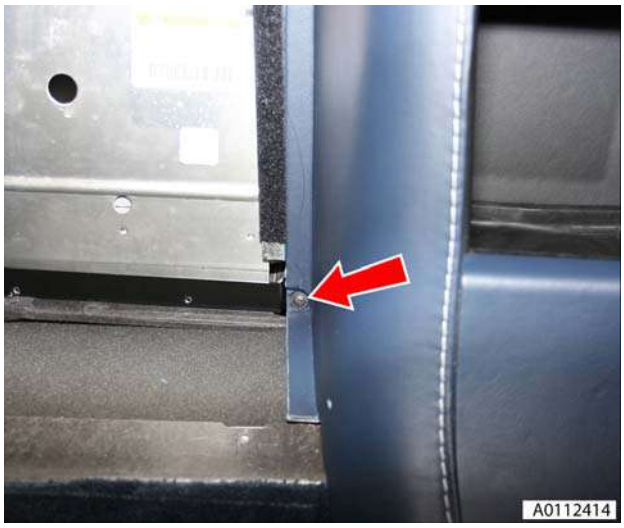

Figure 1

3. Remove nut securing console panel to body side trim (see Figure 2).

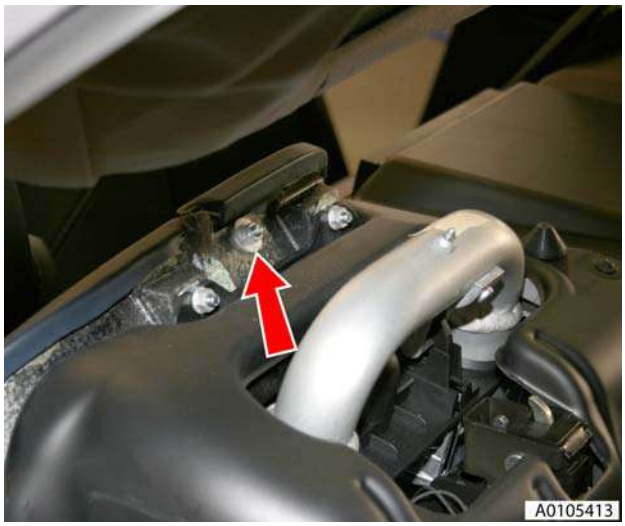

Figure 2

4. Remove wind stop hook (see Workshop Manual procedure 01.05.CZ Hook - Windstop - Renew).
5. Remove accessory socket cover and cubby box liner (see Figure 3).

Figure 3

6. Remove stowage cover (see Figure 4).

Figure 4

7. Prise top of cubby box side trim aside and remove securing screw (see Figure 5).

Figure 5

8. Remove screws (x2) securing trim to tunnel and remove trim.

Installation

1. Install trim and securing screws (x2).
2. Prise top of cubby box side trim aside and install securing screw.
3. Install stowage cover.
4. Install accessory socket cover and cubby box liner.
5. Install wind stop hook (see Workshop Manual procedure 01.05.CZ Hook - Windstop - Renew).
6. Install nut securing console panel to body side trim.
7. Install screw (x1) trim to body lower.

8. Install panel assembly centre (see Workshop Manual procedure 01.05.FR/01.05.FS Panel Assembly - Centre - Rear Bulkhead - LH/RH - Renew).

Centre Console Panel - Remove and Install (Coupe Only)

Repair Operation Time (ROT)	
Item	**Code**
Centre Console Panel - Remove and Install Coupe	**01.12.DG**

Removal

1. Operate the front seats to their fully forward positions.
2. Remove the rear infill panel.

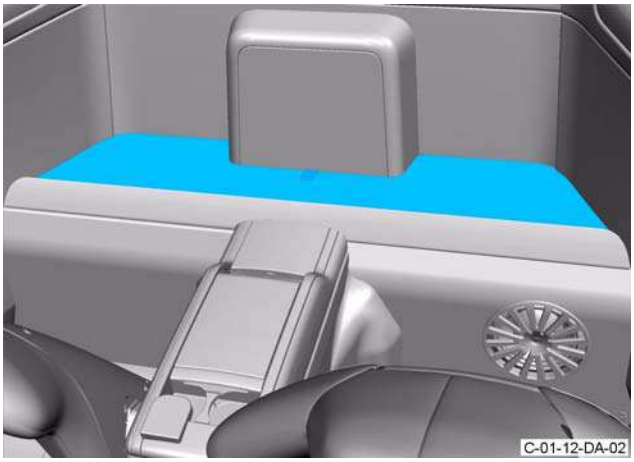

Figure C-01-12-DA-02

3. Remove the five screws that attach the rear finisher to the body.

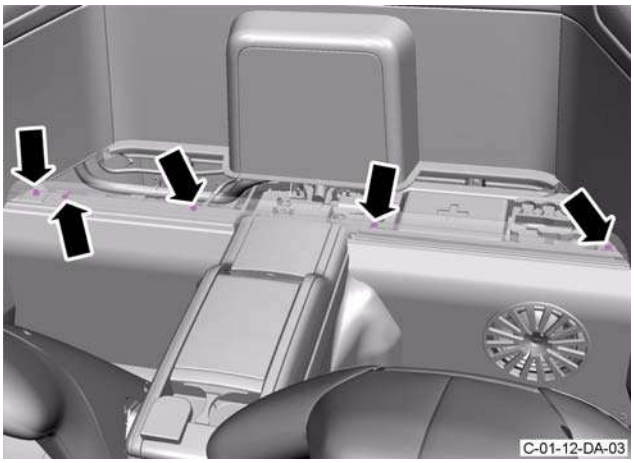

Figure C-01-12-DA-03

4. Remove the rear finisher.

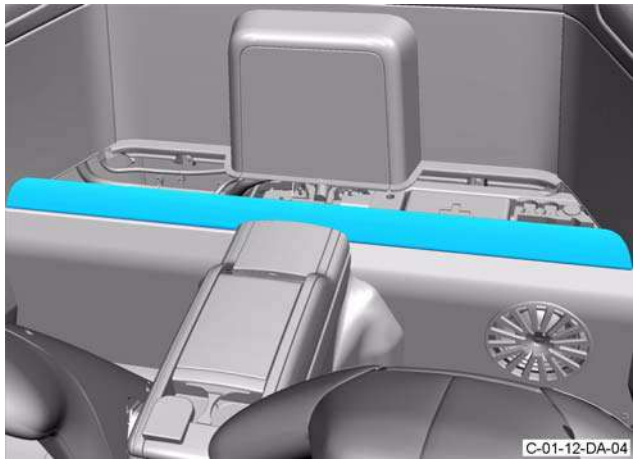

Figure C-01-12-DA-04

5. Remove the rubber mat from the cup holder.

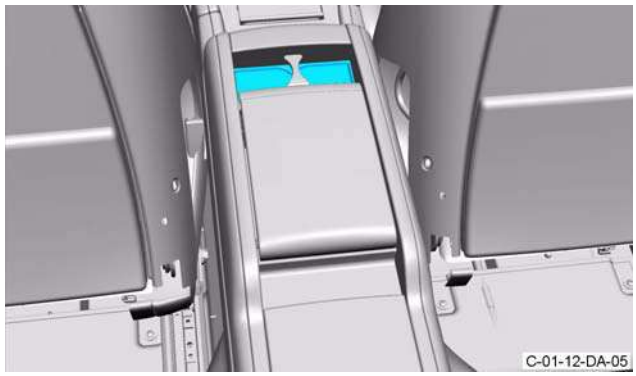

Figure C-01-12-DA-05

Note: The bracket and washers will fall from the armrest.in the step that follows

6. Remove the two Torx bolts that attach the armrest to the body.

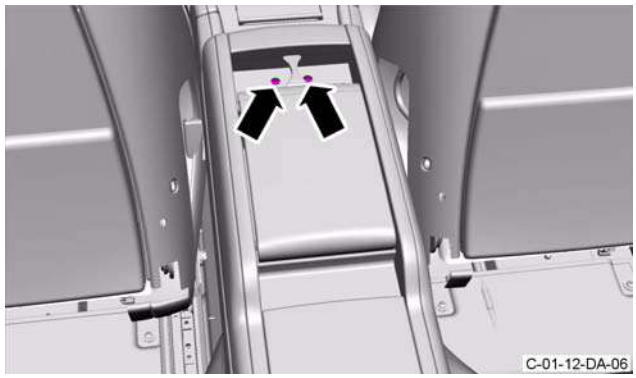

Figure C-01-12-DA-06

7. Remove the leather insert..

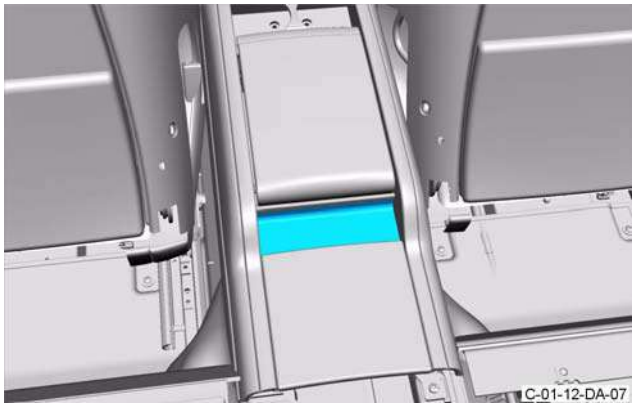

Figure C-01-12-DA-07

8. Remove the two screws that attach the armrest to the body.

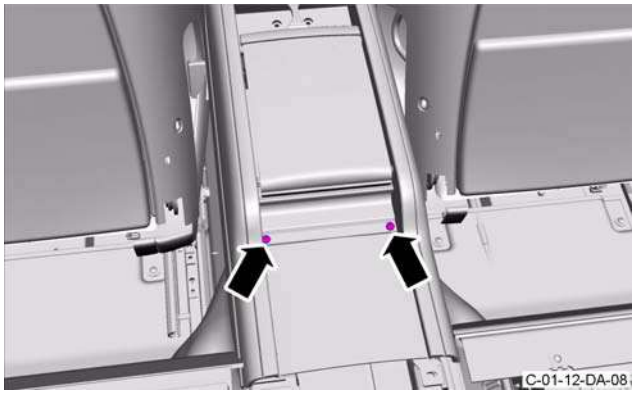

Figure C-01-12-DA-08

9. Remove the rear screw that attaches the armrest to the body.

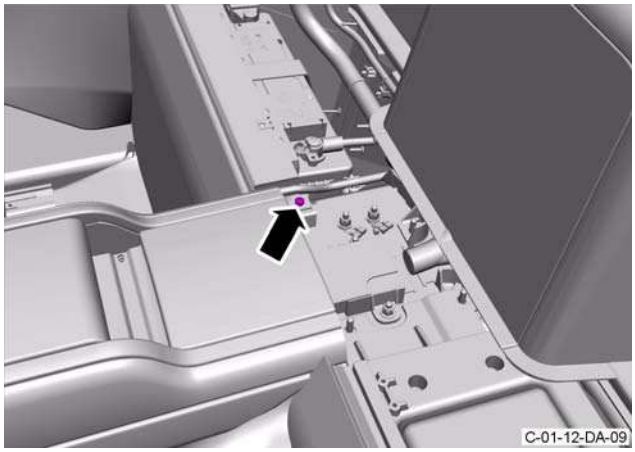

Figure C-01-12-DA-09

10. Move the armrest to get access to the electrical connector for the auxiliary socket.

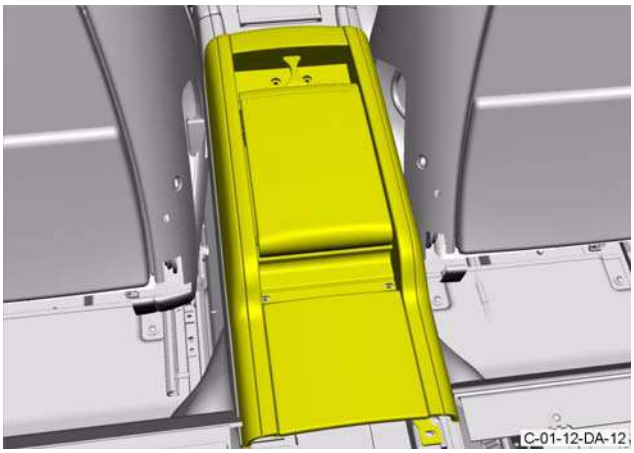

Figure C-01-12-DA-12

11. Disconnect the electrical connector from the auxiliary socket.

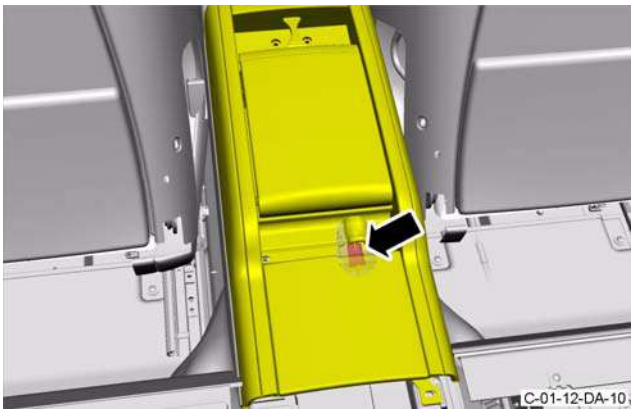

Figure C-01-12-DA-10

12. Remove the armrest.
13. Remove the two screws that attach the centre console panel to the body.

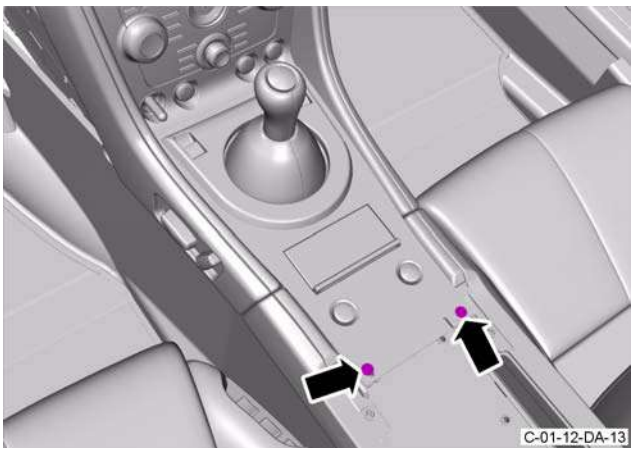

Figure C-01-12-DA-13

14. Push the gearknob down and turn it counterclockwise.

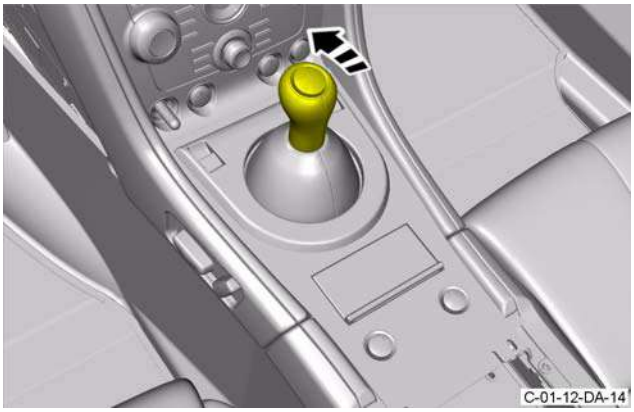

Figure C-01-12-DA-14

15. Remove the gearknob.
16. Release the centre console panel from the body.

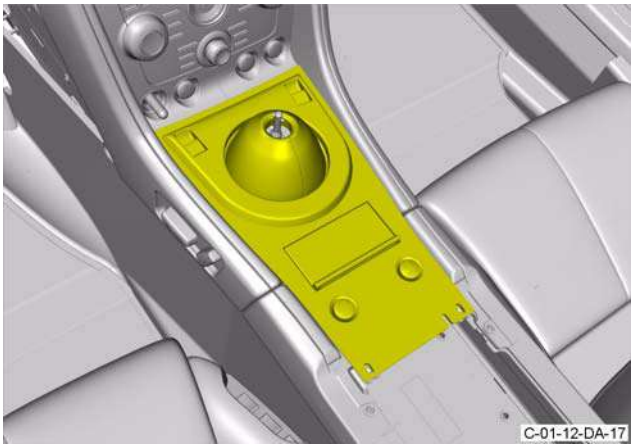

Figure C-01-12-DA-17

17. Disconnect the four electrical connectors from the switches.

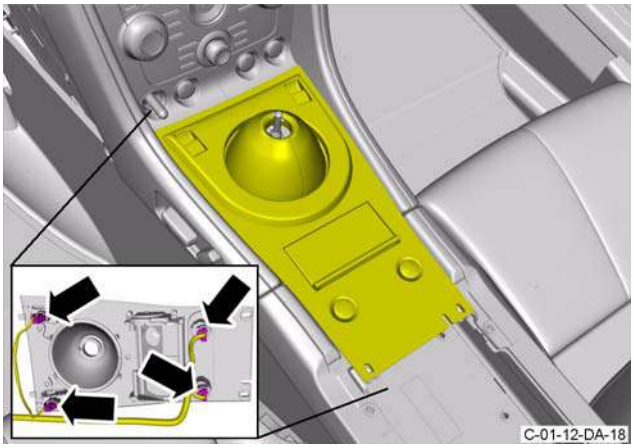

Figure C-01-12-DA-18

18. Remove the centre console panel.

Install

1. Put the centre console panel into position.

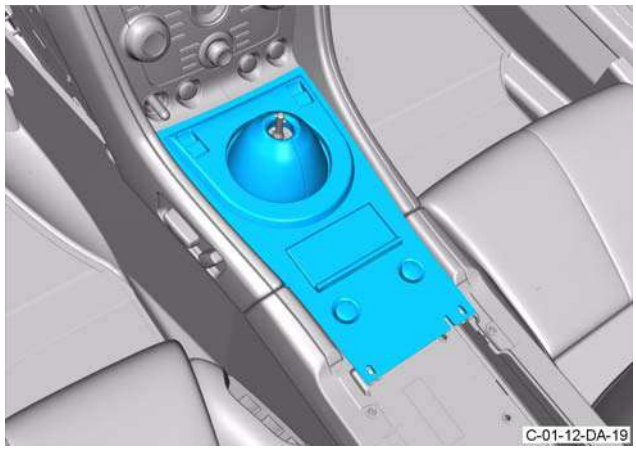

Figure C-01-12-DA-19

2. Connect the four electrical connectors to the switches (refer to Figure C-01-12-DA-18).
3. Install the centre console panel.
4. Install the gearknob.
5. Push the gearknob down and twist it clockwise.

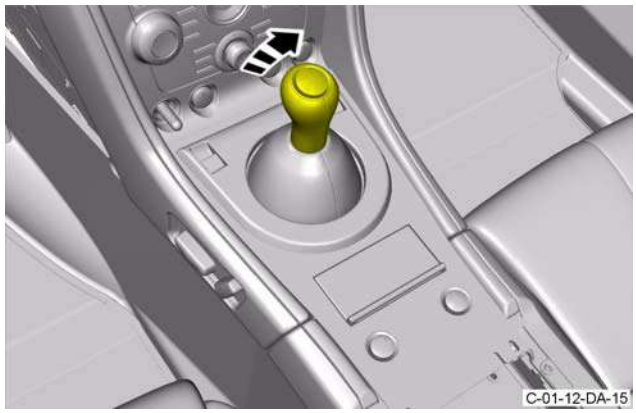

Figure C-01-12-DA-15

6. Install and tighten the two screws that attach the centre console panel to the body.

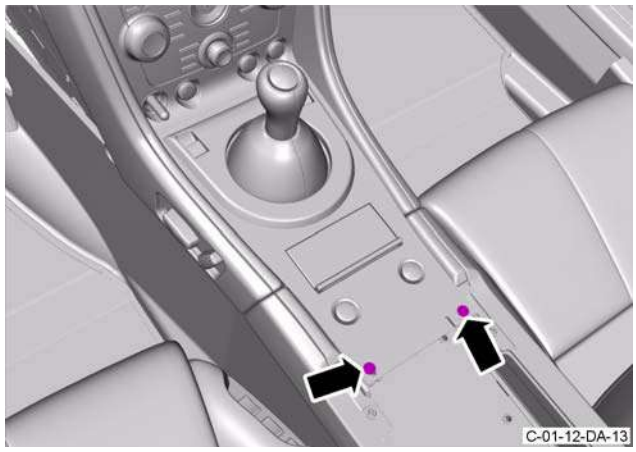

Figure C-01-12-DA-13

7. Install, but do not tighten, the two Torx screws, washers and bracket onto the armrest. Do not tighten the screws at this step.

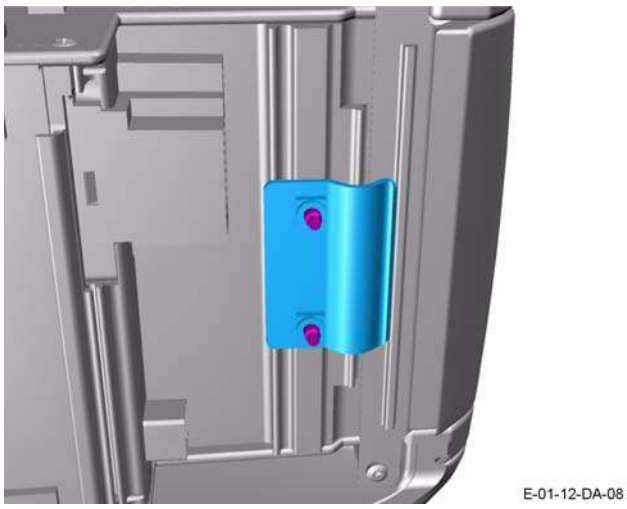

Figure E-01-12-DA-08

8. Put the armrest into position.

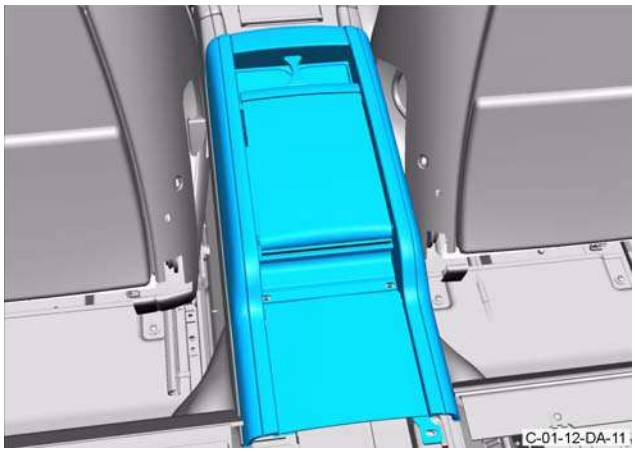

Figure C-01-12-DA-11

9. Connect the electrical connector to the auxiliary socket.

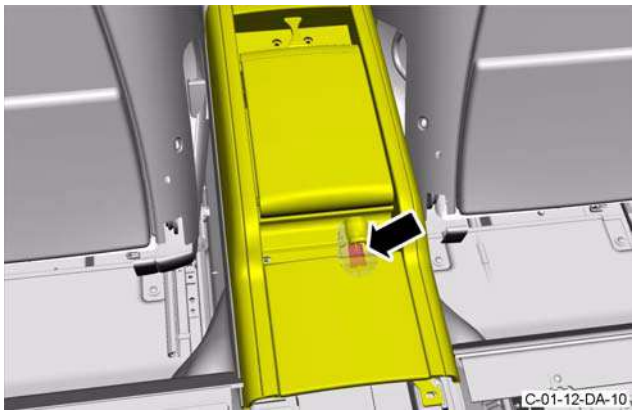

Figure C-01-12-DA-10

10. Install the armrest.

11. Install and tighten the rear screw that attaches the armrest to the body.

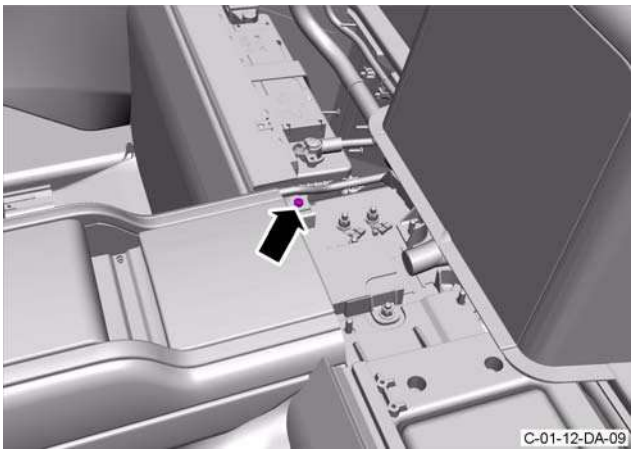

Figure C-01-12-DA-09

12. Tighten the two Torx bolts that attach the armrest to the bracket.

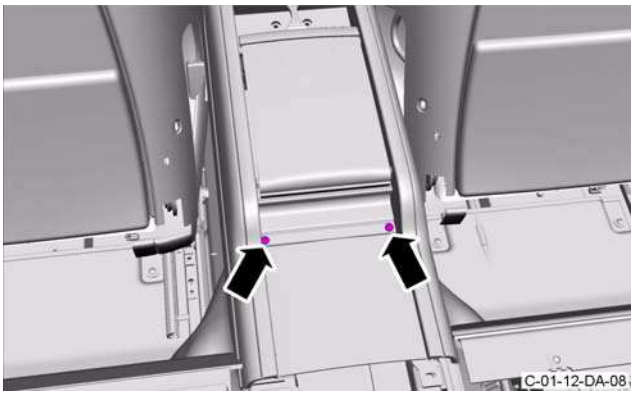

Figure C-01-12-DA-08

13. Install the leather insert.

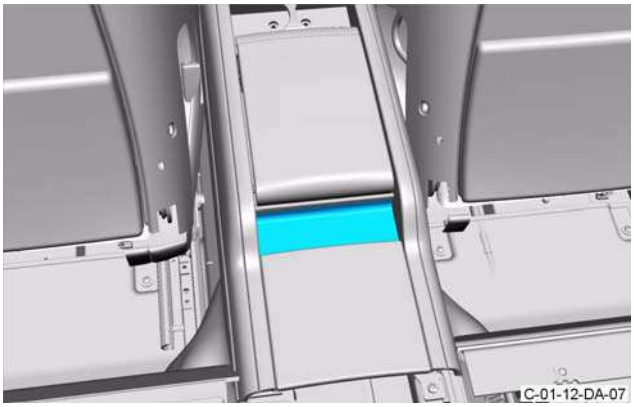

Figure C-01-12-DA-07

14. Install and tighten the two Torx bolts that attach the armrest to the body.

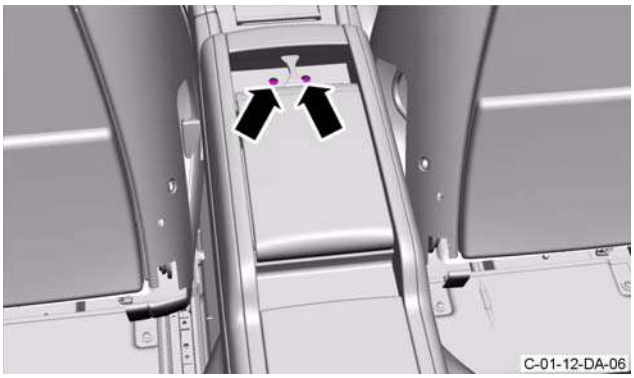

Figure C-01-12-DA-06

15. Install the rubber mat into the cup holder.

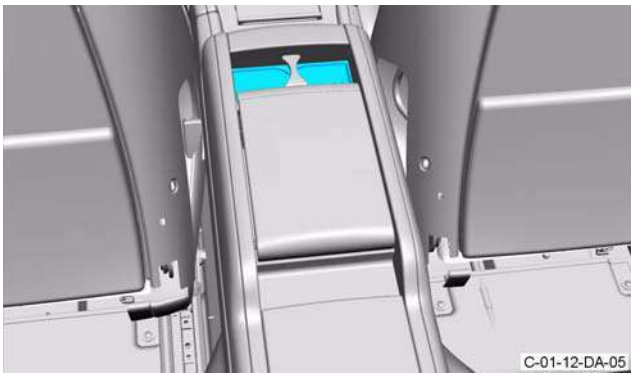

Figure C-01-12-DA-05

16. Install the rear finisher.

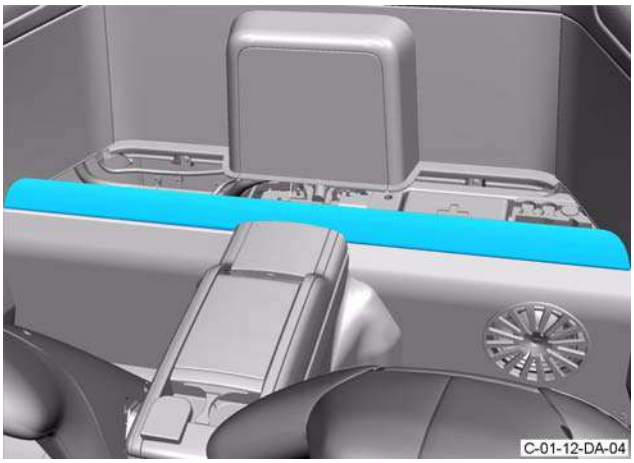

Figure C-01-12-DA-04

17. Install and tighten the five screws that attach the rear finisher to the body.

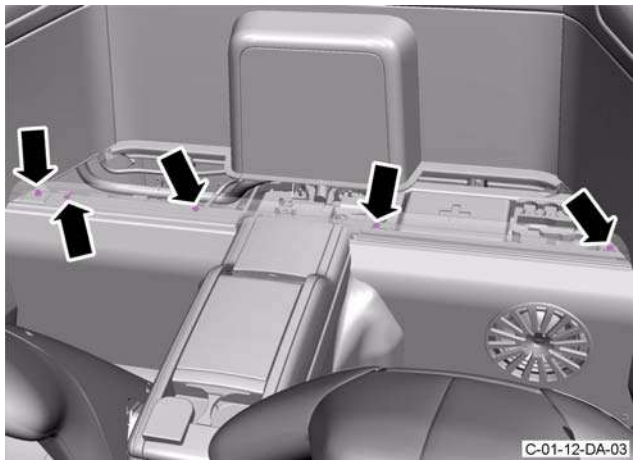

Figure C-01-12-DA-03

18. Install the rear infill panel.

Figure C-01-12-DA-02

19. Operate the front seats to their initial positions.

Centre Console Panel - Remove and Install (Roadster Only)

Repair Operation Time (ROT)		
Item		**Code**
Centre Console Panel - Remove and Install	Roadster	**01.12.DG**

Removal

1. Operate the front seats to their fully forward positions.
2. Disconnect the battery.

WARNING

LEAVE THE VEHICLE FOR TWO MINUTES AFTER YOU SET THE IGNITION TO OFF BEFORE YOU DO WORK ON THE ROLL-OVER PROTECTION SYSTEM (ROPS) UNITS. IF YOU DO NOT, THE ROPS CAN OPERATE AND CAUSE INJURY OR DEATH.

3. Fully open the tonneau cover to get access to the hood compartment.

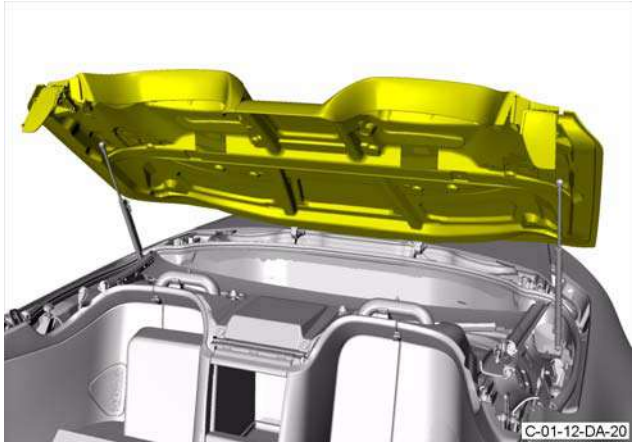

C-01-12-DA-20

4. Use the special tool to hold the tonneau cover.

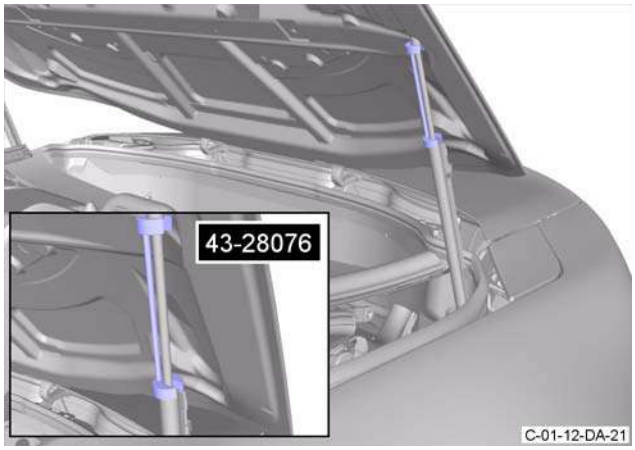

C-01-12-DA-21

5. Remove the left side infill panel.

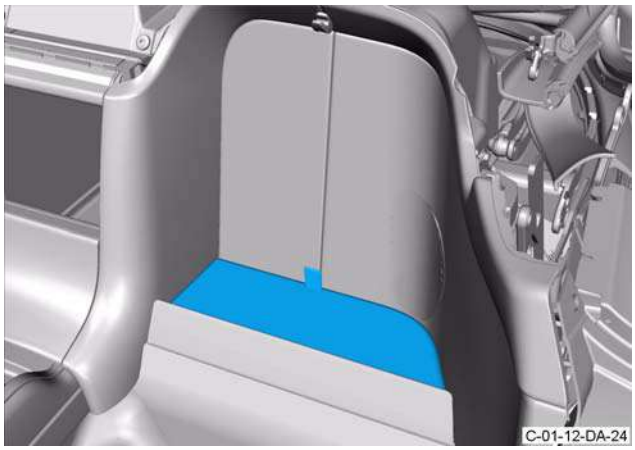

C-01-12-DA-24

6. Remove the screw that attaches the left side rear bulkhead cover to the body.

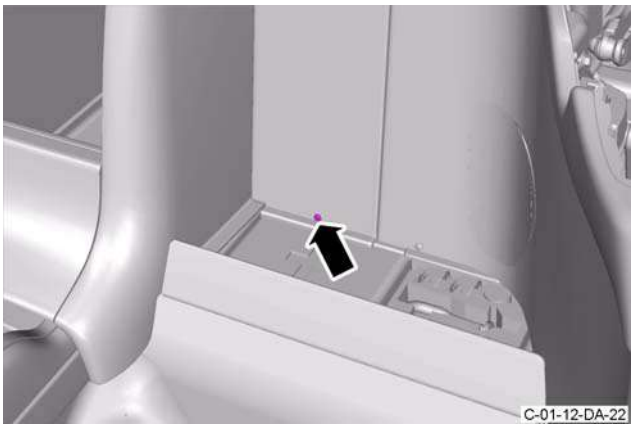

C-01-12-DA-22

7. Remove the left side rear bulkhead cover.

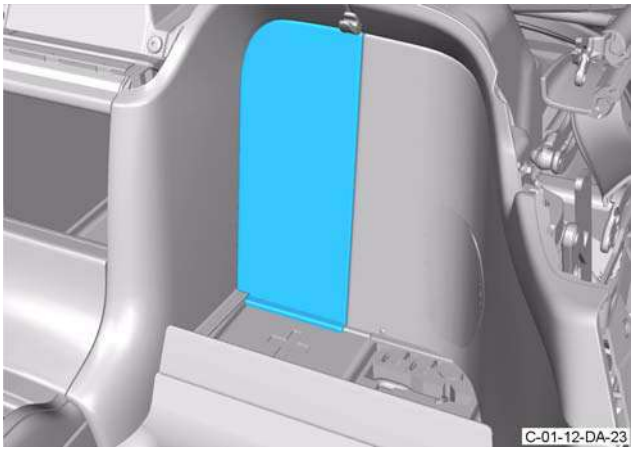

C-01-12-DA-23

8. Remove the stowage box cover and the rubber mat.

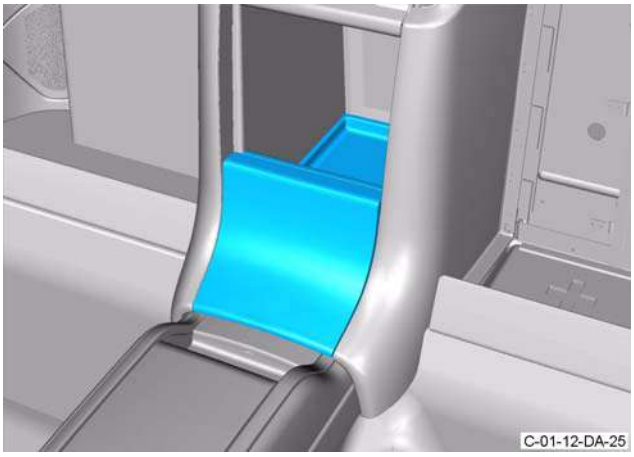

C-01-12-DA-25

9. Remove the two screws that attach the left side cover panel for the centre console to the body.

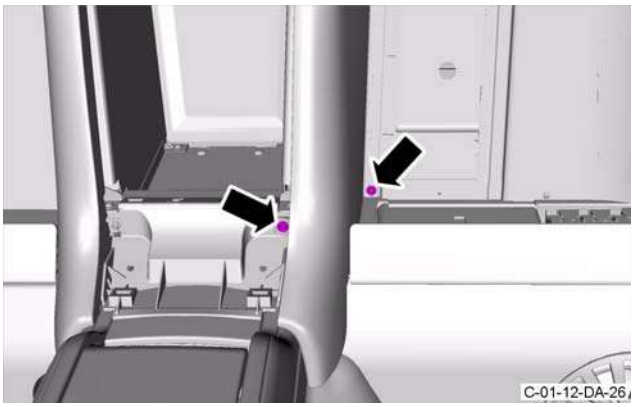

C-01-12-DA-26

10. Remove the two nuts that attach the left side cover panel for the centre console to the body.

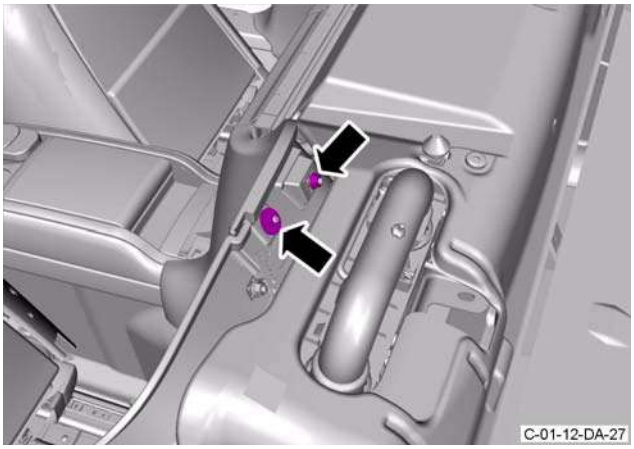

C-01-12-DA-27

11. Remove the left side cover panel for the centre console.

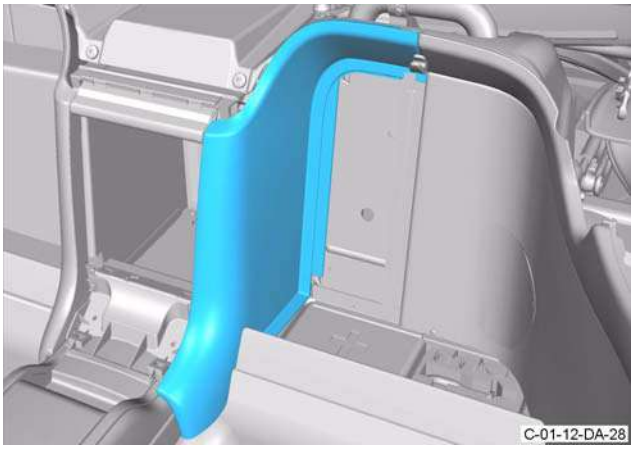

C-01-12-DA-28

12. Remove the right side infill panel.

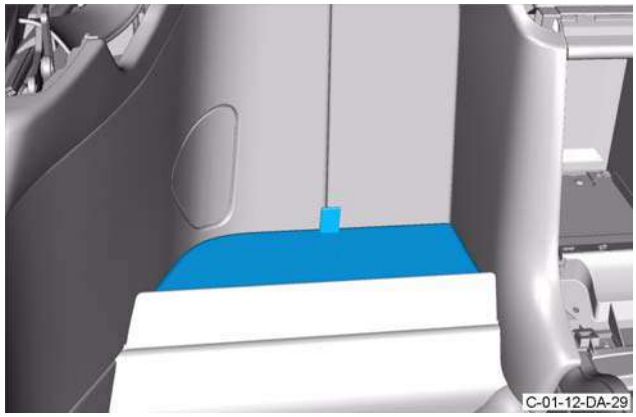

C-01-12-DA-29

13. Remove the screw that attaches the right side rear bulkhead cover to the body.

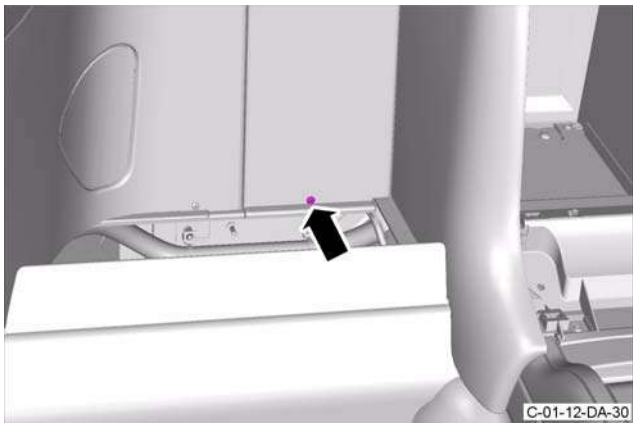

C-01-12-DA-30

14. Remove the right side rear bulkhead cover.

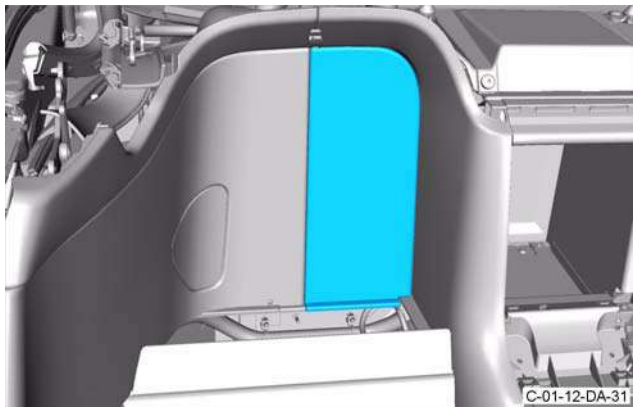

C-01-12-DA-31

15. Remove the two screws that attach the right side cover panel for the centre console to the body.

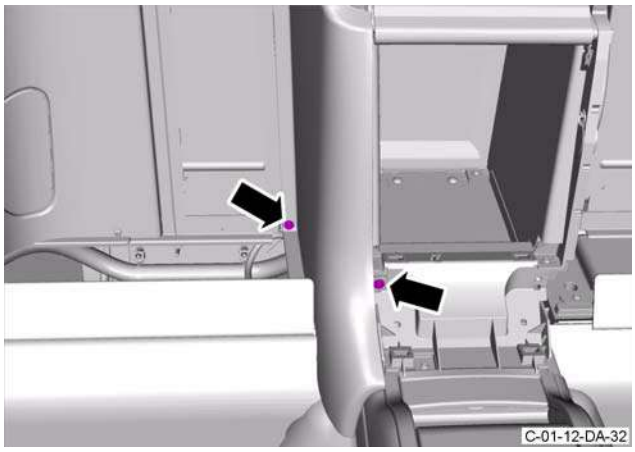

C-01-12-DA-32

16. Remove the two nuts that attach the right side cover panel for the centre console to the body.

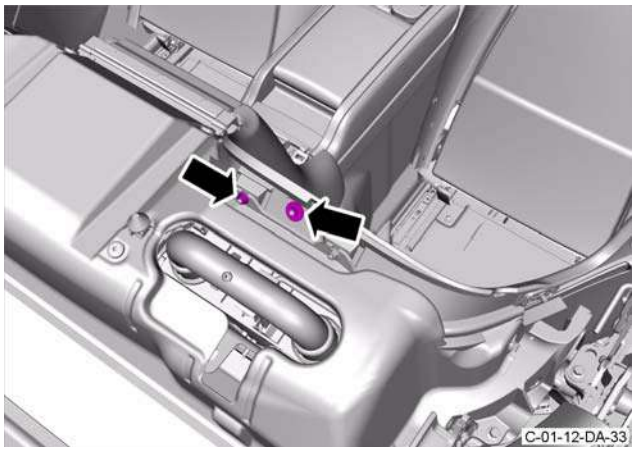

C-01-12-DA-33

17. Remove the right side cover panel for the centre console.

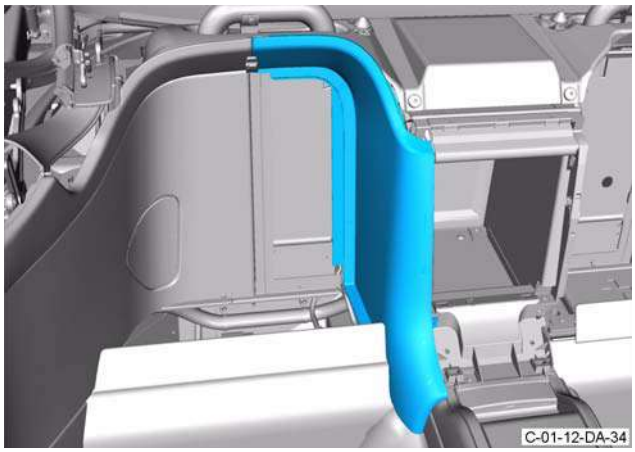

C-01-12-DA-34

18. Remove the four Torx screws and the four nuts that attach the stowage compartment cover to the body.

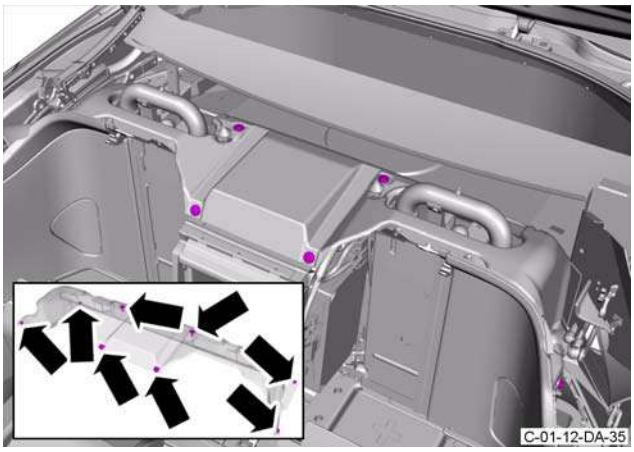

C-01-12-DA-35

19. Remove the stowage compartment cover.

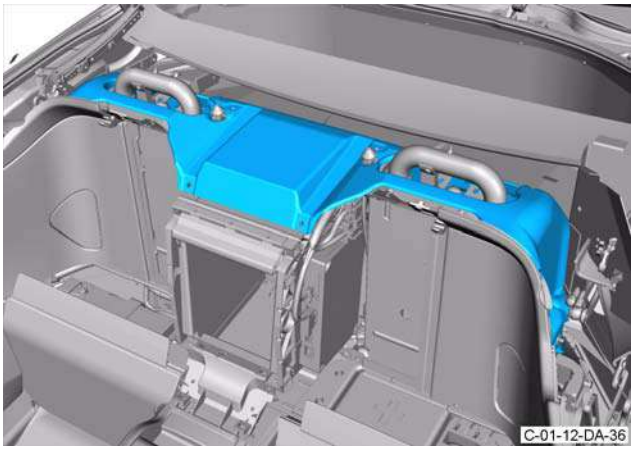

C-01-12-DA-36

20. Remove the screw that attaches the stowage compartment to the body.

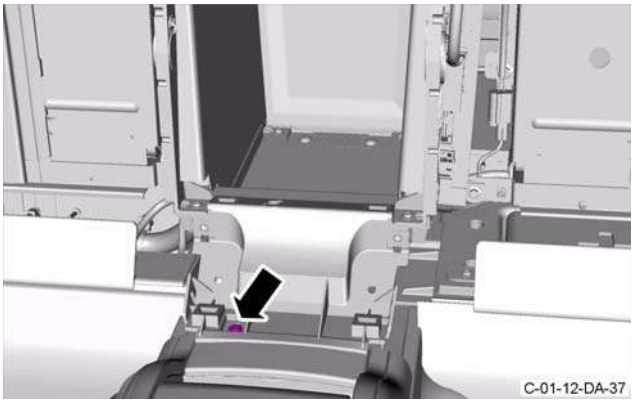

C-01-12-DA-37

21. Remove the four Torx screws that attach the stowage compartment to the body.

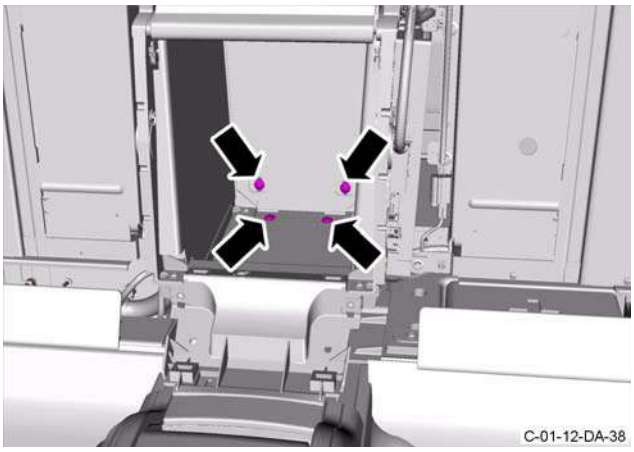

C-01-12-DA-38

22. Remove the two screws that attach the stowage compartment to the body.

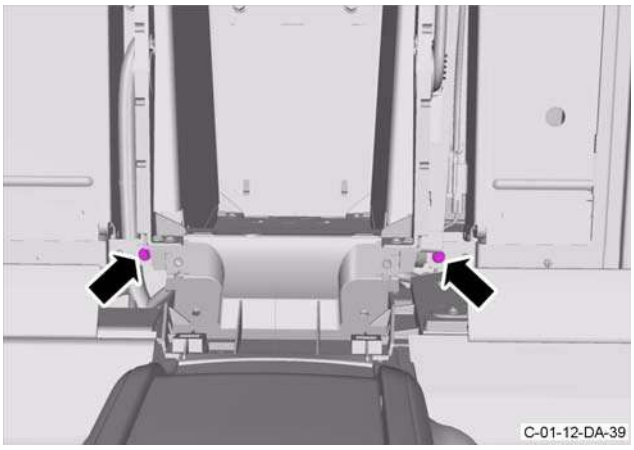

C-01-12-DA-39

23. Remove the rubber mat from the cup holder.

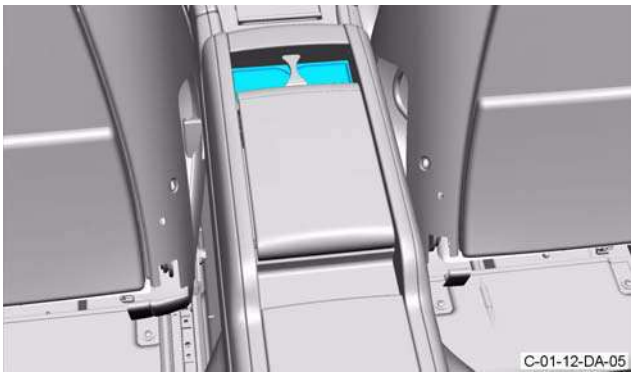

C-01-12-DA-05

Note: The bracket and washers will fall from the armrest in the step that follows.

24. Remove the two Torx screws that attach the armrest to the bracket.

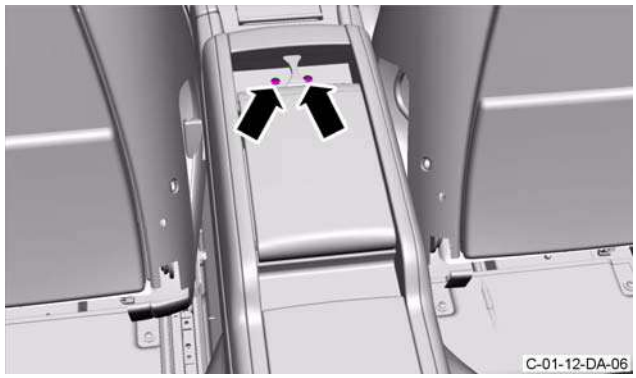

C-01-12-DA-06

25. Remove the leather insert.

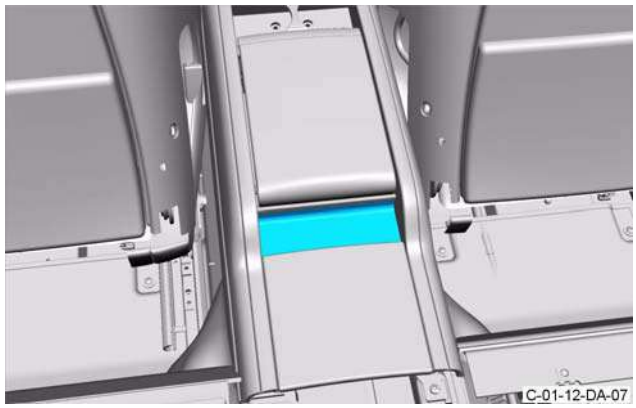

C-01-12-DA-07

26. Remove the two Torx screws that attach the armrest to the body.

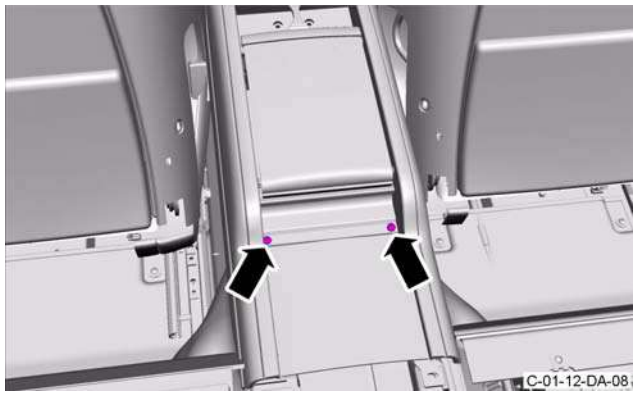

C-01-12-DA-08

27. Move the stowage box and remove the armrest.

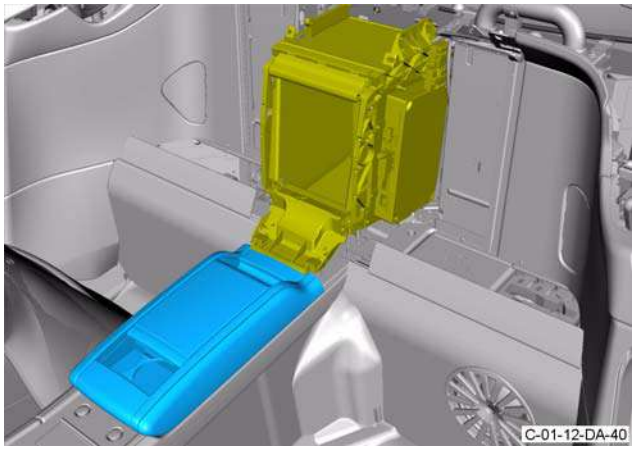

C-01-12-DA-40

28. Remove the two screws that attach the centre console panel to the body.

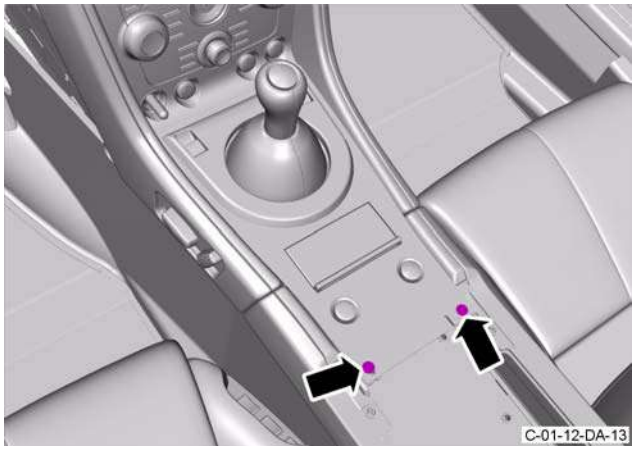

C-01-12-DA-13

29. Push the gear knob down and turn it counterclockwise.

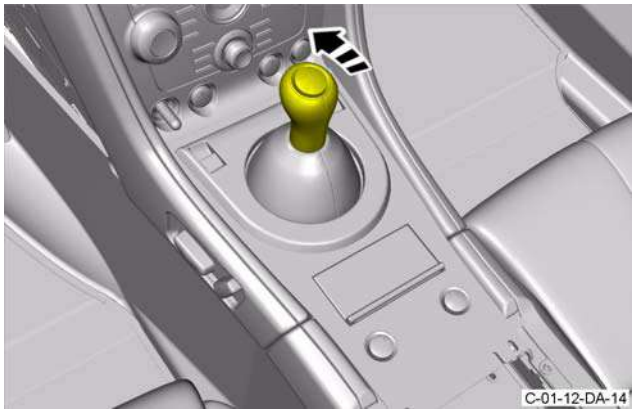

C-01-12-DA-14

30. Remove the gear knob.

31. Release the centre console panel from the body.

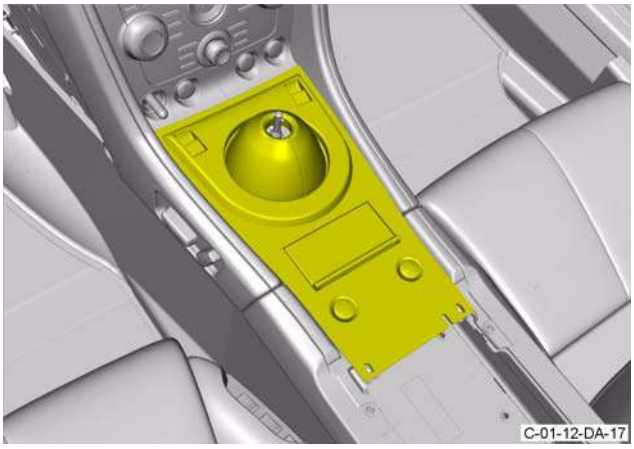

C-01-12-DA-17

32. Disconnect the electrical connector from each of the four switches.

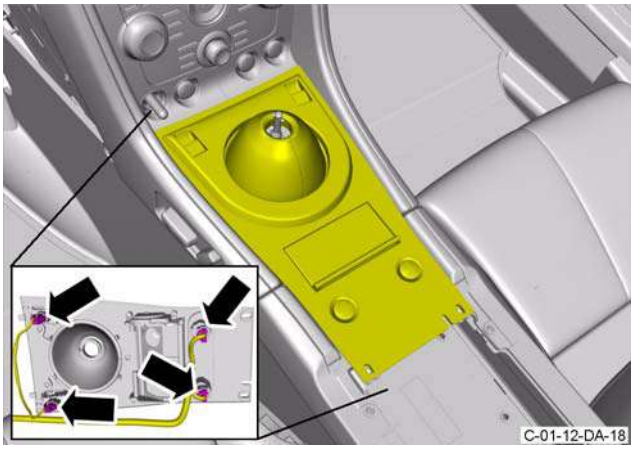

C-01-12-DA-18

33. Remove the centre console panel.

Install

1. Connect the four electrical connector to each of the four switches (refer to Figure C-01-12-DA-18).
2. Put the centre console panel into position.

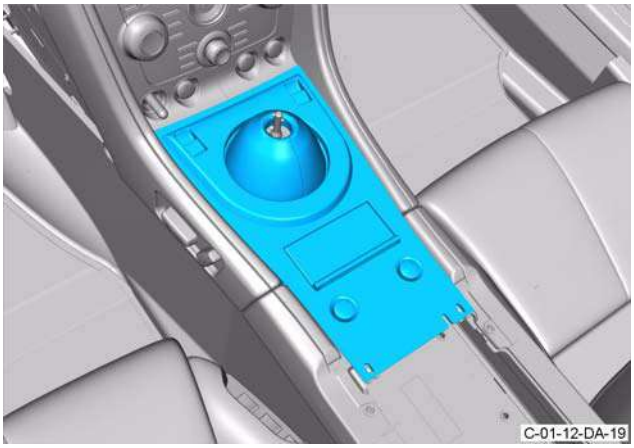

C-01-12-DA-19

3. Install the centre console panel.
4. Install the gearknob.

5. Push the gearknob down and turn it clockwise.

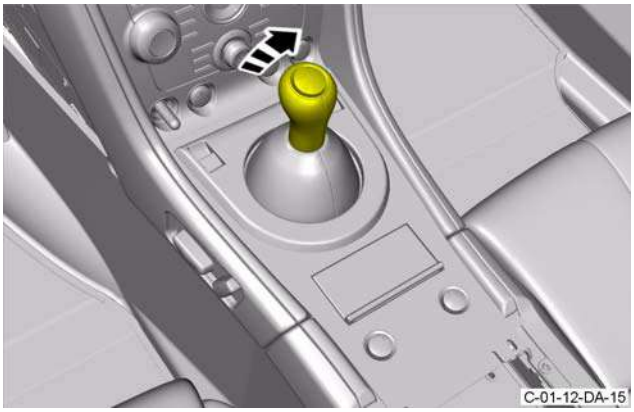

C-01-12-DA-15

6. Install and tighten the two screws that attach the centre console panel to the body.

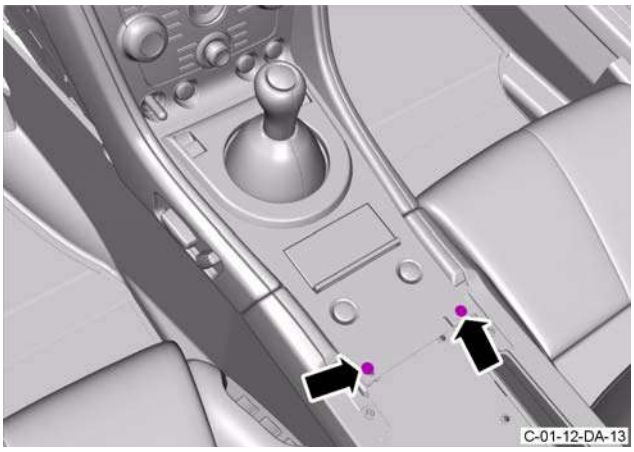

C-01-12-DA-13

7. Install but do not tighten, the two Torx screws, washers and bracket to the armrest.

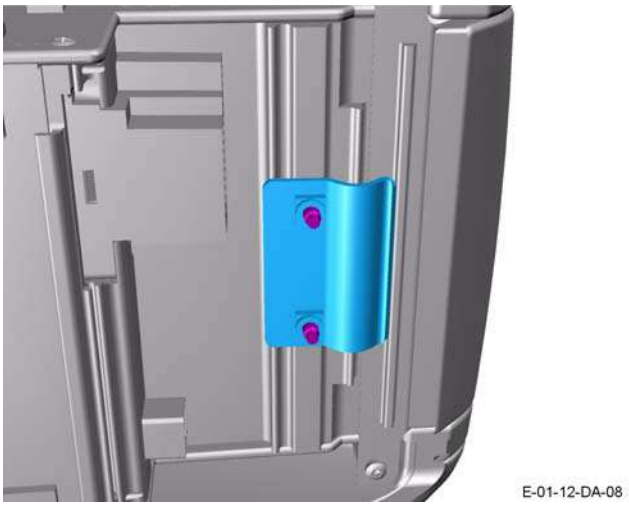

E-01-12-DA-08

8. Move the stowage box and install the armrest.

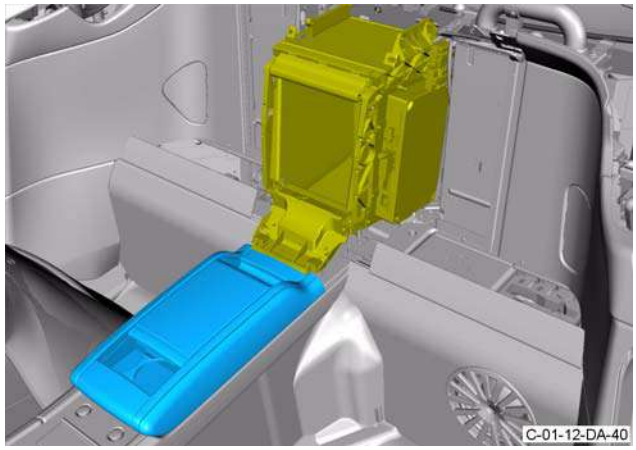

C-01-12-DA-40

9. Tighten the two Torx scrws that attach the armrest to the bracket.

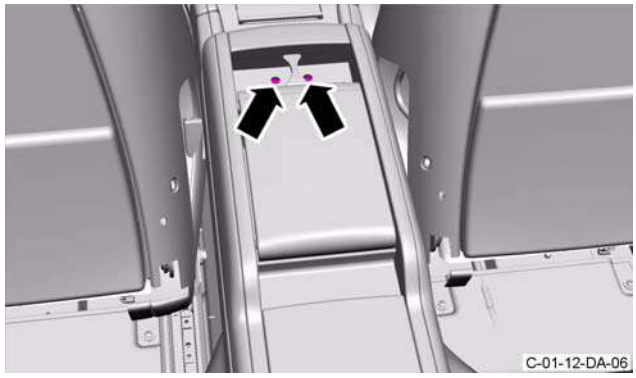

C-01-12-DA-06

10. Install and tighten the two Torx screws that attach the armrest to the body.

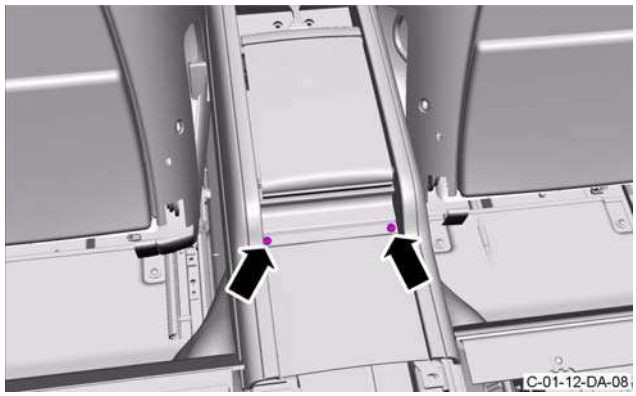

C-01-12-DA-08

11. Install the leather insert.

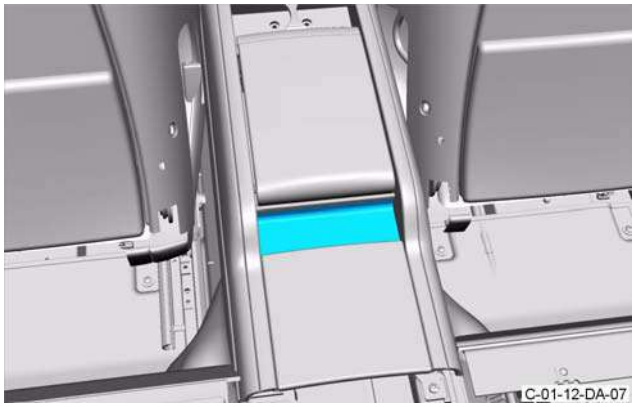

C-01-12-DA-07

12. Install the rubber mat into the cupholder.

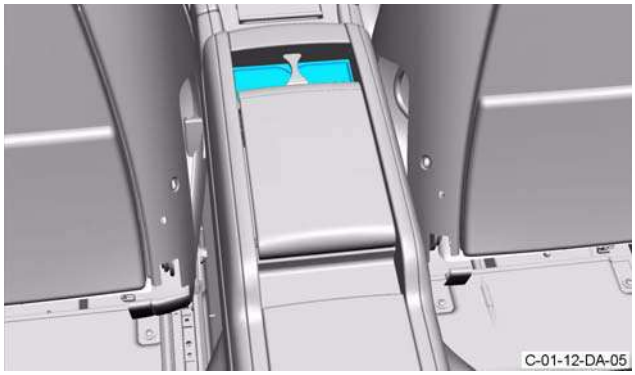

C-01-12-DA-05

13. Install and tighten the two screws that attach the stowage compartment to the body.

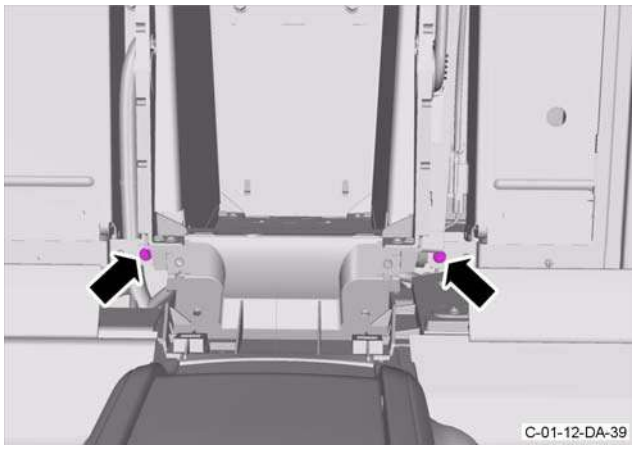

C-01-12-DA-39

14. Install and tighten the four Torx screws that attach the stowage compartment to the body.

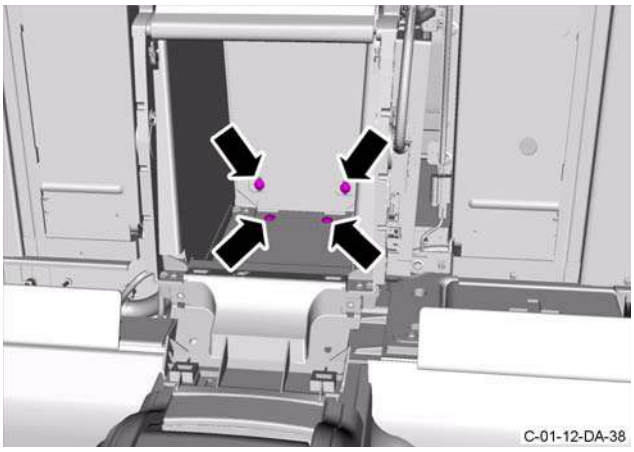

C-01-12-DA-38

15. Install and tighten the screw that attaches the stowage compartment to the body.

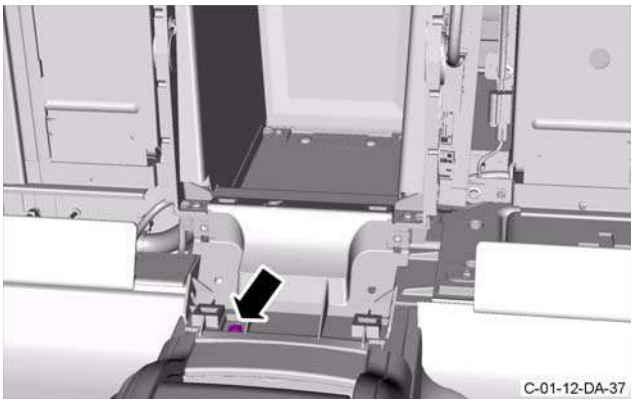

C-01-12-DA-37

16. Install the stowage compartment cover.

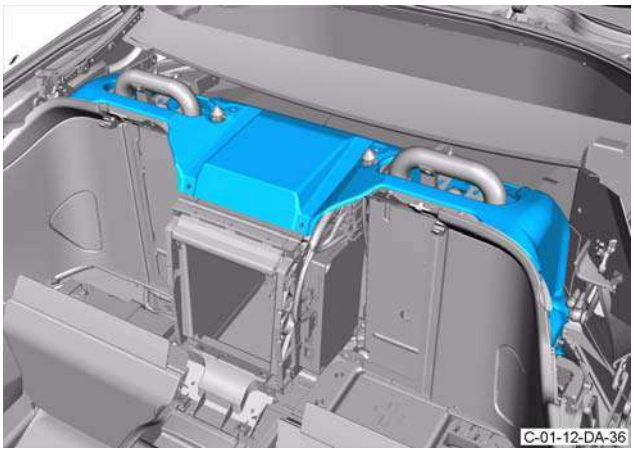

C-01-12-DA-36

17. Install and tighten the four Torx screws and the four nuts that attach the stowage compartment cover to the body.

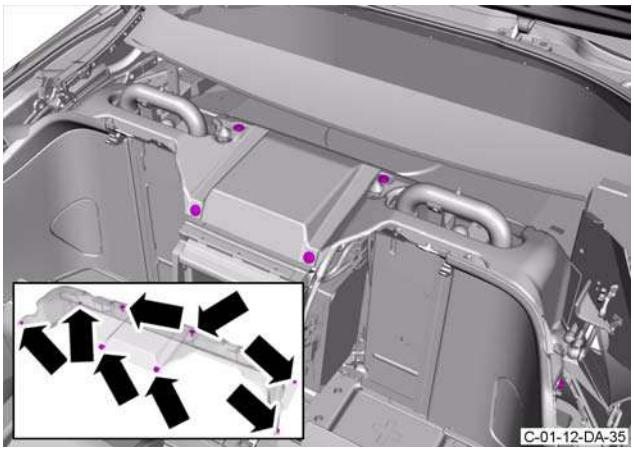

C-01-12-DA-35

18. Install the right side cover panel for the centre console.

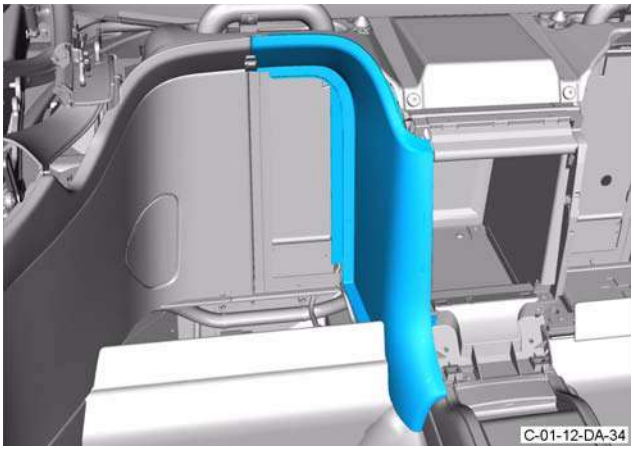

C-01-12-DA-34

19. Install and tighten the two nuts that attach the right side cover panel for the centre console to the body.

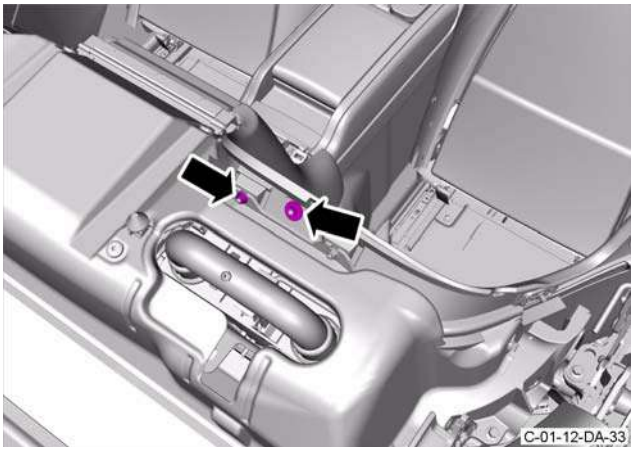

C-01-12-DA-33

20. Install and tighten the two screws that attach the right side cover panel for the centre console to the body.

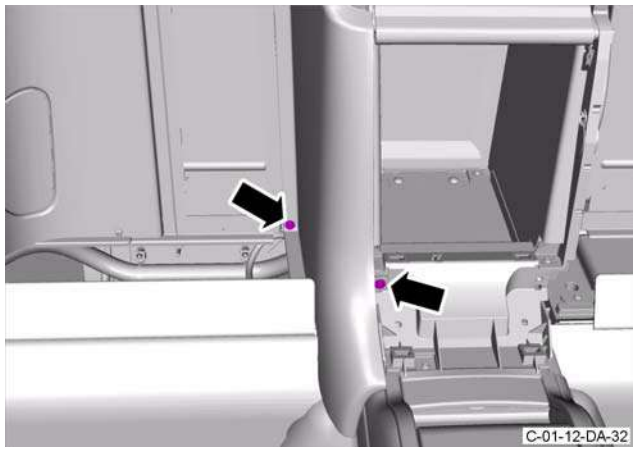

C-01-12-DA-32

21. Install the right side rear bulkhead cover.

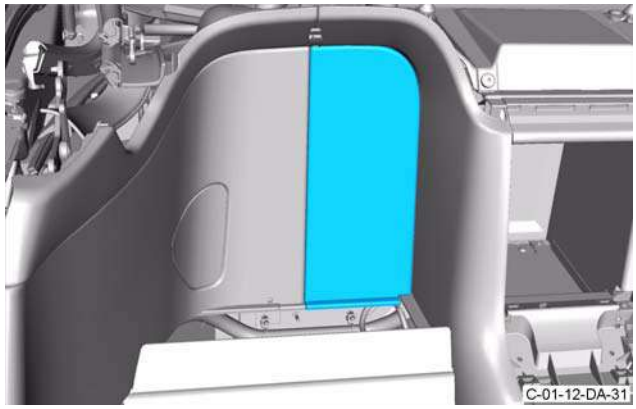

C-01-12-DA-31

22. Install and tighten the screw that attaches the right side rear bulkhead cover to the body.

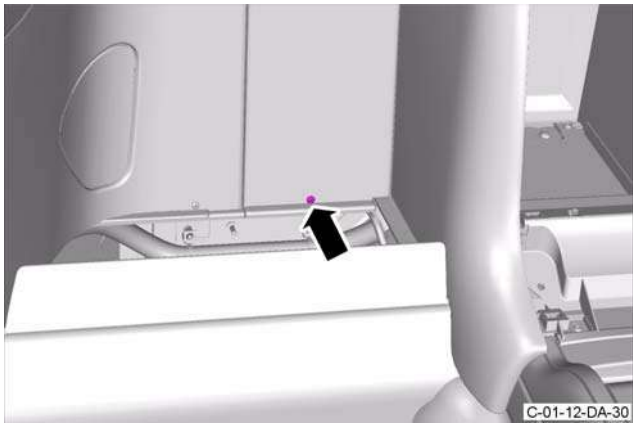

C-01-12-DA-30

23. Install the right hand side infill panel.

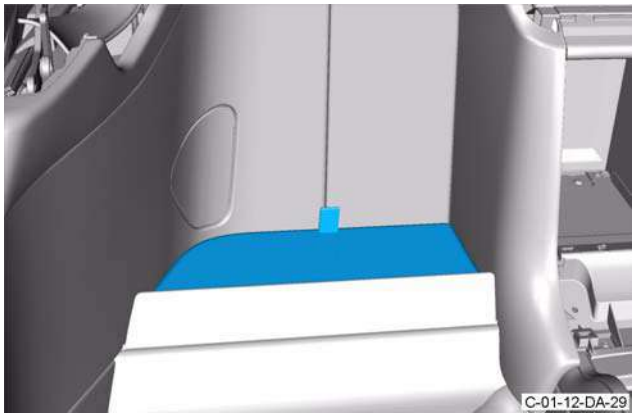

C-01-12-DA-29

24. Install the left side cover panel for the centre console.

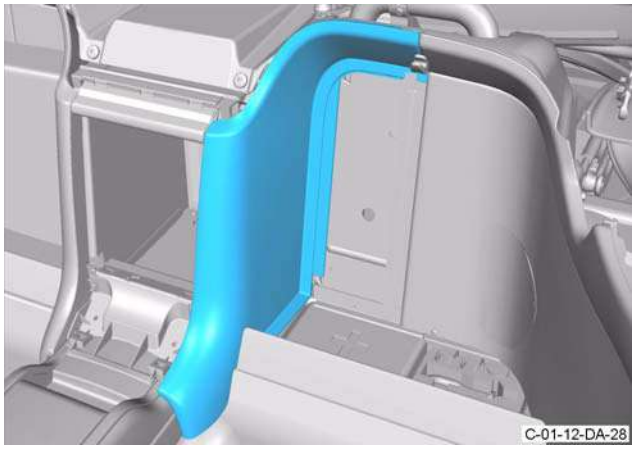

C-01-12-DA-28

25. Install and tighten the two nuts that attach the left side cover panel for the centre console to the body.

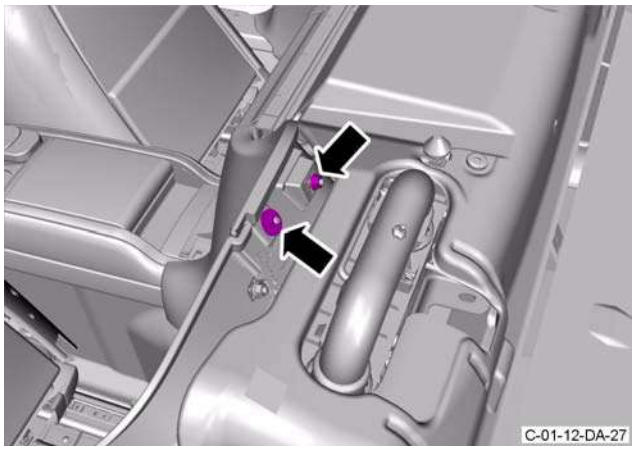

C-01-12-DA-27

26. Install and tighten the two screws that attach the left side cover panel for the centre console to the body.

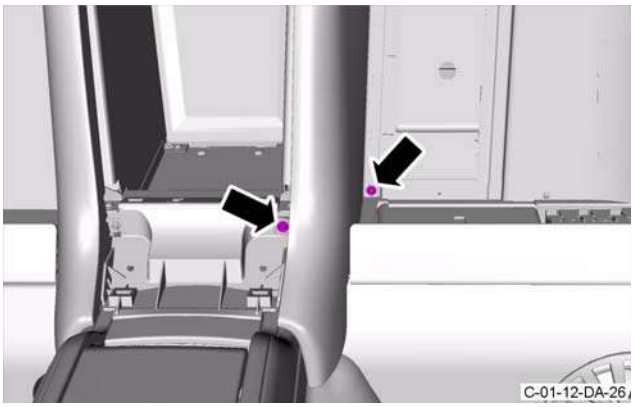

C-01-12-DA-26

27. Install the stowage box cover and the rubber mat.

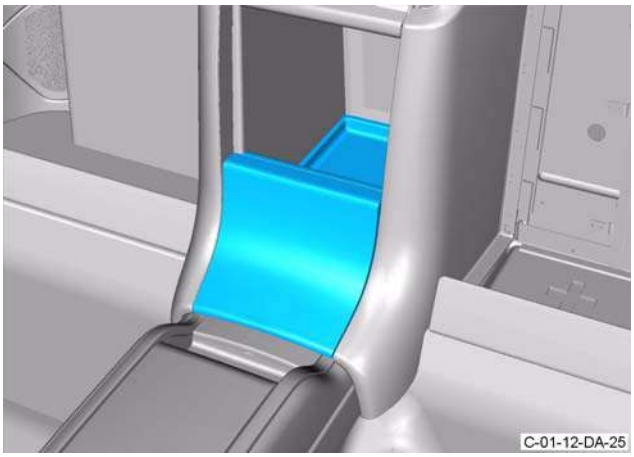

C-01-12-DA-25

28. Install the left side rear bulkhead cover.

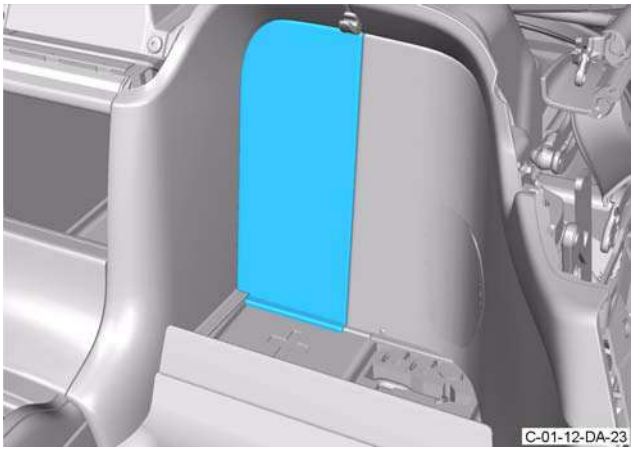

C-01-12-DA-23

29. Install and tighten the screw that attaches the left side rear bulkhead cover to the body.

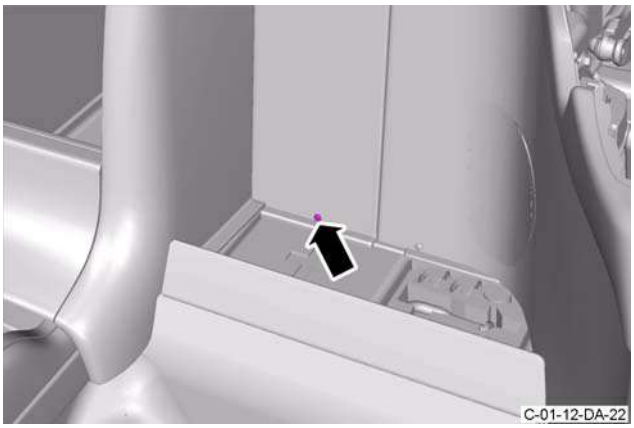

C-01-12-DA-22

30. Install the left side infill panel.

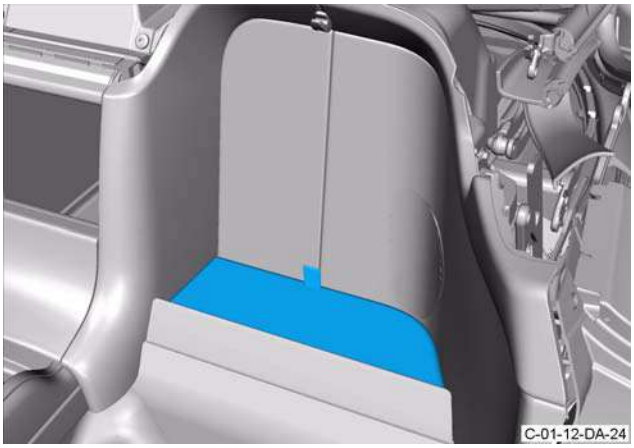

C-01-12-DA-24

31. Remove the special tool from the operating ram on the tonneau cover.

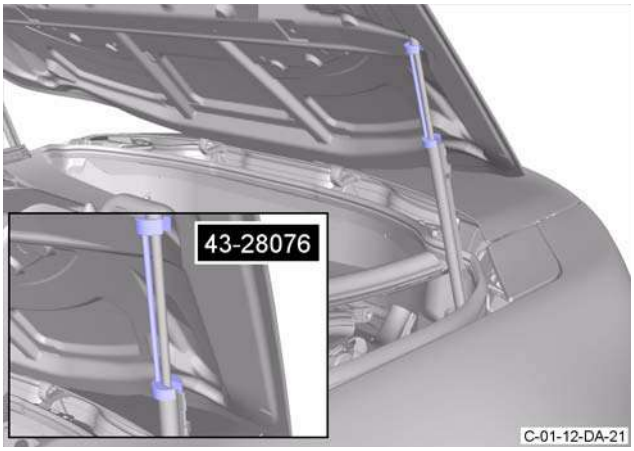

C-01-12-DA-21

32. Fully close the tonneau cover.
33. Connect the battery.
34. Operate the front seats to their initial positions.

RH/LH Lower Quarter Panel Assembly - Renew (Roadster Only)

Repair Operation Time (ROT)		
Item		**Code**
Lower Quarter Panel Assembly	RH	**01.12.DR**
Lower Quarter Panel Assembly	LH	**01.12.DS**

Removal

1. Remove wind deflector (see Workshop Manual procedure 01.17.DA Wind Deflector - Renew).
2. Remove panel centre (see Workshop Manual procedure 01.05.FR/01.05.FS Panel Assembly - Centre - Rear Bulkhead - LH/RH - Renew).
3. Remove speaker grille (see Workshop Manual procedure 01.05.CP/01.05.CN Grille - Speaker Rear Quarter - LH/RH - Renew).
4. Remove screw (x1) securing quarter trim to body (under speaker grille) (see Figure 1).

Figure 1

5. Remove screw (x1) securing bottom centre of quarter trim (see Figure 2).

Figure 2

6. Remove bolt securing body side trim to quarter panel via B-post roof aperture (see Figure 3).

Figure 3

7. Remove nuts (x2) securing panel quarter trim to body side trim (see Figure 4).

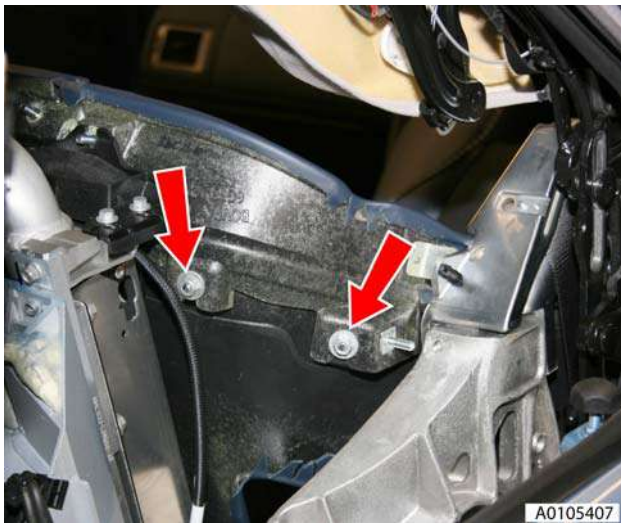

Figure 4

8. Release fir tree clip securing quarter trim to body (see Figure 5).

Figure 5

9. Release quarter trim from heal board and remove quarter trim (see Figure6).

Figure 6

10. Remove nut (x2) securing lower panel to quarter panel.

Installation

1. Install nut (x2) securing lower panel to quarter panel.
2. Install quarter trim and secure under heal board.
3. Install fir tree clip securing quarter trim to body.
4. Install nuts (x2) securing panel quarter trim to body side trim.
5. Install bolt securing body side trim to quarter panel via B-post roof aperture.
6. Install screw (x1) securing bottom centre of quarter trim.
7. Install screw (x1) securing quarter trim to body (under speaker grille)
8. Remove speaker grille (see Workshop Manual procedure 01.05.CP/01.05.CN Grille - Speaker Rear Quarter - LH/RH - Renew).
9. Remove panel centre (see Workshop Manual procedure 01.05.FR/01.05.FS Panel Assembly - Centre - Rear Bulkhead - LH/RH - Renew).
10. Install wind deflector (see Workshop Manual procedure 01.17.DA Wind Deflector - Renew).

ASTON MARTIN
ASTON MARTIN

Body System (01.00)

Handles and Lock Mechanisms (01.14)

Description

Vehicle Key/Remote Transmitter

The vehicle key operates the ignition and the door lock, the remote transmitter operates the central locking and alarm systems.

Do not leave them in the vehicle.

Central Locking System

The Central Locking system consists of lock actuators in both doors, the boot and the fuel flap. Central locking control is through the door modules.

Each lock actuator incorporates a microswitch which signals a change of state when any motor runs to drive the actuator. The microswitches are of the change over type and provide an earth for lock/unlock signals to the door module.

The boot will remain locked or will be unlocked simultaneously with the doors dependant on the boot lock position. The boot lock can be enabled at any time using the remote transmitter irrespective of the Central Locking status.

Remote Transmitter

The remote control system consists of a transmitter and an antenna (radio frequency system). The remote control transmitter for the radio frequency system will operate without the transmitter being directed at the vehicle. The normal range between the transmitter and the antenna is up to 5 meters. Before the remote control system can be used, each transmitter must be initialized to the vehicle. A maximum number of four transmitters can be initialized to any vehicle. All remote transmitters must be initialized at the same time.The keyless entry / remote operated locks will not operate when the ignition key is in the ignition switch.

(A) Lock - One step vehicle locking and alarm enable.

The vehicle will deadlock after 25 seconds.

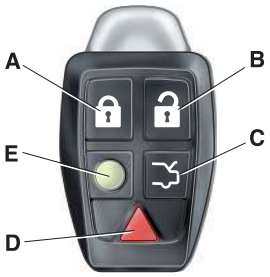

(B) Un-lock - One step vehicle unlocking or two step vehicle unlocking and alarm disable.

(C) Boot Open - Press to enable the boot catch.

(D) Panic Alarm - Activates / deactivates the panic alarm.

(E) Approach Light - Activates the front and rear side lights.

Fuel Filler Assembly

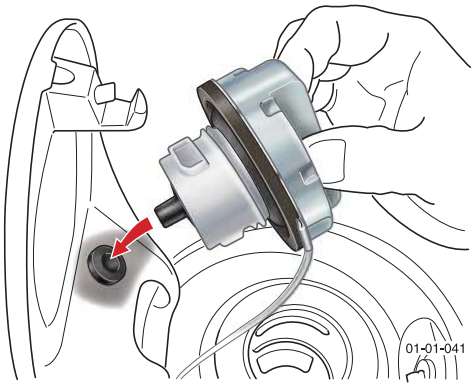

Boot Emergency Release

The boot can be opened from inside the boot by pulling the luminous emergency release handle.

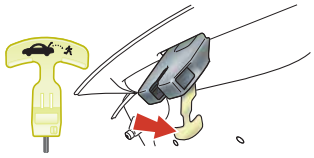

Specifications

Torque Figures	
Description	Nm
Door handle	5
Latch	9

Maintenance

Ignition Cylinder Lock - Renew

Repair Operation Time	
Item	**Code**
Ignition Cylinder Lock-Renew	**01.14.AD**

Removal

1. Remove steering column shroud (see Workshop Manual procedure 11.04.DB Shroud Assembly - Upper and Lower - Steering Column - Renew).
2. Insert ignition key into steering lock and turn to position 2 (see Figure 1).

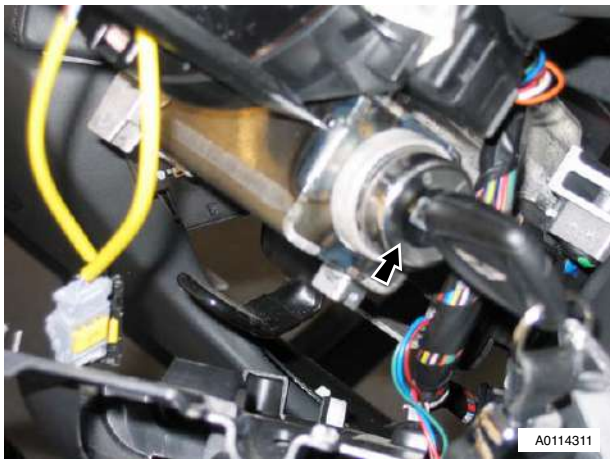

Figure 1

3. Push release button down (through hole).
4. Retract barrel by pulling outwards (gently rotate from side to side) with key (see Figure 2).

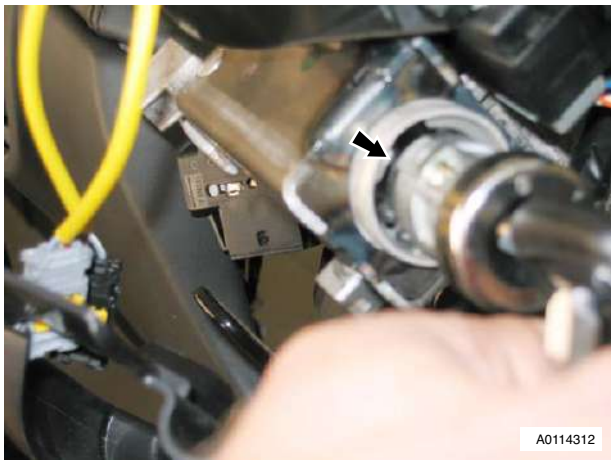

Figure 2

5. Remove key from barrel.

Installation

1. Install key to barrel.
2. Install barrel into steering lock housing until button locates properly.
3. Install steering column shroud (see Workshop Manual procedure 11.04.DB Shroud Assembly - Upper and Lower - Steering Column - Renew).

RH/LH Front Door Latch Assembly - Renew

Repair Operation Time (ROT)		
Item		**Code**
Front Door Latch Assembly	RH	**01.14.CE**
Front Door Latch Assembly	LH	**01.14.CF**

Removal

1. Remove glass regulator (see Workshop Manual procedure 01.11.DA/01.11.1DB Regulator - Door Glass - LH/RH - Renew).
2. Remove aperture seal from inside door.
3. Remove rear rubber cheater panel, fir tree trim pins (x3), and inner glass seal.
4. Disconnect latch mechanism multiplug.
5. Disconnect exterior door handle inner and outer cable.
6. Remove nuts (x3) securing exterior door handle, remove handle.
7. Loosen upper nut and remove lower nut securing key lock mechanism.

8. Remove bolts (x3) securing door latch (see Figure 1).

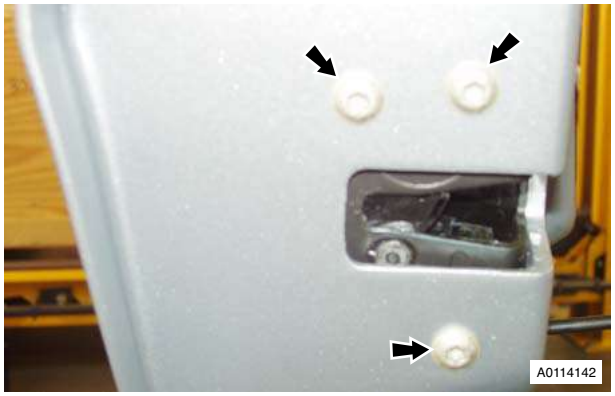

Figure 1

9. Feed interior latch handle cable through inner skin into door interior.
10. Remove latch and keylock mechanisms carefully through aperture.

Installation

1. Install latch and key lock mechanisms through door aperture and feed interior door latch handle cable through aperture.
2. Align door latch, install and torque tighten bolts (x3).
3. Align key lock mechanism, install lower nut, torque tighten nuts (x2).
4. Install exterior door handle, install and torque tighten nuts (x3).
5. Connect latch inner and outer cable to exterior door handle.
6. Connect latch mechanism multiplug.
7. Refit inner glass seal and rubber rear cheater panel, secure with tree trim pins (x3).
8. Refit door aperture seal.
9. Install glass regulator (see Workshop Manual procedure 01.11.DA/01.11.1DB Regulator - Door Glass - /LHRH - Renew).

Bonnet Latch Assembly - Renew

Repair Operation Time	
Item	**Code**
Bonnet Latch Assembly-Renew	**01.14.BD**

Removal

1. Remove grille (see Workshop Manual procedure 01.08.AA Grille - Radiator - Renew
2. Remove slam panel (bolts x12).
3. Remove bolts (x4) securing PAS oil cooler.
4. Remove bolts securing crossmember to inner wing (x4).
5. Remove bolts and spacers securing crossmember to wing (x2).
6. Move crossmember to one side and lift up clear of location (protect paintwork).
7. Disconnect bonnet latch multiplug.
8. Remove switch from latch body (to access cable).
9. Disconnect bonnet latch cable.
10. Remove bonnet latch from crossmember (screws x2).

Installation

1. Install bonnet latch to crossmember (screws x2).
2. Connect bonnet latch cable.
3. Install switch to latch body.
4. Connect bonnet latch multiplug.
5. Install crossmember (as removed).
6. Install bolts and spacers securing crossmember to wing (x2).
7. Install bolts securing crossmember to inner wing (x4).
8. Install bolts (x4) securing PAS oil cooler.
9. Install slam panel (bolts x12).
10. Install grille (see Workshop Manual procedure 01.08.AA Grille - Radiator - Renew).

Hood Release Cable Assembly - Renew (Roadster Only)

Repair Operation Time		
Item		**Code**
Hood Release Cable Assembly-Renew	LHD	**01.14.BE**

Removal

1. Remove hood latch (see Workshop Manual procedure 01.14.BD Latch Assembly - Hood - Renew).
2. Remove Torx screw securing hood release handle to body.
3. Disconnect hood release cable from handle.
4. Release cable tie fir tree from body, remove cable tie from release cable.
5. Tie a length of string to the handle end of release cable for assembly purposes.
6. Remove bolts (x4) securing corner cross brace, remove cross brace.
7. Move expansion tank aside for access (bolt x1, nut x1. hose clips x2, multiplug x1.
8. Remove LH front wheel arch liner (see Workshop Manual procedure 01.02.FB Wheel Arch Liner - Front - LH - Renew).
9. Release clips (x2), release cable to under wing bracket and body.
10. Pull hood release cable through bulkhead, releasing grommet from bulkhead.
11. Remove string from hood release cable, remove cable.
12. Remove grommet from release cable.

Installation

1. Install grommet on hood release cable.
2. Position hood release cable, tie string to cable.
3. Pull release cable through bulkhead, install grommet, remove string from cable.

4. Connect release cable to handle, position handle, install and tighten Torx screw.
5. Install and secure hood release cable with fir tree clip.
6. Install hood latch assembly (see Workshop Manual procedure 01.14.BD Latch Assembly - Hood - Renew).
7. Install and secure hood release cable with fir tree clips to under wing bracket and body.
8. Install expansion tank (bolt x1, nut x1, hose clips x2, multiplug x1.
9. Install corner cross brace, install bolts (x4)(torque tighten bolts with vehicle on level floor).
10. Install LH front wheel arch liner (see Workshop Manual procedure 01.02.FB Wheel Arch Liner - Front - LH - Renew).
11. Top-up cooling system.

Bonnet Secondary Latch Assembly - Renew

Repair Operation Time	
Item	**Code**
Bonnet Secondary Latch Assembly-Renew	**01.14.BF**

Removal

1. Open bonnet.
2. Remove Torx screws (x2), securing secondary latch to bonnet (see Figure 1).

Figure 1

3. Remove secondary latch.
4. Remove sleeve from release lever.

Installation

1. Install sleeve on release lever.
2. Install secondary latch, install and torque tighten Torx screws (x2).
3. Close and re-open bonnet, check secondary latch for correct operation.
4. Close hood.

Tailgate Latch and Cable Assembly - Renew

Repair Operation Time (ROT)	
Item	**Code**
Tailgate Latch and Cable Assembly-Renew	**01.14.DC**

Removal

1. Remove trim - tailgate lid assembly (see Workshop Manual procedure 01.05.EF Trim - Tailgate Lid Assembly - Renew).
2. Remove Torx screws (x2) securing latch assembly to tailgate.
3. Manoeuvre latch from tailgate, disconnect multiplug, remove latch.
4. Release clips (x2), remove bezel from latch.

Installation

1. Install bezel on latch.
2. Install latch in tailgate, align manual release cable.
3. Install and torque tighten Torx screws (x2).
4. Connect multiplug to latch.
5. Install trim - tailgate lid assembly (see Workshop Manual procedure 01.05.EF Trim - Tailgate Lid Assembly - Renew).
6. Check operation of tailgate opening and closing.

Fuel Filler Actuator Assembly - Renew (Roadster Only)

Repair Operation Time (ROT)	
Item	**Code**
Fuel Filler Actuator Assembly-Renew	**01.14.FA**

Removal

1. Remove luggage compartment lid striker assembly (see Workshop Manual procedure 01.03.GE Striker Assembly - Trunk Lid - Renew).
2. Remove front luggage compartment carpet (screws x4, trim clip x1).

3. Release left hand luggage compartment lamp, release multiplug and remove lamp (see Figure 1).

Figure 1

4. Remove lower left-hand luggage compartment carpet.
5. Remove upper left-hand luggage compartment carpet.
6. Release left-hand front luggage compartment carpet from studs and remove.
7. Remove 2 bolts securing fuel filler actuator assembly to body (see Figure 2).

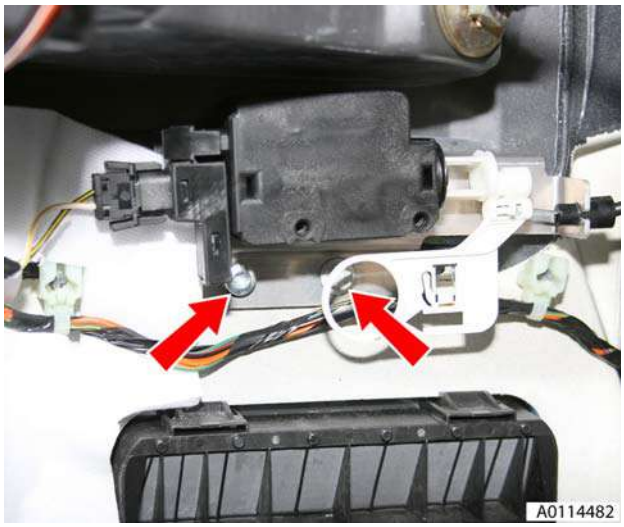

Figure 2

8. Release multiplug from fuel filler actuator.
9. Release cable from fuel filler actuator assembly and remove actuator.

Installation

1. Attach cable to fuel filler actuator assembly.
2. Connect multiplug to fuel filler actuator.
3. Secure fuel filler actuator assembly to body with bolts.
4. Install left-hand front luggage compartment carpet over studs.
5. Install upper left-hand luggage compartment carpet.
6. Install lower left-hand luggage compartment carpet.
7. Connect left-hand luggage compartment lamp and install.
8. Install front luggage compartment carpet.
9. Install luggage compartment lid striker assembly (see Workshop Manual procedure 01.03.GE Striker Assembly - Trunk Lid - Renew).

Fuel Filler Release Cable - Renew (Roadster Only)

Repair Operation Time (ROT)	
Item	**Code**
Fuel Filler Release Cable-Renew	**01.14.FB**

Removal

1. Remove luggage compartment lid striker assembly (see Workshop Manual procedure 01.03.GE Striker Assembly - Trunk Lid - Renew).
2. Remove front luggage compartment carpet (screws x4, trim clip x1).
3. Release left-hand luggage compartment lamp, release multiplug and remove lamp (see Figure 1).

Figure 1

4. Remove lower left-hand luggage compartment carpet.
5. Remove upper left-hand luggage compartment carpet.
6. Release left-hand front luggage compartment carpet from studs and remove.
7. Release cable from fuel filler actuator assembly.

8. Release bayonet fitting on release catch and remove cable (see Figure 2).

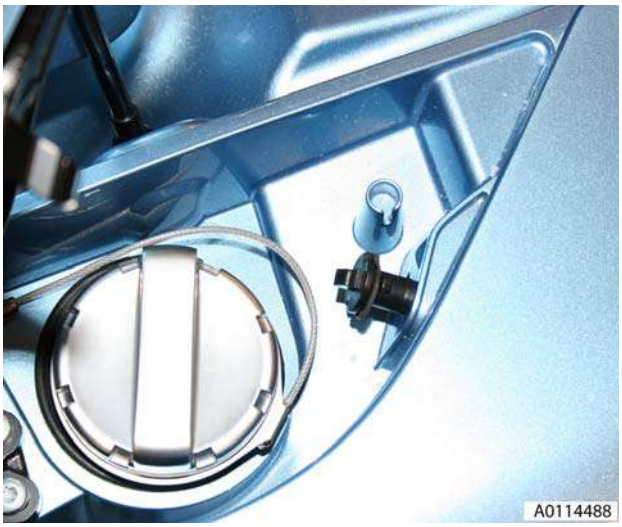

Figure 2

Installation

1. Install fuel filler release cable and secure release catch.
2. Attach cable to fuel filler actuator assembly.
3. Install left-hand front luggage compartment carpet over studs.
4. Install upper left-hand luggage compartment carpet.
5. Install lower left-hand luggage compartment carpet.
6. Connect left-hand luggage compartment lamp and install.
7. Install front luggage compartment carpet.
8. Install luggage compartment lid striker assembly (see Workshop Manual procedure 01.03.GE Striker Assembly - Trunk Lid - Renew).

Fuel Flap Release Switch - Renew

Repair Operation Time (ROT)	
Item	**Code**
Fuel Flap Release Switch-Renew	**01.14.FC**

Removal

1. Remove Trim - upper panel - front pillar - LH (see Workshop Manual procedure 01.05.BE Trim - Upper Panel - Front Pillar - LH - Renew).
2. Remove LH front sill plate (see Workshop Manual procedure 01.05.AK Plate - Front Sill - LH - Renew).
3. Remove trim studs (x2) securing lower A-post trim panel to body (see Figure 1).

Figure 1

4. Disconnect multiplug from fuel flap release switch, remove trim panel (see Figure 2).

Figure 2

5. Depress clips, remove fuel flap release switch from trim panel.

Installation

1. Install switch in trim panel.
2. Position trim panel, connect multiplug.
3. Position A-post trim panel, install trim studs (x2).
4. Install LH front sill plate (see Workshop Manual procedure 01.05.AK Plate - Front Sill - LH - Renew).
5. Install Trim - upper panel - front pillar - LH (see Workshop Manual procedure 01.05.BE Trim - Upper Panel - Front Pillar - LH - Renew).

RH/LH Tonneau Latch Motor - Renew (Roadster Only)

Repair Operation Time (ROT)		
Item		**Code**
Tonneau Latch Motor-Renew	RH	**01.14.GA**
Tonneau Latch Motor-Renew	LH	**01.14.GB**

Removal

1. Remove wind deflector (see Workshop Manual procedure 01.17.DA Wind Deflector - Renew).
2. Release 2 clips securing harness to latch motor bracket.
3. Remove 4 bolts securing latch motor bracket to body (see Figure 1).

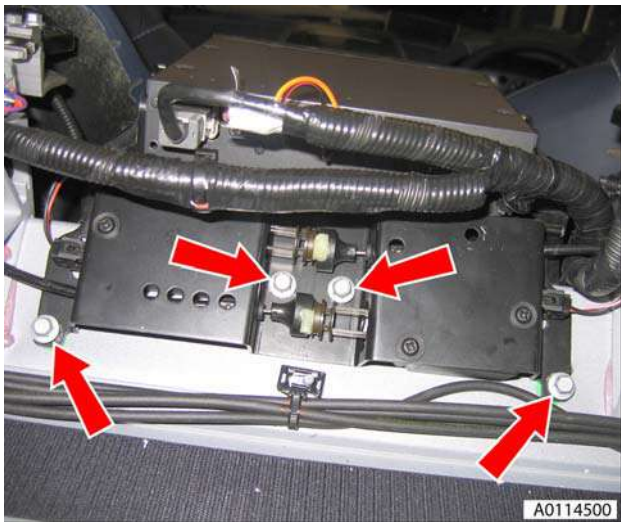

Figure 1

4. Disconnect latch motor multiplug.
5. Release cable from latch motor.
6. Remove 2 screws securing latch motor to bracket and remove.

Installation

1. Install latch motor and secure to bracket with screws.
2. Secure cable to latch motor.
3. Connect latch motor multiplug.
4. Secure latch motor bracket to body with screws.
5. Secure harness to latch motor bracket.
6. Install wind deflector (see Workshop Manual procedure 01.17.DA Wind Deflector - Renew).

RH/LH Tonneau Latch - Renew (Roadster Only)

Repair Operation Time (ROT)		
Item		**Code**
Tonneau Latch-Renew	RH	**01.14.GC**
Tonneau Latch-Renew	LH	**01.14.GD**

Removal

1. Remove wind deflector (see Workshop Manual procedure 01.17.DA Wind Deflector - Renew).
2. Release tonneau latch multiplug from body and disconnect.
3. Unclip emergency pull string from tonneau latch (see Figure 1).

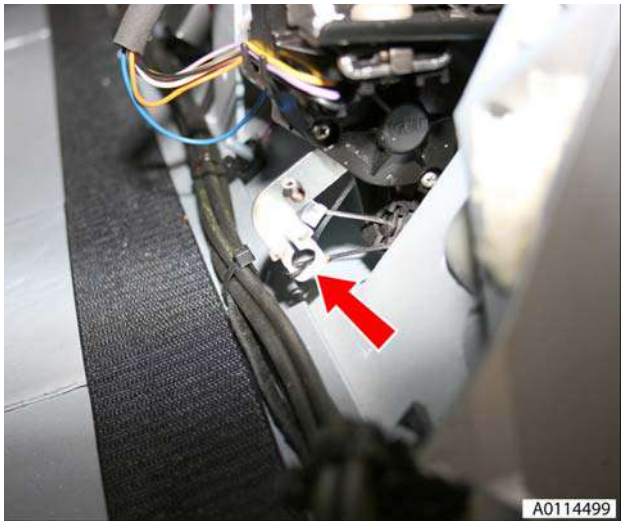

Figure 1

4. Mark position of tonneau latch.
5. Remove 2 bolts securing tonneau latch to bracket.
6. Unclip inner release cable from tonneau latch.
7. Unclip outer release cable from tonneau latch, remove latch.

Installation

1. Install tonneau latch and secure outer release cable.
2. Secure inner release cable to tonneau latch.
3. Align tonneau latch and secure with bolts
4. Secure pull string to tonneau latch.
5. Connect tonneau latch multiplug and secure to body.
6. Install wind deflector (see Workshop Manual procedure 01.17.DA Wind Deflector - Renew).

RH/LH Tonneau Cover Striker Assembly - Renew (Roadster Only)

Repair Operation Time (ROT)	
Item	**Code**
Tonneau Cover Striker Assembly-Renew	01.14.GE
Tonneau Cover Striker Assembly-Renew	01.14.GF

Removal

1. Operate roof to halfway position with tonneau open.
2. Support roof when hydraulic pressure drops with suitable straps and support tonneau cover with suitable prop (see Figure 1).

WARNING

APPROXIMATELY 20 SECONDS AFTER THE OPEN/CLOSE OPERATION HAS BEEN INTERRUPTED THE ROOF MAY SUDDENLY DROP DUE TO LOSS OF HYDRAULIC PRESSURE. IF THIS HAPPENS ENSURE NO BODY PARTS ARE CLOSE TO THE ROOF MECHANISM. IF THE ROOF REQUIRES MAINTENANCE, SUPPORT PROPERLY USING SUITABLE PROPS AND STRAPS.

Figure 1

3. Mark mounting position of right-hand tonneau striker.
4. Remove 2 bolts securing right-hand tonneau striker and remove (see Figure 2).

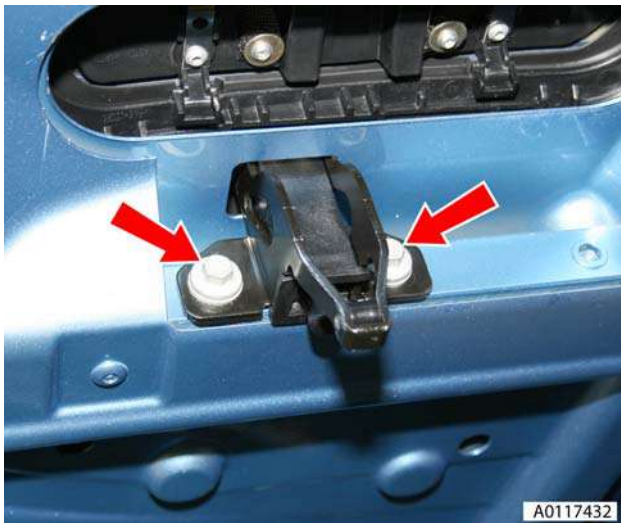

Figure 2

Installation

1. Align and install right-hand tonneau striker, secure with bolts.
2. Restore roof and tonneau to original position.

Tailgate Latch Assembly-Renew (Roadster Only)

Repair Operation Time (ROT)	
Item	**Code**
Tailgate Latch Assembly-Renew	01.14.HA

Removal

1. Open trunk lid.
2. Remove bolt securing strap to trunk lid and remove strap (see Figure 1).

Figure 1

3. Remove clip securing cable to release lever and remove cable.
4. Release clips (x8) and remove trunk lid trim panel.
5. Disconnect multiplugs from latch and release solenoid.
6. Remove cable tie, remove bolts (x3) securing latch to trunk lid and remove latch.

Installation

1. Connect multiplugs to trunk lid latch and release solenoid.
2. Install trunk lid trim panel and secure with clips.
3. Connect cable to release lever and secure with clip.
4. Install latch and secure with bolts and cable tie.
5. Install strap and secure with bolt.
6. Close trunk lid.

ASTON MARTIN
ASTON MARTIN

Body System (01.00)

Wipers and Washer System (01.16)

The wipers and washers system consists of the following components:

- Wipers and washers
- Mounting arm and pivot shaft
- Wiper motor
- Reservoir and washer pump
- Headlamp washing system

The wipers have two speed control (low and high) and an intermittent wipe mode. The wipers will park automatically irrespective of their position when the 'OFF' position of the ignition or control switch is selected.

Within the wiper and washer system the following features can be attained:

- Adjustable interval intermittent wiping

  The intermittent wiping has six speed settings, 3, 6, 9, 12, 15, 18 seconds.
- Programmable wash and wipe sequences

  The programmable wash and wipe sequence is driver controlled. With a depression of the wash/wipe switch between 40 milliseconds and 1.2 seconds the wash pump will be activated for a duration of 1.2 seconds. When the wash/wipe switch is depressed for longer than 1.2 seconds the wash pump will be activated for the duration of switch depression, a 10 second duration is the maximum available.
- Vertical wiper park routine to aid servicing the wiper blades.

  Hold buttons 8 and 9 (centre console) on continuously for 500ms within 3 seconds of switching the ignition 'ON'. Once ignition is 'ON' the wipers will move to the most vertical position. To cancel simply switch 'OFF' ignition or switch wiper switch from 'OFF' position.

Wipers must be in 'OFF' position before continuing with procedure.

The wiping system is automatically activated with the depression of the wash switch.

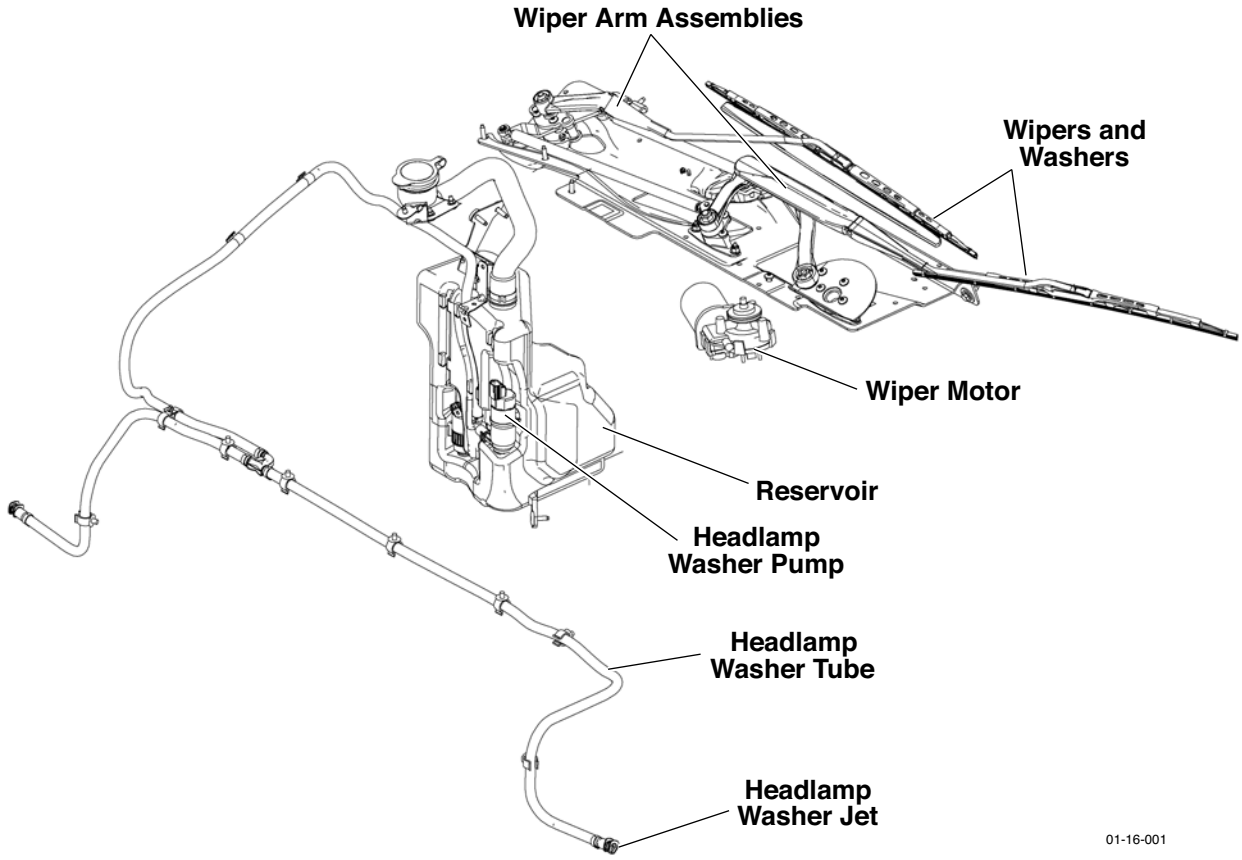

Headlamp Washing

Headlight washers will operate automatically on operation of the windscreen washers. After one operation of the headlamp washers they will not operate for 16 minutes, after which they will be available on the next operation of the windscreen washers.

Headlamp washing is only available when the headlamps are switched on.

Specifications

Torque Figures	
Description	Torque Figure (Nm)
Wiper motor crank to motor	35-42Nm
Wiper motor to cowl panel	7-10Nm
Wiper assembly plate	6Nm (M6 Torx) 8Nm (M6 Bolt)
Brake servo nuts	21-24Nm
Brake master cylinder nuts	25
Wiper arm (Driver)	13-17Nm (M8 Nut)
Wiper arm (Passenger)	20-26Nm (M10 Nut) 5-7Nm (M6 Bolt)

Maintenance

Windscreen Wiper Motor Assembly - Renew

Repair Operation Time (ROT)	
Item	**Code**
Windscreen Wiper Motor Assembly-Renew	**01.16.BB**

Removal

1. Remove wiper linkage.
2. Remove arm from motor (nut x1).
3. Remove motor from plate (bolts x3).

Installation

1. Install motor to plate (bolts x3).
2. Ensure wiper motor is in the 'PARK' position.
3. Install arm from motor (nut x1), using special tool.
4. Install wiper linkage.

Wiper Linkage Assembly - Renew

Repair Operation Time (ROT)		
Item		**Code**
Wiper Linkage Assembly-Renew	LHD	**01.16.BA**
Wiper Linkage Assembly-Renew	RHD	**01.16.BC**

Removal

1. Remove brake booster (see Workshop Manual procedure 06.07.DE/06.07.DG Master Cylinder and Vacuum Booster - Brake - Renew).
2. Remove inlet manifold (see Workshop Manual procedure 03.01.BB/03.01.BF Gasket - Manifold Assembly - Intake Upper - Renew).
3. Remove wiper arm drivers side (see Workshop Manual procedure 01.16.AD Arm Assembly - Wiper - Driver - Renew).
4. Remove wiper arm passengers side (see Workshop Manual procedure 01.16.AE Arm Assembly - Wiper - Passenger - Renew).
5. Unclip expansion tank hose for access.
6. Remove sound deadening (trim buttons x6).
7. Remove seal from spindle.
8. Remove nuts (x2) from heatshield to move aside.
9. Unclip wiper motor harness (x2) LHS.
10. Unclip windscreen heater harness RHS.
11. Disconnect motor multiplug and unclip harness (x2).
12. To prevent damage, protect A/C pipe with tape before wiper linkage removal.
13. Remove plate securing screws (x10) (through plenum).
14. Remove plate securing bolts (x8) (under bonnet).
15. Remove wiper linkage.

Installation

1. Install wiper linkage.
2. Install plate securing bolts (x8) (under bonnet).
3. Install plate securing screws (x10) (through scuttle panel).
4. Connect motor multiplug and clip harness (x2).
5. Clip harness LHS.
6. Clip harness RHS.
7. Refit heatshield and install nuts (x2).
8. Install seal to spindle.
9. Install sound deadening (re-stick, trim buttons x6).
10. Clip expansion tank hose.
11. Install wiper arm drivers side (see Workshop Manual procedure 01.16.AD Arm Assembly - Wiper - Driver - Renew).
12. Install wiper arm passengers side (see Workshop Manual procedure 01.16.AE Arm Assembly - Wiper - Passenger - Renew).
13. Install inlet manifold (see Workshop Manual procedure 03.01.BB/03.01.BF Gasket - Manifold Assembly - Intake Upper - Renew).
14. Install brake booster (see Workshop Manual procedure 06.07.DE/06.07.DG Master Cylinder and Vacuum Booster - Brake - Renew).

Windshield Wash Tube - Renew

Repair Operation Time (ROT)	
Item	**Code**
Windshield Wash Tube-Renew	**01.16.CB**

Removal

1. Remove RH wheel arch liner (see Workshop Manual Procedure 01.02.GB Wheel Arch Liner - Front - RH - Renew).
2. Place container to catch fluid.

3. Disconnect tube from motor and reservoir (Move Headlamp motor and tube to one side) (see Figure 1).

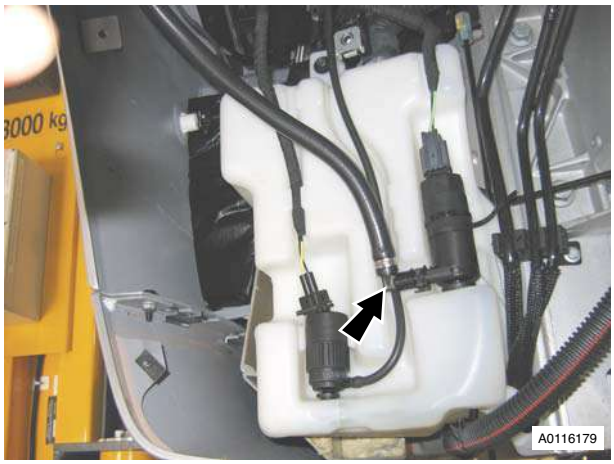

Figure 1

4. Lower ramp.
5. Open hood.
6. Remove jets from hood (pull forward) (see Figure 2).

Figure 2

7. Remove jets from tube.
8. Remove tube and valve from long tube (LH).
9. Attach string to both tube ends (RH and LH side).
10. Pull tube from hood and disconnect to string.
11. Remove tube from clips (x5) and remove tube from vehicle (see Figure 3).

Figure 3

Installation

1. Install tube to vehicle and clips (x5)
2. Attach string to tube ends.
3. Pull tube through hood and disconnect to string.
4. Install tube and valve to long tube.
5. Install jets to tube.
6. Install jets to hood.
7. Close hood.
8. Raise ramp.
9. Connect tube to motor and reservoir.
10. Install RH wheel arch liner (see Workshop Manual Procedure 01.02.GB Wheel Arch Liner - Front - RH - Renew).
11. Remove container and refill reservoir.
12. Adjust jets spray.

Windscreen Reservoir and Motor Assembly - Remove and Install

Repair Operation Time (ROT)	
Item	**Code**
Windscreen Reservoir and Motor Assembly - Remove and Install	**01.16.DA**

Remove

1. Raise the vehicle and make it safe.
2. On Roadster vehicles, remove the centre undertray.
3. Remove the front right roadwheel.
4. Remove the five or six M6 Torx-head screws that attach the rear of the wheelarch liner.
5. Remove the self-tapping screw that attaches the rear of the wheelarch liner into the wheelarch.
6. Turn the steering fully to the right.
7. Move the rear of the wheelarch liner away to get access to the windscreen reservoir.

8. Disconnect the windscreen washer pipe and drain the reservoir into an applicable container.
9. Disconnect the two clips that attach the battery harness to the bottom of the reservoir.
10. Move the harness away.
11. Disconnect the clip that attaches the harness for the level sensor to the reservoir.
12. Remove the rear bottom reservoir fixing.
13. Lower the vehicle on the lift.
14. Disconnect the electrical connector for the windscreen washer motor.
15. Release the headlamp washer pipe from the clip and turn the motor to disconnect the pipe (quickfit) and the electrical connector.
16. Release the windscreen washer pipe from the reservoir.
17. Remove the two reservoir attachment screws.
18. Let the reservoir fall, then release the filler tube from the clip.
19. Move the reservoir down and forward to get access.
20. Disconnect the electrical connector from the level sensor.

Install

1. Connect the electrical connector to the level sensor.
2. Move the reservoir into position.
3. Install the filler pipe into the clip.
4. Install the three attachment screws.
5. Install the windscreen washer pipe into clips on the reservoir and connect it to the motor.
6. Install the headlamp washer pipe. Connect the pipe to the pump.
7. Connect the electrical connector to the pump.
8. Connect the electrical connector for the windscreen washer motor.
9. Raise the vehicle on the lift.
10. Connect the clip that attaches the level sensor harness to the reservoir.
11. Connect the two clips that attach the battery harness to bottom of the reservoir.
12. Put the wheelarch liner back into position.
13. Turn the steering to the centre position.
14. Install the self-tapping screw that attaches the rear of the wheelarch liner into the wheelarch.
15. Install the five or six M6 Torx-head screws that attach the rear of the wheelarch liner.
16. Install the front right roadwheel.
17. On Roadster vehicles, install the centre undertray.
18. Lower the vehicle.
19. Fill the washer reservoir.

Low Level Water Sensor - Remove and Install

Repair Operation Time (ROT)	
Item	**Code**
Low Level Water Sensor - Remove and Install	**01.16.DC**

Remove

1. Raise the vehicle and make it safe.
2. On Roadster vehicles, remove the centre undertray.
3. Remove the front right roadwheel.
4. Remove the five or six M6 Torx-head screws that attach the rear of the wheelarch liner.
5. Remove the self-tapping screw that attaches the rear of the wheelarch liner into the wheelarch.
6. Turn the steering fully to the right.
7. Move the rear of the wheelarch liner away to get access to the windscreen reservoir.
8. Disconnect the windscreen washer pipe and drain the reservoir into an applicable container.
9. Disconnect the two clips that attach the battery harness to the bottom of the reservoir.
10. Move the harness away.
11. Disconnect the clip that attaches the level sensor harness to the reservoir.
12. Remove the rear-lower reservoir fixing.
13. Lower the vehicle on the lift.
14. Disconnect the electrical connector from the windscreen washer motor.
15. Unclip headlamp washer pipe and turn motor to disconnect pipe (quickfit) and multiplug.
16. Unclip the windscreen washer pipe from the reservoir.
17. Remove the two reservoir attachment screws.
18. Let the reservoir fall, then release the filler tube from the clip.
19. Move the reservoir down and forward to give access.
20. Disconnect the electrical connector for the level sensor.
21. Remove level sensor and seal from reservoir.

Install

1. Install the level sensor and seal in the reservoir.
2. Connect the electrical connector for the level sensor
3. Move the reservoir into position.
4. Install the filler pipe in the clip.
5. Install the three attachment screws.
6. Clip the windscreen washer pipe into reservoir and install it onto the motor.
7. Clip the headlamp washer pipe, connect the pipe (quickfit) and the electrical connector.
8. Connect windscreen washer motor multiplug.
9. Raise ramp.
10. Connect the clip that attaches the level sensor harness to the reservoir.

11. Connect the two clips that attach the battery harness to the bottom of the reservoir.
12. PPut the wheelarch liner back into position.
13. Turn the steering to the centre position.
14. Install the self-tapping screw that attaches the rear of the wheelarch liner into the wheelarch.
15. Install the five or six M6 Torx-head screws that attach the rear of the wheelarch liner.
16. Install the front right roadwheel.
17. On Roadster vehicles, install the centre undertray.
18. Lower the vehicle.
19. Fill the washer reservoir.

Headlamp Wash Motor and Pump Assembly - Renew

Repair Operation Time (ROT)	
Item	**Code**
Headlamp Wash Motor and Pump Assembly-Renew	**01.16.EB**

Removal

1. Raise the vehicle and make it safe.
2. On Roadster vehicles, remove the centre undertray.
3. Remove the front right roadwheel.
4. Remove the five or six M6 Torx-head screws that attach the rear of the wheelarch liner.
5. Remove the self-tapping screw that attaches the rear of the wheelarch liner into the wheelarch.
6. Turn the steering fully to the right.
7. Move the rear of the wheelarch liner away to get access to the windscreen reservoir.
8. Disconnect the windscreen washer pipe and drain the reservoir into an applicable container.
9. Disconnect the two clipsthat attach the battery harness to the bottom of the reservoir. Move the harness away.
10. Disconnect the clip that attaches the harness for the level sensor to the reservoir.
11. Remove the rear-lower reservoir fixing.
12. Lower the vehicle on the lift.
13. Disconnect the electrical connector for the windscreen washer motor.
14. Release the headlamp washer pipe and turn the motor to disconnect the pipe (quickfit) and the electrical connector.
15. Release the windscreen washer pipe from the reservoir.
16. Remove the two reservoir attachment screws.
17. Let the reservoir fall, then release the filler tube from the clip.
18. Move the reservoir down and forward to give access.
19. Disconnect the electrical connector for the level sensor.
20. Remove the headlamp washer motor, seal and support clip from reservoir.

Installation

1. Install the headlamp washer motor, seal and support clip into the reservoir.
2. Connect the electrical connector for the level sensor.
3. Move the reservoir into position.
4. Connect the filler pipe and install the clip.
5. Install the three attachment screws.
6. Clip the windscreen washer pipe into reservoir and connect it to the motor.
7. Install the headlamp washer pipe in position. Connect the pipe (quickfit) and the electrical connector.
8. Connect the electrical connector for the windscreen washer motor.
9. Raise ramp.
10. Connect the clip that attaches the level sensor harness to the reservoir.
11. Connect the two clips that attach the battery harness to the bottom of the reservoir.
12. Put the wheelarch liner back into position.
13. Turn the steering to the centre position.
14. Install the self-tapping screw that attaches the rear of the wheelarch liner into the wheelarch.
15. Install the five or six M6 Torx-head screws that attach the rear of the wheelarch liner.
16. Install the front right roadwheel.
17. On Roadster vehicles, install the centre undertray.
18. lower the vehicle.
19. Fill washer reservoir.

Headlamp Wash Tube Assembly - Renew

Repair Operation Time (ROT)	
Item	**Code**
Headlamp Wash Tube Assembly-Renew	**01.16.EC**

Removal

1. Remove LH headlamp (see Workshop Manual procedure 17.01.AB Headlamp Assembly - LH - Renew).
2. Remove RH headlamp (see Workshop Manual procedure 17.01.BB Headlamp Assembly - RH - Renew).
3. Place container to catch fluid.

4. Remove tube from motor (quickfit) and reservoir (see Figure 1).

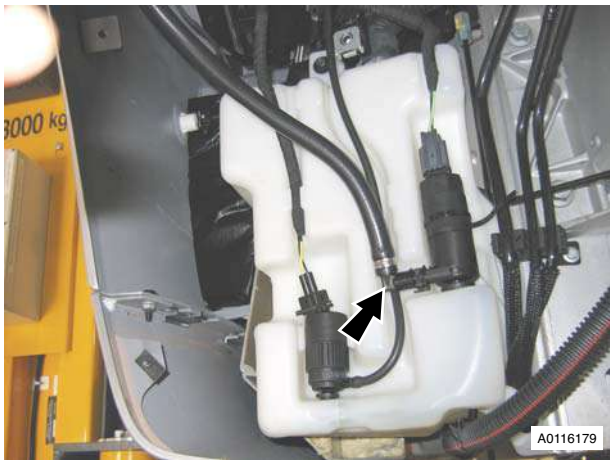

Figure 1

5. Remove tube from body (clips x2) (see Figure 2).

Figure 2

6. Lower ramp.
7. Open hood.
8. Remove slam panel.
9. Remove tube from clips (x9) and remove tube from vehicle (see Figure 3).

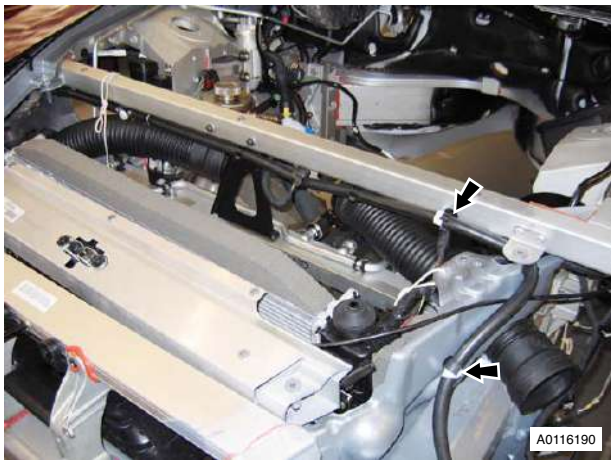

Figure 3

Installation

1. Install tube to vehicle and clips.
2. Install slam panel.
3. Close hood.
4. Raise ramp.
5. Install tube to body (clips x2).
6. Install tube to motor (quickfit) and reservoir.
7. Install LH headlamp (see Workshop Manual procedure 17.01.AB Headlamp Assembly - LH - Renew).
8. Install RH headlamp (see Workshop Manual procedure 17.01.BB Headlamp Assembly - RH - Renew).
9. Remove container and refill reservoir.
10. Adjust jets spray.

Washer Fluid Reservoir - Renew

Repair Operation Time (ROT)	
Item	**Code**
Washer Fluid Reservoir-Renew	**01.16.FB**

Removal

1. Remove RH wheel arch liner (see Workshop Manual procedure 01.02.GB Wheel Arch Liner - Front - RH - Renew).
2. Disconnect Windscreen washer pipe to drain reservoir into suitable container.
3. Disconnect clips (x2) securing battery harness to bottom of reservoir (move aside).
4. Disconnect clip (x1) securing level sensor harness to reservoir.
5. Remove rear lower reservoir fixing.
6. Lower ramp.
7. Disconnect windscreen washer motor multiplug.
8. Unclip Headlamp washer pipe and turn motor to disconnect pipe (quickfit) and multiplug.
9. Unclip windscreen washer pipe from reservoir.

10. Remove reservoir retaining screws (x2).
11. Allow reservoir to drop, then disconnect filler tube (clip x1).
12. Manoeuvre reservoir down and forward to access, disconnect level sensor multiplug.
13. Remove level sensor and seal from reservoir.
14. Remove windscreen washer motor and seal from reservoir.
15. Remove headlamp washer motor and seal and support clip from reservoir.

Installation

1. Install headlamp Washer motor and seal and support clip to reservoir.
2. Install windscreen washer motor and seal to reservoir.
3. Install level sensor and seal to reservoir.
4. Connect level sensor multiplug and manoeuvre reservoir into position.
5. Connect filler pipe (clip x1).
6. Install fixing screws (x3).
7. Clip windscreen washer pipe into reservoir and install to motor.
8. Clip headlamp washer pipe, connect pipe (quickfit) and multiplug.
9. Connect windscreen washer motor multiplug.
10. Raise ramp.
11. Connect clip (x1) securing level sensor harness to reservoir.
12. Connect clips (x2) securing battery harness to bottom of reservoir.
13. Remove RH wheel arch liner (see Workshop Manual procedure 01.02.GB Wheel Arch Liner - Front - RH - Renew).
14. Fill washer reservoir.

ASTON MARTIN
ASTON MARTIN

Body System (01.00)

Convertible Roof and Roof Opening Subsystem (01.17)

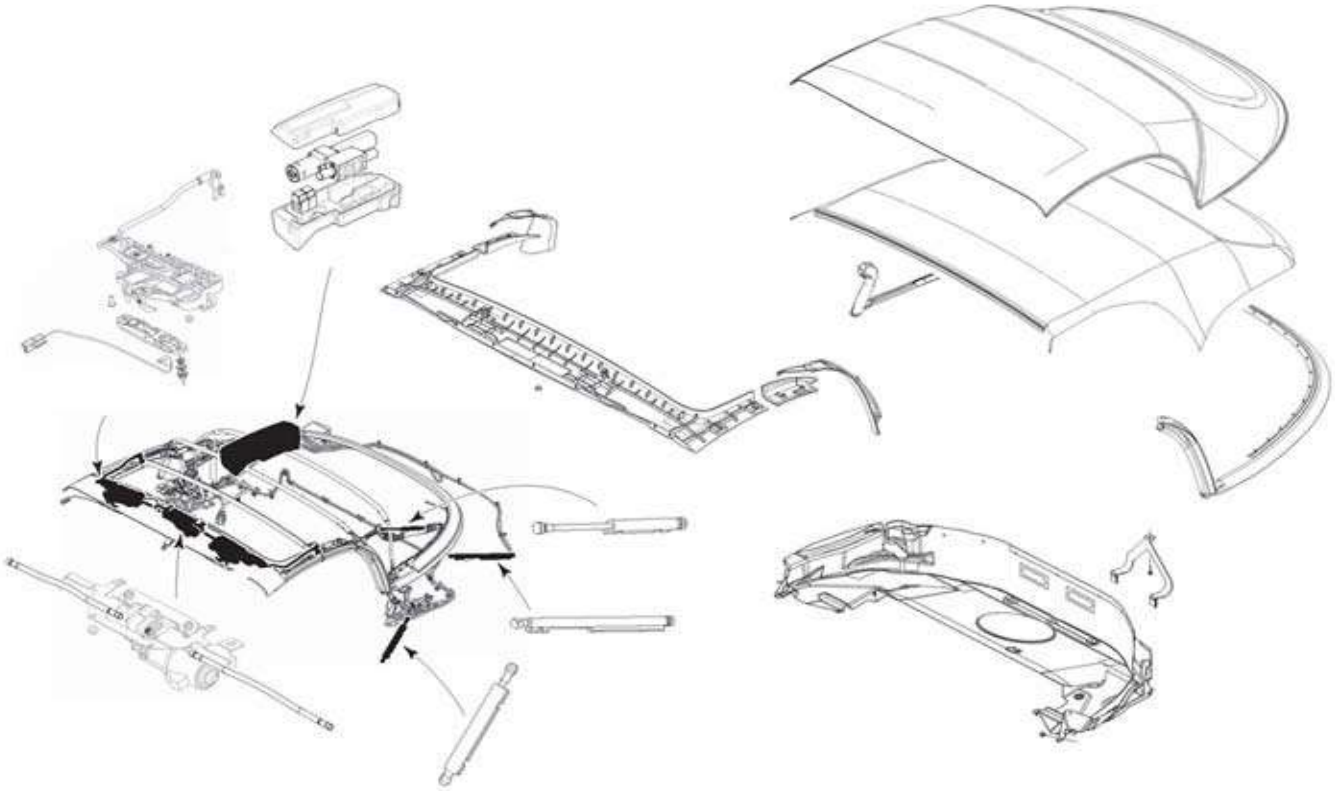

System Description

The convertible roof system comprises of an electrically driven hydraulic pump and six hydraulic rams. Four rams raise and lower the roof and two raise and lower the tonneau cover. The pump is powered via either the 'Hydraulic Pump Fluid In' or 'Hydraulic Pump Fluid Out' relay and is instructed via the Convertible Roof Module (CRM). The CRM is activated by the Console mounted Roof Switch. A further module controls the position and drive command for the Tonneau Latches. The roof hydraulic pump is protected by a 30A fuse. During Roof Operation the door glass and boot release commands are also controlled by the CRM.

Maintenance

WARNING

MANY OF THE FOLLOWING PROCEDURES ADVISE OPERATING THE ROOF TO THE HALFWAY POSITION. WHEN THE OPERATION OF THE ROOF IS STOPPED MID-CYCLE, WITH THE TONNEAU UP, ANY LOSS OF POWER (I.E. REMOVING THE VEHICLE KEY OR AFTER 10 MINUTES OF IDLE) WILL RESULT IN THE HYDRAULIC PRESSURE DROPPING AND MAY CAUSE A CLASH SCENARIO.

WHEN ADVISED TO OPEN THE ROOF TO THE HALFWAY POSITION, ALWAYS SECURE THE ROOF WITH STRAPS AND PROPS (AS ADVISED). SHOULD THE ROOF CLASH AND THEN POWER BE RETURNED TO THE VEHICLE SEVERE DAMAGE TO THE ROOF WILL RESULT.

TO RECTIFY THE 'CLASH' SCENARIO FOLLOW THE PROCEDURE BELOW:

1. ENSURE IGNITION IS OFF AND REMOVE KEY.

2. MANUALLY RAISE TONNEAU LID.

3. WHILST TONNEAU IS RAISED, FULLY RETRACT ROOF ALLOWING IT TO SETTLE BACK INTO TONNEAU WELL.

4. ENSURE LID CLEARS TONNEAU STRIKERS DURING MOVEMENT.

5. CLOSE TONNEAU LID (ALLOW TO DROP UNDER OWN WEIGHT).

6. ONCE TONNEAU IS CLOSED TURN ON IGNITION AND FULLY RETRACT ROOF INTO TONNEAU WELL AND LATCH TONNEAU.

7. ONCE MOVEMENT IS COMPLETED AND HOOD IS STOWED FULL FUNCTIONALITY IS RESTORED.

Hood Assembly-Renew

Repair Operation Time (ROT)	
Item	**Code**
Hood Assembly-Renew	**01.17.AB**

Removal

1. Remove Tonneau well liner (see Workshop Manual procedure 01.17.DB Tonneau Well Liner - Renew).
2. Remove Panel assembly body side LH (see Workshop Manual procedure 01.05.DY Panel Assembly - Bodyside Trim - Rear - LH - Renew).
3. Remove Panel assembly body side RH (see Workshop Manual procedure 01.05.DX Panel Assembly - Bodyside Trim - Rear - RH - Renew).
4. Remove Tonneau cover (see Workshop Manual procedure 01.17.CA Cover - Tonneau - Renew).
5. Disconnect vehicle battery.
6. Release both tonneau cylinders lower retaining clips and disconnect cylinders from body (see Figure 1).

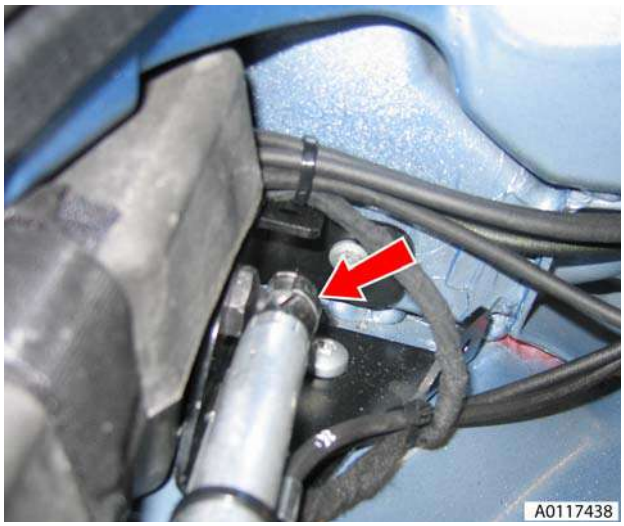

Figure 1

7. Remove tonneau cylinder pivot bracket from body (bolts x3) (see Figure 2).

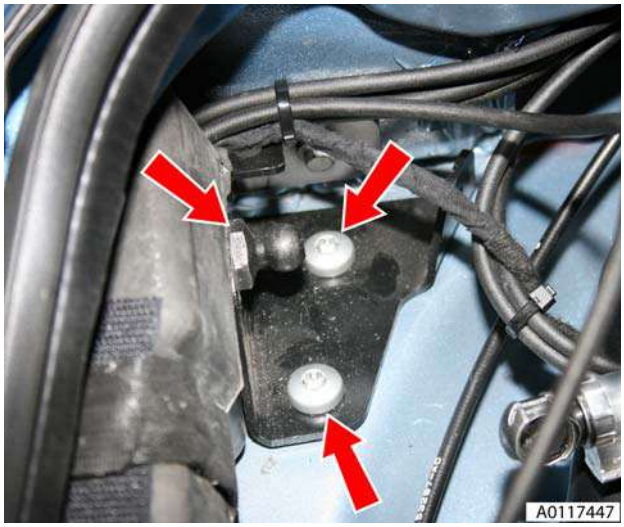

Figure 2

8. Release motor and casing from under tonneau body side (see Figure 3).

Figure 3

9. Cut cable tie securing valve to bracket (see Figure 4).

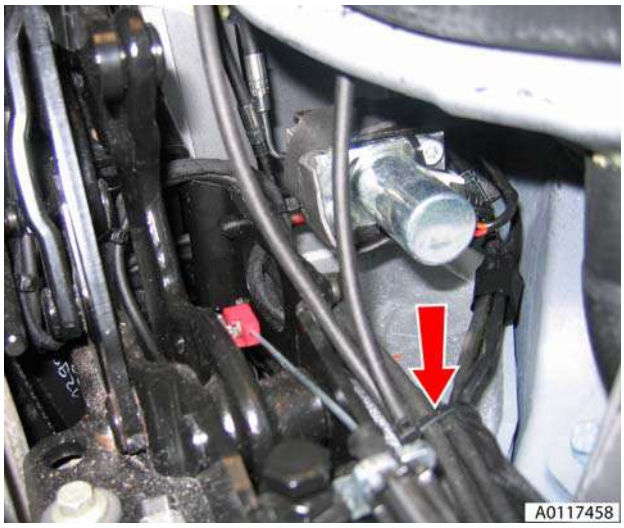

Figure 4

10. Release valve from support bracket, the bracket may need bending slightly.

11. Release both main cylinders lower retaining clips and disconnect cylinders from B-posts (see Figure 5).

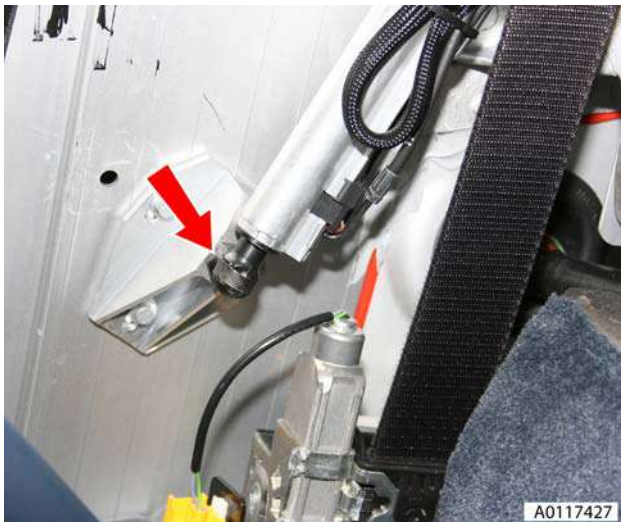

Figure 5

12. Release multiplug from body and disconnect and feed through into tonneau area (RH) (see Figure6).

Figure 6

13. Disconnect multiplug (RH).
14. Release harness/pipe retaining clips (x3) (RH).

15. Disconnect multiplugs (x2) and feed into tonneau area (LH) (see Figure 7).

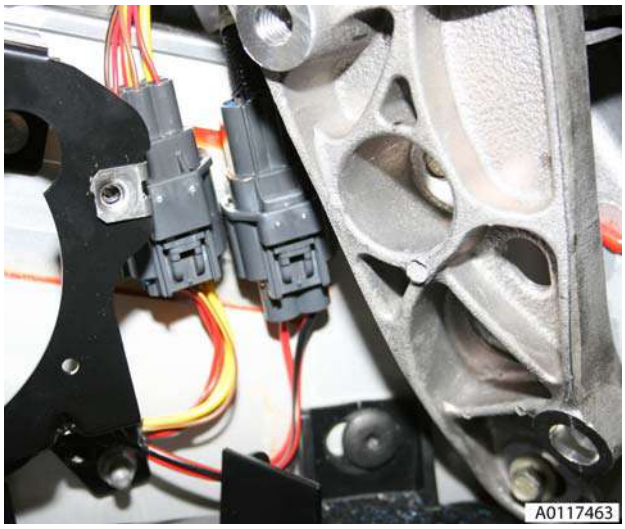

Figure 7

16. Release harness/pipe retaining clips (x2) (LH) (see Figure 8).

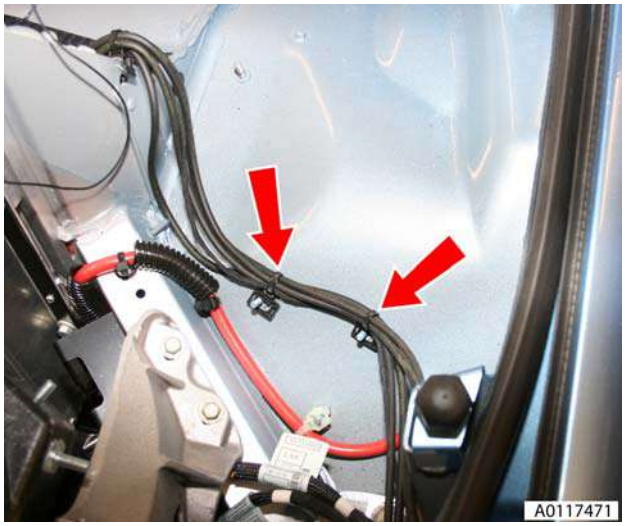

Figure 8

17. Release harness/pipe retaining clips (x7) behind Roll Over Protection System (ROPS) units (see Figure 9).

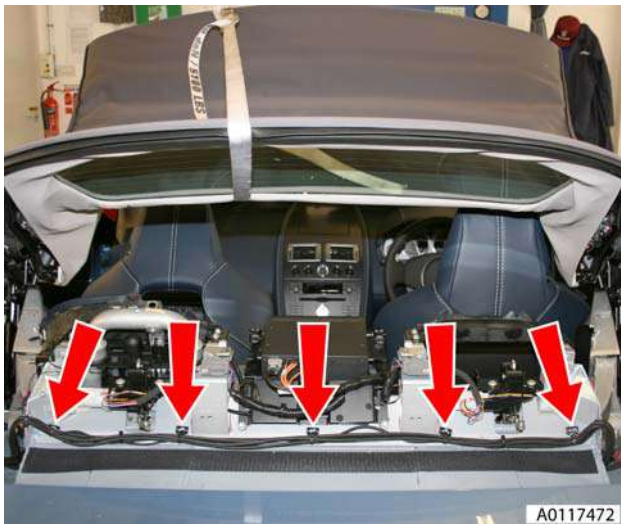

Figure 9

18. Release harness/pipe retaining clips (x3) LH (see Figure 10).

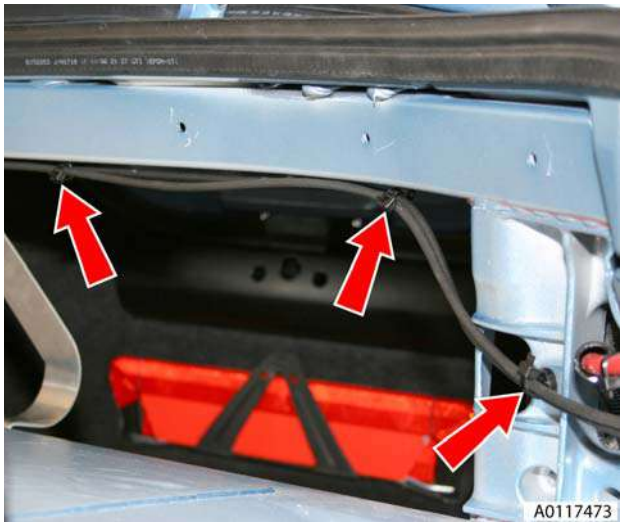

Figure 10

19. Release harness/pipe retaining clips (x3) RH side (see Figure 11).

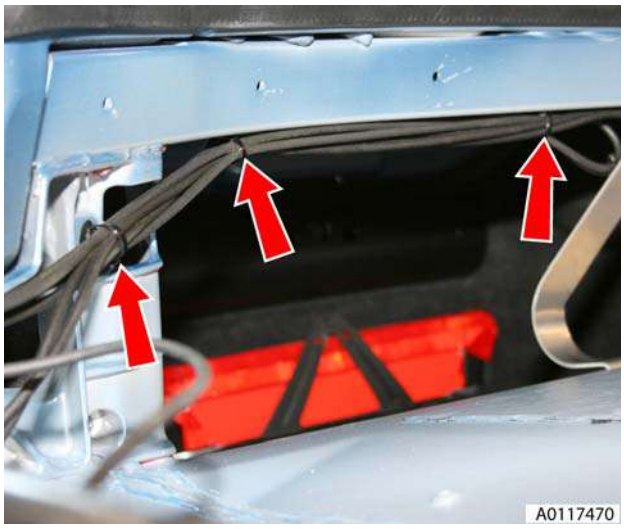

Figure 11

20. Release velcro from bracket and feed harness/pipes under bracket into tonneau area.
21. Tie harness/pipes and tonneau cylinders to roof to ease removal.
22. Mark roof fitted position to body, support weight of roof and remove securing bolts (x6).
23. Lift roof approximately 10mm then using assistance supporting pump unit, manoeuvre roof towards luggage compartment past B-posts.
24. When roof is clear of B-posts, lift roof to clear luggage compartment lid and remove roof from vehicle.

Installation

1. Manoeuvre roof to fitted position on body and install securing bolts (torque)
2. Remove lifting equipment.
3. Untie harness/pipes and tonneau cylinders from roof and layout in approximately fitted position.
4. Feed harness/pipes under bracket into luggage compartment and secure bracket.
5. Secure harness/pipe retaining clips (x3) RH side.
6. Secure harness/pipe retaining clips (x7) behind ROPS units.
7. Secure harness/pipe retaining clips (x2).
8. Feed multiplugs through from tonneau area and connect.
9. Secure harness/pipe retaining clips (x3).
10. Disconnect multiplug.
11. Feed multiplug through from tonneau area, connect and secure to body.
12. Install cylinders to B-post.
13. Install valve to support bracket, reposition bracket.
14. Install cable tie securing valve to bracket. Ensure no pipes or wiring will foul roof mechanism.
15. Install motor and casing under tonneau onto location posts.
16. Install cylinder pivot bracket to body.
17. Install tonneau cylinders to body.
18. Connect vehicle battery.
19. Install Tonneau cover (see Workshop Manual procedure 01.17.CA Cover - Tonneau - Renew).
20. Operate roof from fully open to fully closed. Check operation of roof for correct latching, seal fit, fouling of pipes and harnesses and oil leakage. Carry out adjustments as necessary.
21. Install Panel assembly body side LH (see Workshop Manual procedure 01.05.DY Panel Assembly - Bodyside Trim - Rear - LH - Renew).
22. Install Panel assembly body side RH (see Workshop Manual procedure 01.05.DX Panel Assembly - Bodyside Trim - Rear - RH - Renew).
23. Install Tonneau well liner (see Workshop Manual procedure 01.17.DB Tonneau Well Liner - Renew).
24. Perform water leakage test on roof (see Workshop Manual procedure 01.17.XX Water Test).

Canopy Cover - Renew

Repair Operation Time (ROT)	
Item	**Code**
Canopy Cover-Renew	**01.17.AC**

Removal

1. Remove headlining (see Workshop Manual procedure 01.05.BA Headlining - Renew).
2. Position hood to gain access to rivets (x6) securing B-post seal to hood.
3. Drill out rivets (x6) securing B-post seal to hood mechanism and release seal (see Figure 1).

Figure 1

4. Release velcro securing canopy to tension belts and remove leaf springs (see Figure 2).

Figure 2

5. Remove screws securing canopy strap to third cross bar (see Figure 3).

Figure 3

6. Mark position of nuts (x4) to aid installation.
7. Remove nuts (x4) securing front seal holders to hood mechanism and remove holders.
8. Note position of shims and collect (see Figure 4).

Figure 4

9. Remove screws (x11) securing front header canopy retainer to header rail and remove retainer (see Figure 5).

Figure 5

10. Pull back canopy flag covering tension cable clips (see Figure 6).

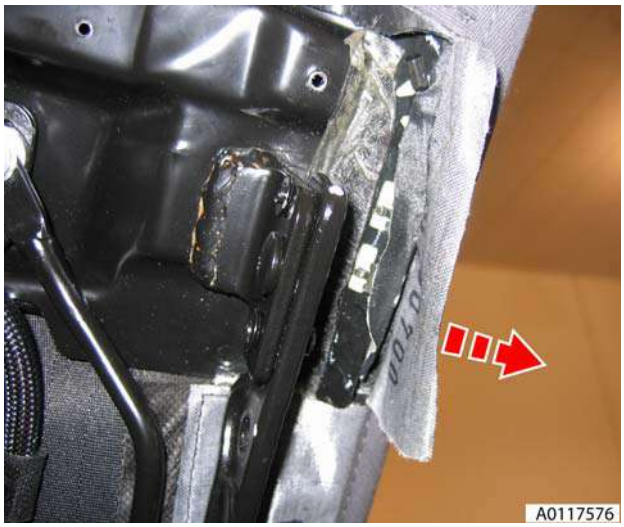

Figure 6

11. Remove tape covering tension cable clips.
12. Release clips (x4) securing tension cables to header rail (see Figure 7).

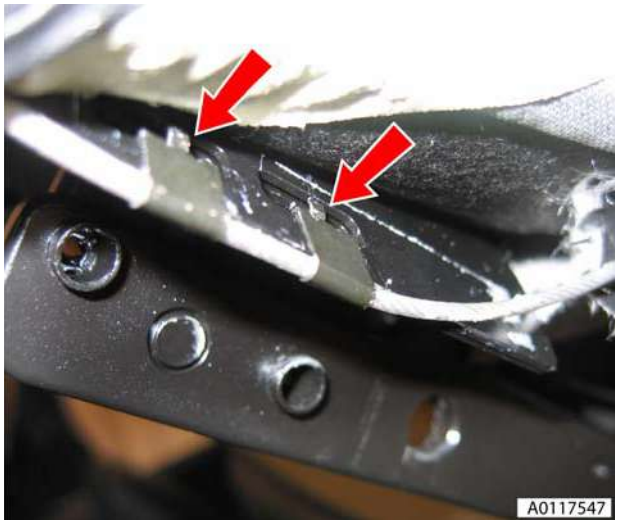

Figure 7

13. Release cables from header rail.
14. Release front of canopy from header rail (see Figure 8).

Figure 8

15. Remove screws (x4) securing canopy liner to header rail (see Figure 9).

Figure 9

16. Release double sided tape securing canopy flag to third cross bar (see Figure 10).

Figure 10

17. Release double sided tape securing canopy flag to second cross bar (see Figure 11).

Figure 11

18. Release double sided tape securing canopy flag to first cross bar (see Figure 12).

Figure 12

19. Using assistance, remove tension cables from canopy channel and upper B-post slots and remove canopy cover.

Installation

1. Using assistance, position canopy cover on hood frame and secure to header rail using screws.
2. Feed tension cables through upper B-post slots, through canopy channel and attach to header rail.
3. Secure tension cables to header rail using clips.
4. Install front header canopy retainer and secure with screws excluding outer 2 screws.
5. Secure outer of front header retainer with screws.
6. Position hood an midway position and support.
7. Position canopy cover to tension bow and secure to B-post temporarily using self tapping screws.
8. Install leaf springs.
9. Position rear insulation over tension belts.
10. Fully close roof and ensure that rear insulation is in correct position.
11. Pull leaf spring retaining straps within tension belts through insulation slots and install leaf springs.
12. Attach velcro between canopy cover and tension belt.
13. Pull canopy flag over third cross bar and align holes in flag with those in cross bar.
14. Stick double sided tape to rear edges of canopy flags.
15. Peel back double sided tape of rearmost canopy flag, pull flag over third cross bar, align holes and attach.
16. Repeat for second and first flags and cross bars.
17. Peel back double sided tape on front header flags and cover tension cable clips.
18. Position seal holder to hood mechanism with shims in original positions, fit nuts but do not tighten at this stage.
19. Align to marked position and tighten nuts.

20. Secure canopy straps to third cross bar using screws.
21. Position hood to gain access to B-post seal fixings.
22. Remove self tapping screws and secure B-post seal to hood mechanism using rivets starting with the lowest hole first.
23. Restore roof to original position, raise door glass and check alignment of front seals.
24. Install headlining (see Workshop Manual procedure 01.05.BA Headlining - Renew).
25. Check operation and fit of hood.

Header Latch Motor - Renew

Repair Operation Time (ROT)	
Item	**Code**
Header Latch Motor-Renew	**01.17.AF**

Removal

1. Remove left-hand header latch flex shaft (see Workshop Manual procedure 01.17.EF Flex Shaft - LH - Renew).
2. Remove right-hand header latch flex shaft (see Workshop Manual procedure 01.17.EG Flex Shaft - RH - Renew).
3. Cut 2 cable ties securing wiring harness to motor mounting bracket (see Figure 1).

Figure 1

4. Disconnect 2 motor multiplugs.
5. Remove 4 nuts securing motor mounting bracket to roof.
6. Remove motor from studs.

Installation

1. Ensure header motor and latch are in fully open position prior to installation.
2. Install motor and tighten nuts to 8 Nm.
3. Connect motor multiplugs.
4. Secure wiring harness to motor mounting bracket with cable ties.
5. Install right-hand header latch flex shaft (see Workshop Manual procedure 01.17.EG Flex Shaft - RH - Renew).
6. Install left-hand header latch flex shaft (see Workshop Manual procedure 01.17.EF Flex Shaft - LH - Renew).

Hydraulic Main Actuator Cylinder - Renew

Repair Operation Time (ROT)		
Item		**Code**
Hydraulic Main Actuator Cylinder-Renew	RH	**01.17.AG**
Hydraulic Main Actuator Cylinder-Renew	LH	**01.17.AH**

Removal

1. Remove panel quarter trim lower (see Workshop Manual procedure 01.05.CR/01.05.CS Panel Assembly - Quarter trim Lower - RH - Renew).
2. Release cylinder lower retaining clip and disconnect cylinder from B-post (see Figure 1).

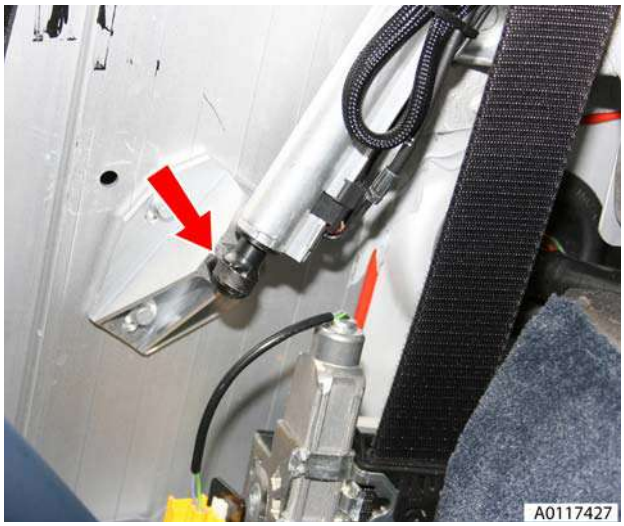

Figure 1

3. Release cylinder lower retaining clip and disconnect cylinder from roof mechanism (see Figure 2).

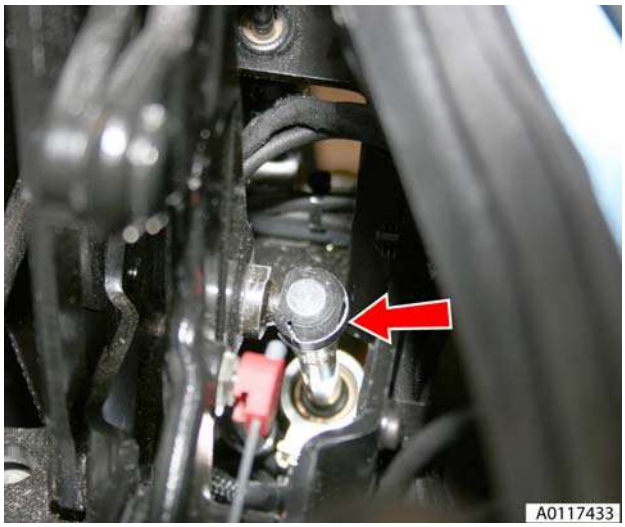

Figure 2

4. Lower cylinder to access pipes and switches.
5. Cut cable ties securing pipes and wires to cylinder (see Figure 3).

Figure 3

6. Release clips securing pipes to cylinder and disconnect pipes.
7. Release clips securing hall effect sensors to cylinder, disconnect sensors and remove cylinder.

Installation

1. Position sensors to cylinder and secure with clips.
2. Position pipes to cylinder and secure with clips.
3. Secure pipes and wires to cylinder with cable tie.
4. Move cylinder into position and install cylinder to roof mechanism.
5. Install cylinder to B-post.
6. Install panel quarter trim lower (see Workshop Manual procedure 01.05.CR/01.05.CS Panel Assembly - Quarter Trim Lower - RH - Renew).

Hydraulic Tensrod Cylinder - Renew

Repair Operation Time (ROT)		
Item		**Code**
Hydraulic Tensrod Cylinder-Renew	LH	**01.17.AJ**
Hydraulic Tensrod Cylinder-Renew	RH	**01.17.AK**

Removal

1. Operate roof to halfway position with tonneau open and support roof when hydraulic pressure drops with suitable straps and support tonneau cover with suitable prop (see Figure 1).

WARNING

APPROXIMATELY 20 SECONDS AFTER THE OPEN/CLOSE OPERATION HAS BEEN INTERRUPTED THE ROOF MAY SUDDENLY DROP DUE TO LOSS OF HYDRAULIC PRESSURE. IF THIS HAPPENS ENSURE NO BODY PARTS ARE CLOSE TO THE ROOF MECHANISM. IF THE ROOF REQUIRES MAINTENANCE, SUPPORT PROPERLY USING SUITABLE PROPS AND STRAPS.

Figure 1

2. Remove lower cover (screw x1) (see Figure 2).

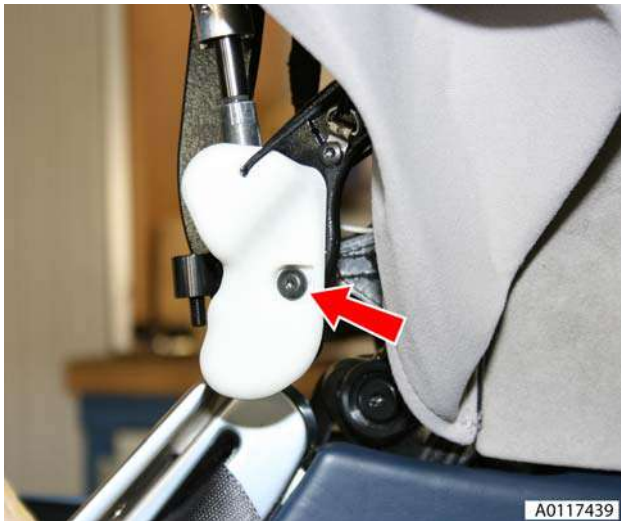

Figure 2

3. Release cylinder upper retaining clip and disconnect cylinder from roof mechanism (see Figure 3).

Figure 3

4. Release cylinder lower retaining clip and disconnect cylinder from roof mechanism (move cylinder to access pipes and wiring).
5. Cut cable tie securing pipes to cylinder.
6. Release clips securing pipes to cylinder and disconnect pipes.

Installation

1. Position pipes to cylinder and secure with clips.
2. Secure pipes to cylinder with cable ties.
3. Move cylinder into position and install cylinder to roof.
4. Install cylinder to roof.
5. Install lower cover.
6. Restore roof and tonneau to original position

Hydraulic Tonneau Cylinder - Renew

Repair Operation Time (ROT)		
Item		**Code**
Hydraulic Tonneau Cylinder-Renew	LH	**01.17.AL**
Hydraulic Tonneau Cylinder-Renew	RH	**01.17.AM**

Removal

1. Operate roof to halfway position with tonneau open and support roof when hydraulic pressure drops with suitable straps and support tonneau cover with suitable prop (see Figure 1).

WARNING

APPROXIMATELY 20 SECONDS AFTER THE OPEN/ CLOSE OPERATION HAS BEEN INTERRUPTED THE ROOF MAY SUDDENLY DROP DUE TO LOSS OF HYDRAULIC PRESSURE. IF THIS HAPPENS ENSURE NO BODY PARTS ARE CLOSE TO THE ROOF MECHANISM. IF THE ROOF REQUIRES MAINTENANCE, SUPPORT PROPERLY USING SUITABLE PROPS AND STRAPS.

Figure 1

2. Release cylinder upper retaining clip and disconnect cylinder from tonneau cover (see Figure 2).

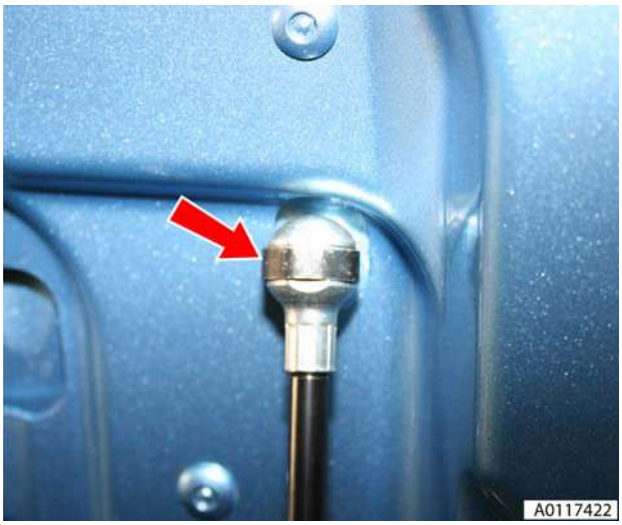

Figure 2

3. Release velcro and move tonneau well liner aside to expose lower cylinder fixing (see Figure 3).

Figure 3

4. Release cylinder lower retaining clip and disconnect cylinder from body (see Figure 4).

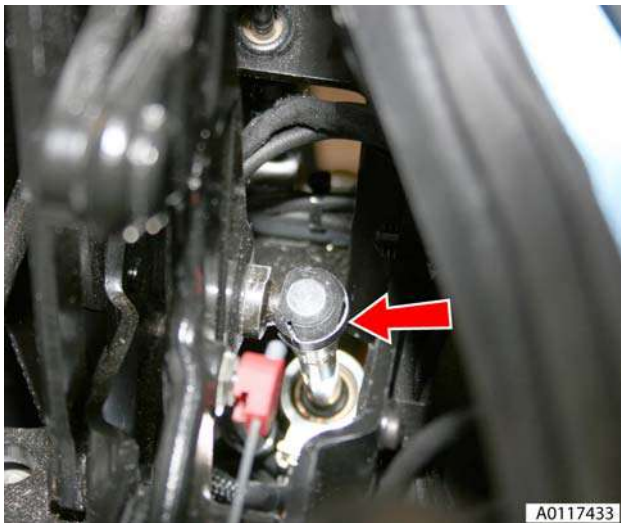

Figure 4

5. Cut cable ties securing pipes and wires to cylinder.
6. Release clips securing pipes to cylinder and disconnect pipes (see Figure 5).

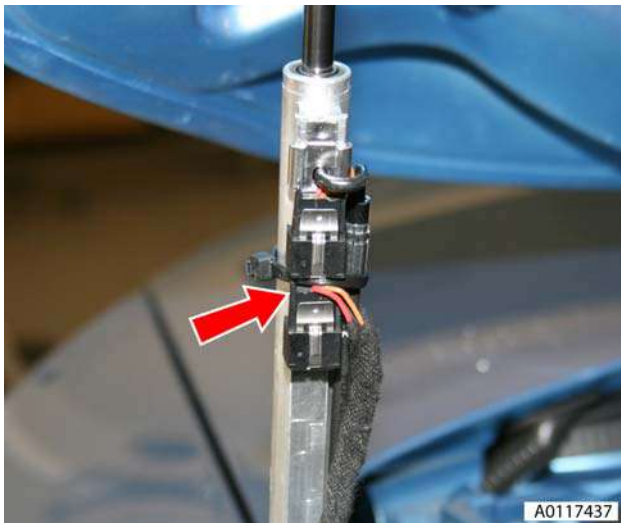

Figure 5

7. Release clips securing hall effect sensors to cylinder, disconnect sensors and remove cylinder.

Installation

1. Position sensors to cylinder and secure with clips.
2. Position pipes to cylinder and secure with clips.
3. Secure pipes and wires to cylinder with cable ties.
4. Move cylinder into position and install cylinder to body.
5. Install cylinder to tonneau cover.
6. Install tonneau well liner.
7. Restore roof and tonneau to original position.

Convertible Top ECU - Renew

Repair Operation Time (ROT)	
Item	**Code**
Convertible Top ECU-Renew	**01.17.AN**

Removal

1. Remove wheel arch liner rear RH (see Workshop Manual procedure 01.02.HB Wheel Arch Liner - Rear - RH - Renew).
2. Remove bolts (x4) securing ECU mounting plate and release from body (see Figure 1).

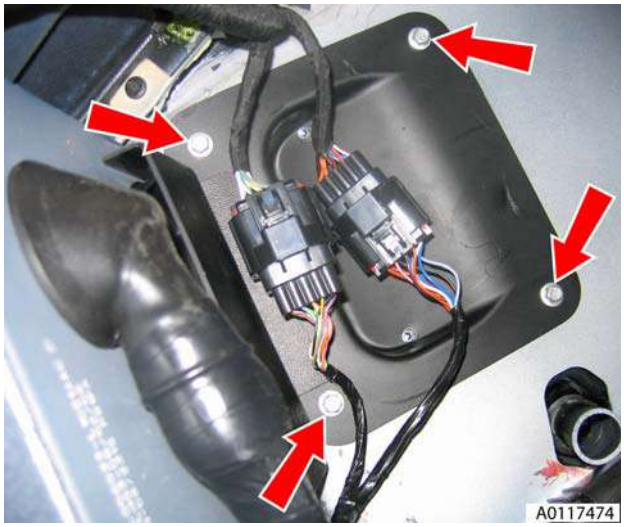

Figure 1

3. Disconnect multiplugs (x3) from ECU (see Figure 2).

Figure 2

4. Remove ECU from mounting plate (nuts x2).

Installation

1. Install ECU to mounting plate.
2. Connect multiplugs (x3) to ECU.
3. Position mounting plate to body and install securing bolts.
4. Remove wheel arch liner rear RH (see Workshop Manual procedure 01.02.HB Wheel Arch Liner - Rear - RH - Renew).

Hydraulic Pump - Renew

Repair Operation Time (ROT)	
Item	**Code**
Hydraulic Pump-Renew	**01.17.AP**

Removal

1. Operate roof to halfway position with tonneau open and support roof when hydraulic pressure drops with suitable straps and support tonneau cover with suitable prop (see Figure 1).

WARNING

APPROXIMATELY 20 SECONDS AFTER THE OPEN/ CLOSE OPERATION HAS BEEN INTERRUPTED THE ROOF MAY SUDDENLY DROP DUE TO LOSS OF HYDRAULIC PRESSURE. IF THIS HAPPENS ENSURE NO BODY PARTS ARE CLOSE TO THE ROOF MECHANISM. IF THE ROOF REQUIRES MAINTENANCE, SUPPORT PROPERLY USING SUITABLE PROPS AND STRAPS.

Figure 1

2. Remove trim clip and release tonneau lining stiffening rod (see Figure 2).

Figure 2

3. Release velcro and move tonneau well liner aside to expose lower cylinder fixing and motor casing.
4. Release cylinder lower retaining clip and disconnect tonneau cylinder from body (see Figure 3).

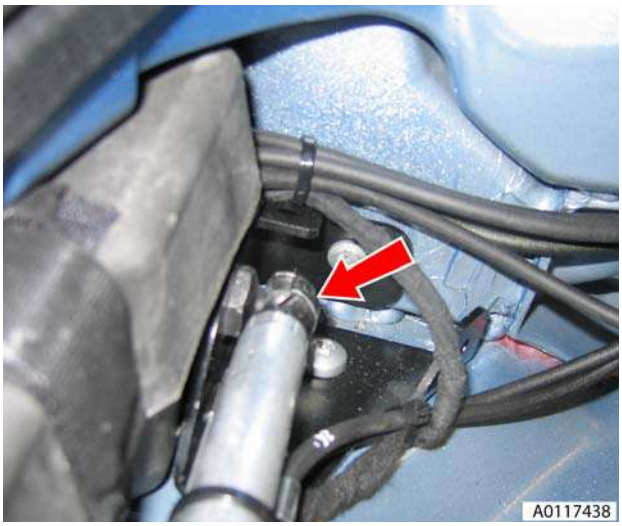

Figure 3

5. Remove cylinder pivot bracket from body (bolts x3) (see Figure 4).

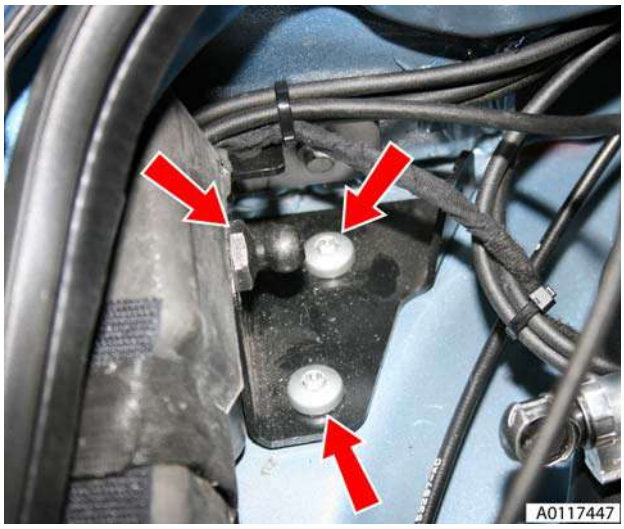

Figure 4

6. Release pump and casing from under tonneau body side (see Figure 5).

Figure 5

7. Release velcro around pump casing and remove casing (see Figure 6).

Figure 6

8. Disconnect pump multiplug (see Figure 7).

Figure 7

9. Disconnect pump multiplug (see Figure 8).

Figure 8

10. Remove end cover (locating tabs x2).
11. Disconnect pump lucar connectors (x2) (see Figure 9).

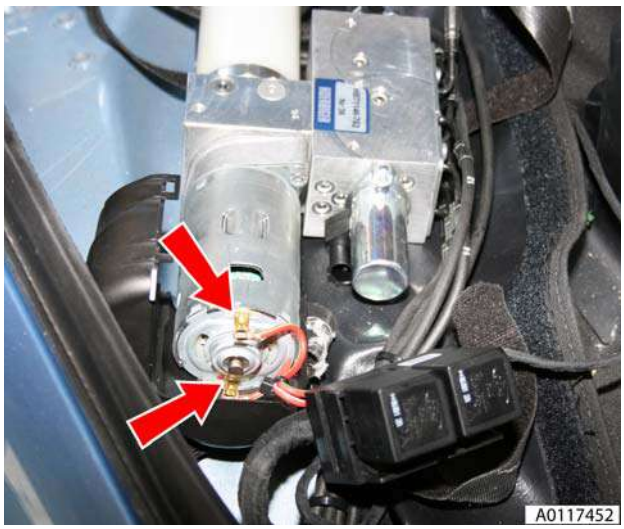

Figure 9

12. Loosen (x6) screws retaining plate (see Figure 10).

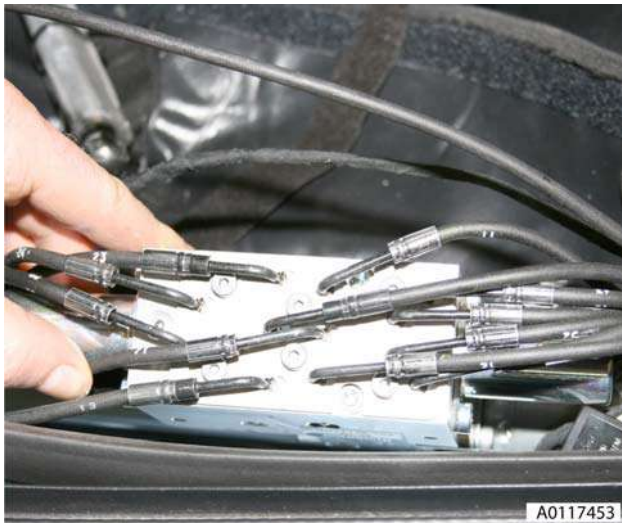

Figure 10

13. Slide retaining plate, disconnect pipes and remove pump (pipes and locations are numbered).

Installation

1. Check pump hydraulic oil level and top-up if required (see Figure 1).

Figure 1

2. Clean pipes and install pipes to pump.
3. Slide retaining plate into place and tighten screws (pipes and locations are numbered).
4. Connect motor lucar connectors (x2).
5. Install end cover (locating tabs x2).
6. Connect pump multiplug.
7. Connect pump multiplug.
8. Install motor under tonneau body side ensuring the roof can be operated without pipes or wires fouling and insulate with cloth if required.
9. Install cylinder pivot bracket and connect cylinder to bracket.
10. Operate roof from fully shut to fully open then to halfway position with tonneau open and support roof when hydraulic pressure drops with suitable straps and support tonneau cover with suitable prop.
11. Disconnect cylinder and remove cylinder pivot bracket.
12. Check pump and pipes for leaks.
13. Remove pump from tonneau bodyside and check oil level. If top up necessary remove reservoir end plug with pump in upright position, add small quantity of oil replace plug and re-check level.
14. Install pump casing and secure velcro.
15. Install pump and casing under tonneau onto location posts.
16. Install cylinder pivot bracket and connect cylinder to bracket.
17. Move tonneau well liner around lower cylinder fixing and motor casing and secure velcro.
18. Install trim clip and position tonneau lining stiffening rod.
19. Restore roof and tonneau to original position

Hydraulic Lock Valve - Renew

Repair Operation Time (ROT)	
Item	**Code**
Hydraulic Lock Valve-Renew	**01.17.AV**

Removal

1. Operate roof to halfway position with tonneau open and support roof when hydraulic pressure drops with suitable straps and support tonneau cover with suitable prop (see Figure 1).

WARNING

APPROXIMATELY 20 SECONDS AFTER THE OPEN/ CLOSE OPERATION HAS BEEN INTERRUPTED THE ROOF MAY SUDDENLY DROP DUE TO LOSS OF HYDRAULIC PRESSURE. IF THIS HAPPENS ENSURE NO BODY PARTS ARE CLOSE TO THE ROOF MECHANISM. IF THE ROOF REQUIRES MAINTENANCE, SUPPORT PROPERLY USING SUITABLE PROPS AND STRAPS.

Figure 1

2. Cut cable tie securing valve to bracket (see Figure 2).

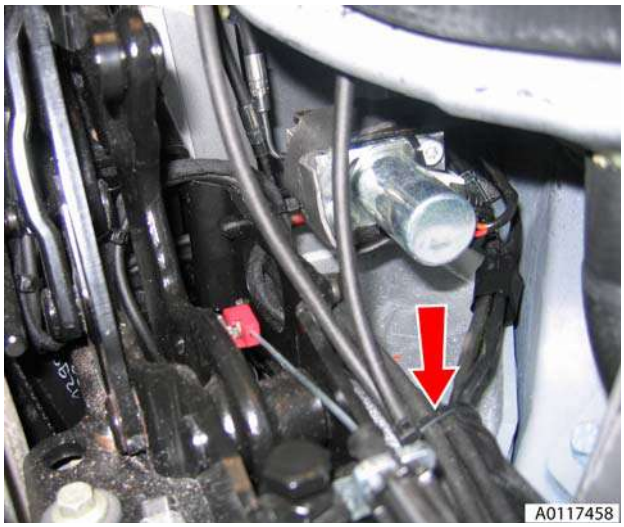

Figure 2

3. Release valve from support bracket, the bracket may need bending slightly.
4. Disconnect multiplug (see Figure 3).

Figure 3

5. Mark pipe fitted positions, loosen screw, slide retaining plate to release pipes and disconnect pipes (x2).
6. Turn valve over and mark pipe fitted position, loosen screw, slide retaining plate to release pipes, disconnect pipes (x2) and remove valve (see Figure 4).

Figure 4

Installation

1. Clean pipes, note fitted position, connect pipes to valve, slide retaining plate and tighten screw.
2. Turn valve over, clean pipes, note fitted position, connect pipes to valve, slide retaining plate and tighten screw.
3. Connect multiplug.
4. Install valve to support bracket, reposition bracket.
5. Install cable tie securing valve to bracket (ensure no pipes or wiring will foul roof mechanism).
6. Restore roof and tonneau to original position.

RH/LH Front Cantrail Seal - Spare Part - Renew

Repair Operation Time (ROT)		
Item		**Code**
Front Cantrail Seal-Spare Part-Renew	RH	**01.17.BE**
Front Cantrail Seal-Spare Part-Renew	LH	**01.17.BG**

Removal

1. Remove header trim (see Workshop Manual procedure 01.05.BB Panel Assembly - Header - Renew).
2. Mark position of nuts (x2) to aid installation.
3. Remove nuts (x2) securing seal holder to hood mechanism and remove seal from holder.
4. Note position of shims and collect (see Figure 1).

Figure 1

Installation

1. Install seal onto holder using soapy water.
2. Position seal holder to hood mechanism with shims in original positions, fit nuts but do not tighten at this stage.
3. Align to marked position and tighten nuts.
4. Restore roof to original position, raise door glass and check alignment.
5. Install header trim (see Workshop Manual procedure 01.05.BB Panel Assembly - Header - Renew).
6. Perform water test (see Workshop Manual procedure 01.17.XX Water Test).

RH/LH Front Cantrail Seal Spare Part Kit - Renew

Repair Operation Time (ROT)		
Item		**Code**
Front Cantrail Seal Spare Part Kit-Renew	RH	**01.17.BF**
Front Cantrail Seal Spare Part Kit-Renew	LH	**01.17.BQ**

Removal

1. Remove header trim (see Workshop Manual procedure 01.05.BB Panel Assembly - Header - Renew).
2. Mark position of nuts (x2) to aid installation.
3. Remove nuts (x2) securing seal holder to hood mechanism and remove seal from holder.
4. Note position of shims and collect (see Figure 1).

Figure 1

Installation

1. Install new seal onto holder using soapy water.
2. Position seal holder to hood mechanism with shims in original positions, fit nuts but do not tighten at this stage.
3. Align to marked position, fit new nuts and tighten.
4. Restore roof to original position and raise door glass.
5. Remove/install shims as necessary to obtain horizontal alignment to door glass.
6. Loosen securing nuts and adjust seal to obtain vertical alignment to door glass and fore and aft alignment to existing seal edges.
7. Adjust seal to obtain alignment to A pillar seal and middle cantrail seal (ensure that seal exerts light pressure on middle cantrail seal without deforming).
8. Tighten nuts securing seal to hood mechanism.
9. Install header trim (see Workshop Manual procedure 01.05.BB Panel Assembly - Header - Renew).
10. Perform water test (see Workshop Manual procedure 01.17.XX Water Test).

RH/LH Middle Cantrail Seal Spare Part - Renew

Repair Operation Time (ROT)		
Item		**Code**
Middle Cantrail Seal Spare Part-Renew	RH	**01.17.BH**
Middle Cantrail Seal Spare Part-Renew	LH	**01.17.BK**

Removal

1. Remove cantrail cover trim (see Workshop Manual procedure 01.17.BT Cover - Trim - Cantrail - Renew).

2. Mark position of nuts (x2) to aid installation (see Figure 1).

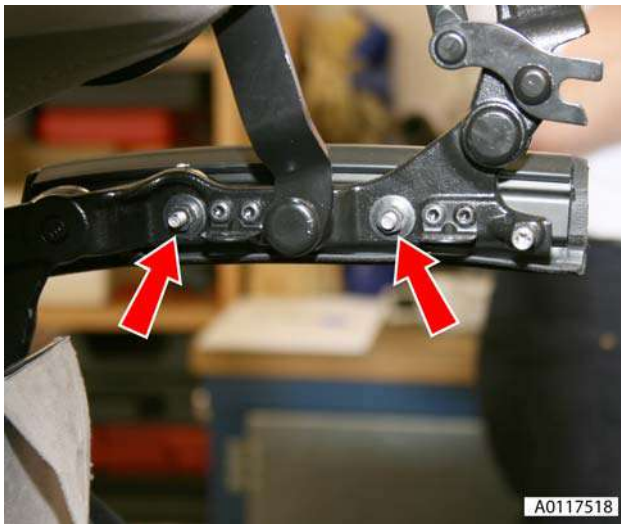

Figure 1

3. Remove nuts (x2) securing seal holder to hood mechanism and remove seal from holder.
4. Note position of shims and collect.

Installation

1. Install seal onto holder using soapy water.
2. Position seal holder to hood mechanism with shims in original positions, fit nuts but do not tighten at this stage.
3. Align to marked position and tighten nuts.
4. Restore roof to original position, raise door glass and check alignment.
5. Install cantrail cover trim (see Workshop Manual procedure 01.17.BT Cover - Trim - Cantrail - Renew).
6. Perform water test (see Workshop Manual procedure 01.17.XX Water Test).

RH/LH Middle Cantrail Seal Spare Part Kit - Renew

Repair Operation Time (ROT)		
Item		**Code**
Middle Cantrail Seal Spare Part Kit-Renew	RH	**01.17.BJ**
Middle Cantrail Seal Spare Part Kit-Renew	LH	**01.17.BL**

Removal

1. Remove cantrail cover trim (see Workshop Manual procedure 01.17.BT Cover - Trim - Cantrail - Renew).

2. Mark position of nuts (x2) to aid installation (see Figure 1).

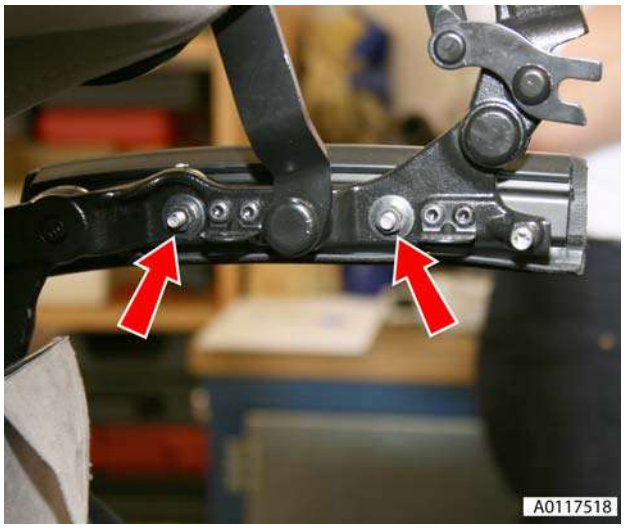

Figure 1

3. Remove nuts (x2) securing seal holder to hood mechanism and remove seal from holder.
4. Note position of shims and collect.

Installation

1. Install seal onto holder using soapy water.
2. Position seal holder to hood mechanism with shims in original positions, fit nuts but do not tighten at this stage.
3. Align to marked position and tighten nuts.
4. Restore roof to original position and raise door glass.
5. Remove/install shims as necessary to obtain vertical alignment to door glass and fore and aft alignment to existing seal edges.
6. Adjust seal to obtain alignment to front seal and rear seal (ensure that seal exerts light pressure on seals without deforming).
7. Tighten nuts securing seal to hood mechanism.
8. Install cantrail cover trim (see Workshop Manual procedure 01.17.BT Cover - Trim - Cantrail - Renew).
9. Perform water test (see Workshop Manual procedure 01.17.XX Water Test).

Rear Seal Spare Part Assembly Kit - Renew

Repair Operation Time (ROT)	
Item	**Code**
Rear Seal Spare Part Assembly Kit-Renew	**01.17.BM**

Removal

1. Operate roof to halfway position (support roof when hydraulic pressure drops with suitable straps) (see Figure 1).

Figure 1

2. Remove 2 screws securing seal retaining brackets to rear seal assembly, remove brackets (see Figure 2).

Figure 2

3. Remove remaining 26 screws securing rear seal assembly to tension bow, rest seal assembly on tonneau (note fitted position of tension springs).
4. Remove RH cant rail trims (see Workshop Manual procedure 01.17.BT Cover - Trim - Cantrail - Renew).
5. Remove LH cant rail trims (see Workshop Manual procedure 01.17.BT Cover - Trim - Cantrail - Renew).
6. Mark position of B-post trim bolts.
7. Remove 4 bolts securing B-post trims to roof (see Figure 3).

Figure 3

8. Drill out 6 pop-rivets securing rear seal assembly to B-posts (see Figure 4).

Figure 4

9. Release water pocket from seal, remove rear seal assembly (see Figure 5).

Figure 5

Installation

1. Insert long straight leg of seal carrier into B-post seal towards joint with tension bow (ensure seal anchors are wrapped around carrier - both sides).
2. Slide carrier to end of seal (ensure carrier is tightly fitted against seal, including corners - both sides).
3. Press seal over full length of carrier (ensure seal inner top anchor and seal lower anchors are fully engaged with carrier - both sides).
4. Check ends of seal are flush with ends of carrier (both sides).
5. Fully roll seal top anchor lip onto carrier (ensure any gaps between seal and carrier are at open end of seal - both sides).
6. Affix (super glue) whole length of seal top anchor lip to carrier (both sides).
7. At each end of the tension bow seal, measure 135mm from the end of the Velcro and mark with black pen.
8. Insert each end of seal retainer into seal at black pen marks.
9. Align seal evenly along retainer, fully push fit home centre of seal onto retainer.
10. Working outwards from centre position, fully push fit home seal onto retainer.
11. Working inwards from ends, fully push fit home seal onto retainer.
12. Position seal assembly across tonneau and rear quarters.
13. Insert water pockets to seal, place a drop of super glue at each end of water pockets.
14. Crimp seal to secure water pocket in place.
15. Secure seal assembly to B-posts with pop-rivets, starting with lower rivet.
16. Align and install B-post trims, secure with bolts.
17. Install LH cant rail trims (see Workshop Manual procedure 01.17.BT Cover - Trim - Cantrail - Renew).
18. Install RH cant rail trims (see Workshop Manual procedure 01.17.BT Cover - Trim - Cantrail - Renew).
19. Align and install seal assembly to tension bow, ensure brackets and spring clips are correctly positioned, secure with screws.

LH Fully Automatic Latching Kit - Renew

Repair Operation Time (ROT)		
Item		**Code**
Fully Automatic Latching Kit-Renew	LH	**01.17.BN**

Removal

1. Remove left-hand header latch flex shaft (see Workshop Manual procedure 01.17.EF Flex Shaft - LH - Renew).
2. Mark mounting position of latching kit (see Figure 1).

Figure 1

3. Remove 3 nuts and 1 screw securing latching kit to roof.

4. Remove C-clip securing tie rod to roof hinge, release tie rod (see Figure 2).

Figure 2

5. Cut cable tie securing latch sensor harness to latch motor bracket (see Figure 3).

Figure 3

6. Disconnect latch sensor multiplug.
7. Remove latching kit from studs.

Installation

1. Ensure header motor and latch are in fully open position prior to installation.
2. Align and install latching kit, secure with nuts and screw.
3. Connect latch sensor multiplug.
4. Secure latch sensor harness to latch motor bracket with cable tie.
5. Attach tie rod, secure with C-clip.
6. Install left-hand header latch flex shaft (see Workshop Manual procedure 01.17.EF Flex Shaft - LH - Renew).

RH Fully Automatic Latching Kit - Renew

Repair Operation Time (ROT)		
Item		**Code**
Fully Automatic Latching Kit-Renew	RH	**01.17.BP**

Removal

1. Remove right-hand header latch flex shaft (see Workshop Manual procedure 01.17.EG Flex Shaft - RH - Renew).
2. Mark mounting position of latching kit (see Figure 1).

Figure 1

3. Remove 3 nuts and 1 screw securing latching kit to roof.
4. Remove C-clip securing tie rod to roof hinge, release tie rod (see Figure 2).

Figure 2

5. Remove latching kit from studs.

Installation

1. Ensure header motor and latch are in fully open position prior to installation.

2. Align and install latching kit, secure with nuts and screw.
3. Attach tie rod, secure with C-clip.
4. Install right-hand header latch flex shaft (see Workshop Manual procedure 01.17.EG Flex Shaft - RH - Renew).

Convertible Roof Hydraulic Pump - Check Fluid Level

Repair Operation Time (ROT)	
Item	**Code**
Convertible Roof Hydraulic Pump-Check Fluid Level	**01.17.BR**

Removal

1. Operate roof to halfway position with tonneau open. Support roof when hydraulic pressure drops with suitable straps and support tonneau cover with suitable prop (see Figure 1).

WARNING

APPROXIMATELY 20 SECONDS AFTER THE OPEN/CLOSE OPERATION HAS BEEN INTERRUPTED THE ROOF MAY SUDDENLY DROP DUE TO LOSS OF HYDRAULIC PRESSURE. IF THIS HAPPENS ENSURE NO BODY PARTS ARE CLOSE TO THE ROOF MECHANISM. IF THE ROOF REQUIRES MAINTENANCE, SUPPORT PROPERLY USING SUITABLE PROPS AND STRAPS.

Figure 1

2. Remove trim clip and release tonneau lining stiffening rod (see Figure 2).

Figure 2

3. Release velcro and move tonneau well liner aside to expose lower cylinder fixing and pump casing.
4. Release cylinder lower retaining clip and disconnect cylinder from body (see Figure 3).

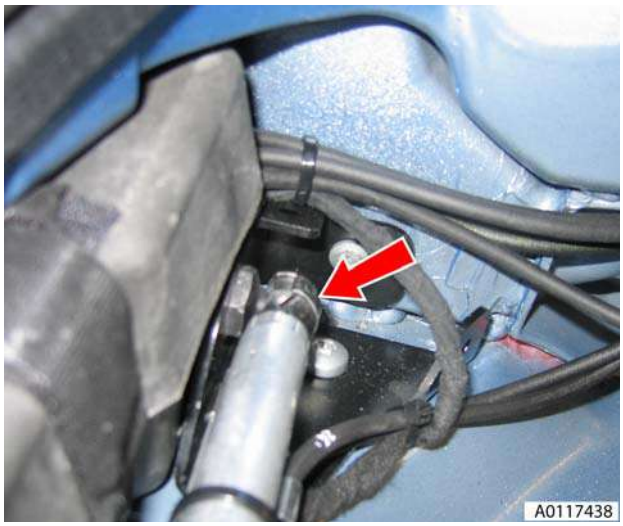

Figure 3

5. Remove cylinder pivot bracket from body (bolts x3) (see Figure 4).

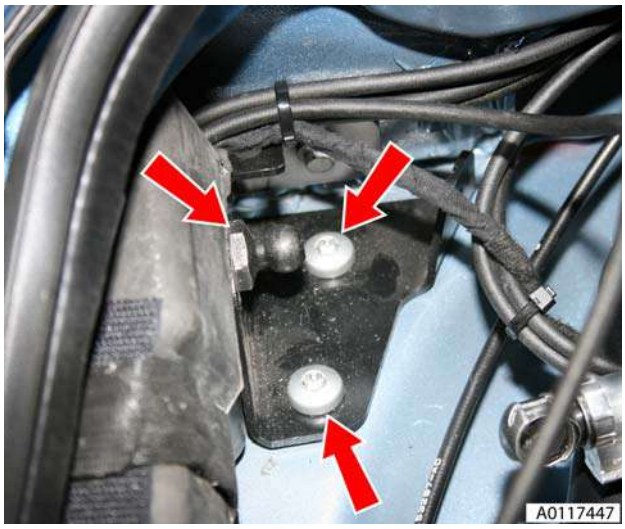

Figure 4

6. Release pump and casing from under tonneau body side (see Figure 5).

Figure 5

7. Release velcro around pump casing and remove casing (see Figure 6).

Figure 6

Installation

1. Check pump and pipes for leaks.
2. Check oil level and top-up if necessary by removing reservoir end plug with pump in upright position, add small quantity of oil replace plug and re-check level (see Figure 1).

Figure 1

3. Install pump casing and secure velcro.
4. Install pump and casing under tonneau onto location posts.
5. Install cylinder pivot bracket and connect cylinder to bracket.
6. Move tonneau well liner around lower cylinder fixing and pump casing and secure velcro.
7. Install trim clip and position tonneau lining stiffening rod.

8. Restore roof and tonneau to original position

Cantrail Cover Trim - Renew

Repair Operation Time (ROT)	
Item	**Code**
Cantrail Cover Trim-Renew	**01.17.BT**

Removal

1. Operate roof to halfway position and support roof when hydraulic pressure drops with suitable straps.

WARNING
APPROXIMATELY 20 SECONDS AFTER THE OPEN/ CLOSE OPERATION HAS BEEN INTERRUPTED THE ROOF MAY SUDDENLY DROP DUE TO LOSS OF HYDRAULIC PRESSURE. IF THIS HAPPENS ENSURE NO BODY PARTS ARE CLOSE TO THE ROOF MECHANISM. IF THE ROOF REQUIRES MAINTENANCE, SUPPORT PROPERLY USING SUITABLE PROPS AND STRAPS.

2. Remove Torx screws (x2) securing trim to hood mechanism and release trim (see Figure 1).

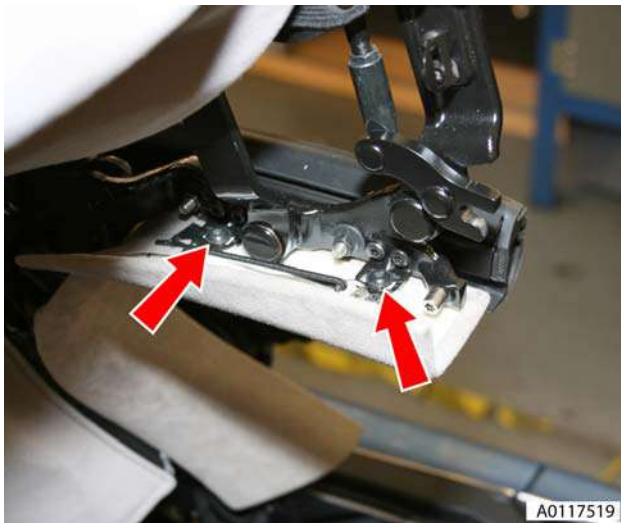

Figure 1

3. Remove bolt securing tension string to trim and remove trim (see Figure 2).

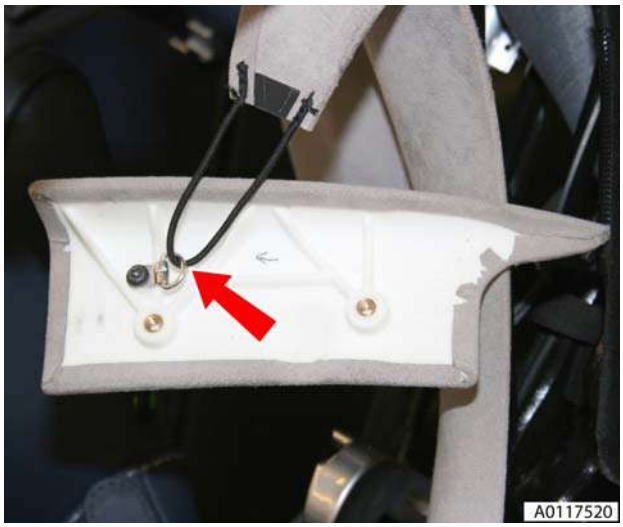

Figure 2

Installation

1. Position tension string to trim and secure with screw.
2. Install trim to hood and secure with bolts (ensure tension string is positioned either side of rear screw).
3. Restore roof to original position.

B-Post Trim Cover - Renew

Repair Operation Time (ROT)	
Item	**Code**
B-Post Trim Cover-Renew	**01.17.BU**

Removal

1. Remove cantrail trim (see Workshop Manual procedure 01.17.BT Cover - Trim - Cantrail - Renew).
2. Mark position of screws (x2) to aid installation.

3. Remove screws (x2) securing trim to hood mechanism and release trim (see Figure 1).

Figure 1

4. Unclip spring securing tension string to hood mechanism (see Figure 2).

Figure 2

5. Remove screw securing tension strap to hood mechanism and remove trim (see Figure 3).

Figure 3

Installation

1. Pass tension strap through trim and secure to hood mechanism using bolt.
2. Pass tension string through trim and secure tension spring to hood mechanism.
3. Install trim to hood mechanism and secure with screws.
4. Install cantrail trim (see Workshop Manual procedure 01.17.BT Cover - Trim - Cantrail - Renew).

Tonneau Cover - Renew

Repair Operation Time (ROT)	
Item	**Code**
Tonneau Cover-Renew	**01.17.CA**

Removal

1. Open trunk lid and loosen 2 tonneau hinge bolts (see Figure 1).

Figure 1

2. Protect tonneau cover and boot lid edges with suitable tape and close trunk lid.
3. Operate roof to halfway position and support roof when hydraulic pressure drops with suitable straps and support tonneau cover with suitable prop (see Figure 2).

WARNING

APPROXIMATELY 20 SECONDS AFTER THE OPEN/ CLOSE OPERATION HAS BEEN INTERRUPTED THE ROOF MAY SUDDENLY DROP DUE TO LOSS OF HYDRAULIC PRESSURE. IF THIS HAPPENS ENSURE NO BODY PARTS ARE CLOSE TO THE ROOF MECHANISM. IF THE ROOF REQUIRES MAINTENANCE, SUPPORT PROPERLY USING SUITABLE PROPS AND STRAPS.

Figure 2

4. Release upper spring clips securing tonneau cylinders to tonneau cover and release cylinders (both sides) (see Figure 3).

Figure 3

5. Release velcro and clip securing right-hand tonneau well liner edges (see Figure 4).

Figure 4

6. Release velcro and 3 clips securing left-hand tonneau well liner edges (see Figure 5).

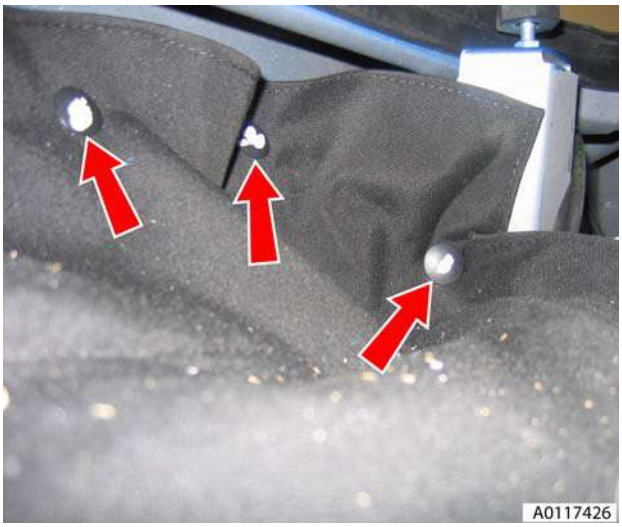

Figure 5

7. Release tonneau B-post flap cables from hood linkage (both sides) (see Figure 6).

Figure 6

8. With assistance, remove tonneau hinge bolts and remove tonneau cover.
9. Release 2 clips (both sides) securing B-post flap cables to tonneau cover (see Figure 7).

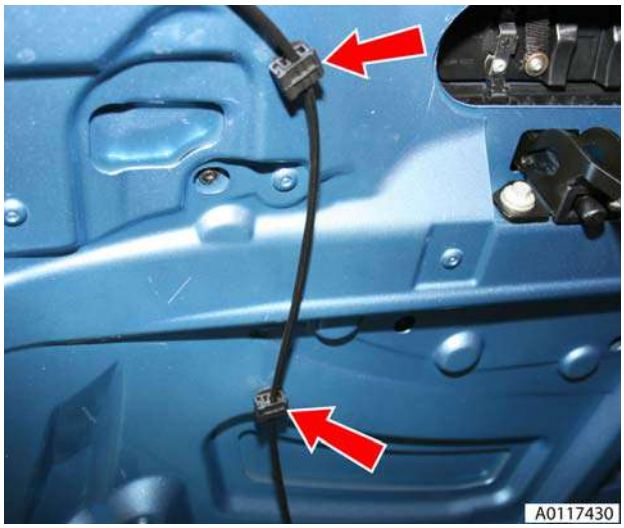

Figure 7

10. Mark mounting position of B-post flaps (both sides).

11. Remove 3 bolts (both sides) securing B-post flaps to tonneau cover and remove (see Figure 8).

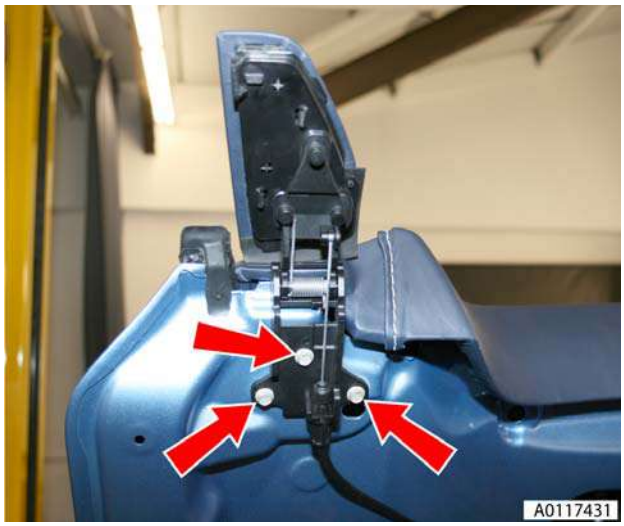

Figure 8

12. Mark mounting position of tonneau strikers (both sides).
13. Remove 2 bolts (both sides) securing tonneau strikers and remove (see Figure 9).

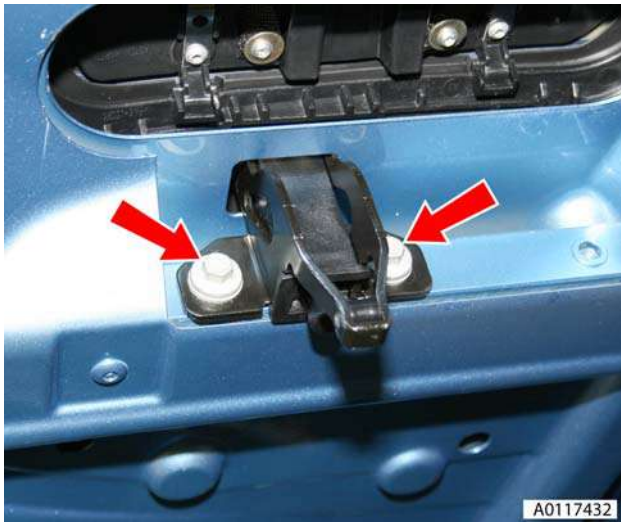

Figure 9

14. Remove 8 screws (both sides) securing tonneau trim and remove (see Figure 10).

Figure 10

Installation

1. Install tonneau trims and secure with screws (both sides).
2. Align and install tonneau strikers (both sides), secure with bolts.
3. Align and install B-post flaps (both sides), secure with bolts.
4. Secure B-post flap cables to tonneau cover with clips (both sides).
5. With assistance, install tonneau cover and hinge bolts.
6. Secure tonneau B-post flap cables to hood linkage (both sides).
7. Secure tonneau well liner with velcro and clips.
8. Attach tonneau cylinders and secure with clips (both sides).
9. Restore roof and tonneau to original position.
10. Open trunk lid and tighten 2 tonneau hinge bolts.
11. Remove protective tape, close trunk lid

LH Front Main Hydraulic Cylinder Pipe - Renew

Repair Operation Time (ROT)		
Item		**Code**
Front Main Hydraulic Cylinder Pipe-Renew	LH	**01.17.CH**

Removal

1. Operate roof to halfway position with tonneau open and support roof when hydraulic pressure drops with

suitable straps and support tonneau cover with suitable prop (see Figure 1).

WARNING

APPROXIMATELY 20 SECONDS AFTER THE OPEN/ CLOSE OPERATION HAS BEEN INTERRUPTED THE ROOF MAY SUDDENLY DROP DUE TO LOSS OF HYDRAULIC PRESSURE. IF THIS HAPPENS ENSURE NO BODY PARTS ARE CLOSE TO THE ROOF MECHANISM. IF THE ROOF REQUIRES MAINTENANCE, SUPPORT PROPERLY USING SUITABLE PROPS AND STRAPS.

Figure 1

2. Remove panel quarter trim lower (see Workshop Manual procedure 01.05.CR Panel Assembly - Quarter Trim Lower - RH - Renew).
3. Disconnect battery.
4. Cut cable ties securing pipes and wires to cylinder (see Figure 2).

Figure 2

5. Release clips securing pipes to cylinder and disconnect pipes.
6. Release fir tree clip and cable tie securing both pipes to roof frame (remove pipes as pair).
7. Attach string to cylinder end of both pipes to aid installation.
8. Feed pipes through to tonneau area by carefully guiding through roof mechanism and release string (see Figure 3).

Figure 3

9. Remove harness/pipe retaining clips (x2) (LH) (see Figure 4).

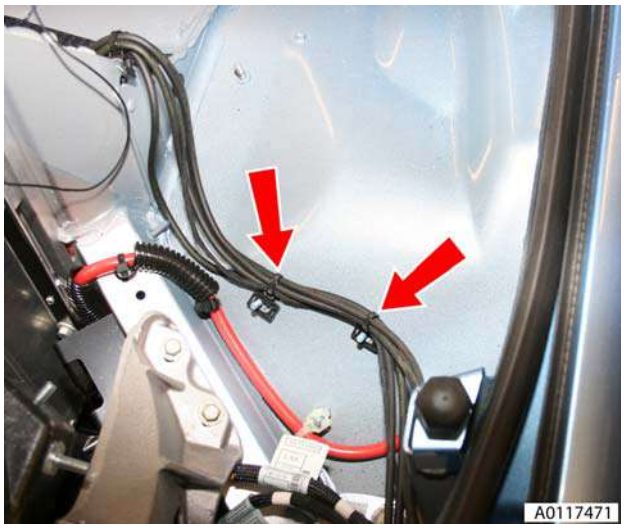

Figure 4

10. Remove harness/pipe retaining clips (x9) behind ROPS units (see Figure 5).

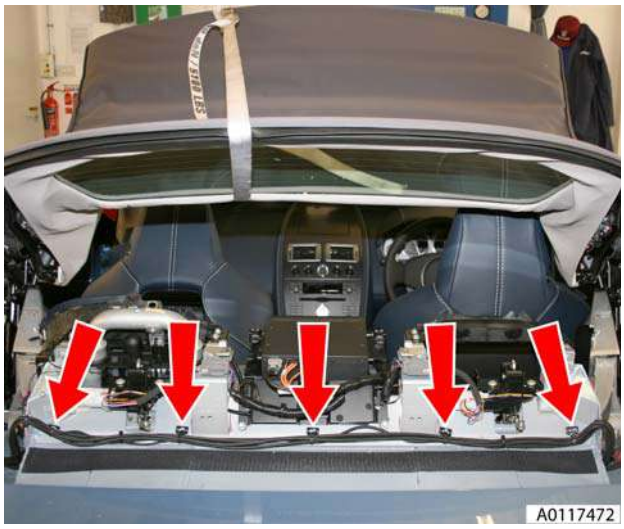

Figure 5

11. Remove harness/pipe retaining clips (x3) LH side (see Figure 6).

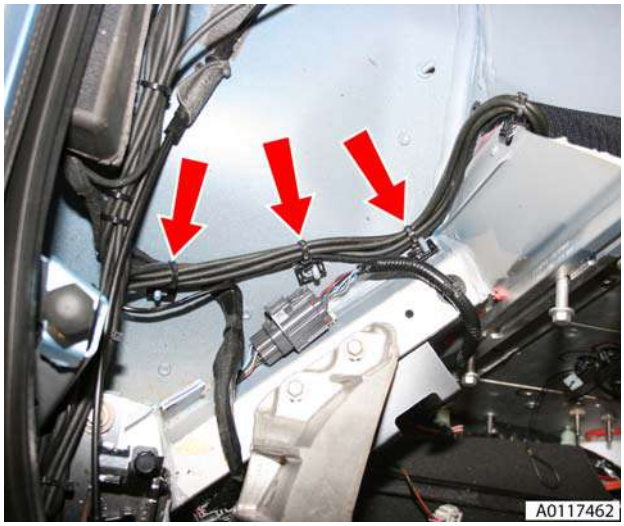

Figure 6

12. Remove trim clip and release tonneau lining stiffening rod (see Figure 7).

Figure 7

13. Release velcro and move tonneau well liner aside to expose lower cylinder fixing and pump casing.
14. Release cylinder lower retaining clip and disconnect cylinder from body (see Figure 8).

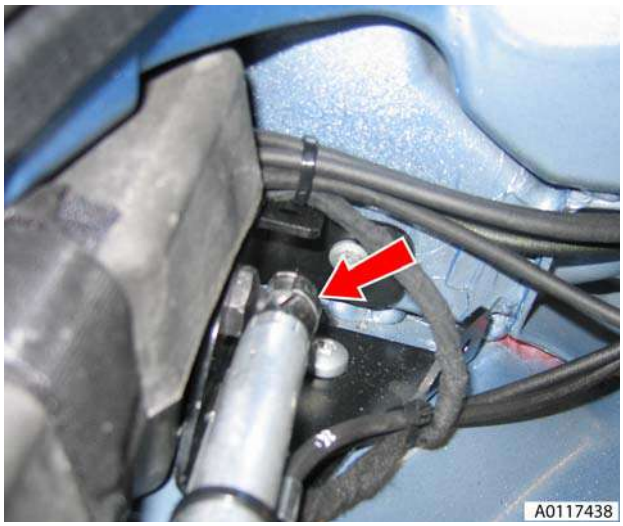

Figure 8

15. Remove cylinder pivot bracket from body (bolts x3).

16. Release pump and casing from under tonneau body side (see Figure 9).

Figure 9

17. Release velcro around pump casing and remove casing (see Figure 10).

Figure 10

18. Loosen (x6) screws on pump retaining plate (see Figure 11).

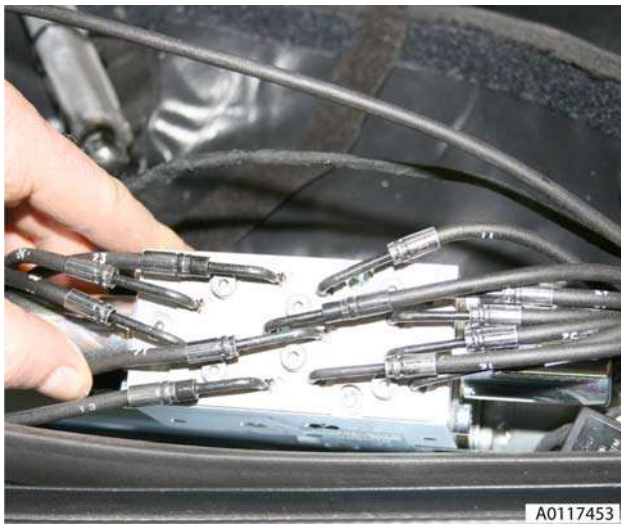

Figure 11

19. Slide retaining plate, disconnect pipe from pump (pipes and locations are numbered).
20. Remove cable ties and remove pipe from vehicle (see Figure 12).

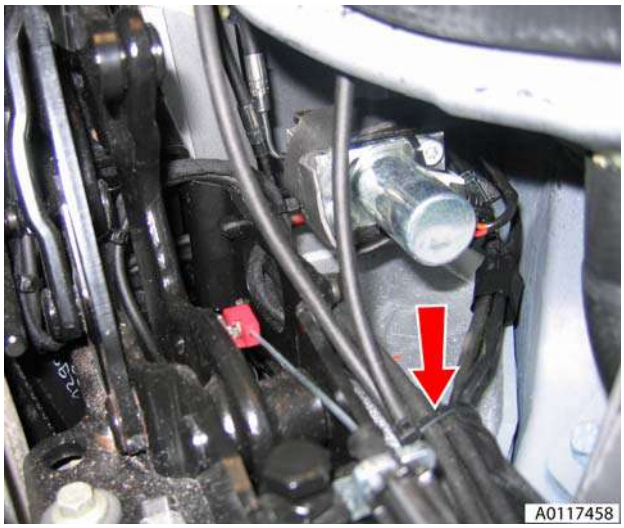

Figure 12

Installation

1. Check oil level and top-up if necessary by removing reservoir end plug with pump in upright position, add

small quantity of oil replace plug and re-check level (see Figure 1).

Figure 1

2. Install pipe to approximate route on vehicle and install cable ties.
3. Clean pipe and install pipe to pump then slide retaining plate into place and tighten screws (pipes and locations are numbered).
4. Install pump casing and secure velcro.
5. Install pump and casing under tonneau onto location posts.
6. Install cylinder pivot bracket and connect cylinder to bracket.
7. Move tonneau well liner around lower cylinder fixing and pump casing and secure velcro.
8. Install trim clip and position tonneau lining stiffening rod.
9. Install harness/pipe retaining clips (x9) behind ROPS units.
10. Install harness/pipe retaining clips LH (x2).
11. Install harness/pipe retaining clips RH (x3).
12. Attach pipes to guide string, feed pipes through roof frame and remove string.
13. Position pipes to cylinder and secure with clips.
14. Secure pipes and wires to cylinder with cable tie.
15. Install new clips securing pipes to roof frame.
16. Connect battery.
17. Install Panel quarter trim lower (see Workshop Manual procedure 01.05.CR Panel Assembly - Quarter Trim Lower - RH - Renew).
18. Restore roof and tonneau to original position.

LH Rear Main Hydraulic Cylinder Pipe - Renew

Repair Operation Time (ROT)		
Item		**Code**
Rear Main Hydraulic Cylinder Pipe-Renew	LH	**01.17.CK**

Removal

1. Operate roof to halfway position with tonneau open and support roof when hydraulic pressure drops with suitable straps and support tonneau cover with suitable prop (see Figure 1).

WARNING

APPROXIMATELY 20 SECONDS AFTER THE OPEN/CLOSE OPERATION HAS BEEN INTERRUPTED THE ROOF MAY SUDDENLY DROP DUE TO LOSS OF HYDRAULIC PRESSURE. IF THIS HAPPENS ENSURE NO BODY PARTS ARE CLOSE TO THE ROOF MECHANISM. IF THE ROOF REQUIRES MAINTENANCE, SUPPORT PROPERLY USING SUITABLE PROPS AND STRAPS.

Figure 1

2. Remove panel quarter trim lower (see Workshop Manual procedure 01.05.CR Panel Assembly - Quarter Trim Lower - RH - Renew).
3. Disconnect battery.

4. Cut cable ties securing pipes and wires to cylinder (see Figure 2).

Figure 2

5. Release clips securing pipes to cylinder and disconnect pipes.
6. Release fir tree clip and cable tie securing both pipes to roof frame (remove pipes as pair).
7. Attach string to cylinder end of both pipes to aid installation.
8. Feed pipes through to tonneau area by carefully guiding through roof mechanism and release string (see Figure 2).

Figure 2

9. Remove harness/pipe retaining clips (x2) (LH) (see Figure 3).

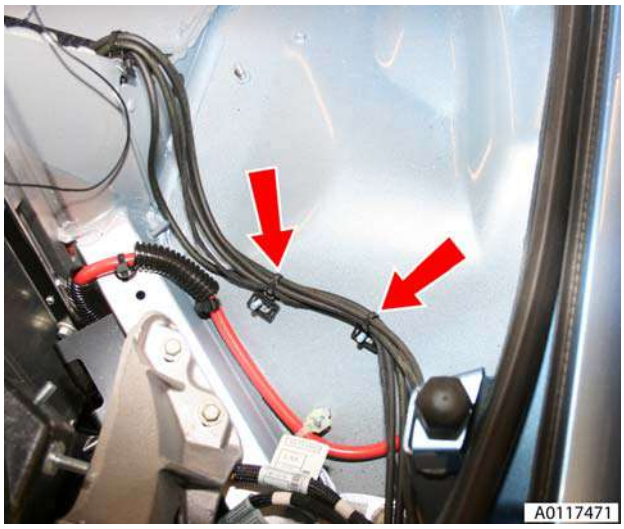

Figure 3

10. Remove harness/pipe retaining clips (x9) behind ROPS units (see Figure 4).

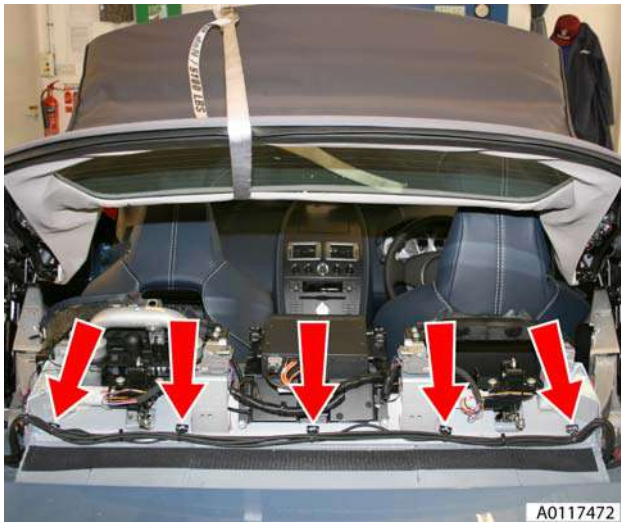

Figure 4

11. Remove harness/pipe retaining clips (x3) LH side (see Figure 5).

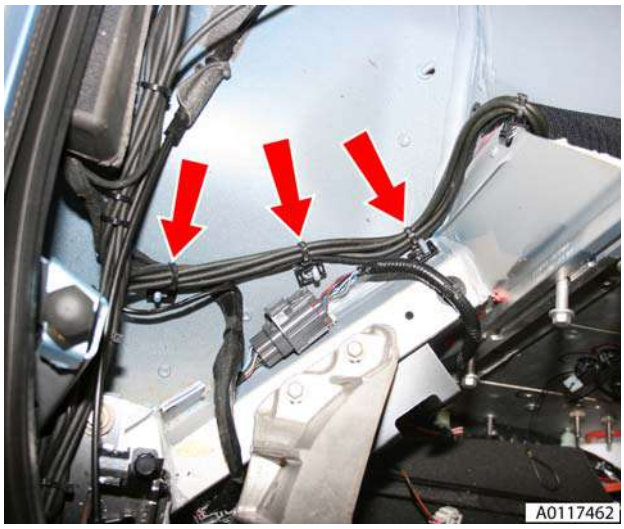

Figure 5

12. Remove trim clip and release tonneau lining stiffening rod (see Figure 6).

Figure 6

13. Release velcro and move tonneau well liner aside to expose lower cylinder fixing and pump casing.

14. Release cylinder lower retaining clip and disconnect cylinder from body (see Figure 7).

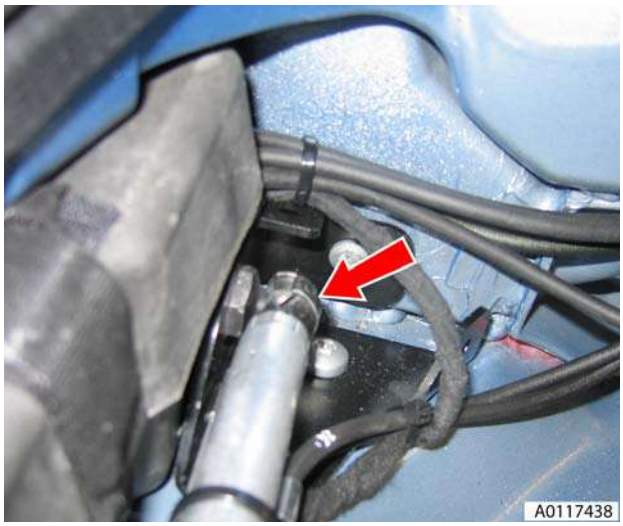

Figure 7

15. Remove cylinder pivot bracket from body (bolts x3).
16. Release pump and casing from under tonneau body side (see Figure 8).

Figure 8

17. Release velcro around pump casing and remove casing (see Figure 9).

Figure 9

18. Loosen (x6) screws on pump retaining plate (see Figure 10).

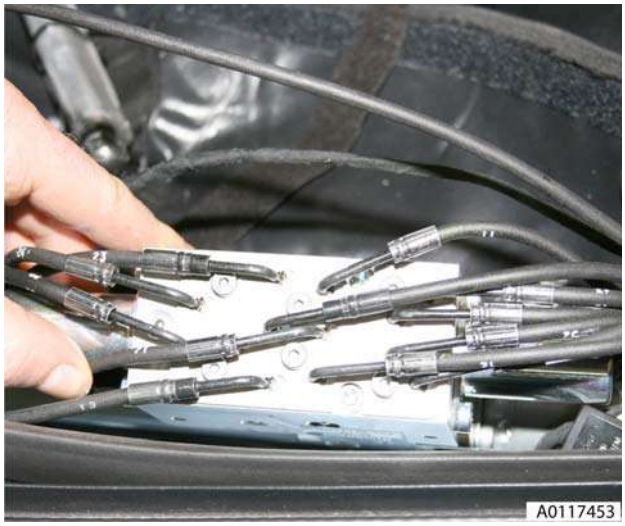

Figure 10

19. Slide retaining plate, disconnect pipe from pump (pipes and locations are numbered).
20. Remove cable ties and remove pipe from vehicle (see Figure 11).

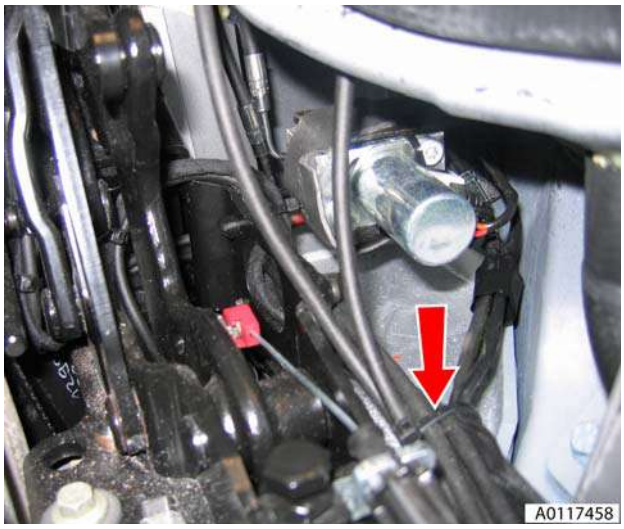

Figure 11

Installation

1. Check oil level and top-up if necessary by removing reservoir end plug with pump in upright position, add small quantity of oil replace plug and re-check level (see Figure 1).

Figure 1

2. Install pipe to approximate route on vehicle and install cable ties.
3. Clean pipe and install pipe to pump then slide retaining plate into place and tighten screws (pipes and locations are numbered).
4. Install pump casing and secure velcro.
5. Install pump and casing under tonneau onto location posts.
6. Install cylinder pivot bracket and connect cylinder to bracket.

7. Move tonneau well liner around lower cylinder fixing and pump casing and secure velcro.
8. Install trim clip and position tonneau lining stiffening rod.
9. Install harness/pipe retaining clips (x9) behind ROPS units.
10. Install harness/pipe retaining clips LH (x2).
11. Install harness/pipe retaining clips RH (x3).
12. Attach pipes to guide string, feed pipes through roof frame and remove string.
13. Position pipes to cylinder and secure with clips.
14. Secure pipes and wires to cylinder with cable tie.
15. Install new clips securing pipes to roof frame.
16. Connect battery.
17. Install Panel quarter trim lower (see Workshop Manual procedure 01.05.CR Panel Assembly - Quarter Trim Lower - RH - Renew).
18. Restore roof and tonneau to original position

RH Front Main Hydraulic Cylinder Pipe - Renew

Repair Operation Time (ROT)		
Item		**Code**
Front Main Hydraulic Cylinder Pipe-Renew	RH	**01.17.CL**

Removal

1. Operate roof to halfway position with tonneau open and support roof when hydraulic pressure drops with suitable straps and support tonneau cover with suitable prop (see Figure 1).

WARNING

APPROXIMATELY 20 SECONDS AFTER THE OPEN/CLOSE OPERATION HAS BEEN INTERRUPTED THE ROOF MAY SUDDENLY DROP DUE TO LOSS OF HYDRAULIC PRESSURE. IF THIS HAPPENS ENSURE NO BODY PARTS ARE CLOSE TO THE ROOF MECHANISM. IF THE ROOF REQUIRES MAINTENANCE, SUPPORT PROPERLY USING SUITABLE PROPS AND STRAPS.

Figure 1

2. Remove panel quarter trim lower (see Workshop Manual procedure 01.05.CR Panel Assembly - Quarter Trim Lower - RH - Renew).
3. Disconnect battery.
4. Cut cable ties securing pipes and wires to cylinder (see Figure 2).

Figure 2

5. Release clips securing pipes to cylinder and disconnect pipes.
6. Release fir tree clip and cable tie securing both pipes to roof frame (remove pipes as pair).
7. Attach string to cylinder end of both pipes to aid installation.

8. Feed pipes through to tonneau area by carefully guiding through roof mechanism and release string (see Figure 3).

Figure 3

9. Remove trim clip and release tonneau lining stiffening rod (see Figure 4).

Figure 4

10. Release velcro and move tonneau well liner aside to expose lower cylinder fixing and pump casing.
11. Release cylinder lower retaining clip and disconnect cylinder from body (see Figure 5).

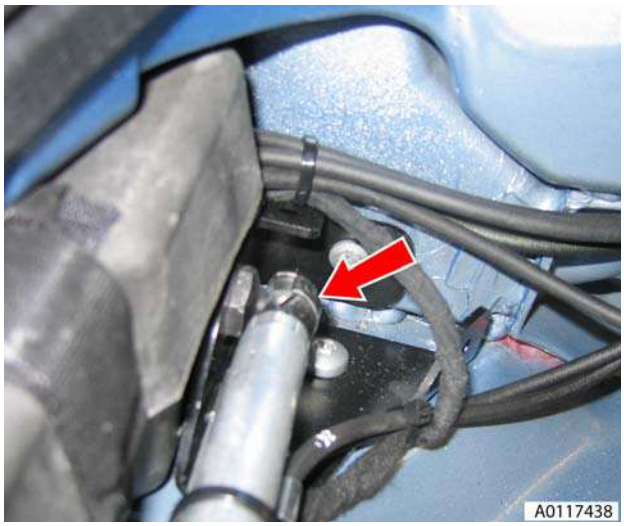

Figure 5

12. Remove cylinder pivot bracket from body (bolts x3).
13. Release pump and casing from under tonneau body side (see Figure 6).

Figure 6

14. Release velcro around pump casing and remove casing (see Figure 7).

Figure 7

15. Loosen (x6) screws on pump retaining plate (see Figure 8).

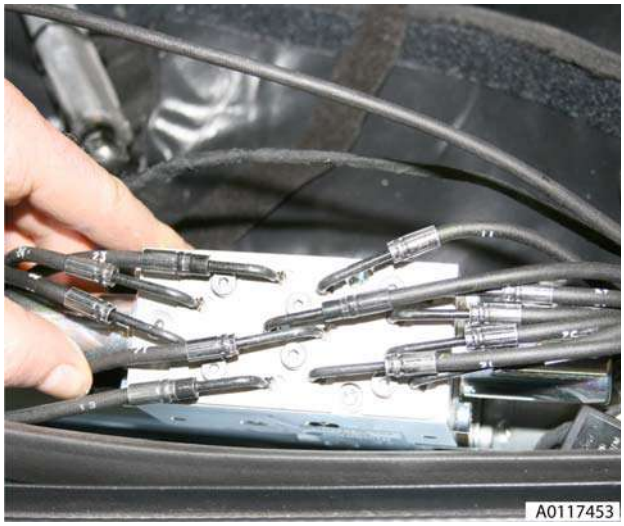

Figure 8

16. Slide retaining plate, disconnect pipe from pump (pipes and locations are numbered).

17. Remove cable ties and remove pipe from vehicle (see Figure 9).

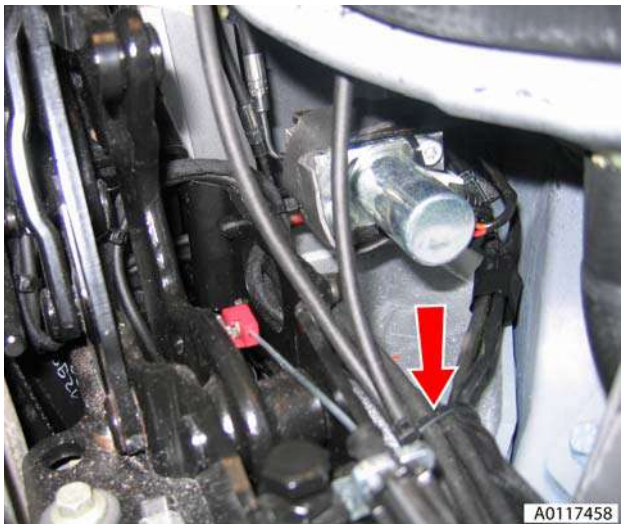

Figure 9

Installation

1. Check oil level and top-up if necessary by removing reservoir end plug with pump in upright position, add small quantity of oil replace plug and re-check level (see Figure 1).

Figure 1

2. Install pipe to approximate route on vehicle and install cable ties.
3. Clean pipe and install pipe to pump then slide retaining plate into place and tighten screws (pipes and locations are numbered).
4. Install pump casing and secure velcro.
5. Install pump and casing under tonneau onto location posts.
6. Install cylinder pivot bracket and connect cylinder to bracket.

7. Move tonneau well liner around lower cylinder fixing and pump casing and secure velcro
8. Install trim clip and position tonneau lining stiffening rod.
9. Attach pipes to guide string, feed pipes through roof frame and remove string.
10. Position pipes to cylinder and secure with clips.
11. Secure pipes and wires to cylinder with cable tie.
12. Install new clips securing pipes to roof frame.
13. Connect battery.
14. Install panel quarter trim lower (see Workshop Manual procedure 01.05.CR Panel Assembly - Quarter Trim Lower - RH - Renew).
15. Restore roof and tonneau to original position

RH Rear Main Hydraulic Cylinder Pipe - Renew

Repair Operation Time (ROT)		
Item		**Code**
Rear Main Hydraulic Cylinder Pipe-Renew	RH	**01.17.CM**

Removal

1. Operate roof to halfway position with tonneau open then support roof when hydraulic pressure drops with suitable straps and support tonneau cover with suitable prop (see Figure 1).

WARNING
APPROXIMATELY 20 SECONDS AFTER THE OPEN/CLOSE OPERATION HAS BEEN INTERRUPTED THE ROOF MAY SUDDENLY DROP DUE TO LOSS OF HYDRAULIC PRESSURE. IF THIS HAPPENS ENSURE NO BODY PARTS ARE CLOSE TO THE ROOF MECHANISM. IF THE ROOF REQUIRES MAINTENANCE, SUPPORT PROPERLY USING SUITABLE PROPS AND STRAPS.

Figure 1

2. Remove Panel quarter trim lower (see Workshop Manual procedure 01.05.CR Panel Assembly - Quarter Trim Lower - RH - Renew).
3. Disconnect battery.

4. Cut cable ties securing pipes and wires to cylinder (see Figure 2).

Figure 2

5. Release clips securing pipes to cylinder and disconnect pipes.
6. Release fir tree clip and cable tie securing both pipes to roof frame (remove pipes as pair).
7. Attach string to cylinder end of both pipes to aid installation.
8. Feed pipes through to tonneau area by carefully guiding through roof mechanism and release string (see Figure 3).

Figure 3

9. Remove trim clip and release tonneau lining stiffening rod (see Figure 4).

Figure 4

10. Release velcro and move tonneau well liner aside to expose lower cylinder fixing and pump casing.
11. Release cylinder lower retaining clip and disconnect cylinder from body (see Figure 5).

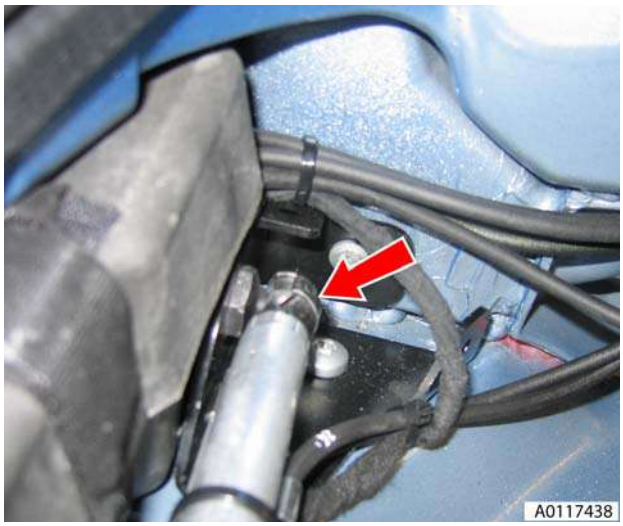

Figure 5

12. Remove cylinder pivot bracket from body (bolts x3).

13. Release pump and casing from under tonneau body side (see Figure 6).

Figure 6

14. Release velcro around pump casing and remove casing (see Figure 7).

Figure 7

15. Loosen (x6) screws on pump retaining plate (see Figure 8).

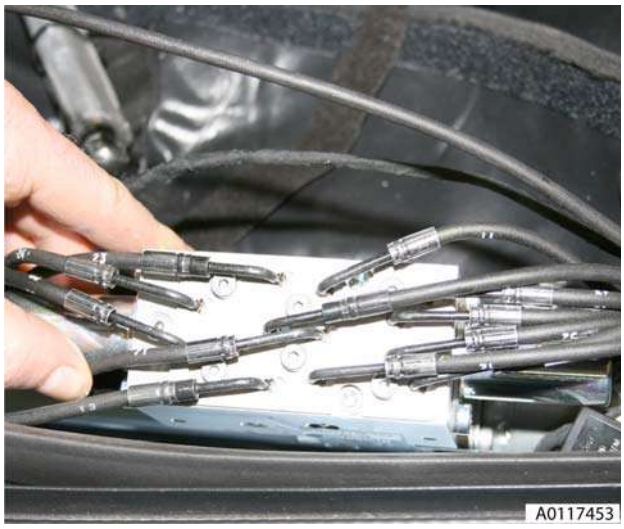

Figure 8

16. Slide retaining plate, disconnect pipe from pump (pipes and locations are numbered).
17. Remove cable ties and remove pipe from vehicle (see Figure 9).

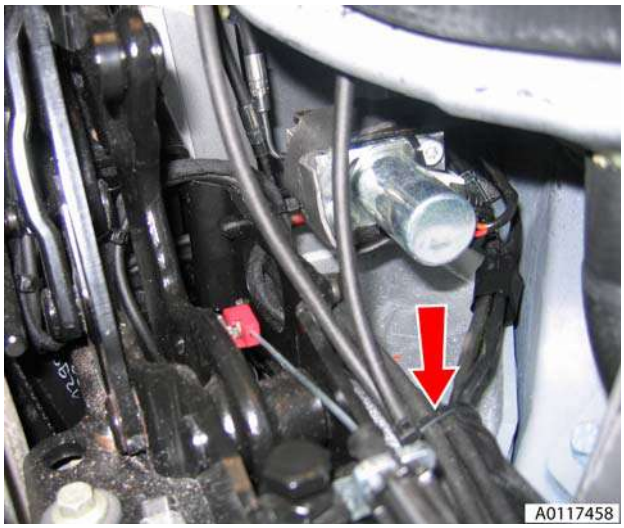

Figure 9

Installation

1. Check oil level and top-up if necessary by removing reservoir end plug with pump in upright position, add

small quantity of oil replace plug and re-check level (see Figure 1).

Figure 1

2. Install pipe to approximate route on vehicle and install cable ties.
3. Clean pipe and install pipe to pump. Slide retaining plate into place and tighten screws (pipes and locations are numbered).
4. Install pump casing and secure velcro.
5. Install pump and casing under tonneau onto location posts.
6. Install cylinder pivot bracket and connect cylinder to bracket.
7. Move tonneau well liner around lower cylinder fixing and pump casing and secure velcro.
8. Install trim clip and position tonneau lining stiffening rod.
9. Attach pipes to guide string, feed pipes through roof frame and remove string.
10. Position pipes to cylinder and secure with clips.
11. Secure pipes and wires to cylinder with cable tie.
12. Install new clips securing pipes to roof frame.
13. Connect battery.
14. Install Panel quarter trim lower (see Workshop Manual procedure 01.05.CR Panel Assembly - Quarter Trim Lower - RH - Renew).
15. Restore roof and tonneau to original position.

LH Front Hydraulic Cylinder Pipe - Renew

Repair Operation Time (ROT)		
Item		**Code**
Front Hydraulic Cylinder Pipe-Renew	LH	**01.17.CN**

Removal

1. Operate roof to halfway position with tonneau open then support roof when hydraulic pressure drops with suitable straps and support tonneau cover with suitable prop (see Figure 1).

WARNING
APPROXIMATELY 20 SECONDS AFTER THE OPEN/ CLOSE OPERATION HAS BEEN INTERRUPTED THE ROOF MAY SUDDENLY DROP DUE TO LOSS OF HYDRAULIC PRESSURE. IF THIS HAPPENS ENSURE NO BODY PARTS ARE CLOSE TO THE ROOF MECHANISM. IF THE ROOF REQUIRES MAINTENANCE, SUPPORT PROPERLY USING SUITABLE PROPS AND STRAPS.

Figure 1

2. Remove wind deflector (see Workshop Manual procedure 01.17.DA Wind Deflector - Renew).
3. Disconnect battery.
4. Remove lower cover (screw x1) (see Figure 2).

Figure 2

5. Cut cable ties securing pipes and wires to cylinder (see Figure 3).

Figure 3

6. Release clips securing pipe to cylinder and disconnect pipes.
7. Remove cable ties securing pipes to roof frame (see Figure 4).

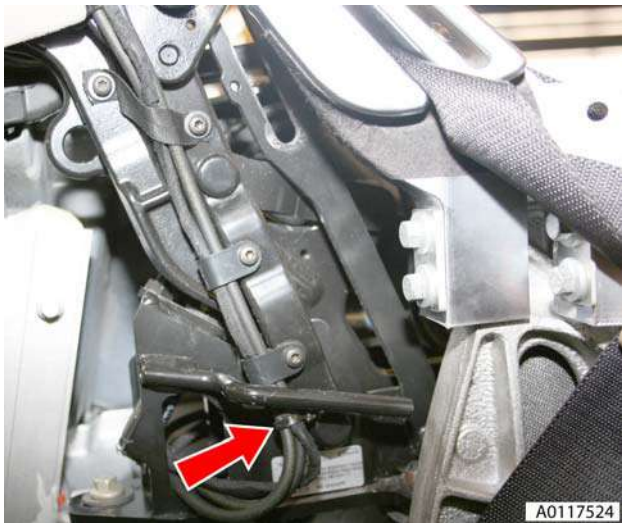

Figure 4

8. Remove screws securing P-clips and strap to frame and release harness.
9. Remove screw of cable/wiring keeper plate, loosen other and release pipe.
10. Attach string to cylinder end of both pipes to aid installation.
11. Feed pipes through to tonneau area by carefully guiding through roof mechanism and release string (see Figure 5).

Figure 5

12. Remove harness/pipe retaining clips (x2) (LH) (see Figure 6).

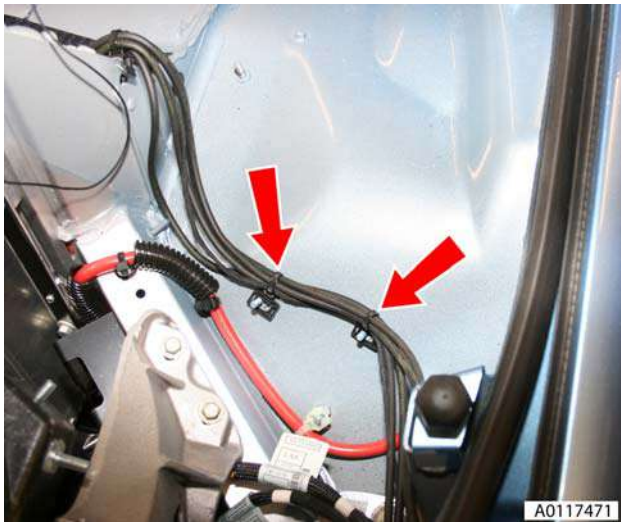

Figure 6

13. Remove harness/pipe retaining clips (x9) behind ROPS units (see Figure 7).

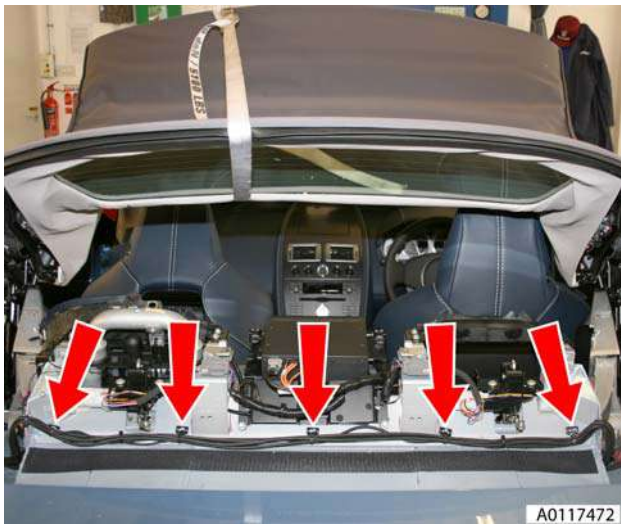

Figure 7

14. Remove harness/pipe retaining clips (x3) LH side (see Figure 8).

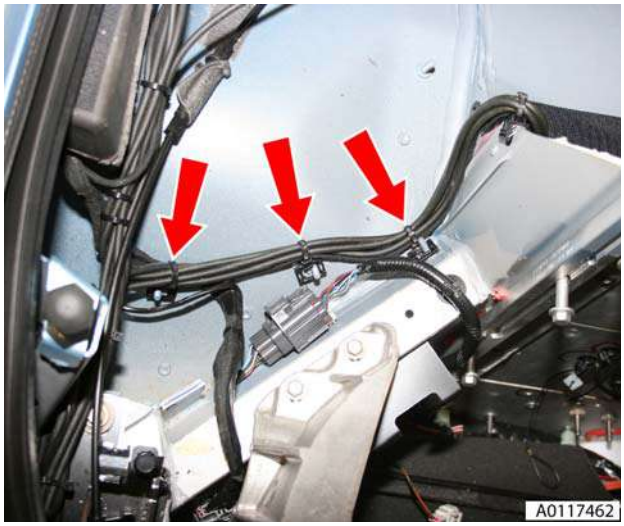

Figure 8

15. Remove trim clip and release tonneau lining stiffening rod (see Figure 9).

Figure 9

16. Cut cable tie securing valve to bracket (see Figure 10).

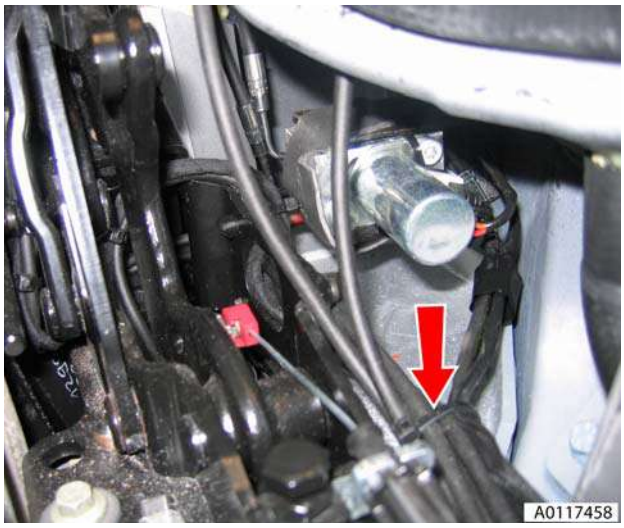

Figure 10

17. Release valve from support bracket, the bracket may need bending slightly.

18. Loosen screw, slide retaining plate to release pipe and remove pipe (see Figure 11).

Figure 11

Installation

1. Fit pipe to approximate position behind ROPS units.
2. Clean pipe, connect pipe to valve, slide retaining plate and tighten screw.
3. Install valve to support bracket, reposition bracket.
4. Install cable tie securing valve to bracket. Ensure no pipes or wiring will foul roof mechanism.
5. Install trim clip and position tonneau lining stiffening rod.
6. Install harness/pipe retaining clips (x9) behind ROPS units.
7. Install harness/pipe retaining clips LH (x2).
8. Install harness/pipe retaining clips RH (x3).
9. Attach pipes to guide string, feed pipes through roof frame and remove string.
10. Position pipes to cylinder and secure with clips.
11. Secure pipes and wires to cylinder with cable ties.
12. Install pipe under keeper plate, install and tighten screws
13. Install new clips securing pipes to roof frame.
14. Install lower cover.
15. Install wind deflector (see Workshop Manual procedure 01.17.DA Wind Deflector - Renew).
16. Connect battery.
17. Restore roof and tonneau to original position

LH Rear Hydraulic Cylinder Pipe - Renew

Repair Operation Time (ROT)		
Item		**Code**
Rear Hydraulic Cylinder Pipe-Renew	LH	**01.17.CP**

Removal

1. Operate roof to halfway position with tonneau open then support roof when hydraulic pressure drops with suitable straps and support tonneau cover with suitable prop (see Figure 1).

WARNING

APPROXIMATELY 20 SECONDS AFTER THE OPEN/ CLOSE OPERATION HAS BEEN INTERRUPTED THE ROOF MAY SUDDENLY DROP DUE TO LOSS OF HYDRAULIC PRESSURE. IF THIS HAPPENS ENSURE NO BODY PARTS ARE CLOSE TO THE ROOF MECHANISM. IF THE ROOF REQUIRES MAINTENANCE, SUPPORT PROPERLY USING SUITABLE PROPS AND STRAPS.

Figure 1

2. Remove Wind deflector (see Workshop Manual procedure 01.17.DA Wind Deflector - Renew).
3. Disconnect battery.
4. Remove lower cover (screw x1) (see Figure 2).

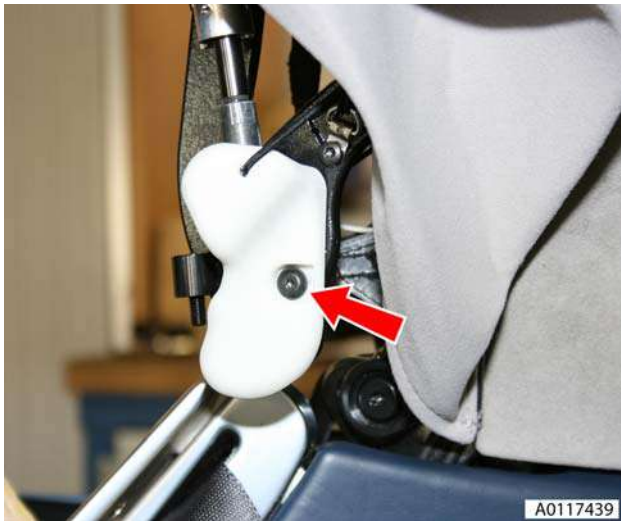

Figure 2

5. Cut cable ties securing pipes and wires to cylinder (see Figure 3).

Figure 3

6. Release clips securing pipe to cylinder and disconnect pipes.
7. Remove cable ties securing pipes to roof frame (see Figure 4).

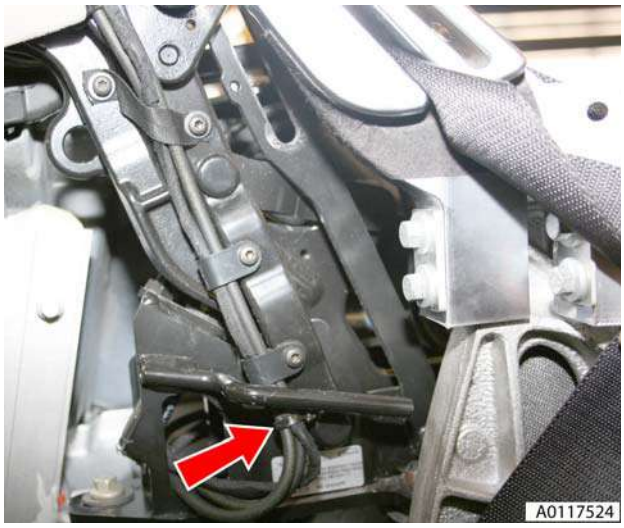

Figure 4

8. Remove screws securing P-clips and strap to frame and release harness.
9. Remove screw of cable/wiring keeper plate, loosen other and release pipe.
10. Attach string to cylinder end of both pipes to aid installation.
11. Feed pipes through to tonneau area by carefully guiding through roof mechanism and release string (see Figure 5).

Figure 5

12. Remove harness/pipe retaining clips (x2) (LH) (see Figure 6).

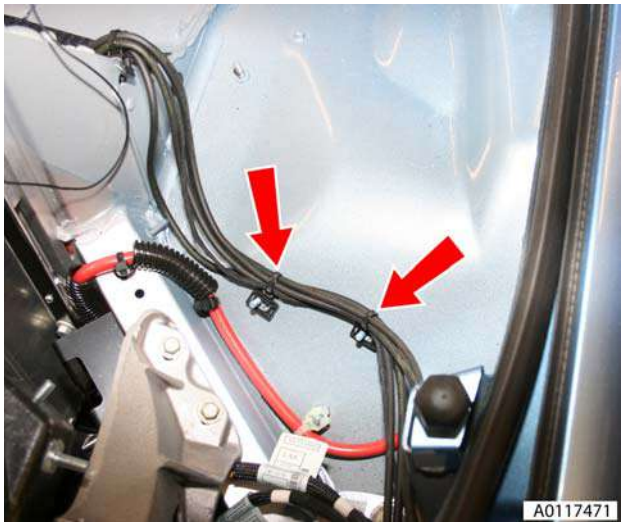

Figure 6

13. Remove harness/pipe retaining clips (x9) behind ROPS units (see Figure 7).

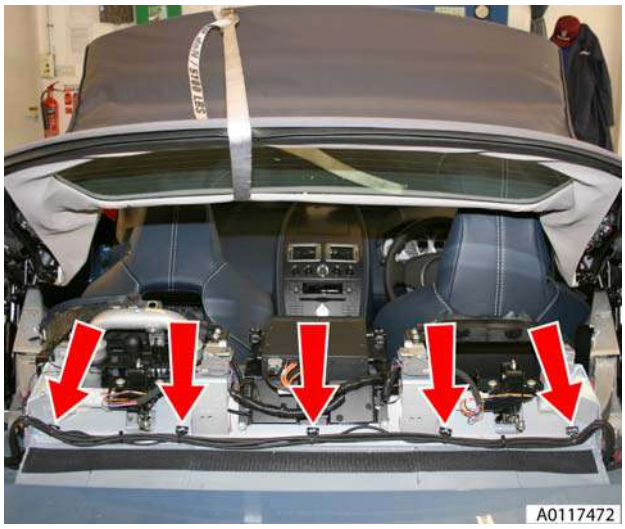

Figure 7

14. Remove harness/pipe retaining clips (x3) LH side (see Figure 8).

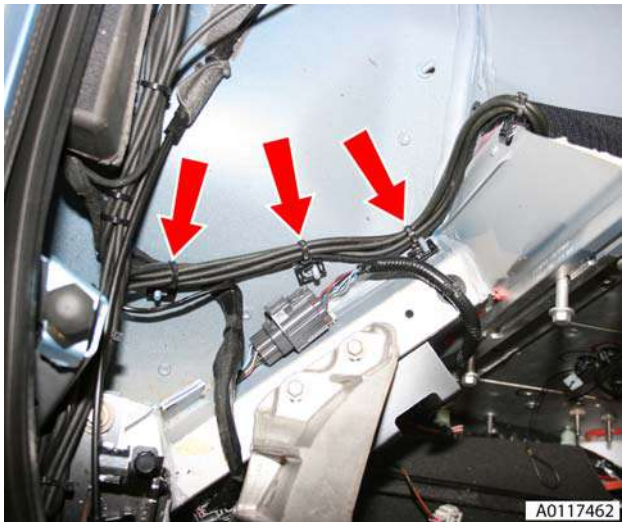

Figure 8

15. Remove trim clip and release tonneau lining stiffening rod (see Figure 9).

Figure 9

16. Release velcro and move tonneau well liner aside to expose lower cylinder fixing and pump casing.
17. Release cylinder lower retaining clip and disconnect cylinder from body (see Figure 10).

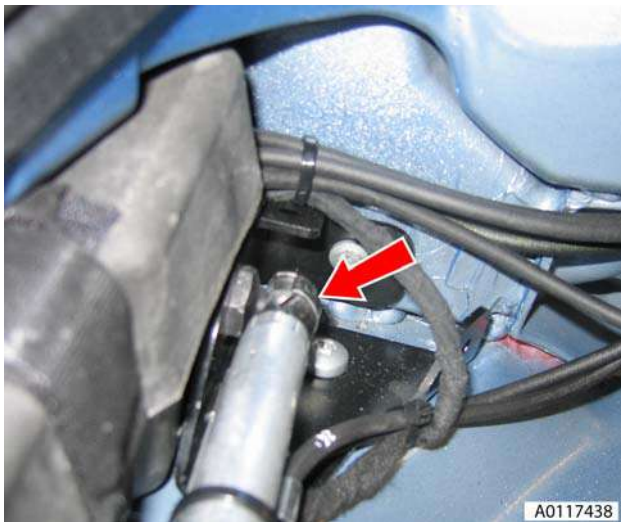

Figure 10

18. Remove cylinder pivot bracket from body (bolts x3).

19. Release pump and casing from under tonneau body side (see Figure 11).

Figure 11

20. Release velcro around pump casing and remove casing (see Figure 12).

Figure 12

21. Loosen (x6) screws on pump retaining plate (see Figure 13).

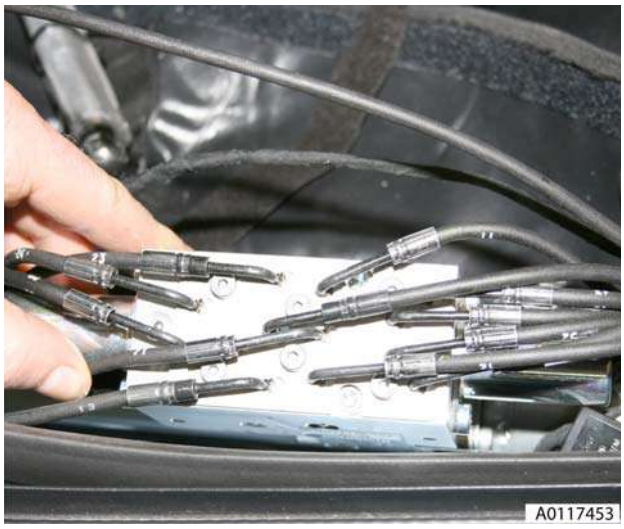

Figure 13

22. Slide retaining plate, disconnect pipe from pump (pipes and locations are numbered).
23. Remove cable ties and remove pipe from vehicle (see Figure 14).

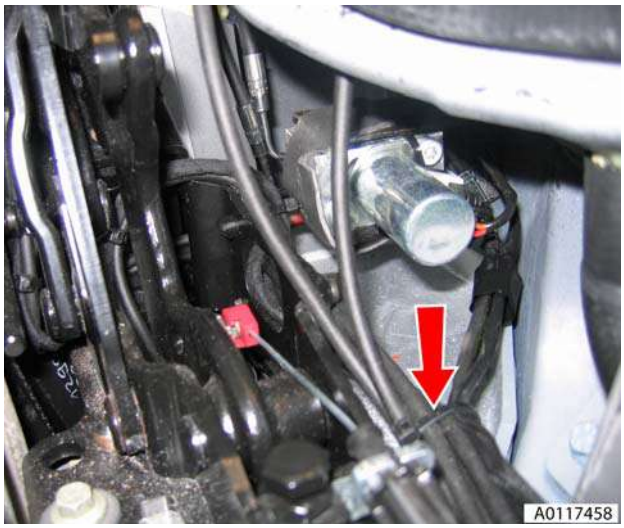

Figure 14

Installation

1. Check oil level and top-up if necessary by removing reservoir end plug with pump in upright position, add

small quantity of oil replace plug and re-check level (see Figure 1).

Figure 1

2. Install pipe to approximate route on vehicle and install cable ties.
3. Clean pipe and install pipe to pump then slide retaining plate into place and tighten screws (pipes and locations are numbered).
4. Install pump casing and secure velcro.
5. Install pump and casing under tonneau onto location posts.
6. Install cylinder pivot bracket and connect cylinder to bracket.
7. Move tonneau well liner around lower cylinder fixing and pump casing and secure velcro.
8. Install trim clip and position tonneau lining stiffening rod.
9. Install harness/pipe retaining clips (x9) behind ROPS units.
10. Install harness/pipe retaining clips LH (x2).
11. Install harness/pipe retaining clips RH (x3).
12. Attach pipes to guide string, feed pipes through roof frame and remove string.
13. Position pipes to cylinder and secure with clips.
14. Secure pipes and wires to cylinder with cable ties
15. Install pipe under keeper plate, install and tighten screws.
16. Install new clips securing pipes to roof frame.
17. Install lower cover.
18. Connect battery.
19. Install Wind deflector (see Workshop Manual procedure 01.17.DA Wind Deflector - Renew).
20. Restore roof and tonneau to original position

RH Front Hydraulic Cylinder Pipe - Renew

Repair Operation Time (ROT)		
Item		**Code**
Front Hydraulic Cylinder Pipe-Renew	RH	**01.17.CQ**

Removal

1. Operate roof to halfway position with tonneau open then support roof when hydraulic pressure drops with suitable straps and support tonneau cover with suitable prop (see Figure 1).

WARNING
APPROXIMATELY 20 SECONDS AFTER THE OPEN/ CLOSE OPERATION HAS BEEN INTERRUPTED THE ROOF MAY SUDDENLY DROP DUE TO LOSS OF HYDRAULIC PRESSURE. IF THIS HAPPENS ENSURE NO BODY PARTS ARE CLOSE TO THE ROOF MECHANISM. IF THE ROOF REQUIRES MAINTENANCE, SUPPORT PROPERLY USING SUITABLE PROPS AND STRAPS.

Figure 1

2. Remove wind deflector (see Workshop Manual procedure 01.17.DA Wind Deflector - Renew).
3. Disconnect battery.

4. Remove lower cover (screw x1) (see Figure 2).

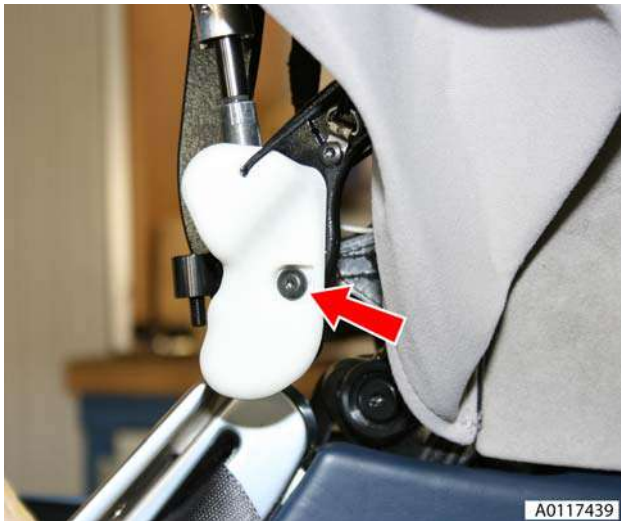

Figure 2

5. Cut cable ties securing pipes and wires to cylinder (see Figure 3).

Figure 3

6. Release clips securing pipe to cylinder and disconnect pipes.
7. Remove cable ties securing pipes to roof frame (see Figure 4).

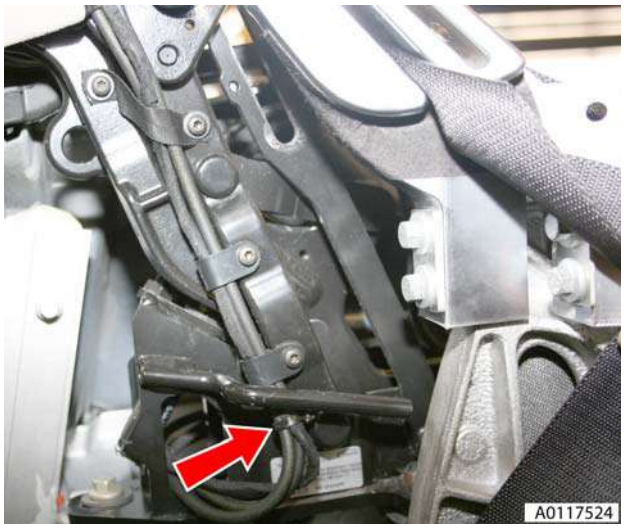

Figure 4

8. Remove screws securing P-clips and strap to frame and release harness.
9. Remove screw of cable/wiring keeper plate, loosen other and release pipe.
10. Attach string to cylinder end of both pipes to aid installation.
11. Feed pipes through to tonneau area by carefully guiding through roof mechanism and release string (see Figure 5).

Figure 5

12. Remove harness/pipe retaining clips (x3) LH side (see Figure 6).

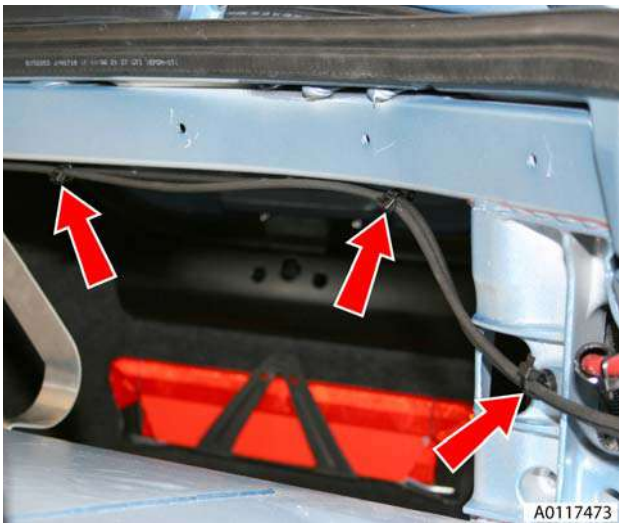

Figure 6

13. Remove trim clip and release tonneau lining stiffening rod (see Figure 7).

Figure 7

14. Cut cable tie securing valve to bracket (see Figure 8).

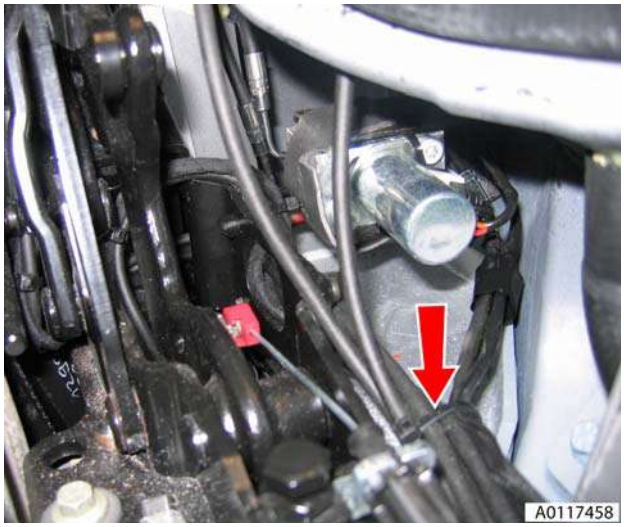

Figure 8

15. Release valve from support bracket, the bracket may need bending slightly.
16. Loosen screw, slide retaining plate to release pipe and remove pipe (see Figure 9).

Figure 9

Installation

1. Fit pipe to approximate position.
2. Clean pipe, connect pipe to valve, slide retaining plate and tighten screw.
3. Install valve to support bracket, reposition bracket.
4. Install cable tie securing valve to bracket. Ensure no pipes or wiring will foul roof mechanism
5. Install trim clip and position tonneau lining stiffening rod.
6. Install harness/pipe retaining clips RH (x3).
7. Attach pipes to guide string, feed pipes through roof frame and remove string.

8. Position pipes to cylinder and secure with clips.
9. Secure pipes and wires to cylinder with cable ties
10. Install pipe under keeper plate, install and tighten screws
11. Install new clips securing pipes to roof frame.
12. Install lower cover.
13. Install wind deflector (see Workshop Manual procedure 01.17.DA Wind Deflector - Renew).
14. Connect battery.
15. Restore roof and tonneau to original position

RH Rear Hydraulic Cylinder Pipe - Renew

Repair Operation Time (ROT)		
Item		**Code**
Rear Hydraulic Cylinder Pipe-Renew	RH	**01.17.CR**

Removal

1. Operate roof to halfway position with tonneau open then support roof when hydraulic pressure drops with suitable straps and support tonneau cover with suitable prop (see Figure 1).

WARNING
APPROXIMATELY 20 SECONDS AFTER THE OPEN/ CLOSE OPERATION HAS BEEN INTERRUPTED THE ROOF MAY SUDDENLY DROP DUE TO LOSS OF HYDRAULIC PRESSURE. IF THIS HAPPENS ENSURE NO BODY PARTS ARE CLOSE TO THE ROOF MECHANISM. IF THE ROOF REQUIRES MAINTENANCE, SUPPORT PROPERLY USING SUITABLE PROPS AND STRAPS.

Figure 1

2. Disconnect battery.
3. Remove lower cover (screw x1) (see Figure 2).

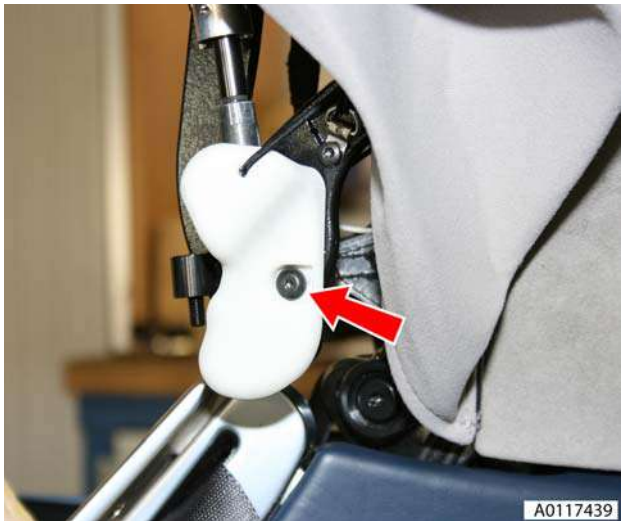

Figure 2

4. Cut cable ties securing pipes and wires to cylinder (see Figure 3).

Figure 3

5. Release clips securing pipe to cylinder and disconnect pipes.

6. Remove cable ties securing pipes to roof frame (see Figure 4).

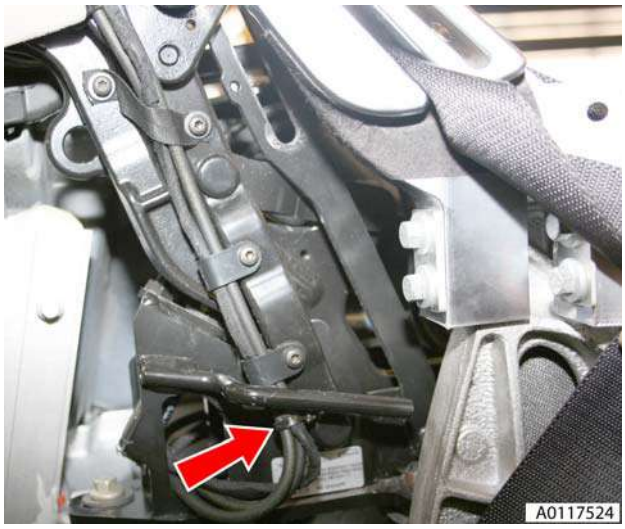

Figure 4

7. Remove screws securing P-clips and strap to frame and release harness.
8. Remove screw of cable/wiring keeper plate, loosen other and release pipe.
9. Attach string to cylinder end of both pipes to aid installation.
10. Feed pipes through to tonneau area by carefully guiding through roof mechanism and release string (see Figure 5).

Figure 5

11. Remove harness/pipe retaining clips (x3) LH side (see Figure 6).

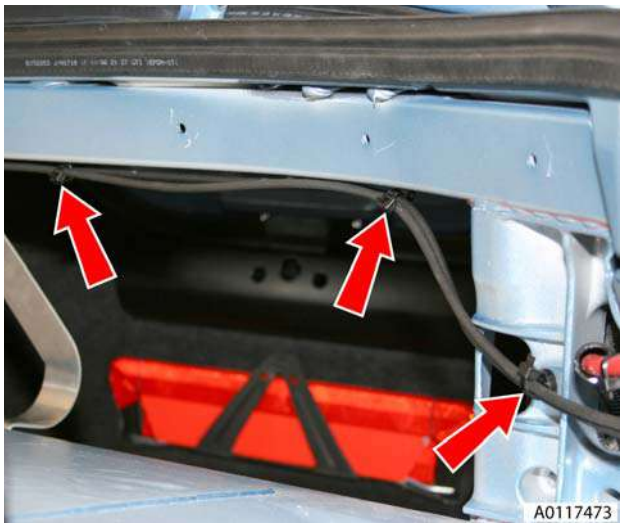

Figure 6

12. Remove trim clip and release tonneau lining stiffening rod (see Figure 7).

Figure 7

13. Release velcro and move tonneau well liner aside to expose lower cylinder fixing and pump casing.

14. Release cylinder lower retaining clip and disconnect cylinder from body (see Figure 8).

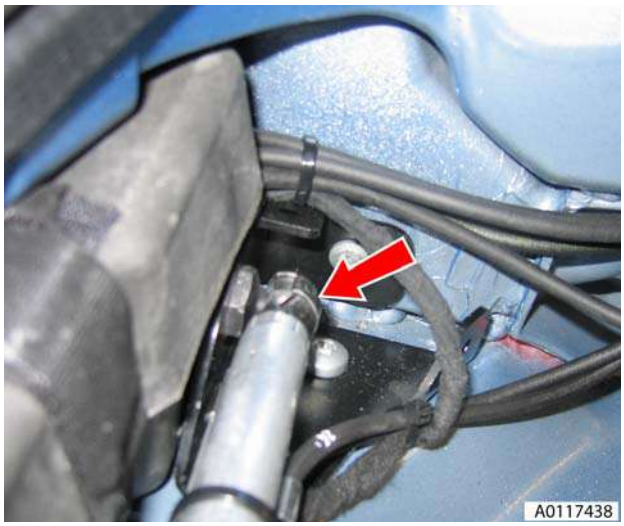

Figure 8

15. Remove cylinder pivot bracket from body (bolts x3).
16. Release pump and casing from under tonneau body side (see Figure 9).

Figure 9

17. Release velcro around pump casing and remove casing (see Figure 10).

Figure 10

18. Loosen (x6) screws on pump retaining plate (see Figure 11).

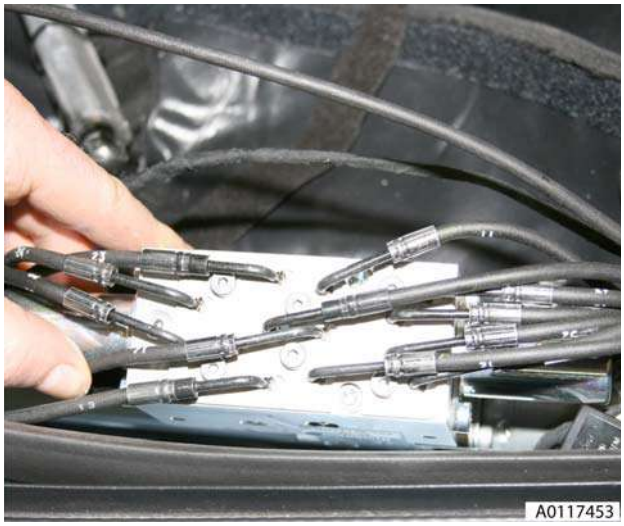

Figure 11

19. Slide retaining plate, disconnect pipe from pump (pipes and locations are numbered).

20. Remove cable ties and remove pipe from vehicle (see Figure 12).

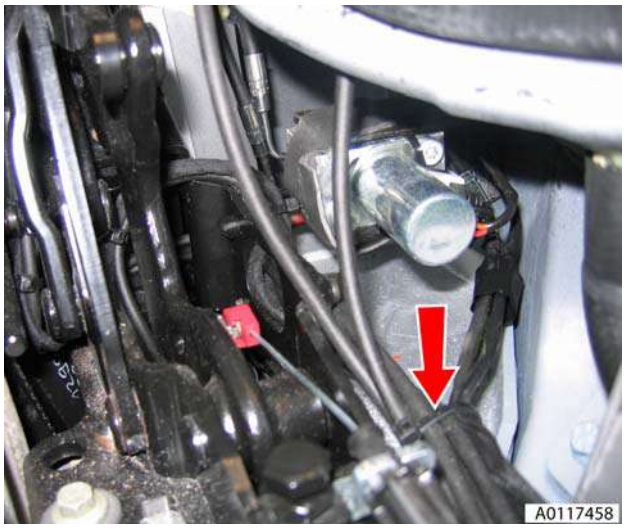

Figure 12

Installation

1. Check oil level and top-up if necessary by removing reservoir end plug with pump in upright position, add small quantity of oil replace plug and re-check level (see Figure 1).

Figure 1

2. Install pipe to approximate route on vehicle and install cable ties.
3. Clean pipe and install pipe to pump then slide retaining plate into place and tighten screws (pipes and locations are numbered).
4. Install pump casing and secure velcro.
5. Install pump and casing under tonneau onto location posts.
6. Install cylinder pivot bracket and connect cylinder to bracket.
7. Move tonneau well liner around lower cylinder fixing and pump casing and secure velcro
8. Install trim clip and position tonneau lining stiffening rod.
9. Install harness/pipe retaining clips RH (x3).
10. Attach pipes to guide string, feed pipes through roof frame and remove string.
11. Position pipes to cylinder and secure with clips.
12. Secure pipes and wires to cylinder with cable ties
13. Install pipe under keeper plate, install and tighten screws.
14. Install new clips securing pipes to roof frame.
15. Install lower cover.
16. Connect battery.
17. Restore roof and tonneau to original position

RH/LH Rear Hydraulic Tonneau Cylinder Pipe - Renew

Repair Operation Time (ROT)	
Item	**Code**
Rear Hydraulic Tonneau Cylinder Pipe- LH Renew	**01.17.CS**
Rear Hydraulic Tonneau Cylinder Pipe- RH Renew	**01.17.CV**

Removal

1. Operate roof to halfway position with tonneau open then support roof when hydraulic pressure drops with suitable straps and support tonneau cover with suitable prop (see Figure 1).

WARNING

APPROXIMATELY 20 SECONDS AFTER THE OPEN/CLOSE OPERATION HAS BEEN INTERRUPTED THE ROOF MAY SUDDENLY DROP DUE TO LOSS OF HYDRAULIC PRESSURE. IF THIS HAPPENS ENSURE NO BODY PARTS ARE CLOSE TO THE ROOF MECHANISM. IF THE ROOF REQUIRES MAINTENANCE, SUPPORT PROPERLY USING SUITABLE PROPS AND STRAPS.

Figure 1

2. Disconnect battery.
3. Remove trim clip and release tonneau lining stiffening rod (see Figure 2).

Figure 2

4. Release velcro and move tonneau well liner aside to expose lower cylinder fixing and pump casing.
5. Release cylinder lower retaining clip and disconnect cylinder from body (see Figure 3).

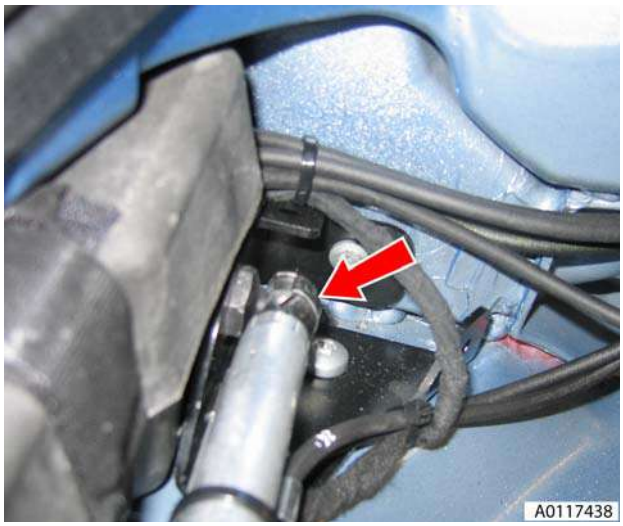

Figure 3

6. Remove cylinder pivot bracket from body (bolts x3) (see Figure 4).

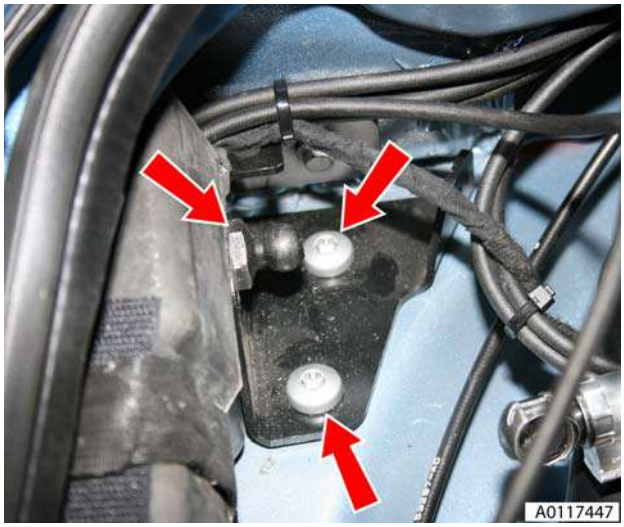

Figure 4

7. Release pump and casing from under tonneau body side (see Figure 5).

Figure 5

8. Release velcro around pump casing and remove casing (see Figure 6).

Figure 6

9. Release trim clips (x5) tonneau liner to body, release velcro from around cylinder and pull liner forward to access pipes and clips (see Figure 7).

Figure 7

10. Cut cable ties (x2) securing pipes and wires to cylinder (see Figure 8).

Figure 8

11. Release clip securing pipe to cylinder and disconnect pipe (see Figure 9).

Figure 9

12. Loosen (x6) screws on pump retaining plate (see Figure 10).

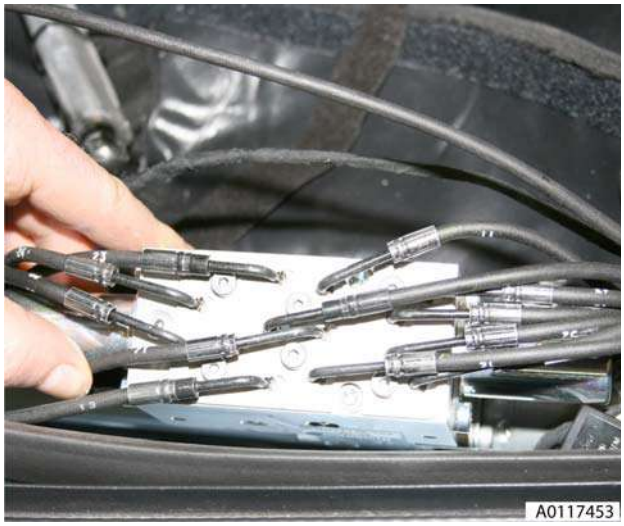

Figure 10

13. Slide retaining plate, disconnect pipe from pump (pipes and locations are numbered).

14. Remove harness/pipe retaining clips (x3) LH/RH (see Figure 11).

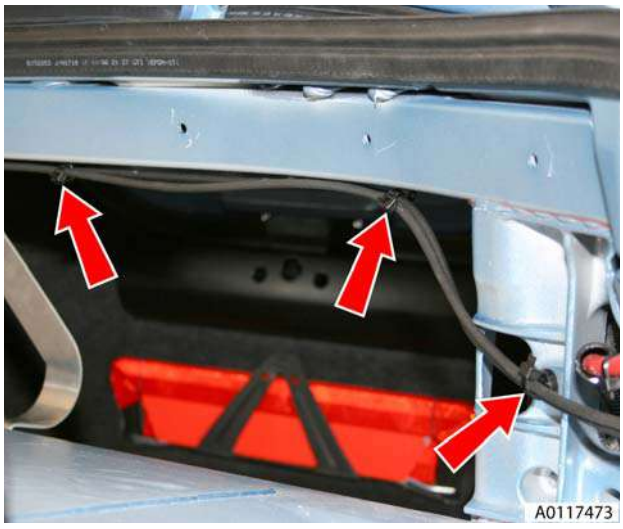

Figure 11

15. Remove harness/pipe retaining clips (x3) RH/LH (see Figure 12).

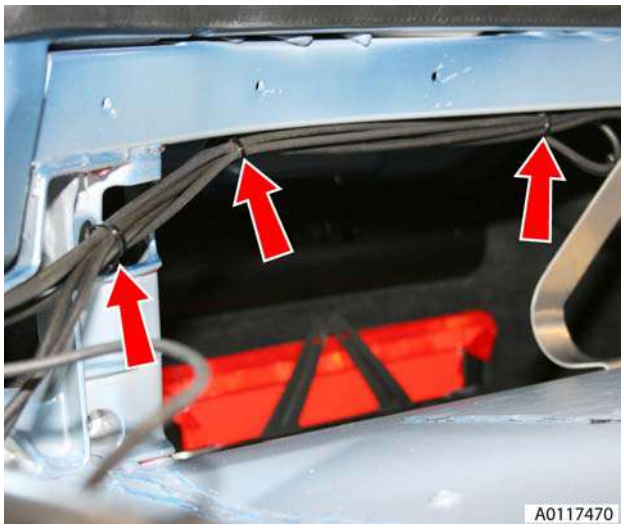

Figure 12

16. Remove pipe from vehicle.

Installation

1. Check oil level and top-up if necessary by removing reservoir end plug with pump in upright position, add

small quantity of oil replace plug and re-check level (see Figure 1).

Figure 1

2. Install pipe to approximate route on vehicle.
3. Clean pipe and install pipe to pump then slide retaining plate into place and tighten screws (pipes and locations are numbered).
4. Clean pipe, connect to cylinder and secure clip.
5. Install cable ties securing pipes and wires to cylinder.
6. Install harness/pipe retaining clips.
7. Position tonneau liner to body and install clips.
8. Install pump casing and secure velcro.
9. Install pump and casing under tonneau onto location posts.
10. Install cylinder pivot bracket and connect cylinder to bracket.
11. Move tonneau well liner around lower cylinder fixing and pump casing and secure velcro.
12. Install trim clip and position tonneau lining stiffening rod.
13. Connect battery.
14. Restore roof and tonneau to original position

LH/RH Front Hydraulic Tonneau Cylinder Pipe - Renew

Repair Operation Time (ROT)	
Item	**Code**
Front Hydraulic Tonneau Cylinder Pipe- LH **Renew**	**01.17.CT**
Front Hydraulic Tonneau Cylinder Pipe- RH **Renew**	**01.17.CU**

Removal

1. Operate roof to halfway position with tonneau open then support roof when hydraulic pressure drops with suitable straps and support tonneau cover with suitable prop (see Figure 1).

WARNING

APPROXIMATELY 20 SECONDS AFTER THE OPEN/ CLOSE OPERATION HAS BEEN INTERRUPTED THE ROOF MAY SUDDENLY DROP DUE TO LOSS OF HYDRAULIC PRESSURE. IF THIS HAPPENS ENSURE NO BODY PARTS ARE CLOSE TO THE ROOF MECHANISM. IF THE ROOF REQUIRES MAINTENANCE, SUPPORT PROPERLY USING SUITABLE PROPS AND STRAPS.

Figure 1

2. Disconnect battery.
3. Remove trim clip and release tonneau lining stiffening rod (see Figure 2).

Figure 2

4. Release velcro and move tonneau well liner aside to expose lower cylinder fixing and motor casing.

5. Release cylinder lower retaining clip and disconnect cylinder from body (see Figure 3).

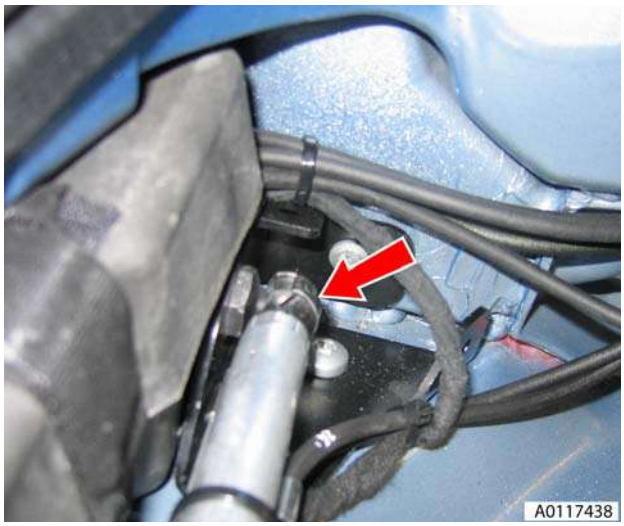

Figure 3

6. Remove cylinder pivot bracket from body (bolts x3) (see Figure 4).

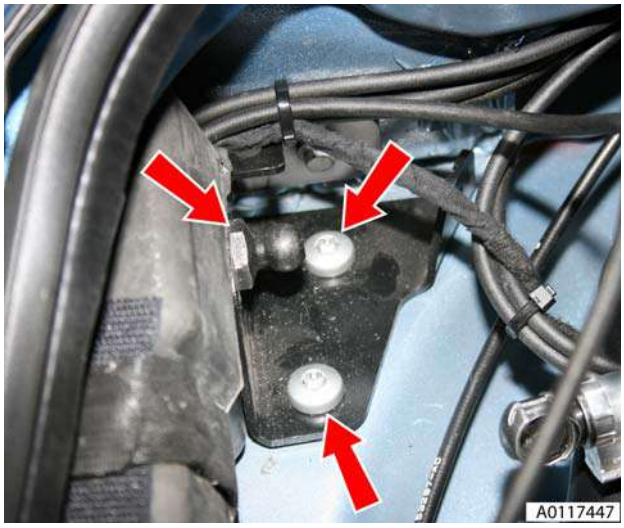

Figure 4

7. Release pump and casing from under tonneau body side (see Figure 5).

Figure 5

8. Release velcro around pump casing and remove casing (see Figure 6).

Figure 6

9. Release trim clips (x5) tonneau liner to body, release velcro from around cylinder and pull liner forward to access pipes and clips (see Figure 7).

Figure 7

10. Cut cable ties (x2) securing pipes and wires to cylinder (see Figure 8).

Figure 8

11. Release clip securing pipe to cylinder and disconnect pipe.

12. Loosen (x6) screws on pump retaining plate (see Figure 9).

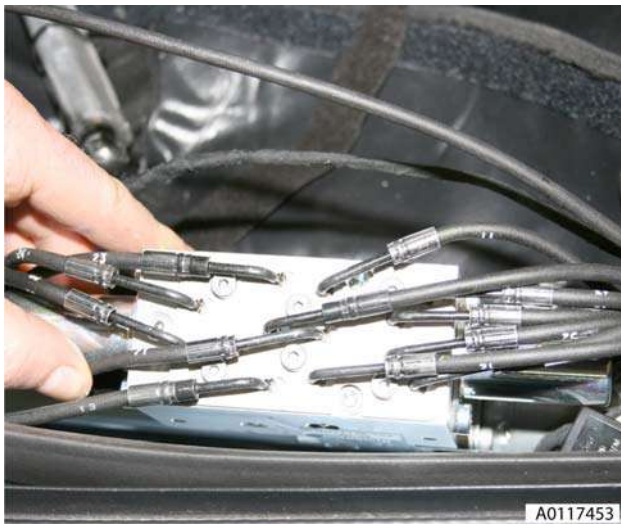

Figure 9

13. Slide retaining plate, disconnect pipe from pump (pipes and locations are numbered).
14. Remove harness/pipe retaining clips (x3) LH/RH (see Figure 10).

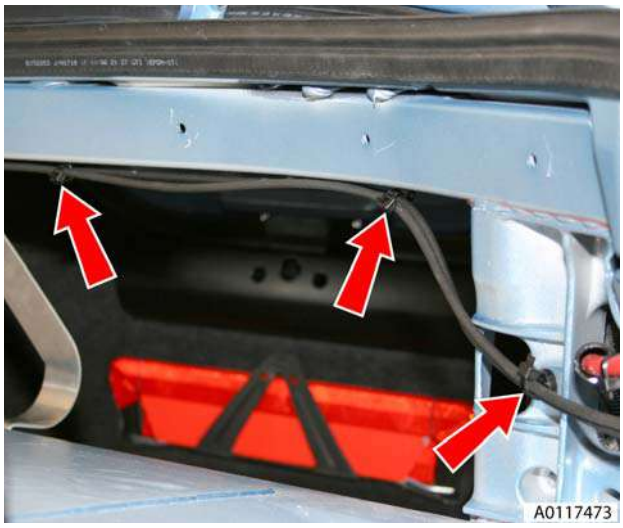

Figure 10

15. Remove harness/pipe retaining clips (x3) RH/LH (see Figure 11).

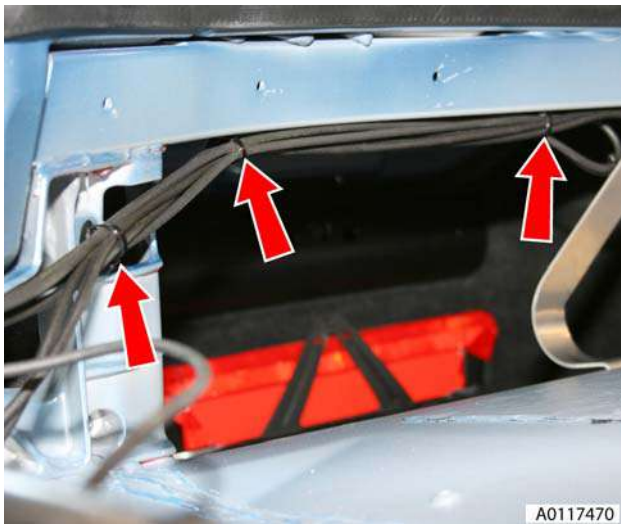

Figure 11

16. Remove pipe from vehicle.

Installation

1. Check oil level and top-up if necessary by removing reservoir end plug with pump in upright position, add small quantity of oil replace plug and re-check level (see Figure 1).

Figure 1

2. Install pipe to approximate route on vehicle.
3. Clean pipe and install pipe to pump then slide retaining plate into place and tighten screws (pipes and locations are numbered).
4. Clean pipe, connect to cylinder and secure clip.
5. Install cable ties securing pipes and wires to cylinder.
6. Install harness/pipe retaining clips.
7. Position tonneau liner to body and install clips.
8. Install pump casing and secure velcro.
9. Install pump and casing under tonneau onto location posts.
10. Install cylinder pivot bracket and connect cylinder to bracket.
11. Move tonneau well liner around lower cylinder fixing and pump casing and secure velcro.
12. Install trim clip and position tonneau lining stiffening rod.
13. Connect battery.
14. Restore roof and tonneau to original position

Hydraulic Cylinder Valve to Pump Pipe - Renew

Repair Operation Time (ROT)	
Item	**Code**
Hydraulic Cylinder Valve to Pump Pipe-Renew	**01.17.CX**

Removal

1. Operate roof to halfway position with tonneau open then support roof when hydraulic pressure drops with suitable straps and support tonneau cover with suitable prop (see Figure 1).

Figure 1

2. Disconnect battery.

3. Cut cable tie securing valve to bracket (see Figure 2).

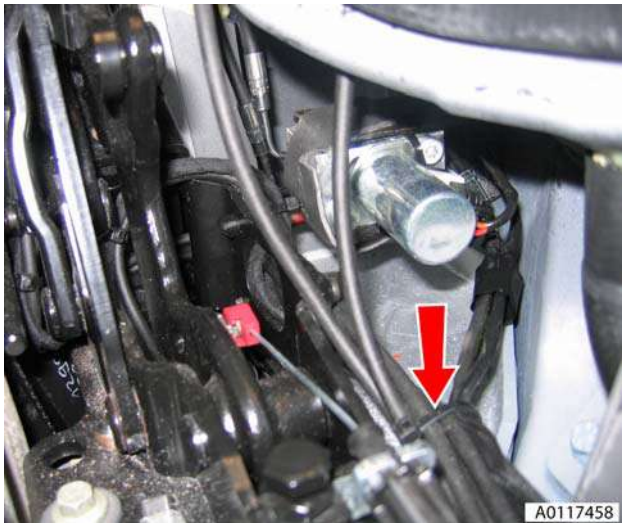

Figure 2

4. Release valve from support bracket, the bracket may need bending slightly.
5. Remove trim clip and release tonneau lining stiffening rod (see Figure 3).

Figure 3

6. Mark pipe fitted positions, loosen screw, slide retaining plate to release pipe and disconnect pipe (see Figure 4).

Figure 4

7. Release velcro and move tonneau well liner aside to expose lower cylinder fixing and motor casing.
8. Release cylinder lower retaining clip and disconnect cylinder from body (see Figure 5).

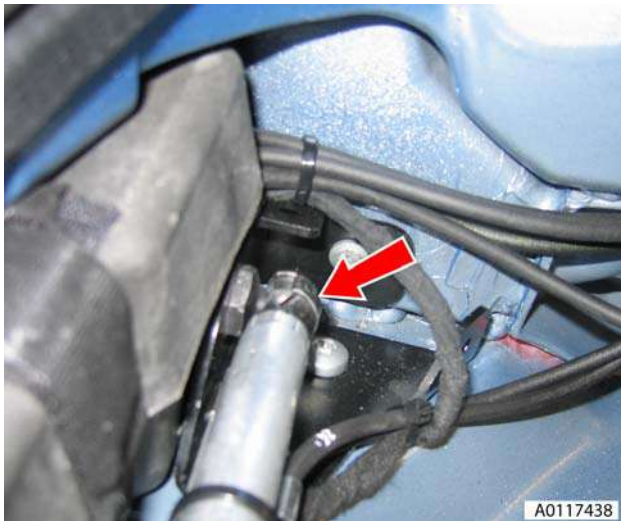

Figure 5

9. Remove cylinder pivot bracket from body (bolts x3).

10. Release motor and casing from under tonneau body side (see Figure 6).

Figure 6

11. Release velcro around motor casing and remove casing (see Figure 7).

Figure 7

12. Release trim clips (x4) tonneau liner to body, release velcro from around cylinder and pull liner forward to access pipes and clips (see Figure 8).

Figure 8

13. Remove pipe retaining clips (x3) RH (see Figure 9).

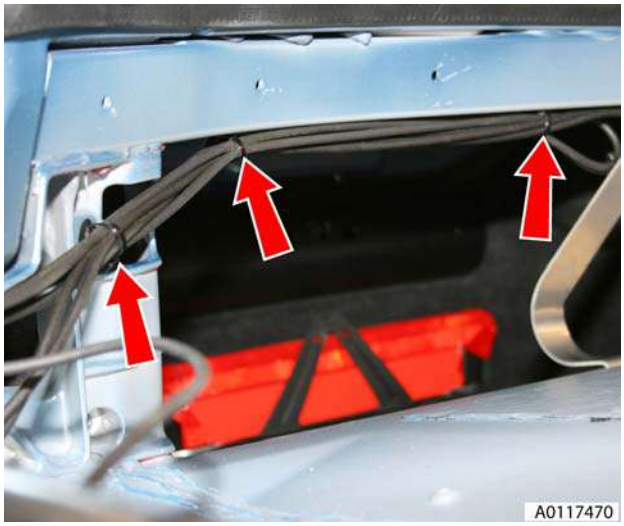

Figure 9

14. Loosen (x6) screws on pump retaining plate (see Figure 10).

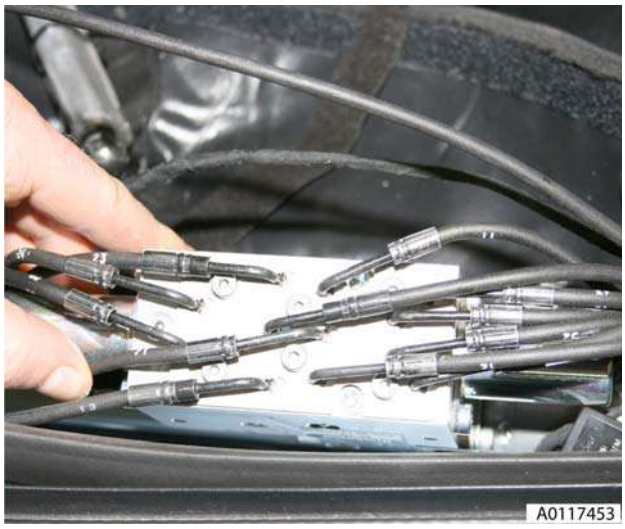

Figure 10

15. Slide retaining plate, disconnect pipe from pump (pipes and locations are numbered).
16. Remove cable ties and remove pipe from vehicle (see Figure 11).

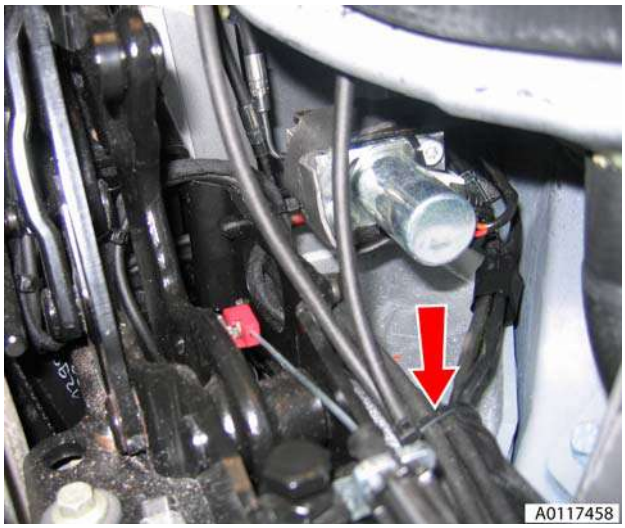

Figure 11

Installation

1. Check oil level and top-up if necessary by removing reservoir end plug with pump in upright position, add small quantity of oil replace plug and re-check level (see Figure 1).

Figure 1

2. Install pipe to approximate route on vehicle and install cable ties.
3. Clean pipe and install pipe to pump then slide retaining plate into place and tighten screws. (pipes and locations are numbered).
4. Install motor casing and secure velcro.
5. Install motor and casing under tonneau onto location posts.
6. Install cylinder pivot bracket and connect cylinder to bracket.
7. Move tonneau well liner around lower cylinder fixing and motor casing and secure velcro
8. Position tonneau liner to body and install clips.
9. Install trim clip and position tonneau lining stiffening rod.
10. Clean pipe, connect pipe to valve, slide retaining plate and tighten screw.
11. Install valve to support bracket, reposition bracket.
12. Install cable tie securing valve to bracket. Ensure no pipes or wiring will foul roof mechanism.
13. Connect battery.
14. Restore roof and tonneau to original position

Wind Deflector - Renew

Repair Operation Time (ROT)	
Item	**Code**
Wind Deflector-Renew	**01.17.DA**

Removal

1. Operate roof to halfway position with tonneau open then support roof when hydraulic pressure drops with

suitable straps and support tonneau cover with suitable prop (see Figure 1).

WARNING
APPROXIMATELY 20 SECONDS AFTER THE OPEN/ CLOSE OPERATION HAS BEEN INTERRUPTED THE ROOF MAY SUDDENLY DROP DUE TO LOSS OF HYDRAULIC PRESSURE. IF THIS HAPPENS ENSURE NO BODY PARTS ARE CLOSE TO THE ROOF MECHANISM. IF THE ROOF REQUIRES MAINTENANCE, SUPPORT PROPERLY USING SUITABLE PROPS AND STRAPS.

Figure 1

2. Remove nuts securing wind deflector to tonneau deck. (LH & RH) (see Figure 2).

Figure 2

3. Remove buffers (x2) and securing screws (x4) (see Figure 3).

Figure 3

4. Remove nuts (x2) securing wind deflector to both quarter panels and remove wind deflector (see Figure 4).

Figure 4

Installation

1. Install wind deflector, secure nuts wind deflector to both quarter panels.
2. Install buffers (x2) and securing screws (x4).
3. Install nuts securing wind deflector to tonneau deck (LH & RH).
4. Restore roof and tonneau to original position.

Tonneau Well Liner - Renew

Repair Operation Time (ROT)	
Item	**Code**
Tonneau Well Liner-Renew	**01.17.DB**

Removal

1. Access luggage compartment and remove front liner (screws x4, trim clip x1) (see Figure 1).

Figure 1

2. Release velcro straps x2 and drain tubes x3.
3. Close luggage compartment.
4. Remove Wind deflector (see Workshop Manual procedure 01.17.DA Wind Deflector - Renew).
5. Release stiffener, liner trim clip and velcro from around hood motor (see Figure 2).

Figure 2

6. Release velcro from around tonneau cylinder and remove trim clips (x3) (see Figure 3).

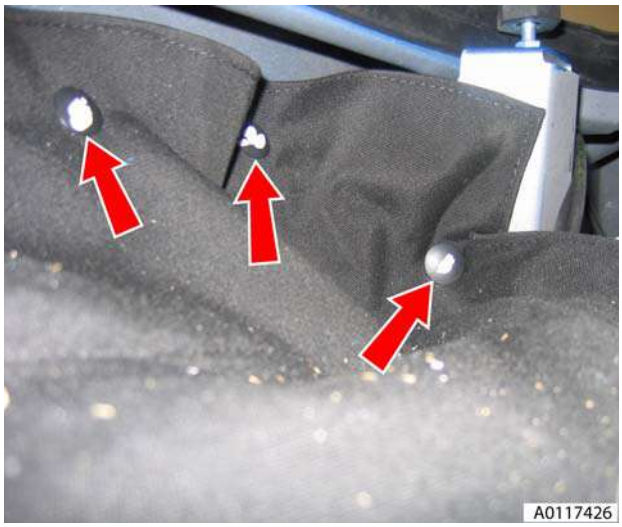

Figure 3

7. Release trim clips (x7) from luggage compartment panel (see Figure 4).

Figure 4

8. Release velcro from behind ROPS units and remove liner.
9. Remove stiffening rod from liner.

Installation

1. Install stiffening rod to liner.
2. Install liner and secure velcro.
3. Install trim clips (x7) to luggage compartment panel.
4. Secure velcro around tonneau cylinder and install trim clips (x3).
5. Install stiffener, liner trim clip and velcro to around hood motor.
6. Install Wind deflector (see Workshop Manual procedure 01.17.DA Wind Deflector - Renew).

7. Open luggage compartment. secure velcro straps x2 and drain tubes x3.
8. Install front liner.
9. Close luggage compartment.

RH/LH Flex Shaft - Renew

Repair Operation Time (ROT)		
Item		**Code**
Flex Shaft-Renew	RH	**01.17.EG**
Flex Shaft-Renew	LH	**01.17.EF**

Removal

10. Remove header panel assembly (see Workshop Manual procedure 01.05.BB Panel Assembly - Header - Renew).
11. Release insulation from header latch motor (see Figure 1).

Figure 1

12. Release flex shaft from centre securing clip (see Figure 2).

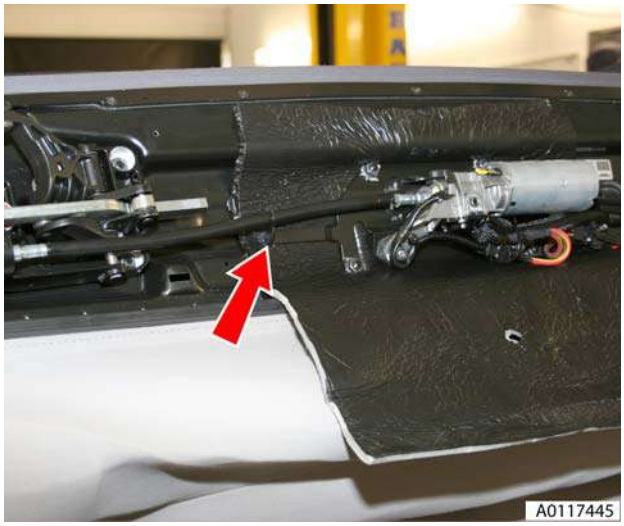

Figure 2

13. Release flex shaft from motor splines.
14. Release flex shaft from latch splines and remove.

Installation

1. Ensure header motor and latch are in fully open position prior to installation.
2. Align flex shaft on latch splines and install.
3. Align flex shaft to motor splines and install.
4. Secure flex shaft to centre securing clip.
5. Secure insulation to header latch motor.
6. Install header panel assembly (see Workshop Manual procedure 01.05.BB Panel Assembly - Header - Renew).

Body System (01.00)

Bumpers (01.19)

Front Bumper

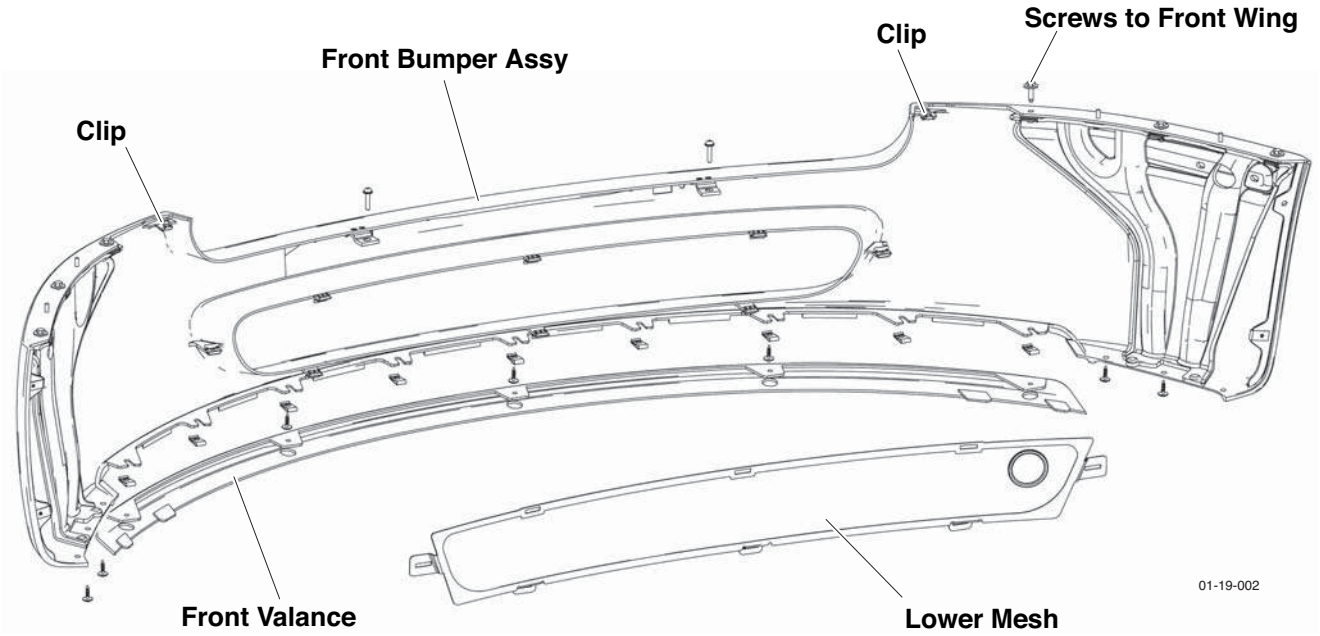

Rear Bumper

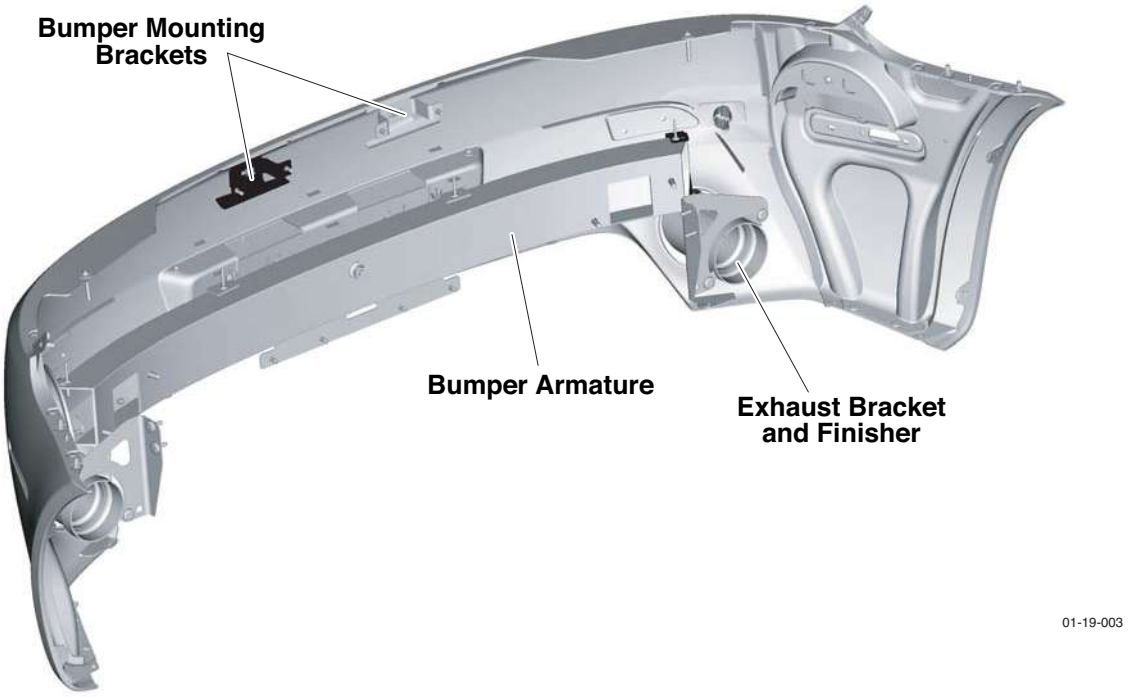

Specifications

Torque Figures	
Description	Nm
Front Bumper to bumper bracket	4-5
Rear Bumper to Bumper Bracket	2-3

Maintenance

Front Bumper Cover - Renew

Repair Operation Time (ROT)	
Item	**Code**
Front Bumper Cover-Renew	**01.19.AA**

Removal

1. Raise vehicle on ramp.
2. Remove front number plate and plinth (see Workshop Manual procedure 01.19.BD Licence Plate - Plinth Assembly - Front - Renew).
3. Remove valance (see Workshop Manual procedure 01.19.AF Panel - Front Valance - Renew).
4. Remove screws (x2) securing front of undertray to bumper (see Figure 1).

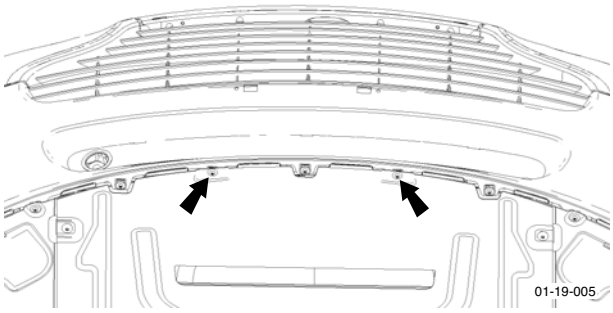

Figure 1

5. Remove screws (x5) LH front wheel arch liner to bumper.
6. Remove screws (x5) RH front wheel arch liner to bumper.
7. Remove bolts (x3 securing LH air box to mounting brackets.
8. Remove bolts (x3 securing RH air box to mounting brackets.
9. Remove bolts (x6) securing bumper to front wing (see Figure 2).

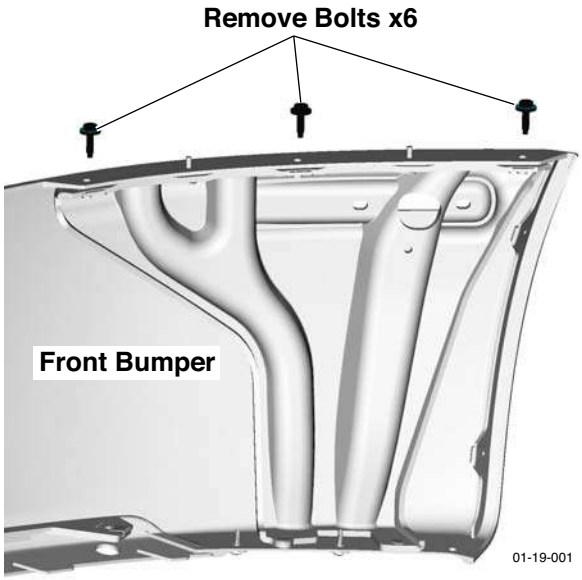

Figure 2

10. With assistance, release bumper from clips (x2) and remove bumper (see Figure 3).

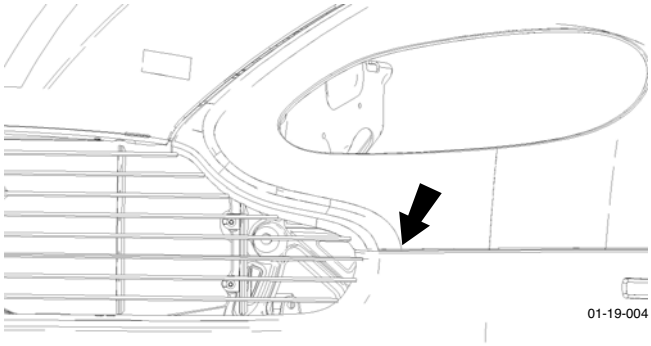

Figure 3

11. Remove mesh (clips x8).

Installation

1. Install mesh (clips x8).
2. With assistance position bumper and secure in clips (x2).
3. Install bolts (x6) bumper to front wing.
4. Install bolts (x3 securing RH air box to mounting brackets.
5. Install bolts (x3 securing LH air box to mounting brackets.
6. Install screws (x5) LH front wheel arch liner to bumper.
7. Install screws (x5) RH front wheel arch liner to bumper.
8. Install screws (x2) securing front undertray to bumper.

9. Install number plate and plinth (see Workshop Manual procedure 01.19.BD Licence Plate - Plinth Assembly - Front - Renew).
10. Install valance (see Workshop Manual procedure 01.19.AF Panel - Front Valance - Renew).
11. Lower vehicle on ramp.

Rear Bumper Cover - Renew

Repair Operation Time (ROT)	
Item	**Code**
Rear Bumper Cover-Renew	**01.19.BA**

Removal

1. Raise vehicle on ramp.
2. Remove number plate.
3. Remove LH rear lamp assembly (see Workshop Manual procedure 17.03.AB Lamp Assembly (Rear) - LH Renew).
4. Remove RH rear lamp assembly (see Workshop Manual procedure 17.03.BB XREF: 280 Lamp Assembly (Rear) - RH Renew).
5. Remove wheel arch liner LH (see Workshop Manual procedure 01.02.JB Wheel Arch Liner - Rear - RH - Renew).
6. Remove wheel arch liner RH (see Workshop Manual procedure 01.02.HB Wheel Arch Liner - Rear - LH - Renew).
7. Remove tyre mobility kit from the rack.
8. Remove torx bolts located behind carpets to rear wings (x2).
9. Remove bolts (x2) in rear light recess.
10. Remove bolts securing bumper to wheel arch (6).
11. Remove bolts (x4) securing bumper to brackets.
12. With assistance Release bumper from body.
13. Release fir trees securing harness to bumper (x6).
14. Release remaining harness clips from bumper (x6).
15. Disconnect multiplugs to parking aid sensors (x2).
16. Disconnect multiplugs to license plate lamps (x2).
17. Remove nuts (x6) securing exhaust finishers to bumper.
18. Remove number plate light assembly (clips x5).
19. Remove parking aid sensors (x2)
20. Remove screw retaining clips (x13)

Installation

1. Install screw retaining clips x13.
2. Install parking aid sensors x2.
3. Install number plate light assembly
4. Install exhaust finishers to bumper.
5. With assistance position bumper to body.
6. Connect multiplugs to license plate lamps X2.
7. Connect multiplug to parking aid sensors.
8. Secure harness to bumper (fir trees x6 and clips x6)
9. Install bumper bolts to brackets and body (x10).
10. Install tyre mobility kit to rack.
11. Install number plate.
12. Install RH rear lamp assembly (see Workshop Manual procedure 17.03.BB Lamp Assembly (Rear) - RH Renew).
13. Install LH rear lamp assembly (see Workshop Manual procedure 17.03.AB Lamp Assembly (Rear) - LH Renew).
14. Install wheel arch liner LH (see Workshop Manual procedure 01.02.JB Wheel Arch Liner - Rear - RH - Renew).
15. Install RH wheel arch liner (see Workshop Manual procedure 01.02.HB Wheel Arch Liner - Rear - RH - Renew).
16. Lower vehicle on ramp.

ASTON MARTIN
ASTON MARTIN

Body System (01.00)

Restraining Devices (01.20)

Seat Belts

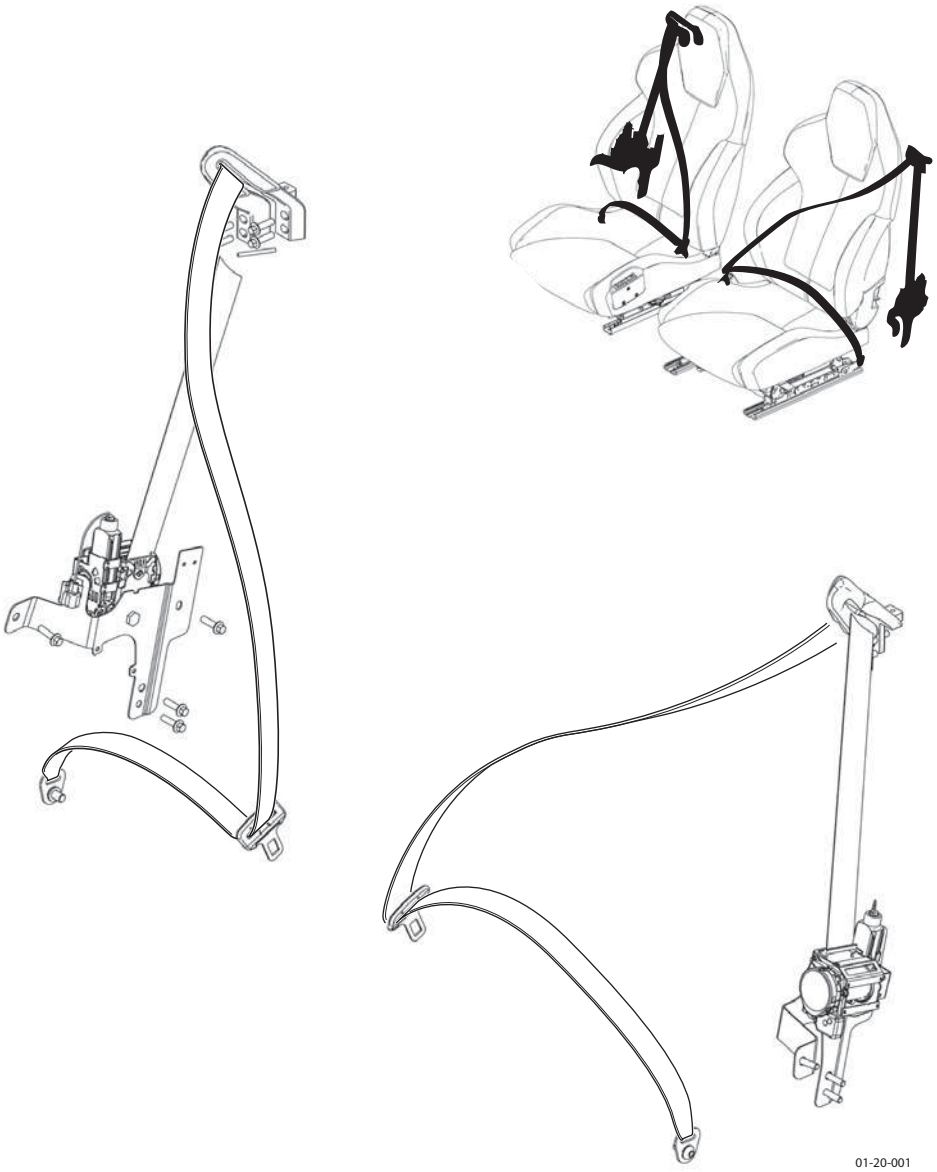

This vehicle is installed with two inertia reel safety belts. The inertia belt reels automatically tension the belts to provide security with comfort. In the event of a collision or during severe braking, the belt reels will lock.

The driver and front passenger safety belt buckles are installed with a switch, which is connected to a warning indicator housed within the DIM. When the ignition is first turned on the warning indicator will illuminate only if the seat belt is not fastened. If the safety belt is fastened before the ignition is turned on the circuit is broken and the indicator will remain off.

Pre-tensioner and Load Limiting Systems

The driver and front passenger seat belts are equipped with pre-tensioner and load limiting systems.

In most moderate frontal or near frontal accidents, the front airbag and pre-tensioner systems will deploy simultaneously.

In some moderate frontal or near frontal accidents, only the pre-tensioner system will deploy.

The pre-tensioners take up slack in the front seat belts as the airbags are expanding. The load limiting system releases belt webbing in a controlled manner to reduce belt force on the occupant's chest.

The RCM receives information on the status of the safety belt buckles from a switch contained in the buckle. Only fastened safety belts will activate.

The safety belt retractors, which are mounted within the base of the B pillars, incorporate a torsion bar load limiting device. This device consists of a retractor reel which is

mounted onto a spindle (torsion bar) which once the sensor has locked the retractor reel and a predetermined load is applied, twists and allows additional webbing into the system. The deceleration force required to initiate this sequence is approximately the same as that required to initiate airbag deployment. The torsion bar load limiting device will only react if the safety belt is in use at the time of the impact.

Caution

It should be considered that during any event that utilizes the full capability of the safety belts, the webbing may have been elongated and the torsion bar may have twisted. For this reason, if a vehicle is involved in an accident which results in the deployment of the airbag(s), all the safety belts that were in use at the time of the accident MUST be renewed.

Emergency Locking Retractor (ELR)

The retractors in all seat positions feature ELR. During any period of sudden deceleration, or under lateral load when cornering at speed, a sensor weight within the safety belt retractor moves a locking pawl against the teeth on the retractor reel, which then locks the retractor preventing any further release of webbing. As soon as the load applied onto the retractor through the safety belt webbing is removed the locking pawl releases the retractor reel and normal movement is returned to the retractor.

Automatic Locking Retractor (ALR)

Automatic locking retractors (ALR) are installed to all passenger seat positions.

The safety belt webbing on these are clearly marked to show their operating feature. To initiate the ALR system, fasten the safety belt into it's buckle and pull all of the webbing from the retractor, as the safety belt is released the retractor locks allowing travel in only one plane thus producing a fixed length restraint and preventing the safety belt from introducing slack, making any child seat it may be restraining secure. The ALR system of the retractor is disengaged by releasing the safety belt and allowing the safety belt to fully retract onto the reel.

Airbag System

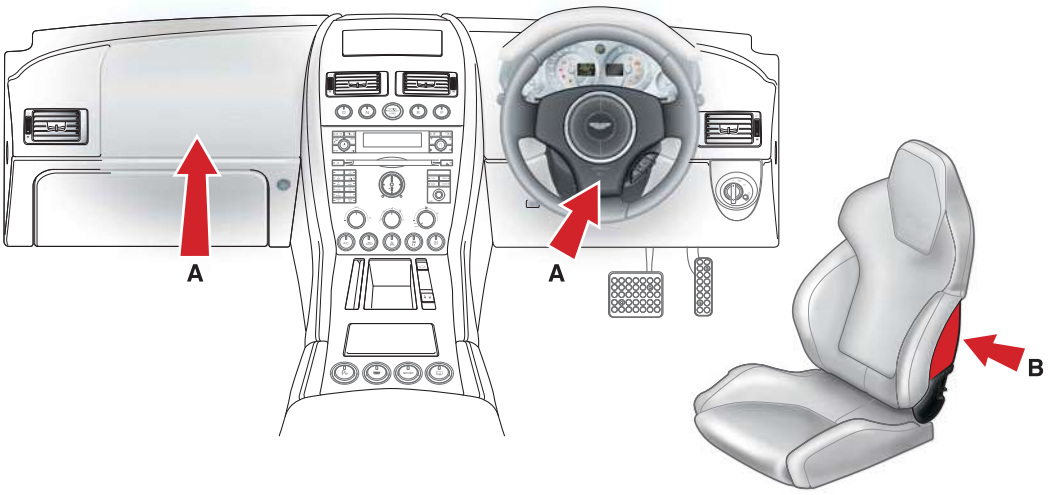

The airbag system is designed to provide increased collision protection for front seat occupants in addition to that provided by the safety belt system. Safety belt use is necessary to obtain the best occupant protection and to receive the full advantages of the airbag system.

This vehicle is equipped with driver, passenger, side impact airbags and seat belt pretensioners, which are electrically controlled an RCM (Restraints Control Module).

The driver and passenger airbags (A) only deploy in a serious front collision. The side airbags (B (one airbag in each front seat)) only deploy according to which side has been impacted in a serious side collision.

The purpose of the driver, passenger and side airbags is to provide **additional** protection for the front seat occupants in the event of a serious impact (front or side impacts). The airbags are supplementary to the seat belts.

Airbag Deployment

WARNING
AIRBAGS INFLATE RAPIDLY AND WITH CONSIDERABLE FORCE, THERE IS THEREFORE A RISK OF DEATH OR SERIOUS INJURY SUCH AS FRACTURES, FACIAL AND EYE INJURIES OR INTERNAL INJURIES, PARTICULARLY TO OCCUPANTS WHO ARE NOT PROPERLY RESTRAINED BY SEAT BELTS OR ARE NOT SITTING CORRECTLY WHEN THE AIRBAGS DEPLOY. THE RISK OF INJURY FROM A DEPLOYING AIRBAG IS GREATEST CLOSE TO THE TRIM COVERING THE AIRBAG.

WARNING
THE WHOLE SEQUENCE OF AIRBAG DEPLOYMENT, FROM SENSING THE IMPACT TO FULL INFLATION OF THE AIRBAG TAKES PLACE IN A FRACTION OF A SECOND.

The noise and gas associated with the deployment of the airbags are not injurious to health.

Driver airbag Module

The driver airbag module is installed in the steering wheel, the cover forming the outer surface of the steering wheel boss. The cover has a split line moulded into its surface allowing the airbag to exit through the cover when the system deploys.

No routine maintenance is required and there are no serviceable parts. The driver airbag module is replaced as an assembly.

Passenger Airbag Module

The passenger airbag module is located above the glove compartment behind a deployment panel.

The passenger airbag deployment panel hinges up out of the way during airbag deployment.

The passenger airbag module is replaced as an assembly. There is no routine maintenance required and there are no serviceable parts.

Side Airbag Module

A side impact airbag module is mounted in the outboard bolster of each front seat and uses compressed argon to inflate. It provides protection for the thorax (the part of the torso between the neck and the abdomen). In a side airbag module deployment situation, the airbag module deploys from behind a hard trim panel.

Clockspring

The airbag clockspring continuously transfers electrical signals from the driver airbag module to the airbag sensor.

The airbag clockspring is mounted on the steering column, behind the steering wheel and does not contain any serviceable components. Ensure that the steering wheel is locked in the central position before commencing any work on the steering column, wheel or airbag.

Control Module

The primary purpose of the RCM is to discriminate between an event that warrants an airbag system deployment and an

event that does not. The RCM governs the operation of the whole system and performs continual system diagnostics. Information on the severity of an impact is received from the impact sensors.

Variations in the deployment of the front airbag modules are dependent on the status of the front safety belt buckles.

Dual Inflation Technology

When activated, the airbags will deploy at either a normal or reduced level of inflation, depending on crash severity. Various sensors determine the direction and severity of an impact. The system analyses this information then deploys the appropriate airbags.

Impact Sensors

Side Impact - Side impact sensors are mounted to the base of each B-pillar and within each door. In the event of a side impact, the RCM processes the impact data sent by the side impact sensor against stored data. The RCM will deploy the side airbag on the side the deployment request was initiated and the seat belt pretensioner.

Front Impact - Front impact sensors (x2) are located under the grill opening panel.

The SRS module processes the impact data sent by the front impact sensor against stored data, and deploys the front airbags, and the seat belt pretensioners.

Passenger Airbag Deactivation

The passenger airbag can be deactivated using the PAD (Passenger Airbag Deactivation) switch. Switching the passenger airbag off allows children under the age of 12 to be carried safely in the passenger seat. The PAD switch is located at the passenger end of the instrument panel and is accessible when the passenger door is open.

Note
Please see the Owner's Guide for the full deactivation procedure.

Warning
Unnecessary deactivation of the passenger airbag is dangerous. The passenger will not receive the added protection from the airbag and serious injuries or even death could occur. With the exception of installing a child seat on the passenger seat, do not turn the passenger airbag deactivation switch to the off position.

Warning
Never place a child in a child seat or on a booster cushion in the passenger seat if the airbag is active.

Maintenance

Driver's Airbag Module - Renew

Repair Operation Time (ROT)	
Item	**Code**
Driver's Airbag Module-Renew	**01.20.AC**

Removal

1. Disconnect vehicle battery.
2. Allow a two minute power down period to de-activate airbag system.
3. Rotate steering wheel to access and remove bolts (x2) from driver's airbag module to steering wheel (see Figure 1).

Figure 1

4. Release driver's airbag module, disconnect multiplugs (x2) and remove airbag module (see Figure 2).

Figure 2

Installation

1. Position driver's airbag module and connect multiplugs (x2).
2. Install bolts (x2) and tighten.
3. Connect vehicle battery.

LH Front Seat Belt - Renew

Repair Operation Time (ROT)		
Item		**Code**
Front Seat Belt-Renew	LH	**01.20.BA**

Removal

1. Remove front seat (see Workshop Manual procedure 01.10.AB Seat Assembly - Front - LH - Remove for Access and Refit).

2. Remove sub woofer enclosure (see Workshop Manual procedure 15.03.GA Subwoofer Enclosure - Premium - Renew).
3. Remove speaker grille.
4. Remove bolts (x2) and screw (x1) securing upper quarter trim moulding to body and rear bulkhead panel.
5. Feed seatbelt through trim moulding aperture and remove moulding.
6. Remove foam cover, disconnect speaker multiplug, remove upper trim quarter moulding.
7. Remove bolts (x4) securing seat belt upper anchor mounting plate (see Figure 1).

Figure 1

8. Release seat belt from anchor mounting plate, remove mounting plate.
9. Disconnect pre-tensioner multiplug, release multiplug from mounting bracket.

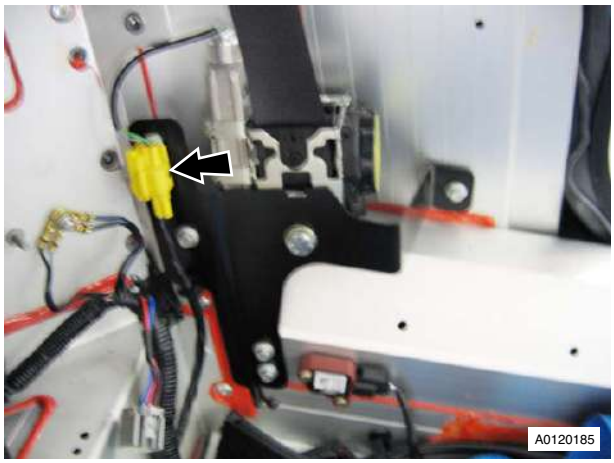

Figure 2

10. Remove bolts (x4) securing seat belt mounting bracket to body.
11. Remove seat belt assembly.
12. Remove bolt securing seat belt stalk to seat frame, remove stalk.

Installation

1. Position seat belt stalk to seat frame, install and torque tighten bolt.
2. Install seat belt assembly, install and torque tighten bolts (x4).
3. Install seat belt in upper anchor mounting plate.
4. Position seat belt upper anchor mounting plate, install and torque tighten bolts (x4).
5. Connect pre-tensioner multiplug, secure multiplug in mounting bracket.
6. Position quarter moulding, connect speaker multiplug, secure foam cover.
7. Feed seat belt harness through quarter trim moulding.
8. Install quarter trim moulding, install and tighten bolts (x3).
9. Install sub woofer enclosure (see Workshop Manual procedure 15.03.GA Subwoofer Enclosure - Premium - Renew).
10. Install front seat (see Workshop Manual procedure 01.10.AB Seat Assembly - Front - LH - Remove for Access and Refit).

RH Front Seat Belt - Renew

Repair Operation Time (ROT)		
Item		**Code**
Front Seat Belt-Renew	RH	**01.20.BB**

Removal

1. Remove front seat (see Workshop Manual procedure 01.10.AA Seat Assembly - Front - RH - Remove for Access and Refit).
2. Remove moulding assembly - quartet trim upper - RH (see Workshop Manual procedure 01.05.CL Moulding Assembly - Quarter Trim Upper - RH - Renew).
3. Remove bolts (x5) securing seat belt upper anchor mounting plate (see Figure 1).

Figure 1

4. Release seat belt from anchor mounting plate, remove mounting plate.

5. Disconnect pre-tensioner multiplug, release multiplug from mounting bracket (see Figure 2).

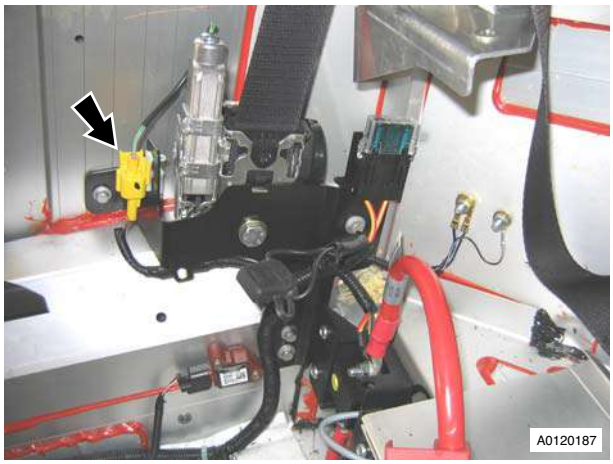

Figure 2

6. Release harness fir tree clips (x2) from seat belt mounting bracket.
7. Release main fuse clips from seat belt mounting bracket.
8. Remove bolts (x4) securing seat belt mounting bracket to body.
9. Remove seat belt assembly.
10. Remove bolt securing seat belt stalk to seat frame, remove stalk.

Installation

1. Position seat belt stalk to seat frame, install and torque tighten bolt.
2. Install seat belt assembly, install and torque tighten bolts (x4).
3. Install seat belt in upper anchor mounting plate.
4. Position seat belt upper anchor mounting plate, install and torque tighten bolts (x5).
5. Install main fuse to mounting bracket.
6. Secure harness fir tree clips (x2) in mounting bracket.
7. Connect pre-tensioner multiplug, secure multiplug in mounting bracket.
8. Install moulding assembly - quartet trim upper - LH (see Workshop Manual procedure 01.05.CL Moulding Assembly - Quarter Trim Upper - RH - Renew).
9. Install front seat (see Workshop Manual procedure 01.10.AA Seat Assembly - Front - RH - Remove for Access and Refit).

Passenger Airbag - Renew

Repair Operation Time (ROT)	
Item	**Code**
Passenger Airbag-Renew	**01.20.CA**

Removal

1. Disconnect vehicle battery for minimum of 2 minutes.
2. Remove airbag panel and door assembly (see Workshop Manual procedure 01.12.AJ Panel and Door Assembly - Air Bag - Renew).
3. Remove bolts (x4) securing airbag unit.
4. Disconnect multiplugs (x2), remove airbag unit.

Installation

1. Install airbag unit, install and tighten bolts (x4), connect multiplugs (x2).
2. Install airbag panel and door assembly (see Workshop Manual procedure 01.12.AJ Panel and Door Assembly - Air Bag - Renew).
3. Connect vehicle battery.

ARS Side Impact Sensor Assembly - B Pillar-Renew

Repair Operation Time (ROT)	
Item	**Code**
ARS Side Impact Sensor Assembly-B-pillar-Renew	**01.20.DB**

Removal

1. Remove plate - front sill - RH (see Workshop Manual procedure 01.05.AJ Plate - Front Sill - RH - Renew).
2. Pull back sill carpet sufficient to access side impact sensor.
3. Disconnect multiplug from side impact sensor (see Figure 1).
4. Remove screws (x2) securing side impact sensor to inner sill, remove sensor.

Installation

1. Install side impact sensor, install and tighten screws (x2).
2. Connect multiplug to side impact sensor.
3. Re-position sill carpet.
4. Install plate - front sill - RH (see Workshop Manual procedure 01.05.AJ Plate - Front Sill - RH - Renew).

Side Impact Door ARS Sensor Assembly - Renew

Repair Operation Time (ROT)	
Item	**Code**
Side Impact Door ARS Sensor Assembly-Renew	**01.20.DD**

Removal

1. Remove door trimboard assembly (see Workshop Manual procedure 01.05.CB Trimboard Assembly - Door - Remove for Access and Refit).
2. Remove door module securing bolts (x4), swing downwards.
3. Remove door impact sensor plate securing bolts (x3) and disconnect sensor multiplug (x1).
4. Remove sensor securing nuts (x2) from plate.

Installation

1. Install sensor on plate and secure nuts (x2).
2. Connect sensor multiplug (x1) and fit plate securing bolts (x3).
3. Install door module with securing bolts (x4).
4. Install door trimboard assembly (see Workshop Manual procedure 01.05.CB Trimboard Assembly - Door - Remove for Access and Refit).

Front Impact Sensor Assembly - Renew

Repair Operation Time (ROT)	
Item	**Code**
Front Impact Sensor Assembly-Renew	**01.20.DE**

Removal

1. Remove grille (see Workshop Manual procedure 01.08.AA Grille - Radiator - Renew).
2. Remove slam panel (bolts x12).
3. Remove bolts (x4) securing PAS oil cooler.
4. Remove bolts securing crossmember to inner wing (x4).
5. Remove bolts and spacers securing crossmember to wing (x2).
6. Move crossmember to one side and lift up clear of location (protect paintwork).
7. Disconnect multiplug from front impact assessor (see Figure 1).

Figure 1

8. Remove screws (x2) securing front impact sensor to cross member, remove sensor.

Installation

1. Install front impact sensor to cross member. install and tighten screws.
2. Connect multiplug to impact sensor.
3. Install crossmember (as removed).
4. Install bolts and spacers securing crossmember to wing (x2).
5. Install bolts securing crossmember to inner wing (x4).
6. Install bolts (x4) securing PAS oil cooler.
7. Install slam panel (bolts x12).
8. Install grille (see Workshop Manual procedure 01.08.AA Grille - Radiator - Renew).

Occupant Restraint Control Module Assembly - Renew

Repair Operation Time (ROT)	
Item	**Code**
Occupant Restraint Control Module Assembly-Renew	**01.20.DF**

Removal

1. Remove rear centre console (see Workshop Manual procedure 01.12.CA Panel Assembly - Console - Rear - Renew).
2. Release harness clip and disconnect front multiplug (x1) (see Figure 1).

Figure 1

3. Remove nuts (x2) and bolts (x2) module to centre tunnel (see Figure 2).

Figure 2

4. Disconnect rear multiplug (x2) and remove module occupant restraint (see Figure 3).

Figure 3

Installation

1. Connect rear multiplug (x1) occupant restraint module.
2. Install module.
3. Connect front multiplug (x1) and secure harness.
4. Install rear centre console (see Workshop Manual procedure 01.12.CA Panel Assembly - Console - Rear - Renew).

RH/LH Roll Over Protection System - Renew

Repair Operation Time (ROT)		
Item		**Code**
Roll Over Protection System-Renew	RH	**01.20.EA**
Roll Over Protection System-Renew	LH	**01.20.EB**

Removal

1. Remove right-hand/left-hand rear body side trim (see Workshop Manual procedure 01.05.DX/01.05.DY Panel Assembly - Bodyside Trim - Rear - RH/LH - Renew).
2. Remove right-hand/left-hand rear console panel assembly (see Workshop Manual procedure 01.12.DF/01.12.DE Console Panel Assembly - Rear Roadster - RH/LH - Renew).

3. Release ROPS multiplug from body and disconnect (see Figure 1).

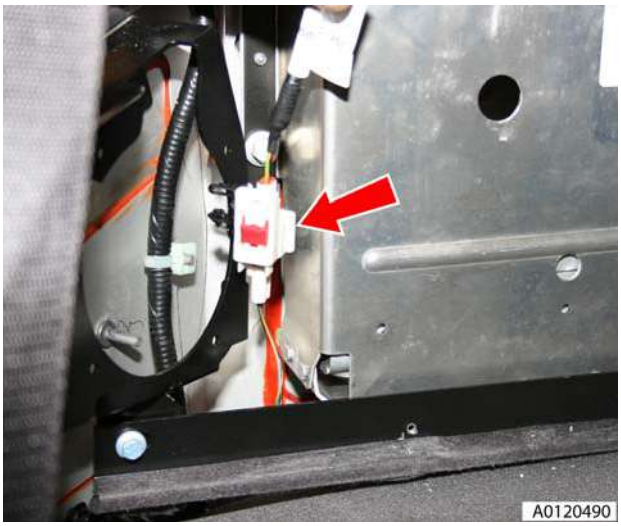

Figure 1

4. Remove 4 bolts securing upper Roll Over Protection System (ROPS) trim and remove.
5. Remove 6 bolts securing ROPS unit to body and remove (see Figure 2).

Figure 2

Installation

1. Install ROPS unit and secure with bolts.
2. Install upper ROPS trim and secure with bolts.
3. Connect ROPS multiplug and secure to body.
4. Install right-hand/left-hand rear console panel assembly (see Workshop Manual procedure 01.12.DF/01.12.DE Console Panel Assembly - Rear Roadster - RH - Renew).
5. Install right-hand/left-hand rear body side trim (see Workshop Manual procedure 01.05.DX/01.05.DY Panel Assembly - Bodyside Trim - Rear - RH/LH - Renew).

ASTON MARTIN
ASTON MARTIN

Frame and Mounting (02.00)

Contents

Subframes (02.03) 2-1-2
Specifications 1-2
Maintenance 1-2
Front Subframe-Renew 1-2
Front Subframe-Remove/Refit 1-4
Rear Subframe-Renew 1-6
Rear Subframe-Remove/Refit 1-7
RH/LH Transmission Rear Hydromount Isolator Assembly-Renew 1-8
RH/LH Engine Bracket-Renew 1-9
Engine Hydromount Isolator Assembly-Renew 1-10

Frame and Mounting (02.00)

Subframes (02.03)

Specifications

Torque Figures		
Description	Nm	lb/ft
Subframe to Front Structure	105-125	77.5-92.5
Subframe to Body	105-125	77.5-92.5
Engine Mounts	47	35
Steering Rack	115	85
Torque tube (rear)	43-57	32-42.5
Spring and Damper top mounting (rear)	85	63
Rear subframe to Body	175	129.5
Rear subframe reinforcement plates	62	46

Maintenance

Front Subframe-Renew

Repair Operation Time (ROT)	
Item	**Code**
Front Subframe-Renew	**02.01.AB**

Removal

1. Switch battery isolation switch 'OFF'.
2. Raise vehicle on ramp.

Caution

When using a 'two post' vehicle ramp, remove the screws that secure the rear section of the wheel arch liner to body. Hold back the rear section of the wheel arch liner to correctly position the foot of the vehicle lift.

Warning

When raising the vehicle on a 'two post' ramp, ensure that the rear end of the vehicle is securely strapped to the ramp. Failure to strap the rear of the vehicle down may lead to the vehicle falling off the ramp.

3. Remove RH wheel arch liner (see Workshop Manual procedure 01.02.GB Wheel Arch Liner - Front - RH - Renew).
4. Remove LH wheel arch liner (see Workshop Manual procedure 01.02.FB Wheel Arch Liner - Front - LH - Renew)
5. Remove road wheel/s.
6. Remove front spring/damper assemblies (see Workshop Manual procedure 04.03.AA Spring and Damper Assembly - Front Pair - Renew).
7. Remove nuts (x2) from track rod ends to vertical link.
8. Using special tool 204-523, release track rod end from vertical link.
9. Disconnect ABS sensor multiplugs then release sensor harness clips (x6) from upper suspension arm and vertical link.
10. Disconnect brake pad wear sensor multiplug then release sensor harness clips (x2) from upper suspension arms.
11. Remove Allen bolts (x4) from brake callipers to vertical link and tie callipers aside.
12. Remove Torx screws (x4) from brake disc to hub and remove brake disc.
13. Remove anti-roll bar links nuts (x2) and washers (x2).
14. Remove ride height sensor link nut and bolt from lower suspension arm (see Fig. 1).

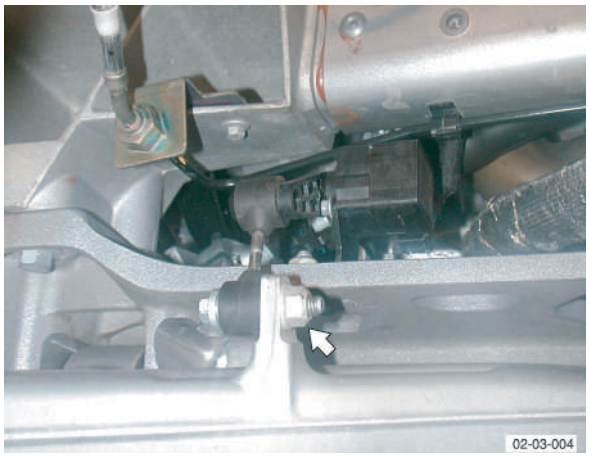

Fig. 1

15. Mark lower arm bolt and cam washer positions (to retain geometry).
16. Remove nuts and bolts (x4) and cam washers (x2) from lower suspension arms to subframe (See Fig. 2).

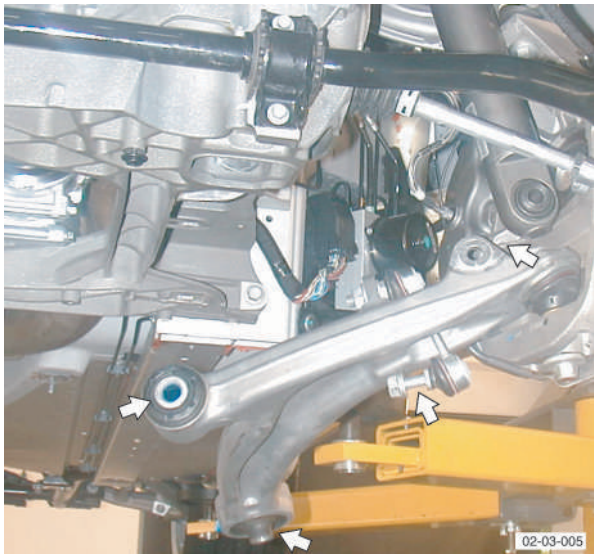

Fig. 2

17. Remove nuts and bolts (x4) from upper suspension arm to body.
18. With assistance, remove suspension assemblies.
19. Install engine lifting bracket to LH side of engine using special tool 303-749.
20. Remove EGR valve.
21. Install engine lifting bracket to RH side of engine using special tool 303-749.

22. Install cross brace support brackets 303-021-02 (x6).
23. Support engine using special tool SPX M553D.
24. Remove undertray (see Workshop Manual procedure 01.02.NB Undertray - Front - Renew).
25. Remove engine mounting nuts (x2) (see Fig. 3).

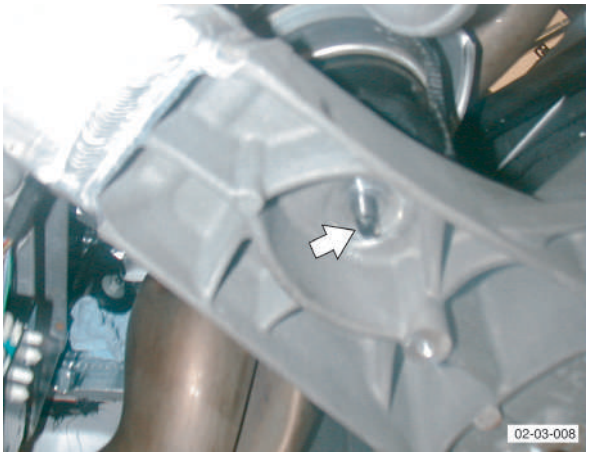

Fig. 3

26. Remove steering rack nuts (x3) from bolts and retain bolts in steering rack (see Fig. 4).

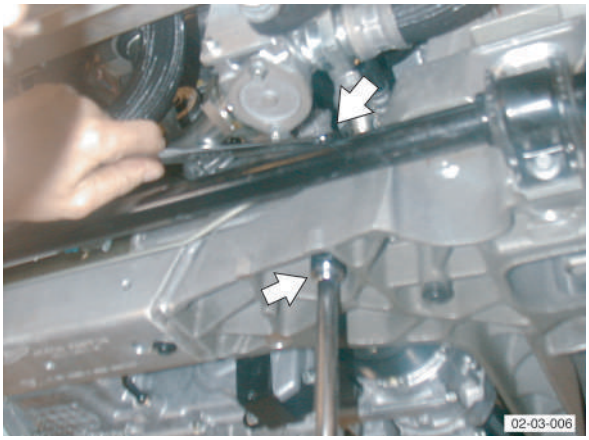

Fig. 4

27. Mark subframe position (see Fig. 5).

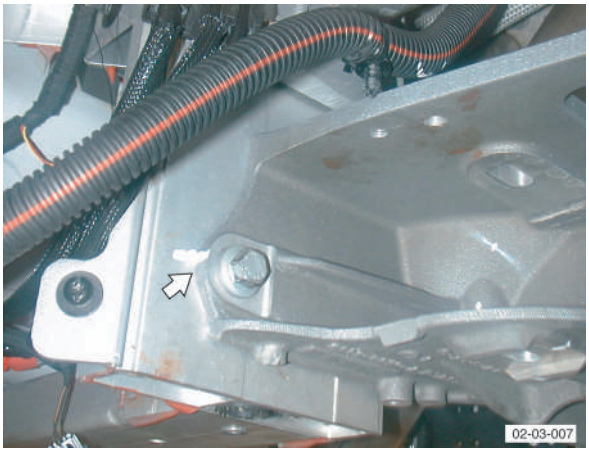

Fig. 5

28. Remove harness clips (x2).
29. Remove nut and bolt securing ride height sensor to subframe.
30. Prepare support trolley 303-F715 with adaptors 303-F715 051 to 4.
31. Position trolley, support subframe, remove bolts (x12) and raise vehicle (see Fig. 6).

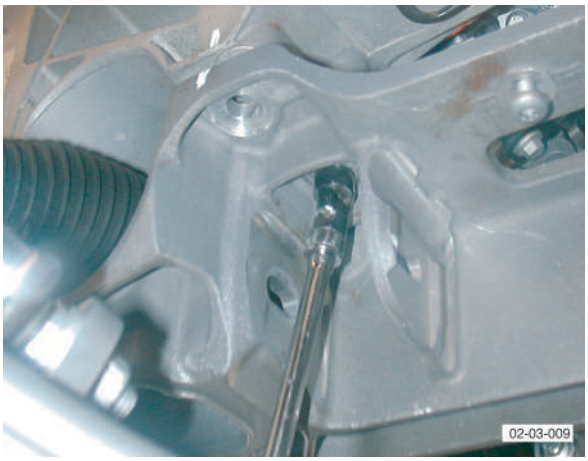

Fig. 6

32. Remove anti-roll bar from subframe (bolts x4).
33. With assistance, remove subframe from trolley.

Installation

1. With assistance, install subframe on trolley.
2. Install anti-roll bar to subframe (Do not torque bolts at this stage).
3. Install subframe to body (remove trolley).

Ensure that the sub-frame mountings to body structure marks are correctly aligned.

4. Install harness clips (x2).
5. Install steering rack nuts (x3) and tighten.
6. Install engine mounting nuts (x2) and tighten.
7. Install ride height sensor.
8. Install undertray (see Workshop Manual procedure 01.02.NB Undertray - Front - Renew).
9. Lower ramp.
10. Remove engine lifting beam.
11. Remove special tool SPX M553D.
12. Remove engine lifting brackets from engine (303-749).
13. Remove cross brace support bracket fixings (x6).
14. Install EGR valve and tighten.
15. Install front spring and damper assemblies (see Workshop Manual procedure 04.03.AA Spring and Damper Assembly - Front Pair - Renew).
16. Install RH wheel arch liner (see Workshop Manual procedure 01.02.GB Wheel Arch Liner - Front - RH - Renew).
17. Install LH wheel arch liner (see Workshop Manual procedure 01.02.FB Wheel Arch Liner - Front - LH - Renew)

18. With assistance, install suspension assemblies, lower suspension arms, nuts and bolts and cam washers (x2)(do not torque tighten at this stage).
19. Install upper suspension arms to body (do not torque tighten at this stage).
20. Install ride height sensor link to lower suspension arm and tighten.
21. Install and tighten nuts (x2) from track rod ends to vertical link.
22. Install anti-roll bar to links nuts and washers (x2) and tighten.
23. Clean and install brake discs and install and tighten Torx screws (x4)).
24. Install brake callipers and torque tighten Allen bolts (x4).
25. Connect brake pad wear sensor multiplug and secure harness clips (x4) in upper suspension arms.
26. Connect ABS sensor multiplugs and secure harness clips (x6) in upper suspension arms and vertical links.

> ***Warning***
> ***Final tightening of suspension components must be carried out with the suspension arms at normal ride height.***

27. Install road wheel/s.
28. Lower vehicle on ramp.
29. Torque tighten suspension nuts and bolts.
30. Battery isolation switch 'ON'.
31. 4 wheel alignment check and adjust (See Workshop Manual procedure 04.00.AD 4 Wheel Alignment - Check and Adjust).

Front Subframe-Remove/Refit

Repair Operation Time (ROT)	
Item	**Code**
Front Subframe-Remove/Refit	**02.01.BA**

Removal

1. Switch battery isolation switch 'OFF'.
2. Raise vehicle on ramp.

> **Caution**
> ***When using a 'two post' vehicle ramp, remove the screws that secure the rear section of the wheel arch liner to body. Hold back the rear section of the wheel arch liner to correctly position the foot of the vehicle lift.***

> ***Warning***
> ***When raising the vehicle on a 'two post' ramp, ensure that the rear end of the vehicle is securely strapped to the ramp. Failure to strap the rear of the vehicle down may lead to the vehicle falling off the ramp.***

3. Remove road wheel(s).
4. Remove RH wheel arch liner (See Workshop Manual procedure 01.02.GB Wheel Arch Liner - Front - RH - Renew).
5. Remove LH wheel arch liner (See Workshop Manual procedure 01.02.FB Wheel Arch Liner - Front - LH - Renew).
6. Remove front spring and damper assemblies (See Workshop Manual procedure 04.03.AA Spring & Damper Assembly - Front Pair - Renew).
7. Remove nuts (x2) from track rod ends to vertical link.
8. Using special tool 204 - 52, release track rod end from vertical link.
9. Disconnect ABS sensor multiplug and release sensor harness clips (x6) from upper suspension arm and vertical link.
10. Disconnect brake pad wear sensor multiplug and release sensor harness clips (x4) from upper suspension arm.
11. Remove Allen bolts (x4) from brake callipers to vertical link and tie callipers aside.
12. Remove Torx screws (x4) from brake disc to hub and remove brake disc.
13. Remove anti-roll bar links nuts (x2) and washers (x2).
14. Remove nut and bolt from ride height sensor link to lower suspension arm (see Fig. 1).

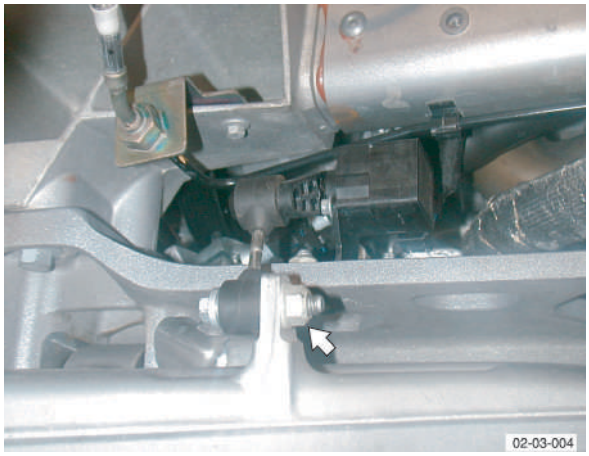

Fig. 1

15. Mark lower arm bolt and cam washer positions (to retain geometry).

16. Remove nightspots and cam washers (x4) from lower suspension arms to subframe (see Fig. 2).

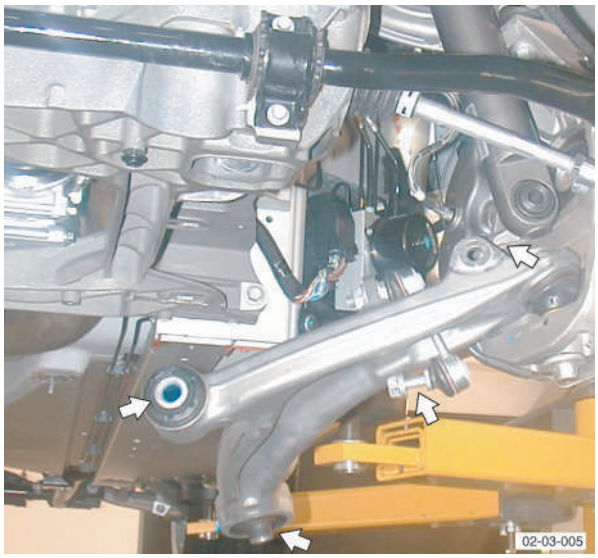

Fig. 2

17. Remove nuts and bolts (x4) from upper suspension arm to body.
18. With assistance, remove suspension assemblies.
19. Install engine lifting beam.
20. Install engine lifting bracket to LH side of engine using special tool 303-749.
21. Remove EGR valve.
22. Install engine lifting bracket to RH side of engine using special tool 303-749.
23. Install cross brace support bracket fixings (x6).
24. Support engine using special tool SPX M553D.
25. Remove undertray (See Workshop Manual procedure 01.02.NB Undertray - Front - Renew).
26. Remove engine mounting nuts (x2) (see Fig 3).

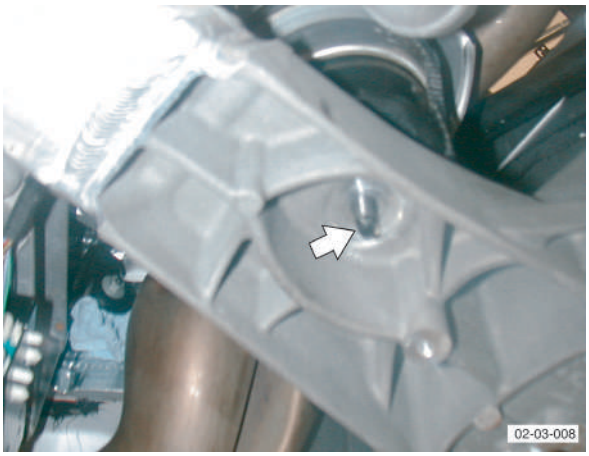

Fig. 3

27. Remove steering rack nuts (x3) from bolts (retain bolts in steering rack) (see Fig. 4).

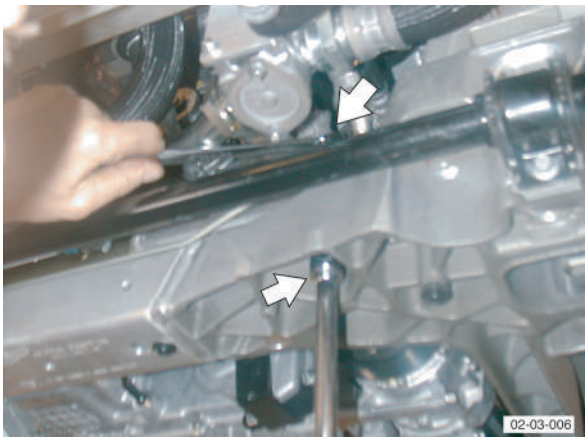

Fig. 4

28. Mark subframe position (see Fig, 5).

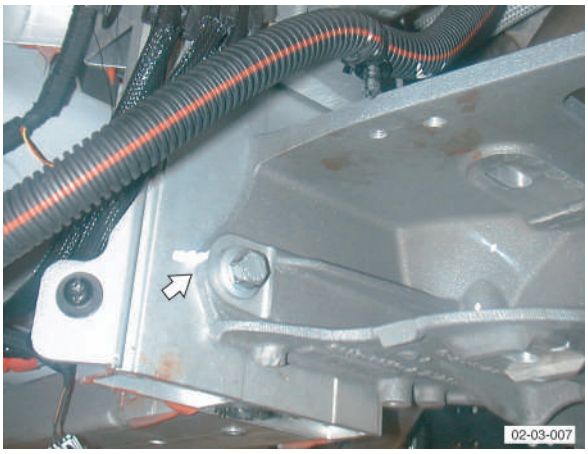

Fig. 5

29. Remove harness clips (x2).
30. Remove nut and bolt that secures ride height sensor from subframe.
31. Prepare support trolley 303-F715 with adaptors 303-F715 051 to 4.

32. Position trolley, support subframe, remove bolts (x12)and raise vehicle.

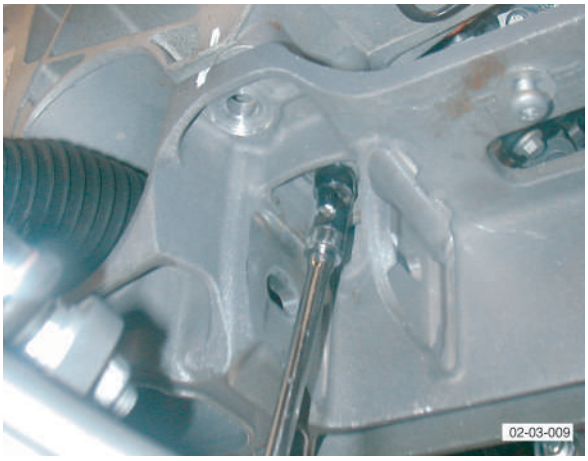

Fig. 6

Installation

1. Install subframe to body and remove trolley.
2. Install steering rack nuts (x3) and tighten.
3. Install engine mounting nuts (x2) and tighten.
4. Install harness clips (x2).
5. Install ride height sensor and tighten nut.
6. Install undertray (See Workshop Manual procedure 01.02.NB Undertray - Front - Renew).
7. Lower ramp.
8. Remove engine lifting beam.
9. Remove special tool SPX M553D.
10. Remove engine lifting brackets from engine using special tool 303-749.
11. Remove cross brace support bracket fixings (x6).
12. Install EGR valve and tighten.
13. Install front spring and damper assemblies (See Workshop Manual procedure 04.03.AA Spring and Damper Assembly - Front Pair - Renew).
14. Install RH wheel arch liner (See Workshop Manual procedure 01.02.GB Wheel Arch Liner - Front - RH - Renew).
15. Install LH wheel arch liner (See Workshop Manual procedure 01.02.FB Wheel Arch Liner - Front - LH - Renew).
16. With assistance, install suspension assemblies, lower suspension arms, bolts and nuts (x4) and cam washers (x2) (do not torque tighten at this stage).
17. Install upper suspension arms to body (do not torque tighten at this stage).
18. Install ride height sensor link to lower suspension arm and tighten.
19. Install and tighten nuts (x2) from track rod ends to vertical link.
20. Install anti-roll bar to links and tighten.
21. Clean and Install brake discs and tighten Torx screws (x4).
22. Install brake callipers and tighten Allen bolts (x4).
23. Connect brake pad wear sensor multiplug and secure harness clips (x4) in upper suspension arms.
24. Connect ABS sensor multiplugs and secure harness clips (x6) in upper suspension arms and vertical links.
25. Install road wheel/s.
26. Lower vehicle on ramp.
27. Switch battery isolation switch ‘ON’.
28. 4 wheel alignment check and adjust (See Workshop Manual procedure 04.00.AD 4 Wheel Alignment - Check and Adjust).

Rear Subframe-Renew

Repair Operation Time (ROT)	
Item	**Code**
Rear Subframe-Renew	**02.01.CA**

Removal

1. Battery isolation switch ‘OFF’.
2. Raise vehicle on ramp and make safe.

Caution
When using a 'two post' vehicle ramp, remove the screws that secure the rear section of the wheel arch liner to body. Hold back the rear section of the wheel arch liner to correctly position the foot of the vehicle lift.

Warning
When raising the vehicle on a 'two post' ramp, ensure that the rear end of the vehicle is securely strapped to the ramp. Failure to strap the rear of the vehicle down may lead to the vehicle falling off the ramp.

3. Remove road wheel(s).
4. Remove LH rear wheel arch liner (see Workshop Manual procedure 01.02.JB Wheel Arch Liner - Rear - LH - Renew).
5. Remove RH rear wheel arch liner (see Workshop Manual procedure 01.02.HB Wheel Arch Liner - Rear - RH - Renew).

Warning
To avoid personal injury, i.e. severe burns to the skin, allow exhaust system to cool down before removing exhaust system components.

6. Remove rear muffler assembly (see Workshop Manual procedure 09.00.KA Silencer and Bypass Valve Assembly - Remove for Access and Refit).
7. Remove bolts (x4), rear subframe cross brace.
8. Loosen clamps (x2), LH and RH rear exhaust pipes from centre pipe.
9. Remove rear exhaust pipes through subframe.
10. Loosen clamps (x2), centre exhaust pipe to LH and RH catalysts.
11. Release centre exhaust pipe from mountings, LH and RH catalysts, remove centre pipe.
12. Remove bolts (x4), centre heatshield.
13. Remove bolts (x8), shear plate to body.
14. Remove bolt securing earth lead to transaxle.

15. Use tool (206-103) and release each handbrake cable from mounting brackets, release inner cable eyelets from calliper levers.
16. Remove bolts (x2) and nuts (x2), handbrake cables to subframe.
17. Use tool (206-103) and release handbrake cables from subframe brackets.
18. Release handbrake cable from clip, tie handbrake cable aside.
19. Loosen and disconnect each brake pipe from body bracket. Plug brake pipes.

Caution
Always plug pipe connections to prevent ingress of dirt.

20. Remove bolt, fuel filler pipe to damper mounting.
21. Remove nut securing fuel filler pipe to body, tie filler pipe aside.
22. Remove bolts (x4 each side), securing spring/damper assemblies.
23. Position drain tray to collect oil spillage.
24. Loosen and disconnect unions (x2), transaxle oil cooler. Plug pipe connections.
25. Remove drain tray.
26. Disconnect multiplug, release harness clips (x2), transaxle harness, RH rear wheel arch.
27. Mark subframe position to body.
28. Position subframe trolley (303-F715), under subframe.
29. Lower vehicle until subframe rests on support trolley.
30. Remove bolts (x6), securing subframe to body.
31. Raise vehicle to gain access to gear selector cables.
32. Using (308-642), release selector cables (x2) from ball joints, release selector cables from bracket.
33. Remove torque tube to transaxle bolts (x8).
34. Move subframe support trolley rearwards to give a clearance between torque tube and transaxle.
35. Carefully raise vehicle from subframe.

Installation

1. Clean transaxle and mating face on torque tube.
2. Position subframe assembly underneath vehicle.
3. Lower vehicle to align transaxle to propshaft splines.
4. Move subframe assembly forward, engage propshaft splines, locating dowels, transaxle to torque tube.
5. Install bolts (x8), torque tube to transaxle, torque tighten bolts.
6. Install gear selector cables on levers and in bracket.
7. Lower vehicle onto subframe mountings, align to marks, install and torque tighten bolts (x6).
8. Position spring/damper assemblies, install bolts (x8).
9. Position fuel filler pipe, install and torque tighten bolt.
10. Position fuel filler pipe to body, install and tighten nut to correct torque.
11. Position handbrake cables to subframe, install bolts (x4), torque bolts.
12. Install handbrake cables to callipers.
13. Remove plugs, install brake pipes.
14. Remove plugs, install transaxle oil cooler pipes, tighten unions to correct torque.
15. Position earth lead to transaxle, install and torque tighten bolt.
16. Install transaxle harness multiplug, secure harness clips (x2).
17. Install shear plate, install and torque tighten bolts (x8).
18. Install heat shield, install and torque tighten bolts (x4).
19. Clean exhaust pipe connections, apply exhaust sealant to connections.
20. Install centre pipe to mountings and catalysts, torque tighten clamp nuts.
21. Install rear exhaust pipes to centre pipe, torque tighten clamp nuts.
22. Position subframe cross brace, install and torque bolts.
23. Install rear muffler (see Workshop Manual procedure 09.00.KA Silencer and Bypass Valve Assembly - Remove for Access and Refit).
24. Install LH rear wheel arch liner (see Workshop Manual procedure 01.02.JB Wheel Arch Liner - Rear - LH - Renew).
25. Install RH rear wheel arch liner (see Workshop Manual procedure 01.02.HB Wheel Arch Liner - Rear - RH - Renew).
26. Bleed brake system (see Workshop Manual procedure 06.07.DD Brake Hydraulic System - Flush/Refill/Bleed
27. Adjust handbrake (see Workshop Manual procedure 06.05.DC Handbrake Cable Assembly - Adjust).
28. Install road Wheel(s).
29. Lower vehicle on ramp and remove safety equipment.

Rear Subframe-Remove/Refit

Repair Operation Time (ROT)	
Item	**Code**
Rear Subframe-Remove/Refit	**02.01.DB**

Removal

1. Disconnect vehicle battery.
2. Remove rear subframe assembly (see Workshop Manual procedure 02.01.CA Subframe Assembly - Rear - Remove for Access and Refit).
3. Mark driveshafts to transaxle flanges for assembly purposes.
4. Remove and discard Allen bolts (x12), collect plates (x6), driveshaft flanges to transaxle.

Allen bolts will be tight to remove due to thread lock.

5. Attach slings to transaxle, connect suitable hoist and take weight of transaxle.
6. Remove nuts (x2). hydramounts to subframe.
7. With assistance, raise and remove transaxle from subframe.

8. Remove bolts (x2), remove both spring/damper assemblies.
9. Remove nuts (x2), anti-roll bar links to lower suspension arms.
10. Remove bolts (x4). anti-roll bar to subframe. Remove anti-roll bar.
11. Disconnect ABS sensor multiplugs (x2), release sensor harness clips (x4) from both toe control arms.
12. Disconnect brake pad wear sensor multiplugs (x2). Release connectors (x2) from subframe.
13. Loosen and disconnect brake pipe unions (x2) from subframe brackets. Plug pipe connections.

Caution
Always plug pipe connections to prevent ingress of dirt.

14. Disconnect multiplug from ride height sensor.
15. Remove nut/bolt securing ride height sensor link to upper suspension arm.
16. Remove bolts (x2), ride height sensor to subframe. Remove sensor.
17. Remove nuts/bolts (x2) and cam washers (x2), toe control arms to subframe.
18. Remove bolts (x2), nuts/bolts (x2) and cam washers (x2), securing lower suspension arms to subframe
19. Remove nuts/bolts (x4), upper suspension arms to subframe.
20. With assistance, remove suspension assemblies from subframe.
21. Remove heatshield clips (x2) from rear of subframe.
22. Release clips (x23), harness to subframe, remove harness.
23. Release brake pipes from clips (x7), remove pipes (x2).
24. Remove brake pipe clips (x5) from subframe.

Installation

1. Clean suspension components and brake pipes.
2. Instal brake pipe clips (x5) in subframe.
3. Install brake pipes (x2) in clips (x7).
4. Install harness and secure with clips (x23).
5. Install heatshield clips (x2).
6. With assistance, install suspension assemblies in subframe.
7. Install bolts/nuts (x4), upper suspension arm to subframe. Do not torque tighten at this stage.
8. Install bolts (x2), bolts/nuts (x2) and cam washers (x2) securing lower suspension arm to subframe. Do not torque tighten at this stage.
9. Position toe control arm, install bolts (x2, cam washers (x2 and nuts (x2). Do not torque tighten at this stage.
10. Install ride height sensor, install and torque tighten bolts (x2).
11. Align ride height sensor link to upper suspension arm, install bolt/nut, tighten to correct torque.
12. Connect multiplug to ride height sensor.
13. Remove pipe plugs, install and torque tighten brake pipe unions.
14. Connect brake pad wear sensor multiplugs, install in subframe brackets.
15. Connect ABS sensor multiplugs (x2), install harness clips (x4), in toe control arms.
16. Install anti-roll bar, install bolts (x4). Do not torque tighten at this stage.
17. Align anti-roll bar links to lower suspension arms. Install nuts (x2), do not torque tighten at this stage.
18. Install spring/damper assemblies (x2). Install bolts (x2), do not torque tighten at this stage
19. With assistance, install transaxle in subframe. Install and torque tighten hydramount nuts (x2).
20. Lower hoist, remove slings.
21. Align driveshafts to transaxle flanges, install plates (x6), new Allen bolts (x12) and tighten to correct torque.

New Allen bolts should have a thread lock coating.

22. Install rear subframe assembly (see Workshop Manual procedure 02.01.CA Subframe Assembly - Rear - Remove for Access and Refit).
23. Connect vehicle battery.

Caution
Final tightening of suspension components must be carried out with the suspension arms at normal ride height.

24. 4 wheel alignment check/adjust (see Workshop Manual procedure 04.00.AD 4 Wheel Alignment - Check and Adjust).
25. Final torque tighten all suspension nuts/bolts.

RH/LH Transmission Rear Hydromount Isolator Assembly-Renew

Repair Operation Time (ROT)		
Item		**Code**
Transmission Rear Hydromount Isolator Assembly-Renew	RH	**02.03.BC**
Transmission Rear Hydromount Isolator Assembly-Renew	LH	**02.03.BD**

Removal

1. Raise vehicle on ramp.

Warning
To avoid personal injury, i.e. severe burns to the skin, allow exhaust system to cool down before removing exhaust system components.

2. Remove rear exhaust silencer (see Workshop Manual procedure 09.00.KA Silencer and Bypass Valve Assembly - Remove for Access and Refit).
3. Remove bolts (x4) from subframe cross brace.
4. Loosen clamp nut and release rear exhaust pipe from centre pipe.
5. Remove rear exhaust pipe through subframe.
6. Position hydraulic lifter to support transaxle.

7. Remove nut from hydromount to subframe (see Fig. 1).

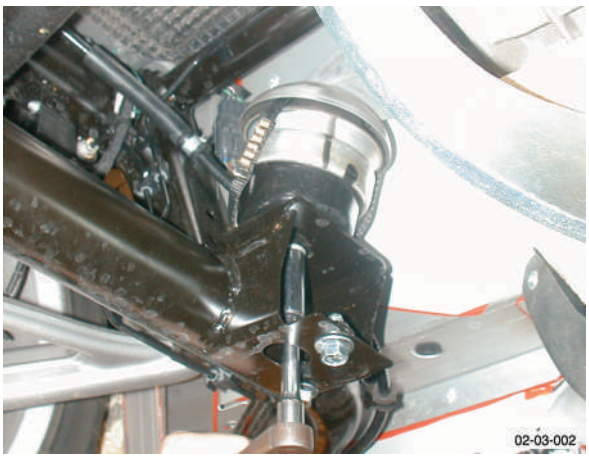

Fig. 1

8. Remove and discard bolts (x4), mounting bracket to transaxle (see Fig. 2).

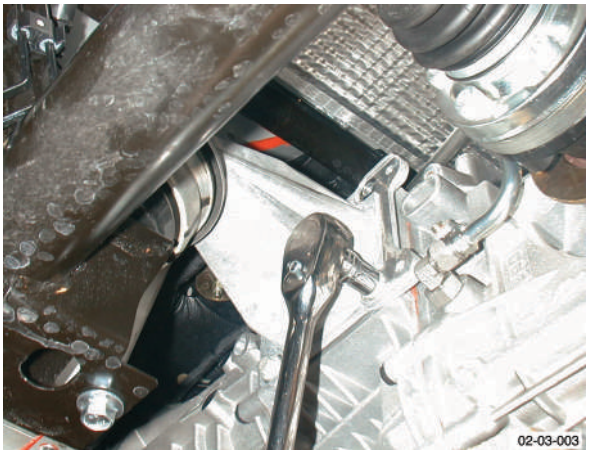

Fig. 2

9. Remove mounting bracket and hydromount.
10. Position hydromount assembly in vice.
11. Remove nut from hydromount to mounting bracket and remove hydromount.

Installation

1. Clean hydramount, mounting bracket and mating faces on transaxle.
2. Install hydromount to mounting bracket and tighten nut to correct torque.
3. Remove hydromount assembly from vice.
4. Install hydromount assembly and install and torque tighten new bolts (x4).
5. Install nut from hydromount to subframe and Torque tighten nut.
6. Remove hydraulic lifter.
7. Clean rear exhaust pipe and mating faces on centre pipe and silencer.
8. Apply a proprietary exhaust sealant around clamp joint.
9. Install rear exhaust pipe to centre pipe (Do not torque nut at this stage).
10. Install cross brace and install and torque tighten bolts (x4).
11. Install rear exhaust silencer (see Workshop Manual procedure 09.00.KA Silencer and Bypass Valve Assembly - Remove for Access and Refit).
12. Lower vehicle on ramp.

RH/LH Engine Bracket-Renew

Repair Operation Time (ROT)		
Item		**Code**
Engine Bracket-Renew	LH	**02.03.BE**
Engine Bracket-Renew	RH	**02.03.BF**

Removal

Warning
To avoid personal injury, i.e. severe burns to the skin, allow exhaust system to cool down before removing exhaust system components.

1. Remove LH/RH exhaust manifold (see Workshop Manual procedure 09.00.CA/09.00.CB Manifold - Exhaust - LH/RH - Renew
2. Remove engine mount lower fixing (nut x1) (see Fig. 1 - LHS shown).

Fig. 1

3. Raise engine with suitable equipment.

4. Remove mount and bracket from engine (bolts x4) (see Fig. 2 - LHS shown).

Fig. 2

5. Remove bracket from mounting (nut x1).

Installation

1. Install bracket to mounting (nut x1) (torque).
2. Install mount and bracket to engine (bolts x4) (torque).
3. Lower engine.
4. Install engine mount lower fixing (nut x1) (torque).
5. Install LH/RH exhaust manifold (see Workshop Manual procedure 09.00.CA/09.00.CB Manifold - Exhaust - LH/RH - Renew.

Engine Hydromount Isolator Assembly-Renew

Repair Operation Time (ROT)		
Item		**Code**
Engine Hydromount Isolator Assembly-Renew	RH	**02.03.BG**
Engine Hydromount Isolator Assembly-Renew	LH	**02.03.BH**

Removal

> ***Warning***
> ***To avoid personal injury, i.e. severe burns to the skin, allow exhaust system to cool down before removing exhaust system components.***

1. Remove RH/LH exhaust manifold (see Workshop Manual procedure 09.00.CA/09.00.CB - Exhaust Manifold - RH/LH - Renew
2. Remove engine mount lower fixing (nut x1) (see Fig. 1 - RHS shown).

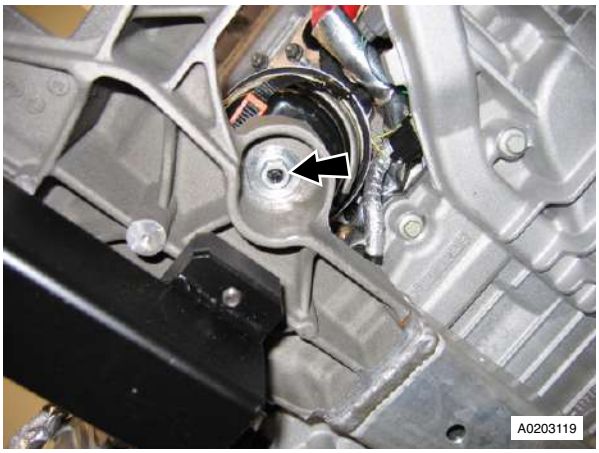

Fig. 1

3. Raise engine with suitable equipment.
4. Remove harness clips (x2) (see Fig. 2 - RHS shown).

Fig. 2

5. Remove mounting from bracket (nut x1).
6. Remove mount and bracket from engine (bolts x4).

Installation

1. Install mount and bracket to engine (bolts x4) (torque).
2. Install mounting to bracket (nut x1) (torque).
3. Install harness clips (x2).
4. Lower engine.
5. Install engine mount lower fixing (nut x1) (torque).
6. Install RH/LH exhaust manifold (see Workshop Manual procedure 09.00.CA/09.00.CB - Exhaust Manifold - RH/LH - Renew).

Engine System (03.00)

Contents

Engine Assembly (03.00) 3-0-3
Description 0-3
Maintenance 0-4
Engine Assembly-Renew 0-4
Engine Assembly-Remove for Access and Refit 0-4
Engine Structure (03.01) 3-1-1
Description 1-1
Engine Block 1-1
Cylinder Block Drain Plug 1-2
Knock Sensors 1-3
Bedplate 1-3
Engine Mountings 1-3
Cylinder Heads 1-4
Inlet/Exhaust Manifolds 1-4
Specifications 1-4
Maintenance 1-5
Upper Intake Manifold Assembly (LHD) - Renew ... 1-5
Upper Intake Manifold Assembly (RHD) - Renew ... 1-6
Upper Intake Manifold Assembly Gasket (LHD) - Renew 1-8
Upper Intake Manifold Assembly Gasket (RHD) - Renew 1-9
Intake Manifold Assembly - Remove for Access and Refit (With Engine Removed) 1-11
RH/LH Cylinder Head Gasket - Renew 1-12
RH/LH Cylinder Head - Overhaul 1-13
Cylinder Head (Engine Set) - Overhaul 1-14
Valve Set (Engine Set) - Renew (including de-coke) 1-15
Inlet Valve (Set) - Renew 1-16
Exhaust Valve (Set) - Renew 1-16
Spring (Valve Set) - Renew 1-17
Spring (Inlet Valve Set) - Renew 1-18
Inlet and Exhaust Valve Seal (Engine Set) - Renew 1-19
Spring (Valve Exhaust Set) - Renew 1-19
RH/LH Cylinder Head Gasket - Renew (with Engine Removed) 1-20
Cylinder Head Gasket (Engine Set) - Renew (with Engine Removed) 1-21
Lubrication System (03.02) 3-2-1
Dry Sump System 2-1
Specifications 2-2
Engine Oil Specification 2-2
Maintenance 2-2
Oil Pressure Pump to Sump Gasket - Renew 2-2
Oil Pump Chain - Renew 2-2
Oil Sump Pan - Renew 2-3
Oil Sump Pan - Remove and Reseal 2-5
Oil Cooler - Renew 2-8
Oil Cooler Tank Assembly - Renew 2-9
Thermostat - Renew 2-9
Oil Cooler Tank Pipe Assembly - Renew 2-10
Oil Thermostat to Tank Tube Assembly - Renew .. 2-10
Oil Pump Inlet Tube Assembly - Renew 2-11
Oil Pump Inlet Tube Assembly - Renew 2-12
Oil Pump Outlet Tube Assembly - Renew 2-12
Oil Thermostat Cooler Pipe Assembly - Renew 2-13
Oil Temperature Controller - Renew 2-14
Oil Sump Pan - Renew (with Engine Removed) 2-14
Oil Sump Pan - Remove and Reseal (with Engine Removed) 2-17
Cooling System (03.03) 3-3-1
Description 3-1
Water Pump 3-1
Thermostat 3-1
Radiator 3-1
Cooling Fans 3-1
Coolant Reservoir 3-1
Engine Oil Cooler 3-2
Specifications 3-2
Torque Figures 3-2
Maintenance 3-2
Coolant-Drain/Fill 3-2
Thermostat - Renew 3-3
Water Pump - Renew 3-3
Water Pump Pulley - Renew 3-3
Oil Temperature Controller - Renew 3-4
Radiator Fan and Motor Assembly - Remove and Install 3-4
Radiator and Condenser Assembly - Renew 3-5
Radiator Assembly - Renew 3-5
Air Conditioning Condenser - Renew 3-6
Radiator Fan Modulator - Remove and Install 3-6
Expansion Tank Assembly - Renew 3-6
Coolant Recovery Tank Assembly - Remove and Install 3-7
Engine Coolant Reservoir Hose - Renew 3-8
Water Inlet/Outlet Manifold - Renew 3-8
Engine Electric Coolant Temperature Sensor - Renew 3-10
Thermostat Cover - Renew 3-11
Fuel Charging System (03.04) 3-4-1
Safety Precautions 4-1
Maintenance 4-2
Fuel Rails - Renew 4-2
Fuel Injection Pressure Sensor - Renew 4-3
Fuel Temperature Sensor - Renew 4-3
Fuel Injector Engine Set - Renew 4-4
Fuel Injector - Each - LH Bank - Renew 4-5
Fuel Injector - Each - RH Bank - Renew 4-5
Engine Set - Fuel Injector - LH Bank - Renew 4-6
Engine Set - Fuel Injector - RH Bank - Renew 4-6
Accessory Drive System (03.05) 3-5-1
Description 5-1
Auxiliary Drives 5-1
Automatic Belt Tensioner 5-1
Specifications 5-1
Maintenance 5-1

Drive Belt-Renew 5-1
Engine Drive Belt and Bracket Assembly Oil Pump Tensioner-Renew 5-1
Idler Pulley-Renew 5-2
Engine Drive Belt Idler Assembly-Renew 5-2
Engine Cranking System (03.06) 3-6-1
Maintenance 6-1
Starter Motor-Renew 6-1
Ignition System (03.07) 3-7-1
Maintenance 7-1
Coil Assembly-Engine Set - LH-Renew 7-1
Emission Control (03.08) 3-8-1
Maintenance 8-1
Vacuum Outlet Hose Assembly-Renew 8-1
Secondary Air Injection Pump Tube-Renew 8-1
Vacuum System Reservoir and Bracket Assembly - Renew 8-1
Oil Tank Breather Hose-Renew 8-1
Air Cleaner to Rocker Cover Hose-Renew 8-1
Oil Separator Tube Assembly-Renew 8-1
Oil Separator Assembly-Renew 8-2
Emissions Separator Hose-Renew 8-2
Secondary Air Injection Pump and Bracket Assembly-Renew 8-2
PCV Valve Assembly-Renew 8-2
Crank Vent Hose-Renew 8-3
Exhaust Valve to Exhaust Manifold Tube Assembly - Renew 8-3
Oil Separator to Inlet Manifold Hose- Renew 8-3
EGR Module-Renew 8-3
Valve Train (03.09) 3-9-1
Specifications 9-1
Maintenance 9-1
Left Side Timing Chain Arm Assembly - Remove and Install 9-1
Right Side Timing Chain Arm Assembly - Remove and Install 9-8
RH/LH Secondary Tensioner Assembly - Remove and Install 9-14
Right and Left Intake Camshaft - Remove and Install 9-15
Right and Left Exhaust Camshaft - Remove and Install 9-17
RH/LH Secondary Timing Chain-Renew 9-18
RH/LH Secondary Tensioner Assembly-Renew (with Engine Removed) 9-19
RH/LH Intake Camshaft Renew With Engine Removed 9-20
RH/LH Exhaust Camshaft-Renew (with Engine Removed) 9-22
RH/LH Secondary Timing Chain-Renew (with Engine Removed) 9-24
RH/LH Intake Camshaft Sprocket and Housing Assembly-Renew 9-25
Left Side Primary Chain - Remove and Install) 9-26
RH/LH Intake Camshaft Sprocket and Housing Assembly-Renew (with Engine Removed) 9-29
Engine Sealing (03.10) 3-10-1
Specifications 10-1
Maintenance 10-1
Engine Timing Cover - Renew 10-1
Left Side Cam Cover - Remove and Install 10-4
Left Side Cam Cover Gasket - Renew 10-5
Right Side Cam Cover Gasket - Renew 10-6
Cylinder Head Gasket - Renew (Engine Set) 10-6
Right Side Cam Cover - Remove and Install 10-9
Cam Cover - Vehicle Set - Remove and Install 10-10
Engine Timing Cover-Renew (with Engine Removed) 10-11
John Guest Cartridge in the Engine Timing Cover - Repair 10-14
Power Conversion (03.11) 3-11-1
Maintenance 11-1
Connecting Rod Bearing-Renew (Engine Set) 11-1
Crankshaft Main Bearing-Renew (Engine Set) 11-1
Crankshaft Assembly-Renew 11-4
Piston-Renew (Engine Set) 11-7
Piston-Renew 11-12
Additional Piston-Renew (Each) 11-17
Piston Ring-Renew (Engine Set) 11-18
Piston Ring-One Piston Set-Renew 11-23
Piston Ring Set-Additional-Renew (Each) 11-28
Connecting Rod-Renew (Engine Set) 11-29
Crankshaft Damper Pulley Assembly-Renew 11-34
Crankshaft Front Oil Seal-Renew 11-35
Rear Oil Crankshaft Seal-Renew 11-36
Cylinder Block-Renew 11-36
Crankshaft Damper Pulley Assembly-Renew (with Engine Removed) 11-37
Crankshaft Front Oil Seal-Renew (with Engine Removed) 11-37
Crankshaft Rear Oil Seal-Renew (with Engine Removed) 11-38
Air Charging (03.12) 3-12-1
Maintenance 12-1
Clean Air Duct - Remove and Install 12-1
Engine Air Filter - Remove and Install 12-1
Engine Air Cleaner Assembly - Remove and Install 12-2
Evaporative Emissions (03.13) 3-13-1
Description 13-1
System Operation 13-1
Engine Management System (03.14) 3-14-1
Maintenance 14-1
Right Engine Control Module - Renew 14-1
LH Front Lower Heated Exhaust Gas Oxygen (HEGO) Sensor - Renew 14-1
LH Front Upper Heated Exhaust Gas Oxygen (HEGO) Sensor - Renew 14-1
RH Front Upper Heated Exhaust Gas Oxygen (HEGO) Sensor - Renew 14-2
RH Rear Lower Heated Exhaust Gas Oxygen (HEGO) Sensor - Renew 14-2
Left Side Powertrain Control Module (PCM) (Coupe Only) - Remove and Install 14-3
Left Side Powertrain Control Module (PCM) (Roadster Only) - Remove and Install 14-4

Throttle Control (03.16) 3-15-1
Description 15-1
Motorised Throttles 15-1
Foot Operated Control (03.18) 3-16-1
Maintenance 16-1
Throttle Pedal Assembly-Renew 16-1

Engine (03.00)

Engine Assembly (03.00)

Description

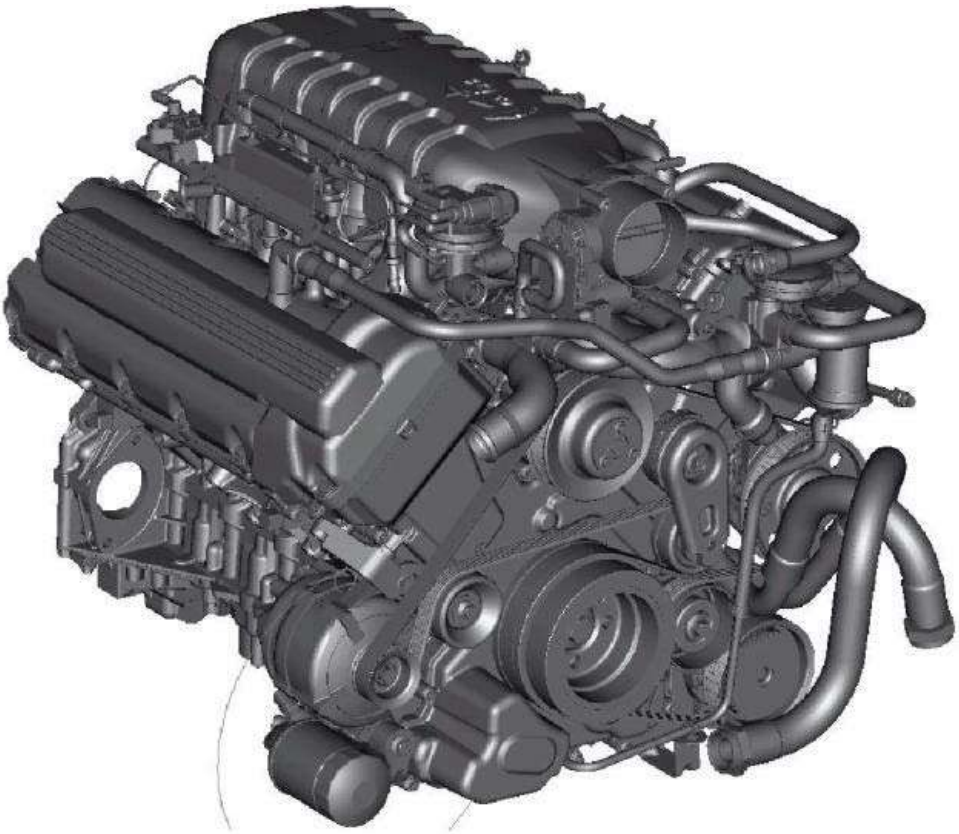

The engine is an all aluminium 4.3 litre 90° V8 configuration. The cylinder heads have dual overhead camshafts and four valves per cylinder. An electronic engine management system controls the sequential multi-port fuel injection and distributor-less ignition systems.

The engine uses the latest 'fast-burn' combustion technology. Heated oxygen sensors monitor the oxygen content of exhaust gasses. The engine management system uses the oxygen sensor signals together with other engine information to 'fine tune' fuelling levels and ignition timing. This helps to achieve the best possible fuel burn with minimum exhaust emissions.

Inlet camshaft variable timing to improve engine performance and emissions.

Inlet manifold is design with tuned length runners to improve volumetric efficiency and performance.

The engine is fitted with a dry sump to improve oil pickup during high speed cornering.

The exhaust system has hydroformed internals with a 4 into 2 into 1 design for improved engine tuning and lower backpressure. Additional oxygen sensors are placed after the catalysts so that long term catalyst efficiency can be monitored.

The engine runs on unleaded fuel only.

Maintenance

Engine Assembly-Renew

Repair Operation Time (ROT)	
Item	**Code**
Engine-Remove/Refit	**03.00.AA**

Removal

1. Remove engine (refer to Workshop Manual procedure 03.00.AC Engine Assembly - Remove for Access and Refit).
2. Remove torque tube (bolts x16 and heatsheild bracket).
3. Install engine lifting brackets.
4. Remove engine from subframe (nuts x2) using suitable lifting equipment.
5. Remove engine lifting brackets (refer to Figure 1).

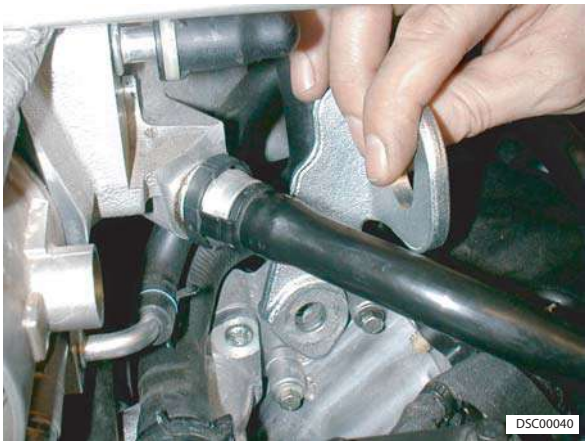

Figure 1

Installation

1. Install engine lifting brackets to new engine.
2. Install engine to subframe (nuts x2) using suitable lifting equipment.
3. Remove engine lifting brackets (refer to Figure 2).

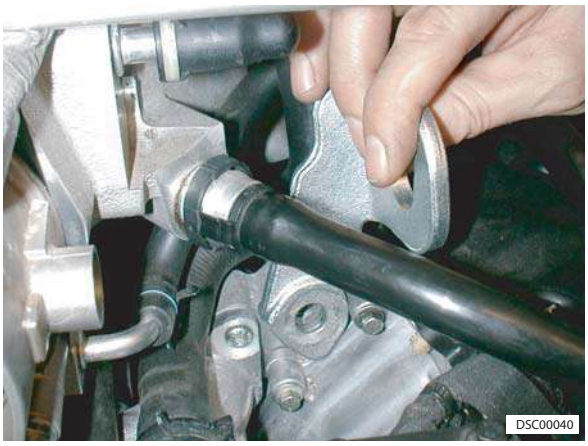

Figure 2

4. Install torque tube (bolts x16 and heatsheild bracket).
5. Install engine (refer to Workshop Manual procedure 03.00.AC Engine Assembly - Remove for Access and Refit).

Engine Assembly-Remove for Access and Refit

Repair Operation Time (ROT)	
Item	**Code**
Engine Assembly-Remove/Refit	**03.00.AC**

Removal

1. Remove transmission (refer to Workshop Manual procedure 07.03.AA Transaxle Assembly - Manual - Remove for Access and Refit).
2. Disconnect battery.
3. Raise vehicle on ramp.
4. Depressurise fuel rail (refer to Workshop Manual procedure 10.01.EK Fuel System - Depressurise).
5. Strap vehicle to ramp (front).

Throttle Duct Removal

6. Disconnect breather pipe quickfits (x2) from air cleaner duct (refer to Figure 1).

Figure 1

7. Remove throttle body duct for access (clips x3) (refer to Figure 2).

Figure 2

Suspension Removal

8. Remove RH wheel arch liner (refer to Workshop Manual procedure 01.02.GB Wheel Arch Liner - Front - RH - Renew).
9. Remove LH wheel arch liner (refer to Workshop Manual procedure 01.02.FB Wheel Arch Liner - Front - LH - Renew).
10. Remove road wheel/s.
11. Remove brake callipers (tie aside).
12. Remove brake discs.
13. Remove anti-roll bar from links (nuts x2).
14. Remove front springs and dampers (refer to Workshop Manual procedure 04.03.AA Spring and Damper Assembly - Front Pair - Renew).
15. Disconnect track rod ends.
16. Remove level sensor link from bottom arm (nut x1).
17. Mark lower arm bolt and washer positions (to retain geometry).
18. Remove bottom arms (nut and bolt x4) with uprights and top arm.
19. Disconnect level sensor multiplug.

Cooling Removal

20. Drain coolant (refer to Workshop Manual procedure 03.03.AD Coolant - Drain and Refill).
21. Disconnect top hose and unclip from body (refer to Figure 3).

Figure 3

22. Disconnect bottom hose and tie aside (refer to Figure 4).

Figure 4

23. Disconnect expansion tank to engine hose (quickfit).
24. Disconnect heater feed hose (quickfit) (refer to Figure 5).

Figure 5

25. Disconnect heater return hose (quickfit).
26. Disconnect expansion tank to engine (bleed) hose and body clips (x2).

Booster Hose Removal

27. Disconnect vacuum hose from booster.

P.A.S. Removal

28. Remove oil from reservoir (syringe).
29. Disconnect H.P. pipe from pump.
30. Remove PAS reservoir from bracket (bolt x1).
31. Remove hoses (x2) from PAS reservoir (refer to Figure 6).

Figure 6

32. Remove suction hose to body P-clip (bolt x1).
33. Remove pipes from steering rack (bolt x1).

Oil Tank Removal

WARNING
DO NOT GET USED ENGINE OIL ON YOUR SKIN. USED ENGINE OIL CAN BE HARMFUL.

34. Drain oil tank.
35. Disconnect breather hose from tank (quickfit) (refer to Figure 7).

Figure 7

36. Disconnect oil pipes from tank (x3) (refer to Figure 8).

Figure 8

37. Remove oil tank (bolts x4) (refer to Figure 9).

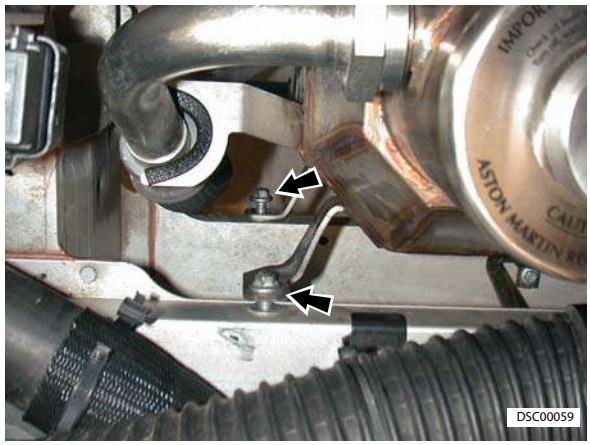

Figure 9

38. Disconnect oil pipe from oil thermostat.

A/C Removal

39. Recover refrigerant (refer to Workshop Manual procedure 12.03.FA Refrigerant Gas - Recover/Recharge - Renew).
40. Disconnect compressor clutch multiplug (access).

41. Remove bolt (x1) HP pipe to bracket (refer to Figure 10).

Figure 10

42. Remove pipes from compressor (bolts x2) and move aside (refer to Figure 11).

Figure 11

43. Remove bolts (x2) LP pipe to body P-clips and move aside (refer to Figure 12).

Figure 12

Steering Removal

44. Disconnect steering column link to steering rack and tie aside (refer to Figure 13).

Figure 13

Electrical Removal

45. Disconnect RH indicator repeater light unit multiplug.
46. Remove fir tree clips (x4) for harness of repeater and screen wash system.
47. Remove fir tree clips ECM harness (x2).
48. Remove attachment bolts (x3) from cover plate (ECM and plate will drop down).
49. Disconnect ECM multiplugs (x3).
50. Remove ECM (refer to Figure 14).

Figure 14

51. Remove fuse box bracket fixings (bolt and nut) (allows movement) (refer to Figure 15).

Figure 15

52. Remove battery lead (1x nut and rubber cover) from fuse box (2x leads).
53. Remove multiplugs (x10) from fusebox.
54. Remove earth terminal (1x nut and rubber cover) from fusebox (refer to Figure 16).

Figure 16

55. Remove fuse box from bracket (bolt x2).
56. Feed harness over engine.
57. Remove starter cable from floor stud (nut x1) (refer to Figure 17).

Figure 17

58. Disconnect multiplugs (x3) RH side of engine bay (refer to Figure 18).

Figure 18

59. Remove earth wires from terminals (nuts x 3).

60. Disconnect multiplugs (x4) from inside of vehicle RH side of I.P. (refer to Figure 19).

Figure 19

61. Release grommet from body, feed harness from inside of vehicle.
62. Release harness from clips (x11) and position over engine.

Purge Removal

63. Remove bottom screws (x2) and loosen top screw of washer bottle.
64. Disconnect purge pipe from purge valve (move washer bottle aside).
65. Release pipe from support clips (x2) and move pipe over engine.

Fuel Pipe Removal

66. Remove fuel hose from rail (clip x1).

Clutch Pipe Removal

67. Remove clutch metal pipe from flexible.
68. Remove flexible hose grommet from support bracket.

Subframe/Engine Removal

69. Remove undertray.
70. Mark subframe position.
71. Remove harness clips (x2).
72. Remove load level sensor from subframe (nut and bolt).
73. Support torque tube with transmission jack.
74. Position trolley, support subframe, remove bolts (x12) raise vehicle.
75. Ensure A/C HP pipe is clear of engine as body is raised.

Installation

Install Subframe/Engine

1. Ensure A/C HP pipe is correct position as body is lowered.
2. Install subframe to body (refer to Figure 20).

Figure 20

3. Remove transmission jack.
4. Install harness clips (x2).
5. Install load level sensor.
6. Install undertray.
7. Lower ramp.

Cooling Install

8. Connect top hose and clip to body (refer to Figure 21).

Figure 21

9. Connect bottom hose (refer to Figure 22).

Figure 22

10. Connect expansion tank to engine hose.
11. Connect heater feed hose (quickfit) (refer to Figure 23).

Figure 23

12. Connect heater return hose (quickfit).
13. Connect expansion tank to engine (bleed) hose and body clips (x2).
14. Refill coolant (refer to Workshop Manual procedure 03.03.AD Coolant - Drain and Refill).

Booster Hose Install

15. Install vacuum hose to booster.

P.A.S. Install

16. Connect H.P. pipe to pump (renew O-ring).
17. Install PAS reservoir to bracket (bolt x1).
18. Install hoses (x2) to PAS reservoir (refer to Figure 24).

Figure 24

19. Install suction hose to body P-clip (bolt x1).
20. Install pipes to steering rack (bolt x1) and fit new O-rings (x2).

Oil Tank Install

21. Connect oil pipe from oil thermostat.
22. Install oil tank (bolts x4) (refer to Figure 25).

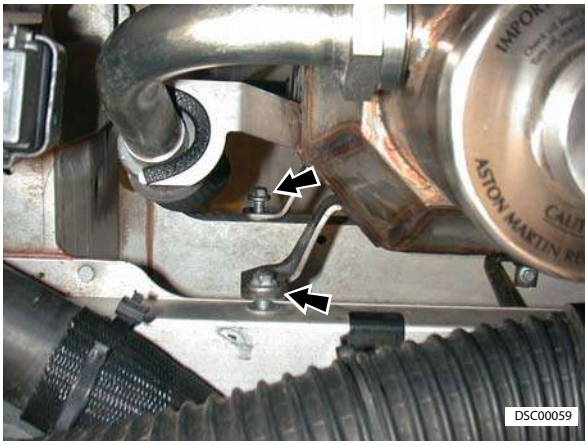

Figure 25

23. Connect breather hose to tank (quickfit) (refer to Figure 26).

Figure 26

24. Connect oil pipes to tank (x3) (refer to Figure 27).

Figure 27

25. Fill tank with approximately amount of displaced oil and replace cap.

A/C Install

26. Fit new O-rings to A/C pipes (lubricate).

27. Install pipes to compressor (bolts x2) (refer to Figure 28).

Figure 28

28. Install bolt (x1) HP pipe to bracket (refer to Figure 29).

Figure 29

29. Install bolts (x2) LP pipe to body P-clips (refer to Figure 30).

Figure30

30. Connect compressor clutch multiplug.

31. Recharge refrigerant (refer to Workshop Manual procedure 12.03.FA Refrigerant Gas - Recover/Recharge - Renew).

Steering Install

32. Connect steering column link to steering rack (bolt x1) (refer to Figure 31).

Figure 31

Electrical Install

33. Feed harness into inner wing area (refer to Figure 32).

Figure 32

34. Install fusebox to bracket.
35. Install earth lead to fusebox.
36. Install battery lead to fusebox (1x nut and rubber cover).
37. Install multiplugs to fuse box (refer to Figure 33).

Figure 33

38. Install fusebox bracket fixings (refer to Figure 34).

Figure 34

39. Install ECM and connect multiplugs to ECM (through cover plate) (refer to Figure 35).

Figure 35

40. Secure ECM and cover plate with bolts (x3) (refer to Figure 36).

Figure36

41. Reclip ECM harness.
42. Reclip repeater light and screen wash system harness.
43. Connect repeater light multiplug.
44. Install starter cable to floor stud (nut x1) (refer to Figure 37).

Figure 37

45. Feed harness to inside of vehicle install grommet to body (refer to Figure 38).

Figure 38

46. Position harness to body and install clips (x11).
47. Connect multiplugs (x4) from inside of vehicle RH side of I.P. (refer to Figure 39).

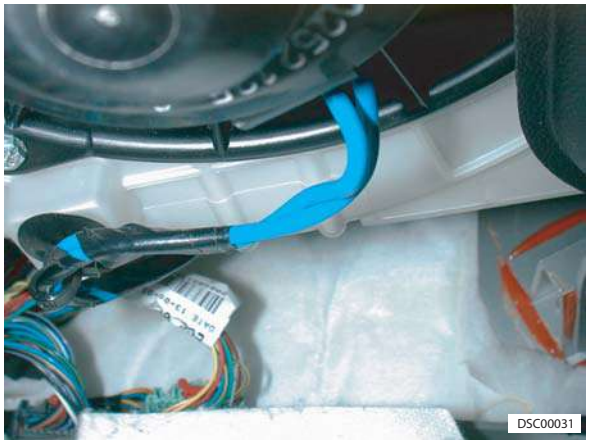

Figure 39

48. Install earth wires to terminals (nuts x13).

49. Connect multiplugs (x3) RH side of engine bay (refer to Figure 40).

Figure 40

Purge Install

50. Connect purge pipe to purge valve.
51. Install bottom screws (x2) and tighten top screw of washer bottle.
52. Move pipe into position and install pipe to support clips (x2).

Fuel Install

53. Install fuel hose to rail (clip x1).

Clutch Pipe Install

54. Install clutch metal pipe from flexible.
55. Install flexible hose grommet to support bracket.
56. Bleed clutch.

Suspension Install

57. Install front springs and dampers. (refer to Workshop Manual procedure 04.03.AA Spring and Damper Assembly - Front Pair - Renew).
58. Install RH wheel arch liner (refer to Workshop Manual procedure 01.02.GB Wheel Arch Liner - Front - RH - Renew
59. Install LH wheel arch liner (refer to Workshop Manual procedure 01.02.FB Wheel Arch Liner - Front - LH - Renew).
60. Install bottom arms (nut and bolt x4) with uprights and top arm.
61. Install level sensor link to bottom arm (nut x1).
62. Connect level sensor multiplug.
63. Connect track rod ends (nut x2).
64. Install anti-roll bar to links (nuts x2).
65. Install brake discs.
66. Install brake callipers.
67. Install road wheel/s

Throttle Duct Install

68. Connect breather pipe quickfits (x2) from air cleaner duct (refer to Figure 41).

Figure 41

69. Install throttle body duct (refer to Figure 42).

Figure 42

General Install

70. Remove strap - vehicle to ramp (front).
71. Lower vehicle on ramp.
72. Connect vehicle battery.
73. Top-up PAS fluid.
74. 4 wheel alignment check/adjust (refer to Workshop Manual procedure 04.00.AD 4 Wheel Alignment - Check and Adjust).
75. Install transmission (refer to Workshop Manual procedure 07.03.AA Transaxle Assembly - Manual - Remove for Access and Refit).
76. Use handbook procedure to check oil level.

ASTON MARTIN
ASTON MARTIN

Engine (03.00)

Engine Structure (03.01)

Description

Engine Block

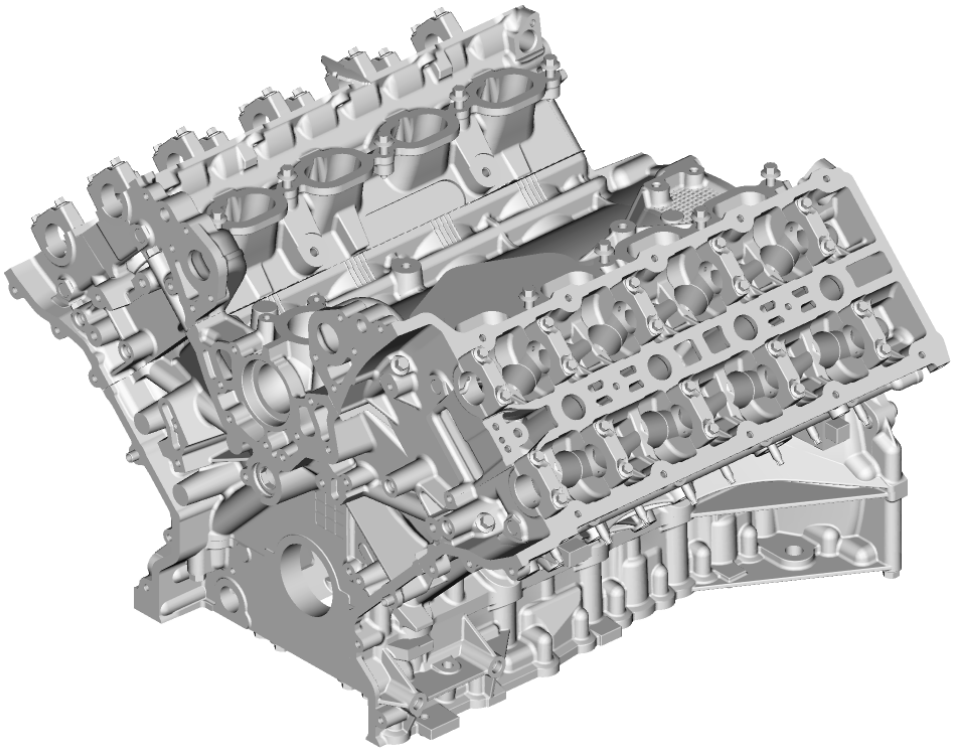

Figure 1 - Engine Block

The 4.3 and 4.7 litre engines have an eight cylinder 90 degree 'Enclosed V' configuration liquid cooled aluminium cylinder block with dry cast liners.

When you sit in the driving position, the right-hand cylinder bank is designated A-bank and the left-hand cylinder bank as B-bank. The cylinders are numered as shown in Figure 2.

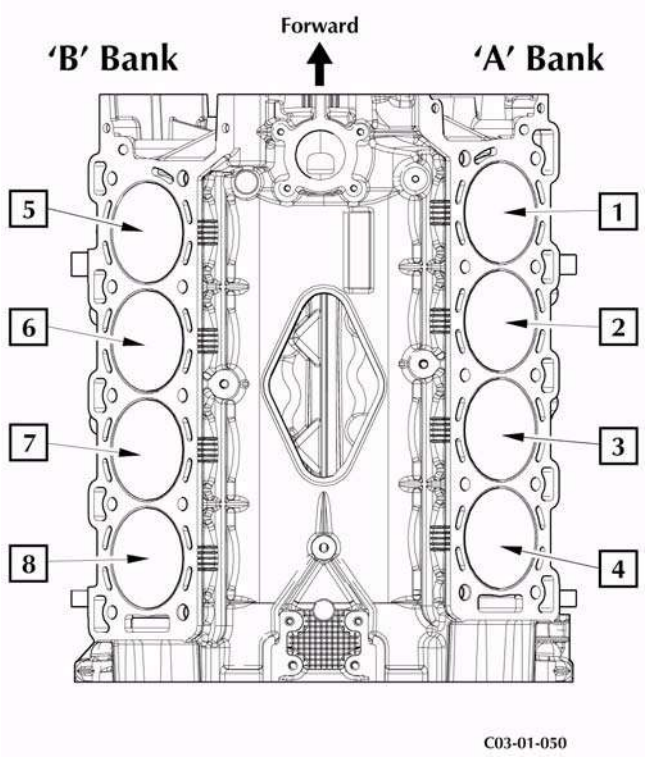

Figure 2 - Cylinder Numbers

Cylinder Block Drain Plug

The coolant drain plug is on the rear left side of the cylinder block.

On vehicles that have a cold climate package (for example: vehicles that operate in conditions regularly below -30°C) a cylinder block heater unit is installed instead of the drain plug (Refer to Figure 3).

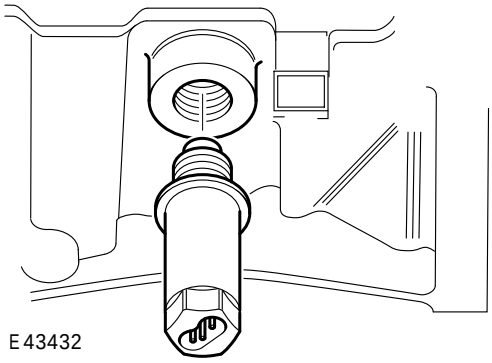

Figure 3 - Cylinder Block Heater

Knock Sensors

Two knock sensors (1) are installed into the cylinder block on the inboard side of each of the two cylinder banks. The electrical connector of each sensor is secured to the left-hand engine cover bracket (Refer to Figure 4).

These piezo-electric sensors send inputs to the ECM to indicate the detection and location of detonation during combustion.

Bedplate

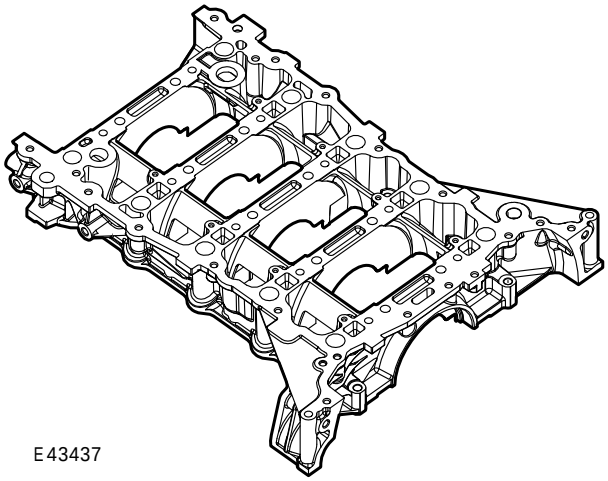

This is a structural casting that is attached with bolts to the bottom of the cylinder block t attach the crankshaft and to further improve overall rigidity.

Main bearing clearance changes due to expansion are minimized by means of iron inserts cast into the bedplate main bearing supports.

Two hollow dowels align the bedplate with the cylinder block and the joint is sealed by a continuous bead of sealant.

Engine Mountings

The engine is mounted at two points. At the front, on each side of the engine, there is a mounting bracket with a Hydramount mounted to the subframe.

Cylinder Heads

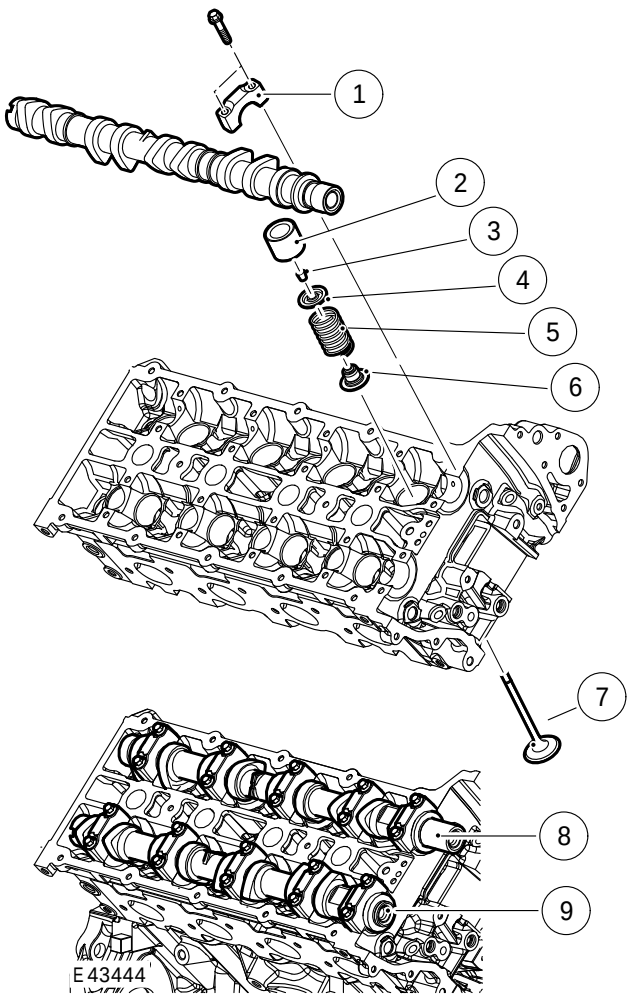

Item	Description	Item	Description
1.	Camshaft bearing cap	5.	Valve stem oil seal
	Tappet (No Shim)	6.	Valve
2.	Collet	7.	Inlet camshaft
3.	Valve spring cap	8.	Exhaust camshaft
4.	Valve spring		

The cylinder heads are unique to each cylinder bank and are attached with deep seated bolts, to the cylinder block. Two hollow dowels align each cylinder head with the cylinder block.

Each cylinder head gasket has a silicon beaded composite gasket with metal eyelets for the cylinder bores.

There are two overhead camshafts that operate four valves each cylinder with solid aluminium-alloy valve lifters. A steel shim in the top of each lifter gives adjustment of the valve clearances.

Collets, valve collars and spring seats locate the valve springs on the intake and exhaust valves. Valve stem seals are part of the spring seats.

Four 14mm diameter spark plugs are installed in recesses on the center-line of each cylinder head.

Inlet/Exhaust Manifolds

Intake air is filtered and passed through Mass Air Flow (MAF) meters. The air then passes through the throttle body into the eight-branch inlet manifold.

Specifications

Torque Figures

Description			Nm.	lb/ft
Cylinder head	All	1.	20	15
	All	2.	35	26
	Bolts 1 to 10	3.	90°	
	Bolts 1 to 10	4.	90°	
	Bolts 11 and 12	5.	25	18

Torque Figures		
Description	Nm.	lb/ft
EGR pipe and exhaust manifold flanges.	25	18
Camshaft position (CMP) sensor	7	5

Clearance Figures	
Exhaust valve	0.23mm - 0.27mm
Inlet Valve clearance	0.18mm - 0.22mm

Maintenance

Upper Intake Manifold Assembly (LHD) - Renew

Repair Operation Time (ROT)		
Item		**Code**
Upper Intake Manifold Assembly-Renew	LHD	**03.01.BA**

Removal

1. Depressurise fuel rail (see Workshop Manual procedure 10.01.EK Fuel System - Depressurise).
2. Coolant drain (see Workshop Manual procedure 03.03.AD Coolant - Drain and Refill).
3. Remove cross brace (bolts x4).

Removal RH Side

4. Remove coil cover.
5. Disconnect breather hose (quick fit) move aside.
6. Release harness fir tree clips (x3) from cylinder head and move aside.
7. Remove fuse box bracket fixings (bolt and nut) (allows movement).
8. Remove ECM (see Workshop Manual procedure 03.14.BB Engine Control Module - RH - Renew).
9. Remove battery lead (1x nut and rubber cover) from fuse box (2x leads).
10. Remove multiplugs (x10) from fusebox.
11. Remove earth terminal (x1 nut and rubber cover) from fusebox.
12. Remove fuse box from bracket (bolt x2).
13. Release harness fir tree clips (x3) from engine bracket.
14. Feed harness from inner wing and over engine.
15. Remove purge pipe P-clip (bolt x1) and move pipe aside.
16. Remove harness bracket from engine (bolts x2, nut x1).
17. Release fuel feed hose from rail (clip x1) and move aside.
18. Disconnect heater hose from pipe (quick fit).
19. Release heater hose (clips x2) and EGR vacuum line (clips x2) from bracket.
20. Release harness from coolant pipe bracket (fir tree x3).
21. Disconnect EGR (x1), fuel rail pressure sensor (x1) and injector (x4) multiplugs, move harness aside.
22. Remove coolant pipe bracket (nuts x2 and bolts x2).
23. Disconnect EGR vacuum pipe from sensor and manifold, move aside.

Removal LH Side

24. Remove corner cross brace.
25. Remove coil cover.
26. Disconnect breather hoses from cam cover (x2) for access.
27. Disconnect purge line from manifold (quickfit) and support clip for access.
28. Disconnect heater hose from pipe (quick fit).
29. Release heater hose (x2) and throttle body hose (x2) from support bracket.
30. Remove booster hose from manifold and support clip.
31. Remove harness support bracket (bolt x1, nut x2) release harness clips (fir tree x3).
32. Release pipe support bracket (nuts x2, bolts x2) move aside.
33. Disconnect injector multiplugs (x4).
34. Unclip injector harness from cam cover (x2).
35. Disconnect IAT multiplug.
36. Disconnect breather hose from manifold (quickfit).

Removal Manifold from Vehicle

37. Disconnect manifold heating hoses (x2).
38. Disconnect throttle body multiplug and harness clip.
39. Disconnect breather pipe quickfits (x2) from air cleaner duct.
40. Disconnect air cleaner duct (clip x1).
41. Disconnect EGR vacuum hose.
42. Disconnect EGR pipe union and tie aside.
43. Remove manifold bolts (x 10) (see Figure 1).

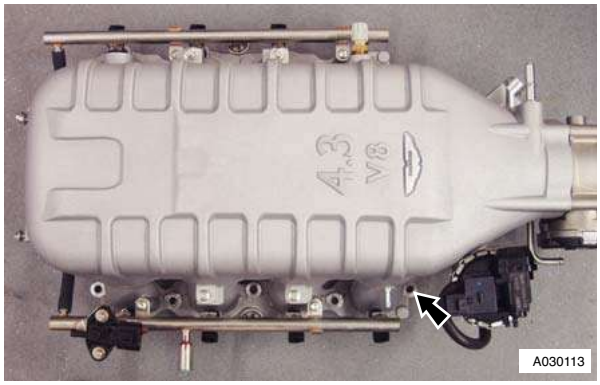

Figure 1

44. Remove bolts (x2) bracket to manifold (rear).
45. Move manifold (2x people) forward, remove bolt for purge line P-clip, remove manifold.
46. Remove gaskets and clean mating faces.

Removal Manifold Parts

47. Remove EGR valve (bolts x2) and gasket.
48. Remove IAT sensor.
49. Remove throttle body (bolts x4) and gasket.
50. Remove fuel rail (bolts x4) with injectors.

Installation

1. Install fuel rail (bolts x4) with injectors. (fit new O-rings to injectors).
2. Install throttle body (bolts x4) and new gasket.
3. Install IAT sensor.
4. Install EGR valve and new gasket.

Installation Manifold to Vehicle

5. Install new gaskets to cylinder block (glue in place).
6. Install manifold (allowing access to install bolt for purge line P-clip).
7. Install manifold bolts (x10) (torque and tightening sequence).
8. Install bolts (x2) bracket to manifold (rear).
9. Connect EGR pipe union.
10. Connect EGR vacuum hose.
11. Connect air cleaner duct (clip x1).
12. Connect breather pipe quickfits (x2) to air cleaner duct.
13. Connect throttle body multiplug and harness clip.
14. Connect manifold heating hoses (x2).

Installation RH Side

15. Connect EGR vacuum pipe to sensor and manifold.
16. Install coolant pipe bracket (bolt x2, nut x2).
17. Connect EGR (x1), fuel rail pressure sensor (x1) and injector multiplugs (x4).
18. Refit harness to coolant pipe bracket (fir tree x3).
19. Connect heater hose to pipe (quick fit).
20. Refit heater hose (clipx2) and EGR vacuum lines (clips x2) to bracket.
21. Install fuel feed pipe.
22. Install purge pipe P-clip.
23. Install harness bracket to engine.
24. Feed harness into inner wing area.
25. Install fusebox to bracket.
26. Install earth lead to fusebox.
27. Install battery lead to fusebox (1x nut and rubber cover).
28. Install multiplugs to fuse box.
29. Install fusebox bracket fixings.
30. Refit harness fir tree clips to cylinder head.
31. Refit engine breather hose.
32. Install VVT solenoid multiplug, position coil and CMP harness (1x edge clip).
33. Install ECM (see Workshop Manual procedure 03.14.BB Engine Control Module - RH - Renew).
34. Install coil cover.

Installation LH Side

35. Connect breather hose to manifold (quickfit).
36. Connect IAT multiplug.
37. Unclip injector harness from cam cover (x2).
38. Connect injector multiplugs (x4).
39. Install pipe support bracket (nuts x2, bolts x2).
40. Install harness support bracket (bolt x1, nut x2) release harness clips (fir tree x3).
41. Connect booster hose to manifold and support clip.
42. Connect heater hose from pipe (quick fit).
43. Install heater hose (x2) and throttle body hose (x2) from support bracket.
44. Connect purge line to manifold and into support clip.
45. Connect breather hoses (x2) to cam cover.
46. Install coil cover.
47. Install corner cross brace (torque bolts with vehicle on level ground).

    Note: The installation is not handed

48. Refill coolant (see Workshop Manual procedure 03.03.AD Coolant - Drain and Refill).
49. Install cross brace. (torque bolts with vehicle on level ground).

Upper Intake Manifold Assembly (RHD) - Renew

Repair Operation Time (ROT)		
Item		**Code**
Upper Intake Manifold Assembly-Renew	RHD	**03.01.BE**

Removal

1. Depressurise fuel rail (see Workshop Manual procedure 10.01.EK Fuel System - Depressurise).
2. Coolant drain (see Workshop Manual procedure 03.03.AD Coolant - Drain and Refill).
3. Remove cross brace (bolts x4).

Removal RH Side

4. Remove coil cover.
5. Remove corner cross brace.
6. Disconnect breather hose (quick fit) move aside.
7. Remove purge pipe P-clip (bolt x1) and move pipe aside.
8. Remove harness bracket from engine (bolts x2, nut x1).
9. Release fuel feed hose from rail (clip x1) and move aside.
10. Disconnect heater hose from pipe (quick fit).
11. Release heater hose (clips x2) and EGR vacuum line (clips x2) from bracket.
12. Release harness from coolant pipe bracket (fir tree x3).
13. Disconnect EGR (x1), fuel rail pressure sensor (x1) and injector (x4) multiplugs, move harness aside.
14. Remove coolant pipe bracket (nuts x2 and bolts x2).
15. Disconnect EGR vacuum pipe from sensor and manifold, move aside.

Removal LH Side

16. Remove coil cover.
17. Disconnect breather hoses from cam cover (x2) for access.
18. Release harness fir tree clips (x3) from cylinder head and move aside.
19. Remove fuse box bracket fixings (bolt and nut) (allows movement).
20. Remove ECM (see Workshop Manual procedure 03.13.ND Module - Power Train Control - RHD - Renew).
21. Remove battery lead (1x nut and rubber cover) from fuse box (2x leads).
22. Remove multiplugs (x10) from fusebox.
23. Disconnect purge line from manifold (quickfit) and support clip for access.
24. Remove earth terminal (1x nut and rubber cover) from fusebox.
25. Remove fuse box from bracket (bolt x2).
26. Release harness fir tree clips (x3) from engine bracket.
27. Feed harness from inner wing and over engine.
28. Disconnect heater hose from pipe (quick fit).
29. Release heater hose (x2) and throttle body hose (x2) from support bracket.
30. Remove booster hose from manifold and support clip.
31. Remove harness support bracket (bolt x1, nut x2) release harness clips (fir tree x3).
32. Release pipe support bracket (nuts x2, bolts x2) move aside.
33. Disconnect injector multiplugs (x4).
34. Unclip injector harness from cam cover (x2).
35. Disconnect IAT multiplug.
36. Disconnect breather hose from manifold (quickfit).

Removal Manifold from Vehicle

37. Remove booster hose from support bracket.
38. Disconnect manifold heating hoses (x2).
39. Disconnect throttle body multiplug and harness clip.
40. Disconnect breather pipe quickfits (x2) from air cleaner duct.
41. Disconnect air cleaner duct (clip x1).
42. Disconnect EGR vacuum hose.
43. Disconnect EGR pipe union and tie aside.
44. Remove manifold bolts (x 10) (see Figure 1)

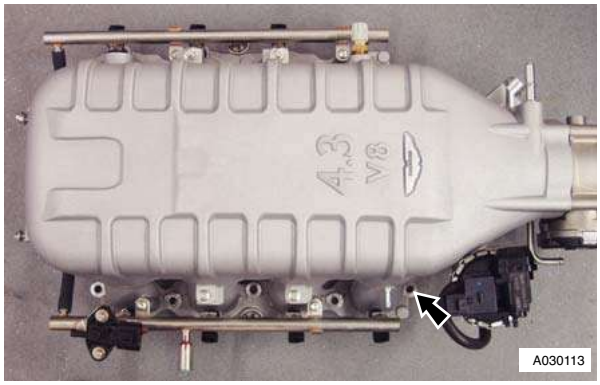

Figure 1

45. Remove bolts (x2) bracket to manifold (rear).
46. Move manifold (2x people) forward, remove bolt for purge line P-clip, remove manifold.
47. Remove gaskets and clean mating faces.
48. Removal Manifold Parts
49. Remove EGR valve (bolts x2) and gasket.
50. Remove IAT sensor.
51. Remove throttle body (bolts x4) and gasket.
52. Remove fuel rail (bolts x4) with injectors.

Installation

1. Install fuel rail (bolts x4) with injectors. (fit new O-rings to injectors).
2. Install throttle body (bolts x4) and new gasket.
3. Install IAT sensor.
4. Install EGR valve and new gasket.
5. Installation Manifold to Vehicle
6. Install new gaskets to cylinder block (glue in place).
7. Install manifold (allowing access to install bolt for purge line P-clip).
8. Install manifold bolts (x10) (torque and tightening sequence).
9. Install bolts (x2) bracket to manifold (rear).
10. Connect EGR pipe union.
11. Connect EGR vacuum hose.
12. Connect air cleaner duct (clip x1).
13. Connect breather pipe quickfits (x2) to air cleaner duct.
14. Connect throttle body multiplug and harness clip.
15. Connect manifold heating hoses (x2).
16. Install booster hose to support bracket.

Installation RH Side

17. Connect EGR vacuum pipe to sensor and manifold.
18. Install coolant pipe bracket (bolt x2, nut x2).
19. Connect EGR (x1), fuel rail pressure sensor (x1) and injector multiplugs (x4).
20. Refit harness to coolant pipe bracket (fir tree x3).
21. Connect heater hose to pipe (quick fit).
22. Refit heater hose (clipx2) and EGR vacuum lines (clips x2) to bracket.

23. Install fuel feed pipe.
24. Install purge pipe P-clip.
25. Install harness bracket to engine.
26. Refit harness fir tree clips to cylinder head.
27. Refit engine breather hose.
28. Install VVT solenoid multiplug, position coil and CMP harness (1x edge clip).
29. Install corner cross brace (torque bolts with vehicle on level ground).
30. Install coil cover.

Installation LH Side

31. Connect breather hose to manifold (quickfit).
32. Connect IAT multiplug.
33. Install injector harness to cam cover (x2).
34. Connect injector multiplugs (x4).
35. Install pipe support bracket (nuts x2, bolts x2).
36. Install harness support bracket (bolt x1, nut x2) release harness clips (fir tree x3).
37. Connect booster hose to manifold and support clip.
38. Connect heater hose from pipe (quick fit).
39. Install heater hose (x2) and throttle body hose (x2) from support bracket.
40. Connect purge line to manifold and into support clip.
41. Connect breather hoses (x2) to cam cover.
42. Feed harness into inner wing area.
43. Install fusebox to bracket.
44. Install earth lead to fusebox.
45. Install battery lead to fusebox (1x nut and rubber cover).
46. Install multiplugs to fuse box.
47. Install fusebox bracket fixings.
48. Install ECM (see Workshop Manual procedure 03.13.ND Module - Power Train Control - RHD - Renew).
49. Install coil cover.
50. Refill coolant (see Workshop Manual procedure 03.03.AD Coolant - Drain and Refill).
51. Install cross brace. (torque bolts with vehicle on level ground).

Upper Intake Manifold Assembly Gasket (LHD) - Renew

Repair Operation Time (ROT)		
Item		**Code**
Upper Intake Manifold Assembly Gasket-Renew	LHD	**03.01.BB**

Removal

1. Depressurise fuel rail (see Workshop Manual procedure 10.01.EK Fuel System - Depressurise).

Note: The removal is not handed

2. Coolant drain (see Workshop Manual procedure 03.03.AD Coolant - Drain and Refill).
3. Remove cross brace (bolts x4).

Removal R/H Side

4. Remove coil cover.
5. Disconnect breather hose (quick fit) move aside.
6. Release (alt/inj) harness fir tree clips (x3) from cylinder head and move aside.
7. Remove fuse box bracket fixings (bolt and nut) (allows movement).
8. Remove ECM (see Workshop Manual procedure 03.13.NC Module - Power Train Control - Renew).
9. Remove battery lead (x1nut and rubber cover) from fuse box (2x leads).
10. Remove multiplugs (x10) from fusebox.
11. Remove earth terminal (1x nut and rubber cover) from fusebox.
12. Remove fuse box from bracket (bolt x2).
13. Release harness fir tree clips (x3) from engine bracket.
14. Feed harness from inner wing and over engine to gain access to cam cover.
15. Remove purge pipe P-clip (bolt x1) and move pipe aside.
16. Remove harness bracket from engine (bolts x2, nut x1).
17. Release fuel feed hose from rail (clip x1) and move aside.
18. Disconnect heater hose from pipe (quick fit).
19. Release heater hose (clips x2) and EGR vacuum line (clips x2) from bracket.
20. Release (inj/alt) harness from coolant pipe bracket (fir tree x3).
21. Disconnect EGR (x1), fuel rail pressure sensor (x1) and injector multiplugs (x4), move harness aside.
22. Remove coolant pipe bracket (nuts x2 and bolts x2).
23. Disconnect EGR vacuum pipe from sensor and manifold, move aside.

Removal L/H Side

24. Remove corner cross brace.
25. Remove coil cover.
26. Disconnect breather hoses from cam cover (x2) for access.
27. Disconnect purge line from manifold (quickfit) and support clip for access.
28. Disconnect heater hose from pipe (quick fit).
29. Release heater hose (x2) and throttle body hose (x2) from support bracket.
30. Remove booster hose from manifold and support clip.
31. Remove harness support bracket (bolt x1, nut x2) release harness clips (fir tree x3).
32. Release pipe support bracket (nuts x2, bolts x2) move aside.
33. Disconnect injector multiplugs (x4).
34. Unclip injector harness from cam cover (x2).
35. Disconnect IAT multiplug.
36. Disconnect breather hose from manifold (quickfit).

Removal Manifold

37. Disconnect manifold heating hoses (x2).
38. Disconnect throttle body multiplug and harness clip.
39. Disconnect breather pipe quickfits (x2) from air cleaner duct.
40. Disconnect air cleaner duct (clip x1).
41. Disconnect EGR vacuum hose.
42. Disconnect EGR pipe union and tie aside.
43. Remove manifold bolts (x 10) (see Figure 1).

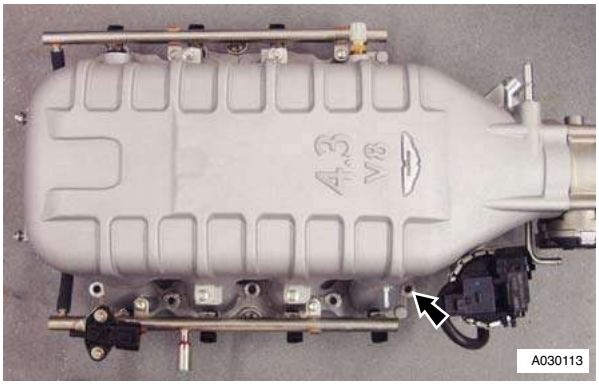

Figure 1

44. Remove bolts (x2) bracket to manifold (rear).
45. Move manifold (2x people) forward, remove bolt for purge line P-clip, remove manifold.
46. Remove gaskets and clean mating faces.

Installation

Manifold to Vehicle

1. Install new gaskets to cylinder block (glue in place).
2. Install manifold (allowing access to install bolt for purge line P-clip).
3. Install manifold bolts (x10) (torque and tightening sequence).
4. Install bolts (x2) bracket to manifold (rear).
5. Connect EGR pipe union.
6. Connect EGR vacuum hose.
7. Connect air cleaner duct (clip x1).
8. Connect breather pipe quickfits (x2) to air cleaner duct.
9. Connect throttle body multiplug and harness clip.
10. Connect manifold heating hoses (x2).

Installation RH Side

11. Connect EGR vacuum pipe to sensor and manifold.
12. Install coolant pipe bracket (bolt x2, nut x2).
13. Connect EGR (x1), fuel rail pressure sensor (x1) and injector multiplugs (x4).
14. Refit (inj/alt) harness to coolant pipe bracket (fir tree x3).
15. Connect heater hose to pipe (quick fit).
16. Refit heater hose (clipx2) and EGR vacuum lines (clips x2) to bracket.
17. Install fuel feed pipe.
18. Install purge pipe P-clip.
19. Install harness bracket to engine.
20. Feed harness into inner wing area.
21. Install fusebox to bracket.
22. Install earth lead to fusebox.
23. Install battery lead to fusebox (1x nut and rubber cover).
24. Install multiplugs to fuse box.
25. Install fusebox bracket fixings.
26. Refit harness fir tree clips to cylinder head.
27. Refit engine breather hose.
28. Install VVT solenoid multiplug, position coil and CMP harness (1x edge clip).
29. Install ECM (see Workshop Manual procedure 03.13.NC Module - Power Train Control - Renew).
30. Install coil cover.

Installation LH Side

31. Connect breather hose to manifold (quickfit).
32. Connect IAT multiplug.
33. Unclip injector harness from cam cover (x2).
34. Connect injector multiplugs (x4).
35. Install pipe support bracket (nuts x2, bolts x2).
36. Install harness support bracket (bolt x1, nut x2) release harness clips (fir tree x3).
37. Connect booster hose to manifold and support clip.
38. Connect heater hose from pipe (quick fit).
39. Install heater hose (x2) and throttle body hose (x2) from support bracket.
40. Connect purge line to manifold and into support clip.
41. Connect breather hoses (x2) to cam cover.
42. Install coil cover.
43. Install corner cross brace (torque bolts with vehicle on level ground).

Note: The installation is not handed

44. Refill coolant (see Workshop Manual procedure 03.03.AD Coolant - Drain and Refill).
45. Install cross brace. (torque bolts with vehicle on level ground).

Upper Intake Manifold Assembly Gasket (RHD) - Renew

Repair Operation Time (ROT)		
Item		**Code**
Upper Intake Manifold Assembly Gasket-Renew	RHD	**03.01.BF**

Removal

1. Depressurise fuel rail (see Workshop Manual procedure 10.01.EK Fuel System - Depressurise).
2. Coolant drain (see Workshop Manual procedure 03.03.AD Coolant - Drain and Refill).
3. Remove cross brace (bolts x4).

Removal RH Side

4. Remove coil cover.
5. Remove corner cross brace.

6. Disconnect breather hose (quick fit) move aside.
7. Remove purge pipe P-clip (bolt x1) and move pipe aside.
8. Remove harness bracket from engine (bolts x2, nut x1).
9. Release fuel feed hose from rail (clip x1) and move aside.
10. Disconnect heater hose from pipe (quick fit).
11. Release heater hose (clips x2) and EGR vacuum line (clips x2) from bracket.
12. Release harness from coolant pipe bracket (fir tree x3).
13. Disconnect EGR (x1), fuel rail pressure sensor (x1) and injector (x4) multiplugs, move harness aside.
14. Remove coolant pipe bracket (nuts x2 and bolts x2).
15. Disconnect EGR vacuum pipe from sensor and manifold, move aside.

Removal LH Side

16. Remove coil cover.
17. Disconnect breather hoses from cam cover (x2) for access.
18. Release harness fir tree clips (x3) from cylinder head and move aside.
19. Remove fuse box bracket fixings (bolt and nut) (allows movement).
20. Remove ECM (see Workshop Manual procedure 03.13.ND Module - Power Train Control - RHD - Renew).
21. Remove battery lead (1x nut and rubber cover) from fuse box (2x leads).
22. Remove multiplugs (x10) from fusebox.
23. Disconnect purge line from manifold (quickfit) and support clip for access.
24. Remove earth terminal (1x nut and rubber cover) from fusebox.
25. Remove fuse box from bracket (bolt x2).
26. Release harness fir tree clips (x3) from engine bracket.
27. Feed harness from inner wing and over engine.
28. Disconnect heater hose from pipe (quick fit).
29. Release heater hose (x2) and throttle body hose (x2) from support bracket.
30. Remove booster hose from manifold and support clip.
31. Remove harness support bracket (bolt x1, nut x2) release harness clips (fir tree x3).
32. Release pipe support bracket (nuts x2, bolts x2) move aside.
33. Disconnect injector multiplugs (x4).
34. Unclip injector harness from cam cover (x2).
35. Disconnect IAT multiplug.
36. Disconnect breather hose from manifold (quickfit).

Removal Manifold from Vehicle

37. Remove booster hose from support bracket.
38. Disconnect manifold heating hoses (x2).
39. Disconnect throttle body multiplug and harness clip.
40. Disconnect breather pipe quickfits (x2) from air cleaner duct.
41. Disconnect air cleaner duct (clip x1).
42. Disconnect EGR vacuum hose.
43. Disconnect EGR pipe union and tie aside.
44. Remove manifold bolts (x 10) (see Figure 1)

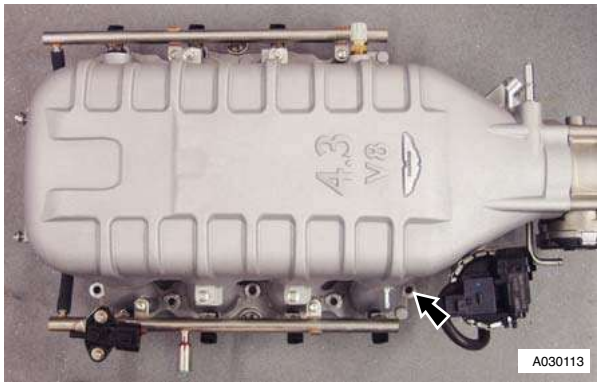

Figure 1

45. Remove bolts (x2) bracket to manifold (rear).
46. Move manifold (2x people) forward, remove bolt for purge line P-clip, remove manifold.
47. Remove gaskets and clean mating faces.

Installation

1. Install new gaskets to cylinder block (glue in place).
2. Install manifold (allowing access to install bolt for purge line P-clip).
3. Install manifold bolts (x10) (torque and tightening sequence).
4. Install bolts (x2) bracket to manifold (rear).
5. Connect EGR pipe union.
6. Connect EGR vacuum hose.
7. Connect air cleaner duct (clip x1).
8. Connect breather pipe quickfits (x2) to air cleaner duct.
9. Connect throttle body multiplug and harness clip.
10. Connect manifold heating hoses (x2).
11. Install booster hose to support bracket.

Installation RH Side

12. Connect EGR vacuum pipe to sensor and manifold.
13. Install coolant pipe bracket (bolt x2, nut x2).
14. Connect EGR (x1), fuel rail pressure sensor (x1) and injector multiplugs (x4).
15. Refit harness to coolant pipe bracket (fir tree x3).
16. Connect heater hose to pipe (quick fit).
17. Refit heater hose (clipx2) and EGR vacuum lines (clips x2) to bracket.
18. Install fuel feed pipe.
19. Install purge pipe P-clip.
20. Install harness bracket to engine.
21. Refit harness fir tree clips to cylinder head.
22. Refit engine breather hose.

23. Install VVT solenoid multiplug, position coil and CMP harness (1x edge clip).
24. Install corner cross brace (torque bolts with vehicle on level ground).
25. Install coil cover.

Installation LH Side

26. Connect breather hose to manifold (quickfit).
27. Connect IAT multiplug.
28. Install injector harness to cam cover (x2).
29. Connect injector multiplugs (x4).
30. Install pipe support bracket (nuts x2, bolts x2).
31. Install harness support bracket (bolt x1, nut x2) release harness clips (fir tree x3).
32. Connect booster hose to manifold and support clip.
33. Connect heater hose from pipe (quick fit).
34. Install heater hose (x2) and throttle body hose (x2) from support bracket.
35. Connect purge line to manifold and into support clip.
36. Connect breather hoses (x2) to cam cover.
37. Feed harness into inner wing area.
38. Install fusebox to bracket.
39. Install earth lead to fusebox.
40. Install battery lead to fusebox (1x nut and rubber cover).
41. Install multiplugs to fuse box.
42. Install fusebox bracket fixings.
43. Install ECM (see Workshop Manual procedure 03.13.ND Module - Power Train Control - RHD - Renew)
44. Install coil cover.
45. Refill coolant (see Workshop Manual procedure 03.03.AD Coolant - Drain and Refill).
46. Install cross brace. (torque bolts with vehicle on level ground).

Intake Manifold Assembly - Remove for Access and Refit (With Engine Removed)

Repair Operation Time (ROT)	
Item	**Code**
Intake Manifold Assembly-Remove for access/Refit	**03.01.DA**

Removal

1. Remove RH coil cover.
2. Disconnect breather hose (quick fit).
3. Release alternator and injector harness fir tree clips (x3) from cylinder head.
4. Remove nut and bolts (x2) securing harness bracket to engine, remove bracket.
5. Release heater hose (clips x2) and EGR vacuum line (clips x2) from bracket.
6. Release alternator and injector harness fir tree clips (x3) from coolant pipe bracket.
7. Disconnect multiplugs from EGR valve, fuel rail pressure sensor and injectors (x4).
8. Remove nuts (x2) and bolts (x2) securing coolant pipe bracket, remove bracket.
9. Disconnect EGR vacuum pipe from sensor and manifold.
10. Remove LH coil cover.
11. Disconnect breather hoses (x2) from LH engine cover.
12. Disconnect purge line from manifold (quickfit) and support clip for access.
13. Disconnect heater hose from pipe (quick fit).
14. Release heater hose (x2) and throttle body hose (x2) from support bracket.
15. Remove bolt and nuts (x2) securing harness support bracket, release harness clips (fir tree x3). Remove bracket.
16. Remove nuts (x2) and bolts (x2) pipe support bracket.
17. Disconnect injector multiplugs (x4).
18. Release injector harness clips (x2) from LH engine cover.
19. Disconnect IAT multiplug.
20. Disconnect breather hose from manifold (quickfit).
21. Disconnect manifold heating hoses (x2).
22. Disconnect throttle body multiplug and harness clip.
23. Disconnect EGR vacuum hose.
24. Loosen and disconnect EGR pipe union from EGR valve.
25. Remove bolts (x2) securing EGR pipe to RH exhaust manifold, remove pipe, discard gasket.
26. Progressively loosen and remove bolts (x 10) securing intake manifold to cylinder heads (see Figure 1).

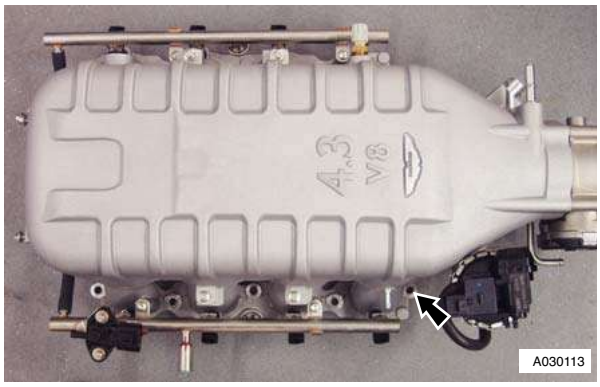

Figure 1

27. Carefully remove intake manifold from cylinder heads.
28. Remove and discard gaskets (x2).

Installation

1. Clean intake manifold and mating faces on cylinder heads.
2. Install new gaskets to cylinder block (glue in place).
3. Install intake manifold (allowing access to install bolt for purge line P-clip).
4. Install and torque tighten intake manifold bolts (x10) in the correct sequence.
5. Clean EGR pipe and mating face on exhaust manifold.

6. Install new gasket on exhaust manifold.
7. Install EGR pipe to exhaust manifold and EGR valve.,
8. Install EGR pipe to EGR valve, install pipe union. Do not torque tighten at this stage.
9. Install and torque tighten bolts (x2), EGR pipe to exhaust manifold. Torque tighten pipe union.
10. Connect EGR vacuum hose.
11. Connect throttle body multiplug and harness clip.
12. Connect manifold heating hoses (x2).
13. Connect EGR vacuum pipe to sensor and manifold.
14. Install coolant pipe bracket, install and torque tighten bolts (x2) and nuts (x2).
15. Connect multiplugs to EGR valve, fuel rail pressure sensor and injectors.
16. Install alternator and injector harness fir tree clips (x3) to coolant pipe bracket.
17. Install heater hose clips (x2) and EGR vacuum lines clips (x2) to bracket.
18. Install harness bracket to engine.
19. Refit harness fir tree clips to cylinder head.
20. Refit engine breather hose.
21. Install VVT solenoid multiplug, position coil and CMP harness (1x edge clip).
22. Install coil cover.
23. Connect breather hose to manifold (quickfit).
24. Connect IAT multiplug.
25. Secure injector harness clips (x2) to LH engine cover.
26. Connect injector multiplugs (x4).
27. Install pipe support bracket, install and tighten nuts (x2 and bolts(x2).
28. Install harness support bracket, install and tighten bolt (x1) and, nut (x1).
29. Install heater hoses (x2) and throttle body hoses (x2) in support bracket.
30. Connect breather hoses (x2) to engine cover.
31. Install coil cover.

RH/LH Cylinder Head Gasket - Renew

Repair Operation Time (ROT)		
Item		**Code**
Cylinder Head Gasket-Renew	RH-LHD	**03.01.GU**
Cylinder Head Gasket-Renew	LH-LHD	**03.01.GV**
Cylinder Head Gasket-Renew	RH-RHD	**03.01.FU**
Cylinder Head Gasket-Renew	LH-RHD	**03.01.FV**

Removal

1. Re-install front subframe to body, install and tighten bolts (x6), remove support trolley.
2. Install and tighten engine mounting nuts (x2).
3. With assistance, remove engine lifting beam (SPX M553D).
4. Remove SAI pump and bracket assembly (see Workshop Manual procedure 03.08.DB/03.08.DJ Pump and Bracket Assembly - Secondary Air Injection - Renew).
5. Disconnect multiplugs (x2) from knock sensors.
6. Disconnect multiplug from camshaft timing sensor.
7. Remove RH/LH exhaust manifold (see Workshop Manual procedure 09.00.CC/09.00.CD Gasket - Exhaust Manifold - RH/LH - Renew).
8. Remove RH/LH intake camshaft (see Workshop Manual procedure 03.09.AT/03.09.AV Camshaft - Intake - RH/LH - Renew).
9. Remove RH exhaust camshaft bearing cap retaining bolts (x10) evenly and in stages (see Figure 1).

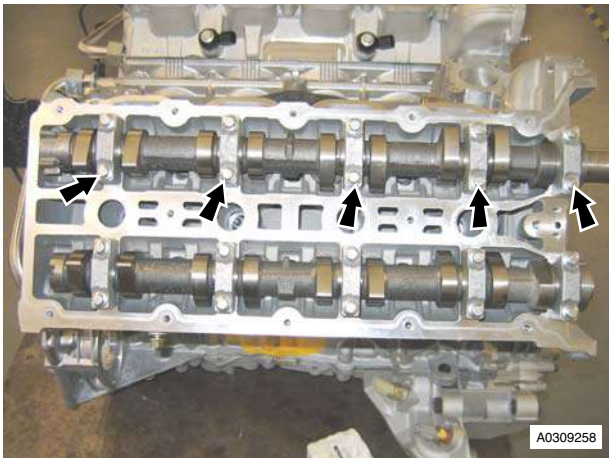

Figure 1

10. Note their orientation and markings and remove the RH exhaust camshaft bearing caps.
11. Remove RH exhaust camshaft (see Figure 2).

Figure 2

12. Remove bolts (x2) securing front end of RH cylinder head to cylinder block.

13. Remove bolts (x10), evenly and in stages securing RH cylinder head to cylinder block (see Figure 3).

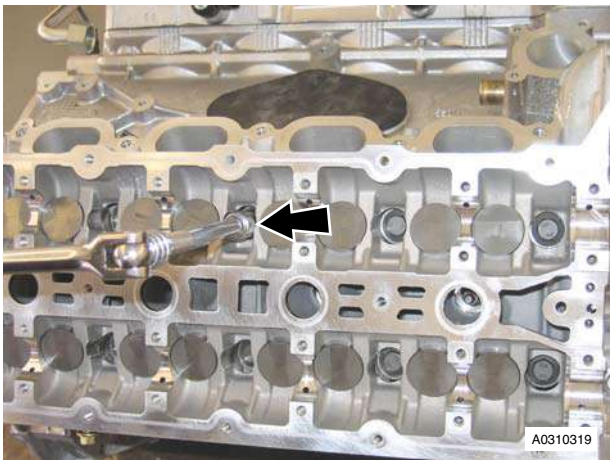

Figure 3

14. With assistance, remove RH cylinder head assembly.
15. Remove and discard cylinder head gasket.

Installation

1. Thoroughly clean RH cylinder head face and retaining bolt pockets.
2. Thoroughly clean RH cylinder block face.
3. Thoroughly clean and dry RH cylinder head retaining bolts.
4. Install new RH cylinder gasket, locate on dowels.
5. With assistance, install RH cylinder head, locate on dowels.
6. Install and torque tighten cylinder head bolts (x12) in the correct sequence.
7. Lubricate RH exhaust camshaft journals, camshaft lobes, bearing surfaces on cylinder head and bearing caps with clean engine oil.
8. Install RH exhaust camshaft, install bearing caps (x5) in their original positions.
9. Install bolts (x10) and torque tighten in the sequence specified.
10. Install sprocket retaining Torx bolt in camshaft.
11. Rotate camshaft accordingly and check each valve clearance using feeler gauges.
12. Remove sprocket retaining Torx bolt.
13. Install RH/LH intake camshaft (see Workshop Manual procedure 03.09.AT/03.09.AV Camshaft - Intake - RH/LH - Renew).
14. Install timing chain tensioning tool (303-532) into RH exhaust camshaft sprocket.
15. Apply a force to the tool (303-532) in an anti-clockwise direction and torque tighten RH sprocket Torx bolts. Remove special tool.
16. Connect multiplug to cam a haft timing sensor.
17. Connect multiplugs (x2) to knock sensors.
18. Install SAI pump and bracket assembly (see Workshop Manual procedure 03.08.DB/03.08.DJ Pump and Bracket Assembly - Secondary Air Injection - Renew).
19. Install RH/LH exhaust manifold (see Workshop Manual procedure 09.00.CC/09.00.CD Gasket - Exhaust Manifold - RH/LH - Renew).
20. With assistance, position engine support beam (SPX M553D) and secure to engine.
21. Position trolley, support front subframe, remove bolts (x6), raise vehicle, remove trolley.
22. Install and torque tighten engine mounting nuts (x2).

RH/LH Cylinder Head - Overhaul

Repair Operation Time (ROT)		
Item		**Code**
Cylinder Head-Overhaul	RH-LHD	**03.01.GX**
Cylinder Head-Overhaul	LH-LHD	**03.01.GY**
Cylinder Head-Overhaul	RH-RHD	**03.01.FX**
Cylinder Head-Overhaul	LH-RHD	**03.01.FY**

1. Remove cylinder head gasket - RH (see Workshop Manual procedure 03.01.GU Gasket - Cylinder Head - RH - Renew).
2. Remove Torx screws (x2) securing EGR tube to cylinder head, remove tube.
3. Remove and discard gasket.
4. Remove bolt securing camshaft timing sensor to cylinder head, remove sensor.
5. Remove bolts (x2) securing knock sensors (x2) to cylinder head, remove sensors.
6. Remove spark plugs from cylinder head.
7. Remove selective tappet buckets, keep in their fitted order.
8. Position valve spring compressor, compress valve spring (see Figure 1).

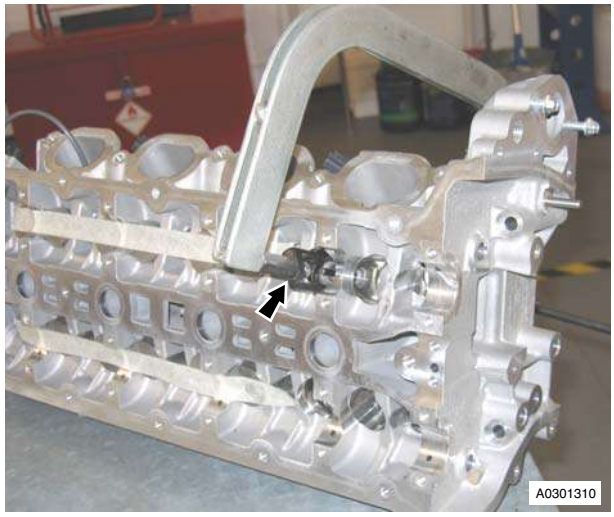

Figure 1

9. Remove collets (x2), release/remove spring compressor, collect collar and valve spring.
10. Remove valve from cylinder.
11. Remove valve stem oil seal.
12. Repeat procedure for remaining valve assemblies.
13. Keep valves and springs in their fitted order.

14. Inspect cylinder head face for warpage, across centre and from corner to corner.
15. Check condition and measure free length of valve springs.
16. Decarbonise combustion chambers and exhaust ports.
17. Measure valve stem diameters.
18. Use new valves and check valve guide clearance.

Installation

1. Clean cylinder head face and inlet/exhaust manifold faces. Use and air line to completely dry cylinder head surfaces.
2. Lubricate and install intake and exhaust valves (x16).
3. Install valve stem oil seals.
4. Install valve springs and collars.
5. Using valve spring compressor, compress valve spring, install collets.
6. Release/remove spring compressor.
7. Repeat procedure for remaining valve assemblies.
8. Install selective tappet buckets in their original fitted positions.
9. Lubricate intake camshaft bearings and journals with clean engine oil.
10. Install intake camshaft, install bearing caps (x5), install bolts (x10).
11. Torque tighten bearing cap bolts in the correct sequence.
12. Lubricate exhaust camshaft bearings and journals with clean engine oil.
13. Install exhaust camshaft, install bearing caps (x5), install bolts (x10).
14. Torque tighten bearing cap bolts in the correct sequence.
15. Install camshaft sprocket Torx bolts in intake and exhaust camshafts.
16. Rotate intake camshaft clockwise, check and log each valve clearance using feeler gauges.
17. Calculate the correct tappet bucket grade.
18. Repeat procedure for exhaust valve clearances.
19. Remove bearing cap bolts (x10), remove bearing caps (x5), remove intake camshaft.
20. Remove tappet buckets, install selected tappet buckets.
21. Repeat procedure for exhaust valve clearances.
22. Install intake camshaft, install bearing caps (x5), install bolts (x10).
23. Torque tighten bearing cap bolts in the correct sequence.
24. Rotate intake camshaft clockwise, re-check each valve clearance using feeler gauges.
25. Repeat procedure and re-check exhaust valve clearances.
26. Remove camshaft sprocket Torx bolts (x2).
27. Remove bearing cap bolts (x10), remove bearing caps (x5), remove intake camshaft.
28. Remove bearing cap bolts (x10), remove bearing caps (x5), remove exhaust camshaft.
29. Clean EGR tube.
30. Install new gasket, install EGR tube to cylinder head, install and torque tighten Torx screws (x2).
31. Clean Knock sensors (x2).
32. Install knock sensors (x2) to cylinder head, install and torque tighten bolts (x2).
33. Clean camshaft timing sensor.
34. Install camshaft timing sensor, install and torque tighten bolt.
35. Install spark plugs.
36. Install cylinder head gasket RH (see Workshop Manual procedure 03.01.GU Gasket - Cylinder Head - RH - Renew).

Cylinder Head (Engine Set) - Overhaul

Repair Operation Time (ROT)		
Item		**Code**
Cylinder Head (Engine Set)-Overhaul	LHD	**03.01.GZ**
Cylinder Head (Engine Set)-Overhaul	RHD	**03.01.FZ**

Removal

1. Remove cylinder head gaskets - engine set (see Workshop Manual procedure 03.10.AL Gasket - Cylinder Head - Engine Set - Renew).
2. Remove Torx screws (x4) securing EGR tubes to cylinder heads, remove tubes.
3. Remove and discard gaskets.
4. Remove bolts (x2) securing camshaft timing sensors to cylinder heads, remove sensors.
5. Remove bolts (x4) securing knock sensors (x4) to cylinder heads, remove sensors.
6. Remove spark plugs from cylinder heads (x8).
7. Remove selective tappet buckets, keep in their fitted order.
8. Position valve spring compressor, compress valve springs.
9. Remove collets, release/remove spring compressor, collect collars and valve springs.
10. Remove valves from cylinder heads.
11. Remove valve stem oil seals.
12. Keep valves and springs in their fitted order.
13. Inspect cylinder head face for warpage, across centre and from corner to corner.
14. Check condition and measure free length of valve springs.
15. Decarbonise combustion chambers and exhaust ports.
16. Use new valves and check valve guide clearances.

Installation

1. Clean cylinder head face and inlet/exhaust manifold faces. Use and air line to completely dry cylinder head surfaces.

2. Lubricate and install intake and exhaust valves (x16).
3. Install valve stem oil seals.
4. Install valve springs and collars.
5. Using valve spring compressor, compress valve spring, install collets.
6. Release/remove spring compressor.
7. Install selective tappet buckets in their original fitted positions.
8. Lubricate intake and exhaust camshaft bearings and journals with clean engine oil.
9. Install intake and exhaust camshafts, install bearing caps (x20), install bolts (x40).
10. Torque tighten bearing cap bolts in the correct sequence.
11. Install camshaft sprocket Torx bolts in intake and exhaust camshafts.
12. Rotate intake camshaft clockwise, check and log each valve clearance using feeler gauges.
13. Calculate the correct tappet bucket grade.
14. Remove bearing cap bolts (x40), remove bearing caps (x20), remove intake and exhaust camshafts.
15. Remove tappet buckets, install selected tappet buckets.
16. Install intake and exhaust camshafts, install bearing caps (x20), install bolts (x40).
17. Torque tighten bearing cap bolts in the correct sequence.
18. Rotate intake and exhaust camshafts clockwise, re-check each valve clearance using feeler gauges.
19. Remove camshaft sprocket Torx bolts (x4).
20. Remove bearing cap bolts (x40), remove bearing caps (x20), remove intake and exhaust camshafts.
21. Clean EGR tubes.
22. Install new gaskets, install EGR tubes to cylinder heads, install and torque tighten Torx screws (x4).
23. Clean Knock sensors (x4).
24. Install knock sensors (x4) to cylinder head, install and torque tighten bolts (x4).
25. Clean camshaft timing sensors.
26. Install camshaft timing sensor, install and torque tighten bolt.
27. Install spark plugs.
28. Install cylinder head gaskets - engine set (see Workshop Manual procedure 03.10.AL Gasket - Cylinder Head - Engine Set - Renew).

Valve Set (Engine Set) - Renew (including de-coke)

Repair Operation Time (ROT)		
Item		**Code**
Valve Set (Engine Set)-Renew	LHD	**03.01.HA**
Valve Set (Engine Set)-Renew	RHD	**03.01.JA**

Removal

1. Remove cylinder head gaskets - engine set (see Workshop Manual procedure 03.10.AL Gasket - Cylinder Head - Engine Set - Renew).
2. Remove spark plugs (x8).
3. Remove selective tappet buckets, keep in their fitted order.
4. Position valve spring compressor, compress valve spring.
5. Remove collets, release/remove spring compressor, collect collar and valve spring.
6. Remove valves from cylinder.
7. Remove valve stem oil seals.
8. Keep valves and springs in their fitted order.
9. Inspect cylinder head face for warpage, across centre and from corner to corner.
10. Check condition and measure free length of valve springs.
11. Decarbonise combustion chambers and exhaust ports.
12. Use new valves and check valve guide clearances.

Installation

1. Clean cylinder head face and inlet/exhaust manifold faces. Use and air line to completely dry cylinder head surfaces.
2. Lubricate and install intake and exhaust valves (x32).
3. Install valve stem oil seals.
4. Install valve springs and collars.
5. Using valve spring compressor, compress valve spring, install collets.
6. Release/remove spring compressor.
7. Install selective tappet buckets in their original fitted positions.
8. Lubricate intake and exhaust camshaft bearings and journals with clean engine oil.
9. Install intake and exhaust camshafts, install bearing caps (x20), install bolts (x40).
10. Torque tighten bearing cap bolts in the correct sequence.
11. Install camshaft sprocket Torx bolts in intake and exhaust camshafts.
12. Rotate intake camshaft clockwise, check and log each valve clearance using feeler gauges.
13. Calculate the correct tappet bucket grade.
14. Remove bearing cap bolts (x40), remove bearing caps (x20), remove intake and exhaust camshafts.
15. Remove tappet buckets, install selected tappet buckets.
16. Install intake and exhaust camshafts, install bearing caps (x20), install bolts (x40).
17. Torque tighten bearing cap bolts in the correct sequence.
18. Rotate intake and exhaust camshafts clockwise, re-check each valve clearance using feeler gauges.
19. Remove camshaft sprocket Torx bolts (x4).

20. Remove bearing cap bolts (x40), remove bearing caps (x20), remove intake and exhaust camshafts.
21. Install spark plugs.
22. Install cylinder head gaskets - engine set (see Workshop Manual procedure 03.10.AL Gasket - Cylinder Head - Engine Set - Renew).

Inlet Valve (Set) - Renew

Repair Operation Time (ROT)		
Item		**Code**
Inlet Valve (Set)-Renew	LHD	**03.01.HB**
Inlet Valve (Set)-Renew	RHD	**03.01.JB**

Removal

1. Remove cylinder head gaskets - engine set (see Workshop Manual procedure 03.10.AL Gasket - Cylinder Head - Engine Set - Renew).
2. Remove spark plugs from cylinder head.
3. Remove intake selective tappet buckets from cylinder heads, keep in their fitted order.
4. Position valve spring compressor, compress valve springs (see Figure 1).

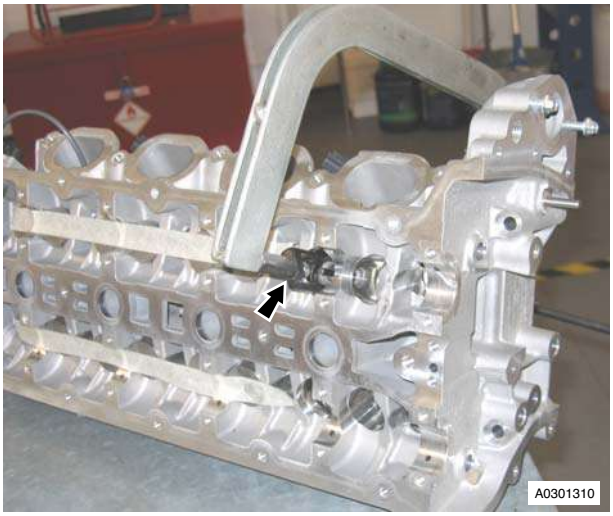

Figure 1

5. Remove collets (x2), release/remove spring compressor, collect collar and valve spring.
6. Remove intake valves from cylinder heads.
7. Remove valve stem oil seas.
8. Keep intake valves and springs in their fitted order.
9. Inspect condition and measure free length of valve springs.
10. Use new valves and check valve guide clearance.

Installation

1. Clean cylinder head face and inlet/exhaust manifold faces. Use and air line to completely dry cylinder head surfaces.
2. Lubricate and install intake valves (x16).
3. Install valve stem oil seals.
4. Install valve springs and collars.
5. Using valve spring compressor, compress valve spring, install collets.
6. Release/remove spring compressor.
7. Install intake selective tappet buckets in their original fitted positions.
8. Lubricate intake camshaft bearings and journals with clean engine oil.
9. Install intake camshafts, install bearing caps (x10), install bolts (x20).
10. Torque tighten bearing cap bolts (x20) in the correct sequence.
11. Install camshaft sprocket Torx bolts in each intake camshaft.
12. Rotate each intake camshaft clockwise, check and log each valve clearance using feeler gauges.
13. Calculate the correct tappet bucket grade.
14. Remove bearing cap bolts (x20), remove bearing caps (x10), remove both intake camshafts.
15. Remove tappet buckets, install selected tappet buckets.
16. Install both intake camshafts, install bearing caps (x10), install bolts (x20).
17. Torque tighten bearing cap bolts in the correct sequence.
18. Rotate intake camshafts clockwise, re-check each valve clearance using feeler gauges.
19. Remove intake camshaft sprocket Torx bolts (x2).
20. Remove bearing cap bolts (x20), remove bearing caps (x10), remove both intake camshafts.
21. Install spark plugs.
22. Install cylinder head gaskets - engine set (see Workshop Manual procedure 03.10.AL Gasket - Cylinder Head - Engine Set - Renew).

Exhaust Valve (Set) - Renew

Repair Operation Time (ROT)		
Item		**Code**
Exhaust Valve (Set)-Renew	LHD	**03.01.HC**
Exhaust Valve (Set)-Renew	RHD	**03.01.JC**

Removal

1. Remove cylinder head gaskets - engine set (see Workshop Manual procedure 03.10.AL Gasket - Cylinder Head - Engine Set - Renew).
2. Remove spark plugs from cylinder head.
3. Remove exhaust selective tappet buckets from cylinder heads, keep in their fitted order.

4. Position valve spring compressor, compress valve springs (see Figure 1).

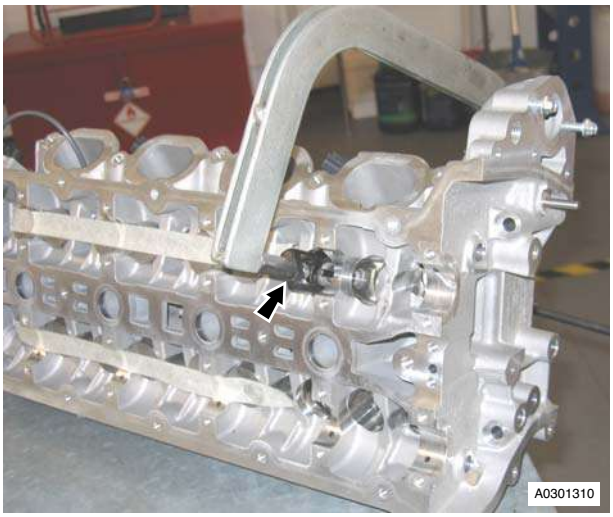

Figure 1

5. Remove collets (x2), release/remove spring compressor, collect collar and valve spring.
6. Remove exhaust valves from cylinder heads.
7. Remove valve stem oil seas.
8. Keep exhaust valves and springs in their fitted order.
9. Inspect condition and measure free length of valve springs.
10. Use new valves and check valve guide clearance.

Installation

1. Clean cylinder head face and inlet/exhaust manifold faces. Use and air line to completely dry cylinder head surfaces.
2. Lubricate and install exhaust valves (x16).
3. Install valve stem oil seals.
4. Install valve springs and collars.
5. Using valve spring compressor, compress valve spring, install collets.
6. Release/remove spring compressor.
7. Install exhaust selective tappet buckets in their original fitted positions.
8. Lubricate exhaust camshaft bearings and journals with clean engine oil.
9. Install exhaust camshafts, install bearing caps (x10), install bolts (x20).
10. Torque tighten bearing cap bolts (x20) in the correct sequence.
11. Install camshaft sprocket Torx bolts in each exhaust camshaft.
12. Rotate each exhaust camshaft clockwise, check and log each valve clearance using feeler gauges.
13. Calculate the correct tappet bucket grade.
14. Remove bearing cap bolts (x20), remove bearing caps (x10), remove both exhaust camshafts.
15. Remove tappet buckets, install selected tappet buckets.
16. Install both exhaust camshafts, install bearing caps (x10), install bolts (x20).
17. Torque tighten bearing cap bolts in the correct sequence.
18. Rotate exhaust camshafts clockwise, re-check each valve clearance using feeler gauges.
19. Remove exhaust camshaft sprocket Torx bolts (x2).
20. Remove bearing cap bolts (x20), remove bearing caps (x10), remove both exhaust camshafts.
21. Install spark plugs.
22. Install cylinder head gaskets - engine set (see Workshop Manual procedure 03.10.AL Gasket - Cylinder Head - Engine Set - Renew).

Spring (Valve Set) - Renew

Repair Operation Time (ROT)		
Item		**Code**
Spring (Valve Set)-Renew	LHD	**03.01.HD**
Spring (Valve Set)-Renew	RHD	**03.01.JD**

Removal

1. Remove cylinder head gaskets - engine set (see Workshop Manual procedure 03.10.AL Gasket - Cylinder Head - Engine Set - Renew).
2. Remove spark plugs from cylinder heads (x8).
3. Remove selective tappet buckets, keep in their fitted order.
4. Position valve spring compressor, compress valve springs (see Figure 1).

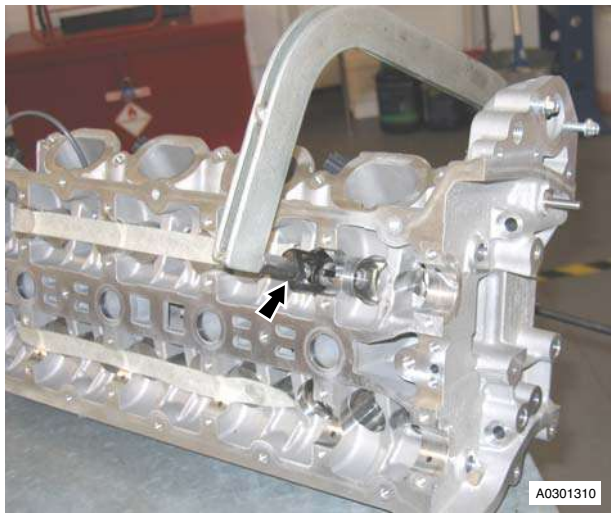

Figure 1

5. Remove collets, release/remove spring compressor, collect collars and valve springs.
6. Inspect cylinder head face for warpage, across centre and from corner to corner.

Installation

1. Clean cylinder head face and inlet/exhaust manifold faces. Use and air line to completely dry cylinder head surfaces.
2. Install valve springs and collars.

3. Using valve spring compressor, compress valve spring, install collets.
4. Release/remove spring compressor.
5. Install selective tappet buckets in their original fitted positions.
6. Lubricate intake and exhaust camshaft bearings and journals with clean engine oil.
7. Install intake and exhaust camshafts, install bearing caps (x20), install bolts (x40).
8. Torque tighten bearing cap bolts in the correct sequence.
9. Install camshaft sprocket Torx bolts in intake and exhaust camshafts.
10. Rotate intake camshaft clockwise, check and log each valve clearance using feeler gauges.
11. Calculate the correct tappet bucket grade.
12. Remove bearing cap bolts (x40), remove bearing caps (x20), remove intake and exhaust camshafts.
13. Remove tappet buckets, install selected tappet buckets.
14. Install intake and exhaust camshafts, install bearing caps (x20), install bolts (x40).
15. Torque tighten bearing cap bolts in the correct sequence.
16. Rotate intake and exhaust camshafts clockwise, re-check each valve clearance using feeler gauges.
17. Remove camshaft sprocket Torx bolts (x4).
18. Remove bearing cap bolts (x40), remove bearing caps (x20), remove intake and exhaust camshafts.
19. Install spark plugs.
20. Install cylinder head gaskets - engine set (see Workshop Manual procedure 03.10.AL Gasket - Cylinder Head - Engine Set - Renew).

Spring (Inlet Valve Set) - Renew

Repair Operation Time (ROT)		
Item		**Code**
Spring (Inlet Valve Set)-Renew	LHD	**03.01.HE**
Spring (Inlet Valve Set)-Renew	RHD	**03.01.JE**

Removal

1. Remove cylinder head gaskets - engine set (see Workshop Manual procedure 03.10.AL Gasket - Cylinder Head - Engine Set - Renew).
2. Remove spark plugs from cylinder heads (x8).
3. Remove intake selective tappet buckets, keep in their fitted order.
4. Position valve spring compressor, compress valve springs (see Figure).

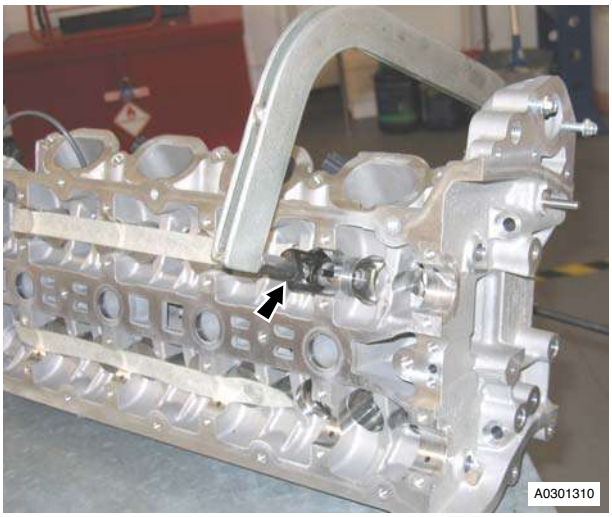

Figure 1

5. Remove collets, release/remove spring compressor, collect collars and valve springs.
6. Inspect cylinder head face for warpage, across centre and from corner to corner.

Installation

1. Clean cylinder head face and inlet/exhaust manifold faces. Use and air line to completely dry cylinder head surfaces.
2. Install intake valve springs and collars.
3. Using valve spring compressor, compress valve spring, install collets.
4. Release/remove spring compressor.
5. Install intake selective tappet buckets in their original fitted positions.
6. Lubricate both intake camshaft bearings and journals with clean engine oil.
7. Install both intake camshafts, install bearing caps (x10), install bolts (x20).
8. Torque tighten bearing cap bolts in the correct sequence.
9. Install camshaft sprocket Torx bolts in both intake camshafts.
10. Rotate intake camshafts clockwise, check and log each valve clearance using feeler gauges.
11. Calculate the correct tappet bucket grade.
12. Remove bearing cap bolts (x20), remove bearing caps (x10), remove both intake camshafts.
13. Remove tappet buckets, install selected tappet buckets.
14. Install intake camshafts, install bearing caps (x10), install bolts (x20).
15. Torque tighten bearing cap bolts in the correct sequence.
16. Rotate both intake camshafts clockwise, re-check each valve clearance using feeler gauges.
17. Remove camshaft sprocket Torx bolts (x4).

18. Remove bearing cap bolts (x20), remove bearing caps (x10), remove both intake camshafts.
19. Install spark plugs.
20. Install cylinder head gaskets - engine set (see Workshop Manual procedure 03.10.AL Gasket - Cylinder Head - Engine Set - Renew).

Inlet and Exhaust Valve Seal (Engine Set) - Renew

Repair Operation Time (ROT)		
Item		**Code**
Inlet and Exhaust Valve Seal (Engine Set)-Renew	LHD	**03.01.HF**
Inlet and Exhaust Valve Seal (Engine Set)-Renew	RHD	**03.01.JF**

Removal

1. Remove cylinder head gaskets - engine set (see Workshop Manual procedure 03.10.AL Gasket - Cylinder Head - Engine Set - Renew).
2. Remove spark plugs (x8).
3. Remove selective tappet buckets, keep in their fitted order.
4. Position valve spring compressor, compress valve spring (see Figure 1).

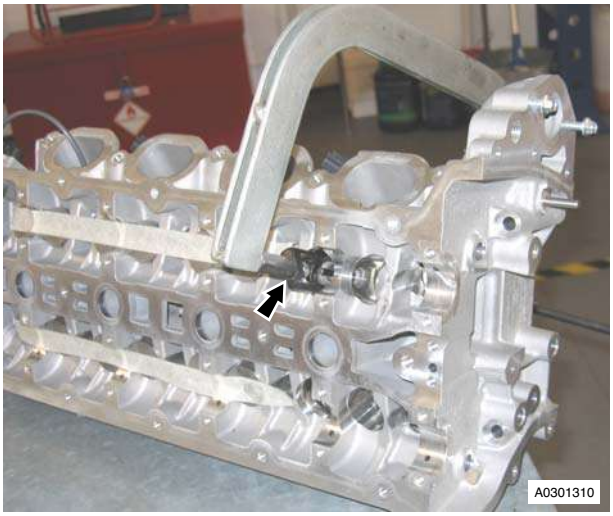

Figure 1

5. Remove collets (x2), release/remove spring compressor, collect collar and valve spring.
6. Remove valves from cylinder.
7. Remove valve stem oil seals.
8. Keep valves and springs in their fitted order.
9. Inspect cylinder head face for warpage, across centre and from corner to corner.

Installation

1. Clean cylinder head face and inlet/exhaust manifold faces. Use and air line to completely dry cylinder head surfaces.
2. Lubricate and install intake and exhaust valves (x32).
3. Install valve stem oil seals.
4. Install valve springs and collars.
5. Using valve spring compressor, compress valve spring, install collets.
6. Release/remove spring compressor.
7. Install selective tappet buckets in their original fitted positions.
8. Lubricate intake and exhaust camshaft bearings and journals with clean engine oil.
9. Install intake and exhaust camshafts, install bearing caps (x20), install bolts (x40).
10. Torque tighten bearing cap bolts in the correct sequence.
11. Install camshaft sprocket Torx bolts in intake and exhaust camshafts.
12. Rotate intake camshaft clockwise, check and log each valve clearance using feeler gauges.
13. Calculate the correct tappet bucket grade.
14. Remove bearing cap bolts (x40), remove bearing caps (x20), remove intake and exhaust camshafts.
15. Remove tappet buckets, install selected tappet buckets.
16. Install intake and exhaust camshafts, install bearing caps (x20), install bolts (x40).
17. Torque tighten bearing cap bolts in the correct sequence.
18. Rotate intake and exhaust camshafts clockwise, re-check each valve clearance using feeler gauges.
19. Remove camshaft sprocket Torx bolts (x4).
20. Remove bearing cap bolts (x40), remove bearing caps (x20), remove intake and exhaust camshafts.
21. Install spark plugs.
22. Install cylinder head gaskets - engine set (see Workshop Manual procedure 03.10.AL Gasket - Cylinder Head - Engine Set - Renew

Spring (Valve Exhaust Set) - Renew

Repair Operation Time (ROT)		
Item		**Code**
Spring (Valve Exhaust Set)-Renew	LHD	**03.01.HG**
Spring (Valve Exhaust Set)-Renew	RHD	**03.01.JG**

Removal

1. Remove cylinder head gaskets - engine set (see Workshop Manual procedure 03.10.AL Gasket - Cylinder Head - Engine Set - Renew).
2. Remove spark plugs from cylinder heads (x8).
3. Remove exhaust selective tappet buckets, keep in their fitted order.

4. Position valve spring compressor, compress valve springs (see Figure).

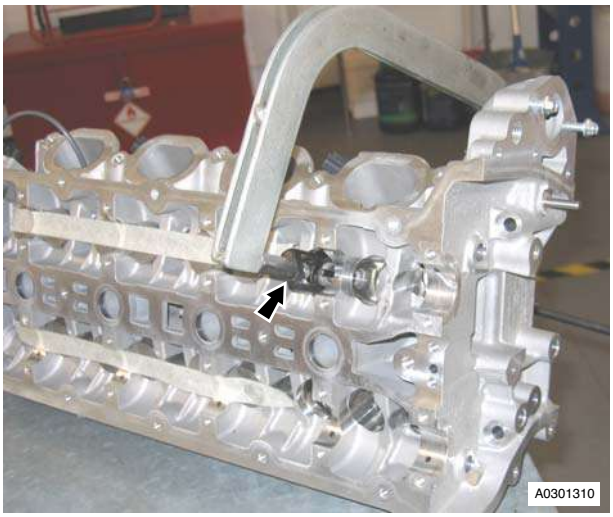

Figure 1

5. Remove collets, release/remove spring compressor, collect collars and valve springs.
6. Inspect cylinder head face for warpage, across centre and from corner to corner.

Installation

1. Clean cylinder head face and inlet/exhaust manifold faces. Use and air line to completely dry cylinder head surfaces.
2. Install exhaust valve springs and collars.
3. Using valve spring compressor, compress valve spring, install collets.
4. Release/remove spring compressor.
5. Install exhaust selective tappet buckets in their original fitted positions.
6. Lubricate both exhaust camshaft bearings and journals with clean engine oil.
7. Install both exhaust camshafts, install bearing caps (x10), install bolts (x20).
8. Torque tighten bearing cap bolts in the correct sequence.
9. Install camshaft sprocket Torx bolts in both exhaust camshafts.
10. Rotate exhaust camshafts clockwise, check and log each valve clearance using feeler gauges.
11. Calculate the correct tappet bucket grade.
12. Remove bearing cap bolts (x20), remove bearing caps (x10), remove both exhaust camshafts.
13. Remove tappet buckets, install selected tappet buckets.
14. Install exhaust camshafts, install bearing caps (x10), install bolts (x20).
15. Torque tighten bearing cap bolts in the correct sequence.
16. Rotate both exhaust camshafts clockwise, re-check each valve clearance using feeler gauges.
17. Remove camshaft sprocket Torx bolts (x4).
18. Remove bearing cap bolts (x20), remove bearing caps (x10), remove both exhaust camshafts.
19. Install spark plugs.
20. Install cylinder head gaskets - engine set (see Workshop Manual procedure 03.10.AL Gasket - Cylinder Head - Engine Set - Renew).

RH/LH Cylinder Head Gasket - Renew (with Engine Removed)

Repair Operation Time (ROT)		
Item		**Code**
Cylinder Head Gasket-Renew	RH	**03.01.HU**
Cylinder Head Gasket-Renew	LH	**03.01.HV**

Removal

1. Remove SAI pump and bracket assembly (see Workshop Manual procedure 03.08.EB Pump and Bracket Assembly - Secondary Air Injection - Renew).
2. Disconnect multiplugs (x2) from knock sensors.
3. Disconnect multiplug from camshaft timing sensor.
4. Remove nuts (x8) securing RH/LH exhaust manifold to cylinder head.
5. Remove exhaust manifold, remove and discard gasket.
6. Remove RH/LH intake camshaft (see Workshop Manual procedure 03.09.BT/03.09.BV Camshaft - Intake - RH/LH - Renew With Engine Removed).
7. Remove RH exhaust camshaft bearing cap retaining bolts (x10) evenly and in stages (see Figure)

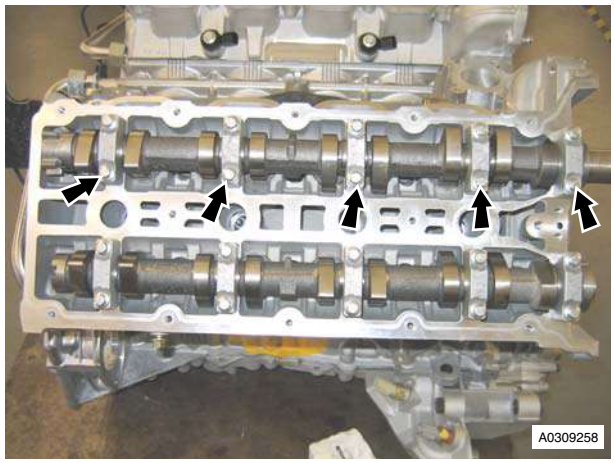

Figure 1

8. Note their orientation and markings and remove the RH/LH exhaust camshaft bearing caps.

9. Remove RH/LH exhaust camshaft (see Figure 2).

Figure 2

10. Remove bolts (x2) securing front end of RH/LH cylinder head to cylinder block.
11. Remove bolts (x10), evenly and in stages securing RH/LH cylinder head to cylinder block (see Figure 3).

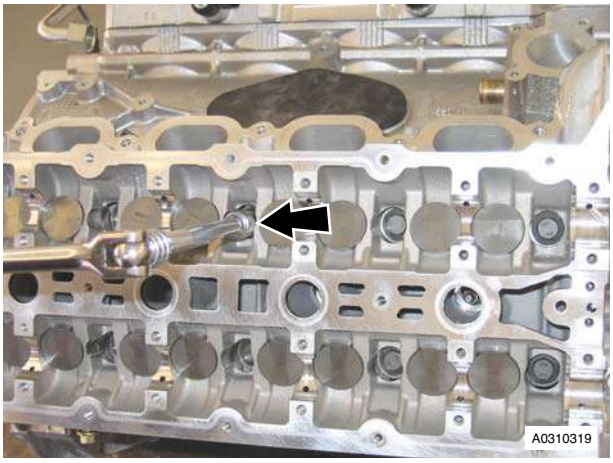

Figure 3

12. With assistance, remove RH/LH cylinder head assembly.
13. Remove and discard cylinder head gasket.

Installation

1. Thoroughly clean RH/LH cylinder head face and retaining bolt pockets.
2. Thoroughly clean RH/LH cylinder block face.
3. Thoroughly clean and dry RH cylinder head retaining bolts.
4. Install new RH/LH cylinder gasket, locate on dowels.
5. With assistance, install RH/LH cylinder head, locate on dowels.
6. Install and torque tighten cylinder head bolts (x12) in the correct sequence.
7. Lubricate RH exhaust camshaft journals, camshaft lobes, bearing surfaces on cylinder head and bearing caps with clean engine oil.
8. Install RH exhaust camshaft, install bearing caps (x5) in their original positions.
9. Install bolts (x10) and torque tighten in the sequence specified.
10. Install sprocket retaining Torx bolt in camshaft.
11. Rotate camshaft accordingly and check each valve clearance using feeler gauges.
12. Remove sprocket retaining Torx bolt.
13. Install RH intake camshaft (see Workshop Manual procedure (03.09.BT/03.09.BV) Camshaft - Intake - RH/LH - Renew With Engine Removed).
14. Install timing chain tensioning tool (303-532) into RH/LH exhaust camshaft sprocket.
15. Apply a force to the tool (303-532) in an anti-clockwise direction and torque tighten RH/LH sprocket Torx bolts. Remove special tool.
16. Connect multiplug to camshaft timing sensor.
17. Connect multiplugs (x2) to knock sensors.
18. Clean RH/LH exhaust manifold.
19. Install new RH/LH exhaust manifold gasket, install exhaust manifold.
20. Install and torque tighten RH/LH exhaust manifold nuts (x8).
21. Install SAI pump and bracket assembly (see Workshop Manual procedure 03.08.EB Pump and Bracket Assembly - Secondary Air Injection - Renew).

Cylinder Head Gasket (Engine Set) - Renew (with Engine Removed)

Repair Operation Time (ROT)	
Item	**Code**
Cylinder Head Gasket (Engine Set)- Renew	**03.01.HW**

Removal

1. Remove SAI pump and bracket assembly (see Workshop Manual procedure 03.08.EB Pump and Bracket Assembly - Secondary Air Injection - Renew).
2. Disconnect multiplugs (x4) from LH and RH knock sensors.
3. Disconnect multiplugs (x2) from LH and RH camshaft timing sensors.
4. Remove nuts (x8) securing LH exhaust manifold to cylinder head.
5. Remove LH exhaust manifold, remove and discard gasket.
6. Remove LH intake camshaft (see Workshop Manual procedure 03.09.BV Camshaft - Intake - LH - Renew With Engine Removed).

7. Remove LH exhaust camshaft bearing cap retaining bolts (x10) evenly and in stages (see Figure).

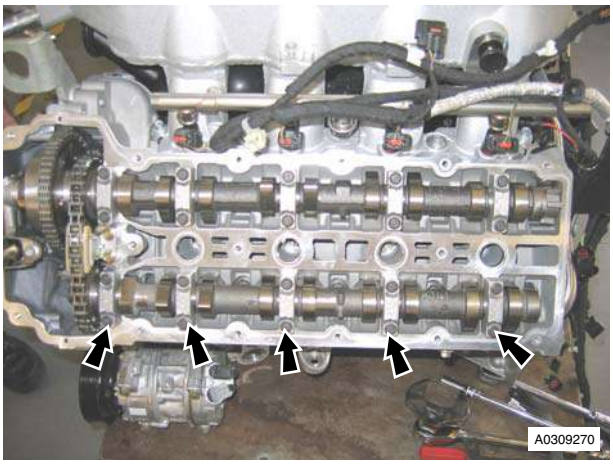

Figure 1

8. Note their orientation and markings and remove the LH exhaust camshaft bearing caps.
9. Remove LH exhaust camshaft (see Figure 2).

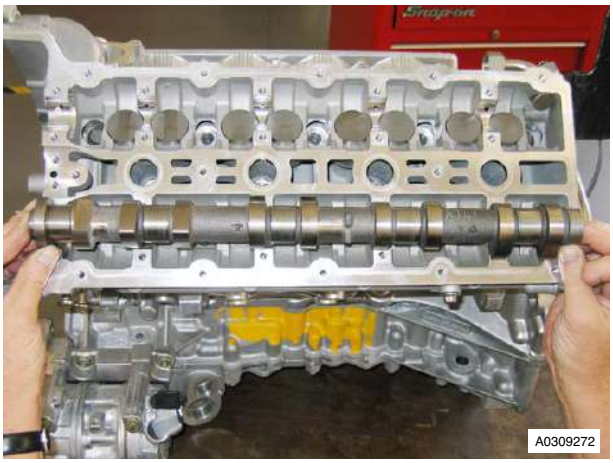

Figure 2

10. Remove bolts (x2) securing front end of LH cylinder head to cylinder block.
11. Remove bolts (x10), evenly and in stages securing LH cylinder head to cylinder block (see Figure 3).

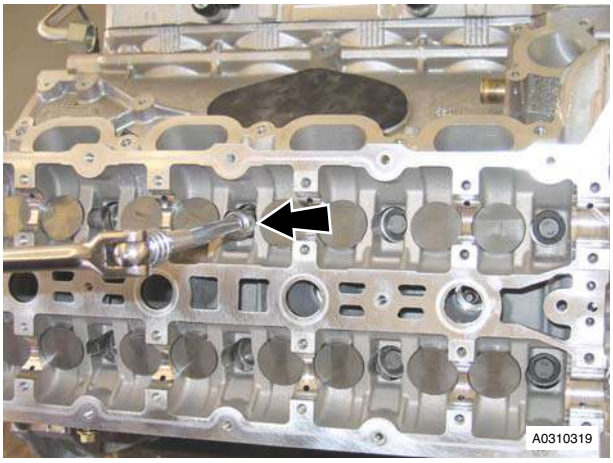

Figure 3

12. With assistance, remove LH cylinder head assembly.
13. Remove and discard cylinder head gasket.
14. Remove nuts (x8) securing RH exhaust manifold to cylinder head.
15. Remove LH exhaust manifold, remove and discard gasket.
16. Remove Torx bolts (x2), spacer on exhaust Torx bolt, securing RH intake and exhaust camshaft sprockets to camshafts (see Figure 4).

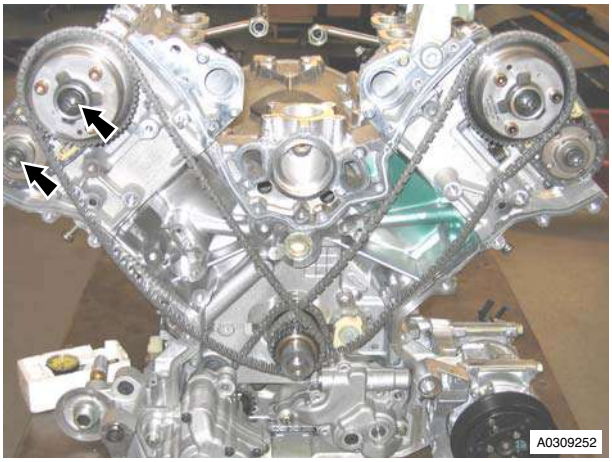

Figure 4

17. Remove bolts (x2) securing RH secondary timing chain tensioner to cylinder head (see Figure 5).

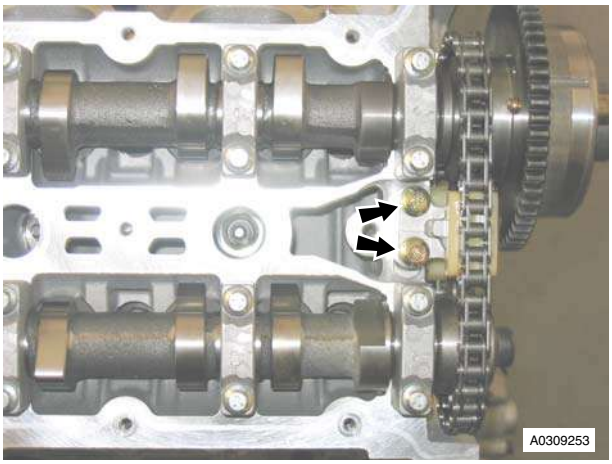

Figure 5

18. Remove RH camshaft sprockets complete with timing chain and tensioner from camshafts (see Figure 6).

Figure 6

19. Remove bolts (x3) securing tool (303-1215) to cylinder head, remove special tool (see Figure 7).

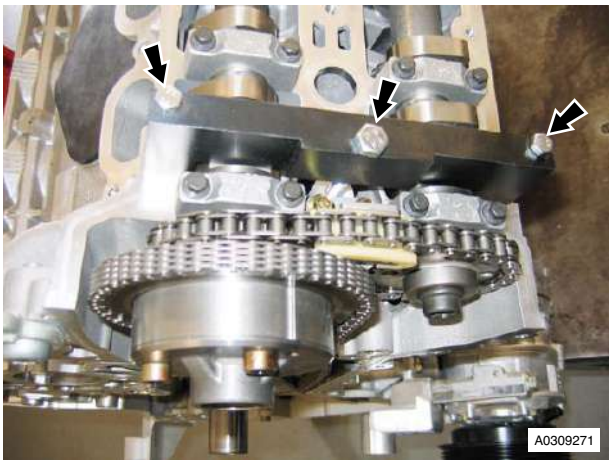

Figure 7

20. Remove RH intake camshaft bearing cap retaining bolts (x10) evenly and in stages (see Figure 8).

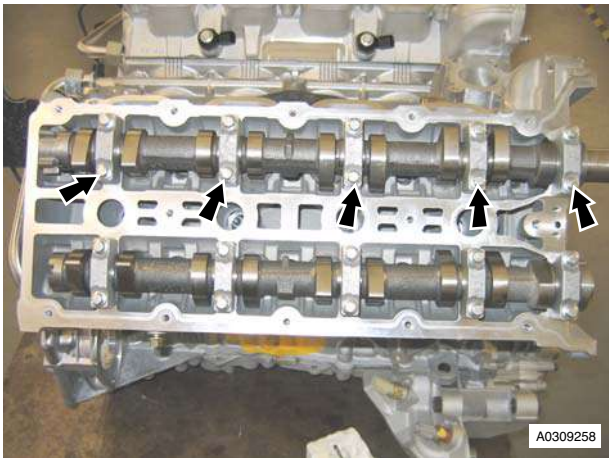

Figure 8

21. Note their orientation and markings and remove the RH intake camshaft bearing caps.
22. Remove RH intake camshaft (see Figure 9).

Figure 9

23. Remove RH exhaust camshaft bearing cap retaining bolts (x10) evenly and in stages (see Figure 10).

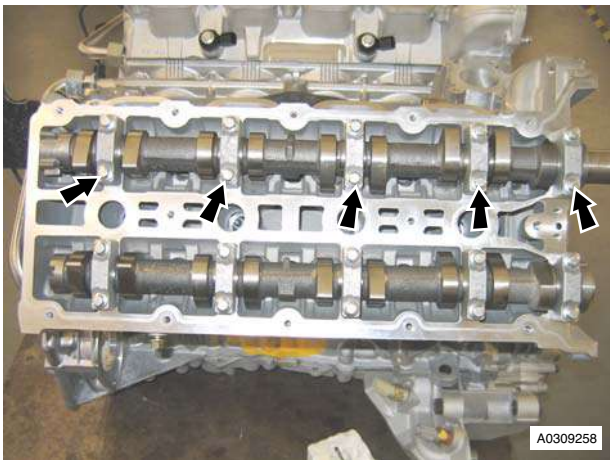

Figure 10

24. Note their orientation and markings and remove the RH exhaust camshaft bearing caps.
25. Remove RH exhaust camshaft (see Figure 11).

Figure 11

26. Remove bolts (x2) securing front end of RH cylinder head to cylinder block.
27. Remove bolts (x10), evenly and in stages securing RH cylinder head to cylinder block (see Figure 12).

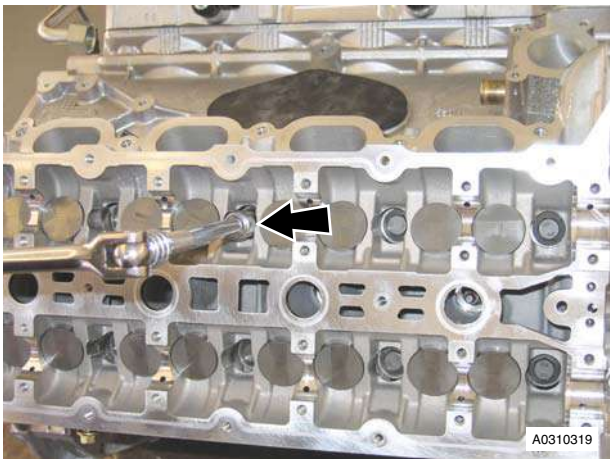

Figure 12

28. With assistance, remove RH cylinder head assembly.
29. Remove and discard cylinder head gasket.

Installation

1. Thoroughly clean LH and RH cylinder head faces and retaining bolt pockets.
2. Thoroughly clean LH and RH cylinder block faces.
3. Thoroughly clean and dry LH and RH cylinder head retaining bolts.
4. Install new RH cylinder gasket, locate on dowels.
5. With assistance, install RH cylinder head, locate on dowels.
6. Install and torque tighten cylinder head bolts (x12) in the correct sequence.
7. Lubricate camshaft journals, camshaft lobes, bearing surfaces on cylinder head and bearing caps with clean engine oil.
8. Install RH exhaust camshaft, install bearing caps (x5) in their original positions.
9. Install bolts (x10) and torque tighten in the sequence specified.
10. Install sprocket retaining Torx bolt in camshaft.
11. Rotate camshaft accordingly and check each valve clearance using feeler gauges.
12. Repeat procedure and install RH intake camshaft.
13. Remove sprocket retaining Torx bolt.
14. Rotate RH intake and exhaust camshafts until timing flats on each camshaft face uppermost.
15. Install tool (303-530) to RH cylinder head to secure camshafts, install and tighten bolts (x3).
16. Install new LH cylinder gasket, locate on dowels.
17. With assistance, install LH cylinder head, locate on dowels.
18. Install and torque tighten cylinder head bolts (x12) in the correct sequence.
19. Lubricate LH exhaust camshaft journals, camshaft lobes, bearing surfaces on cylinder head and bearing caps with clean engine oil.
20. Install LH exhaust camshaft, install bearing caps (x5) in their original positions.
21. Install bolts (x10) and torque tighten in the sequence specified.
22. Install sprocket retaining Torx bolt in LH exhaust camshaft.
23. Rotate LH exhaust camshaft accordingly and check each valve clearance using feeler gauges.
24. Remove sprocket retaining Torx bolt.
25. Install LH intake camshaft (see Workshop Manual procedure 03.09.BV Camshaft - Intake - LH - Renew With Engine Removed).
26. Install timing chain tensioning tool (303-532) into RH exhaust camshaft sprocket.
27. Apply a force to the tool (303-532) in an anti-clockwise direction and torque tighten RH sprocket Torx bolts. Remove special tool.
28. Connect multiplugs to LH and RH camshaft timing sensors.

29. Connect multiplugs (x4) to LH and RH knock sensors.
30. Install SAI pump and bracket assembly (see Workshop Manual procedure 03.08.EB Pump and Bracket Assembly - Secondary Air Injection - Renew).
31. Clean LH and RH exhaust manifolds.
32. Install new LH and RH exhaust manifold gaskets.
33. Install LH and RH exhaust manifolds, install and torque tighten nuts (x16).

ASTON MARTIN

ASTON MARTIN

Engine (03.00)

Lubrication System (03.02)

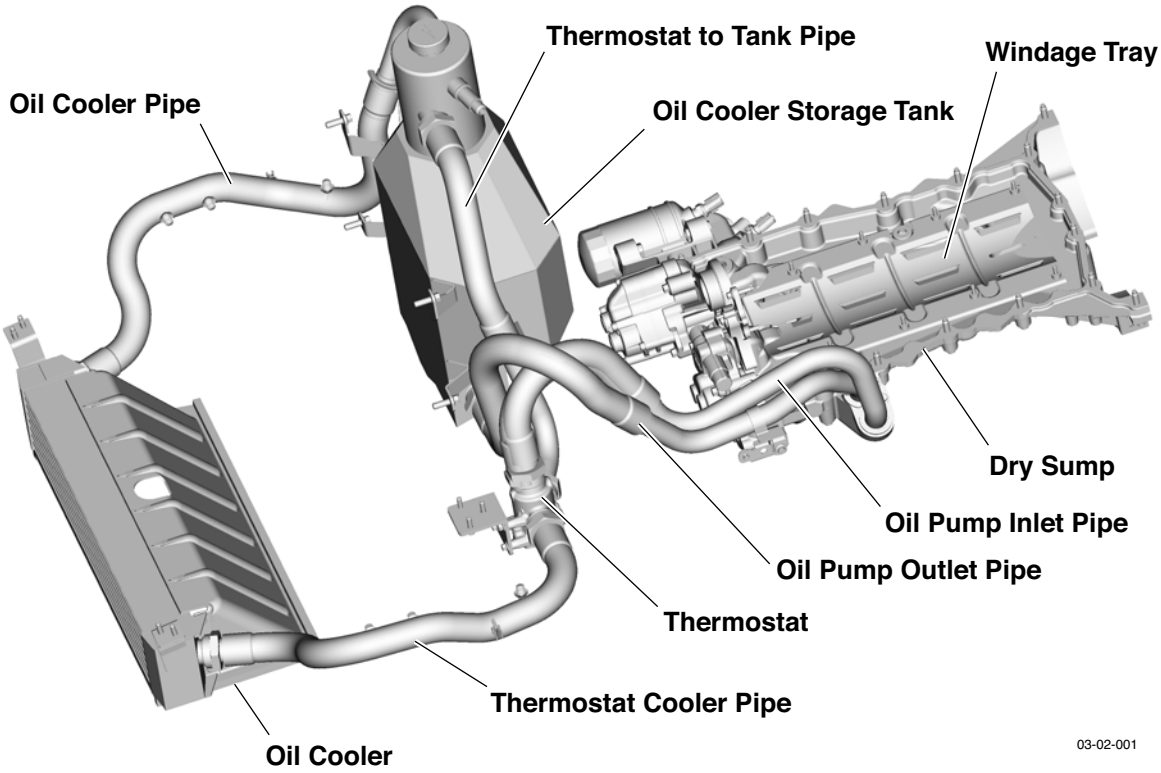

Dry Sump System

Unlike a wet sump system where oil is stored in the sump, a dry sump oiling system stores oil in a separate tank, leaving the sump essentially 'dry'.

Two internally-mounted pumps, are used to 'scavenge' (1) oil and deliver it to the storage tank, and then deliver (2) the oil through the engine.

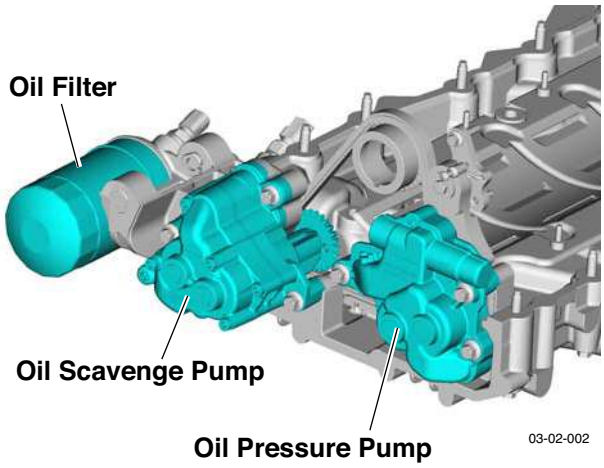

The primary advantage of a dry sump system is its ability to make more power. With very little oil in the sump, the rotating assembly is not burdened with the weight of excess oil (windage). The windage tray or screen which serves to isolate sump oil from the rotating assembly, runs the full length of the sump.This keeps the rotating assembly free of windage and allows it to spin freely and make more power.

In addition, the extra crankcase vacuum created by the dry sump pump helps to improve ring seal for additional power gain.

Other advantages of a dry sump system include increased oil capacity, more consistent oil pressure, the ability to easily add remote coolers, and adjustable oil pressure. And because the sump does not store oil, it can be relatively shallow in depth to allow lower engine placement for improved weight distribution and handling.

Specifications

Engine oil Europe/Aus/USA Castrol Edge Sport 10W-60

To achieve the required high performance of synthetic lubricants, do not mix with mineral oils.

Capacity	Europe (Litres)	UK (Pints)	USA (Qts.)
Full System	13	23	11
Service Fill	10	18	9

Torque Figures		
Description	Nm	lb/ft
Oil filter	15 - 18	11-13
Sump plug	20 - 26	15-19
Sump bolts	20 - 22	15-16
Oil delivery pump bolts	19 - 23	14-17
Oil scavenger pump bolts	19 - 23	14-17
Oil scavenger filters	11 - 13	8-10
Oil temperature sensor	16 - 24	12-17
Oil pressure switch	11 - 15	8-11
Oil pump tensioner bracket	11 - 13	8-10

Engine Oil Specification

10W-60	
Authority	Standard
API	SL/CF
ACEA	A3/B3/B4

Oil 10W-60 has both API and ACEA and therefore meets more demanding tests than either API or ACEA oils alone.

Maintenance

Oil Pressure Pump to Sump Gasket - Renew

Repair Operation Time (ROT)	
Item	**Code**
Oil Pressure Pump to Sump Gasket-Renew	**03.02.AG**

1. Remove crankshaft timing chain sprocket (refer to Workshop Manual procedure 03.09.AK Sprocket - Crankshaft - Renew).
2. Install guide pin through lower hole on chain tensioner.
3. Remove bolt that attaches the oil pressure pump chain tensioner assembly to engine bedplate (refer to Figure 1).

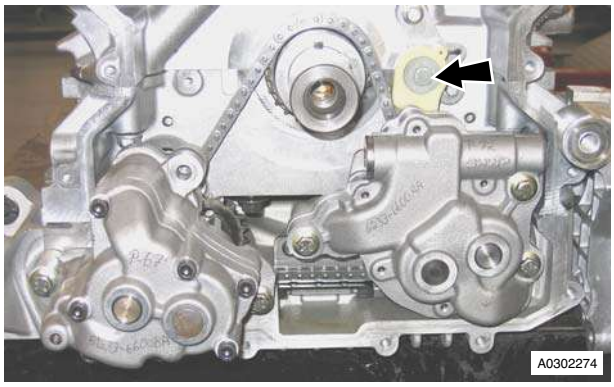

Figure 1

4. Remove tensioner assembly.
5. Remove bolts (x3) that attach the oil pressure pump to sump.
6. Release chain from oil pressure pump sprocket, remove oil pump.
7. Remove and discard oil pressure pump gasket.

Installation

1. Clean oil pressure pump and mating face on sump.
2. Install new gasket to sump, align to dowels (x2).
3. Position oil pressure pump, install chain on pump sprocket.
4. Install oil pressure pump, align to dowels (x2), Install and torque tighten bolts (x3).
5. Install chain tensioner, install and torque tighten bolt, remove guide pin.
6. Install crankshaft timing chain sprocket (refer to Workshop Manual procedure 03.09.AK Sprocket - Crankshaft - Renew).

Oil Pump Chain - Renew

Repair Operation Time (ROT)	
Item	**Code**
Oil Pump Chain-Renew	**03.02.AJ**

Removal

1. Remove oil pressure pump gasket (refer to Workshop Manual procedure 03.02.AG Gasket - Oil Pressure Pump to Sump - Renew)

2. Remove bolts (x3) that attach the oil scavenge pump to sump (refer to Figure 1).

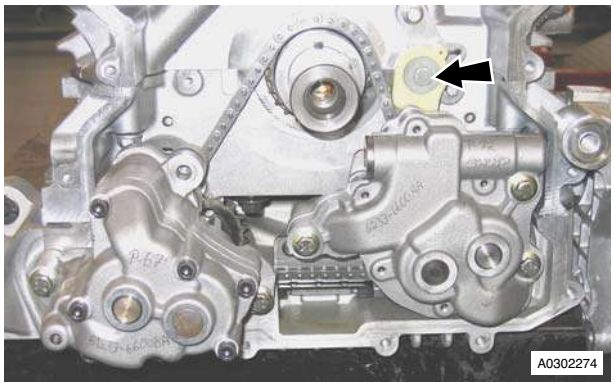

Figure 1

3. Remove oil scavenge pump, remove and discard gasket (refer to Figure 2).

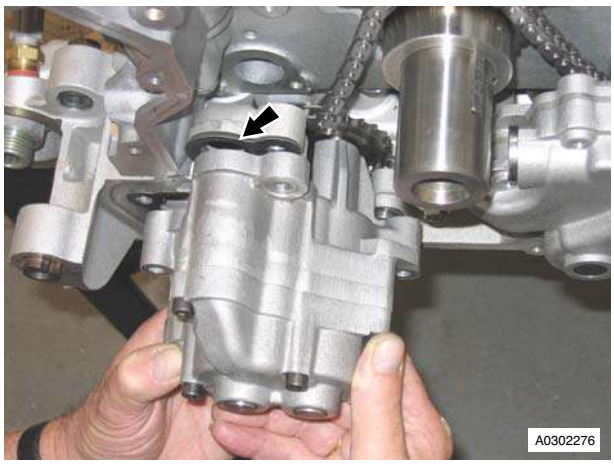

Figure 2

4. Release chain from oil pump drive sprocket, remove chain (refer to Figure 3).

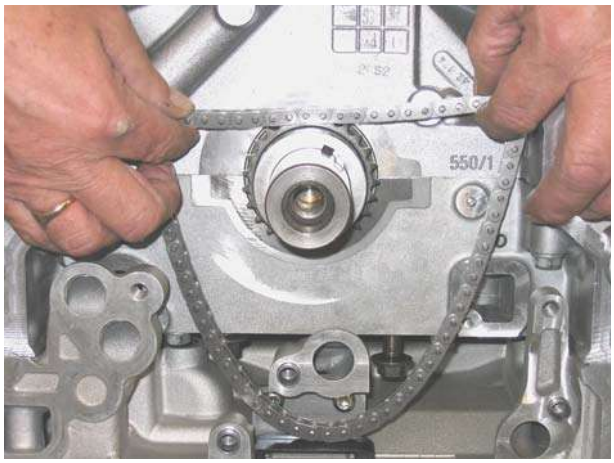

Figure 3

Installation

1. Clean oil scavenge pump and mating face on sump.
2. Install new oil scavenge pump gasket, align on dowels (x2).
3. Install chain onto oil scavenge pump sprocket.
4. Install oil scavenge pump, align to dowels (x2), Install and torque tighten bolts (x3).
5. Install chain onto oil pump drive sprocket.
6. Install oil pressure pump gasket (refer to Workshop Manual procedure 03.02.AG Gasket - Oil Pressure Pump to Sump - Renew).

Oil Sump Pan - Renew

Repair Operation Time (ROT)	
Item	**Code**
Oil Sump Pan-Renew	**03.02.BM**

Removal

1. Remove oil sump (refer to Workshop Manual procedure 03.02.BN Pan - Oil Sump - Remove and Reseal).

WARNING
DO NOT GET USED ENGINE OIL ON YOUR SKIN. USED ENGINE OIL CAN BE HARMFUL.

WARNING
DO NOT GET MINERAL OIL ON YOUR SKIN. MINERAL OILS CAN BE HARMFUL.

2. Remove bolt that attach the crankshaft timing sensor, remove sensor (refer to Figure 1).

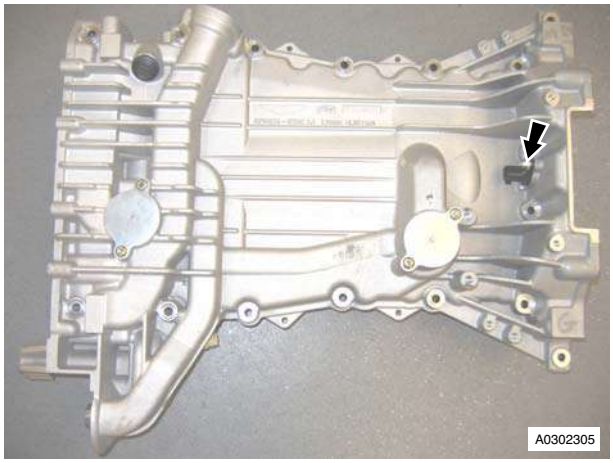

Figure 1

3. Remove oil pressure sensor (refer to Figure 2).

Figure 2

4. Remove engine electric coolant temperature sensor (refer to Figure 3).

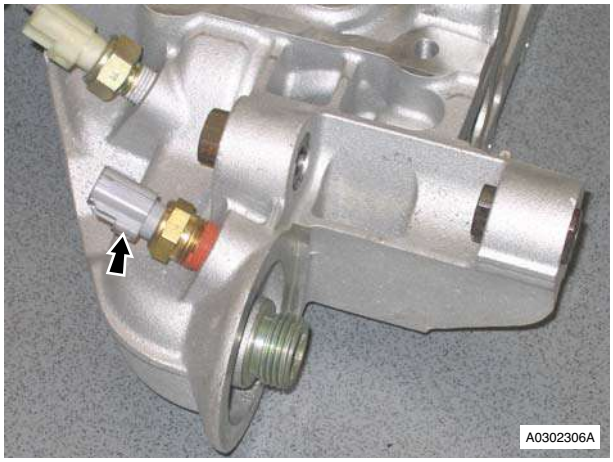

Figure 3

5. Remove Torx screws (x4) that attach the oil filter plates (x2) to sump. Remove plates (refer to Figure 4).

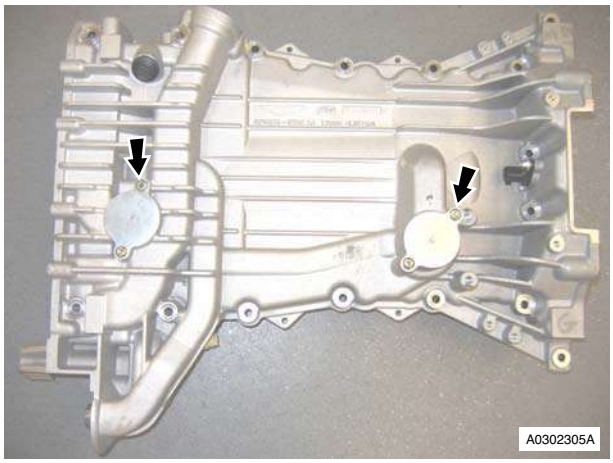

Figure 4

WARNING
DO NOT GET USED ENGINE OIL ON YOUR SKIN. USED ENGINE OIL CAN BE HARMFUL.

6. Install suitable bolt and remove filters (x2) from sump (refer to Figure 5).

Figure 5

7. Remove oil filter adaptor (refer to Figure 6).

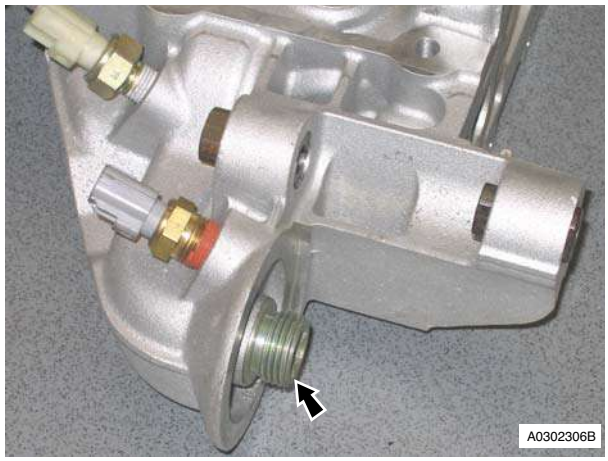

Figure 6

8. Press out alternator mounting bushes (x2) from sump (refer to Figure 7).

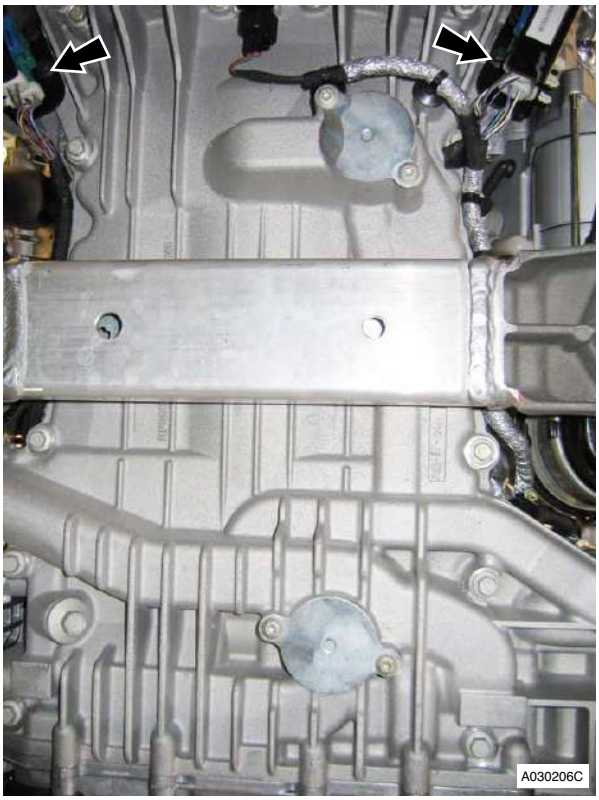

Figure 7

9. Remove dowels (x4) from sump for oil pressure and scavenge pumps location (refer to Figure 8).

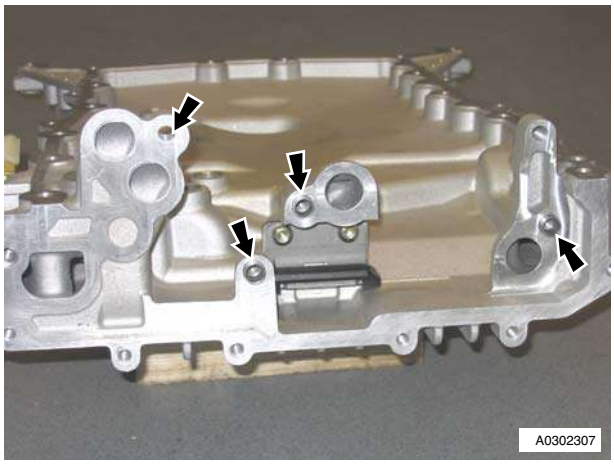

Figure 8

10. Remove Torx screws (x2) that attach the oil pump(s) chain guide, remove chain guide (refer to Figure 9).

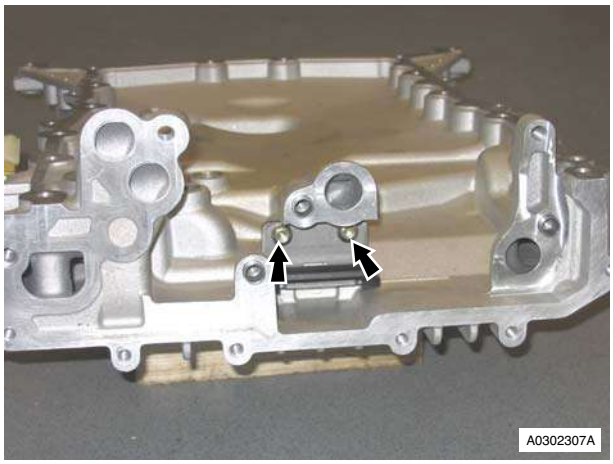

Figure 9

11. Remove oil plug from sump.

Installation

1. Clean chain guide, oil filter adaptor, filters (x2), sump plug, pump(s) dowels and crankshaft timing sensor.
2. Install alternator bushes.
3. Install oil filter adaptor.
4. Install filters (x2), install oil filter plates (x2), install and torque tighten Torx screws (x4).
5. Install oil plug.
6. Install oil pump(s) dowels (x4).
7. Clean old sealant from sensor threads (x2).
8. Apply sealant to engine electric coolant temperature sensor threads, install and torque tighten sensor.
9. Apply sealant to oil pressure sensor threads, install and torque tighten sensor.
10. Install oil pump(s) chain guide, Install and torque tighten Torx screws (x2).
11. Install crankshaft timing sensor, install and torque tighten bolt.
12. Install oil sump (refer to Workshop Manual procedure 03.02.BN Pan - Oil Sump - Remove and Reseal).

Oil Sump Pan - Remove and Reseal

Repair Operation Time (ROT)	
Item	**Code**
Oil Sump Pan-Remove and Reseal	**03.02.BN**

Removal

1. Remove oil pump(s) drive chain (refer to Workshop Manual procedure 03.02.AJ Chain - Oil Pump - Renew).

2. Disconnect multiplug from oil pressure sensor (refer to Figure 1).

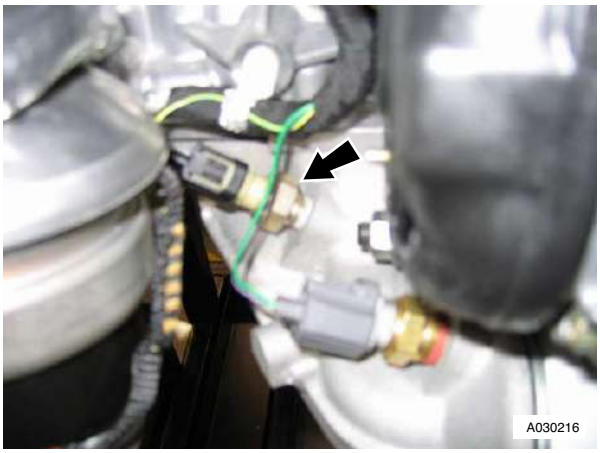

Figure

3. Disconnect multiplug from engine electric coolant temperature sensor (refer to Figure 2).

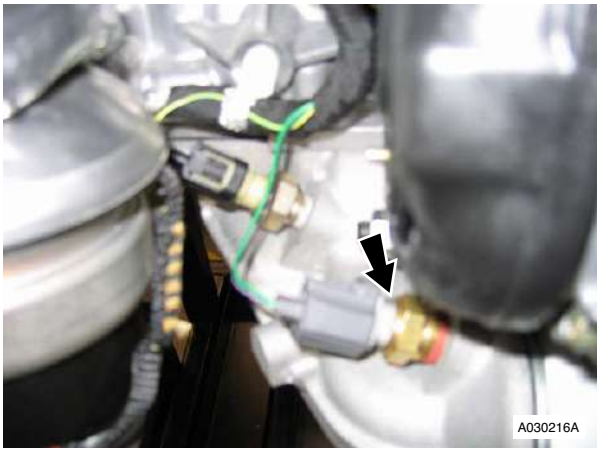

Figure 2

4. Disconnect multiplug from crankshaft timing sensor (refer to Figure 3).

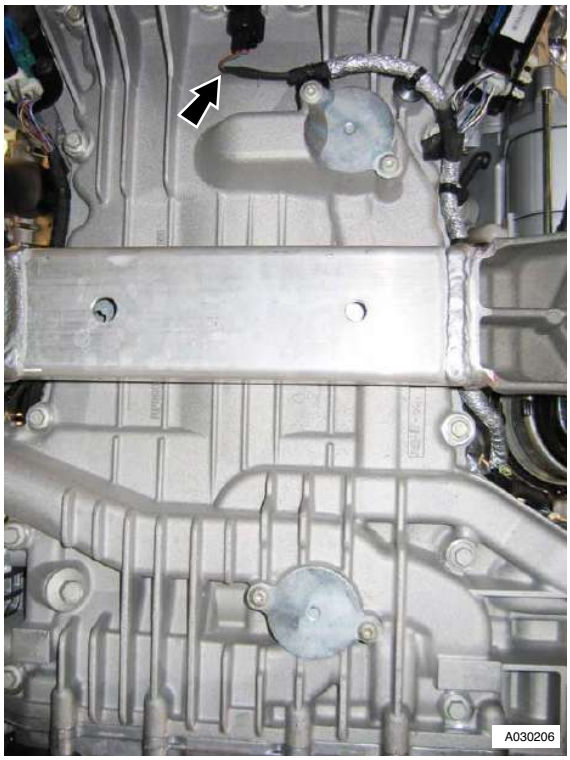

Figure 3

5. Release harness clips (x6) from sump (refer to Figure 4).

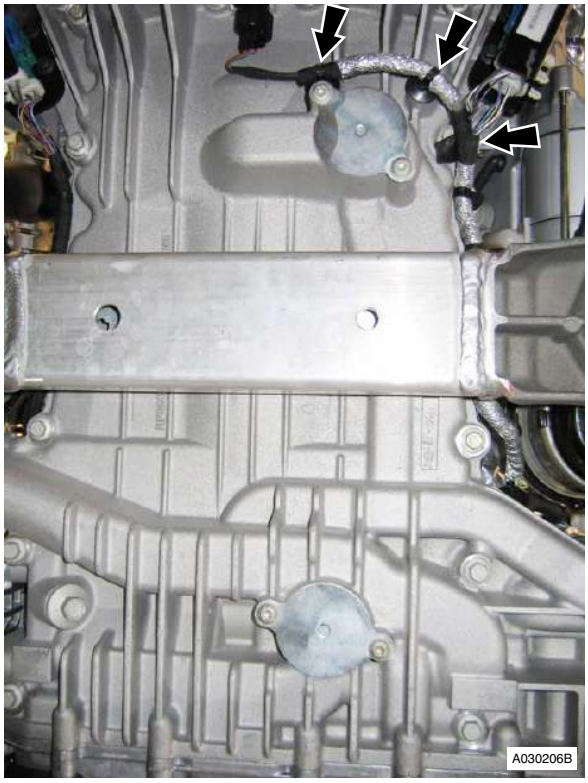

Figure 4

6. Remove bolts (x4) that attach the LH and RH HEGO sensor multiplug brackets to sump (refer to Figure 5).

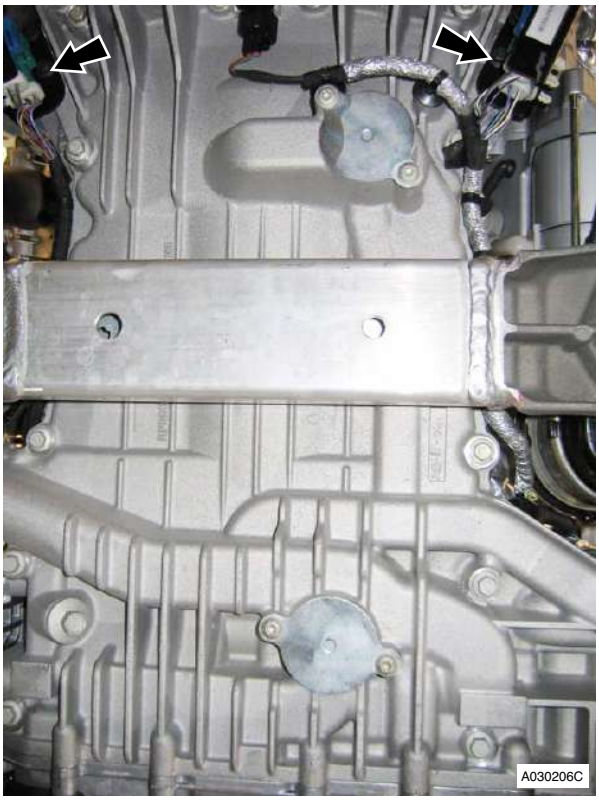

Figure 5

7. Disconnect multiplug from A/C compressor.
8. Remove bolts (x4) that attach the A/C compressor to mounting bracket. Tie compressor aside.

WARNING
DO NOT GET USED ENGINE OIL ON YOUR SKIN. USED ENGINE OIL CAN BE HARMFUL.

9. Remove bolts (x2) that attach the inlet and outlet oil pipes to sump (refer to Figure 6).

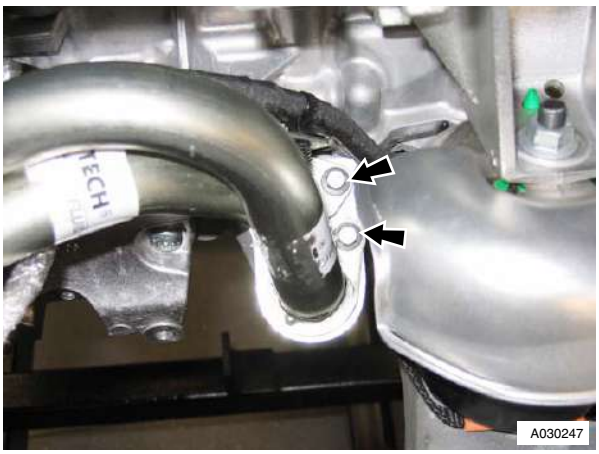

Figure 6

10. Release both oil pipes together from sump, remove and discard O-ring seals from pipes.
11. Remove Torx bolts (x4) that attach the A/C compressor mounting bracket to engine bedplate and sump. Remove bracket (refer to Figure 7).

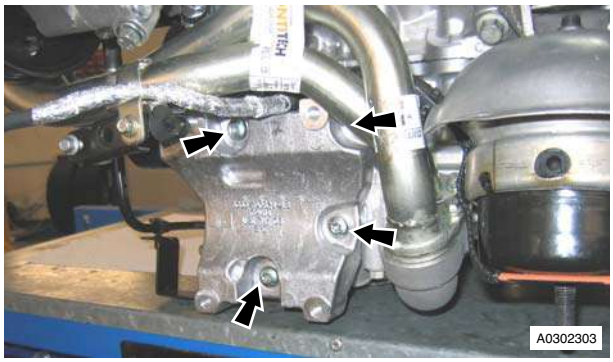

Figure 7

12. Note fitted position of clutch bleed tube bracket, remove bolts (x4) that attach the torque tube to sump (refer to Figure 8).

Figure 8

13. Remove bolts (x16) that attach the sump to engine bedplate (refer to Figure 9).

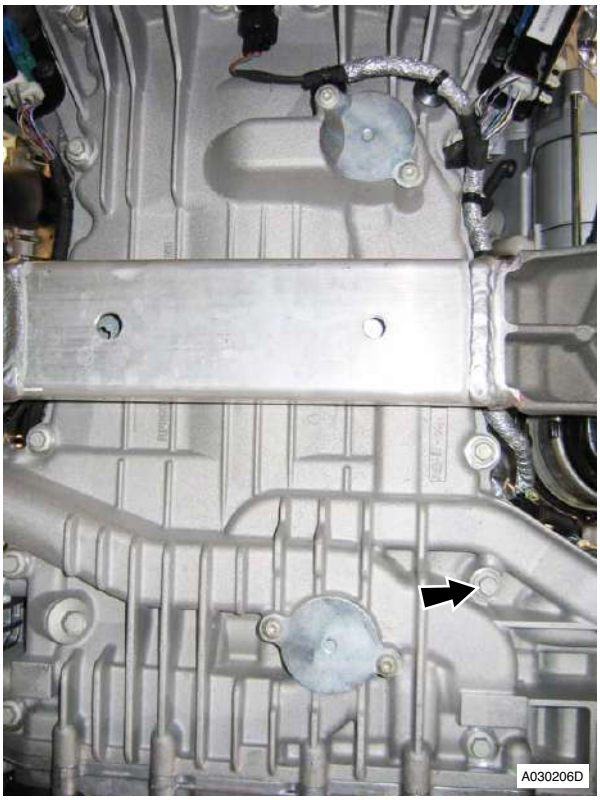

Figure 9

14. Release and remove sump.

Installation

1. Clean old sealant from sump flange and engine bedplate.
2. Ensure that sump flange and mating face on engine bedplate are clean and dry.
3. Apply a continuous 3mm diameter bead of RTV sealant to sump flange as recommended.
4. Ensure that there are no gaps in sealant track.
5. Install sump, install bolts (x16). Do not torque tighten at this stage.
6. Install bolts (x4), sump to torque tube, lightly tighten bolts and then loosen bolts.
7. Torque tighten sump bolts (x16) in the recommended sequence.
8. Torque tighten sump to torque tube bolts (x4).
9. Install A/C compressor mounting bracket, install and torque tighten Torx bolts (x4).

WARNING
DO NOT GET USED ENGINE OIL ON YOUR SKIN. USED ENGINE OIL CAN BE HARMFUL.

10. Lubricate and install new O-ring seals to oil pipes.
11. Install oil pipes in sump, install and torque tighten bolts (x2)
12. Install compressor, install and torque tighten bolts (x4).
13. Connect multiplug to A/C compressor.
14. Install LH and RH HEGO sensor multiplug brackets to sump. Install and torque tighten bolts (x4).
15. Secure harness clips (x6) in sump.
16. Connect multiplug to crankshaft timing sensor.
17. Connect multiplug to engine electric coolant temperature sensor.
18. Connect multiplug to oil pressure sensor.
19. Install oil pump(s) drive chain (refer to Workshop Manual procedure 03.02.AJ Chain - Oil Pump - Renew).

Oil Cooler - Renew

Repair Operation Time (ROT)	
Item	**Code**
Oil Cooler - Renew	**03.02.BX**

Removal

1. Raise vehicle on ramp.
2. Remove undertray (refer to Workshop Manual procedure 01.02.NB Undertray - Front - Renew).

WARNING
DO NOT GET USED ENGINE OIL ON YOUR SKIN. USED ENGINE OIL CAN BE HARMFUL.

3. Remove pipes from oil cooler (position container to catch oil) (refer to Figure).

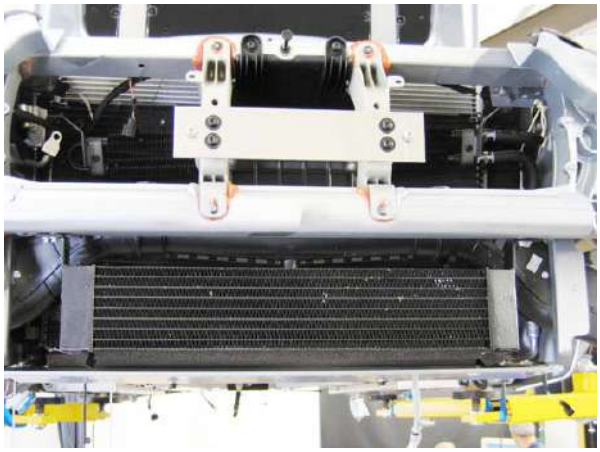

Figure 1

Caution
Make sure that all open ends of oil cooler pipes and oil cooler connections are plugged to prevent dirt or foreign material entering the lubrication system.

4. Remove oil cooler from body (bolts x4).
5. Remove duct from oil cooler (bolts x4).

Installation

1. Install duct from to cooler (bolts x4) (torque).
2. Install oil cooler to body (bolts x4) (torque).
3. Install pipes to oil cooler (torque).
4. Install undertray (refer to Workshop Manual procedure 01.02.NB Undertray - Front - Renew).
5. Lower vehicle on ramp.

6. Fill tank with approximately amount of displaced oil and replace cap.
7. Use handbook procedure to check oil level.

Oil Cooler Tank Assembly - Renew

Repair Operation Time (ROT)	
Item	**Code**
Oil Cooler Tank Assembly - Renew	**03.02.CA**

Removal

1. Disconnect breather pipe quickfits (x2) from air cleaner duct.
2. Remove throttle body duct for access (clips x3).
3. Remove cap.
4. Disconnect top hose from engine (clip x1) tie aside (catch coolant).
5. Remove breather pipe from oil tank (quick fit) (refer to Figure 1).

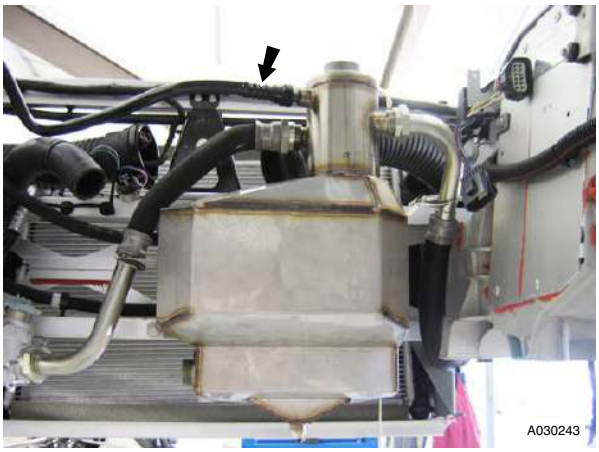

Figure 1

WARNING
DO NOT GET USED ENGINE OIL ON YOUR SKIN. USED ENGINE OIL CAN BE HARMFUL.

6. Remove pipes (x2) from oil tank, tie aside.
7. Raise vehicle on ramp.
8. Remove undertray (refer to Workshop Manual procedure 01.02.NB Undertray - Front - Renew).
9. Drain oil tank.
10. Remove bottom pipe (x1) from oil tank (refer to Figure 2).

Figure 2

11. Remove bolts (x3) that attach the oil thermostat to body (allows oil hose movement).
12. Lower ramp.
13. Remove bolts (x4) that attach the tank to body and lift out.

Installation

1. Position tank to body and fit bolts (x4) (torque).
2. Install oil pipes to tank (torque).
3. Connect breather hose.
4. Connect top hose to engine (clip x1).
5. Raise vehicle on ramp.
6. Install bottom oil pipe to tank (torque).
7. Install bolts (x3) that attach the oil thermostat to body (torque).
8. Install undertray (refer to Workshop Manual procedure 01.02.NB Undertray - Front - Renew).
9. Lower vehicle.
10. Install throttle body duct.
11. Connect breather pipe quickfits (x2) to air cleaner duct.
12. Fill tank with approximately amount of displaced oil and replace cap.
13. Use handbook procedure to check oil level.
14. Top up coolant.

Thermostat - Renew

Repair Operation Time (ROT)	
Item	**Code**
Thermostat - Renew	**03.03.CB**

Removal

1. Drain Coolant (refer to Workshop Manual procedure 03.03.AD Coolant - Drain and Refill).
2. Release breather valve (bolt x1) and tie aside.
3. Unclip engine harness for access (x4).
4. Remove one end of engine breather hoses for access (x3).

5. Remove breather valve bracket for access (nuts x2 bolt x1).
6. Remove thermostat housing from manifold (bolt x3).
7. Remove thermostat and sealing ring.

Installation

1. Install new thermostat and sealing ring.
2. Install thermostat housing (torque).
3. Install breather valve bracket.
4. Install breather hoses (x3) and clip.
5. Clip engine harness.
6. Install breather valve.
7. Refill coolant (refer to Workshop Manual procedure 03.03.AD Coolant - Drain and Refill).

Oil Cooler Tank Pipe Assembly - Renew

Repair Operation Time (ROT)	
Item	**Code**
Oil Cooler Tank Pipe Assembly - Renew	**03.02.CC**

Removal

1. Remove oil pipe from oil tank (refer to Figure 1).

Figure 1

2. Raise vehicle on ramp.
3. Remove undertray (refer to Workshop Manual procedure 01.02.NB Undertray - Front - Renew).
4. Remove RH air filter box (refer to Workshop Manual procedure 03.12.DH Cleaner Assembly - Engine Air - RH - Renew).
5. Unclip pipe (x4) from inner wing.

WARNING
DO NOT GET USED ENGINE OIL ON YOUR SKIN. USED ENGINE OIL CAN BE HARMFUL.

6. Remove pipe from oil cooler and pull out from inner wing (position container to catch oil) (refer to Figure 2).

Figure 2

Installation

1. Install pipe to oil cooler (torque) through inner wing.
2. Clip pipe (x4) to inner wing.
3. Install undertray (refer to Workshop Manual procedure 01.02.NB Undertray - Front - Renew).
4. Install RH air filter box (refer to Workshop Manual procedure 03.12.DH Cleaner Assembly - Engine Air - RH - Renew).
5. Lower vehicle on ramp.
6. Install pipe to oil tank (torque) ensure correct alignment in oil tank bracket.
7. Fill tank with approximately amount of displaced oil and replace cap.
8. Use handbook procedure to check oil level.

Oil Thermostat to Tank Tube Assembly - Renew

Repair Operation Time (ROT)	
Item	**Code**
Oil Thermostat to Tank Tube Assembly - Renew	**03.02.CD**

Removal

1. Disconnect breather pipe quickfits (x2) from air cleaner duct.
2. Remove throttle body duct for access (clips x3).

WARNING
DO NOT GET USED ENGINE OIL ON YOUR SKIN. USED ENGINE OIL CAN BE HARMFUL.

3. Remove pipes from oil tank (refer to Figure 1).

Figure 1

4. Raise vehicle on ramp.
5. Remove undertray (refer to Workshop Manual procedure. 01.02.NB Undertray - Front - Renew).
6. Remove pipe from oil thermostat (position container to catch oil) (refer to Figure 2).

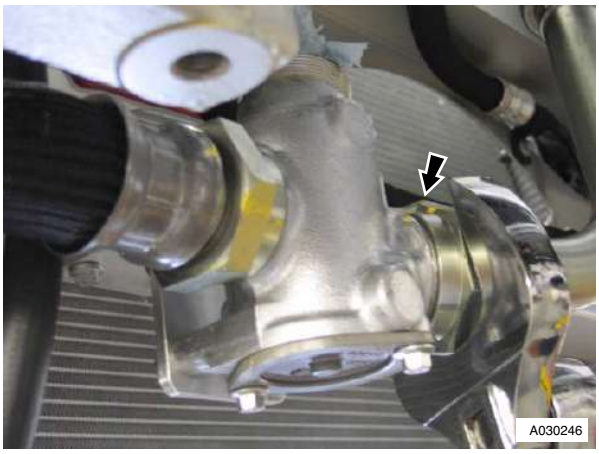

Figure 2

Installation

1. Install pipe to oil thermostat (torque) ensure correct alignment in oil tank bracket.
2. Install undertray (refer to Workshop Manual procedure 01.02.NB Undertray - Front - Renew).
3. Lower vehicle on ramp.
4. Install oil pipe to tank.
5. Install throttle body duct.
6. Connect breather pipe quickfits (x2) to air cleaner duct.
7. Fill tank with approximately amount of displaced oil and replace cap.
8. Use handbook procedure to check oil level.

Oil Pump Inlet Tube Assembly - Renew

Repair Operation Time (ROT)	
Item	**Code**
Oil Pump Inlet Tube Assembly - Renew	**03.02.CE**

Removal

1. Remove the PAS pump (refer to Workshop Manual procedure 03.05.AA Pump - Power Steering - Renew).

WARNING
DO NOT GET USED ENGINE OIL ON YOUR SKIN. USED ENGINE OIL CAN BE HARMFUL.

2. Remove pipe from oil controller (position container to catch oil).
3. Remove bolt, pipes to bracket (refer to Figure 1).

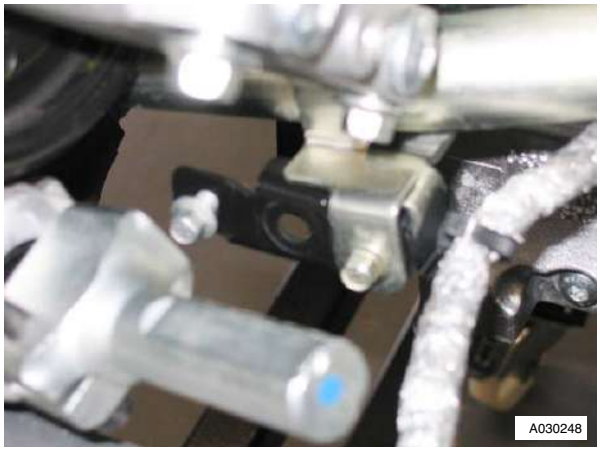

Figure 1

4. Remove LH exhaust manifold (refer to Workshop Manual procedure 09.00.CD Gasket - Exhaust Manifold - LH - Renew).
5. Remove harness to pipe clip (refer to Figure 2).

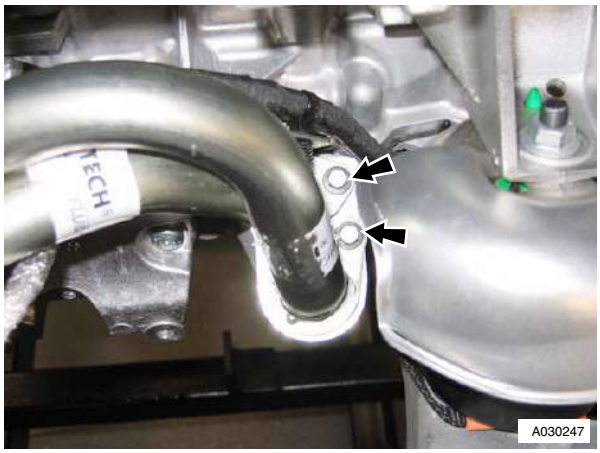

Figure 2

6. Remove bolts that attach the oil pipes to block.
7. Release both pipes from block and remove inlet pipe.

Installation

1. Renew O-ring on remaining oil pipe.
2. Install inlet pipe and position both pipes into block.

3. Install bolts that attach the oil pipes to block (torque).
4. Install LH exhaust manifold (refer to Workshop Manual procedure 09.00.CD Gasket - Exhaust Manifold - LH - Renew).
5. Install bolt, pipes to bracket.
6. Install harness clip to pipe.
7. Install pipe to oil controller (torque).
8. Install P.A.S pump (refer to Workshop Manual procedure 03.05.AA Pump - Power Steering - Renew).
9. Fill tank with approximately amount of displaced oil and replace cap.
10. Use handbook procedure to check oil level.

Oil Pump Inlet Tube Assembly - Renew

Repair Operation Time (ROT)	
Item	**Code**
Oil Pump Inlet Tube Assembly - Renew	**03.02.CE**

Removal

1. Remove the PAS pump (refer to Workshop Manual procedure 03.05.AA Pump - Power Steering - Renew).

WARNING
DO NOT GET USED ENGINE OIL ON YOUR SKIN. USED ENGINE OIL CAN BE HARMFUL.

2. Remove pipe from oil controller (position container to catch oil).
3. Remove bolt, pipes to bracket (refer to Figure 1).

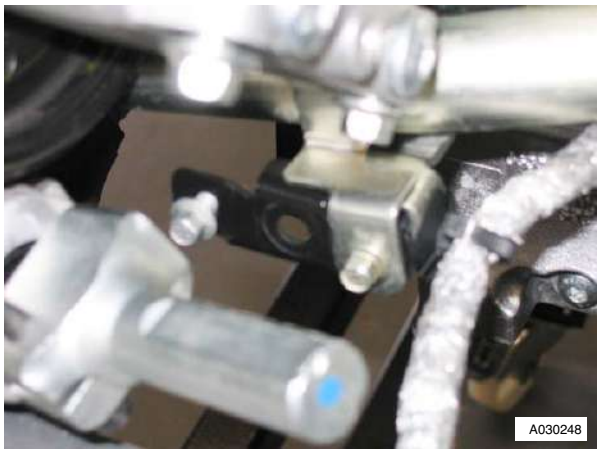

Figure 1

4. Remove LH exhaust manifold (refer to Workshop Manual procedure 09.00.CD Gasket - Exhaust Manifold - LH - Renew).
5. Remove harness to pipe clip (refer to Figure 2).

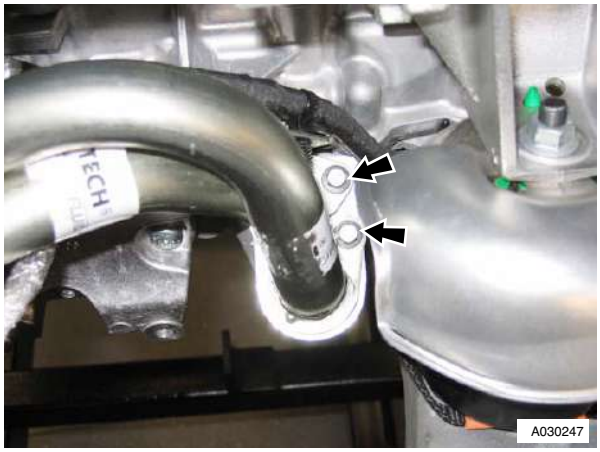

Figure 2

6. Remove bolts that attach the oil pipes to block.
7. Release both pipes from block and remove inlet pipe.

Installation

1. Renew O-ring on remaining oil pipe.
2. Install inlet pipe and position both pipes into block.
3. Install bolts that attach the oil pipes to block (torque).
4. Install LH exhaust manifold (refer to Workshop Manual procedure 09.00.CD Gasket - Exhaust Manifold - LH - Renew).
5. Install bolt, pipes to bracket.
6. Install harness clip to pipe.
7. Install pipe to oil controller (torque).
8. Install P.A.S pump (refer to Workshop Manual procedure 03.05.AA Pump - Power Steering - Renew).
9. Fill tank with approximately amount of displaced oil and replace cap.
10. Use handbook procedure to check oil level.

Oil Pump Outlet Tube Assembly - Renew

Repair Operation Time (ROT)	
Item	**Code**
Oil Pump Outlet Tube Assembly - Renew	**03.02.CF**

Removal

1. Remove PAS pump (refer to Workshop Manual procedure 03.05.AA Pump - Power Steering - Renew).

WARNING
DO NOT GET USED ENGINE OIL ON YOUR SKIN. USED ENGINE OIL CAN BE HARMFUL.

2. Remove pipe from oil tank (position container to catch oil) (refer to Figure 1).

Figure 1

3. Remove bolt, pipes to bracket (refer to Figure 2).

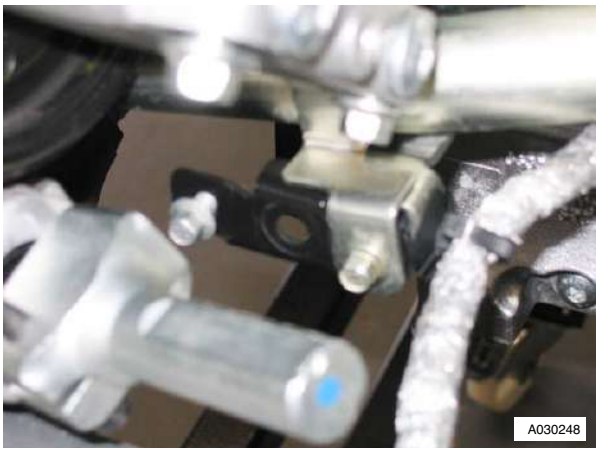

Figure 2

4. Remove LH exhaust manifold (refer to Workshop Manual procedure 09.00.CD Gasket - Exhaust Manifold - LH - Renew).
5. Remove harness to pipe clip (refer to Figure 3).

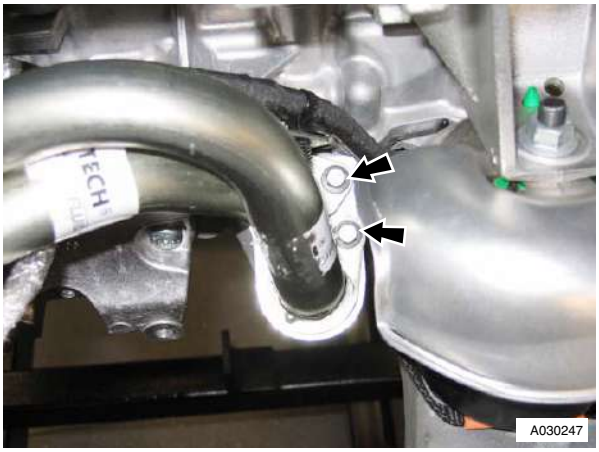

Figure 3

6. Remove bolts that attach the oil pipes to block.
7. Release both pipes from block and remove outlet pipe.

Installation

1. Renew O-ring on remaining oil pipe.
2. Install outlet pipe and position both pipes into block.
3. Install bolts that attach the oil pipes to block (torque).
4. Install bolt, pipes to bracket.
5. Install harness clip to pipe.
6. Install pipe to oil tank (torque).
7. Install LH exhaust manifold (refer to Workshop Manual procedure 09.00.CD Gasket - Exhaust Manifold - LH - Renew).
8. Install P.A.S pump (refer to Workshop Manual procedure 03.05.AA Pump - Power Steering - Renew).
9. Fill tank with approximately amount of displaced oil and replace cap.
10. Use handbook procedure to check oil level.

Oil Thermostat Cooler Pipe Assembly - Renew

Repair Operation Time (ROT)	
Item	**Code**
Oil Thermostat Cooler Pipe Assembly - Renew	**03.02.CG**

Removal

1. Raise vehicle on ramp.
2. Remove undertray (refer to Workshop Manual procedure 01.02.NB Undertray - Front - Renew).
3. Remove LH air filter box (refer to Workshop Manual procedure 03.12.AB Air Filter Box LH Renew).

WARNING
DO NOT GET USED ENGINE OIL ON YOUR SKIN. USED ENGINE OIL CAN BE HARMFUL.

4. Remove pipe from oil thermostat (position container to catch oil) (refer to Figure 1).

Figure 1

5. Unclip pipe (x4) from inner wing.

6. Remove pipe from oil cooler and pull out from inner wing (position container to catch oil) (refer to Figure 2).

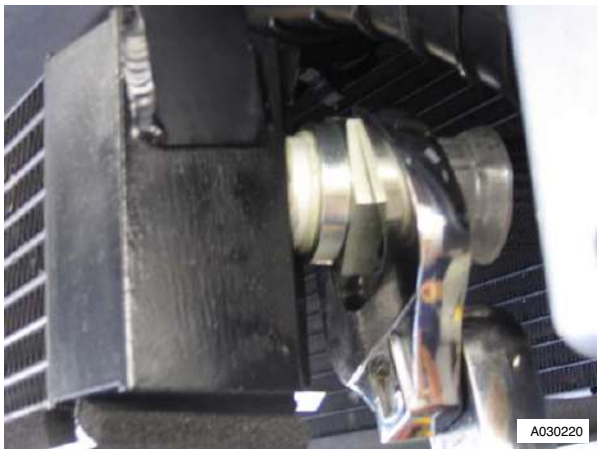

Figure 2

Installation

1. Install pipe to oil cooler (torque) through inner wing.
2. Clip pipe (x4) to inner wing.
3. Install pipe to oil thermostat and ensure correct alignment in oil tank bracket.
4. Install undertray (refer to Workshop Manual procedure 01.02.NB Undertray - Front - Renew).
5. Lower vehicle on ramp.
6. Install LH air filter box (refer to Workshop Manual procedure 03.12.AB Air Filter Box LH Renew).
7. Fill tank with approximately amount of displaced oil and replace cap.
8. Use handbook procedure to check oil level.

Oil Temperature Controller - Renew

Repair Operation Time (ROT)	
Item	**Code**
Oil Temperature Controller - Renew	**03.02.CH**

Remove

1. Raise vehicle on ramp.
2. Remove undertray (refer to Workshop Manual procedure 01.02.NB Undertray - Front - Renew).

WARNING
DO NOT GET USED ENGINE OIL ON YOUR SKIN. USED ENGINE OIL CAN BE HARMFUL.

3. Remove pipes from oil thermostat (position container to catch oil) (refer to Figure 1).

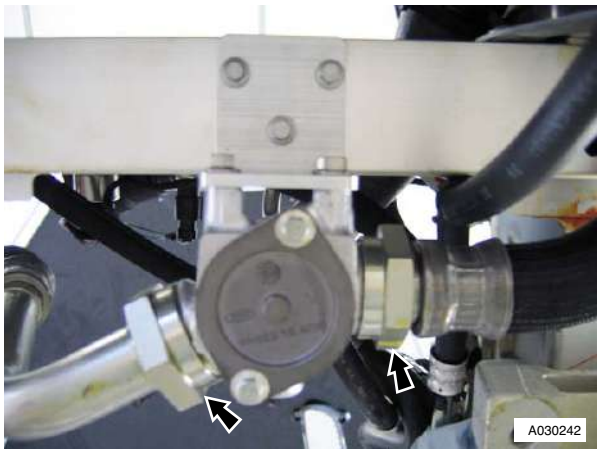

Figure 1

4. Remove controller from body (bolts x2).

Install

1. Install controller to body (bolts x2) (torque).
2. Install pipes to oil thermostat (torque) ensure correct alignment in oil tank bracket.
3. Install undertray (refer to Workshop Manual procedure 01.02.NB Undertray - Front - Renew).
4. Fill tank with approximately amount of displaced oil and replace cap.
5. Use handbook procedure to check oil level.
6. Lower vehicle on ramp.

Oil Sump Pan - Renew (with Engine Removed)

Repair Operation Time (ROT)	
Item	**Code**
Oil Sump Pan-Renew (with Engine Removed)	**03.02.CM**

Removal

WARNING
DO NOT GET USED ENGINE OIL ON YOUR SKIN. USED ENGINE OIL CAN BE HARMFUL.

1. Remove oil sump (refer to Workshop Manual procedure 03.02.CN Pan - Oil Sump - Remove and Reseal With Engine Removed).

2. Remove bolt that attach the crankshaft timing sensor, remove sensor (refer to Figure 1).

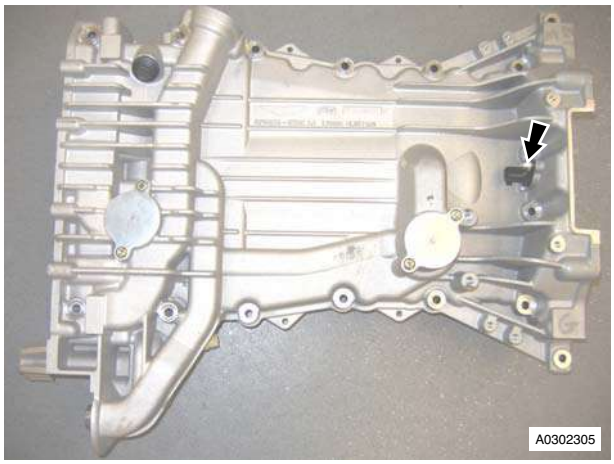

Figure 1

3. Remove oil pressure sensor (refer to Figure 2).

Figure 2

4. Remove engine electric coolant temperature sensor (refer to Figure 3).

Figure 3

5. Remove Torx screws (x4) that attach the oil filter plates (x2) to sump. Remove plates (refer to Figure 4).

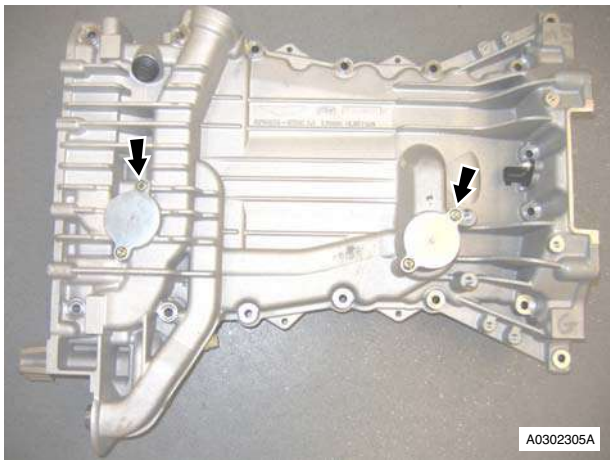

Figure 4

WARNING
DO NOT GET USED ENGINE OIL ON YOUR SKIN. USED ENGINE OIL CAN BE HARMFUL.

6. Install suitable bolt and remove filters (x2) from sump (refer to Figure 5).

Figure 5

7. Remove oil filter adaptor (refer to Figure 6).

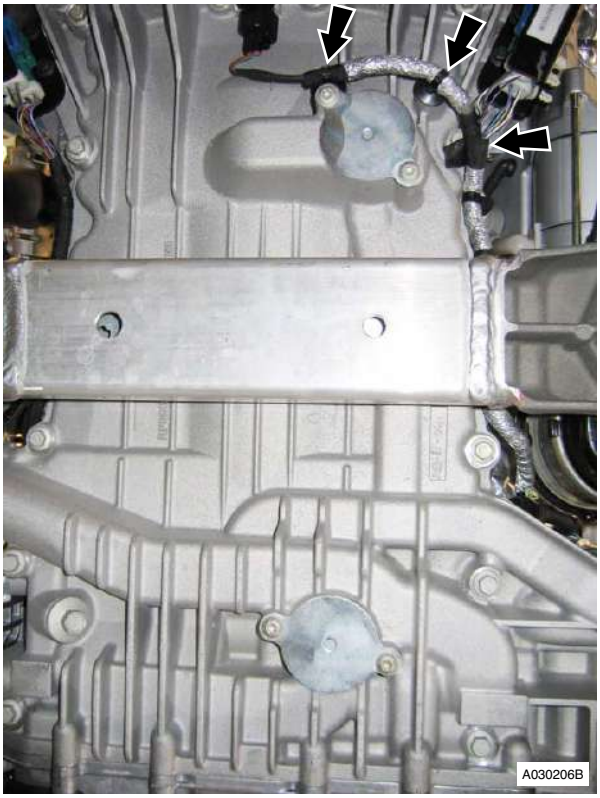

Figure 6

8. Press out alternator mounting bushes (x2) from sump (refer to Figure 7).

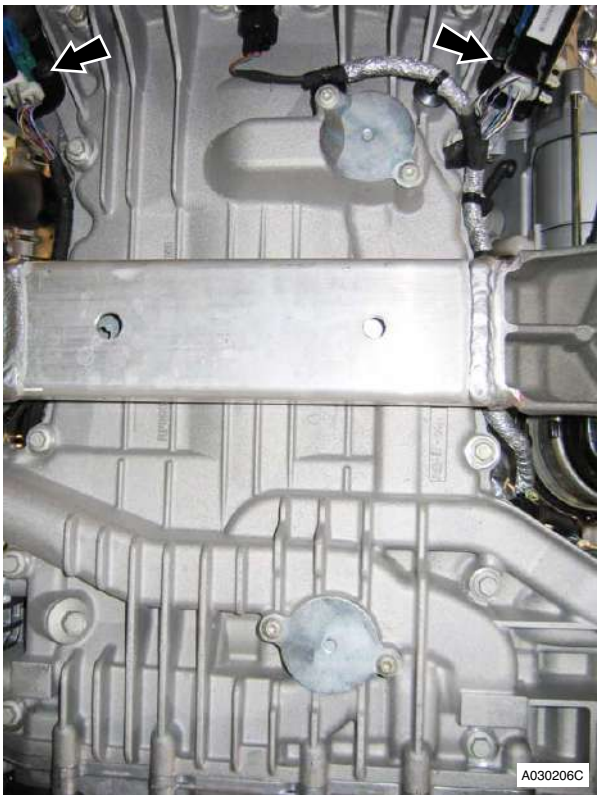

Figure 7

9. Remove dowels (x4) from sump for oil pressure and scavenge pumps location (refer to Figure 8).

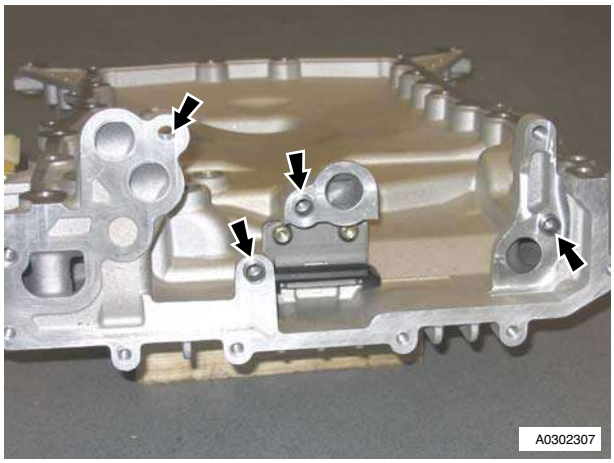

Figure 8

10. Remove Torx screws (x2) that attach the oil pump(s) chain guide, remove chain guide (refer to Figure 9).

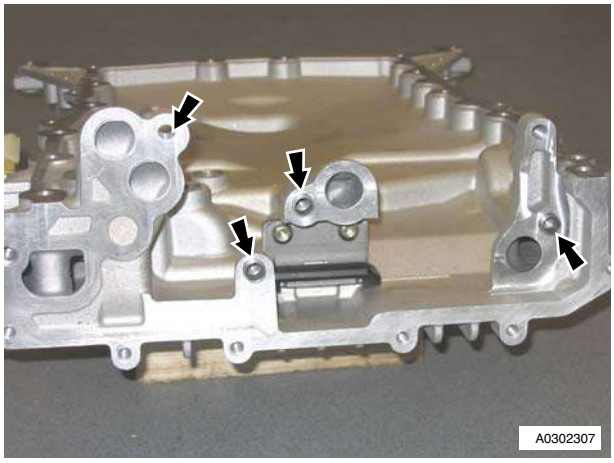

Figure 9

11. Remove oil plug from sump.

Installation

1. Clean chain guide, oil filter adaptor, filters (x2), sump plug, pump(s) dowels and crankshaft timing sensor.
2. Install alternator bushes.
3. Install oil filter adaptor.
4. Install filters (x2), install oil filter plates (x2), install and torque tighten Torx screws (x4).
5. Install oil plug.
6. Install oil pump(s) dowels (x4).
7. Clean old sealant from sensor threads (x2).
8. Apply sealant to engine electric coolant temperature sensor threads, install and torque tighten sensor.
9. Apply sealant to oil pressure sensor threads, install and torque tighten sensor.

10. Install oil pump(s) chain guide, Install and torque tighten Torx screws (x2).
11. Install crankshaft timing sensor, install and torque tighten bolt.
12. Install oil sump (refer to Workshop Manual procedure 03.02.CN Pan - Oil Sump - Remove and Reseal With Engine Removed).

Oil Sump Pan - Remove and Reseal (with Engine Removed)

Repair Operation Time (ROT)	
Item	**Code**
Oil Sump Pan-Remove and Reseal (with Engine Removed)	**03.02.CN**

Removal

WARNING
DO NOT GET USED ENGINE OIL ON YOUR SKIN. USED ENGINE OIL CAN BE HARMFUL.

1. Remove oil pump(s) drive chain (refer to Workshop Manual procedure 03.02.BJ Chain - Oil Pump - Renew With Engine Removed).
2. Disconnect multiplug from oil pressure sensor (refer to Figure 1).

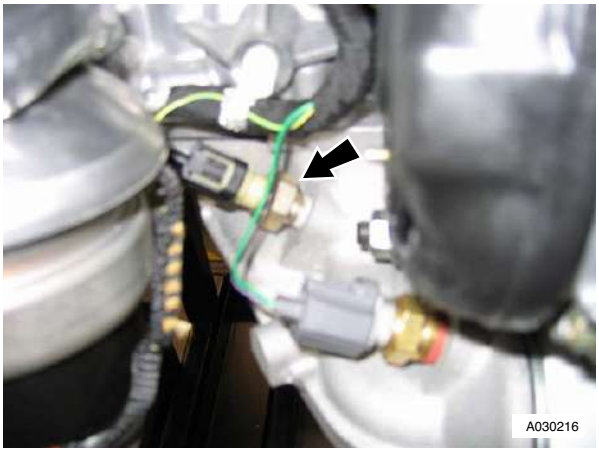

Figure 1

3. Disconnect multiplug from engine electric coolant temperature sensor (refer to Figure 2).

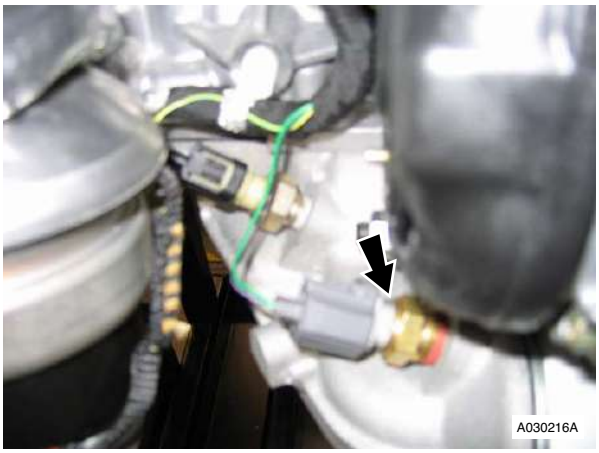

Figure 2

4. Disconnect multiplug from crankshaft timing sensor (refer to Figure 3).

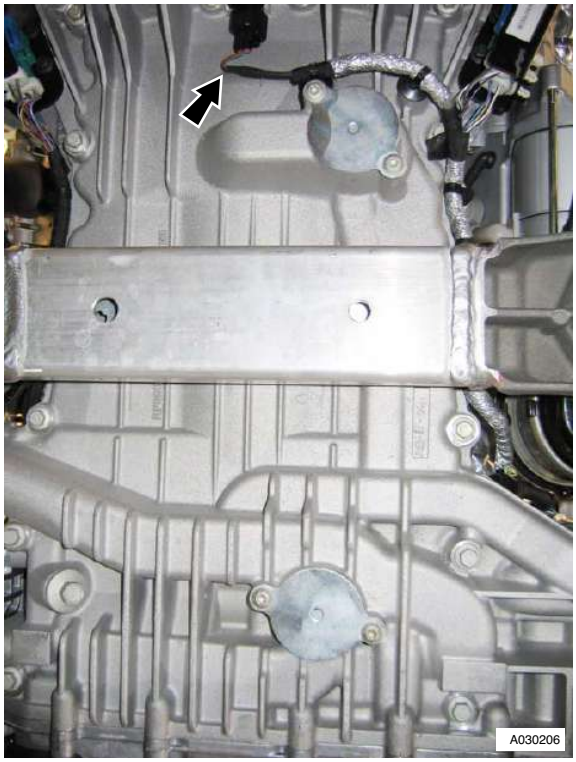

Figure 3

5. Release harness clips (x6) from sump (refer to Figure 4).

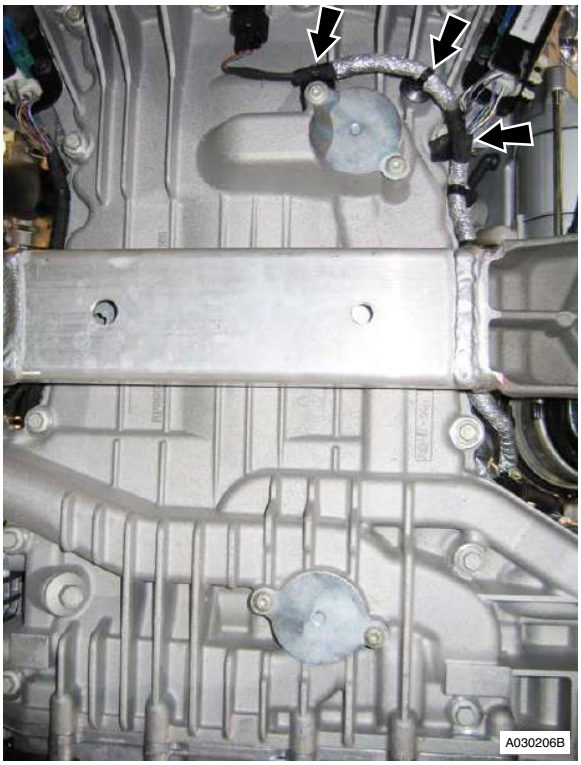

Figure 4

6. Remove bolts (x4) that attach the LH and RH HEGO sensor multiplug brackets to sump (refer to Figure 5).

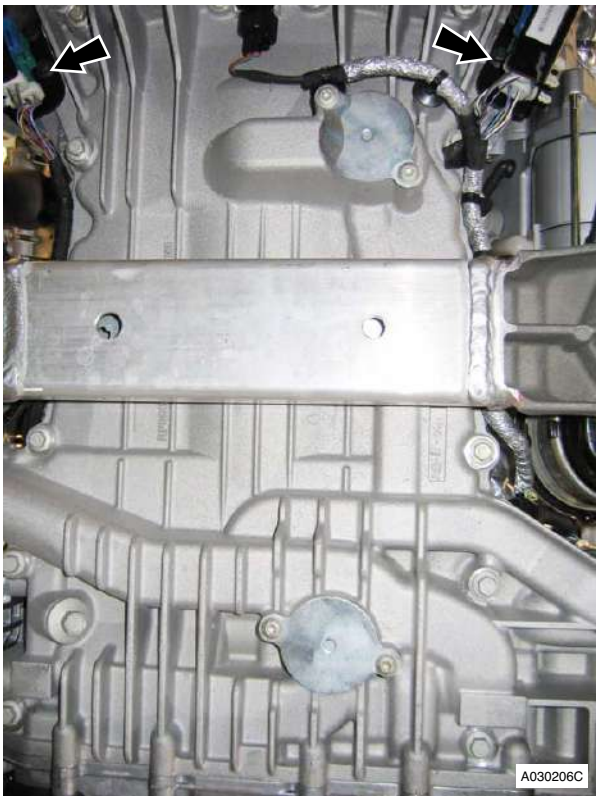

Figure 5

7. Disconnect multiplug from A/C compressor.
8. Remove bolts (x4) that attach the A/C compressor to mounting bracket. Tie compressor aside.

WARNING
DO NOT GET USED ENGINE OIL ON YOUR SKIN. USED ENGINE OIL CAN BE HARMFUL.

9. Remove bolts (x2) that attach the inlet and outlet oil pipes to sump (refer to Figure 6).

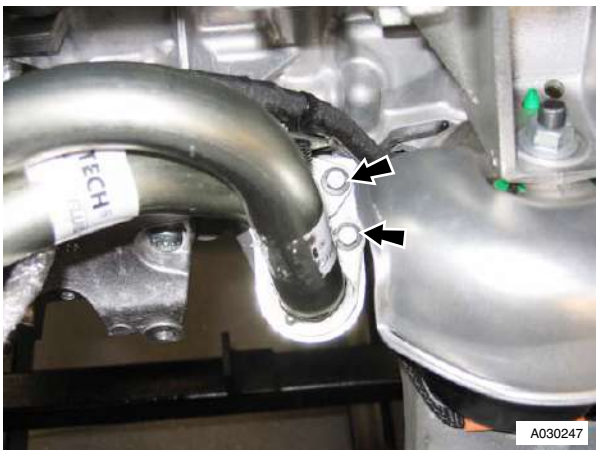

Figure 6

10. Release both oil pipes together from sump, remove and discard O-ring seals from pipes.

11. Remove Torx bolts (x4) that attach the A/C compressor mounting bracket to engine bedplate and sump. Remove bracket (refer to Figure 7).

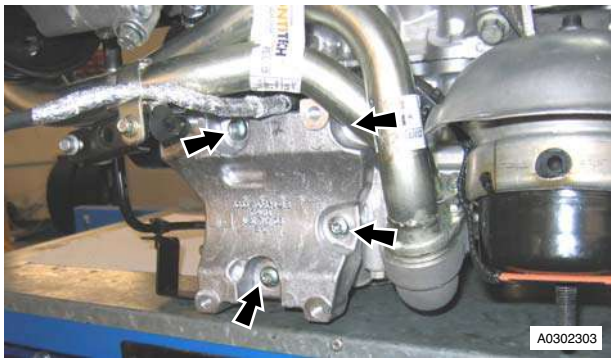

Figure 7

12. Remove bolts (x16) that attach the sump to engine bedplate (refer to Figure 8).

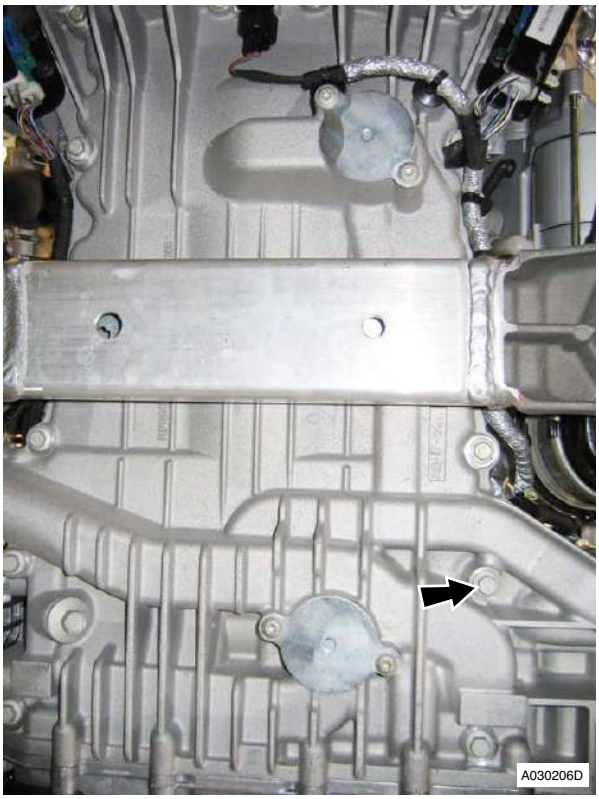

Figure 8

13. Release and remove sump.

Installation

1. Clean old sealant from sump flange and engine bedplate.
2. Ensure that sump flange and mating face on engine bedplate are clean and dry.
3. Apply a continuous 3mm diameter bead of RTV sealant to sump flange as recommended.
4. Ensure that there are no gaps in sealant track.
5. Install sump, install and torque tighten bolts (x16) in the correct sequence.
6. Install A/C compressor mounting bracket, install and torque tighten Torx bolts (x4).
7. Lubricate and install new O-ring seals to oil pipes.
8. Install oil pipes in sump, install and torque tighten bolts (x2)
9. Install compressor, install and torque tighten bolts (x4).
10. Connect multiplug to A/C compressor.
11. Install LH and RH HEGO sensor multiplug brackets to sump. Install and torque tighten bolts (x4).
12. Secure harness clips (x6) in sump.
13. Connect multiplug to crankshaft timing sensor.
14. Connect multiplug to engine electric coolant temperature sensor.
15. Connect multiplug to oil pressure sensor.
16. Install oil pump(s) drive chain (refer to Workshop Manual procedure 03.02.BJ Chain - Oil Pump - Renew With Engine Removed).

ASTON MARTIN
ASTON MARTIN

Engine (03.00)

Cooling System (03.03)

Description

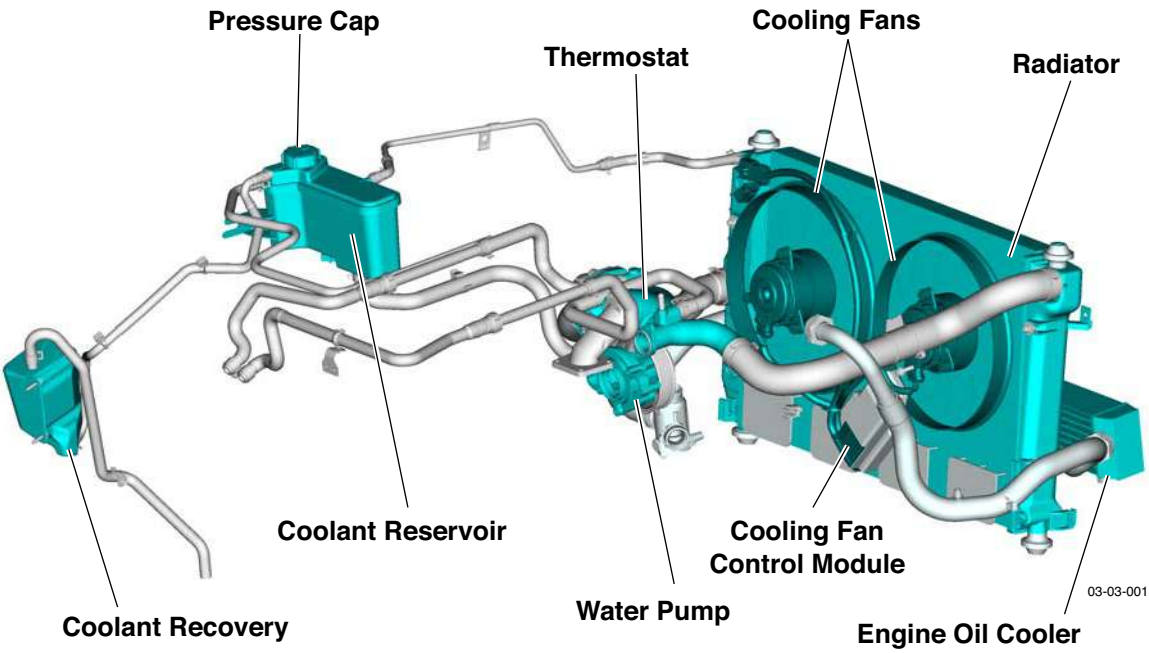

- Water pump
- Thermostat
- Radiator
- Pressure cap
- Coolant Reservoir
- Electric cooling fans (x2)
- Cooling fan motor control module
- Engine oil cooler

Water Pump

The water pump is of a conventional design and is located at the front of the engine. It is driven by the accessory drive belt.

Thermostat

The thermostat allows rapid engine warm-up by redirecting coolant flow through the engine below 88°C (190.5°F).

The thermostat also assists in keeping the engine operating temperature within predetermined limits. The thermostat starts to open between 86°C - 90°C (186.8°F - 194°F) and is fully open at 102°C (215.5°F).

Cold Engine (Bypass Circuit) - When the engine is cold and the thermostat is closed coolant flows from the water pump through the engine block, through the cylinder heads and into the water cross-over housing. Coolant then passes through the secondary thermostat sealing plate and returns to the water pump.

Warm Engine (Cooling Module Circuit) - When the engine is warm and the thermostat is open coolant flows from the water pump, through the engine block, through the cylinder head and into the water cross-over housing. Coolant then passes through the upper coolant hose, through the radiator and returns to the water pump through the lower coolant hose and water cross-over housing.

Radiator

The radiator is of aluminium construction with plastic end tanks. Foam seals are installed to the radiator to prevent the cooling air from by-passing the radiator core. The radiator is located by four isolator mountings and supported by the radiator support beams. A coolant drain plug is provided in the lower right-hand side for the draining of the coolant. The cooling fan shroud is attached to the radiator.

Cooling Fans

Two variable speed electric cooling fans are housed in the cooling fan pack for the cooling of the radiator. The speed of the electric cooling fans is adjusted by the Powertrain Control Module (PCM).

Coolant Reservoir

A pressurised coolant reservoir system is used which continuously removes any air from the cooling system. A continuous vent from the engine and radiator to the coolant expansion tank prevents air locks from forming in the

cooling system. No manual bleed points are provided on the system.

The coolant reservoir should be full when the coolant system is cold.

Engine Oil Cooler

The oil temperature is controlled by an air/oil cooler mounted at the front of the car. Engine oil is removed from the dry sump, with the scavenge pump. The oil is routed to a temperature controlled thermostat which controls the directional flow of the oil. With the thermostat closed the oil is routed directly to the oil tank. When the thermostat starts to open (at 105°C) the oil is routed via the air/oil cooler before entering the tank.

Specifications

Antifreeze Mix	50% OAT coolant/50% water
Pressure Cap	150kpa
Leakage Rates	30cm/min. 150-180kpa
	60xcm/min. 10kpa
	Up to 75kpa @ 150cm/h
Water Pump	Pumps 4ltr/min. @ 1000rpm
	Pumps 240ltr/min. @ 7000rpm
Thermostat	Opens between 86°C - 90°C (186.8°F - 194°F)
	Fully open at 102°C

The anti-freeze is unique and cannot be mixed with other anti-freeze solutions. The OAT coolant/water mixture has a life of 150,000 miles or 5 years (which ever comes first).

Torque Figures

Description	Nm.	lb/ft
Condenser A/C pipes	8-10	6-8
Thermostat Housing	8-12	6-9
Thermostat housing support bracket	23-27	17-20
Water pump	23-27	17-20
Water pump pulley	23-27	17-20
Oil Cooler	50	36

Maintenance

Caution
'Spring-band' clips
'Spring-band' clips must be installed as detailed below:

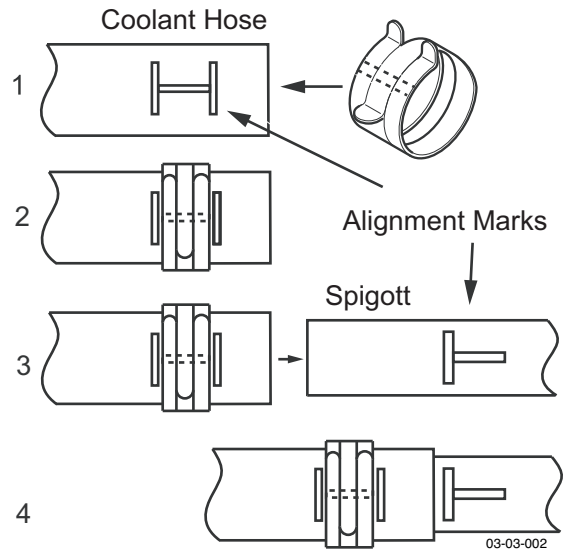

All coolant hoses and spigots must be de-greased before assembly.

Coolant-Drain/Fill

Repair Operation Time (ROT)	
Item	**Code**
Coolant-Drain-Fill	**03.03.AD**

1. Raise vehicle on ramp.
2. Remove front undertray (refer to Workshop Manual procedure 01.02.NB Undertray - Front - Renew).
3. Position suitable container to collect coolant.

WARNING
DO NOT REMOVE THE PRESSURE CAP WHEN THE COOLANT IS HOT. ALLOW TIME FOR THE COOLANT / ENGINE TO COOL. TAKE PARTICULAR CARE TO AVOID BURNS FROM THE COOLING SYSTEM.

4. Remove pressure cap from coolant reservoir.
5. Remove drain plug from radiator, allow coolant to drain.
6. Installation
7. Clean radiator drain plug.
8. Install and tighten drain plug.
9. Remove drain container.
10. Install front undertray (refer to Workshop Manual procedure 01.02.NB Undertray - Front - Renew).
11. Lower vehicle on ramp.
12. Fill cooling system with specified coolant mix to maximum level in coolant reservoir.

13. Install and tighten pressure cap.

WARNING
DO NOT REMOVE THE PRESSURE CAP WHEN THE COOLANT IS HOT. ALLOW TIME FOR THE COOLANT / ENGINE TO COOL. TAKE PARTICULAR CARE TO AVOID BURNS FROM THE COOLING SYSTEM.

14. Run engine until normal operating temperature is reached.
15. Stop engine, allow to cool down.
16. Re-check coolant level, top-up as necessary.

Thermostat - Renew

Repair Operation Time (ROT)	
Item	**Code**
Thermostat - Renew	**03.03.CB**

Removal

1. Drain Coolant (refer to Workshop Manual procedure 03.03.AD Coolant - Drain and Refill).
2. Release breather valve (bolt x1) and tie aside.
3. Unclip engine harness for access (x4).
4. Remove one end of engine breather hoses for access (x3).
5. Remove breather valve bracket for access (nuts x2 bolt x1).
6. Remove thermostat housing from manifold (bolt x3).
7. Remove thermostat and sealing ring.

Installation

1. Install new thermostat and sealing ring.
2. Install thermostat housing (torque).
3. Install breather valve bracket.
4. Install breather hoses (x3) and clip.
5. Clip engine harness.
6. Install breather valve.
7. Refill coolant (refer to Workshop Manual procedure 03.03.AD Coolant - Drain and Refill).

Water Pump - Renew

Repair Operation Time (ROT)	
Item	**Code**
Water Pump - Renew	**03.03.CD**

Removal

1. Drain cooling system (refer to Workshop Manual procedure 03.03.AD Coolant - Drain and Refill).
2. Disconnect breather pipe quickfits (x2) from air cleaner duct.
3. Remove throttle body duct for access. (clips x3).
4. Remove pump pulley bolts (x3) (refer to Figure 1).

Figure 1

5. Release tensioner and slip belt from idler.
6. Remove pump pulley.
7. Remove pump (bolts x7) (refer to Figure 2).

Figure 2

Installation

1. Install pump (bolts x7) (torque), clean mating faces.
2. Fit pulley to pump with bolts.
3. Torque pulley bolts (bolt x3).
4. Release tensioner and slip belt on idler.
5. Install throttle body duct.
6. Connect breather pipe quickfits (x2) to air cleaner duct.
7. Refill cooling system (refer to Workshop Manual procedure 03.03.AD Coolant - Drain and Refill).

Water Pump Pulley - Renew

Repair Operation Time (ROT)	
Item	**Code**
Water Pump Pulley - Renew	**03.03.CE**

Removal

1. Battery isolation switch 'OFF'.
2. Disconnect breather pipe quickfits (x2) from air cleaner duct.

3. Remove throttle body duct for access. (clips x3).
4. Remove pump pulley bolts (x3) (refer to Figure 1).

Figure 1

5. Release tensioner and slip belt from idler.
6. Remove pump pulley.

Installation

1. Fit pulley to pump with bolts.
2. Torque pulley bolts (bolt x3).
3. Release tensioner and slip belt on idler.
4. Install throttle body duct.
5. Connect breather pipe quickfits (x2) to air cleaner duct.
6. Battery isolation switch 'ON'.

Oil Temperature Controller - Renew

Repair Operation Time (ROT)	
Item	**Code**
Oil Temperature Controller - Renew	**03.02.CH**

Remove

1. Raise vehicle on ramp.
2. Remove undertray (refer to Workshop Manual procedure 01.02.NB Undertray - Front - Renew).

WARNING
DO NOT GET USED ENGINE OIL ON YOUR SKIN. USED ENGINE OIL CAN BE HARMFUL.

3. Remove pipes from oil thermostat (position container to catch oil) (refer to Figure 1).

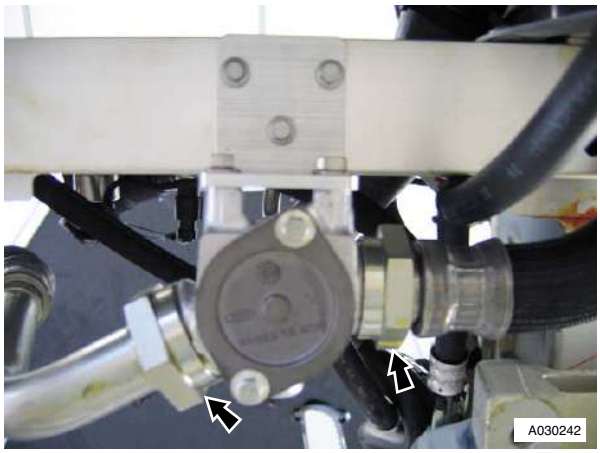

Figure 1

4. Remove controller from body (bolts x2).

Install

1. Install controller to body (bolts x2) (torque).
2. Install pipes to oil thermostat (torque) ensure correct alignment in oil tank bracket.
3. Install undertray (refer to Workshop Manual procedure 01.02.NB Undertray - Front - Renew).
4. Fill tank with approximately amount of displaced oil and replace cap.
5. Use handbook procedure to check oil level.
6. Lower vehicle on ramp.

Radiator Fan and Motor Assembly - Remove and Install

Repair Operation Time (ROT)	
Item	**Code**
Radiator Fan and Motor Assembly - Remove and Install	**03.03.DB**

Removal

1. Open the boot..
2. Set the battery isolation switch to off.
3. Remove the radiator closing panel. (01.02.AA - Radiator Closing Panel).
4. Disconnect the two electrical connectors from the wiring harness for the radiator fan and motor assembly.
5. Remove the two bolts that attach the horn mount bracket to the body.
6. Move the horn assembly away.
7. Remove the two nuts that attach the radiator fan and motor assembly to the body.
8. Remove the radiator fan and motor assembly.

Installation

1. Install the radiator fan and motor assembly.
2. Install and tighten the two nuts that attach the radiator fan and motor assembly to the body.

3. Put the horn assembly into the correct position.
4. Install and tighten the two bolts that attach the horn mount bracket to the body.
5. Connect the two electrical connectors to the wiring harness for the radiator fan and motor assembly.
6. Install the radiator closing panel. (0102AA - Radiator Closing Panel).
7. Set the battery isolation switch to on.
8. Close the boot.

Radiator and Condenser Assembly - Renew

Repair Operation Time (ROT)	
Item	**Code**
Radiator and Condenser Assembly - Renew	**03.03.EA**

Removal

1. Remove cooling fan pack (refer to Workshop Manual procedure 03.03.DB Fan and Motor Assembly - Radiator - Renew).
2. Remove grille (refer to Workshop Manual procedure 01.08.AA Grille - Radiator - Renew).
3. Drain cooling system (refer to Workshop Manual procedure 03.03.AD Coolant - Drain and Refill).
4. Recover refrigerant (refer to Workshop Manual procedure 12.03.FA Refrigerant Gas - Recover/Recharge - Renew).
5. Remove bolts (x4), that attach the PAS fluid cooler to bonnet latch cross member. Tie fluid cooler aside.
6. Remove bolts (x6), and spacers (x2) that attach the bonnet latch cross member to body and position aside.
7. Disconnect top and bottom hose from radiator (clips x2).
8. Remove expansion tank hose from radiator (clip x1).
9. Remove bolts (x2), that attach the condenser pipe connections. Plug pipes and block connections.

Caution

Make sure that all open ends are plugged immediately after disconnecting refrigeration parts. If moist air or foreign material enters the refrigeration cycle, cooling ability will be lowered and abnormal noise or other faults may occur.

10. Remove radiator mounting rubbers (x4)
11. Remove foam seals from radiator (x3).

Installation

1. Install foam seals to radiator (x3).
2. Install rubber mounts to radiator (x4).
3. Clean pipe connections, remove plugs.
4. Install new 'O' rings to pipe connections. Connect pipes to condenser. Install and torque tighten bolts (x2).
5. Connect top and bottom hoses to radiator (clips x2).
6. Connect expansion tank hose to radiator (clip x1).
7. Install bonnet latch cross member, install spacers and bolts (torque).
8. Position PAS fluid cooler to cross member, install and torque tighten bolts (x4).
9. Install grill (refer to Workshop Manual procedure 01.08.AA Grille - Radiator - Renew).
10. Install cooling fan pack (refer to Workshop Manual procedure 03.03.DB Fan and Motor Assembly - Radiator - Renew).
11. Recharge refrigerant (refer to Workshop Manual procedure 12.03.FA Refrigerant Gas - Recover/Recharge - Renew).
12. Refill cooling system (refer to Workshop Manual procedure 03.03.AD Coolant - Drain and Refill).

Radiator Assembly - Renew

Repair Operation Time (ROT)	
Item	**Code**
Radiator Assembly - Renew	**03.03.EB**

Removal

1. Remove cooling fan pack (refer to Workshop Manual procedure 03.03.EB Fan and Motor Assembly Radiator - Renew
2. Remove grille (refer to Workshop Manual procedure 01.08.AA Grille - Radiator - Renew).
3. Drain coolant (refer to Workshop Manual procedure 03.03.AD Coolant - Drain and Refill).
4. Remove bolt that attaches the PAS pipe bracket to bottom cross member.
5. Remove bolts (x6), and spacers (x2) that attach the bonnet latch cross member to body and position aside.
6. Disconnect top and bottom hose from radiator (clips x2).
7. Disconnect top and bottom hose from radiator (clips x2).
8. Remove expansion tank hose from radiator (clip x1).
9. Remove bolts (x2) that attach the radiator to condenser.
10. Unclip condenser from radiator and remove from vehicle (lugs x4) (support condenser).
11. Remove radiator mounting rubbers (x4)
1. Remove foam seals from radiator (x3).

Installation

1. Install foam seals to radiator (x3).
2. Install rubber mounts to radiator (x4).
3. Install radiator and clip to condenser (lugs x4).
4. Install condenser to radiator bolts x2 (torque).
5. Connect top and bottom hoses to radiator (clips x2).
6. Connect expansion tank hose to radiator (clip x1).
7. Install bonnet latch cross member, install spacers and bolts (torque).
8. Position PAS fluid cooler to cross member, install and torque tighten bolts (x4).

9. Install grill (refer to Workshop Manual procedure 01.08.AA Grille - Radiator - Renew).
10. Install cooling fan pack (refer to Workshop Manual procedure 03.03.EB Fan and Motor Assembly Radiator - Renew).
11. Raise vehicle
12. Install bottom radiator crossmember (bolts x4) (torque).
13. Install PAS pipe bracket to cross member (bolt x1).
14. Refill coolant (refer to Workshop Manual procedure 03.03.AD Coolant - Drain and Refill).

Air Conditioning Condenser - Renew

Repair Operation Time (ROT)	
Item	**Code**
Air Conditioning Condenser - Renew	**03.03.EC**

Removal

1. Recover refrigerant gas from A/C system (refer to Workshop Manual procedure 12.03.FA Refrigerant Gas - Recover/Recharge - Renew).
2. Remove grille (refer to Workshop Manual procedure 01.08.AA Grille - Radiator - Renew).
3. Remove slam panel (screws x12).
4. Remove bolts (x4), that attach the PAS fluid cooler to bonnet latch cross member. Tie fluid cooler aside.
5. Remove bolts (x6), and spacers (x2) that attach the bonnet latch cross member to body and position aside.
6. Remove bolts (x2), that attach the condenser pipe connections. Plug pipes and block connections.

Caution

Make sure open ends are plugged immediately after disconnecting refrigeration parts. If moist air or foreign material enters the refrigeration cycle, cooling ability will be lowered and abnormal noise or other faults may occur.

7. Remove and discard O-rings (x2) from pipe connections.
8. Remove bolts (x2), that attach the condenser to radiator, remove condenser.

Installation

1. Install condenser to radiator, install and torque tighten bolts (x2).
2. Clean pipe connections, remove plugs.
3. Install new O-rings to pipe connections. Connect pipes to condenser. Install and torque tighten bolts (x2).
4. Install bonnet latch cross member, install spacers and bolts (torque).
5. Position PAS fluid cooler to cross member, install and torque tighten bolts (x4).
6. Install slam panel.
7. Install grille (refer to Workshop Manual procedure 01.08.AA Grille - Radiator - Renew).
8. Refrigerant gas re-charge A/C system (refer to Workshop Manual procedure 12.03.FA Refrigerant Gas - Recover/Recharge - Renew).

Radiator Fan Modulator - Remove and Install

Repair Operation Time (ROT)	
Item	**Code**
Radiator Fan Modulator - Remove and Install	**03.03.EC**

Removal

1. Remove the radiator fan and motor assembly. (0303DB - Radiator Fan and Motor Assembly).
2. Disconnect the two electrical connectors from the radiator fan modulator.
3. Release the five fir tree clips that attach the wiring harness for the radiator fan modulator to the fan cowl.
4. Release the two electrical connectors for the radiator fan modulator from the mount.
5. Remove the screw that attaches the radiator fan modulator to the fan cowl.
6. Remove the radiator fan modulator.

Install

1. Install the radiator fan modulator.
2. Install and tighten the screw that attaches the radiator fan modulator to the fan cowl.
3. Attach the two electrical connectors for the radiator fan modulator to the mount.
4. Install the five fir tree clips that attach the wiring harness for the radiator fan modulator to the fan cowl.
5. Connect the two electrical connectors to the radiator fan modulator.
6. Install the radiator fan and motor assembly. (03.03.DB - Radiator Fan and Motor Assembly).

Expansion Tank Assembly - Renew

Repair Operation Time (ROT)	
Item	**Code**
Expansion Tank Assembly - Renew	**03.03.FB**

Remove

WARNING

DO NOT REMOVE THE PRESSURE CAP WHEN THE COOLANT IS HOT. ALLOW TIME FOR THE COOLANT / ENGINE TO COOL. TAKE PARTICULAR CARE TO AVOID BURNS FROM THE COOLING SYSTEM.

1. Using a syringe, remove coolant from expansion tank.
2. Remove bolts (x4), remove LH corner cross brace.
3. Release clips, disconnect coolant hoses (x3) from expansion tank.
4. Remove upper bolt and side nut that attaches the expansion tank.

5. Raise expansion tank sufficient to disconnect multiplug, release clip, disconnect hose.
6. Remove expansion tank.

Install

1. Position expansion tank, connect multiplug, install hose and secure with clip.
2. Install nut and bolt, tighten to correct torque.
3. Install hoses (x3) on expansion tank, secure with clips (x3).
4. Install LH cross brace, install bolts (x4) (torque with vehicle on level ground).
5. Refill expansion tank to correct level with correct coolant fluid mixture.
6. Clean up any spilled coolant fluid.

Coolant Recovery Tank Assembly - Remove and Install

Repair Operation Time (ROT)	
Item	**Code**
Coolant Recovery Tank Assembly- Remove and Install	**03.03.FD**

Remove

1. Raise the vehicle and make it safe.
2. On Roadster vehicles, remove the centre undertray.
3. Remove the left side front wheel.
4. Remove the five or six M6 Torx-head screws that attach the rear of the wheelarch liner.
5. Remove the self-tapping screw that attaches the rear of the wheelarch liner into the wheelarch.
6. Turn the steering fully to the left.
7. Move the rear of the wheelarch liner away to get access to the recovery tank.

WARNING

DO NOT DISCONNECT THE HOSES WHEN THE COOLANT IS HOT. HOT COOLANT CAN CAUSE INJURY. LET THE COOLANT AND THE ENGINE COOL BEFORE YOU DO WORK.

Note: Put absorbent material around the work area to absorb spilled fluid.

8. Release the clip that attaches each of the two hoses (2) to the recovery tank and release the hoses (refer to Figure 1).

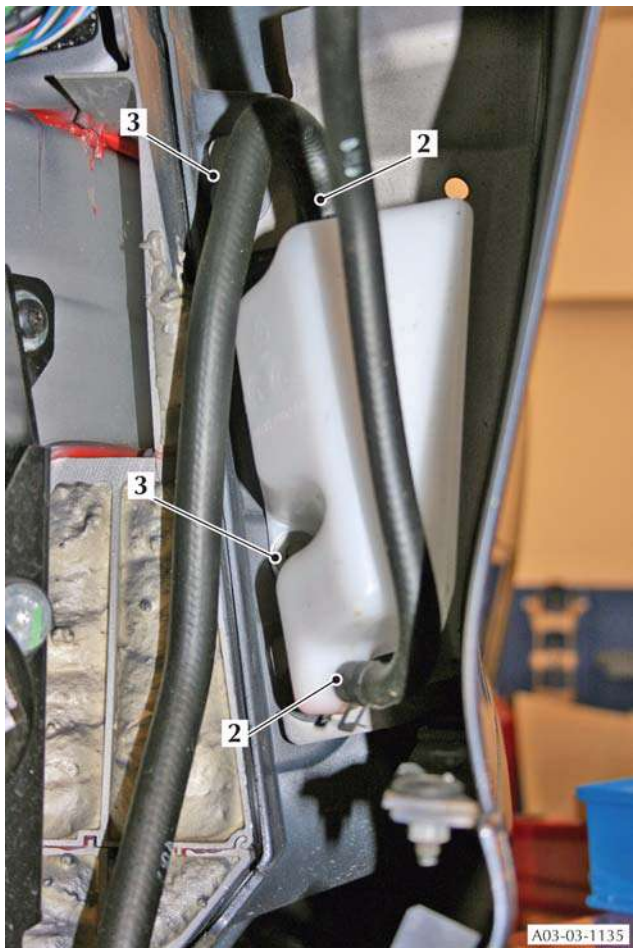

Figure 1

9. Remove the two M6 screws (3) that attach the recovery tank to the body and remove the recovery tank.

Install

1. Put the recovery tank in position on the body.
2. Install and tighten the two M6 attachment screws (3).
3. Connect the two hoses (2) to the recovery tank.
4. Put the clip back in position on each hose.
5. Put the wheelarch liner back into position.
6. Turn the steering to the centre position.
7. Install the self-tapping screw that attaches the rear of the wheelarch liner into the wheelarch.
8. Install the five or six M6 Torx-head screws that attach the rear of the wheelarch liner.
9. Install the front left roadwheel.
10. On Roadster vehicles, install the centre undertray.
11. Lower the vehicle.
12. Do a check of the coolant level and fill if necessary.

Engine Coolant Reservoir Hose - Renew

Repair Operation Time (ROT)	
Item	**Code**
Engine Coolant Reservoir Hose - Renew	**03.03.KA**

Removal

1. Drain cooling system (refer to Workshop Manual procedure 03.03.AD Coolant - Drain and Refill).
2. Remove screw and nut that attaches the expansion tank to body, move expansion tank aside (to access hose clip).
3. Release clip and disconnect hose from expansion tank.
4. Remove hose from engine (quickfit).
5. Release hose from body clip, remove hose.

Installation

1. Install hose, secure in body clip.
2. Install hose to expansion tank, secure with clip.
3. Install and secure hose to engine (quick fit).
4. Install and torque tighten screw and nut that attaches the expansion tank to body.
5. Refill cooling system (refer to Workshop Manual procedure 03.03.AD Coolant - Drain and Refill).

Water Inlet/Outlet Manifold - Renew

Repair Operation Time (ROT)		
Item		**Code**
Water Inlet/Outlet Manifold - Renew	LHD	**03.03.MH**
Water Inlet/Outlet Manifold - Renew	RHD	**03.03.MJ**

Removal

1. Remove reservoir bracket assembly - vacuum system (refer to Workshop Manual procedure 03.08.AE Reservoir and Bracket Assembly - Vacuum System - Renew).
2. Disconnect bottom hose (clip x1) (refer to Figure 1).

Figure 1

3. Disconnect top hose (clip x1) (refer to Figure 2).

Figure 2

4. Disconnect expansion tank feed hose (quickfit) (refer to Figure 3).

Figure 3

5. Disconnect heater feed hose (clip x1) (refer to Figure 4).

Figure 4

6. Disconnect heater return hose (clip x1) (refer to Figure 5).

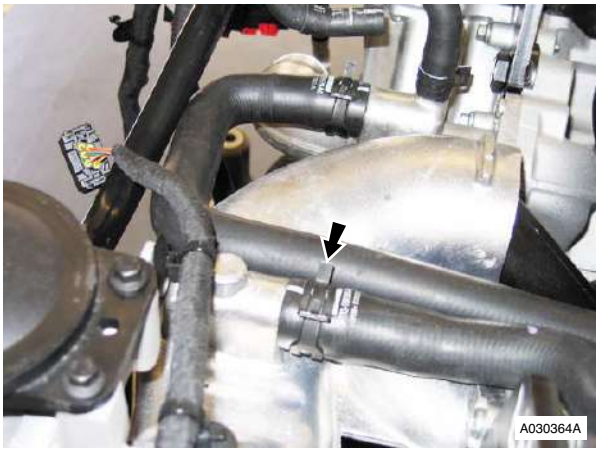

Figure 5

7. Disconnect breather hose (quickfit) (refer to Figure 6).

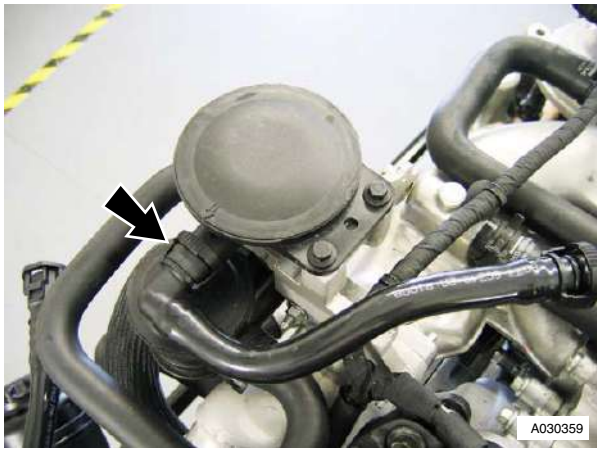

Figure 6

8. Disconnect separator hose (clip x1) (refer to Figure 7).

Figure 7

9. Disconnect coolant temperature multiplug (refer to Figure 8).

Figure 8

10. Remove harness clips (x2).
11. Remove 4th bolt of vacuum tank bracket fixing (refer to Figure 9).

12. Remove coolant manifold (bolts x4) (refer to Figure 9).

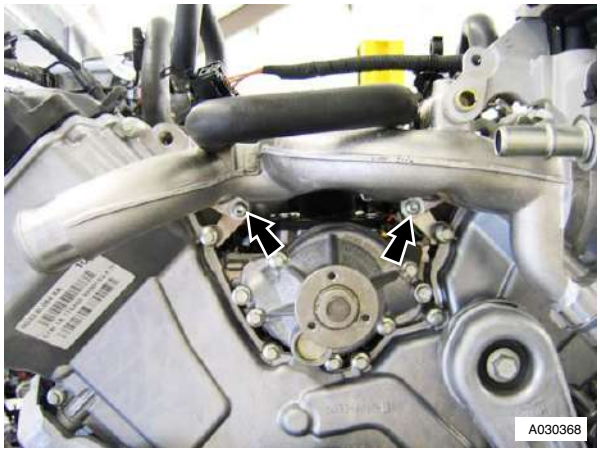

Figure 9

13. Remove old seals.
14. Remove bracket breather (bolt x1, nut x2).

Installation

1. Install bracket breather (bolt x1, nuts x2) (torque).
2. Clean gasket faces.
3. Install new seals.
4. Install coolant manifold (bolts x4) (torque).
5. Install 4th bolt of vacuum tank bracket fixing (torque).
6. Install harness clips (x2).
7. Connect coolant temp multiplug.
8. Connect separator hose (clip x1).
9. Connect breather hose (quickfit).
10. Connect heater return hose (clip x1).
11. Connect heater feed hose (clip x1).
12. Connect expansion tank feed hose (quickfit).
13. Disconnect top hose (clip x1).
14. Connect bottom hose (clip x1).
15. Install reservoir bracket assembly - vacuum system (refer to Workshop Manual procedure 03.08.AE Reservoir and Bracket Assembly - Vacuum System - Renew).

Engine Electric Coolant Temperature Sensor - Renew

Repair Operation Time (ROT)	
Item	**Code**
Engine Electric Coolant Temperature Sensor - Renew	**03.03.GB**

Removal

1. Drain Cooling system (refer to Workshop Manual procedure 03.03.AD Coolant - Drain and Refill).
2. Disconnect breather pipe quickfits (x2) from air cleaner duct.
3. Remove throttle body duct for access. (clips x3).
4. Remove pump pulley bolts (x3) (refer to Figure 1).

Figure 1

5. Release tensioner and slip belt from idler (refer to Figure 2).

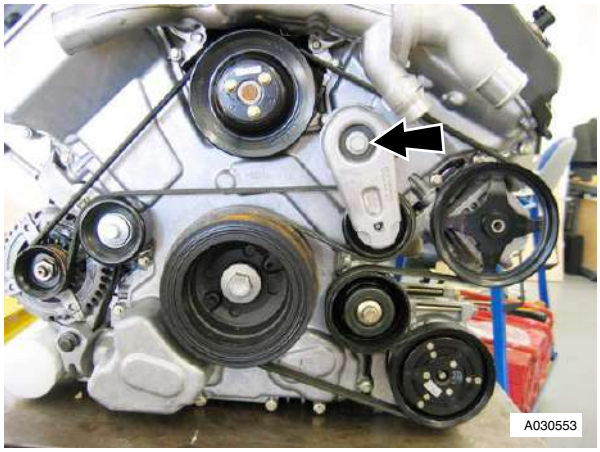

Figure 2

6. Remove pump pulley.
7. Disconnect throttle body coolant hose (refer to Figure 3).

Figure 3

8. Remove sensor attachment clip (refer to Figure 4).

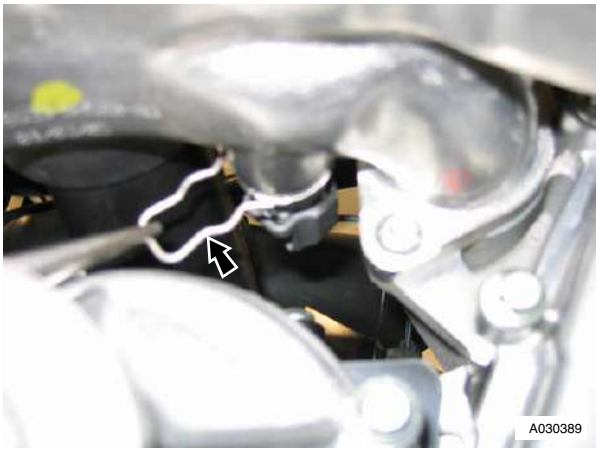

Figure 4

9. Remove sensor from housing with multiplug, then disconnect (refer to Figure 5).

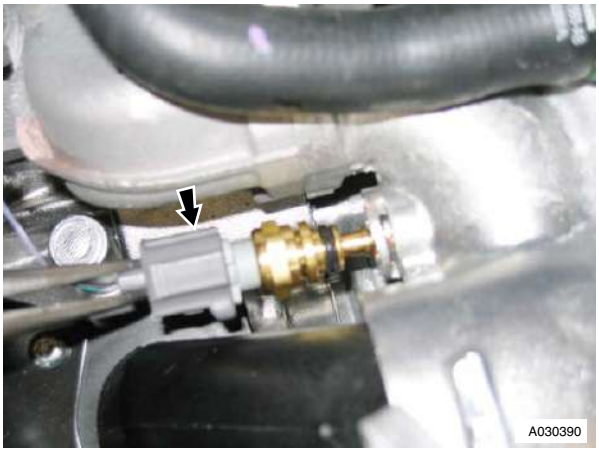

Figure 5

Installation

1. Clean seal area.
2. Install sensor, with multiplug connected.
3. Install sensor attachment clip.
4. Connect throttle body coolant hose.
5. Fit pulley to pump with bolts.
6. Release tensioner and slip belt on idler.
7. Torque pulley bolts (bolt x3).
8. Install throttle body duct.
9. Connect breather pipe quickfits (x2) to air cleaner duct.
10. Refill cooling system (refer to Workshop Manual procedure 03.03.AD Coolant - Drain and Refill).

Thermostat Cover - Renew

Repair Operation Time (ROT)	
Item	**Code**
Thermostat Cover - Renew	**03.03.HB**

Removal

1. Drain Coolant (refer to Workshop Manual procedure 03.03.AD Coolant - Drain and Refill).
2. Release breather valve (bolt x1) and tie aside.
3. Disconnect breather pipe quickfits (x2) from air cleaner duct.
4. Remove throttle body duct for access. (clips x3).
5. Unclip engine harness for access (x4).
6. Remove one end of engine breather hoses for access (x3).
7. Remove breather valve bracket for access (nuts x2 bolt x1).
8. Remove thermostat housing from manifold (bolt x3).
9. Remove thermostat and sealing ring.

Installation

1. Install thermostat and sealing ring.
2. Install thermostat housing (torque).
3. Install breather valve bracket.
4. Install breather hoses (x3) and clip.
5. Clip engine harness.
6. Install breather valve.
7. Install throttle body duct.
8. Connect breather pipe quickfits (x2) to air cleaner duct.
9. Refill coolant (refer to Workshop Manual procedure 03.03.AD Coolant - Drain and Refill).

ASTON MARTIN
ASTON MARTIN

Engine (03.00)

Fuel Charging System (03.04)

Safety Precautions

Operations on fuel system result in fuel liquid and vapour being present in the working environment. This presents a very serious risk and the following precautions must be strictly observed:

WARNING
OPERATIONS ON REFUELLING AND THE FUEL SYSTEM MUST ONLY BE PERFORMED BY PERSONNEL WHO HAVE COMPLETED TRAINING ON FUEL HANDLING.

WARNING
SMOKING MUST NOT BE ALLOWED NEAR THE WORKING AREA. “NO SMOKING” SIGNS MUST BE POSTED AROUND THE WORKING AREA.

WARNING
ANY OPERATION WHICH COULD INVOLVE SPARKS OR NAKED LIGHTS (E.G. BATTERY TESTING, WELDING, METAL GRINDING, ETC.) MUST NOT BE ALLOWED NEAR THE WORKING AREA.

WARNING
A CO2 FIRE EXTINGUISHER MUST BE AVAILABLE CLOSE AT HAND.

WARNING
DRY SAND MUST BE AVAILABLE CLOSE AT HAND TO SOAK UP ANY ACCIDENTAL FUEL SPILLAGE.

WARNING
IF NECESSARY, EMPTY THE FUEL INTO AN EXPLOSION PROOF CONTAINER USING SUITABLE FIREPROOF FUEL HANDLING EQUIPMENT.

WARNING
THE WORKING AREA MUST BE WELL VENTILATED.

WARNING
DISCONNECT THE BATTERY BEFORE COMMENCING WORK ON THE FUEL SYSTEM.

WARNING
DEPRESSURISE THE FUEL SYSTEM BEFORE DISCONNECTING ANY FUEL LINES.

Maintenance

Fuel Rails - Renew

Repair Operation Time (ROT)	
Item	**Code**
Fuel Rails-Renew	**03.01.BZ**

Removal

1. Depressurise fuel rail (see Workshop Manual procedure 10.01.EK Fuel System - Depressurise).

Note: Removal Not Handed

2. Coolant drain (see Workshop Manual procedure 03.03.AD Coolant - Drain and Refill).
3. Remove cross brace (bolts x4).

Removal RH Side

4. Remove coil cover.
5. Disconnect breather hose (quick fit) move aside.
6. Release harness fir tree clips (x3) from cylinder head and move aside.
7. Remove fuse box bracket fixings (bolt and nut) (allows movement).
8. Remove ECM (see Workshop Manual procedure 03.14.BB Engine Control Module - RH Renew).
9. Remove battery lead (1x nut and rubber cover) from fuse box (2x leads).
10. Remove multiplugs (x10) from fusebox.
11. Remove earth terminal (1x nut and rubber cover) from fusebox.
12. Remove fuse box from bracket (bolt x2).
13. Release harness fir tree clips (x3) from engine bracket.
14. Feed harness from inner wing and over engine to gain access to cam cover.
15. Remove purge pipe P-clip (bolt x1) and move pipe aside.
16. Remove harness bracket from engine (bolts x2, nut x1).
17. Release fuel feed hose from rail (clip x1) and move aside.
18. Disconnect heater hose from pipe (quick fit).
19. Release heater hose (clips x2) and EGR vacuum line (clips x2) from bracket.
20. Release harness from coolant pipe bracket (fir tree x3).
21. Disconnect EGR (x1), fuel rail pressure sensor (x1) and injector multiplugs (x4), move harness aside.
22. Remove coolant pipe bracket (nuts x2 and bolts x2).
23. Disconnect EGR vac pipe from sensor and manifold, move aside.

Removal LH Side

24. Remove corner cross brace.
25. Remove coil cover.
26. Disconnect breather hoses from cam cover (x2) for access.
27. Disconnect purge line from manifold (quickfit) and support clip for access.
28. Disconnect heater hose from pipe (quick fit).
29. Release heater hose (x2) and throttle body hose (x2) from support bracket.
30. Remove booster hose from manifold and support clip.
31. Remove harness support bracket (bolt x1, nut x2) release harness clips (fir tree x3).
32. Release pipe support bracket (nuts x2, bolts x2) move aside.
33. Disconnect injector multiplugs (x4).
34. Unclip injector harness from cam cover (x2).
35. Disconnect IAT multiplug.
36. Disconnect breather hose from manifold (quickfit).

Removal - Manifold From Vehicle

37. Disconnect manifold heating hoses (x2).
38. Disconnect throttle body multiplug and harness clip.
39. Disconnect breather pipe quickfits (x2) from air cleaner duct.
40. Disconnect air cleaner duct (clip x1).
41. Disconnect EGR vacuum hose.
42. Disconnect EGR pipe union and tie aside.
43. Remove manifold bolts (x 10).
44. Remove bolts (x2) bracket to manifold (rear).

WARNING
THE INTAKE MANIFOLD IS HEAVY. TO AVOID PERSONAL INJURY OR DAMAGE TO THE INTAKE MANIFOLD, INTAKE MANIFOLD REMOVAL / ISTALLATION IS A TWO PERSON OPERATION.

45. Move manifold (2x people) forward, remove bolt for purge line T-clip, remove manifold.
46. Remove gaskets and clean mating faces.

Removal - Manifold Parts

47. Remove Injector to rail clips (x8) (see Figure 1).

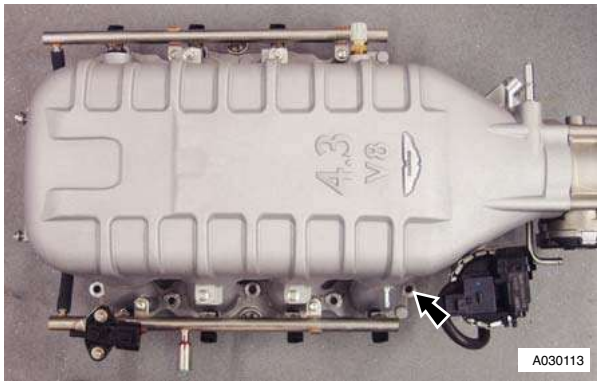

Figure 1

48. Remove fuel rail (bolts x4).

Installation

1. Install clips and new O-rings to injectors.
2. Install fuel rail (bolts x4).

Installation Manifold to Vehicle

3. Install new gaskets to cylinder block (glue in place).

WARNING
THE INTAKE MANIFOLD IS HEAVY. TO AVOID PERSONAL INJURY OR DAMAGE TO THE INTAKE MANIFOLD, INTAKE MANIFOLD REMOVAL / ISTALLATION IS A TWO PERSON OPERATION.

4. Install manifold (allowing access to install bolt for purge line P-clip).
5. Install manifold bolts (x10) (torque and tightening sequence).
6. Install bolts (x2) bracket to manifold (rear).
7. Connect EGR pipe union.
8. Connect EGR vacuum hose.
9. Connect air cleaner duct (clip x1).
10. Connect breather pipe quickfits (x2) to air cleaner duct.
11. Connect throttle body multiplug and harness clip.
12. Connect manifold heating hoses (x2).

Installation RH Side

13. Connect EGR vac pipe to sensor and manifold.
14. Install coolant pipe bracket (bolt x2, nut x2).
15. Connect EGR (x1), fuel rail pressure sensor (x1) and injector multiplugs (x4).
16. Refit harness to coolant pipe bracket (fir tree x3).
17. Connect heater hose to pipe (quick fit).
18. Refit heater hose (clipx2) and EGR vacuum lines (clips x2) to bracket.
19. Install fuel feed pipe.
20. Install purge pipe P-clip.
21. Install harness bracket to engine.
22. Feed harness into inner wing area.
23. Install fusebox to bracket.
24. Install earth lead to fusebox.
25. Install battery lead to fusebox (1x nut and rubber cover).
26. Install multiplugs to fuse box.
27. Install fusebox bracket fixings.
28. Refit harness fir tree clips to cylinder head.
29. Refit engine breather hose.
30. Install VVT solenoid multiplug, position coil and CMP harness (1x edge clip).
31. Install ECM (see Workshop Manual procedure 03.14.BB XREF: 319 Engine Control Module - RH Renew
32. Install coil cover.

Installation LH Side

33. Connect breather hose to manifold (quickfit).
34. Connect IAT multiplug.
35. Unclip injector harness from cam cover (x2).
36. Connect injector multiplugs (x4).
37. Install pipe support bracket (nuts x2, bolts x2).
38. Install harness support bracket (bolt x1, nut x2) release harness clips (fir tree x3).
39. Connect booster hose to manifold and support clip.
40. Connect heater hose from pipe (quick fit).
41. Install heater hose (x2) and throttle body hose (x2) from support bracket.
42. Connect purge line to manifold and into support clip.
43. Connect breather hoses (x2) to cam cover.
44. Install coil cover.
45. Install corner cross brace (torque bolts with vehicle on level ground).

Installation Not Handed

46. Refill coolant (see Workshop Manual procedure 03.03.AD Coolant - Drain and Refill).
47. Install cross brace (torque bolts with vehicle on level ground).

Fuel Injection Pressure Sensor - Renew

Repair Operation Time (ROT)	
Item	**Code**
Fuel Injection Pressure Sensor-Renew	**03.04.CB**

Removal

1. Depressurise fuel rail (see Workshop Manual procedure 10.01.EK Fuel System - Depressurise).
2. Disconnect vacuum hose.
3. Remove sensor from fuel rail (bolts x2).
4. Disconnect multiplug.

Installation

1. Install sensor to fuel rail (bolts x2) (torque).
2. Connect multiplug.
3. Connect vacuum hose.

Fuel Temperature Sensor - Renew

Repair Operation Time (ROT)	
Item	**Code**
Fuel Temperature Sensor-Renew	**03.04.DB**

Removal

1. Depressurise fuel rail (see Workshop Manual procedure 10.01.EK Fuel System - Depressurise).
2. Disconnect vacuum hose.
3. Remove sensor from fuel rail (bolts x2).
4. Disconnect multiplug.

Installation

1. Install sensor to fuel rail (bolts x2) (torque).
2. Connect multiplug.
3. Connect vacuum hose.

Fuel Injector Engine Set - Renew

Repair Operation Time (ROT)	
Item	**Code**
Fuel Injector Engine Set-Renew	**03.04.FB**

Removal

1. Remove LH injectors (see Workshop Manual procedure 03.04.GH Injector - Fuel - LH Bank - Engine Set - Renew).
2. Remove coils (see Workshop Manual procedure 03.07.HC Coil Assembly - Engine Set - RH - Renew).
3. Disconnect breather hose (quick fit) move aside.
4. Release harness fir tree clips (x3) from cylinder head and move aside.
5. Remove fuse box bracket fixings (bolt and nut) (allows movement).
6. Remove ECM (see Workshop Manual procedure 03.14.BB Engine Control Module - RH Renew).
7. Remove battery lead (1x nut and rubber cover) from fuse box (2x leads).
8. Remove multiplugs (x10) from fusebox.
9. Remove earth terminal (1x nut and rubber cover) from fusebox.
10. Remove fuse box from bracket (bolt x2).
11. Release harness fir tree clips (x3) from engine bracket.
12. Feed harness from inner wing and over engine to gain access to cam cover.
13. Remove purge pipe P-clip (bolt x1) and move pipe aside.
14. Remove harness bracket from engine (bolts x2, nut x1).
15. Release fuel feed hose from rail (clip x1) and move aside.
16. Disconnect heater hose from pipe (quick fit).
17. Release heater hose (clips x2) and EGR vacuum line (clips x2) from bracket.
18. Release harness from coolant pipe bracket (fir tree x3).
19. Disconnect EGR (x1), fuel rail pressure sensor (x1) and injector multiplugs (x4), move harness aside.
20. Remove coolant pipe bracket (nuts x2 and bolts x2).
21. Disconnect EGR vac pipe from sensor and manifold, move aside.
22. Remove Injector to rail clips (see Figure 1).

Figure 1

23. Remove fuel rail bolts (x2) and lift rail (tie aside) (see Figure 2).

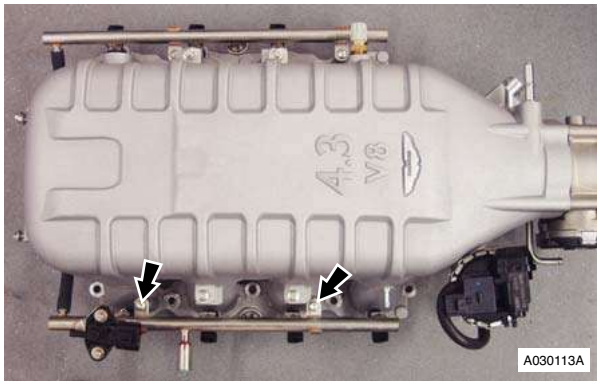

Figure 2

24. Remove injectors from manifold.

Installation

1. Install clips on to new injectors then fit injectors into manifold.
2. Install rail onto injectors (taking care each injector is aligned correctly and the clip seats properly) and fit bolts (x2) (torque).
3. Connect EGR vac pipe to sensor and manifold.
4. Install coolant pipe bracket (bolt x2, nut x2).
5. Connect EGR (x1), fuel rail pressure sensor (x1) and injector multiplugs (x4).
6. Refit harness to coolant pipe bracket (fir tree x3).
7. Connect heater hose to pipe (quick fit).
8. Refit heater hose (clipx2) and EGR vac lines (clips x2) to bracket.
9. Install fuel feed pipe.
10. Install purge pipe P-clip.
11. Install harness bracket to engine.
12. Feed harness into inner wing area.
13. Install fusebox to bracket.
14. Install earth lead to fusebox.
15. Install battery lead to fusebox (1x nut and rubber cover).
16. Install multiplugs to fuse box.

17. Install fusebox bracket fixings.
18. Refit harness fir tree clips to cylinder head.
19. Refit engine breather hose.
20. Install VVT solenoid multiplug, position coil and CMP harness (1x edge clip).
21. Install LH injectors (see Workshop Manual procedure 03.04.GH Injector - Fuel - LH Bank - Each - Renew).
22. Install ECM (see Workshop Manual procedure 03.14.BB Engine Control Module - RH Renew).
1. Install coils (see Workshop Manual procedure 03.07.HC Coil Assembly - Engine Set - RH - Renew).

Fuel Injector - Each - LH Bank - Renew

Repair Operation Time (ROT)		
Item		**Code**
Fuel Injector-Each-LH Bank-Renew	LHD	**03.04.GD**
Fuel Injector-Each-LH Bank-Renew	RHD	**03.04.GL**

Removal

1. Depressurise fuel rail (see Workshop Manual procedure 10.01.EK Fuel System - Depressurise).
2. Remove corner cross brace.
3. Disconnect breather hoses from cam cover (x2) for access.
4. Disconnect purge line from manifold (quickfit) and support clip for access.
5. Disconnect heater hose from pipe (quick fit).
6. Release heater hose (x2) and throttle body hose (x2) from support bracket.
7. Remove booster hose from manifold and support clip.
8. Remove harness support bracket (bolt x1, nut x2) release harness clips (fir tree x3).
9. Release pipe support bracket (nuts x2, bolts x2) move aside.
10. Disconnect IAT multiplug.
11. Disconnect injector multiplugs (x4).
12. Unclip injector harness from cam cover (x2).
13. Disconnect breather hose from manifold (quickfit).
14. Remove Injector to rail clip (for injector to be changed).
15. Remove fuel rail bolts (x2) and lift rail with remaining injectors (tie aside).
16. Remove injector from manifold.

Installation

1. Install new O-rings to remaining injectors (lube O-rings).
2. Install clip to new injector then injector into rail.
3. Install rail (with injectors) to manifold (bolt x2) (torque) (taking care each injector is aligned correctly).
4. Connect breather hose to manifold (quickfit).
5. Connect IAT multiplug.
6. Unclip injector harness from cam cover (x2).
7. Connect injector multiplugs (x4).
8. Install pipe support bracket (nuts x2, bolts x2).
9. Install harness support bracket (bolt x1, nut x2) release harness clips (fir tree x3).
10. Connect booster hose to manifold and support clip.
11. Connect heater hose from pipe (quick fit).
12. Install heater hose (x2) and throttle body hose (x2) from support bracket.
13. Connect purge line to manifold and into support clip.
14. Connect breather hoses (x2) to cam cover.
15. Install corner cross brace (torque bolts with vehicle on level ground).

Fuel Injector - Each - RH Bank - Renew

Repair Operation Time (ROT)		
Item		**Code**
Fuel Injector-Each-RH Bank-Renew	LHD	**03.04.GF**
Fuel Injector-Each-RH Bank-Renew	RHD	**03.04.GM**

Removal

1. Depressurise fuel rail (see Workshop Manual procedure 10.01.EK Fuel System - Depressurise).
2. Disconnect breather hose (quick fit) move aside.
3. Release harness fir tree clips (x3) from cylinder head and move aside.
4. Remove fuse box bracket fixings (bolt and nut) (allows movement).
5. Remove ECM (see Workshop Manual procedure 03.14.BB Engine Control Module - RH Renew).
6. Remove battery lead (1x nut and rubber cover) from fuse box (2x leads).
7. Remove multiplugs (x10) from fusebox.
8. Remove earth terminal (1x nut and rubber cover) from fusebox.
9. Remove fuse box from bracket (bolt x2).
10. Release harness fir tree clips (x3) from engine bracket.
11. Feed harness from inner wing and over engine to gain access to cam cover.
12. Remove purge pipe P-clip (bolt x1) and move pipe aside.
13. Remove harness bracket from engine (bolts x2, nut x1).
14. Release fuel feed hose from rail (clip x1) and move aside.
15. Disconnect heater hose from pipe (quick fit).
16. Release heater hose (clips x2) and EGR vacuum line (clips x2) from bracket.
17. Release harness from coolant pipe bracket (fir tree x3).
18. Disconnect EGR (x1), fuel rail pressure sensor (x1) and injector multiplugs (x4), move harness aside.
19. Remove coolant pipe bracket (nuts x2 and bolts x2).
20. Disconnect EGR vac pipe from sensor and manifold, move aside.
21. Remove Injector to rail clip (for injector to be changed).
22. Remove fuel rail bolts (x2) and lift rail with remaining injectors (tie aside).
23. Remove injector from manifold.

Installation

1. Install new O-rings to remaining injectors (lube O-ringP-clips).
2. Install clip to new injector then injector into rail.
3. Install rail (with injectors) to manifold (bolt x2) (torque) (taking care each injector is aligned correctly).
4. Connect EGR vac pipe to sensor and manifold.
5. Install coolant pipe bracket (bolt x2, nut x2).
6. Connect EGR (x1), fuel rail pressure sensor (x1) and injector multiplugs (x4).
7. Refit harness to coolant pipe bracket (fir tree x3).
8. Connect heater hose to pipe (quick fit).
9. Refit heater hose (clipx2) and EGR vacuum lines (clips x2) to bracket.
10. Install fuel feed pipe.
11. Install purge pipe P-clip.
12. Install harness bracket to engine.
13. Feed harness into inner wing area.
14. Install fusebox to bracket.
15. Install earth lead to fusebox.
16. Install battery lead to fusebox (1x nut and rubber cover).
17. Install multiplugs to fuse box.
18. Install fusebox bracket fixings.
19. Refit harness fir tree clips to cylinder head.
20. Refit engine breather hose.
21. Install VVT solenoid multiplug, position coil and CMP harness (1x edge clip).
22. Install ECM (see Workshop Manual procedure 03.14.BB Engine Control Module - RH Renew).

Engine Set - Fuel Injector - LH Bank - Renew

Repair Operation Time (ROT)		
Item		**Code**
Engine Set-Fuel Injector-LH Bank-Renew	LHD	**03.04.GH**
Engine Set-Fuel Injector-LH Bank-Renew	RHD	**03.04.GN**

Removal

1. Depressurise fuel rail (see Workshop Manual procedure 10.01.EK Fuel System - Depressurise).
2. Remove corner cross brace.
3. Disconnect breather hoses from cam cover (x2) for access.
4. Disconnect purge line from manifold (quickfit) and support clip for access.
5. Disconnect heater hose from pipe (quick fit).
6. Release heater hose (x2) and throttle body hose (x2) from support bracket.
7. Remove booster hose from manifold and support clip.
8. Remove harness support bracket (bolt x1, nut x2) release harness clips (fir tree x3).
9. Release pipe support bracket (nuts x2, bolts x2) move aside.
10. Disconnect IAT multiplug.
11. Disconnect injector multiplugs (x4).
12. Unclip injector harness from cam cover (x2).
13. Disconnect breather hose from manifold (quickfit).
14. Remove Injector to rail clips.
15. Remove fuel rail bolts (x2) and lift rail (tie aside).
16. Remove injectors from manifold.

Installation

1. Install clips on to new injectors then fit injectors into manifold.
2. Install rail onto injectors (taking care each injector is aligned correctly and the clip seats properly) and fit bolts (x2) (torque).
3. Connect breather hose to manifold (quickfit).
4. Connect IAT multiplug.
5. Unclip injector harness from cam cover (x2).
6. Connect injector multiplugs (x4).
7. Install pipe support bracket (nuts x2, bolts x2).
8. Install harness support bracket (bolt x1, nut x2) release harness clips (fir tree x3).
9. Connect booster hose to manifold and support clip.
10. Connect heater hose from pipe (quick fit).
11. Install heater hose (x2) and throttle body hose (x2) from support bracket.
12. Connect purge line to manifold and into support clip.
13. Connect breather hoses (x2) to cam cover.
14. Install corner cross brace (torque bolts with vehicle on level ground).

Engine Set - Fuel Injector - RH Bank - Renew

Repair Operation Time (ROT)		
Item		**Code**
Engine Set-Fuel Injector-RH Bank-Renew	LHD	**03.04.GK**
Engine Set-Fuel Injector-RH Bank-Renew	RHD	**03.04.GP**

Removal

1. Depressurise fuel rail (see Workshop Manual procedure 10.01.EK Fuel System - Depressurise
2. Disconnect breather hose (quick fit) move aside.
3. Release harness fir tree clips (x3) from cylinder head and move aside.
4. Remove fuse box bracket fixings (bolt and nut) (allows movement).
5. Remove ECM (see Workshop Manual procedure 03.14.BB Engine Control Module - RH Renew).
6. Remove battery lead (1x nut and rubber cover) from fuse box (2x leads).
7. Remove multiplugs (x10) from fusebox.

8. Remove earth terminal (1x nut and rubber cover) from fusebox.
9. Remove fuse box from bracket (bolt x2).
10. Release harness fir tree clips (x3) from engine bracket.
11. Feed harness from inner wing and over engine to gain access to cam cover.
12. Remove purge pipe P-clip (bolt x1) and move pipe aside.
13. Remove harness bracket from engine (bolts x2, nut x1).
14. Release fuel feed hose from rail (clip x1) and move aside.
15. Disconnect heater hose from pipe (quick fit).
16. Release heater hose (clips x2) and EGR vacuum line (clips x2) from bracket.
17. Release harness from coolant pipe bracket (fir tree x3).
18. Disconnect EGR (x1), fuel rail pressure sensor (x1) and injector multiplugs (x4), move harness aside.
19. Remove coolant pipe bracket (nuts x2 and bolts x2).
20. Disconnect EGR vac pipe from sensor and manifold, move aside.
21. Remove Injector to rail clips.
22. Remove fuel rail bolts (x2) and lift rail (tie aside).
23. Remove injectors from manifold.

Installation

1. Install clips on to new injectors then fit injectors into manifold.
2. Install rail onto injectors (taking care each injector is aligned correctly and the clip seats properly) and fit bolts (x2) (torque).
3. Connect EGR vac pipe to sensor and manifold.
4. Install coolant pipe bracket (bolt x2, nut x2).
5. Connect EGR (x1), fuel rail pressure sensor (x1) and injector multiplugs (x4).
6. Refit harness to coolant pipe bracket (fir tree x3).
7. Connect heater hose to pipe (quick fit).
8. Refit heater hose (clipx2) and EGR vac lines (clips x2) to bracket.
9. Install fuel feed pipe.
10. Install purge pipe P-clip.
11. Install harness bracket to engine.
12. Feed harness into inner wing area.
13. Install fusebox to bracket.
14. Install earth lead to fusebox.
15. Install battery lead to fusebox (1x nut and rubber cover).
16. Install multiplugs to fuse box.
17. Install fusebox bracket fixings.
18. Refit harness fir tree clips to cylinder head.
19. Refit engine breather hose.
20. Install VVT solenoid multiplug, position coil and CMP harness (1x edge clip).
21. Install ECM (see Workshop Manual procedure 03.14.BB Engine Control Module - RH Renew).

ASTON MARTIN
ASTON MARTIN

Engine (03.00)

Accessory Drive System (03.05)

Description

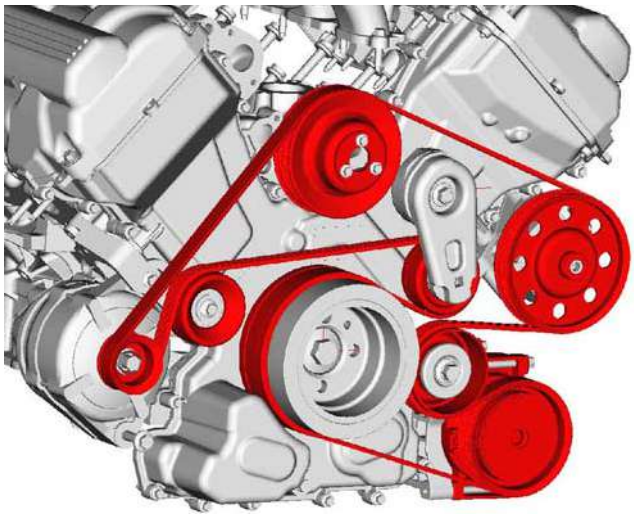

Auxiliary Drives

A damper pulley installed to the front of the crankshaft drives a 'polyvee' drive belt to power all of the engine auxiliaries.

- Air Conditioning Compressor
- Alternator
- Power Steering Pump
- Water Pump

Automatic Belt Tensioner

The automatic belt tensioner consists of an idler pulley which is free to rotate on a bearing, located at the end of a spring-loaded pivot arm.The pivot arm can be turned clockwise (viewed from the front of the engine) for belt removal and installation.

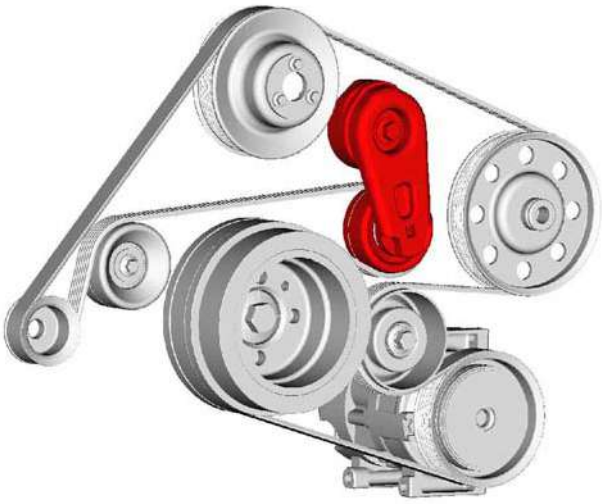

Specifications

Torque Figures		
Description	Nm	lb/ft
Belt Tensioner	34-46	25.1-34
Idler Pulleys	34-46	25.1-34

Maintenance

Drive Belt-Renew

Repair Operation Time (ROT)	
Item	**Code**
Drive Belt-Renew	**03.05.AB**

Remove

1. Remove throttle body duct for access. (clips x3).
2. Disconnect breather pipe quickfits (x2) from air cleaner duct.
3. Release tensioner and slip belt from idler.
4. Remove tensioner from engine (bolt x1).
5. Remove belt from engine.

Install

1. Fit belt to engine.
2. Install tensioner to engine (bolt x1) (torque).
3. Release tensioner and slip belt on idler.
4. Install throttle body duct.
5. Connect breather pipe quickfits (x2) to air cleaner duct.

Engine Drive Belt and Bracket Assembly Oil Pump Tensioner-Renew

Repair Operation Time (ROT)	
Item	**Code**
Engine Drive Belt and Bracket Assembly Oil Pump Tensioner-Renew	**03.05.AE**

Remove

1. Set the battery isolation switch to 'OFF'.
2. Release the three clips and remove the throttle body duct for access..
3. Disconnect the two 'quickfit' breather pipe connections from the air cleaner duct.

4. Release the tensioner and remove the belt from the idler (see Figure 1).

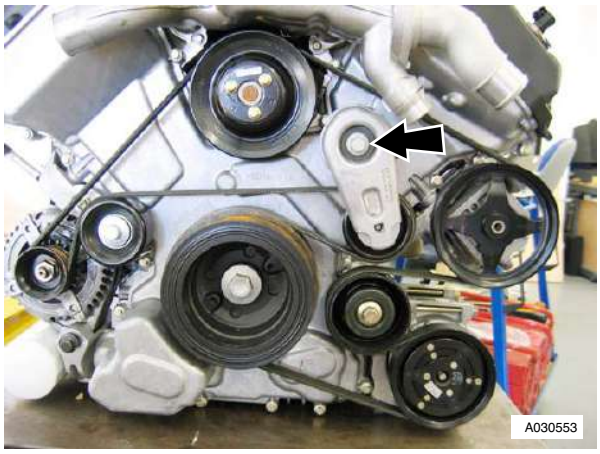

Figure 1

5. Remove the bolt that attaches the tensioner to the engine and remove.

Install

1. Install tensioner to engine (bolt x1) (torque).
2. Release tensioner and slip belt on idler.
3. Install throttle body duct.
4. Connect breather pipe quickfits (x2) to air cleaner duct.
5. Battery isolation switch 'ON'.

Idler Pulley-Renew

Repair Operation Time (ROT)	
Item	**Code**
Idler Pulley-Renew	**03.05.BF**

Removal

1. Set the battery isolation switch to 'OFF'.
2. Release the three clips and remove the throttle body duct for access.
3. Disconnect the two 'quick-fit' breather pipe connectors from the air cleaner duct.
4. Release the tensioner and remove the belt from the idler.
5. Remove the bolt (2) that attaches the idler (1) to the engine (refer to Figure 1)..

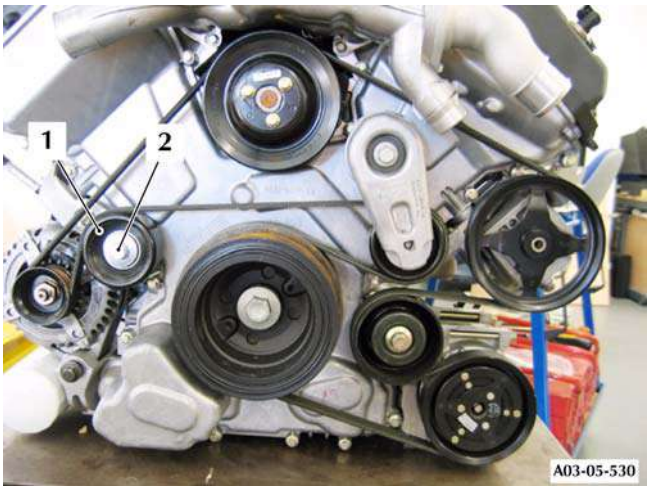

Figure 1

6. Remove the idler.

Install

1. Install idler to engine (bolt x1) (torque).
2. Release tensioner and slip belt on idler.
3. Install throttle body duct.
4. Connect breather pipe quickfits (x2) to air cleaner duct.
5. Battery isolation switch 'ON'.

Engine Drive Belt Idler Assembly-Renew

Repair Operation Time (ROT)	
Item	**Code**
Engine Drive Belt Idler Assembly-Renew	**03.05.BG**

Removal

1. Set the battery isolation switch to 'OFF'.
2. Release the three clips and remove the throttle body duct for access.
3. Disconnect the two 'quick-fit' breather pipe connectors from the air cleaner duct.

4. Release the tensioner and remove the belt from the idler (see Figure 1).

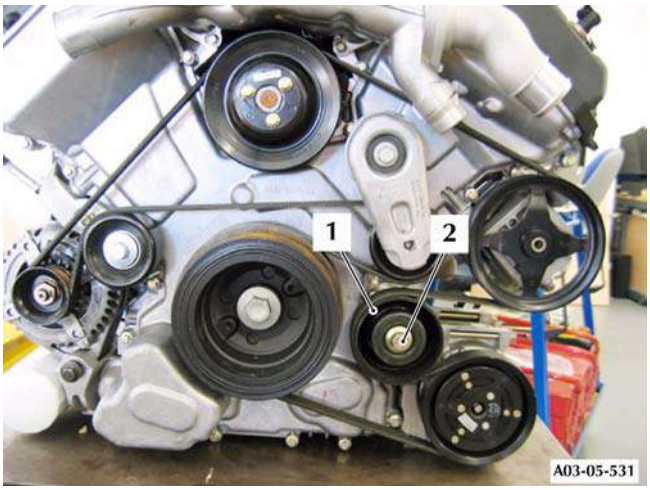

Figure 1

5. Remove the bolt that attaches the idler to the engine.
6. Remove the idler.

Installation

1. Put the idler in position on the engine.
2. Install and torque the bolt that attaches the idler.
3. Release the tensioner and put the belt on the idler.
4. Install the duct for the throttle body.
5. Connect the two 'quick-fit' connectors for the breather pipes to the air cleaner duct.
6. Set the battery isolation switch to 'ON'.

ASTON MARTIN

ASTON MARTIN

Engine (03.00)

Engine Cranking System (03.06)

Maintenance

Starter Motor-Renew

Repair Operation Time (ROT)	
Item	**Code**
Starter motor-Renew	**03.06.AB**

Removal

1. Remove RH exhaust manifold (see Workshop Manual procedure 09.00.CA Manifold - Exhaust - RH - Renew).
2. Switch battery isolation switch 'OFF'.
3. Remove battery cable from starter motor.
4. Disconnect solenoid multiplug from starter motor (see Figure 1).

Figure 1

5. Remove starter motor bolts (x2) (see Figure 2).

Figure 2

Installation

1. Install starter motor bolts (x2).
2. Connect solenoid multiplug to starter motor.
3. Install battery cable from starter motor.
4. Switch battery isolation switch 'ON'.
5. Install RH exhaust manifold (see Workshop Manual procedure 09.00.CA Manifold - Exhaust - RH - Renew).

ASTON MARTIN

ASTON MARTIN

Engine (03.00)

Ignition System (03.07)

Maintenance

Coil Assembly-Engine Set - LH-Renew

Repair Operation Time (ROT)		
Item		**Code**
Coil Assembly-Engine Set-Renew	LH	**03.07.GB**

Procedure to follow.

ASTON MARTIN
ASTON MARTIN

Engine (03.00)

Emission Control (03.08)

Maintenance

Vacuum Outlet Hose Assembly-Renew

Repair Operation Time (ROT)	
Item	**Code**
Vacuum Outlet Hose Assembly-Renew	**03.08.AC**

Removal

1. Remove inlet manifold (see Workshop Manual procedure 03.01.BB Gasket - Manifold Assembly - Intake Upper - Renew).
2. Disconnect hose from vacuum reservoir.
3. Disconnect hose from SAI module.
4. Unclip from bracket and remove hose.

Installation

1. Install hose and clip to bracket.
2. Connect hose to SAI module.
3. Connect hose to vacuum reservoir.
4. Install inlet manifold (see Workshop Manual procedure 03.01.BB Gasket - Manifold Assembly - Intake Upper - Renew).

Secondary Air Injection Pump Tube-Renew

Repair Operation Time (ROT)	
Item	**Code**
Secondary Air Injection Pump Tube-Renew	**03.08.AD**

Removal

1. Remove inlet manifold (see Workshop Manual procedure 03.01.BB Gasket - Manifold Assembly - Intake Upper - Renew).
2. Disconnect hose from SAI module and remove hose (quickfit).

Installation

1. Install hose and connect to SAI module (quickfit).
2. Install inlet manifold (see Workshop Manual procedure 03.01.BB Gasket - Manifold Assembly - Intake Upper - Renew).

Vacuum System Reservoir and Bracket Assembly-Renew

Repair Operation Time (ROT)	
Item	**Code**
Vacuum System Reservoir and Bracket Assembly-Renew	**03.08.AE**

Removal

1. Remove inlet manifold (see Workshop Manual procedure 03.01.BB Gasket - Manifold Assembly - Intake Upper - Renew).
2. Disconnect vacuum hose from reservoir.
3. Unclip harness from bracket.
4. Remove reservoir (bolts x3).

Installation

1. Install reservoir (bolts x3) (torque).
2. Clip harness to bracket.
3. Connect hose to SAI module.
4. Connect vacuum hose to reservoir.
5. Install inlet manifold (see Workshop Manual procedure 03.01.BB Gasket - Manifold Assembly - Intake Upper - Renew).

Oil Tank Breather Hose-Renew

Repair Operation Time (ROT)	
Item	**Code**
Oil Tank Breather Hose-Renew	**03.08.AH**

Removal

1. Disconnect hose from cam cover (quickfit).
2. Disconnect hose from oil tank (quickfit) and remove hose from clip.

Installation

1. Install hose to clip and connect to oil tank (quickfit).
2. Connect hose to cam cover (quickfit).

Air Cleaner to Rocker Cover Hose-Renew

Repair Operation Time (ROT)	
Item	**Code**
Air Cleaner to Rocker Cover Hose-Renew	**03.08.AJ**

Removal

1. Disconnect hose from cam cover (quickfit).
2. Disconnect hose from air duct (quickfit) and remove hose from clip.

Installation

1. Install hose to clip and connect to air duct (quickfit).
2. Connect hose to cam cover (quickfit).

Oil Separator Tube Assembly-Renew

Repair Operation Time (ROT)	
Item	**Code**
Oil Separator Tube Assembly-Renew	**03.08.AK**

Removal

1. Release clip and disconnect air cleaner duct from throttle body.
2. Disconnect hose from oil separator (clip x1).
3. Raise vehicle on ramp.
4. Unclip hose from bracket.
5. Position container to collect any oil spillage.

6. Disconnect hose from engine (quickfit) and remove hose.

Installation

1. Connect hose to engine (quickfit).
2. Clip hose to bracket.
3. Remove drain container.
4. Lower vehicle on ramp.
5. Install hose to oil separator (quickfit).
6. Install throttle body to air cleaner duct (clip x1).
7. Fill tank with approximately amount of displaced oil and replace cap.
8. Use handbook procedure to check oil level.

Oil Separator Assembly-Renew

Repair Operation Time (ROT)	
Item	**Code**
Oil Separator Assembly-Renew	**03.08.CA**

Removal

1. Release clip and disconnect air cleaner duct from throttle body.
2. Disconnect hoses from oil separator (clips x2).
3. Remove separator (bolt x1) (place cloth to catch oil)

Installation

1. Install separator (bolt x1) (torque).
2. Install hoses to oil separator (clips x2).
3. Install throttle body to air cleaner duct (clip x1).
4. Use handbook procedure to check oil level.

Emissions Separator Hose-Renew

Repair Operation Time (ROT)	
Item	**Code**
Emissions Separator Hose-Renew	**03.08.DA**

Removal

1. Move throttle body to air cleaner duct for access (clip x1).
2. Disconnect hose from oil separator (clips x1).
3. Disconnect hose from engine and remove (clips x1).

Installation

1. Connect hose to engine (clips x1).
2. Install hose to oil separator (clips x1).
3. Install throttle body to air cleaner duct (clip x1).
4. Use handbook procedure to check oil level.

Secondary Air Injection Pump and Bracket Assembly-Renew

Repair Operation Time (ROT)	
Item	**Code**
Secondary Air Injection Pump and Bracket Assembly-Renew	**03.08.DB**

Removal

1. Disconnect vehicle battery.
2. Remove inlet manifold assembly (see Workshop Manual procedure 03.01.BA Manifold Assembly - Intake Upper - Renew).
3. Disconnect breather tube to secondary air pump (quickfit).
4. Disconnect vacuum tube from solenoid valve.
5. Disconnect vacuum tubes (x2) from actuator valves.
6. Loosen unions and disconnect secondary air injection tubes (x2).
7. Disconnect multiplug, air injection pump. Release multiplug from mounting bracket.
8. Release harness and vacuum tube fir tree clips (x6) from mounting bracket.
9. Remove bolts (x3), securing secondary air injection pump assembly to engine.
10. Remove secondary air injection pump assembly.

Installation

1. Position secondary air injection pump assembly, install and torque tighten bolts (x3).
2. Secure harness and vacuum tube fir tree clips (x6) in mounting bracket.
3. Secure multiplug in bracket, connect multiplug.
4. Connect and torque tighten secondary air tube unions (x2).
5. Connect vacuum tubes to solenoid and actuator valves (x3).
6. Connect breather tube to secondary air injection pump.
7. Install inlet manifold assembly (see Workshop Manual procedure 03.01.BA Manifold Assembly - Intake Upper - Renew).
8. Connect vehicle battery.

PCV Valve Assembly-Renew

Repair Operation Time (ROT)	
Item	**Code**
PCV Valve Assembly-Renew	**03.08.DC**

Removal

1. Disconnect breather tube from PCV valve.
2. Remove bolts (x2) securing PCV valve, remove PCV valve.

Installation

1. Clean PCV valve and mating face.
2. Install PCV valve, install and torque tighten bolts (x2).
3. Connect breather tube to PCV valve.

Crank Vent Hose-Renew

Repair Operation Time (ROT)	
Item	**Code**
Crank Vent Hose-Renew	**03.08.DD**

Removal

1. Disconnect hose from cam cover (quickfit).

2. Disconnect hose from oil separator (quickfit) and remove.

Installation

1. Install hose to oil separator (quickfit).
2. Connect hose to cam cover (quickfit).

Exhaust Valve to Exhaust Manifold Tube Assembly-Renew

Repair Operation Time (ROT)	
Item	**Code**
Exhaust Valve to Exhaust Manifold Tube Assembly-Renew	**03.08.DE**

Removal

1. Raise vehicle on ramp.
2. Remove flange nuts (x2) on RH exhaust manifold. Remove and discard gasket.
3. Lower vehicle.
4. Undo tube union connection (x1) at exhaust valve, remove tube.

Installation

1. Clean flange and pipe connections.
2. Align tube and loosely connect at the valve.
3. Raise vehicle.
4. Fit new gasket to manifold flange.
5. Install tube assembly. install and torque tighten nuts (x2).
6. Lower vehicle on ramp.
7. Torque tighten valve union connection.

Oil Separator to Inlet Manifold Hose-Renew

Repair Operation Time (ROT)	
Item	**Code**
Oil Separator to Inlet Manifold Hose-Renew	**03.08.DF**

Removal

1. Disconnect hose from throttle body adaptor assembly (quickfit).
2. Disconnect hose from PCV valve (quickfit), remove hose.

Installation

1. Install hose to PCV valve (quickfit).
2. Connect hose to throttle body adapter assembly (quickfit).

EGR Module-Renew

Repair Operation Time (ROT)	
Item	**Code**
EGR Module-Renew	**03.08.DH**

Removal

1. Disconnect vacuum tube and multiplug from EGR module.
2. Loosen and disconnect pipe union, EGR module to exhaust manifold.
3. Remove bolts (x2) securing EGR module to inlet manifold, remove EGR module, discard gasket.

Installation

1. Clean EGR module and mating face on inlet manifold.
2. Install EGR module with new gasket, install and torque tighten bolts (x2).
3. Clean EGR module pipe and union connection.
4. Install and torque tighten pipe union.
5. Connect multiplug and vacuum tube to EGR module.

ASTON MARTIN
ASTON MARTIN

Engine (03.00)

Valve Train (03.09)

Specifications

Torque Figures		
Description	Nm	lb/ft
Front Lifting Eye Attachment operated (M12)	25-35	18.5-26
Camshaft Caps (M6) all to:	5	3.7
then to:	9-11	6.5-8.1
Secondary Chain Tensioner (M6)	9-13	6.5-8.1
Primary Chain Guide (M6)	9-13	6.5-8.1
Primary Chain Tensioner Blade Pivot	9-13	6.5-8.1
Primary Chain Tensioner	9-13	6.5-8.1
Bush Carrier (“A” Bank) (M8)	19-23	14-17
Bush Carrier (“B” Bank) (M8)	19-23	14-17
(M6)	9-13	6.5-8.1
Exhaust Cam Sprocket Bolt	20	14.8
then 90° more, ±5°		
Front Cover:		
Bolts 1 to 7, 9 to 18 and 20 to 27	11-13	6.5-8.1
Bolts 8 and 9	9-11	6.5-8.1

Maintenance

Left Side Timing Chain Arm Assembly - Remove and Install

Repair Operation Time (ROT)	
Item	**Code**
Left Side Timing Chain Arm Assembly - Remove and Install	**03.09.AA**

Remove

WARNING
DO NOT GET USED ENGINE OIL ON YOUR SKIN. USED ENGINE OIL CAN BE HARMFUL.

1. Remove the engine timing cover. (03.10.AF - Engine Timing Cover).
2. Remove the two screws that attach the special tool to the engine.

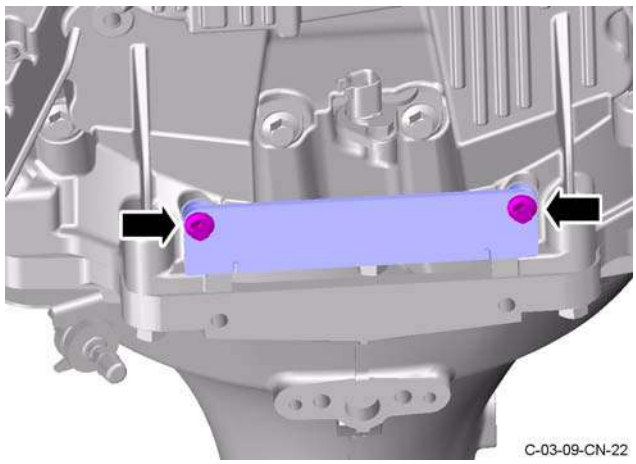

Figure 1

3. Remove the special tool from the flywheel.

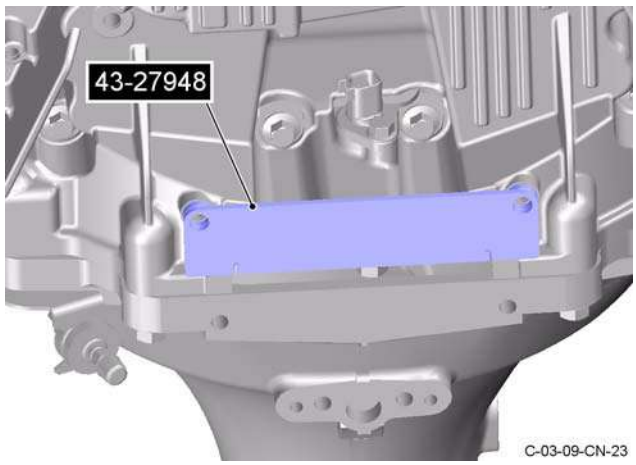

Figure 2

4. Turn the crankshaft clockwise until the machined flat areas on the camshafts are parallel to the face of the cylinder head.

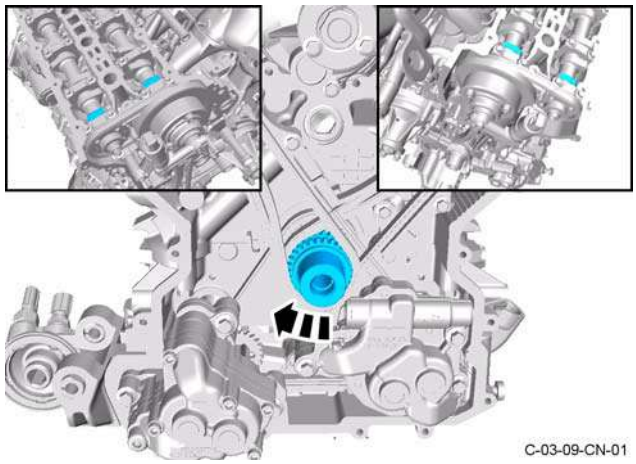

Figure 3

5. Install the special tool on the right side camshaft.

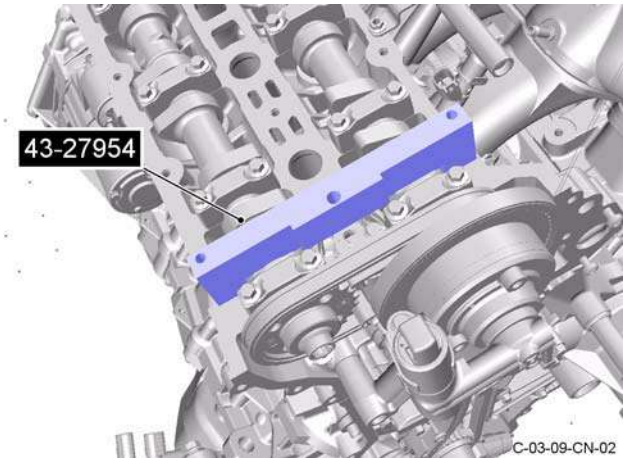

Figure 4

6. Install and tighten the three screws that attach the special tool to the cylinder head.

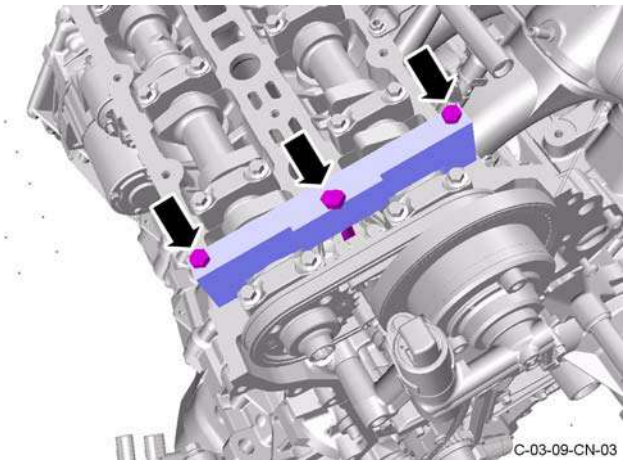

Figure 5

7. Install the special tool on the left side camshaft.

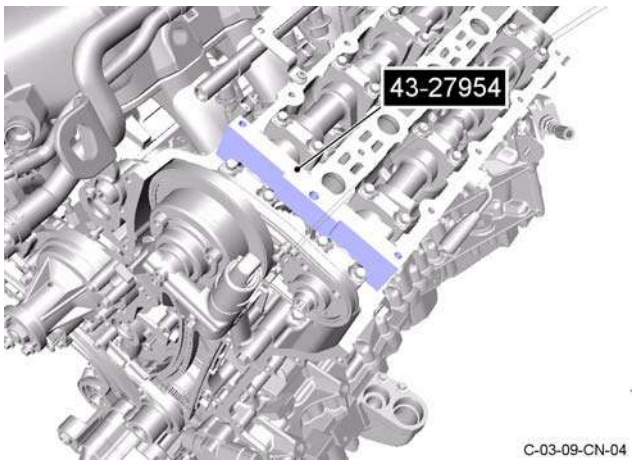

Figure 6

8. Install and tighten the three screws that attach the special tool to the cylinder head.

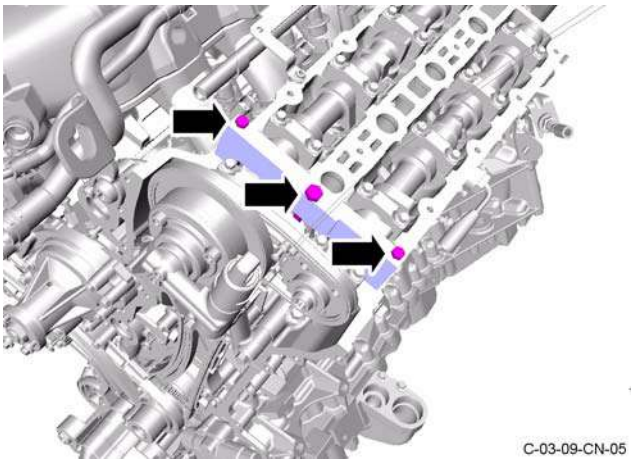

Figure 7

9. Use the applicable equipment to lift the vehicle and make it safe.
10. Loosen the two socket cap screws that attach the teeth to the special tool.

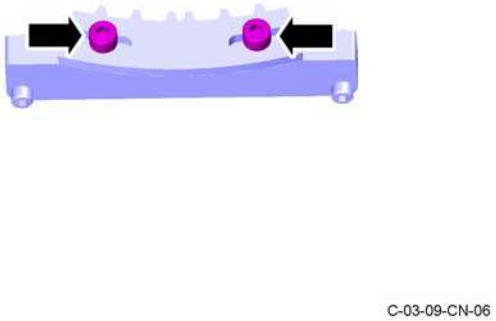

Figure 8

11. Install the special tool onto the flywheel.

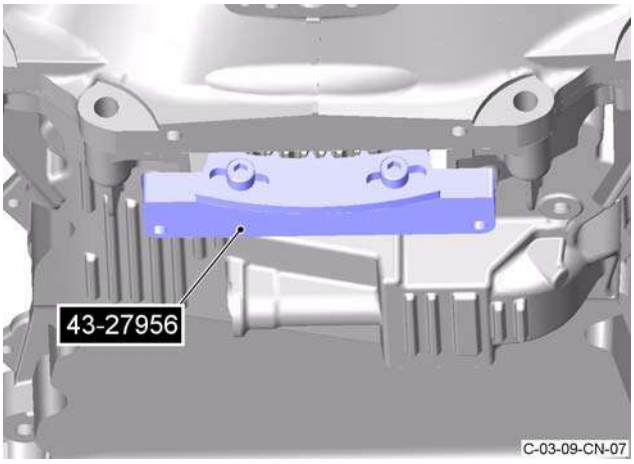

Figure 9

12. Install and tighten the two socket cap screws that attach the special tool to the engine.

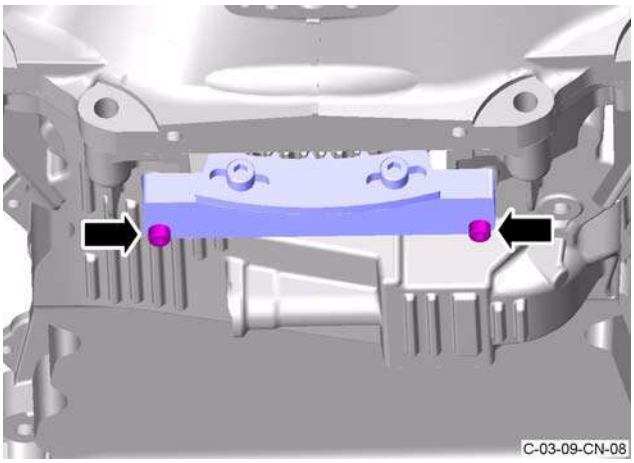

Figure 10

13. Tighten the two socket cap screws that attach the teeth to the special tool.

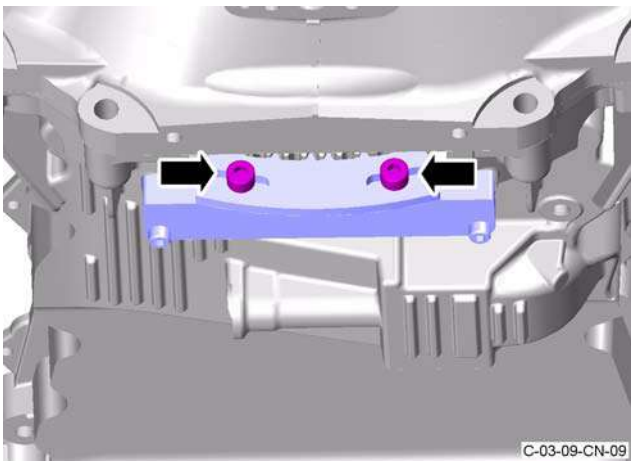

Figure 11

14. Lower the vehicle.
15. Remove the two bolts that attach the left side bush carrier for the Variable Camshaft Timing (VCT) to the engine.

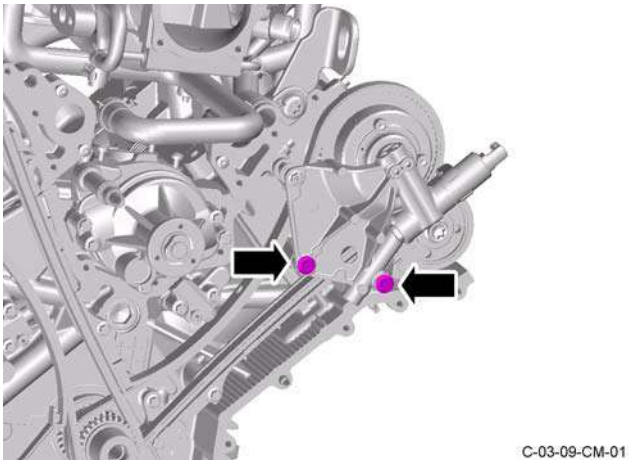

Figure 12

16. Remove the nut that attaches the left side bush carrier for the VCT to the engine.

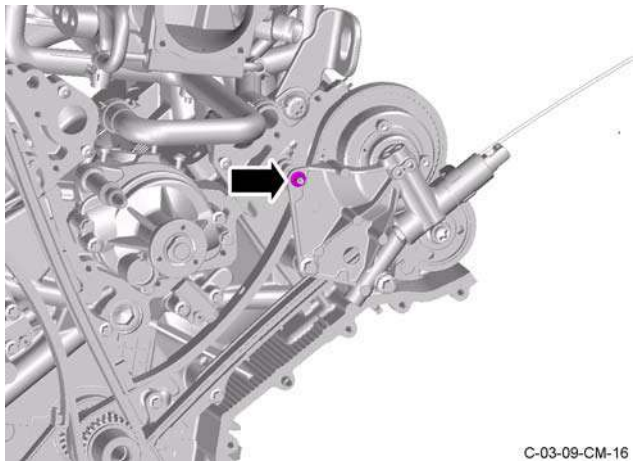

Figure 13

17. Remove the left side bush carrier for the VCT.

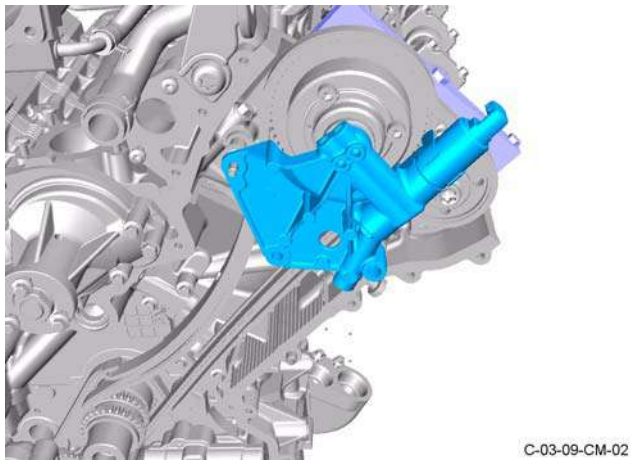

Figure 14

18. Loosen the two bolts that attach the timing chain tensioner to the engine.

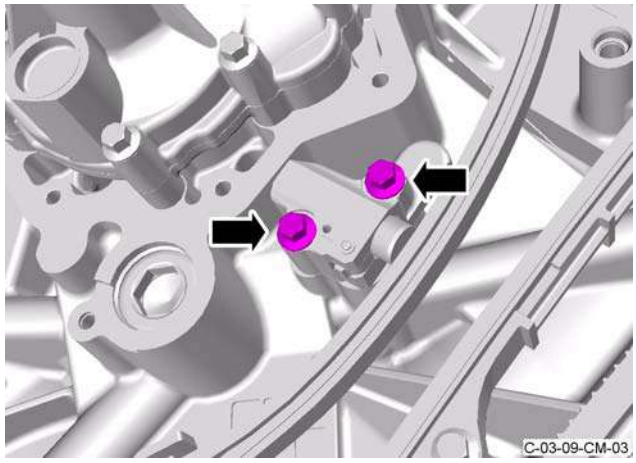

Figure 15

19. Release the ratchet lock on the timing chain tensioner and push the piston into the tensioner housing.

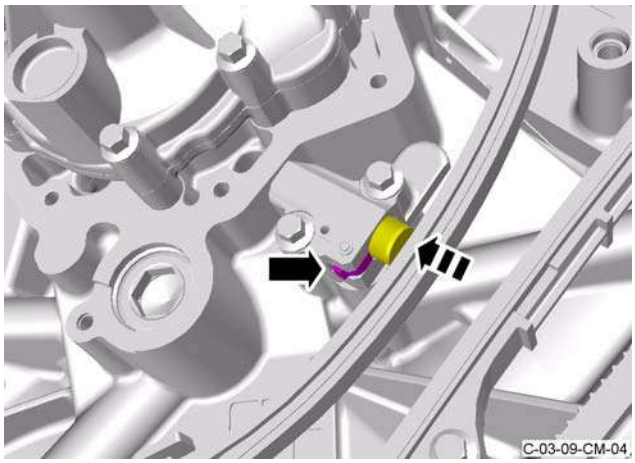

Figure 16

20. Install an applicable pin into the timing chain tensioner.

Figure 17

21. Remove the two bolts that attach the timing chain tensioner to the engine.

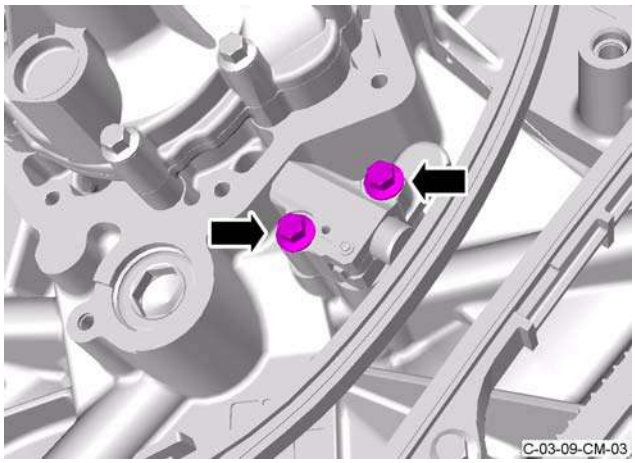

Figure 18

22. Remove the timing chain tensioner.

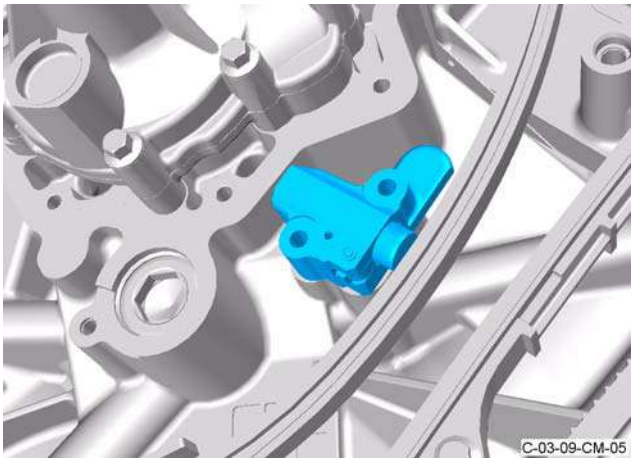

Figure 19

23. Remove the special bolt that attaches the tensioner arm to the engine.

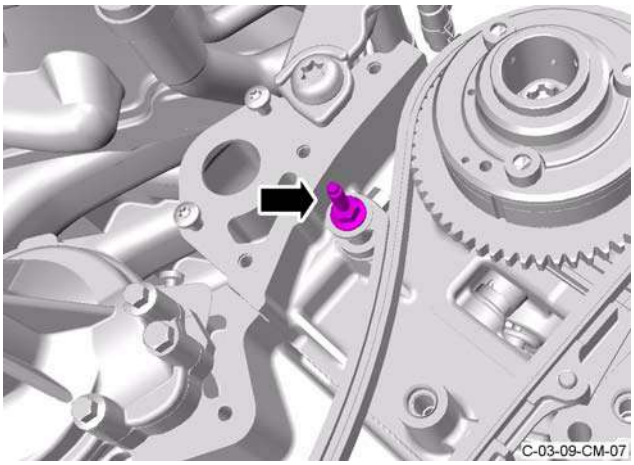

Figure 20

24. Remove the tensioner arm.

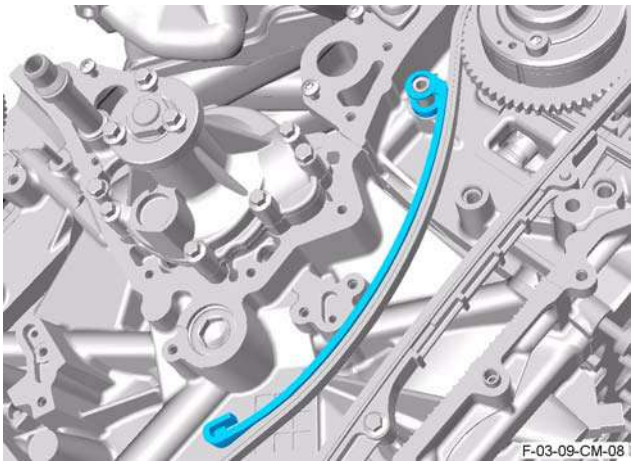

Figure 21

25. Loosen the two Torx bolts that attach the camshaft sprockets to the camshafts.

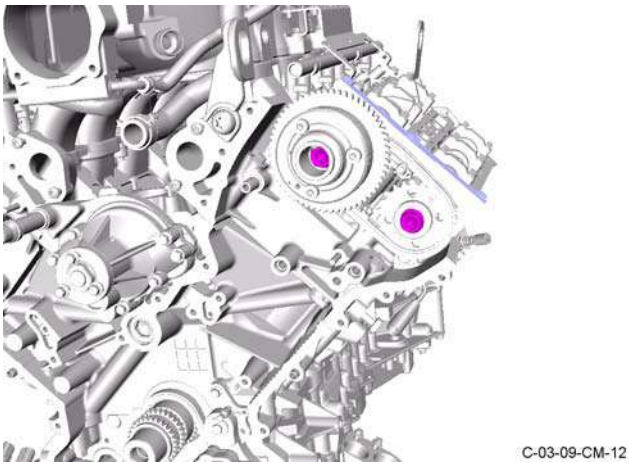

Figure 22

Install

1. Install the tensioner arm (refer to Figure 21).
2. Install the special bolt that attaches the tensioner arm to the engine and torque the bolt to 11 Nm (refer to Figure 20).
3. Install the timing chain tensioner (refer to Figure 19).
4. Install the two bolts that attach the timing chain tensioner to the engine and torque the bolts to 11 Nm (refer to Figure 18).
5. Install the special tool on the exhaust camshaft sprocket.

Note: You must use the special tool to hold the timing chain in the correct position during the subsequent two steps of the procedure.

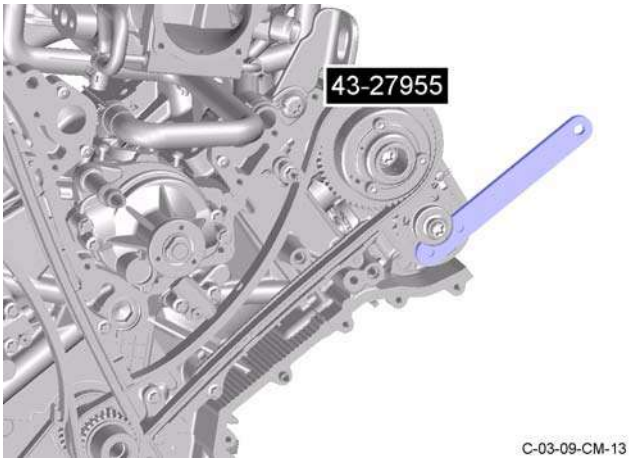

Figure 23

6. Use the special tool to turn the exhaust sprocket counterclockwise until there is tension in the chain.

Note: Make sure that the tensioner is fully operated but do not use too much force.

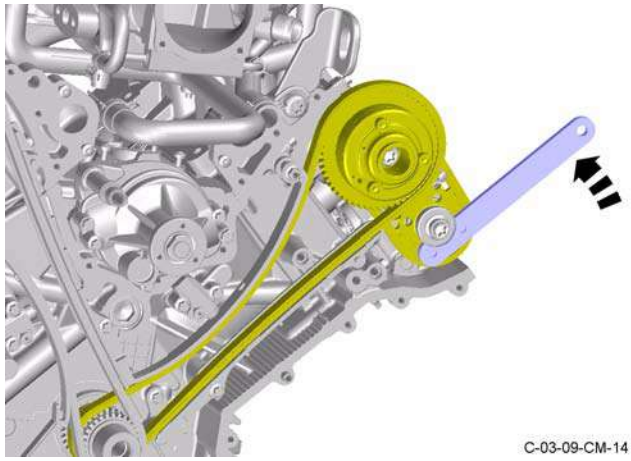

Figure 24

7. Release the pin from the timing chain tensioner and let the tension piston gradually apply tension to the timing chain.

Figure 25

Note: Make sure that you torque the bolt that attaches the sprocket to the exhaust camshaft first in the step that follows.

8. Torque the two Torx bolts that attach the camshaft sprockets to the camshafts to 20 Nm.

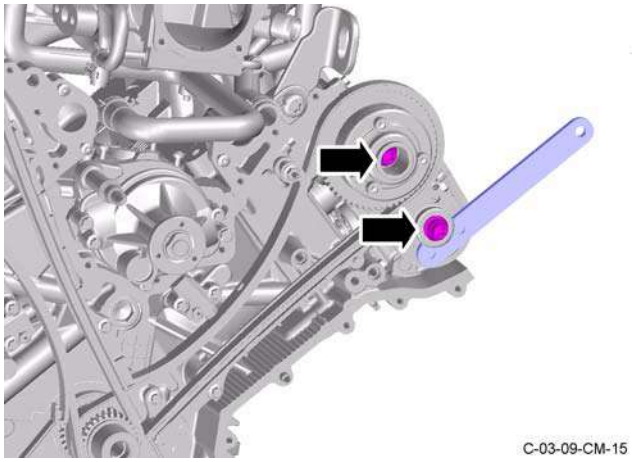

Figure 26

Note: Make sure that you torque the bolt that attaches the sprocket to the exhaust camshaft first in the step that follows.

9. Tighten the two Torx bolts that attach the camshaft sprockets to the camshafts 90 degrees more (refer to Figure 26).
10. Remove the special tool from the exhaust camshaft sprocket (refer to Figure 23).
11. Install the left side bush carrier for the VCT.

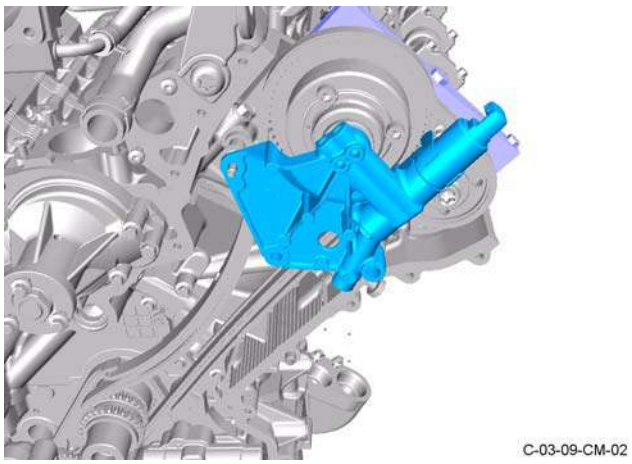

Figure 27

12. Install the two bolts that attach the left side bush carrier for the VCT to the engine. Torque the two bolts to 21 Nm.

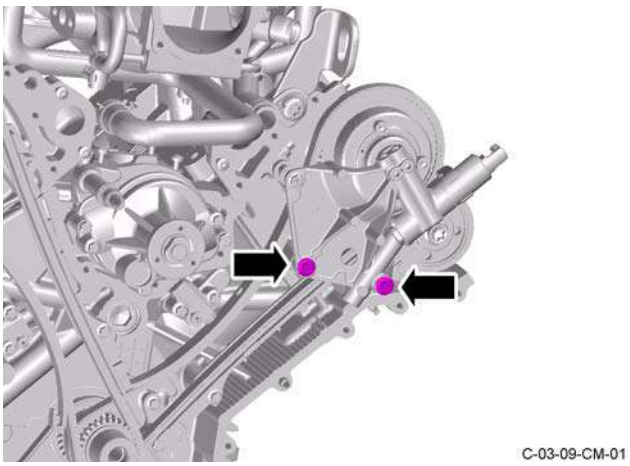

Figure 28

13. Install and torque the nut that attaches the left side bush carrier for the VCT to the engine to 11 Nm.

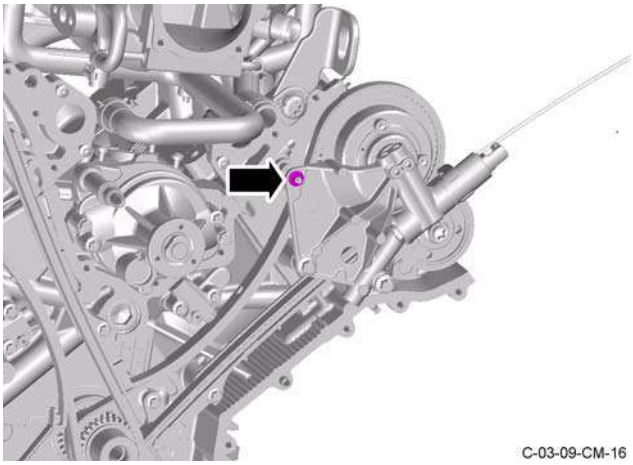

Figure 29

14. Use the applicable equipment to lift the vehicle and make it safe.
15. Remove the two socket cap screws that attach the special tool to the engine.

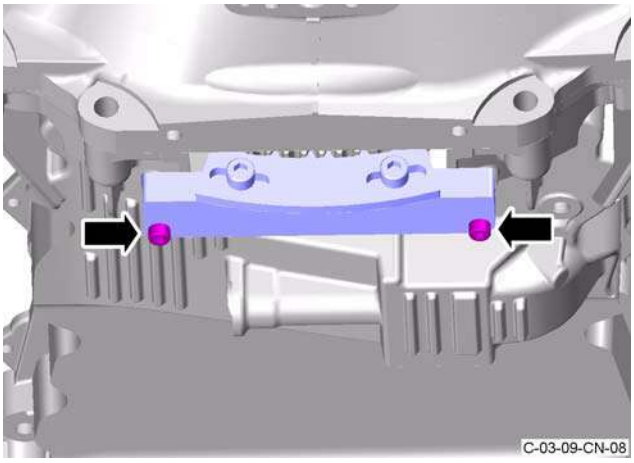

Figure 30

16. Remove the special tool from the flywheel.

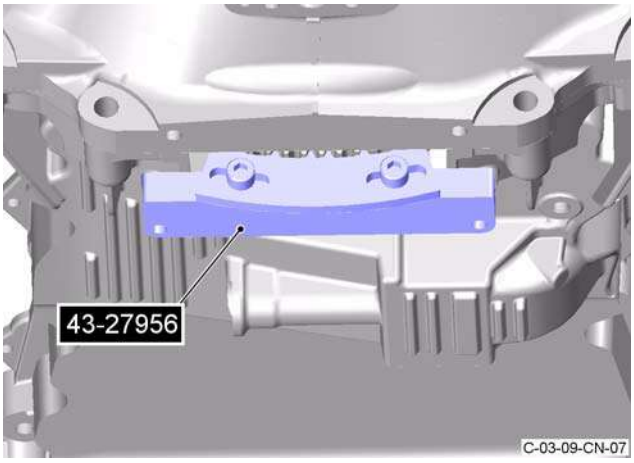

Figure 31

17. Lower the vehicle.
18. Remove the three screws that attach the special tool to the cylinder head.

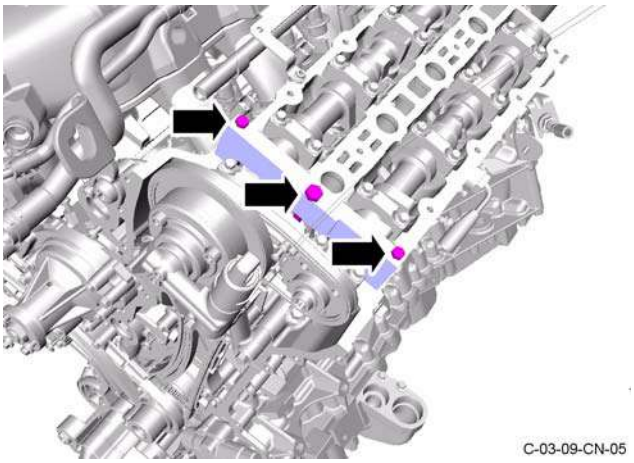

Figure 32

19. Remove the special tool from the left side camshaft.

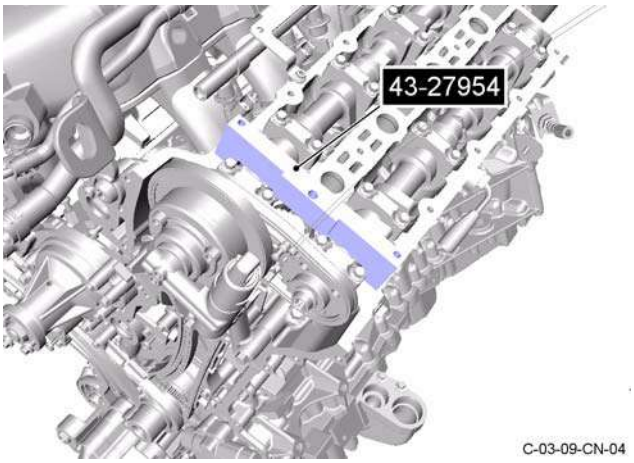

Figure 33

20. Remove the three screws that attach the special tool to the cylinder head.

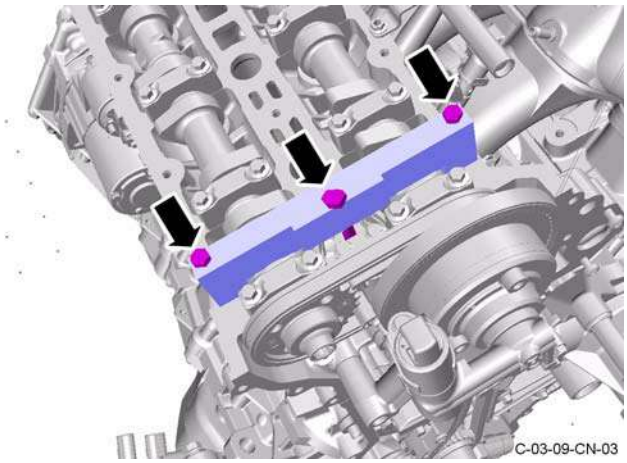

Figure 34

21. Remove the special tool from the right side camshaft.

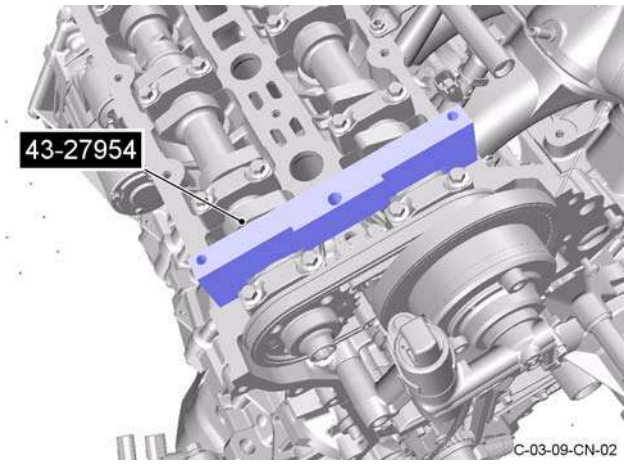

Figure 35

Caution:
During the step that follows, if you feel any increase in resistance, do not force the crankshaft. If you do you can damage the engine. If you cannot turn the crankshaft, you must do the engine timing procedure again.

22. Turn the crankshaft two full revolutions clockwise.
23. Use the applicable equipment to lift the vehicle and make it safe.

24. Install the special tool onto the flywheel.

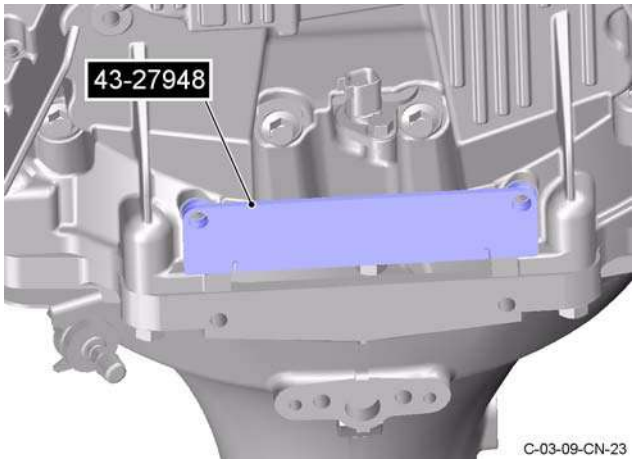

Figure 36

25. Install and tighten the two screws that attach the special tool to the engine.

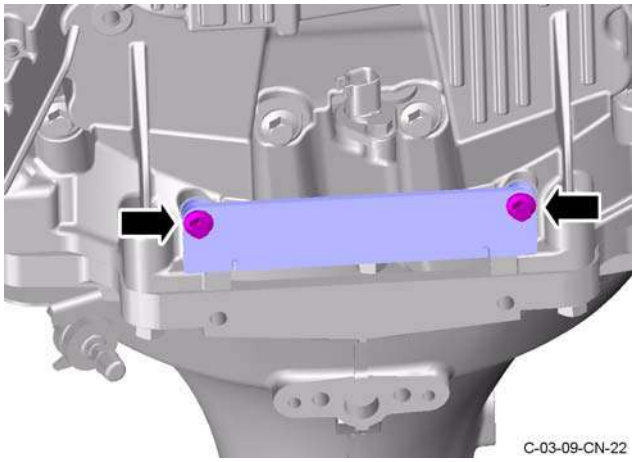

Figure 37

26. Install the engine timing cover (refer to procedure 03.10.AF - Engine Timing Cover).

Right Side Timing Chain Arm Assembly - Remove and Install

Repair Operation Time (ROT)	
Item	**Code**
Right Side Timing Chain Arm Assembly - Remove and Install	**03.09.AB**

Remove

WARNING
DO NOT GET USED ENGINE OIL ON YOUR SKIN. USED ENGINE OIL CAN BE HARMFUL.

1. Remove the engine timing cover. (03.10.AF - Engine Timing Cover).
2. Remove the two screws that attach the special tool to the engine.

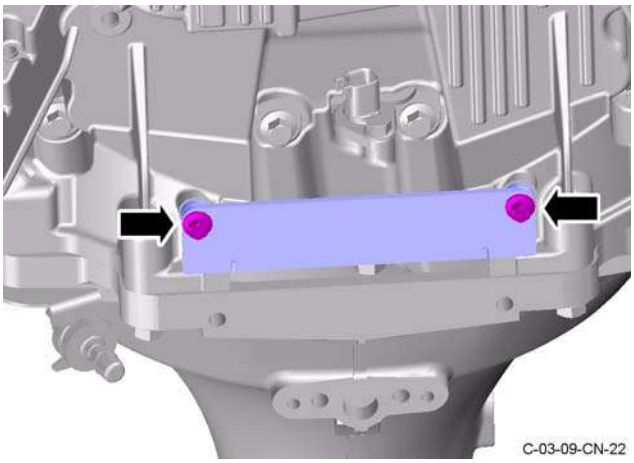

Figure 1

3. Remove the special tool from the flywheel.

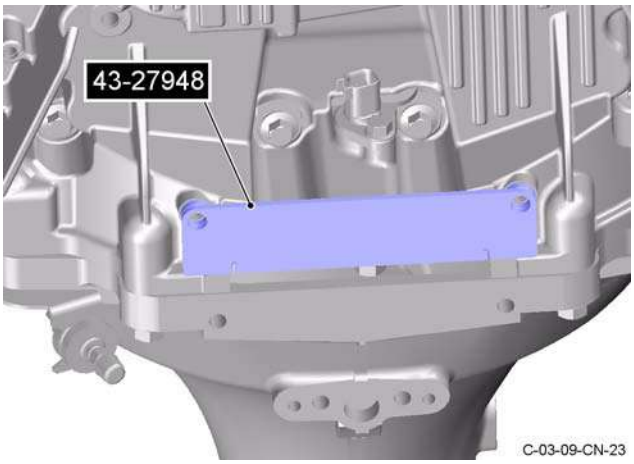

Figure 2

4. Turn the crankshaft clockwise until the machined flat areas on the camshafts are parallel to the face of the cylinder head.

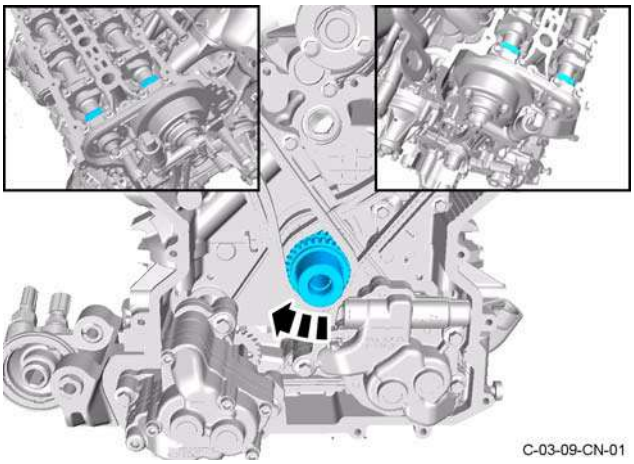

Figure 3

5. Install the special tool on the right side camshaft.

Note: If necessary, use special tool 303-530-04 with this step.

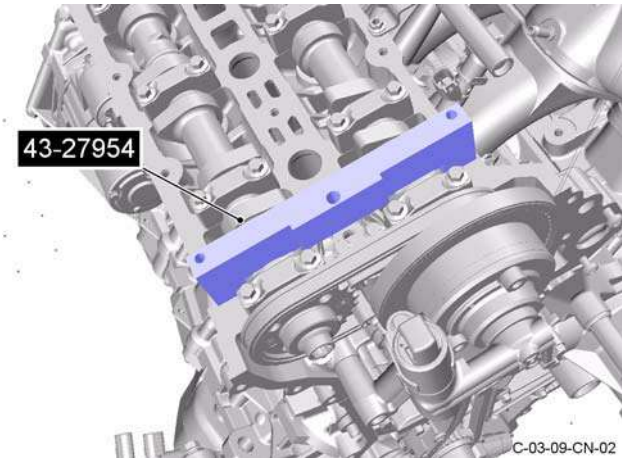

Figure 4

6. Install and tighten the three screws that attach the special tool to the cylinder head.

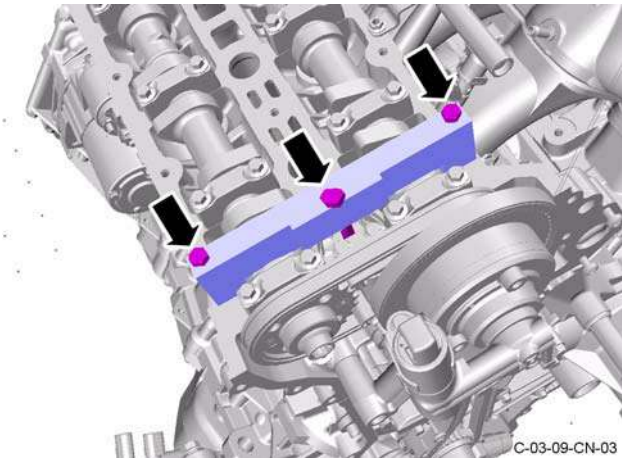

Figure 5

7. Install the special tool on the left side camshaft.

Note: If necessary, use special tool 303-530-04 with this step.

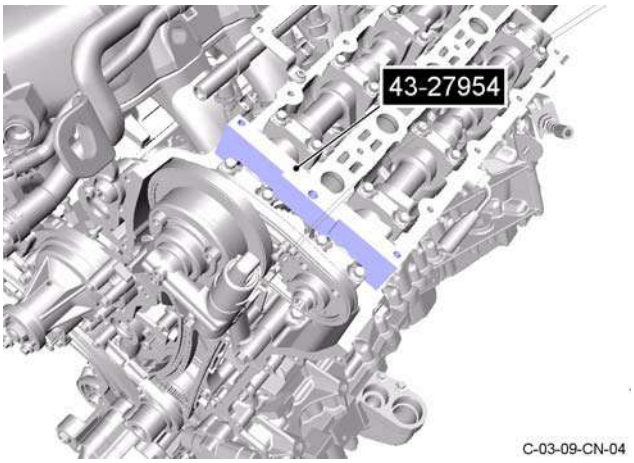

Figure 6

8. Install and tighten the three screws that attach the special tool to the cylinder head.

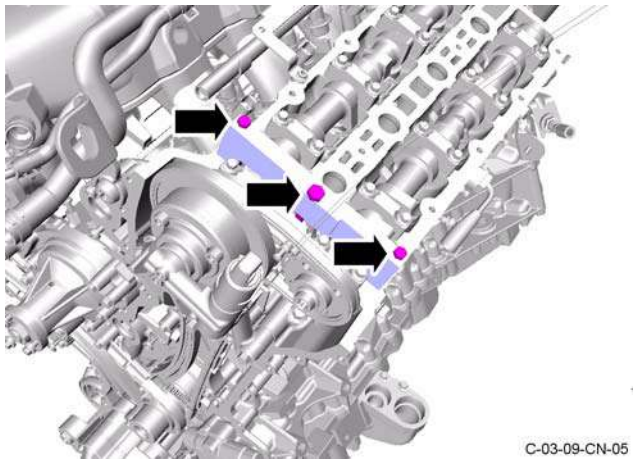

Figure 7

9. Use the applicable equipment to lift the vehicle and make it safe.
10. Loosen the two socket cap screws that attach the teeth to the special tool.

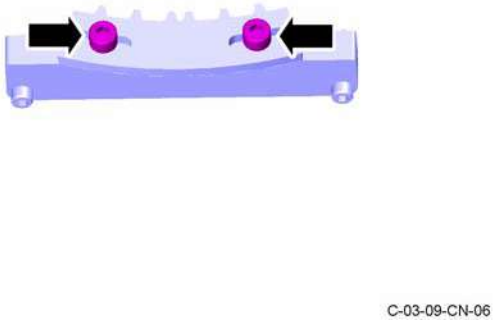

Figure 8

11. Install the special tool onto the flywheel.

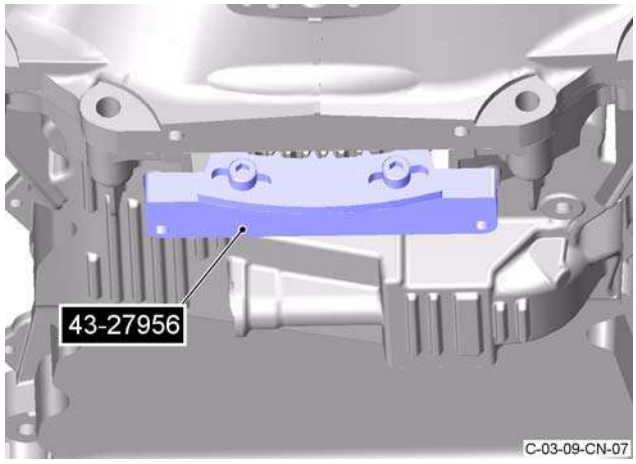

Figure 9

12. Install and tighten the two socket cap screws that attach the special tool to the engine.

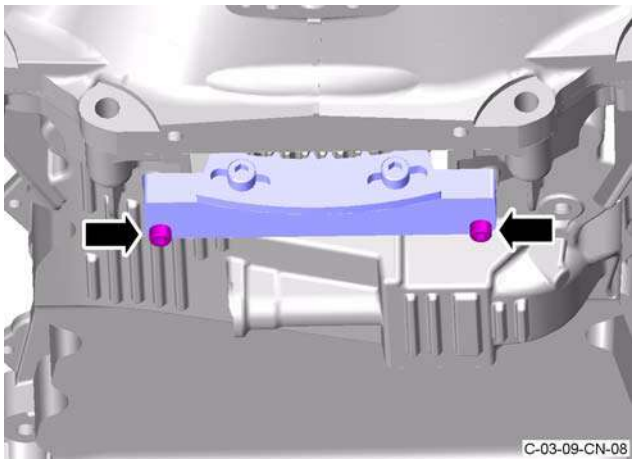

Figure 10

13. Tighten the two socket cap screws that attach the teeth to the special tool.

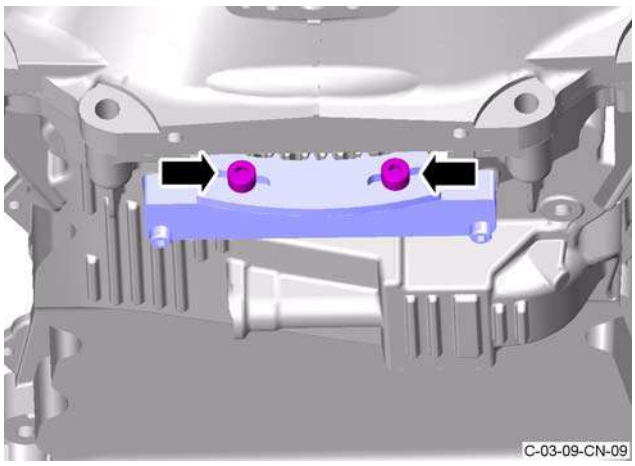

Figure 11

14. Lower the vehicle.
15. Remove the three screws that attach the right side bush carrier for the Variable Camshaft Timing (VCT) to the engine.

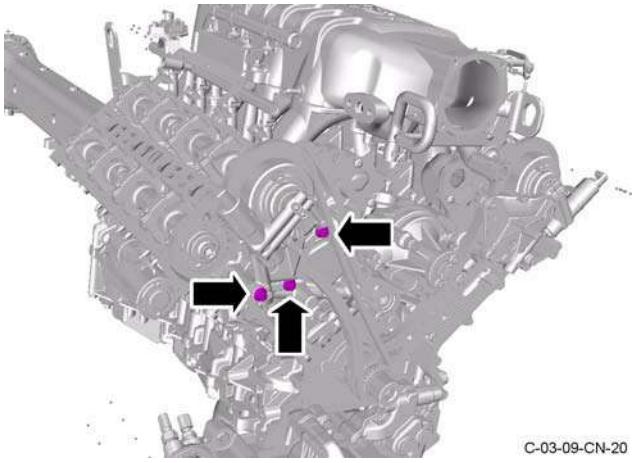

Figure 12

16. Remove the right side bush carrier for the VCT.

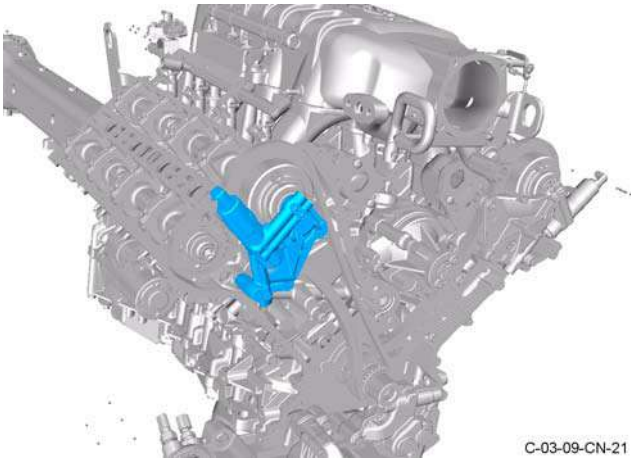

Figure 13

17. Loosen the two screws that attach the timing chain tensioner to the engine.

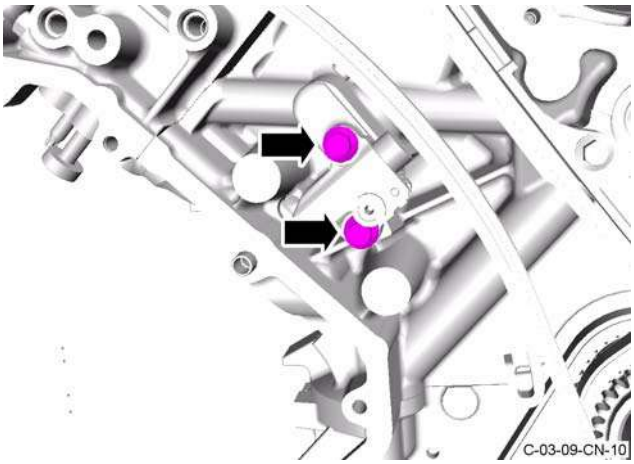

Figure 14

18. Release the ratchet lock on the timing chain tensioner and push the piston into the tensioner housing.

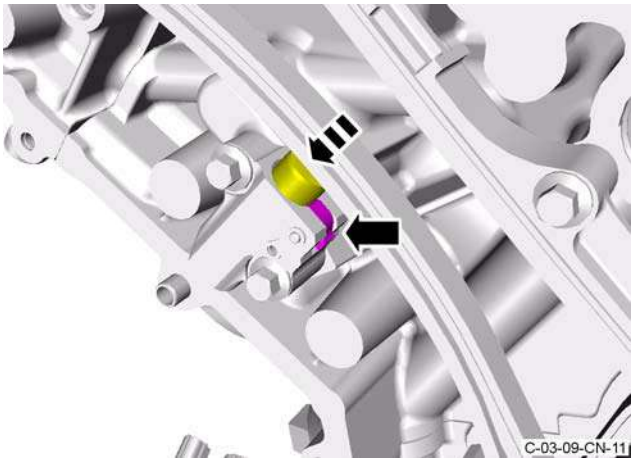

Figure 15

19. Install an applicable pin into the timing chain tensioner.

Figure 16

20. Remove the two bolts that attach the timing chain tensioner to the engine.

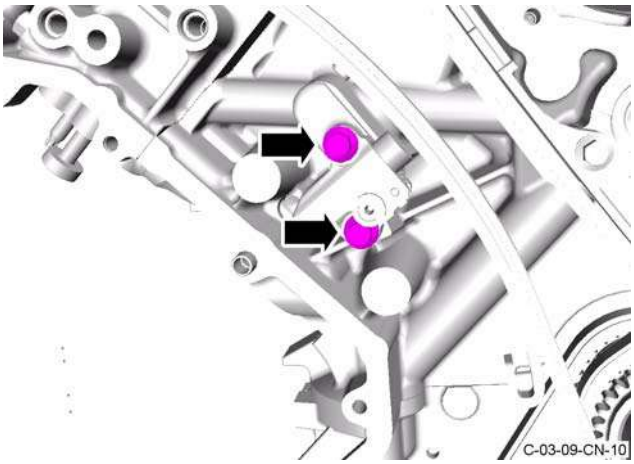

Figure 17

21. Remove the timing chain tensioner.

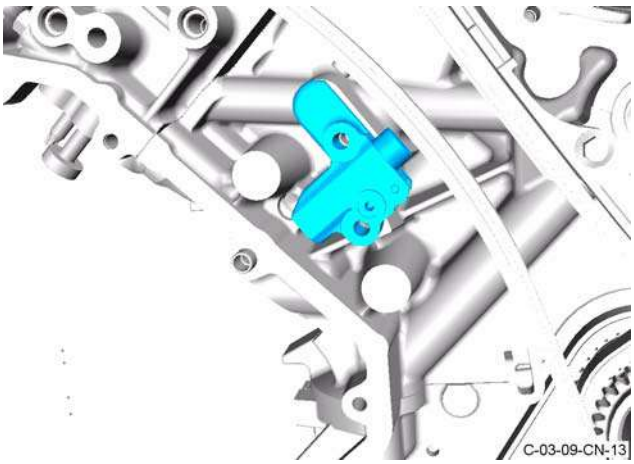

Figure 18

22. Remove the bolt that attaches the tensioner arm to the engine.

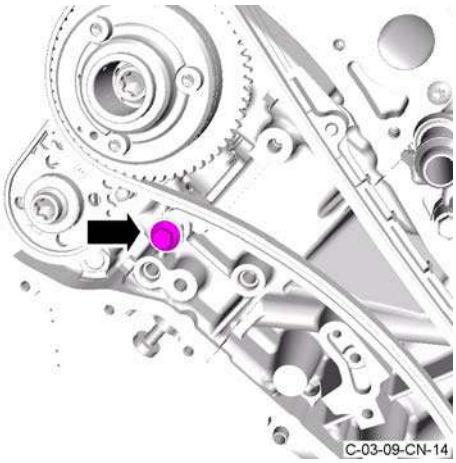

Figure 19

23. Remove the tensioner arm.

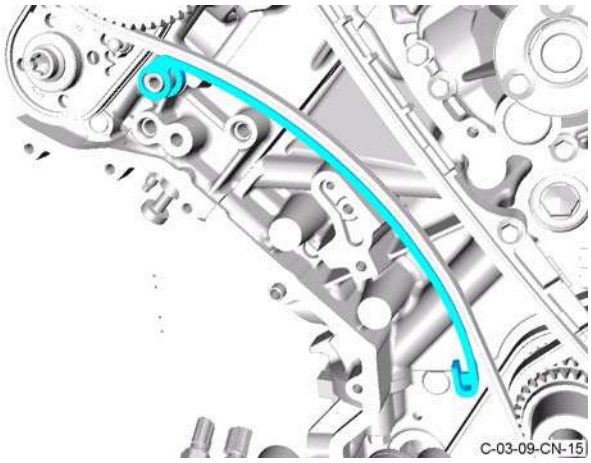

Figure 20

24. Loosen the two Torx bolts that attach the camshaft sprockets to the camshafts.

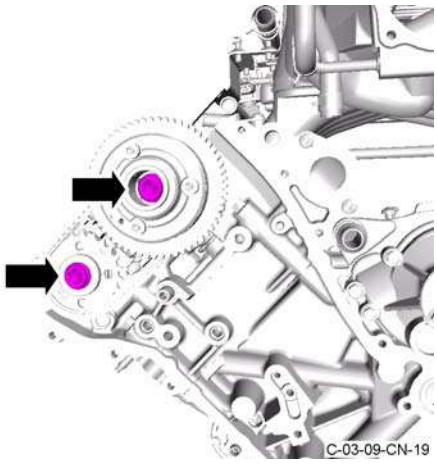

Figure 21

Install

1. Install the tensioner arm (refer to Figure 20).

2. Install and torque the special bolt that attaches the tensioner arm to the engine to 11 Nm (refer to Figure 19).
3. Install the timing chain tensioner (refer to Figure 18).
4. Install and torque the two bolts that attach the timing chain tensioner to the engine to 11 Nm (refer to Figure 17).
5. Install the special tool on the exhaust camshaft sprocket.

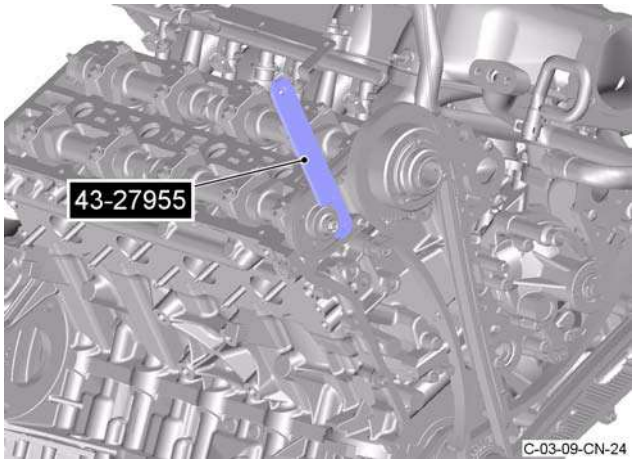

Figure 22

Note: You must use the special tool to hold the timing chain in the correct position during the subsequent two steps of the procedure.

6. Use the special tool to turn the exhaust sprocket counterclockwise until the chain is tight.

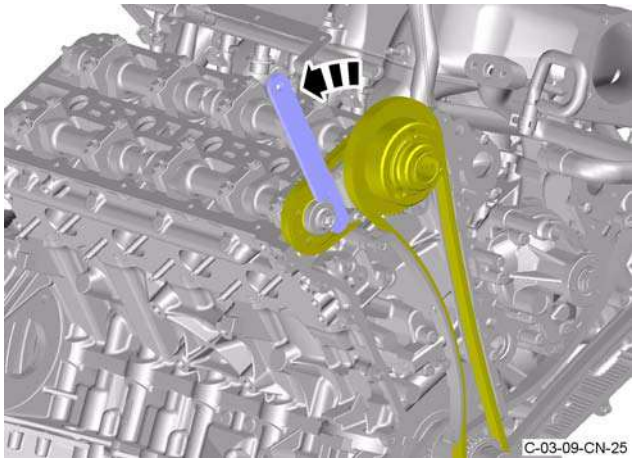

Figure 23

7. Release the pin from the timing chain tensioner and let the tension piston gradually tension the timing chain.

Figure 24

Note: Make sure that the tensioner is fully operated but do not use too much force.

Note: Make sure that you torque the bolt that attaches the sprocket to the exhaust camshaft first in the step that follows.

8. Torque the two Torx bolts that attach the camshaft sprockets to the camshafts to 20 Nm.

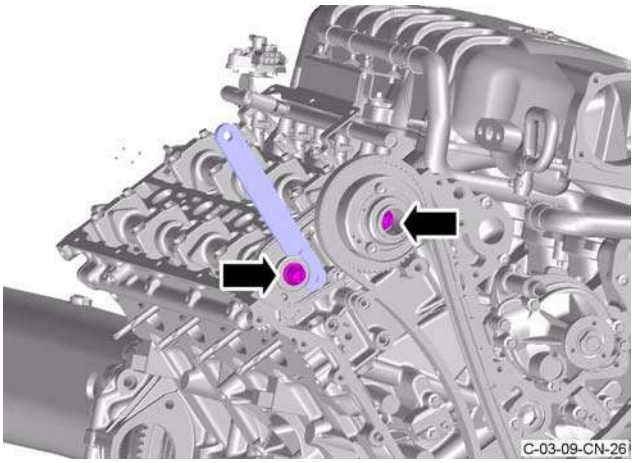

Figure 25

Note: Make sure that you torque the bolt that attaches the sprocket to the exhaust camshaft first in the step that follows.

9. Torque the two Torx bolts that attach the camshaft sprockets to the camshafts 90 degrees more (refer to Figure 25).

10. Remove the special tool from the exhaust camshaft sprocket.

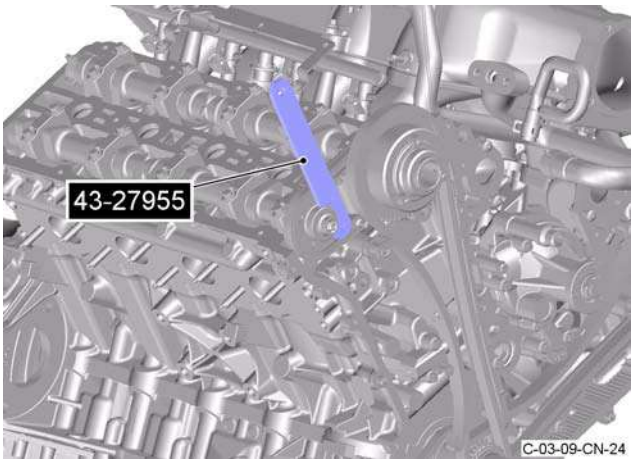

Figure 26

11. Install the right side bush carrier for the VCT.

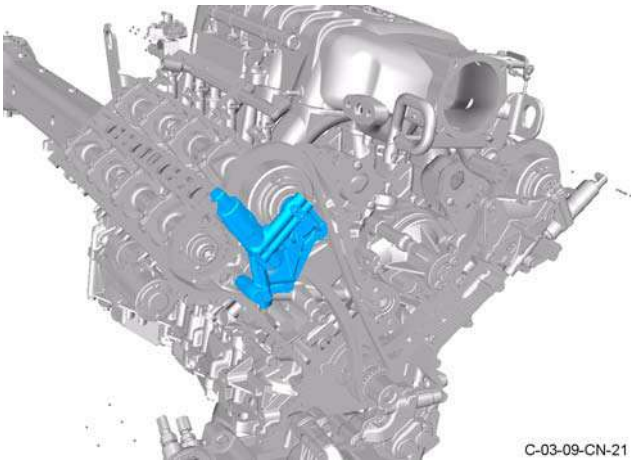

Figure 27

12. Install the three bolts that attach the right side bush carrier for the VCT to the engine. Torque the three bolts to 21 Nm.

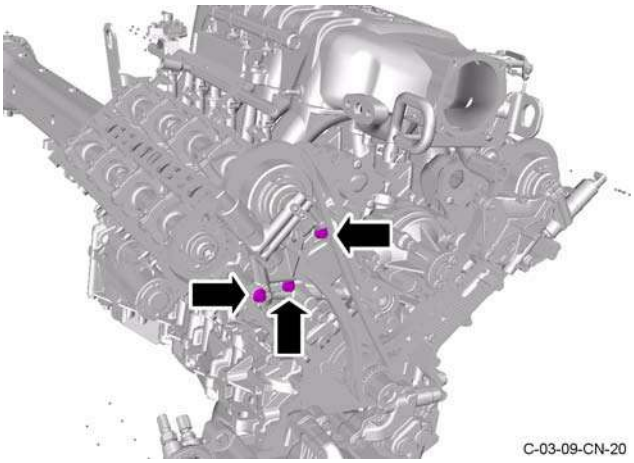

Figure 28

13. Use the applicable equipment to lift the vehicle and make it safe.

14. Remove the two socket cap screws that attach the special tool to the engine.

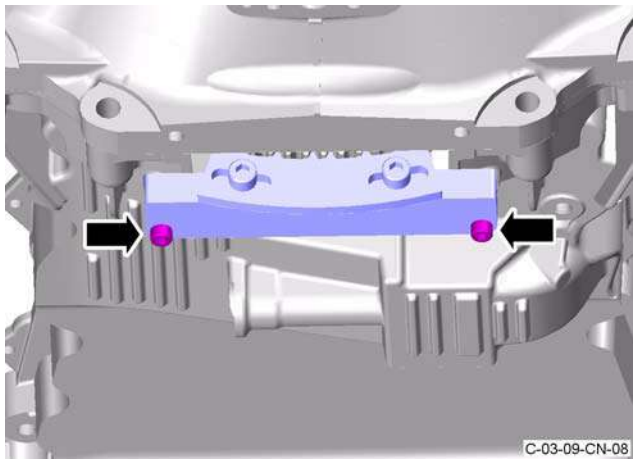

Figure 29

15. Remove the special tool from the flywheel.

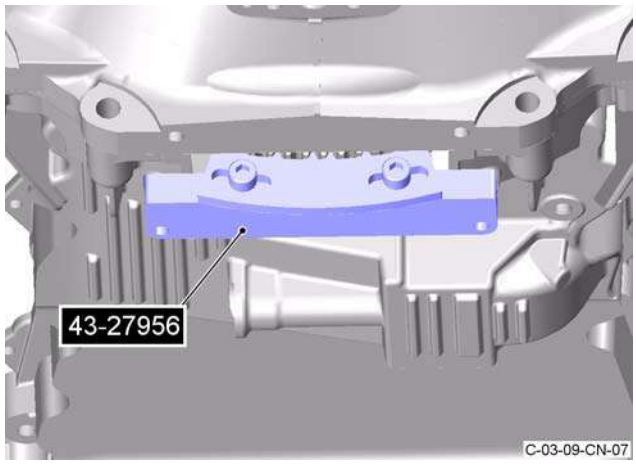

Figure 30

16. Lower the vehicle.
17. Remove the three screws that attach the special tool to the left cylinder head.

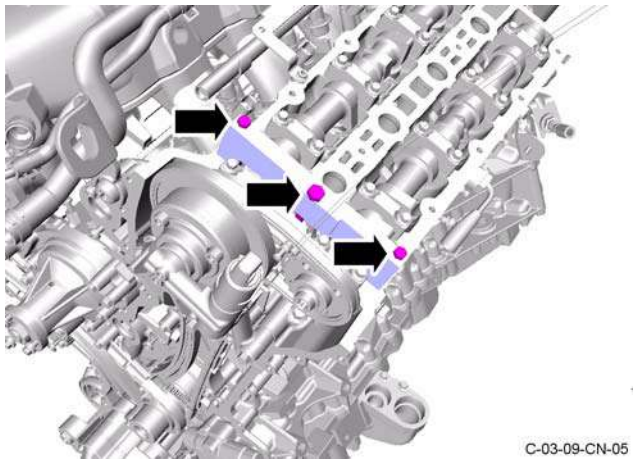

18. Remove the special tool from the left cylinder head.

19. Remove the three screws that attach the special tool to the right cylinder head.

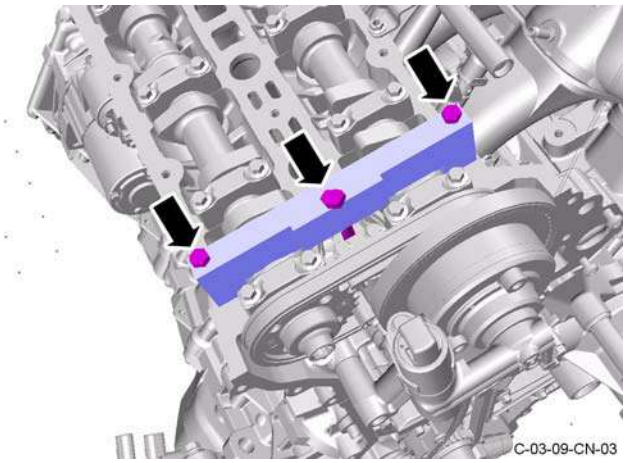

20. Remove the special tool from the right cylinder head.

Caution: During the step that follows, if you feel any increase in resistance, do not force the crankshaft. If you do you can damage the engine. If you cannot turn the crankshaft, you must do the engine timing procedure again.

21. Turn the crankshaft two full revolutions clockwise.
22. Use the applicable equipment to lift the vehicle and make it safe.
23. Install the special tool onto the flywheel.

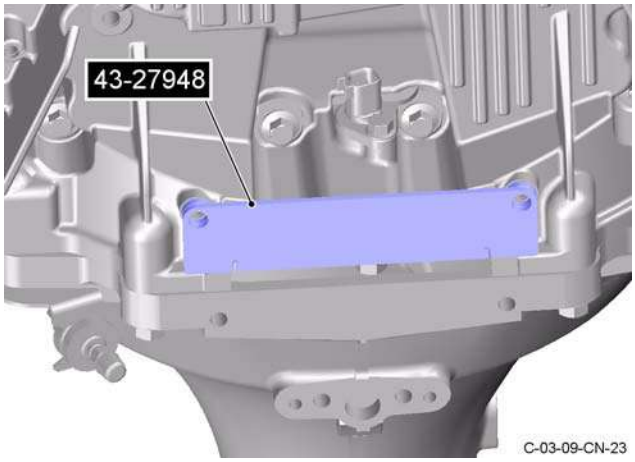

24. Install and tighten the two screws that attach the special tool to the engine.
25. Install the engine timing cover (refer to procedure 03.10.AF - Engine Timing Cover).

RH/LH Secondary Tensioner Assembly - Remove and Install

Repair Operation Time (ROT)		
Item		**Code**
Secondary Tensioner Assembly-Renew	LH-LHD	**03.09.AR**
Secondary Tensioner Assembly-Renew	RH-LHD	**03.09.AS**

Repair Operation Time (ROT)		
Item		**Code**
Secondary Tensioner Assembly-Renew	LH-RHD	**03.09.CR**
Secondary Tensioner Assembly-Renew	RH-RHD	**03.09.CS**

Remove

WARNING
DO NOT GET USED ENGINE OIL ON YOUR SKIN. USED ENGINE OIL CAN BE HARMFUL.

1. Remove the left and right primary timing chains (refer to Workshop Manual procedure 03.09.AM/03.09.AN/03.09.CM/03.09.CN Chain - Timing Primary - LH/RH - Renew).
2. Remove the two M12 Torx bolts that attach the inlet and exhaust camshaft sprockets to the camshafts (refer to Figure 1).

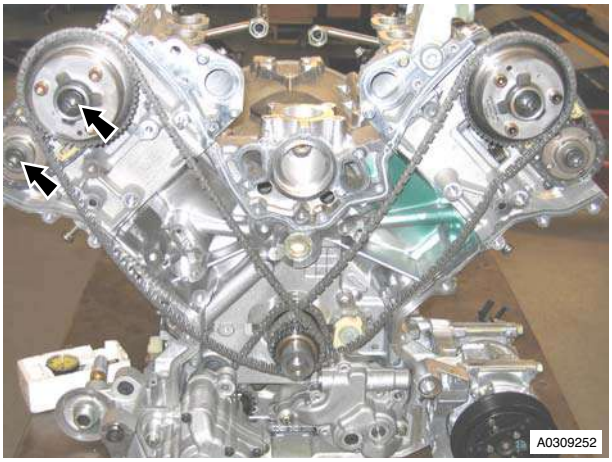

Figure 1

3. Collect the spacer from the bolt on the exhaust camshaft.
4. Remove the two M6 bolts that attach the secondary timing chain tensioner to the cylinder head (refer to Figure 2).

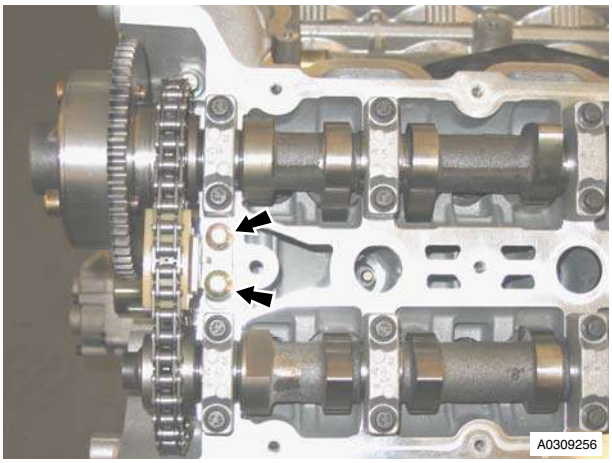

Figure 2

5. Release and remove camshaft sprockets complete with timing chain and tensioner from camshafts (refer to Figure 3).

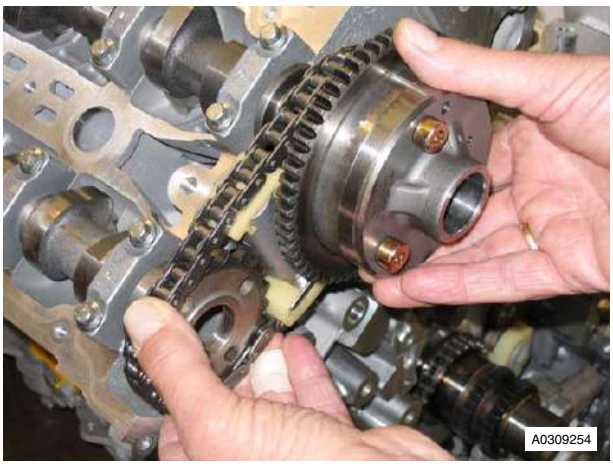

Figure 3

6. Remove the secondary timing chain and tensioner from the sprockets (refer to Figure 4).

Figure 4

Install

1. Clean the camshaft sprockets and the tensioner.
2. Install the secondary timing chain and tensioner to the camshaft sprockets.
3. Install the secondary timing chain assembly onto the camshafts.
4. Install the spacer onto the exhaust Torx bolt.
5. Install the M12 exhaust Torx bolt to attach the exhaust camshaft sprocket. Do not tighten at this step.
6. Install the M12 inlet Torx bolt to attach the inlet camshaft sprocket. Do not tighten at this step.
7. Install and torque the two M6 bolts that attach the secondary tensioner.
8. Install the left primary timing chain guide.
9. Install and torque the M6 bolt that attaches the guide.
10. Make sure that the timing chain has no tension on the tensioner side of the timing chain.
11. Install the primary timing chain.
12. Install the tensioner blade for the primary timing chain.
13. Install and torque tighten the M6 bolt that attaches the tensioner blade.
14. Install the tensioner assembly for the primary timing chain.
15. Install and torque the two M6 bolts that attach the tensioner assembly.
16. Release the tension on the timing chain tensioner piston. Remove retaining special tool.
17. Install the timing chain tensioning tool (303-532) into the exhaust camshaft sprocket.

Caution
Apply an opposite force to the sprockets and chain while you tighten the sprocket bolts.

18. Apply a force to the tool (303-532) in a counterclockwise direction and torque the two M12 sprocket Torx bolts.
19. Remove the special tool (303-532).
20. Install the left and right primary timing chains (refer to Workshop Manual procedure 03.09.AM/03.09.AN/ 03.09.CM/03.09.CN Chain - Timing Primary - LH/RH - Renew).

Right and Left Intake Camshaft - Remove and Install

Repair Operation Time (ROT)		
Item		**Code**
Intake Camshaft - Renew	Right-LHD	**03.09.AT**
Intake Camshaft - Renew	Left-LHD	**03.09.AV**
Intake Camshaft - Renew	Right-RHD	**03.09.CT**
Intake Camshaft - Renew	Left-RHD	**03.09.CV**

Remove

WARNING
DO NOT GET USED ENGINE OIL ON YOUR SKIN. USED ENGINE OIL CAN BE HARMFUL.

1. Remove the right and left secondary timing chain tensioners (refer to Workshop Manual procedure 03.09.AS/03.09.AR03.09.CS/03.09.CR Tensioner Assembly - Secondary - RH/LH - Renew).
2. Remove the three bolts that attach the tool (303-530) to the cylinder head.

3. Remove the special tool (refer to Figure 1 - Right side shown).

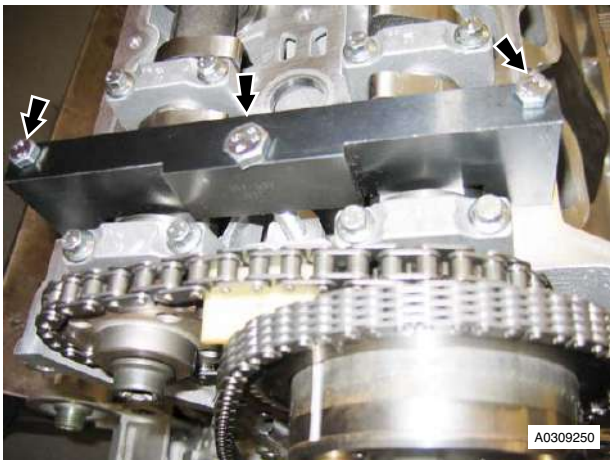

Figure 1 (Right Side Shown)

4. Collect the spacer (303-530/04) if used.
5. Loosen the bolts that attach the ten intake camshaft bearing caps gradually, in steps (refer to Figure 2 - Right side shown).

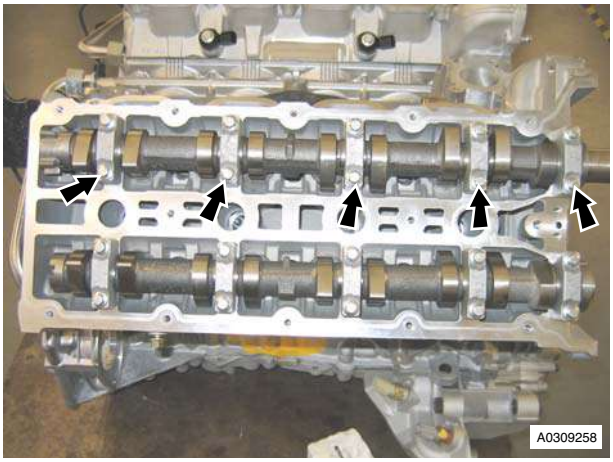

Figure 2 (Right Side Shown)

6. Record the installed direction and positions and remove the five right intake bearing caps.
7. Remove the right intake camshaft (refer to Figure 3 - Right side shown).

Figure 3 (Right Side Shown)

Install

1. Apply clean engine oil to the items that follow:
   - The camshaft journals
   - The camshaft lobes
   - The bearing surfaces on the cylinder head
   - The bearing caps.
2. Install the right intake camshaft.
3. Install the five bearing caps in their initial positions.

Caution
Tighten the bearing cap bolts gradually in a diagonal sequence to correctly seat the camshaft bearing caps.

4. Install and torque the ten bolts in the sequence shown in Figure 3.

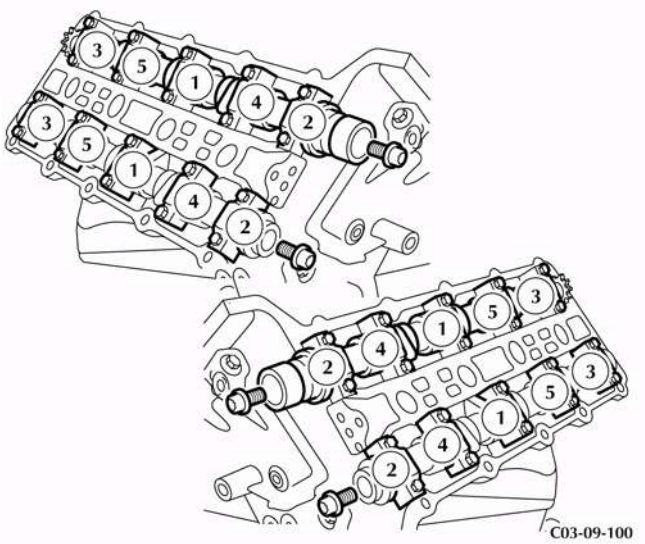

Figure 3

5. Install the M12 Torx bolt to attach the sprocket to the camshaft.
6. Rotate the camshaft as necessary and measure and record each valve clearance.
7. Do steps 4 to 6 again.
8. Calculate the necessary tappet grade for each valve.

9. Install the correct tappets.
10. Do steps 1 to 4 again.
11. Rotate the camshaft as necessary and measure each valve clearance again.
12. Remove the M12 sprocket attachment Torx bolt.
13. Install the right and left tensioner for the secondary timing chain (refer to Workshop Manual procedure 03.09.AS/03.09.AR03.09.CS/03.09.CR Tensioner Assembly - Secondary - RH/LH - Renew).

Right and Left Exhaust Camshaft - Remove and Install

Repair Operation Time (ROT)		
Item		**Code**
Exhaust Camshaft-Renew	RH-LHD	**03.09.AU**
Exhaust Camshaft-Renew	LH-LHD	**03.09.AW**
Exhaust Camshaft-Renew	RH-RHD	**03.09.CU**
Exhaust Camshaft-Renew	LH-RHD	**03.09.CW**

Remove

WARNING
DO NOT GET USED ENGINE OIL ON YOUR SKIN. USED ENGINE OIL CAN BE HARMFUL.

1. Remove the right and left secondary timing chain tensioner (refer to Workshop Manual procedure 03.09.AS/03.09.AR/03.09.CS/03.09.CR Tensioner Assembly - Secondary - RH/LH - Renew).
2. Remove the three bolts that attach the tool (303-530) to the cylinder head.
3. Remove the special tool (refer to Figure 1 - Right side shown).

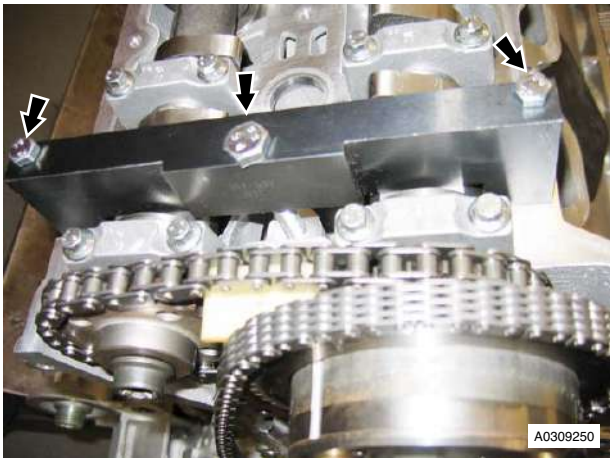

Figure 1 (Right Side Shown)

4. Collect the spacer (303-530/04) if used.
5. Loosen the bolts that attach the ten exhaust camshaft bearing caps gradually, in steps (refer to Figure 2 - Right side shown).

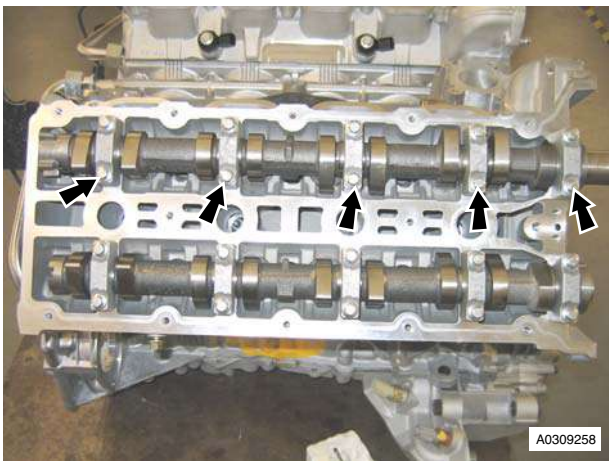

Figure 2

6. Record the installed direction and positions and remove the five right exhaust bearing caps.
7. Remove the right exhaust camshaft (refer to Figure 3 - Right side shown.

Figure 3

Install

1. Apply clean engine oil to the items that follow:
   - The camshaft journals
   - The camshaft lobes
   - The bearing surfaces on the cylinder head
   - The bearing caps.
2. Install the right exhaust camshaft.
3. Install the five bearing caps in their initial positions.

Caution
Tighten the bearing cap bolts gradually in a diagonal sequence to correctly seat the camshaft bearing caps.

4. Install and torque the ten bolts in the sequence specified as shown in Figure 4.

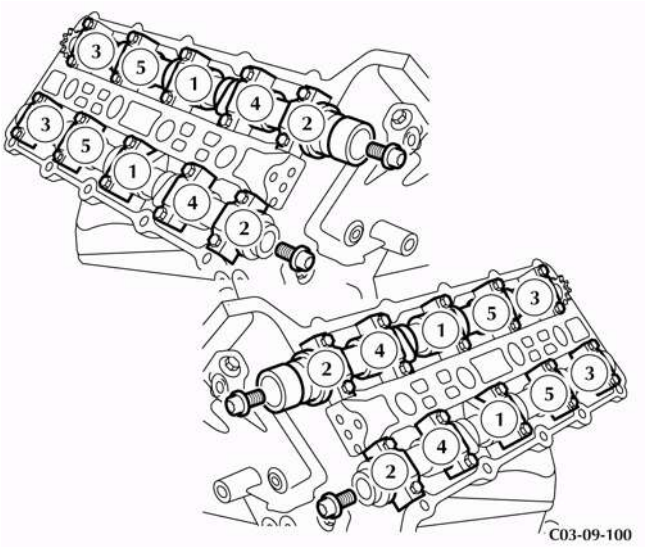

Figure 4

5. Install the Torx bolt to attach the sprocket to the camshaft.
6. Rotate the camshaft as necessary and measure and record each valve clearance.
7. Do steps 4 to 6 again.
8. Calculate the necessary tappet grade for each valve.
9. Install the correct tappets.
10. Do steps 1 to 4 again.
11. Rotate the camshaft as necessary and measure each valve clearance again.
12. Remove the sprocket attachment Torx bolt.
13. Install right and left secondary timing chain tensioner (refer to Workshop Manual procedure 03.09.AS/03.09.AR03.09.CS/03.09.CR Tensioner Assembly - Secondary - RH/LH - Renew).

RH/LH Secondary Timing Chain-Renew

Repair Operation Time (ROT)		
Item		**Code**
Secondary Timing Chain - Renew	LH-LHD	**03.09.AY**
Secondary Timing Chain - Renew	RH-LHD	**03.09.AZ**
Secondary Timing Chain - Renew	LH-RHD	**03.09.CY**
Secondary Timing Chain - Renew	RH-RHD	**03.09.CZ**

Remove

1. Remove the left and right primary timing chain (refer to Workshop Manual procedure 03.09.AM/03.09.AN/03.09.CM/03.09.CN Chain - Timing Primary - LH/RH - Renew).
2. Remove the two Torx bolts that attach the inlet and exhaust camshaft sprockets to camshafts (refer to Figure 1).

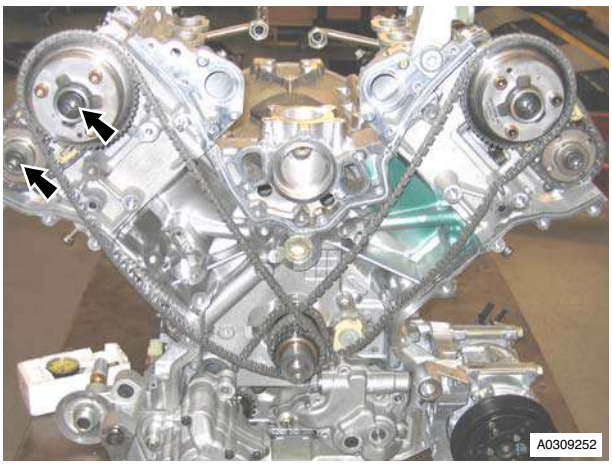

Figure 1

3. Collect the spacer from the bolt on the exhaust camshaft.
4. Remove the two M6 bolts that attach the secondary timing chain tensioner to the cylinder head (refer to Figure 2).

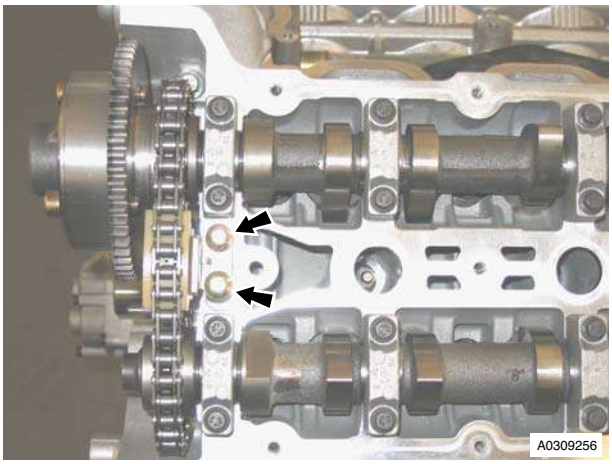

Figure 2

5. Release and remove the camshaft sprockets complete with timing chain and tensioner from camshafts (refer to Figure 3).

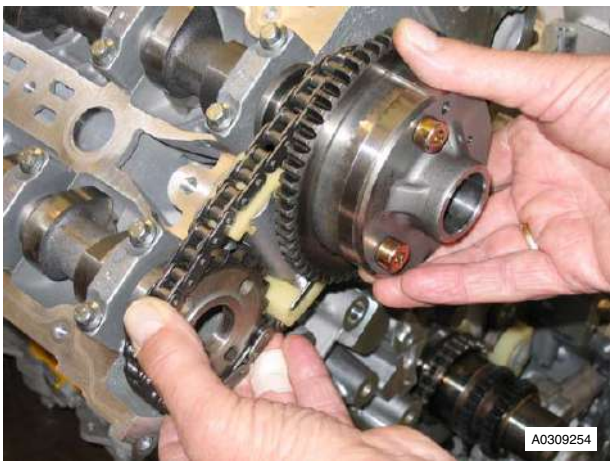

Figure 3

6. Remove secondary timing chain and tensioner from sprockets (refer to Figure 4).

Figure 4

Install

1. Clean the camshaft sprockets and tensioner.
2. Install the secondary timing chain and tensioner on to the camshaft sprockets.
3. Install the secondary timing chain assembly onto the camshafts.
4. Install the spacer onto the M12 exhaust Torx bolt.
5. Install the exhaust M12 Torx bolt to attach the exhaust camshaft sprocket. Do not tighten at this step.
6. Install the inlet M12 Torx bolt to attach the inlet camshaft sprocket. Do not tighten at this step.
7. Install and torque tighten the two M6 secondary tensioner bolts.
8. Install the left primary timing chain guide.
9. Install and torque the M6 bolt that attaches the left primary timing chain guide.
10. Make sure that there is no tension in the chain at the tensioner side.
11. Install the primary timing chain.
12. Install primary timing chain tensioner blade.
13. Install and torque the M6 bolt that attaches the tensioner blade.
14. Install the primary timing chain tensioner assembly.
15. Install and torque tighten the two M6 bolts that attach the tensioner assembly.
16. Release tension on the timing chain tensioner piston, remove retaining special tool.
17. Install timing chain tensioning tool (303-532) into exhaust camshaft sprocket.

Caution

Apply an opposite force to the sprockets and chain while you tighten the sprocket bolts

18. Apply a force to the tool (303-532) in an anti-clockwise direction and torque tighten sprocket Torx bolts. Remove special tool.
19. Install LH/RH primary timing chain (refer to Workshop Manual procedure 03.09.AM/03.09.AN/03.09.CM/ 03.09.CN Chain - Timing Primary - LH/RH - Renew).

RH/LH Secondary Tensioner Assembly-Renew (with Engine Removed)

Repair Operation Time (ROT)		
Item		**Code**
Secondary Tensioner Assembly-Renew	LH	**03.09.BR**
Secondary Tensioner Assembly-Renew	RH	**03.09.BS**

Remove

WARNING

DO NOT GET USED ENGINE OIL ON YOUR SKIN. USED ENGINE OIL CAN BE HARMFUL.

1. Remove the LH/RH primary timing chain (refer to Workshop Manual procedure 03.09.BM/03.09.BN/ 03.09.CM/03.09.CN Timing Chain - Primary - LH/RH - Renew With Engine Removed).
2. Remove the two Torx head bolts, (there is a spacer on the exhaust Torx bolt), that attach the inlet and exhaust camshaft sprockets to the camshafts (refer to Figure 1).

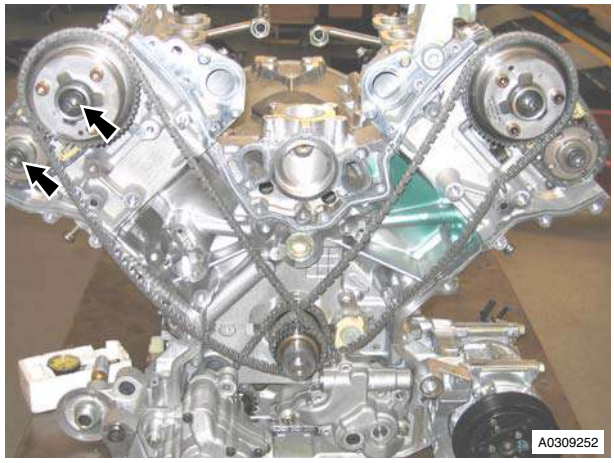

Figure 1

3. Remove the two bolts that attach the secondary timing chain tensioner to the cylinder head (refer to Figure 2).

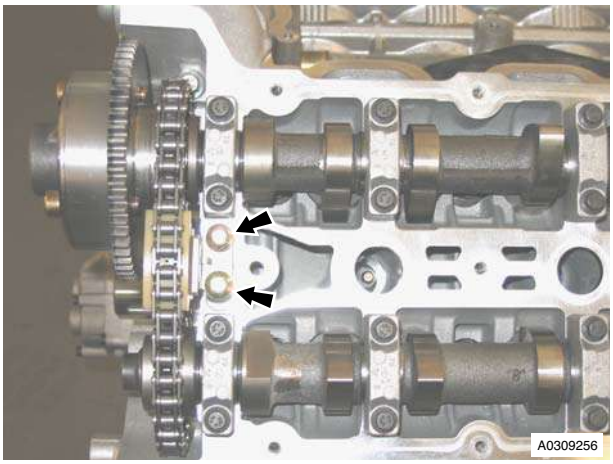

Figure 2

4. Release and remove the camshaft sprockets complete with the timing chain and tensioner from the camshafts (refer to Figure 3).

Figure 3

5. Remove the secondary timing chain and tensioner from the sprockets (refer to Figure 4).

Figure 4

Install

1. Clean the camshaft sprockets and tensioner.
2. Install the secondary timing chain and tensioner to the camshaft sprockets.
3. Install the secondary timing chain assembly onto the camshafts.
4. Install the spacer onto the M12 exhaust Torx bolt.
5. Install the exhaust M12 Torx bolt to attach the exhaust camshaft sprocket. Do not tighten at this step.
6. Install the inlet M12 Torx bolt to attach the inlet camshaft sprocket. Do not tighten at this step.
7. Install and torque tighten the two secondary tensioner bolts.
8. Install the left-side primary timing chain guide.
9. Install and torque the bolt that attaches the chain guide.
10. Make sure that the timing chain slack is on the tensioner side of the timing chain.
11. Install the primary timing chain.
12. Install the tensioner blade for the primary timing chain.
13. Install and torque the bolt that attaches the tensioner blade.
14. Install the primary timing chain tensioner assembly.
15. Install and torque the two bolts that attach the primary chain tensioner.
16. Release the tension on the timing chain tensioner piston. Remove the retaining special tool.
17. Install the timing chain tensioning tool (303-532) on the exhaust camshaft sprocket.
18. Apply a force to the special tool (303-532) in a counterclockwise direction and torque the sprocket Torx bolts. Remove the special tool.
19. Install the the left and right primary timing chain (refer to Workshop Manual procedure 03.09.BM/03.09.BN/ 03.09.CM/03.09.CN Timing Chain - Primary - LH/RH - Renew With Engine Removed).

RH/LH Intake Camshaft Renew With Engine Removed

Repair Operation Time (ROT)		
Item		**Code**
Intake Camshaft-Renew	LH	**03.09.BT**
Intake Camshaft-Renew	RH	**03.09.BV**

Remove

WARNING
DO NOT GET USED ENGINE OIL ON YOUR SKIN. USED ENGINE OIL CAN BE HARMFUL.

1. Remove the left and right secondary timing chain tensioner (refer to Workshop Manual procedure 03.09.BS/03.09.BR Tensioner Assembly - Secondary - RH/LH - Renew With Engine Removed).
2. Remove the three bolts that attach the tool (303-530) to the cylinder head.

3. Remove the special tool (refer to Figure 1 - Right side shown).

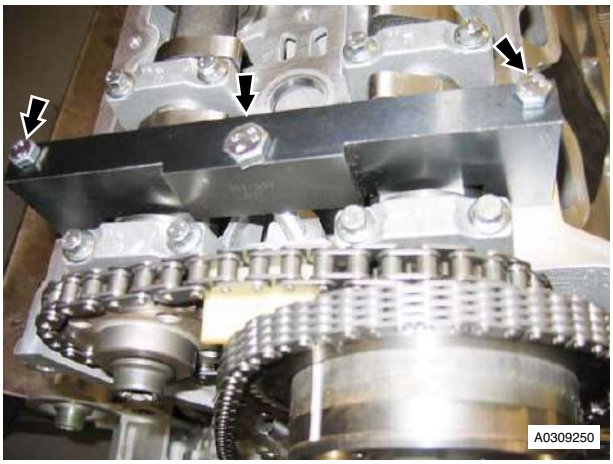

Figure 1

4. Collect the spacer (303-530/04) if used.
5. Loosen the bolts that attach the ten intake camshaft bearing caps gradually in steps (refer to Figure 2 - Right side shown.

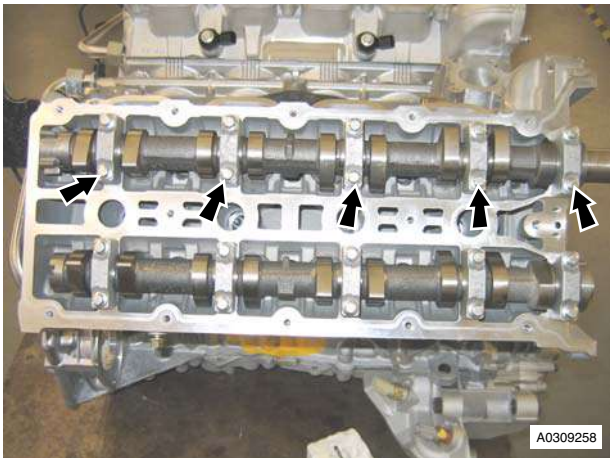

Figure 2

6. Record the installed direction and positions and remove the five right intake bearing caps.
7. Remove the right intake camshaft (refer to Figure 3 shown..

Figure 3

Install

1. Apply clean engine oil to the items that follow:
   - The camshaft journals
   - The camshaft lobes
   - The bearing surfaces on the cylinder head
   - The bearing caps.
2. Install the right intake camshaft.
3. Install the five bearing caps in their initial positions.

Caution
Tighten the bearing cap bolts gradually in a diagonal sequence to correctly seat the camshaft bearing caps.

4. Install and torque the ten bolts in the sequence specified as shown in Figure 4.

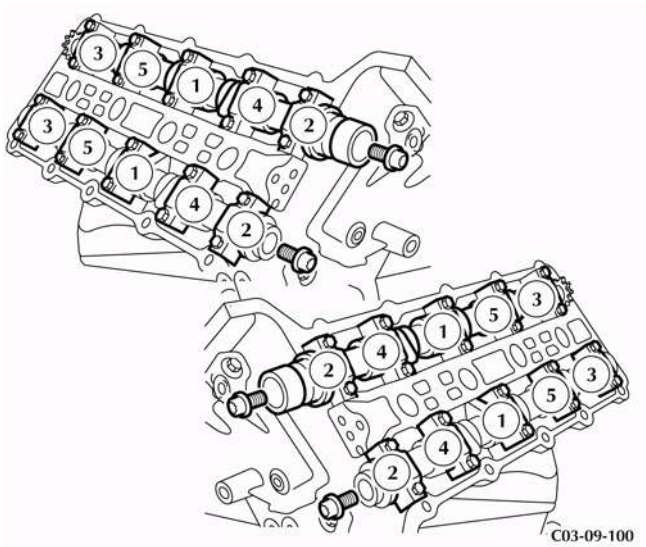

Figure 4

5. Install the Torx bolt to attach the sprocket to the camshaft.
6. Rotate the camshaft as necessary and measure and record each valve clearance.
7. Do steps 4 to 6 again.
8. Calculate the necessary tappet grade for each valve.

9. Install the correct tappets.
10. Do steps 1 to 4 again.
11. Rotate the camshaft as necessary and measure each valve clearance again.
12. Remove the sprocket attachment Torx bolt.
13. Install the right and left secondary timing chain tensioner (refer to Workshop Manual procedure 03.09.BS/ 03.09.BR Tensioner Assembly - Secondary - RH/LH - Renew With Engine Removed).

RH/LH Exhaust Camshaft-Renew (with Engine Removed)

Repair Operation Time (ROT)		
Item		**Code**
Exhaust Camshaft-Renew	LH	**03.09.BW**
Exhaust Camshaft-Renew	RH	**03.09.BU**

Remove

WARNING
DO NOT GET USED ENGINE OIL ON YOUR SKIN. USED ENGINE OIL CAN BE HARMFUL.

1. Remove the left and right secondary timing chain tensioner (refer to Workshop Manual procedure 03.09.BR/03.09.BS Tensioner Assembly - Secondary - LH/RH - Renew With Engine Removed).
2. Remove the three bolts that attach the tool (303-530) to the cylinder head.
3. Remove the special tool (refer to Figure 1 - Left side shown)..

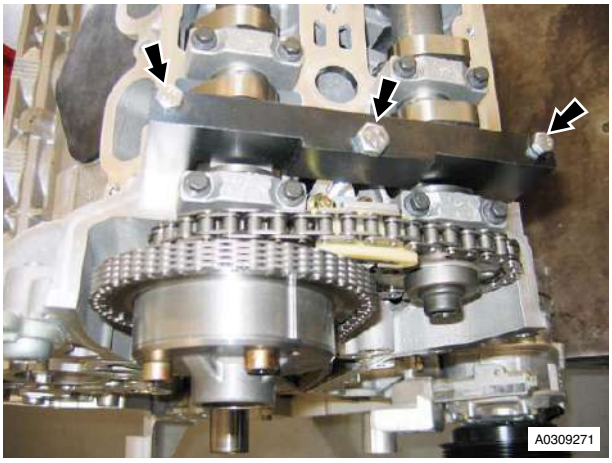

Figure 1

4. Collect the spacer (303-530/04) if used.
5. Loosen the bolts that attach the ten exhaust camshaft bearing caps gradually in steps (refer to Figure 2 - left side shown).

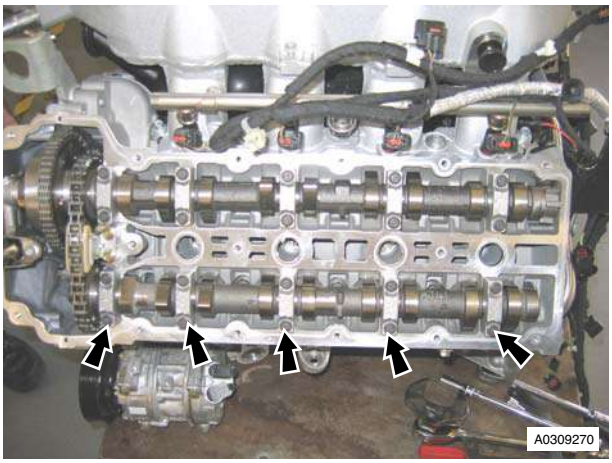

Figure 2

6. Record the installed direction and positions and remove the five right exhaust bearing caps.
7. Remove the right exhaust camshaft (refer to Figure 3 - Right side shown.)..

Figure 3

Install

1. Apply clean engine oil to the items that follow:
   - The camshaft journals
   - The camshaft lobes
   - The bearing surfaces on the cylinder head
   - The bearing caps.
2. Install the right exhaust camshaft.
3. Install the five bearing caps in their initial positions.

Caution

Tighten the bearing cap bolts gradually in a diagonal sequence to correctly seat the camshaft bearing caps.

4. Install and torque the ten bolts in the sequence shown in Figure 4.

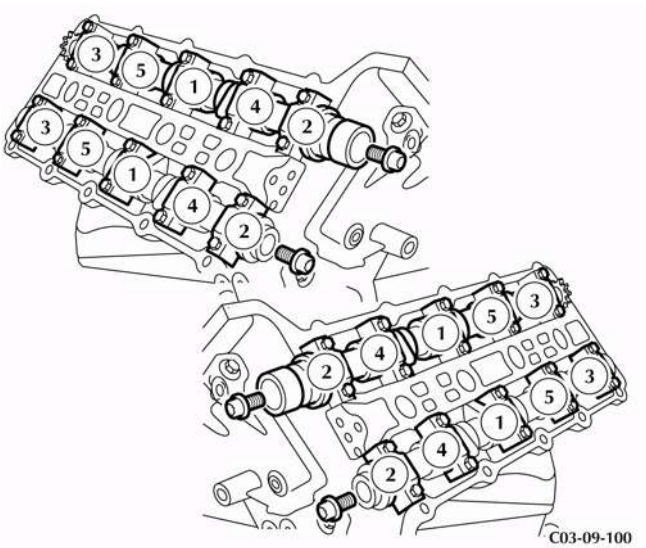

Figure 4

5. Install the Torx bolt to attach the sprocket to the camshaft.
6. Rotate the camshaft as necessary and measure and record each valve clearance.
7. Do steps 4 to 6 again.
8. Calculate the necessary tappet grade for each valve.
9. Install the correct tappets.
10. Do steps 1 to 4 again.
11. Rotate the camshaft as necessary and measure each valve clearance again.
12. Remove the sprocket attachment Torx bolt.
13. Install left and right secondary timing chain tensioner (refer to Workshop Manual procedure 03.09.BR/ 03.09.BS Tensioner Assembly - Secondary - LH/RH - Renew With Engine Removed).

RH/LH Secondary Timing Chain-Renew (with Engine Removed)

Repair Operation Time (ROT)		
Item		**Code**
Secondary Timing Chain-Renew	LH	**03.09.BY**
Secondary Timing Chain-Renew	RH	**03.09.BZ**

Remove

WARNING
DO NOT GET USED ENGINE OIL ON YOUR SKIN. USED ENGINE OIL CAN BE HARMFUL.

1. Remove the left and right primary timing chain (refer to Workshop Manual procedure 03.09.BM/03.09.BN Timing Chain - Primary - LH/RH - Renew With Engine Removed).
2. Remove the two M12 Torx bolts that attach the inlet and exhaust camshaft sprockets to camshafts (refer to Figure 1)..

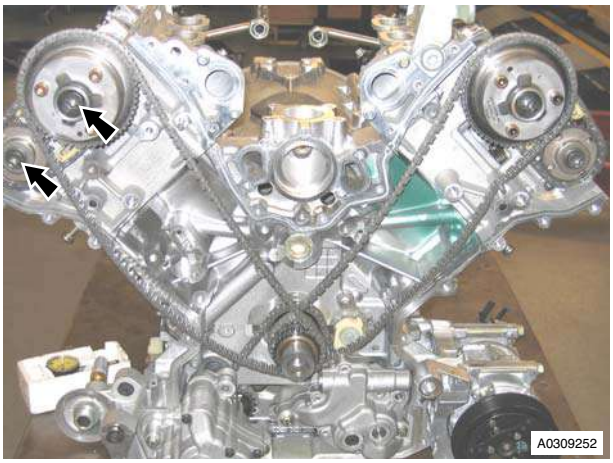

Figure 1

3. Collect the spacer from the bolt on the exhaust camshaft.
4. Remove the two M6 bolts that attach the secondary timing chain tensioner to the cylinder head (refer to Figure 2).

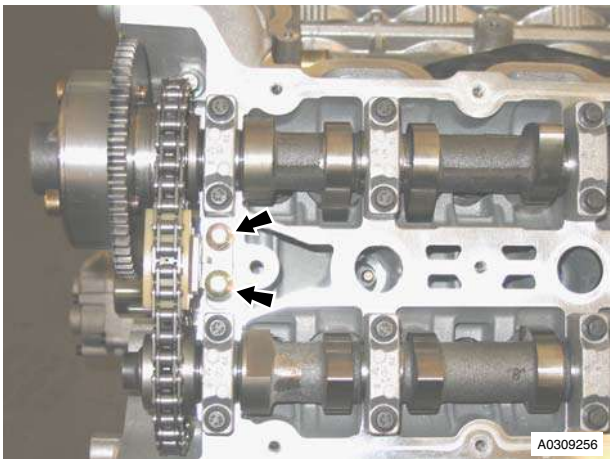

Figure 2

5. Release and remove the camshaft sprockets complete with the timing chain and tensioner from camshafts (refer to Figure 3)..

Figure 3

6. Remove secondary timing chain and tensioner from sprockets (refer to Figure 4).

Figure 4

Install

1. Clean the camshaft sprockets and the tensioner.
2. Install the secondary timing chain and tensioner to camshaft sprockets.
3. Install the secondary timing chain assembly onto the camshafts.
4. Install the spacer onto the M12 exhaust Torx bolt.
5. Install the exhaust M12 Torx bolt to attach the exhaust camshaft sprocket. Do not tighten at this step.
6. Install the inlet M12 Torx bolt to attach the inlet camshaft sprocket. Do not tighten at this step.
7. Install and torque the two M6 secondary tensioner attachment bolts.
8. Install the left guide for the primary timing chain.
9. Install and torque the M6 bolt that attaches the left guide.
10. Make sure that the timing chain slack is on the tensioner side of the timing chain.
11. Install the primary timing chain.
12. Install the primary timing chain tensioner blade.

13. Install and torque the M6 attachment bolt for the tensioner blade.
14. Install the tensioner assembly for the primary timing chain.
15. Install and torque the two M6 bolts that attach the tensioner assembly.
16. Release the tension on the piston of the timing chain tensioner.
17. Remove the retaining special tool.
18. Install the timing chain tensioning tool (303-532) into the exhaust camshaft sprocket.

Caution
Apply an opposite force to the sprockets and chain while you tighten the sprocket bolts

19. Apply a force to the tool (303-532) in a counterclockwise direction and torque the M12 sprocket Torx bolts.
20. Remove the special tool.
21. Install the left and right primary timing chain (refer to Workshop Manual procedure 03.09.BM/03.09.BN Timing Chain - Primary - LH/RH - Renew With Engine Removed).

RH/LH Intake Camshaft Sprocket and Housing Assembly-Renew

Repair Operation Time (ROT)		
Item		**Code**
Intake Camshaft Sprocket and Housing Assembly - Renew	RH-LHD	**03.09.CE**
Intake Camshaft Sprocket and Housing Assembly - Renew	LH-LHD	**03.09.CF**
Intake Camshaft Sprocket and Housing Assembly - Renew	RH-RHD	**03.09.DG**
Intake Camshaft Sprocket and Housing Assembly - Renew	LH-RHD	**03.09.DH**

Remove

WARNING
DO NOT GET USED ENGINE OIL ON YOUR SKIN. USED ENGINE OIL CAN BE HARMFUL.

1. Remove the left and right primary timing chain (refer to Workshop Manual procedure 03.09.AN/03.09.AM/ 03.09.CN/03.09.CM Chain - Timing Primary - RH/LH - Renew).
2. Remove the two M12 Torx bolts that attach the inlet and exhaust camshaft sprockets to camshafts (refer to Figure 1).

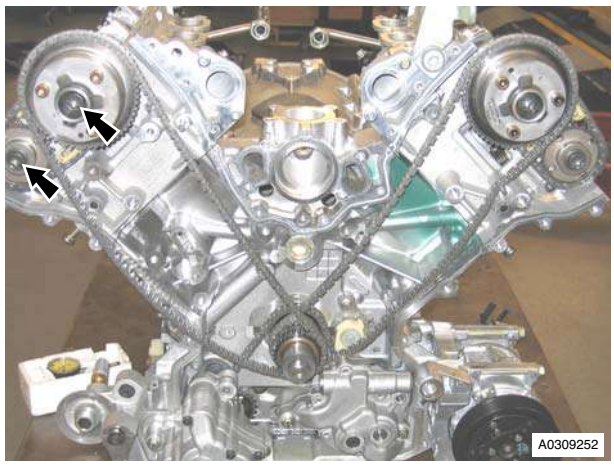

Figure 1

3. Collect the spacer from the bolt on the exhaust camshaft.
4. Remove the two M6 bolts that attach the secondary timing chain tensioner to the cylinder head (refer to Figure 2).

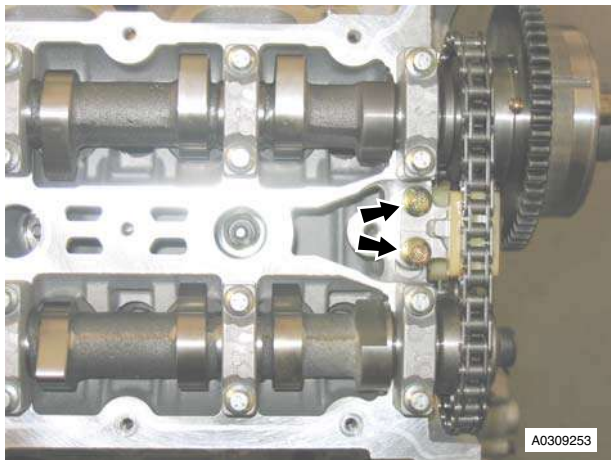

Figure 2

5. Release and remove the two camshaft sprockets complete with the timing chain and tensioner from the camshafts (refer to Figure 3).

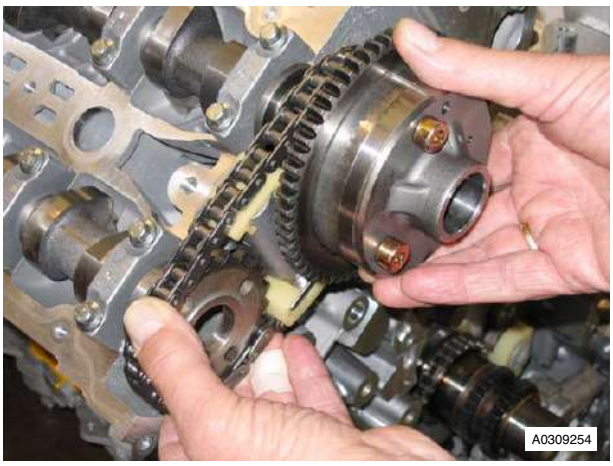

Figure 3

6. Remove the intake sprocket housing assembly from the secondary timing chain (refer to Figure 4).

Figure 4

Install

1. Clean the two camshaft sprockets and the tensioner.
2. Install intake sprocket housing assembly and exhaust sprocket into secondary timing chain.
3. Install secondary timing chain tensioner onto timing chain.
4. Install secondary timing chain assembly onto camshafts.
5. Install the spacer onto the M12 exhaust Torx bolt.
6. Install the exhaust M12 Torx bolt to attach the exhaust camshaft sprocket. Do not tighten at this step.
7. Install the inlet M12 Torx bolt to attach the inlet camshaft sprocket. Do not tighten at this step.
8. Install and torque tighten secondary tensioner bolts (x2).
9. Install RH primary timing chain guide, install and torque tighten bolt.
10. Make sure that the timing chain slack is on the tensioner side of the timing chain.
11. Install primary timing chain.
12. Install primary timing chain tensioner blade, install and torque tighten bolt.
13. Install primary timing chain tensioner assembly, install and torque tighten bolts (x2).
14. Release tension on the timing chain tensioner piston, remove retaining special tool.
15. Install timing chain tensioning tool (303-532) into exhaust camshaft sprocket.

Caution
Apply an opposite force to the sprockets and chain while you tighten the sprocket bolts

16. Apply a force to the tool (303-532) in an anti-clockwise direction and torque tighten sprocket Torx bolts. Remove special tool.
17. Install RH/LH primary timing chain (refer to Workshop Manual procedure 03.09.AN/03.09.AM/03.09.CN/ 03.09.CM Chain - Timing Primary - RH/LH - Renew).

Left Side Primary Chain - Remove and Install)

Repair Operation Time (ROT)	
Item	**Code**
Left Side Primary Chain - Remove and Install	**03.09.CM**

Remove

1. Remove the right side primary timing chain. (refer to procedure 03.09.CN - Right Side Primary Timing Chain)
2. Remove the two bolts that attach the left side bush carrier for the Variable Camshaft Timing (VCT) to the engine.

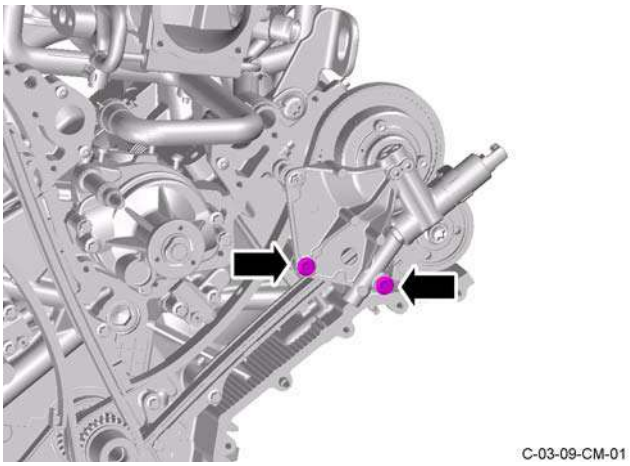

Figure 1

3. Remove the nut that attaches the left side bush carrier for the VCT to the engine.

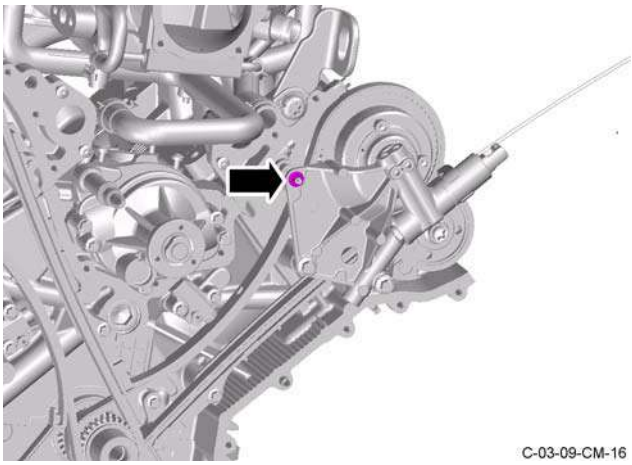

Figure 2

4. Remove the left side bush carrier for the VCT.

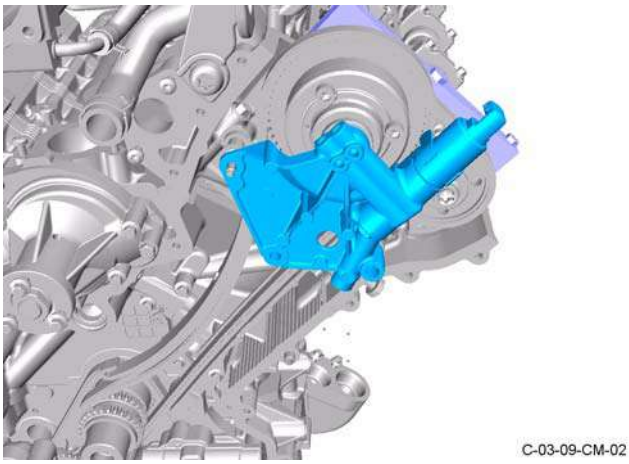

Figure 3

5. Loosen the two bolts that attach the timing chain tensioner to the engine.

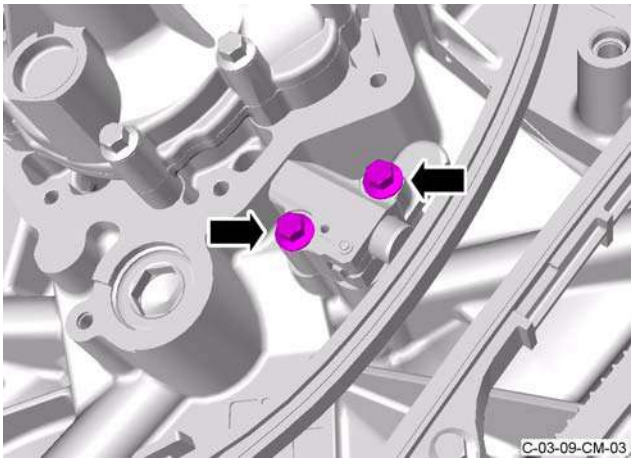

Figure 4

6. Release the ratchet lock on the timing chain tensioner and push the piston into the tensioner housing.

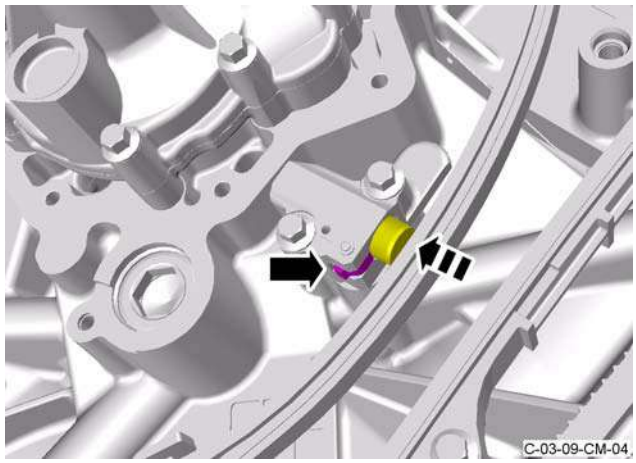

Figure 5

7. Install an applicable pin into the timing chain tensioner.

Figure 6

8. Remove the two bolts that attach the timing chain tensioner to the engine.

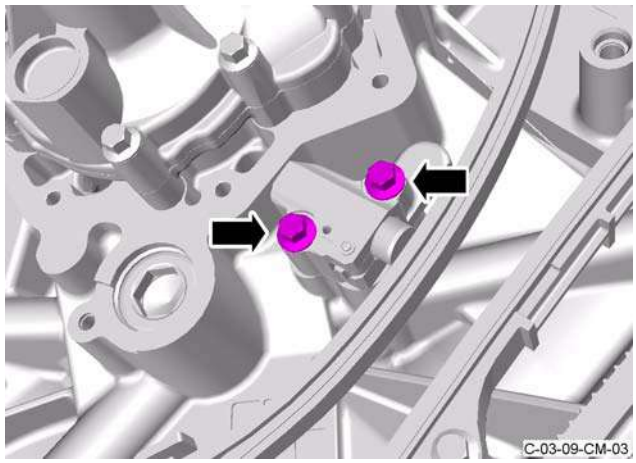

Figure 7

9. Remove the timing chain tensioner.

10. Remove the special pivot bolt for the tensioner arm from the engine.

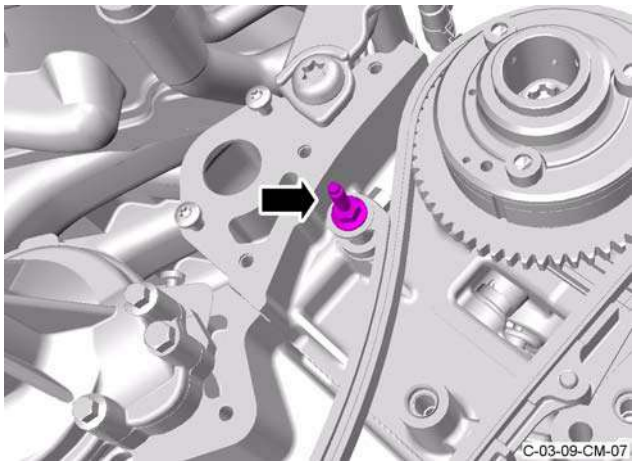

Figure 8

11. Remove the tensioner arm.

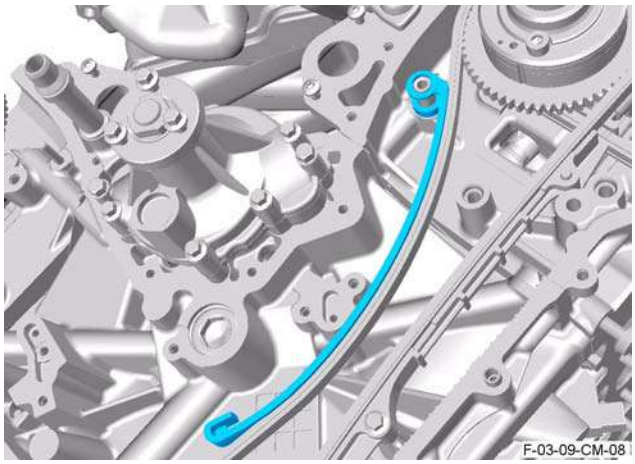

Figure 9

12. Remove the bolt that attaches the timing chain guide to the engine.

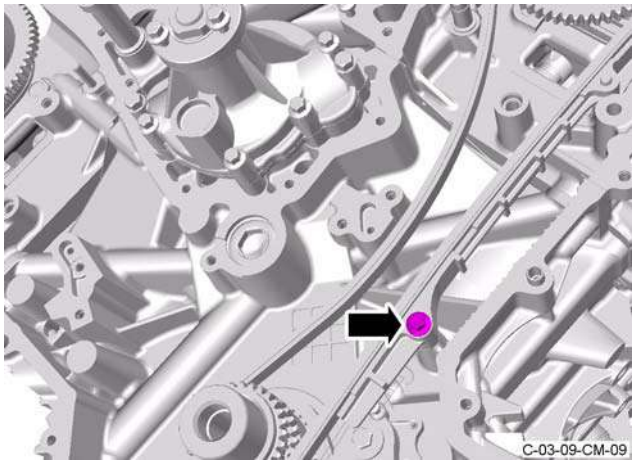

Figure 10

13. Remove the timing chain guide.

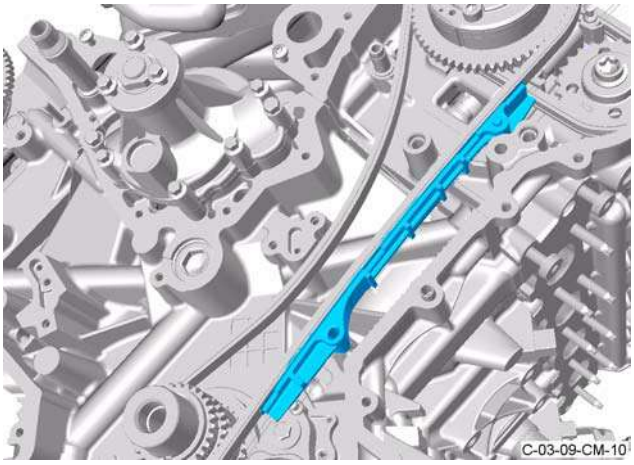

Figure 11

14. Remove the timing chain.

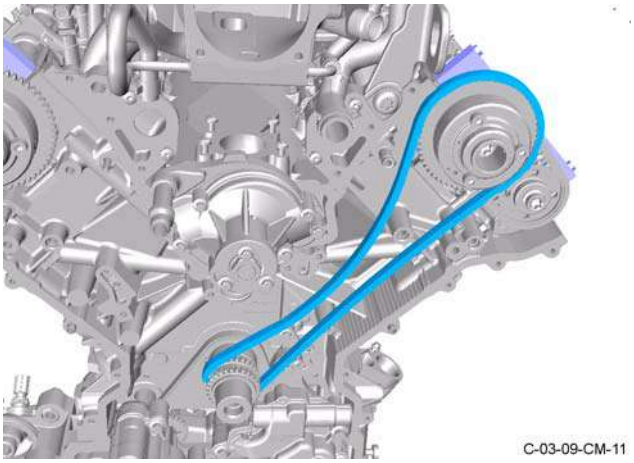

Figure 12

15. Loosen the two Torx bolts that attach the camshaft sprockets to the camshafts.

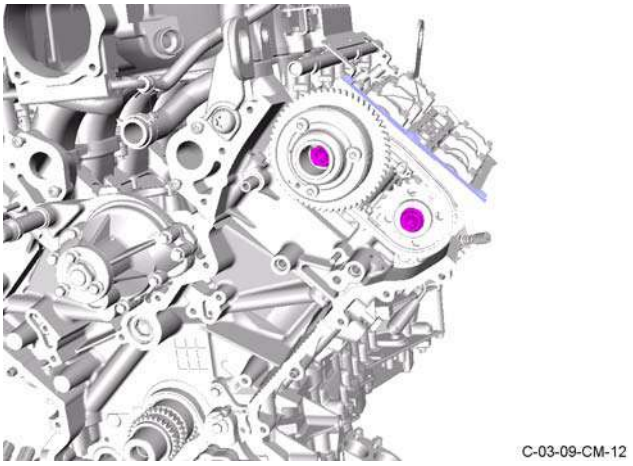

Figure 13

Install

1. If you have moved the crankshaft after you have removed the timing chain, make sure that you set the crankshaft with the left bank rear piston (4B) at 135 degrees after top dead centre.

2. Install the timing chain (refer to Figure 12).
3. Install the timing chain guide (refer to Figure 11).
4. Install the bolt that attaches the timing chain guide to the engine. Torque the bolt to 11 Nm.

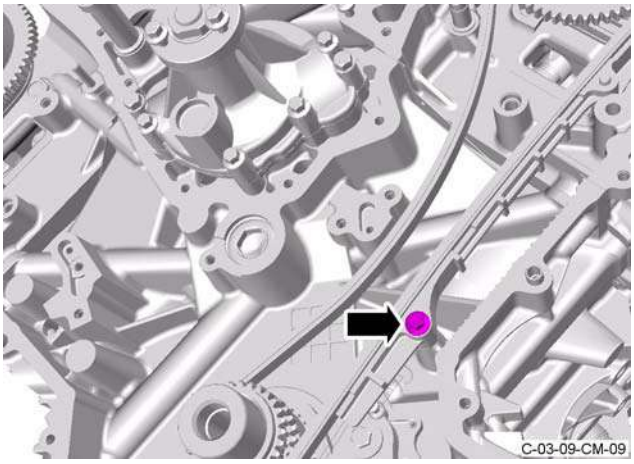

5. Install the tensioner arm.

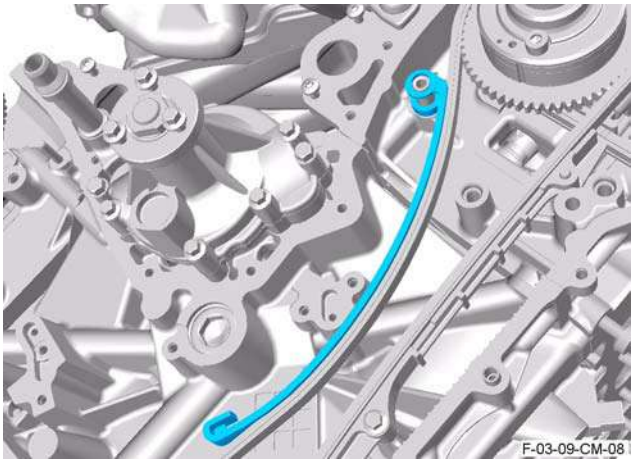

6. Install the bolt that attaches the tensioner arm to the engine. Torque the bolt to 11 Nm.

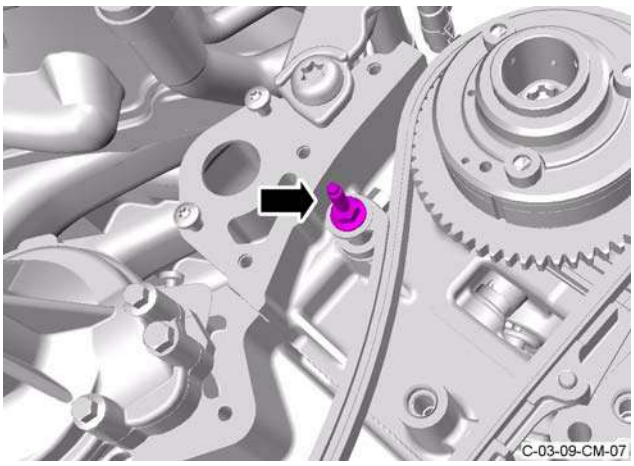

7. Install the timing chain tensioner.
8. Install and torque the two bolts that attach the timing chain tensioner to the engine to 11 Nm.
9. Install the special tool onto the exhaust camshaft sprocket.
10. Note: Use the special tool to hold the timing chain in the correct place during the next two steps of the procedure.
11. Use the special tool to turn the exhaust sprocket counterclockwise until there is tension in the chain.
12. Note: Make sure that the tensioner is fully operated but do not use too much force.
13. Release the pin from the timing chain tensioner and let the tension piston gradually tension the timing chain.
14. Note: Make sure that you torque the bolt that attaches the sprocket to the exhaust camshaft first in the step that follows.
15. Torque the two Torx bolts that attach the camshaft sprockets to the camshafts to 20 Nm.
16. Note: Make sure that you torque the bolt that attaches the sprocket to the exhaust camshaft first in the step that follows.
17. Tighten the two Torx bolts that attach the camshaft sprockets to the camshafts 90 degrees more.
18. Remove the special tool from the exhaust camshaft sprocket.
19. Install the left side bush carrier for the VCT.
20. Install the two bolts that attach the left side bush carrier for the VCT to the engine. Torque the two bolts to 21 Nm.
21. Install the nut that attaches the left side bush carrier for the VCT to the engine. Torque the nut to 11 Nm.
22. Install the right side primary timing chain. (refer to procedure 03.09.CN - Right Side Primary Timing Chain).

RH/LH Intake Camshaft Sprocket and Housing Assembly-Renew (with Engine Removed)

Repair Operation Time (ROT)		
Item		**Code**
Intake Camshaft Sprocket and Housing Assembly-Renew	RH	**03.09.DE**
Intake Camshaft Sprocket and Housing Assembly-Renew	LH	**03.09.DF**

Remove

WARNING
DO NOT GET USED ENGINE OIL ON YOUR SKIN. USED ENGINE OIL CAN BE HARMFUL.

1. Remove the right and left primary timing chains (refer to Workshop Manual procedure 03.09.BN/03.09.BM Timing Chain - Primary - RH/LH - Renew With Engine Removed).

2. Collect the spacer from the bolt on the exhaust camshaft.

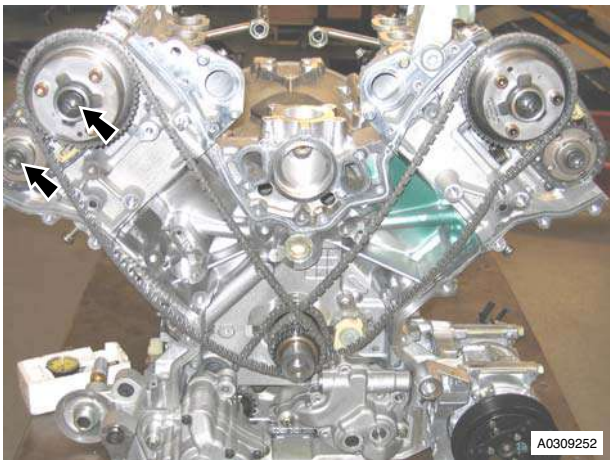

Figure 1

3. Remove the two M6 bolts that attach the secondary timing chain tensioner to the cylinder head (refer to Figure 2).

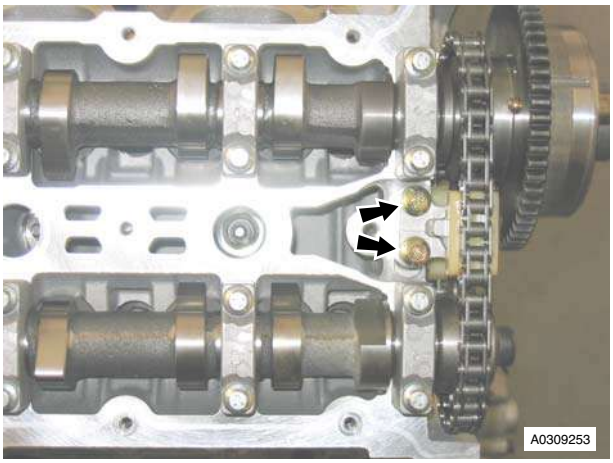

Figure 2

4. Release and remove camshaft sprockets complete with timing chain and tensioner from camshafts (refer to Figure 3).

Figure 3

5. Remove intake sprocket housing assembly from secondary timing chain (refer to Figure 4).

Figure 4

Install

1. Clean the two camshaft sprockets and the tensioner.
2. Install the intake sprocket housing assembly and the exhaust sprocket into the secondary timing chain.
3. Install the secondary timing chain tensioner onto the timing chain.
4. Install the secondary timing chain assembly onto the camshafts.
5. Install the spacer onto the M12 exhaust Torx bolt.
6. Install the exhaust M12 Torx bolt to attach the exhaust camshaft sprocket. Do not tighten at this step.
7. Install the inlet M12 Torx bolt to attach the inlet camshaft sprocket. Do not tighten at this step.
8. Install and torque the two M6 bolts that attach the secondary tensioner.
9. Install the guide for the right primary timing chain.
10. Install and torque the M6 bolt that attaches the guide.
11. Make sure that the timing chain slack is on the tensioner side of the timing chain.
12. Install the primary timing chain.
13. Install the tensioner blade for the primary timing chain.
14. Install and torque the M6 bolt that attaches the tensioner blade.
15. Install the primary timing chain tensioner assembly.
16. Install and torque the two M6 bolts that attach the tensioner assembly.
17. Release the tension from the timing chain tensioner piston and remove the retaining special tool.
18. Install the timing chain tensioning tool (303-532) into the exhaust camshaft sprocket.

Caution
Apply an opposite force to the sprockets and chain while you tighten the sprocket bolts.

19. Apply a force to the tool (303-532) in a counterclockwise direction and torque the two M12 sprocket Torx bolts.
20. Remove the special tool.
21. Install the left and right primary timing chain (refer to Workshop Manual procedure 03.09.BN/03.09.BM

Timing Chain - Primary - RH/LH - Renew With Engine Removed).

ASTON MARTIN
ASTON MARTIN

Engine (03.00)

Engine Sealing (03.10)

Specifications

Torque Figures		
Description	Nm.	lb./ft.
Cam cover	10	7
Dipstick tube	6	4
Timing cover:		
Bolts 1 to 7, 9 to 18 and 20 to 27	12	9
Bolts 8 and 19	10	7
Crankshaft pulley bolt	320	236
Alternator mounting bracket	21	15.5
Alternator	40	30
Coolant manifold	9	6.5
Coolant pump	12	9
Coolant pump pulley	10 + 45°	7 + 45°
PAS pump	21	15.5
Accessory drive belt idler pulleys	40	30
Accessory drive belt tensioner	40	30
Heater hose brackets:		
M6 Bolts	12	9
M5 Nuts	5	3.7
Harness support brackets:		
M5 Nut	5	3.7
M6 Screw	10	7
M8 Screw	25	18.5

Maintenance

Engine Timing Cover - Renew

Repair Operation Time (ROT)		
Item		**Code**
Engine Timing Cover-Renew	LHD	**03.10.AF**
Engine Timing Cover-Renew	RHD	**03.10.CF**

1. Remove the front subframe (refer to Workshop Manual procedure 02.01.BA Subframe Assembly - Front - Remove for Access and Refit).
2. Put an applicable container in position under the engine to collect drained oil.

WARNING
DO NOT GET USED ENGINE OIL ON YOUR SKIN. USED ENGINE OIL CAN BE HARMFUL.

3. Remove the sump drain plug and drain the oil from the engine.
4. Remove the oil tank assembly (refer to Workshop Manual procedure 03.02.CA Tank Assembly - Oil Cooler - Renew).
5. Drain cooling system (refer to Workshop Manual procedure 03.03.AD Coolant - Drain and Refill).
6. Remove the left cam cover (Refer to 'Left Side Cam Cover - Remove and Install', page 3-10-4)
7. Remove the outer and inner seals from the left cam cover.
8. Remove the right cam cover (Refer to 'Right Side Cam Cover - Remove and Install', page 3-10-9).
9. Remove the outer and inner seals from the right cam cover.
10. Release the clips and disconnect the two coolant hoses from the coolant manifold.
11. Release the clip and disconnect the hose from oil the separator.
12. Remove the four M6 Torx screws that attach the coolant manifold to the cylinder heads (Refer to Figure 1).

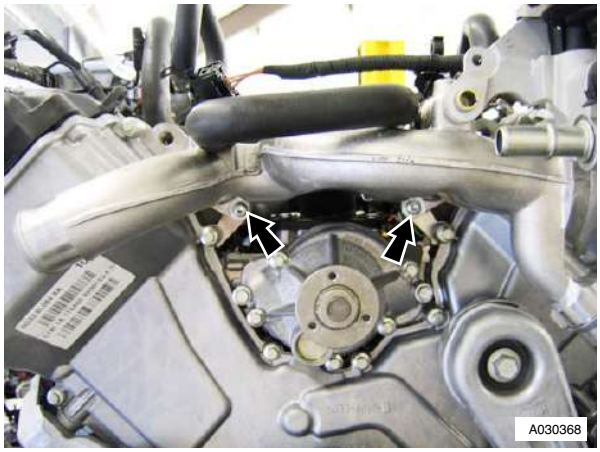

Figure 1

13. Release the coolant manifold from the coolant pipe.
14. Disconnect the electrical connector for the temperature sensor.
15. Remove the coolant manifold.
16. Remove and discard the two O-rings from the manifold.
17. Loosen the three M6 attachment screws for the water pump pulley (Refer to Figure 2).

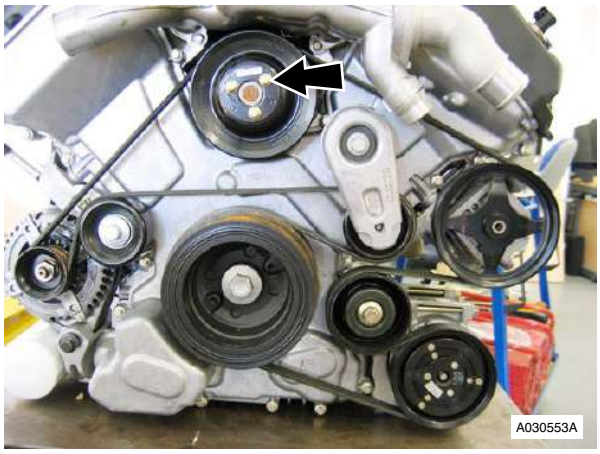

Figure 2

18. Turn the auxiliary drive belt tensioner to release the tension from the drive belt.
19. Remove the drive belt.
20. Remove the three M6 screws that attach the water pump pulley and remove the pulley.

21. Remove the M10 bolt that attaches the auxiliary drive belt tensioner and remove tensioner (Refer to Figure 3).

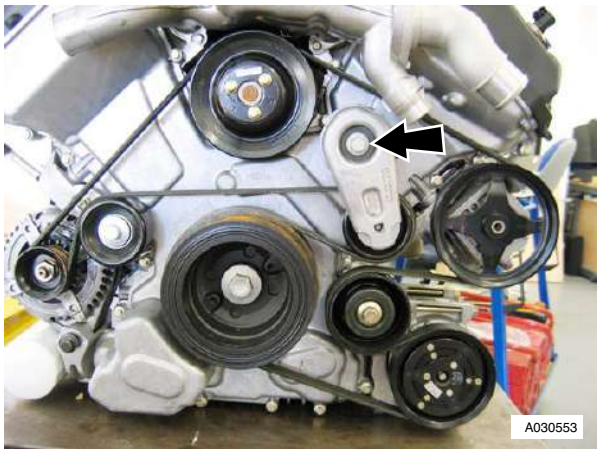

Figure 3

22. Remove the two bolts that attach the inspection cover to lower crankcase and remove the cover.
23. Install the tool (303-1185) to hold the flywheel. Install and tighten the two bolts.
24. Remove and discard the M16 screw that attaches the crankshaft pulley.
25. Install the thrust-button of tool (303 -1186) into crankshaft.
26. Put the tool into the pulley.
27. Attach the tool with the two bolts.
28. Turn the centre bolt clockwise to withdraw the pulley from the crankshaft.
29. Collect the crankshaft pulley, locking ring and the thrust button for the special tool.
30. Remove the special tool from the pulley.
31. Remove and discard the O-ring seal from the pulley.
32. Remove the bolt that attaches the alternator idler pulley and remove the pulley.
33. Remove the bolt that attaches the idler pulley for the air-conditioning compressor and remove the pulley.
34. Put an applicable container under the oil filter to collect drained oil.

WARNING
DO NOT GET USED ENGINE OIL ON YOUR SKIN. USED ENGINE OIL CAN BE HARMFUL.

35. Remove the oil filter.
36. Release the oil separator drain tube from the timing cover.
37. Release the clip for the oil separator drain tube from the bracket.
38. Release the cover for the battery cable from the alternator.
39. Remove the nut that attaches the battery cable to the alternator and remove the cable. (Refer to Figure 4).

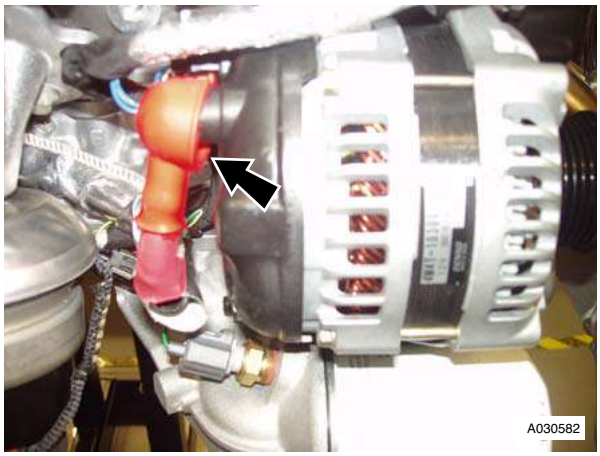

Figure 4

40. Disconnect the electrical connector from the alternator.
41. Remove the M8 bolt that attaches the top of the alternator.
42. Remove the M10 bolt and the nut that attaches the bottom of the alternator and remove the alternator.
43. Remove the three Torx bolts that attach the alternator mounting bracket to the cylinder block.
44. Remove the bracket (Refer to Figure 5).

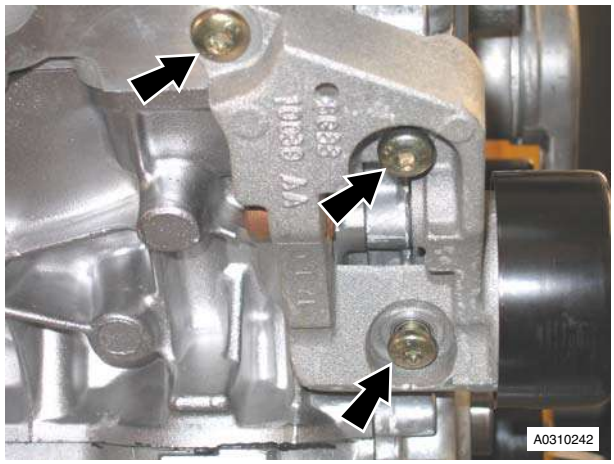

Figure 5

45. Remove the three M8 bolts that attach the PAS pump to the mounting bracket and move the pump away.

46. Remove the four M8 Torx bolts that attach the PAS pump mounting bracket to the cylinder block and remove the bracket (refer to Figure 6).

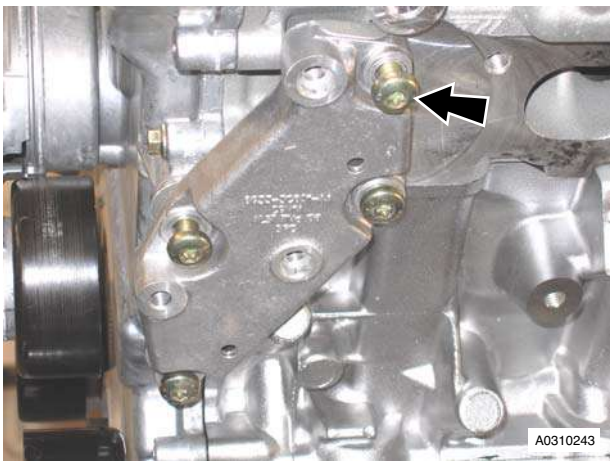

Figure 6

47. Remove the 27 M6 bolts that attach the timing cover to the engine.
48. Collect the bracket for the oil separator drain tube.
49. Remove the timing cover.

WARNING
DO NOT GET USED ENGINE OIL ON YOUR SKIN. USED ENGINE OIL CAN BE HARMFUL.

50. Remove the outer and inner rubber seals from timing cover (Refer to Figure 7).

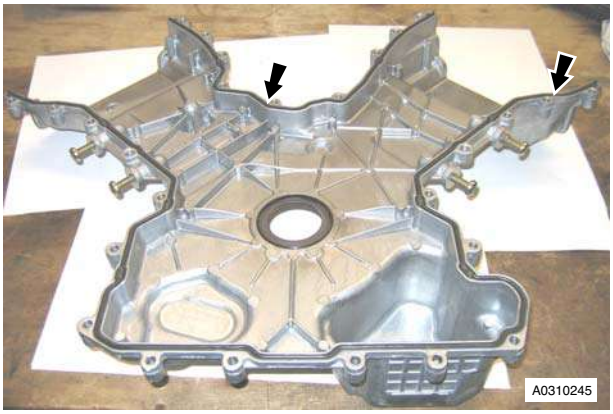

Figure 7

51. Remove the front crankshaft oil seal from the timing cover.

Install

1. Examine the condition of the seal in the John Guest cartridge connector for the oil return pipe. If there are signs that the connector has leaked, install a new John Guest cartridge kit (Refer to 'John Guest Cartridge in the Engine Timing Cover - Repair', page 3-10-14).
2. Clean the timing cover and the mating face on the engine.

Caution
Make sure the crankshaft front oil seal mating faces are clean and dry.

3. Install the inner and outer seals to the timing cover.
4. Apply 3mm x 12mm beads of sealant to the eight joints on the engine.
5. Install the timing cover. Put the oil separator drain tube bracket in position and install the 27 M6 bolts..
6. Torque the 27 bolts in the sequence shown in Figure 8.

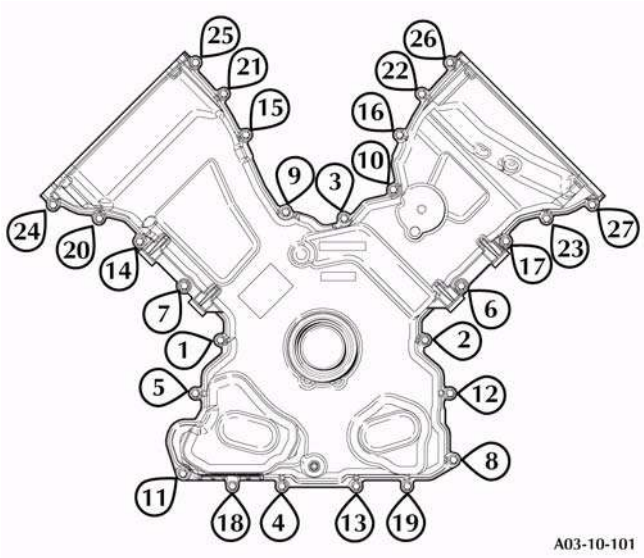

Figure 8

Caution
Do not remove the crankshaft front oil seal protector until the oil seal is correctly installed.

7. Use tool (303-750) to install the front crankshaft oil seal.
8. Remove the special tool and the seal protector.

Caution
Clean the thread in the crankshaft before you install a new crankshaft pulley bolt. If you do not you can not apply the correct torque to the bolt.

9. Use an M16 x 2 plug tap to clean the thread in the crankshaft.
10. Clean the crankshaft pulley and mating face on the crankshaft.
11. Lubricate and install a new O-ring seal in the crankshaft pulley.
12. Examine the crankshaft pulley and the taper collet for damage. Replace all damaged parts.
13. Install the crankshaft pulley, taper collet and a new pulley bolt.
14. Torque tighten the crankshaft pulley bolt.
15. Remove the special tool (303-1185) from the crankcase.
16. Install the inspection cover to the lower crankcase, install and tighten the two attachment bolts.
17. Install the PAS pump mounting bracket. install and torque tighten the four M8 Torx bolts.
18. Install the PAS pump. Install and torque the three M8 bolts.
19. Install the alternator mounting bracket. Install and torque tighten the three M8 Torx bolts.

20. Put the alternator in position.
21. Install the M8 bolt that attaches the top of the alternator.
22. Install the M10 nut and bolt that attaches the bottom of the alternator.
23. Torque tighten the alternator attachment bolts.
24. Connect the battery cable to the alternator.
25. Install and torque the nut that attaches the battery cable.
26. Install the cover for the cable connection.
27. Connect the electrical connector to the alternator.
28. Apply new engine oil to the seal on a new oil filter.
29. Install the new oil filter.
30. Install the drain tube for the oil separator into the clip in the bracket.
31. Install the drain tube for the oil separator into timing cover.
32. Install the idler pulley for the air conditioning compressor.
33. Install and torque the M10 bolt that attaches the idler pulley.
34. Install the alternator idler pulley.
35. Install and torque the M10 bolt that attaches the idler pulley.
36. Install the auxiliary drive belt tensioner.
37. Install and torque the M10 bolt that attaches the tensioner.
38. Put the water pump pulley in position.
39. Install the three M6 bolts that attach the water pump pulley.
40. Turn the auxiliary drive belt tensioner until you can install the drive belt.
41. Torque tighten the three M6 water pump pulley bolts.
42. Clean the coolant manifold and the mating faces on the cylinder heads.
43. Install two new O-ring seals into the coolant manifold.
44. Put the coolant manifold in position.
45. Connect the electrical connector for the temperature sensor.
46. Install the coolant pipe in the manifold.
47. Install and torque tighten the four M6 Torx bolts that attach the coolant manifold to the cylinder heads.
48. Connect the three coolant hoses to the coolant manifold and install the hose clips.
49. Connect the engine breather to the oil separator.
50. Clean the left and right cam covers.
51. Install the inner and outer seals on the left cam cover.
52. Install the left cam cover (Refer to 'Left Side Cam Cover - Remove and Install', page 3-10-4).
53. Install the inner and outer seals on the right cam cover.
54. Install the right cam cover (Refer to 'Right Side Cam Cover - Remove and Install', page 3-10-9).
55. Install the front subframe (refer to Workshop Manual procedure 02.01.BA Subframe Assembly - Front - Remove for Access and Refit).
56. Install the oil tank assembly (refer to Workshop Manual procedure 03.02.CA Tank Assembly - Oil Cooler - Renew).
57. Fill the cooling system (refer to Workshop Manual procedure 03.03.AD Coolant - Drain and Refill).

Left Side Cam Cover - Remove and Install

Repair Operation Time (ROT)	
Item	**Code**
Left Side Cam Cover - Remove and Install	**03.10.AS**

Removal

1. Disconnect the battery earth cable.
2. Remove the front crush brace. (Refer to procedure 01.01.LC - Front Crush Brace).
3. Remove the left side front crush bar for the body reinforcement. (Refer to procedure 01.01.AC - Left Side Front Crush Bar for the Body Reinforcement).
4. Disconnect the breather pipes from the cam cover and the oil tank Y-piece.
5. Use applicable caps to seal the open ports.
6. Remove the ignition coil cover.
7. Disconnect the electrical connector from each of the four ignition coils.
8. Disconnect the electrical connector from the Variable Valve Timing (VVT) solenoid.
9. Release the fir tree clip that attaches the wiring harness for the ignition coils.
10. Move the wiring harness for the ignition coils away.
11. Release the wiring harness for the injectors from the mounts.
12. Cut and remove the three cable ties that attach the rear of the wiring harness for the injectors.
13. Release the purge pipe and heater pipe from the two clips on the wiring harness bracket.
14. Remove the two nuts and three screws that attach the front bracket for the wiring harness.
15. Remove the three screws that attach the rear bracket for the wiring harness.
16. Cut and remove the four cable ties that attach the rear of the wiring harness to the front bracket.
17. Remove the rear bracket for the wiring harness.
18. Remove the front bracket for the wiring harness.
19. Remove the screw that attaches each of the four ignition coils.
20. Remove the four ignition coils.

Note: When you remove the cam cover attachment bolts in the step that follows, record their installed positions in the cam cover.

21. Remove the 14 screws that attach the cam cover to the engine.

22. Remove and discard the seals for the 14 cam cover screws.
23. Remove the cam cover.
24. Remove the breather pipe stub.
25. Remove and discard the seal for the breather pipe stub.
26. Remove and discard the O-ring seal for the VVT solenoid.
27. Remove and discard the cam cover gasket.
28. Remove and discard the four O-ring seals from the spark plug wells.
29. Clean the component mating faces.

Install

1. Install four new O-ring seals in the spark plug wells.
2. Install a new O-ring seal for the VVT solenoid.
3. Install a new cam cover gasket.
4. Install a new seal for the breather pipe stub.
5. Install the breather pipe stub.
6. Apply a 6 mm diameter sphere of silicon RTV sealant at the positions shown in Figure C03-10-102.

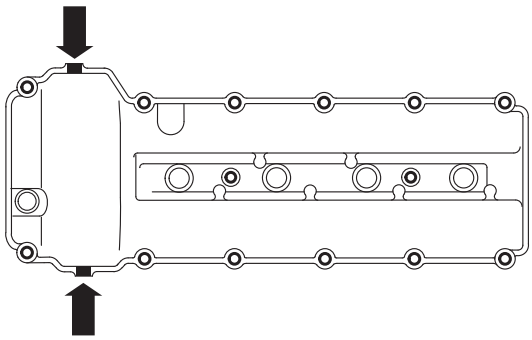

Figure C03-10-102

7. Install the cam cover.
8. Install new seals for the 14 cam cover screws.

CAUTION
Tighten the screws gradually and equally in the step that follows. If you do not, the cam cover gasket can be damaged.

9. Install and torque the 14 screws that attach the cam cover to the engine in the sequence shown to 10 Nm.

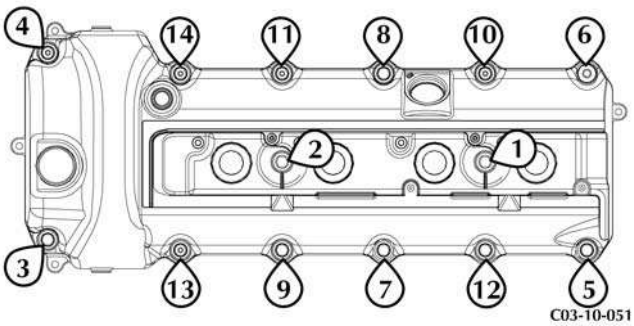

Figure C03-10-051

10. Install the four ignition coils.
11. Install and torque the screw that attaches each of the four ignition coils to 5 Nm.
12. Install the front bracket for the wiring harness.
13. Install the rear bracket for the wiring harness.
14. Install and torque the three screws that attach the rear bracket for the wiring harness to 11 Nm.
15. Install and tighten the two nuts and three bolts that attach the front bracket for the wiring harness.
16. Install the purge pipe and heater pipe into the two clips on the wiring harness bracket.
17. Use four applicable cable ties to attach the rear of the wiring harness to the front bracket.
18. Install the wiring harness for the injectors into the mounts.
19. Install the fir tree clip that attaches the wiring harness for the ignition coils.
20. Connect the electrical connector to each of the four ignition coils.
21. Connect the electrical connector to the VVT solenoid.
22. Install the ignition coil cover.
23. Remove and discard the caps from the breather pipes.
24. Connect the breather pipes to the cam cover and the oil tank Y-piece.

CAUTION
Make sure that the vehicle is on its road wheels on level ground when you do the do the steps that folllow. If you do not, the front of the vehicle can be twisted when the cross brace is tightened.

25. Install the left side front crush bar for the body reinforcement. (Refer to procedure 01.01.AC - Left Side Front Crush Bar for the Body Reinforcement).
26. Install the front crush brace. (Refer to procedure 01.01.LC - Front Crush Brace).
27. Connect the battery earth cable

Left Side Cam Cover Gasket - Renew

Repair Operation Time (ROT)		
Item		**Code**
Cam Cover Gasket-Renew	LH-LHD	**03.10.AJ**
Cam Cover Gasket-Renew	LH-RHD	**03.10.CJ**

Removal

1. Remove the left cam cover (Refer to 'Left Side Cam Cover - Remove and Install', page 3-10-4).
2. Remove and discard the cam cover gasket.

Installation

1. Clean the mating faces of the cam cover and the cylinder head.
2. Put the new cam cover gasket in position.
3. Install the left cam cover (Refer to 'Left Side Cam Cover - Remove and Install', page 3-10-4).

Right Side Cam Cover Gasket - Renew

Repair Operation Time (ROT)		
Item		**Code**
Cam Cover Gasket-Renew	RH-LHD	**03.10.AK**
Cam Cover Gasket-Renew	RH-RHD	**03.10.CK**

1. Remove the right cam cover (Refer to 'Right Side Cam Cover - Remove and Install', page 3-10-9).
2. Remove and discard the cam cover gasket.

Installation

1. Clean the mating faces of the cam cover and the cylinder head.
2. Put the new cam cover gasket in position.
3. Install the right cam cover (Refer to 'Right Side Cam Cover - Remove and Install', page 3-10-9).

Cylinder Head Gasket - Renew (Engine Set)

Repair Operation Time (ROT)	
Item	**Code**
Cylinder Head Gasket - Renew (Engine Set)	**03.10.AL**

Removal

1. Remove the SAI pump and bracket assembly (refer to procedure 03.08.DB Pump and Bracket Assembly - Secondary Air Injection - Renew).
2. Disconnect the electrical connector from each of the two left and two right knock sensors.
3. Disconnect the electrical connector from the left and right camshaft timing sensors.
4. Remove the right exhaust manifold (refer to procedure 09.00.CC Gasket - Exhaust Manifold - RH - Renew).
5. Remove the left front wheel arch liner (refer to procedure 01.02.FB Wheel Arch Liner - Front - LH - Renew).
6. Remove the eight nuts that attach the left exhaust manifold to cylinder head.
7. Remove the left exhaust manifold. Remove and discard the gasket.
8. Remove the left intake camshaft (refer to Workshop Manual procedure 03.09.AV Camshaft - Intake - LH - Renew).

WARNING
DO NOT GET USED ENGINE OIL ON YOUR SKIN. USED ENGINE OIL CAN BE HARMFUL.

9. Remove the 10 left exhaust camshaft bearing cap attachment bolts evenly and in steps (refer to Figure 1).

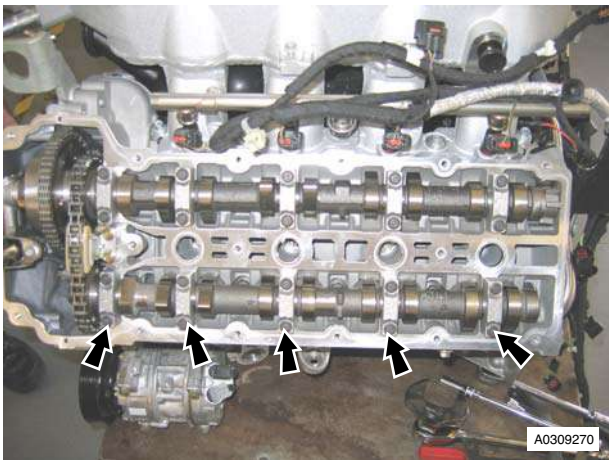

Figure 1

10. Record the positions and the markings of the bearing caps for the left exhaust camshaft .
11. Remove the bearing caps for the left exhaust camshaft.

Figure 2

12. Remove the two bolts that attach the front end of the left cylinder head to the cylinder block.

13. Remove the 10 bolts evenly and in steps, that attach the left cylinder head to the cylinder block (refer to Figure 3).

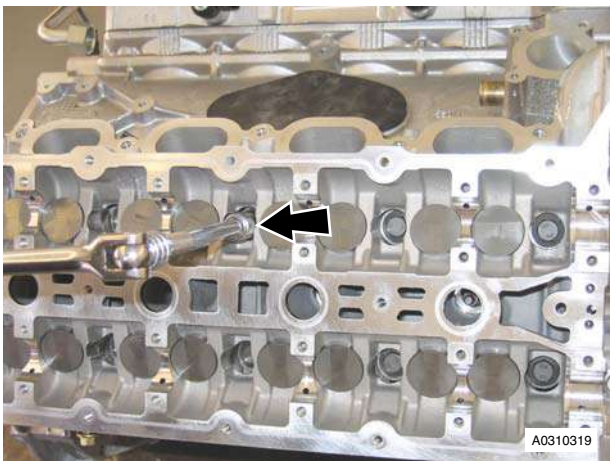

Figure 3

14. With the aid of one more person, remove the left cylinder head assembly.
15. Remove and discard the cylinder head gasket.
16. Remove the two Torx bolts, the spacer on the exhaust and the Torx bolt that attaches the right intake and exhaust camshaft sprockets to the camshafts (refer to Figure 4).

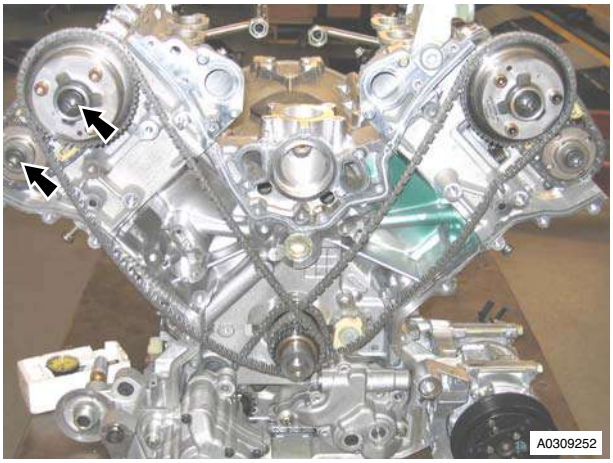

Figure 4

17. Remove the two bolts that attach the right secondary timing chain tensioner to the cylinder head (refer to Figure 5).

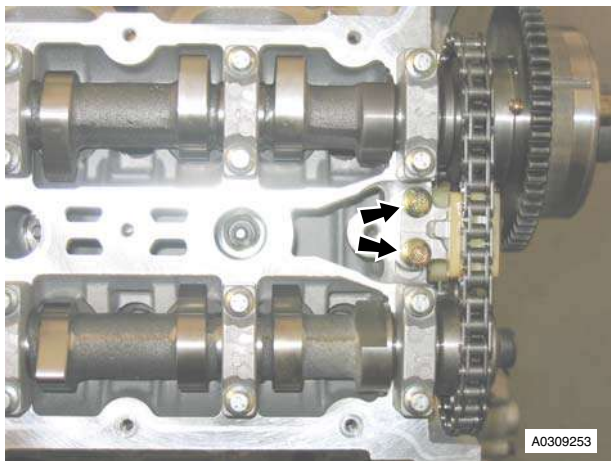

Figure 5

18. Remove the right camshaft sprockets complete with the timing chain and tensioner from the camshafts (refer to Figure 6).

Figure 6

19. Remove the three bolts that attach tool (303-530) to the cylinder head. Remove the special tool (refer to Figure 7).

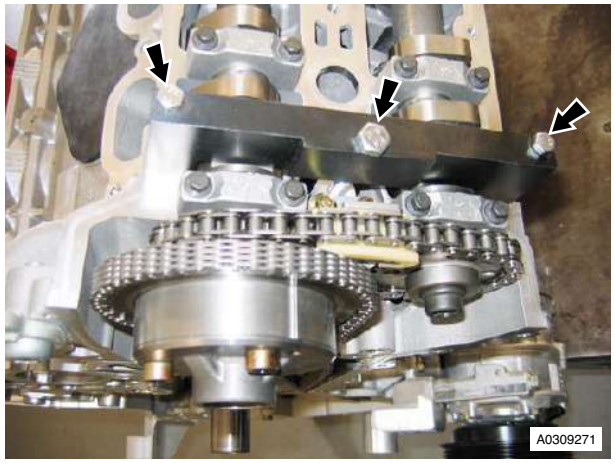

Figure 7

20. Remove the ten bolts evenly and in steps, that attach the bearing caps for the right intake camshaft (refer to Figure 8).

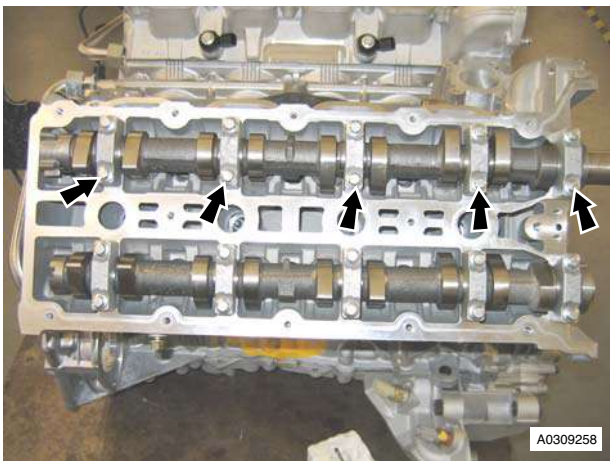

Figure 8

21. Record the positions and the markings of the bearing caps for the right intake camshaft.
22. Remove the right intake camshaft (refer to Figure 9).

Figure 9

23. Remove the ten bolts evenly and in steps, that attach the bearing caps for the right exhaust camshaft (refer to Figure 10).

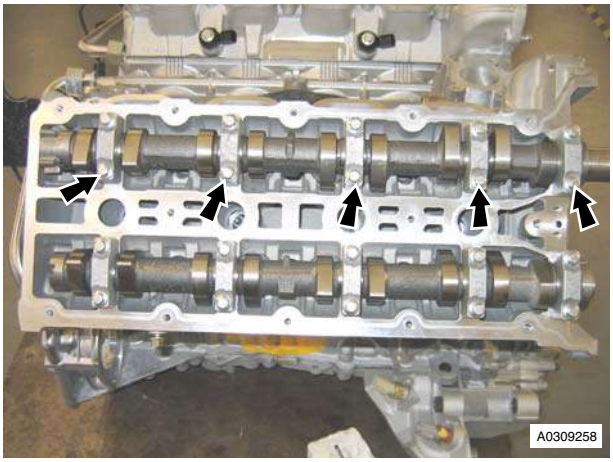

Figure 10

24. Record the positions and the markings of the bearing caps for the right exhaust camshaft.
25. Remove right exhaust camshaft (refer to Figure 11).

Figure 11

26. Remove the two bolts that attach the front end of the right cylinder head to the cylinder block.
27. Remove the ten bolts evenly and in steps, that attach the right cylinder head to the cylinder block (refer to Figure 12).

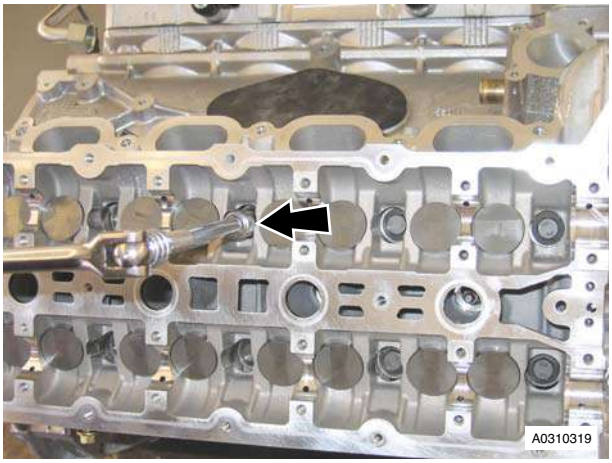

Figure 12

28. With the aid of one more person, remove the right cylinder head assembly.
29. Remove and discard the cylinder head gasket.

Installation

1. Fully clean the left and right cylinder head faces and the attachment bolt pockets.
2. Fully clean the left and right cylinder block faces.
3. Fully clean and dry the left and right cylinder head retaining bolts.
4. Install a new right cylinder gasket. Make sure that it is correctly engaged on the dowels.
5. With assistance, install the right cylinder head. Make sure it is correctly engaged on the dowels.
6. Install and torque tighten the 12 cylinder head bolts in the correct sequence.
7. Lubricate the camshaft journals, camshaft lobes, bearing surfaces on cylinder head and the bearing caps with clean engine oil.

8. Install the right exhaust camshaft.
9. Install the five bearing caps in their correct positions.
10. Install the ten bolts and torque tighten them in the sequence specified.
11. Install the Torx bolt that attaches the sprocket to the camshaft.
12. Rotate the camshaft and use feeler gauges to do a check of each valve clearance .
13. Do the procedure again and install the right intake camshaft.
14. Remove the Torx bolt that attaches the sprocket.
15. Rotate the right intake and exhaust camshafts until the timing flats on each camshaft face up.
16. Install tool (303-530) onto the right cylinder head to hold the camshafts. Install and tighten the three bolts.
17. Install a new left cylinder head gasket. Make sure that it is correctly engaged on the dowels.
18. With the aid of one more person, install the left cylinder head. Make sure that it is correctly engaged on the dowels.
19. Install and torque the 12 cylinder head bolts in the correct sequence.

WARNING
DO NOT GET USED ENGINE OIL ON YOUR SKIN. USED ENGINE OIL CAN BE HARMFUL.

20. Lubricate the left exhaust camshaft journals, camshaft lobes, bearing surfaces on the cylinder head and the bearing caps with clean engine oil.
21. Install left exhaust camshaft.
22. Install the five bearing caps in their correct positions.

Caution
Gradually tighten one bolt and then the next to correctly install the camshaft bearing caps in the step that follows.

23. Install the ten bolts and torque in the sequence specified.
24. Install the Torx bolt that attaches the sprocket to the left exhaust camshaft.
25. Rotate the left exhaust camshaft as necessary and use feeler guages to do a check of each valve clearance.
26. Remove the Torx bolt that attaches the sprocket.
27. Install the left intake camshaft (refer to Workshop Manual procedure 03.09.AV Camshaft - Intake - LH - Renew).
28. Install the timing chain tensioning tool (303-532) into the right exhaust camshaft sprocket.
29. Apply a force to the tool (303-532) in a counterclockwise direction to hold the sprocket and torque the right sprocket Torx bolts.
30. Remove the special tool.
31. Connect the electrical connectors to the left and right camshaft timing sensors.
32. Connect the electrical connector to each of the two left and two right knock sensors.
33. Install SAI pump and bracket assembly (refer to Workshop Manual procedure 03.08.DB Pump and Bracket Assembly - Secondary Air Injection - Renew).
34. Clean the left exhaust manifold.
35. Install a new gasket for the left exhaust manifold .
36. Install the left exhaust manifold.
37. Install and torque tighten the eight nuts.
38. Install the left front wheel arch liner (refer to Workshop Manual procedure 01.02.FB Wheel Arch Liner - Front - LH - Renew).
39. Install the right exhaust manifold (refer to Workshop Manual procedure 09.00.CC Gasket - Exhaust Manifold - right - Renew).

Right Side Cam Cover - Remove and Install

Repair Operation Time (ROT)	
Item	**Code**
Right Side Cam Cover - Remove and Install	**03.10.AT**

Removal

1. Disconnect the battery earth cable.
2. Remove the front crush brace. (Refer to procedure 01.01.LC - Front Crush Brace)
3. Remove the right side front crush bar for the body reinforcement. (Refer to procedure 01.01.AB - Right Side Front Crush Bar for the Body Reinforcement)
4. Remove the breather pipe from the cam cover.
5. Install applicable caps to seal the open ports.
6. Remove the ignition coil cover.
7. Disconnect the electrical connector from each of the four ignition coils.
8. Disconnect the electrical connector from the Variable Valve Timing (VVT) solenoid.
9. Release the fir tree clip that attaches the wiring harness for the ignition coils.
10. Move the wiring harness for the ignition coils away.
11. Release the wiring harness for the injectors from the mounts.
12. Cut and remove the three cable ties that attach the rear of the wiring harness for the injectors.
13. Remove the screw that attaches the purge pipe P-clip to the cam cover.
14. Move the purge-pipe P-clip away.
15. Release the purge pipe and heater pipe from the two clips on the wiring harness bracket.
16. Remove the two nuts and two screws that attach the front bracket for the wiring harness.
17. Remove the three screws that attach the rear bracket for the wiring harness.
18. Remove the rear bracket for the wiring harness.
19. Remove the front bracket for the wiring harness.

20. Remove the four screws that attach each ignition coil.
21. Remove the four ignition coils.

Note: When you remove the cam cover attachment screws in the step that follows, record their installed positions in the cam cover.

22. Remove the 14 screws that attach the cam cover to the engine.
23. Remove and discard the seals for the 14 cam cover screws.
24. Remove the cam cover.
25. Remove and discard the O-ring seal for the VVT solenoid.
26. Remove and discard the cam cover gasket.
27. Remove and discard the four O-ring seals from the spark plug wells.
28. Clean the component mating faces.

Install

1. Install four new O-ring seals in the spark plug wells.
2. Install a new O-ring seal for the VVT solenoid.
3. Install a new cam cover gasket.
4. Apply a 12 mm by 3 mm bead of sealant to the tri-joints shown.

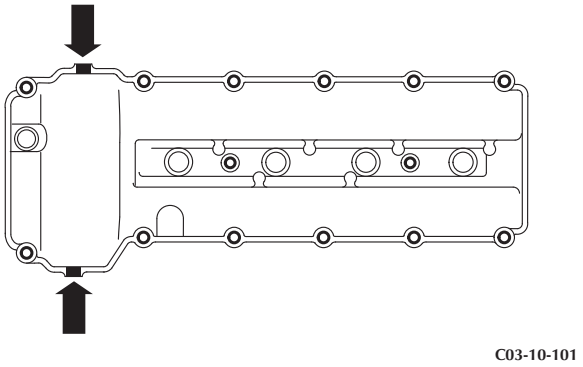

Figure C03-10-101

5. Install the cam cover.
6. Install new seals for the 14 cam cover screws.

CAUTION
Tighten the screws gradually and equally in the step that follows. If you do not, the cam cover gasket can be damaged.

7. Install and torque the 14 screws that attach the cam cover to the engine in the sequence shown to 10 Nm.

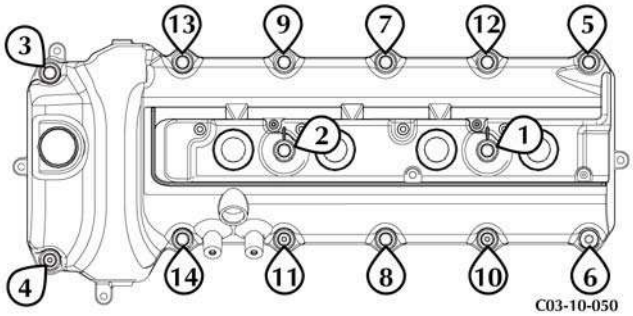

8. Install the four ignition coils.
9. Install and torque the screw that attaches each of the four ignition coils to 5 Nm.
10. Install the front bracket for the wiring harness.
11. Install the rear bracket for the wiring harness.
12. Install and torque the three screws that attach the rear bracket for the wiring harness to 11 Nm.
13. Install and tighten the two nuts and three screws that attach the front bracket for the wiring harness.
14. Install the purge pipe and heater pipe into the two clips on the wiring harness bracket.
15. Put the purge pipe P-clip into the correct position.
16. Install and tighten the screw that attaches the purge pipe P-clip to the cam cover.
17. Use three applicable cable ties to attach the rear of the wiring harness to the front bracket.
18. Install the wiring harness for the injectors into the mounts.
19. Install the fir tree clip that attaches the wiring harness for the ignition coils.
20. Connect the electrical connectors to each of the four ignition coils.
21. Connect the electrical connector to the VVT solenoid.
22. Install the ignition coil cover.
23. Remove and discard the caps from the breather pipes.
24. Install the breather pipes to the cam cover.
25. Install the right side front crush bar for the body reinforcement. (0101AB - Right Side Front Crush Bar for the Body Reinforcement)
26. Install the front crush brace. (0101LC - Front Crush Brace)

Cam Cover - Vehicle Set - Remove and Install

Repair Operation Time (ROT)	
Item	**Code**
Cam Cover - Vehicle Set - Remove and Install	**03.10.AW**

Removal

1. Remove the left side cam cover (Refer to 'Left Side Cam Cover - Remove and Install', page 3-10-4).
2. Remove the right side cam cover (Refer to 'Right Side Cam Cover - Remove and Install', page 3-10-9).

Install

1. Install the left side cam cover (Refer to 'Left Side Cam Cover - Remove and Install', page 3-10-4).
2. Install the right side cam cover (Refer to 'Right Side Cam Cover - Remove and Install', page 3-10-9).

Engine Timing Cover-Renew (with Engine Removed)

Repair Operation Time (ROT)	
Item	**Code**
Engine Timing Cover-Renew	**03.10.BF**

Removal

1. Remove the engine assembly (refer Workshop Manual procedure 03.00.AA Engine Assembly - Renew).
2. Position drain container.
3. Remove the drain plug and drain the oil from the sump.
4. Remove the left cam cover (Refer to 'Left Side Cam Cover - Remove and Install', page 3-10-4).
5. Remove the right cam cover (Refer to 'Right Side Cam Cover - Remove and Install', page 3-10-9).
6. Release the hose clips and disconnect the two coolant hoses from the coolant manifold.
7. Release the hose clip and disconnect the hose from the oil separator.
8. Remove the four Torx bolts that attach the coolant manifold to cylinder heads (refer to Figure 1).

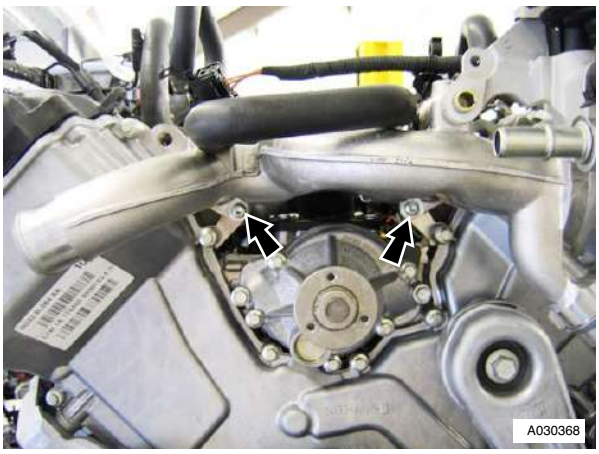

Figure 1

9. Release the coolant manifold from coolant pipe, disconnect the temperature sensor multiplug.
10. Remove the coolant manifold.
11. Remove and discard the two O-rings from the coolant manifold.
12. Loosen the three water pump pulley bolts (refer to Figure 2).

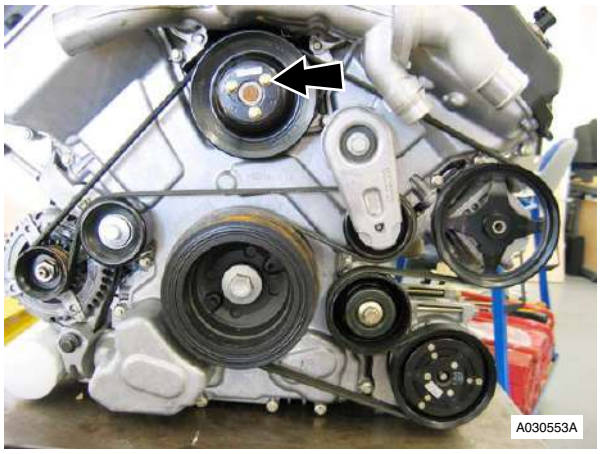

Figure 2

13. Use an applicable socket bar to release the auxiliary drive belt tensioner.
14. Remove the drive belt.
15. Remove the three bolts and remove the water pump pulley.
16. Remove the bolt that attaches the auxiliary drive belt tensioner.
17. Remove the tensioner (refer to Figure 3).

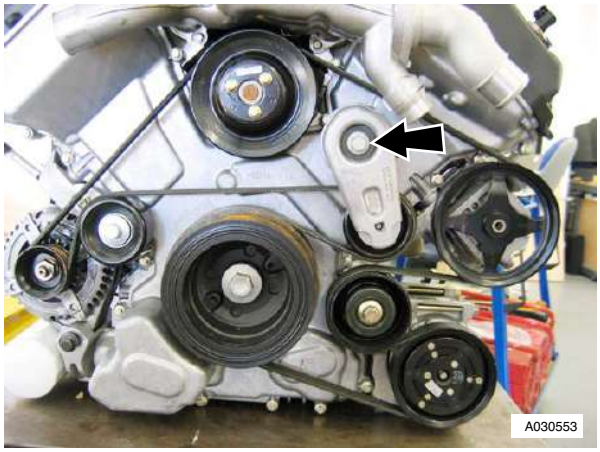

Figure 3

18. Remove the two bolts that attach the inspection cover to the lower crankcase. Remove the cover.
19. Install tool (303-1185) to hold flywheel. Install and tighten the two bolts .
20. Install the thrust button of tool (303 -1186) into the crankshaft.
21. Put the tool in position in the pulley. Attach the tool with the two bolts. Tighten the centre bolt and remove the pulley from the crankshaft.
22. Collect the crankshaft pulley, locking ring and the special tool thrust button.
23. Remove the special tool from the pulley.
24. Remove and discard the O-ring seal from pulley.
25. Remove the bolt that attaches the alternator idler pulley.

26. Remove the pulley (refer to Figure 4).

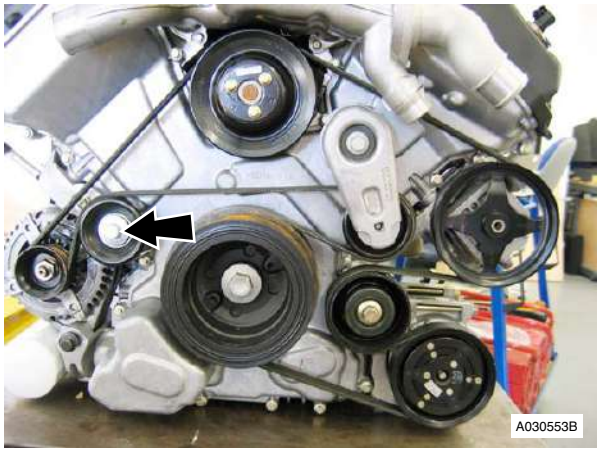

Figure 4

27. Remove the bolt that attaches the A/C compressor idler pulley. Remove the pulley (refer to Figure 5).

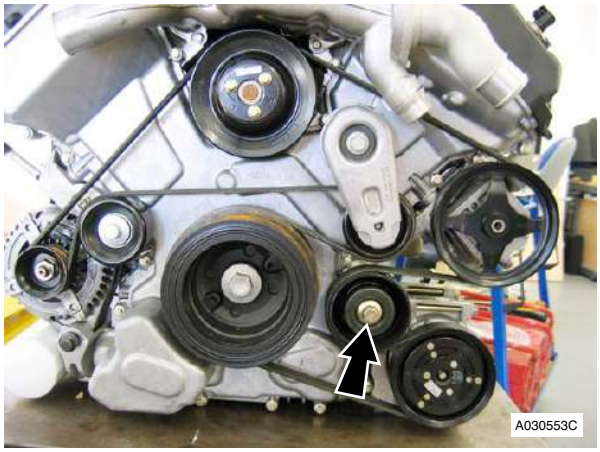

Figure 5

28. Position the drain tray.
29. Remove the oil filter.
30. Release the oil separator drain tube from the timing cover (refer to Figure 6).

Figure 6

31. Release the clip for the oil separator drain tube from the bracket.
32. Release the terminal cover on the alternator. Remove the nut that attaches the battery cable to the alternator. (refer to Figure 7).

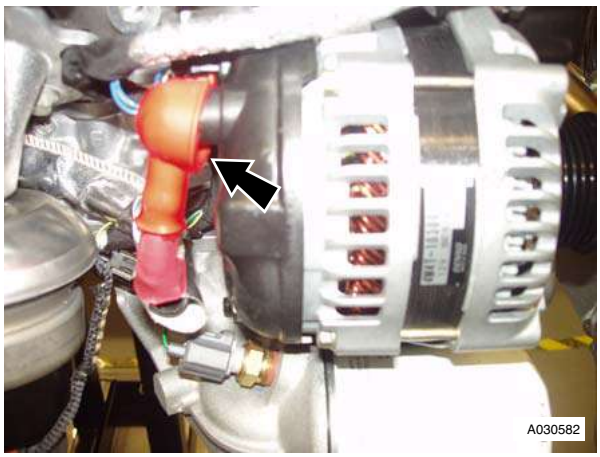

Figure 7

33. Disconnect the electrical connector from the alternator.
34. Remove the bolt and the nut and bolt that attach the alternator.
35. Remove the alternator.
36. Remove the three Torx bolts that attach the alternator mounting bracket to cylinder block. Remove the bracket (refer to Figure 8).

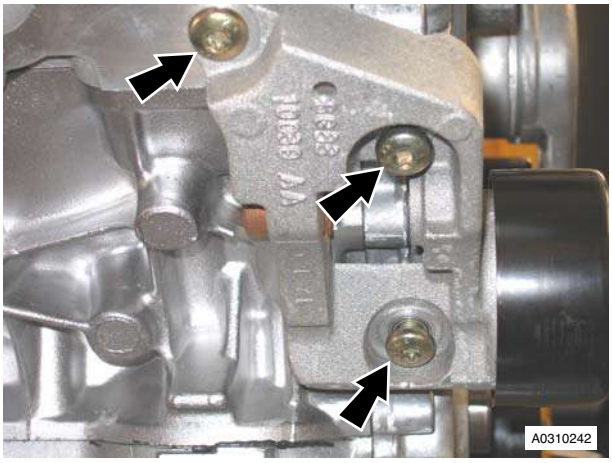

Figure 8

37. Remove the three bolts that attach the PAS pump to mounting bracket. Move the pump away.

38. Remove the four Torx bolts that attach the PAS pump mounting bracket to the cylinder block. Remove the bracket (refer to Figure 9).

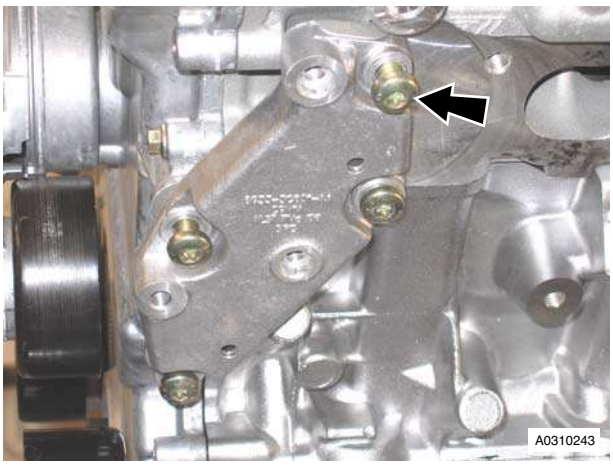

Figure 9

39. Remove the 27 bolts that attach the timing cover to the engine. Collect the bracet for the oil separator drain tube. Remove the timing cover.
40. Remove the outer and inner rubber seals from the timing cover (refer to Figure0).

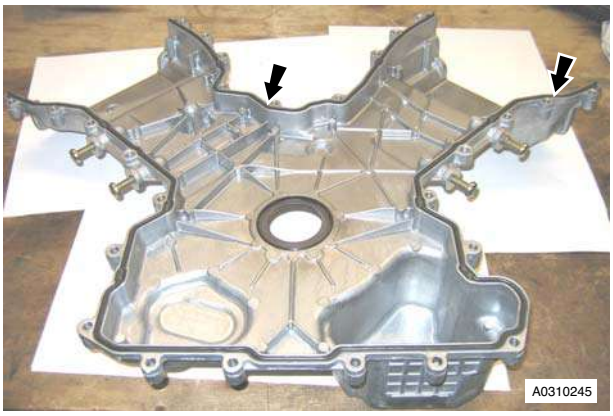

Figure0

41. Remove the front crankshaft oil seal from timing cover.

Installation

1. Clean the timing cover and mating face on engine.

Caution
Make sure the crankshaft front oil seal mating faces are clean and dry.

2. Install the inner and outer seals into timing cover.
3. Apply 3mm x 12mm beads of sealant to the eight joints on the engine.
4. Install the timing cover. Put the oil separator drain tube bracket in position. Install the 27 bolts and torque the bolts in the specified sequence.

Caution
Do not remove the crankshaft front oil seal protector until the oil seal is correctly installed.
If you do, the oil seal can be damaged.

5. Using tool (303-750), install front crankshaft oil seal. Remove special tool and seal protector.

Caution
The bolt thread in the crankshaft must be cleaned out before a new crankshaft pulley retaining bolt is installed.

6. Clean crankshaft pulley and mating face on crankshaft.
7. Lubricate and install new O-ring seal in crankshaft pulley.

Note: Check the crankshaft pulley and locking ring for damage.

8. Install crankshaft pulley, locking ring and new pulley bolt.
9. Torque tighten crankshaft pulley bolt. Remove special tool (303-1185) from crankcase.
10. Install inspection cover to lower crankcase, install and tighten bolts (x2).
11. Install PAS pump mounting bracket, install and torque tighten Torx bolts (x4).
12. Install PAS pump, install and torque tighten bolts (x3).
13. Install alternator mounting bracket, install and torque tighten Torx bolts (x3).
14. Install alternator, install bolt and nut/bolt and torque tighten
15. Connect battery cable, install and torque tighten nut, secure cover. Connect multiplug.
16. Lubricate seal, install new oil filter.
17. Install oil separator drain tube clip in bracket.
18. Install oil separator drain tube to timing cover.
19. Install A/C compressor idler pulley, torque tighten bolt.
20. Install alternator idler pulley, torque tighten bolt.
21. Install auxiliary drive belt tensioner, torque tighten bolt.
22. Install water pump pulley, install bolts (x3).
23. Using a suitable socket bar, release auxiliary drive belt tensioner, install drive belt.
24. Torque tighten water pump pulley bolts (x3).
25. Clean coolant manifold and mating faces on cylinder heads.
26. Install new O-ring seals (x2) to coolant manifold.
27. Position coolant manifold, connect temperature sensor multiplug, install coolant pipe in manifold.
28. Install and torque tighten Torx bolts (x4) that attach the coolant manifold to cylinder heads.
29. Connect coolant hoses (x3) to coolant manifold and secure clips.
30. Connect engine breather to oil separator.
31. Clean left and right cam covers.
32. Install the right cam cover (Refer to 'Right Side Cam Cover - Remove and Install', page 3-10-9).
33. Install left cam cover (Refer to 'Left Side Cam Cover - Remove and Install', page 3-10-4).
34. Install the engine assembly (refer to Workshop Manual procedure 03.00.AA Engine Assembly - Renew).

John Guest Cartridge in the Engine Timing Cover - Repair

Repair Operation Time (ROT)	
Item	**Code**
John Guest Cartridge in the Engine Timing Cover - Repair	**03.10.??**

Removal

1. Open the bonnet.
2. Raise the vehicle and make it safe.
3. On Roadster models, remove the front undertray (Refer to 'Centre Undertray - Remove and Install (Roadster Only)', page 1-2-1).
4. Put an approved container under the front cover to collect oil.
5. Disconnect the oil drain pipe from the John Guest cartridge.
6. Let the oil drain.
7. Use a trim tool as a lever to remove the plastic collet from the cartridge.

CAUTION:
Do not let the O-ring fall into the timing case in the step that follows. If the O-ring falls into the timing case, you will have to remove the case cover.

8. Remove and discard the O-ring from the cartridge.
9. Clean all unwanted oil from the cartridge.

Install

1. Apply a layer of oil to the new O-ring.

CAUTION:
Do not let the O-ring fall into the timing case in the step that follows. If the O-ring falls into the timing case, you will have to remove the case cover.

2. Carefully install the new O-ring in the cartridge. Make sure that the O-ring is in the correct position against the shoulder of the cartridge.
3. Install the new plastic collet into the cartridge.
4. Connect the oil pipe into the cartridge.
5. Clean all unwanted oil from the area around the cartridge.
6. Remove the container of drained oil.
7. On Roadster models, install the front undertray (Refer to 'Centre Undertray - Remove and Install (Roadster Only)', page 1-2-1).
8. Lower the vehicle.
9. Remove the cap from the oil tank.
10. Add oil to the oil tank to the correct level.
11. Install the cap on the oil tank.
12. Start and operate the engine for approximately five minutes.
13. Stop the engine.
14. Wait five minutes for the oil to drain back to the sump.
15. Do a check of the oil level. Add oil if necessary.
16. Install the oil tank cap.
17. Close the bonnet.

Engine (03.00)

Power Conversion (03.11)

Maintenance

Connecting Rod Bearing-Renew (Engine Set)

Repair Operation Time (ROT)	
Item	**Code**
Connecting Rod Bearing-Renew	**03.11.AA**

Removal

WARNING
DO NOT GET USED ENGINE OIL ON YOUR SKIN. USED ENGINE OIL CAN BE HARMFUL.

1. Remove engine oil sump (see Workshop Manual procedure 03.02.BN Pan - Oil Sump - Remove and Re-seal).
2. Remove spark plugs (see Workshop Manual procedure 03.07.DB Spark Plugs - Engine Set - Renew).
3. Remove bolts (x8) securing windage tray to engine bedplate, remove windage tray.

Caution
Pistons, connecting rods and connecting rod bearings should be numbered to make sure they are reassembled in the same position.

4. Mark bearing caps and connecting rods for correct installation.
5. Rotate crankshaft clockwise to access number 1 cylinder connecting rod bolts.

Caution
Connecting rod bolts are torque tightened to yield and must be replaced.

6. Remove bolts securing bearing cap to connecting rod, remove bearing cap (see Figure 1).

Figure 1

7. Install special tools (303-535) to the connecting rod to prevent damage to crankshaft journal.
8. Move connecting rod upwards, remove bearing shell.
9. Record colour code on bearing shell edge.
10. Remove and discard bearing shell from cap.
11. Record colour code on bearing shell edge, discard bearing shell.
12. Wipe crankshaft journal, connecting rod and bearing cap using a lint free cloth.
13. Inspect crankshaft journal for damage.
14. Check crankshaft journal for ovality using a micrometer and record journal diameters.

Installation

Note: Connecting rod bearings are a selective fit by colour code on edge of bearing shell.

1. Select the correct colour coded bearing shells for each connecting rod crankshaft journal.
2. Install new selective bearing shell in connecting rod.
3. Lubricate crankshaft journal with clean engine oil.
4. Install connecting rod on crankshaft journal.
5. Remove special tools (303-535) from connecting rod.
6. Install new selective bearing shell in bearing cap.

Caution
When assembling connecting rods and connecting rod bearing caps it is imperative that bearing slots and tangs be located on the same side of the connecting rods.

7. Install bearing cap and new bolts (x2), torque tighten bearing cap bolts.
8. Repeat procedure for remaining connecting rod bearings.
9. Install windage tray to engine bedplate, install and torque tighten bolts (x8).
10. Install spark plugs (see Workshop Manual procedure 03.07.DB Spark Plugs - Engine Set - Renew).
11. Install engine oil sump (see Workshop Manual procedure 03.02.BN Pan - Oil Sump - Remove and re-seal).

Crankshaft Main Bearing-Renew (Engine Set)

Repair Operation Time (ROT)	
Item	**Code**
Crankshaft Main Bearing-Renew	**03.11.AB**

Removal

1. Remove bolts (x2), inspection cover to lower crankcase, remove cover.
2. Install tool (303-1185) to restrain flywheel, install and tighten bolts (x2).
3. Remove bolts (x6), clutch cover to flywheel.
4. Release clutch cover from dowels (x3), remove clutch cover, collect drive plate.
5. Remove and discard bolts (x8), flywheel to crankshaft flange.
6. Remove bolts (x2), collect tool (303-1185).

7. Release flywheel from dowel, remove flywheel.

WARNING
DO NOT GET USED ENGINE OIL ON YOUR SKIN. USED ENGINE OIL CAN BE HARMFUL.

8. Remove engine sump (see Workshop Manual procedure 03.02.CN Pan - Oil Sump - Remove and re-seal With Engine Removed).
9. Remove bolts (x8) securing windage tray to engine bedplate, remove windage tray.
10. Mark bearing caps and connecting rods for correct installation (see Figure 1).

Figure 1

11. Rotate crankshaft clockwise to access number 1 cylinder connecting rod bolts.
12. Remove and discard bolts (x16) securing bearing caps to connecting rods, remove bearing caps (see Figure 2).

Figure 2

Caution
Connecting rod bolts are torque tightened to yield and must be replaced.

13. Install special tools (303-535) to the connecting rod to prevent damage to crankshaft journal.
14. Carefully push each connecting rod/piston assembly up each cylinder bore.
15. Secure Dial Test Indicator (DTI) on engine bedplate.
16. Push crankshaft fully rearwards.
17. Position DTI probe on crankshaft web and zero gauge.
18. Push crankshaft fully forwards and record reading on dial gauge.
19. Remove DTI gauge.
20. Noting their fitted positions, remove bolts (x34) securing engine bedplate to cylinder block (see Figure 3).

Figure 3

21. Carefully release and remove engine bedplate from cylinder block (see Figure 4).

Figure 4

22. Carefully remove crankshaft from cylinder block.
23. Remove rear oil seal from crankshaft.

24. Note fitted position and remove crankshaft thrust washers (x2) from cylinder block (see Figure 5).

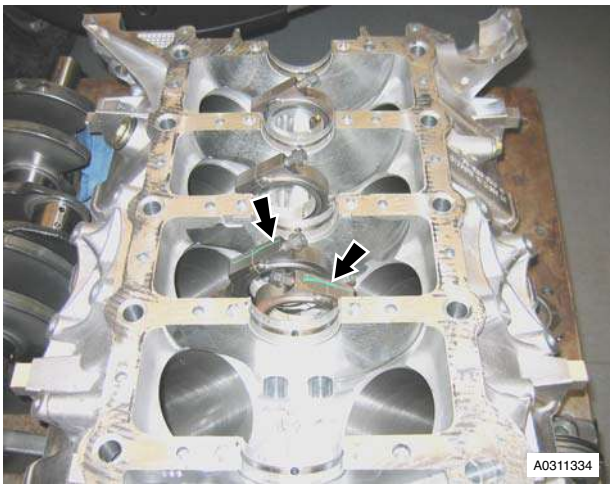

Figure 5

25. Remove main bearing shells (grooved) from cylinder block (see Figure 6).

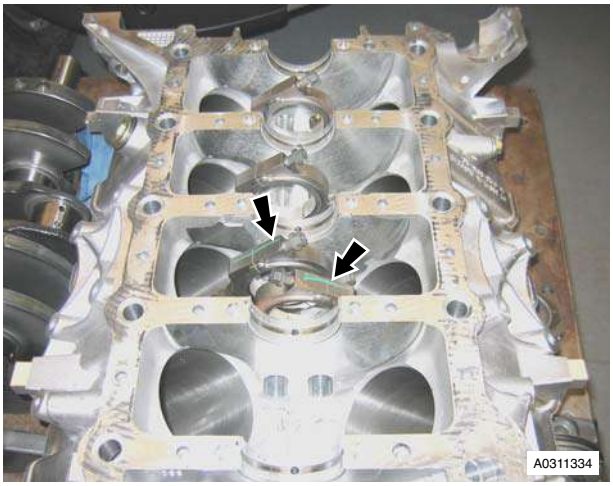

Figure 6

26. Remove main bearing shells (plain) from engine bedplate (see Figure 7).

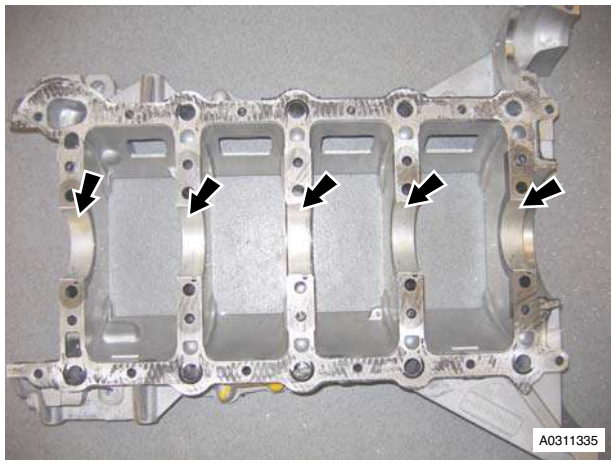

Figure 7

Note: Main bearing shells are selective by colour code with plain bearings in bedplate and grooved bearings in cylinder block

Installation

1. Clean crankshaft main bearing and connecting rod journals.
2. Clean bearing recess in cylinder block.

Caution
Use only a plastic scraper when removing old sealant and gaskets from engine components.

3. Clean old sealant from engine bedplate and bearing recesses.
4. Select the correct colour coded bearing shells for each main bearing journal.
5. Install selected main bearing shells in cylinder block and engine bedplate.
6. Install thrust washers in cylinder block.
7. Lubricate crankshaft journals with clean engine oil.
8. Position connecting rods and carefully lower crankshaft into cylinder block.

Caution
Avoid damage to any crankshaft bearing surfaces.

9. Carefully pull each connecting rod into place on crankshaft journals.

Caution
When assembling connecting rods and connecting rod bearing caps it is imperative that bearing slots and tangs be located on the same side of the connecting rods.

10. Install crankshaft retaining caps (303-534), install and lightly tighten bolts (x10) (see Figure 8).

Figure 8

11. Install connecting rod bearing caps (x8), install and torque tighten retaining bolts.
12. Remove bolts securing crankshaft retaining caps (303-534), remove retaining caps (see Figure 9).

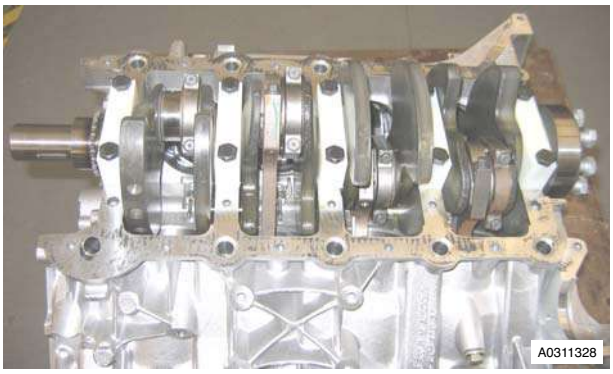

Figure 9

13. Apply a 2mm diameter continuous bead of sealant to cylinder block flange ensuring that there are no gaps in the sealant.
14. Install engine bedplate to cylinder block, install and torque tighten bolts (x34) in the correct sequence.

Caution
Do not lubricate engine bedplate retaining bolts.

Caution
Tighten engine bedplate retaining bolts in the sequence shown.

Caution
Do not rotate crankshaft until all engine bedplate retaining bolts are tightened to specification.

Caution
Engine bedplate retaining bolts must be tightened within twenty minutes of applying sealant.

15. Remove excess sealant from crankshaft rear oil seal aperture and front face of cylinder block.
16. Clean windage tray.
17. Install windage tray, install and torque tighten bolts (x8).
18. Ensure that oil seal protector is positioned correctly and install oil seal onto crankshaft flange.

Caution
Do not use any lubricant on crankshaft oil seals or seal protectors. Make sure all components are clean and dry.

19. Install tool (303-1189) to crankshaft, position nuts on tool against oil seal.
20. Ensure that oil seal and special are parallel to rear of engine.
21. To install oil seal, tighten nuts alternately on tool (303-1189) until oil seal correctly seated.
22. Remove special tool from crankshaft.
23. Check that the oil seal is located correctly.
24. Clean flywheel and mating face on crankshaft.
25. Install flywheel, align to dowel on crankshaft flange.
26. Install new bolts (x8), install tool (303-1185) to restrain flywheel. Torque tighten bolts (x8) in the correct sequence.
27. Clean clutch cover and drive plate.
28. Install clutch assembly on flywheel, align to dowels (x3).
29. Install bolts (x6), install clutch alignment tool, evenly torque tighten bolts (x6) in a diagonal sequence. Remove clutch alignment tool.
30. Remove bolts (x2), collect tool (303-1185).
31. Install inspection cover, install and torque tighten bolts (x2).
32. Install engine sump (see Workshop Manual procedure 03.02.CN Pan - Oil Sump - Remove and Reseal With Engine Removed).

Crankshaft Assembly-Renew

Repair Operation Time (ROT)	
Item	**Code**
Crankshaft Assembly-Renew	**03.11.CF**

Removal

1. Remove bolts (x2), inspection cover to lower crankcase, remove cover.
2. Install tool (303-1185) to restrain flywheel, install and tighten bolts (x2).
3. Remove bolts (x6), clutch cover to flywheel.
4. Release clutch cover from dowels (x3), remove clutch cover, collect drive plate.
5. Remove and discard bolts (x8), flywheel to crankshaft flange.
6. Remove bolts (x2), collect tool (303-1185).
7. Release flywheel from dowel, remove flywheel.

WARNING
DO NOT GET USED ENGINE OIL ON YOUR SKIN. USED ENGINE OIL CAN BE HARMFUL.

8. Remove engine sump (see Workshop Manual procedure 03.02.CN Pan - Oil Sump - Remove and Reseal With Engine Removed).

9. Remove bolts (x8) securing windage tray to engine bedplate, remove windage tray.

Caution

Pistons, connecting rods and connecting rod bearings should be numbered to make sure they are reassembled in the same position.

10. Mark bearing caps and connecting rods for correct installation (see Figure 1).

Figure 1

11. Rotate crankshaft clockwise to access number 1 cylinder connecting rod bolts.

Remove bolts (x16) securing bearing caps to connecting rods, remove bearing caps (see Figure 2).

Figure 2

Caution

Connecting rod bolts are torque tightened to yield and must be replaced.

12. Install special tools (303-535) to the connecting rod to prevent damage to crankshaft journal.
13. Carefully push each connecting rod/piston assembly up each cylinder bore.
14. Secure Dial Test Indicator (DTI) on engine bedplate.
15. Push crankshaft fully rearwards.
16. Position DTI probe on crankshaft web and zero gauge.
17. Push crankshaft fully forwards and record reading on dial gauge.
18. Remove DTI gauge.
19. Noting their fitted positions, remove bolts (x34) securing engine bedplate to cylinder block (see Figure 3).

Figure 3

20. Carefully release and remove engine bedplate from cylinder block.
21. Carefully remove crankshaft from cylinder block.
22. Remove rear oil seal from crankshaft.
23. Note fitted position and remove crankshaft thrust washers (x2) from cylinder block (see Figure 4).

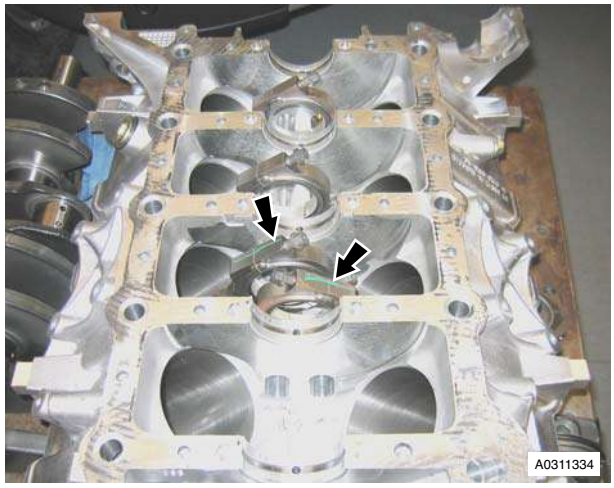

Figure 4

24. Remove main bearing shells (grooved) from cylinder block (see Figure 5).

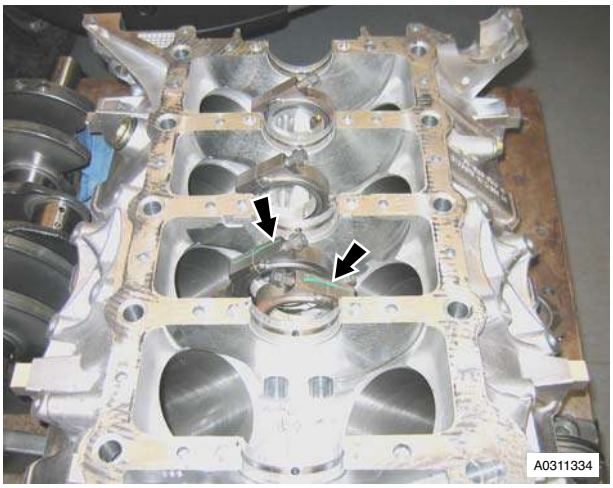

Figure 5

25. Remove main bearing shells (plain) from engine bedplate (see Figure 6).

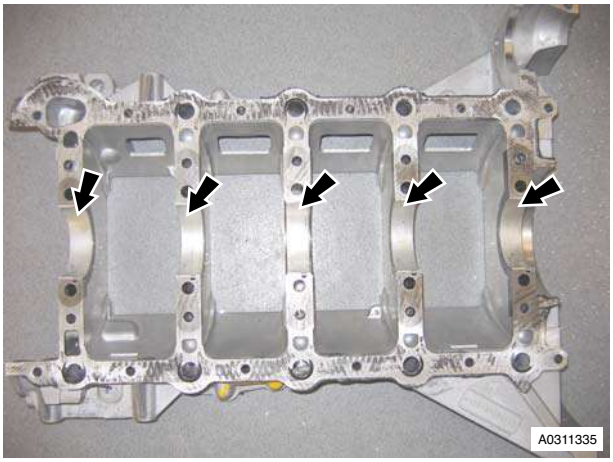

Figure 6

Installation

Note: Main bearing shells are selective by colour code with plain bearings in bedplate and grooved bearings in cylinder block

1. Clean crankshaft main bearing and connecting rod journals.
2. Clean bearing recess in cylinder block.

Caution
Use only a plastic scraper when removing old sealant and gaskets from engine components.

3. Clean old sealant from engine bedplate and bearing recesses.
4. Clean bearing shell locations in connecting rods and caps.
5. Select the correct colour coded bearing shells for each connecting rod crankshaft journal.
6. Select the correct colour coded bearing shells for each main bearing journal.
7. Install selected main bearing shells in cylinder block and engine bedplate.
8. Install thrust washers in cylinder block.
9. Install selected bearing shells in connecting rods and bearing caps.
10. Lubricate crankshaft journals with clean engine oil.
11. Position connecting rods and carefully lower crankshaft into cylinder block.
12. Install crankshaft retaining caps (303-534), install and lightly tighten bolts (x10).
13. Carefully pull each connecting rod into place on crankshaft journals.
14. Install connecting rod bearing caps (x8), install and torque tighten retaining bolts.

Caution
When assembling connecting rods and connecting rod bearing caps it is imperative that bearing slots and tangs be located on the same side of the connecting rods.

15. Remove bolts securing crankshaft retaining caps (303-534), remove retaining caps.
16. Apply a 2mm diameter continuous bead of sealant to cylinder block flange ensuring that there are no gaps in the sealant.
17. Install engine bedplate to cylinder block, install and torque tighten bolts (x34) in the correct sequence.

Caution
Do not lubricate engine bedplate retaining bolts.

Caution
Tighten engine bedplate retaining bolts in the sequence shown.

Caution
Do not rotate crankshaft until all engine bedplate retaining bolts are tightened to specification.

Caution
Engine bedplate retaining bolts must be tightened within twenty minutes of applying sealant.

18. Remove excess sealant from crankshaft rear oil seal aperture and front face of cylinder block.
19. Clean windage tray.
20. Install windage tray, install and torque tighten bolts (x8).
21. Ensure that oil seal protector is positioned correctly and install oil seal onto crankshaft flange.

Caution
Do not use any lubricant on crankshaft oil seals or seal protectors. Make sure all components are clean and dry.

22. Install tool (303-1189) to crankshaft, position nuts on tool against oil seal.
23. Ensure that oil seal and special are parallel to rear of engine.
24. To install oil seal, tighten nuts alternately on tool (303-1189) until oil seal correctly seated.
25. Remove special tool from crankshaft.
26. Check that the oil seal is located correctly.

27. Clean flywheel and mating face on crankshaft.
28. Install flywheel, align to dowel on crankshaft flange.
29. Install new bolts (x8), install tool (303-1185) to restrain flywheel. Torque tighten bolts (x8) in the correct sequence.
30. Clean clutch cover and drive plate.
31. Install clutch assembly on flywheel, align to dowels (x3).
32. Install bolts (x6), install clutch alignment tool, evenly torque tighten bolts (x6) in a diagonal sequence. Remove clutch alignment tool.
33. Remove bolts (x2), collect tool (303-1185).
34. Install inspection cover, install and torque tighten bolts (x2).
35. Install engine sump (see Workshop Manual procedure 03.02.CN Pan - Oil Sump - Remove and Reseal With Engine Removed).

Piston-Renew (Engine Set)

Repair Operation Time (ROT)	
Item	**Code**
Piston-Renew (Engine Set)	**03.11.CG**

Removal

WARNING
DO NOT GET USED ENGINE OIL ON YOUR SKIN. USED ENGINE OIL CAN BE HARMFUL.

1. Remove cylinder head gaskets - engine set (see Workshop Manual procedure 03.01.HW Gasket - Cylinder Head - Engine Set - Renew With Engine Removed).
2. Remove crankshaft timing sprocket from crankshaft.
3. Install guide pin through lower hole on chain tensioner.
4. Remove bolt securing oil pressure pump chain tensioner assembly to engine bedplate (see Figure 1).

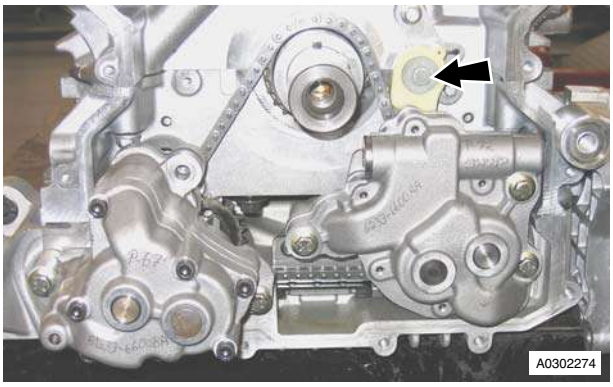

Figure 1

5. Remove tensioner assembly (see Figure 2).
6. Remove bolts (x3) securing oil pressure pump to sump (see Figure 3).

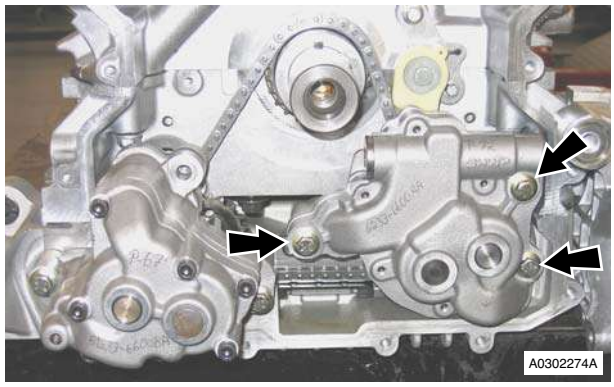

Figure 3

7. Release chain from oil pressure pump sprocket, remove oil pump.
8. Remove and discard oil pressure pump gasket.
9. Remove bolts (x3) securing oil scavenge pump to sump (see Figure 4).

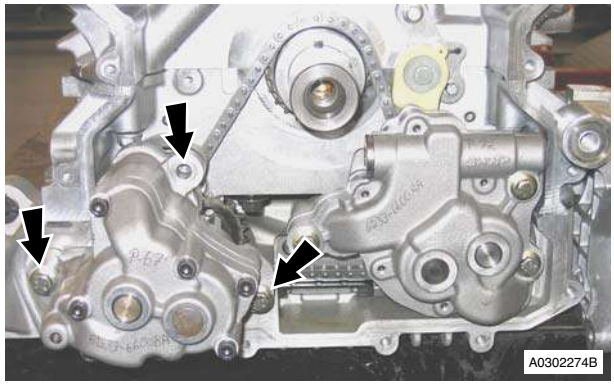

Figure 4

10. Release chain from oil scavenge pump sprocket, remove scavenge pump.

11. Remove and discard oil scavenge pump gasket (see Figure 5).

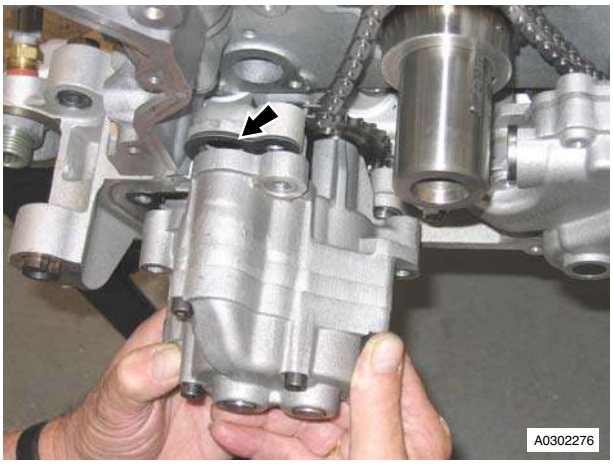

Figure 5

12. Remove oil pump(s) drive sprocket.
13. Disconnect multiplug from oil pressure sensor (see Figure 6).

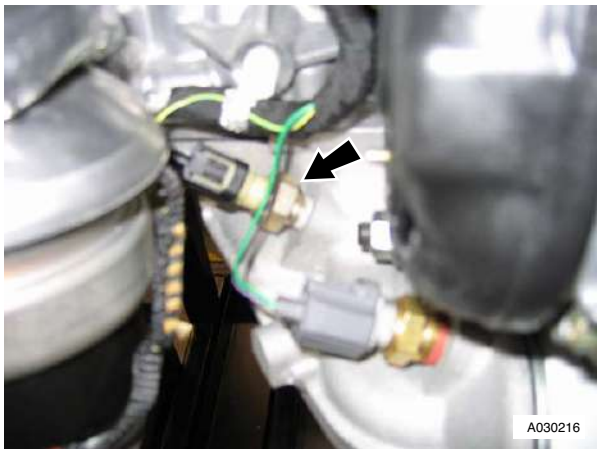

Figure 6

14. Disconnect multiplug from engine electric coolant temperature sensor (see Figure 7).

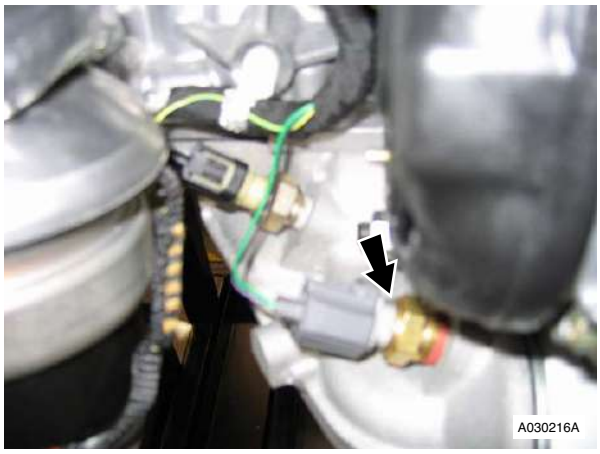

Figure 7

15. Disconnect multiplug from crankshaft timing sensor (see Figure 8).

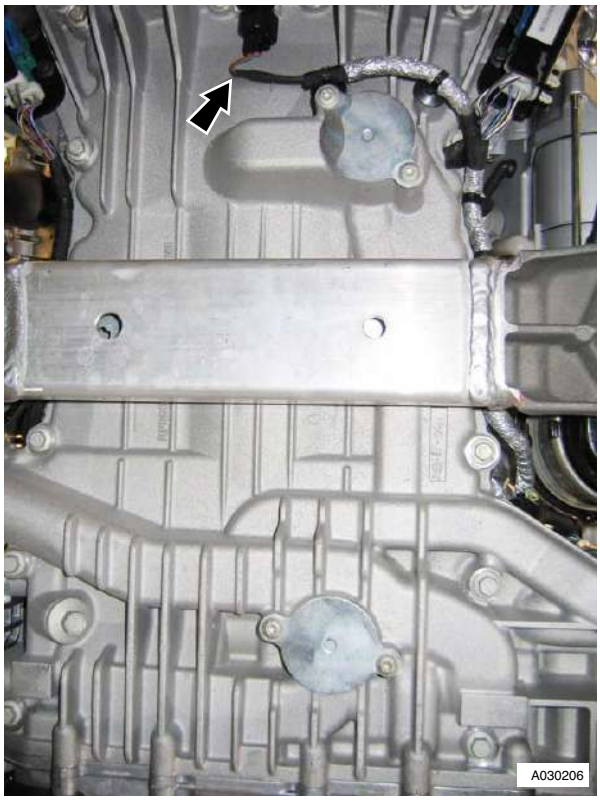

Figure 8

16. Release harness clips (x6) from sump (see Figure 9).

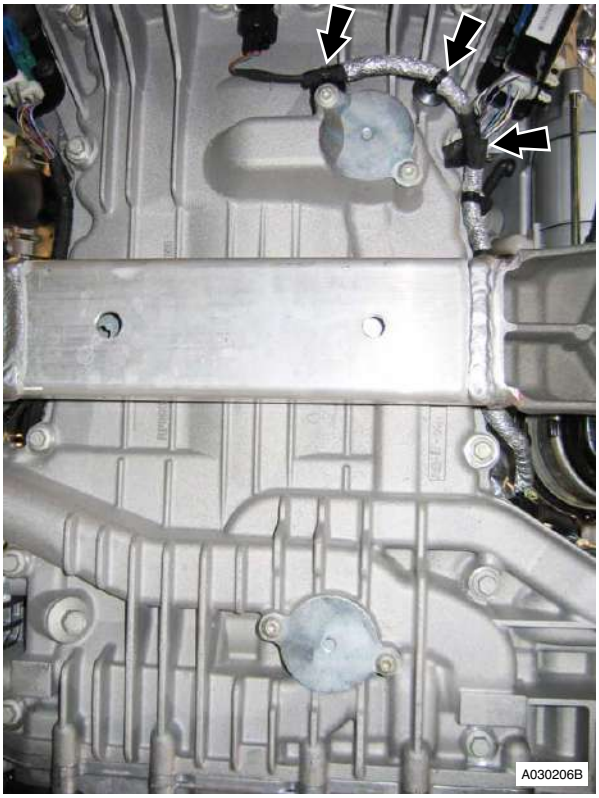

Figure 9

17. Remove bolts (x4) securing LH and RH HEGO sensor multiplug brackets to sump (see Figure 10).

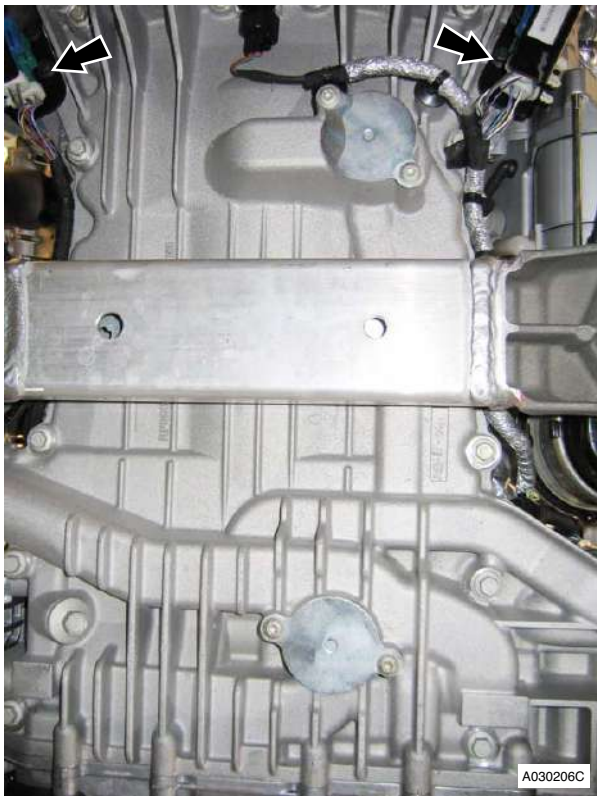

Figure 10

18. Disconnect multiplug from A/C compressor.
19. Remove bolts (x4) securing A/C compressor to mounting bracket. Remove compressor.
20. Remove bolts (x2) securing inlet and outlet oil pipes to sump (see Figure 11).

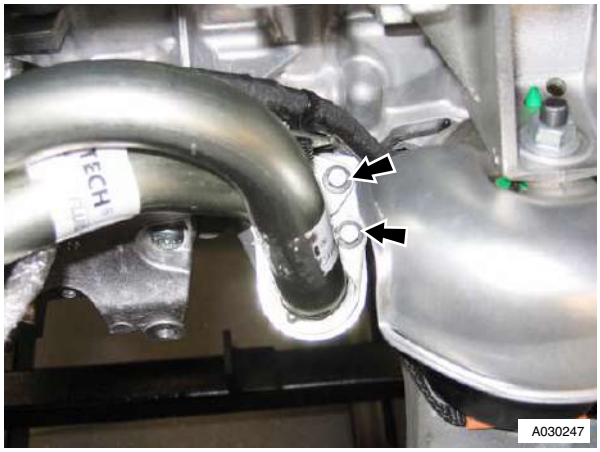

Figure 11

21. Release both oil pipes together from sump, remove and discard 'O' ring seals from pipes.

22. Remove Torx bolts (x4) securing A/C compressor mounting bracket to engine bedplate and sump. Remove bracket (see Figure 12).

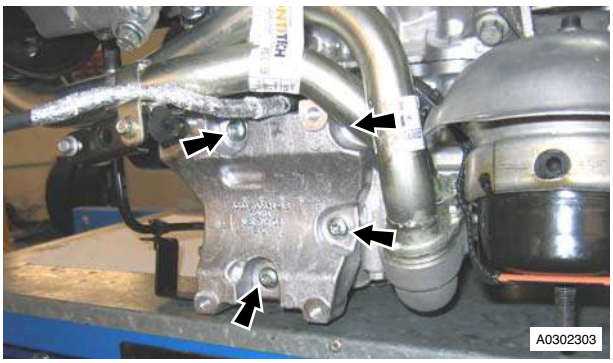

Figure 12

23. Remove bolts (x16) securing sump to engine bedplate (see Figure 13).

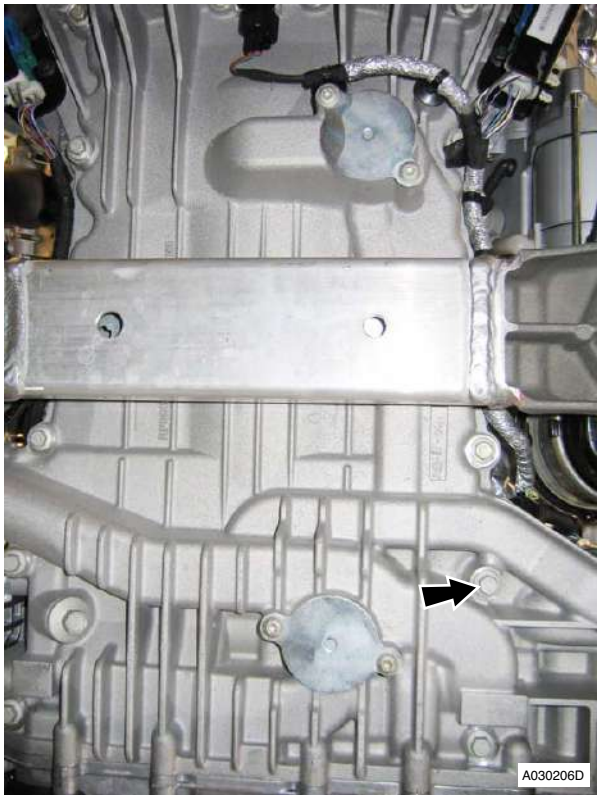

Figure 13

24. Release and remove sump.
25. Remove bolts (x8) securing windage tray to engine bedplate, remove windage tray.
26. Mark bearing caps and connecting rods for correct installation (see Figure 14).

Figure 14

27. Rotate crankshaft clockwise to access number 1 cylinder connecting rod bolts.
28. Remove and discard bolts (x16) securing bearing caps to connecting rods, remove bearing caps (see Figure 15).

Figure 15

Caution
Connecting rod bolts are torque tightened to yield and must be replaced.

29. Install special tools (303-535) to the connecting rod to prevent damage to crankshaft journal.
30. Carefully push each connecting rod/piston assembly upwards and remove from cylinder block.
31. Remove special tools from connecting rods.
32. Install bearing caps on connecting rods, install and lightly tighten retaining bolts.

33. Note that piston grade number on crown and thick flange on connecting rod faces to front of engine on Right Hand bank (A) (see Figure 16).

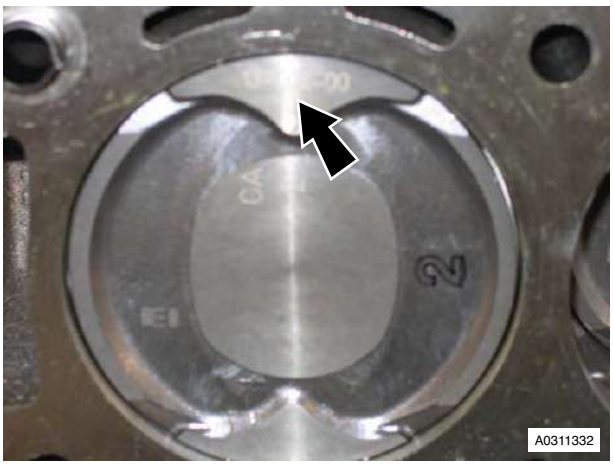

Figure 16

34. Note that piston grade number on crown and thick flange on connecting rod faces to front of engine on Left Hand bank (B) (see Figure 17).

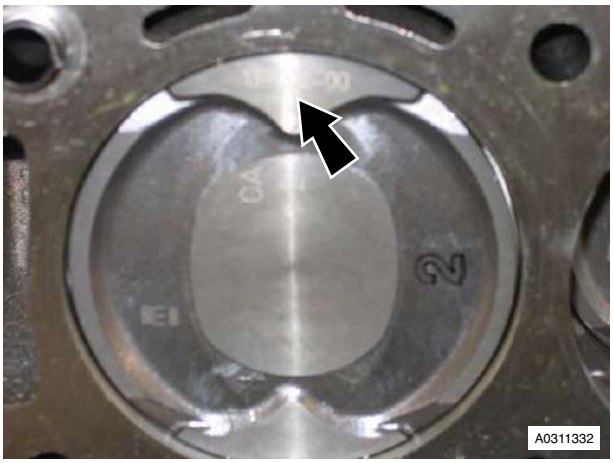

Figure 17

35. Remove circlip(s) securing gudgeon pin(s) in piston(s) and connecting rod(s). Remove piston(s) (see Figure 18).

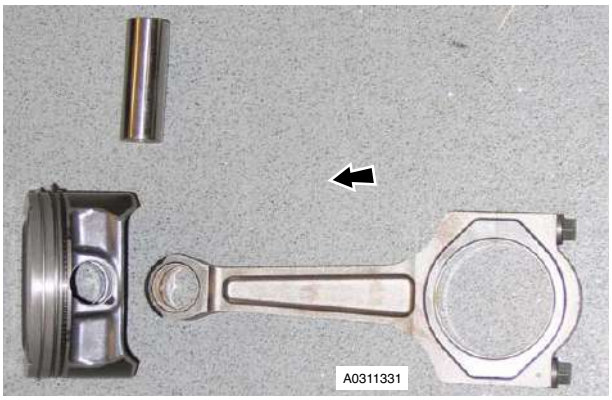

Figure 18

Installation

1. Clean the cylinder bores.
2. Use an expander and remove piston rings from pistons.
3. Install piston rings, (each set), in cylinder bores to a pre-determined depth and measure ring gaps.
4. Remove each piston ring set from cylinder bores and install on pistons
5. Clean connecting rods,
6. Install pistons on connecting rods in their correct orientation, install circlip(s).

Caution

Make sure the piston ring gaps are positioned at different positions opposite the thrust side of the piston before installation.

7. Correctly position ring gaps on pistons prior to installation.
8. Remove connecting rod bearing caps.
9. Install bearings in connecting rods and bearing caps.
10. Lubricate cylinder bores, pistons and rings with clean engine oil.
11. Install special tools (303-535) to the connecting rod to prevent damage to crankshaft journal.

Caution

Install pistons into cylinder block with the 'arrow' on the piston crown facing to the front of the engine.

12. Install piston ring clamp to each piston in turn and install in its respective cylinder bore. Remove piston ring clamp (see Figure 19).

Figure 19

13. Lubricate crankshaft journals with clean engine oil.
14. Carefully pull each connecting rod into place on each crankshaft journal.
15. Install bearing caps to their relevant connecting rods. Install and torque tighten retaining bolts (x16).

Caution

When assembling connecting rods and connecting rod bearing caps it is imperative that bearing slots and tangs be located on the same side of the connecting rods.

16. Clean windage tray.
17. Install windage tray, install and torque tighten bolts (x8).
18. Clean old sealant from sump flange and engine bedplate.
19. Ensure that sump flange and mating face on engine bedplate are clean and dry.
20. Apply a continuous 3mm diameter bead of RTV sealant to sump flange as recommended.
21. Ensure that there are no gaps in sealant track.
22. Install sump, install and torque tighten bolts (x16) in the correct sequence.
23. Install A/C compressor mounting bracket, install and torque tighten Torx bolts (x4).
24. Lubricate and install new O-ring seals to oil pipes.
25. Install oil pipes in sump, install and torque tighten bolts (x2)
26. Install compressor, install and torque tighten bolts (x4).
27. Connect multiplug to A/C compressor.
28. Install LH and RH HEGO sensor multiplug brackets to sump. Install and torque tighten bolts (x4).
29. Secure harness clips (x6) in sump.
30. Connect multiplug to crankshaft timing sensor.
31. Connect multiplug to engine electric coolant temperature sensor.
32. Connect multiplug to oil pressure sensor.
33. Clean oil scavenge pump and mating face on sump.
34. Install oil pump(s) drive sprocket.
35. Install new oil scavenge pump gasket, align on dowels (x2).
36. Install chain onto oil scavenge pump sprocket.
37. Install oil scavenge pump, align to dowels (x2), Install and torque tighten bolts (x3).
38. Install chain onto oil pump drive sprocket.
39. Clean oil pressure pump and mating face on sump.
40. Install new gasket to sump, align to dowels (x2).
41. Position oil pressure pump, install chain on pump sprocket.
42. Install oil pressure pump, align to dowels (x2), Install and torque tighten bolts (x3).
43. Install chain tensioner, install and torque tighten bolt, remove guide pin.
44. Install crankshaft timing sprocket.
45. Install cylinder head gaskets - engine set (see Workshop Manual procedure 03.01.HW Gasket - Cylinder Head - Engine Set - Renew With Engine Removed).

Piston-Renew

Repair Operation Time (ROT)	
Item	**Code**
Piston-Renew	**03.11.CH**

Removal

WARNING
DO NOT GET USED ENGINE OIL ON YOUR SKIN. USED ENGINE OIL CAN BE HARMFUL.

1. Remove cylinder head gaskets - engine set (see Workshop Manual procedure 03.01.HW Gasket - Cylinder Head - Engine Set - Renew With Engine Removed).
2. Remove crankshaft timing sprocket from crankshaft.
3. Install guide pin through lower hole on chain tensioner.
4. Remove bolt securing oil pressure pump chain tensioner assembly to engine bedplate (see Figure 1).

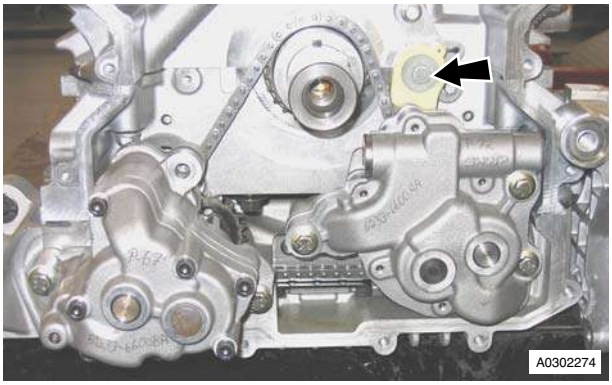

Figure 1

5. Remove tensioner assembly (see Figure 2).

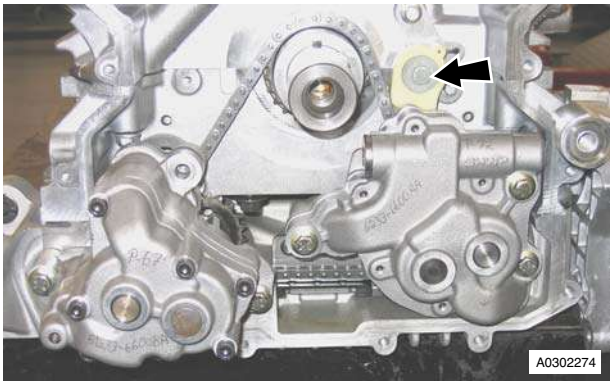

Figure 2

6. Remove bolts (x3) securing oil pressure pump to sump.
7. Release chain from oil pressure pump sprocket, remove oil pump.
8. Remove and discard oil pressure pump gasket.
9. Remove bolts (x3) securing oil scavenge pump to sump (see Figure 3).

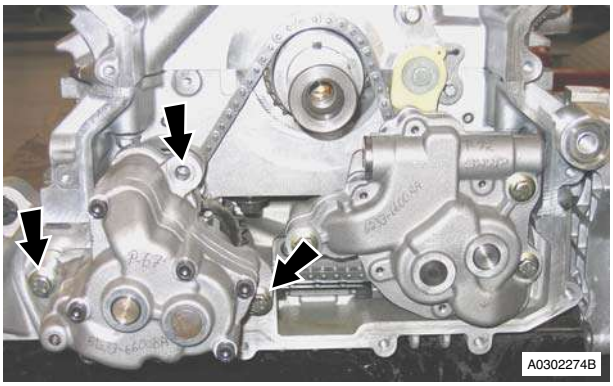

Figure 3

10. Release chain from oil scavenge pump sprocket, remove scavenge pump.
11. Remove and discard oil scavenge pump gasket (see Figure 4).

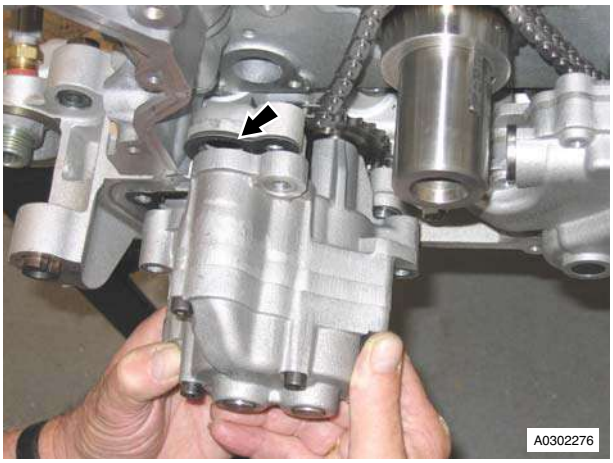

Figure 4

12. Remove oil pump(s) drive sprocket.
13. Disconnect multiplug from oil pressure sensor (see Figure 5).

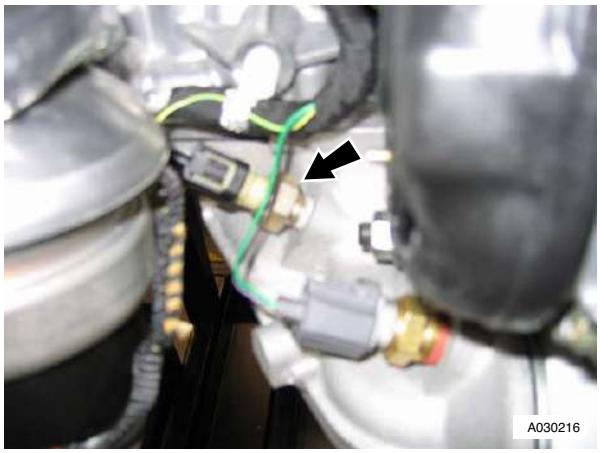

Figure 5

14. Disconnect multiplug from engine electric coolant temperature sensor (see Figure 6).

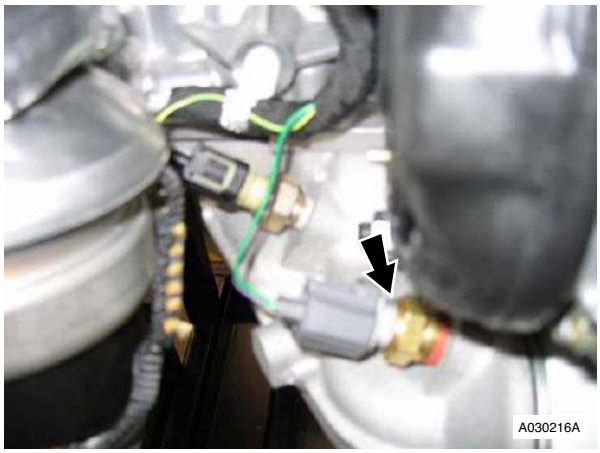

Figure 6

15. Disconnect multiplug from crankshaft timing sensor (see Figure 7).

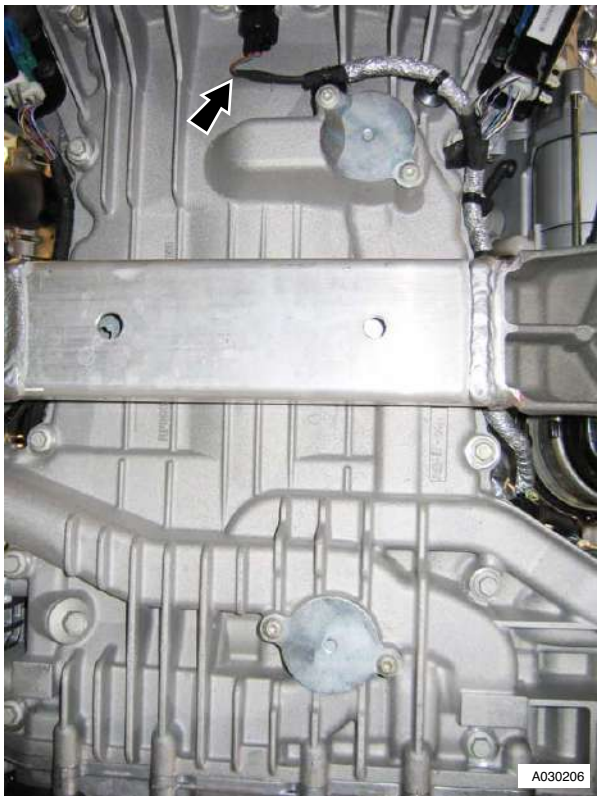

Figure 7

16. Release harness clips (x6) from sump (see Figure 8).

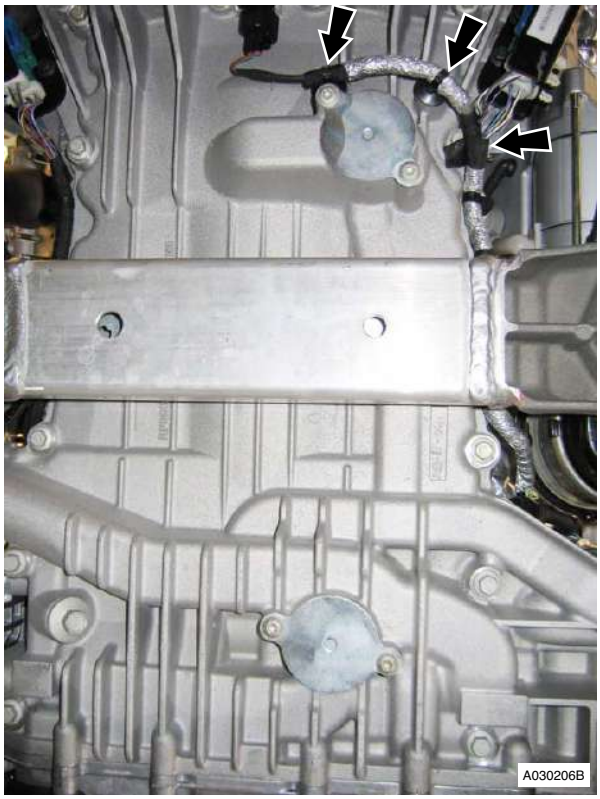

Figure 8

17. Remove bolts (x4) securing LH and RH HEGO sensor multiplug brackets to sump (see Figure 9).

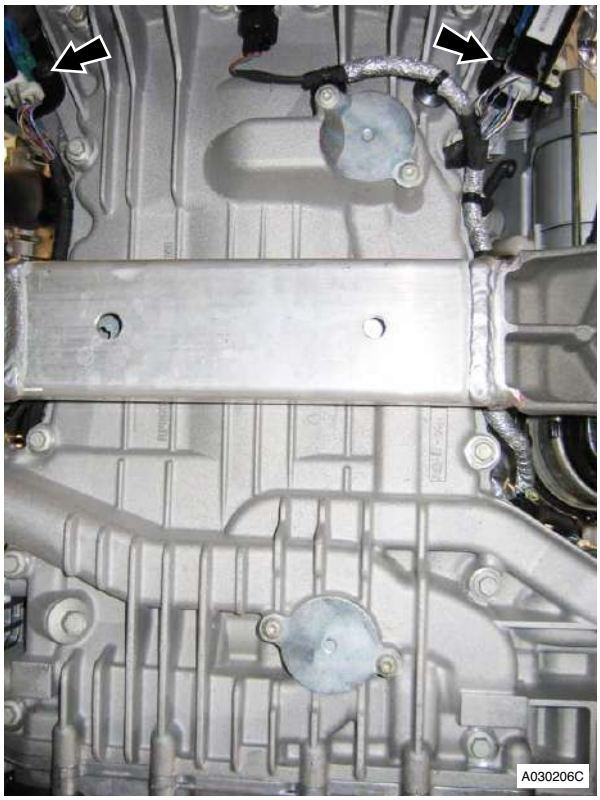

Figure 9

18. Disconnect multiplug from A/C compressor.
19. Remove bolts (x4) securing A/C compressor to mounting bracket. Remove compressor (see Figure 10).

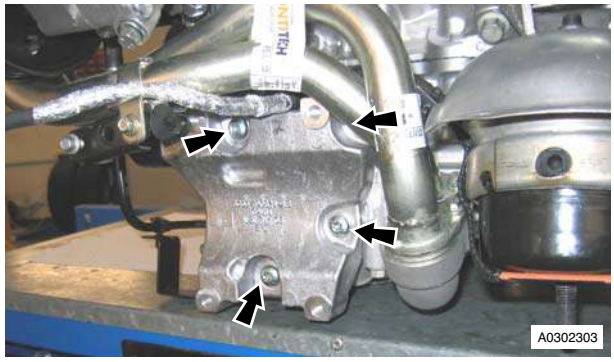

Figure 10

20. Remove bolts (x2) securing inlet and outlet oil pipes to sump (see Figure 11).

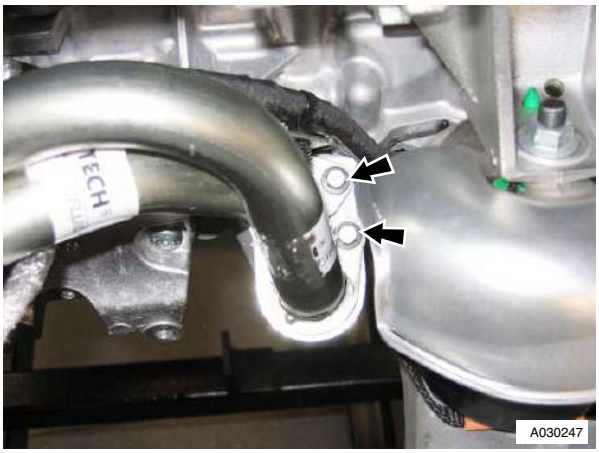

Figure 11

WARNING
DO NOT GET USED ENGINE OIL ON YOUR SKIN. USED ENGINE OIL CAN BE HARMFUL.

21. Release both oil pipes together from sump, remove and discard O-ring seals from pipes.
22. Remove Torx bolts (x4) securing A/C compressor mounting bracket to engine bedplate and sump. Remove bracket (see Figure 12).

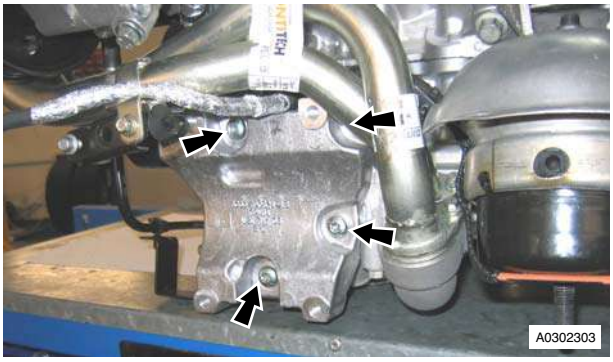

Figure 12

23. Remove bolts (x16) securing sump to engine bedplate (see Figure 13).

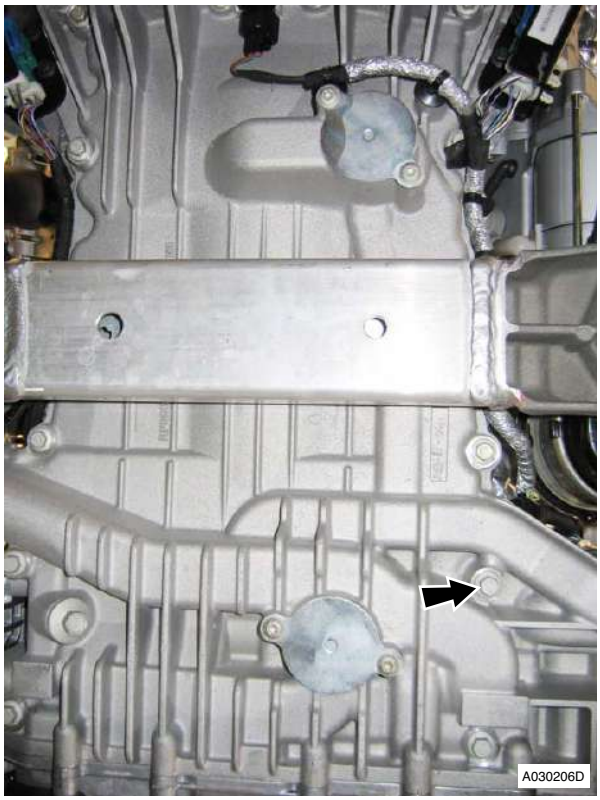

Figure 13

24. Release and remove sump.
25. Remove bolts (x8) securing windage tray to engine bedplate, remove windage tray.
26. Mark bearing caps and connecting rods for correct installation (see Figure 14).

Figure 14

27. Rotate crankshaft clockwise to access number 1 cylinder connecting rod bolts.

28. Remove bolts (x2) securing bearing cap to connecting rod, remove bearing cap (see Figure 15).

Figure 15

Caution
Connecting rod bolts are torque tightened to yield and must be replaced.

29. Install special tools (303-535) to the connecting rod to prevent damage to crankshaft journal.
30. Carefully push connecting rod/piston assembly upwards and remove from cylinder bore.
31. Remove special tools from connecting rod.
32. Install bearing cap on connecting rod, install and lightly tighten retaining bolts.
33. Note that piston grade number on crown and thick flange on connecting rod faces to front of engine on RH bank (A) (see Figure 16).

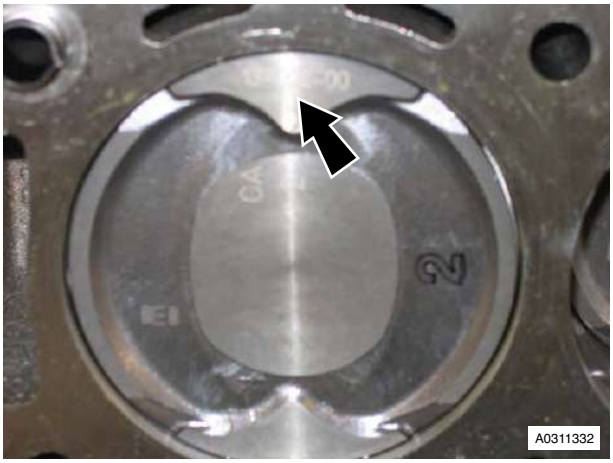

Figure 16

34. Note that piston grade number on crown and thick flange on connecting rod faces to front of engine on LH bank (B) (see Figure7).

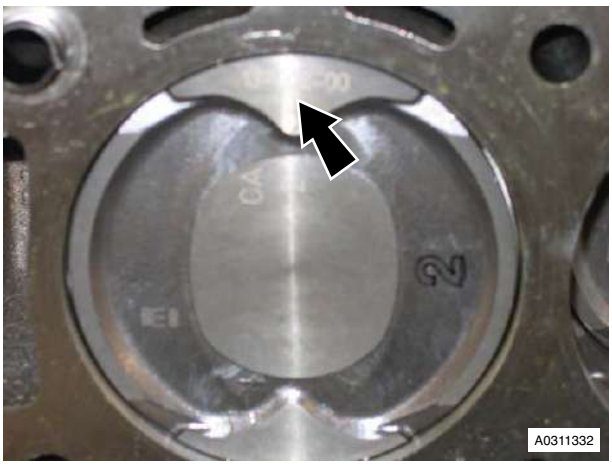

Figure 17

35. Remove circlip (x2) securing gudgeon pin in piston and connecting rod. Remove piston (see Figure 18).

Figure 18

Installation

1. Clean cylinder bore.
2. Use an expander and remove piston rings from piston.
3. Install piston rings in cylinder bore to a pre-determined depth and measure ring gaps.
4. Remove piston ring set from cylinder bore and install on piston.
5. Clean connecting rod.
6. Install piston on connecting rod in its correct orientation, install circlip(s.
7. Correctly position ring gaps on piston prior to installation.
8. Remove connecting rod bearing cap.
9. Install bearings in connecting rod and bearing cap.
10. Lubricate cylinder bore, piston and rings with clean engine oil.
11. Install special tools (303-535) to the connecting rod to prevent damage to crankshaft journal.

12. Install piston ring clamp to piston, install piston assembly in its cylinder bore. Remove piston ring clamp (see Figure 19).

Figure 19

Caution
Install pistons into cylinder block with the 'arrow' on the piston crown facing to the front of the engine.

13. Lubricate crankshaft journal with clean engine oil.
14. Carefully pull connecting rod into place on crankshaft journal.
15. Install bearing cap to connecting rod. Install and torque tighten retaining bolts (x2).
16. Clean windage tray.
17. Install windage tray, install and torque tighten bolts (x8).
18. Clean old sealant from sump flange and engine bedplate.
19. Ensure that sump flange and mating face on engine bedplate are clean and dry.
20. Apply a continuous 3mm diameter bead of RTV sealant to sump flange as recommended.
21. Ensure that there are no gaps in sealant track.
22. Install sump, install and torque tighten bolts (x16) in the correct sequence.
23. Install A/C compressor mounting bracket, install and torque tighten Torx bolts (x4).
24. Lubricate and install new 'O' ring seals to oil pipes.
25. Install oil pipes in sump, install and torque tighten bolts (x2)
26. Install compressor, install and torque tighten bolts (x4).
27. Connect multiplug to A/C compressor.
28. Install LH and RH HEGO sensor multiplug brackets to sump. Install and torque tighten bolts (x4).
29. Secure harness clips (x6) in sump.
30. Connect multiplug to crankshaft timing sensor.
31. Connect multiplug to engine electric coolant temperature sensor.
32. Connect multiplug to oil pressure sensor.
33. Clean oil scavenge pump and mating face on sump.
34. Install oil pump(s) drive sprocket.
35. Install new oil scavenge pump gasket, align on dowels (x2).
36. Install chain onto oil scavenge pump sprocket.
37. Install oil scavenge pump, align to dowels (x2), Install and torque tighten bolts (x3).
38. Install chain onto oil pump drive sprocket.
39. Clean oil pressure pump and mating face on sump.
40. Install new gasket to sump, align to dowels (x2).
41. Position oil pressure pump, install chain on pump sprocket.
42. Install oil pressure pump, align to dowels (x2), Install and torque tighten bolts (x3).
43. Install chain tensioner, install and torque tighten bolt, remove guide pin.
44. Install crankshaft timing sprocket.
45. Install cylinder head gaskets - engine set (see Workshop Manual procedure 03.01.HW Gasket - Cylinder Head - Engine Set - Renew With Engine Removed).

Additional Piston-Renew (Each)

Repair Operation Time (ROT)	
Item	**Code**
Additional Piston-Renew	**03.11.CJ**

Removal

WARNING
DO NOT GET USED ENGINE OIL ON YOUR SKIN. USED ENGINE OIL CAN BE HARMFUL.

1. Mark bearing caps and connecting rods for correct installation.
2. Remove bolts (x2) securing bearing cap to connecting rod, remove bearing cap.

Caution
Connecting rod bolts are torque tightened to yield and must be replaced.

3. Install special tools (303-535) to the connecting rod to prevent damage to crankshaft journal.
4. Carefully push connecting rod/piston assembly upwards and remove from cylinder bore.
5. Remove special tools from connecting rod.
6. Install bearing cap on connecting rod, install and lightly tighten retaining bolts.
7. Remove circlip (x2) securing gudgeon pin in piston and connecting rod. Remove piston.

Installation

1. Clean cylinder bore.
2. Install piston rings in cylinder bore to a pre-determined depth and measure ring gaps.
3. Remove piston ring set from cylinder bore and install on piston.
4. Clean connecting rod.
5. Install piston on connecting rod in its correct orientation, install circlip(s).

6. Correctly position ring gaps on piston prior to installation.

Caution
Make sure the piston ring gaps are positioned at different positions opposite the thrust side of the piston before installation.

7. Remove connecting rod bearing cap.
8. Install bearings in connecting rod and bearing cap.
9. Lubricate cylinder bore, piston and rings with clean engine oil.
10. Install special tools (303-535) to the connecting rod to prevent damage to crankshaft journal.

Caution
Install pistons into cylinder block with the 'arrow' on the piston crown facing to the front of the engine.

11. Install piston ring clamp to piston, install piston assembly in its cylinder bore. Remove piston ring clamp.
12. Lubricate crankshaft journal with clean engine oil.
13. Carefully pull connecting rod into place on crankshaft journal.
14. Install bearing cap to connecting rod. Install and torque tighten retaining bolts (x2).

Piston Ring-Renew (Engine Set)

Repair Operation Time (ROT)	
Item	**Code**
Piston Ring-Renew	**03.11.CK**

Removal

WARNING
DO NOT GET USED ENGINE OIL ON YOUR SKIN. USED ENGINE OIL CAN BE HARMFUL.

1. Remove cylinder head gaskets - engine set (see Workshop Manual procedure 03.01.HW Gasket - Cylinder Head - Engine Set - Renew With Engine Removed).
2. Remove crankshaft timing sprocket from crankshaft.
3. Install guide pin through lower hole on chain tensioner.
4. Remove bolt securing oil pressure pump chain tensioner assembly to engine bedplate (see Figure 1).

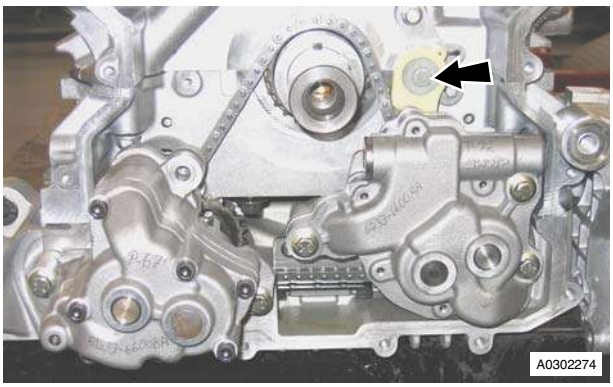

Figure 1

5. Remove tensioner assembly (see Figure 2).

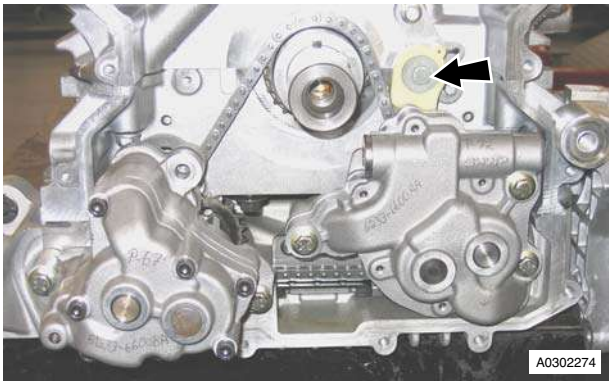

Figure 2

6. Remove bolts (x3) securing oil pressure pump to sump.
7. Release chain from oil pressure pump sprocket, remove oil pump.
8. Remove and discard oil pressure pump gasket.
9. Remove bolts (x3) securing oil scavenge pump to sump (see Figure 3).

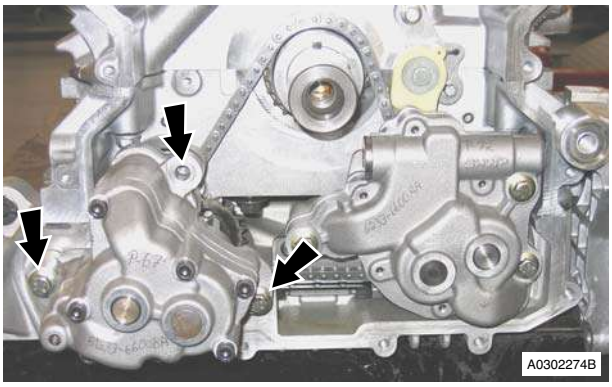

Figure 3

10. Release chain from oil scavenge pump sprocket, remove scavenge pump.

11. Remove and discard oil scavenge pump gasket (see Figure 4).

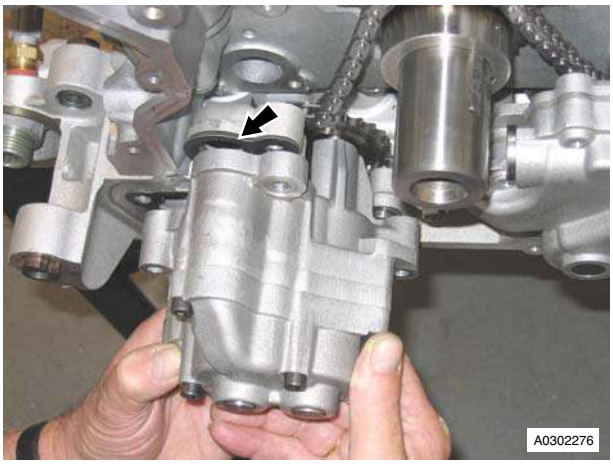

Figure 4

12. Remove oil pump(s) drive sprocket.
13. Disconnect multiplug from oil pressure sensor (see Figure 5).

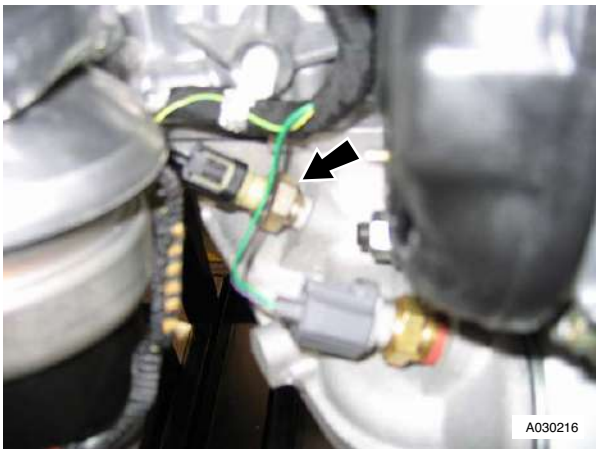

Figure 5

14. Disconnect multiplug from engine electric coolant temperature sensor (see Figure 6).

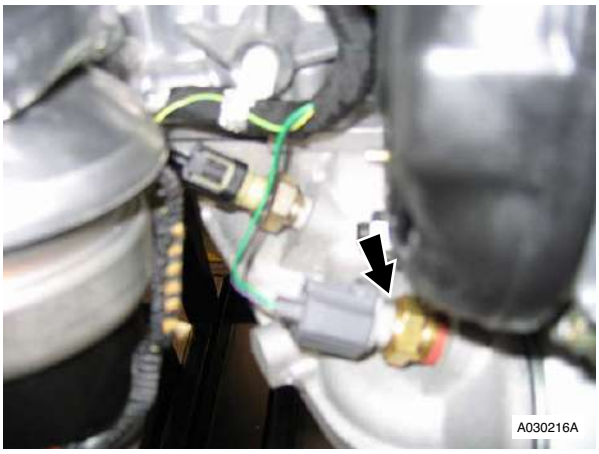

Figure 6

15. Disconnect multiplug from crankshaft timing sensor (see Figure 7).

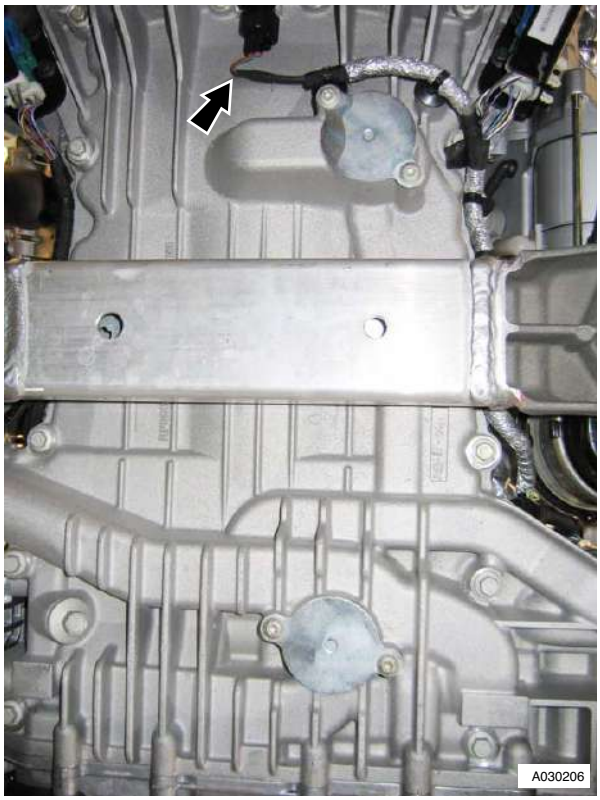

Figure 7

16. Release harness clips (x6) from sump (see Figure 8).

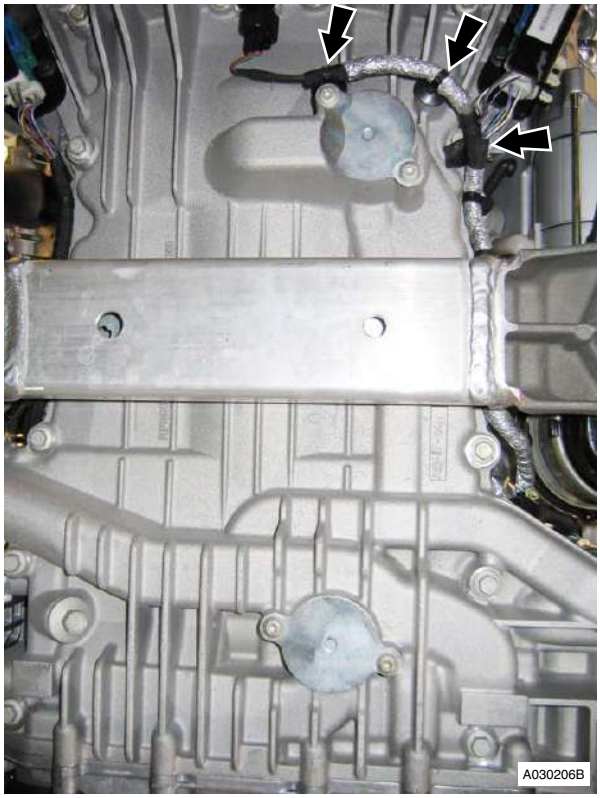

Figure 8

17. Remove bolts (x4) securing LH and RH HEGO sensor multiplug brackets to sump (see Figure 9).

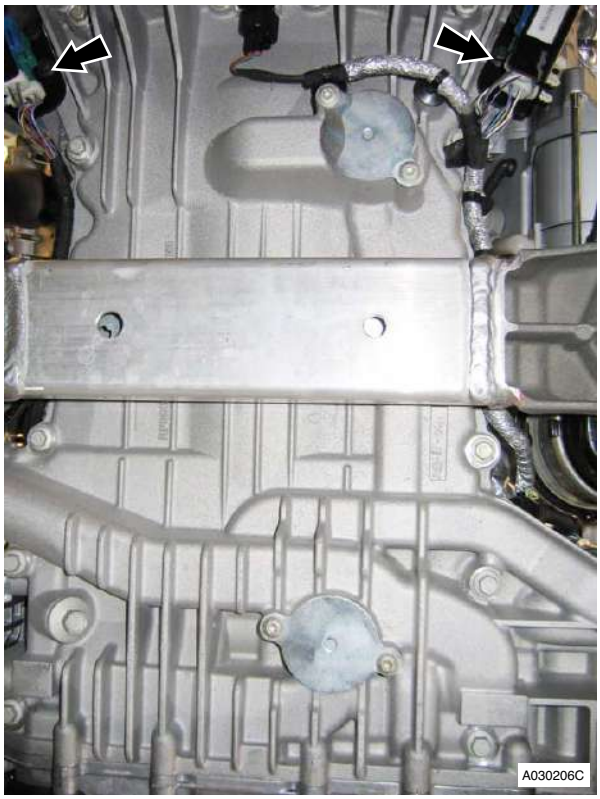

Figure 9

18. Disconnect multiplug from A/C compressor.
19. Remove bolts (x4) securing A/C compressor to mounting bracket. Remove compressor.
20. Remove bolts (x2) securing inlet and outlet oil pipes to sump (see Figure 10).

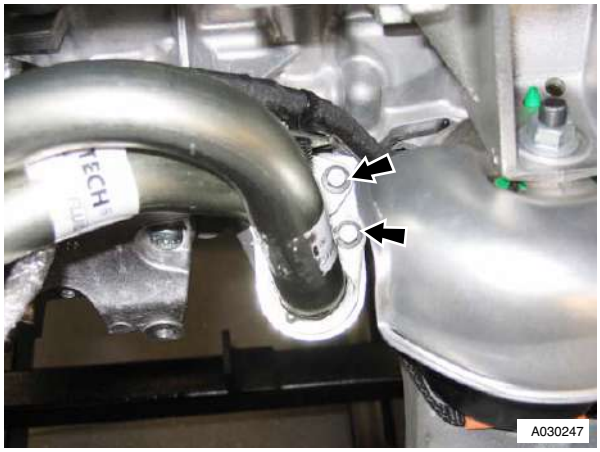

Figure 10

21. Release both oil pipes together from sump, remove and discard O-ring seals from pipes.
22. Remove Torx bolts (x4) securing A/C compressor mounting bracket to engine bedplate and sump. Remove bracket (see Figure 11).

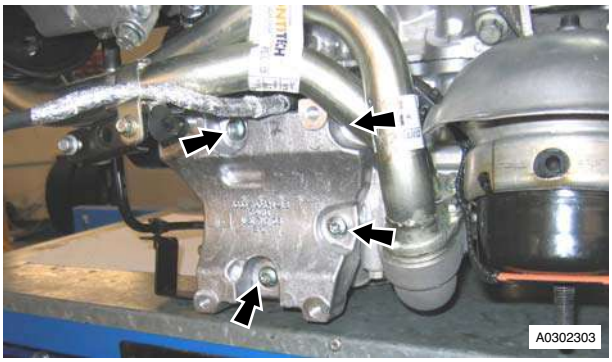

Figure 11

23. Remove bolts (x16) securing sump to engine bedplate (see Figure 12).

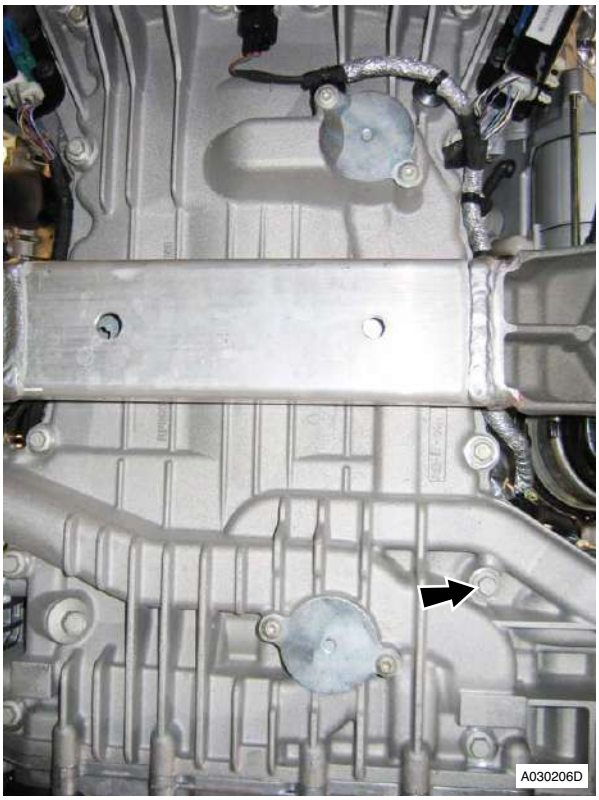

Figure 12

24. Release and remove sump.
25. Remove bolts (x8) securing windage tray to engine bedplate, remove windage tray.
26. Mark bearing caps and connecting rods for correct installation (see Figure 13).

Figure 13

27. Rotate crankshaft clockwise to access number 1 cylinder connecting rod bolts.
28. Remove and discard bolts (x16) securing bearing caps to connecting rods, remove bearing caps (see Figure 14).

Figure 14

Caution
Connecting rod bolts are torque tightened to yield and must be replaced.

29. Install special tools (303-535) to the connecting rod to prevent damage to crankshaft journal.
30. Carefully push each connecting rod/piston assembly upwards and remove from cylinder block.
31. Remove special tools from connecting rods.
32. Install bearing caps on connecting rods, install and lightly tighten retaining bolts.
33. Note that piston grade number on crown and thick flange on connecting rod faces to front of engine on RH bank (A) (see Figure 15).

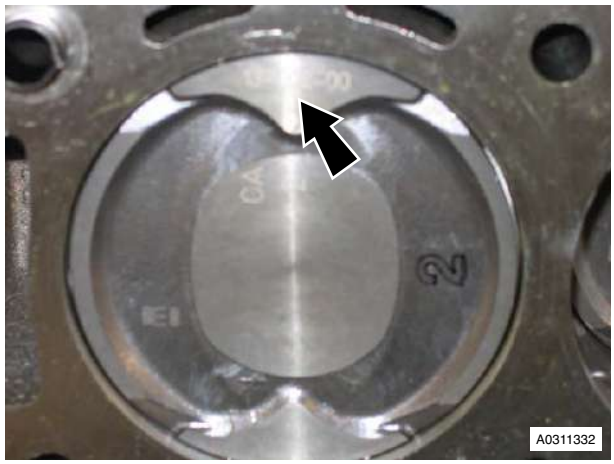

Figure 15

34. Note that piston grade number on crown and thick flange on connecting rod faces to front of engine on LH bank (B) (see Figure 16).

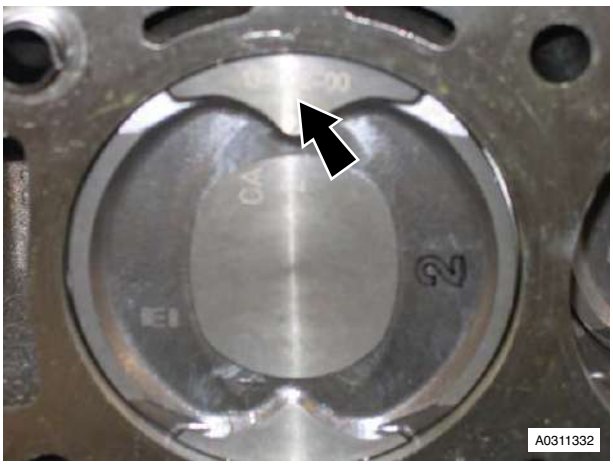

Figure 16

Installation

1. Clean cylinder bores.
2. Use an expander and remove and discard piston rings from pistons.
3. Clean pistons.
4. Install new piston rings, (each set), in cylinder bores to a pre-determined depth and measure ring gaps.
5. Remove each piston ring set from cylinder bores and install on pistons
6. Remove connecting rod bearing caps.
7. Install bearings in connecting rods and bearing caps.
8. Lubricate cylinder bores, pistons and rings with clean engine oil.
9. Install special tools (303-303-535) to the connecting rod to prevent damage to crankshaft journal.

Caution
Make sure the piston ring gaps are positioned at different positions opposite the thrust side of the piston before installation.

10. Correctly position ring gaps on pistons prior to installation.
11. Install piston ring clamp to each piston in turn and install in its respective cylinder bore. Remove piston ring clamp (see Figure 17).

Figure 17

12. Lubricate crankshaft journals with clean engine oil.

Caution
Install pistons into cylinder block with the 'arrow' on the piston crown facing to the front of the engine.

13. Carefully pull each connecting rod into place on each crankshaft journal.

Caution
When assembling connecting rods and connecting rod bearing caps it is imperative that bearing slots and tangs be located on the same side of the connecting rods.

14. Install bearing caps to their relevant connecting rods. Install and torque tighten retaining bolts (x16).
15. Clean windage tray.
16. Install windage tray, install and torque tighten bolts (x8).
17. Clean old sealant from sump flange and engine bedplate.
18. Ensure that sump flange and mating face on engine bedplate are clean and dry.
19. Apply a continuous 3mm diameter bead of RTV sealant to sump flange as recommended.
20. Ensure that there are no gaps in sealant track.
21. Install sump, install and torque tighten bolts (x16) in the correct sequence.
22. Install A/C compressor mounting bracket, install and torque tighten Torx bolts (x4).
23. Lubricate and install new O-ring seals to oil pipes.
24. Install oil pipes in sump, install and torque tighten bolts (x2)
25. Install compressor, install and torque tighten bolts (x4).
26. Connect multiplug to A/C compressor.
27. Install LH and RH HEGO sensor multiplug brackets to sump. Install and torque tighten bolts (x4).
28. Secure harness clips (x6) in sump.
29. Connect multiplug to crankshaft timing sensor.
30. Connect multiplug to engine electric coolant temperature sensor.
31. Connect multiplug to oil pressure sensor.

32. Clean oil scavenge pump and mating face on sump.
33. Install oil pump(s) drive sprocket.
34. Install new oil scavenge pump gasket, align on dowels (x2).
35. Install chain onto oil scavenge pump sprocket.
36. Install oil scavenge pump, align to dowels (x2), Install and torque tighten bolts (x3).
37. Install chain onto oil pump drive sprocket.
38. Clean oil pressure pump and mating face on sump.
39. Install new gasket to sump, align to dowels (x2).
40. Position oil pressure pump, install chain on pump sprocket.
41. Install oil pressure pump, align to dowels (x2), Install and torque tighten bolts (x3).
42. Install chain tensioner, install and torque tighten bolt, remove guide pin.
43. Install crankshaft timing sprocket.
44. Install cylinder head gaskets - engine set (see Workshop Manual procedure 03.01.HW Gasket - Cylinder Head - Engine Set - Renew With Engine Removed).

Piston Ring-One Piston Set-Renew

Repair Operation Time (ROT)	
Item	**Code**
Piston Ring Set-Renew	**03.11.CL**

Removal

WARNING
DO NOT GET USED ENGINE OIL ON YOUR SKIN. USED ENGINE OIL CAN BE HARMFUL.

1. Remove cylinder head gaskets - engine set (see Workshop Manual procedure 03.01.HW Gasket - Cylinder Head - Engine Set - Renew With Engine Removed).
2. Remove crankshaft timing sprocket from crankshaft.
3. Install guide pin through lower hole on chain tensioner.
4. Remove bolt securing oil pressure pump chain tensioner assembly to engine bedplate (see Figure).

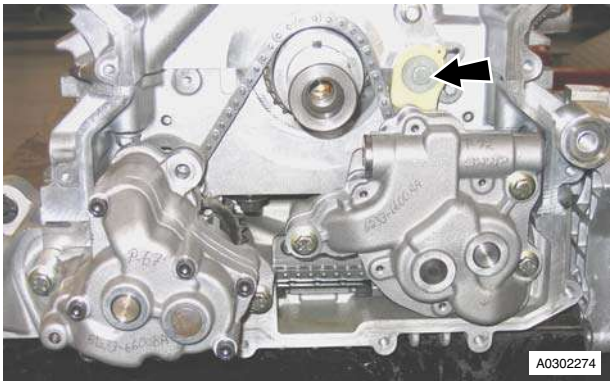

Figure

5. Remove tensioner assembly.
6. Remove bolts (x3) securing oil pressure pump to sump.
7. Release chain from oil pressure pump sprocket, remove oil pump.
8. Remove and discard oil pressure pump gasket.
9. Remove bolts (x3) securing oil scavenge pump to sump (see Figure 2).

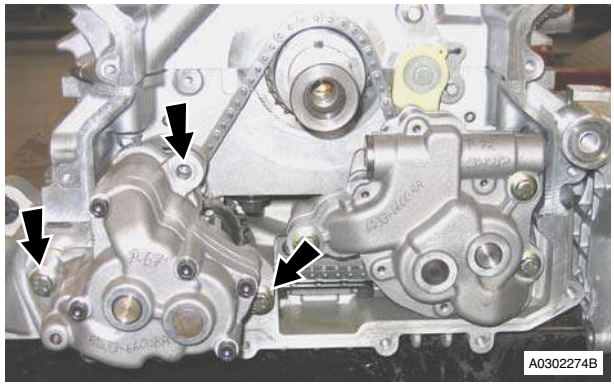

Figure 2

10. Release chain from oil scavenge pump sprocket, remove scavenge pump.
11. Remove and discard oil scavenge pump gasket (see Figure 3).

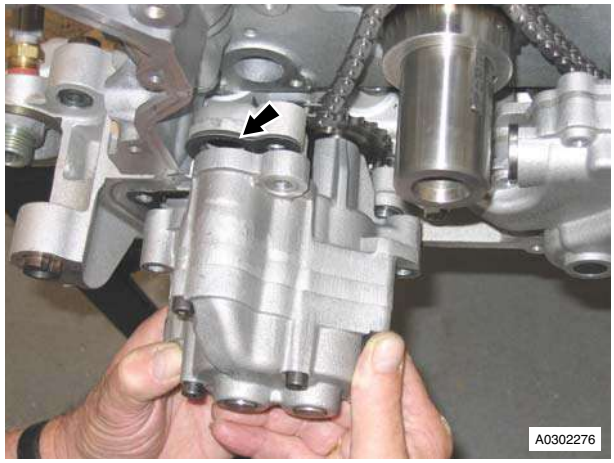

Figure 3

12. Remove oil pump(s) drive sprocket.
13. Disconnect multiplug from oil pressure sensor (see Figure 4).

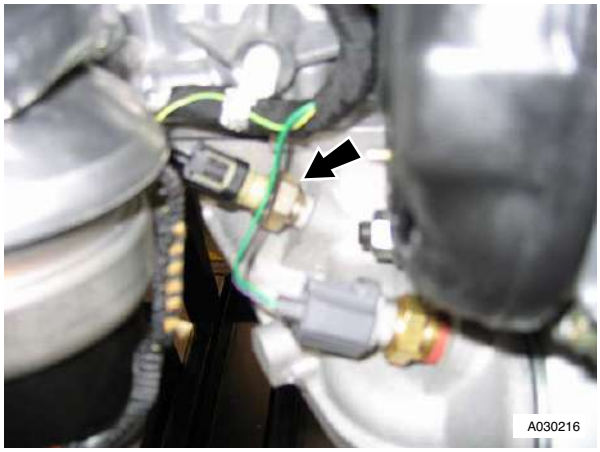

Figure 4

14. Disconnect multiplug from engine electric coolant temperature sensor (see Figure 5).

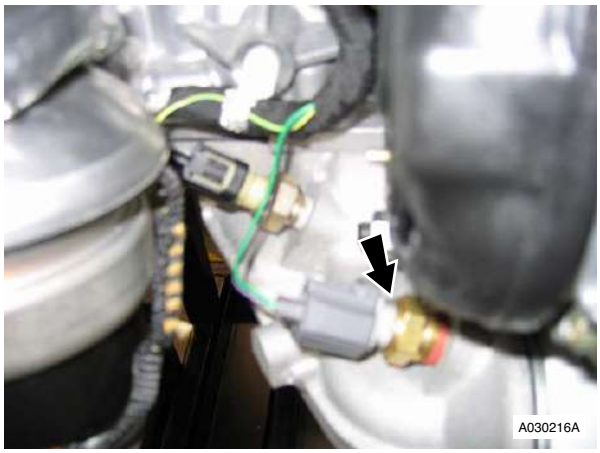

Figure 5

15. Disconnect multiplug from crankshaft timing sensor. (see Figure 6)

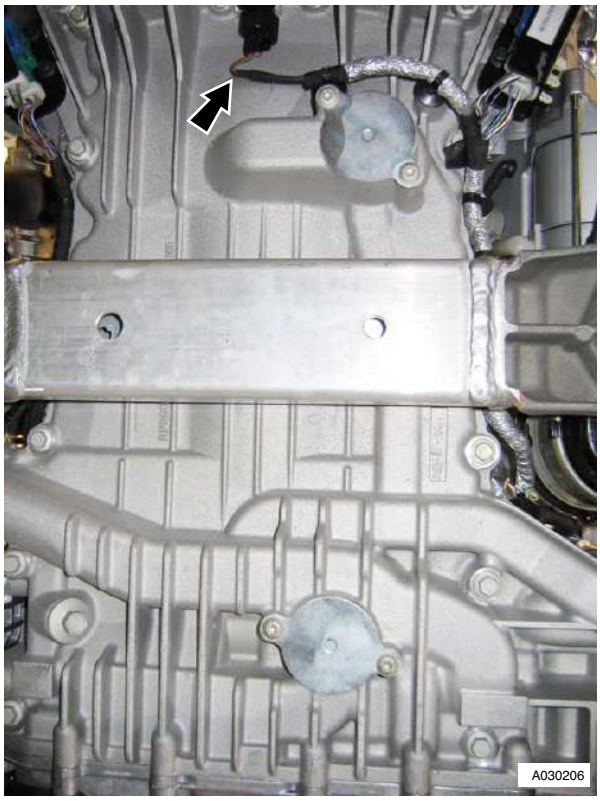

Figure 6

16. Release harness clips (x6) from sump (see Figure 7).

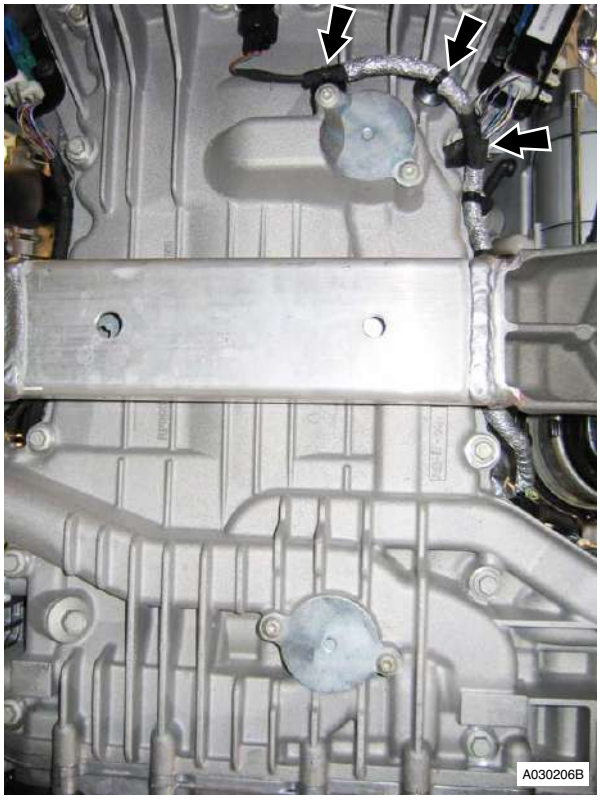

Figure 7

17. Remove bolts (x4) securing LH and RH HEGO sensor multiplug brackets to sump (see Figure 8).

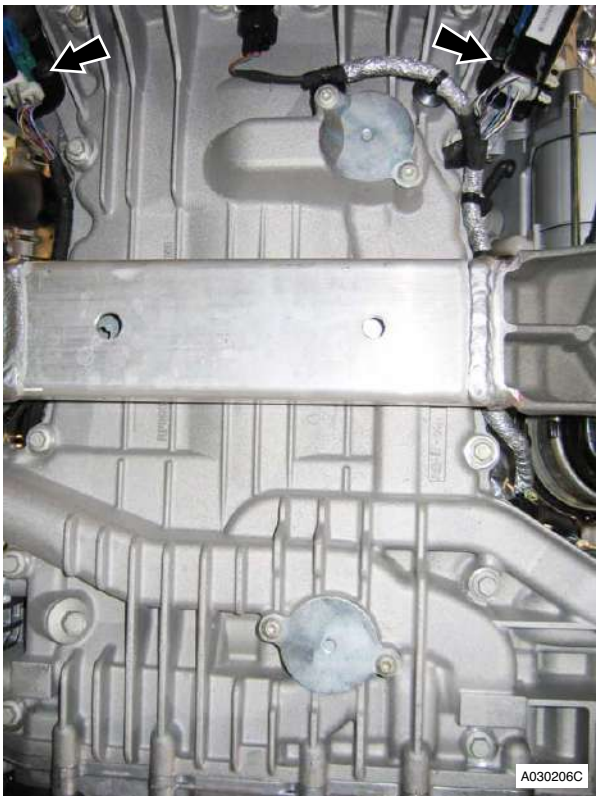

Figure 8

18. Disconnect multiplug from A/C compressor.
19. Remove bolts (x4) securing A/C compressor to mounting bracket. Remove compressor.
20. Remove bolts (x2) securing inlet and outlet oil pipes to sump (see Figure 9).

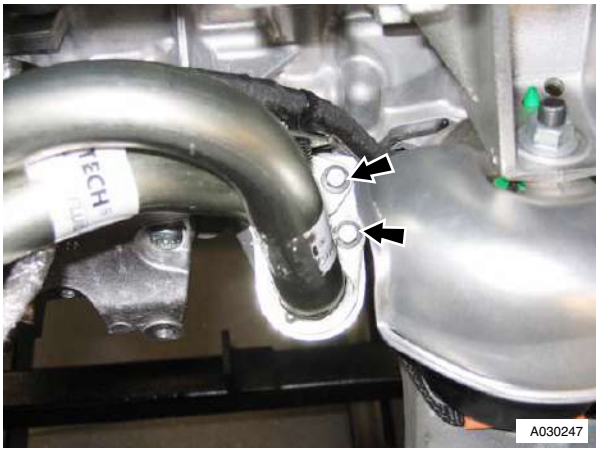

Figure 9

21. Release both oil pipes together from sump, remove and discard O-ring seals from pipes.
22. Remove Torx bolts (x4) securing A/C compressor mounting bracket to engine bedplate and sump. Remove bracket (see Figure 10).

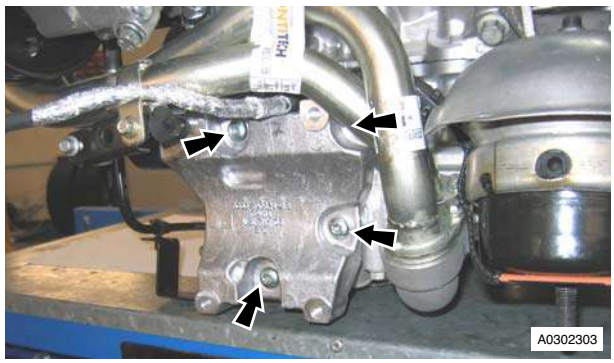

Figure 10

23. Remove bolts (x16) securing sump to engine bedplate (see Figure11).

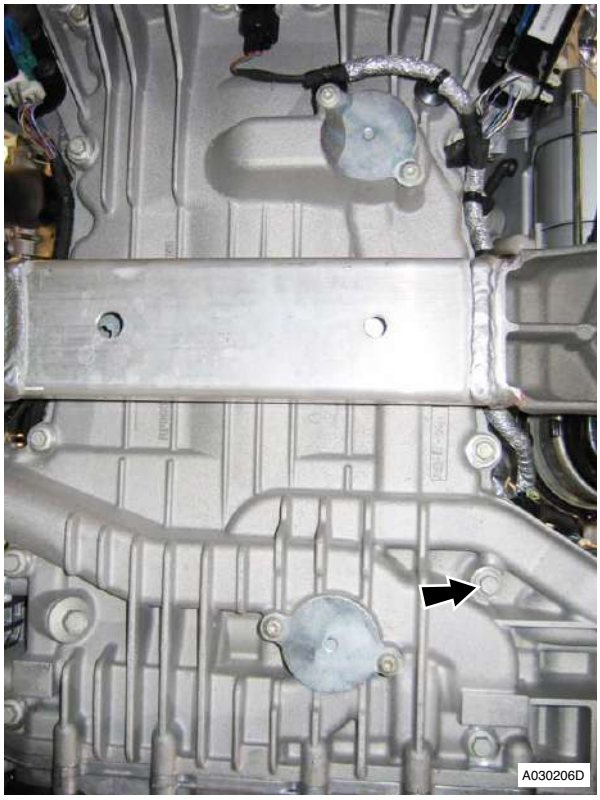

Figure 11

24. Release and remove sump.
25. Remove bolts (x8) securing windage tray to engine bedplate, remove windage tray.

26. Mark bearing caps and connecting rods for correct installation (see Figure 12).

Figure 12

27. Rotate crankshaft clockwise to access number 1 cylinder connecting rod bolts.
28. Remove bolts (x2) securing bearing cap to connecting rod, remove bearing cap (see Figure 13).

Figure 13

Caution

Connecting rod bolts are torque tightened to yield and must be replaced.

29. Install special tools (303-535) to the connecting rod to prevent damage to crankshaft journal.
30. Carefully push connecting rod/piston assembly upwards and remove from cylinder bore.
31. Remove special tools from connecting rod.
32. Install bearing cap on connecting rod, install and lightly tighten retaining bolts.
33. Note that piston grade number on crown and thick flange on connecting rod faces to front of engine on RH bank (A) (see Figure 14).

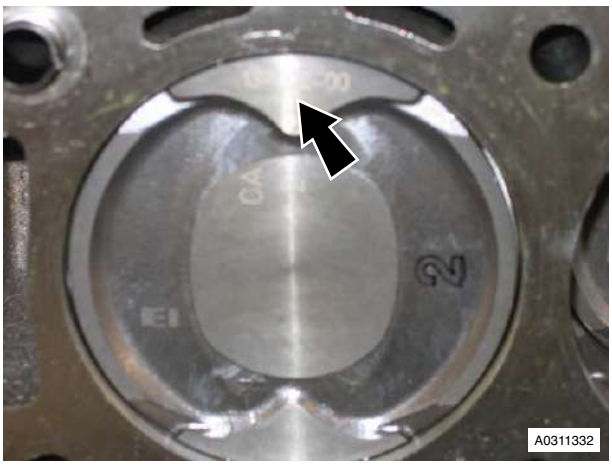

Figure 14

34. Note that piston grade number on crown and thick flange on connecting rod faces to front of engine on LH bank (B) (see Figure5).

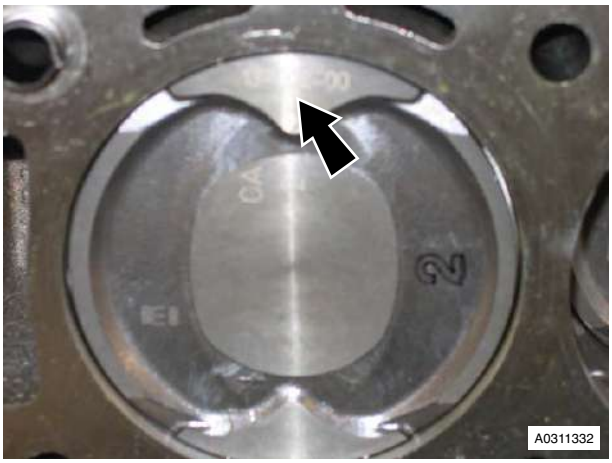

Figure 15

Installation

1. Clean cylinder bore.
2. Use an expander and remove piston rings from piston.
3. Install piston rings in cylinder bore to a pre-determined depth and measure ring gaps.
4. Remove piston ring set from cylinder bore and install on piston.
5. Clean connecting rod.
6. Correctly position ring gaps on piston prior to installation.

Caution

Make sure the piston ring gaps are positioned at different positions opposite the thrust side of the piston before installation.

7. Remove connecting rod bearing cap.
8. Install bearings in connecting rod and bearing cap.
9. Lubricate cylinder bore, piston and rings with clean engine oil.

10. Install special tools (303-535) to the connecting rod to prevent damage to crankshaft journal.
11. Install piston ring clamp to piston, install piston assembly in its cylinder bore. Remove piston ring clamp (see Figure 16).

Figure 16

Caution
Install pistons into cylinder block with the 'arrow' on the piston crown facing to the front of the engine.

12. Lubricate crankshaft journal with clean engine oil.
13. Carefully pull connecting rod into place on crankshaft journal.
14. Install bearing cap to connecting rod. Install and torque tighten retaining bolts (x2).
15. Clean windage tray.
16. Install windage tray, install and torque tighten bolts (x8).
17. Clean old sealant from sump flange and engine bedplate.

Caution
Use only a plastic scraper when removing old sealant and gaskets from engine components.

18. Ensure that sump flange and mating face on engine bedplate are clean and dry.
19. Apply a continuous 3mm diameter bead of RTV sealant to sump flange as recommended.
20. Ensure that there are no gaps in sealant track.
21. Install sump, install and torque tighten bolts (x16) in the correct sequence.
22. Install A/C compressor mounting bracket, install and torque tighten Torx bolts (x4).
23. Lubricate and install new O-ring seals to oil pipes.
24. Install oil pipes in sump, install and torque tighten bolts (x2)
25. Install compressor, install and torque tighten bolts (x4).
26. Connect multiplug to A/C compressor.
27. Install LH and RH HEGO sensor multiplug brackets to sump. Install and torque tighten bolts (x4).
28. Secure harness clips (x6) in sump.
29. Connect multiplug to crankshaft timing sensor.
30. Connect multiplug to engine electric coolant temperature sensor.
31. Connect multiplug to oil pressure sensor.
32. Clean oil scavenge pump and mating face on sump.
33. Install oil pump(s) drive sprocket.
34. Install new oil scavenge pump gasket, align on dowels (x2).
35. Install chain onto oil scavenge pump sprocket.
36. Install oil scavenge pump, align to dowels (x2), Install and torque tighten bolts (x3).
37. Install chain onto oil pump drive sprocket.
38. Clean oil pressure pump and mating face on sump.
39. Install new gasket to sump, align to dowels (x2).
40. Position oil pressure pump, install chain on pump sprocket.
41. Install oil pressure pump, align to dowels (x2), Install and torque tighten bolts (x3).
42. Install chain tensioner, install and torque tighten bolt, remove guide pin.
43. Install crankshaft timing sprocket.
44. Install cylinder head gaskets - engine set (see Workshop Manual procedure 03.01.HW Gasket - Cylinder Head - Engine Set - Renew With Engine Removed).

Piston Ring Set-Additional-Renew (Each)

Repair Operation Time (ROT)	
Item	**Code**
Piston Ring Set-Additional-Renew	**03.11.CM**

Removal

WARNING
DO NOT GET USED ENGINE OIL ON YOUR SKIN. USED ENGINE OIL CAN BE HARMFUL.

1. Mark bearing cap and connecting rod for correct installation (see Figure 1).

Figure 1

2. Remove bolts (x2) securing bearing cap to connecting rod, remove bearing cap (see Figure 2).

Figure 2

Caution
When using a 'two post' vehicle ramp, remove the screws that secure the rear section of the wheel arch liner to body. Hold back the rear section of the wheel arch liner to correctly position the foot of the vehicle lift.

3. Install special tools (303-535) to the connecting rod to prevent damage to crankshaft journal.
4. Carefully push connecting rod/piston assembly upwards and remove from cylinder bore.
5. Remove special tools from connecting rod.
6. Install bearing cap on connecting rod, install and lightly tighten retaining bolts.

Installation

1. Clean cylinder bore.
2. Install piston rings in cylinder bore to a pre-determined depth and measure ring gaps.
3. Remove piston ring set from cylinder bore and install on piston.
4. Clean connecting rod.
5. Correctly position ring gaps on piston prior to installation.

Caution
Make sure the piston ring gaps are positioned at different positions opposite the thrust side of the piston before installation.

6. Remove connecting rod bearing cap.
7. Install bearings in connecting rod and bearing cap.
8. Lubricate cylinder bore, piston and rings with clean engine oil.
9. Install special tools (303-535) to the connecting rod to prevent damage to crankshaft journal.
10. Install piston ring clamp to piston, install piston assembly in its cylinder bore. Remove piston ring clamp (see Figure 3).

Figure 3

11. Lubricate crankshaft journal with clean engine oil.
12. Carefully pull connecting rod into place on crankshaft journal.
13. Install bearing cap to connecting rod. Install and torque tighten retaining bolts (x2).

Connecting Rod-Renew (Engine Set)

Repair Operation Time (ROT)	
Item	**Code**
Connecting Rod-Renew	**03.11.CN**

Removal

WARNING
DO NOT GET USED ENGINE OIL ON YOUR SKIN. USED ENGINE OIL CAN BE HARMFUL.

1. Remove cylinder head gaskets - engine set (see Workshop Manual procedure 03.01.HW Gasket - Cylinder Head - Engine Set - Renew With Engine Removed).
2. Remove crankshaft timing sprocket from crankshaft.
3. Install guide pin through lower hole on chain tensioner.
4. Remove bolt securing oil pressure pump chain tensioner assembly to engine bedplate (see Figure 1).

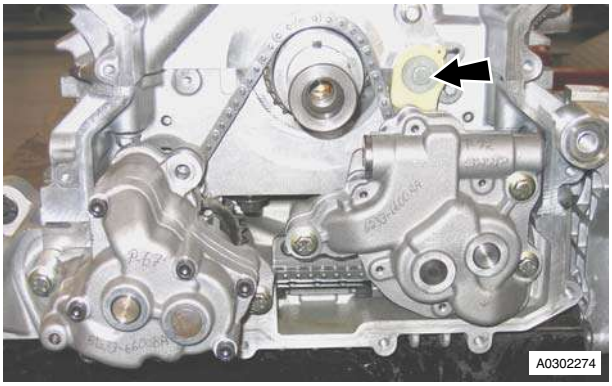

Figure 1

5. Remove tensioner assembly.

6. Remove bolts (x3) securing oil pressure pump to sump (see Figure 2).

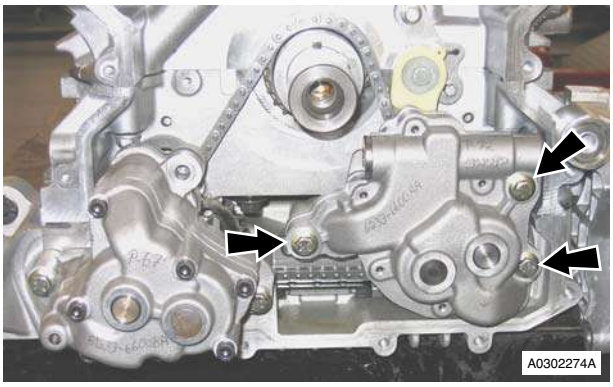

Figure 2

7. Release chain from oil pressure pump sprocket, remove oil pump.
8. Remove and discard oil pressure pump gasket.
9. Remove bolts (x3) securing oil scavenge pump to sump (see Figure 3).

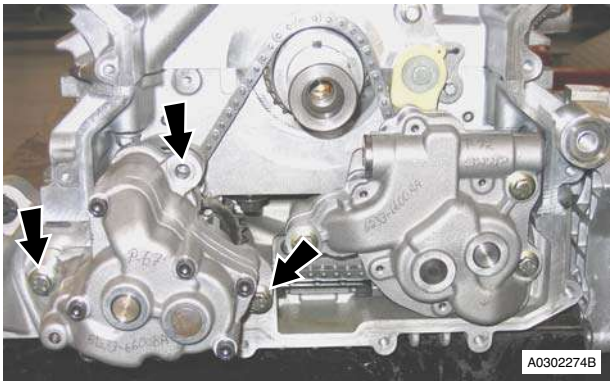

Figure 3

10. Release chain from oil scavenge pump sprocket, remove scavenge pump.
11. Remove and discard oil scavenge pump gasket (see Figure 4).

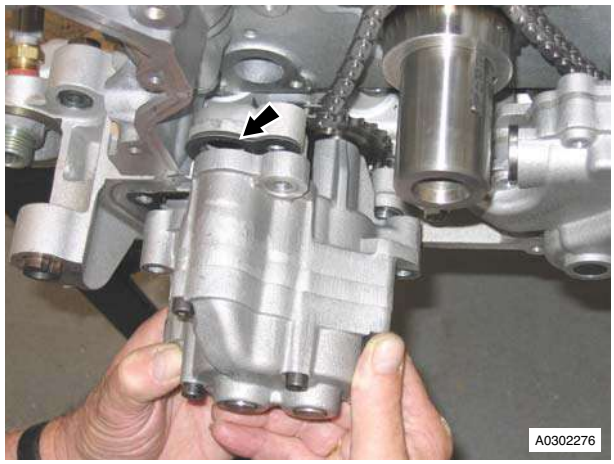

Figure 4

12. Remove oil pump(s) drive sprocket.
13. Disconnect multiplug from oil pressure sensor (see Figure 5).

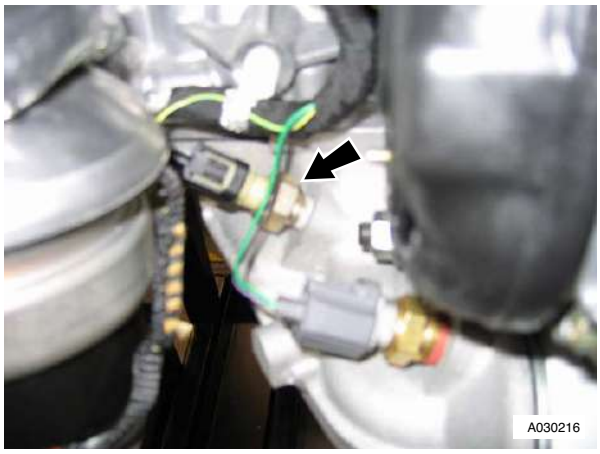

Figure 5

14. Disconnect multiplug from engine electric coolant temperature sensor (see Figure 6).

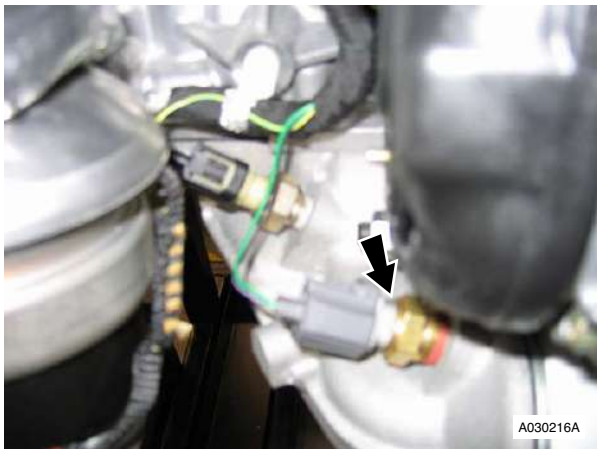

Figure 6

15. Disconnect multiplug from crankshaft timing sensor (see Figure 7).

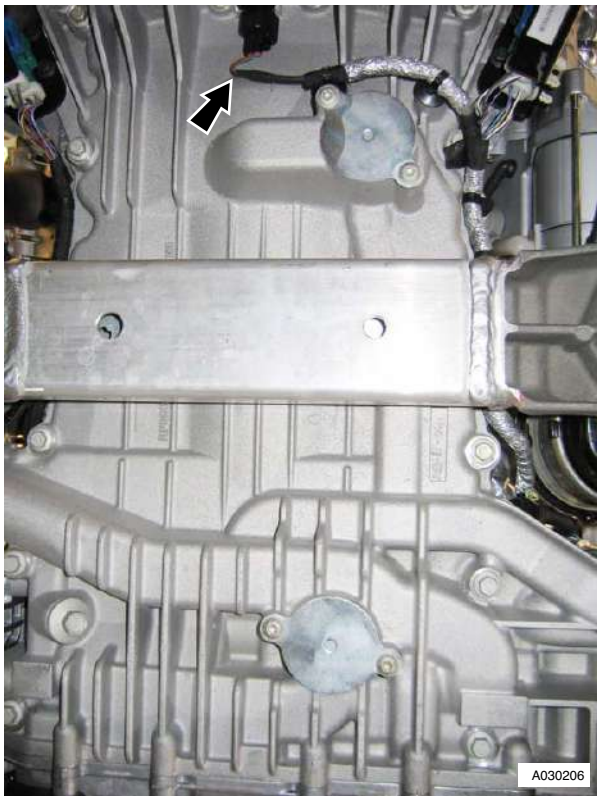

Figure 7

16. Release harness clips (x6) from sump (see Figure 8).

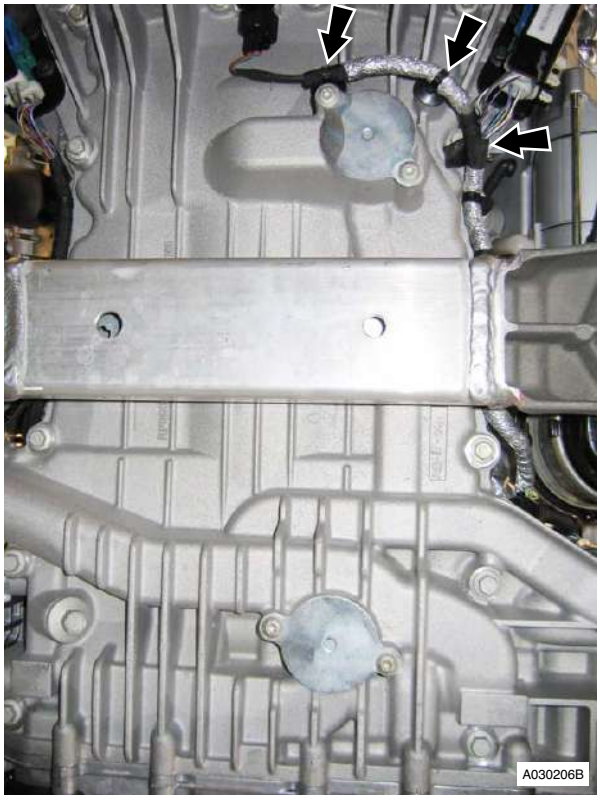

Figure 8

17. Remove bolts (x4) securing LH and RH HEGO sensor multiplug brackets to sump (see Figure 9).

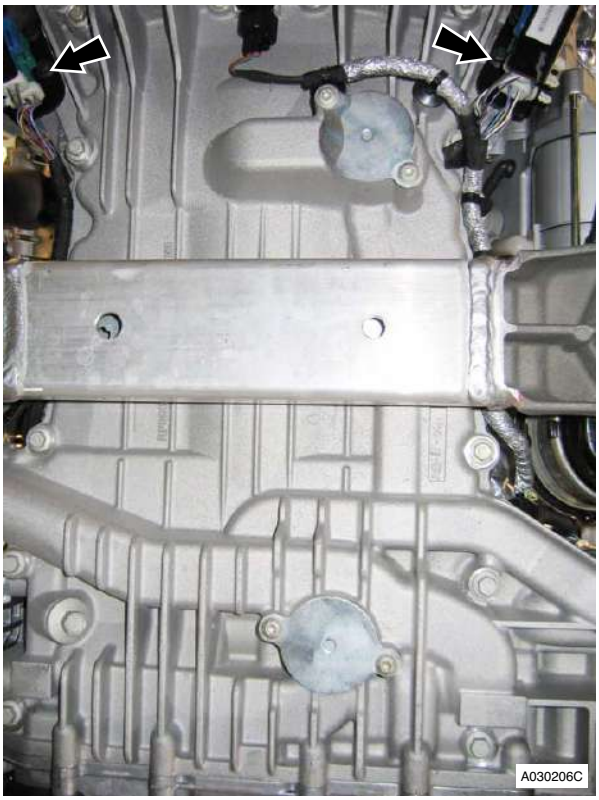

Figure 9

18. Disconnect multiplug from A/C compressor.
19. Remove bolts (x4) securing A/C compressor to mounting bracket. Remove compressor (see Figure 10).

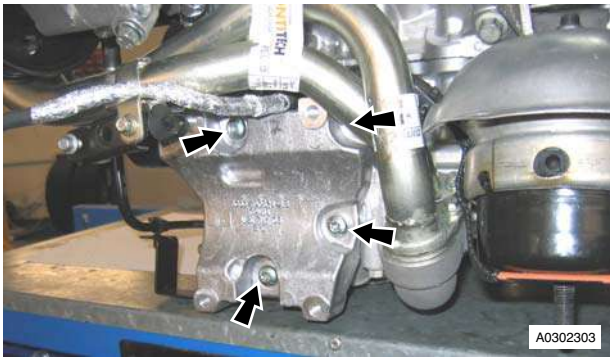

Figure 10

20. Remove bolts (x2) securing inlet and outlet oil pipes to sump (see Figure 11).

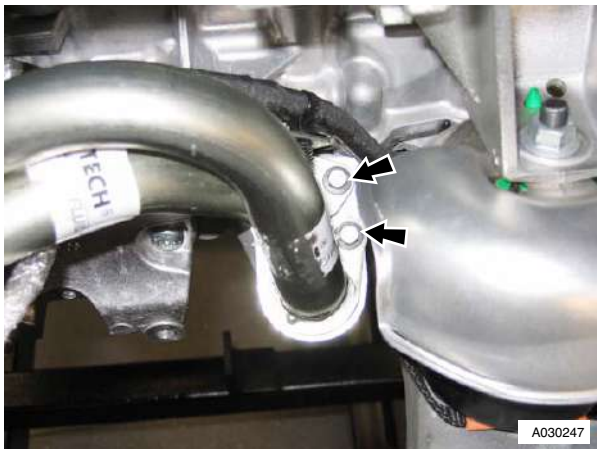

Figure 11

21. Release both oil pipes together from sump, remove and discard O-ring seals from pipes.
22. Remove Torx bolts (x4) securing A/C compressor mounting bracket to engine bedplate and sump. Remove bracket (see Figure 12).

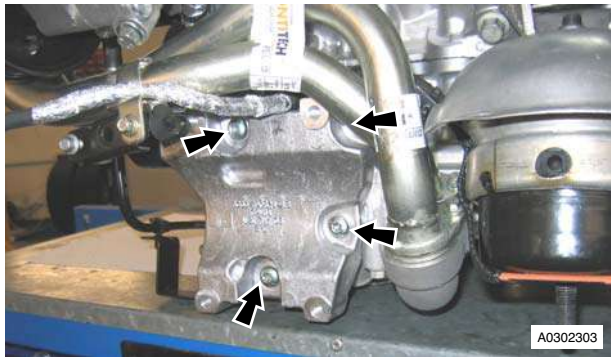

Figure 12

23. Remove bolts (x16) securing sump to engine bedplate (see Figure 13).

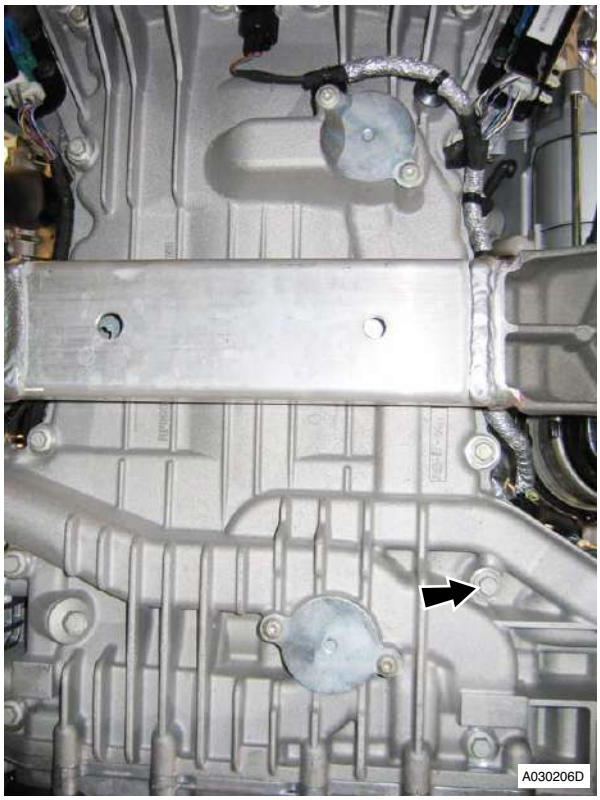

Figure 13

24. Release and remove sump.
25. Remove bolts (x8) securing windage tray to engine bedplate, remove windage tray.
26. Mark bearing caps and connecting rods for correct installation (see Figure 14).

Figure 14

27. Rotate crankshaft clockwise to access number 1 cylinder connecting rod bolts.
28. Remove bolts (x16) securing bearing caps to connecting rods, remove bearing caps (see Figure 15).

Figure 15

Caution
Connecting rod bolts are torque tightened to yield and must be replaced.

29. Install special tools (303-535) to the connecting rod to prevent damage to crankshaft journal.
30. Carefully push each connecting rod/piston assembly upwards and remove from cylinder bores.
31. Remove special tools from connecting rods.
32. Install bearing caps on connecting rods, install and lightly tighten retaining bolts.
33. Note that piston grade number on crown and thick flange on connecting rod faces to front of engine on RH bank (A) (see Figure 16).

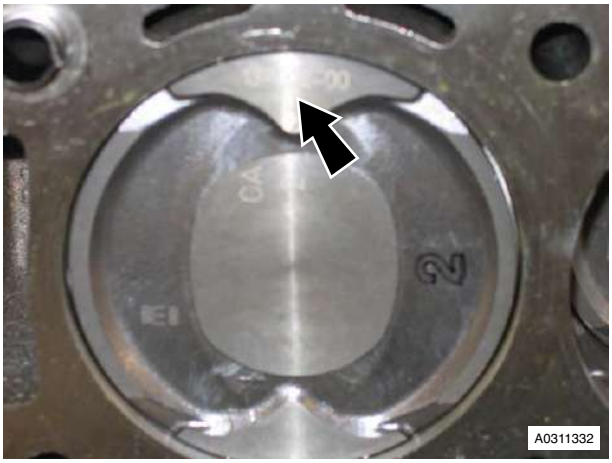

Figure 16

34. Note that piston grade number on crown and thick flange on connecting rod faces to front of engine on LH bank (B) (see Figure 17).

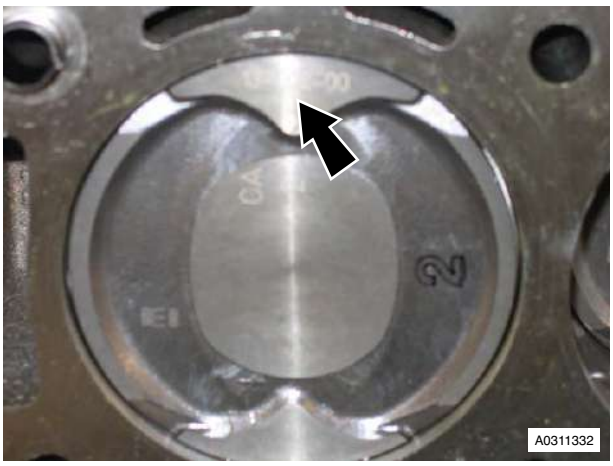

Figure 17

Installation

1. Clean cylinder bores.
2. Clean connecting rods,
3. Install pistons on connecting rods in their correct orientation, install circlip(s) (see Figure 18).

Figure 18

4. Correctly position ring gaps on pistons prior to installation.

Caution
Make sure the piston ring gaps are positioned at different positions opposite the thrust side of the piston before installation.

5. Remove connecting rod bearing caps.
6. Install bearings in connecting rods and bearing caps.
7. Lubricate cylinder bores, pistons and rings with clean engine oil.
8. Install special tools (303-535) to the connecting rod to prevent damage to crankshaft journal.
9. Install piston ring clamp to each piston in turn and install in its respective cylinder bore. Remove piston ring clamp (see Figure 19).

Figure 19

Caution
Install pistons into cylinder block with the 'arrow' on the piston crown facing to the front of the engine.

10. Lubricate crankshaft journals with clean engine oil.
11. Carefully pull each connecting rod into place on each crankshaft journal.
12. Install bearing caps to their relevant connecting rods. Install and torque tighten retaining bolts (x16).

Caution
When assembling connecting rods and connecting rod bearing caps it is imperative that bearing slots and tangs be located on the same side of the connecting rods.

13. Clean windage tray.
14. Install windage tray, install and torque tighten bolts (x8).
15. Clean old sealant from sump flange and engine bedplate.
16. Ensure that sump flange and mating face on engine bedplate are clean and dry.
17. Apply a continuous 3mm diameter bead of RTV sealant to sump flange as recommended.
18. Ensure that there are no gaps in sealant track.
19. Install sump, install and torque tighten bolts (x16) in the correct sequence.
20. Install A/C compressor mounting bracket, install and torque tighten Torx bolts (x4).
21. Lubricate and install new 'O' ring seals to oil pipes.
22. Install oil pipes in sump, install and torque tighten bolts (x2)
23. Install compressor, install and torque tighten bolts (x4).
24. Connect multiplug to A/C compressor.
25. Install LH and RH HEGO sensor multiplug brackets to sump. Install and torque tighten bolts (x4).
26. Secure harness clips (x6) in sump.
27. Connect multiplug to crankshaft timing sensor.
28. Connect multiplug to engine electric coolant temperature sensor.
29. Connect multiplug to oil pressure sensor.

30. Clean oil scavenge pump and mating face on sump.
31. Install oil pump(s) drive sprocket.
32. Install new oil scavenge pump gasket, align on dowels (x2).
33. Install chain onto oil scavenge pump sprocket.
34. Install oil scavenge pump, align to dowels (x2), Install and torque tighten bolts (x3).
35. Install chain onto oil pump drive sprocket.
36. Clean oil pressure pump and mating face on sump.
37. Install new gasket to sump, align to dowels (x2).
38. Position oil pressure pump, install chain on pump sprocket.
39. Install oil pressure pump, align to dowels (x2), Install and torque tighten bolts (x3).
40. Install chain tensioner, install and torque tighten bolt, remove guide pin.
41. Install crankshaft timing sprocket.
42. Install cylinder head gaskets - engine set (see Workshop Manual procedure 03.01.HW Gasket - Cylinder Head - Engine Set - Renew With Engine Removed).

Crankshaft Damper Pulley Assembly-Renew

Repair Operation Time (ROT)	
Item	**Code**
Crankshaft Damper Pulley Assembly-Renew	**03.11.CP**

Removal

1. Remove engine drive belt (see Workshop Manual procedure 03.05.AB Belt - Engine Drive - Renew).
2. Raise vehicle on ramp.
3. Remove bolts (x2), inspection cover to lower crankcase, remove cover.
4. Install tool (303-1185) to restrain flywheel, install and tighten bolts (x2).
5. Install thrust button of tool (303 -1186) in crankshaft, position tool in pulley, secure with bolts (x2). Tighten centre bolt, withdraw pulley from crankshaft.
6. Collect crankshaft pulley, locking ring and special tool thrust button.
7. Remove special tool from pulley.
8. Remove and discard O-ring seal from pulley (see Figure 1).

Figure 1

Installation

1. Clean crankshaft pulley, locking ring and mating face on crankshaft.

Caution
The bolt thread in the crankshaft must be cleaned out before a new crankshaft pulley retaining bolt is installed

2. Lubricate and install new O-ring seal in crankshaft pulley.
3. Install crankshaft pulley, locking ring and new pulley bolt.
4. Torque tighten crankshaft pulley bolt. Remove special tool (303-1185) from crankcase.
5. Install inspection cover to lower crankcase, install and tighten bolts (x2).
6. Lower vehicle on ramp.
7. Install engine drive belt (see Workshop Manual procedure 03.05.AB Belt - Engine Drive - Renew).

Crankshaft Front Oil Seal-Renew

Repair Operation Time (ROT)	
Item	**Code**
Crankshaft Front Oil Seal-Renew	**03.11.CQ**

Removal

1. Battery isolation switch 'OFF'.
2. Raise vehicle on ramp.
3. Remove crankshaft pulley (see Workshop Manual procedure 03.11.CP Pulley Assembly - Crankshaft Damper - Renew).

4. Install tool (303-1190) into crankshaft front oil seal (see Figure 1).

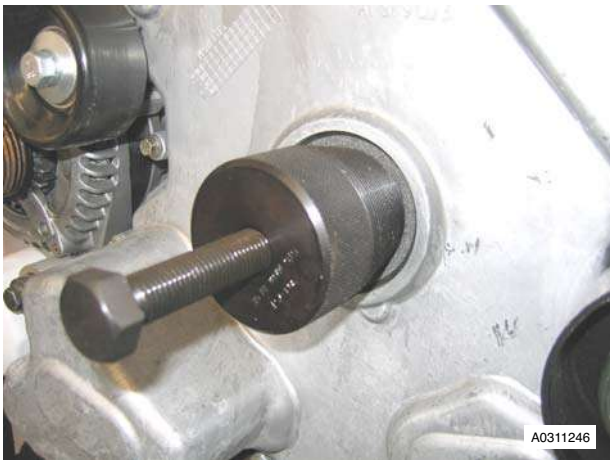

Figure 1

5. Tighten centre bolt of tool (303-1190) and withdraw oil seal from timing cover (see Figure 2).

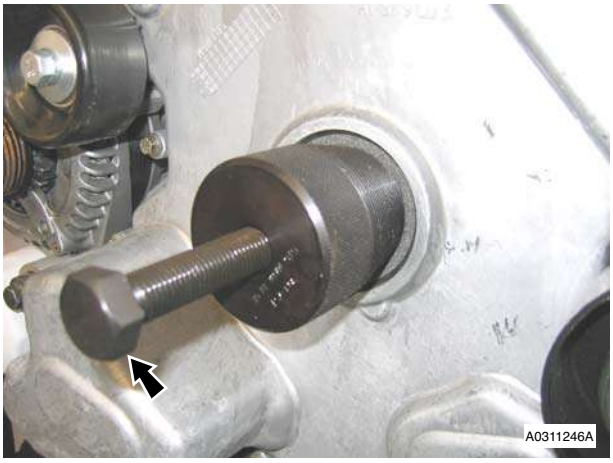

Figure 2

6. Remove seal from special tool.

Installation

1. Clean oil seal aperture in timing cover.

Caution
Caution: Make sure the crankshaft front oil seal mating faces are clean and dry.

Caution
Do not remove the crankshaft front oil seal protector until the oil seal is correctly installed.

2. Do NOT remove protector from oil seal.
3. Position new oil seal (fitted dry). Install oil seal in timing cover using tool (303-750) (see Figure 3).

Figure 3

4. Remove crankshaft oil seal protector.
5. Install crankshaft pulley (see Workshop Manual procedure 03.11.CP Pulley Assembly - Crankshaft Damper - Renew).
6. Lower vehicle on ramp.
7. Battery isolation switch 'ON'.

Rear Oil Crankshaft Seal-Renew

Repair Operation Time (ROT)	
Item	**Code**
Rear Oil Crankshaft Seal-Renew	**03.11.CR**

Removal

1. Remove clutch and flywheel assembly (see Workshop Manual procedure 08.00.AA Clutch and Flywheel Assembly - Renew).
2. Position tool (303 -1189) to crankshaft flange, screw in alignment bolts (x2) 1.5 turns (only).
3. Use tool and pierce holes (x3) in oil seal through holes in special tool for self-tapping screws
4. Install and tighten self-tapping screws (x3) into oil seal.
5. Tighten centre bolt of tool (303-1189) and withdraw crankshaft oil seal.
6. Remove oil seal from special tool, discard oil seal.

Installation

1. Clean oil seal aperture in cylinder block.

Caution
Do not use any lubricant on crankshaft oil seals or seal protectors. Make sure all components are clean and dry.

2. Ensure that oil seal protector is positioned correctly and install oil seal onto crankshaft flange.
3. Install tool (303-1189) to crankshaft, position nuts on tool against oil seal.

4. Ensure that oil seal and special are parallel to rear of engine.

Caution
Alternate nut tightening to correctly seat the crankshaft rear oil seal.

5. To install oil seal, tighten nuts alternately on tool (303-1189) until oil seal correctly seated.
6. Remove special tool from crankshaft.
7. Check that the oil seal is located correctly.
8. Install clutch and flywheel assembly (see Workshop Manual procedure 08.00.AA Clutch and Flywheel Assembly - Renew).

Cylinder Block-Renew

Repair Operation Time (ROT)	
Item	**Code**
Cylinder Block-Renew	**03.11.CU**

Removal

WARNING
DO NOT GET USED ENGINE OIL ON YOUR SKIN. USED ENGINE OIL CAN BE HARMFUL.

1. Remove cylinder head gasket - engine set (see Workshop Manual procedure 03.01.HW Gasket - Cylinder Head - Engine Set - Renew With Engine Removed).
2. Remove crankshaft assembly.
3. Remove pistons and connecting rod assemblies from cylinder block.
4. Remove Torx screws (x4) securing engine oil cooling valves to cylinder block.
5. Remove engine oil cooling valves (x4).
6. Remove bolts (x5) securing water pump to cylinder block. Remove water pump, discard gasket.
7. Remove cylinder block valley cover.

Installation

1. Clean cylinder block valley cover and mating face on cylinder block.
2. Install cylinder block valley cover.
3. Clean engine oil cooling valves.
4. Install engine oil cooling valves in cylinder block.
5. Install and torque tighten Torx screws (x4).
6. Clean connecting rods and piston assemblies.
7. Correctly position ring gaps on pistons prior to installation.
8. Remove connecting rod bearing caps.
9. Install bearings in connecting rods and bearing caps.
10. Lubricate cylinder bores, pistons and rings with clean engine oil.
11. Install special tools (303-535) to the connecting rod to prevent damage to crankshaft journal.
12. Install crankshaft assembly.
13. Install new gasket, water pump, install and torque tighten bolts (x5).
14. Install cylinder head gasket - engine set (see Workshop Manual procedure 03.01.HW Gasket - Cylinder Head - Engine Set - Renew With Engine Removed).

Crankshaft Damper Pulley Assembly-Renew (with Engine Removed)

Repair Operation Time (ROT)	
Item	**Code**
Crankshaft Damper Pulley Assembly-Renew	**03.11.DP**

Removal

1. Remove engine assembly (see Workshop Manual procedure 03.00.AA Engine Assembly - Renew).
2. Release drive belt tensioner, release drive belt from idler pulley (see Figure 1).

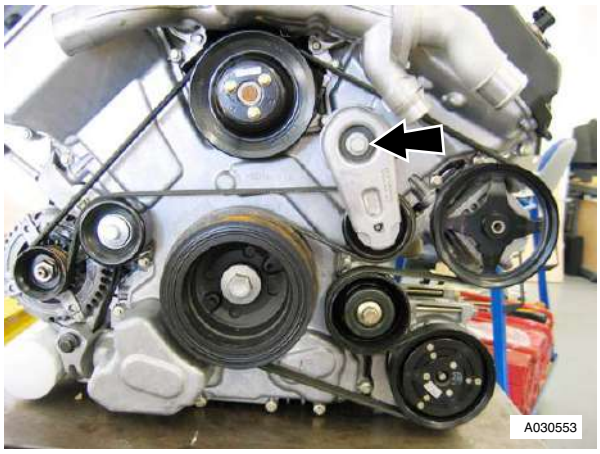

Figure 1

3. Remove bolt securing drive belt tensioner to engine timing cover, remove tensioner.
4. Remove drive belt from pulleys.
5. Remove bolts (x2), inspection cover to lower crankcase, remove cover.
6. Install tool (303-1185) to restrain flywheel, install and tighten bolts (x2).
7. Install thrust button of tool (303 -1186) in crankshaft, position tool in pulley, secure with bolts (x2). Tighten centre bolt, withdraw pulley from crankshaft.
8. Collect crankshaft pulley, locking ring and special tool thrust button.
9. Remove special tool from pulley.

10. Remove and discard O-ring seal from pulley (see Figure 2).

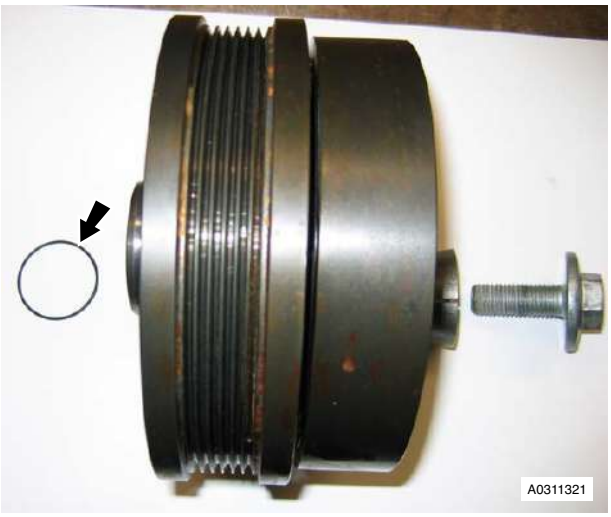

Figure 2

Installation

1. Clean crankshaft pulley, locking ring and mating face on crankshaft.
2. Lubricate and install new O-ring seal in crankshaft pulley.
3. Install crankshaft pulley, locking ring and new pulley bolt.
4. Torque tighten crankshaft pulley bolt. Remove special tool (303-1185) from crankcase.
5. Install inspection cover to lower crankcase, install and tighten bolts (x2).
6. Install drive belt on pulleys.
7. Install drive belt tensioner, install and torque tighten bolt.
8. Release tensioner and install drive belt onto idler pulley.
9. Install engine assembly (see Workshop Manual procedure 03.00.AA Engine Assembly - Renew).

Crankshaft Front Oil Seal-Renew (with Engine Removed)

Repair Operation Time (ROT)	
Item	**Code**
Crankshaft Front Oil Seal-Renew	**03.11.DQ**

Removal

1. Remove crankshaft pulley (see Workshop Manual procedure 03.11.DP Pulley Assembly - Crankshaft Damper - Renew With Engine Removed).
2. Install tool (303-1190) into crankshaft front oil seal (see Figure 1).

Figure 1

3. Tighten centre bolt of tool (303-1190) and withdraw oil seal from timing cover (see Figure 2).

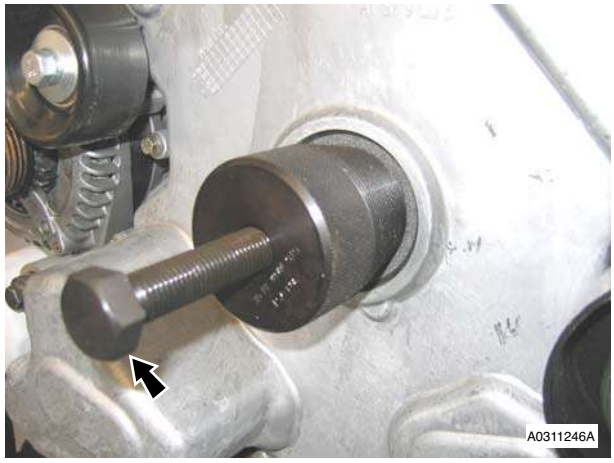

Figure 2

4. Remove seal from special tool.

Installation

1. Clean oil seal aperture in timing cover.

Caution
Make sure the crankshaft front oil seal mating faces are clean and dry.

Caution
Do not remove the crankshaft front oil seal protector until the oil seal is correctly installed.

2. Do NOT remove protector from oil seal.

3. Position new oil seal (fitted dry). Install oil seal in timing cover using tool (303-750) (see Figure 3).

Figure 3

4. Remove crankshaft oil seal protector.
5. Install crankshaft pulley (see Workshop Manual procedure 03.11.DP Pulley Assembly - Crankshaft Damper - Renew With Engine Removed).

Crankshaft Rear Oil Seal-Renew (with Engine Removed)

Repair Operation Time (ROT)	
Item	**Code**
Crankshaft Rear Oil Seal-Renew	**03.11.DR**

Removal

1. Remove engine assembly (see Workshop Manual procedure 03.00.AA Engine Assembly - Renew).
2. Remove bolts (x2), inspection cover to lower crankcase, remove cover.
3. Install tool (303-1185) to restrain flywheel, install and tighten bolts (x2).
4. Remove bolts (x6), clutch cover to flywheel.
5. Release clutch cover from dowels (x3), remove clutch cover, collect drive plate.
6. Remove and discard bolts (x8), flywheel to crankshaft flange.
7. Remove bolts (x2), collect tool (303-1185).
8. Release flywheel from dowel, remove flywheel.
9. Position tool (303-1189) to crankshaft flange, screw in alignment bolts (x2) 1.5 turns (only).
10. Use tool and pierce holes (x3) in oil seal through holes in special tool for self-tapping screws
11. Install and tighten self-tapping screws (x3) into oil seal.
12. Tighten centre bolt of tool (303-1189) and withdraw crankshaft oil seal.
13. Remove oil seal from special tool, discard oil seal.

Installation

1. Clean oil seal aperture in cylinder block.

Caution

Do not use any lubricant on crankshaft oil seals or seal protectors. Make sure all components are clean and dry

2. Ensure that oil seal protector is positioned correctly and install oil seal onto crankshaft flange.
3. Install tool (303-1189) to crankshaft, position nuts on tool against oil seal.
4. Ensure that oil seal and special are parallel to rear of engine.

Caution

Alternate nut tightening to correctly seat the crankshaft rear oil seal.

5. To install oil seal, tighten nuts alternately on tool (303-1189) until oil seal correctly seated.
6. Remove special tool from crankshaft.
7. Check that the oil seal is located correctly.
8. Clean flywheel and mating face on crankshaft.
9. Install flywheel, align to dowel on crankshaft flange.
10. Install new bolts (x8), install tool (303-1185) to restrain flywheel. Torque tighten bolts (x8) in the correct sequence.
11. Clean clutch cover and drive plate.
12. Install clutch assembly on flywheel, align to dowels (x3).
13. Install bolts (x6), install clutch alignment tool, evenly torque tighten bolts (x6) in a diagonal sequence. Remove clutch alignment tool.
14. Remove bolts (x2), collect tool (303-1185).
15. Install inspection cover, install and torque tighten bolts (x2).
16. Install engine assembly (see Workshop Manual procedure 03.00.AA Engine Assembly - Renew).

Engine (03.00)

Air Charging (03.12)

Maintenance

Clean Air Duct - Remove and Install

Repair Operation Time (ROT)	
Item	**Code**
Clean Air Duct - Right Side - Remove and Install	**03.12.BC**
Clean Air Duct - Left Side - Remove and Install	**03.12.BD**

Remove

1. Raise the vehicle and make it safe.
2. Remove the front road wheel at the side for the clean air duct to be removed.
3. Apply protective tape to the wheelarch area of the front wing to prevent damage.
4. Remove the front outside screw that attaches the valance.
5. Move the valance away to get access to the wheelarch liner attachment screws (refer to Figure 1).

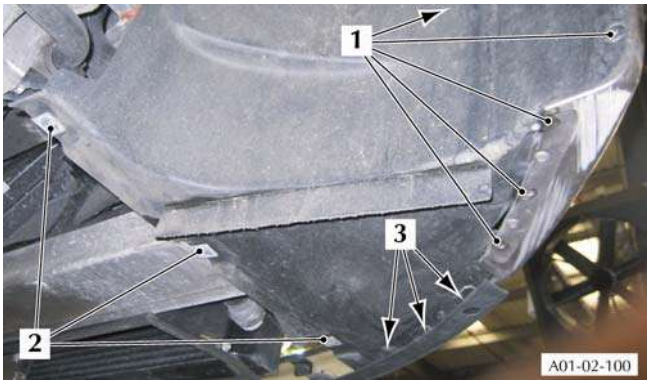

Figure 1 - Front Wheelarch Liner Attachment (Right side shown)

6. Remove the five screws (1) that attach the wheelarch liner to the bumper.
7. Remove the three M6 Torx screws (2) that attach the wheelarch liner to the front undertray.
8. Remove the three screws (3) that attach the wheelarch liner to the front valance.
9. Move the wheelarch liner away to get access to the clean air duct (duct).
10. Disconnect the clip that attaches the duct to the mass air-flow meter.
11. Remove the duct from the mass air-flow meter.
12. Lower the vehicle.
13. Disconnect the clip that attaches the duct to the throttle body adaptor.
14. Remove the duct from the throttle body adaptor.
15. Remove the duct from the support clip.

Install

1. Install the duct into the support clip.
2. Install the duct to the throttle body adaptor.
3. Install the clip to attach the duct to the throttle body adaptor.
4. Raise the vehicle and make it safe.
5. Connect the duct to the mass air-flow meter.
6. Install the clip to attach the duct to the mass air-flow meter.
7. Connect the duct to the mass air-flow meter.
8. Install the clip that attaches the duct to the mass air-flow meter.
9. Put the wheelarch liner into position.
10. Install the three screws (3) that attach the wheelarch liner to the front valance.
11. Install the three M6 Torx screws (2) that attach the wheelarch liner to the front undertray.
12. Install the five screws (1) that attach the wheelarch liner to the bumper.
13. Make sure that the valance is in the correct position.
14. Install the front outside screw that attaches the valance.
15. Remove the protective tape from the wheelarch area of the front wing.
16. Install the front right road wheel.
17. Lower the vehicle.

Engine Air Filter - Remove and Install

Repair Operation Time (ROT)	
Item	**Code**
Engine Air Filter - Right Side - Remove and Install	**03.12.CB**
Engine Air Filter - Left Side - Remove and Install	**03.12.DB**

Remove

1. Raise the vehicle and make it safe.
2. Remove the front road wheel at the side of the air filter to be removed.
3. Apply protective tape to the wheelarch area of the front wing to prevent damage.
4. Remove the front outside screw that attaches the valance.

5. Move the valance away to get access to the wheelarch liner attachment screws (refer to Figure 1).

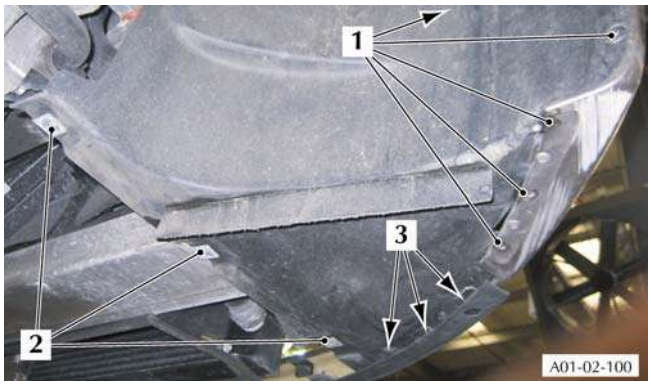

Figure 1 - Front Wheelarch Liner Attachment (Right side shown)

6. Remove the five screws (1) that attach the wheelarch liner to the bumper.
7. Remove the three M6 Torx screws (2) that attach the wheelarch liner to the front undertray.
8. Remove the three screws (3) that attach the wheelarch liner to the front valance.
9. Move the wheelarch liner away to get access to the air filter box.
10. Remove the seven self-tapping screws that attach the base of the air cleaner.
11. Remove the the base of the air cleaner.
12. Remove the air filter element.

Installation

1. Clean the air cleaner box and base.
2. Install the air filter element.
3. Remove the the base of the air cleaner.
4. Install the seven self-tapping screws that attach the base of the air cleaner.
5. Put the wheelarch liner back into position.
6. Install the three screws (3) that attach the wheelarch liner to the front valance (refer to Figure 1).
7. Install the three M6 Torx screws (2) that attach the wheelarch liner to the front undertray.
8. Install the five screws (1) that attach the wheelarch liner to the bumper.
9. Make sure that the valance is in the correct position.
10. Install the front outside screw that attaches the valance.
11. Remove the protective tape from the wheelarch.
12. Install the front road wheel.
13. Lower the vehicle.

Engine Air Cleaner Assembly - Remove and Install

Repair Operation Time (ROT)	
Item	**Code**
Engine Air Cleaner Assembly - Right Side - Remove and Install	**03.12.DJ**
Engine Air Cleaner Assembly - Left Side - Remove and Install	**03.12.DH**

Remove

1. Raise the vehicle and make it safe.
2. Remove the front road wheel at the side for the air filter box to be removed.
3. Apply protective tape to the wheelarch area of the front wing to prevent damage.
4. Remove the front outside screw that attaches the valance.
5. Move the valance away to get access to the wheelarch liner attachment screws (refer to Figure 1).

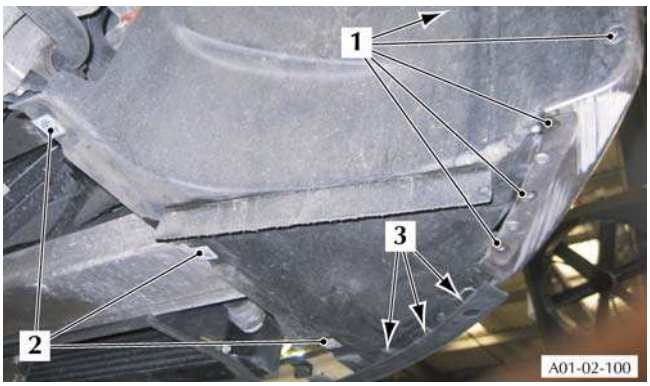

Figure 1 - Front Wheelarch Liner Attachment (Right side shown)

6. Remove the five screws (1) that attach the wheelarch liner to the bumper.
7. Remove the three M6 Torx screws (2) that attach the wheelarch liner to the front undertray.
8. Remove the three screws (3) that attach the wheelarch liner to the front valance.
9. Move the wheelarch liner away to get access to the air filter box.
10. Remove the self-tapping screw that attaches the mass air-flow meter to the air filter box.
11. Disconnect the mass air-flow meter from the air filter box.
12. Disconnect the air inlet duct from the air filter box .
13. Remove the three M6 screws that attach the air filter box.
14. Remove the air filter box.

Install

1. Put the air filter box in position.
2. Install the three M6 screws that attach the air box.
3. Connect the air inlet duct to the air filter box.
4. Connect the mass air-flow meter to the air filter box

5. Install the self-tapping screw that attaches the mass air-flow meter to the air filter box.
6. Put the wheelarch liner back into position.
7. Install the three screws (3) that attach the wheelarch liner to the front valance (refer to Figure 1).
8. Install the three M6 Torx screws (2) that attach the wheelarch liner to the front undertray.
9. Install the five screws (1) that attach the wheelarch liner to the bumper.
10. Make sure that the valance is in the correct position.
11. Install the front outside screw that attaches the valance.
12. Remove the protective tape from the wheelarch.
13. Install the front road wheel.
14. Lower the vehicle.

ASTON MARTIN
ASTON MARTIN

Engine (03.00)

Evaporative Emissions (03.13)

Description

The evaporative loss system prevents escape of fuel vapours into the atmosphere.

Fuel vapour is displaced from the fuel tank during filling. Vapour is also displaced due to fuel evaporation in higher temperatures. Displaced fuel vapour is absorbed in the carbon canister filter located on top of the fuel tank.

During normal engine running, absorbed fuel vapour is purged from the carbon canisters and mixed with the normal fuel/air charge in the inlet manifold.

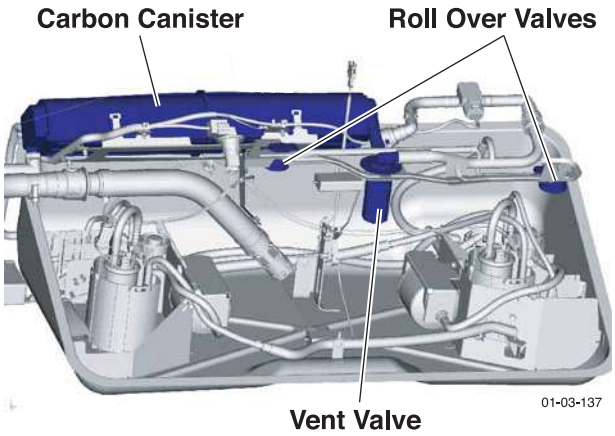

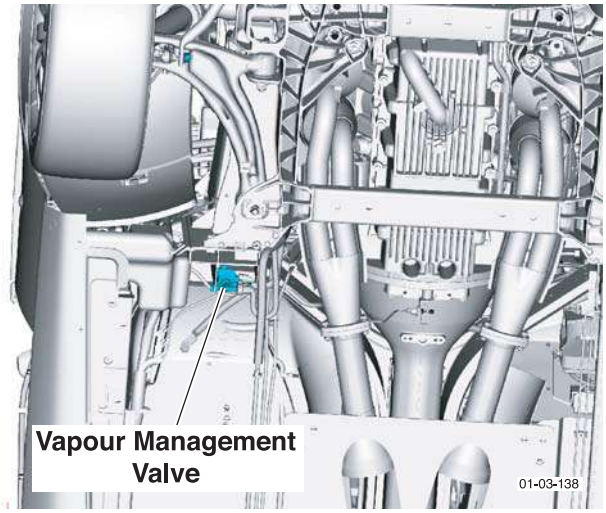

System Operation

Displaced fuel vapour leaves the fuel tank via the normally open fill level vent valve and the roll over valves. It passes through the carbon canister where fuel hydrocarbons are absorbed. Clean air leaves the system via the normally open canister vent valve. This valve is only closed during diagnostic pressure testing of the fuel system.

During normal engine running, the single vapour management valve in the engine bay is periodically opened allowing fresh air flow into the open canister vent valve, through the carbon canister, through the vapour management valve and into the primary inlet manifold. This fresh air flow progressively purges any absorbed fuel vapour from the carbon canister.

ASTON MARTIN
ASTON MARTIN

Engine (03.00)

Engine Management System (03.14)

Maintenance

Right Engine Control Module - Renew

Repair Operation Time (ROT)		
Item		**Code**
Engine Control Module - Renew	RH	**03.14.BB**

Removal

1. Disconnect the battery.
2. Raise the vehicle and make it safe.
3. Remove the right front wheel arch liner (refer to Workshop Manual procedure 01.02.GB Wheel Arch Liner - Front - RH - Renew).
4. Disconnect the electrical connector from the right indicator repeater light unit.
5. Remove the four fir-tree clips that attach the electrical harness for the indicator repeater and screen wash system.
6. Remove the two fir tree clips that attach the electrical harness for the ECM harness.
7. Remove the three screws that attach the ECM cover plate (the ECM and cover plate will fall).
8. Disconnect the three electrical connectors from the ECM.
9. Remove the ECM.

Installation

1. Put the ECM in position.
2. Connect the three electrical connectors to the ECM (through the cover plate).
3. Attach the ECM and the cover plate with the three screws.
4. Attach the ECM harness with the two fir-tree clips.
5. Attach the electrical harness for the repeater light and screen wash system with the three fir-tree clips.
6. Connect the electrical connector to the repeater light.
7. Install the wheel arch liner (refer to Workshop Manual procedure 01.02.GB Wheel Arch Liner - Front - RH - Renew).
8. Lower the vehicle.
9. Connect the battery.
10. Do a functional check of the WDS (refer to Workshop Manual procedure 00.06.AD WDS Operation - Check).

LH Front Lower Heated Exhaust Gas Oxygen (HEGO) Sensor - Renew

Repair Operation Time (ROT)		
Item		**Code**
Front Lower Heated Exhaust Gas Oxygen (HEGO) Sensor - Renew	LH	**03.14.CB**

Removal

1. Raise vehicle on ramp.

WARNING
THE EXHAUST SYSTEM WILL BE VERY HOT AFTER OPERATION. LET THE EXHAUST SYSTEM COOL BEFORE YOU DO WORK. IF YOU DO NOT, SEVERE INJURY CAN OCCUR.

2. Remove rear exhaust silencer (refer to Workshop Manual procedure 09.00.KA Silencer and Bypass Valve Assembly - Remove for Access and Refit).
3. Disconnect multiplugs (x2), HEGO sensors.
4. Secure sufficient lengths of string to HEGO sensor multiplugs for assembly purposes.
5. Loosen LH and RH clamp nuts, catalysts to centre pipes.
6. With assistance, manoeuvre exhaust centre pipe assembly rearwards to release from catalysts.
7. Remove nuts (x3), catalyst to exhaust manifold.
8. Release and support weight of LH catalyst from exhaust manifold.
9. Manoeuvre HEGO sensor leads and remove cable tie. Release HEGO sensor leads from behind heat shield. Remove string from HEGO multiplugs.
10. Remove catalyst assembly.
11. Remove and discard gasket.
12. Remove HEGO sensors from catalyst.

Installation

1. Clean catalyst, mating joint faces and HEGO sensors.
2. Install and tighten HEGO sensor to catalyst.
3. Apply proprietary exhaust sealant around clamp joints.
4. Install new gasket to exhaust manifold.
5. Position catalyst, secure string (x2) to HEGO multiplugs, feed sensor leads behind heat shield. Install catalyst to exhaust manifold.
6. Instal land tighten nuts (x3), catalyst to exhaust manifold.
7. Align centre pipe assembly to catalyst, tighten clamp nuts.
8. Remove string (x2), connect multiplugs (x2), HEGO sensors.
9. Install rear exhaust silencer (refer to Workshop Manual procedure 09.00.KA Silencer and Bypass Valve Assembly - Remove for Access and Refit).
10. Lower vehicle on ramp.

LH Front Upper Heated Exhaust Gas Oxygen (HEGO) Sensor - Renew

Repair Operation Time (ROT)		
Item		**Code**
Front Upper Heated Exhaust Gas Oxygen (HEGO) Sensor - Renew	LH	**03.14.EB**

Removal

1. Raise vehicle on ramp.

WARNING
THE EXHAUST SYSTEM WILL BE VERY HOT AFTER OPERATION. LET THE EXHAUST SYSTEM COOL BEFORE YOU DO WORK. IF YOU DO NOT, SEVERE INJURY CAN OCCUR.

2. Remove rear exhaust silencer (refer to Workshop Manual procedure 09.00.KA Silencer and Bypass Valve Assembly - Remove for Access and Refit).
3. Disconnect multiplugs (x2), HEGO sensors.
4. Secure sufficient lengths of string to HEGO sensor multiplugs for assembly purposes.
5. Loosen LH and RH clamp nuts, catalysts to centre pipes.
6. With assistance, manoeuvre exhaust centre pipe assembly rearwards to release from catalysts.
7. Remove nuts (x3), catalyst to exhaust manifold.
8. Release and support weight of LH catalyst from exhaust manifold.
9. Manoeuvre HEGO sensor leads and remove cable tie. Release HEGO sensor leads from behind heat shield. Remove string from HEGO multiplugs.
10. Remove catalyst assembly.
11. Remove and discard gasket.
12. Remove HEGO sensors from catalyst.

Installation

1. Clean catalyst, mating joint faces and HEGO sensors.
2. Install and tighten HEGO sensor to catalyst.
3. Apply proprietary exhaust sealant around clamp joints.
4. Install new gasket to exhaust manifold.
5. Position catalyst, secure string (x2) to HEGO multiplugs, feed sensor leads behind heat shield. Install catalyst to exhaust manifold.
6. Instal land tighten nuts (x3), catalyst to exhaust manifold.
7. Align centre pipe assembly to catalyst, tighten clamp nuts to.
8. Remove string (x2), connect multiplugs (x2), HEGO sensors.
9. Install rear exhaust silencer (refer to Workshop Manual procedure 09.00.KA Silencer and Bypass Valve Assembly - Remove for Access and Refit).
10. Lower vehicle on ramp.

RH Front Upper Heated Exhaust Gas Oxygen (HEGO) Sensor - Renew

Repair Operation Time (ROT)		
Item		**Code**
Front Upper Heated Exhaust Gas Oxygen (HEGO) Sensor - Renew	RH	**03.14.GB**

Removal

1. Raise vehicle on ramp.

WARNING
THE EXHAUST SYSTEM WILL BE VERY HOT AFTER OPERATION. LET THE EXHAUST SYSTEM COOL BEFORE YOU DO WORK. IF YOU DO NOT, SEVERE INJURY CAN OCCUR

2. Remove rear exhaust silencer (refer to Workshop Manual procedure 09.00.KA Silencer and Bypass Valve Assembly - Remove for Access and Refit).
3. Disconnect multiplugs (x2), HEGO sensors.
4. Secure sufficient lengths of string to HEGO sensor multiplugs for assembly purposes.
5. Loosen LH and RH clamp nuts, catalysts to centre pipes.
6. With assistance, manoeuvre exhaust centre pipe assembly rearwards to release from catalysts.
7. Remove nuts (x3), catalyst to exhaust manifold.
8. Release and support weight of LH catalyst from exhaust manifold.
9. Manoeuvre HEGO sensor leads and remove cable tie. Release HEGO sensor leads from behind heat shield. Remove string from HEGO multiplugs.
10. Remove catalyst assembly.
11. Remove and discard gasket.
12. Remove HEGO sensors from catalyst.

Installation

1. Clean catalyst, mating joint faces and HEGO sensors.
2. Install and tighten HEGO sensor to catalyst.
3. Apply proprietary exhaust sealant around clamp joints.
4. Install new gasket to exhaust manifold.
5. Position catalyst, secure string (x2) to HEGO multiplugs, feed sensor leads behind heat shield. Install catalyst to exhaust manifold.
6. Instal land tighten nuts (x3), catalyst to exhaust manifold.
7. Align centre pipe assembly to catalyst, tighten clamp nuts to.
8. Remove string (x2), connect multiplugs (x2), HEGO sensors.
9. Install rear exhaust silencer (refer to Workshop Manual procedure 09.00.KA Silencer and Bypass Valve Assembly - Remove for Access and Refit).
10. Lower vehicle on ramp.

RH Rear Lower Heated Exhaust Gas Oxygen (HEGO) Sensor - Renew

Repair Operation Time (ROT)	
Item	**Code**
Rear Lower Heated Exhaust Gas Oxygen (HEGO) Sensor - Renew	**03.14.JB**

Removal

1. Raise vehicle on ramp.

WARNING
THE EXHAUST SYSTEM WILL BE VERY HOT AFTER OPERATION. LET THE EXHAUST SYSTEM COOL BEFORE YOU DO WORK. IF YOU DO NOT, SEVERE INJURY CAN OCCUR

2. Remove rear exhaust silencer (refer to Workshop Manual procedure 09.00.KA Silencer and Bypass Valve Assembly - Remove for Access and Refit).
3. Disconnect multiplugs (x2), HEGO sensors.
4. Secure sufficient lengths of string to HEGO sensor multiplugs for assembly purposes.
5. Loosen LH and RH clamp nuts, catalysts to centre pipes.
6. With assistance, manoeuvre exhaust centre pipe assembly rearwards to release from catalysts.
7. Remove nuts (x3), catalyst to exhaust manifold.
8. Release and support weight of LH catalyst from exhaust manifold.
9. Manoeuvre HEGO sensor leads and remove cable tie. Release HEGO sensor leads from behind heat shield. Remove string from HEGO multiplugs.
10. Remove catalyst assembly.
11. Remove and discard gasket.
12. Remove HEGO sensors from catalyst.

Installation

1. Clean catalyst, mating joint faces and HEGO sensors.
2. Install and tighten HEGO sensor to catalyst.
3. Apply proprietary exhaust sealant around clamp joints.
4. Install new gasket to exhaust manifold.
5. Position catalyst, secure string (x2) to HEGO multiplugs, feed sensor leads behind heat shield. Install catalyst to exhaust manifold.
6. Instal land tighten nuts (x3), catalyst to exhaust manifold.
7. Align centre pipe assembly to catalyst, tighten clamp nuts to.
8. Remove string (x2), connect multiplugs (x2), HEGO sensors.
9. Install rear exhaust silencer (refer to Workshop Manual procedure 09.00.KA Silencer and Bypass Valve Assembly - Remove for Access and Refit).
10. Lower vehicle on ramp.

Left Side Powertrain Control Module (PCM) (Coupe Only) - Remove and Install

Repair Operation Time (ROT)	
Item	**Code**
Left Side Powertrain Control Module (PCM) (Coupe) - Remove and Install	**03.14.NA**

Remove

1. Disconnect the battery ground cable.
2. Remove the wheel and tyre. (refer to Workshop Manual procedure 04.04.EC - Wheel and Tyre)
3. Remove the six rear screws that attach the wheel-arch liner to the body.
4. Remove the rear screw that attaches the wheel-arch liner to the body.
5. Turn the steering fully to the right.
6. Move the wheel arch liner to get access to the Powertrain Control Module (PCM).
7. Disconnect the electrical connector from the direction indicator.
8. Release the four fir-tree clips that attach the wiring harness for the direction indicator and the screen wash system.
9. Release the two fir tree clips that attach the wiring harness for the PCM.
10. Remove the three bolts that attach the PCM bottom bracket and PCM to the PCM top bracket.
11. Disconnect the three electrical connectors from the PCM.
12. Remove the PCM.

Install

1. Put the PCM in position.
2. Connect the three electrical connectors to the PCM.
3. Align the PCM to the top bracket.
4. Align the bottom bracket to the PCM.
5. Install and tighten the three bolts that attach the PCM bottom bracket and PCM to the PCM top bracket.
6. Install the two fir tree clips that attach the wiring harness for the PCM.
7. Attach the four fir-tree clips that attach the wiring harness for the direction indicator and the screen wash system.
8. Connect the electrical connector to the direction indicator.
9. Put the wheel-arch liner into the correct position.
10. Install and tighten the rear screw that attaches the wheel-arch liner to the body.
11. Install and tighten the six rear screws that attach the wheel-arch liner to the body.
12. Move the steering to the centre position.
13. Connect the battery ground cable.
14. Install the wheel and tyre. (04.04.EC - Wheel and Tyre)
15. Connect AMDS.
16. Use AMDS to do a test of the PCM. (00.06.AD - AMDS Operation Check)

Left Side Powertrain Control Module (PCM) (Roadster Only) - Remove and Install

Repair Operation Time (ROT)	
Item	**Code**
Left Side Powertrain Control Module (PCM) (Roadster) - Remove and Install	**03.14.NA**

Remove

1. Disconnect the battery ground cable.
2. Lift the vehicle on a four-post lift.
3. Remove the centre undertray. (refer to Workshop Manual procedure 01.02.MB - Centre Undertray)
4. Lower the vehicle.
5. Lift the vehicle on a two-post lift.
6. Remove the wheel and tyre. (refer to Workshop Manual procedure 04.04.EC - Wheel and Tyre)
7. Remove the six rear screws that attach the wheel-arch liner to the body.
8. Remove the rear screw that attaches the wheel-arch liner to the body.
9. Turn the steering fully to the right.
10. Move the wheel-arch liner to get access to the Powertrain Control Module (PCM).
11. Disconnect the electrical connector from the direction indicator.
12. Release the four fir tree clips that attach the wiring harness for the direction indicator and the screen wash system.
13. Release the two fir tree clips that attach the wiring harness for the PCM.
14. Remove the three screws that attach the PCM bottom bracket and PCM to the PCM top bracket.
15. Disconnect the three electrical connectors from the PCM.
16. Remove the PCM.

Install

1. Put the PCM in position.
2. Connect the three electrical connectors to the PCM.
3. Align the PCM with the top bracket.
4. Align the bottom bracket with the PCM.
5. Install and tighten the three screws that attach the PCM bottom bracket and PCM to the PCM top bracket.
6. Install the two fir tree clips that attach the wiring harness for the PCM.
7. Attach the four fir tree clips that attach the wiring harness for the indicator and the screen wash system.
8. Connect the electrical connector to the indicator.
9. Put the wheel-arch liner into the correct position.
10. Install and tighten the rear screw that attaches the wheel-arch liner to the body.
11. Install and tighten the six rear screws that attach the wheel-arch liner to the body.
12. Install the centre undertray. (refer to Workshop Manual procedure 01.02.MB - Centre Undertray)
13. Install the wheel and tyre. (refer to Workshop Manual procedure 04.04.EC - Wheel and Tyre)
14. Move the steering to the centre position.
15. Connect the battery ground cable.

Engine (03.00)

Throttle Control (03.16)

Description

Motorised Throttles

The motorised throttle allows accurate control of the inlet air.

A throttle position sensor (TPS) is incorporated into the throttle unit. During normal engine run, TPS signals are used by the PCM to indicate power demand from the engine. If not already at the desired position, the PCM will drive the throttle motor to open or close the throttle by the required amount.

At idle, the throttle butterfly is almost closed and idle speed is controlled by small throttle movements.

The throttle butterfly is spring loaded to fail in the idle position. In the event of the throttle butterfly spring failing, air flow will allow the throttle butterflies to fail in the idle position.

No set-up procedure is required.

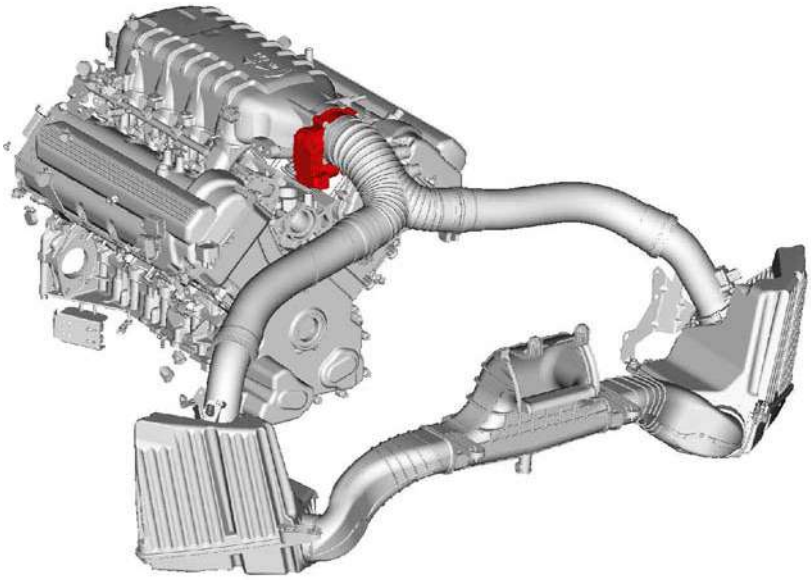

ASTON MARTIN
ASTON MARTIN

Engine System (03.00)

Foot Operated Control (03.18)

Maintenance

Throttle Pedal Assembly-Renew

Repair Operation Time (ROT)	
Item	**Code**
Throttle Pedal Assembly-Renew	**03.18.AC**

Removal

1. Remove drivers seat (see Workshop Manual procedure 01.10.AB Seat Assembly - Front - LH - Remove for Access and Refit).
2. Remove securing bolts (3) (see Figure 1).

Figure 1

3. With unit free, disconnect two connectors (see Figure 2).

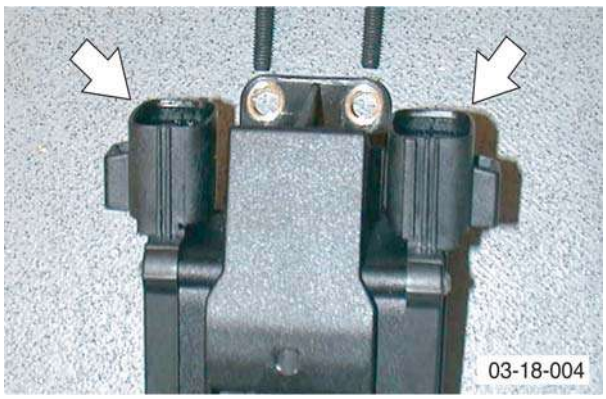

Figure 2

Installation

1. Connect two electrical connectors.
2. Position throttle unit and secure with three bolts.
3. Install drivers seat (see Workshop Manual procedure 01.10.AB Seat Assembly - Front - LH - Remove for Access and Refit).

ASTON MARTIN
ASTON MARTIN

Suspension (04.00)

Contents

Road Wheel Alignment (04.00) 4-0-2
Specifications 0-2
Maintenance 0-2
All Wheel Alignment 0-2
Front Suspension (04.01) 4-1-1
Description 1-1
Suspension Arms 1-1
Anti-roll Bar 1-1
Vertical link 1-1
Specifications 1-1
Symptoms 1-2
Maintenance 1-3
RH/LH Front Hub and Bearing Assembly - Renew 1-3
RH/LH Lower Front Suspension Arm Assembly - Renew 1-4
RH/LH Upper Front Suspension Arm Assembly - Renew 1-4
Front Anti-Roll Bar - Renew 1-5
Front Pair Anti-Roll Bar Bushing - Renew 1-5
RH/LH Front Anti-Roll Bar Link - Renew 1-5
RH/LH Front Hub Vertical Link - Renew 1-6
Front Suspension Sensor Assembly-Renew 1-7
Rear Suspension (04.02) 4-2-1
Description 2-1
Suspension Arms 2-1
Anti-roll Bar 2-1
Vertical Link 2-1
Specifications 2-2
Maintenance 2-2
RH/LH Rear Hub and Bearing Assembly-Renew 2-2
RH/LH Rear Lower Arm Assembly-Renew 2-2
RH/LH Upper Rear Arm Assembly-Renew 2-3
RH/LH Toe Control Rear Arm Assembly-Renew 2-3
Rear Anti-Roll Bar-Renew 2-3
Rear Pair-Anti-Roll Bar Bushing-Renew 2-4
RH/LH Rear Anti-Roll Bar Link-Renew 2-4
RH/LH Rear Hub Vertical Link-Renew 2-4
Rear Suspension Sensor Assembly-Renew 2-5
Shock Absorber System (04.03) 4-3-1
Description 3-1
Specifications 3-1
Maintenance 3-1
Front Spring and Damper Assembly-Pair-Renew 3-1
Front Spring-Pair-Renew 3-3
Front Damper-Pair-Renew 3-4
Rear Spring and Damper Assembly-Pair-Renew 3-5
Rear Spring-Pair-Renew 3-7
Rear Damper-Pair-Renew 3-9
Road Wheels and Tyres (04.04) 4-4-1
Specifications 4-1
USA Tyre Gradings 4-2
Tread Wear 4-2
Traction 4-2
Temperature 4-2
Maintenance 4-3
Safety 4-3
Tyre Replacement and Wheel Interchanging 4-3
Winter (Snow) tyres 4-4
Recommended Winter Wheel and Tyre Combination 4-4
Inspection and Verification 4-4
Tyre Wear 4-4
Tyre Damage 4-6
Repairs 4-7
Care of Alloy Road Wheels 4-7
Road Wheel Alignment 4-7
Road Wheel and Tyre Balance 4-8
Torque Tightening of Road Wheel Nuts 4-8
Tyre Pressure Sensing (Option) 4-9
Pressure Sensing with Winter Wheels and Tyres 4-9
Warnings 4-9
Display Unit 4-10
System Programming 4-10

Suspension (04.00)

Road Wheel Alignment (04.00)

Specifications

V8 Models up to 09MY (not SportsPack)

	Front	Rear
Toe (individual)	3′ (±2′)	10′ (+5′/-0′)
Total Toe	6′ (±4′)	20′ (+10′/-0′)
Camber	-30′ (±5′)	-105′ (-1° 45′) (±5′)
Cross Camber	0′ (±10′)	0′ (±10′)
Castor	5° (+0.5°/-0.25°)	N/A
Cross Castor	0° (±0.25°)	N/A
Normal Ride Height	37.5kg in each front seat, and a full fuel tank.	

V8 SportsPack Models from 8.5MY
All V8 Models from 09MY (4.7 Litre)

	Front	Rear
Toe (in)	-4′ (±2′)	10′ (+5′ / -0′)
Total Toe	-8′ (±4′)	20′ (+10′ / -0′)
Camber	-30′ (±5′)	-105′ (±5′)
Cross Camber	0′ (±10′)	0′ (±10′)
Caster	5° (+0.5° / -0.25°)	N/A
Cross Castor	0° (±0.25°)	N/A
Thrust Angle	N/A	0′ (+2.5′ / -2.5′)
Normal Ride Height	1x 75 kg (across the driver and passenger seats) + all fluids full + full fuel tank.	

The ride height is measured between the inboard and outboard arm height as tyre wear can affect the reading.

Check the tyre pressures before you do a check of the road wheel alignment.

	Front	Rear
Ride Height-Coupe	26mm (±10mm)	12mm (±10mm)
Ride Height-Roadster	21mm (±10mm	15mm (±10mm

Over time this vehicle's ride height will settle (up to 20mm). Therefore, as this vehicle ages it's ride height will tend to sit towards the lower end of the ride height tolerance band. This needs to be taken into account when checking vehicle ride height.

Maintenance

All Wheel Alignment

Repair Operation Time (ROT)	
Item	**Code**
All Wheel Alignment	**04.00.AD**

Refer to the geometry setup tool manufacture operating instructions.

Check vehicle geometry in the following order:

1. Caster Angle
2. Camber Angle
3. Toe

Adjustments to caster, camber and toe settings may impact each other. After checking / adjusting each setting, minor adjustments to caster, camber and toe may have to be made to reach the correct set up for the vehicle.

Both LH and RH Toe need to be adjusted when adjusting caster and camber.

Suspension (04.00)

Front Suspension (04.01)

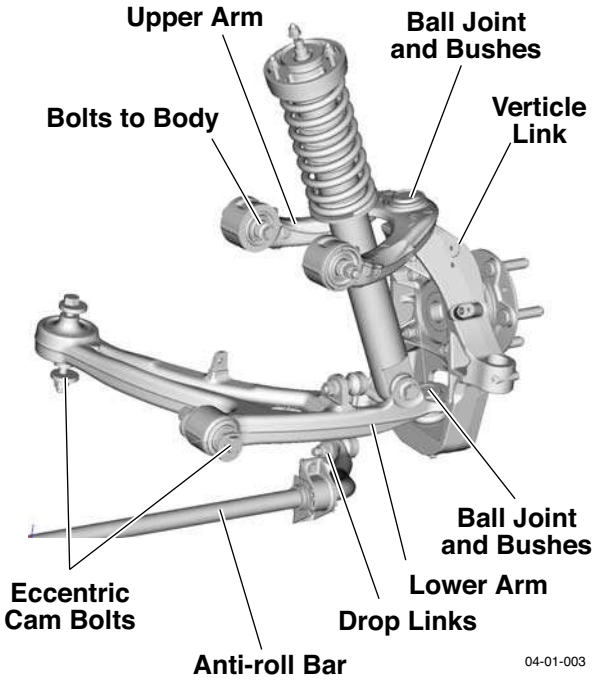

Description

Suspension Arms

The upper suspension arm is attached to the body structure. The lower suspension arm is attached to the front subframe.

Each upper suspension arm has a press-fit ball-joint, and two interleaved rubber bushes. Two bolts attach the upper suspension arm to the body structure.

Each lower suspension arm has a press fit ball-joint and metal-to-rubber bonded bushes which are attached to the front subframe by two eccentric cam bolts (Camber and castor settings).

Anti-roll Bar

The anti-roll bar, is attached to the subframe in two positions by rubber bushes and clamps. The outer ends of the anti-roll bar are attached to the lower suspension arms by drop links. The anti-roll bar provides the required stiffness to control body roll.

Vertical link

The Vertical link (Knuckle Joint) swivels on the upper and lower suspension arms via ball-joints, and carries the hub, a unit 3 wheel bearing (including the ABS encoder ring), the wheel speed sensor, the brake caliper, and the brake disc and shield. The position of the Vertical link is determined by the movement of the steering rack, which is connected to the Vertical link by the steering track rod.

Specifications

Torque Figures			
Description		Nm	lb. / ft.
Brake dust shield.		9	7
Bearing Assembly to the Vertical link.		55	41
Vertical Link to the Lower Suspension Arm.		90	66.5
Vertical Link to the Upper Suspension Arm.		90	66.5
Track-rod End Lock Nut.		70	52
Vehicle Ride Height Sensor.	M8	22.5	17
	M5	9	7
Anti-roll Bar Link Nuts		110	81.5
Anti-roll Bar Mounting Bolts		22.5	17
Torque bolt 1, then bolt 2, then bolt 1 again (to allow for rubber compression)			
Torque the following suspension fixings with the vehicle at normal ride height			
Lower Suspension Arm front bush to the Subframe	M14	185	137
Lower Suspension Arm rear bush to the Subframe.	M12	115	85
Upper Suspension Arm to the Front Structure		115	85
Spring and Damper Bolts	Top	22.5	17
	Lower	175	129.5

Normal ride height 2 x 37.5kg in front seats (37.5kg in each seat) plus a full fuel tank.

Symptoms

Symptom	Possible Cause	Action
Crabbing	Front or rear suspension components/road wheel alignment	Inspect front and rear suspension systems.
		Check / adjust road wheel alignment
	Drive axle damaged	New drive axle.
Front 'Bottoming' or Riding Low	Spring(s)	Check ride height.
	Dampers	Check dampers.
Drift/Pull	Unequal tyre pressure	Check / adjust tyre pressures.
		Inspect tyre for excessive wear.
	Incorrect road wheel alignment	Check / adjust road wheel alignment.
	Tyres	Check / adjust tyre pressures. Inspect tyre for excessive wear.
	Unevenly loaded or overloaded vehicle	Notify customer of incorrect vehicle loading.
	Damaged steering components	Check steering system for mechanical or hydraulic bias.
	Brake drag	Check brakes.
		Check steering system for mechanical or hydraulic bias.
Rough Ride	Spring(s)	Check springs.
	Shock absorber(s)	Check shock absorbers.
Incorrect Tyre Wear	Incorrect tyre pressure	Check and adjust tyre pressure. Inspect tyre for excessive wear.
	Excessive front or rear Toe (rapid inner or outer edge wear)	Check and adjust road wheel alignment (Refer to 'Road Wheel Alignment (04.00)', page 4-0-2).
	Excessive negative or positive camber (rapid or outer edge wear)	Check and adjust road wheel alignment (Refer to 'Road Wheel Alignment (04.00)', page 4-0-2).
	Tyres out of balance (tyres cupped or dished)	Balance tyres.
'Shimmy' or 'Road Wheel Tramp'	Loose road wheel nut(s)	Check and tighten road wheel nuts to specification.
	Loose front suspension	Check and tighten suspension fixings to specification.
	Front road wheel bearing(s)	Check road wheel bearings.
	Road wheel / tyres	Check road wheels / tyres.
	Shock absorber(s)	Check shock absorbers.
	Spring(s)	Check springs.
	Loose, worn or damaged ball-joint(s)	Check ball-joint(s).
	Loose, worn or damaged steering components	Check components.
	Front road wheel alignment	Check and adjust road wheel alignment (Refer to 'Road Wheel Alignment (04.00)', page 4-0-2).
	Worn or damaged suspension bushes	Check suspension bushes
Poor 'Return ability' of Steering	ball-joints	Check ball-joint(s).
	Steering components	Check for excessive friction in steering system.
		Check tyre pressures
Steering Wheel Off-Centre	Unequal front or rear Toe settings	Check and adjust road wheel alignment.
	Steering components	Check and install new components as required.
Sway or Roll	Overloaded, unevenly or incorrectly loaded vehicle	Notify customer of incorrect vehicle loading
	Loose road wheel nut(s)	Check. Tighten road wheel nut(s) to specification
	Spring(s)	Check. Install new springs as required.
	Shock absorber(s)	Check. Install new shock absorbers as required.
	Loose front stabilizer bar or rear stabilizer bar	Check. Tighten anti-roll bar to specification.

Symptom	Possible Cause	Action
Vibration/Noise	Tyres/road wheel	Check. Install new components as required.
	Road wheel bearing assemblies	
	Brake components	
	Suspension components	
	Spring and damper units	
	Steering components	
Vehicle Leans to One Side	Unevenly loaded or overloaded vehicle	Notify customer of incorrect vehicle loading.
	Front or rear suspension components	Inspect front and rear suspension systems.
	Spring and damper assemblies	Check spring and damper assemblies.
	Incorrect ride height. Lateral tilt out of specification	Check ride height.
	Suspension bushes not torqued at ride height	Check / adjust suspension bushes torque.
Wander	Unevenly loaded or overloaded vehicle	Notify customer of incorrect vehicle loading.
	ball-joint(s)	Check ball-joint(s).
	Front road wheel bearing(s)	Check road wheel bearings.
	Loose, worn or damaged suspension components	Check suspension components.
	Loose suspension fasteners	Check and tighten suspension fasteners to specification.
	Steering components	Check steering components for wear and / or free play.
	Road wheel alignment (excessive total front Toe-out)	Check / adjust road wheel alignment (Refer to 'Road Wheel Alignment (04.00)', page 4-0-2).

Maintenance

Caution
Be careful with the suspension components. The suspension components can be damaged if hit, for example, with a metal faced hammer.

RH/LH Front Hub and Bearing Assembly - Renew

Repair Operation Time (ROT)		
Item		**Code**
Front Hub and Bearing Assembly-Renew	RH	**04.01.AA**
Front Hub and Bearing Assembly-Renew	LH	**04.01.AB**

Removal

1. Raise vehicle on ramp.
2. Remove road wheel(s).
3. Release pad wear sensor harness clips (x2) from upper suspension arm.
4. Disconnect multiplug from wheel speed sensor.
5. Ease caliper pistons to release pads.
6. Remove caliper Allen bolts (x2), release caliper and tie aside.
7. Remove retaining screws (x2) and disc.
8. Remove Torx securing wheel speed sensor to vertical link, remove sensor.
9. Remove Allen bolts (x4) securing hub bearing assembly to vertical link.
10. Release/remove hub bearing assembly from vertical link.

Installation

1. Clean hub bearing carrier and mating face on vertical link.
2. Install hub bearing assembly, install and torque tighten Allen bolts (x4).
3. Clean wheel speed sensor.
4. Install wheel speed sensor, install and torque tighten Torx screw.
5. Clean disc.
6. Install disc, install and torque tighten retaining screws (x2).
7. Connect multiplug to wheel speed sensor.
8. Install caliper, install and torque tighten Allen bolts (x2).
9. Install pad wear sensor harness clips (x2) in upper suspension arm.
10. Pump brake pedal.
11. Install road wheel(s).
12. Lower vehicle on ramp.

RH/LH Lower Front Suspension Arm Assembly - Renew

Repair Operation Time (ROT)		
Item		**Code**
Lower Front Suspension Arm Assembly-Renew	RH	**04.01.AC**
Lower Front Suspension Arm Assembly-Renew	LH	**04.01.AD**

Removal

1. Raise vehicle on ramp.
2. Remove road wheel(s).
3. Remove nut/washer securing anti-roll bar link to lower suspension, release link from arm.
4. Remove nut/bolt securing damper to lower suspension arm, release damper from mounting.
5. Remove nut securing lower suspension arm ball-joint to vertical link.
6. Install tool (204 - 523) ball-joint remover and release lower suspension ball-joint from vertical link.

Caution
Take care not to damage the ball-joint rubber boot when using the special tool.

7. Mark fitted positions of cam washers on lower suspension arm inner fixings to aid assembly purpose.
8. Remove nuts/bolts, cam washers (x2), securing lower suspension arm to subframe.
9. Release/remove lower suspension arm from subframe and vertical link.

Installation

1. Clean lower suspension arm and mating faces on vertical link and subframe
2. Install lower suspension arm in subframe.
3. Install cam washers, bolts/nuts (x2). Align cam washers to marks. Do not torque tighten at this stage.
4. Install lower suspension arm ball-joint in vertical link. Install and torque tighten nut.
5. Align damper to mounting, install bolt/nut. Do not torque tighten at this stage.
6. Install anti-roll bar link, install washer/nut. Do not torque tighten at this stage.
7. Final tightening of suspension components must be carried out with the suspension arms at normal ride height.
8. Install road wheel(s).
9. Lower vehicle on ramp.
10. Torque tighten suspension nuts/bolts.
11. 4 wheel alignment - check/adjust (see Workshop Manual procedure 04.00.AD 4 Wheel Alignment - Check and Adjust).

RH/LH Upper Front Suspension Arm Assembly - Renew

Repair Operation Time (ROT)		
Item		**Code**
Upper Front Suspension Arm Assembly-Renew	RH	**04.01.AE**
Upper Front Suspension Arm Assembly-Renew	LH	**04.01.AF**

Removal

1. Raise the vehicle and make it safe.
2. Remove the road wheel for the applicable suspension arm.
3. Disconnect the electrical connector from the ABS sensor.
4. Release the three sensor harness clips from the upper suspension arm and the vertical link.
5. Remove the two Torx screws that attach the engine cross brace to the mounting.
6. Remove the two nuts and two bolts that attach the upper suspension arm to the body.
7. Release the suspension arm from the body.
8. Remove the three nuts that attach the damper top mounting.
9. Remove the mounting for the engine cross brace.
10. Remove the nut and bolt that attaches the damper to its lower mounting.
11. Remove spring/damper assembly.
12. Remove the nut that attaches the ball-joint for the upper suspension arm to the vertical link.
13. Install tool (204 - 523 - ball-joint remover) and release the ball-joint from vertical link.

Caution
Be carefulthat you do not damage the ball-joint rubber boot when you use the special tool.

14. Remove the upper suspension arm assembly.

Installation

1. Clean the upper suspension arm and the mating faces on the body and the vertical link.
2. Install the upper suspension arm to vertical link. Install the nut but do not torque tighten at this step.
3. Install spring/damper assembly.
4. Install the cross-brace support.
5. Install the three nuts but do not torque tighten at this step.
6. Align the damper to the lower mounting, install bolt/nut. Do not torque tighten at this step.
7. Put the upper suspension arm in positionon the body.
8. Install bolts and nuts but do not torque tighten at this step.
9. Connect the electrical connector to the ABS sensor.

10. Install the three sensor harness clips in the upper suspension and the vertical link.

Caution

Do not fully tighten the nuts and bolts on the suspension components. Only tighten the nuts and bolts of the suspension components when the suspension arms are at their usual ride-height and you have adjusted the geometry. If you do not do this, the suspension bushes will have too much stress when the suspension is moved to its maximum upward travel.

11. Install the road wheel.
12. Lower the vehicle on ramp.
13. Do an all-wheel alignment procedure (Refer to 'All Wheel Alignment', page 4-0-2).
14. Torque tighten suspension nuts and bolts.
15. Align engine cross brace to support, install and torque tighten Torx bolts (x2).

Front Anti-Roll Bar - Renew

Repair Operation Time (ROT)	
Item	**Code**
Front Anti-Roll Bar-Renew	**04.01.BA**

Removal

1. Raise vehicle on ramp.
2. Remove road wheel(s).
3. Remove front undertray (see Workshop Manual procedure 01.02.NB Undertray - Front - Renew).
4. Remove nuts and washers (x2), anti-roll bar to drop links.
5. Remove bolts (x4), straps (x2).
6. Remove anti-roll bar.
7. Remove bushes (x2) from anti-roll bar.

Installation

1. Clean anti-roll bar, bushes and straps.
2. Install bushes (x2) on anti-roll bar.
3. Position anti-roll bar, align bushes (x2), install straps (x2), install bolts (x4). Do not torque tighten.
4. Install drop links to anti-roll bar, install nuts/washers (x2). Do not torque tighten.

Caution

Do not fully tighten the nuts and bolts on the suspension components. Only tighten the nuts and bolts of the suspension components when the suspension arms are at their usual ride-height and you have adjusted the geometry. If you do not do this, the suspension bushes will have too much stress when the suspension is moved to its maximum upward travel.

5. Install front undertray (see Workshop Manual procedure 01.02.NB Undertray - Front - Renew).
6. Lower vehicle in ramp.
7. Torque tighten link nuts (x4).
8. Torque tighten bush strap bolts (x4).

Front Pair Anti-Roll Bar Bushing - Renew

Repair Operation Time (ROT)	
Item	**Code**
Front Pair Anti-Roll Bar Bushing-Renew	**04.01.BB**

Removal

1. Raise vehicle on ramp.
2. Remove front undertray (see Workshop Manual procedure 01.02.NB Undertray - Front - Renew).
3. Remove bolts (x4) securing anti-roll bar bush straps to subframe.
4. Release/remove bush straps.
5. Remove bushes (x2) from anti-roll bar.

Installation

1. Clean anti-roll bar and bush straps.
2. Install bushes onto anti-roll bar.
3. Install bush straps (x2), install bolts (x4). Do not torque tighten at this stage.

Caution

Do not fully tighten the nuts and bolts on the suspension components. Only tighten the nuts and bolts of the suspension components when the suspension arms are at their usual ride-height and you have adjusted the geometry. If you do not do this, the suspension bushes will have too much stress when the suspension is moved to its maximum upward travel.

4. Install front undertray (see Workshop Manual procedure 01.02.NB Undertray - Front - Renew).
5. Lower vehicle on ramp.
6. Torque tighten all suspension nuts/bolts.

RH/LH Front Anti-Roll Bar Link - Renew

Repair Operation Time (ROT)		
Item		**Code**
Front Anti-Roll Bar link-Renew	RH	**04.01.CB**
Front Anti-Roll Bar link-Renew	LH	**04.01.DB**

Removal

1. Raise vehicle on ramp.
2. Remove road wheel(s).
3. Remove nut/bolt securing damper to lower suspension arm.
4. Release damper from mounting sufficient to remove top anti-roll bar link.
5. Remove nuts and washers (x2), link to lower suspension arm and anti-roll bar.
6. Release and remove anti-roll bar link.

Installation

1. Clean anti-roll bar link and mating faces on lower suspension arm and anti-roll bar.
2. Install link to anti-roll bar and lower suspension arm.
3. Install washers (x2) and nuts (x2). Do not torque tighten.

4. Align damper to lower mounting, install bolt/nut. Do not torque tighten at this stage.

Caution

Do not fully tighten the nuts and bolts on the suspension components. Only tighten the nuts and bolts of the suspension components when the suspension arms are at their usual ride-height and you have adjusted the geometry. If you do not do this, the suspension bushes will have too much stress when the suspension is moved to its maximum upward travel.

5. Install road wheel(s).
6. Lower vehicle in ramp.
7. Torque tighten link nuts (x2).
8. Torque tighten lower damper bolt.

RH/LH Front Hub Vertical Link - Renew

Repair Operation Time (ROT)		
Item		**Code**
Front Hub Vertical Link-Renew	RH	**04.01.CB**
Front Hub Vertical Link-Renew	LH	**04.01.DB**

Removal

1. Raise vehicle on ramp.
2. Remove road wheel(s).
3. Install tool (204 - 524) on front hub, install and tighten wheel nuts.
4. Lower vehicle to raise suspension sufficient to install ball-joint removing tool (204 - 523).
5. Remove track rod end from vertical link (using tool 204-523).
6. Remove pad wear sensors.
7. Remove ABS sensor multiplug.
8. Remove Torx screw securing ABS sensor, remove sensor.
9. Ease caliper pistons to release pads.
10. Remove caliper Allen bolts (x2), release caliper and tie caliper aside.
11. Remove brake disc Torx screws (x2), remove disc.
12. Release lower suspension arm from vertical link (using tool 204-523).
13. Release vertical link from upper suspension arm (using tool 204-523). Remove vertical link assembly.
14. Remove Allen bolts (x4) securing hub bearing assembly to vertical link.
15. Release/remove hub bearing assembly from vertical link.
16. Remove Torx screws (x4), disc shield to vertical link. Remove shield.

Installation

1. Clean vertical link, hub bearing carrier and disc shield.
2. Position disc shield to vertical link, install and torque tighten Torx screws (x4).
3. Install hub bearing assembly in vertical link, install Allen bolts (x4) and tighten.
4. Install vertical link assembly to upper suspension arm. Install and torque tighten nut.
5. Install vertical link in lower suspension arm. Install and torque tighten nut.

Caution

Do not fully tighten the nuts and bolts on the suspension components. Only tighten the nuts and bolts of the suspension components when the suspension arms are at their usual ride-height and you have adjusted the geometry. If you do not do this, the suspension bushes will have too much stress when the suspension is moved to its maximum upward travel.

6. Clean brake disc.
7. Install brake disc. Install and torque tighten Torx screws (x2).

8. Install caliper and Allen bolts (x2) and tighten.
9. Install ABS speed sensor, install and torque tighten.
10. Install sensor multiplug.
11. Install pad wear sensors.
12. Install track rod end to vertical link, install and torque tighten nut.
13. Install road wheel(s).
14. Pump brake pedal.
15. Lower vehicle on ramp.
16. 4 wheel alignment - check/adjust (see Workshop Manual procedure 04.00.AD 4 Wheel Alignment - Check & Adjust).

Front Suspension Sensor Assembly-Renew

Repair Operation Time (ROT)	
Item	**Code**
Front Suspension Sensor Assembly-Renew	**17.04.BB**

Removal

1. Raise vehicle on ramp
2. Remove nut/bolt securing ride height sensor link to lower suspension arm (see Figure 1).

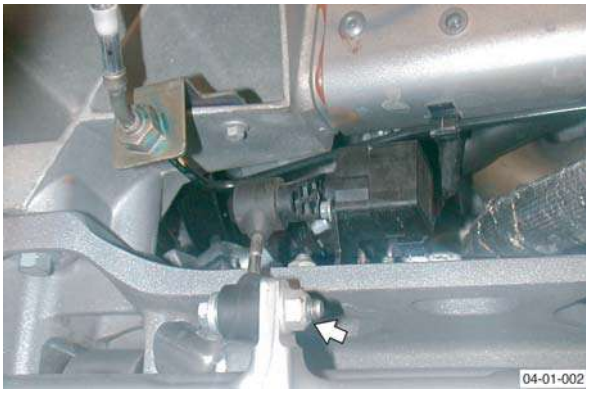

Figure 1

3. Remove nut/Torx bolt, ride height sensor to subframe.
4. Disconnect ride height sensor multiplug.
5. Remove bolts (x2) securing sensor to sensor bracket.

Installation

1. Align sensor to bracket and install bolts (x2).
2. Connect ride height sensor multiplug.
3. Position sensor to subframe, install and torque tighten nut/Torx bolt.
4. Align sensor link to lower suspension arm, install and torque tighten nut/bolt.
5. Lower vehicle on ramp.

Suspension (04.00)

Rear Suspension (04.02)

Description

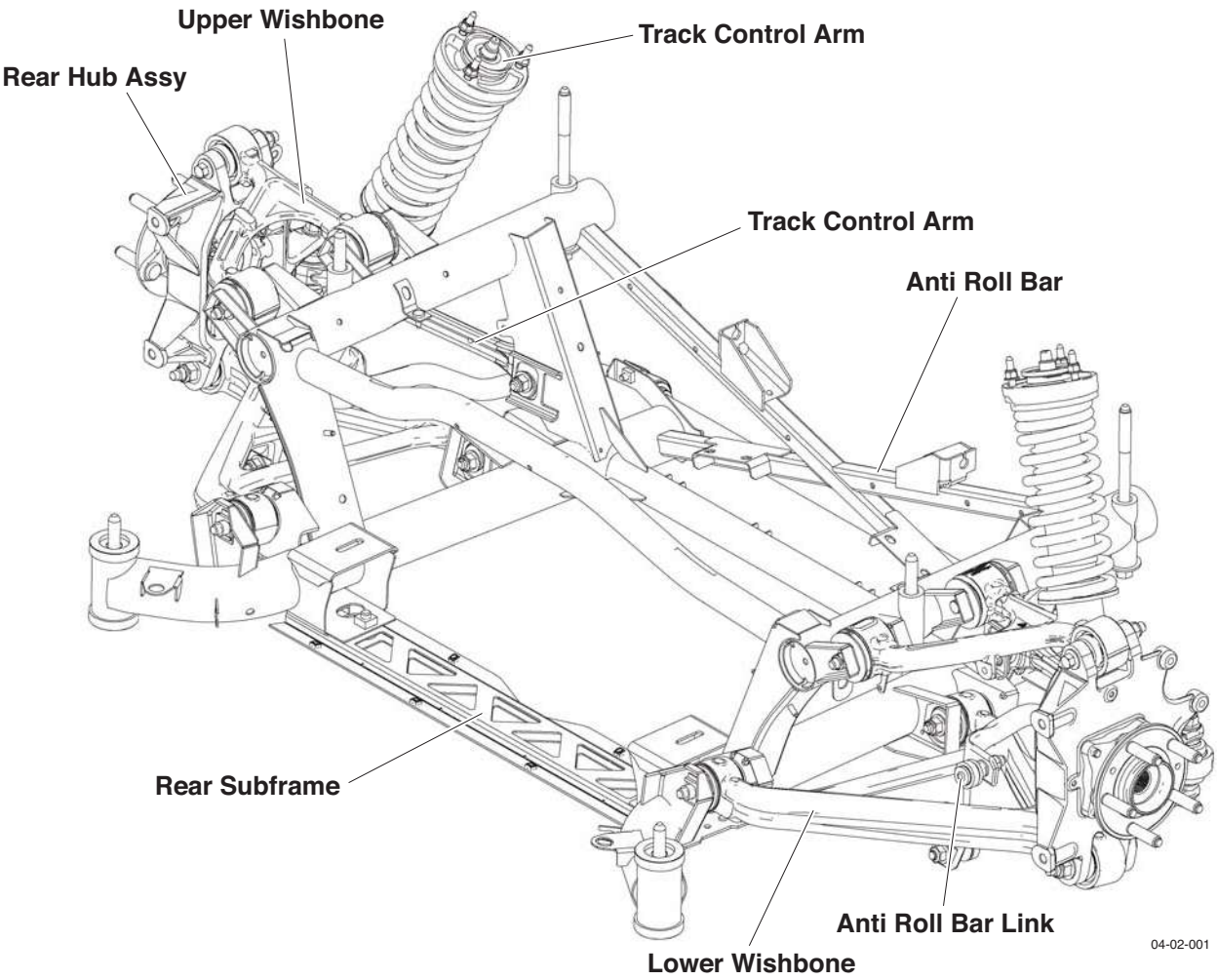

Suspension Arms

The upper suspension arms are each installed with a press-fit ball joint, and two interleaved rubber bushes. Two bolts attach each upper suspension arm to the rear subframe.

The lower suspension arms each have press fit ball joints installed and metal-to-rubber bonded bushes which are attach to the rear subframe by two eccentric cam bolts.

The camber setting is adjusted by rotating the lower suspension arm rear eccentric cam bolt.

Anti-roll Bar

An anti-roll bar, mounted on the rear subframe connects to the LH and RH lower suspension arms via drop links. The drop links, with a ball joint at either end, transmit vertical movement of the rear suspension to the anti-roll bar, minimising body roll.

Vertical Link

The vertical link carries the hub, the cartridge wheel bearing, the ABS rotor, the wheel speed sensor, the brake caliper, the hand brake caliper and the brake disc and shield.

A toe control (track-rod) arm secures the rear of the vertical link to the subframe. The toe control arm is adjustable, on an eccentric cam, to alter the rear road wheel toe alignment.

Specifications

Torque Figures			
Description		Nm	lb. / ft.
Brake Dust Shield.		9	7
Bearing Assembly to the Vertical link.		50	37
Halfshaft Nut		300	221.5
Spring and Damper Bracket Mounting		75-80	55.5-59.5
Spring and Damper Top Mounting to Bracket		22.5	17
Spring and Damper Lower Mounting		175	129.5
Track rod Arm to Vertical Link		115	85
Anti-roll Bar Link		110	81.5
Anti-roll Bar Mounting Bolts		22.5	17
Torque bolt 1, then bolt 2, then bolt 1 again (to allow for rubber compression)			
Ride Height Sensor	M8	22.5	17
Torque the following suspension fixings with the vehicle at normal ride height			
Vertical Link to the Lower Suspension Arm.		175	129.5
Vertical Link to the Upper Suspension Arm.		115	85
Lower Suspension Arm to the Subframe.		115	85
Upper Suspension Arm to the Subframe		115	85
Track-Rod Arm to Subframe		115	85

Normal ride height: 2 x 37.5kg in front seats (37.5kg in each seat) plus a full fuel tank.

Maintenance

RH/LH Rear Hub and Bearing Assembly-Renew

Repair Operation Time (ROT)		
Item		**Code**
Rear Hub and Bearing Assembly-Renew	RH	**04.02.AA**
Rear Hub and Bearing Assembly-Renew	LH	**04.02.AB**

Removal

1. Raise vehicle on ramp.
2. Remove road wheel(s).
3. Remove RH/LH rear driveshaft (see Workshop Manual procedure 05.05.BB/05.05.AB Drive Shaft Assembly - RH/LH - Renew).
4. Ease caliper pistons to release pads.
5. Remove caliper Allen bolts (x2) release caliper and tie aside.
6. Remove handbrake caliper bolts (x2) and tie caliper aside.
7. Remove brake disc Torx screws (x2), remove disc.
8. Disconnect multiplug from wheel speed sensor.
9. Remove Torx securing wheel speed sensor to vertical link, remove sensor.
10. Remove Allen bolts (x4) securing hub bearing assembly in vertical link.
11. Release/remove hub bearing assembly from vertical link.

Installation

1. Clean vertical link and mating face on hub bearing carrier.
2. Install hub bearing assembly. Install and torque tighten Allen bolts (x4).
3. Clean wheel speed sensor.
4. Install wheel speed sensor, install and torque tighten Torx screw.
5. Connect multiplug to wheel sped sensor.
6. Clean disc.
7. Install disc, install and torque tighten Torx screws (x2).
8. Install caliper, install and torque tighten Allen bolts (x2).
9. Install handbrake caliper, install and torque tighten retaining bolts (x2).
10. Install RH/LH driveshaft (see Workshop Manual procedure 05.05.BB/05.05.AB Drive Shaft Assembly - RH/LH - Renew).
11. Pump brake pedal.
12. Install road wheel(s).
13. Lower vehicle on ramp.

RH/LH Rear Lower Arm Assembly-Renew

Repair Operation Time (ROT)		
Item		**Code**
Rear Lower Arm Assembly-Renew	RH	**04.02.AC**
Rear Lower Arm Assembly-Renew	LH	**04.02.AD**

Removal

1. Raise vehicle on ramp.
2. Remove road wheel(s).
3. Remove nut, anti-roll bar link to lower suspension arm. Release link.
4. Remove bolt securing damper to lower suspension arm.
5. Remove bolt and nut/bolt, securing lower suspension arm to subframe.
6. Remove nut/bolt securing lower suspension arm to vertical link.
7. Release/remove lower suspension arm from subframe and vertical link.

Installation

1. Clean lower suspension arm and mating faces on vertical link, subframe, damper and anti-roll bar link.
2. Install lower suspension arm to subframe and vertical link.

3. Install bolt and bolts/nuts (x2), lower suspension arm to subframe and vertical link. Do not torque tighten at this stage.
4. Align damper to lower suspension arm, install bolt. Do not torque tighten at this stage.
5. Align anti-roll bar link to lower suspension arm, install nut. Do not torque tighten at this stage.

Caution

Final tightening of suspension components must be carried out with the suspension arms at normal ride height. Failure to do this will over stress the suspension bushes when the suspension is deflected to maximum upward travel.

6. Install road wheel(s).
7. Lower vehicle on ramp.
8. Torque tighten suspension nuts/bolts.
9. 4 wheel alignment - check/adjust (see Workshop Manual procedure 04.00.AD 4 Wheel Alignment - Check and Adjust).

RH/LH Upper Rear Arm Assembly-Renew

Repair Operation Time (ROT)		
Item		**Code**
Upper Rear Arm Assembly-Renew	RH	**04.02.AE**
Upper Rear Arm Assembly-Renew	LH	**04.02.AF**

Removal

1. Raise vehicle on ramp.
2. Remove road wheel(s).
3. Remove nuts/bolts (x2), upper suspension arm to subframe.
4. Remove nut/bolt securing upper suspension arm to vertical link.
5. Release and remove upper suspension arm assembly.

Installation

1. Clean upper suspension arm and mating faces on subframe and vertical link.
2. Install upper suspension arm in subframe.
3. Install bolts/nuts (x2), upper suspension arm to subframe. Do not torque tighten at this stage.
4. Install upper suspension arm in vertical link, install bolt/nut. Do not torque tighten at this stage.

Caution

Final tightening of suspension components must be carried out with the suspension arms at normal ride height. Failure to do this will over stress the suspension bushes when the suspension is deflected to maximum upward travel.

5. Install road wheel(s).
6. Lower vehicle on ramp.
7. Torque tighten nuts/bolts, upper suspension arm to vertical link and subframe.

RH/LH Toe Control Rear Arm Assembly-Renew

Repair Operation Time (ROT)		
Item		**Code**
Toe Control Rear Arm Assembly-Renew	RH	**04.02.AG**
Toe Control Rear Arm Assembly-Renew	LH	**04.02.AH**

Removal

1. Raise vehicle on ramp.
2. Remove road wheel(s).
3. Release ABS sensor harness clips (x2) from toe control arm.
4. Remove nut/bolt securing toe control arm to subframe.
5. Remove nut/bolt securing toe control arm to vertical link.
6. Release/remove toe control arm.

Installation

1. Clean toe control arm and mating faces on vertical link and subframe.
2. Install toe control arm in vertical link and subframe.
3. Install bolts/nuts (x2). toe control arm to vertical link and subframe. Do not torque tighten at this stage.
4. Install ABS sensor harness clips in toe control arm.

Caution

Final tightening of suspension components must be carried out with the suspension arms at normal ride height. Failure to do this will over stress the suspension bushes when the suspension is deflected to maximum upward travel.

5. Install road wheel(s).
6. Lower vehicle on ramp.
7. 4 wheel alignment - check/adjust(see Workshop Manual procedure 04.00.AD 4 Wheel Alignment - Check and Adjust).

Rear Anti-Roll Bar-Renew

Repair Operation Time (ROT)	
Item	**Code**
Rear Anti-Roll Bar-Renew	**04.02.BB**

Removal

1. Raise vehicle on ramp.
2. Remove rear undertray (see Workshop Manual procedure 01.02.PB Undertray - Rear - Renew).
3. Remove nuts (x2), anti-roll bar links to lower arms.
4. Remove bolts (x4), bush straps (x2), anti-roll bar to subframe.
5. Remove anti-roll bar. Note cut-off section at top.
6. Remove bushes (x2) from anti-roll bar.
7. Remove nuts (x2), washers (x2), remove links from anti-roll bar.

Installation

1. Clean anti-roll bar, bushes, bush straps and links.
2. Install links (x2), to anti-roll bar. Install washers (x2) and nuts (x2). Do not torque tighten.
3. Install bushes (x2) on anti-roll bar.
4. Position anti-roll bar, align bushes (x2), install straps (x2), install bolts (x4). Do not torque tighten.
5. Position anti-roll bar drop links to lower arms, install nuts (x2). Do not torque tighten.

Caution

Final tightening of suspension components must be carried out with the suspension arms at normal ride height. Failure to do this will over stress the suspension bushes when the suspension is deflected to maximum upward travel.

6. Install rear undertray (see Workshop Manual procedure 01.02.PB Undertray - Rear - Renew).
7. Lower vehicle on ramp.
8. Torque tighten link nuts (x4).
9. Torque tighten bush strap bolts (x4).

Rear Pair-Anti-Roll Bar Bushing-Renew

Repair Operation Time (ROT)	
Item	**Code**
Rear Anti-Roll Bar Bushing-Renew	**04.02.BC**

Removal

1. Raise vehicle on ramp.
2. Remove rear undertray(see Workshop Manual procedure01.02.PB Undertray - Rear - Renew).
3. Remove bolts (x4) securing anti-roll bar bush straps (x2) to subframe.
4. Release/remove bush straps.
5. Remove bushes (x2) from anti-roll bar.

Installation

1. Clean anti-roll bar and bush straps.
2. Install bushes onto anti-roll bar.
3. Install bush straps (x2), install bolts (x4). Do not torque tighten at this stage.

Caution

Final tightening of suspension components must be carried out with the suspension arms at normal ride height. Failure to do this will over stress the suspension bushes when the suspension is deflected to maximum upward travel.

4. Install rear undertray(see Workshop Manual procedure 01.02.PB Undertray - Rear - Renew).
5. Lower vehicle on ramp.
6. Torque tighten all suspension nuts/bolts.

RH/LH Rear Anti-Roll Bar Link-Renew

Repair Operation Time (ROT)		
Item		**Code**
Rear Anti-Roll Bar Link-Renew	RH	**04.02.BD**
Rear Anti-Roll Bar Link-Renew	LH	**04.02.BE**

Removal

1. Raise vehicle on ramp.
1. Remove nut, collect washer, link to anti-roll bar.
1. Remove nut, link to lower suspension arm. Remove link.

Installation

1. Clean link and mating faces on anti-roll bar and lower suspension arm.
2. Install link to anti-roll bar, install washer and nut. Do not torque tighten at this stage.
3. Position link to lower suspension arm, install nut). Do not torque tighten at this stage.

Caution

Final tightening of suspension components must be carried out with the suspension arms at normal ride height. Failure to do this will over stress the suspension bushes when the suspension is deflected to maximum upward travel.

4. Lower vehicle on ramp.
5. Torque tighten link nuts (x2).

RH/LH Rear Hub Vertical Link-Renew

Repair Operation Time (ROT)		
Item		**Code**
Rear Hub Vertical Link-Renew	RH	**04.02.HB**
Rear Hub Vertical Link-Renew	LH	**04.02.GB**

Removal

1. Raise vehicle on ramp.
2. Remove road wheel/s
3. With assistance, remove rear hub nut.
4. Remove nut/bolt, securing toe rod to vertical link, release toe rod.
5. Disconnect ABS sensor multiplug.
6. Remove Torx screw securing ABS sensor, remove sensor
7. Ease caliper pistons to release pads.
8. Remove caliper Allen bolts (x2) release caliper and tie aside.
9. Remove handbrake caliper bolts (x2) and tie caliper aside.
10. Remove brake disc Torx screws (x2) remove disc.
11. Remove nut/bolt securing lower suspension arm to vertical link.
12. Remove nut/bolt securing vertical link to upper suspension arm.
13. Release vertical link from driveshaft, remove vertical link.

14. Tie driveshaft aside.
15. Remove Allen bolts (x4) securing hub bearing assembly in vertical link.
16. Release/remove hub bearing assembly from vertical link.
17. Remove Torx screws (x4) securing disc shield to vertical link.

Installation

1. Clean vertical link, disc shield and hub bearing carrier.
2. Install disc shield to vertical link, install and torque tighten Torx screws (x4).
3. Install hub bearing assembly in vertical link. Install and tighten Allen bolts.
4. Release driveshaft.
5. Align to driveshaft, install vertical link to upper suspension arm. Install bolt/nut. Do not torque tighten at this stage.
6. Align vertical link to lower suspension arm. Install bolt/nut. Do not torque tighten at this stage.

Caution

Final tightening of suspension components must be carried out with the suspension arms at normal ride height. Failure to do this will over stress the suspension bushes when the suspension is deflected to maximum upward travel.

7. Install hub nut. Do not torque tighten at this stage.
8. Clean brake disc.
9. Install disc and Torx screws (x2) and tighten Torx screws.
10. Install caliper and Allen bolts (x2) and tighten to.
11. Install handbrake caliper and retaining bolts (x2), tighten bolts.
12. Install ABS speed sensor, install and torque tighten Torx screw.
13. Install ABS sensor multiplug.
14. Install toe rod to vertical link, install bolt/nut. Do not torque tighten at this stage.
15. Install road wheel/s
16. Pump brake pedal.
17. Lower vehicle on ramp.
18. With assistance, torque tighten rear hub nut.
19. Correctly torque tighten all suspension nuts/bolts.
20. 4 wheel alignment - check/adjust(see Workshop Manual procedure 04.00.AD 4 Wheel Alignment - Check and Adjust)

Rear Suspension Sensor Assembly-Renew

Repair Operation Time (ROT)	
Item	**Code**
Rear Suspension Sensor Assembly-Renew	**17.04.CB**

Removal

1. Raise vehicle on ramp.
2. Remove nut/bolt ride height sensor link to upper suspension arm.
3. Remove bolts (x2), ride height sensor to subframe.
4. Disconnect sensor multiplug and remove sensor.

Installation

1. Position ride height sensor to subframe, install and torque tighten bolts (x2).
2. Connect sensor multiplug.
3. Align sensor link to upper suspension arm, install and torque tighten bolt/nut.
4. Lower vehicle on ramp.

Suspension (04.00)

Shock Absorber System (04.03)

Description

Movement of each road spring is independently damped by a telescopic, hydraulically-controlled shock absorber. Each shock absorber is installed coaxially within the road spring. Front spring and damper assemblies are located between the upper suspension arm and attach to the lower suspension arm and the body structure.

Rear spring and damper assemblies attach to the lower suspension arm and the rear subframe, via a mounting bracket, laying to the rear of the upper suspension arm.

Specifications

Torque Figures		
Description	Nm	lb. / ft.
Front		
Spring and Damper Top Mounts	22.5	17
Spring and Damper Bottom Mount	175	129.5
Upper Suspension Arm	115	85
Rear		
Spring and Damper Top Mounting to Bracket	22.5	17
Spring and Damper Lower Mounting	175	129.5
Vertical Link to Lower Suspension Arm	175	129.5
Track-rod Arm to Lower Suspension Arm	115	85

Maintenance

Front Spring and Damper Assembly-Pair-Renew

Repair Operation Time (ROT)	
Item	**Code**
Front Pair-Spring and Damper Assembly-Renew	**04.03.AA**

Removal

1. Raise vehicle on ramp.
2. Remove road wheel(s).
3. Disconnect ABS sensor multiplug (see Fig. 1).

Fig. 1

4. Release sensor harness clips (x3) from upper suspension arm and vertical link (see Fig. 2).

Fig. 2

5. Remove Torx bolts (x4) from LH and RH side securing engine cross brace and remove cross brace.
6. Remove nuts and bolts (x2 each side) from upper suspension arm to body (see Fig. 3).

Fig. 3

Allow the upper suspension arm and vertical link to fall back, giving access to remove the spring and damper assembly.

Caution
Make sure that the brake flex hose is not over stretched.

7. Position suspension arm aside (see Fig. 4).

Fig. 4

8. Remove nuts (x3 each side) from damper top mounting. and remove engine cross brace support (see Fig. 5).

Fig. 5

If removing both spring and damper units - the engine bay cross brace will be released.

9. Remove nuts and bolts each side from damper lower mountings (see Fig, 6).

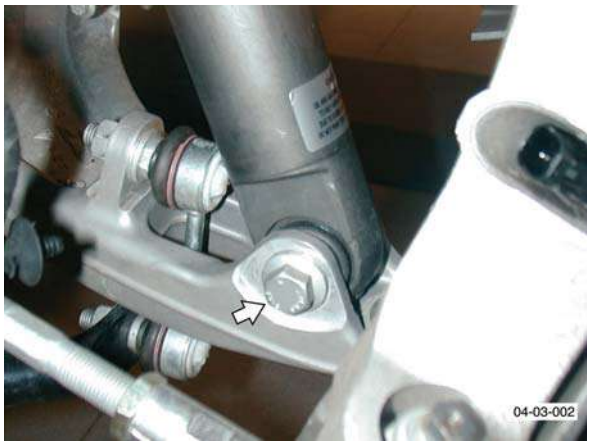

Fig. 6

10. Remove spring and damper assembly.

Installation

1. Install spring and damper assembly and engine cross brace support.

If removed, place the engine bay cross brace, complete with mounts, in position.

2. Install top mounting nuts (x3) each side (do not torque tighten).

Caution
Ensure that the brake flex hose is not over stretched.

3. Align damper to lower mounting and install bolts and nuts each side (do not torque tighten).
4. Position upper suspension arm to body and install bolts and nuts (x2) each side (do not torque tighten).

Caution
Final tightening of suspension components must be carried out with the suspension arms at normal ride height. Failure to do this will over stress the suspension bushes when the suspension is deflected to maximum upward travel.

5. Connect ABS sensor multiplug and install harness clips in upper suspension arm and vertical link.
6. Install road wheel(s).
7. Lower vehicle on ramp.
8. Tighten upper arm nuts and bolts.
9. Torque tighten top mounting nuts (x3) and lower mounting nut and bolt.
10. Install engine cross brace and install and torque tighten Torx bolts (x4).

Front Spring-Pair-Renew

Repair Operation Time (ROT)	
Item	**Code**
Front Spring-Pair-Renew	**04.03.AB**

Removal

1. Raise vehicle on ramp.
2. Remove road wheel(s).
3. Disconnect ABS sensor multiplug (see Fig. 1).

Fig. 1

4. Release sensor harness clips (x3) from upper suspension arm and vertical link (see Fig. 2).

Fig. 2

5. Remove Torx bolts (x4) from LH and RH side securing engine cross brace and remove cross brace.

If removing both spring and damper units - the engine bay cross brace will be released.

6. Remove nuts and bolts (x2 each side) from upper suspension arm to body (see Fig. 3).

Fig. 3

Allow the upper suspension arm and vertical link to fall back, giving access to remove the spring and damper assembly

7. Position suspension arm aside (see Fig. 4).

Fig. 4

Caution
Ensure that the brake flex hose is not over stretched.

8. Remove nuts (x3 each side) from damper top mounting and remove engine cross brace support (see Fig. 5).

Fig. 5

9. Remove nuts and bolts (each side) from damper lower mountings (see Fig. 6).

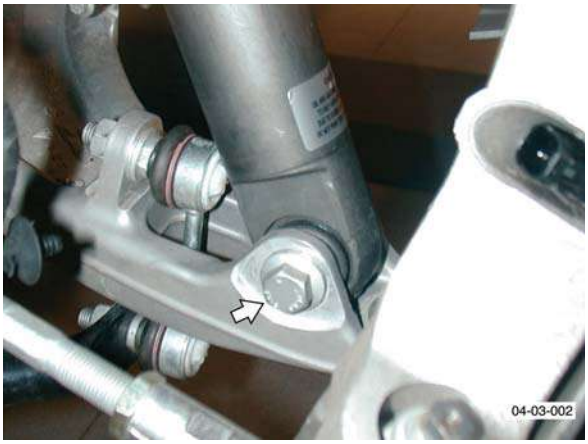

Fig. 6

10. Remove spring and damper assembly.
11. Position spring compressor to spring and compress spring.
12. Hold damper shaft and remove top mounting retaining nut.
13. Remove top mounting and spring assembly.
14. Remove spring compressor from spring.

Installation

1. Clean spring and top mounting.
2. Position spring compressor to new spring and compress spring.
3. Install spring and top mounting and install and torque tighten retaining nut.
4. Remove spring compressor.
5. Install spring and damper assembly and install engine cross brace support.

If removed, place the engine bay cross brace, complete with mounts, in position.

6. Install top mounting nuts (x3) each side (do not torque tighten).

Caution
Ensure that the brake flex hose is not over stretched.

7. Align damper to lower mounting and install bolts and nuts each side (do not torque tighten).
8. Position upper suspension arm and install bolts and nuts (x2) each side (do not torque tighten).

Caution
Final tightening of suspension components must be carried out with the suspension arms at normal ride height. Failure to do this will over stress the suspension bushes when the suspension is deflected to maximum upward travel.

9. Connect ABS sensor multiplug and install harness clips in upper suspension arm and vertical link.
10. Install road wheel(s).
11. Lower vehicle on ramp.
12. Torque tighten upper arm nuts and bolts.
13. Torque tighten top mounting nuts (x3) and lower mounting nut and bolt.
14. Align engine cross brace and install Torx bolts (x2).
15. Tighten Torx bolts (x4) to correct torque.

Front Damper-Pair-Renew

Repair Operation Time (ROT)	
Item	**Code**
Front Damper-Pair-Renew	**04.03.AC**

Removal

1. Raise vehicle on ramp.
2. Remove road wheel(s).
3. Disconnect ABS sensor multiplug.
4. Release sensor harness clips (x3) from upper suspension arm and vertical link.
5. Remove Torx bolts (x4) from LH and RH side securing engine cross brace and remove cross brace.

If removing both spring and damper units - the engine bay cross brace will be released.

6. Remove nuts and bolts (x2 each side) from upper suspension arm to body and position suspension arm aside.

Allow the upper suspension arm and vertical link to fall back, giving access to remove the spring and damper assembly.

Caution
Ensure that the brake flex hose is not over stretched.

7. Remove nuts (x3 each side) from damper top mounting and remove engine cross brace support.
8. Remove nuts and bolts each side from damper lower mountings.
9. Remove spring and damper assembly.
10. Position spring compressor to spring and compress spring.
11. Hold damper shaft, and remove top mounting retaining nut.
12. Remove top mounting and spring assembly.
13. Remove dust shield from rebound bumper and spring seat flange.

Installation

1. Clean spring, spring seat flange, bumper, dust shield and top mounting.
2. Install spring seat flange, rebound bumper and dust shield onto damper.
3. Install spring and top mounting and install and tighten retaining nut.
4. Remove spring compressor.
5. Install spring and damper assembly and install engine cross brace support.

If removed, place the engine bay cross brace, complete with mounts, in position.

6. Install top mounting nuts (x3) each side (do not torque tighten).

Caution
Ensure that the brake flex hose is not over stretched.

7. Align damper to lower mounting and install bolts and nuts each side (do not torque tighten).
8. Position upper suspension arm and install bolts and nuts (x2) each side (do not torque tighten).

Caution
Final tightening of suspension components must be carried out with the suspension arms at normal ride height. Failure to do this will over stress the suspension bushes when the suspension is deflected to maximum upward travel.

9. Connect ABS sensor multiplug and install harness clips in upper suspension arm and vertical link.
10. Install road wheel(s).
11. Lower vehicle on ramp.
12. Tighten upper arm nuts and bolts to correct torque.
13. Torque tighten top mounting nuts (x3) and lower mounting nut and bolt.
14. Align engine cross brace, install Torx bolts (x2) and tighten Torx bolts (x4) to correct torque.

Rear Spring and Damper Assembly-Pair-Renew

Repair Operation Time (ROT)	
Item	**Code**
Rear Spring and Damper Assembly-Pair-Renew	**04.03.BA**

Removal

1. Open fuel filler lid and remove fuel filler cap.
2. Raise vehicle on ramp.
3. Remove road wheel(s).
4. Remove LH rear wheel arch liner (see Workshop Manual procedure 01.02.HB Wheel Arch Liner - Rear - RH - Renew).
5. Remove RH wheel arch liner (see Workshop Manual procedure 01.02.JB Wheel Arch Liner - Rear - LH - Renew).
6. Remove bolt securing fuel filler pipe bracket to shock absorber mounting bracket.
7. Remove nut securing fuel filler pipe to body and tie filler pipe aside (see Fig. 1).

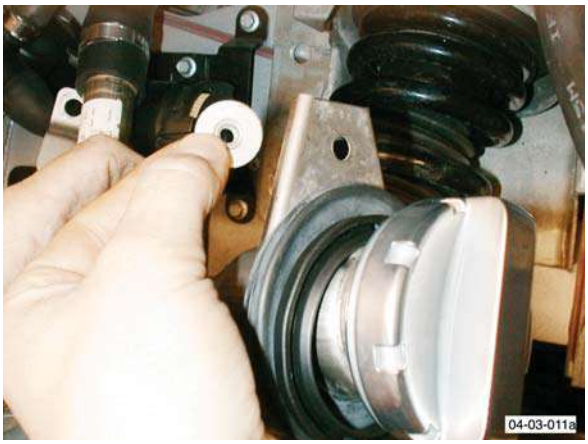

Fig. 1

8. Disconnect ABS sensor multiplug (see Fig. 2).

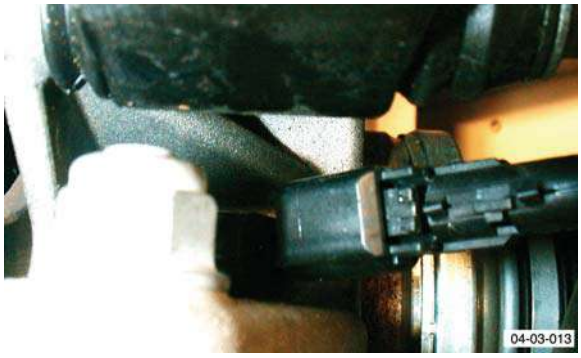

Fig. 2

9. Release sensor harness clips (x2) from toe control arm (see Fig. 3).

Fig. 3

10. Remove bolts (x2) each side from handbrake calliper to rear hub and release calliper and position aside (see Fig. 4).

Fig. 4

11. Remove nuts and bolts both sides from toe control arms (see Fig. 5).

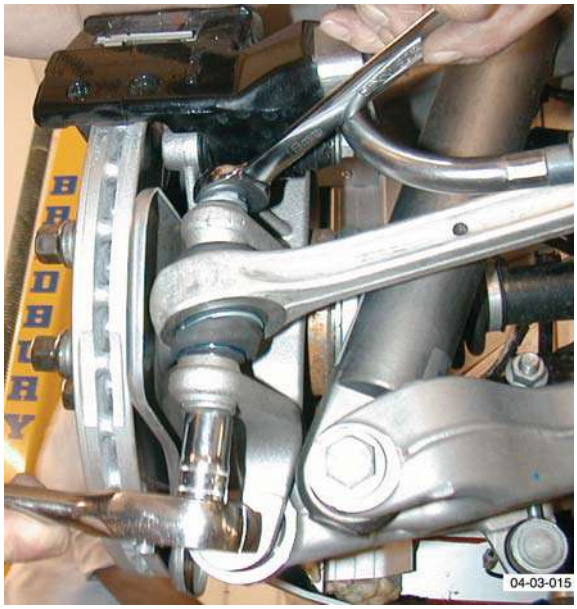

Fig. 5

12. Remove nuts and bolts each side from lower damper mountings (see Fig. 6).

Fig. 6

13. Remove bolts (x4) each side from damper upper mounting (see Fig. 7).

Fig. 7

14. Remove spring and damper assembly (see Fig. 8).

Fig. 8

15. Remove nuts (x3) each side from damper to mounting plate (see Fig, 9).

Fig. 9

Installation

1. Position mounting plate to damper and torque tighten retaining nuts (x3) each side.
2. Install spring and damper assembly and torque tighten upper bolts (x4) each side.
3. Install damper to lower arm each side and torque tighten nuts and bolts.
4. Position fuel filler pipe to body, install and tighten nut.
5. Position fuel filler pipe, install and tighten bolt.
6. Position toe control arm each side, install and torque tighten nuts/bolts.
7. Position handbrake callipers each side, install bolts (x2) each side and tighten bolts to the correct torque.
8. Connect ABS sensor multiplugs each side.
9. Install clips (x2) each side from sensor harness to toe control arms.
10. Install LH wheel arch liner (see Workshop Manual procedure 01.02.HB Wheel Arch Liner - Rear - RH - Renew).
11. Install RH wheel arch liner (see Workshop Manual procedure 01.02.JB Wheel Arch Liner - Rear - LH - Renew)
12. Install road wheel(s).
13. Lower vehicle on ramp.
14. Install fuel filler cap and close fuel filler lid.

Rear Spring-Pair-Renew

Repair Operation Time (ROT)	
Item	**Code**
Rear Spring-Pair-Renew	**04.03.BB**

Removal

1. Open fuel filler lid and remove fuel filler cap.
2. Raise vehicle on ramp.
3. Remove road wheel(s).
4. Remove LH rear wheel arch liner (see Workshop Manual procedure 01.02.HB Wheel Arch Liner - Rear - RH - Renew).
5. Remove RH wheel arch liner (see Workshop Manual procedure01.02.JB Wheel Arch Liner - Rear - LH - Renew).
6. Remove bolt securing fuel filler pipe bracket to damper mounting bracket.
7. Remove nut securing fuel filler pipe to body and tie filler pipe aside (see Fig. 1).

Fig. 1

8. Disconnect ABS sensor multiplug (see Fig. 2).

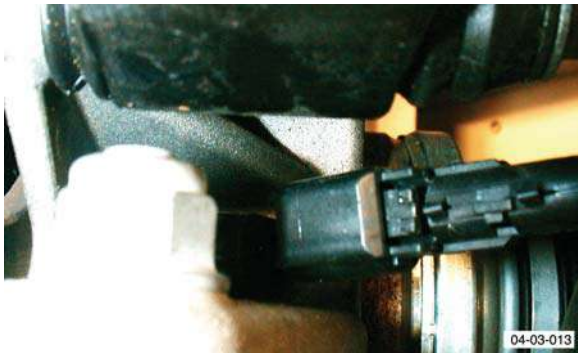

Fig. 2

9. Release sensor harness clips (x2) from toe control arm (see Fig. 3).

Fig. 3

10. Remove bolts (x2) each side from handbrake calliper to rear hub and release calliper and position aside (see Fig. 4).

Fig. 4

11. Remove nuts and bolts both sides from toe control arms (see Fig. 5).

Fig. 5

12. Remove nuts and bolts each side from lower damper mountings (see Fig. 6).

Fig. 6

13. Remove bolts (x4) each side from damper upper mounting (see Fig. 7).

Fig. 7

14. Remove spring and damper assembly (see Fig. 8).

Fig. 8

15. Remove nuts (x3) each side from damper to mounting plates and remove mounting plates (see Fig. 9).

Fig. 9

16. Position spring compressor to spring and compress spring.
17. Hold damper shaft and remove top mounting retaining nut.
18. Remove top mounting and spring assembly.
19. Remove spring compressor from spring.

Installation

1. Clean spring and top mounting.
2. Position spring compressor to new spring and compress spring.
3. Install spring and top mounting and torque tighten retaining nut.
4. Remove spring compressor.
5. Position mounting plate to damper and torque tighten retaining nuts (x3) each side.
6. Install spring and damper assembly and torque tighten upper bolts (x4) each side.
7. Install damper assembly to lower arm each side and torque tighten nuts and bolts.
8. Position fuel filler pipe to body and install and tighten nut.
9. Position fuel filler pipe and install and tighten bolt.
10. Position toe control arm each side and install and torque tighten nuts and bolts.
11. Position handbrake callipers each side, install bolts (x2) each side and tighten bolts to the correct torque.
12. Connect ABS sensor multiplugs each side.
13. Install clips (x2) each side from sensor harness to toe control arms.
14. Install LH wheel arch liner. (see Workshop Manual procedure 01.02.HB Wheel Arch Liner - Rear - RH - Renew).
15. Install RH wheelwright liner (see Workshop Manual procedure 01.02.JB Wheel Arch Liner - Rear - LH - Renew).
16. Install road wheel(s).
17. Lower vehicle on ramp.
18. Fit fuel filler cap and close fuel filler lid.

Rear Damper-Pair-Renew

Repair Operation Time (ROT)	
Item	**Code**
Rear Damper-Pair-Renew	**04.03.BC**

Removal

1. Raise vehicle on ramp.
2. Remove road wheel(s).
3. Remove LH rear wheel arch liner (see Workshop Manual procedure 01.02.HB Wheel Arch Liner - Rear - RH - Renew)
4. Remove RH wheel arch liner (see Workshop Manual procedure 01.02.JB Wheel Arch Liner - Rear - LH - Renew).
5. Remove bolt securing fuel filler pipe bracket to damper mounting plate.
6. Remove nut securing fuel filler pipe to body and tie filler pipe aside.
7. Disconnect ABS sensor multiplug.

8. Release sensor harness clips (x2) from toe control arm.
9. Remove bolts (x2) each side from handbrake calliper to rear hub.
10. Release calliper and position aside.
11. Remove nuts and bolts both sides from toe control arms.
12. Remove nuts and bolts each side from lower damper mountings.
13. Remove bolts (x4) each side from damper upper mounting.
14. Remove spring and damper assembly.
15. Remove nuts (x3) each side from damper to mounting plates and remove mounting plates.
16. Position spring compressor to spring and compress spring.
17. Hold damper shaft and remove top mounting retaining nut.
18. Remove top mounting and spring assembly.
19. Remove dust shield, rebound bumper and spring seat flange.

Installation

1. Clean spring, spring seat flange, rebound bumper, dust shield and top mounting.
2. Install spring seat flange, rebound bumper and dust shield onto damper.
3. Install spring and top mounting and fit and tighten retaining nut.
4. Remove spring compressor.
5. Position mounting plate to damper and torque tighten retaining nuts (x3).
6. Install spring and damper assembly and torque tighten upper bolts (x4) each side.
7. Install damper assembly to lower arm each side and torque tighten nuts and bolts.
8. Position fuel filler pipe to body and install and tighten nut.
9. Position fuel filler pipe and install and tighten bolt.
10. Position toe control arm each side and install and torque tighten nuts and bolts.
11. Position handbrake callipers each side, install bolts (x2) each side and tighten bolts to the correct torque.
12. Connect ABS sensor multiplugs each side.
13. Install clips (x2) each side from sensor harness to toe control arms.
14. Install LH wheel arch liner (see Workshop Manual procedure 01.02.HB Wheel Arch Liner - Rear - RH - Renew).
15. Install RH wheel arch liner (see Workshop Manual procedure 01.02.JB Wheel Arch Liner - Rear - LH - Renew)
16. Install road wheel(s).
17. Lower vehicle on ramp.

Suspension (04.00)

Road Wheels and Tyres (04.04)

WARNING
DO NOT MIX DIFFERENT TYPES OF TYRES ON THE SAME VEHICLE SUCH AS RADIAL, BIAS OR BIAS BELTED TYRES EXCEPT IN EMERGENCIES (TEMPORARY SPARE USAGE).

WARNING
NEVER RUN THE ENGINE WITH ONE WHEEL OFF THE GROUND, FOR EXAMPLE WHEN CHANGING A WHEEL. THE WHEEL RESTING ON THE GROUND MAY CAUSE THE VEHICLE TO MOVE.

WARNING
AFTER MARKET AEROSOL TYRE SEALANTS ARE EXTREMELY FLAMMABLE. ALWAYS QUESTION THE CUSTOMER TO MAKE SURE THESE PRODUCTS HAVE NOT BEEN USED.

WARNING
ALWAYS WEAR SAFETY GOGGLES OR A FACE SHIELD WHEN PERFORMING ANY WORK WITH WHEEL AND TYRE ASSEMBLIES.

WARNING
CHECK ROAD WHEEL NUTS TORQUE AT 32 KM (20 MILES) AFTER ANY WHEEL CHANGE OR ANY TIME THE WHEEL NUTS ARE LOOSENED.

WARNING
WHEN CHANGING A WHEEL, MAKE SURE THAT THE VEHICLE CANNOT MOVE. ALWAYS APPLY THE PARKING BRAKE AND SELECT THE TRANSMISSION PARK POSITION (AUTOMATIC TRANSMISSION ONLY).

WARNING
REDUCE AIR PRESSURE AS MUCH AS POSSIBLE BY PUSHING THE VALVE CORE PLUNGER IN BEFORE REMOVING THE VALVE CORE.

WARNING
EACH INDIVIDUAL AXLE, ROAD WHEEL AND TYRE HAS ITS OWN MAXIMUM WEIGHT OR TYRE INFLATION RATING. DO NOT OVERLOAD OR OVER-INFLATE BEYOND THE CAPACITY OF THE LOWEST RATED COMPONENTS OF THE SYSTEM.

Caution
Do not clean the aluminium alloy wheels with steel wool, abrasive type cleaners or detergents. Failure to follow these instructions may result in damage to the vehicle.

Caution
Paraffin (kerosene) must not be used as a cleansing agent on tyres.

Specifications

Tyres

The tyres recommended by Aston Martin meet the high speed performance of this vehicle. Only tyres of identical specification may be installed as replacements. Under no circumstances must cross-ply tyres be installed.

WARNING
CORRECT TYRE INSTALLATION IS CRITICAL TO PERSONAL AND VEHICLE SAFETY. THE RECOMMENDED TYRES FOR THIS VEHICLE ARE ASYMMETRICAL AND MUST BE INSTALLED TO THE WHEEL WITH THE TYRE MARK 'OUTSIDE' ON THE OUTSIDE OF THE WHEEL RIM.

Unique Aston Martin lightweight aluminium alloy road wheels. The tyres are made exclusively for Aston Martin.

Standard

Wheels

- Front - 8.5J x 18
- Rear - 9.5J x 18

Tyres

- Front - Bridgestone 235/40 ZR 18 (94Y)

Rear - Bridgestone 275/35 ZR 18 (99Y)

Optional

Wheels

- Front - 8.5J x 19
- Rear - 9.5J x 19

Tyres

- Front - Bridgestone 235/40 ZR 19 (92Y)
- Rear - Bridgestone 275/35 ZR 19 (96Y)

Tyre Pressures

Tyre pressures must be checked with the tyres cold.

WARNING
PDI INSPECTION.
TYRE PRESSURES MUST BE REDUCED TO NORMAL LEVEL DURING PDI. THE VEHICLE MUST NEVER BE RUN ON ROAD WITH ELEVATED TYRE PRESSURES, DRIVEABILITY MAY BE SERIOUSLY COMPROMISED.

Caution
In order to protect tyres against flat spots during storage and transportation, tyre pressures should be increased to 65 - 70 psi (450 - 500 kPa). Ensure that the tyre pressure are set to the recommended tyre pressures before driving.

- Front - 2.3 bar (230 kpa /33 psi)
- Rear - 2.5 bar (250 kpa /36 psi)

Torque Figures		
Description	Nm	lb/ft
Road wheel nuts:		
Step 1 for all Wheel Nuts	80	60
Step 2 for 22 mm Wheel Nuts	135	100
Step 2 for Titanium Wheel Nuts	150	111
Step 2 for 21 mm Wheel Nuts	180	133

USA Tyre Gradings

The following information relates to the tyre grading system developed by the National Highway Traffic Safety Administration which grades tyres by tread wear, traction and temperature performance.

Tread Wear

Tread wear grade is a comparative rating based on the wear rate of the tyre when tested under controlled conditions (specified government test course). For example, a tyre graded 150 would wear one and a half times less on the government course than a tyre graded 100. Relative performance of the tyres depends upon actual conditions of use and may depart significantly from normal due to variations in driving habits, service practices and differences in road characteristics and climate.

Traction

Traction grades, A (highest), B and C represent a tyre's ability to stop in wet conditions measured on specified government test surfaces of asphalt and concrete.

WARNING

PDI INSPECTION.

TRACTION GRADE IS BASED ON BRAKING (STRAIGHT AHEAD) TRACTION TESTS AND DOES NOT INCLUDE CORNERING (TURNING) TRACTION.

Temperature

Temperature grades, A (highest), B and C, represent a tyre's resistance to the generation of wear and its ability to dissipate heat when tested under controlled conditions (specified indoor laboratory test road wheel). Sustained high temperature can cause the material of a tyre to degenerate and reduce tyre life; excessive temperatures can lead to sudden tyre failure. Grade 'C' corresponds to a level of performance which all passenger vehicle tyres must meet under Federal Motor Vehicle Safety Standard No. 109. Grades 'B' and 'A' represent higher levels of performance than the minimum required by law.

WARNING

TEMPERATURE GRADE IS ESTABLISHED FOR A TYRE THAT IS PROPERLY INFLATED AND NOT OVERLOADED. EXCESSIVE SPEED, UNDER INFLATION OR EXCESSIVE LOADING, WHETHER SEPARATELY OR IN COMBINATION, CAN CAUSE HEAT BUILD-UP AND POSSIBLE TYRE FAILURE.

Aston Martin grade as follows:

Tyre Grade	Level Achieved
Tread Wear	140
Traction	A
Temperature	A

Maintenance

Factory installed tyres and road wheels are designed to operate satisfactory when inflated to the recommended inflation pressures (Refer to 'Inspection and Verification', page 4-4-4). The recommended pressures apply to vehicle loads up to and including the full-rated load capacity.

Correct tyre pressures and driving technique have an important influence on tyre life. Heavy cornering, excessively rapid acceleration and unnecessary sharp braking increase tyre wear.

Replacement tyres should follow the recommended:

- Size
- Speed rating
- Load range
- Radial construction type

The use of any other size or type may seriously affect:

- Safety
- Ride
- Handling
- Speedometer and Odometer calibration
- Vehicle ground clearance
- Tyre clearance between body and chassis
- Wheel bearing life
- Brake cooling

Wheels need to be renewed when:

- Impact damaged
- Heavily corroded
- Porous
- Wheel stud holes or seats become damaged
- They have excessive radial or lateral runout.

Safety

ENSURE THAT TYRES ARE MOUNTED WITH THE SIDEWALL MARKING 'OUTSIDE' SHOWING ON THE OUTER SIDEWALL FACE.

CORRECT TYRE ROTATIONAL DIRECTION IS CRITICAL.

WARNING

A TYRE AND WHEEL MUST ALWAYS BE CORRECTLY MATCHED. WIDER OR NARROWER TYRES THAN RECOMMENDED COULD CAUSE DANGER THROUGH SUDDEN DEFLATION.

WARNING

WHEN CHANGING A WHEEL, MAKE SURE THAT THE VEHICLE CANNOT MOVE. ALWAYS APPLY THE PARKING BRAKE AND SELECT THE TRANSMISSION PARK POSITION (AUTOMATIC TRANSMISSION ONLY).

WARNING

NEVER RUN THE ENGINE WITH ONE WHEEL OFF THE GROUND, FOR EXAMPLE, WHEN CHANGING THE WHEEL. THE WHEEL RESTING ON THE GROUND MAY CAUSE THE VEHICLE TO MOVE.

WARNING

ALWAYS TIGHTEN THE WHEEL NUTS TO SPECIFICATION. TOO TIGHT MAY CAUSE DAMAGE, TOO LOOSE MAY ALLOW THE WHEEL TO BECOME DETACHED.

WARNING

DO NOT MIX DIFFERENT TYPES OF TYRES ON THE SAME VEHICLE. HANDLING MAY BE SERIOUSLY AFFECTED RESULTING IN LOSS OF CONTROL.

WARNING

USE ONLY WHEELS AND WHEEL NUTS SUPPLIED BY ASTON MARTIN. AFTER MARKET WHEELS OR WHEEL NUTS MAY NOT INSTALL OR FUNCTION CORRECTLY AND COULD CAUSE INJURY OR DAMAGE.

Tyre Replacement and Wheel Interchanging

Caution

When a new tyre is installed, always renew the tyre valve.

When replacement of tyres is required it is preferable to install a complete vehicle set. Should either the front or rear tyres only show excessive wear, new tyres must be installed to replace worn ones. Under no circumstances interchange tyres from side to side, front to rear or vice versa as individual tyre wear produces unique characteristics depending upon their position. If the position is changed after wear has occurred, the performance of the tyre will be adversely affected.

New tyres must be balanced before installing to the vehicle.

Winter (Snow) tyres

Winter tyres must only be installed in complete four-wheel sets of the same type. The maximum speed with winter tyres installed (without snow chains) is 210 km/h (131 mile/h) for H rated tyres or 240 km/h (149 mile/h) for V rated tyres.

When using snow chains, note that:

- Snow chains must only be installed to the rear wheels
- Only Aston Martin snow chains should be used
- Snow chains must not be used on roads which are clear of snow
- The maximum speed with winter tyres and snow chains fitted is 48 km/h (30 mile/h)
- Traction control must be switched Off when using snow chains

Recommended Winter Wheel and Tyre Combination

Unique Aston Martin lightweight aluminium alloy road wheels.

Wheels

- Front - 8.5J x 18
- Rear - 9.5J x 18

Tyres

Pirelli 240 Snowsport

- Front - 225/45 R18 (95V)
- Rear - 255/40 R18 (95V)

Inspection and Verification

Verify the customer's concern by driving the vehicle.

Visually inspect for obvious signs of damage:

Visual Inspection Chart

- Incorrect tyre pressure
- Wheel imbalance
- Bulges (blister)
- Cuts
- Abrasions
- Tyres worn beyond tread wear indicators
- Ply separation
- Embedded objects
- Impact damage
- Incorrect speed rating
- Incorrect load rating
- Tyres installed with the 'Outside' marking not shown

1. If an obvious cause for an observed or reported concern is found, correct the cause (if possible) before proceeding to the next step.
2. If the concern is not visually evident, verify the symptom and refer to Symptom Chart.

Tyre Wear

Tread wear indicators (A) are moulded into the bottom of the tread grooves across the width of the tyre. When the tread wear indicators become visible at the surface of the tread, in two or more adjacent tread grooves, only 1.6 mm of tread remains.

Tyre tread depth and condition must comply with prevailing local legislation.

To maximize tyre performance, inspect the tyres for signs of incorrect inflation and uneven wear which may indicate a need for balancing, rotation or front suspension alignment. tyres should also be checked frequently for cuts, stone bruises, abrasions, blisters, and for objects that may have become embedded in the tread. More frequent inspections are recommended when rapid or extreme temperature changes occur or when road surfaces are rough or occasionally littered with debris.

Tyre Wear Diagnosis

New tyres should be installed if the wear indictors are exposed or if there is severe shoulder wear. Shoulder wear is usually caused by either excessive camber or excessive toe on radial tyres.

Sometimes incorrect rear toe settings or damaged struts will cause severe cupping' or scalloped' tyre wear on non-drive wheels.

Incorrect rear toe alignment will also cause other unusual wear patterns.

Road Test

A tyre vibration diagnostic procedure always begins with a road test. The road test and customer interview (if available) will provide much of the information needed to find the source of a vibration.

During the road test, drive the vehicle on a road that is smooth and free of undulations. If vibration is apparent, note and record the following:

- The speed at which the vibration occurs
- What type of vibration occurs in each speed range
- How the vibration is affected by changes in the following types of vibration-sensitivity:

Torque Sensitive **-** This means that the condition may be improved or made worse by accelerating, decelerating, coasting, maintaining a steady vehicle speed or applying engine torque.

Vehicle Speed Sensitive **-** This means that the vibration always occurs at the same vehicle speed and is not affected by engine torque, engine speed or the transmission gear selected.

Engine Speed Sensitive **-** This means that the vibration occurs at varying vehicle speeds when a different transmission gear is selected. It may sometimes be isolated by increasing or decreasing engine speed with the transmission in NEUTRAL or by stall testing with the transmission in gear. If the condition is engine speed sensitive, the cause is probably not related to the tyres.

If the road test indicates that there is tyre whine, but no shake or vibration, the noise originates with the contact between the tyre and the road surface.

A thumping noise usually means that the tyre has a flat or soft spot making a noise as they slap the roadway. Tyre whine may be distinguished from axle noise. Tyre whine remains the same over a range of speeds.

Symptoms

Symptom	Possible Source(s):	Action(s)
Tyres show excess wear on edge of treads	Tyres under-inflated	Correct pressure to specification.
	Vehicle overloaded	Correct as required.
Tyres show excess wear on edge of treads (having the correct tyre pressures)	Incorrect toe setting	Set to specification.
Tyres show excess wear in center of tread	Tyres over-inflated	Correct pressure to specification.
Other excessive tyre wear problems	Incorrect tyre pressure	Correct pressure to specification.
	Incorrect tyre and wheel usage	Install correct tyre and wheel combination.
	Geometry out of alignment	Check and adjust.
	Loose, worn or damaged suspension components	Inspect, repair or install new suspension components as necessary.
	Wheel and tyre assembly out of balance	Balance wheel and tyre assembly.
	Excessive lateral or radial runout of wheel or tyre	Check, repair or install a new wheel or tyre as necessary.
Wheel mounting is difficult	Incorrect application or mismatched parts, including wheel studs and wheel nuts. Corroded, worn or damaged parts	Clean or install new parts.
Wobble or shimmy affecting wheel runout	Damaged wheel (eventually damaging wheel bearings and causing uneven tyre wear)	Inspect wheel rims for damage and runout. Install a new wheel rim as necessary.
Excessive vibration, rough steering or severe tyre wear	Loose or incorrect attaching parts	Tighten or install new parts.

Symptom	Possible Source(s):	Action(s)
Vehicle vibrations	Tyres and wheels mismatched	Install correct tyre and wheel combination.
	Inflation pressure too high or too low	Correct pressure to specification
	Uneven tyre wear	Refer to Diagnosis and Testing.
	Out-of-balance wheel, tyre, wheel hub or disc assembly	Determine the out-of-balance component and balance or install a new part.
	Damaged or distorted wheel from road impact hazard or incorrect handling	Install a new wheel.
	Excessive radial runout	Install a new wheel or tyre. Check for incorrect wheel and tyre specifications.
	Excessive lateral runout	Install a new wheel or tyre.
	Incorrectly seated tyre	Remount the tyre.
	Loose wheel mountings - damaged wheel studs, wheel nuts, worn or broken wheel hub face or foreign material on mounting faces	Tighten or install new parts. Clean mounting surfaces.
	Defective wheel bearings	Install a new bearing set.
	Brake disc imbalance	
	Water in tyres	Remove water.
	Loose engine or transmission mounts	Install new mount nuts / install new mounts.
	Incorrect front end alignment	Align front end.
	Loose or worn driveline or suspension parts	Repair or install new parts.
	Excessive driveshaft runout or imbalance	Install a new driveshaft.
	Worn or damaged flexible drive joint	Install a new driveshaft.
Damaged wheel hub stud threads	Sliding wheel across the wheel studs during installation. Loose wheel nuts	Install new wheel studs.
Broken wheel studs	Loose or over tightened wheel nuts	Install new wheel studs.
Corrosion and contamination streaks from the wheel hub wheel stud holes	Loose wheel nuts	Check complete assembly. Install new parts.
Damaged wheel nuts	Loose wheel assembly	Install new wheel nuts.
	Over-tightened wheel nuts	Install new wheel nuts.
Frozen wheel nuts	Corrosion or galling	If corrosion is light, wire brush away corrosion. If corrosion is excessive install new wheel studs and wheel nuts.

Tyre Damage

Symptom	Description
Age Deterioration	Cracking and crazing of the tread and sidewall rubber, sometimes accompanied by carcass deformation. An indication that the tyres have been in service for a very long time.
Neglected Cut	Damage through accidental cuts or penetrations will extend in use due to continued flexing and / or ingress of moisture and road matter.
Impact Fracture	Resultant damage from impact fractures is not always visible externally and, therefore, as a safety precaution the tyre should be removed and examined.
	Casing fracture caused by severe localized impact through driving over kerbs, hitting potholes and / or objects in the road.
	A double fracture caused by crushing the side wall of the tyre between an object and the rim flange.
	In both instances, such damage can lead to sudden and dangerous tyre deflation some time after the impact occurred.

Repairs

In view of the high performance capability of the vehicle, damaged tyres should be renewed and not repaired.

Caution
When a new tyre is installed, always renew the tyre valve.

Care of Alloy Road Wheels

Aluminium alloy road wheels are covered with a protective coating. To prevent corrosion it is essential that this coating is not damaged. When removing or installing tyres only equipment utilizing spigot or stud hole clamping must be used. The equipment must not have any moving parts which contact the road wheel, and tyre levers must not be used.

To clean road wheels use warm soapy water; stubborn stains can be removed using a soft brush or by using a proprietary alloy road wheel cleaner.

Road Wheel Alignment

It is important that correct road wheel alignment be maintained. Misalignment causes tyre tread to be scrubbed off laterally because the natural direction of the road wheel differs from that of the vehicle.

A sharp 'fin' protrusion on the edge of each pattern rib is a sure sign of misalignment.

- 'Fins' on the inside edges of the pattern ribs, particularly on the nearside tyre, indicate Toe-in.
- 'Fins' on the outside edges, particularly on the offside tyre, indicate Toe-out.

With minor misalignment, the evidence is less noticeable and sharp pattern edges may be caused by road camber even when the road wheel alignment is correct. In such cases it is better to make sure by checking with an alignment gauge. Road camber affects the direction of the vehicle by imposing a side thrust and, if left to follow its natural course, the vehicle will drift towards its nearside. This is instinctively corrected by steering towards the road centre and, as a result, the vehicle runs crabwise. The diagram shows why nearside tyres are very sensitive to too much Toe-in and offside tyres to Toe-out.

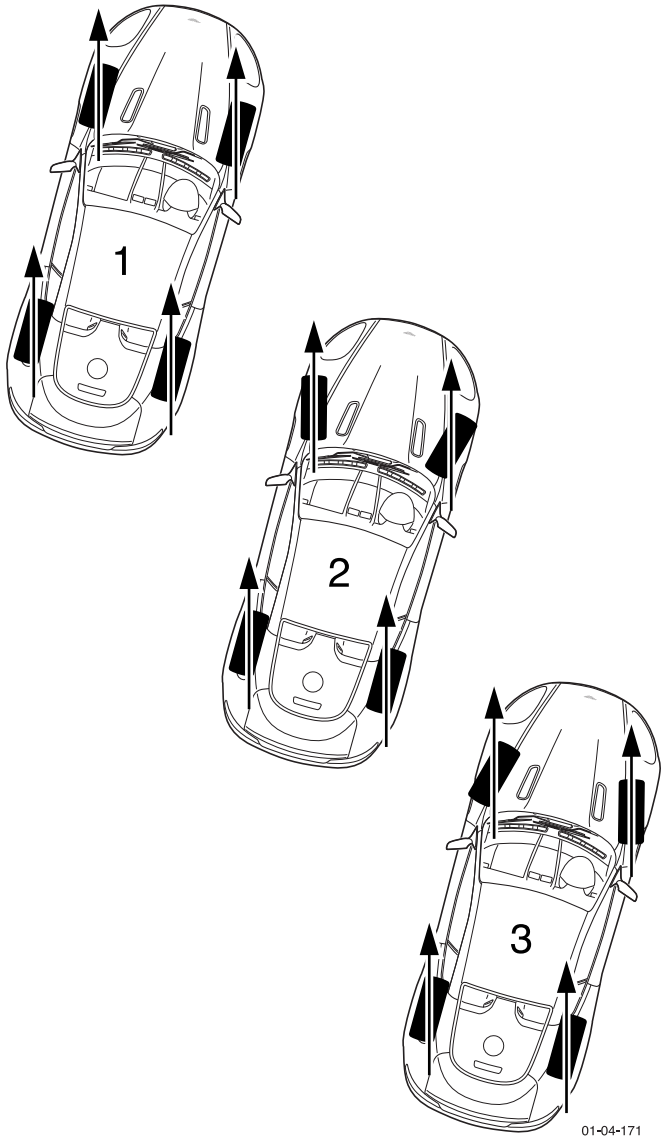

It also shows why sharp 'fins' appear on one tyre but not on the other, and why the direction of misalignment can be determined by noting the position of the 'fins'. Severe misalignment produces clear evidence on both tyres.

Front road wheels on a moving vehicle should be parallel. Tyre wear can be affected noticeably by quite small variations from this condition. It will be noted from the diagram that even with parallel road wheels, the vehicle is still out of line with its direction of movement, but there is less tendency for the wear to be concentrated on one tyre.

The near front tyre sometimes persists in wearing faster and more unevenly than the other tyres, even when the mechanical condition of the vehicle and tyre maintenance are satisfactory. The more severe the average road camber, the more marked this tendency will be.

Misalignment Effects

Misalignment	Effect
Road wheels are correctly aligned but crabbing due to road camber	All tyres will wear equally.
Shows road wheels 'Toed-out' in motion	RH front tyre will wear faster.
Shows road wheels 'Toed-in' in motion	LH front tyre will wear faster.

Alignment Precautions

The following alignment precautions should be observed:

1. The vehicle should have come to rest from a forward movement. This ensures, as far as possible, that the road wheels are in natural running positions.
2. It is preferable for alignment to be checked with the vehicle laden (Refer to 'Specifications', page 4-0-2).

Road Wheel and Tyre Balance

Static Balance

For smooth riding, precise steering and the avoidance of high speed 'tramp' or 'road wheel hop', all tyres are balance checked to predetermined limits. To ensure the best degree of tyre balance, the covers are marked with yellow spots on the outer sidewall and these indicate the lightest balance point of the cover.

The original degree of balance is not necessarily maintained. It can be affected by uneven tread wear, tyre removal or refitting, by road wheel damage or eccentricity. The vehicle may also become sensitive to imbalance due to normal wear of moving parts. If roughness or high speed steering troubles develop and mechanical investigation fails to disclose a possible cause, road wheel and tyre balance should be suspected.

WARNING

IF BALANCING EQUIPMENT IS USED TO DYNAMICALLY BALANCE ROAD WHEELS, ALWAYS JACK BOTH REAR ROAD WHEELS OFF THE GROUND WHEN REAR ROAD WHEEL BALANCING, OTHERWISE DAMAGE MAY BE CAUSED TO DIFFERENTIAL. THIS IS DOUBLY IMPORTANT IN CASE OF VEHICLES INSTALLED WITH A LIMITED SLIP DIFFERENTIAL, AS IN ADDITION TO POSSIBLE DAMAGE TO THE DIFFERENTIAL, THE VEHICLE MAY DRIVE ITSELF OFF THE JACK OR STAND.

Dynamic Balance

Static imbalance can be measured when the tyre and road wheel assembly is stationary. There is another form known as dynamic imbalance which can be detected only when the assembly is revolving.

There may be no heavy spot, i.e. there is no natural tendency for the tyre and road wheel assembly to rotate about its centre due to gravity, but the weight may be unevenly distributed each side of the tyre centre line. Laterally, the eccentric road wheels give the same effect. During rotation, the offset weight distribution sets up a situation which tends to steer the road wheel to the right and left alternately.

Dynamic imbalance of the tyre and road wheel assemblies can be measured on suitable tyre balancing equipment, and corrections implemented. Where it is clear that a damaged road wheel is the primary cause of severe imbalance, it is advisable for the road wheel to be renewed.

Torque Tightening of Road Wheel Nuts

Repair Operation Time (ROT)		
Item		**Code**
Road Wheel	(LHF)	**04.04.AB**
	(RHF)	**04.04.CB**
	(LHR)	**04.04.BB**
	(RHR)	**04.04.DB**

WARNING

ONLY TIGHTEN THE WHEEL NUTS WHEN THE WHEELS ARE COLD. IF THE WHEELS ARE NOT COLD THE TORQUE CAN BE INCORRECT AND CAUSE FAILURE OF THE WHEEL NUTS.

Tightening Order - Torque tighten the nuts in the pattern shown in the figure in the two steps that follow:

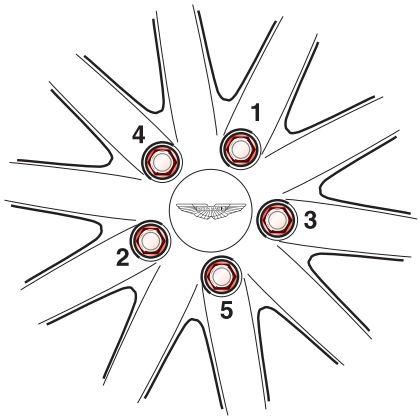

1. To 80 Nm (60 lb/ft) in one continuous movement.
2. Refer to the Table that follows:

Vehicle	Torque
with 22 mm Wheel Nuts	135 Nm (100 lb/ft)
with Titanium Wheel Nuts	150 Nm (111 lb/ft)
with 21 mm Wheel Nuts	180 Nm (133 lb/ft)

Tell the customer that the wheel nuts must be torque checked after 32km (20 mile).

Tyre Pressure Sensing (Option)

WARNING
TYRE PRESSURE SENSING IS NOT INTENDED TO REPLACE DRIVER AWARENESS OF TYRE PERFORMANCE OR THE NEED FOR RECOMMENDED WEEKLY CHECKS ON TYRE CONDITION AND PRESSURE.

Tyre pressure sensing monitors the vehicle tyre pressures and feeds-back this information to the driver.

Each road wheel is installed with a tyre pressure sensing device which sends tyre pressure information to a control unit mounted in the centre, rear wall of the boot.

Each pressure sensing device has a colour coded collar. Ensure the coloured collars are always installed in their original positions, i.e. after new tyres are installed.

Road wheel	Colour
Front right	Green
Front Left	Red
Rear Right	Blue
Rear Left	Yellow

The control unit provides a visual warning by illuminating the tyre pressure warning lamp (A) on the instrument panel if any tyre pressure falls below specification.

Pressure Sensing with Winter Wheels and Tyres

If the tyre pressure sensing option is installed on the vehicle, the winter road wheel and tyre option with the tyre pressure sensing system should be installed. The tyre pressure sensing system will need to be programmed to recognize additional tyres.

Warnings

Instrument Cluster	Lamp constant / Message 'Check Tyres'.
Control module	Tyre LED constant **red.**
Fault	Tyre pressure below specification.

Action

Reduce speed to 48 km/h (30 mph). Stop in safe place as soon as possible.

One of the coloured LEDs on the control module will illuminate to indicate which tyre requires inflating. The LED colour corresponds to the colour of the band below each tyre valve cap. Inspect affected tyre. Re-inflate if necessary. If on inspection the tyre is found to be OK, continue at 48 km/h (30 mph) maximum.

Ensure that the coloured band remains in position.

Instrument Cluster	Lamp constant / Message 'Check Tyres'.
Control module	Tyre LED constant **amber**.
Fault	Tyre transmitter fault.

Action

Reduce speed to 48 km/h (30 mph). Stop in safe place as soon as possible.

Inspect affected tyre. Re-inflate if necessary.

If on inspection the tyre is found to be OK, continue at 48 km/h (30 mph) maximum.

Instrument Cluster	Lamp constant / Message 'Tyre system Fault'
Control module	Module LED constant **amber**.
Fault	Control module fault.

Action

Stop in safe place as soon as possible.

Check all tyres for flats. If OK, continue at 48 km/h (30 mph) maximum.

Display Unit

The display unit provides additional features when correctly connected to a previously installed 'Smartire' system. The display unit connects directly to the front of the basic 'Smartire' receiver and is powered from the vehicle circuits. The display will be fully illuminated during use but will go into 'Energy Saver' mode when no activity is detected.

Display Panel

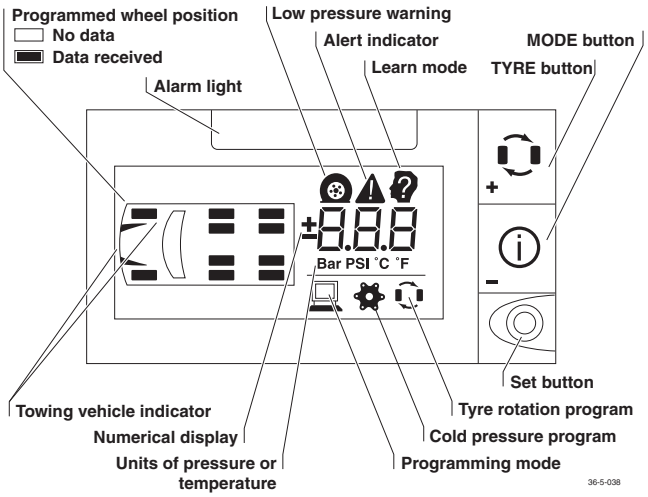

Connection and Normal Operation

1. Remove the front bezel of the Pressure Sensor Receiver. Install the extension lead to the display unit and to the receiver module. Turn on the ignition.

   All icons will illuminate briefly and then extinguish leaving only the vehicle outline.

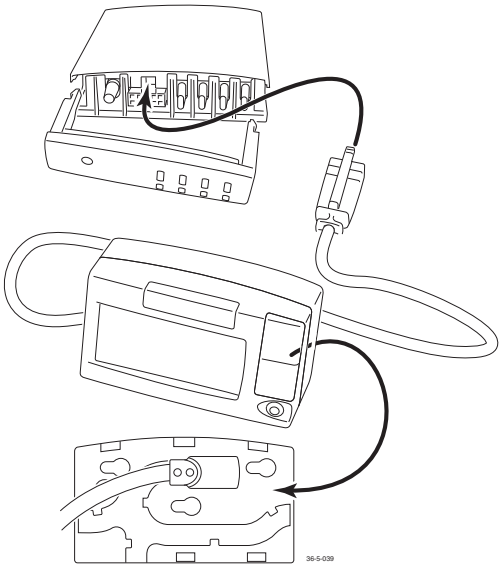

2. When tyre pressure data is received, (drive the vehicle or spin the road wheels), all the road wheel icons will appear. Press the Tyre icon to access the recorded data for each of the four road wheels.
3. Press the Mode button to scroll through the pressure, temperature and pressure deviation readings for the selected tyre.
4. If any tyre pressure sensor is defective, the display will show three dashes to indicate the absence of data for that tyre.
5. To return to normal mode, press the SET button.

System Programming

The system may be programmed by the user on three different levels. Enter Programming Mode by pressing the 'Set' button:

- 2 seconds to enter level 1
- 5 seconds to enter level 2
- 10 seconds to enter level 3

The following parameters may be set in each level:

Level 1
- Cold Pressure
- Tyre Rotation
- Low Pressure Warning
- Pressure Deviation
- High Temperature Alert
- Units Selection

Level 2
- Slope
- Learn Transmitter ID

Level 3
- Low Pressure Alert

Level 1 Programming

Cold inflation pressure

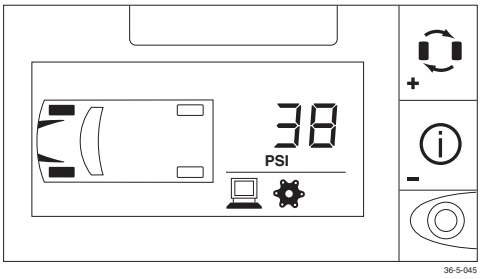

1. Press 'Set' for 2 seconds to enter level 1 programming.
2. Press 'Tyre' to select the front or rear axle. Front or rear tyres will be highlighted.
3. Press 'Mode' to show the current value. Press 'Tyre' to increase or 'Mode' to decrease the current value.
4. Press 'Set' to save the new values.
5. Repeat steps 2 - 4 to set the cold inflation pressure for other the axle.

Tyre Rotation

WARNING
THE ROAD WHEELS AND TYRES ARE ASYMMETRICAL AND DIFFERENT SIZES FRONT AND REAR. THEY MUST NOT BE ROTATED FRONT TO REAR. THIS FUNCTION SHOULD BE USED ONLY TO VERIFY CORRECT TYRE POSITION. DO NOT CHANGE THE PROGRAMMED DATA.

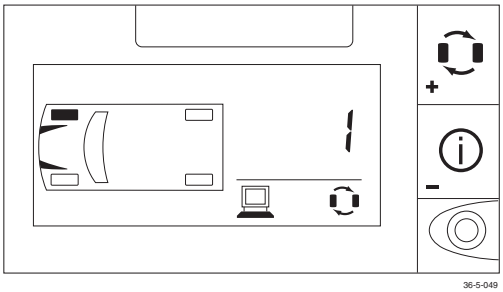

1. Press 'Set' for 2 seconds to enter level 1 programming.
2. Press 'Mode' repeatedly until 'Tyre Rotation' icon is displayed.
3. Press 'Tyre' to scroll to a tyre position. Press 'Mode' to display the current sensor identity.

Each sensor is identified by the colour of a washer on the tyre valve. Tyres are always installed in fixed positions and must remain as follows:

- *Right Front - Green (Code 1)*
- *Left Front - Red (Code 2)*
- *Right Rear - Blue (Code 3)*
- *Left Rear - Yellow (Code 4)*

If the current data is incorrect, revise as follows:

4. Ensure that the road wheels and tyres are installed in the correct locations (see the colour code list above). Note the correct code number for each road wheel.
5. Use 'Tyre' or 'Mode' to correct the sensor identity code if required.
6. Repeat for the remaining tyres.
7. Press 'Set' twice to exit the programme.

Low Pressure Warning

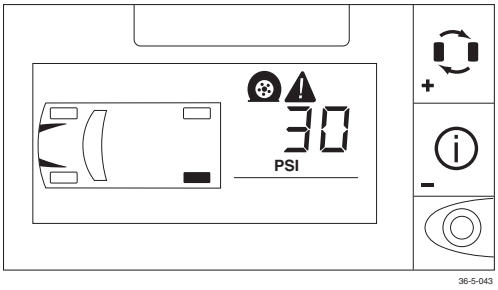

1. Press 'Set' for 2 seconds to enter level 1 programming.
2. Press 'Mode' repeatedly until 'Flat Tyre' icon is displayed.
3. Press 'Tyre' to scroll to the desired axle. Press 'Mode' to display the current low pressure warning value.
4. Press 'Tyre' to increase or 'Mode' to decrease current value.
5. Press 'Set' to enter the new value into memory.

Pressure Deviation Alert

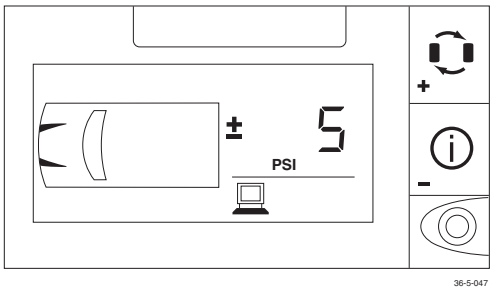

This function sets the threshold for warning of a deviation from normal tyre pressures.

1. Press 'Set' for 2 seconds to enter level 1 programming.
2. Press 'Mode' repeatedly until the '+-' icon is displayed.
3. Press 'Tyre' to display the current value.
4. Press 'Tyre' to increase or 'Mode' to decrease the current value
5. Press 'Set' to save the amended value.
6. Press 'Set' again to revert to normal operation.

High Temperature Alert

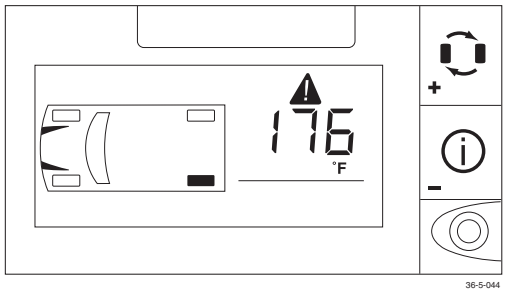

1. Press 'Set' for 2 seconds to enter level 1 programming.
2. Press 'Mode' until 'alert' icon is displayed.
3. Press 'Tyre' to display the current value of the high temperature alert.
4. Press 'Tyre' to increase or 'Mode' to decrease current value
5. Press 'Set' to save the amended value.
6. Press 'Set' again to return to normal mode.

Units Selection

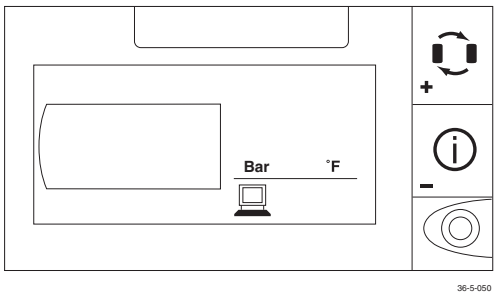

Use this function to select the combination of units for pressure and temperature.

1. Press 'Set' for 2 seconds to enter level 1 programming.
2. Press 'Mode' until pressure / temperature units are displayed.
3. Press 'Tyre' to enter 'Units Selection' mode.
4. Use 'Tyre' or 'Mode' to scroll through four combinations of pressure / temperature units.
5. Press 'Set' to save the selected combination of units.
6. Press the 'Set' button again to revert to normal mode.

Level 2 Programming

Slope

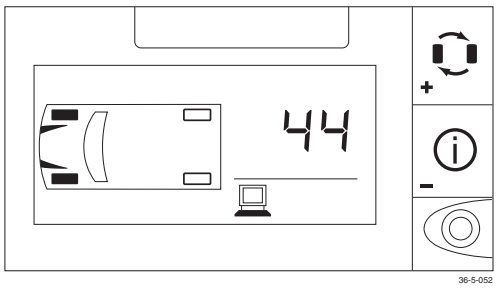

Sets rate of pressure change for tyres in use. This parameter is set at manufacture and is specific only to the recommended tyres for DB9.

1. Press 'Set' for 5 seconds to enter level 2 programming.
2. Press 'Tyre' until the desired vehicle axle is displayed.
3. Press 'Mode' to display the current SLOPE entry (DB9 is set at?)
4. If required, use 'Tyre' to increase or 'Mode' to decrease current value.
5. Press 'Set' to save the final value.
6. Press 'Set' again to return to normal mode.

Transmitter Learn Mode

This mode is used to add or delete transmitters from the system memory. It is vital that transmitter signals are correctly recognised to avoid system reaction to other transmitters (e.g. from passing vehicles with similar sensors).

1. Remove a Redundant Transmitter
   - 1.1 Press 'Set' for 5 seconds to enter level 2 programming.
   - 1.2 Press 'Mode' to select 'Transmitter Learn' mode.
   - 1.3 Press 'Tyre' to display possible tyre positions (filled rectangles represent currently programmed transmitters).
   - 1.4 Press 'Tyre' to scroll to the desired position.
   - 1.5 To delete a transmitter, press the 'Mode' once.
   - 1.6 If required, scroll to other positions using 'Tyre' and, if required, delete any other transmitters using 'Mode' button.
2. Add new Transmitters.
   - 2.1 Press 'Set' for 5 seconds to enter level 2 programming.
   - 2.2 Press 'Mode' to select 'Transmitter Learn' mode.
   - 2.3 Press 'Tyre' to display possible tyre positions (filled rectangles represent currently programmed transmitters).
   - 2.4 Press 'Tyre' to scroll to the desired position. The chosen road wheel icon will flash.
   - 2.5 Program a new transmitter by either:
   - 2.6 Vigorously shaking the transmitter (bounce the road wheel on the ground) to promote a transmission.
   - 2.7 Inflate or deflate the tyre by more than 3 psi (0.2 bar).

The unit will 'beep' when new transmitter is recognised.

   - 2.8 Press 'Tyre' to scroll to the next position. Repeat steps 4 and 5 as required to programme additional transmitters.
   - 2.9 Press 'Set' to save the new transmitter data and to exit 'learn' mode. If no error is found, the system will return to 'normal' mode.

Level 3 Programming

Low Pressure Alert

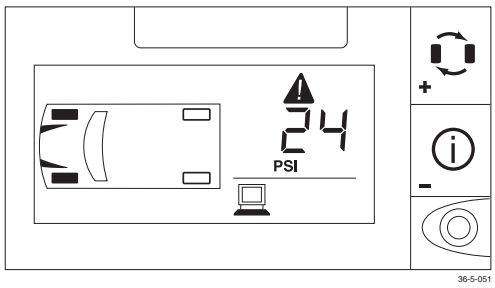

1. Press 'Set' for 10 seconds to enter level 3 programming.
2. Press 'Tyre' button to scroll to the desired axle.
3. Press 'Mode' to view the current low pressure alert value.
4. Press 'Tyre' to increase the current value or press 'Mode' to the decrease current value.
5. Press 'Set' to save when the desired value is reached.
6. Repeat steps 2 to 5 until the Low Pressure Alert Level has been set for all road wheels.
7. Press 'Set' button to exit this mode.
8. Press the 'Set' button again to return to normal mode.

Driveline (05.00)

Contents

Driveshaft (05.01) 5-1-2
Description 1-2
Specifications 1-2
Maintenance 1-2
Propeller Shaft-Renew 1-2
Propshaft Cam Sensor-Sportshift-Renew -Sportshift Only 1-2
Torque Tube-Renew 1-3
Torque Tube & Prop Shaft Assembly-Renew-Manual Vehicles Only 1-4
Torque Tube & Prop Shaft Assembly-Renew-Sportshift Vehicles Only 1-4
Torque Tube-Remove for Access/Refit 1-5
RH/LH Drive Shaft Assembly-Renew 1-7
Halfshafts (05.05) 5-2-1
Specifications 2-1

Driveline (05.00)

Driveshaft (05.01)

Description

The driveshaft consists of a torque tube assembly, incorporating a carbon fibre propshaft, transferring engine power to the gearbox.

The torque tube acts as a structural support between the engine and transmission through the powertrain maintaining NVH (Noise, Vibration & Harshness) and crash worthiness.

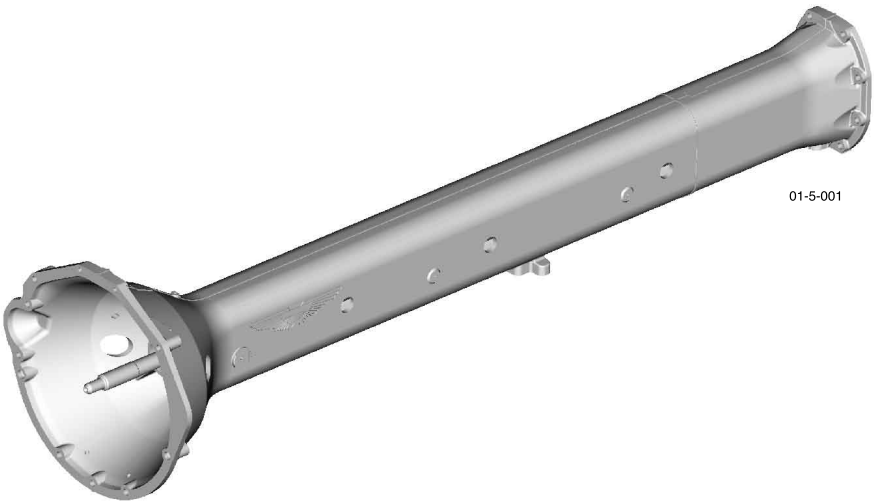

Specifications

Torque Figures			
Description		Nm.	lb. / ft.
Torque Tube (front)	M10	43-57 (Nominal 50.5 ±15%)	32-42.5
Torque Tube (rear)		43-57 (Nominal 50.5 ±15%)	32-42.5
Exhaust Manifold		18-22	13.5-16.5
Starter Motor		50	37

Maintenance

Propeller Shaft-Renew

Repair Operation Time (ROT)	
Item	**Code**
Propeller Shaft-Renew	**05.01.AB**

Removal

1. Disconnect vehicle battery.
2. Raise vehicle on ramp.

> **Caution**
> ***On a two post ramp, ensure the vehicle is 'strapped' to the ramp.***

3. Remove transaxle (see Workshop Manual procedure 07.03.AA Manual or 07.03.BA Sportshift - Transaxle Assembly - Remove for Access and Refit).
4. Lower lifter supporting torque tube.
5. Remove large circlip and with assistance, remove propshaft from torque tube

Installation

1. Clean propeller shaft assembly, circlip and mating faces.
2. With assistance, install propshaft into torque tube, install circlip.
3. Raise lifter supporting torque tube to enable installation of transaxle.
4. Install transaxle (see Workshop Manual procedure 07.03.AA Manual or 07.03.BA Sportshift - Transaxle Assembly - Remove for Access and Refit).
5. Lower vehicle on ramp.
6. Connect vehicle battery.

Propshaft Cam Sensor-Sportshift-Renew-Sportshift Only

Repair Operation Time (ROT)	
Item	**Code**
Propshaft Cam Sensor-Sportshift-Renew	**05.01.AC**

Removal

1. Disconnect vehicle battery.

> ***Warning***
> ***Always disconnect the battery earth (- ve) terminal first.***

2. Raise vehicle on ramp.

> ***Warning***
> ***When raising the vehicle on a 'two post' ramp, ensure that the rear end of the vehicle is securely strapped to the ramp. Failure to strap the rear of the vehicle down may lead to the vehicle falling off the ramp.***

> **Caution**
> ***When using a 'two post' vehicle ramp, remove the screws that secure the rear section of the wheel arch liner to body. Hold back the rear section of the wheel arch liner to correctly position the foot of the vehicle lift.***

3. Remove exhaust system (see Workshop Manual procedure 09.00.NB Exhaust System - Excluding Manifold/DownPipes - Renew).
4. Disconnect multiplug between propshaft speed sensor and transmission harness.

5. Remove bolt securing propshaft speed sensor to torque tube and remove sensor.

Installation

1. Install propshaft speed sensor to torque tube and secure with bolt.
2. Connect multiplug between propshaft speed sensor and transmission harness.
3. Install exhaust system (see Workshop Manual procedure 09.00.NB Exhaust System - Excluding Manifold/ DownPipes - Renew)
4. Lower vehicle on ramp.
5. Connect vehicle battery.

Warning
Always connect the battery earth (+ ve) terminal first.

Torque Tube-Renew

Repair Operation Time (ROT)	
Item	**Code**
Torque Tube-Renew	**05.01.BB**

Removal

1. Disconnect vehicle battery.
2. Raise vehicle on ramp.

Caution
On a two post ramp, ensure the vehicle is 'strapped' to the ramp.

Warning
The torque tube is heavy. To avoid personal injury or damage to the torque tube, torque tube removal / installation is a two person operation.

3. Remove torque tube assembly (see Workshop Manual procedure 05.01.CA Torque Tube - Remove for Access and Refit).
4. **Sportshift only** - Remove grommet sealing clutch bleed pipe to torque tube.
5. Release clips and remove bleed and supply pipes from slave cylinder. Install clips in union.

Caution
Plug pipe connection to prevent ingress of moisture or dirt.

6. **Sportshift only** - Remove grommet sealing clutch pipe to torque tube.
7. **Manual only** - Loosen and remove pipe adaptors (x2) from slave cylinder.
8. **Sportshift only** - Release clip, disconnect clutch pipe from slave cylinder adaptor.
9. **Sportshift only** - Release clip securing transmission harness to clutch pipe mounting bracket.
10. **Sportshift only** - Release clips (x4) securing clutch pipe to transmission harness.
11. **Sportshift only** - Remove clutch pipe from torque tube.
12. **Sportshift only** - Disconnect multiplug between clutch position sensor and transmission harness.
13. **Sportshift only** - Release clip securing clutch position sensor harness to top of torque tube.
14. **Sportshift only** - Release clips (x2) securing clutch position sensor harness to side of torque tube.
15. **Sportshift only** - Remove bolts (x2) securing clutch position sensor to slave cylinder and remove sensor.
16. Remove bolts (x2), securing slave cylinder to torque tube.
17. Remove bolts (x2), securing slave cylinder to torque tube.
18. Remove slave cylinder, collect spacer.
19. **Sportshift only** - Disconnect multiplug between propshaft speed sensor and transmission harness.
20. **Sportshift only** - Remove bolt securing propshaft speed sensor to torque tube and remove sensor.
21. **Sportshift only** - Release clips (x5) securing transmission harness to torque tube.
22. Remove exhaust mountings (bolts x4) (see Fig. 1).

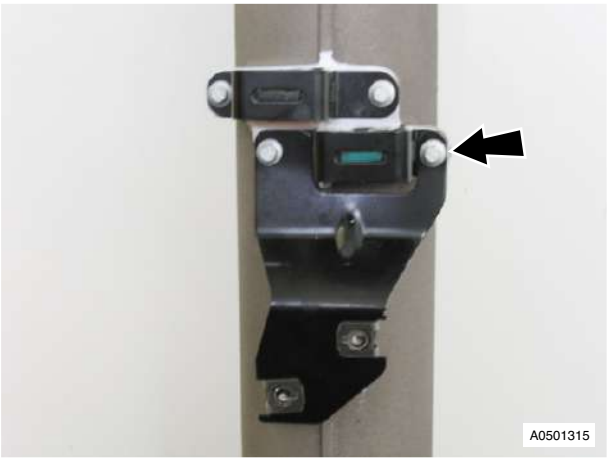

Fig. 1

Installation

1. Install exhaust mountings (bolts x4) (torque).
2. Clean slave cylinder, spacer and pipe adaptors.
3. **Sportshift only** - Secure transmission harness to torque tube using clips.
4. **Sportshift only** - Secure propshaft speed sensor to torque tube using bolt.
5. **Sportshift only** - Connect multiplug between propshaft speed sensor and transmission harness.
6. Install spacer and slave cylinder, install and torque tighten bolts (x2).
7. **Sportshift only** - Secure clutch position sensor to slave cylinder using bolts.
8. **Sportshift only** - Secure clutch position sensor harness to side of torque tube using clips.
9. **Sportshift only** - Secure clutch position sensor harness to top of torque tube using clip.
10. **Sportshift only** - Connect multiplug between clutch position sensor and transmission harness.

11. **Sportshift only** - Install clutch pipe to torque tube.
12. **Sportshift only** - Secure clutch pipe to transmission harness using clips.
13. **Sportshift only** - Secure transmission harness to clutch pipe mounting bracket using clip.
14. Install pipe adaptors (x2) in slave cylinder.
15. **Sportshift only** - Install grommet sealing clutch pipe to torque tube.
16. **Sportshift only** - Install clip and refit bleed pipe to slave cylinder adaptor.
17. **Sportshift only** - Install grommet sealing clutch bleed pipe to torque tube.
18. **Manual only** - Install bleed and supply pipes onto slave cylinder adaptors (x2), secure with clips.

Warning
The torque tube is heavy. To avoid personal injury or damage to the torque tube, torque tube removal / installation is a two person operation.

19. Install torque tube assembly (see Workshop Manual procedure 05.01.CA Torque Tube - Remove for Access and Refit).
20. Bleed clutch (see Workshop Manual procedure 08.00.AF - Manual, 08.00.AE - Sportshift - Clutch Hydraulic System - Bleed).

Caution
Clutch fluid must not be allowed to contact vehicle paint work. Remove spilt clutch fluid from paint work by rinsing away with running water.

21. Lower vehicle on ramp.
22. Connect vehicle battery.

Torque Tube & Prop Shaft Assembly-Renew-Manual Vehicles Only

Repair Operation Time (ROT)	
Item	**Code**
Torque Tube & Prop Shaft Assembly-Renew-Manual Vehicles Only	**05.01.BC**

Removal

1. Disconnect vehicle battery.
2. Raise vehicle on ramp.
3. Remove torque tube assembly (see Workshop Manual procedure 05.01.CA Torque Tube - Remove for Access & Refit).
4. Release clips and remove bleed and supply pipes from slave cylinder.
5. Install clips in union.
6. Loosen and remove pipe adaptors (x2) from slave cylinder.
7. Remove bolts (x2), securing slave cylinder to torque tube.
8. Remove slave cylinder and collect spacer.
9. Remove exhaust mountings (bolts x4).

Installation

1. Install exhaust mountings (bolts x4) (torque).
2. Clean slave cylinder, spacer and pipe adaptors.
3. Install spacer and slave cylinder, install and torque tighten bolts (x2).
4. Install pipe adaptors (x2) in slave cylinder.
5. Install bleed and supply pipes onto slave cylinder adaptors (x2), secure with clips.
6. Install torque tube assembly (see Workshop Manual procedure 05.01.CA Torque Tube - Remove for Access & Refit).
7. Bleed clutch (see Workshop Manual procedure 08.00.AF Clutch Hydraulic System - Bleed).
8. Lower vehicle on ramp.
9. Connect vehicle battery.

Torque Tube & Prop Shaft Assembly-Renew-Sportshift Vehicles Only

Repair Operation Time (ROT)	
Item	**Code**
Torque Tube & Prop Shaft Assembly-Renew-Sportshift Vehicles Only	**05.01.BC**

Removal

1. Disconnect vehicle battery.
2. Raise vehicle on ramp.
3. Remove torque tube assembly (see Workshop Manual procedure 05.01.CA Torque Tube - Remove for Access & Refit).
4. Remove grommet sealing clutch bleed pipe to torque tube.
5. Release clip, disconnect bleed pipe from slave cylinder adaptor and remove pipe.
6. Remove grommet sealing clutch pipe to torque tube.
7. Release clip, disconnect clutch pipe from slave cylinder adaptor.
8. Release clip securing transmission harness to clutch pipe mounting bracket.
9. Release clips (x4) securing clutch pipe to transmission harness.
10. Remove clutch pipe from torque tube.
11. Disconnect multiplug between clutch position sensor and transmission harness.
12. Release clip securing clutch position sensor harness to top of torque tube.
13. Release clips (x2) securing clutch position sensor harness to side of torque tube.
14. Remove bolts (x2) securing clutch position sensor to slave cylinder and remove sensor.
15. Remove bolts (x2), securing slave cylinder to torque tube.
16. Remove slave cylinder and collect spacer.
17. Disconnect multiplug between propshaft speed sensor and transmission harness.

18. Remove bolt securing propshaft speed sensor to torque tube and remove sensor.
19. Release clips (x5) securing transmission harness to torque tube.
20. Remove bolts (x4) securing exhaust mountings to torque tube.

Installation

1. Secure exhaust mountings to torque tube using bolts.
2. Secure transmission harness to torque tube using clips.
3. Secure propshaft speed sensor to torque tube using bolt.
4. Connect multiplug between propshaft speed sensor and transmission harness.
5. Install slave cylinder and spacer to torque tube.
6. Secure slave cylinder to torque tube using bolts.
7. Secure clutch position sensor to slave cylinder using bolts.
8. Secure clutch position sensor harness to side of torque tube using clips.
9. Secure clutch position sensor harness to top of torque tube using clip.
10. Connect multiplug between clutch position sensor and transmission harness.
11. Install clutch pipe to torque tube.
12. Secure clutch pipe to transmission harness using clips.
13. Secure transmission harness to clutch pipe mounting bracket using clip.
14. Install clip and install clutch pipe to slave cylinder adaptor.
15. Install grommet sealing clutch pipe to torque tube.
16. Install clip and refit bleed pipe to slave cylinder adaptor.
17. Install grommet sealing clutch bleed pipe to torque tube.
18. Install torque tube assembly (see Workshop Manual procedure 05.01.CA Torque Tube - Remove for Access & Refit).
19. Connect vehicle battery.
20. Bleed clutch hydraulics (see Workshop Manual procedure 08.00.AE Clutch Hydraulic System - Sportshift - Bleed).
21. Lower vehicle on ramp.

Torque Tube-Remove for Access/Refit

Repair Operation Time (ROT)	
Item	**Code**
Torque Tube-Remove/Refit	**05.01.CA**

Remove

1. Disconnect vehicle battery.
2. Raise vehicle on ramp.

Caution
On a two post ramp, ensure the vehicle is 'strapped' to the ramp.

Warning
The torque tube is heavy. To avoid personal injury or damage to the torque tube, torque tube removal / installation is a two person operation.

3. Remove transaxle (see Workshop Manual procedure 07.03.AA Transaxle Assembly - Manual - Remove for Access and Refit).
4. Remove LH exhaust manifold (see Workshop Manual procedure 09.00.CB Manifold - Exhaust - LH - Renew).
5. Allow torque tube to lower until engine is balanced.
6. Remove large circlip using special tool (see Fig. 1).

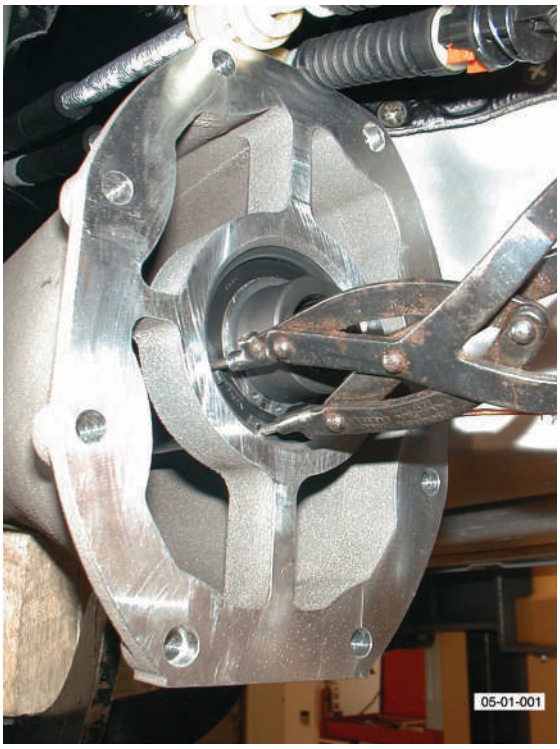

Fig. 1

7. With assistance, remove propshaft from torque tube (see Fig. 2).

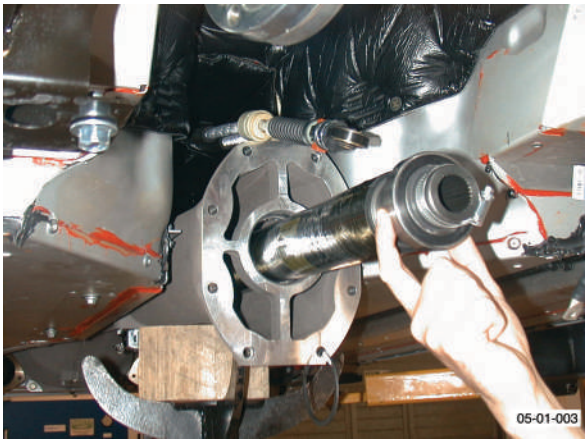

Fig. 2

8. **Manual Only** - Open clutch hydraulics bleed nipple and with suitable container below, press clutch pedal fully and retain pedal in that position. Tighten bleed nipple (see Fig. 3).

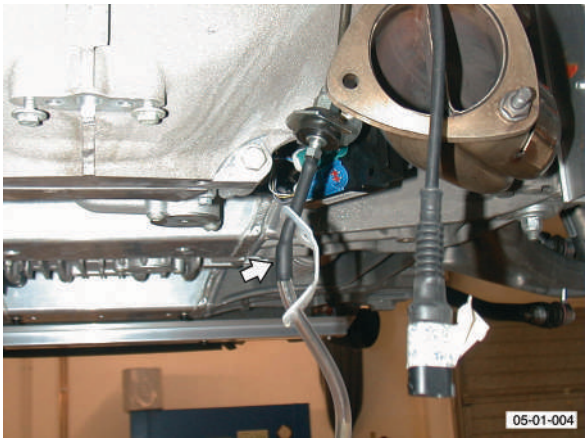

Fig. 3

Place suitable absorbent material around the affected area to absorb any possible clutch fluid spillage.

9. **Manual Only** - Disconnect the clutch slave cylinder supply pipe at the flexible pipe union and cap pipes (see Fig. 4)

Fig. 4

10. With assistance, support torque tube and remove bolts (x16) that secure torque tube to engine (see Fig. 5).

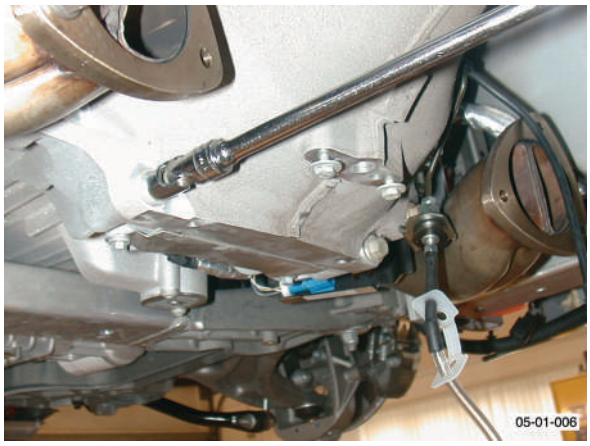

Fig. 5

11. Remove torque tube (see Fig. 6).

Fig. 6

Warning
The torque tube is heavy. To avoid personal injury or damage to the torque tube, torque tube removal / installation is a two person operation.

Installation

1. Clean torque tube and mating face on engine.
2. With assistance, install and align torque tube to engine.

Warning
The torque tube is heavy. To avoid personal injury or damage to the torque tube, torque tube removal / installation is a two person operation.

3. Install and torque tighten bolts (x16) using a cross-over sequence to ensure even face loading.
4. With assistance, install propshaft into torque tube and install circlip.
5. **Manual Only** - Remove pipe caps and reconnect clutch hydraulics (clean up fluid loss).

6. **Manual Only** - Bleed clutch hydraulics.

Caution
Clutch fluid must not be allowed to contact vehicle paint work. Remove spilt clutch fluid from the paint work by rinsing away with running water.

7. Install LH exhaust manifold (see Workshop Manual 09.00.CB Manifold - Exhaust - LH - Renew).
8. Install transaxle (see Workshop Manual07.03.AA Transaxle Assembly - Manual - Remove for Access and Refit).
9. Lower vehicle on ramp.
10. Connect vehicle battery.

RH/LH Drive Shaft Assembly-Renew

Repair Operation Time (ROT)		
Item		**Code**
Drive Shaft Assembly-Renew	RH	**05.05.BB**
Drive Shaft Assembly-Renew	LH	**05.05.AB**

Removal

1. Raise vehicle on ramp.
2. Remove road wheel(s).
3. Remove rear undertray (see Workshop Manual procedure 01.02.PB Undertray - Rear - Renew).
4. With assistance, remove drive shaft nut.

Drive shaft nut will be very tight.

5. Remove and discard Allen bolts (x6), collect plates (x3), drive shaft to differential.

Allen bolts will be tight to remove due to thread lock coating.

6. Release drive shaft from rear hub, remove drive shaft.

Installation

1. Clean drive shaft and mating faces on differential flange and rear hub.
2. Install drive shaft in rear hub, align to differential flange.
3. Apply thread lock to new Allen bolt threads.

New Allen bolts should have a thread lock coating.

4. Clean and install plates (x3), Allen bolts (x6), tighten bolts.
5. Install drive shaft nut. With assistance, tighten nut.
6. Install rear undertray (see Workshop Manual procedure 01.02.PB Undertray - Rear - Renew).
7. Install road wheel(s).
8. Lower vehicle on ramp.

Driveline (05.00)

Halfshafts (05.05)

Specifications

Torque Figures		
Description	Nm.	lb./ft
Halfshaft nut	300	221.5
Halfshaft to differential	70	52

Brake System (06.00)

Contents

Front Disc Brake (06.03) 6-3-2
Description 3-2
Specifications 3-2
Maintenance 3-3
Front Brake Disc Set - Renew 3-3
Front Caliper-Renew 3-4
Front Pad Kit - Renew 3-5
Front Brake Hose Assembly - Renew 3-5
Rear Disc Brakes (06.04) 6-4-1
Description 4-1
Specifications 4-1
Maintenance 4-2
Rear Brake Disc Set-Renew 4-2
RH/LH Rear Caliper-Renew 4-2
Rear Pad Kit-Renew 4-3
Rear Brake Hose Assembly-Renew 4-4
Hand Brake (06.05) 6-5-1
Description 5-1
Specifications 5-1
Maintenance 5-2
RH/LH Handbrake Caliper-Renew 5-2
Handbrake Lever Assembly-Renew 5-2
Handbrake Pad Set-Renew 5-2
Handbrake Cable Assembly-Adjust 5-3
Handbrake Cable Assembly-Vehicle Set-Renew 5-3
Brake Actuation System (06.06) 6-6-1
Description 6-1
Tandem Master Cylinder 6-1
Specifications 6-1
Maintenance 6-2
Pedal Box Assembly - Renew 6-2
Installation 6-2
RHD-Brake Master Cylinder Assembly-Renew 6-2
LHD-Brake Master Cylinder Assembly-Renew 6-3
Clutch Master Cylinder Assembly-Renew 6-3
RH/LH Front Caliper Hose Assembly-Renew 6-4
RH/LH Rear Brake Caliper Tube Assembly-Renew . 6-5
Brake Master Cylinder to Modulator Secondary Tube Assembly-Renew 6-6
Brake Master Cylinder to Modulator Primary Tube Assembly-Renew 6-7
Rear Wheel Brake Front to Rear Tube Assembly -Renew 6-8
RH Front Caliper to Modulator Tube Assembly -Renew 6-9
Rear Wheel Brake Tube Assembly-Renew 6-10
Dynamic Stability Control Module-Renew 6-11
Power Brake System (06.07) 6-7-1
Brake Booster 7-1
Emergency Brake Assist 7-1
Specifications 7-2
Maintenance 7-2
Brake Booster-RHD-Renew 7-2
Brake Booster-LHD-Renew 7-2
Brake Fluid Reservoir-Renew 7-3
Brake Bleeding - AMDS 7-3
Brake Master Cylinder and Vacuum Booster -Renew 7-4
Brake Master Cylinder-Renew 7-5
Anti-lock Braking System (ABS) (06.09) 6-9-1
Dynamic Stability Control 9-1
Concept 9-1
System Overview 9-2
Operation Summary 9-2
Traction Control 9-2
Functional Description 9-2
Engine Intervention 9-3
Brake Intervention 9-3
ABS / DSC Circuit 9-3
Specifications 9-3
Maintenance 9-4
ABS Modulator - Remove and Install 9-4

Brake Systems (06.00)

Front Disc Brake (06.03)

Description

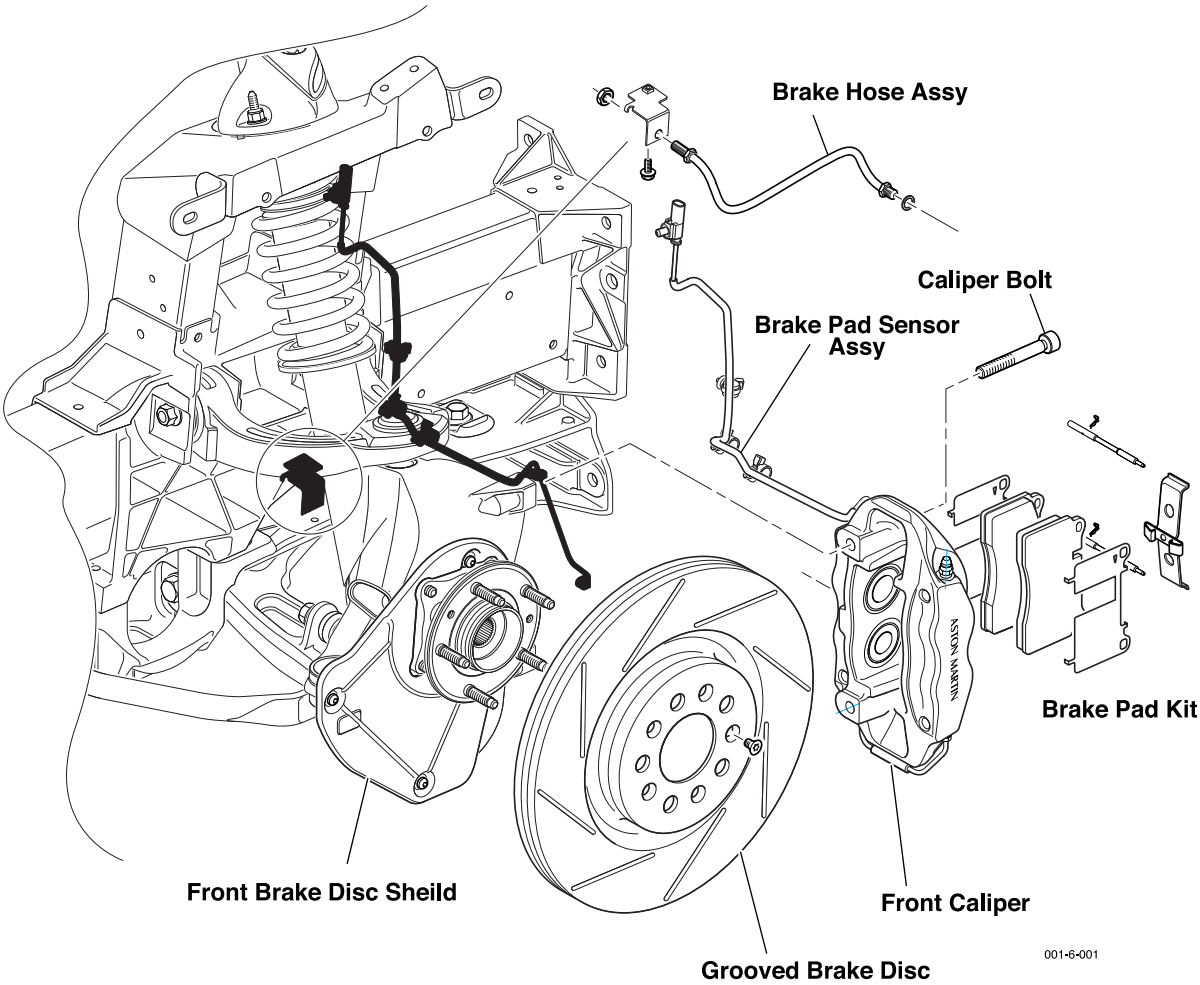

The front, four piston, brake caliper is attached to the vertical link with two bolts. The caliper is a monobloc assembly. The steel brake discs are ventilated and grooved. They are attached to the hub by two attachment bolts.

The two-pairs of opposed pistons operate directly on the brake pads that are installed one each side of the disc.

Specifications

Oils/Greases	
Brake Fluid	Castrol Response SuperDOT 4 (Not silicon based brake fluid)

Brake discs	Front
Brake disc initial thickness	32 mm
Brake disc Min. thickness	30 mm
Brake Disc 'Runout'	<70 μm measured @ 2 mm in from the brake disc edge.

Brake pads	
New pad thickness	9.4 mm
Minimum lining thickness	2.5 mm

Torque Figures

Description	Nm.	lb. / ft.
Brake Hose Unions	22	16.5
Brake Hose Bracket to Body	9	6.6
Brake Caliper to Vertical Link	20 + 66°-70°	15 + 66°-70°
Handbrake Caliper to Vertical Link	15 +90°-94°	11.5 + 90°-94°
Brake Disc Screws	10.5	8

Maintenance

Front Brake Disc Set - Renew

Repair Operation Time (ROT)	
Item	**Code**
Front Brake Disc Set - Renew	**06.03.AA**

Removal

WARNING
BRAKE FLUID IS POISONOUS.
DO NOT DRINK THE BRAKE FLUID OR LET IT TOUCH YOUR SKIN OR EYES. IF YOU GET BRAKE FLUID IN YOUR MOUTH, GET MEDICAL AID IMMEDIATELY. FLUSH ALL BRAKE FLUID FROM YOUR EYES OR SKIN WITH WATER AND GET MEDICAL AID.

WARNING
DO NOT USE COMPRESSED AIR TO REMOVE BRAKE PAD DUST. THE DUST CAN BE DANGEROUS. ALWAYS USE A VACUUM BRUSH OR THE RECOMMENDED BRAKE CLEANER TO REMOVE BRAKE PAD DUST.

WARNING
BRAKE FLUID IS HYGROSCOPIC. IF KEPT IN OPENED CONTAINERS IT WILL ABSORB WATER VAPOUR. ONLY USE BRAKE FLUID FROM NEW CONTAINERS WHEN YOU FILL THE BRAKE FLUID RESERVOIR.

CAUTION
DO NOT LET BRAKE FLUID TOUCH THE VEHICLE PAINT WORK. IF YOU DO THE PAINTWORK CAN BE DAMAGED. FLUSH ALL SPILLED BRAKE FLUID FROM THE PAINTWORK WITH WATER.

Place an absorbent cloth around the brake fluid reservoir filler neck to absorb any possible brake fluid spillage.

1. Raise the vehicle and make it safe.
2. Remove the road wheels.
3. Remove the pad wear sensors.

To remove the brake caliper easier, retract the caliper pistons. When you retract the caliper pistons the brake fluid reservoir can overflow.

4. Remove the dust caps from the bleed nipples.
5. Install a bleed bottle.
6. Loosen the bleed nipples.
7. Push the pistons into calipers and tighten the bleed nipples.
8. Remove the bleed bottle.
9. Install the dust caps on the bleed screws.
10. Remove the brake pad retaining pins and anti-rattle springs.
11. Remove the two caliper attachment bolts from each caliper.
12. Use a cable tie to hold each caliper away.
13. Remove the two disc attachment screws and the two discs.

Installation

1. Clean the two hubs.
2. Install the two discs.
3. Install and torque two attachment screws into each disc.

WARNING
ALWAYS INSTALL NEW BOLTS WHEN YOU INSTALL THE BRAKE CALIPER. IF YOU DO NOT THE BOLTS CAN BREAK AND CAUSE FAILURE OF THE BRAKE.

4. Put each caliper in position and attach it with two new bolts.
5. Torque the caliper attachment bolts.
6. Clean the calipers, pins, shims and springs.
7. Apply anti-seize compound to the pads, pins and shims.
8. Install the pads and shims into the caliper.

When you install new brake pads, install a new brake pad wear sensor.

9. Install the pad retaining pins and springs into the calipers.
10. Install the pad wear sensors.
11. Operate the brake pedal four times.
12. Fill the brake fluid reservoir to the correct level.
13. Install the road wheels.
14. Lower the vehicle.

WARNING
BEFORE YOU DRIVE THE VEHICLE, OPERATE THE FOOT BRAKE PEDAL 2 OR 3 TIMES TO MAKE SURE THAT THE FOOT BRAKE OPERATES CORRECTLY. YOU MUST OPERATE BRAKE CALIPER PISTONS TO CLOSE THE SPACE BETWEEN THE BRAKE PADS AND THE DISC.

Front Caliper-Renew

Repair Operation Time (ROT)		
Item		**Code**
Front caliper-Renew	Right	**06.03.AB**
Front caliper-Renew	Left	**06.03.AC**

Removal

WARNING
BRAKE FLUID IS POISONOUS.
DO NOT DRINK THE BRAKE FLUID OR LET IT TOUCH YOUR SKIN OR EYES. IF YOU GET BRAKE FLUID IN YOUR MOUTH, GET MEDICAL AID IMMEDIATELY. FLUSH ALL BRAKE FLUID FROM YOUR EYES OR SKIN WITH WATER AND GET MEDICAL AID.

WARNING
DO NOT USE COMPRESSED AIR TO REMOVE BRAKE PAD DUST. THE DUST CAN BE DANGEROUS. ALWAYS USE A VACUUM BRUSH OR THE RECOMMENDED BRAKE CLEANER TO REMOVE BRAKE PAD DUST.

WARNING
BRAKE FLUID IS HYGROSCOPIC. IF KEPT IN OPENED CONTAINERS IT WILL ABSORB WATER VAPOUR. USE ONLY BRAKE FLUID FROM FRESHLY OPENED CONTAINERS WHEN TOPPING-UP THE BRAKE FLUID RESERVOIR.

CAUTION
DO NOT LET BRAKE FLUID TOUCH THE VEHICLE PAINT WORK. IF YOU DO THE PAINTWORK CAN BE DAMAGED. FLUSH ALL SPILLED BRAKE FLUID FROM THE PAINTWORK WITH WATER.

Place an absorbent cloth around the brake fluid reservoir filler neck to absorb spilled brake fluid.

1. Raise the vehicle and make it safe.
2. Remove the road wheel.
3. Remove the pad wear sensor.

To remove the brake caliper easier, retract the caliper pistons. When you retract the caliper pistons the brake fluid reservoir can overflow.

4. Move the caliper pistons into to the caliper to release the pads.
5. Remove the brake pad retaining pins and anti-rattle spring.
6. Remove the pads and shims from the caliper.
7. Disconnect the brake hose.
8. Install sealing plugs into the open brake-pipe port of the caliper and the hose to prevent contamination.
9. Remove and discard the two caliper attachment bolts.
10. Remove the caliper.

Installation

WARNING
DO NOT USE COMPRESSED AIR TO REMOVE BRAKE PAD DUST. THE DUST CAN BE DANGEROUS. ALWAYS USE A VACUUM BRUSH OR THE RECOMMENDED BRAKE CLEANER TO REMOVE BRAKE PAD DUST.

1. Clean the pads, pins, shims and the spring.

WARNING
ALWAYS INSTALL NEW BOLTS WHEN YOU INSTALL THE BRAKE CALIPER. IF YOU DO NOT THE BOLTS CAN BREAK AND CAUSE FAILURE OF THE BRAKE.

2. Install a new caliper and attach it with two new bolts.
3. Torque the two caliper attachment bolts.
4. Apply anti-seize compound to the pads, pins and shims.
5. Install the pads and shims into the caliper.

When you install new brake pads, install a new brake pad wear sensor.

6. Install the pad retaining pins and spring into the caliper.
7. Remove the sealing plug from the brake-pipe port.

CAUTION
MAKE SURE THAT THE ALIGNMENT LINE ON THE BRAKE HOSE STAYS IN A STRAIGHT LINE. IF THE ALIGNMENT LINE IS NOT STRAIGHT, THE BRAKE HOSE IS TWISTED. THIS CAN CAUSE IT TO FAIL.

CAUTION
ON LEFT AND RIGHT CALIPERS, THE BRAKE HOSE MUST GO TOWARDS THE FRONT OF THE CAR.

7.1 Loosely install the brake hose union into the caliper.
7.2 Make sure that the brake hose alignment line is straight. Adjust the hose if necessary.
7.3 Install the alignment tool (206-100).

7.4 Use the tool to align the hose and tighten the union to **22 Nm**.
7.5 Do a check of the hose alignment again. If the hose is not correctly aligned, loosen the union and adjust the hose. Tighten the union to **22 Nm.**

8. Install the pad wear sensor.
9. Remove the dust cap from the bleed nipple.
10. Install the bleed bottle.
11. Fill the brake fluid reservoir to the correct level.
12. With the aid of one more person, bleed the brake caliper.
13. Remove the bleed bottle.

14. Install the dust cap for the bleed nipple.
15. Fill the brake fluid reservoir to the correct level.
16. Install road wheel.
17. Lower the vehicle.

WARNING
BEFORE YOU DRIVE THE VEHICLE, OPERATE THE FOOT BRAKE PEDAL 2 OR 3 TIMES TO MAKE SURE THAT THE FOOT BRAKE OPERATES CORRECTLY. YOU MUST OPERATE BRAKE CALIPER PISTONS TO CLOSE THE SPACE BETWEEN THE BRAKE PADS AND THE DISC.

Front Pad Kit - Renew

Repair Operation Time (ROT)	
Item	**Code**
Front Pad Kit - Renew	**06.03.AD**

Removal

WARNING
BRAKE FLUID IS POISONOUS.
DO NOT DRINK THE BRAKE FLUID OR LET IT TOUCH YOUR SKIN OR EYES. IF YOU GET BRAKE FLUID IN YOUR MOUTH, GET MEDICAL AID IMMEDIATELY. FLUSH ALL BRAKE FLUID FROM YOUR EYES OR SKIN WITH WATER AND GET MEDICAL AID.

WARNING
BRAKE FLUID IS HYGROSCOPIC. IF KEPT IN OPENED CONTAINERS IT WILL ABSORB WATER VAPOUR. USE ONLY BRAKE FLUID FROM FRESHLY OPENED CONTAINERS WHEN TOPPING-UP THE BRAKE FLUID RESERVOIR.

CAUTION
DO NOT LET BRAKE FLUID TOUCH THE VEHICLE PAINT WORK. IF YOU DO THE PAINTWORK CAN BE DAMAGED. FLUSH ALL SPILLED BRAKE FLUID FROM THE PAINTWORK WITH WATER.

Place an absorbent cloth around the brake fluid reservoir filler neck to absorb spilled brake fluid.

1. Raise the vehicle and make it safe.
2. Remove the road wheels.
3. Remove the pad wear sensors.

To remove the brake caliper easier, retract the caliper pistons. When you retract the caliper pistons the brake fluid reservoir can overflow.

4. Remove the dust caps from the bleed nipples .
5. Install a bleed bottle onto each bleed nipple.
6. Loosen the bleed nipples and push pistons into calipers.
7. Tighten bleed nipples.
8. Remove the bleed bottles.
9. Install the dust caps onto the bleed nipples.
10. Remove the brake pad retaining pins and anti-rattle springs.
11. Remove the pads and shims from the calipers.

Installation

WARNING
DO NOT USE COMPRESSED AIR TO REMOVE BRAKE PAD DUST. THE DUST CAN BE DANGEROUS. ALWAYS USE A VACUUM BRUSH OR THE RECOMMENDED BRAKE CLEANER TO REMOVE BRAKE PAD DUST.

1. Clean the calipers, pins, shims and the springs.
2. Apply anti-seize compound to the pads, pins and shims.
3. Install the pads and shims into the caliper.

When you install new brake pads, install a new brake pad wear sensor.

4. Install the pad retaining pins and springs into the calipers.
5. Install the pad wear sensors.
6. Operate the brake pedal four times.
7. Fill the brake fluid reservoir to the correct level.
8. Install the road wheels.
9. Lower the vehicle.

Front Brake Hose Assembly - Renew

Repair Operation Time (ROT)		
Item		**Code**
Front Brake Hose Assembly-Renew	Right	**06.03.AE**
Front Brake Hose Assembly-Renew	Left	**06.03.AF**

Removal

1. Raise the vehicle and make it safe.
2. Remove the applicable road wheel.
3. Remove the dust cap from the bleed nipple.
4. Install a bleed bottle onto the applicable caliper.
5. Open the bleed nipple.
6. Push the brake pedal approximately 60 mm and hold it with a support.
7. Tighten the bleed nipple.
8. Remove the bleed bottle.
9. Install the dust cap on the bleed nipple.
10. Disconnect the brake hose union from the caliper.
11. Install sealing plugs in the open ports.
12. Remove the brake pipe union from the hose.
13. Remove the M6 screw that attaches the hose bracket to the body.
14. Remove the hose.

Installation

1. Put the hose in position.
2. Install and torque the M6 screw that attaches the hose bracket to the body.
3. Install and torque the brake pipe union onto the hose.

4. Remove the sealing plugs from the port in the caliper and the hose.

CAUTION
MAKE SURE THAT THE ALIGNMENT LINE ON THE BRAKE HOSE STAYS IN A STRAIGHT LINE. IF THE ALIGNMENT LINE IS NOT STRAIGHT, THE BRAKE HOSE IS TWISTED. THIS CAN CAUSE IT TO FAIL.

CAUTION
ON LEFT AND RIGHT CALIPERS, THE BRAKE HOSE MUST GO TOWARDS THE FRONT OF THE CAR.

4.1 Loosely install the brake hose union into the caliper.
4.2 Make sure that the brake hose alignment line is straight. Adjust the hose if necessary.
4.3 Install the alignment tool (206-100).

4.4 Use the tool to align the hose and tighten the union to **22 Nm**.
4.5 Do a check of the hose alignment again. If the hose is not correctly aligned, loosen the union and adjust the hose. Tighten the union to **22 Nm.**

5. Remove the pedal support.
6. Fill the brake fluid reservoir to the correct level.
7. Get the aid of one more person and bleed the brake caliper.
8. Remove the bleed bottle.
9. Install the bleed nipple dust cap.
10. Clean all spilled brake fluid.
11. Fill the brake fluid reservoir to the correct level.
12. Install the road wheel.
13. Lower the vehicle.

Brake system (06.00)

Rear Disc Brakes (06.04)

Description

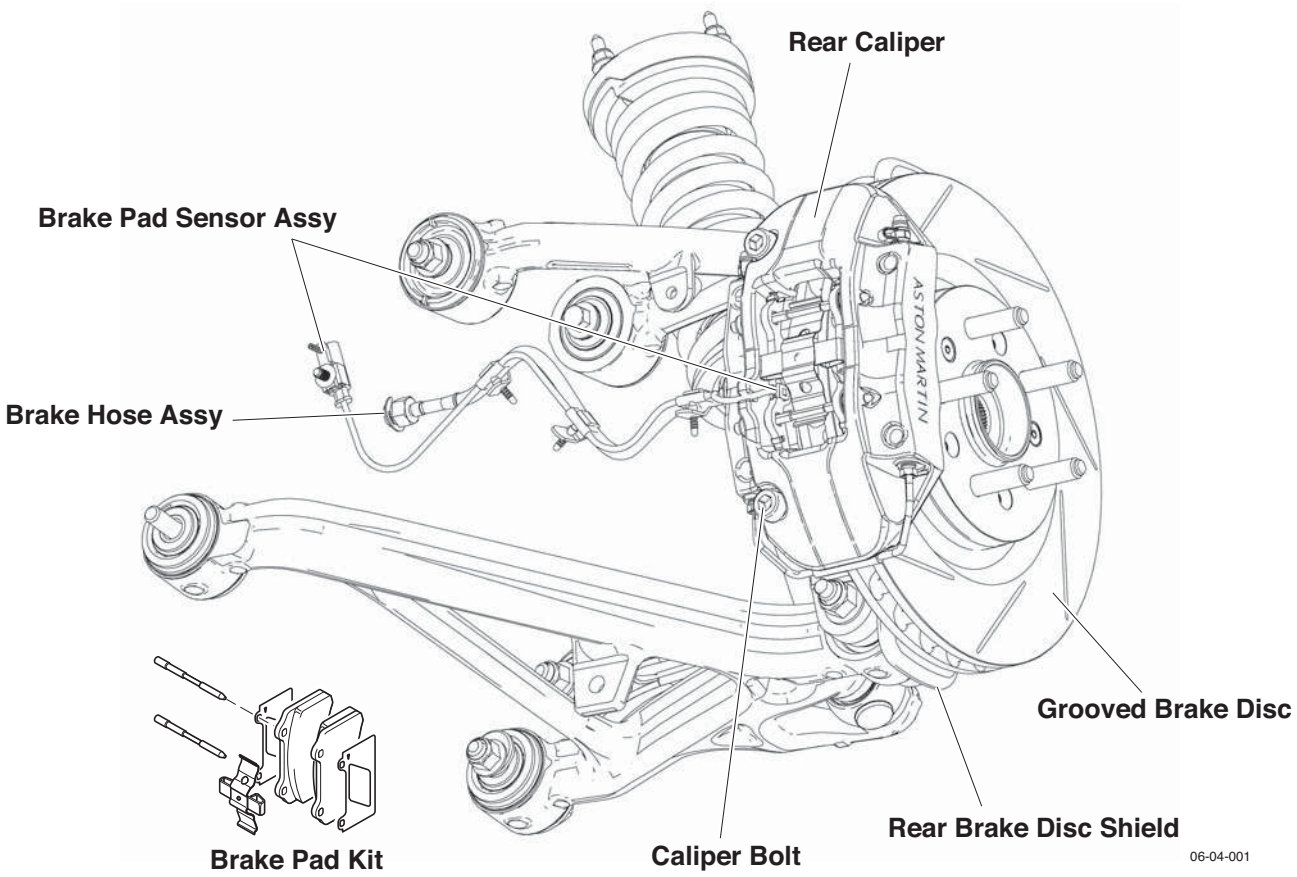

The rear, four piston, brake caliper is bolted directly to the vertical link by two bolts. The caliper is a monobloc assembly. The steel brake discs are ventilated and grooved. They are secured to the hub by two retaining bolts.

Specifications

Oils/Greases	
Brake Fluid	Castrol Response Super DOT 4 (Not silicon based brake fluid)

Brake discs	
Brake disc initial thickness	28.0 mm
Brake disc Min. thickness	26.0 mm
Brake Disc 'Runout'	<70 mm measured @ 2 mm in from the brake disc edge.

Brake pads	
Minimum lining thickness	2.5

Torque Figures		
Description	Nm.	lb. / ft.
Brake hose unions	22	16.5
Service brake Caliper to Vertical Link	20 + 66°-70°	15 + 66°-70°
Handbrake Caliper to Vertical Link	15 + 90°-94°	11.5 + 90°-94°

Maintenance

Rear Brake Disc Set-Renew

Repair Operation Time (ROT)	
Item	**Code**
Rear Brake Disc Set-Renew	**06.04.AA**

Removal

WARNING
AVOID SKIN / EYE CONTACT OR INGESTION OF BRAKE FLUID. IF SKIN OR EYES ARE SPLASHED WITH BRAKE FLUID, RINSE THE AFFECTED AREA IMMEDIATELY WITH PLENTY OF WATER AND OBTAIN MEDICAL ATTENTION. IF BRAKE FLUID IS INGESTED, OBTAIN IMMEDIATE MEDICAL ATTENTION.

WARNING
BRAKE FLUID IS HYGROSCOPIC. IF KEPT IN OPENED CONTAINERS IT WILL ABSORB WATER VAPOUR. USE ONLY BRAKE FLUID FROM FRESHLY OPENED CONTAINER.

Caution
Brake fluid must not be allowed to contact the vehicle paint work. Remove spilt brake fluid from the paint work by rinsing away with running water.

Place an absorbent cloth around the brake fluid reservoir filler neck to absorb any possible brake fluid spillage.

1. Raise vehicle on ramp.
2. Remove road wheel/s
3. Remove pad wear sensors.

To allow easier removal of the brake Caliper, retract the Caliper pistons. Retracting the Caliper pistons may cause the brake fluid reservoir to overflow.

4. Remove bleed nipple dust caps.
5. Fit bleed bottle.
6. Loosen bleed nipples, push pistons into Calipers, tighten bleed nipples.
7. Remove bleed bottle.
8. Fit bleed screw dust caps.
9. Remove brake pad retaining pins and anti-rattle springs.
10. Remove Caliper bolts (x4) and tie Caliper aside.
11. Remove handbrake Caliper bolts (x4) and tie Calipers aside.
12. Remove retaining screws (x4) and discs.

Installation

WARNING
ALWAYS USE A VACUUM BRUSH OR AQUEOUS BRAKE CLEANER TO REMOVE BRAKE DUST. NEVER USE COMPRESSED AIR.

1. Clean hubs.
2. Install discs and retaining screws.
3. Install Calipers and retaining bolts.
4. Install handbrake Calipers (bolts x4).
5. Clean components (Calipers, pins, shims, springs)
6. Apply anti-seize compound to pads, pins and shims.
7. Install pads and shims to Caliper.

When installing new brake pads, install a new brake pad wear sensor.

8. Install retaining pad pins and springs to Calipers.
9. Install pad wear sensors.
10. Pump brake pedal.
11. Top-up brake fluid.
12. Install road wheel/s
13. Lower vehicle on ramp.

WARNING
BEFORE MOVING OFF, PUMP THE FOOT BRAKE 2 OR 3 TIMES TO ENSURE THE FOOT BRAKE WORKS CORRECTLY. BRAKE CALIPER PISTONS MAY REQUIRE TRAVEL TO CONTACT THE BRAKE PADS AND DISC.

RH/LH Rear Caliper-Renew

Repair Operation Time (ROT)		
Item		**Code**
Rear Caliper-Renew	RH	**06.04.AB**
Rear Caliper-Renew	LH	**06.04.AC**

Removal

WARNING
AVOID SKIN / EYE CONTACT OR INGESTION OF BRAKE FLUID. IF SKIN OR EYES ARE SPLASHED WITH BRAKE FLUID, RINSE THE AFFECTED AREA IMMEDIATELY WITH PLENTY OF WATER AND OBTAIN MEDICAL ATTENTION. IF BRAKE FLUID IS INGESTED, OBTAIN IMMEDIATE MEDICAL ATTENTION.

WARNING
BRAKE FLUID IS HYGROSCOPIC. IF KEPT IN OPENED CONTAINERS IT WILL ABSORB WATER VAPOUR. USE ONLY BRAKE FLUID FROM FRESHLY OPENED CONTAINER.

Caution
Brake fluid must not be allowed to contact the vehicle paint work. Remove spilt brake fluid from the paint work by rinsing away with running water.

Place an absorbent cloth around the brake fluid reservoir filler neck to absorb any possible brake fluid spillage.

1. Raise vehicle on ramp.
2. Remove road wheel/s
3. Remove pad wear sensor.
4. Ease Caliper pistons to release pads.
5. Remove brake pad retaining pins and anti-rattle spring.
6. Remove pads and shims from Caliper.
7. Remove brake hose (cap and plug open orifices).
8. Remove Caliper bolts (x2) and Caliper.

Installation

WARNING
ALWAYS USE A VACUUM BRUSH OR AQUEOUS BRAKE CLEANER TO REMOVE BRAKE DUST. NEVER USE COMPRESSED AIR.

1. Clean components (pads, pins, shims, spring)
2. Install new Caliper and secure bolts (x2) (torque).
3. Apply anti-seize compound to pads, pins and shims.
4. Install pads and shims to Caliper.

When installing new brake pads, install a new brake pad wear sensor.

5. Install retaining pins and spring to Caliper.
6. Install brake pipe (torque).
7. Install pad wear sensor.
8. Remove bleed nipple dust cap.
9. Fit bleed bottle.
10. Top-up brake fluid.
11. Bleed brake Caliper with assistance.

When bleeding a brake Caliper, always bleed the inner bleed screw first, followed by the outer bleed screw, then bleed the inner bleed screw once again.

12. Install bleed nipple dust caps.
13. Remove bleed bottle.
14. Top-up brake fluid.
15. Install road wheel/s
16. Lower vehicle on ramp.

WARNING
BEFORE MOVING OFF, PUMP THE FOOT BRAKE 2 OR 3 TIMES TO ENSURE THE FOOT BRAKE WORKS CORRECTLY. BRAKE CALIPER PISTONS MAY REQUIRE TRAVEL TO CONTACT THE BRAKE PADS AND DISC.

Rear Pad Kit-Renew

Repair Operation Time (ROT)	
Item	**Code**
Rear Pad Kit-Renew	**06.04.AD**

Removal

WARNING
AVOID SKIN / EYE CONTACT OR INGESTION OF BRAKE FLUID. IF SKIN OR EYES ARE SPLASHED WITH BRAKE FLUID, RINSE THE AFFECTED AREA IMMEDIATELY WITH PLENTY OF WATER AND OBTAIN MEDICAL ATTENTION. IF BRAKE FLUID IS INGESTED, OBTAIN IMMEDIATE MEDICAL ATTENTION.

WARNING
BRAKE FLUID IS HYGROSCOPIC. IF KEPT IN OPENED CONTAINERS IT WILL ABSORB WATER VAPOUR. USE ONLY BRAKE FLUID FROM FRESHLY OPENED CONTAINER.

Caution
Brake fluid must not be allowed to contact the vehicle paint work. Remove spilt brake fluid from the paint work by rinsing away with running water.

Place an absorbent cloth around the brake fluid reservoir filler neck to absorb any possible brake fluid spillage.

1. Raise vehicle on ramp.
2. Remove road wheel/s
3. Remove pad wear sensors.
4. Remove bleed nipple dust caps.
5. Fit bleed bottle.
6. Loosen bleed nipples, push pistons into Calipers, tighten bleed nipples.
7. Remove bleed bottle.
8. Fit bleed nipple dust caps
9. Remove brake pad retaining pins and anti-rattle springs.
10. Remove pads and shims from Calipers.

Installation

WARNING
ALWAYS USE A VACUUM BRUSH OR AQUEOUS BRAKE CLEANER TO REMOVE BRAKE DUST. NEVER USE COMPRESSED AIR.

1. Clean components (Calipers, pins, shims, springs)
2. Apply anti-seize compound to pads, pins and shims.
3. Install pads and shims to Caliper.

When installing new brake pads, install a new brake pad wear sensor.

4. Install retaining pad pins and springs to Calipers
5. Install pad wear sensors.
6. Pump brake pedal.
7. Top-up brake fluid.
8. Install road wheel/s
9. Lower vehicle on ramp.

WARNING
BEFORE MOVING OFF, PUMP THE FOOT BRAKE 2 OR 3 TIMES TO ENSURE THE FOOT BRAKE WORKS CORRECTLY. BRAKE CALIPER PISTONS MAY REQUIRE TRAVEL TO CONTACT THE BRAKE PADS AND DISC.

Rear Brake Hose Assembly-Renew

Repair Operation Time (ROT)		
Item		**Code**
Rear Brake Hose Assembly-Renew	RH	**06.04.AE**
Rear Brake Hose Assembly-Renew	LH	**06.04-AF**

Removal

WARNING
AVOID SKIN / EYE CONTACT OR INGESTION OF BRAKE FLUID. IF SKIN OR EYES ARE SPLASHED WITH BRAKE FLUID, RINSE THE AFFECTED AREA IMMEDIATELY WITH PLENTY OF WATER AND OBTAIN MEDICAL ATTENTION. IF BRAKE FLUID IS INGESTED, OBTAIN IMMEDIATE MEDICAL ATTENTION.

WARNING
BRAKE FLUID IS HYGROSCOPIC. IF KEPT IN OPENED CONTAINERS IT WILL ABSORB WATER VAPOUR. USE ONLY BRAKE FLUID FROM FRESHLY OPENED CONTAINERS WHEN TOPPING-UP THE BRAKE FLUID RESERVOIR.

Caution
Brake fluid must not be allowed to contact the vehicle paint work. Remove spilt brake fluid from the paint work by rinsing away with running water.

Place an absorbent cloth around the brake fluid reservoir filler neck to absorb any possible brake fluid spillage.

1. Raise vehicle on ramp.
2. Remove road wheel/s
3. Remove bleed nipple dust caps.
4. Fit bleed bottle to RHR/LHR Caliper, open bleed nipples (x1).
5. Fit bleed bottle to RHF/LHF Caliper, open bleed nipples (x1).
6. Depress brake pedal >60 mm and secure with support.
7. Tighten RHF/LHR bleed nipple, remove bleed bottle and fit dust cap.
8. Tighten RHR/LHR bleed nipple, remove bleed bottle.
9. Remove clips (x3) wear indicator harness to brake hose.

Caution
Always plug pipe ends to prevent ingress of dirt or moisture into the system.

10. Remove brake hose from Caliper (cap and plug open orifices).
11. Remove brake union from hose.
12. Remove hose C-clip and remove hose.

Installation

1. Install hose C-clip and hose.
2. Install brake union to hose (torque).
3. Install brake pipe to Caliper (torque) using alignment tool (206-100).
4. Remove pedal support.
5. Top-up brake fluid.
6. Bleed brake Caliper with assistance.
7. Remove bleed bottle.
8. Fit bleed nipple dust caps.
9. Clean off excess fluid.
10. Top-up brake fluid.
11. Install road wheel/s
12. Lower vehicle on ramp.

Brake Systems (06.00)

Hand Brake (06.05)

Description

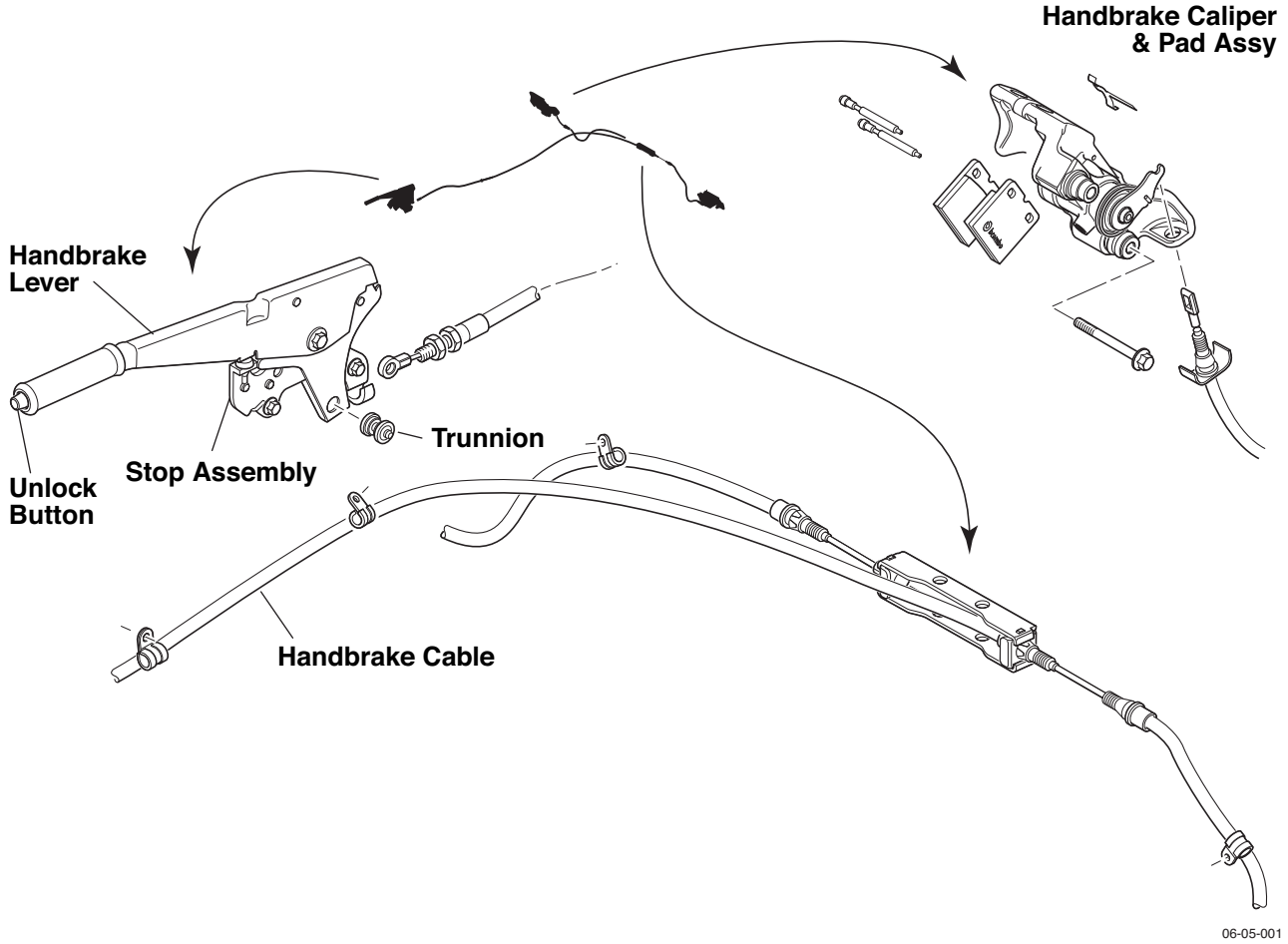

The handbrake control lever is located on the outside of the drivers seat and brakes the rear road wheels through a cable system and two mechanical handbrake Calipers. Handbrake pads are applied by the mechanical brake Calipers (x2), one acting on each rear road wheel brake disc. The Calipers are bolted to the vertical links. Return springs on each Caliper retract the pads when the parking brake is released.

Wear in the parking brake pads is compensated for automatically by a mechanism within the calipers. Cable stretch is compensated by cable adjusters.

A handbrake switch is wired normally closed. The switch is held open whilst the handbrake is ‘off’ and closes when the handbrake is applied. The handbrake warning lamp on the instrument panel is illuminated when the handbrake is applied.

Specifications

Brake pads		
Minimum lining thickness	2mm	
Torque Figures		
Description	Nm.	lb. / ft.
Brake Caliper to Vertical Link	15 + 92°	11.5 + 92°

Maintenance

RH/LH Handbrake Caliper-Renew

Repair Operation Time (ROT)		
Item		**Code**
Handbrake Caliper-Renew	RH	**06.05.AB**
Handbrake Caliper-Renew	LH	**06.05.BB**

Removal

1. Raise vehicle on ramp.
2. Remove road wheel/s.
3. Ensure handbrake lever is fully released.
4. Release handbrake adjustment (both sides).
5. Release inner cable eyelet from lever, compress ring clip (special tool) and remove cable (see Fig. 1).

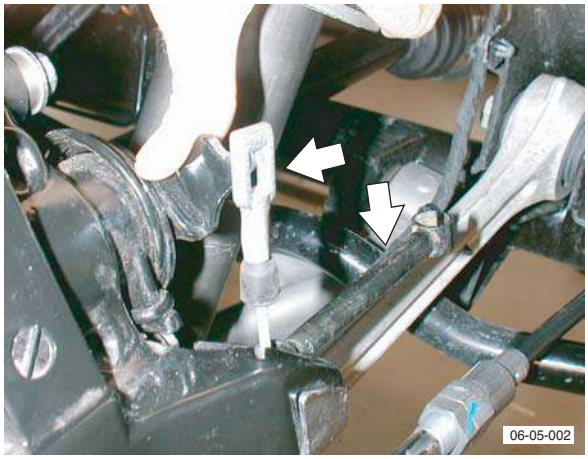

Fig. 1

WARNING
ALWAYS USE A VACUUM BRUSH OR AQUEOUS BRAKE CLEANER TO REMOVE BRAKE DUST. NEVER USE COMPRESSED AIR.

6. Remove brake pad retaining pins and anti-rattle spring.
7. Remove pads and shims from Caliper.
8. Remove Caliper bolts (x2) and Caliper.

Installation

1. Clean pads, pins and spring.
2. Install new Caliper, secure bolts (x2) and tighten.
3. Apply anti-seize compound to pads, pins and shims.
4. Install pads into Caliper.
5. Install retaining pins and spring to Caliper.
6. Operate lever on Caliper until pads contact disc.
7. Install cable to Caliper.
8. Adjust handbrake cable (see Workshop Manual procedure 06.05.DC Handbrake Cable Assembly - Renew).

WARNING
BEFORE MOVING OFF, OPERATE THE HANDBRAKE 2 OR 3 TIMES TO ENSURE THE HANDBRAKE WORKS CORRECTLY. HANDBRAKE CALIPER PISTONS MAY REQUIRE TRAVEL TO CONTACT THE BRAKE PADS AND DISC.

9. Install road wheel/s.
10. Lower vehicle on ramp.

Handbrake Lever Assembly-Renew

Repair Operation Time (ROT)	
Item	**Code**
Handbrake Lever Assembly-Renew	**06.05.CB**

Removal

1. Remove driver's seat (see Workshop Manual procedure 01.10.AB Seat Assembly - Front - LH - Remove for Access and Refit).
2. Raise vehicle on ramp.
3. Remove road wheel/s.
4. Release handbrake adjustment (both sides).
5. Remove warning light switch Lucar connection.
6. Remove handbrake lever bracket (4 x bolts).
7. Remove clevis pin and clip from lever.

Installation

1. Install cable to lever.
2. Install lever to body (bolts x4) and tighten).
3. Connect warning light switch Lucar connection.
4. Install driver's seat (see Workshop Manual procedure 01.10.AB Seat Assembly - Front - LH - Remove for Access and Refit).
5. Adjust handbrake cable (see Workshop Manual procedure 06.05.DC Handbrake Cable Assembly - Renew).

Handbrake Pad Set-Renew

Repair Operation Time (ROT)	
Item	**Code**
Handbrake Pad Set-Renew	**06.05.DB**

Removal

1. Raise vehicle on ramp.
2. Remove road wheel/s.
3. Ensure handbrake lever is fully released.
4. Release handbrake adjustment (both sides).
5. Remove brake pad retaining pins and anti-rattle spring.
6. Remove pads from Caliper.

WARNING
ALWAYS USE A VACUUM BRUSH OR AQUEOUS BRAKE CLEANER TO REMOVE BRAKE DUST. NEVER USE COMPRESSED AIR.

7. Remove Calipers bolts (x4) and move Caliper aside.

Installation

1. Clean pins, springs, Caliper slide pins and pistons.
2. Retract pistons into Calipers.

Always replace handbrake pads in axle sets.

3. Install Calipers and bolts (x2) to knuckles and tighten.
4. Apply anti-seize compound to pads, pins, and slide pins.
5. Install pads into Caliper.
6. Install retaining pins and springs to Caliper.

WARNING
BEFORE MOVING OFF, OPERATE THE HANDBRAKE 2 OR 3 TIMES TO ENSURE THE HANDBRAKE WORKS CORRECTLY. HANDBRAKE CALIPER PISTONS MAY REQUIRE TRAVEL TO CONTACT THE BRAKE PADS AND DISC.

7. Operate lever on Caliper until pads contact discs.
8. Adjust handbrake cable (see Workshop Manual procedure 06.05.DC Handbrake Cable Assembly - Renew).
9. Install road wheel/s.
10. Lower vehicle on ramp.

Handbrake Cable Assembly-Adjust

Repair Operation Time (ROT)	
Item	**Code**
Handbrake Cable Assembly-Adjust	**06.05.DC**

1. Ensure handbrake is fully released.
2. Raise vehicle on ramp.
3. Check condition of handbrake cable.
4. Release handbrake cable adjustment (both sides).
5. Adjust cable equally at each Caliper to achieve 4 clicks at lever.
6. Check handbrake is not binding.
7. Lower vehicle on ramp.
8. Ensure warning light is off when handbrake lever is released.
9. Ensure for correct operation of handbrake.

Handbrake Cable Assembly-Vehicle Set-Renew

Repair Operation Time (ROT)	
Item	**Code**
Handbrake Cable Assembly-Renew	**06.05.DD**

Removal

1. Remove driver's seat (see Workshop Manual procedure 01.10.AB Seat Assembly - Front - LH - Remove for Access and Refit).
2. Raise vehicle on ramp.
3. Remove road wheel/s.

WARNING
TO AVOID PERSONAL INJURY, I.E. SEVERE BURNS TO THE SKIN, ALLOW EXHAUST SYSTEM TO COOL DOWN BEFORE REMOVING EXHAUST SYSTEM COMPONENTS.

4. Remove exhaust rear silencer box (see Workshop Manual procedure 09.00.KB Silencer and Bypass Valve Assembly - Renew).
5. Remove rear heat shield bolts (x4) and clips (x2).
6. Release cable adjustments (both sides).

Caution
Do Not attempt to disconnect the handbrake cables from the equaliser unit.

7. Remove handbrake bracket to access clevis pin and clip and disconnect from lever (see Workshop Manual procedure 06.05.CB Handbrake Lever Assembly - Renew).
8. Unclip cable in the cabin.
9. Remove screws (x4) from cable clips and unclip grommet from body clip (see Fig. 1).

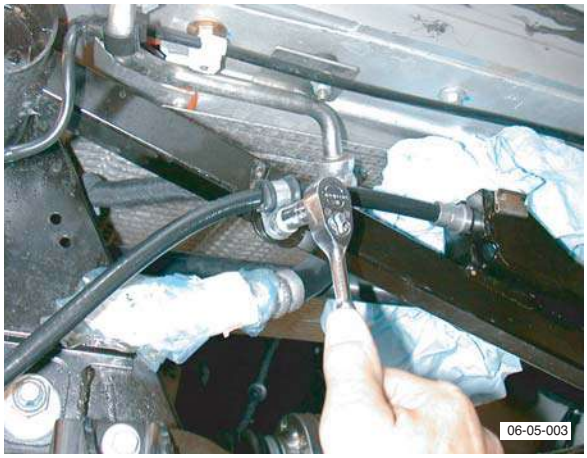

Fig. 1

10. Withdraw cable from body.
11. Release inner cable eyelets from Caliper levers, compress ring clip and remove cable (see Fig. 2).

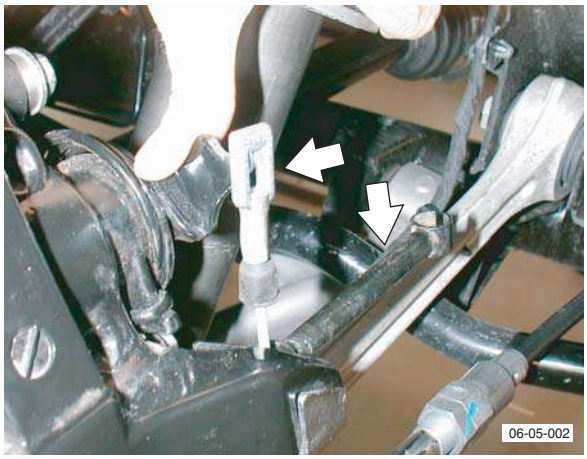

Fig. 2

12. Remove cable from subframe.

Installation

1. Install cable into body.

Ensure that the handbrake lever is fully released.

2. Connect cable to handbrake lever and install handbrake lever (see Workshop Manual procedure 06.05.CB Handbrake Lever Assembly - Renew).
3. Clip cable in cabin
4. Install cable to subframe (bolts x4).
5. Install heat shield bolts (x4) and clips (x2).
6. Install exhaust rear silencer box (see Workshop Manual procedure 09.00.KB Silencer and Bypass Valve Assembly - Renew).
7. Install cable to Calipers.
8. Install driver's seat (see Workshop Manual procedure 01.10.AB Seat Assembly - Front - LH - Remove for Access and Refit).
9. Adjust handbrake cable (see Workshop Manual procedure 06.05.DC Handbrake Cable Assembly - Renew).

WARNING
BEFORE MOVING OFF, OPERATE THE HANDBRAKE 2 OR 3 TIMES TO ENSURE THE HANDBRAKE WORKS CORRECTLY. HANDBRAKE CALIPER PISTONS MAY REQUIRE TRAVEL TO CONTACT THE BRAKE PADS AND DISC.

10. Install road wheel/s.
11. Lower vehicle on ramp.

If the handbrake pads are binding, a squeal will be emitted from the rear brakes.

Brake System (06.00)

Brake Actuation System (06.06)

Description

Tandem Master Cylinder

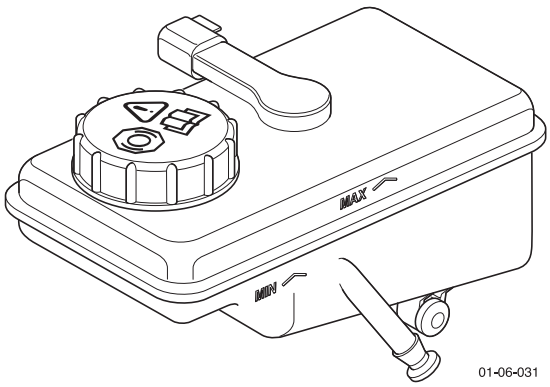

The short-stroke tandem master-cylinder controls two separate brake circuits which are jointly activated by the brake pedal. In the event of a major leak in one system, the other will still function. The two systems are supplied by a common brake fluid reservoir.

A pressure sensor attached to the master-cylinder provides the ABS / DSC module with brake pressure information. This information informs the system how hard the driver is braking and is used as an aid for the ABS / DSC to achieve accurate brake pressure control.

Brake Fluid Reservoir

The brake fluid reservoir is mounted directly on the tandem master cylinder and secured with a pin. Two stub pipes, on the base of the reservoir, locate into the primary and secondary chambers of the tandem master cylinder.

An integral fluid-level switch is incorporated in the reservoir. If the brake fluid level is low, the brake warning lamp in the Driver Information Module (DIM) will illuminate and 'LOW BRAKE FLUID' will be displayed in the message center right.

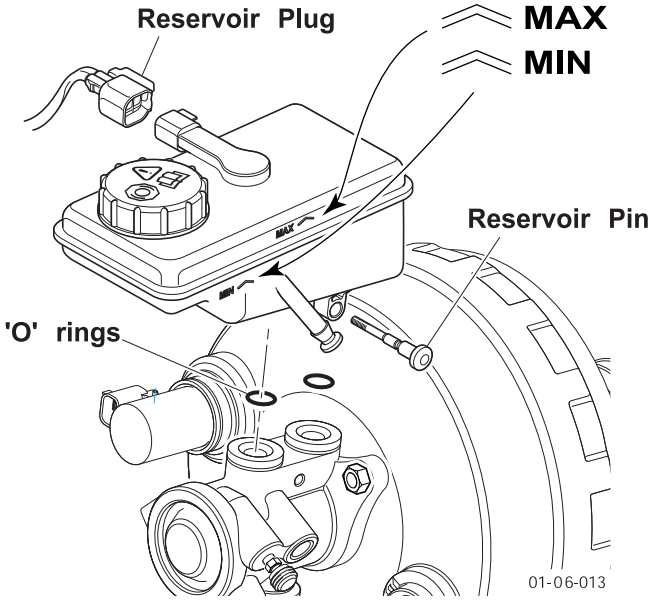

Specifications

Oils/Greases	
Brake Fluid	Castrol Response Super Dot 4

Torque Figures	
Description	Nm.
Master Cylinder Mount	25 (+/- 4)
Brake Pipe Unions	17
Brake fluid reservoir securing pin	4
Pressure Sensor	35 (+/- 2)

Maintenance

Pedal Box Assembly - Renew

Repair Operation Time (ROT)	
Item	**Code**
Pedal Box Assembly-Renew	**06.06.AB**

1. Remove front seat (see Workshop Manual procedure 01.10.AB Seat Assembly - Front - RH - Remove for Access and Refit).
2. Disconnect multiplug from stop lamp switch (see Fig. 1).

Fig. 1

3. Remove clip clevis pin from brake pedal. Collect wavy washer.
4. Remove clip clevis pin from clutch pedal.
5. Remove nuts (x2) securing clutch master cylinder to pedal box.
6. Remove nuts (x4) securing brake booster assembly to pedal box.
7. Release main harness clips (x2) from pedal box.
8. Remove bolts (x3) securing pedal box to bulkhead.
9. Remove pedal box assembly.
10. Remove stop lamp switch.
11. Remove and discard O-ring seal from clutch master cylinder.

Installation

1. Install new O-ring seal to clutch master cylinder.
2. Install stop lamp switch in pedal box.
3. Install pedal box assembly, install bolts (x3). Do not torque tighten at this stage.
4. Position brake booster, install and torque tighten nuts (x4).
5. Torque tighten pedal box bolts (x3).
6. Position clutch master cylinder, install and torque tighten nuts (x2).
7. Secure main harness to pedal box with clips (x2)
8. Install brake pedal clevis pin, wavy washer and retaining clip.
9. Install clutch pedal clevis pin, and retaining clip.
10. Connect multiplug to stop lamp switch.
11. Install front seat (see Workshop Manual procedure 01.10.AB Seat Assembly - Front - RH - Remove for Access and Refit).

RHD-Brake Master Cylinder Assembly-Renew

Repair Operation Time (ROT)		
Item		**Code**
Brake Master Cylinder Assembly-Renew	RHD	**06.06.EB**

Removal

WARNING
AVOID SKIN / EYE CONTACT OR INGESTION OF BRAKE FLUID. IF SKIN OR EYES ARE SPLASHED WITH BRAKE FLUID, RINSE THE AFFECTED AREA IMMEDIATELY WITH PLENTY OF WATER AND OBTAIN MEDICAL ATTENTION. IF BRAKE FLUID IS INGESTED, OBTAIN IMMEDIATE MEDICAL ATTENTION.

WARNING
BRAKE FLUID IS HYGROSCOPIC. IF KEPT IN OPENED CONTAINERS IT WILL ABSORB WATER VAPOUR. USE ONLY BRAKE FLUID FROM FRESHLY OPENED CONTAINERS WHEN TOPPING-UP THE BRAKE FLUID RESERVOIR.

Caution
Brake fluid must not be allowed to contact the vehicle paint work. Remove spilt brake fluid from the paint work by rinsing away with running water.

1. Remove reservoir cap.
2. Remove fluid in reservoir (syringe).

Place an absorbent cloth around the brake fluid reservoir filler neck to absorb any possible brake fluid spillage.

3. Position cloth to absorb spillage.
4. Disconnect level indicator multiplug.
5. Disconnect pressure sensor multiplug.

Caution
Always plug pipe ends to prevent ingress of dirt or moisture into the system.

6. Remove clutch cylinder feed pipe.
7. Remove brake pipe union (x2).
8. Remove master cylinder from servo (nuts x2).

Installation

1. Install O-ring.
2. Install master cylinder to servo (nuts x 2) (torque).
3. Install clutch cylinder feed pipe.
4. Connect pressure switch multiplug.
5. Install brake pipe unions (x2 torque).
6. Connect level indicator multiplug.

7. Fill reservoir.
8. Bleed Brakes (see Workshop Manual procedure 06.06.AD Pad Kit - Manual Brake and Clutch Pedal - Renew).

LHD-Brake Master Cylinder Assembly-Renew

Repair Operation Time (ROT)		
Item		**Code**
Brake Master Cylinder Assembly-Renew	LHD	**06.07.EA**

Removal

1. Remove corner cross brace.
2. Move expansion tank aside for access (bolt x1, nut x1, hose clips x2, multiplug x1).

WARNING
AVOID SKIN / EYE CONTACT OR INGESTION OF BRAKE FLUID. IF SKIN OR EYES ARE SPLASHED WITH BRAKE FLUID, RINSE THE AFFECTED AREA IMMEDIATELY WITH PLENTY OF WATER AND OBTAIN MEDICAL ATTENTION. IF BRAKE FLUID IS INGESTED, OBTAIN IMMEDIATE MEDICAL ATTENTION.

WARNING
BRAKE FLUID IS HYGROSCOPIC. IF KEPT IN OPENED CONTAINERS IT WILL ABSORB WATER VAPOUR. USE ONLY BRAKE FLUID FROM FRESHLY OPENED CONTAINERS WHEN TOPPING-UP THE BRAKE FLUID RESERVOIR.

Caution
Brake fluid must not be allowed to contact the vehicle paint work. Remove spilt brake fluid from the paint work by rinsing away with running water.

Caution
Always plug pipe ends to prevent ingress of dirt or moisture into the system.

3. Disconnect clutch reservoir feed pipe.
4. Disconnect multiplugs (x2).

Caution
Always plug pipe ends to prevent ingress of dirt or moisture into the system.

5. Disconnect brake pipes from master cylinder (move aside).
6. Remove reservoir holding screw for access to master cylinder retaining nut.
7. Remove master cylinder from booster (nuts x2).

Installation

1. On new master cylinder - Remove reservoir holding screw for access to master cylinder retaining nut.
2. Install master cylinder to booster (nuts x2).
3. Install reservoir holding screw for access to master cylinder retaining nut.
4. Connect brake pipes to master cylinder.
5. Connect clutch reservoir feed pipe.
6. Connect multiplugs (x2).
7. Install expansion tank aside (bolt x1, nut x1, hose clips x2, multiplug x1).
8. Install corner cross brace (torque) (only fully tighten when vehicle on level floor).
9. Bleed Brakes (see Workshop Manual procedure 06.06.AD Pad Kit - Manual Brake and Clutch Pedal - Renew).
10. Top-up coolant.

Clutch Master Cylinder Assembly-Renew

Repair Operation Time (ROT)	
Item	**Code**
Clutch Master Cylinder Assembly-Renew	**06.06.AE**

Removal

WARNING
AVOID SKIN / EYE CONTACT OR INGESTION OF BRAKE FLUID. IF SKIN OR EYES ARE SPLASHED WITH BRAKE FLUID, RINSE THE AFFECTED AREA IMMEDIATELY WITH PLENTY OF WATER AND OBTAIN MEDICAL ATTENTION. IF BRAKE FLUID IS INGESTED, OBTAIN IMMEDIATE MEDICAL ATTENTION.

WARNING
BRAKE FLUID IS HYGROSCOPIC. IF KEPT IN OPENED CONTAINERS IT WILL ABSORB WATER VAPOUR. USE ONLY BRAKE FLUID FROM FRESHLY OPENED CONTAINERS WHEN TOPPING-UP THE BRAKE FLUID RESERVOIR.

Caution
Brake fluid must not be allowed to contact the vehicle paint work. Remove spilt brake fluid from the paint work by rinsing away with running water.

1. Move drivers seat fully rearward.
2. Remove clevis pin and clip.
3. Remove cylinder securing nuts (x2).

Place an absorbent cloth around the brake fluid reservoir filler neck to absorb any possible brake fluid spillage.

4. Remove fluid (syringe) from brake master cylinder to below clutch level.
5. Remove corner cross brace.
6. Move expansion tank aside for access (bolt x1, nut x1, hose clips x2, multiplug x1).

Caution
Always plug pipe ends to prevent ingress of dirt or moisture into the system.

7. Disconnect clutch reservoir feed pipe.
8. Disconnect clutch pipe quick fit (pull clip back) and move aside.
9. Remove cylinder assembly.
10. Remove and discard O-ring seal from master cylinder.
11. Split components
12. Remove pipe from cylinder (mark position).

13. Re-fit components
14. Install pipe to cylinder.

Installation

1. Install new O-ring seal on master cylinder.
2. Install cylinder assembly.
3. Connect pipe to master cylinder (quickfit).
4. Connect clutch reservoir feed pipe.
5. Install expansion tank aside (bolt x1, nut x1, hose clips x2, multiplug x1).
6. Install corner cross brace (torque) (only fully tighten when vehicle on level floor).
7. Install cylinder retaining nuts (x2) (torque).
8. Install clevis pin and clip.
9. Bleed clutch system (see Workshop Manual procedure 08.00.AF - Clutch Hydraulic System - Bleed).
10. Top-up coolant.

RH/LH Front Caliper Hose Assembly-Renew

Repair Operation Time (ROT)		
Item		**Code**
Front Caliper Hose Assembly-Renew	RH	**06.06.BA**
Front Caliper Hose Assembly-Renew	LH	**06.06.BB**

Removal

WARNING
AVOID SKIN / EYE CONTACT OR INGESTION OF BRAKE FLUID. IF SKIN OR EYES ARE SPLASHED WITH BRAKE FLUID, RINSE THE AFFECTED AREA IMMEDIATELY WITH PLENTY OF WATER AND OBTAIN MEDICAL ATTENTION. IF BRAKE FLUID IS INGESTED, OBTAIN IMMEDIATE MEDICAL ATTENTION.

WARNING
BRAKE FLUID IS HYGROSCOPIC. IF KEPT IN OPENED CONTAINERS IT WILL ABSORB WATER VAPOUR. USE ONLY BRAKE FLUID FROM FRESHLY OPENED CONTAINERS WHEN TOPPING-UP THE BRAKE FLUID RESERVOIR.

Caution
Brake fluid must not be allowed to contact the vehicle paint work. Remove spilt brake fluid from the paint work by rinsing away with running water.

1. Raise vehicle on ramp.
2. Remove road wheel(s).
3. Remove RH/LH front wheel arch liner (see Workshop Manual procedure 01.02.FB/01.02.GB Wheel Arch Liner - Front - RH/LH - Renew).
4. Remove bleed nipple dust caps.
5. Position bleed container, connect bleed hose to RHR/LHR Caliper, open bleed nipples (x1).
6. Position bleed container, connect bleed hose to RHF/LHF Caliper, open bleed nipples (x1).
7. Depress brake pedal >60 mm and secure with support.
8. Tighten RHR/LHR bleed nipple, disconnect bleed hose, remove bleed container and fit dust cap.
9. Tighten RHF/LHF bleed nipple, disconnect bleed hose, remove bleed container and fit dust cap.

Caution
Always plug pipe ends to prevent ingress of dirt or moisture into the system.

10. Loosen and disconnect RH/LH front brake tube union from in line connector (see Fig. 1 - RHS shown).

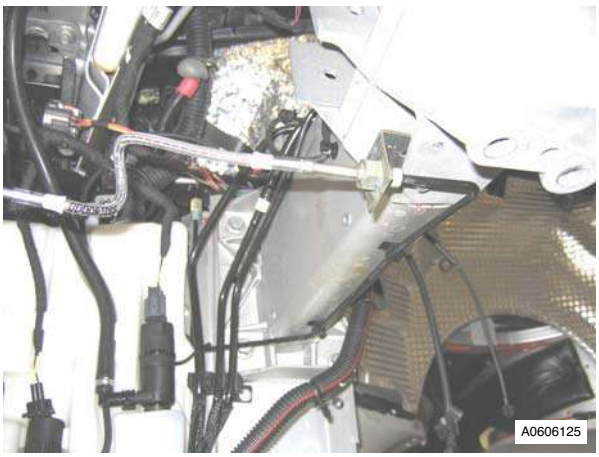

Fig. 1

11. Loosen and disconnect RH/LH front brake tube union from hose connection.
12. Release brake tube from clips (x2), remove brake tube.

Installation

1. Install brake tube, connect unions, secure brake tube in clips (x2), torque tighten unions.
2. Install RH/LH front wheel arch liner (see Workshop Manual procedure 01.02.FB/01.02.GB Wheel Arch Liner - Front - RH/LH - Renew).
3. Remove pedal support.
4. Top-up brake fluid.
5. Bleed brake Caliper with assistance.
6. Remove bleed bottle.
7. Install bleed nipple dust caps.
8. Clean off excess fluid.
9. Top-up brake fluid.
10. Install road wheel(s)).
11. Lower vehicle on ramp.

RH/LH Rear Brake Caliper Tube Assembly-Renew

Repair Operation Time (ROT)	
Item	**Code**
Rear Brake Caliper Tube Assembly-Renew	06.06.BD
Rear Brake Caliper Tube Assembly-Renew	06.06.BE

Removal

WARNING
AVOID SKIN / EYE CONTACT OR INGESTION OF BRAKE FLUID. IF SKIN OR EYES ARE SPLASHED WITH BRAKE FLUID, RINSE THE AFFECTED AREA IMMEDIATELY WITH PLENTY OF WATER AND OBTAIN MEDICAL ATTENTION. IF BRAKE FLUID IS INGESTED, OBTAIN IMMEDIATE MEDICAL ATTENTION.

WARNING
BRAKE FLUID IS HYGROSCOPIC. IF KEPT IN OPENED CONTAINERS IT WILL ABSORB WATER VAPOUR. USE ONLY BRAKE FLUID FROM FRESHLY OPENED CONTAINERS WHEN TOPPING-UP THE BRAKE FLUID RESERVOIR.

Caution
Brake fluid must not be allowed to contact the vehicle paint work. Remove spilt brake fluid from the paint work by rinsing away with running water.

1. Raise vehicle on ramp.
2. Remove road wheel(s).
3. Remove bleed nipple dust caps.
4. Fit bleed bottle to RHR/LHR Caliper, open bleed nipples (x1).
5. Fit bleed bottle to RHF/LHF Caliper, open bleed nipples (x1).
6. Depress brake pedal >60 mm and secure with support.
7. Tighten RHF bleed nipple, remove bleed bottle and fit dust cap.
8. Tighten RHR/LHR bleed nipple, remove bleed bottle.
9. Remove screws (x5) securing LH/RH rear wheel arch liner to body.
10. Ease wheel arch liner downwards to access brake tube union (see Fig. 1 - RHS shown).

Fig. 1

Caution
Always plug pipe ends to prevent ingress of dirt or moisture into the system.

11. Loosen and disconnect brake tube unions from LH/RH in line connection and RH brake hose connection (see Fig. 2- LHS shown).

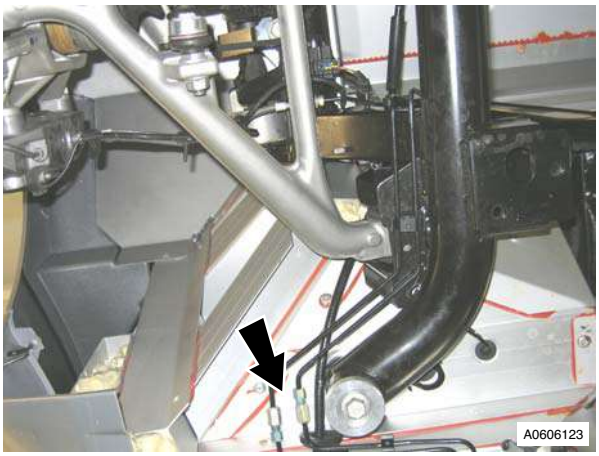

Fig. 2

12. Release brake tube from clips (x5) on subframe.
13. Manoeuvre and remove brake tube.

Installation

1. Install brake tube, connect unions (x2), secure brake tube in clips (x5). Torque tighten unions.
2. Position wheel arch liner, install and tighten screws (x5).
3. Remove pedal support.

Caution
Brake fluid must not be allowed to contact the vehicle paint work. Remove spilt brake fluid from the paint work by rinsing away with running water.

4. Top-up brake fluid.
5. Bleed brake Caliper with assistance.

6. Remove bleed bottle.
7. Fit bleed nipple dust caps.
8. Clean off excess fluid.
9. Top-up brake fluid.
10. Install road wheel/s
11. Lower vehicle on ramp.

Brake Master Cylinder to Modulator Secondary Tube Assembly-Renew

Repair Operation Time (ROT)		
Item		**Code**
Brake Master Cylinder to Modulator Secondary Tube Assembly-Renew	LHD	**06.06.BF**
Brake Master Cylinder to Modulator Primary Tube Assembly-Renew	RHD	**06.06.CF**

Removal

WARNING
AVOID SKIN / EYE CONTACT OR INGESTION OF BRAKE FLUID. IF SKIN OR EYES ARE SPLASHED WITH BRAKE FLUID, RINSE THE AFFECTED AREA IMMEDIATELY WITH PLENTY OF WATER AND OBTAIN MEDICAL ATTENTION. IF BRAKE FLUID IS INGESTED, OBTAIN IMMEDIATE MEDICAL ATTENTION.

WARNING
BRAKE FLUID IS HYGROSCOPIC. IF KEPT IN OPENED CONTAINERS IT WILL ABSORB WATER VAPOUR. USE ONLY BRAKE FLUID FROM FRESHLY OPENED CONTAINERS WHEN TOPPING-UP THE BRAKE FLUID RESERVOIR.

Caution
Brake fluid must not be allowed to contact the vehicle paint work. Remove spilt brake fluid from the paint work by rinsing away with running water.

1. Raise vehicle on ramp.
2. Remove road wheel(s).
3. Remove LH front wheel arch liner (see Workshop Manual procedure 01.02.FB/01.02.BC Wheel Arch Liner - Front - LH - Renew).
4. Remove bleed nipple dust caps.
5. Position bleed container, connect bleed hose to LHR Caliper, open bleed nipples (x1).
6. Position bleed container, connect bleed hose to LHF Caliper, open bleed nipples (x1).
7. Depress brake pedal >60 mm and secure with support.
8. Tighten LHR bleed nipple, disconnect bleed hose, remove bleed container and fit dust cap.
9. Tighten LHF bleed nipple, disconnect bleed hose, remove bleed container and fit dust cap.

Caution
Always plug pipe ends to prevent ingress of dirt or moisture into the system.

10. Loosen and disconnect brake tube union from modulator (see Fig. 1).

Fig. 1

11. Loosen and disconnect brake tube union from master cylinder.
12. Remove brake tube.

Installation

1. Install brake tube, connect and torque tighten unions.
2. Install LH front wheel arch liner (see Workshop Manual procedure 01.02.FB/01.02.BC Wheel Arch Liner - Front - LH - Renew).
3. Remove pedal support.
4. Top-up brake fluid.
5. Brake bleed (see Workshop Manual procedure 06.07.DD Brake Hydraulic System - Flush/Refill/Bleed).
6. Install road wheel(s)).
7. Lower vehicle on ramp.

Brake Master Cylinder to Modulator Primary Tube Assembly-Renew

Repair Operation Time (ROT)		
Item		**Code**
Brake Master Cylinder to Modulator Primary Tube Assembly-Renew	LHD	**06.06.BG**
Brake Master Cylinder to Modulator Primary Tube Assembly-Renew	RHD	**06.06.CG**

Removal

WARNING
AVOID SKIN / EYE CONTACT OR INGESTION OF BRAKE FLUID. IF SKIN OR EYES ARE SPLASHED WITH BRAKE FLUID, RINSE THE AFFECTED AREA IMMEDIATELY WITH PLENTY OF WATER AND OBTAIN MEDICAL ATTENTION. IF BRAKE FLUID IS INGESTED, OBTAIN IMMEDIATE MEDICAL ATTENTION.

WARNING
BRAKE FLUID IS HYGROSCOPIC. IF KEPT IN OPENED CONTAINERS IT WILL ABSORB WATER VAPOUR. USE ONLY BRAKE FLUID FROM FRESHLY OPENED CONTAINERS WHEN TOPPING-UP THE BRAKE FLUID RESERVOIR.

Caution
Brake fluid must not be allowed to contact the vehicle paint work. Remove spilt brake fluid from the paint work by rinsing away with running water.

1. Raise vehicle on ramp.
2. Remove road wheel(s).
3. Remove LH front wheel arch liner (see Workshop Manual procedure 01.02.FB/01.02.BC Wheel Arch Liner - Front - LH - Renew).
4. Remove bleed nipple dust caps.
5. Position bleed container, connect bleed hose to LHR Caliper, open bleed nipples (x1).
6. Position bleed container, connect bleed hose to LHF Caliper, open bleed nipples (x1).
7. Depress brake pedal >60 mm and secure with support.
8. Tighten LHR bleed nipple, disconnect bleed hose, remove bleed container and fit dust cap.
9. Tighten LHF bleed nipple, disconnect bleed hose, remove bleed container and fit dust cap.

Caution
Always plug pipe ends to prevent ingress of dirt or moisture into the system.

10. Loosen and disconnect brake tube union from modulator (see Fig. 1).

Fig. 1

11. Loosen and disconnect brake tube union from master cylinder.
12. Remove brake tube.

Installation

1. Install brake tube, connect and torque tighten unions.
2. Install LH front wheel arch liner (see Workshop Manual procedure 01.02.FB/01.02.BC Wheel Arch Liner - Front - LH - Renew).
3. Remove pedal support.
4. Top-up brake fluid.
5. Brake bleed (see Workshop Manual procedure 06.07.DD Brake Hydraulic System - Flush/Refill/Bleed).
6. Install road wheel(s)).
7. Lower vehicle on ramp.

Rear Wheel Brake Front to Rear Tube Assembly-Renew

Repair Operation Time (ROT)		
Item		**Code**
Rear Wheel Brake Front to Rear Tube Assembly-Renew	RH	**06.06.BH**
Rear Wheel Brake Front to Rear Tube Assembly-Renew	LH	**06.06.BJ**

Removal

WARNING
AVOID SKIN / EYE CONTACT OR INGESTION OF BRAKE FLUID. IF SKIN OR EYES ARE SPLASHED WITH BRAKE FLUID, RINSE THE AFFECTED AREA IMMEDIATELY WITH PLENTY OF WATER AND OBTAIN MEDICAL ATTENTION. IF BRAKE FLUID IS INGESTED, OBTAIN IMMEDIATE MEDICAL ATTENTION.

WARNING
BRAKE FLUID IS HYGROSCOPIC. IF KEPT IN OPENED CONTAINERS IT WILL ABSORB WATER VAPOUR. USE ONLY BRAKE FLUID FROM FRESHLY OPENED CONTAINERS WHEN TOPPING-UP THE BRAKE FLUID RESERVOIR.

Caution
Brake fluid must not be allowed to contact the vehicle paint work. Remove spilt brake fluid from the paint work by rinsing away with running water.

1. Raise vehicle on ramp.
2. Remove RH/LH front and rear road wheel(s).
3. Remove RH/LH front wheel arch liner (see Workshop Manual procedure 01.02.FB/01.02.GB Wheel Arch Liner - Front - LH - Renew).
4. Remove bleed nipple dust caps.
5. Position bleed container, connect bleed hose to RHR/LHR Caliper, open bleed nipples (x1).
6. Position bleed container, connect bleed hose to RHF/LHR Caliper, open bleed nipples (x1).
7. Depress brake pedal >60 mm and secure with support.
8. Tighten RHR/LHR bleed nipple, disconnect bleed hose, remove bleed container and fit dust cap.
9. Tighten RHF/LHF bleed nipple, disconnect bleed hose, remove bleed container and fit dust cap.
10. Remove screws (x5) securing RH/LH rear wheel arch liner to body.
11. Ease wheel arch liner downwards to access brake tube rear in line connection.

Caution
Always plug pipe ends to prevent ingress of dirt or moisture into the system.

12. Loosen and disconnect RH/LH rear brake tube union from front line connection (see Fig. 1).

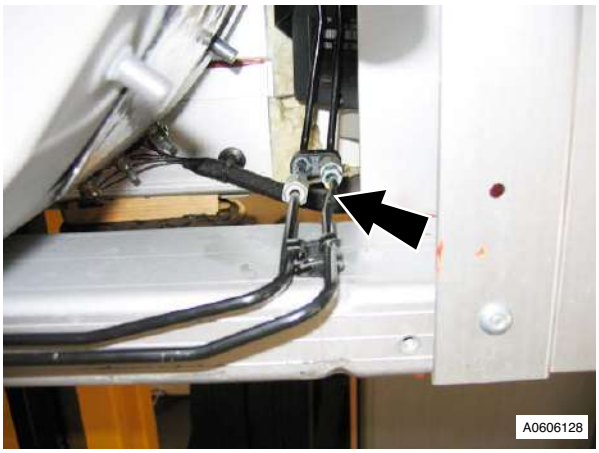

Fig. 1

13. Loosen and disconnect RH/LH brake tube union from rear in line connection (see Fig. 2).

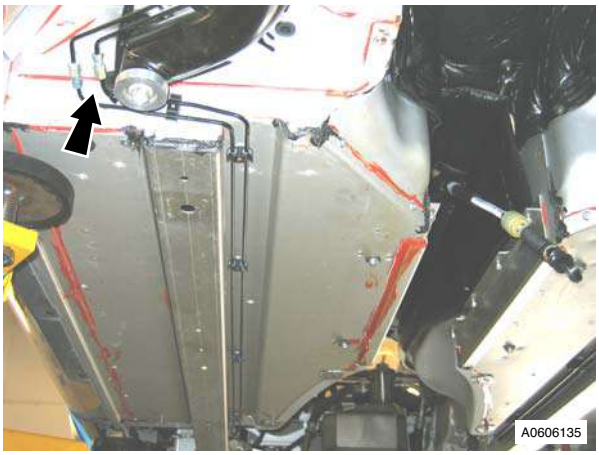

Fig. 2

14. Release brake tube from clips (x6), remove brake tube.

Installation

1. Install brake tube, connect unions, secure brake tube in clips (x6), torque tighten unions.
2. Position LH/RH rear wheel arch liner, install and tighten screws (x5).
3. Install RH/LH front wheel arch liner (see Workshop Manual procedure 01.02.FB/01.02.GB Wheel Arch Liner - Front - LH/RH - Renew).
4. Remove pedal support.
5. Top-up brake fluid.
6. Bleed brake Caliper with assistance.
7. Remove bleed bottle.
8. Install bleed nipple dust caps.
9. Clean off excess fluid.
10. Top-up brake fluid.
11. Install road wheel(s)).

12. Lower vehicle on ramp.

RH Front Caliper to Modulator Tube Assembly-Renew

Repair Operation Time (ROT)		
Item		**Code**
Front Caliper to Modulator Tube Assembly-Renew	RH	**06.06.BK**

Removal

WARNING
AVOID SKIN / EYE CONTACT OR INGESTION OF BRAKE FLUID. IF SKIN OR EYES ARE SPLASHED WITH BRAKE FLUID, RINSE THE AFFECTED AREA IMMEDIATELY WITH PLENTY OF WATER AND OBTAIN MEDICAL ATTENTION. IF BRAKE FLUID IS INGESTED, OBTAIN IMMEDIATE MEDICAL ATTENTION.

WARNING
BRAKE FLUID IS HYGROSCOPIC. IF KEPT IN OPENED CONTAINERS IT WILL ABSORB WATER VAPOUR. USE ONLY BRAKE FLUID FROM FRESHLY OPENED CONTAINERS WHEN TOPPING-UP THE BRAKE FLUID RESERVOIR..

Caution
Brake fluid must not be allowed to contact the vehicle paint work. Remove spilt brake fluid from the paint work by rinsing away with running water.

1. Remove Bulkhead heatsheild (see Workshop Manual procedure 02.06.BC Heatshield - Bulkhead - Renew).
2. Remove bleed nipple dust caps.
3. Position bleed container, connect bleed hose to RHR Caliper, open bleed nipples (x1).
4. Position bleed container, connect bleed hose to RHF Caliper, open bleed nipples (x1).
5. Depress brake pedal >60 mm and secure with support.
6. Tighten RHR bleed nipple, disconnect bleed hose, remove bleed container and fit dust cap.
7. Tighten RHF bleed nipple, disconnect bleed hose, remove bleed container and fit dust cap.
8. Disconnect RH front brake tube union from modulator (see Fig. 1).

Fig. 1

Caution
Always plug pipe ends to prevent ingress of dirt or moisture into the system.

9. Disconnect RH front brake tube union from front brake tube in-line connection (see Fig. 2).

Fig. 2

10. Release brake tube from clips (x4), remove brake tube (see Fig. 3).

Fig. 3

Installation

1. Install brake tube, connect unions, secure brake tube in clips (x4), torque tighten unions.
2. Remove pedal support.
3. Top-up brake fluid.
4. Bleed brake Caliper with assistance.
5. Remove bleed bottle.
6. Install bleed nipple dust caps.
7. Clean off excess fluid.
8. Top-up brake fluid.
9. Install Bulkhead heatsheild (see Workshop Manual procedure 02.06.BC Heatshield - Bulkhead - Renew).

Rear Wheel Brake Tube Assembly-Renew

Repair Operation Time (ROT)		
Item		**Code**
Rear Wheel Brake Tube Assembly-Renew	RH	**06.06.BL**
Rear Wheel Brake Tube Assembly-Renew	LH	**06.06.BM**

Removal

WARNING
AVOID SKIN / EYE CONTACT OR INGESTION OF BRAKE FLUID. IF SKIN OR EYES ARE SPLASHED WITH BRAKE FLUID, RINSE THE AFFECTED AREA IMMEDIATELY WITH PLENTY OF WATER AND OBTAIN MEDICAL ATTENTION. IF BRAKE FLUID IS INGESTED, OBTAIN IMMEDIATE MEDICAL ATTENTION.

WARNING
BRAKE FLUID IS HYGROSCOPIC. IF KEPT IN OPENED CONTAINERS IT WILL ABSORB WATER VAPOUR. USE ONLY BRAKE FLUID FROM FRESHLY OPENED CONTAINERS WHEN TOPPING-UP THE BRAKE FLUID RESERVOIR.

Caution
Brake fluid must not be allowed to contact the vehicle paint work. Remove spilt brake fluid from the paint work by rinsing away with running water.

1. Raise vehicle on ramp.
2. Remove road wheel(s).
3. Remove LH/RH front wheel arch liner (see Workshop Manual procedure 01.02.FB/01.02.GB Wheel Arch Liner - Front - LH/RH - Renew).
4. Remove bleed nipple dust caps.
5. Position bleed container, connect bleed hose to RHR/LHR Caliper, open bleed nipples (x1).
6. Position bleed container, connect bleed hose to RHF/LHF Caliper, open bleed nipples (x1).
7. Depress brake pedal >60 mm and secure with support.
8. Tighten RHR/LHR bleed nipple, disconnect bleed hose, remove bleed container and fit dust cap.
9. Tighten RHF/LHF bleed nipple, disconnect bleed hose, remove bleed container and fit dust cap.

Caution
Always plug pipe ends to prevent ingress of dirt or moisture into the system.

10. Loosen and disconnect RH/LH rear brake tube union from modulator (see Fig. 1).

Fig. 1

11. Loosen and disconnect RH/LH brake tube union from in line connection (see Fig. 2).

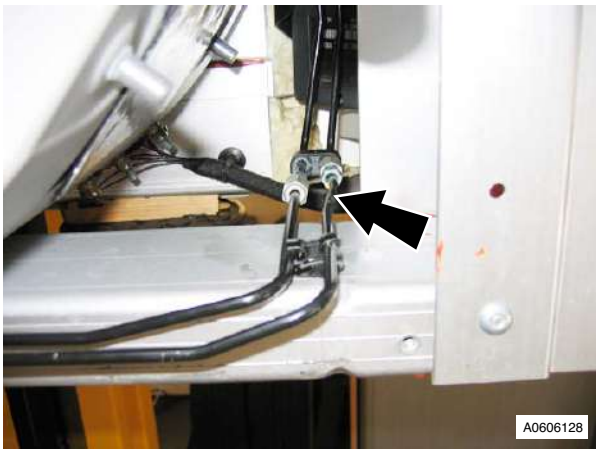

Fig. 2

12. Release brake tube from clips (x2), remove brake tube.

Installation

1. Install brake tube, connect unions, secure brake tube in clips (x2), torque tighten unions.
2. Install LH/RH front wheel arch liner (see Workshop Manual procedure 01.02.FB/01.02.GB Wheel Arch Liner - Front - LH - Renew
3. Remove pedal support.
4. Top-up brake fluid.
5. Bleed brake Caliper with assistance.
6. Remove bleed bottle.
7. Install bleed nipple dust caps.
8. Clean off excess fluid.
9. Top-up brake fluid.
10. Install road wheel(s)).
11. Lower vehicle on ramp.

Dynamic Stability Control Module-Renew

Repair Operation Time (ROT)	
Item	**Code**
Dynamic Stability Control Module-Renew	**06.06.EA**

Removal

WARNING
AVOID SKIN / EYE CONTACT OR INGESTION OF BRAKE FLUID. IF SKIN OR EYES ARE SPLASHED WITH BRAKE FLUID, RINSE THE AFFECTED AREA IMMEDIATELY WITH PLENTY OF WATER AND OBTAIN MEDICAL ATTENTION. IF BRAKE FLUID IS INGESTED, OBTAIN IMMEDIATE MEDICAL ATTENTION.

WARNING
BRAKE FLUID IS HYGROSCOPIC. IF KEPT IN OPENED CONTAINERS IT WILL ABSORB WATER VAPOUR. USE ONLY BRAKE FLUID FROM FRESHLY OPENED CONTAINERS WHEN TOPPING-UP THE BRAKE FLUID RESERVOIR.

Caution
Brake fluid must not be allowed to contact the vehicle paint work. Remove spilt brake fluid from the paint work by rinsing away with running water.

1. Raise vehicle on ramp.
2. Disconnect vehicle battery.
3. Remove road wheel(s).
4. Remove bleed nipple dust caps.
5. Position bleed container, connect bleed hose to LHR Caliper, open bleed nipples (x1).
6. Position bleed container, connect bleed hose to LHF Caliper, open bleed nipples (x1).
7. Depress brake pedal >60 mm and secure with support.
8. Tighten LHR bleed nipple, disconnect bleed hose, remove bleed container and fit dust cap.
9. Tighten LHF bleed nipple, disconnect bleed hose, remove bleed container and fit dust cap.
10. Remove LH front wheel arch liner (see Workshop Manual procedure 01.02.FB Wheel Arch Liner - Front - LH - Renew).
11. Disconnect modulator multiplug.

Caution
Always plug pipe ends to prevent ingress of dirt or moisture into the system.

12. Mark brake pipe unions for assembly purposes. Loosen and disconnect brake pipe unions (x6) from modulator. Plug modulator and pipe connections.
13. Remove Torx bolts (x3) securing modulator mounting bracket to body. Remove modulator.
14. Remove Torx bolts (x3) securing modulator to mounting bracket. Collect mounting bracket from modulator.

Installation

1. Install modulator to mounting bracket, install and torque tighten Torx bolts (x3).
2. Install modulator to body, install and torque tighten Torx bolts (x3).
3. Remove plugs. Install and torque tighten brake unions (x6) to modulator.
4. Connect modulator multiplug.

5. Install wheel arch liner. (see Workshop Manual procedure 01.02.FB Wheel Arch Liner - Front - LH - Renew).
6. Bleed braking system (see Workshop Manual procedure 06.07.DD Brake Hydraulic System - Flush/Refill/Bleed).
7. Install road wheel/s.
8. Lower vehicle on ramp.

ASTON MARTIN
ASTON MARTIN

Brake System (06.00)

Power Brake System (06.07)

Brake Booster

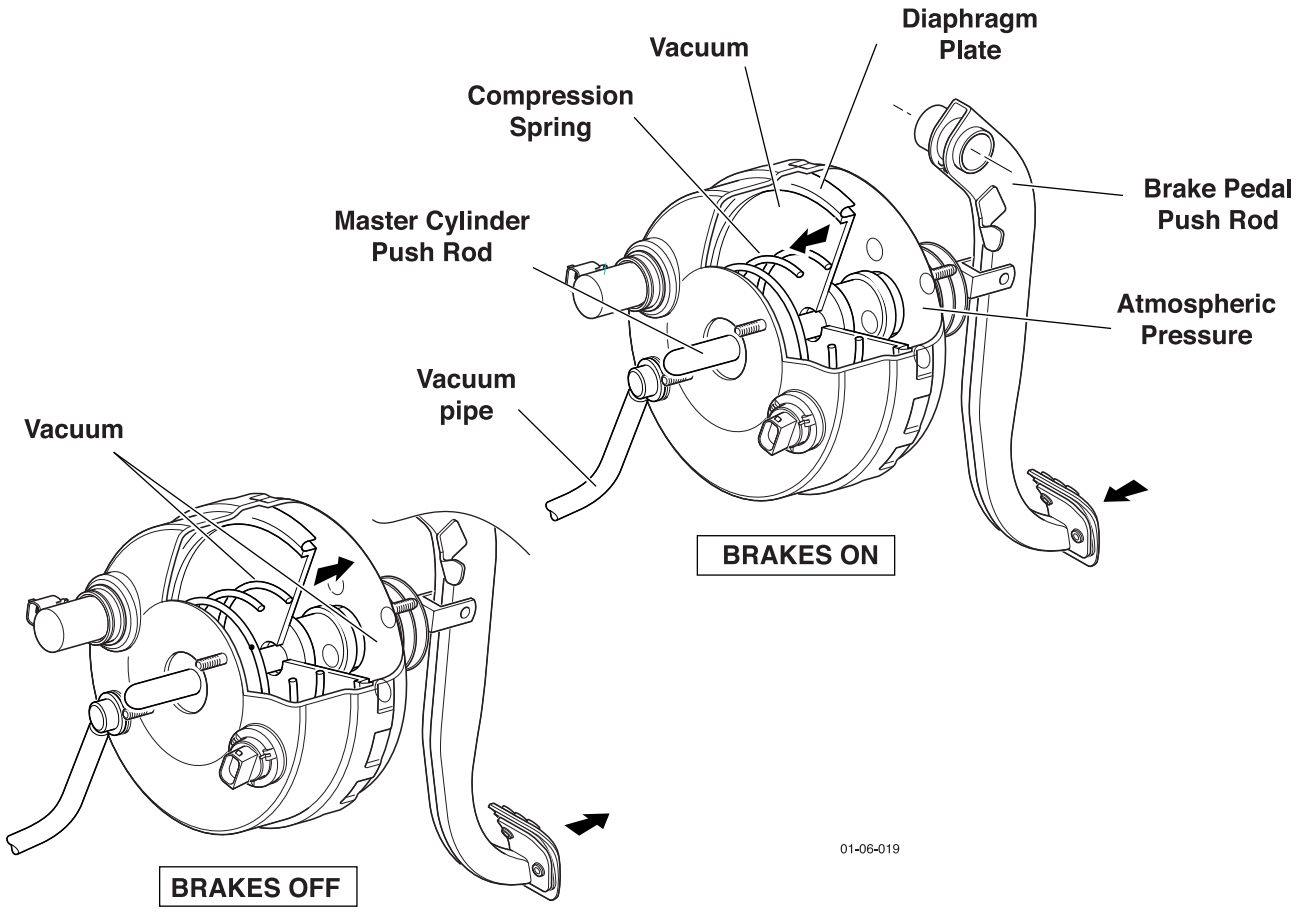

The brake booster comprises a chamber divided by a diaphragm plate and is secured to the brake pedal housing.

As the brake pedal is pressed, a poppet valve opens allowing atmospheric pressure into the drivers side of the diaphragm. Atmospheric pressure builds up on the drivers side of the diaphragm and pushes against the partial vacuum on the other side. This additional force boosts the applied brake pedal force up to 6.5 times.

When the brake pedal is released, the poppet valve closes. The pressure on the diaphragm reduces and the compression spring returns the diaphragm to the release position.

Emergency Brake Assist

In an emergency braking situation, a driver presses down on the brake pedal much faster than in normal braking conditions, but often without sufficient force. The initial application of the brake pedal is a reflex reaction. After the initial application, many drivers do not brake hard enough because of concerns that they might cause the vehicle to skid. To aid the driver, the panic brake assist (PBA) intervenes in bringing the vehicle to a halt, sooner and in a controlled manner, in emergency braking situation. The PBA system monitors the speed of brake pedal activation, and at a calibrated pedal activation speed, the PBA provides maximum brake force and makes full use of the ABS.

PBA is controlled by the ABS/DSC module, which monitors a travel sensor attached to the internal vacuum diaphragm of the brake booster. The sensor determines the position of the diaphragm and the speed of the diaphragm movement. If the sensor's signal indicates an emergency braking situation, the

ABS/DSC module will open an electric solenoid on the brake booster. The solenoid directs atmospheric pressure into the rear of the brake booster, causing the booster diaphragm to move forward to fully apply the brakes. PBA takes full benefit of ABS to stop the vehicle in a controlled manner and in the shortest distance possible. When the brake pedal is released the ABS/DSC module instantly releases the brakes.

Specifications

Torque Figures		
Description	Nm.	lb. / ft.
Brake Booster Mount	21-24	15.5-18

Maintenance

Brake Booster-RHD-Renew

Repair Operation Time (ROT)	
Item	Code
Brake Booster-Renew	06.07.AB

Removal

WARNING
AVOID SKIN / EYE CONTACT OR INGESTION OF BRAKE FLUID. IF SKIN OR EYES ARE SPLASHED WITH BRAKE FLUID, RINSE THE AFFECTED AREA IMMEDIATELY WITH PLENTY OF WATER AND OBTAIN MEDICAL ATTENTION. IF BRAKE FLUID IS INGESTED, OBTAIN IMMEDIATE MEDICAL ATTENTION.

WARNING
BRAKE FLUID IS HYGROSCOPIC. IF KEPT IN OPENED CONTAINERS IT WILL ABSORB WATER VAPOUR. USE ONLY BRAKE FLUID FROM FRESHLY OPENED CONTAINERS WHEN TOPPING-UP THE BRAKE FLUID RESERVOIR.

Caution
Brake fluid must not be allowed to contact the vehicle paint work. Remove spilt brake fluid from the paint work by rinsing away with running water.

1. Remove brake master cylinder (see Workshop Manual procedure 06.06.EB Brake Master Cylinder Assembly Renew).
2. Remove oil dipstick.
3. Remove vacuum hose.
4. Disconnect multiplugs (x2).
5. Remove pedal cover.
6. Remove clevis pin and clip.
7. Remove servo securing nuts (x4).
8. Remove servo assembly.
9. Remove brake light switch.

Installation

After installing a new brake booster, a new brake light switch, mounted on the brake pedal block, must be installed.

1. Install brake light switch.
2. Install servo assembly.
3. Install servo retaining nuts (x4) (torque).
4. Install clevis pin and clip.
5. Install pedal cover.
6. Connect multiplugs (x2).
7. Install vacuum hose.
8. Install dipstick.
9. Install brake master cylinder (see Workshop Manual procedure 06.06.EB Brake Master Cylinder Assembly Renew).

Brake Booster-LHD-Renew

Repair Operation Time (ROT)	
Item	Code
Brake Booster-Renew	06.07.AC

Removal

WARNING
AVOID SKIN / EYE CONTACT OR INGESTION OF BRAKE FLUID. IF SKIN OR EYES ARE SPLASHED WITH BRAKE FLUID, RINSE THE AFFECTED AREA IMMEDIATELY WITH PLENTY OF WATER AND OBTAIN MEDICAL ATTENTION. IF BRAKE FLUID IS INGESTED, OBTAIN IMMEDIATE MEDICAL ATTENTION.

WARNING
BRAKE FLUID IS HYGROSCOPIC. IF KEPT IN OPENED CONTAINERS IT WILL ABSORB WATER VAPOUR. USE ONLY BRAKE FLUID FROM FRESHLY OPENED CONTAINERS WHEN TOPPING-UP THE BRAKE FLUID RESERVOIR.

Caution
Brake fluid must not be allowed to contact the vehicle paint work. Remove spilt brake fluid from the paint work by rinsing away with running water.

1. Move drivers seat fully rearward.
2. Remove clevis pin and clip.
3. Remove booster securing nuts (x4).
4. Remove corner cross brace.
5. Move expansion tank aside for access (bolt x1, nut x1, hose clips x2, multiplug x1).
6. Remove vacuum hose move aside.
7. Remove bolts (x2) from clutch pipe bracket and move aside.

Caution
Always plug pipe ends to prevent ingress of dirt or moisture into the system.

8. Disconnect clutch reservoir feed pipe.
9. Disconnect multiplugs (x4).

Caution
Always plug pipe ends to prevent ingress of dirt or moisture into the system.

10. Disconnect brake pipes from master cylinder (move aside).
11. Remove booster assembly.
12. Split components.
13. Remove reservoir securing screw (for access to securing nut).
14. Remove master cylinder from booster (nuts x2).
15. Re-fit components.
16. Install master cylinder to booster (nuts x2).
17. Install reservoir securing screw.

Installation

1. Install booster assembly.
2. Connect brake pipes to master cylinder.
3. Install bolts (x2) clutch pipe bracket.
4. Connect clutch reservoir feed pipe.
5. Connect multiplugs (x4).
6. Install vacuum hose.
7. Install expansion tank aside (bolt x1, nut x1, hose clips x2, multiplug x1).
8. Install corner cross brace (torque) (only fully tighten when vehicle on level floor).
9. Install servo retaining nuts (x4) (torque).
10. Install clevis pin and clip.
11. Bleed Brakes (see Workshop Manual procedure 06.06.AD Pad Kit - Manual Brake and Clutch Pedal - Renew).
12. Top-up coolant.

Brake Fluid Reservoir-Renew

Repair Operation Time (ROT)		
Item		**Code**
Brake Fluid Reservoir-Renew	LHD	**06.07.DA**
Brake Fluid Reservoir-Renew	RHD	**06.07.DH**

Removal

WARNING
AVOID SKIN / EYE CONTACT OR INGESTION OF BRAKE FLUID. IF SKIN OR EYES ARE SPLASHED WITH BRAKE FLUID, RINSE THE AFFECTED AREA IMMEDIATELY WITH PLENTY OF WATER AND OBTAIN MEDICAL ATTENTION. IF BRAKE FLUID IS INGESTED, OBTAIN IMMEDIATE MEDICAL ATTENTION.

WARNING
BRAKE FLUID IS HYGROSCOPIC. IF KEPT IN OPENED CONTAINERS IT WILL ABSORB WATER VAPOUR. USE ONLY BRAKE FLUID FROM FRESHLY OPENED CONTAINERS WHEN TOPPING-UP THE BRAKE FLUID RESERVOIR.

Caution
Brake fluid must not be allowed to contact the vehicle paint work. Remove spilt brake fluid from the paint work by rinsing away with running water.

1. Remove corner cross brace.
2. Move expansion tank aside for access (bolt x1, nut x1, hose clips x2, multiplug x1).

Caution
Always plug pipe ends to prevent ingress of dirt or moisture into the system.

3. Disconnect clutch reservoir feed pipe.
4. Disconnect multiplugs (x2).

Caution
Always plug pipe ends to prevent ingress of dirt or moisture into the system.

5. Disconnect brake pipes from master cylinder (move aside).
6. Remove reservoir holding screw for access to master cylinder retaining nut.
7. Remove master cylinder from booster (nuts x2).
8. Remove reservoir from master cylinder.

Installation

1. Fit new seals and install reservoir to master cylinder.
2. Install master cylinder to booster (nuts x2).
3. Install reservoir holding screw for access to master cylinder retaining nut
4. Connect brake pipes to master cylinder.
5. Connect clutch reservoir feed pipe.
6. Connect multiplugs (x2).
7. Install expansion tank aside (bolt x1, nut x1, hose clips x2, multiplug x1).
8. Install corner cross brace (torque) (only fully tighten when vehicle on level floor).
9. Bleed Brakes (see Workshop Manual procedure 06.07.DD Brake Hydraulic System - Flush/Refill/Bleed).
10. Top-up coolant.

Brake Bleeding - AMDS

Repair Operation Time (ROT)	
Item	**Code**
Brake Bleeding with AMDS	**06.07.DD**

WARNING
BRAKE FLUID IS POISONOUS.
DO NOT DRINK THE BRAKE FLUID OR LET IT TOUCH YOUR SKIN OR EYES. IF YOU GET BRAKE FLUID IN YOUR MOUTH, GET MEDICAL AID IMMEDIATELY. FLUSH ALL BRAKE FLUID FROM YOUR EYES OR SKIN WITH WATER AND GET MEDICAL AID.

Caution
Do not let brake fluid touch the vehicle paint work. If you do the paintwork can be damaged. Flush all spilled brake fluid from the paintwork with water.

Use the AMDS to bleed the brakes if you are bleeding the brake system after you replaced a major component, for example: a modulator or a master cylinder or when filling from empty.

If you are bleeding a caliper, you can use a manual brake-bleed procedure.

1. Connect the AMDS.

2. Clean each caliper around the bleed screws. Remove the dust caps.

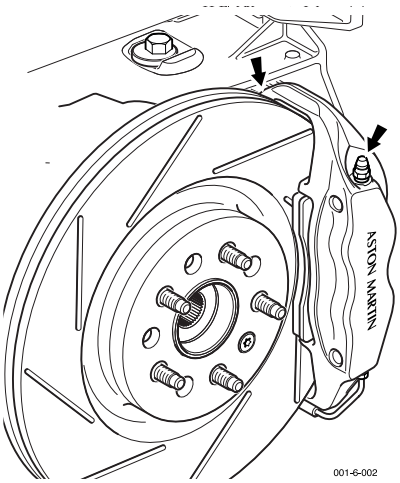

WARNING
BRAKE FLUID THAT CONTAINS WATER CAN AFFECT THE PERFORMANCE OF THE BRAKES AND CAUSE CORROSION IN THE BRAKE SYSTEM.
IF YOU KEEP BRAKE FLUID IN OPEN CONTAINERS, IT WILL ABSORB WATER VAPOUR.
USE ONLY BRAKE FLUID FROM NEW CONTAINERS WHEN YOU TOP-UP THE BRAKE FLUID RESERVOIR..

3. Prepare a bleed tube and a bottle that contains a small quantity of clean brake fluid.
4. If necessary, top up the brake fluid reservoir with brake fluid from a new container.
5. Switch on the AMDS and load the 'Anti-lock braking diagnostics' software.

When you bleed a brake caliper, always bleed the inner bleed screw first, followed by the outer bleed screw, then bleed the inner bleed screw again.

6. Select 'Brake Bleed' and follow the AMDS instructions.

Brake Master Cylinder and Vacuum Booster-Renew

Repair Operation Time (ROT)		
Item		**Code**
Brake Master Cylinder and Vacuum Booster-Renew	LHD	**06.07.DE**
Brake Master Cylinder and Vacuum Booster-Renew	RHD	**06.07.DG**

Removal

WARNING
AVOID SKIN / EYE CONTACT OR INGESTION OF BRAKE FLUID. IF SKIN OR EYES ARE SPLASHED WITH BRAKE FLUID, RINSE THE AFFECTED AREA IMMEDIATELY WITH PLENTY OF WATER AND OBTAIN MEDICAL ATTENTION. IF BRAKE FLUID IS INGESTED, OBTAIN IMMEDIATE MEDICAL ATTENTION.

WARNING
BRAKE FLUID IS HYGROSCOPIC. IF KEPT IN OPENED CONTAINERS IT WILL ABSORB WATER VAPOUR. USE ONLY BRAKE FLUID FROM FRESHLY OPENED CONTAINERS WHEN TOPPING-UP THE BRAKE FLUID RESERVOIR.

Caution
Brake fluid must not be allowed to contact the vehicle paint work. Remove spilt brake fluid from the paint work by rinsing away with running water.

1. Move drivers seat fully rearward.
2. Remove clevis pin and clip.
3. Remove booster securing nuts (x4).
4. Remove corner cross brace.
5. Move expansion tank aside for access (bolt x1, nut x1, hose clips x2, multiplug x1).
6. Remove vacuum hose move aside.
7. Remove bolts (x2) from clutch pipe bracket and move aside.

Caution
Always plug pipe ends to prevent ingress of dirt or moisture into the system.

8. Disconnect clutch reservoir feed pipe.
9. Disconnect multiplugs (x4).

Caution
Always plug pipe ends to prevent ingress of dirt or moisture into the system.

10. Disconnect brake pipes from master cylinder (move aside).
11. Remove booster assembly.

Installation

1. Install booster assembly.
2. Connect brake pipes to master cylinder.
3. Install bolts (x2) clutch pipe bracket.
4. Connect clutch reservoir feed pipe.
5. Connect multiplugs (x4).
6. Install vacuum hose.
7. Install expansion tank aside (bolt x1, nut x1, hose clips x2, multiplug x1).
8. Install corner cross brace (torque) (only fully tighten when vehicle on level floor).
9. Install servo retaining nuts (x4) (torque).
10. Install clevis pin and clip.
11. Bleed Brakes (see Workshop Manual procedure 06.07.DD Brake Hydraulic System - Flush/Refill/Bleed).

12. Top-up coolant.

Brake Master Cylinder-Renew

Repair Operation Time (ROT)		
Item		**Code**
Brake Master Cylinder-Renew	LHD	**06.07.EA**
Brake Master Cylinder-Renew	RHD	**06.07.EB**

Removal

WARNING
AVOID SKIN / EYE CONTACT OR INGESTION OF BRAKE FLUID. IF SKIN OR EYES ARE SPLASHED WITH BRAKE FLUID, RINSE THE AFFECTED AREA IMMEDIATELY WITH PLENTY OF WATER AND OBTAIN MEDICAL ATTENTION. IF BRAKE FLUID IS INGESTED, OBTAIN IMMEDIATE MEDICAL ATTENTION.

WARNING
BRAKE FLUID IS HYGROSCOPIC. IF KEPT IN OPENED CONTAINERS IT WILL ABSORB WATER VAPOUR. USE ONLY BRAKE FLUID FROM FRESHLY OPENED CONTAINERS WHEN TOPPING-UP THE BRAKE FLUID RESERVOIR.

Caution
Brake fluid must not be allowed to contact the vehicle paint work. Remove spilt brake fluid from the paint work by rinsing away with running water.

1. Remove corner cross brace.
2. Move expansion tank aside for access (bolt x1, nut x1, hose clips x2, multiplug x1).

Caution
Always plug pipe ends to prevent ingress of dirt or moisture into the system.

3. Disconnect clutch reservoir feed pipe.
4. Disconnect multiplugs (x2).

Caution
Always plug pipe ends to prevent ingress of dirt or moisture into the system.

5. Disconnect brake pipes from master cylinder (move aside).
6. Remove reservoir holding screw for access to master cylinder retaining nut.
7. Remove master cylinder from booster (nuts x2).

Installation

1. On new master cylinder - Remove reservoir holding screw for access to master cylinder retaining nut
2. Install master cylinder to booster (nuts x2).
3. Install reservoir holding screw for access to master cylinder retaining nut
4. Connect brake pipes to master cylinder.
5. Connect clutch reservoir feed pipe.
6. Connect multiplugs (x2).
7. Install expansion tank aside (bolt x1, nut x1, hose clips x2, multiplug x1).
8. Install corner cross brace (torque) (only fully tighten when vehicle on level floor).
9. Bleed Brakes (see Workshop Manual procedure 006.07.DD Brake Hydraulic System - Flush/Refill/Bleed).
10. Top-up coolant.

ASTON MARTIN
ASTON MARTIN

Brake system (06.00)

Anti-lock Braking System (ABS) (06.09)

The anti-lock braking system (ABS) is a four-channel system having independent inputs from all four-wheel speed sensors.

The ABS module, monitors signals from the sensors to calculate, brake slip and the acceleration / deceleration of individual wheels. When the brake pedal is depressed, and the ABS module detects incipient wheel lock-up from the incoming signals, it triggers the re-circulation pump inside the module's hydraulic modulator, and the solenoid valves for the wheel(s) concerned. Brake pressure, is then modulated to increase / decrease or remain constant at the wheel(s) concerned until wheel lock-up is eliminated. The ABS provides self-diagnosis and any malfunction within the system will be indicated to the driver by the illumination of the brake warning light and 'ABS FAULT' displayed in the message centre right. Should a fault develop within the ABS, the brake system will operate conventionally and with the same standard of performance as a vehicle not equipped with ABS.

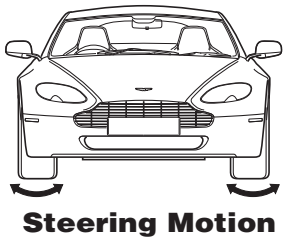

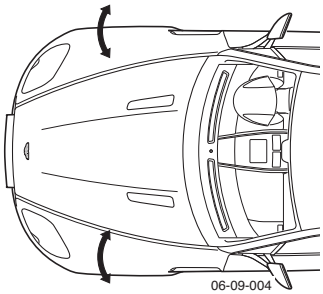

Dynamic Stability Control

Dynamic Stability Control (DSC) is a closed-loop system designed to enhance driving safety by improving vehicle handling when the tyres are at the limits of their grip capabilities. This is achieved through instantaneous, electronically controlled, reduction of engine torque and strategic application of the brakes at individual wheels.

By using the principle that by controlling the brakes individually it is possible, to an extent, to steer the vehicle.

This principle can be used to enhance driving safety by correcting the vehicle's yaw moment (turning force), when the vehicle fails to follow the driver's steering inputs.

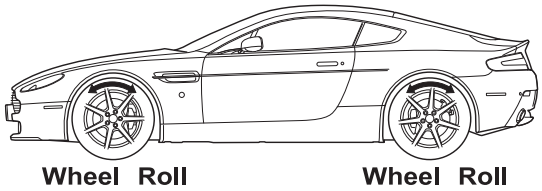

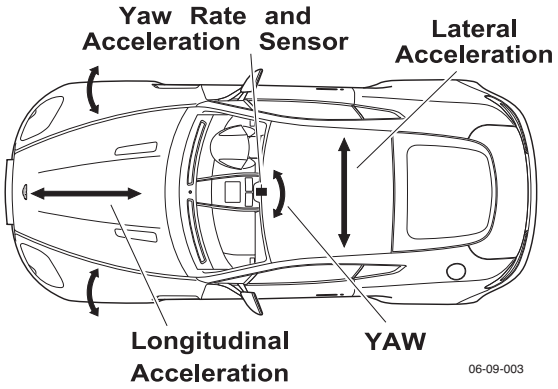

Concept

Satisfactory handling is determined according to whether a vehicle maintains a path, which accurately reflects the driver's input (steering wheel angle) while at the same time remaining stable.

The ABS / DSC module measures the vehicle's motion using the sensors below and processes the information to maintain vehicle control and stability within its ultimate control limits, which are determined by the physical limits set by the tyre's grip.

Wheel speed sensors - Longitudinal acceleration.

lateral acceleration sensor - Lateral acceleration.

Yaw rate sensor - Yaw rate, defined as the rotation around the vertical axis.

When there is insufficient tyre grip for the driving situation (for example, the driver has entered a corner too fast) the DSC will maintain stability and optimise the cornering and stopping performance, but cannot always prevent the vehicle from running wide.

Driver demand is measured by using the steering wheel angle sensor and vehicle speed to calculate the optimum yaw rate. This is compared to the actual measured yaw-rate and a yaw-rate calculated from the lateral acceleration and the vehicle speed. If the deviation between these measurements is too great, an understeer or oversteer correction is made.

The first step in this process is to determine how the vehicle should respond to driver demand (ideal response) and how it actually does respond (actual response). Hydraulic control valves can then be activated to generate brake pressure and / or engine torque reduction can be used to maintain the

difference between the ideal and actual response within a tolerance band. This directly influences the forces on the tires to generate a corrective yaw moment to reduce the side forces of the tires where appropriate

System Overview

The DSC system embraces capabilities far beyond that of ABS, or ABS and traction control combined, while relying on the components of these systems. It also incorporates these additional sensors for measuring the vehicle's motion and brake system pressure:

Yaw rate sensor - located centrally on the transmission tunnel.

Lateral acceleration sensor - integrated with the yaw rate sensor.

Steering angle sensor - located on the upper steering column.

Pressure transducer - located on master cylinder.

The ABS / DSC module supports data exchange with other vehicle electronic systems via the CAN network; the module also enables diagnostic interrogation using WDS.

The following components register driver demand and the ABS / DSC module processes their signals as a basis for defining an ideal response:

PCM - position of accelerator pedal.

Brake master cylinder pressure transducer - driver's braking effort.

Steering angle sensor - position of steering wheel.

There are many supplementary parameters also included in the processing calculations these include the coefficient of friction and vehicle speed. The ABS / DSC module monitors these factors based on signals transmitted by the sensors for:

- Wheel speed
- Lateral acceleration
- Brake pressure
- Yaw rate

Using these parameters, the function of the ABS / DSC module is to determine the current vehicle status based on the yaw-rate signal and the slip as estimated by the ABS / DSC module. It then maintains the vehicle response within a tolerance of the 'normal' behaviour, which is easily controlled by the driver.

In order to generate the desired yaw behaviour the ABS / DSC module controls the selected wheels using the ABS hydraulic system and engine control system. In the event of engine intervention, the ABS / DSC module calculates the torque which should be supplied by the engine to the wheels, and relays this request signal to the PCM which implements the torque request.

The PCM receives signals from the DSC system via the CAN bus and reduces engine torque as follows:

- The throttle is positioned to provide the requested engine target torque.
- During the transient phase of torque reduction caused by mechanical and combustion delays, other alternative torque reduction methods are used to provide a quicker response.
- The ignition is retarded and / or the fuel is cut-off at the injectors at selected cylinders.
- Ignition and fuelling are reinstated when the engine torque reaches the requested value

Operation Summary

- DSC is switched 'ON' when the engine is started
- When the system is operating, the DSC light in the instrument cluster will flash, at the rate of twice a second
- DSC can be switched 'OFF / ON' by pressing the DSC switch
- The DSC light in the instrument cluster will illuminate continuously when the system is switched 'Off'.
- 'DSC OFF' will be displayed in the message centre right to indicate the system has been switched 'OFF'
- A malfunction in the traction control system will be indicated to the driver by the following:
  - The DSC light in the instrument cluster will illuminate continuously
  - The message 'DSC NOT AVAILABLE' will be displayed in the message centre right
- If vehicle speed control is engaged it will automatically disengage when traction control is operating.

Traction Control

Traction control is a function of DSC, and is operated in association with DSC. Traction control prevents excessive wheel-spin at standing starts, or during acceleration. Wheel-spin is usually caused by excessive use of the accelerator pedal, or slippery, loose or bumpy road surfaces. To prevent excessive wheel-spin and maintain vehicle stability such situations are overcome by the intervention of the traction control system by:

- Braking the driven-wheel when it starts to slip
- And / or adapting the engine torque to a level corresponding to the traction available on the road surface.

Functional Description

Traction control uses the ABS electronic and mechanical / hydraulic hardware with additional valves to control the braking pressure at the calipers. An engine interface also enables the engine to respond to torque reduction requests from the traction control. As with ABS, the signals from the wheel-speed sensors are supplied to the ABS module, where they are used to calculate the wheel-slip of the individual wheels. Traction control intervention is initiated if the slip at one of the wheels is excessive.

Engine Intervention

In the event of wheel-slip the ABS / DSC module calculates the torque, which should be applied by the engine to reduce the wheel-slip (this torque does not exceed driver demand). Engine torque reduction is then requested from the PCM via the CAN bus. The PCM, in response to these signals, reduces engine torque by controlling the ignition and fuelling. A traction control gearshift pattern is automatically selected within the automatic transmission software whenever traction control is active.

Brake Intervention

This function operates by increasing the pressure in the brake caliper of the slipping wheel, by closing the separation valve and the inlet valve of the non-slipping wheel and running the modulator pump. This takes fluid from the fluid reservoir via the non-actuated master cylinder and pressurizes the brake caliper. The pressure is modulated at the caliper via the inlet and outlet valves to achieve the desired wheel-slip target to maximize traction.

ABS / DSC Circuit

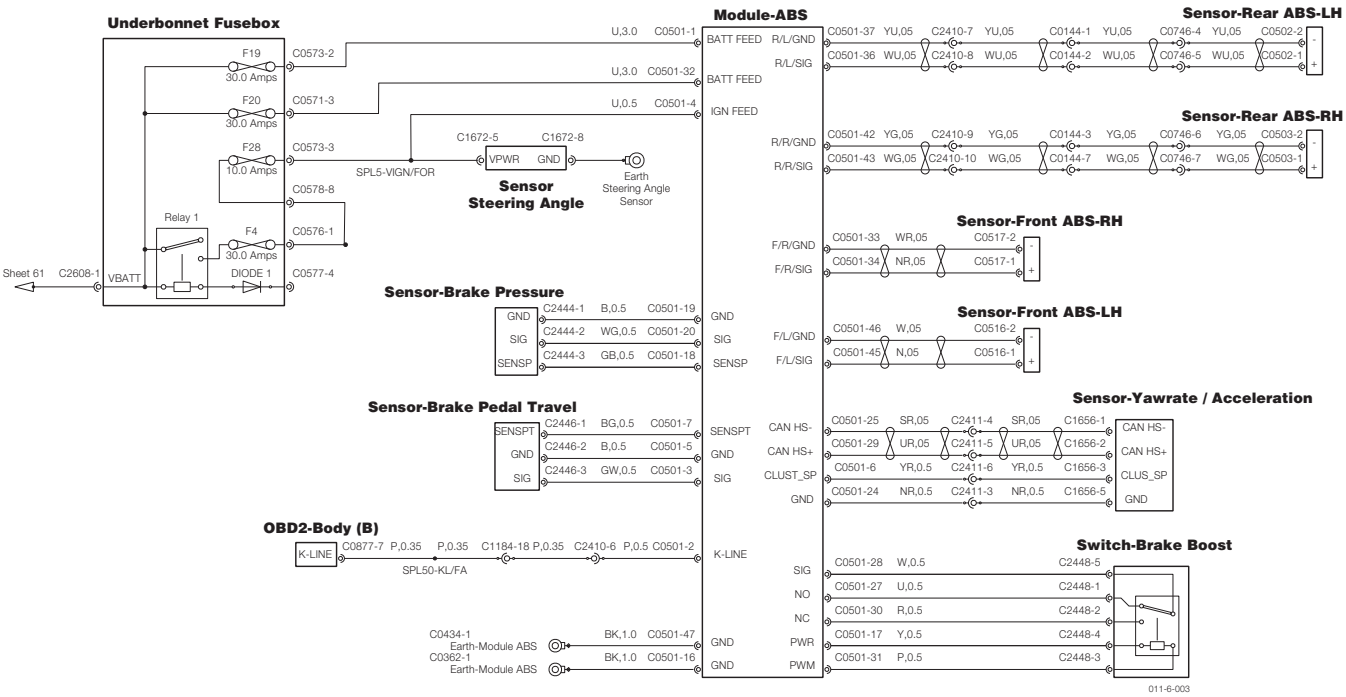

Specifications

Oils/Greases	
Brake Fluid	Castrol Response Super Dot 4

Torque Figures

Description	Nm.	lb. / ft.
Modulator to Bracket	5	4
Modulator / Bracket to body	9	7
Brake hose unions	17	13
	14	10.5

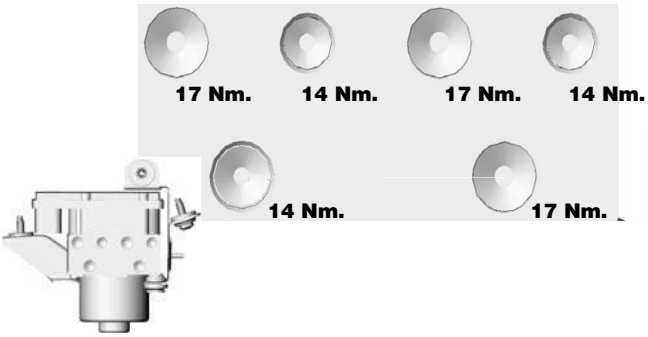

Maintenance

ABS Modulator - Remove and Install

Repair Operation Time (ROT)	
Item	**Code**
ABS Modulator - Remove and Install	**06.09.AA**

Remove

WARNING
BRAKE FLUID IS POISONOUS.
DO NOT DRINK THE BRAKE FLUID OR LET IT TOUCH YOUR SKIN OR EYES. IF YOU GET BRAKE FLUID IN YOUR MOUTH, GET MEDICAL AID IMMEDIATELY. FLUSH ALL BRAKE FLUID FROM YOUR EYES OR SKIN WITH WATER AND GET MEDICAL AID.

WARNING
HYDRAULIC FLUID ABSORBS WATER VAPOUR. ONLY USE BRAKE FLUID FROM NEW CONTAINERS WHEN YOU FILL THE BRAKE FLUID RESERVOIR. IF YOU DO NOT, IN THE FLUID CAN CAUSE THE PERFORMANCE OF THE BRAKES TO DECREASE.

Caution
Do not let brake fluid touch the vehicle paint work. If you do the paintwork can be damaged. Flush all spilled brake fluid from the paintwork with water.

Note: Put absorbent cloth around the brake fluid reservoir filler neck to absorb spilled brake fluid.

1. Disconnect the vehicle battery.
2. Raise the vehicle and make it safe.
3. Remove the four road wheels.
4. Remove the dust caps from the four brake caliper bleed nipples .
5. Put a container in position under the rear left-side caliper to collect brake fluid.
6. Connect a bleed hose to rear left-side caliper.
7. Open the bleed nipple.
8. Put a container in position under the front left-side caliper to collect brake fluid.
9. Connect a bleed hose to front left-side caliper
10. Open the bleed nipple.
11. Operate the brake pedal more than 60 mm and install a pedal clamp to hold it.
12. Tighten the two bleed nipples.
13. Disconnect the two bleed hoses.
14. Remove the two fluid containers.
15. Install the two dust caps.
16. Remove the five or six screws that attach the rear half of the front left wheelarch liner.
17. Remove the self-tapping screw that attaches the rear of the wheelarch liner into the wheelarch.
18. Move the wheel arch liner to get access.
19. Disconnect the electrical connector from the modulator.

Caution
Seal all pipe ends and open ports to prevent contamination.

20. Put a label on each brake pipe union for the assembly procedure.
21. Loosen and disconnect the six brake pipe unions from the modulator. Install plugs into the modulator and the pipe connections.
22. Remove the three M8 Torx-head screws (1) that attach the modulator mounting bracket to the body.

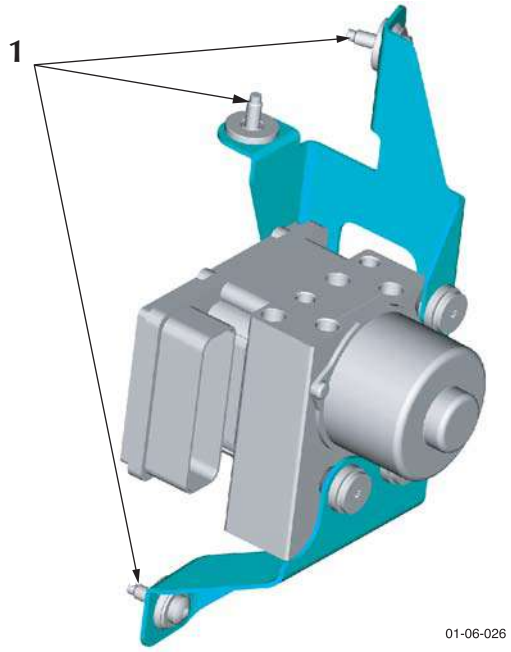

23. Remove the modulator.
24. Remove the three M6 Torx-head bolts that attach the modulator to the mounting bracket. Remove the mounting bracket from the modulator.

Installation

1. Install the modulator onto the mounting bracket.
2. Install and torque the three M6 Torx-head bolts.
3. Install the modulator to the body.
4. Install and torque the three M8 Torx-head screws.
5. Remove the sealing plugs.
6. Install and torque the six brake unions to the modulator.
7. Connect the electrical connector to the modulator.
8. Put the wheel arch liner back in the correct position.
9. Install the self-tapping screw that attaches the rear of the wheelarch liner into the wheelarch.
10. Install the five or six screws to attach the wheel arch liner.
11. Bleed the braking system (Refer to 'Brake Bleeding - AMDS', page 6-7-3).
12. Install the road wheels.

13. Lower the vehicle.

WARNING
BEFORE YOU DRIVE THE VEHICLE, OPERATE THE FOOT BRAKE PEDAL 2 OR 3 TIMES TO MAKE SURE THAT THE FOOT BRAKE OPERATES CORRECTLY. YOU MUST OPERATE BRAKE CALIPER PISTONS TO CLOSE THE SPACE BETWEEN THE BRAKE PADS AND THE DISC.

Transmission (07.00)

Contents

Transmission Cooling (07.02) 7-2-2
Specifications 2-2
Maintenance 2-2
Oil Cooler Matrix-Renew 2-2
Manual Transmission Oil Outlet Hose-Renew 2-3
Manual Transmission Oil Inlet Hose-Renew 2-3
Manual Transmission (07.03) 7-3-1
Description 3-1
Cooling 3-1
Specifications 3-2
Maintenance 3-2
Transaxle Assembly-Remove for Access/Refit 3-2
Complete Sportshift Hydraulic Kit-Renew 3-6
Complete Shifter Assembly-Renew-Roadster Only .. 3-9
Reservoir Tank Assembly-Renew-Roadster Only ... 3-10
Pump Inlet/Valve Body Bleed/Reservoir Tank Hoses-Renew-Roadster Only 3-11
Hydraulic Pump Assembly-Renew -Sportshift Only 3-12
HP Hose Kit-Renew-Roadster Only 3-13
Dry Break Connector-Renew-Roadster Only 3-15
Clutch Position Sensor-Renew -Roadster/Sportshift Only 3-17
Transmission Sensor Assembly -Renew-Sportshift Only 3-18
Transmission Valve Block-Renew 3-20
Shifter Assembly Gasket-Renew 3-23
Transaxle Assembly-Remove for Access & Refit -Sportshift Only 3-23
Transmission Axle Assembly-Drain/Refill 3-26
Transaxle Assembly-Renew 3-26
Automatic Control System (07.05) 7-5-1
Maintenance 5-1
Paddle Shift Switch Assembly - Renew - (Sportshift Only) 5-1
Sportshift Drive Switch-Renew-Sportshift Only 5-1
Sportshift Neutral Switch-Renew-Sportshift Only 5-2
Sportshift Reverse Switch-Renew-Sportshift Only ... 5-2
Sportshift Comfort Switch-Renew-Sportshift Only ... 5-3
Sportshift Interface Box-Renew-Sportshift Only 5-3
Manual Control System (07.06) 7-6-1
Maintenance 6-1
Gearshift Assembly Mechanism-Renew 6-1
Transmission Gearshift Cable Assembly-Renew 6-1
Automatic Shifting Subsystem (07.11) 7-11-1
Maintenance 11-1
Transmission Control Module -Renew-Sportshift Only 11-1

Transmission (07.00)

Transmission Cooling (07.02)

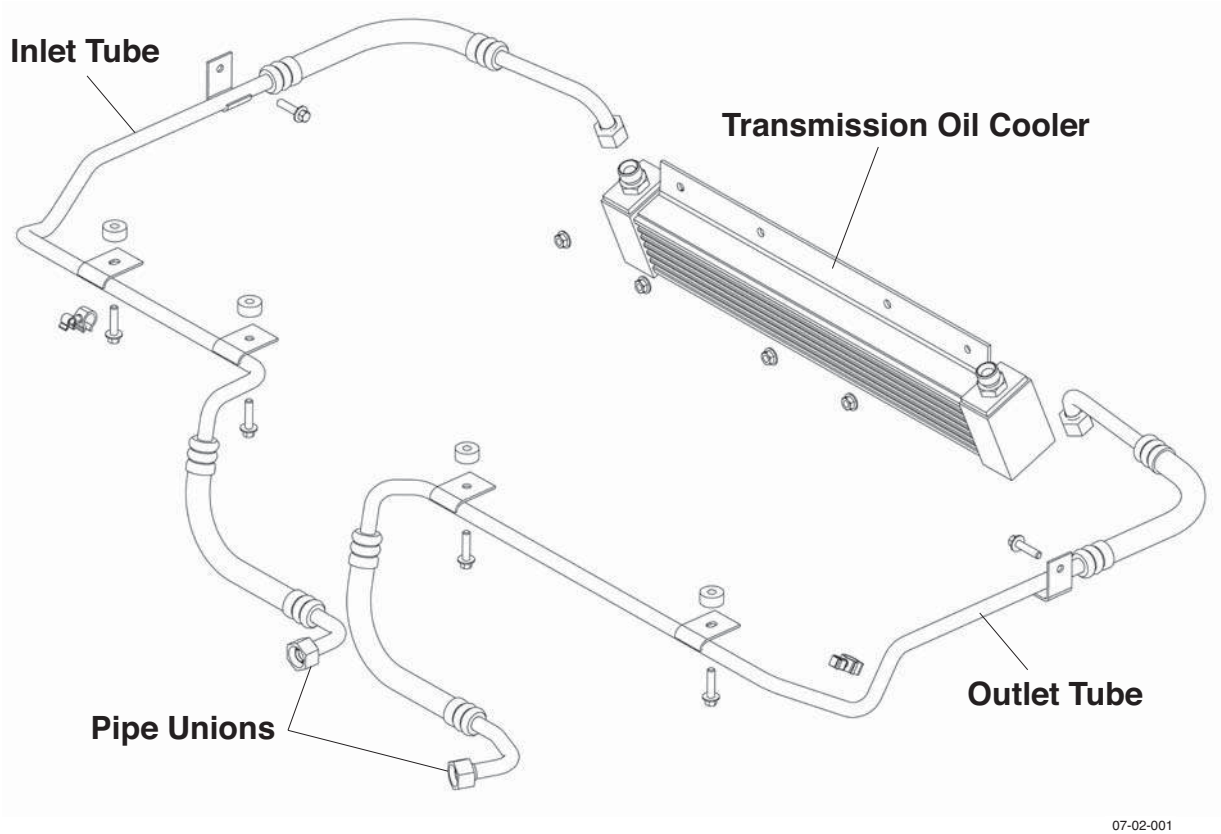

Specifications

Torque Figures		
Description	Nm.	lb. / ft.
Cooler to subframe	8-10	6-7.5

Maintenance

Oil Cooler Matrix-Renew

Repair Operation Time (ROT)	
Item	**Code**
Oil Cooler Matrix-Renew	**07.02.FC**

Removal

1. Raise vehicle on ramp.

WARNING
TO AVOID PERSONAL INJURY, I.E. SEVERE BURNS TO THE SKIN, ALLOW EXHAUST SYSTEM TO COOL DOWN BEFORE REMOVING EXHAUST SYSTEM COMPONENTS.

2. Remove rear exhaust silencer heatshield (see Workshop Manual procedure 02.06.AG Heatshield - Exhaust Muffler - Renew).
3. Position drain container to collect oil spillage.
4. Loosen oil cooler pipe unions (x2) (see Figure 1).

Figure 1

5. Remove nuts (x4) from oil cooler to rear bumper armature.

WARNING
OBSERVE ALL TRANSAXLE OIL MANUFACTURERS SAFETY INSTRUCTIONS WHEN HANDLING COMPONENTS THAT HAVE BEEN IN CONTACT WITH TRANSAXLE OIL.

Caution
Plug oil cooler connections to prevent ingress of dirt or moisture into the system.

6. Disconnect oil cooler pipes and remove oil cooler (see Figure 2).

Figure 2

7. Install plugs in oil cooler and pipe connections.

Installation

1. Clean oil cooler, connections and mating face on subframe.

WARNING
OBSERVE ALL TRANSAXLE OIL MANUFACTURERS SAFETY INSTRUCTIONS WHEN HANDLING COMPONENTS THAT HAVE BEEN IN CONTACT WITH TRANSAXLE OIL.

2. Remove plugs, position oil cooler and connect oil cooler pipes (do not tighten at this stage).
3. Install oil cooler and tighten nuts (x4).
4. Tighten pipe unions.

WARNING
OBSERVE ALL TRANSAXLE OIL MANUFACTURERS SAFETY INSTRUCTIONS WHEN HANDLING COMPONENTS THAT HAVE BEEN IN CONTACT WITH TRANSAXLE OIL.

5. Top-up transaxle oil level.
6. Remove drain container.
7. Install rear exhaust silencer heatshield (see Workshop Manual procedure 02.06.AG Heatshield - Exhaust Silencer - Renew).
8. Lower vehicle on ramp.

Manual Transmission Oil Outlet Hose-Renew

Repair Operation Time (ROT)	
Item	**Code**
Manual Transmission Oil Outlet Hose-Renew	**07.02.FD**

Removal

1. Raise vehicle on ramp.

WARNING
TO AVOID PERSONAL INJURY, I.E. SEVERE BURNS TO THE SKIN, ALLOW EXHAUST SYSTEM TO COOL DOWN BEFORE REMOVING EXHAUST SYSTEM COMPONENTS.

2. Remove rear exhaust silencer heatshield (see Workshop Manual procedure 02.06.AG Heatshield - Exhaust Muffler - Renew).
3. Release transaxle breather hose from oil cooler pipe.
4. Remove bolt, nuts (x2),insulating washers (x2) and plain washer securing outlet hose brackets to body.
5. Position container to collect oil spillage.

WARNING
OBSERVE ALL TRANSAXLE OIL MANUFACTURERS SAFETY INSTRUCTIONS WHEN HANDLING COMPONENTS THAT HAVE BEEN IN CONTACT WITH TRANSAXLE OIL.

Caution
Plug oil cooler connections to prevent ingress of dirt or moisture into the system.

6. Loosen union and remove hose from oil cooler.
7. Loosen union and remove oil cooler hose from transaxle and collect hose.
1. Plug oil cooler and transaxle pipe connections.

Install

1. Clean hose connections and remove plugs.
2. Position hose, align brackets, install insulating washers (x2) and plain washer.
3. Install and tighten bolt and nuts (x2) to correct torque.

WARNING
OBSERVE ALL TRANSAXLE OIL MANUFACTURERS SAFETY INSTRUCTIONS WHEN HANDLING COMPONENTS THAT HAVE BEEN IN CONTACT WITH TRANSAXLE OIL.

4. Connect and tighten hose unions to correct torque.
5. Remove drain container.
6. Install transaxle breather hose clip to oil cooler pipe.
7. Install rear exhaust silencer heatshield (see Workshop Manual procedure 02.06.AG Heatshield - Exhaust Muffler - Renew).
8. Lower vehicle on ramp.

Manual Transmission Oil Inlet Hose-Renew

Repair Operation Time (ROT)	
Item	**Code**
Manual Transmission Oil Inlet Hose-Renew	**07.02.FE**

Removal

1. Raise vehicle on ramp.

WARNING
TO AVOID PERSONAL INJURY, I.E. SEVERE BURNS TO THE SKIN, ALLOW EXHAUST SYSTEM TO COOL DOWN BEFORE REMOVING EXHAUST SYSTEM COMPONENTS.

2. Remove rear exhaust silencer heatshield (see Workshop Manual procedure 02.06.AG Heatshield - Exhaust Muffler - Renew).
3. Release transaxle breather hose from oil cooler pipe.
4. Remove bolt and nuts (x2) that secure inlet hose brackets to body.
5. Collect pipe insulating washers (x2) and plain washer.
6. Position container to collect oil spillage.

WARNING
OBSERVE ALL TRANSAXLE OIL MANUFACTURERS SAFETY INSTRUCTIONS WHEN HANDLING COMPONENTS THAT HAVE BEEN IN CONTACT WITH TRANSAXLE OIL.

Caution
Plug oil cooler connections to prevent ingress of dirt or moisture into the system.

7. Loosen union and remove hose from oil cooler.
8. Loosen union and remove oil cooler hose from transaxle and collect hose.
1. Plug oil cooler and transaxle pipe connections.

Install

1. Clean hose connections and remove plugs.
2. Position hose, align brackets, install insulating washers and plain washer.
3. Install and tighten bolt and nuts (x2) to correct torque.

WARNING
OBSERVE ALL TRANSAXLE OIL MANUFACTURERS SAFETY INSTRUCTIONS WHEN HANDLING COMPONENTS THAT HAVE BEEN IN CONTACT WITH TRANSAXLE OIL.

4. Connect and tighten hose unions to correct torque.
5. Remove drain container.
6. Install transaxle breather hose clip to oil cooler pipe.
7. Install rear exhaust silencer heatshield (see Workshop Manual procedure 02.06.AG Heatshield - Exhaust Muffler - Renew)
8. Lower vehicle on ramp.

Transmission (07.00)

Manual Transmission (07.03)

Description

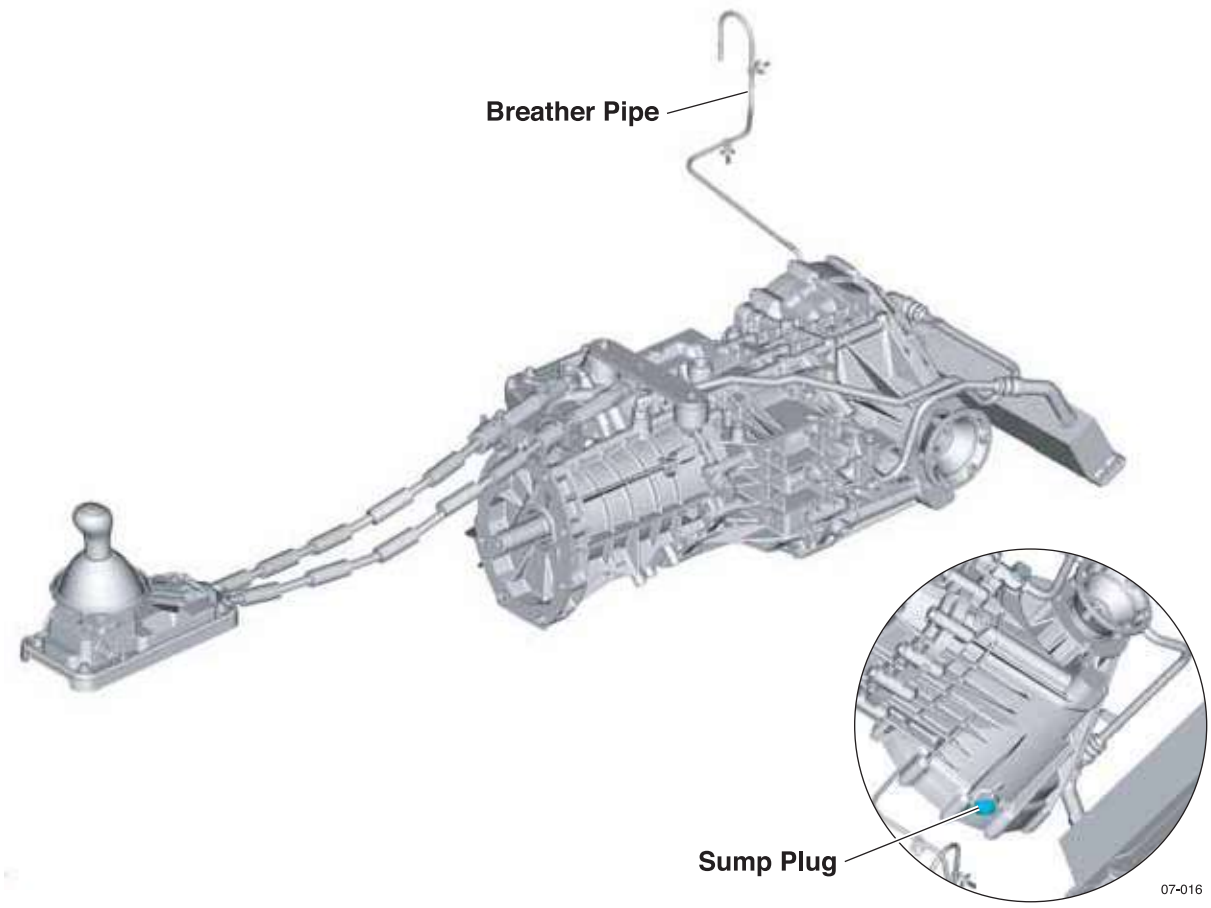

The Graziano rear transaxle installed to this vehicle incorporates a six speed transmission plus reverse, with synchromesh on all gears. Gear selection is via an Integrated Shifter Bellcrack System (Cable Operated).

Cooling

The manual transaxle has an external cooling circuit which operates continuously by a fixed displacement pump driven by the input shaft.

The cooler is mounted at the rear attached to the subframe.

Specifications

Type

Graziano AM803T transaxle with:

- Integrated Shifter Bellcrack System (Cable Operated)
- Integrated Reverse Switch
- Plate Type Limited Slip Differential

Synchronisers

Triple Cone Syncros on 1st and 2nd, double cone on all other gears incl. reverse.

Lubrication

Pressure fed system with integrated pump driven by the input shaft. Filter (filter is serviceable item).

Transaxle Oil

Shell Transaxle 75W/90 (very important that this is the transaxle type, Do not use Shell Spirax 75W90)

Transaxle Quantity.	4 ltr (7 pt / 4.2 US qts)
Coolant System Quantity.	0.5 ltr (0.9 pt / 0.53 US qts)
Transaxle + Coolant Quantity	4.5 ltr (7.9 pt / 4.6 US qts)

Gear Ratios

1st	2nd	3rd	4th	5th	6th
3.15:1	1.95:1	1.44:1	1.15:1	0.94:1	0.77:1 (upto VIN C00525) 0.76:1 (VIN C00526 Onwards)

Reverse
2.39:1

Differential Locking Ratio

10% Drive, 30% Coast

Torque Figures

Description	Nm.	lb. / ft.
Sump plug	49	36.5
LH Output shaft housing	10	7.5
Halfshaft	70	52
Differential Cover	35	26

Maintenance

Transaxle Assembly - Remove for Access and Install

Repair Operation Time (ROT)	
Item	**Code**
Transaxle Assembly-Remove for Access/Refit	**07.03.AA**

Removal

1. Disconnect the battery ground cable.
2. Remove the rear undertray (refer to Workshop Manual procedure 01.02.PB - Rear Undertray).

WARNING
WHEN YOU LIFT THE VEHICLE ON A 'TWO POST' LIFT MAKE SURE THAT YOU USE A STRAP TO HOLD THE REAR END OF THE VEHICLE TO THE RAMP. IF YOU DO NOT, THE VEHICLE CAN FALL OFF THE RAMP AND CAUSE PERSONAL INJURY OR DEATH.

3. Raise the vehicle and install straps to hold it to the lift (refer to Figure 1).

Figure 1

WARNING
THE EXHAUST SYSTEM WILL BE VERY HOT AFTER OPERATION. LET THE EXHAUST COOL BEFORE YOU DO WORK. IF YOU DO NOT, PESONAL INJURY CAN OCCUR.

4. Remove the four bolts that attach the cross-brace to the rear subframe.

Figure 2

5. Remove the cross brace.
6. Remove the four bolts that attach the exhaust centre pipe to the rear silencer.
7. Loosen the two clamps that attach the exhaust centre pipe to the catalytic converters.
8. Move the clamps along the exhaust pipes.
9. Remove the four bolts that attach the exhaust centre pipe to the exhaust front mount.

WARNING
GET THE AID OF ONE MORE PERSON WHEN YOU REMOVE THE EXHAUST CENTRE PIPE.
THE CENTRE EXHAUST PIPE IS HEAVY

10. Remove the exhaust centre pipe.
11. Remove the exhaust front mount.
12. Remove the four bolts that attach the floor heat shield to the body.
13. Remove the floor heatshield.
14. Remove the eight screws that attach the tunnel reinforcement plate to the body.

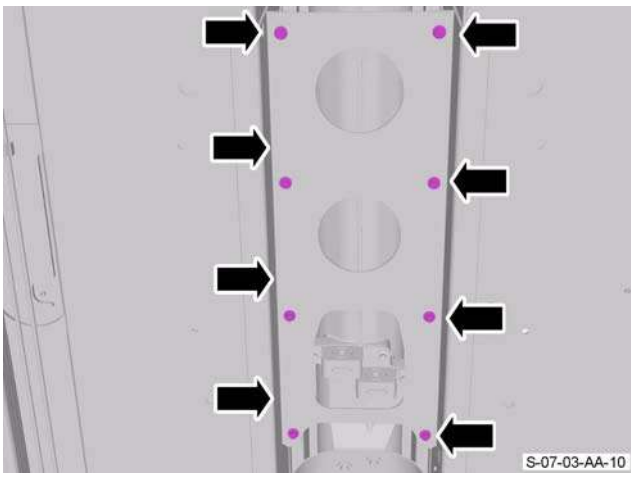

Figure 3

15. Remove the tunnel reinforcement plate.
16. Remove the nut that attaches the ground cable to the body.

Figure 4

17. Move the ground cable away.
18. Put marks on the driveshaft to transaxle flanges to help align during installation.
19. Remove and discard the six bolts that attach the right side driveshaft to the transaxle. Collect and keep the bolt plates.

Note: If necessary, turn the driveshaft to get access to the six bolts.

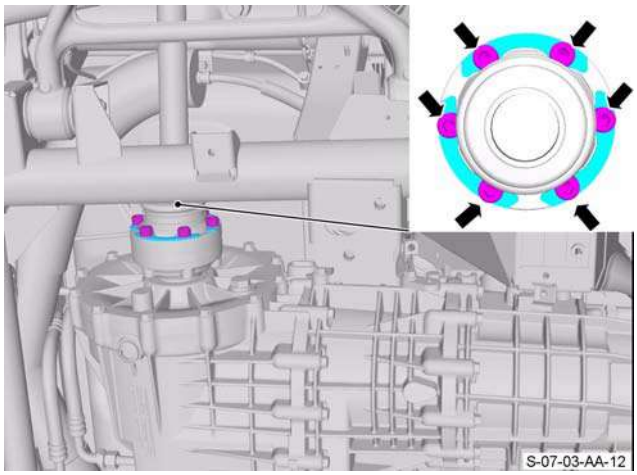

Figure 5

20. Remove and discard the six bolts that attach the left side driveshaft to the transaxle. Collect and keep the bolt plates.

Note: If necessary, turn the driveshaft to get access to the six bolts.

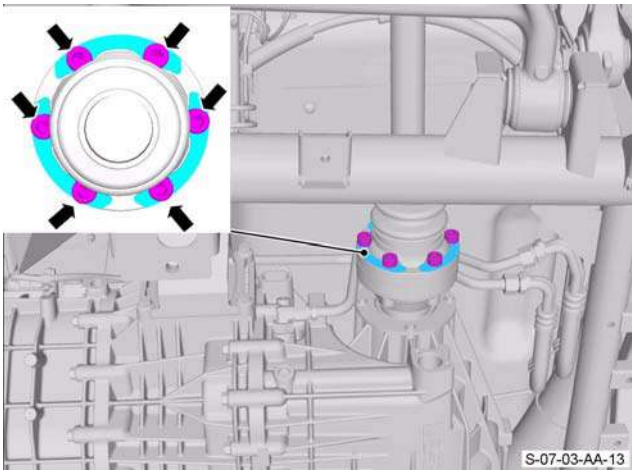

Figure 6

21. Release the driveshafts from the transaxle.

Figure 7

WARNING
TRANSAXLE OIL CAN BE HARMFUL.
OBEY ALL TRANSAXLE OIL MANUFACTURER'S SAFETY INSTRUCTIONS WHEN YOU HANDLE COMPONENTS THAT HAVE TOUCHED TRANSAXLE OIL.

22. Put an applicable container in position under the oil cooler matrix to collect spilled oil.
23. Disconnect the pipes from the oil cooler matrix.

Figure 8

24. Let the oil drain into the container.
25. Install plugs to seal the pipe connections.
26. Remove the container of used oil.
27. Disconnect the breather pipe from the transaxle (refer Figure 9).

Figure 9

28. Install sealing plugs into the open ports.
29. Remove the nut that attaches the right side transaxle mount to the rear subframe.

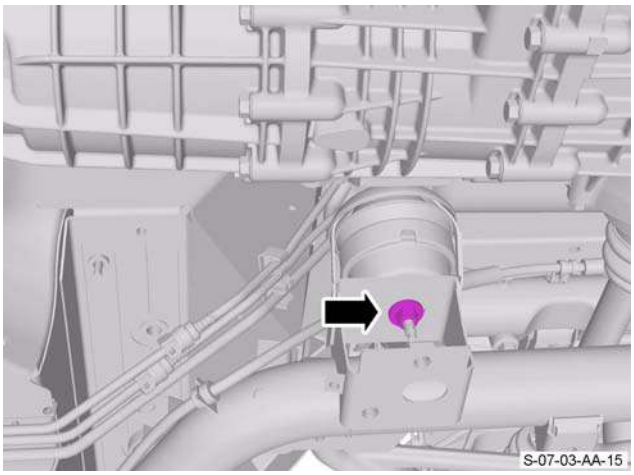

Figure 10

30. Remove the nut that attaches the left side transaxle mount to the rear subframe.

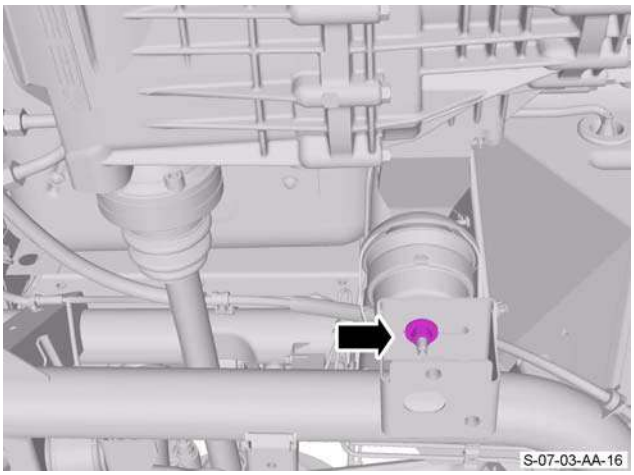

Figure 11

31. Put a transmission jack below the transaxle (refer to Figure 12).

Figure 12

32. Adjust the height of the transmission jack until it holds the transaxle.
33. Remove and discard the four bolts that attach the right side transaxle mount bracket to the transaxle. (see Figure 13).

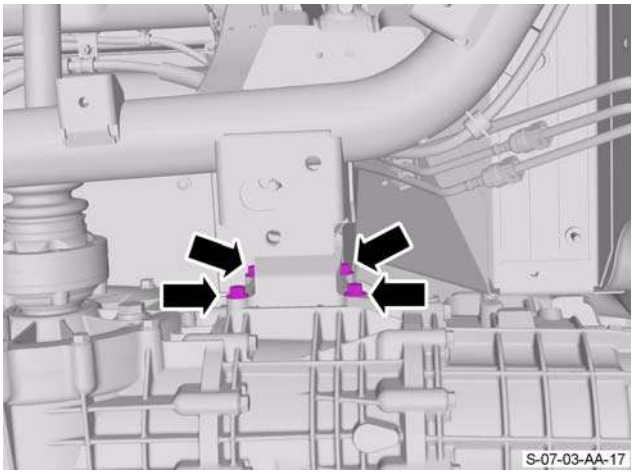

Figure 13

34. Remove and discard the four bolts that attach the left side transaxle mount bracket to the transaxle.

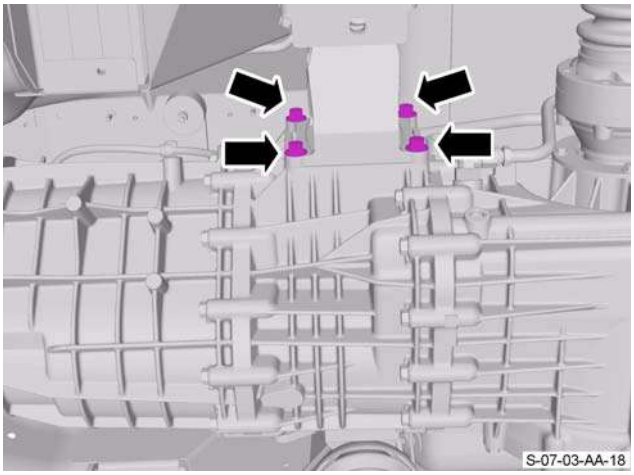

Figure 14

35. Remove the transaxle mount assemblies.

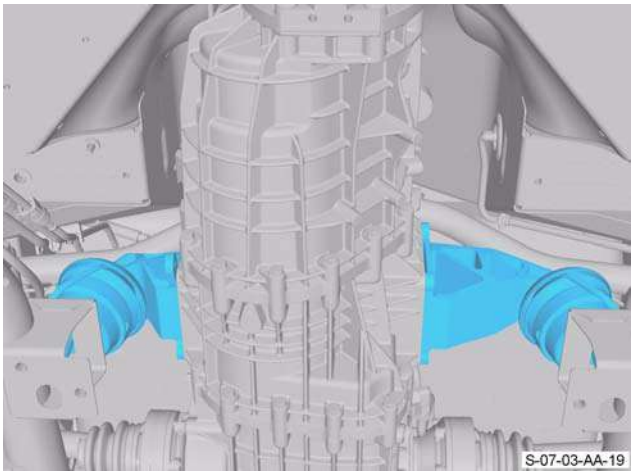

Figure 15

36. Use an applicable strap to attach the transaxle to the transmission jack.
37. Lower the transaxle on the transmission jack by approximately 420 mm.
38. Release the wiring harness for the reverse lamp switch from the clip.
39. Release the electrical connector for the reverse lamp switch from the mount.

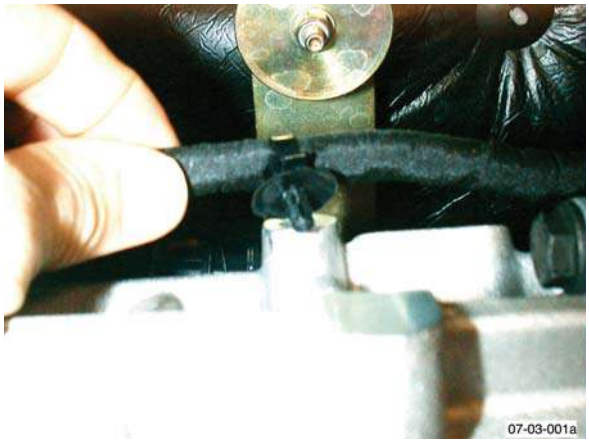

Figure 16

40. Disconnect the electrical connector from the reverse lamp switch.

41. Use the special tool to release the gear selector cables from the ball joints.

Figure 16

42. Release the gear selector cables from the bracket.

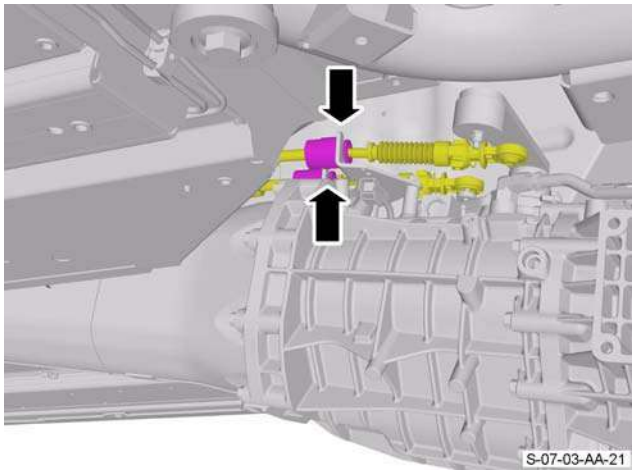

Figure 17

Put a transmission jack in position below the torque tube.

Figure 18

43. Adjust the height of the transmission jack to hold the torque tube.

44. Remove the eight bolts that attach the torque tube to the transaxle.

Figure 19.

WARNING
THE TRANSAXLE ASSEMBLY IS VERY HEAVY. GET THE AID OF ONE MORE PERSON WHEN YOU MOVE THE TRANSAXLE. IF YOU DO NOT, PERSONAL INJURY CAN OCCUR.

45. Move the transaxle rearward to give clearance between the torque tube and the transaxle
46. Carefully lower the transaxle on the transmission jack to remove the transaxle from the vehicle.

Figure 20

47. Clean the mating faces of the components.

Install

1. Move the transaxle on the transmission jack, into position below the vehicle.

WARNING
THE TRANSAXLE ASSEMBLY IS VERY HEAVY. GET THE AID OF ONE MORE PERSON WHEN YOU MOVE THE TRANSAXLE. IF YOU DO NOT, PERSONAL INJURY CAN OCCUR.

2. Use the transmission jack to adjust the height of the transaxle to align the transaxle with the torque tube.
3. Install and torque the eight bolts that attach the torque tube to the transaxle.
4. Lower the transmission jack away from the torque tube.
5. Connect the gear selector cables to the ball joints.
6. Install the gear selector cables into the bracket.

7. Connect the electrical connector to the reverse lamp switch.
8. Install the electrical connector for the reverse lamp switch into the mount.
9. Install the wiring harness for the reverse lamp switch to the clip.
10. Adjust the height of the transmission jack to lift the transaxle into the correct position.
11. Remove the strap from the transaxle and the transmission jack.
12. Install the transaxle mount assemblies.

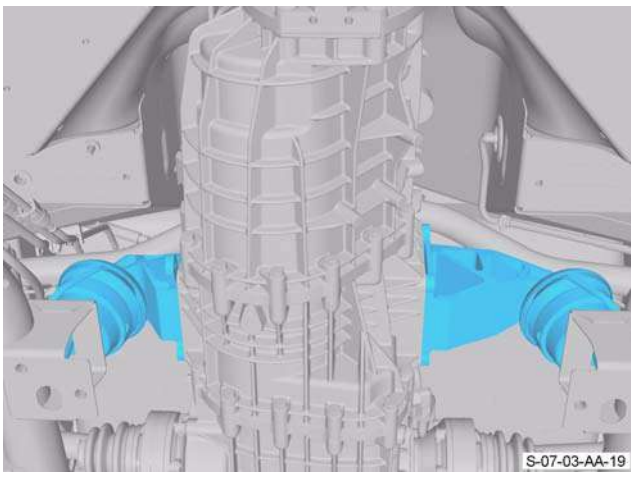

Figure 21

13. Install and torque the four bolts that attach the left side transaxle mount bracket to the transaxle.

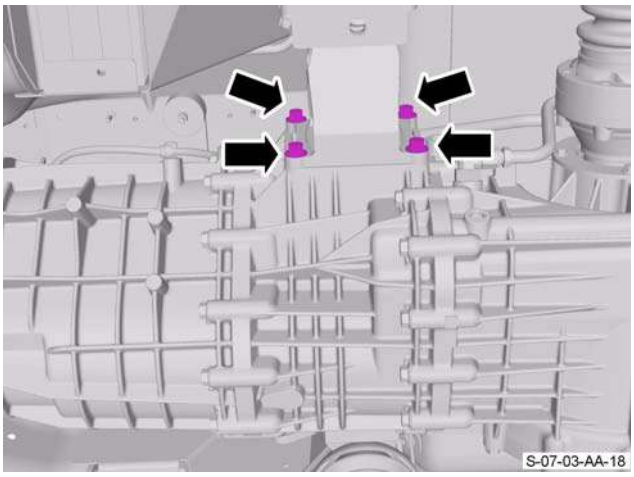

Figure 22

14. Install and torque the four bolts that attach the right side transaxle mount bracket to the transaxle.

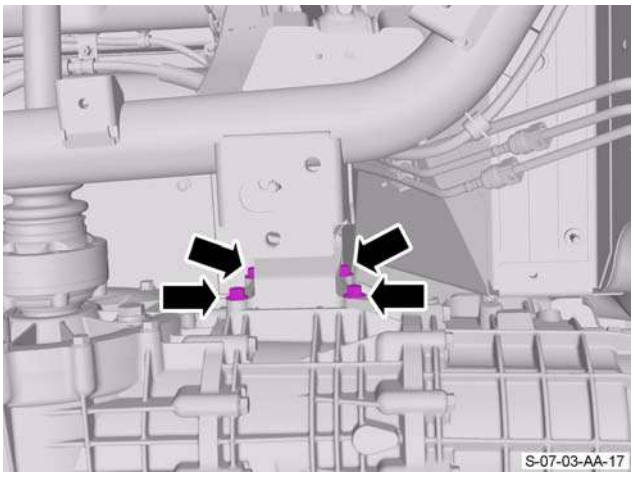

Figure 23

15. Lower the transmission jack to align the transaxle mounts to the rear subframe.
16. Move the transmission jack away from the vehicle.
17. Install and tighten the nut that attaches the left side transaxle mount to the rear subframe.
18. Install and tighten the nut that attaches the right side transaxle mount to the rear subframe.
19. Remove and the sealing plugs from the transaxle and the breather pipe.
20. Connect breather pipe to the transaxle.
21. Remove and discard the sealing plugs from the oil cooler matrix and the pipes.
22. Connect and tighten the pipes to the oil cooler matrix.
23. Put the driveshafts into position on the transaxle shaft flanges. Align the marks on the flanges that you made during removal.

Note: Put the three driveshaft bolt plates in position when you install the bolts in the step that follows.

24. Install and torque the six new bolts that attach the left side driveshaft flange to the transaxle flange. If necessary, turn the driveshaft to get access to all of the bolts.

Note: Put the three driveshaft bolt plates in position when you install the bolts in the step that follows.

25. Install and torque the six new bolts that attach the right side driveshaft flange to the transaxle flange. If necessary, turn the driveshaft to get access to all of the bolts.
26. Put the ground cable into position.
27. Install and tighten the nut that attaches the ground cable to the body.
28. Install the tunnel reinforcement plate.
29. Install and torque the eight bolts that attach the tunnel reinforcement plate to the body.
30. Install floor heatshield.
31. Install and tighten the four bolts that attach the floor heat shield to the body.

32. Install the exhaust front mount.
33. Clean the component mating faces.
34. Apply an applicable sealant to the component mating faces.

WARNING
THE EXHAUST CENTRE PIPE IS HEAVY. GET THE AID OF ONE MORE PERSON TO DO THE STEP THAT FOLLOWS.

35. Install the exhaust centre pipe.
36. Install and tighten the four bolts that attach the exhaust centre pipe to the exhaust front mount.
37. Put the clamps into position on the exhaust pipes.
38. Loosely install the four bolts that attach the exhaust centre pipe to the rear silencer.
39. Align the exhaust assembly.
40. Tighten the two clamps that attach the exhaust centre pipe to the catalytic converters.
41. Install the cross brace.

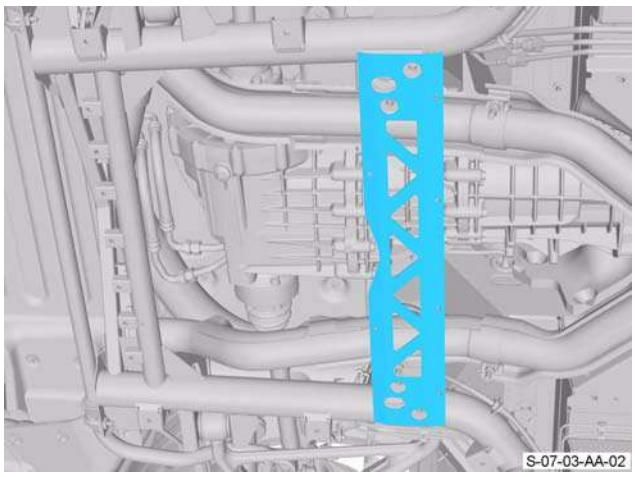

Figure 24

42. Install and torque the four bolts that attach the cross brace to the rear subframe.

Figure 25

43. Remove the strap that attaches the vehicle to the lift.
44. Lower the vehicle until the wheels are 10 mm above the ground.
45. Connect the battery ground cable.
46. Start the engine.
47. Select first gear and let the wheels to turn for 10 seconds.
48. Stop the engine.
49. Lift the vehicle.

WARNING
TRANSAXLE OIL CAN BE HARMFUL.
OBEY ALL TRANSAXLE OIL MANUFACTURER'S SAFETY INSTRUCTIONS WHEN YOU HANDLE COMPONENTS THAT HAVE TOUCHED TRANSAXLE OIL.

50. Remove the fill plug for the transaxle oil.
51. Make sure that the transaxle oil is level with the opening for the transaxle oil. Add more oil if necessary.
52. Install and tighten the fill plug for the transaxle oil.
53. Install the rear undertray (refer to Workshop Manual procedure 01.02.PB - Rear Undertray).

Complete Sportshift Hydraulic Kit-Renew

Repair Operation Time (ROT)	
Item	**Code**
Complete Sportshift Hydraulic Kit-Renew	**07.03.AB**

Removal

1. Disconnect vehicle battery.

WARNING
ALWAYS DISCONNECT THE BATTERY EARTH (- VE) TERMINAL FIRST.

2. Raise vehicle on ramp and secure with straps.

WARNING
WHEN YOU LIFT THE VEHICLE ON A 'TWO POST' LIFT MAKE SURE THAT YOU USE A STRAP TO HOLD THE REAR END OF THE VEHICLE TO THE RAMP. IF YOU DO NOT, THE VEHICLE CAN FALL OFF THE RAMP AND CAUSE PERSONAL INJURY OR DEATH.

Caution
When using a 'two post' vehicle ramp, remove the screws that secure the rear section of the wheel arch liner to body. Hold back the rear section of the wheel arch liner to correctly position the foot of the vehicle lift.

3. Remove road wheel(s).
4. Remove rear exhaust silencer assembly (see Workshop Manual procedure 09.00.KA Muffler & Bypass Valve Assembly - Remove for Access & Refit).
5. **Roadster Only** - Remove centre undertray (see Workshop Manual procedure 01.02.MB Undertray - Centre - Renew).
6. Remove bolts (x4), subframe cross brace.
7. Remove centre exhaust mounting bolts (x4).
8. Loosen clamp nuts (x2), release centre pipe from both catalysts.
9. Remove centre pipe and rear exhaust pipes as an assembly.

10. Remove bolts/washers (x4), tunnel heatshield to body, remove heatshield.
11. Remove bolts (x8), shear plate to body, remove shear plate.
12. Remove bolt securing earth lead to transaxle.
13. Mark drive shaft to differential flanges for assembly purposes.
14. Remove and discard Allen bolts (x12), collect plates (x6), drive shaft flanges to transaxle.
15. Position drain container to collect oil spillage.
16. Loosen unions and disconnect oil cooler pipes (x2) from transaxle interconnecting pipes. Plug pipe connections (x4).

WARNING
TRANSAXLE OIL CAN BE HARMFUL.
OBEY ALL TRANSAXLE OIL MANUFACTURER'S SAFETY INSTRUCTIONS WHEN YOU HANDLE COMPONENTS THAT HAVE TOUCHED TRANSAXLE OIL.

Caution
Plug oil cooler connections to prevent ingress of dirt or moisture into the system.

17. Remove drain container.
18. Disconnect transaxle breather pipe.
19. Release reservoir hose from mounting bracket (Clips x2).
20. Remove bolt from reservoir bracket, release and remove clamp, tie reservoir aside (see Figure 1).

Figure 1

21. Remove nuts (x2), hydramounts to subframe mountings.
22. Position hydraulic lifter to support transaxle.
23. Remove and discard bolts (x8, 4 each side), mounting brackets to transaxle. Remove mounting brackets with hydramounts.
24. Release drive shafts from transaxle and position aside.
25. Lower transaxle sufficiently to access harness to subframe clip, release harness to subframe clip (see Figure 2).

Figure 2

WARNING
THE TRANSAXLE ASSEMBLY IS VERY HEAVY. GET THE AID OF ONE MORE PERSON WHEN YOU MOVE THE TRANSAXLE. IF YOU DO NOT, PERSONAL INJURY CAN OCCUR.

26. Lower transaxle to approx. 420mm from fitted position and retain on hydraulic lifter (see Figure 3).

Figure 3

27. Disconnect pump multiplug (see Figure 4).

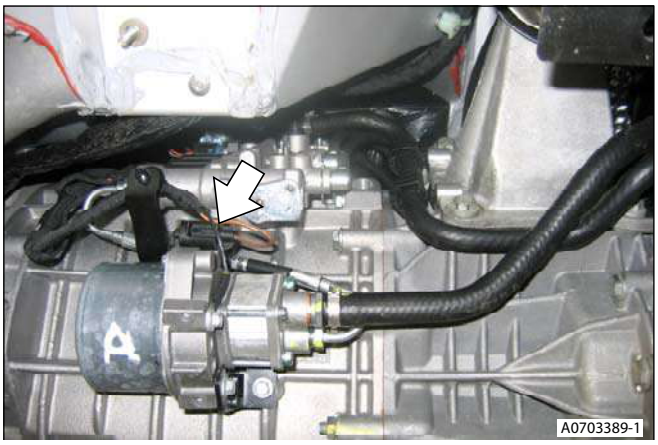

Figure 4

28. Remove ground eye from pump body (bolt x1)(see Figure 5).

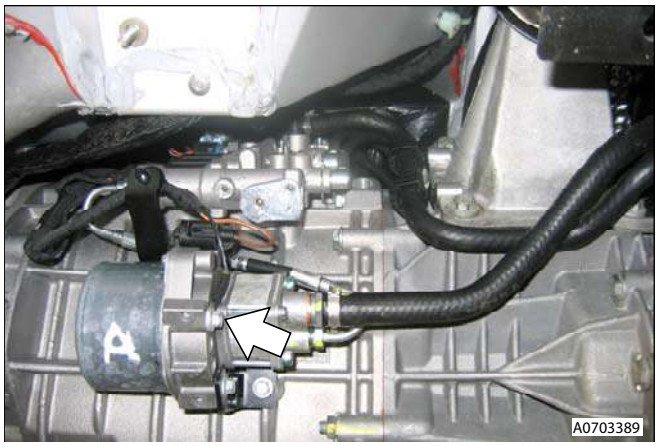

Figure 5

29. Remove pump from transaxle (bolts x2) (see Figure 6).

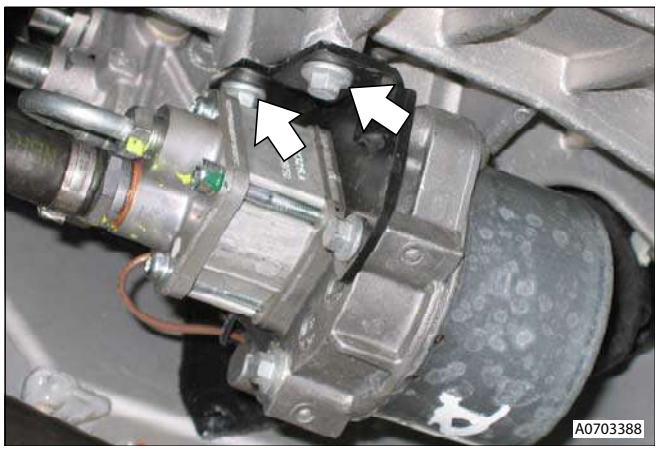

Figure 6

30. Disconnect dry break quick-fit connector from torque tube pipe (see Figure 7).

Figure 7

31. Remove gear position sensor (screws x4).
32. Disconnect gear position sensor from multiplug (see Figure 8).

Figure 8

33. Release harness clip from shifter casing.
34. Remove shifter unit (bolts x6, nut x1) and release from dowels (x2) (see Figure 9).

Figure 9

35. Release hoses from support clips (x3).

36. Mark and disconnect valve-block connectors positions. Disconnect multiplugs (x5) (see Figure 10).

Figure 10

37. Remove bolt valve block to transaxle (see Figure 11).

Figure 11

38. Remove nuts (x3) securing valve block to transaxle and remove Sportshift hydraulic kit (see Figure 12).

Figure 12

Install

1. Install Sportshift hydraulic kit valve block to stud and fit nuts.
2. Install bolt valve block to transaxle.
3. Connect multiplugs (x5) to valve block.
4. Connect dry break quick-fit connector to torque tube pipe.
5. Install pump to transaxle.
6. Install ground eye to pump body.
7. Connect pump multiplug.
8. Clean mating faces and install new shifter unit gasket to dowels.
9. Ensure alignment of selector mechanism with shifter unit and install shifter unit.
10. Install harness clip into shifter casing.
11. Secure hoses to support clip.
12. Connect gear position sensor to multiplug.
13. Install gear position sensor (screws x4).
14. Raise transaxle, install harness clip to subframe.
15. Connect transaxle breather pipe.
16. Raise transaxle to fitted position. Install transaxle mounting brackets and hydramounts, install and torque tighten new bolts (x8).
17. Align hydramounts to subframe, lower lifter, install and torque nuts. Remove lifter.
18. Position reservoir to bracket and fit clamp (bolt x1).
19. Position reservoir hose and secure clips.
20. Remove plugs, connect and torque oil cooler unions.

WARNING
OBSERVE ALL TRANSAXLE OIL MANUFACTURERS SAFETY INSTRUCTIONS WHEN HANDLING COMPONENTS THAT HAVE BEEN IN CONTACT WITH TRANSAXLE OIL.

21. Apply thread lock to new Allen bolts.
22. Align drive shafts to transaxle flanges, clean and install plates (x6), install and torque tighten Allen bolts (x12).

New Allen bolts should have a thread lock coating.

23. Position earth lead to transaxle, install and torque tighten bolt.
24. Install shear plate, install bolts (x8), tighten bolts to correct torque.
25. Install tunnel heatshield, install bolts/washers (x4), tighten bolts to correct torque.
26. Install centre and rear exhaust pipe assembly, align to both catalysts. tighten clamp nuts to correct torque.
27. Install bolts (x4) into centre mounting.
28. Install subframe cross brace, install bolts (x4) and torque.
29. Install rear exhaust silencer assembly (see Workshop Manual procedure 09.00.KA Muffler & Bypass Valve Assembly - Remove for Access & Refit).
30. **Roadster Only** - Install centre undertray (see Workshop Manual procedure 01.02.MB Undertray - Centre - Renew).
31. Install road wheel(s).
32. Lower vehicle on ramp, remove securing straps.

33. Connect vehicle battery.

WARNING
ALWAYS CONNECT THE BATTERY EARTH (+VE) TERMINAL FIRST.

34. Bleed clutch (see Workshop Manual procedure 08.00.AE Clutch Hydraulic System - Sportshift - Bleed).
35. Test drive vehicle.
36. Raise vehicle on ramp; check transaxle and Sportshift fluid.

WARNING
TRANSAXLE OIL CAN BE HARMFUL.
OBEY ALL TRANSAXLE OIL MANUFACTURER'S SAFETY INSTRUCTIONS WHEN YOU HANDLE COMPONENTS THAT HAVE TOUCHED TRANSAXLE OIL.

Complete Shifter Assembly-Renew-Roadster Only

Repair Operation Time (ROT)	
Item	**Code**
Complete Shifter Assembly-Renew	**07.03.AC**

Removal

1. Disconnect vehicle battery.

WARNING
ALWAYS DISCONNECT THE BATTERY EARTH (- VE) TERMINAL FIRST.

2. Remove Gear position sensor (see Workshop Manual procedure 07.03.AL Sensor - Transmission Assembly - Sportshift - Renew).
3. Release harness clip from shifter casing.
4. Remove and discard clips (x2) securing hoses into shifter assembly and disconnect hoses (see Figure 1).

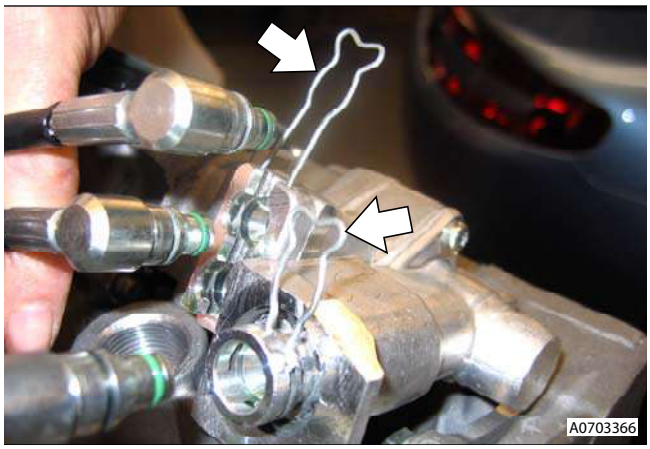

Figure 1

WARNING
TRANSAXLE OIL CAN BE HARMFUL.
OBEY ALL TRANSAXLE OIL MANUFACTURER'S SAFETY INSTRUCTIONS WHEN YOU HANDLE COMPONENTS THAT HAVE TOUCHED TRANSAXLE OIL.

5. Remove shifter unit (bolts x6, nut x1) and release from dowels (x2) (see Figure 2).

Figure 2

6. Remove and discard gasket (see Figure 3).

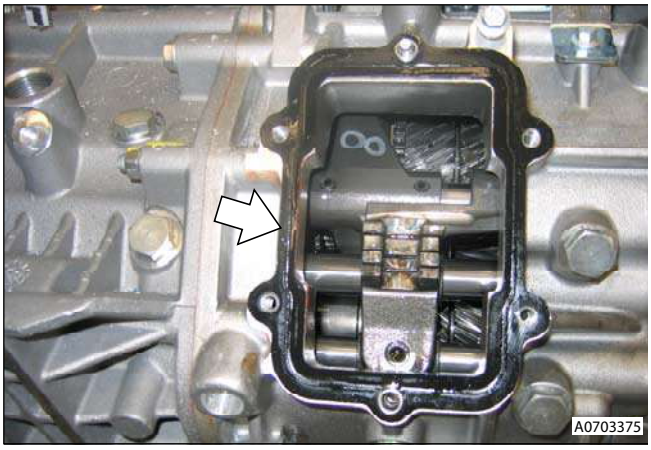

Figure 3

7. Remove and discard hose O-rings (x3).

Install

1. Install new O-rings to hoses.
2. Clean mating faces and install new gasket to dowels.
3. Ensure alignment of selector mechanism with shifter unit and install shifter unit.
4. Install hoses into shifter unit and install clips.
5. Install harness clip into shifter casing.
6. Install Gear position sensor (see Workshop Manual procedure 07.03.AL Sensor - Transmission Assembly - Sportshift - Renew).
7. Connect vehicle battery.

WARNING
ALWAYS CONNECT THE BATTERY EARTH (+VE) TERMINAL FIRST.

8. Test drive vehicle.
9. Raise vehicle on ramp; Check transaxle and Sportshift fluid.
10. Lower vehicle on ramp.

Reservoir Tank Assembly-Renew-Roadster Only

Repair Operation Time (ROT)	
Item	**Code**
Reservoir Tank Assembly-Renew	**07.03.AD**

Removal

1. Disconnect vehicle battery.

WARNING
ALWAYS DISCONNECT THE BATTERY EARTH (- VE) TERMINAL FIRST.

2. Raise vehicle on ramp.
3. Remove rear undertray (see Workshop Manual procedure 01.02.PB Undertray - Rear - Renew).
4. Remove clips and release reservoir hoses from valve unit and pump (place drain tray to collect fluid) (see Figure 1).

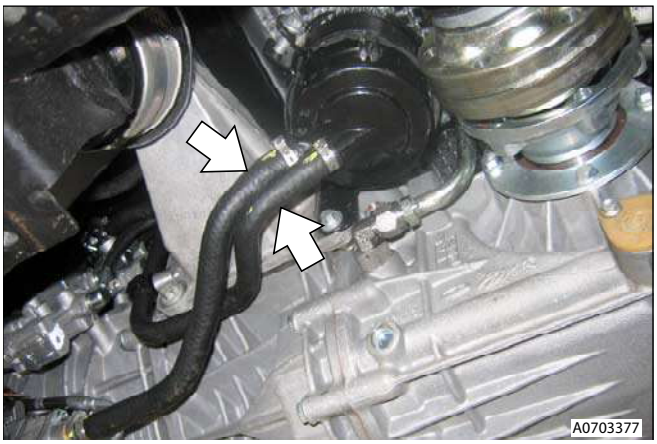

Figure 1

WARNING
TRANSAXLE OIL CAN BE HARMFUL.
OBEY ALL TRANSAXLE OIL MANUFACTURER'S SAFETY INSTRUCTIONS WHEN YOU HANDLE COMPONENTS THAT HAVE TOUCHED TRANSAXLE OIL.

5. Release reservoir hoses from transaxle mounting clips (x2) (see Figure 2).

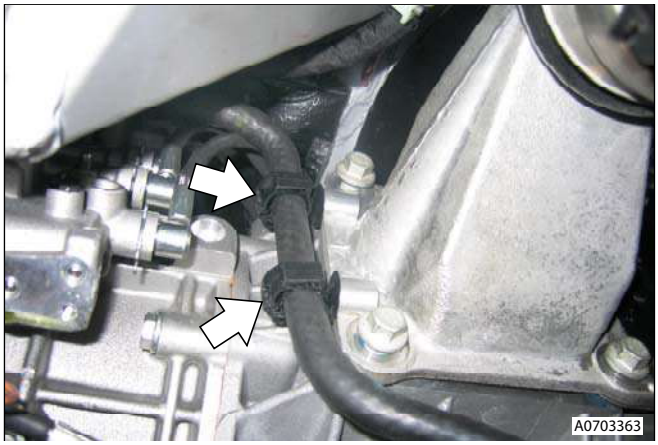

Figure 2

6. Remove bolt, separate bracket clamp and remove reservoir (see Figure 3).

Figure 3

Install

1. Install reservoir and clamp to bracket.
2. Install reservoir hoses to valve unit and pump then install new clips (remove drain tray) (see Figure 1).

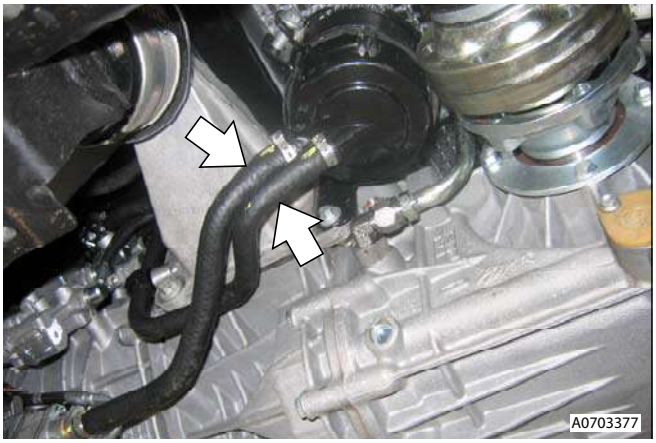

Figure 1

3. Install reservoir hoses to clips.
4. Top-up reservoir.
5. Connect vehicle battery.

WARNING
ALWAYS CONNECT THE BATTERY EARTH (+VE) TERMINAL FIRST.

6. Lower vehicle, turn ignition ON for 20 seconds to activate gearbox pump. Turn ignition OFF and raise vehicle.
7. Top-up reservoir.
8. Install rear undertray (see Workshop Manual procedure 01.02.PB Undertray - Rear - Renew).
9. Lower vehicle on ramp.

Pump Inlet/Valve Body Bleed/Reservoir Tank Hoses-Renew-Roadster Only

Repair Operation Time (ROT)	
Item	**Code**
Pump Inlet/Valve Body Bleed/Reservoir Tank Hoses-Renew	**07.03.AF**

Removal

1. Disconnect vehicle battery.

WARNING
ALWAYS DISCONNECT THE BATTERY EARTH (- VE) TERMINAL FIRST.

2. Raise vehicle on ramp.
3. Remove rear undertray (see Workshop Manual procedure 01.02.PB Undertray - Rear - Renew).
4. Remove clips and release reservoir hoses from valve unit and pump (place drain tray to collect fluid) (see Figure 1).

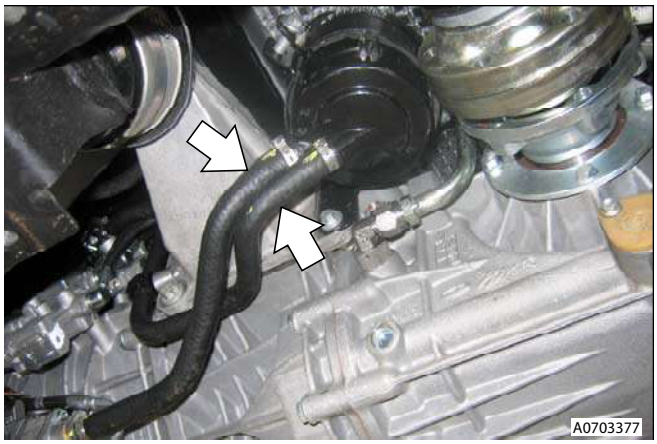

Figure 1

WARNING
TRANSAXLE OIL CAN BE HARMFUL.
OBEY ALL TRANSAXLE OIL MANUFACTURER'S SAFETY INSTRUCTIONS WHEN YOU HANDLE COMPONENTS THAT HAVE TOUCHED TRANSAXLE OIL.

5. Release reservoir hoses from transaxle mounting clips (x2) (see Figure 2).

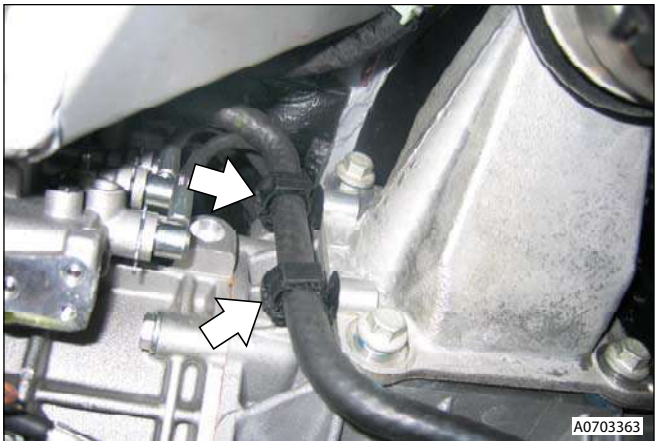

Figure 2

6. Remove clips and release hoses from reservoir (see Figure 3).

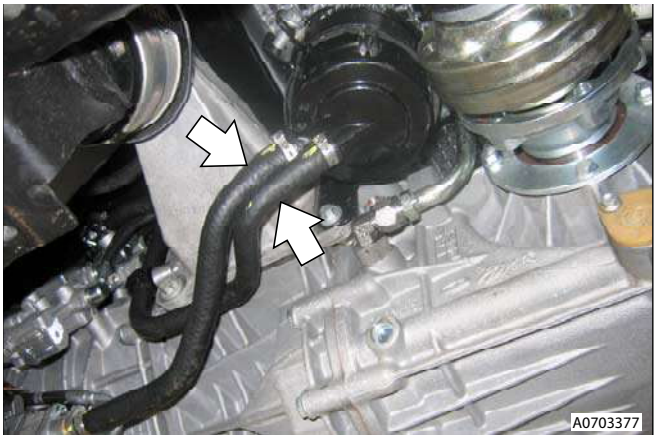

Figure 3

Install

1. Install hoses to reservoir and fit new clips.
2. Install reservoir hoses to valve unit and pump. Fit new clips (remove drain tray).
3. Install reservoir hoses to clips.
4. Top-up reservoir.
5. Connect vehicle battery.

WARNING
ALWAYS CONNECT THE BATTERY EARTH (+VE) TERMINAL FIRST.

6. Lower vehicle, turn ignition ON for 20 seconds to activate gearbox pump. Turn ignition OFF and raise vehicle.
7. Top-up reservoir.
8. Install rear undertray (see Workshop Manual procedure 01.02.PB Undertray - Rear - Renew).
9. Lower vehicle on ramp.

Hydraulic Pump Assembly-Renew-Sportshift Only

Repair Operation Time (ROT)	
Item	**Code**
Hydraulic Pump Assembly-Renew	**07.03.AG**

Removal

1. Raise vehicle on ramp.
2. Disconnect vehicle battery.

WARNING
ALWAYS DISCONNECT THE BATTERY EARTH (- VE) TERMINAL FIRST.

3. Remove rear undertray (see Workshop Manual procedure 01.02.PB Undertray - Rear - Renew).
4. Disconnect pump multiplug (see Figure 1).

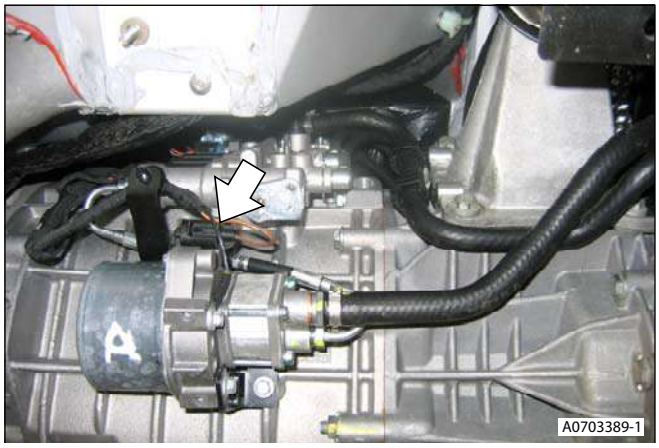

Figure 1

5. Remove ground eye from pump body (bolt x1) (see Figure 2).

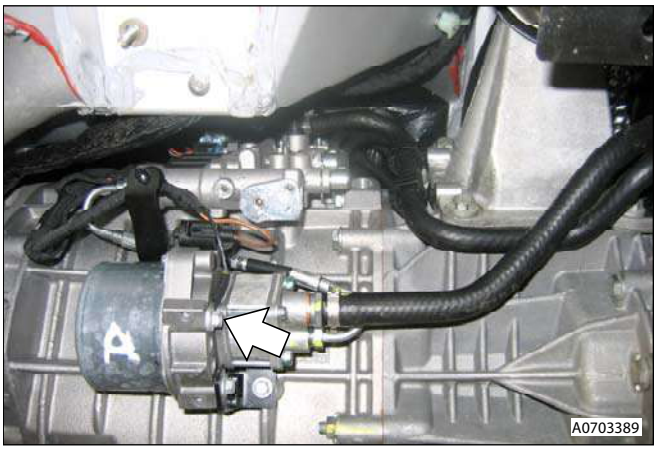

Figure 2

6. Clamp reservoir hose.

7. Remove clip and release from pump (place drain tray to collect fluid) (see Figure 3).

WARNING
TRANSAXLE OIL CAN BE HARMFUL.
OBEY ALL TRANSAXLE OIL MANUFACTURER'S SAFETY INSTRUCTIONS WHEN YOU HANDLE COMPONENTS THAT HAVE TOUCHED TRANSAXLE OIL.

8. Remove HP hose from pump.
9. Remove and discard O-ring from hose.
10. Remove pump from transaxle (bolts x2).

Install

1. Install pump to transaxle.
2. Install new O-ring to HP hose. Install hose to pump.
3. Install reservoir hose to pump then install new clip (remove drain tray).
4. Connect pump multiplug.
5. Install ground eye to pump body.
6. Top-up reservoir.
7. Connect vehicle battery.

WARNING
ALWAYS CONNECT THE BATTERY EARTH (+VE) TERMINAL FIRST.

8. Lower vehicle, turn ignition ON for 20 seconds to activate gearbox pump. Turn ignition OFF and raise vehicle.
9. Top-up reservoir.
10. Install rear undertray (see Workshop Manual procedure 01.02.PB Undertray - Rear - Renew).
11. Lower vehicle on ramp.

HP Hose Kit-Renew-Roadster Only

Repair Operation Time (ROT)	
Item	**Code**
HP Hose Kit-Renew-Roadster Only	07.03.AH

Removal

1. Disconnect vehicle battery.

WARNING
ALWAYS DISCONNECT THE BATTERY EARTH (- VE) TERMINAL FIRST.

2. Raise vehicle on ramp and secure with straps.

WARNING
WHEN YOU LIFT THE VEHICLE ON A 'TWO POST' LIFT MAKE SURE THAT YOU USE A STRAP TO HOLD THE REAR END OF THE VEHICLE TO THE RAMP. IF YOU DO NOT, THE VEHICLE CAN FALL OFF THE RAMP AND CAUSE PERSONAL INJURY OR DEATH.

3. Remove road wheel(s).
4. Remove rear exhaust silencer assembly (see Workshop Manual procedure 09.00.KA Muffler & Bypass Valve Assembly - Remove for Access & Refit).
5. Remove centre undertray (see Workshop Manual procedure 01.02.MB Undertray - Centre - Renew).
6. Remove bolts (x4) and subframe cross brace.
7. Remove centre exhaust mounting bolts (x4) (see Figure 1).

Figure 1

8. Loosen clamp nuts (x2), release centre pipe from both catalysts.
9. Remove centre pipe and rear exhaust pipes as an assembly.
10. Remove bolts/washers (x4), tunnel heatshield to body, remove heatshield.
11. Remove bolts (x8), shear plate to body, remove shear plate.
12. Remove bolt securing earth lead to transaxle.
13. Mark drive shaft to differential flanges for assembly purposes.
14. Remove and discard Allen bolts (x12), collect plates (x6), drive shaft flanges to transaxle.

15. Position drain container to collect oil spillage.
16. Loosen unions and disconnect oil cooler pipes (x2) from transaxle interconnecting pipes and plug pipe connections (x4).

WARNING
TRANSAXLE OIL CAN BE HARMFUL.
OBEY ALL TRANSAXLE OIL MANUFACTURER'S SAFETY INSTRUCTIONS WHEN YOU HANDLE COMPONENTS THAT HAVE TOUCHED TRANSAXLE OIL.

Caution
Plug oil cooler connections to prevent ingress of dirt or moisture into the system.

17. Remove drain container.
18. Disconnect transaxle breather pipe.
19. Release reservoir hose from mounting bracket (clips x2) (see Figure 2).

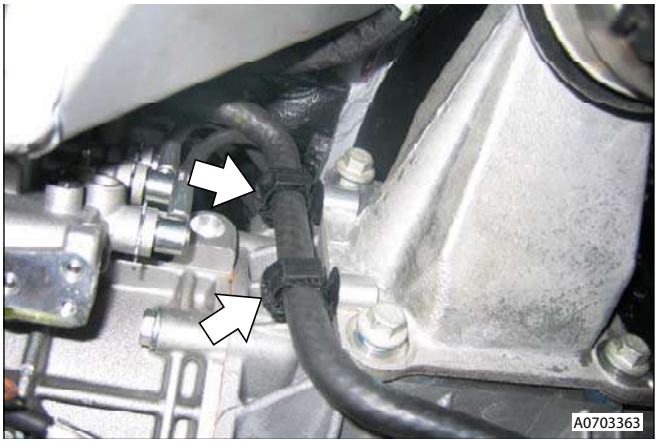

Figure 2

20. Remove bolt from reservoir bracket, release and remove clamp, tie reservoir aside (see Figure 3).

Figure 3

21. Remove nuts (x2) from hydramounts to subframe mountings.
22. Position hydraulic lifter to support transaxle.
23. Remove and discard bolts (x8, 4 each side), mounting brackets to transaxle.
24. Remove mounting brackets with hydramounts.
25. Release drive shafts from transaxle and position aside.
26. Lower transaxle sufficiently to access harness to subframe clip, release harness to subframe clip (see Figure 4).

Figure 4

WARNING
THE TRANSAXLE ASSEMBLY IS VERY HEAVY. TO AVOID PERSONAL INJURY OR DAMAGE TO THE TRANSAXLE, HANDLING OF THE TRANSAXLE ASSEMBLY IS A TWO PERSON OPERATION.

27. Lower transaxle to approx. 420mm from fitted position and retain on hydraulic lifter (see Figure 5).

Figure 5

28. Remove and discard clips (x2) securing hoses into shifter assembly and disconnect hoses (see Figure 6).

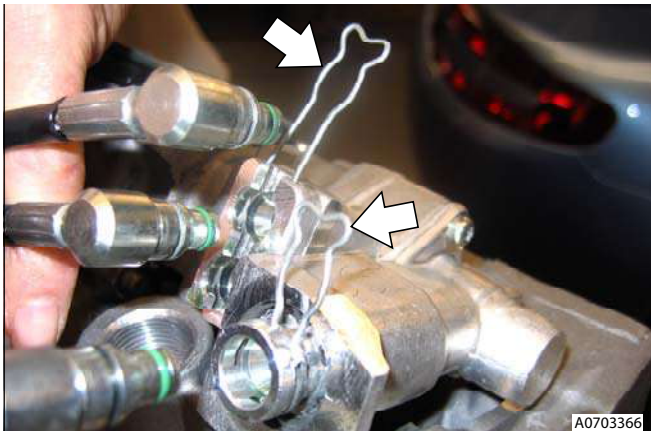

Figure 6

WARNING
TRANSAXLE OIL CAN BE HARMFUL.
OBEY ALL TRANSAXLE OIL MANUFACTURER'S SAFETY INSTRUCTIONS WHEN YOU HANDLE COMPONENTS THAT HAVE TOUCHED TRANSAXLE OIL.

29. Remove and discard clips (x3) securing hoses into valve block and disconnect hoses (see Figure 7).

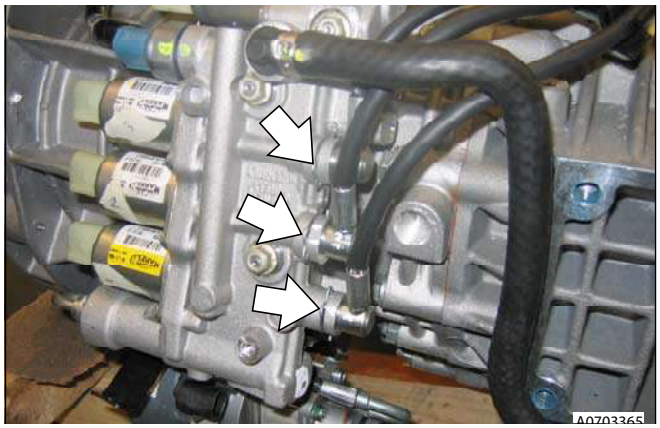

Figure 7

30. Release hoses from support clips (x3) (see Figure 8).

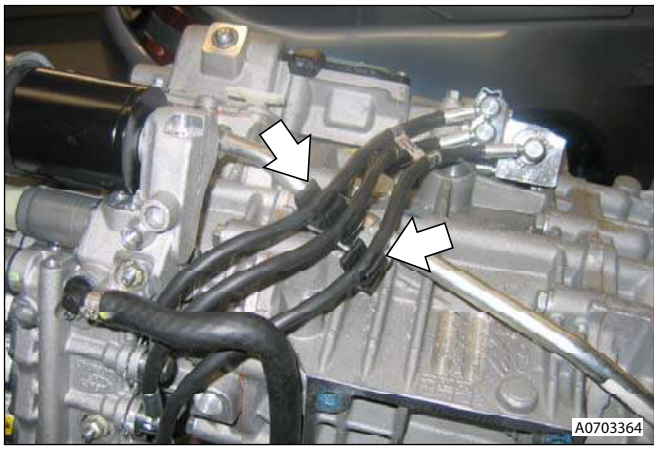

Figure 8

Install

1. Install hoses to support clips.
2. Install hoses into shifter unit and install clips.
3. Install hoses to valve block and install new clips.
4. Raise transaxle, install harness clip to subframe.
5. Connect transaxle breather pipe.
6. Raise transaxle to fitted position.
7. Install transaxle mounting brackets and hydramounts, install and torque tighten new bolts (x8).
8. Align hydramounts to subframe, lower lifter, install and torque nuts. Remove lifter.
9. Position reservoir to bracket and fit clamp (bolt x1).
10. Position reservoir hose and secure clips.
11. Remove plugs, connect and torque oil cooler unions.
12. Apply thread lock to new Allen bolts.
13. Align drive shafts to transaxle flanges, clean and install plates (x6), install and torque tighten Allen bolts (x12).
14. Position earth lead to transaxle, install and torque tighten bolt.
15. Install shear plate, install bolts (x8), tighten bolts to correct torque.
16. Install tunnel heatshield, install bolts/washers (x4), tighten bolts to correct torque.
17. Install centre and rear exhaust pipe assembly, align to both catalysts. tighten clamp nuts to correct torque.
18. Install bolts (x4) into centre mounting.
19. Install subframe cross brace, install bolts (x4) and torque.
20. Install rear exhaust silencer assembly (see Workshop Manual procedure 09.00.KA Muffler & Bypass Valve Assembly - Remove for Access & Refit).
21. Install centre undertray (see Workshop Manual procedure 01.02.MB Undertray - Centre - Renew).
22. Install road wheel(s).
23. Lower vehicle on ramp, remove securing straps.
24. Connect vehicle battery.

WARNING
ALWAYS CONNECT THE BATTERY EARTH (+VE) TERMINAL FIRST.

25. Test drive vehicle.
26. Raise vehicle on ramp; check transaxle and Sportshift fluid.
27. Lower vehicle on ramp.

Dry Break Connector-Renew-Roadster Only

Repair Operation Time (ROT)	
Item	**Code**
Dry Break Connector-Renew	07.03.AJ

Removal

1. Disconnect vehicle battery.

WARNING
ALWAYS DISCONNECT THE BATTERY EARTH (- VE) TERMINAL FIRST.

2. Raise vehicle on ramp and secure with straps.

WARNING
WHEN YOU LIFT THE VEHICLE ON A 'TWO POST' LIFT MAKE SURE THAT YOU USE A STRAP TO HOLD THE REAR END OF THE VEHICLE TO THE RAMP. IF YOU DO NOT, THE VEHICLE CAN FALL OFF THE RAMP AND CAUSE PERSONAL INJURY OR DEATH.

3. Remove road wheel(s).
4. Remove rear exhaust silencer assembly (see Workshop Manual procedure 09.00.KA Muffler & Bypass Valve Assembly - Remove for Access & Refit).
5. Remove centre undertray (see Workshop Manual procedure 01.02.MB Undertray - Centre - Renew).
6. Remove bolts (x4), subframe cross brace.
7. Remove centre exhaust mounting bolts (x4) (see Figure 1).

Figure 1

8. Loosen clamp nuts (x2), release centre pipe from both catalysts.
9. Remove centre pipe and rear exhaust pipes as an assembly.
10. Remove bolts/washers (x4), tunnel heatshield to body, remove heatshield.
11. Remove bolts (x8), shear plate to body, remove shear plate.
12. Remove bolt securing earth lead to transaxle.
13. Mark drive shaft to differential flanges for assembly purposes.
14. Remove and discard Allen bolts (x12), collect plates (x6), drive shaft flanges to transaxle.
15. Position drain container to collect oil spillage.
16. Loosen unions and disconnect oil cooler pipes (x2) from transaxle interconnecting pipes and plug pipe connections (x4).

WARNING
OBSERVE ALL OIL/FLUID MANUFACTURERS SAFETY INSTRUCTIONS WHEN HANDLING COMPONENTS THAT HAVE BEEN IN CONTACT WITH TRANSAXLE OIL.

Caution
Plug oil cooler connections to prevent ingress of dirt or moisture into the system.

17. Remove drain container.
18. Disconnect transaxle breather pipe.
19. Release reservoir hose from mounting bracket (Clips x2) (see Figure 2).

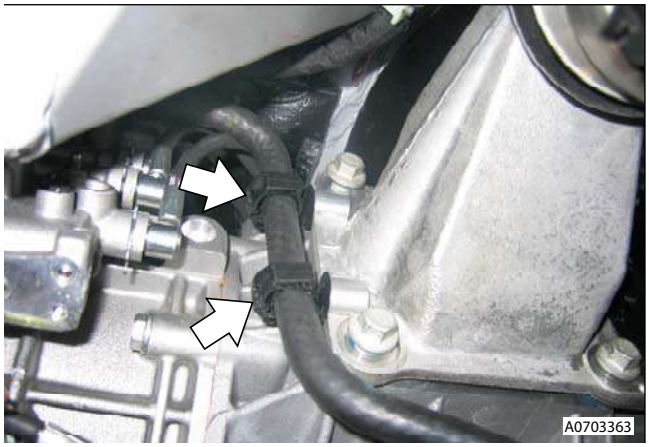

Figure 2

20. Remove bolt from reservoir bracket, release and remove clamp, tie reservoir aside (see Figure 3).

Figure 3

21. Remove nuts (x2), hydramounts to subframe mountings.
22. Position hydraulic lifter to support transaxle.

23. Remove and discard bolts (x8, 4 each side), mounting brackets to transaxle. Remove mounting brackets with hydramounts.
24. Release drive shafts from transaxle and position aside.
25. Lower transaxle sufficiently to access harness to subframe clip, release harness to subframe clip (see Figure 4).

Figure 4

WARNING
THE TRANSAXLE ASSEMBLY IS VERY HEAVY. GET THE AID OF ONE MORE PERSON WHEN YOU MOVE THE TRANSAXLE. IF YOU DO NOT, PERSONAL INJURY CAN OCCUR.

26. Lower transaxle to approx. 420mm from fitted position and retain on hydraulic lifter (see Figure 5).

Figure 5

27. Disconnect dry break quick-fit connector from torque tube pipe (see Figure 6).

Figure 6

28. Remove retaining clip from valve unit and disconnect hose.
29. Remove hose from under valve unit (see Figure 7).

Figure 7

Install

1. Install hose under valve unit.
2. Connect hose to valve unit and install retaining clip.
3. Connect dry break quick-fit connector to torque tube pipe.
4. Raise transaxle, install harness clip to subframe.
5. Connect transaxle breather pipe.
6. Raise transaxle to fitted position.
7. Install transaxle mounting brackets and hydramounts, install and torque tighten new bolts (x8).
8. Align hydramounts to subframe, lower lifter, install and torque nuts and remove lifter.
9. Position reservoir to bracket and fit clamp (bolt x1).
10. Position reservoir hose and secure clips.
11. Remove plugs, connect and torque oil cooler unions.
12. Apply thread lock to new Allen bolts.
13. Align drive shafts to transaxle flanges, clean and install plates (x6), install and torque tighten Allen bolts (x12).

14. Position earth lead to transaxle, install and torque tighten bolt.
15. Install shear plate, install bolts (x8), tighten bolts to correct torque.
16. Install tunnel heatshield, install bolts/washers (x4), tighten bolts to correct torque.
17. Install centre and rear exhaust pipe assembly, align to both catalysts. tighten clamp nuts to correct torque.
18. Install bolts (x4) into centre mounting.
19. Install subframe cross brace, install bolts (x4) and torque.
20. Install rear exhaust silencer assembly (see Workshop Manual procedure 09.00.KA Muffler & Bypass Valve Assembly - Remove for Access & Refit).
21. Install centre undertray (see Workshop Manual procedure 01.02.MB Undertray - Centre - Renew).
22. Install road wheel(s).
23. Lower vehicle on ramp, remove securing straps.
24. Connect vehicle battery.

WARNING
ALWAYS CONNECT THE BATTERY EARTH (+VE) TERMINAL FIRST.

25. Bleed clutch system (see Workshop Manual procedure 08.00.AE Clutch Hydraulic System - Sportshift - Bleed).
26. Test drive vehicle.

Clutch Position Sensor-Renew-Roadster/ Sportshift Only

Repair Operation Time (ROT)	
Item	**Code**
Clutch Position Sensor-Renew	**07.03.AK**

Removal

1. Disconnect vehicle battery.

WARNING
ALWAYS DISCONNECT THE BATTERY EARTH (- VE) TERMINAL FIRST.

2. Raise vehicle on ramp.

WARNING
WHEN YOU LIFT THE VEHICLE ON A 'TWO POST' LIFT MAKE SURE THAT YOU USE A STRAP TO HOLD THE REAR END OF THE VEHICLE TO THE RAMP. IF YOU DO NOT, THE VEHICLE CAN FALL OFF THE RAMP AND CAUSE PERSONAL INJURY OR DEATH.

3. Remove torque tube (see Workshop Manual procedure 05.01.CA Torque Tube - Remove for Access & Refit).
4. Remove grommet sealing clutch position sensor harness to torque tube.
5. Disconnect multiplug between clutch position sensor and transmission harness (see Figure 1).

Figure 1

6. Release clip securing clutch position sensor harness to top of torque tube.
7. Release clips (x2) securing clutch position sensor harness to side of torque tube (see Figure 2).

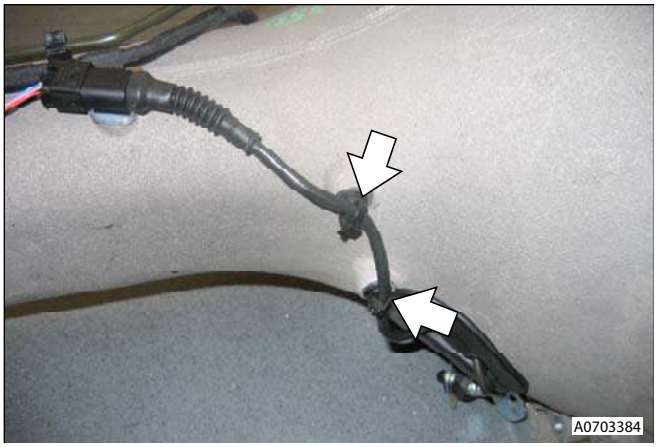

Figure 2

8. Remove bolts (x2) securing clutch position sensor to slave cylinder and remove sensor.

Install

1. Secure clutch position sensor to slave cylinder using bolts.
2. Install clutch position sensor harness to side of torque tube and secure with clips.
3. Secure clutch position sensor harness to top of torque tube using clip.
4. Connect multiplug between clutch position sensor and transmission harness.
5. Install grommet sealing clutch position sensor harness to torque tube.
6. Install torque tube (see Workshop Manual procedure 05.01.CA Torque Tube - Remove for Access & Refit).
7. Lower vehicle on ramp.

8. Connect vehicle battery.

WARNING
ALWAYS CONNECT THE BATTERY EARTH (+VE) TERMINAL FIRST.

Transmission Sensor Assembly-Renew-Sportshift Only

Repair Operation Time (ROT)	
Item	**Code**
Transmission Sensor Assembly-Renew	**07.03.AL**

Removal

1. Disconnect vehicle battery.

WARNING
ALWAYS DISCONNECT THE BATTERY EARTH (- VE) TERMINAL FIRST.

2. Raise vehicle on ramp and secure with straps.

WARNING
WHEN YOU LIFT THE VEHICLE ON A 'TWO POST' LIFT MAKE SURE THAT YOU USE A STRAP TO HOLD THE REAR END OF THE VEHICLE TO THE RAMP. IF YOU DO NOT, THE VEHICLE CAN FALL OFF THE RAMP AND CAUSE PERSONAL INJURY OR DEATH.

3. Remove road wheel(s).
4. Remove rear exhaust silencer assembly (see Workshop Manual procedure 09.00.KA Muffler & Bypass Valve Assembly - Remove for Access & Refit).
5. **Roadster Only** - Remove centre undertray (see Workshop Manual procedure 01.02.MB Undertray - Centre - Renew).
6. Remove bolts (x4), subframe cross brace.
7. Remove centre exhaust mounting bolts (x4) (see Figure 1).

Figure 1

8. Loosen clamp nuts (x2), release centre pipe from both catalysts.
9. Remove centre pipe and rear exhaust pipes as an assembly.
10. Remove bolts/washers (x4), tunnel heatshield to body, remove heatshield.
11. Remove bolts (x8), shear plate to body, remove shear plate.
12. Remove bolt securing earth lead to transaxle.
13. Mark drive shaft to differential flanges for assembly purposes.
14. Remove and discard Allen bolts (x12), collect plates (x6), drive shaft flanges to transaxle.
15. Position drain container to collect oil spillage.
16. Loosen unions and disconnect oil cooler pipes (x2) from transaxle interconnecting pipes. Plug pipe connections (x4).

WARNING
OBSERVE ALL OIL/FLUID MANUFACTURERS SAFETY INSTRUCTIONS WHEN HANDLING COMPONENTS THAT HAVE BEEN IN CONTACT WITH TRANSAXLE OIL.

Caution
Plug oil cooler connections to prevent ingress of dirt or moisture into the system.

17. Remove drain container.
18. Disconnect transaxle breather pipe.
19. Release reservoir hose from mounting bracket (clips x2 (see Figure 2).

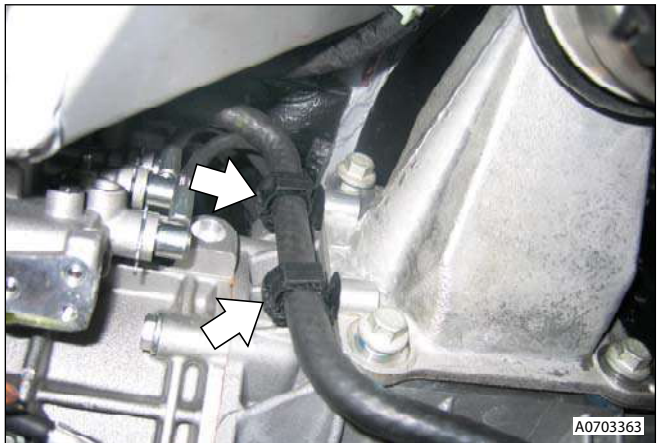

Figure 2

20. Remove bolt from reservoir bracket, release and remove clamp, tie reservoir aside (see Figure 3).

Figure 3

21. Remove nuts (x2), hydramounts to subframe mountings.
22. Position hydraulic lifter to support transaxle.
23. Remove and discard bolts (x8, 4 each side), mounting brackets to transaxle. Remove mounting brackets with hydramounts.
24. Release drive shafts from transaxle and position aside.
25. Lower transaxle sufficiently to access harness to subframe clip, release harness to subframe clip (see Figure 4).

Figure 4

WARNING
THE TRANSAXLE ASSEMBLY IS VERY HEAVY. GET THE AID OF ONE MORE PERSON WHEN YOU MOVE THE TRANSAXLE. IF YOU DO NOT, PERSONAL INJURY CAN OCCUR.

26. Lower transaxle to approx. 420mm from fitted position and retain on hydraulic lifter (see Figure 5).

Figure 5

27. Remove gear position sensor (screws x4).
28. Disconnect gear position sensor from multiplug (see Figure 6).

Figure 6

Install

1. Connect gear position sensor to multiplug.
2. Install gear position sensor (screws x4).
3. Raise transaxle, install harness clip to subframe.
4. Connect transaxle breather pipe.
5. Raise transaxle to fitted position. Install transaxle mounting brackets and hydramounts, install and torque tighten new bolts (x8).
6. Align hydramounts to subframe, lower lifter, install and torque nuts. Remove lifter.
7. Position reservoir to bracket and fit clamp (bolt x1).
8. Position reservoir hose and secure clips.
9. Remove plugs, connect and torque oil cooler unions.
10. Apply thread lock to new Allen bolts.
11. Align drive shafts to transaxle flanges, clean and install plates (x6), install and torque tighten Allen bolts (x12).
12. Position earth lead to transaxle, install and torque tighten bolt.
13. Install shear plate, install bolts (x8), tighten bolts to correct torque.
14. Install tunnel heatshield, install bolts/washers (x4), tighten bolts to correct torque.
15. Install centre and rear exhaust pipe assembly, align to both catalysts. tighten clamp nuts to correct torque.
16. Install bolts (x4) into centre mounting.
17. Install subframe cross brace, install bolts (x4) and torque.
18. Install rear exhaust silencer assembly (see Workshop Manual procedure 09.00.KA Muffler & Bypass Valve Assembly - Remove for Access & Refit).
19. **Roadster Only -** Install centre undertray (see Workshop Manual procedure 01.02.MB Undertray - Centre - Renew).
20. Install road wheel(s).
21. Lower vehicle on ramp, remove securing straps.

22. Connect vehicle battery.

WARNING
ALWAYS CONNECT THE BATTERY EARTH (+VE) TERMINAL FIRST.

23. Test drive vehicle.

Transmission Valve Block-Renew

Repair Operation Time (ROT)	
Item	**Code**
Transmission Valve Block-Renew	**07.03.AM**

Removal

1. Disconnect vehicle battery.

WARNING
ALWAYS DISCONNECT THE BATTERY EARTH (- VE) TERMINAL FIRST.

2. Raise vehicle on ramp and secure with straps.

WARNING
WHEN YOU LIFT THE VEHICLE ON A 'TWO POST' LIFT MAKE SURE THAT YOU USE A STRAP TO HOLD THE REAR END OF THE VEHICLE TO THE RAMP. IF YOU DO NOT, THE VEHICLE CAN FALL OFF THE RAMP AND CAUSE PERSONAL INJURY OR DEATH.

3. Remove road wheel(s).
4. Remove rear exhaust silencer assembly (see Workshop Manual procedure 09.00.KA Silencer & Bypass Valve Assembly - Remove for Access & Refit).
5. **Roadster Only** - Remove centre undertray (see Workshop Manual procedure 01.02.MB Undertray - Centre - Renew).
6. Remove bolts (x4), subframe cross brace.
7. Remove centre exhaust mounting bolts (x4) (see Figure 1).

Figure 1

8. Loosen clamp nuts (x2), release centre pipe from both catalysts.
9. Remove centre pipe and rear exhaust pipes as an assembly.
10. Remove bolts/washers (x4), tunnel heatshield to body, remove heatshield.
11. Remove bolts (x8), shear plate to body, remove shear plate.
12. Remove bolt securing earth lead to transaxle.
13. Mark drive shaft to differential flanges for assembly purposes.
14. Remove and discard Allen bolts (x12), collect plates (x6), drive shaft flanges to transaxle.
15. Position drain container to collect oil spillage.
16. Loosen unions and disconnect oil cooler pipes (x2) from transaxle interconnecting pipes and plug pipe connections (x4).

WARNING
OBSERVE ALL OIL/FLUID MANUFACTURERS SAFETY INSTRUCTIONS WHEN HANDLING COMPONENTS THAT HAVE BEEN IN CONTACT WITH TRANSAXLE OIL.

Caution
Plug oil cooler connections to prevent ingress of dirt or moisture into the system.

17. Remove drain container.
18. Disconnect transaxle breather pipe.
19. Release reservoir hose from mounting bracket (clips x2) (see Figure 2).

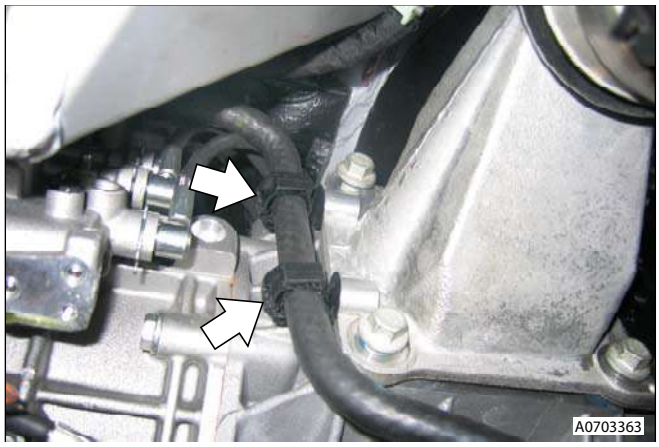

Figure 2

20. Remove bolt from reservoir bracket, release and remove clamp, tie reservoir aside (see Figure 3).

Figure 3

21. Remove nuts (x2), hydramounts to subframe mountings.
22. Position hydraulic lifter to support transaxle.
23. Remove and discard bolts (x8, 4 each side), mounting brackets to transaxle. Remove mounting brackets with hydramounts.
24. Release drive shafts from transaxle and position aside.
25. Lower transaxle sufficiently to access harness to subframe clip, release harness to subframe clip (see Figure 4).

Figure 4

WARNING
THE TRANSAXLE ASSEMBLY IS VERY HEAVY. GET THE AID OF ONE MORE PERSON WHEN YOU MOVE THE TRANSAXLE. IF YOU DO NOT, PERSONAL INJURY CAN OCCUR.

26. Lower transaxle to approx. 420mm from fitted position and retain on hydraulic lifter (see Figure 5).

Figure 5

27. Disconnect dry break quick-fit connector from torque tube pipe (see Figure 6).

Figure 6

28. Mark and disconnect valve-block connectors positions and disconnect multiplugs (x5) (see Figure 7)).
29. Remove and discard clip, release reservoir hose from valve unit (place drain tray to collect fluid) (see Figure 8).
30. Remove and discard clips (x3) securing hoses into valve block and disconnect hoses (see Figure 7).

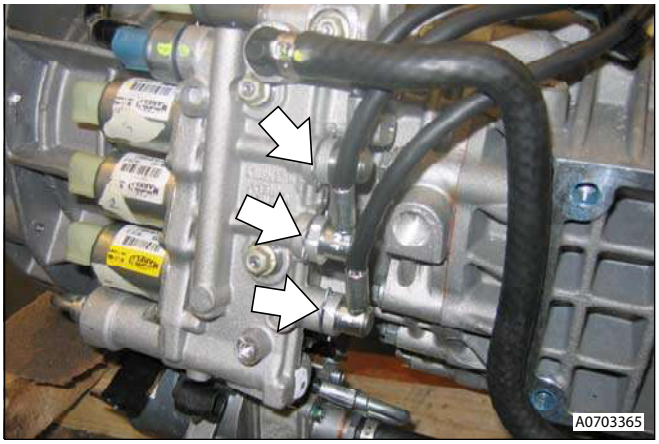

Figure 7

31. Remove clip pump hose to valve block (see Figure 10).
32. Remove bolts (x2) pump to transaxle, move pump aside and remove pipe from valve block.

33. Remove bolt valve block to transaxle (see Figure 8).

Figure 8

34. Remove nuts (x3) securing valve block to transaxle and remove valve block from studs (see Figure 12).

Install

1. Install valve block to stud and fit nuts.
2. Install bolt valve block to transaxle.
3. Install hoses (x3) to valve block and install new clips.
4. Install pipe into valve block and bolts (x2) pump to transaxle (renew O-ring on hose).
5. Install clip pump hose to valve block.
6. Install reservoir hose to valve block and install new clip.
7. Connect multiplugs (x5) to valve block.
8. Connect dry break quick-fit connector to torque tube pipe.
9. Raise transaxle, install harness clip to subframe.
10. Connect transaxle breather pipe.
11. Raise transaxle to fitted position.
12. Install transaxle mounting brackets and hydramounts, install and torque tighten new bolts (x8).
13. Align hydramounts to subframe, lower lifter, install and torque nuts. Remove lifter.
14. Position reservoir to bracket and fit clamp (bolt x1).
15. Position reservoir hose and secure clips.
16. Remove plugs, connect and torque oil cooler unions.
17. Apply thread lock to new Allen bolts.
18. Align drive shafts to transaxle flanges, clean and install plates (x6), install and torque tighten Allen bolts (x12).
19. Position earth lead to transaxle, install and torque tighten bolt.
20. Install shear plate, install bolts (x8), tighten bolts to correct torque.
21. Install tunnel heatshield, install bolts/washers (x4), tighten bolts to correct torque.
22. Install centre and rear exhaust pipe assembly, align to both catalysts then tighten clamp nuts to correct torque.
23. Install bolts (x4) into centre mounting.
24. Install subframe cross brace, install bolts (x4) and torque.
25. Install rear exhaust silencer assembly (see Workshop Manual procedure 09.00.KA Muffler & Bypass Valve Assembly - Remove for Access & Refit).
26. **Roadster Only -** Install centre undertray (see Workshop Manual procedure 01.02.MB Undertray - Centre - Renew).
27. Install road wheel(s).
28. Lower vehicle on ramp, remove securing straps.
29. Connect vehicle battery.

WARNING
ALWAYS CONNECT THE BATTERY EARTH (+VE) TERMINAL FIRST.

30. Test drive vehicle.

Shifter Assembly Gasket-Renew

Repair Operation Time (ROT)	
Item	**Code**
Shifter Assembly Gasket-Renew	**07.03.AN**

Removal

1. Disconnect vehicle battery.

WARNING
ALWAYS DISCONNECT THE BATTERY EARTH (- VE) TERMINAL FIRST.

2. Raise vehicle on ramp and secure with straps.

WARNING
WHEN YOU LIFT THE VEHICLE ON A 'TWO POST' LIFT MAKE SURE THAT YOU USE A STRAP TO HOLD THE REAR END OF THE VEHICLE TO THE RAMP. IF YOU DO NOT, THE VEHICLE CAN FALL OFF THE RAMP AND CAUSE PERSONAL INJURY OR DEATH.

3. Remove gear position sensor (see Workshop Manual procedure 07.03.AL Sensor - Transmission Assembly - Sportshift - Renew).
4. Remove shifter unit fixings (bolts x6, nut x1), release from dowels (x2) and tie shifter aside (see Figure 1).

Figure 1

5. Remove and discard gasket (see Figure 2).

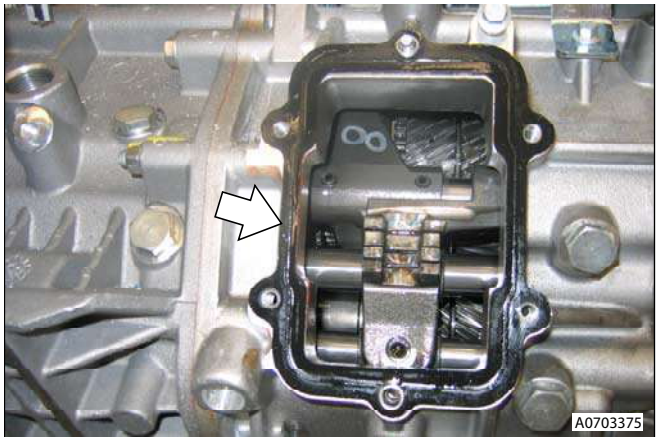

Figure 2

Install

1. Clean mating faces and install new gasket to dowels.
2. Ensure alignment of selector mechanism with shifter unit and install shifter unit.
3. Install Gear position sensor (see Workshop Manual procedure 07.03.AL Sensor - Transmission Assembly - Sportshift - Renew).
4. Connect battery.

WARNING
ALWAYS CONNECT THE BATTERY EARTH (+VE) TERMINAL FIRST.

5. Test drive vehicle.
6. Lower vehicle on ramp.

Transaxle Assembly - Sportshift Only - Remove for Access & Install

Repair Operation Time (ROT)	
Item	**Code**
Transaxle Assembly - Vehicles with Sportshift - Remove for Access and Install	**07.03.BA**

Remove for Access

1. Set the transaxle to neutral.
2. Disconnect the battery ground cable.
3. Remove the rear undertray (refer to Workshop Manual procedure 01.02.PB - Rear Undertray).

WARNING
WHEN YOU LIFT THE VEHICLE ON A 'TWO POST' LIFT MAKE SURE THAT YOU USE A STRAP TO HOLD THE REAR END OF THE VEHICLE TO THE RAMP. IF YOU DO NOT, THE VEHICLE CAN FALL OFF THE RAMP AND CAUSE PERSONAL INJURY OR DEATH.

4. Raise the vehicle and install straps to hold it to the lift (refer to Figure 1).

Figure 1

WARNING
THE EXHAUST SYSTEM WILL BE VERY HOT AFTER OPERATION. LET THE EXHAUST COOL BEFORE YOU DO WORK. IF YOU DO NOT, PESONAL INJURY CAN OCCUR.

5. Remove the four bolts that attach the cross-brace to the rear subframe.

Figure 2

6. Remove the cross brace.
7. Remove the four bolts that attach the exhaust centre pipe to the rear silencer.
8. Loosen the two clamps that attach the exhaust centre pipe to the catalytic converters.
9. Move the clamps along the exhaust pipes.

10. Remove the four bolts that attach the exhaust centre pipe to the exhaust front mount.

WARNING
GET THE AID OF ONE MORE PERSON WHEN YOU REMOVE THE EXHAUST CENTRE PIPE.
THE CENTRE EXHAUST PIPE IS HEAVY

11. Remove the exhaust centre pipe.
12. Remove the exhaust front mount.
13. Remove the four bolts that attach the floor heat shield to the body.
14. Remove the floor heatshield.
15. Remove the eight screws that attach the tunnel reinforcement plate to the body.

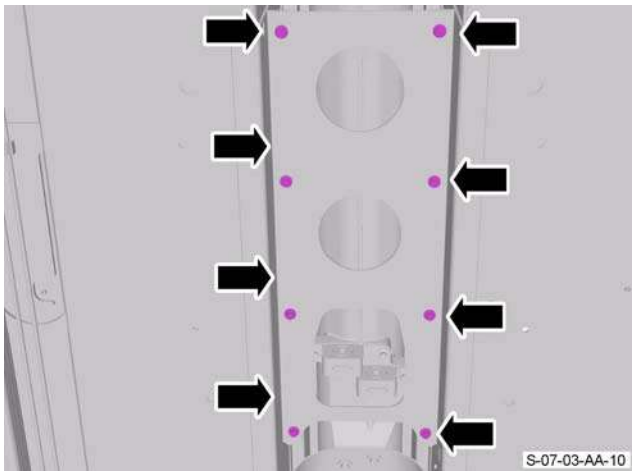

Figure 3

16. Remove the tunnel reinforcement plate.
17. Remove the nut that attaches the ground cable to the body.

Figure 4

18. Move the ground cable away.
19. Put marks on the driveshaft to transaxle flanges to help align during installation.
20. Remove and discard the six bolts that attach the right side driveshaft to the transaxle. Collect and keep the bolt plates.

Note: If necessary, turn the driveshaft to get access to the six bolts.

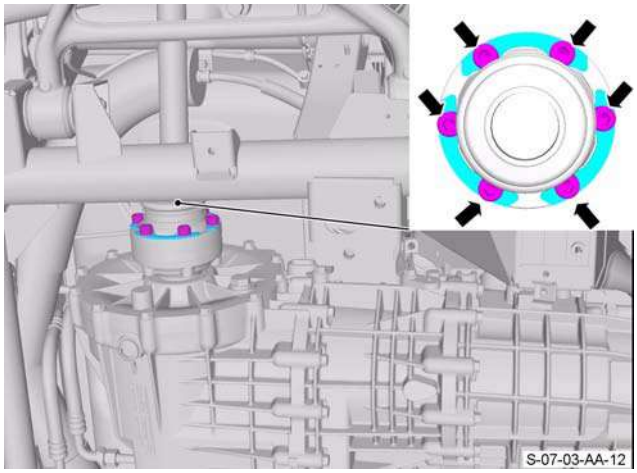

Figure 5

21. Remove and discard the six bolts that attach the left side driveshaft to the transaxle. Collect and keep the bolt plates.

Note: If necessary, turn the driveshaft to get access to the six bolts.

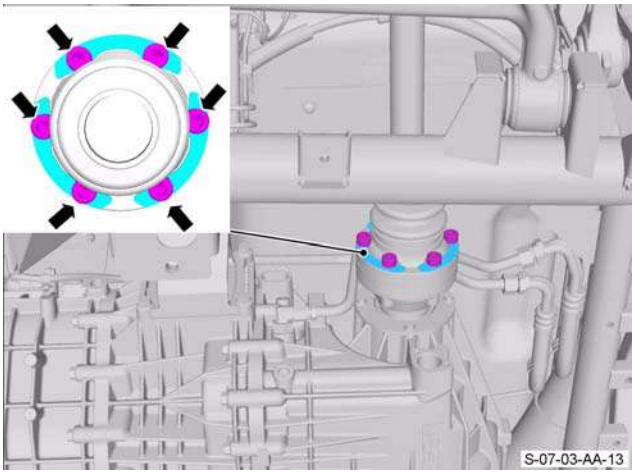

Figure 6

22. Release the driveshafts from the transaxle.

Figure 7

WARNING
TRANSAXLE OIL CAN BE HARMFUL.
OBEY ALL TRANSAXLE OIL MANUFACTURER'S SAFETY INSTRUCTIONS WHEN YOU HANDLE COMPONENTS THAT HAVE TOUCHED TRANSAXLE OIL.

23. Put an applicable container in position under the oil cooler matrix to collect oil.
24. Disconnect the pipes from the oil cooler matrix.

Figure 8

25. Let the oil drain into the container.
26. Install plugs to seal the pipe connections.
27. Remove the container of used oil.
28. Disconnect the breather pipe from the transaxle (refer Figure 9).

Figure 9

29. Install sealing plugs into the open ports.
30. Remove the nut that attaches the right side transaxle mount to the rear subframe.

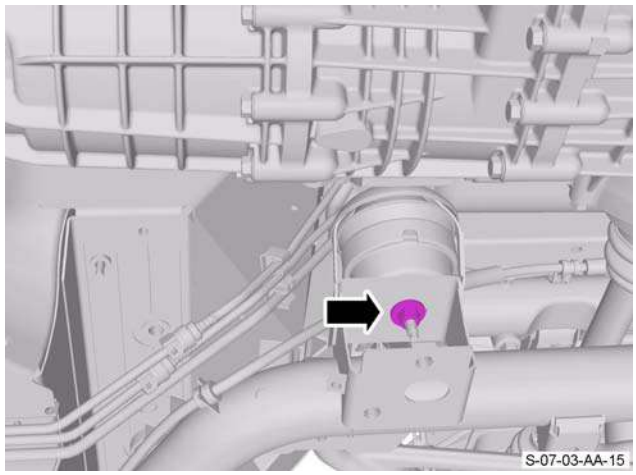

Figure 10

31. Remove the nut that attaches the left side transaxle mount to the rear subframe.

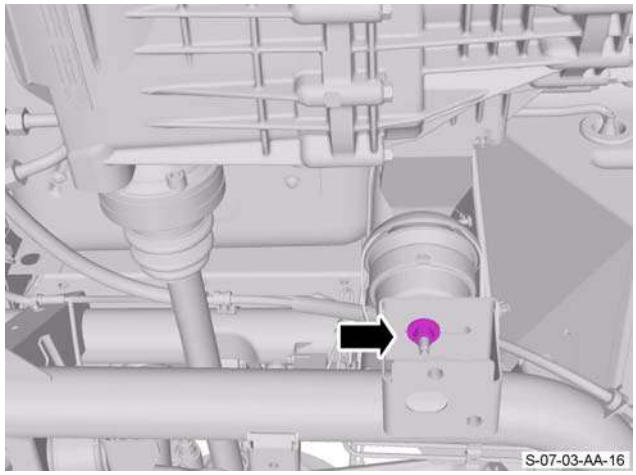

Figure 11

32. Release the reservoir hose from the two clips.

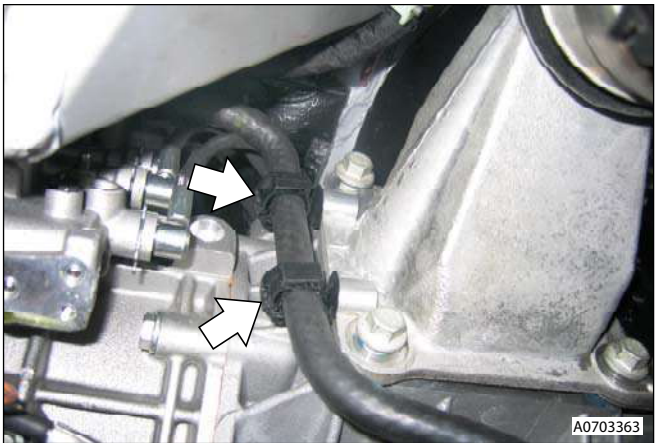

Figure 12

33. Remove the two bolts that attach the reservoir to the transaxle bracket.
34. Use a cable tie to attach the reservoir to the transaxle.
35. Put a transmission jack below the transaxle (refer to Figure 12).

Figure 13

36. Adjust the height of the transmission jack until it holds the transaxle.
37. Remove and discard the four bolts that attach the right side transaxle mount bracket to the transaxle. (see Figure 14).

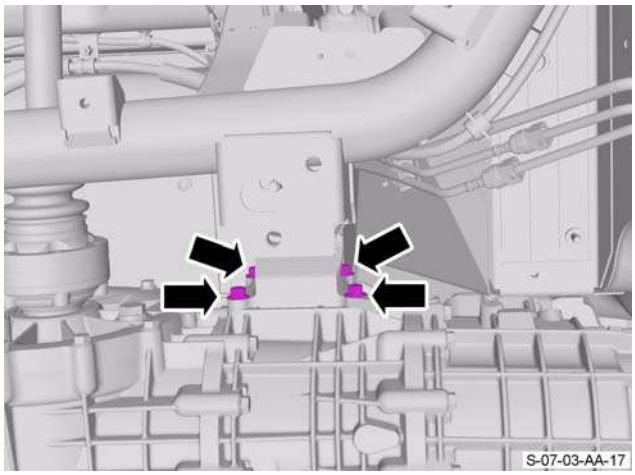

Figure 14

38. Remove and discard the four bolts that attach the left side transaxle mount bracket to the transaxle.

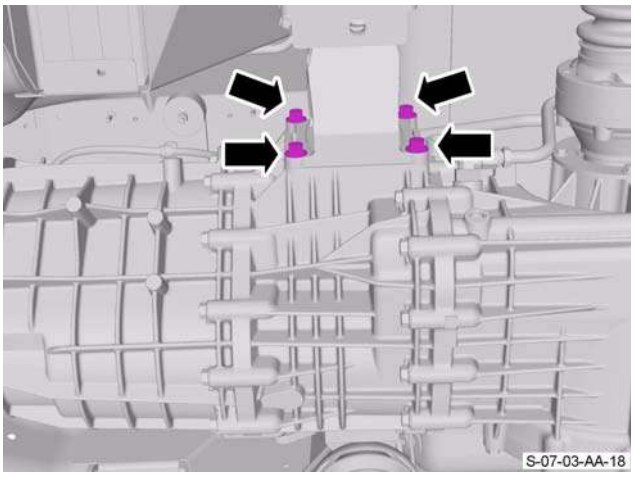

Figure 15

39. Remove the transaxle mount assemblies.

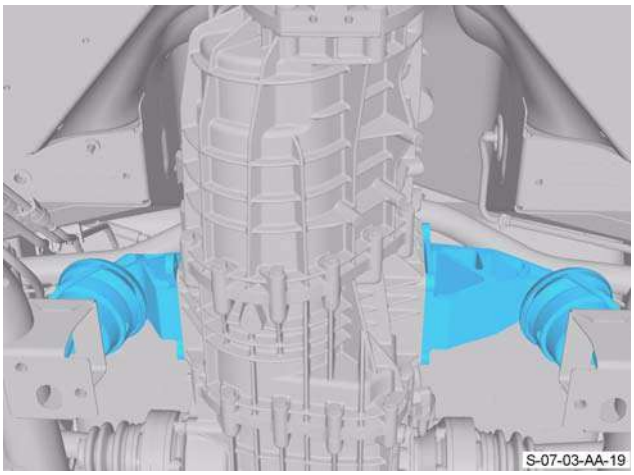

Figure 16

40. Use an applicable strap to attach the transaxle to the transmission jack.
41. Lower the transaxle on the transmission jack by approximately 420 mm.
42. Disconnect the hydraulic pipe for the clutch.

Figure 17

43. Disconnect the electrical connector from the wiring harness for the torque tube.
44. Remove the bolt that attaches the bracket for the electrical connector.
45. Move the bracket for the electrical connector away.
46. Remove the bolt that attaches the transaxle ground cable to the transaxle Automatic Shift Mechanism (ASM) pump.
47. Disconnect the electrical connector from the ASM pump.
48. Release the wiring harness for the ASM pump from the two clips that attach it to the transxle.
49. Identify and disconnect the five electrical connectors from the transaxle.
50. Disconnect the electrical connector from the selector position sensor.
51. Remove the bolt that attaches the ground cable eyelet to the transaxle.
52. Put the wiring harness under the hydraulic pipe for the clutch, and move it away from the transaxle.
53. Put a transmission jack below the torque tube (refer to Figure 18).

Figure 18

54. Adjust the height of the transmission jack until it holds the torque tube.
55. Remove the eight bolts that attach the torque tube to the transaxle.

Figure 19

WARNING
THE TRANSAXLE ASSEMBLY IS VERY HEAVY. GET THE AID OF ONE MORE PERSON WHEN YOU MOVE THE TRANSAXLE. IF YOU DO NOT, PERSONAL INJURY CAN OCCUR.

56. Move the transaxle rearwards to give clearance between the torque tube and the transaxle.
57. Carefully lower the transaxle on the transmission jack to remove the transaxle from the vehicle.

Figure 20

58. Clean the mating faces of the component.

Install

1. Move the transaxle and transmission jack into position below the vehicle.
2. Remove the filler plug for the transaxle oil.
3. Do a level check of the transaxle oil.
4. Install and tighten the filler plug for the transaxle oil.

WARNING
THE TRANSAXLE ASSEMBLY IS VERY HEAVY. GET THE AID OF ONE MORE PERSON WHEN YOU MOVE THE TRANSAXLE. IF YOU DO NOT, PERSONAL INJURY CAN OCCUR.

5. Use the transmission jack to adjust the height of the transaxle to align the transaxle with the torque tube.
6. Lower the transmission jack away from the torque tube.
7. Install and tighten the eight bolts that attach the torque tube to the transaxle.
8. Put the wiring harness for the transaxle into position.
9. Install the ground cable eyelet to the transaxle.
10. Install and tighten the bolt that attaches the ground cable eyelet to the transaxle.
11. Connect the electrical connector to the selector position sensor.
12. Connect the five electrical connectors to the transaxle.
13. Install the wiring harness for the ASM pump to the two clips that attach it to the transaxle.
14. Connect the electrical connector to the ASM pump.
15. Install the transaxle ground cable to the transaxle ASM pump.
16. Install and tighten the bolt that attaches the transaxle ground cable to the transaxle ASM pump.
17. Put the bracket for the electrical connector into position.
18. Install and tighten the bolt that attaches the bracket for the electrical connector.

19. Connect the electrical connector to the wiring harness for the torque tube.
20. Connect the hydraulic pipe for the clutch.
21. Adjust the height of the transmission jack to lift the transaxle into the correct position.
22. Remove the strap from the transaxle and the transmission jack.
23. Install the transaxle mount assemblies.

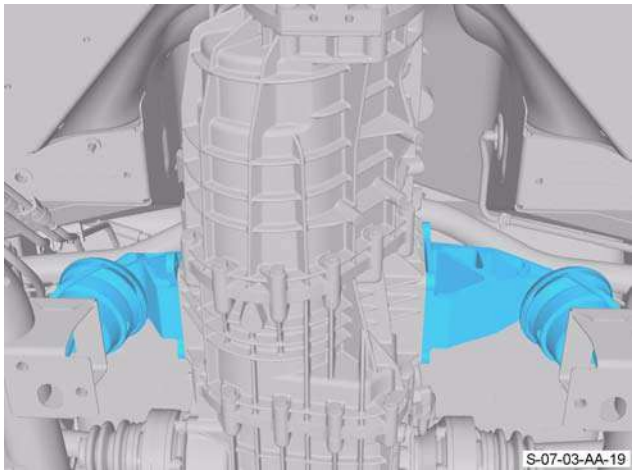

Figure 21

24. Install and tighten the four bolts that attach the left side transaxle mount bracket to the transaxle.

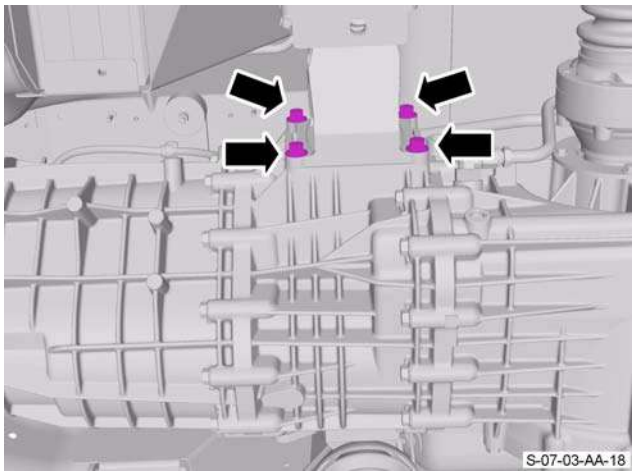

Figure 22

25. Install and tighten the four bolts that attach the right side transaxle mount bracket to the transaxle.

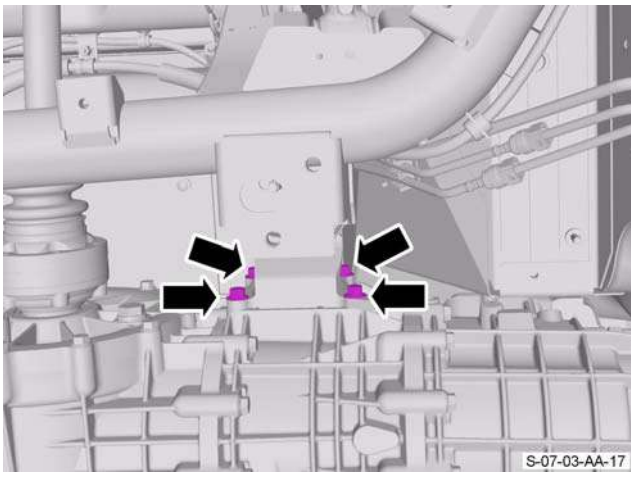

Figure 23

26. Remove and discard the cable tie to release the reservoir from the transaxle.
27. Put the reservoir into position on the transaxle bracket.
28. Install and tighten the two bolts that attach the reservoir to the transaxle bracket.
29. Install the reservior hose into the two clips.
30. Lower the transmission jack to align the transaxle mounts to the rear subframe.
31. Move the transmission jack away from the vehicle.
32. Install and tighten the nut that attaches the left side transaxle mount to the rear subframe.
33. Install and tighten the nut that attaches the right side transaxle mount to the rear subframe.
34. Remove and discard the sealing plugs from the transaxle and the breather pipe.
35. Connect the breather pipe to the transaxle.
36. Remove and discard the sealing plugs from the oil cooler matrix and the pipes.
37. Connect and tighten the pipes to the oil cooler matrix.
38. Put the driveshafts into position on the transaxle shaft flanges. Align the marks on the flanges that you made during removal.

Note: Put the three driveshaft bolt plates in position when you install the bolts in the step that follows.

39. Install and torque the six new bolts that attach the left side driveshaft flange to the transaxle flange. If necessary, turn the driveshaft to get access to all of the bolts.

Note: Put the three driveshaft bolt plates in position when you install the bolts in the step that follows.

40. Install and torque the six new bolts that attach the right side driveshaft flange to the transaxle flange. If necessary, turn the driveshaft to get access to all of the bolts.
41. Put the ground cable into position.
42. Install and tighten the nut that attaches the ground cable to the body.

43. Install the tunnel reinforcement plate.
44. Install and torque the eight bolts that attach the tunnel reinforcement plate to the body.
45. Install floor heatshield.
46. Install and tighten the four bolts that attach the floor heat shield to the body.
47. Install the exhaust front mount.
48. Clean the component mating faces.
49. Apply an applicable sealant to the component mating faces.

WARNING
THE EXHAUST CENTRE PIPE IS HEAVY. GET THE AID OF ONE MORE PERSON TO DO THE STEP THAT FOLLOWS.

50. Install the exhaust centre pipe.
51. Install and tighten the four bolts that attach the exhaust centre pipe to the exhaust front mount.
52. Put the clamps into position on the exhaust pipes.
53. Loosely install the four bolts that attach the exhaust centre pipe to the rear silencer.
54. Align the exhaust assembly.
55. Tighten the two clamps that attach the exhaust centre pipe to the catalytic converters.
56. Install the cross brace.

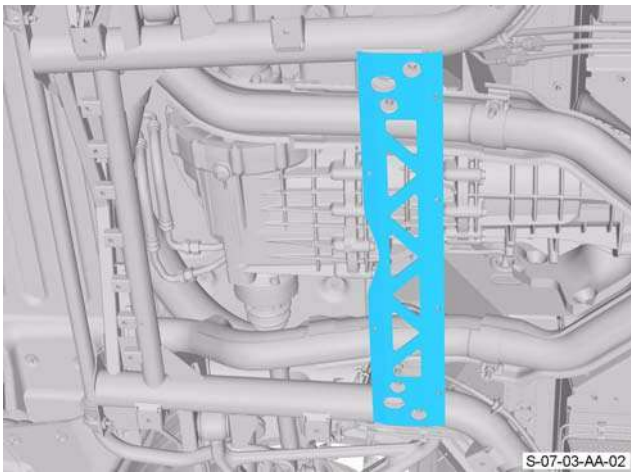

Figure 24

57. Install and torque the four bolts that attach the cross brace to the rear subframe.

Figure 25

58. Remove the strap that attaches the vehicle to the lift.
59. Lower the vehicle until the wheels are approximately 10 mm above the ground.
60. Connect the battery ground cable.
61. Bleed the clutch system.
62. Use AMDS to do an ASM self-tune.
63. Start the engine, select first gear and allow the wheels to turn for 10 seconds.
64. Lift the vehicle.
65. Remove the fill plug for the transaxle oil.
66. Make sure that the transaxle oil is level with the opening for the transaxle oil. Add more oil if necessary.
67. Install and tighten the fill plug for the transaxle oil.
68. Do a check of the ASM fluid level.
69. Install the rear undertray (refer to Workshop Procedure 01.02.PB - Rear Undertray)

Transmission Axle Assembly-Drain/Refill

Repair Operation Time (ROT)	
Item	**Code**
Transmission Axle Assembly-Drain/ Refill	**07.03.BC**

Removal

1. Position vehicle on ramp.
2. Remove rear undertray (see Workshop Manual procedure 01.02.PB Undertray - Rear - Renew).
3. Position container to collect transaxle oil.

WARNING
OBSERVE ALL TRANSAXLE OIL MANUFACTURERS SAFETY INSTRUCTIONS WHEN DRAINING AND REFILLING THE MANUAL TRANSAXLE.

4. Remove transaxle drain plug and drain oil.

Caution
Plug oil cooler connections to prevent ingress of dirt or moisture into the system.

5. Loosen and disconnect oil cooler pipes and allow oil in the oil cooler system to drain into container.
6. Remove filler plug.
7. Discard sealing washers (x2).

Install

1. Clean drain and filler plugs.
2. Install new sealing washers to filler and drain plugs.
3. Install drain plug and tighten to correct torque.

WARNING
OBSERVE ALL TRANSAXLE OIL MANUFACTURERS SAFETY INSTRUCTIONS WHEN HANDLING COMPONENTS THAT HAVE BEEN IN CONTACT WITH TRANSAXLE OIL.

4. Install oil cooler pipes and tighten unions to correct torque.

WARNING
OBSERVE ALL TRANSAXLE OIL MANUFACTURERS SAFETY INSTRUCTIONS WHEN HANDLING COMPONENTS THAT HAVE BEEN IN CONTACT WITH TRANSAXLE OIL.

5. Fill transaxle with the correct grade and quantity of oil.
6. Install filler plug and tighten to the correct torque.
7. Install rear undertray (see Workshop Manual procedure 01.02.PB Undertray - Rear - Renew).
8. Lower vehicle on ramp.
9. Road test vehicle.
10. Position vehicle on ramp.

WARNING
OBSERVE ALL TRANSAXLE OIL MANUFACTURERS SAFETY INSTRUCTIONS WHEN HANDLING COMPONENTS THAT HAVE BEEN IN CONTACT WITH TRANSAXLE OIL.

11. Check and top-up transaxle oil level.
12. Lower vehicle on ramp.

Transaxle Assembly-Renew

Repair Operation Time (ROT)	
Item	**Code**
Transaxle Assembly-Renew	**07.03.CB**

Removal

1. Remove transaxle assembly (see Workshop Manual procedure 07.03.AA Transaxle Assembly - Manual - Remove for Access & Refit).
2. Attach slings to transaxle and connect suitable hoist.

WARNING
THE TRANSAXLE ASSEMBLY IS VERY HEAVY. TO AVOID PERSONAL INJURY OR DAMAGE TO THE TRANSAXLE, HANDLING OF THE TRANSAXLE ASSEMBLY IS A TWO PERSON OPERATION.

3. With assistance, remove transaxle from lifter and position on work bench.
4. Lower hoist and remove slings.
5. Position container and drain transaxle oil.
6. Remove bolt securing oil cooler pipes bracket to transaxle (see Figure 1).

Figure 1

WARNING
OBSERVE ALL TRANSAXLE OIL MANUFACTURERS SAFETY INSTRUCTIONS WHEN HANDLING COMPONENTS THAT HAVE BEEN IN CONTACT WITH TRANSAXLE OIL.

7. Loosen and disconnect oil cooler pipe unions and remove oil cooler pipe assembly (see Fig 2).

Figure 2

Caution
Plug oil cooler connections to prevent ingress of dirt or moisture into the system.

8. Remove reverse light switch from transaxle (see Fig, 3).

Figure 3

9. Remove bolts (x3) from selector cable bracket to transaxle and collect bracket (see Figure 4).

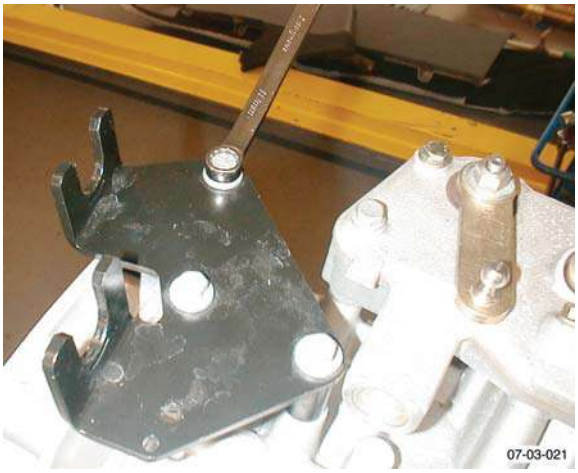

Figure 4

10. Remove nuts (x2) from selector levers (x2) to transaxle (see Figure 5).

Figure 5

Install

1. Clean reverse light switch, oil cooler pipes, selector levers and selector cable bracket.
2. Install selector levers (x2) and install and torque tighten nuts (x2).
3. Install selector cable bracket and install and torque tighten bolts (x3).
4. Install and torque tighten reverse light switch.
5. Install oil cooler pipe assembly.
6. Install and torque tighten oil cooler pipe unions and support bracket bolt.

WARNING
THE TRANSAXLE ASSEMBLY IS VERY HEAVY. TO AVOID PERSONAL INJURY OR DAMAGE TO THE TRANSAXLE, HANDLING OF THE TRANSAXLE ASSEMBLY IS A TWO PERSON OPERATION.

7. Fill transaxle with the specified oil to the correct level.
8. Attach slings to transaxle and connect hoist.

WARNING
THE TRANSAXLE ASSEMBLY IS VERY HEAVY. TO AVOID PERSONAL INJURY OR DAMAGE TO THE TRANSAXLE, HANDLING OF THE TRANSAXLE ASSEMBLY IS A TWO PERSON OPERATION.

9. With assistance, remove transaxle from workbench and position on lifter.
10. Install transaxle assembly (see Workshop Manual procedure 07.03.AA Transaxle Assembly - Manual - Remove for Access & Refit).
11. Install road wheel(s).
12. Test drive vehicle.

WARNING
THE TRANSAXLE ASSEMBLY IS VERY HEAVY. TO AVOID PERSONAL INJURY OR DAMAGE TO THE TRANSAXLE, HANDLING OF THE TRANSAXLE ASSEMBLY IS A TWO PERSON OPERATION.

13. Raise vehicle on ramp and check transaxle oil level.
14. Lower vehicle on ramp.

Transmission (07.00)

Automatic Control System (07.05)

Maintenance

Paddle Shift Switch Assembly - Renew - (Sportshift Only)

Repair Operation Time (ROT)	
Item	**Code**
Paddle Shift Switch Assembly-Renew	**07.05.AE**

Remove

1. Remove the top and bottom shrouds from the steering column (Refer to 'Top and Bottom Shrouds for the Steering Column - Remove and Install', page 11-4-4).
2. Remove the screw that attaches the paddle shift switch assembly (switch assembly) to the steering column (Refer to Figure. 1).

Figure. 1

3. Move the paddle shift switch assembly to get access to the electrical connector.
4. Disconnect the electrical connector for the paddle shift switch assembly (see Figure 2).

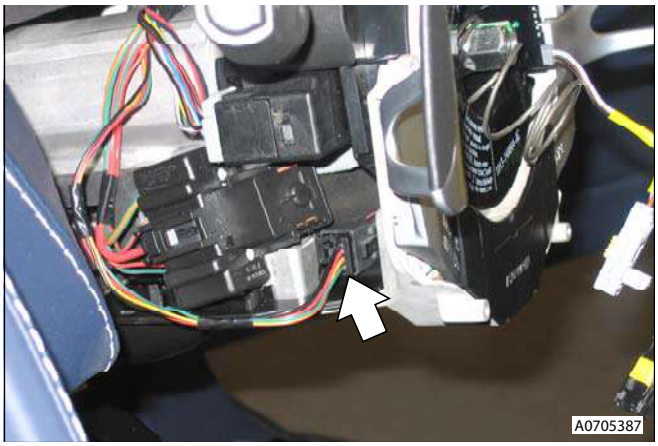

Figure 2

5. Remove the switch assembly.

Install

1. Connect the electrical connector for the switch assembly.
2. Put the switch assembly in position on the steering column.
3. Install the screw that attaches the switch assembly.
4. Remove the top and bottom shrouds from the steering column (Refer to 'Top and Bottom Shrouds for the Steering Column - Remove and Install', page 11-4-4).
5. Connect the vehicle battery.

Sportshift Drive Switch-Renew-Sportshift Only

Repair Operation Time (ROT)	
Item	**Code**
Sportshift Drive Switch-Renew	**07.05.AF**

Removal

1. Battery isolation switch OFF.
2. Remove upper centre panel using special tool (501 115) to hook into either one of the two centre air vents (see Figure 1).

Figure 1

3. Disconnect Drive 'D' switch multiplug (see Figure 2).

Figure 2

4. Depress clips and remove Drive 'D' switch from upper centre panel.

Install

1. Align Drive 'D' switch and secure in upper centre panel.
2. Position upper centre panel, connect multiplug, install upper centre panel.
3. Battery isolation switch ON.

Sportshift Neutral Switch-Renew-Sportshift Only

Repair Operation Time (ROT)	
Item	**Code**
Sportshift Neutral Switch-Renew	**07.05.AG**

Removal

1. Battery isolation switch OFF.
2. Remove upper centre panel using special tool (501 115) to hook into either one of the two centre air vents (see Figure 1).

Figure 1

3. Disconnect Neutral 'N' switch multiplug (see Figure 2).

Figure 2

4. Depress clips and remove Neutral 'N' switch from upper centre panel.

Install

1. Align Neutral 'N' switch and secure in upper centre panel.
2. Position upper centre panel, connect multiplug, install upper centre panel.
3. Battery isolation switch ON.

Sportshift Reverse Switch-Renew-Sportshift Only

Repair Operation Time (ROT)	
Item	**Code**
Sportshift Reverse Switch-Renew	**07.05.AH**

Removal

1. Battery isolation switch OFF.
2. Remove upper centre panel using special tool (501 115) to hook into either one of the two centre air vents (see Figure 1).

Figure 1

3. Disconnect Reverse 'R' switch multiplug (see Figure 2).

Figure 2

4. Depress clips and remove Reverse 'R' switch from upper centre panel.

Install

1. Align Reverse 'R' switch and secure in upper centre panel.
2. Position upper centre panel, connect multiplug, install upper centre panel.
3. Battery isolation switch ON.

Sportshift Comfort Switch-Renew-Sportshift Only

Repair Operation Time (ROT)	
Item	**Code**
Sportshift Comfort Switch-Renew	**07.05.AJ**

Removal

1. Battery isolation switch OFF.
2. Remove upper centre panel using special tool (501 115) to hook into either one of the two centre air vents (see Figure 1).

Figure 1

3. Disconnect Comfort switch multiplug (see Figure 2).

Figure 2

4. Depress clips and remove Comfort switch from upper centre panel.

Install

1. Align Comfort switch and secure in upper centre panel.
2. Position upper centre panel, connect multiplug, install upper centre panel.
3. Battery isolation switch ON.

Sportshift Interface Box-Renew-Sportshift Only

Repair Operation Time (ROT)	
Item	**Code**
Sportshift Interface Box-Renew	**07.05.AL**

Removal

1. Battery isolation switch OFF.
2. Remove upper centre panel using special tool (501 115) to hook into either one of the two centre air vents (see Figure 1).

Figure 1

3. Cut cable tie securing interface box to mounting bracket (see Figure 2).

Figure 2

4. Release interface box from Velcro (see Figure 3).

Figure 3

5. Disconnect multiplug and remove interface box.

Install

1. Connect multiplug and secure interface box to Velcro.
2. Secure interface box to mounting bracket with cable tie.
3. Position then install upper centre panel.
4. Battery isolation switch ON.

Transmission (07.00)

Manual Control System (07.06)

Maintenance

Gearshift Assembly Mechanism-Renew

Repair Operation Time (ROT)	
Item	**Code**
Gearshift Assembly Mechanism-Renew	**07.06.AA**

Removal

1. Remove panel assembly - console (see Workshop Manual procedure 01.12.DB Panel Assembly Console - Renew).

Caution
Ensure that the service tool No. 0308 - 642 is used to release selector cable ball joints from selector levers.

2. Using tool (308 - 642), release selector cable ball joints (x2) from gear lever mechanism.
3. Remove screws (x6), securing gear lever mechanism to housing.
4. Remove gearshift assembly mechanism.
5. Remove gear knob, collect gaiter.

Installation

1. Clean gearshift mechanism.
2. Lubricate gearshift mechanism with recommended grease.
3. Install gearshift mechanism, install and tighten screws (x6).
4. Install selector cables to gearshift mechanism.
5. Install panel assembly - console (see Workshop Manual procedure 01.12.DB Panel Assembly Console - Renew).
6. Install gear lever gaiter, install gear knob.

Transmission Gearshift Cable Assembly-Renew

Repair Operation Time (ROT)	
Item	**Code**
Transmission Gearshift Cable Assembly-Renew	**07.06.AE**

Removal

1. Disconnect vehicle battery.
2. Remove panel assembly - console.

Caution
Ensure that the service tool No. 0308 - 642 is used to release selector cable ball joints from selector levers.

3. Using tool 308 - 642, release selector cable ball joint from gear lever mechanism.
4. Remove horseshoe clip securing selector to bracket.
5. Raise vehicle on ramp and secure with straps.
6. Remove road wheel(s).

WARNING
TO AVOID PERSONAL INJURY, I.E. SEVERE BURNS TO THE SKIN, ALLOW EXHAUST SYSTEM TO COOL DOWN BEFORE REMOVING EXHAUST SYSTEM COMPONENTS.

7. Remove rear exhaust muffler (see Workshop Manual procedure 09.00.KA Silencer and Bypass Valve Assembly - Remove for Access and Refit
8. Remove bolts (x4), subframe cross brace.
9. Loosen clamp nuts (x2), release centre pipe from both catalysts.
10. Remove centre pipe and rear exhaust pipes as an assembly.
11. Remove bolts (x4), centre heatshield to body, remove heatshield.
12. Remove bolts (x8), shear plate to body, remove shear plate.
13. Remove bolt securing earth lead to transaxle.
14. Mark drive shaft to differential flanges for assembly purposes.
15. Remove and discard Allen bolts (x12), collect plates (x6), drive shaft flanges to transaxle.
16. Release drive shafts from transaxle and position aside.
17. Position drain container to collect oil spillage.

WARNING
OBSERVE ALL TRANSAXLE OIL MANUFACTURERS SAFETY INSTRUCTIONS WHEN HANDLING COMPONENTS THAT HAVE BEEN IN CONTACT WITH TRANSAXLE OIL.

Caution
Plug oil cooler connections to prevent ingress of dirt or moisture into the system.

18. Loosen unions and disconnect oil cooler pipes (x2) from transaxle interconnecting pipes. Plug pipe connections (x4).
19. Remove drain container.
20. Remove nuts (x2), hydra mounts to subframe mountings.
21. Position hydraulic lifter to support transaxle.
22. Remove and discard bolts (x8 (4 each side), mounting brackets to transaxle. Remove mounting brackets with hydra mounts.
23. Release reverse lamp switch multiplug from bracket, disconnect multiplug.

Caution
Ensure that the service tool No. 0308 - 642 is used to release selector cable ball joints from selector levers.

24. Lower transaxle sufficiently and use tool (308 - 642) to release selector cable ball joint from selector lever.
25. Remove horse shoe clip securing selector cable to mounting bracket, remove selector cable assembly.

Installation

1. Install selector cable, connect to ball joint, install horseshoe clip.
2. Connect multiplug to reverse light switch, install multiplug in bracket.
3. Install reverse light harness clip in transaxle.
4. Install transaxle mounting brackets and hydra mounts, install and torque tighten new bolts (x8).
5. Align hydra mounts to subframe, lower lifter, install and torque tighten nuts (x2). Remove lifter.
6. Remove plugs, connect and torque oil cooler unions.
7. Apply thread lock to new Allen bolts.
8. Align drive shafts to transaxle flanges, clean and install plates (x6), install and torque tighten Allen bolts (x12).
9. Position earth lead to transaxle, install and torque tighten bolt.
10. Install shear plate, install bolts (x8), tighten bolts to correct torque.
11. Install centre heatshield, install bolts (x4), tighten bolts to correct torque.
12. Install centre and rear exhaust pipe assembly, align to both catalysts. tighten clamp nuts to correct torque.
13. Install subframe cross brace, install and torque tighten bolts (x4).
14. Install rear exhaust muffler (see Workshop Manual procedure 09.00.KA Silencer and Bypass Valve Assembly - Remove for Access and Refit).
15. Install road wheel(s).
16. Lower vehicle on ramp, remove securing straps.
17. Position selector cable in bracket, install horseshoe clip.
18. Install selector cable ball joint to gear lever mechanism.
19. Install panel assembly - console.
20. Connect vehicle battery.
21. Test drive vehicle.
22. Raise vehicle on ramp; Check transaxle oil level.

Transmission (07.00)

Automatic Shifting Subsystem (07.11)

Maintenance

Transmission Control Module-Renew-Sportshift Only

Repair Operation Time (ROT)	
Item	**Code**
Transmission Control Module-Renew	**07.11.AA**

Removal

1. Open boot lid.
2. Disconnect vehicle battery.

WARNING
ALWAYS DISCONNECT THE BATTERY EARTH (- VE) TERMINAL FIRST.

3. Remove access panel (right-hand side).
4. Release strap securing puncture repair kit from bracket and remove.
5. Remove retention clip (bolt x1) and Transmission Control Module from mounting bracket.
6. Release Transmission Control Module multiplug catches (x2), disconnect Transmission Control Module multiplugs (x2) and remove.

Installation

1. Install Transmission Control Module and connect multiplugs.
2. Install Transmission Control Module to mounting bracket, secure with retention clip and bolt.
3. Install puncture repair kit to bracket and secure with strap.
4. Install access panel (right-hand side).
5. Connect vehicle battery.

WARNING
ALWAYS CONNECT THE BATTERY EARTH (+VE) TERMINAL FIRST.

6. Close the boot lid.

ASTON MARTIN
ASTON MARTIN

Clutch (08.00)

Contents

Clutch Assembly (08.01) 8-1-2
Description 1-2
Specifications 1-2
Maintenance 1-2
Clutch and Flywheel Assembly-Renew 1-2
Slave Clutch Cylinder-Renew 1-3
Clutch Bleed Hose Assembly-Renew 1-4
Clutch Hydraulic System-Bleed-Sportshift Only 1-4
Clutch Hydraulic System-Bleed 1-5
Master Cylinder to Slave Cylinder Tube Assembly-Renew-Sportshift Only 1-5

Clutch (08.00)

Clutch Assembly (08.01)

Description

The clutch assembly consists of a balanced flywheel, a clutch driven plate and a clutch cover.

The clutch is a single plate, diaphragm spring type assembly.

A concentric clutch slave cylinder is mounted around the first motion shaft in the torque tube bell housing.

The clutch master cylinder is mounted on the engine bulkhead and is operated directly by the clutch pedal.

A hydraulic connection from the master cylinder feeds pressurised fluid to the slave cylinder. The slave cylinder has an extension tube and bleed nipple extending from the left side of the bell housing for bleeding the system after any major work.

Specifications

Clutch Fluid

Castrol/Girling Universal Brake and Clutch fluid.

Clutch Assembly

Clutch and flywheel are separately balanced.

Clutch Plate

Single 267mm driven plate.

Torque Figures

Description	Nm	lb/ft
Flywheel Bolts	100 - 120	74-88.5
Tighten the bolts in sequence. Loosen the bolts and then torque, in even stages, in the same sequence.		
Clutch Bolts	65-75	48-55
Tighten x6 equally-spaced bolts, in-turn, to pull-down the clutch evenly. Then torque all bolts in sequence.		
Starter Motor Bolts	42.5-57.5	31.5-42.5

Maintenance

Clutch and Flywheel Assembly-Renew

Repair Operation Time (ROT)	
Item	**Code**
Clutch and Flywheel Assembly-Renew	**08.00.AA**

Removal

1. Disconnect vehicle battery.
2. Raise vehicle on ramp.
3. Remove torque tube assembly (see Workshop Manual procedure 05.01.CA Torque Tube Remove for Access and Refit).
4. Remove bolts (x2) from inspection cover to lower crankcase and remove cover.
5. Install special tool SKAM14546 OT to restrain flywheel and install and tighten bolts (x2) (see Fig. 1).

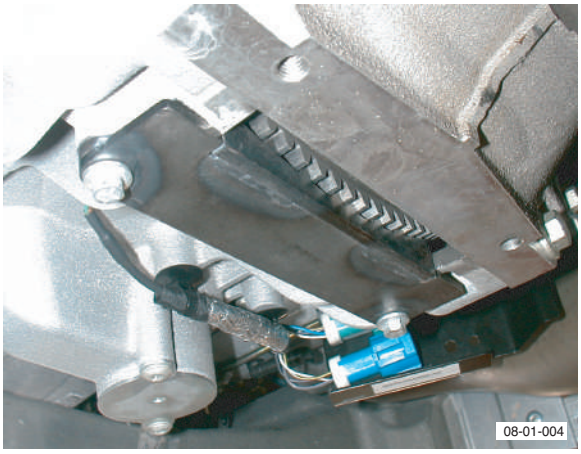

Fig. 1

6. Remove bolts (x6) from clutch cover to flywheel (see Fig. 2).

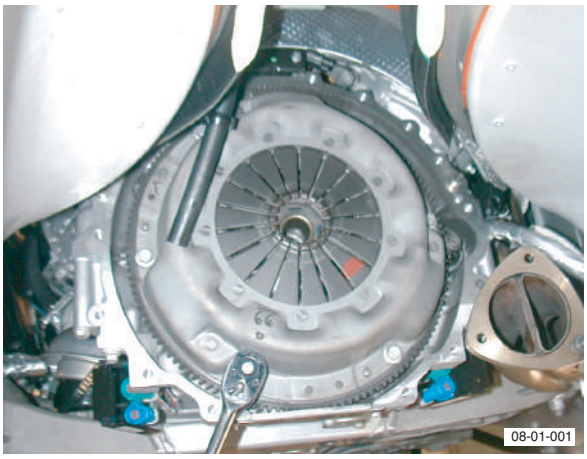

Fig. 2

> ***Warning***
> ***The clutch assembly is heavy. Ensure the clutch assembly is supported before removing final bolts.***

7. Release clutch cover from dowels, remove cover and collect drive plate.

8. Remove bolts (x8) from flywheel to crankshaft and discard bolts (see Fig. 3).

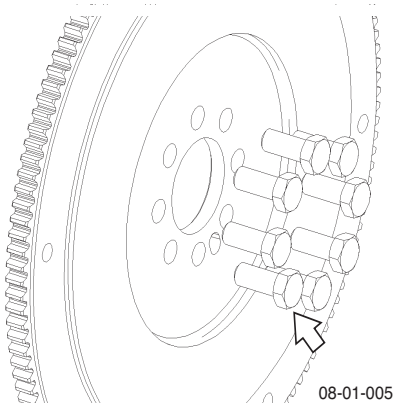

Fig. 3

9. Remove bolts (x2) and collect special tool SKAM14546 OTC.

> ***Warning***
> ***The flywheel is heavy. Ensure the flywheel is supported before removing.***

10. Release flywheel from dowels and remove flywheel.

Installation

1. Clean flywheel and mating face on crankshaft flange.
2. Inspect pilot bearing for wear.

> ***Warning***
> ***The flywheel is heavy. Ensure the flywheel is supported when installing.***

3. Position flywheel and align to dowel(s) on crankshaft flange.
4. Install bolts (x8) and install special tool SKAM14546 OTC to restrain flywheel.
5. Tighten flywheel bolts in the correct sequence.
6. Clean clutch cover and drive plate.

> ***Warning***
> ***The clutch assembly is heavy. Ensure the clutch assembly is supported when installing.***

> **Caution**
> ***The flywheel and pressure are a balanced assembly. Ensure alignment marks are aligned.***

7. Install clutch assembly on flywheel and align to dowels.
8. Install bolts (x8), insert clutch alignment tool and evenly tighten bolts to the correct torque.
9. Remove clutch alignment tool.
10. Remove bolts (x2) and collect tool.
11. Install inspection cover to crankcase and tighten bolts (x2).
12. Install torque tube assembly (see Workshop Manual procedure 05.01.CA Torque Tube Remove for Access and Refit).
13. Lower vehicle on ramp.
14. Connect vehicle battery.

Slave Clutch Cylinder-Renew

Repair Operation Time (ROT)	
Item	**Code**
Slave Clutch Cylinder-Renew	**08.00.AC**

Removal

1. Disconnect vehicle battery.

> ***Warning***
> ***Always disconnect the battery earth (- ve) terminal first.***

2. Raise vehicle on ramp.

> ***Warning***
> ***When raising the vehicle on a 'two post' ramp, ensure that the rear end of the vehicle is securely strapped to the ramp. Failure to strap the rear of the vehicle down may lead to the vehicle falling off the ramp.***

3. Remove torque tube (see Workshop Manual procedure 05.01.CA Torque Tube Remove for Access and Refit).

> **Caution**
> ***Always plug pipe ends to prevent ingress of dirt or moisture into the system.***

4. Release clips and remove bleed and supply pipes from slave cylinder.
5. Install clips in union
6. Loosen and remove pipe adaptors (x2) from slave cylinder (see Fig. 1).

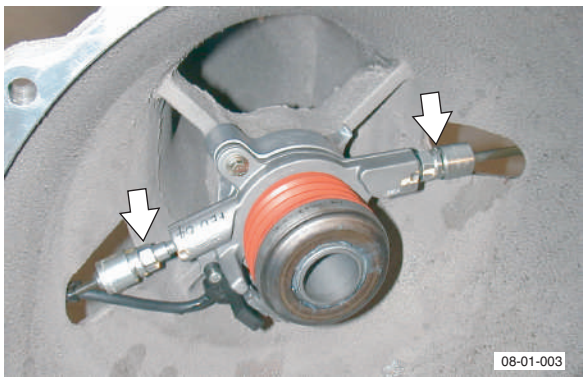

Fig. 1

7. **Sportshift Only** - Remove bolts (x2) securing clutch position sensor to slave cylinder.

8. Remove bolts (x2) that secure slave cylinder to torque tube (see Fig. 2).

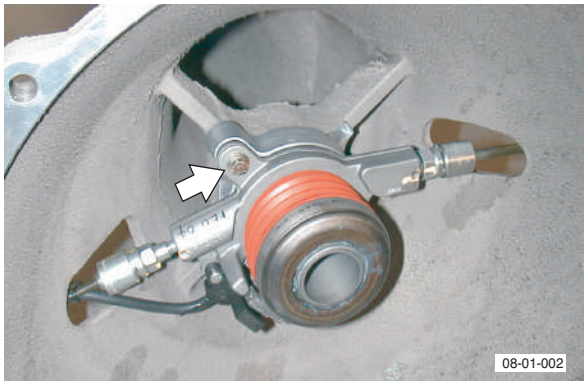

Fig. 2

9. Remove slave cylinder and collect spacer.

Installation

1. Clean slave cylinder, spacer and pipe adaptors.
2. Install spacer and slave cylinder and tighten bolts (x2).
3. **Sportshift Only** - Install clutch position sensor to slave cylinder and secure with bolts.
4. Install pipe adaptors (x2) in slave cylinder.
5. Install bleed and supply pipes onto slave cylinder adaptors (x2) and secure with clips.
6. Install torque tube (see Workshop Manual procedure 05.01.CA Torque Tube Remove for Access and Refit).
7. Bleed clutch (see Workshop Manual procedure 08.00.AF Clutch Hydraulic System - Bleed).
8. Lower vehicle on ramp.
9. Connect vehicle battery.

Warning
Always connect the battery earth (+ve) terminal first.

Clutch Bleed Hose Assembly-Renew

Repair Operation Time (ROT)	
Item	**Code**
Clutch Bleed Hose Assembly-Renew	**08.00.AD**

Removal

1. Raise vehicle on ramp.
2. **Coupe Only** - Remove deflector - front floor heatshield (see Workshop Manual procedure 09.04.AA Heatshield - Front Floor - Renew).

Before proceeding with the next step, position a piece of cloth in the torque tube aperture to collect the spring clip if dropped.

Caution
Always plug pipe ends to prevent ingress of dirt or moisture into the system.

3. **Roadster Only** - Remove exhaust sysytem (see Workshop Manual procedure 09.00.NB Exhaust System - Excluding manifold/down pipes - Renew).
4. **Roadster Only** - Remove grommet sealing clutch bleed pipe to torque tube.
5. **Roadster Only** - Position a piece of cloth in torque tube aperture to collect spring clip (if dropped) and fluid loss.
6. Release clip and disconnect bleed hose from slave cylinder adaptor.
7. Plug slave cylinder to prevent fluid loss.
8. Release and remove bleed pipe assembly from support bracket.

Installation

1. Clean bleed hose assembly.
2. Remove plug from slave cylinder adaptor.
3. Install bleed hose and secure with clip.
4. Install bleed hose in support bracket.
5. **Roadster Only** - Install grommet sealing clutch bleed pipe to torque tube.
6. Bleed clutch (see Workshop Manual procedure 08.00.AF Clutch Hydraulic System - Bleed).
7. **Roadster Only** - Install exhaust sysytem (see Workshop Manual procedure 09.00.NB Exhaust System - Excluding manifold/down pipes - Renew).
8. **Coupe Only** - Install deflector - front floor heatshield (see Workshop Manual procedure 09.04.AA Heatshield - Front Floor - Renew).
9. Lower vehicle on ramp.

Clutch Hydraulic System-Bleed-Sportshift Only

Repair Operation Time (ROT)	
Item	**Code**
Clutch Hydraulic System-Bleed	**08.00.AE**

1. Raise vehicle on ramp.
2. Install Diagnostic tool and navigate to appropriate screen.
3. Position cloth around fluid reservoir to collect any spillage.

Warning
Observe all oil/fluid manufacturers safety instructions when handling components that have been in contact with transaxle oil.

4. Remove fluid reservoir cap, ensure fluid level is correct in reservoir.
5. Clean area around clutch bleed nipple.
6. Remove cap from bleed nipple.
7. Position bleed container containing clean hydraulic fluid, connect hose to bleed nipple.
8. Initiate bleed procedure on Diagnostic tool.
9. Loosen bleed nipple, allow air/fluid to escape and tighten bleed nipple.
10. Repeat procedure until air free fluid emerges.
11. Disconnect bleed hose, remove container, install dust cap to bleed nipple.
12. Top-up fluid reservoir.

13. Remove Diagnostic tool.
14. Lower vehicle on ramp.

Clutch Hydraulic System-Bleed

Repair Operation Time (ROT)	
Item	**Code**
Clutch Hydraulic System-Bleed	**08.00.AF**

1. Raise vehicle on ramp.

Warning
Avoid skin / eye contact or ingestion of clutch fluid. If skin or eyes are splashed with clutch fluid, rinse the affected area immediately with plenty of water and obtain medical attention. If clutch fluid is ingested, obtain immediate medical attention.

Caution
Clutch fluid must not be allowed to contact vehicle paint work. Remove spilt clutch fluid from the paint work by rinsing away with running water.

Warning
Brake / Clutch fluid is hygroscopic. If kept in opened containers it will absorb water vapour. Use only brake fluid from freshly opened containers when topping-up the brake fluid reservoir.

Before proceeding to the next step, position cloth around fluid reservoir to collect any spillage.

2. Remove fluid reservoir cap and ensure fluid level is correct.
3. Clean area around clutch bleed nipple.
4. Remove cap from bleed nipple.
5. Position bleed container containing clean hydraulic fluid and connect hose to bleed nipple.
6. Depress clutch pedal to floor 3 times and hold pedal down on third application.
7. Loosen bleed nipple allowing any air/fluid to escape.
8. Tighten bleed nipple.
9. Repeat procedure until air-free fluid emerges.
10. Disconnect bleed hose, remove container and install dust cap to bleed nipple.
11. Top-up fluid reservoir.
12. Lower vehicle on ramp.

Master Cylinder to Slave Cylinder Tube Assembly-Renew-Sportshift Only

Repair Operation Time (ROT)	
Item	**Code**
Master Cylinder to Slave Cylinder Tube Assembly-Renew	**08.00.AJ**

Removal

1. Disconnect vehicle battery.

Warning
Always disconnect the battery earth (- ve) terminal first.

2. Raise vehicle on ramp.

Warning
When raising the vehicle on a 'two post' ramp, ensure that the rear end of the vehicle is securely strapped to the ramp. Failure to strap the rear of the vehicle down may lead to the vehicle falling off the ramp.

3. Remove torque tube (see Workshop Manual procedure 05.01.CA Torque Tube - Remove for Access & Refit).
4. Remove grommet sealing clutch pipe to torque tube.

Warning
Observe all oil/fluid manufacturers safety instructions when handling components that have been in contact with transaxle oil.

5. Remove clip, disconnect clutch pipe from slave cylinder adaptor.
6. Release clip securing transmission harness to clutch pipe mounting bracket.
7. Release clips (x4) securing clutch pipe to transmission harness.
8. Remove clutch pipe from torque tube.

Installation

1. Install clutch pipe to torque tube.
2. Secure clutch pipe to transmission harness using clips.
3. Secure transmission harness to clutch pipe mounting bracket using clip.
4. Install clip and refit clutch pipe to slave cylinder adaptor.
5. Install grommet sealing clutch pipe to torque tube.
6. Install torque tube (see Workshop Manual procedure 05.01.CA Torque Tube - Remove for Access & Refit).
7. Bleed clutch hydraulics (see Workshop Manual procedure 08.00.AE Clutch Hydraulic System - Sportshift - Bleed).
8. Lower vehicle on ramp.
9. Connect vehicle battery.

Warning
Always connect the battery earth (+ve) terminal first.

Exhaust (09.00)

Contents

Exhaust Overview 9-1-2
Silencer Assembly (09.01) 9-1-3
Variable Flow Silencer Assembly 1-3
Maintenance 1-3
LH Catalyst & Pipe Assembly-Renew 1-3
RH Catalyst & Pipe Assembly-Renew 1-3
LH Exhaust Manifold-Renew-Roadster Only 1-4
Heated Exhaust Gas Oxygen (HEGO) Sensor - Remove and Install 1-4
Silencer and Bypass Valve Assembly-Remove for Access/Refit-Coupe Only 1-5
Silencer and Bypass Valve Assembly-Remove for Access/Refit-Roadster Only 1-5
Silencer and Bypass Valve Assembly-Renew 1-6
Exhaust Rear Silencer Mounting Rubber-Renew 1-7
Exhaust System-Renew 1-7
Exhaust System (Excluding Manifold/Downpipes) -Renew 1-8
Pipes and Supports (09.03) 9-2-1
Specifications 2-1
Maintenance 2-1
RH/LH Catalyst and Pipe Assembly-Renew 2-1
Exhaust Centre Pipe-Renew 2-1
RH Exhaust Manifold-Renew 2-2
LH Exhaust Manifold-Renew 2-2
RH Exhaust Manifold Gasket-Renew 2-3
LH Exhaust Manifold Gasket-Renew 2-3
Exhaust Gas Temperature Sensor-Renew 2-4
Exhaust Gas Heated Temperature Sensor-Renew 2-4
RH/LH Rear Exhaust Pipe Assembly-Renew 2-5

Exhaust System (09.00)

Exhaust Overview

The exhaust system consists of two four-branch manifolds, two catalytic converters, four oxygen sensors and a single variable flow silencer assembly.

Exhaust gasses flow from the exhaust manifolds, through the catalysts and on to the rear silencer assembly.

- Two engine management oxygen sensors are mounted before the catalysts.
- Two catalyst monitor oxygen sensors are mounted in the catalysts between the primary and secondary catalyst brick.

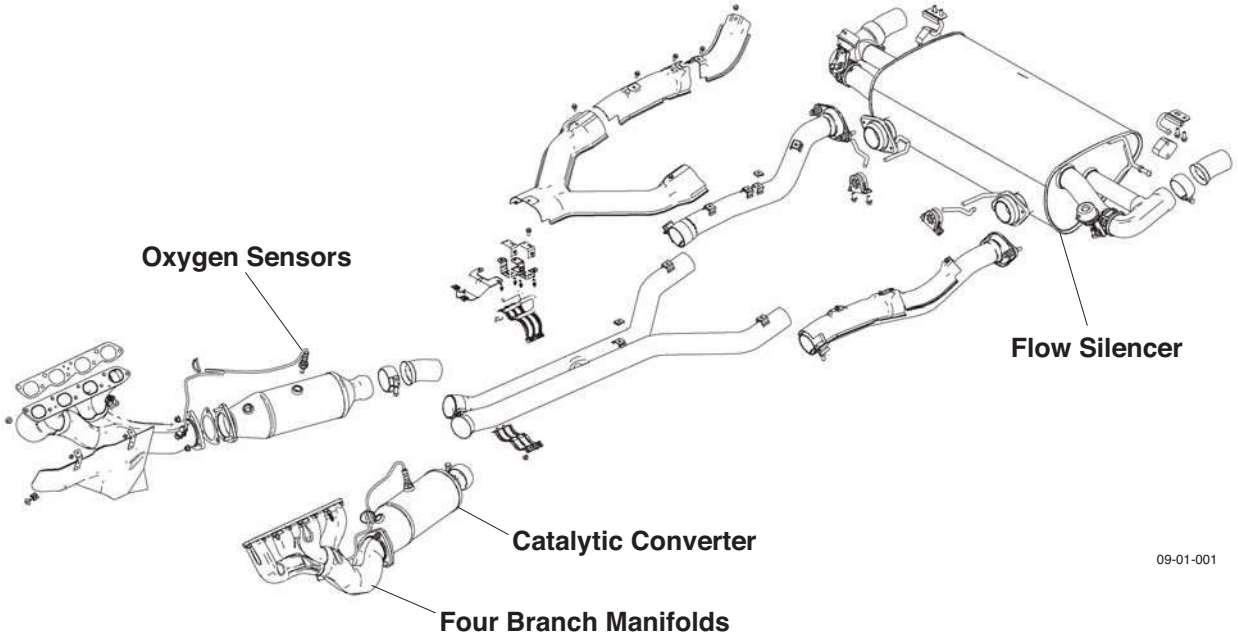

Exhaust (09.00)

Silencer Assembly (09.01)

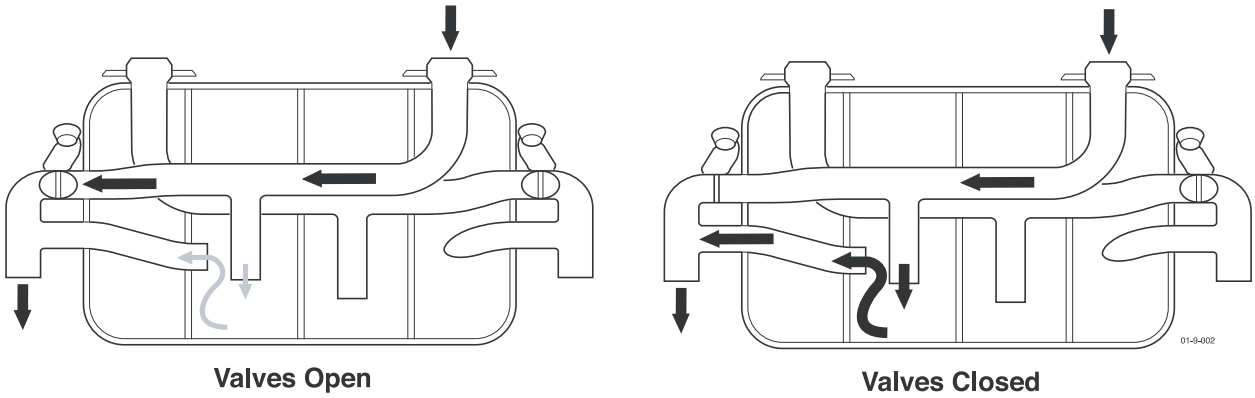

Variable Flow Silencer Assembly

The rear silencer assembly has a variable flow path controlled by two bypass valves.

The system is intended to enhance top end performance in motor sport applications and will not operate in most normal driving conditions.

By directing exhaust gasses through a modified path at high vehicle speeds, exhaust back pressure is reduced and top end performance is enhanced.

As engine speed increase from idle, the bypass valve is open until the engine speed is 1500 rpm.

From 1500 rpm to 3000 rpm, the valve is closed

Above 3000 rpm the bypass valves state is load dependent (fully open at higher loads).

Maintenance

LH Catalyst & Pipe Assembly-Renew

Repair Operation Time (ROT)	
Item	**Code**
LH Catalyst & Pipe Assembly-Renew	**09.00.AB**

Removal

1. Raise vehicle on ramp.
2. Remove rear exhaust silencer (refer to Workshop Manual procedure 09.00.KA Muffler & Bypass Valve Assembly - Remove for Access & Refit).
3. Disconnect multiplugs (x2), HEGO sensors.
4. Release sensor lead from clip on heatshield.
5. Secure sufficient lengths of string to HEGO sensor multiplugs for assembly purposes.
6. Loosen LH and RH clamp nuts, catalysts to centre pipe.
7. Remove nuts (x3), catalyst to exhaust manifold.
8. With assistance, manoeuvre exhaust centre pipe assembly rearwards to release from catalysts.
9. With assistance, release and support weight of LH catalyst from exhaust manifold.
10. Manoeuvre HEGO sensor leads and remove cable tie. Release HEGO sensor leads from behind heat shield. Secure cable tie. Remove string from HEGO multiplugs.
11. Remove catalyst assembly.
12. Remove and discard gasket.
13. Remove HEGO sensors (x2) from catalyst.

Installation

1. Clean catalyst, mating joint faces and HEGO sensors..
2. Install and tighten HEGO sensors (x2) to catalyst.
3. Apply proprietary exhaust sealant around pipe joints.
4. Install new gasket to exhaust manifold flange.
5. With assistance, position catalyst, secure string (x2) to HEGO multiplugs, feed sensor leads behind heat shield. Install catalyst to exhaust manifold.
6. Install and torque tighten nuts (x3), catalyst to exhaust manifold.
7. Align centre pipe asembly to catalyst, torque tighten clamp nuts.
8. Remove string (x2), connect multiplugs (x2), HEGO sensors.
9. Secure sensor lead in clip on heatshield.
10. Install rear exhaust silencer (refer to Workshop Manual procedure 09.00.KA Muffler & Bypass Valve Assembly - Remove for Access & Refit).
11. Lower vehicle on ramp.

RH Catalyst & Pipe Assembly-Renew

Repair Operation Time (ROT)	
Item	**Code**
RH Catalyst & Pipe Assembly-Renew	**09.00.BB**

Removal

1. Raise vehicle on ramp.
2. Remove rear exhaust silencer (refer to Workshop Manual procedure 09.00.KA Muffler & Bypass Valve Assembly - Remove for Access & Refit).
3. Disconnect multiplugs (x2), HEGO sensors.
4. Release sensor lead from clip on heatshield.
5. Secure sufficient lengths of string to HEGO sensor multiplugs for assembly purposes.
6. Loosen LH and RH clamp nuts, catalysts to centre pipe.
7. With assistance, manoeuvre exhaust centre pipe assembly rearwards to release from catalysts.
8. Remove nuts (x3), catalyst to exhaust manifold.
9. With assistance, release and support weight of RH catalyst from exhaust manifold.
10. Manoeuvre HEGO sensor leads and remove cable tie. Release HEGO sensor leads from behind heat shield. Remove string from HEGO multiplugs.
11. Remove catalyst assembly.
12. Remove and discard gasket.
13. Remove HEGO sensors (x2) from catalyst.

Installation

1. Clean catalyst, mating joint faces and HEGO sensors..
2. Install and tighten HEGO sensors (x2) to catalyst.
3. Apply proprietary exhaust sealant around pipe joints.
4. Install new gasket to exhaust manifold flange.
5. With assistance, position catalyst, secure string (x2) to HEGO multiplugs, feed sensor leads behind heat shield. Secue cable tie. Install catalyst to exhaust manifold.
6. Install and torque tighten nuts (x3), catalyst to exhaust manifold.
7. Align centre pipe asembly to catalyst, torque tighten clamp nuts.
8. Remove string (x2), connect multiplugs (x2), HEGO sensors.
9. Secure sensor lead in clip on heatshield.
10. Install rear exhaust silencer (refer to Workshop Manual procedure 09.00.KA Muffler & Bypass Valve Assembly - Remove for Access & Refit).
11. Lower vehicle on ramp.

LH Exhaust Manifold-Renew-Roadster Only

Repair Operation Time (ROT)	
Item	**Code**
LH Exhaust Manifold-Renew	**09.00.CB**

Removal

1. Disconnect vehicle battery.
2. Raise vehicle on ramp.
3. Remove heatshield deflector, front floor (refer to Workshop Manual procedure 09.04.AA Heatshield - Front Floor - Renew).
4. Remove LH front wheel arch liner (refer to Workshop Manual procedure 01.02.FB Wheel Arch Liner - Front - LH - Renew).
5. Remove nuts (x8), securing manifold to cylinder head.
6. Remove exhaust manifold, remove and discard gasket.

Installation

1. Clean manifold and mating face on engine. Install new gasket to engine.
2. Install manfold to engine.
3. Install nuts (x8) securing manifold to cylinder head (torque).
4. Install LH front wheel arch liner (refer to Workshop Manual procedure 01.02.FB Wheel Arch Liner - Front - LH - Renew).
5. Install heatshield deflector, front floor (refer to Workshop Manual procedure 09.04.AA Heatshield - Front Floor - Renew).
6. Lower vehicle on ramp.
7. Connect vehicle battery.

Heated Exhaust Gas Oxygen (HEGO) Sensor - Remove and Install

Repair Operation Time (ROT)	
Item	**Code**
Heated Exhaust Gas Oxygen (HEGO) Sensor - Remove and Install	**09.00.DB**

Removal

1. Raise the vehicle and make it safe.

WARNING
THE EXHAUST SYSTEM WILL BE VERY HOT AFTER OPERATION. LET THE EXHAUST COOL BEFORE YOU DO WORK. IF YOU DO NOT, PESONAL INJURY CAN OCCUR.

2. Release the two electrical connnectors for the Heated Exhaust Gas Oxygen (HEGO) sensor from the bracket.
3. Disconnect the two electrical connnectors from the HEGO sensor.
4. Move the two wiring harnesses for the HEGO sensor away.
5. Remove the two bolts that attach the bracket to the engine.
6. Remove the bracket.
7. Remove the two bolts that attach the heat shield to the torque tube.
8. Move the heat shield away.

9. Release the two wiring harnesses for the HEGO sensor from the clip on the heat shield.

CAUTION
Turn the electrical harness for the HEGO sensor when you remove the sensor in the step that follows. If you do not, the harness can be damaged.

10. Release the HEGO sensor from the catalytic converter.
11. Install an applicable length of string to the wiring harness and the electrical connector for the HEGO sensor.
12. Use the string to put the wiring harness for the HEGO sensor behind the heat shield.
13. Release the string from the electrical connector for the HEGO sensor.
14. Remove the HEGO sensor.
15. Clean the component mating faces.

Install

1. Put the HEGO sensor into position.
2. Attach an applicable length of string to the wiring harness for the HEGO sensor.
3. Use the string to put the wiring harness for the HEGO sensor behind the heat shield.
4. Remove and discard the string.

CAUTION
Turn the electrical harness for the HEGO sensor when you remove the sensor in the step that follows. If you do not, the harness can be damaged.

5. Install the HEGO sensor into the catalytic converter.
6. Tighten the HEGO sensor.
7. Put the heat shield into position.
8. Install and tighten the two bolts that attach the heat shield to the torque tube.
9. Install the two wiring harnesses for the HEGO sensor into the clip on the heat shield.
10. Put the bracket into position.
11. Install and tighten the two bolts that attach the bracket to the engine.
12. Connect the two electrical connnectors to the HEGO sensor.
13. Install the two electrical connnectors for the HEGO sensor into the bracket.

Silencer and Bypass Valve Assembly-Remove for Access/Refit-Coupe Only

Repair Operation Time (ROT)	
Item	**Code**
Silencer and Bypass Valve Assembly-Remove for Access/Refit	**09.00.KA**

Removal

1. Raise vehicle on ramp.
2. Remove rear undertray (refer to Workshop Manual procedure 01.02.PB Undertray - Rear - Renew).
3. Remove Allen bolts (x4), bumper diffuser to mounting brackets. Remove diffuser, collect securing brackets.
4. Disconnect both by-pass valve vacuum lines.

WARNING
THE EXHAUST SYSTEM WILL BE VERY HOT AFTER OPERATION. LET THE EXHAUST COOL BEFORE YOU DO WORK. IF YOU DO NOT, PESONAL INJURY CAN OCCUR.

5. Remove bolts (x4), rear exhaust pipes to silencer. Collect springs from bolts.
6. Remove bolts (x4), securing LH and RH silencer rear hanger brackets to body.
7. Remove bolts (x4), silencer front mountings to subframe.

WARNING
GET THE AID OF ONE MORE PERSON WHEN YOU REMOVE THE REAR EXHAUST SILENCER.
THE SILENCER IS HEAVY.

8. Position suitable lifter to support weight of silencer. With assistance, remove silencer.
9. Remove both rear rubber mountings and hanger brackets from silencer.

Installation

1. Clean muffler and mating faces on rear pipes.

WARNING
GET THE AID OF ONE MORE PERSON WHEN YOU INSTALL THE REAR EXHAUST SILENCER.
THE SILENCER IS HEAVY.

2. Position silencer on lifter. Install silencer, position rear hangers, install and torque tighten bolts (x4).
3. Position front mountings to subframe, install and torque tighten bolts (x4).
4. Align silencer to rear pipes, install springs (x4), install and torque tighten bolts (x4).

Ensure correct alignment of exhaust pipes and silencer before tightening of fixing clamps.

5. Check silencer to rear pipes for correct alignment and clearances.
6. Connect lines to both by-pass vacuum valves.
7. Position mounting brackets, install rear bumper diffuser. Install and tighten Allen bolts.
8. Install rear undertray (refer to Workshop Manual procedure 01.02.PB Undertray - Rear - Renew).
9. Lower vehicle on ramp.

Silencer and Bypass Valve Assembly-Remove for Access/Refit-Roadster Only

Repair Operation Time (ROT)	
Item	**Code**
Silencer and Bypass Valve Assembly-Remove for Access/Refit	**09.00.KA**

Removal

1. Raise vehicle on ramp.

2. Clean silencer and mating faces on rear pipes.
3. Remove Rear RH wheel arch liner (refer to Workshop Manual procedure 01.02.HB Wheel Arch Liner - Rear - RH - Renew).
4. Remove rear undertray (refer to Workshop Manual procedure 01.02.PB Undertray - Rear - Renew).
5. Apply a proprietary exhaust sealant around all clamp joints
6. Remove Allen bolts (x2), loosen Allen bolts (x2), bumper diffuser to mounting brackets and remove diffuser.
7. Position silencer on lifter.
8. Install silencer, position rear hangers to body, install and torque tighten bolts (x4).
9. Remove Rear LH wheel arch liner.
10. Disconnect both by-pass valve vacuum lines.
11. Remove Allen bolts (x2), loosen Allen bolts (x2), bumper diffuser to mounting brackets and Remove diffuser.
12. Position front mountings to subframe, install and torque tighten bolts (x4).
13. Loosen clamp nuts (x2), remove stub pipes (x2).
14. Disconnect both by-pass valve vacuum lines.
15. Align silencer to rear pipes, install springs onto bolts (x4), install and torque tighten bolts (x4).
16. Remove bolts (x4), rear exhaust pipes to silencer. Collect springs from bolts.
17. Loosen clamp nuts (x2), remove stub pipes (x2).
18. Install stub pipes (x2), centralise stub pipes to exhaust trim finisher. Torque tighten clamp nuts (x2).
19. Remove bolts (x4), securing LH and RH silencer rear hanger brackets to body.
20. Remove bolts (x4), rear exhaust pipes to silencer and collect springs from bolts.
21. Check silencer to rear pipes for correct alignment and clearances.
22. Remove bolts (x4), silencer front mountings to subframe.
23. Remove bolts (x4), securing LH and RH silencer rear hanger brackets to body.
24. Connect lines to both by-pass vacuum valves.
25. Position suitable lifter to support weight of silencer. With assistance, remove silencer.
26. Remove bolts (x4), silencer front mountings to subframe.
27. Install rear bumper diffuser and install and tighten Allen bolts (x4).
28. Install Rear RH wheel arch liner (refer to Workshop Manual procedure 01.02.HB Wheel Arch Liner - Rear - RH - Renew).

Installation

1. Position suitable lifter to support weight of silencer. With assistance, remove silencer.
2. Clean silencer and mating faces on rear pipes.
3. Install Rear LH wheel arch liner.
4. Apply a proprietary exhaust sealant around all clamp joints
5. Lower vehicle on ramp.
6. Position silencer on lifter. Install silencer, position rear hangers to body, install and torque tighten bolts (x4).
7. Position front mountings to subframe, install and torque tighten bolts (x4).
8. Align silencer to rear pipes, install springs onto bolts (x4), install and torque tighten bolts (x4).
9. Install stub pipes (x2), centralise stub pipes to exhaust trim finisher and torque tighten clamp nuts (x2).
10. Check silencer to rear pipes for correct alignment and clearances.
11. Connect lines to both by-pass vacuum valves.
12. Install rear bumper diffuser and install and tighten Allen bolts (x4).
13. Install rear undertray (refer to Workshop Manual procedure 01.02.PB Undertray - Rear - Renew).
14. Lower vehicle on ramp.

Silencer and Bypass Valve Assembly-Renew

Repair Operation Time (ROT)	
Item	**Code**
Silencer and Bypass Valve Assembly-Renew	**09.00.KB**

Removal

1. Raise vehicle on ramp.
2. **Coupe Only** - Remove rear undertray (refer to Workshop Manual procedure 01.02.PB Undertray - Rear - Renew).
3. **Roadster Only** - Remove RH rear wheel arch liner (refer to Workshop Manual procedure 01.02.HB Wheel Arch Liner - Rear - RH - Renew).
4. **Roadster Only** - Remove LH rear wheel arch liner.
5. Remove Allen bolts (x2, loosen Allen bolts (x2), securing bumper diffuser to mounting brackets. Remove diffuser.
6. Disconnect both by-pass valve vacuum lines.

WARNING
THE EXHAUST SYSTEM WILL BE VERY HOT AFTER OPERATION. LET THE EXHAUST COOL BEFORE YOU DO WORK. IF YOU DO NOT, PESONAL INJURY CAN OCCUR.

7. Loosen clamp nuts (x2), remove stub pipes (x2).
8. Remove bolts (x4), rear exhaust pipes to silencer. Collect springs from bolts.
9. Remove bolts (x4), securing LH and RH silencer rear hanger brackets to body.
10. Remove bolts (x4), muffler front mountings to subframe. Remove mountings from silencer.

WARNING
GET THE AID OF ONE MORE PERSON WHEN YOU REMOVE THE REAR EXHAUST SILENCER.
THE SILENCER IS HEAVY.

11. Position suitable lifter to support weight of silencer. With assistance, remove silencer.
12. Remove both rear rubber mountings and hanger brackets from silencer.

Installation

1. Clean silencer and mating faces on rear pipes and stub pipes.
2. Install both rear rubber mountings and hanger brackets to silencer.

WARNING
GET THE AID OF ONE MORE PERSON WHEN YOU INSTALL THE REAR EXHAUST SILENCER.
THE SILENCER IS HEAVY.

3. Position silencer on lifter. Install silencer, position hangers, install and tighten bolts (x4).
4. Install front mountings to silencer, install and tighten bolts (x4).
5. Align silencer to rear pipes. Install springs (x4), and torque tighten bolts (x4).
6. Install and align stub pipes (x2) to silencer and trims in bumper. Align and tighten clamp bolts.
7. Check silencer to rear pipes for correct alignment and clearances.
8. Install stub pipes (x2), install clamps (x2), centralise stub pipes to exhaust trim finisher, torque tighten clamp nuts (x2).

Ensure correct alignment of exhaust pipes and silencer before tightening of fixing clamps.

9. Check silencer to rear pipes for correct alignment and clearances.
10. Connect lines to both by-pass vacuum valves.
11. Install rear bumper diffuser. Install and tighten Allen bolts (x4).
12. **Roadster Only** - Install RH rear wheel arch liner (refer to Workshop Manual procedure 01.02.HB Wheel Arch Liner - Rear - RH - Renew).
13. Roadster Only - Install LH rear wheel arch liner.
14. **Coupe Only** - Install rear undertray (refer to Workshop Manual procedure 01.02.PB Undertray - Rear - Renew).
15. Lower vehicle on ramp.

Exhaust Rear Silencer Mounting Rubber-Renew

Repair Operation Time (ROT)	
Item	**Code**
Exhaust Rear Silencer Mounting Rubber-Renew	**09.00.LB**

Removal

1. Raise vehicle on ramp.
2. Remove Allen bolts (x4), bumper diffuser to mounting brackets. Remove diffuser, collect mounting brackets.

WARNING
THE EXHAUST SYSTEM WILL BE VERY HOT AFTER OPERATION. LET THE EXHAUST COOL BEFORE YOU DO WORK. IF YOU DO NOT, PESONAL INJURY CAN OCCUR.

3. Remove bolts (x2), securing silencer rear hanger brackets to body.
4. Release/remove rubber mounting and hanger bracket from silencer bracket.
5. Remove rubber mounting from hanger bracket.

Installation

1. To aid assembly, apply liquid soap to rubber mounting.
2. Install rubber mounting on hanger bracket.
3. Install rubber mounting on muffler bracket.
4. Align hanger bracket to body, install and torque tighten bolts (x2).
5. Position mounting brackets, install bumper diffuser, install and torque tighten Allen bolts (x4).
6. Lower vehicle on ramp.

Exhaust System-Renew

Repair Operation Time (ROT)	
Item	**Code**
Exhaust System-Renew	**09.00.MB**

1. Disconnect vehicle battery.
2. Raise vehicle on ramp.

WARNING
THE EXHAUST SYSTEM WILL BE VERY HOT AFTER OPERATION. LET THE EXHAUST COOL BEFORE YOU DO WORK. IF YOU DO NOT, PESONAL INJURY CAN OCCUR.

3. Remove RH exhaust manifold.
4. Remove RH front wheel arch liner (refer to Workshop Manual procedure 01.02.GB Wheel Arch Liner - Front - RH - Renew).
5. Remove LH front wheel arch liner (refer to Workshop Manual procedure 01.02.FB Wheel Arch Liner - Front - LH - Renew).
6. Remove heatshield deflector, front floor (refer to Workshop Manual procedure 09.04.AA Heatshield - Front Floor - Renew).
7. Loosen EGR pipe in valve.
8. Remove (nuts x2) EGR pipe from manifold, discard gasket and tie aside.

9. Remove nut (x8) securing RH exhaust manifold to cylinder head (refer to Fig. 1).

Figure 1

10. Remove nut (x2) on RH engine mounting.
11. Raise engine by approximately 25mm.
12. Remove RH exhaust manifold from vehicle and discard gasket.
13. Remove heatshield from manifold (bolts x4)
14. Remove nuts (x8) securing LH exhaust manifold to cylinder head.
15. Remove exhaust manifold, remove and discard gasket.

Installation

1. Clean LH exhaust manifold and mating face on cylinder head. Install new manifold gasket.
2. Install LH exhaust manifold to cylinder head.
3. Install and torque tighten nuts (x8) securing exhaust manifold to cylinder head.
4. Clean exhaust manifold and mating face on engine. Install new gasket to engine.
5. Install heatshield to manifold (bolts x4)
6. Install RH exhaust manifold to cylinder head.
7. Install nut (x8) securing manifold to cylinder head (torque).
8. Lower engine.
9. Install nuts (x2) on engine mounts (torque).
10. Install (nuts x2) EGR pipe from manifold, clean mating face and fit new gasket (torque).
11. Install heatshield deflector, front floor (refer to Workshop Manual procedure 09.04.AA Heatshield - Front Floor - Renew).
12. Tighten EGR pipe in valve (torque).
13. Install RH front wheel arch liner (refer to Workshop Manual procedure 01.02.GB Wheel Arch Liner - Front - RH - Renew
14. Install LH wheel arch liner (refer to Workshop Manual procedure 01.02.FB Wheel Arch Liner - Front - LH - Renew).
15. Lower vehicle on ramp.
16. Connect vehicle battery.

Exhaust System (Excluding Manifold/ Downpipes)-Renew

Repair Operation Time (ROT)	
Item	**Code**
Exhaust System (Excluding Manifold/ Downpipes)-Renew	**09.00.NB**

Removal

1. Raise vehicle on ramp.
2. Remove undertrays - vehicle set (refer to Workshop Manual procedure 01.02.PD Undertrays - Vehicle Set - Renew).
3. Remove Allen bolts(x4), bumper diffuser to mounting brackets. Remove diffuser
4. Disconnect both by-pass valve vacuum lines.

WARNING
TO AVOID PERSONAL INJURY, I.E. SEVERE BURNS TO THE SKIN, ALLOW EXHAUST SYSTEM TO COOL DOWN BEFORE REMOVING EXHAUST SYSTEM COMPONENTS.

5. Remove bolts (x4), securing LH and RH silencer rear hanger brackets to body. Remove hanger brackets.
6. Remove bolts (x4), rear exhaust pipes to silencer. Collect springs from bolts
7. Remove bolts (x4), silencer front mountings to subframe. Remove mountings from silencer.

WARNING
GET THE AID OF ONE MORE PERSON WHEN YOU REMOVE THE REAR EXHAUST SILENCER.
THE SILENCER IS HEAVY.

8. Position suitable lifter to support weight of silencer. with assistance, remove silencer.
9. Mark rear stub pipes to silencer for assembly purposes.
10. Loosen clamps (x2), rear stub pipes to silencer. Remove stub pipes and clamps.
11. Remove bolts (x4), remove rear subframe cross brace.
12. Loosen clamps (x2), release RH and LH rear pipes from centre pipe.
13. Remove rear pipes through subframe.
14. Loosen clamps (x2), centre pipe to LH and RH catalysts.
15. **Coupe Only** - Release centre pipe from mountings, LH and RH catalysts, remove centre pipe.
16. **Roadster Only** - Remove centre exhaust mounting bolts (x4).
17. Release LH and RH catalysts, remove centre pipe.
18. Disconnect multiplugs (x4), from each catalyst.

Attach lengths of string to the HEGO sensor multiplugs. This enables routing the HEGO sensor harness behind the exhaust heat shield on assembly.

19. **Coupe Only** - Secure sufficient lengths of string to HEGO sensor multiplugs for assembly purposes.

20. **Coupe Only** - Remove cable ties (x2) from LH and RH HEGO sensor harnesses.
21. Remove nuts (x6), securing each catalyst to exhaust manifolds.
22. With assistance, remove catalysts (x2), release HEGO sensor harnesses from behind heat shield.
23. **Coupe Only** - Remove string from multiplugs.
24. Discard gaskets (x2) from exhaust manifolds.
25. **Coupe Only** - Remove bolts (x11), heatshields to centre, LH and RH rear pipes. Remove heatshields.

Installation

1. Clean heatshields.
2. **Coupe Only** - Position heatshields to centre, LH and RH rear pipes. Install and tighten bolts.
3. Install new flange gaskets to exhaust manifolds.

Attach lengths of string to the HEGO sensor multiplugs. This enables routing the HEGO sensor harness behind the exhaust heat shield on assembly.

4. With assistance, install both catalysts, install and torque tighten nuts (x6).
5. **Roadster Only** - Install bolts (x4) and nuts (x2) to catalyst heatshield.
6. **Coupe Only** - Feed HEGO sensor harnesses behind heat shield, secure harnesses with cable ties.
7. Apply exhaust sealant to centre pipe, install centre pipe to catalysts and centre mounting. Do not torque clamp nuts at this stage.
8. **Roadster Only** - Install centre exhaust mounting bolts (x4).
9. Apply exhaust sealant to LH and RH rear pipes.
10. Install LH and RH rear pipes to centre pipe. Do not torque clamp nuts at this stage.
11. Install both rear rubber mountings and hanger brackets to silencer.

WARNING
GET THE AID OF ONE MORE PERSON WHEN YOU INSTALL THE REAR EXHAUST SILENCER.
THE SILENCER IS HEAVY.

12. Position silencer on lifter. Install silencer, position hangers, install and tighten bolts (x4).
13. Install front mountings to silencer, install and tighten bolts (x4).
14. Align silencer to rear pipes, install springs (x4) and bolts (x4). Do not torque bolts at this stage.
15. Install and align stub pipes (x2) to silencer and to trims in bumper.
16. Align clamps, do not torque tighten.
17. Connect lines to both by-pass vacuum valves.
18. **Coupe Only** - Remove string from multiplugs.
19. Connect multiplugs to HEGO sensors.

Ensure correct alignment of exhaust pipes and silencer before tightening of fixing clamps.

20. Working from front to rear, set all exhaust to body clearances.
21. Tighten all exhaust fixings to the correct torque.
22. Install subframe cross brace, install and torque tighten bolts (x4).
23. Position mounting brackets, install rear bumper diffuser. Install and tighten Allen bolts.
24. Install undertrays - vehicle set (refer to Workshop Manual procedure 01.02.PD Undertrays - Vehicle Set - Renew).
25. Lower vehicle on ramp.

ASTON MARTIN
ASTON MARTIN

Exhaust System (09.00)

Pipes and Supports (09.03)

Specifications

Torque Figures		
Description	Nm	lb. / ft.
Catalyst (nuts / bolts)	25.5-34.5	19-25.5
Catalyst (clamps)	19-22	14.5-16.5
Centre pipe to rear pipe (clamp)	39-51	29-38
Rear Pipe to Silencer (bolt)	28-33	21-24.5

Maintenance

RH/LH Catalyst and Pipe Assembly-Renew

Repair Operation Time (ROT)		
Item		**Code**
Catalyst and Pipe Assembly-Renew	RH	**09.00.BB**
Catalyst and Pipe Assembly-Renew	LH	**09.00.AB**

Removal

1. Raise vehicle on ramp.

WARNING
TO AVOID PERSONAL INJURY, I.E. SEVERE BURNS TO THE SKIN, ALLOW EXHAUST SYSTEM TO COOL DOWN BEFORE REMOVING EXHAUST SYSTEM COMPONENTS.

2. Remove rear exhaust silencer (refer to Workshop Manual procedure 09.00.KA Silencer and Bypass Valve Assembly - Remove for Access and Refit).
3. Disconnect multiplugs (x2), HEGO sensors.
4. Release sensor lead from clip on heatshield.

Attach lengths of string to the HEGO sensor multiplugs. This enables routing the HEGO sensor harness behind the exhaust heat shield on assembly.

5. Secure sufficient lengths of string to HEGO sensor multiplugs for assembly purposes.
6. Loosen LH and RH clamp nuts, catalysts to centre pipe.
7. Remove nuts (x3), catalyst to exhaust manifold.
8. With assistance, manoeuvre exhaust centre pipe assembly rearwards to release from catalysts.
9. With assistance, release and support weight of LH/RH catalyst from exhaust manifold.
10. Manoeuvre HEGO sensor leads and remove cable tie. Release HEGO sensor leads from behind heat shield. Remove string from HEGO multiplugs.
11. Remove catalyst assembly.
12. Remove and discard gasket.
13. Remove HEGO sensors (x2) from catalyst.

Installation

1. Clean catalyst, mating joint faces and HEGO sensors.
2. Install and tighten HEGO sensors (x2) to catalyst.
3. Install new gasket to exhaust manifold flange.

Attach lengths of string to the HEGO sensor multiplugs. This enables routing the HEGO sensor harness behind the exhaust heat shield on assembly.

4. With assistance, position catalyst, secure string (x2) to HEGO multiplugs, feed sensor leads behind heat shield. Install catalyst to exhaust manifold.
5. Install and torque tighten nuts (x3), catalyst to exhaust manifold.
6. Align centre pipe assembly to catalyst, torque tighten clamp nuts.
7. Remove string (x2), connect multiplugs (x2), HEGO sensors.
8. Secure sensor lead in clip on heatshield.
9. Install rear exhaust silencer (refer to Workshop Manual procedure 09.00.KA Silencer and Bypass Valve Assembly - Remove for Access and Refit).
10. Lower vehicle on ramp.

Exhaust Centre Pipe-Renew

Repair Operation Time (ROT)	
Item	**Code**
Exhaust Centre Pipe-Renew	**09.00.BC**

Removal

1. Raise vehicle on ramp.

WARNING
TO AVOID PERSONAL INJURY, I.E. SEVERE BURNS TO THE SKIN, ALLOW EXHAUST SYSTEM TO COOL DOWN BEFORE REMOVING EXHAUST SYSTEM COMPONENTS.

2. Remove pipe assembly exhaust rear - RH (refer to Workshop Manual procedure 09.00. Pipe Assembly - Exhaust - Rear - RH - Renew).
3. Remove pipe assembly exhaust rear - LH (refer to Workshop Manual procedure 09.00.JB Pipe Assembly - Exhaust - Rear - LH - Renew).
4. Loosen clamp nuts (x2), centre pipe to LH and RH catalysts.
5. Release centre pipe from mountings, LH and RH catalysts, remove centre pipe.
6. Remove bolts (x3), heatshield to centre pipe, remove heatshield.
7. Remove Torx screws (x4), mounting bracket to centre pipe, remove bracket.

Installation

1. Use a proprietary exhaust sealant around all pipe joints prior to installation of exhaust system.
2. Install mounting bracket to centre pipe, install and tighten Torx screws (x4).
3. Install heatshield to centre pipe, install and tighten bolts (x3).
4. Apply exhaust sealant to centre pipe joints.

5. Install centre pipe to both catalysts and centre mountings. Do not torque clamp nuts at this stage.
6. Install pipe assembly exhaust rear - LH (refer to Workshop Manual procedure 09.00.JB Pipe Assembly - Exhaust - Rear - LH - Renew).
7. Install pipe assembly exhaust rear - RH (refer to Workshop Manual procedure 09.00.HB Pipe Assembly - Exhaust - Rear - RH - Renew).
8. Align and torque tighten exhaust system nuts/bolts.
9. Lower vehicle on ramp.

RH Exhaust Manifold-Renew

Repair Operation Time (ROT)		
Item		**Code**
Exhaust Manifold-Renew	RH	**09.00.CA**

Removal

1. Disconnect vehicle battery.
2. Raise vehicle on ramp.
3. Remove RH front wheel arch liner (refer to Workshop Manual procedure 01.02.GB Wheel Arch Liner - Front - RH - Renew).

WARNING
TO AVOID PERSONAL INJURY, I.E. SEVERE BURNS TO THE SKIN, ALLOW EXHAUST SYSTEM TO COOL DOWN BEFORE REMOVING EXHAUST SYSTEM COMPONENTS.

4. Loosen EGR pipe in valve.
5. Remove heatshield deflector, front floor (refer to Workshop Manual procedure 09.04.AA Heatshield - Front Floor - Renew).
6. Remove (nuts x2) EGR pipe from manifold, discard gasket and tie aside.
7. Remove nut (x8) securing manifold to cylinder head (refer to Fig. 1).

Fig. 1

8. Remove nut (x2) on engine mountings.
9. Raise engine by approximately 25mm.
10. Remove exhaust manifold from vehicle and discard gasket.
11. Remove heatshield from manifold (bolts x4)

Installation

1. Clean exhaust manifold and mating face on engine. Install new gasket to engine.
2. Install heatshield to manifold (bolts x4)
3. Install manifold to engine.
4. Install nut (x8) securing manifold to cylinder head.
5. Lower engine.
6. Install nuts (x2) on engine mounts.
7. Install (nuts x2) EGR pipe from manifold, clean mating face and fit new gasket (torque).
8. Install heatshield deflector, front floor (refer to Workshop Manual procedure 09.04.AA Heatshield - Front Floor - Renew).
9. Tighten EGR pipe in valve (torque).
10. Install RH front wheel arch liner (refer to Workshop Manual procedure 01.02.GB Wheel Arch Liner - Front - RH - Renew).
11. Lower vehicle on ramp.
12. Connect vehicle battery.

LH Exhaust Manifold-Renew

Repair Operation Time (ROT)		
Item		**Code**
Exhaust Manifold-Renew	LH	**09.00.CB**

Removal

1. Disconnect vehicle battery.
2. Raise vehicle on ramp.

WARNING
TO AVOID PERSONAL INJURY, I.E. SEVERE BURNS TO THE SKIN, ALLOW EXHAUST SYSTEM TO COOL DOWN BEFORE REMOVING EXHAUST SYSTEM COMPONENTS.

3. Remove heatshield deflector, front floor (refer to Workshop Manual procedure 09.04.AA Heatshield - Front Floor - Renew).
4. Remove LH front wheel arch liner (refer to Workshop Manual procedure 01.02.FB Wheel Arch Liner - Front - LH - Renew).

5. Remove nuts (x8), securing manifold to cinder head (refer to Fig. 1).

Fig. 1

6. Remove exhaust manifold, remove and discard gasket.

Installation

1. Clean manifold and mating face on engine and install new gasket to engine.
2. Install manifold to engine.
3. Install nuts (x8) securing manifold to cylinder head.
4. Install LH front wheel arch liner (refer to Workshop Manual procedure 01.02.FB Wheel Arch Liner - Front - LH - Renew).
5. Install heatshield deflector, front floor (refer to Workshop Manual procedure 09.04.AA Heatshield - Front Floor - Renew).
6. Lower vehicle on ramp.
7. Connect vehicle battery.

RH Exhaust Manifold Gasket-Renew

Repair Operation Time (ROT)		
Item		**Code**
Exhaust Manifold Gasket-Renew	RH	**09.00.CC**

Removal

1. Remove wheel arch liner (refer to Workshop Manual procedure 01.02.GB Wheel Arch Liner - Front - RH - Renew).

WARNING
TO AVOID PERSONAL INJURY, I.E. SEVERE BURNS TO THE SKIN, ALLOW EXHAUST SYSTEM TO COOL DOWN BEFORE REMOVING EXHAUST SYSTEM COMPONENTS.

2. Loosen EGR pipe in valve.
3. Remove heatshield deflector, front floor (refer to Workshop Manual procedure 09.04.AA Heatshield - Front Floor - Renew).
4. Remove nuts (x2), EGR pipe to manifold, discard gasket and tie EGR pipe aside.
5. Remove nut (x8) securing exhaust manifold to cylinder head.
6. Remove nuts (x2) on engine mountings.
7. Raise engine by approximately 25mm. (care to be taken as inlet manifold can foul).
8. Remove exhaust manifold from vehicle and discard gasket.

Installation

1. Install new gasket to engine, clean mating face on engine.
2. Install manifold to engine.
3. Install nut (x8) securing manifold to cylinder head (torque).
4. Lower engine.
5. Install nuts (x2) on engine mounts (torque).
6. Install (nuts x2) EGR pipe from manifold, clean mating face and fit new gasket (torque).
7. Install heatshield deflector, front floor (refer to Workshop Manual procedure 09.04.AA Heatshield - Front Floor - Renew).
8. Tighten EGR pipe in valve (torque).
9. Install wheel arch liner (refer to Workshop Manual procedure 01.02.GB Wheel Arch Liner - Front - RH - Renew).

LH Exhaust Manifold Gasket-Renew

Repair Operation Time (ROT)		
Item		**Code**
Exhaust Manifold Gasket-Renew	RH	**09.00.CD**

Removal

WARNING
TO AVOID PERSONAL INJURY, I.E. SEVERE BURNS TO THE SKIN, ALLOW EXHAUST SYSTEM TO COOL DOWN BEFORE REMOVING EXHAUST SYSTEM COMPONENTS.

1. Remove heatshield deflector, front floor (refer to Workshop Manual procedure 09.04.AA Heatshield - Front Floor - Renew).
2. Remove LH wheel arch liner (refer to Workshop Manual procedure 01.02.FB Wheel Arch Liner - Front - LH - Renew).
3. Remove nut (x8) securing manifold to cylinder head.
4. Remove manifold from vehicle and discard gasket.

Installation

1. Install new gasket to engine, clean mating face on engine.
2. Install manifold to engine.
3. Install nut (x8) securing manifold to cylinder head (torque).
4. Install LH wheel arch liner (refer to Workshop Manual procedure 01.02.FB Wheel Arch Liner - Front - LH - Renew).

5. Install heatshield deflector, front floor (refer to Workshop Manual procedure 09.04.AA Heatshield - Front Floor - Renew).

Exhaust Gas Temperature Sensor-Renew

Repair Operation Time (ROT)	
Item	**Code**
Exhaust Gas Temperature Sensor-Renew	**09.00.DA**

Removal

1. Raise vehicle on ramp.

WARNING
TO AVOID PERSONAL INJURY, I.E. SEVERE BURNS TO THE SKIN, ALLOW EXHAUST SYSTEM TO COOL DOWN BEFORE REMOVING EXHAUST SYSTEM COMPONENTS.

2. Remove rear exhaust silencer (refer to Workshop Manual procedure 09.00.KA Silencer and Bypass Valve Assembly - Remove for Access and Refit).
3. Disconnect sensor multiplugs (x2.
4. Release sensor leads from clips (x2) on heatshield.

Attach lengths of string to the HEGO sensor multiplugs. This enables routing the HEGO sensor harness behind the exhaust heat shield on assembly.

5. Secure sufficient lengths of string to sensor multiplugs for assembly purposes.
6. Loosen rear LH and RH clamp nuts, catalysts to centre pipe.
7. Remove nuts (x3), catalyst to exhaust manifold.
8. With assistance, manoeuvre exhaust centre pipe assembly rearwards to release from catalysts.
9. With assistance, release and support weight of LH catalyst from exhaust manifold.
10. Manoeuvre sensor leads and remove cable tie. Release sensor leads from behind heat shield. Secure cable tie. Remove string from multiplugs.
11. Remove catalyst assembly.
12. Remove and discard gasket.
13. Remove sensor from catalyst.

Installation

1. Clean catalyst mating joint faces.
2. Install and tighten sensor (x2) (torque).
3. Apply proprietary exhaust sealant around pipe joints.
4. Install new gasket to exhaust manifold flange.

Attach lengths of string to the HEGO sensor multiplugs. This enables routing the HEGO sensor harness behind the exhaust heat shield on assembly.

5. With assistance, position catalyst, secure string (x2) to multiplugs, feed sensor leads behind heat shield. Install catalyst to exhaust manifold.
6. Install and torque tighten nuts (x3), catalyst to exhaust manifold.
7. Align centre pipe assembly to catalyst, torque tighten clamp nuts.
8. Remove string (x2), connect multiplugs (x2), sensors.
9. Secure sensor leads in clips on heatshield.
10. Install rear exhaust silencer (refer to Workshop Manual procedure 09.00.KA Silencer and Bypass Valve Assembly - Remove for Access and Refit).
11. Lower vehicle on ramp.

RH/LH Rear Exhaust Pipe Assembly-Renew

Repair Operation Time (ROT)		
Item		**Code**
Rear Exhaust Pipe Assembly-Renew	RH	**09.00.HB**
Rear Exhaust Pipe Assembly-Renew	LH	**09.00.JB**

Removal

1. Raise vehicle on ramp.
2. Remove rear undertray.

WARNING
TO AVOID PERSONAL INJURY, I.E. SEVERE BURNS TO THE SKIN, ALLOW EXHAUST SYSTEM TO COOL DOWN BEFORE REMOVING EXHAUST SYSTEM COMPONENTS.

3. Remove rear silencer assembly (refer to Workshop Manual procedure 09.00.KA Silencer and Bypass Valve Assembly - Remove for Access and Refit).
4. Remove bolts (x4), cross brace.
5. Loosen clamp nut, release/remove rear intermediate pipe from centre pipe.
6. Remove rear intermediate pipe through subframe.
7. Remove bolts (x4), heat shields (x2).
8. Remove clamp nut, bolt and washers (x2) from rear intermediate pipe.

Installation

1. Clean rear intermediate pipe and mating faces on centre pipe.
2. Install clamp bolt, washers and nut.
3. Position heat shields (x2), install and torque bolts (x4).
4. Apply a proprietary exhaust sealant to clamp joint.
5. Install rear intermediate pipe to centre pipe.
6. Align rear intermediate pipe to silencer.
7. Install rear silencer assembly (refer to Workshop Manual procedure 09.00.KA Silencer and Bypass Valve Assembly - Remove for Access and Refit).
8. Torque tighten clamp nut.
9. Install cross brace, install and torque tighten bolts (x4).
10. Install rear undertray.
11. Lower vehicle on ramp.

ASTON MARTIN
ASTON MARTIN

Fuel (10.00)

Contents

Fuel Tank and Lines (10.01) 10-1-2
Description 1-2
Fuel Tank.....1-3
Fuel Pumps.....1-3
Jet Pumps 1-4
Filler Neck and Check Valve 1-4
Valves and Sensors.....1-5
Fuel System Schematic.....1-5
Evaporative Loss System.....1-6
System Operation 1-6
Fuel Tank Vents and Control Valves 1-6
Safety Precautions 1-7
Specifications.....1-7
Maintenance.....1-8
Fuel System 1-8
Fuel Filter Assembly-Renew 1-8
Fuel Pump and Reservoir Assembly-Renew 1-9
Fuel Tank and Canister Assembly-Renew 1-11
Fuel Tank and Canister Assembly-Remove for Access/Refit 1-13
Fuel Tank Sender Assembly-Renew.....1-15
Fuel Vapour Pipe Assembly-Renew.....1-16
Fuel Supply and Vapour Pipe Assembly-Renew....1-17
Manifold Supply Fuel Pipe Assembly- Renew 1-17

Fuel (10.00)

Fuel Tank and Lines (10.01)

Description

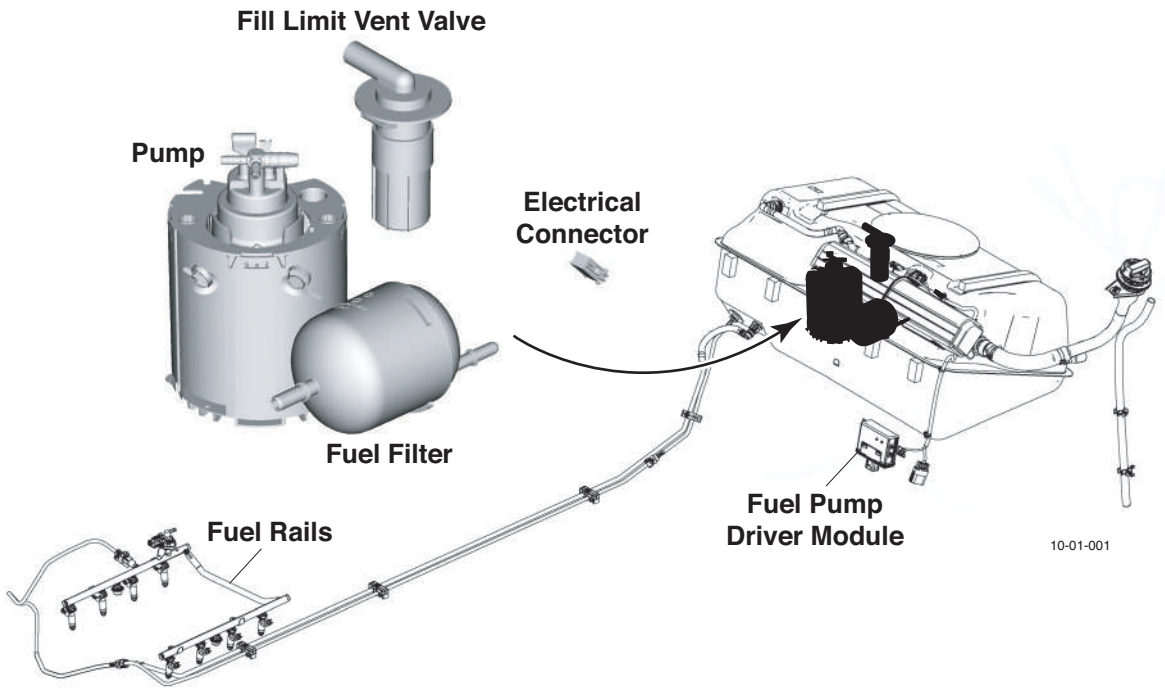

This vehicle uses a return less fuel system in which the fuel pump, controlled by the fuel pump driver module, is run to supply fuel through one in-tank filter to the fuel rail (Refer to 'Fuel Charging System (03.04)', page 3-5-1). A pressure sensor and a temperature sensor are fitted on the primary fuel rail. The fuel pump speeds are varied as required to regulate the fuel pressure in the fuel rails.

Fuel Tank

The fuel tank incorporates a single filler neck and check valve, internal fuel pump, internal fuel filter, a sender unit and an 'on board refuelling vapour recovery' system.

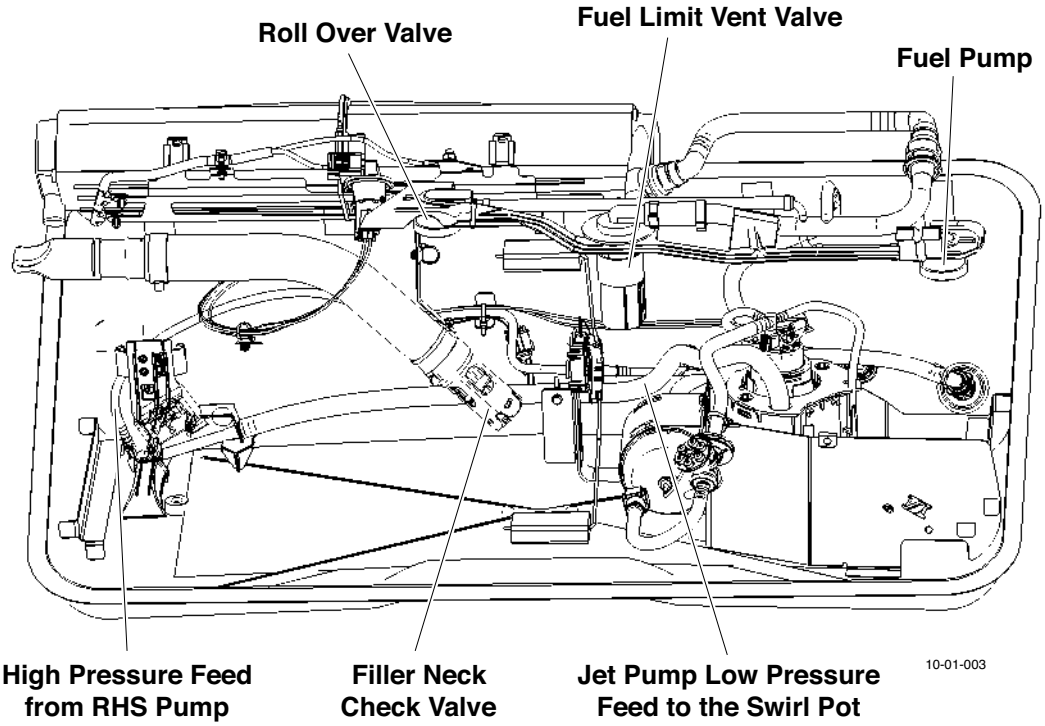

Fuel Pumps

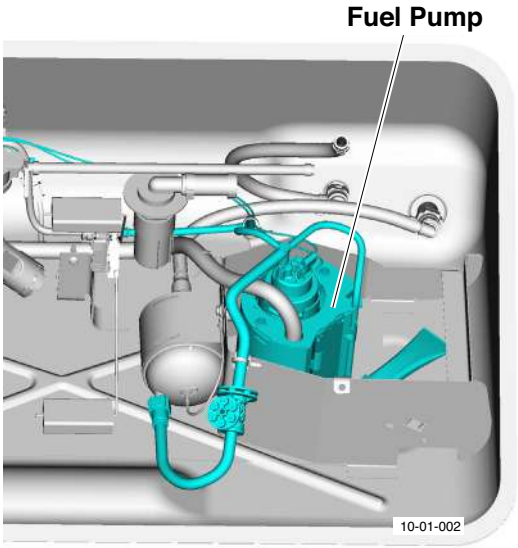

The modular fuel pump is immersed in the base of the fuel tank. The pump can deliver up to 150 litres/hour. The in-tank fuel line connects to the external line using a quick-fit connector in the base of the fuel tank.

During normal running, pressurised fuel from each fuel pump passes from the tank, through an 3 micron in-tank fuel filter to one of the two fuel rails on the engine.

Fuel temperature is measured on the primary fuel rail. If fuel temperature becomes excessive, the fuel pressure is increased to prevent fuel vaporisation (boiling).

Fuel pressure is measured by sensors on each fuel rail. The fuel pressure to each rail is regulated as required by continuously changing the run speed of the associated fuel pump. Maximum pressure in the system is limited to 5.3 bar by in-tank pressure regulators.

A constant head of fuel is maintained in the fuel pump modules to ensure that the pumps cannot run dry in a 'low fuel' situation.

Jet Pumps

Fuel feed from the fuel pumps is split three ways:

1. Feed to the fuel rails.
2. Feed to the swirl pot jet pump (integral to the FDM).
3. Feed to the externally mounted jet pump (LHS).

   These pumps ensure that the appropriate pump swirl pot is maintained with fuel under severe dynamic conditions.

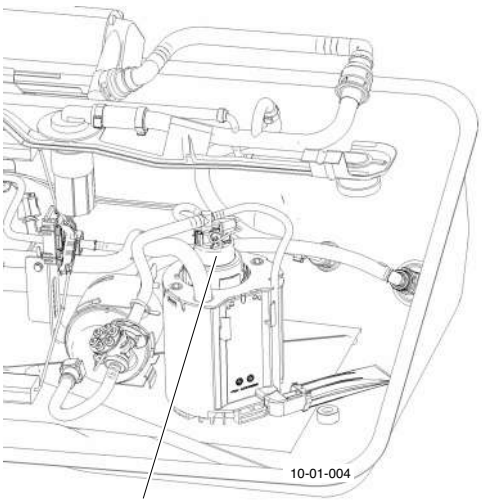

Jet Pump Assy

Filler Neck and Check Valve

Incoming fuel passes through a check valve at the base of the filler neck. This valve is normally held closed by light spring pressure. The valve opens under the pressure of incoming fuel and closes again when fuel flow ceases. The check valve prevents surging of fuel in the filler neck.

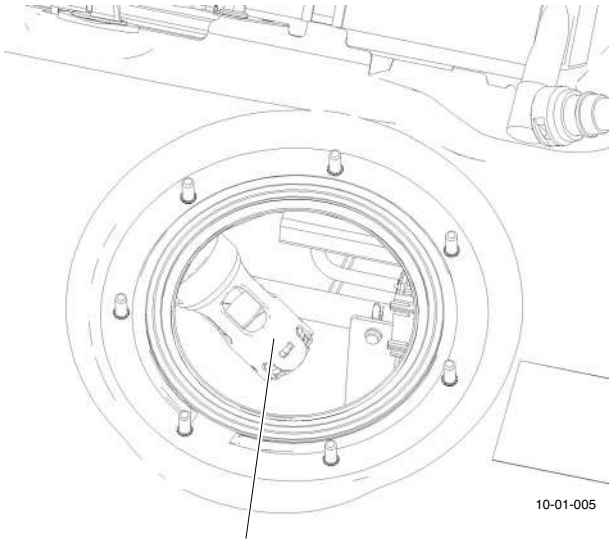

Check Valve

The filler neck also forms part of the on-board refuelling vapour recovery system. Incoming fuel forms a liquid seal in the filler neck. Thus any air displaced during fuel tank filling cannot escape via the filler neck.

Valves and Sensors

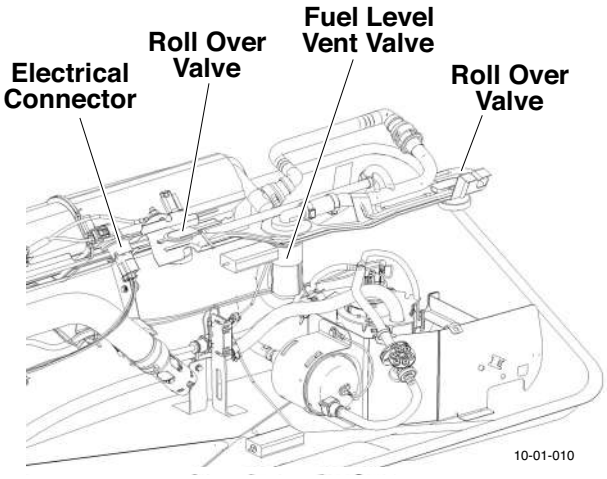

Fuel Limit Vent Valve (FLVV)

This valve contains a float which rises to cut off the path for displaced air when the fuel level rises towards maximum during fuel filling. This causes a rapid pressure build up in the tank which triggers the cut-off valve in the fuel delivery nozzle. This discourages overfilling of the fuel tank.

The FLVV also includes an over pressure relief valve set at about 2 psi to vent the tank if all other vents fail.

Roll Over Valves

The roll over valves purpose is to vent the highest point of the tank. If the tank is grossly overfilled (e.g. many clicks over the normal filler nozzle cut-off), the FLVV will suffer a hydraulic lock. The roll over vent valve allows venting of the tank at the highest possible level in this situation.

All three valves allow the tank to breath until it is inverted when they will close to prevent fuel spill. The fuel level vent valve controls the fuel height of the tank by creating a pressure spike inside the tank which shuts of the fill nozzle.

If the vehicle is inverted in an accident, this valve will close to prevent leakage of liquid fuel.

Fuel System Schematic

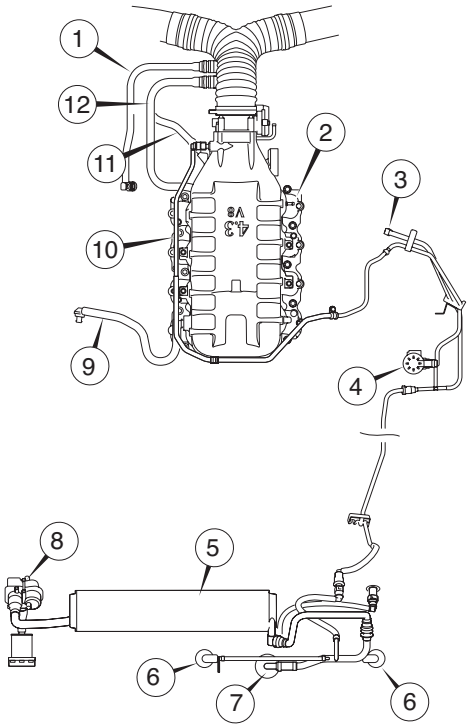

1. Positive crankcase ventilation
2. Engine emission vacuum control
3. Service port
4. Purge valve
5. Carbon canister
6. Roll over valve
7. Fill limit vent valve
8. Leak detection module
9. Brake booster (LHD shown)
10. Purge line
11. Part load breather
12. Secondary air

10-01-012

Evaporative Loss System

Fuel vapour is displaced from the fuel tank during filling. Vapour is also displaced due to fuel evaporation in higher temperatures. Displaced fuel vapour is absorbed in the carbon canister filter located on top of the fuel tank.

During normal engine running, absorbed fuel vapour is purged from the carbon canister and mixed with the normal fuel/air charge in the inlet manifold.

System Operation

Displaced fuel vapour leaves the fuel tank via the normally open fuel level vent valve and the roll over valves. It passes through the carbon canister where fuel hydrocarbons are absorbed. Clean air leaves the system via the normally open canister vent valve. This valve is only closed during diagnostic pressure testing of the fuel system.

During normal engine running, the single vapour management valve in the engine bay is periodically opened, when negative pressure exists in the intake manifold, allowing fresh air flow into the open canister vent valve, through the carbon canister, through the vapour management valve and into the primary inlet manifold. This fresh air flow progressively purges any absorbed fuel vapour from the carbon canister.

Fuel Tank Vents and Control Valves

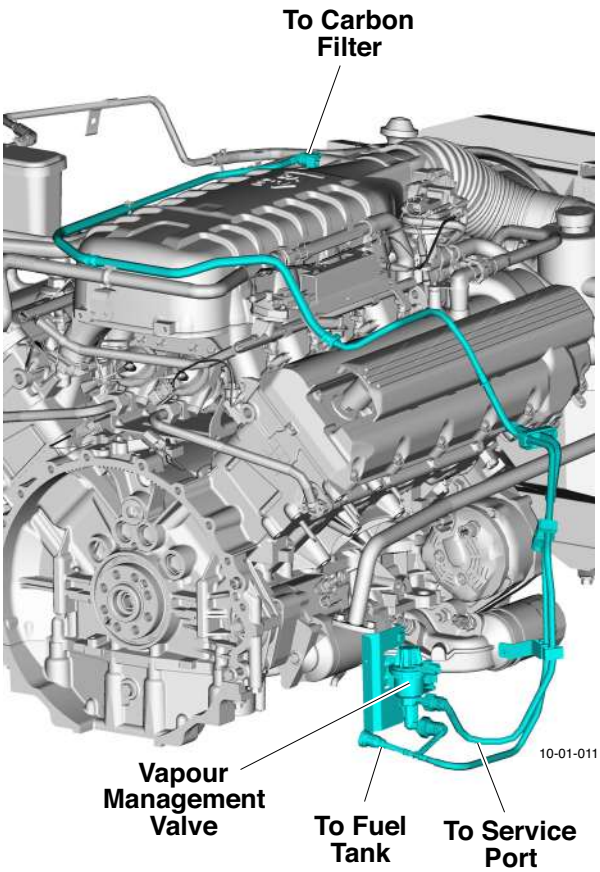

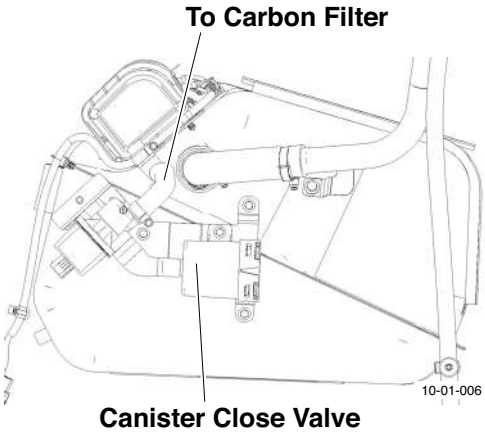

On-Board Refuelling Vapour Recovery

All of the vapour displaced from the tank by refuelling passes through a series of valves and through a carbon canister. This filters out and stores all the fuel vapour and clean air exits the carbon canister port.

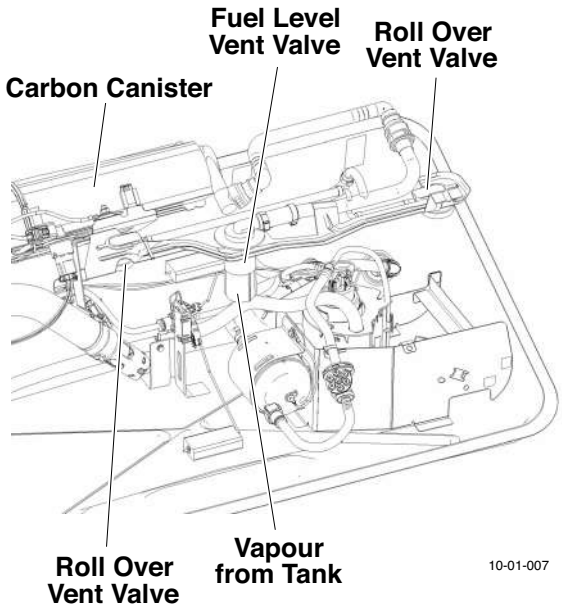

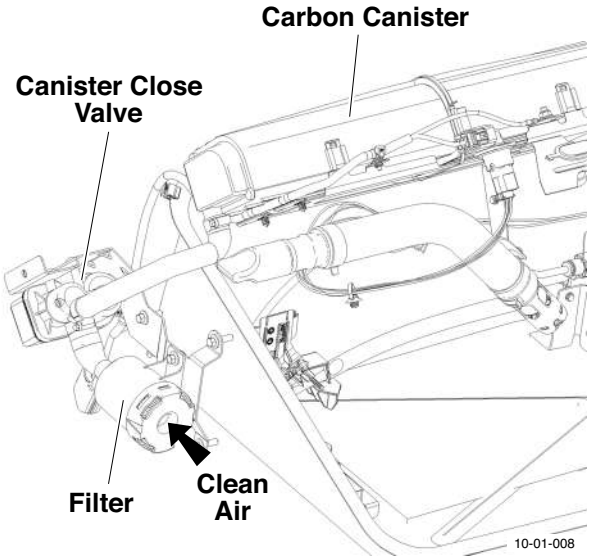

Normal Fuel Fill - Air displaced from the fuel tank during filling can only exit via the fuel level vent valve and roll over valves and be forced through the carbon canister. Any fuel vapour in the displaced air is absorbed in the carbon filter material. No fuel vapour can escape to the atmosphere. Clean air then exits the carbon canister, via and additional filter, to atmosphere.

Excessive Fuel Fill - In the event of overfilling of the fuel tank, the fuel level vent valve will close at normal maximum fuel level. Finally the roll over vent valve will close, completely sealing the tank. Any excess pressure in the fuel tank will 'blow off' via the Over-pressure vent valve (part of the roll over vent valves) in the Fuel Level vent valve assembly.

Safety Precautions

Operations on fuel system result in fuel liquid and vapour being present in the working environment. This presents a very serious risk and the following precautions must be strictly observed:

Warning
Operations on refuelling and the fuel system must only be performed by personnel who have completed training on fuel handling.

Warning
Smoking must not be allowed near the working area. "NO SMOKING" signs must be posted around the working area.

Warning
Any operation which could involve sparks or naked lights (e.g. battery testing, welding, metal grinding, etc.) must not be allowed near the working area.

Warning
A CO2 fire extinguisher must be available close at hand.

Warning
Dry sand must be available close at hand to soak up any accidental fuel spillage.

Warning
If necessary, empty the fuel into an explosion proof container using suitable fireproof fuel handling equipment.

Warning
The working area must be well ventilated.

Warning
Disconnect the battery before commencing work on the fuel system.

Warning
Depressurise the fuel system before disconnecting any fuel lines.

Specifications

Pump Pressure

Nominal pump pressure 40 psi (2.7 bar) above inlet manifold pressure.

Torque Figures

Description	Nm	lb. / ft.
Tank retaining plate bolts	20-25	15-18.5

Maintenance

Fuel System

The fuel system must only be serviced by staff trained in fuel handling.

Fuel Filter Assembly-Renew

Repair Operation Time (ROT)	
Item	**Code**
Fuel Filter Assembly-Renew	**10.01.AB**

Removal

Warning
Read and follow all fuel handling instructions (at the beginning of the Fuel System section) and the fuel bowser manufacturers fuel handling documentation before commencing work on the fuel system. Clean up spillages immediately and dispose of fuel contaminated materials safely.

1. Depressurise the fuel system (see Workshop Manual procedure 10.01.EK Fuel System - Depressurise).

Warning
Ensure there is adequate ventilation inside the vehicle (i.e. place the vehicle in a well ventilated area, with the windows open).

Warning
Disconnect the battery earth lead before commencing work on the fuel system.

2. Disconnect battery earth lead.
3. Release and remove luggage compartment rear floor carpet.
4. Remove luggage compartment front floor carpet retainers (x6).
5. Remove luggage compartment front floor carpet.
6. Remove fuel tank cover, clean off the sealant around the aperture.

Caution
The following procedure is completed inside the vehicle cabin area. Extra care must be taken to ensure no fuel or fuel vapours come into contact with the vehicle interior.

7. Remove nuts (x7) and release fuel tank service cover and clamp.
8. Install the fuel tank drainage adaptor (see Fig. 1).

Fig. 1

Warning
Several litres of fuel remain in the fuel tank sump after draining.

9. Connect the external pipe to a fuel recovery unit. Recover the fuel in accordance with the recovery unit instructions.
10. Release the fuel filter hoses (x2) quick release unions (see Fig. 2).

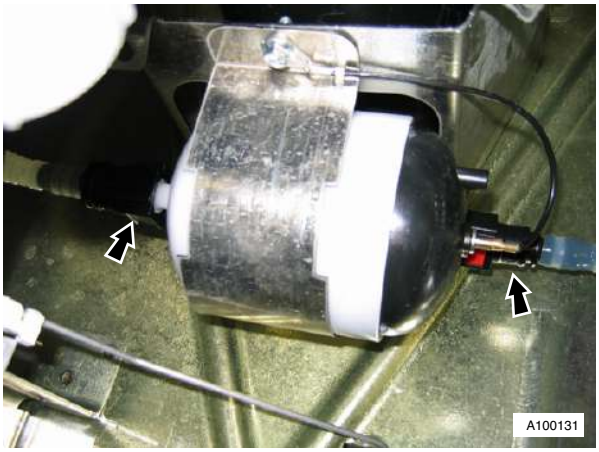

Fig. 2

11. Remove nut fuel filter clamp to bracket (see Fig. 2).

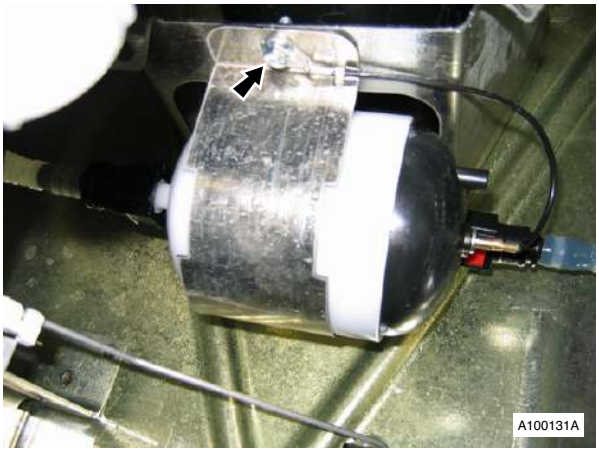

Fig. 3

1. Remove the fuel filter clamp and withdraw the filter.

Installation

1. Position filter in clamp and install nut (x1).
2. Connect fuel filter hoses (x2).
3. Install fuel tank service cover (nuts x7).
4. Install fuel tank cover with new seal.
5. Install luggage compartment front floor carpet and retainers (x6)
6. install luggage compartment rear floor carpet.

> ***Warning***
> ***Fire Risk. Do Not connect the vehicle battery and switch on the ignition until all work on the fuel system is completed and the area is cleared of fuel contamination.***
> ***Remove contaminated material, open fuel containers and waste fuel. Fully ventilate vehicle and work area to remove all fuel fumes.***

7. Connect battery earth lead.

> ***Warning***
> ***Fire Risk. Do Not start the engine until the fuel system integrity is confirmed.***

Fuel Pump and Reservoir Assembly-Renew

Repair Operation Time (ROT)	
Item	**Code**
Fuel Pump and Reservoir Assembly-Renew	**10.01.CB**
As above less WDS Allowance	**10.01.CC**

Removal

> ***Warning***
> ***Read and follow all fuel handling instructions (at the beginning of the Fuel System section) and the fuel bowser manufacturers fuel handling documentation before commencing work on the fuel system. Clean up spillages immediately and dispose of fuel contaminated materials safely.***

1. Depressurise fuel system (see Workshop Manual procedure 10.01.EK Fuel System - Depressurise).

> ***Warning***
> ***Ensure there is adequate ventilation inside the vehicle (i.e. place the vehicle in a well ventilated area, with the windows open).***

> ***Warning***
> ***Disconnect the battery earth lead before commencing work on the fuel system.***

2. Disconnect battery earth lead.
3. Release and remove luggage compartment rear floor carpet.
4. Remove luggage compartment front floor carpet retainers (x6).
5. Remove luggage compartment front floor carpet.
6. Remove fuel tank cover, clean off the sealant around the aperture.

> **Caution**
> ***The following procedure is completed inside the vehicle cabin area. Extra care must be taken to ensure no fuel or fuel vapours come into contact with the vehicle interior.***

7. Remove nuts (x7) and release fuel tank service cover and clamp.
8. Install the fuel tank drainage adaptor (see Fig. 1).

Fig. 1

> ***Warning***
> ***Several litres of fuel remain in the fuel tank sump after draining.***

9. Connect the external pipe to a fuel recovery unit. Recover the fuel in accordance with the recovery unit instructions.

10. Remove recovery unit and fuel tank drainage adaptor.
11. Release the fuel filter hose to pump (x1) quick release unions (see Fig. 2).

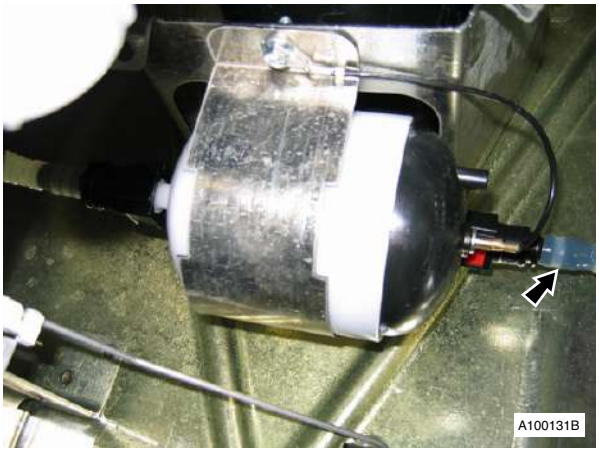

Fig. 2

12. Release vent hose from fuel pump assembly (see Fig. 3).

Fig. 3

13. Release fuel hose and tank harness from fuel pump bracket clip.
14. Disconnect wiring harness plugs (x2).
15. Install fuel pump removal tool (310-140) (see Fig. 4).

Fig. 4

16. Turn the fuel pump anti-clockwise, release and withdraw pump from mounting.
17. Remove fuel pump.

Installation

1. Position fuel pump in its mounting. Using the service tool, turn clockwise to secure fuel pump.
2. Secure fuel hose and tank harness to bracket
3. Install vent hose to fuel pump.
4. Connect hose to pump assembly.
5. Connect wiring harness multiplugs (x2).
6. Connect fuel filter pipes.
7. Install fuel tank service cover and clamp.
8. Install fuel tank cover with new seal.
9. Install luggage compartment front floor carpet and retainers (x6).
10. Install luggage compartment rear floor carpet.

Warning

Fire Risk. Do Not connect the vehicle battery and switch on the ignition until all work on the fuel system is completed and the area is cleared of fuel contamination.

Remove contaminated material, open fuel containers and waste fuel. Fully ventilate vehicle and work area to remove all fuel fumes.

11. Connect battery earth lead.

Warning

Fire Risk. Do Not start the engine until the fuel system integrity is confirmed.

Fuel Tank and Canister Assembly-Renew

Repair Operation Time (ROT)	
Item	**Code**
Fuel Tank and Canister Assembly-Renew	**10.01.FB**

Removal

Warning
Read and follow all fuel handling instructions (at the beginning of the Fuel System section) and the fuel bowser manufacturers fuel handling documentation before commencing work on the fuel system. Clean up spillages immediately and dispose of fuel contaminated materials safely.

Warning
Fuel vapour is explosive. During the following procedure, fuel tank and fuel lines will be open. Ensure good ventilation and take all necessary precautions to eliminate fire risk.

Warning
Fire Risk. Before commencing work on the vehicle fuel system, disconnect the earth (- ve) lead from the vehicle battery.

1. Disconnect vehicle battery.
2. Remove rear subframe (see Workshop Manual procedure 02.01.CA Subframe Assembly - Rear - Remove for Access and Refit).
3. Remove fuel filler cap.
4. Remove bolt filler pipe bracket to spring damper assembly.
5. Remove nut filler neck pipe and hose to body.
6. Release filler neck pipe and hose, collect sealing washer.
7. Remove filler neck pipe and hose assembly from the tank (using filler neck disconnection tool - 310 - 134) (see Fig. 2).

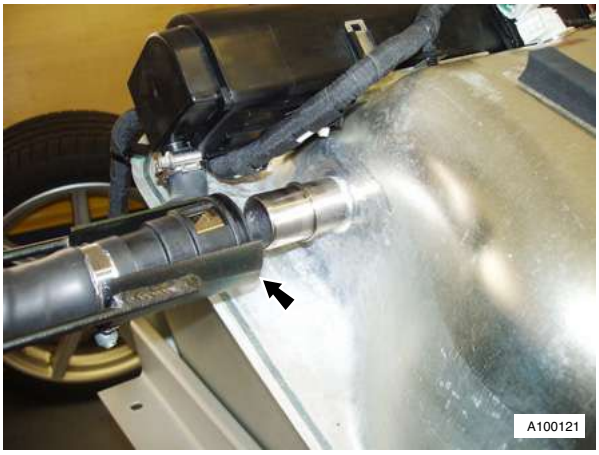

Fig. 2

8. loosen jubilee clip and disconnect hose from evaporative emission control assembly (see Fig. 3).

Fig. 3

9. Disconnect fuel tank harness from main harness (see Fig. 4).

Fig. 4

10. Remove nut and release earth lead from stud (see Fig. 5).

Fig. 5

11. Disconnect vapour purge and fuel pipe from the tank
12. Remove bolts (x4) exhaust heatshield to floor.
13. Remove nuts (x5) oil cooler pipes to body.
14. Release exhaust vacuum pipe from clips.
15. Remove vacuum hose clips from studs.
16. Remove vacuum hose clip bolts /stud (x4) tank to body.

> ***Warning***
> ***The fuel tank is heavy. Fuel tank removal / replacement is a two person operation.***

17. With assistance support tank, remove bolts (x14) tank to body and remove fuel tank (see Fig. 6).

Fig. 6

18. Disconnect fuel vapour hose quick fit connection to tank (see Fig. 7).

Fig. 7

19. Remove nut (x1) fuel tank harness earth (see Fig. 8).

Fig. 8

20. Disconnect multiplug (x1) fuel tank harness (see Fig. 9).

Fig. 9

21. Release clips (x5) fuel tank harness and remove harness (see Fig. 10).

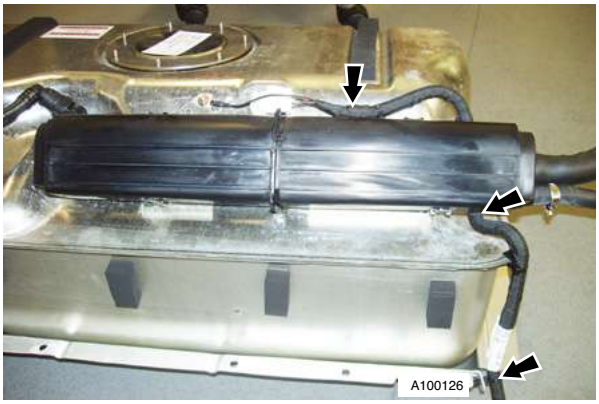

Fig. 10

22. Remove cable tie carbon canister to bracket (see Fig. 11).

Fig. 11

23. Remove carbon canister from fuel tank (clips 4) (see Fig. 12)

Fig. 12

24. Remove tank from support plate.

Installation

1. Position tank to support plate.
2. Install new cable tie behind carbon canister bracket.
3. Align and secure carbon canister to clips (x4).
4. Tighten cable tie around carbon canister.
5. Connect multiplug (x1) fuel tank harness.
6. Install nut (x1) fuel tank harness earth.
7. Secure fuel tank harness (clips x5).
8. Connect fuel vapour hose quick fit connection to tank.

> ***Warning***
> ***The fuel tank is heavy. Fuel tank removal / replacement is a two person operation.***

9. With assistance position tank and secure with bolts (x14)
10. Install vacuum hose clip to tank bolts / studs (x4)
11. install vacuum hose clips to studs and secure vacuum hose.
12. Install nuts (x5) oil cooler to body.
13. Install heatshield.
14. Connect vapour purge and fuel pipe to tank.
15. Position earth lead and secure with nut.
16. Connect fuel tank harness to main harness.
17. Connect evaporative emission control assembly hose and secure with jubilee clip.
18. install filler neck pipe and hose assembly to fuel tank.
19. Position filler neck pipe, hose assembly and sealing washer to body.
20. Install nut filler neck pipe and hose assembly to body.
21. Install bolt filler pipe bracket to spring damper assembly.
22. install fuel filler cap
23. Install rear subframe (see Workshop Manual procedure 02.01.CA Subframe Assembly - Rear - Remove for Access and Refit).

> ***Warning***
> ***Fire Risk. Do Not connect the vehicle battery and switch on the ignition until all work on the fuel system is completed and the area is cleared of fuel contamination.***
> ***Remove contaminated material, open fuel containers and waste fuel. Fully ventilate vehicle and work area to remove all fuel fumes.***

24. Connect vehicle battery.

> ***Warning***
> ***Fire Risk. Do Not start the engine until the fuel system integrity is confirmed.***

Fuel Tank and Canister Assembly- Remove for Access/Refit

Repair Operation Time (ROT)	
Item	**Code**
Fuel Tank and Canister Assembly- Remove for Access/Refit	**10.01.GA**

Removal

> ***Warning***
> ***Read and follow all fuel handling instructions (at the beginning of the Fuel System section) and the fuel bowser manufacturers fuel handling documentation before commencing work on the fuel system. Clean up spillages immediately and dispose of fuel contaminated materials safely.***

> ***Warning***
> ***Fuel vapour is explosive. During the following procedure, fuel tank and fuel lines will be open. Ensure good ventilation and take all necessary precautions to eliminate fire risk.***

> ***Warning***
> ***Fire Risk. Before commencing work on the vehicle fuel system, disconnect the earth (- ve) lead from the vehicle battery.***

1. Disconnect vehicle battery.
2. Remove rear subframe (see Workshop Manual procedure 02.01.CA Subframe Assembly - Rear - Remove for Access and Refit).

3. Remove fuel filler cap.
4. Remove bolt filler pipe bracket to spring damper assembly.
5. Remove nut filler neck pipe and hose to body.
6. Release filler neck pipe and hose, collect sealing washer.
7. Remove filler neck pipe and hose assembly from the tank (using filler neck disconnection tool - 310 - 134) (see Fig. 2).

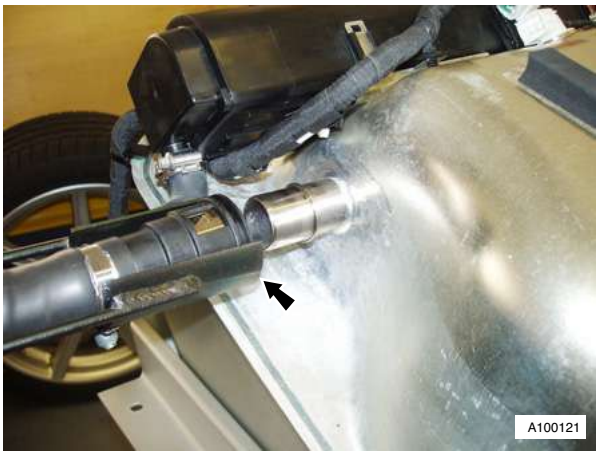

Fig. 2

8. loosen jubilee clip and disconnect hose from evaporative emission control assembly (see Fig. 3).

Fig. 3

9. Disconnect fuel tank harness from main harness (see Fig. 4).

Fig. 4

10. Remove nut and release earth lead from stud (see Fig. 5).

Fig. 5

11. Disconnect vapour purge and fuel pipe from the tank
12. Remove bolts (x4) exhaust heatshield to floor.
13. Remove nuts (x5) oil cooler pipes to body.
14. Release exhaust vacuum pipe from clips.
15. Remove vacuum hose clips from studs.
16. Remove vacuum hose clip bolts/stud (x4) tank to body.

Warning
The fuel tank is heavy. Fuel tank removal / replacement is a two person operation.

17. With assistance support tank, remove bolts (x14) tank to body and remove fuel tank (see Fig. 6).

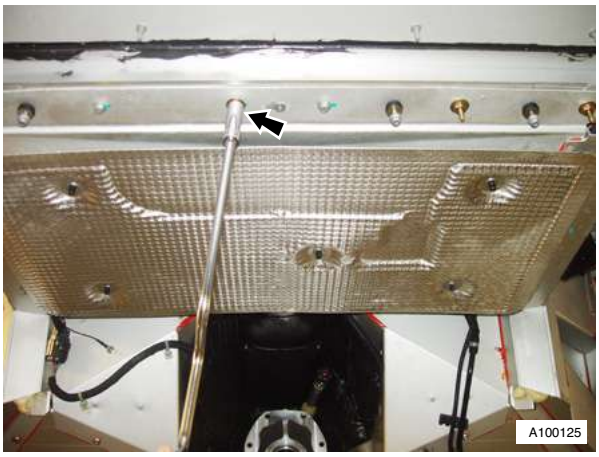

Fig. 6

Installation

> ***Warning***
> ***The fuel tank is heavy. Fuel tank removal / replacement is a two person operation.***

1. With assistance position tank and secure with bolts (x14)
2. Install vacuum hose clip to tank bolts / studs (x4)
3. install vacuum hose clips to studs and secure vacuum hose.
4. Install nuts (x5) oil cooler to body.
5. Install heatshield.
6. Connect vapour purge and fuel pipe to tank.
7. Position earth lead and secure with nut.
8. Connect fuel tank harness to main harness.
9. Connect evaporative emission control assembly hose and secure with jubilee clip.
10. install filler neck pipe and hose assembly to fuel tank.
11. Position filler neck pipe, hose assembly and sealing washer to body.
12. Install nut filler neck pipe and hose assembly to body.
13. Install bolt filler pipe bracket to spring damper assembly.
14. install fuel filler cap
15. Install rear subframe (see Workshop Manual procedure 02.01.CA Subframe Assembly - Rear - Remove for Access and Refit).

> ***Warning***
> ***Fire Risk. Do Not connect the vehicle battery and switch on the ignition until all work on the fuel system is completed and the area is cleared of fuel contamination.***
> ***Remove contaminated material, open fuel containers and waste fuel. Fully ventilate vehicle and work area to remove all fuel fumes.***

16. Connect vehicle battery.

> ***Warning***
> ***Fire Risk. Do Not start the engine until the fuel system integrity is confirmed.***

Fuel Tank Sender Assembly-Renew

Repair Operation Time (ROT)	
Item	**Code**
Fuel Tank Sender Assembly-Renew	**10.01.JB**

Removal

> ***Warning***
> ***Read and follow all fuel handling instructions (at the beginning of the Fuel System section) and the fuel bowser manufacturers fuel handling documentation before commencing work on the fuel system. Clean up spillages immediately and dispose of fuel contaminated materials safely.***

> ***Warning***
> ***Fuel vapour is explosive. During the following procedure, fuel tank and fuel lines will be open. Ensure good ventilation and take all necessary precautions to eliminate fire risk.***

> ***Warning***
> ***Fire Risk. Before commencing work on the vehicle fuel system, disconnect the earth (- ve) lead from the vehicle battery.***

1. Disconnect battery earth lead.
2. Release and remove luggage compartment rear floor carpet.
3. Remove luggage compartment front floor carpet retainers (x6) and remove carpet.
4. Remove fuel tank cover, clean off the sealant around the aperture.

> ***Warning***
> ***Ensure there is adequate ventilation inside the vehicle (i.e. place the vehicle in a well ventilated area, with the windows open).***

5. Remove nuts (x7) and release plate clamp and fuel tank service cover.

> **Caution**
> ***The following procedure is completed inside the vehicle cabin area. Extra care must be taken to ensure no fuel or fuel vapours come into contact with the vehicle interior.***

6. Install the fuel tank drainage adaptor (see Fig. 1).

Fig. 1

7. Connect the external pipe to a fuel recovery unit. Recover the fuel in accordance with the recovery unit instructions.
8. Remove the recovery unit and fuel tank drainage adaptor.
9. Disconnect fuel tank sender unit multiplug (see Fig. 2).

Fig. 2

10. Release fuel tank sender assembly from bracket.
11. Remove fuel tank sender unit (see Fig. 3).

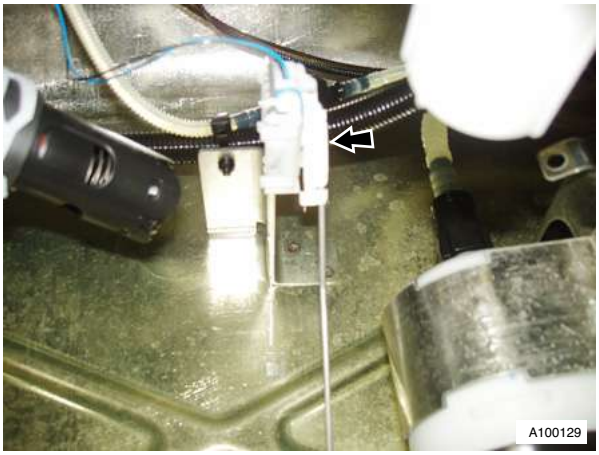

Fig. 3

Installation

1. Install sender unit, secure to bracket and connect multiplug.
2. Install nuts (x7) securing plate clamp and fuel tank service cover.
3. Install fuel tank cover with new seal.
4. Install luggage compartment front floor carpet and retainers (x6).
5. Install luggage compartment rear floor carpet.

Warning

Fire Risk. Do Not connect the vehicle battery and switch on the ignition until all work on the fuel system is completed and the area is cleared of fuel contamination.

Remove contaminated material, open fuel containers and waste fuel. Fully ventilate vehicle and work area to remove all fuel fumes.

6. Connect battery earth lead.

Warning

Fire Risk. Do Not start the engine until the fuel system integrity is confirmed.

Fuel Vapour Pipe Assembly-Renew

Repair Operation Time (ROT)	
Item	**Code**
Fuel Vapour Pipe Assembly-Renew	**10.01.KA**

Removal

Warning

Read and follow all fuel handling instructions (at the beginning of the Fuel System section) and the fuel bowser manufacturers fuel handling documentation before commencing work on the fuel system. Clean up spillages immediately and dispose of fuel contaminated materials safely.

1. Battery isolation switch off.

2. Remove RH front wheel arch liner (see Workshop Manual procedure 01.02.GB Wheel Arch Liner - Front - RH - Renew).

> ***Warning***
> ***Fuel vapour is explosive. During the following procedure, fuel tank and fuel lines will be open. Ensure good ventilation and take all necessary precautions to eliminate fire risk.***

3. Disconnect quick fit connector fuel vapour pipe to tank.
4. Release fuel vapour pipe from fuel line clips (x4).
5. Disconnect quick fit connector fuel vapour pipe assembly to purge valve T-piece.
6. Remove fuel vapour pipe.

Installation

1. Install fuel vapour pipe and connect to purge valve 'T' piece.
2. Position fuel vapour pipe in vapour line clips.
3. Connect fuel vapour pipe to fuel tank.
4. Install RH front wheel arch liner (see Workshop Manual procedure 01.02.GB Wheel Arch Liner - Front - RH - Renew).
5. Battery isolation switch on.

> ***Warning***
> ***Fire Risk. Do Not start the engine until the fuel system integrity is confirmed.***

Fuel Supply and Vapour Pipe Assembly-Renew

Repair Operation Time (ROT)	
Item	**Code**
Fuel Supply and Vapour Pipe Assembly-Renew	**10.01.KB**

Removal

> ***Warning***
> ***Read and follow all fuel handling instructions (at the beginning of the Fuel System section) and the fuel bowser manufacturers fuel handling documentation before commencing work on the fuel system. Clean up spillages immediately and dispose of fuel contaminated materials safely.***

1. Depressurise fuel system (see Workshop Manual procedure 10.01.EK Fuel System - Depressurise).

> ***Warning***
> ***Fire Risk. Before commencing work on the vehicle fuel system, disconnect the earth (- ve) lead from the vehicle battery.***

2. Disconnect vehicle battery.
3. Remove RH front wheel arch liner (see Workshop Manual procedure 01.02.GB Wheel Arch Liner - Front - RH - Renew).

> ***Warning***
> ***Fuel vapour is explosive. During the following procedure, fuel tank and fuel lines will be open. Ensure good ventilation and take all necessary precautions to eliminate fire risk.***

4. Position container to collect spillage from fuel supply pipe.
5. Disconnect quick fit connector fuel supply pipe to tank
6. Release pipe assembly from fuel line clips (x3).
7. Disconnect quick fit connector fuel supply to manifold supply (fuel rail) and remove pipe assembly.

Installation

1. Connect fuel supply pipe to manifold supply pipe.
2. Position fuel line in fuel line clips (x3).
3. Connect fuel supply pipe to tank.
4. Install RH front wheel arch liner (see Workshop Manual procedure 01.02.GB Wheel Arch Liner - Front - RH - Renew).

> ***Warning***
> ***Fire Risk. Do Not connect the vehicle battery and switch on the ignition until all work on the fuel system is completed and the area is cleared of fuel contamination.***
> ***Remove contaminated material, open fuel containers and waste fuel. Fully ventilate vehicle and work area to remove all fuel fumes.***

5. Connect vehicle battery.

> ***Warning***
> ***Fire Risk. Do Not start the engine until the fuel system integrity is confirmed.***

Manifold Supply Fuel Pipe Assembly-Renew

Repair Operation Time (ROT)	
Item	**Code**
Manifold Supply Fuel Pipe Assembly-Renew	**10.01.KC**

Removal

> ***Warning***
> ***Read and follow all fuel handling instructions (at the beginning of the Fuel System section) and the fuel bowser manufacturers fuel handling documentation before commencing work on the fuel system. Clean up spillages immediately and dispose of fuel contaminated materials safely.***

1. Depressurise fuel system (see Workshop Manual procedure 10.01.EK Fuel System - Depressurise).

> ***Warning***
> ***Fire Risk. Before commencing work on the vehicle fuel system, disconnect the earth (- ve) lead from the vehicle battery.***

2. Disconnect vehicle battery
3. Remove RH wheel arch liner (see Workshop Manual procedure 01.02.GB Wheel Arch Liner - Front - RH - Renew).
4. Position container to collect fuel spillage.
5. Release fuel supply and vapour pipe from pipe clips (3).
6. Disconnect quick fit connector manifold supply pipe to fuel supply and vapour pipe.
7. Disconnect manifold supply pipe from fuel rail.
8. Release manifold supply pipe from pipe clips (x3) and remove pipe.

Installation

1. Position manifold supply pipe and secure in clips (x3).
2. Connect manifold supply pipe to fuel rail.
3. Connect manifold supply pipe to fuel supply and vapour pipe.
4. Secure fuel supply and vapour pipe in clips (x3).
5. Install wheel arch liner (see Workshop Manual procedure 01.02.GB Wheel Arch Liner - Front - RH - Renew).

Warning

Fire Risk. Do Not connect the vehicle battery and switch on the ignition until all work on the fuel system is completed and the area is cleared of fuel contamination.

Remove contaminated material, open fuel containers and waste fuel. Fully ventilate vehicle and work area to remove all fuel fumes.

6. Connect vehicle battery.

Warning

Fire Risk. Do Not start the engine until the fuel system integrity is confirmed.

Steering (11.00)

Contents

Steering Gear (11.01) 11-1-2
Diagnostics - Symptom Chart.....1-2
Specifications.....1-4
Power Steering (11.02) 11-2-1
Description.....2-1
Specifications.....2-1
Maintenance.....2-2
Power Steering System - Bleed..... 2-2
Procedure..... 2-2
Power Steering Pump-Renew..... 2-2
Power Assisted Steering (PAS) Rack - Remove and Install..... 2-2
RH/LH Track Rod End-Renew..... 2-11
Power Steering Pump to Rack Hose Assembly -Renew..... 2-11
Power Steering Rack to Cooler Hose-Renew 2-12
Steering Column (11.04).....11-4-1
Description.....4-1
Specifications.....4-1
Maintenance.....4-1
Top Shroud for the Steering Column - Remove and Install 4-1
Bottom Shroud for the Steering Column - Remove and Install 4-1
Steering Column Gaiter-Renew..... 4-2
Upper Steering Column Assembly-Renew 4-3
Top and Bottom Shrouds for the Steering Column - Remove and Install 4-4
Steering Column Lower Shaft Assembly-Renew..... 4-5
Steering Column Switches (11.05).....11-5-1
Maintenance.....5-1
Ignition Switch-Renew (Pre-08 MY Only) 5-1
Steering Column Stalk Assembly Switch-Renew (Pre-08 MY Only)..... 5-1
Cruise Control Switch-Renew..... 5-2
Indicator Switch for the Steering Column - Remove and Install 5-2
Airbag Rotary Coupler Assembly - Remove and Install..... 5-2
Wiper Switch for the Steering Column - Remove and Install 5-4
Steering Wheel (11.06) 11-6-1
Specifications.....6-1
Maintenance.....6-1
Steering Wheel-Renew 6-1
Driver's Airbag Module - Remove and Install..... 6-1

Steering (11.00)

Steering Gear (11.01)

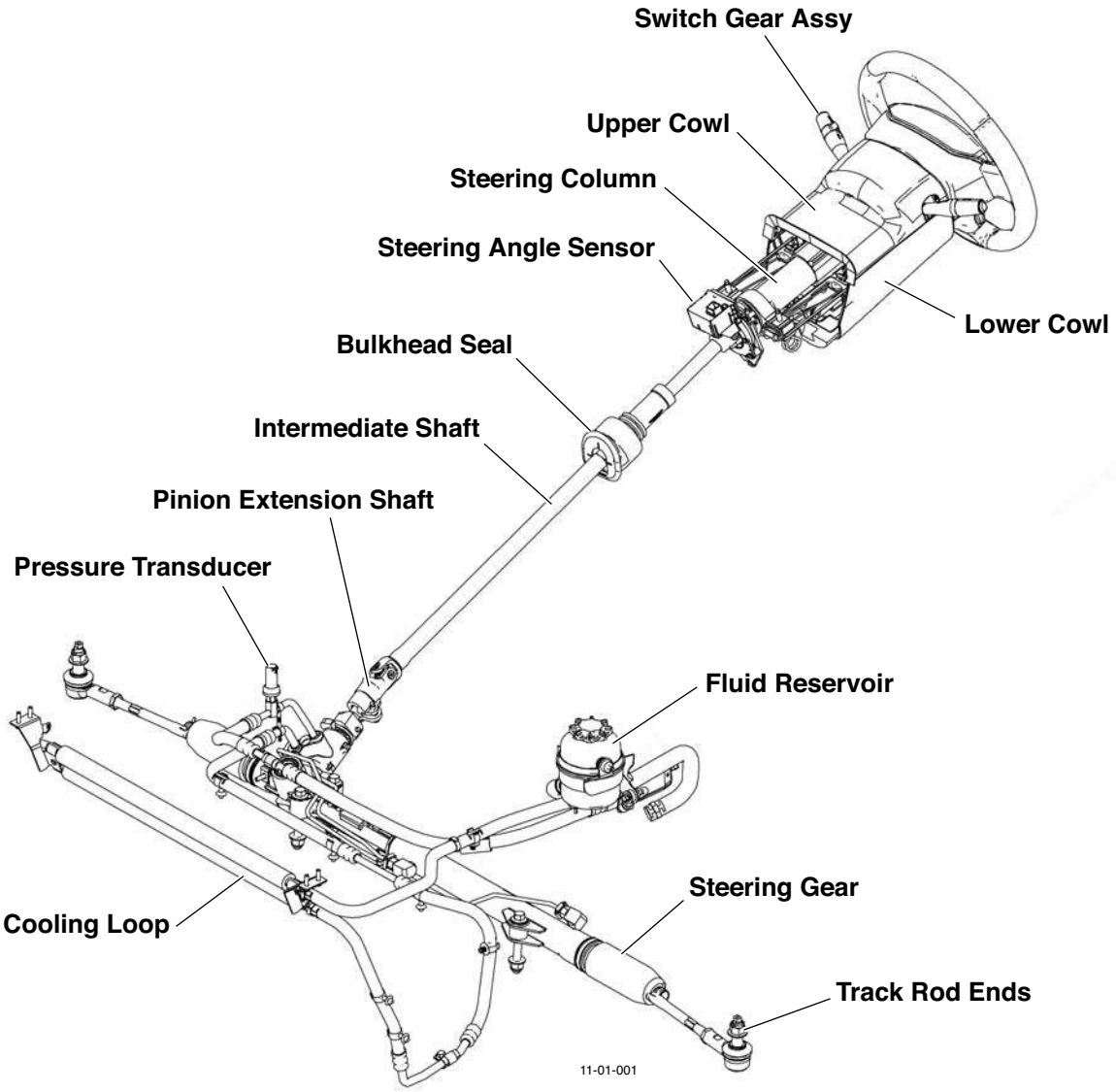

Diagnostics - Symptom Chart

Symptom	Possible Cause	Action
Vehicle wanders from side to side on the road when driven straight ahead with the steering wheel held firmly.	Incorrect tyre size or pressure.	Check for correct tyre size.
		Adjust tyre pressures.
	Vehicle unevenly loaded or overloaded.	Adjust load.
	Loose or worn tie-rods or tie-rod ends.	New tie-rod end or steering gear.
	Steering gear bolts loose or damaged.	Tighten.
		New bolts.
	Loose or worn suspension ball joint(s).	New suspension ball joint assembly.
	Steering column universal joint pinch bolt loose.	Tighten pinch bolt.
	Incorrect toe adjustment.	Adjust as required.
	Loose or worn rear suspension.	Tighten if loose.
		New rear suspension components.
	Insufficient Castor.	Check front suspension geometry.

Symptom	Possible Cause	Action
Vehicle tends to pull to one side when driven on a level surface.	Incorrect tyre pressure.	Adjust tyre pressure.
	Incorrect tyre size.	New tyre as required.
	Different tyre or tread type.	
	Vehicle is unevenly or excessively loaded.	Adjust load evenly.
	Incorrect toe adjustment.	Adjust as required.
	Damaged front or rear suspension components.	New suspension components.
	Steering gear valve effort out of balance.	Shift transmission into neutral while driving at no more than 30 miles/hour (50 km/h) and turn the ignition to position I (engine 'Off'-coasting). a. If the vehicle does not pull to one side with the engine off, install a new steering gear. b. If the vehicle drifts with the engine off, 'cross switch' the front wheel assemblies. Test at low speed due to directional tyres. a. If the vehicle pulls to the opposite side, switch the wheels that were on the rear to the same side on the front. b. If the vehicle pull direction is not changed, check the front suspension components and toe adjustments.
	Check front and rear brakes for correct operation.	Adjust as required.
	Check for bent rear suspension components and for damaged coil springs in the front suspension.	New rear suspension components.
	Check the rear suspension for loose or worn suspension components.	Tighten. New components.
	Incorrect underbody alignment.	Check underbody alignment.
Feedback (whining or knocking noises in the steering gear) Condition where roughness is felt in the steering wheel by the driver when the vehicle is driven over rough surfaces.	Loose or worn tie-rods.	New steering gear.
	Steering gear bolts loose or damaged.	Tighten. New bolts.
	Loose suspension bushing, bolts or ball joints.	Tighten. New components.
	Damaged steering column.	New steering column.
	Loose Column bolts.	Tighten bolts.
Power steering pump or reservoir leaks	Overfilled system.	Correct fluid level.
	Damaged fluid cap.	New fluid cap.
	Loose or damaged hose fittings.	Tighten. New hose.
	Leakage at power steering pump.	New power steering pump.
Poor returnability of the steering	Incorrect tyre pressure.	Check and adjust tyre pressure.
	Incorrect tyre size or type.	New tyre as required.
	Steering column universal joints binding.	New steering column.
	Steering column shaft floor seal may be torn and fouling I-shaft.	New floor seal as required.
	Binding or damaged tie-rods.	New steering gear.
	Damaged or worn front suspension components.	New front suspension components as required.
	Incorrect toe adjustment.	Adjust as required.

Symptom	Possible Cause	Action
Excessive steering efforts required to turn corners and during parking manoeuvres	Dirty fluid filter.	Clean/replace reservoir.
	Low power steering pump fluid.	Fill as required. Check for system leaks.
	Damaged accessory drive belt tensioner.	New accessory drive belt tensioner.
	Hose or oil cooler external leak.	New hose or oil cooler as required.
	Hose or cooler line restriction.	New hose as required.
	Fluid aeration.	Bleed system.
	Damaged pump.	Replace pump.
Fluid leakage	Overfilled system.	Correct fluid level.
	Component leak.	Locate suspect component and repair as required.
Accessory drive belt squeal	Check accessory drive belt for correct tension or glazing.	New accessory drive belt.
'Chirp' noise from steering pump	Loose or worn accessory drive belt.	New accessory drive belt.
Power steering pump noisy	Low fluid level.	Top up and check for system leaks.
	Power steering pump.	Check for leaks. Repair as required. New pump.
	Steering hoses fouling body structure.	Ensure hose is secured and routed correctly.
'Hiss' noise	Fluid flow through steering gear rotary valve - close to 'Full Lock'.	Normal noise.
'Whine' noise	Aerated fluid.	Bleed system.
Steering wheel vibration	Road wheels out of balance.	Check front end alignment.

Specifications

Torque Figures		
Description	Nm.	lb/ft
Ball Joint (M14 nut)	70	52
Track-Rod (lock nut)	70	52
Steering Rack to Subframe (M12)	115	85
Steering Rack Pipe Attachment Plate	9-12	7-9
Intermediate Shaft Pinch Bolt	21-29	15.5-21.5

Steering (11.00)

Power Steering (11.02)

Description

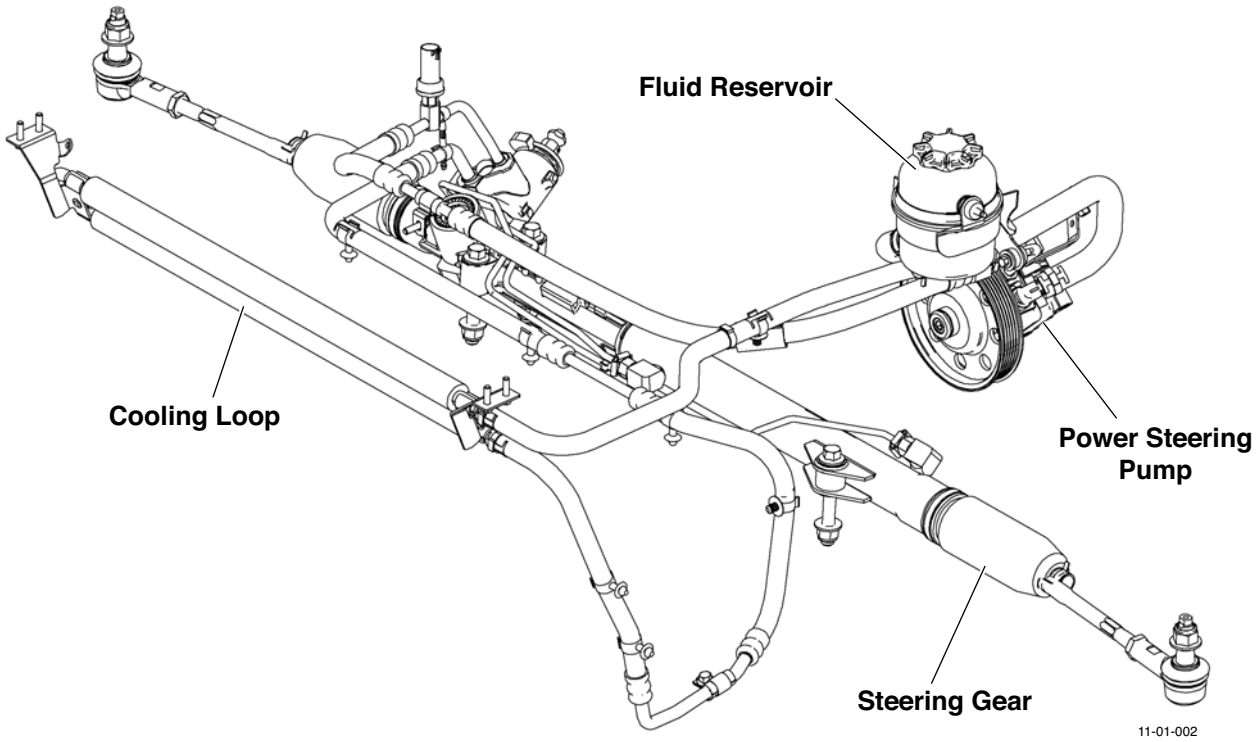

The power steering system comprises of a non-speed sensitive rack and pinion steering gear together with an engine driven vane pump, operating at a constant flow rate. The level of assistance is controlled via a rotary hydraulic valve, integral to the steering gear assembly.

Hoses / pipe are used to transmit hydraulic fluid throughout the steering system. The high-pressure line contains a pressure transducer, which sends an electronic signal to the engine management system. This ensures engine RPM is maintained when the steering system draws higher loads from the engine (i.e. during parking manoeuvres.) In order to regulate system temperatures, a wire-wound cooler is incorporated into the return line.

Specifications

Item	Data
Pump Pressure (max)	116 ±4Bar
Turns lock-to-lock	3
Overall steering ratio	17:1
Turning Circle (Kerb To Kerb)	11.1m
Fluids	33270 Texaco Cold Climate Power Steering Fluid 14315G (to 10 MY)
	Pentosin CHF 11S (10MY onwards)
Toe Settings	(Refer to 'Road Wheel Alignment (04.00)', page 4-0-2)

Maintenance

Power Steering System - Bleed

Repair Operation Time (ROT)	
Item	**Code**
Power Steering System - Bleed	**11.01.AA**

Procedure

1. Do a check of the fluid level in the PAS fluid reservoir. Add fluid if necessary.
2. Start the engine and let it idle for 20 seconds.
3. Operate the steering fully to the left and then the right through three cycles.
4. Stop the engine.
5. Wait for five minutes then do a check of the fluid level in the PAS fluid reservoir again.
6. Add fluid if necessary.
7. Install the PAS fluid reservoir cap.

Power Steering Pump-Renew

Repair Operation Time (ROT)	
Item	**Code**
Power Steering Pump-Renew	**03.05.AA**

Removal

1. Remove A/C compressor (see Workshop Manual procedure 03.05.BE Compressor - Air Conditioning - Renew).
2. Coolant drain (see Workshop Manual procedure 03.03.AD Coolant - Drain & Refill).
3. Remove PAS fluid from reservoir.
4. Disconnect HP union from PAS pump pipe.
5. Remove bolt P-clip suction hose to body.
6. Remove bolt (x1) HP pump pipe to engine.
7. Remove bolts (x3) PAS pump to engine.
8. Disconnect bottom hose and move aside.
9. Unclip (x1) harness from cylinder head for access.
10. Manouvre pump forward and up.
11. Disconnect suction hose (cut off clip) and remove pump.
12. Remove HP union pipe from pump (mark position on pump).

Installation

1. Install HP union pipe to pump (align correctly), fit new O-ring.
2. Install pump to vehicle connect suction pipe to PAS pump, align timing marks and fit new clip.
3. Manouvre pump into position.
4. Install bolts (x3) PAS pump to engine (torque).
5. Install bolt (x1) HP pump pipe to engine (torque).
6. Connect bottom hose.
7. Clip (x1) harness from cylinder head for access.
8. Install bolt P-clip suction hose to body (torque).
9. Connect HP union to PAS pump pipe, replace O-ring (torque).
10. Coolant refill (see Workshop Manual procedure 03.03.AD Coolant - Drain & Refill).
11. Install A/C compressor (see Workshop Manual procedure 03.05.BE Compressor - Air Conditioning - Renew).
12. Top-up PAS fluid.
13. Start and run engine, operate steering lock to lock x2.
14. Top-up PAS fluid.

Power Assisted Steering (PAS) Rack - Remove and Install

Repair Operation Time (ROT)	
Item	**Code**
Power Assisted Steering (PAS) Rack - Remove and Install	**11.02.AA**

Removal

1. Disconnect the battery ground cable.
2. Remove the front undertray (refer to Workshop Manual Procedure 01.02.NB - Front Undertray).
3. Remove the front wheels and tyres (refer to Workshop Manual Procedure 04.04.ED - Wheel and Tyre - Pair).
4. Remove the front right side wheel-arch liner (refer to Workshop Manual Procedure 01.02.GB - Front Right Side Wheel-Arch Liner).
5. Put a container in position under the oil tank to collect oil.
6. Remove the drain plug from the oil tank.

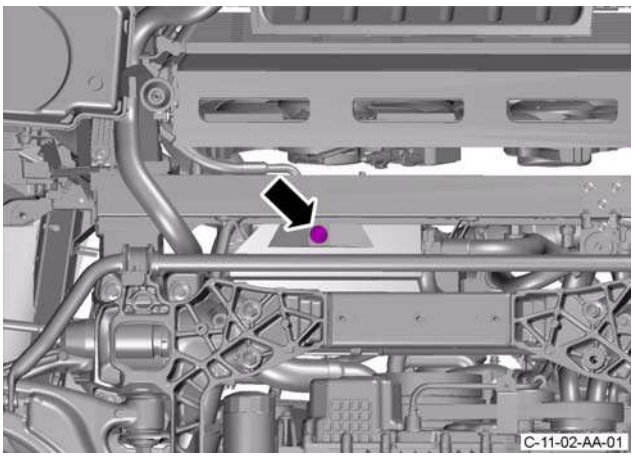

Figure 1

7. Let the oil drain into the container.
8. Install and tighten the drain plug into the oil tank (refer to Figure 1).
9. Remove the container.
10. Lower the vehicle.
11. Remove the radiator closing panel (refer to Workshop Manual Procedure 01.02.AA - Radiator Closing Panel).

12. Disconnect the two breather pipes from the air intake pipe.

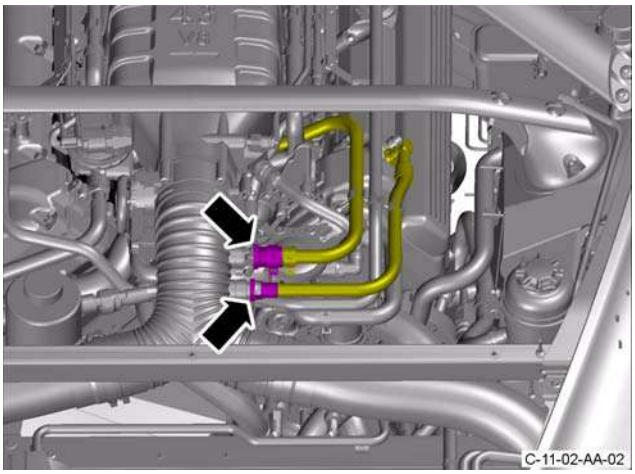

Figure 2

13. Install sealing caps into the open ports.
14. Release the clip that attaches the air intake pipe to the throttle body.

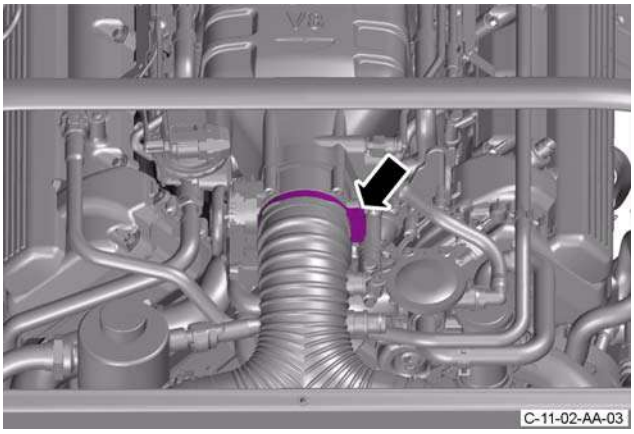

Figure 3

15. Release the clip that attaches the air intake pipe to the outlet pipe for the right side air cleaner.

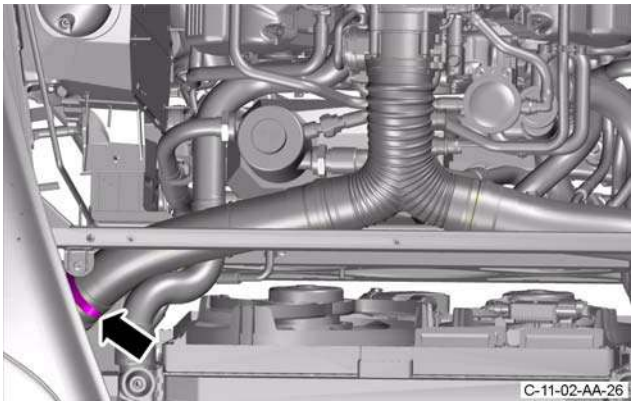

Figure 4

16. Disconnect the air intake pipe from the outlet pipe for the right side air cleaner and move it away.

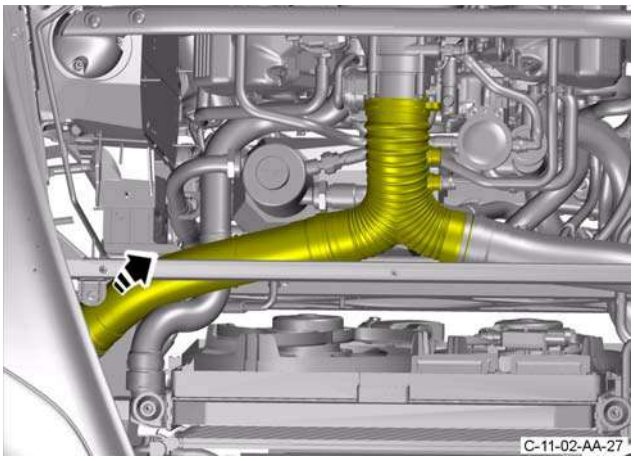

Figure 5

17. Disconnect the two oil breather pipes from the oil tank.

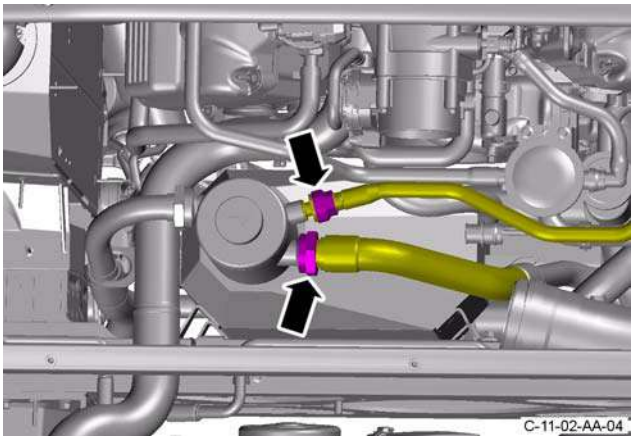

Figure 6

18. Install sealing caps into the open ports.
19. Loosen the union that attaches the top oil pipe to the oil tank and move the pipe away.

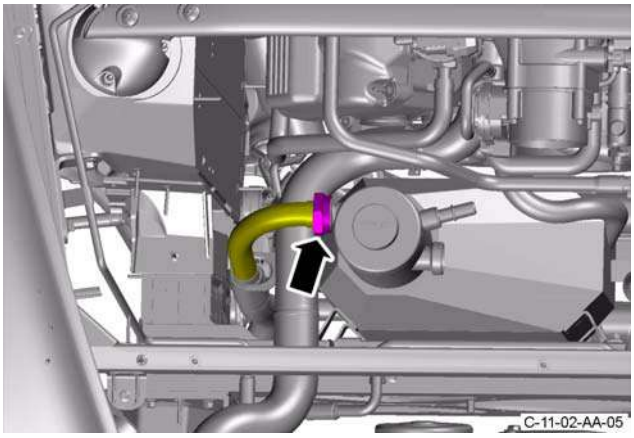

Figure 7

20. Install sealing plugs into the open ports.

21. Remove the two top screws that attach the oil tank to the body.

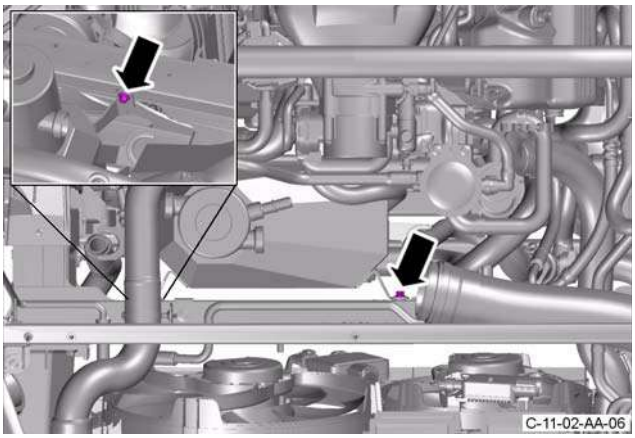

Figure 8

22. Lift the vehicle.
23. Remove the four screws that attach the anti-roll bar to the front subframe.

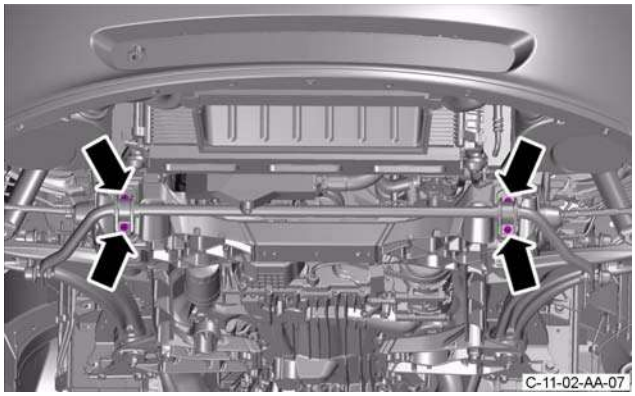

Figure 9

24. Move the anti-roll bar away and use a cable tie to hold it.
25. Loosen the union that attaches the bottom oil pipe to the oil tank and move the pipe away.

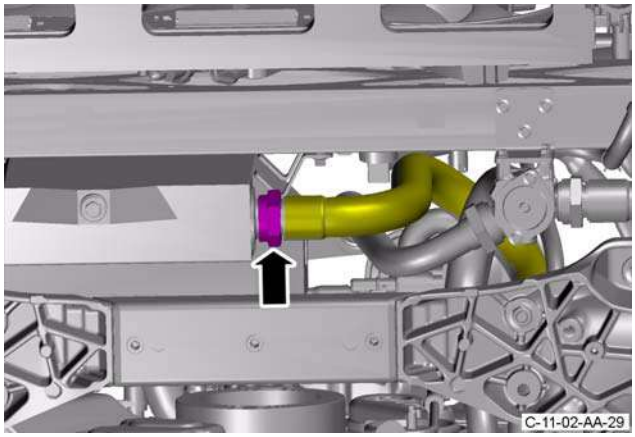

Figure 10

26. Disconnect the two lower oil pipes from the oil tank and move them away.
27. Install sealing caps in the open ports.
28. Remove the two bottom screws that attach the oil tank to the body.

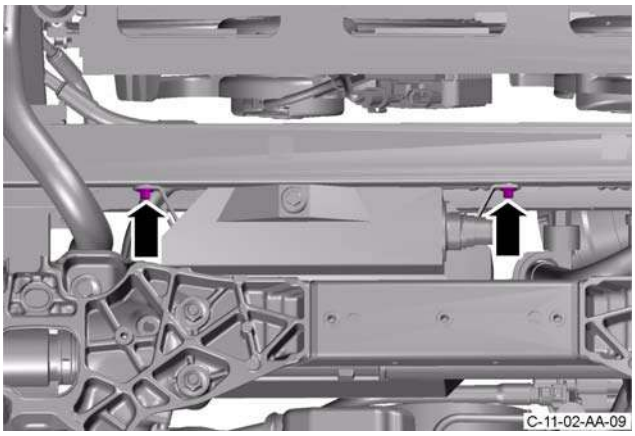

Figure 11

29. Lower the vehicle.

CAUTION
Be careful when you remove the oil tank in the step that follows. If you are not, the air conditioning switch and wiring harness can be damaged.

30. Carefully remove the oil tank.

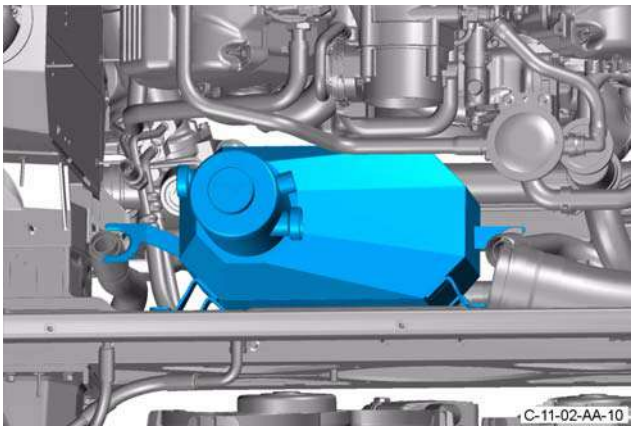

Figure 12

31. Lift the vehicle.
32. Remove the bolt that attaches the universal joint for the lower steering column to the pinion coupling.

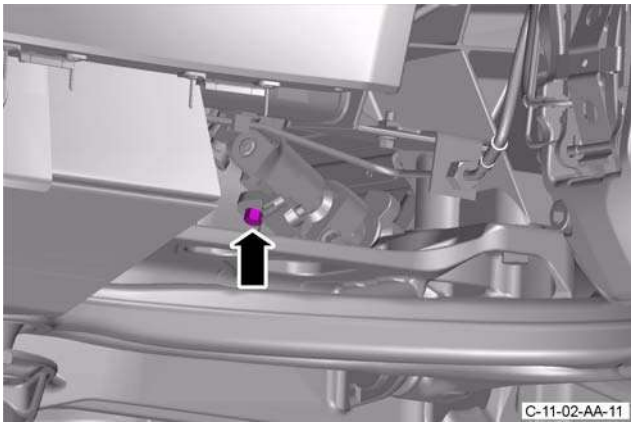

Figure 13

33. Turn the lever on the universal joint to release it from the coupling.

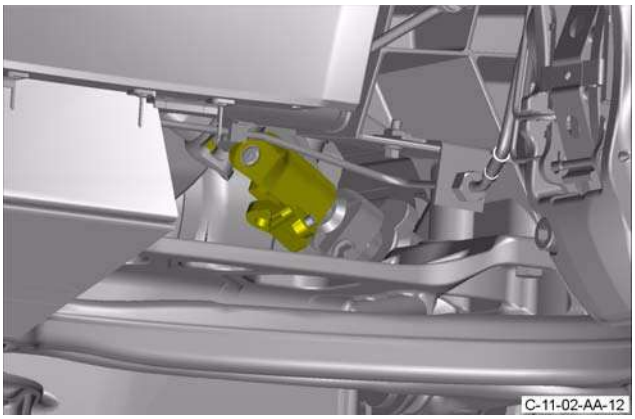

Figure 14

34. Move the steering to get access to the bolt that attaches the pinion coupling to the Power Assisted Steering (PAS) rack.
35. Remove the bolt that attaches the pinion coupling to the PAS rack.

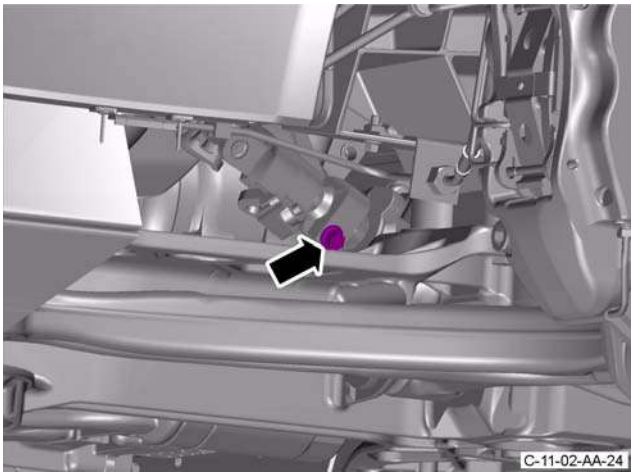

Figure 15

36. Remove the pinion coupling.
37. Remove and discard the two bolts that attach the brake caliper to the front wheel knuckle.

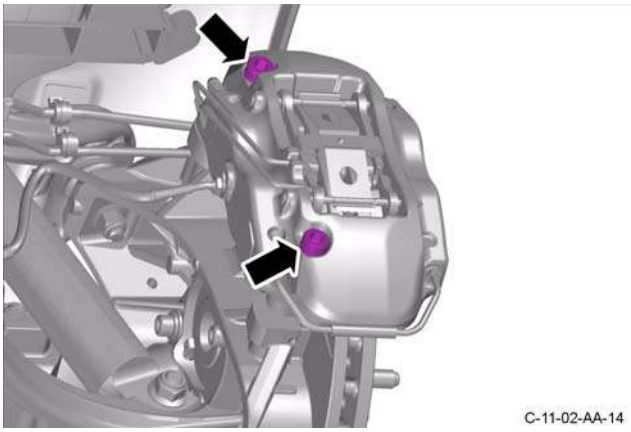

Figure 16

38. Release the brake caliper from the front wheel knuckle.

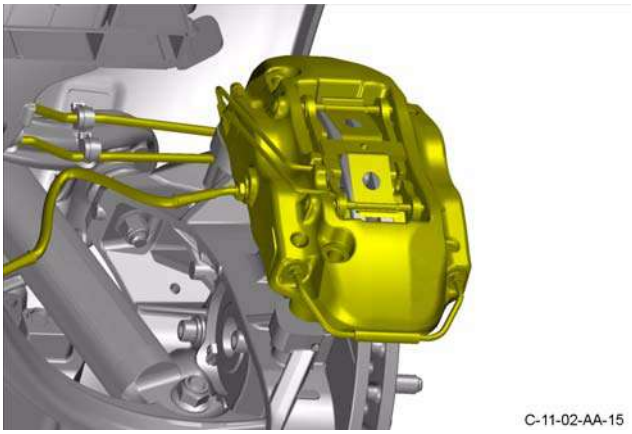

Figure 17

CAUTION
Do not let the caliper hang on the brake hose. If you do, the brake hose can be damaged

39. Use a cable tie to hold the brake caliper.
40. Make a mark to show the position of the brake disc against the wheel hub.
41. Remove the two screws that attach the brake disc to the wheel hub.

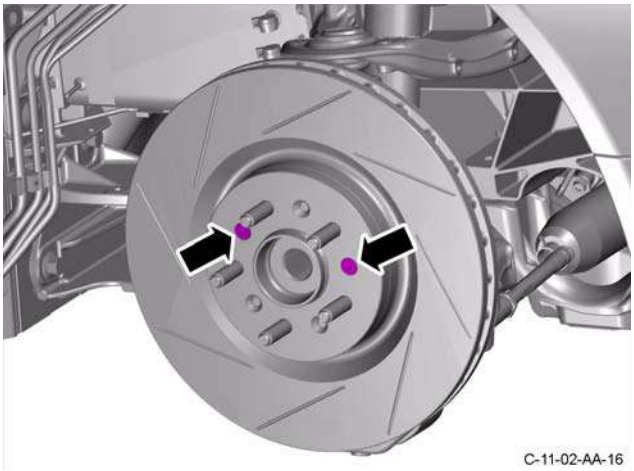

Figure 18

42. Remove the brake disc.

43. Remove the front bolt that attaches the brake backplate to the front wheel knuckle.

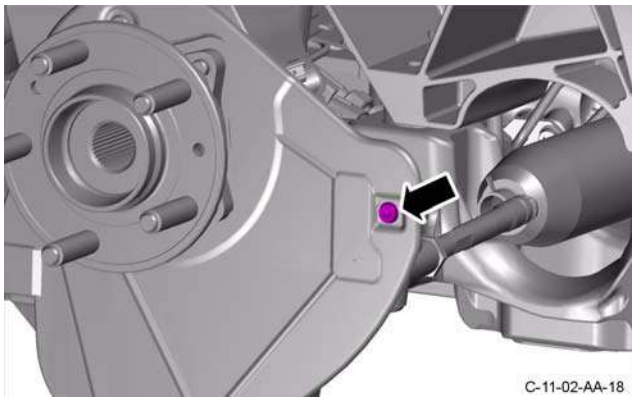

Figure 19

44. Remove and discard the nut that attaches the track rod end to the front wheel knuckle.

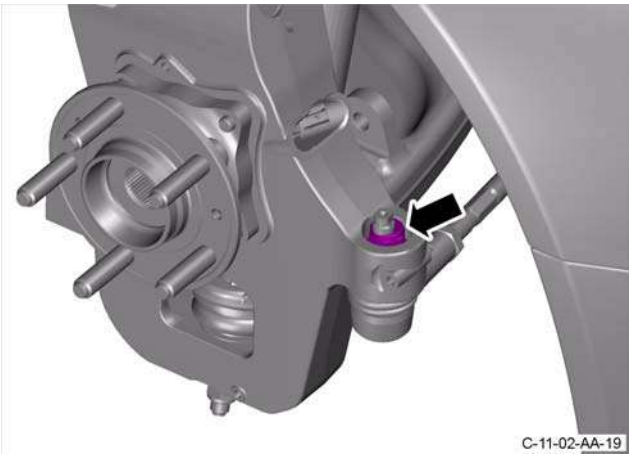

Figure 20

45. Use the special tool to release the track rod end from the vertical link.

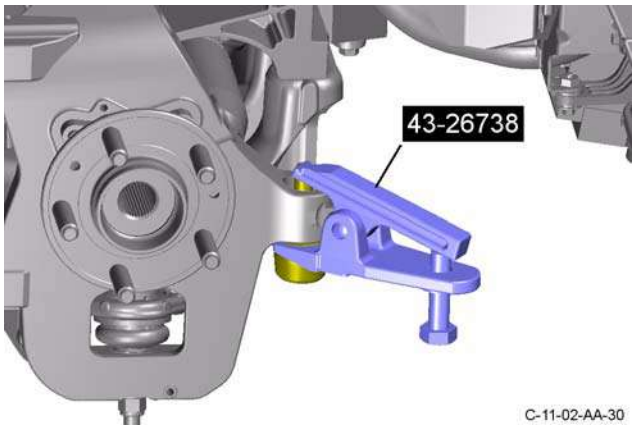

Figure 21

46. Remove the special tool from the track rod end.
47. Do steps 39 to 48 for the other side.
48. Put a container in position under the PAS rack to collect spilled oil.
49. Lower the vehicle.
50. Remove the bolt that attaches the PAS pipes to the PAS rack.

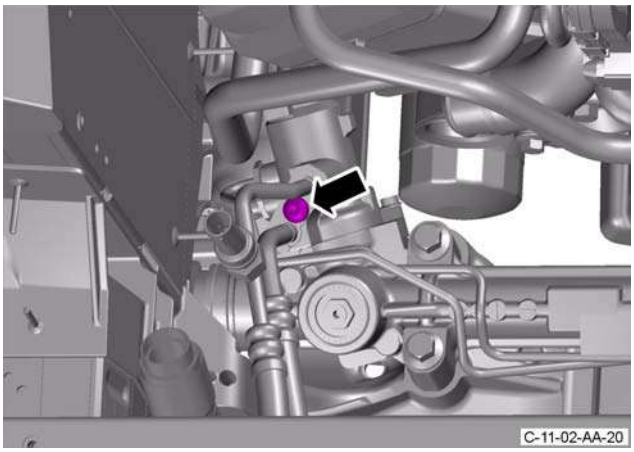

Figure 22

51. Disconnect the PAS pipes from the PAS rack.

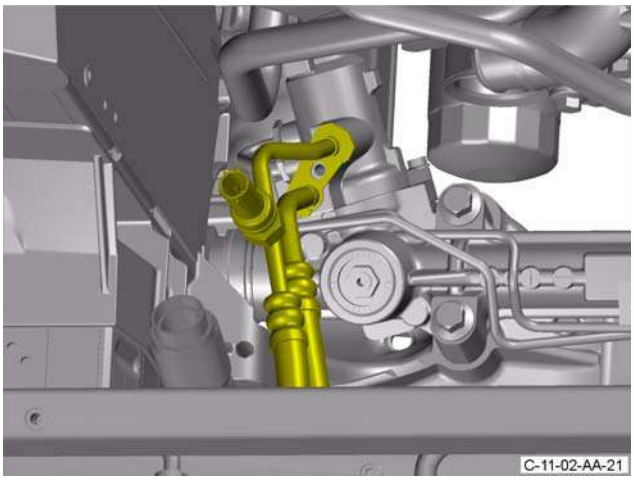

Figure 23

52. Let the oil drain into the container.
53. Lift the vehicle.
54. Remove and discard the two O-ring seals from the PAS pipes.

Figure 24

55. Install applicable caps to seal the open ports.
56. Make sure that the area is clean.

57. Remove the three bolts that attach the PAS rack to the front subframe.

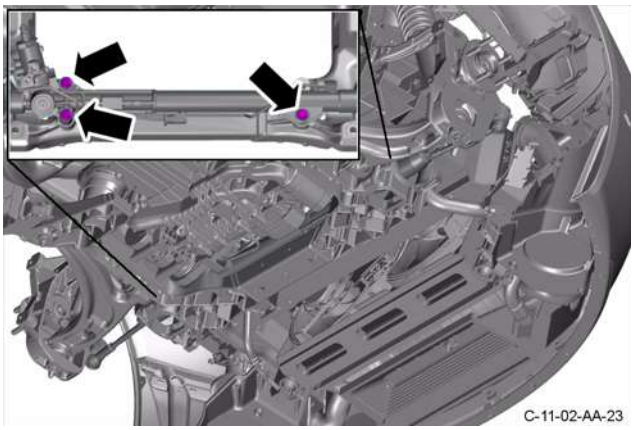

Figure 25

58. Remove the PAS rack.

Install

1. Put the PAS rack into position.

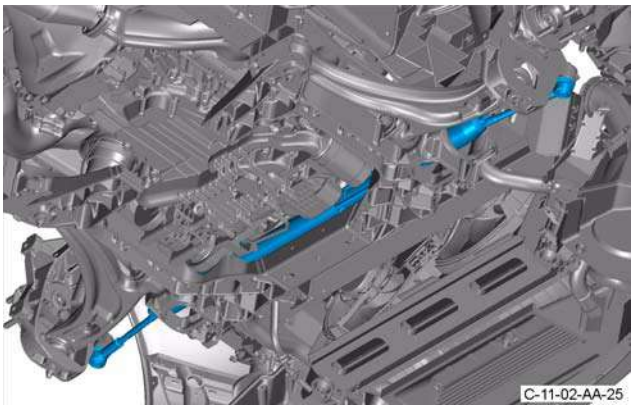

Figure 26

2. Install and tighten the three bolts that attach the PAS rack to the front subframe.

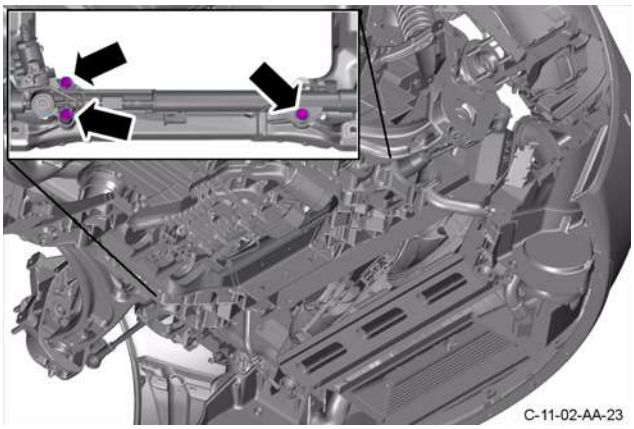

Figure 27

3. Remove and discard the caps from the PAS pipes and the PAS rack.
4. Install two new O-ring seals onto the PAS pipes.

Figure 28

5. Connect the PAS pipes to the PAS rack.

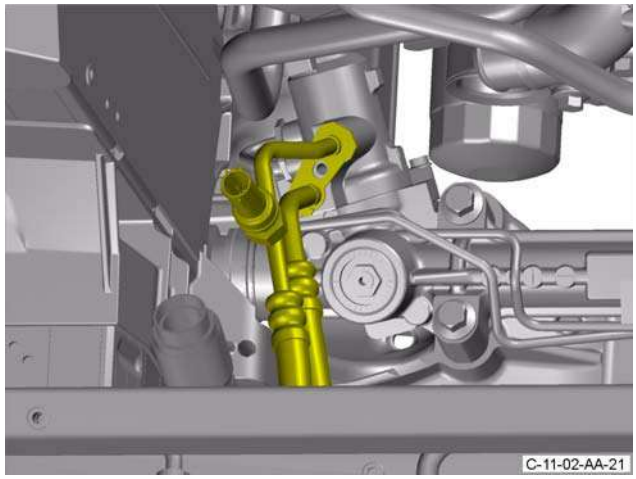

Figure 29

6. Lower the vehicle.
7. Install and torque the screw that attaches the PAS pipes to the PAS rack.

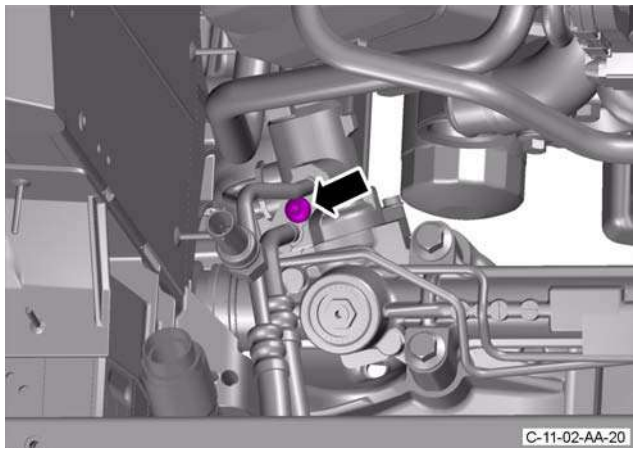

Figure 30

8. Lift the vehicle.

9. At the left side, install the track rod end onto the front wheel knuckle, and install and torque the nut.

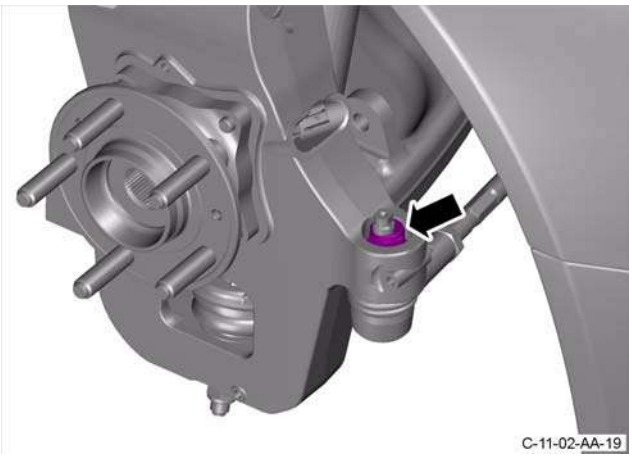

Figure 31

10. Install and tighten the front bolt that attaches the brake backplate to the front wheel knuckle.

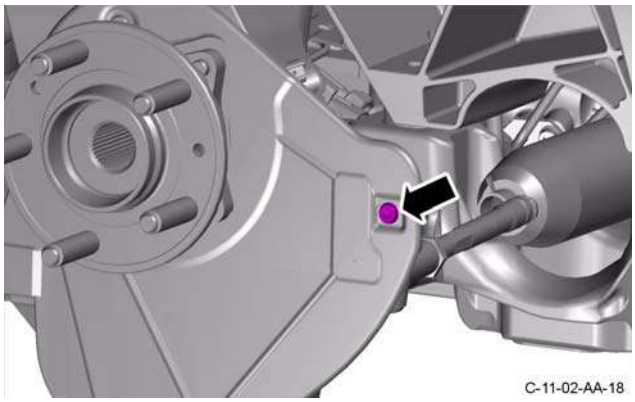

Figure 32

11. Install the brake disc.
12. Install and tighten the two screws that attach the brake disc to the wheel hub.

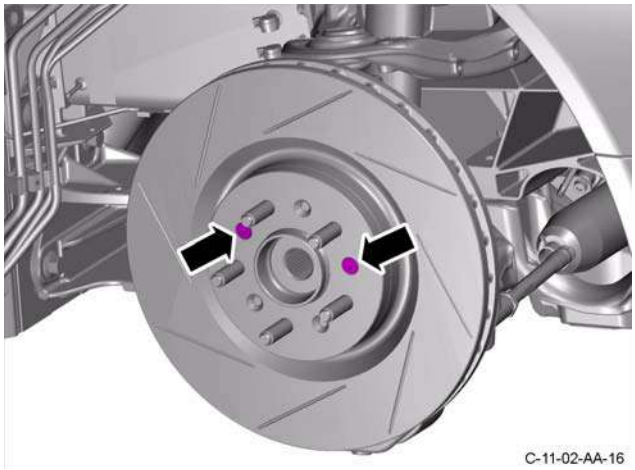

Figure 33

13. Remove and discard the cable tie to release the brake caliper.
14. Put the brake caliper in position on the front wheel knuckle.

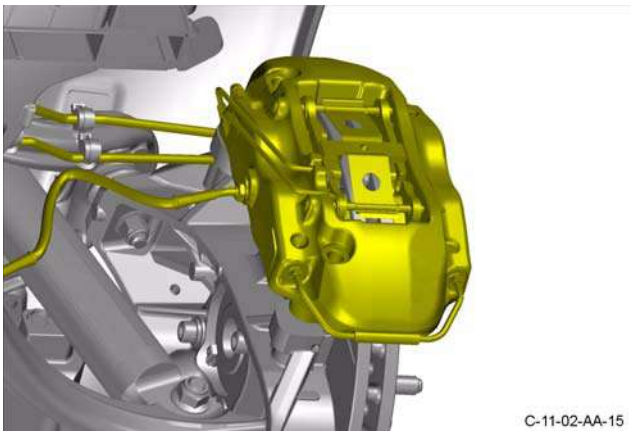

Figure 34

15. Install and tighten the two new bolts that attach the brake caliper to the front wheel knuckle.

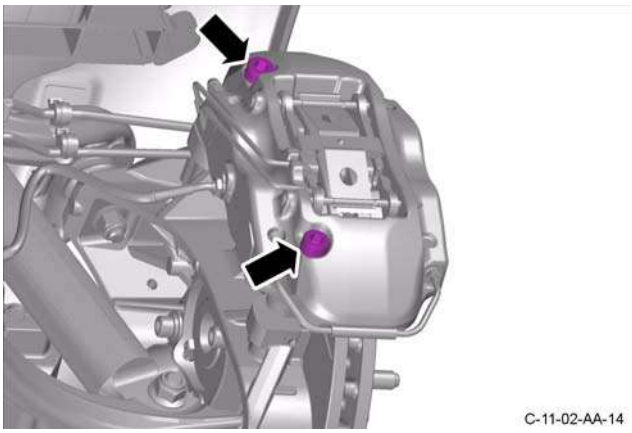

Figure 35

16. Do steps 9 to 15 for the right side.
17. Install the pinion coupling.

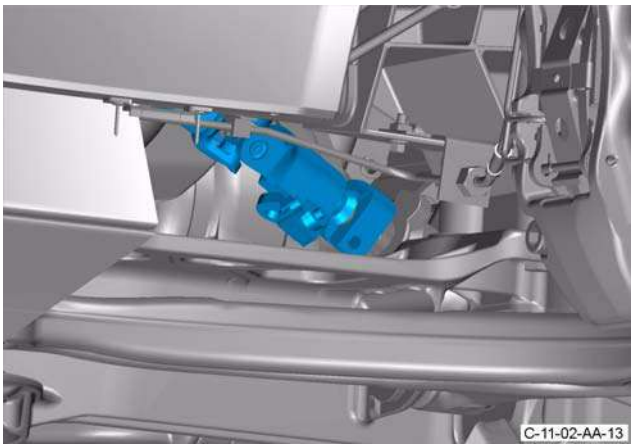

Figure 36

18. Turn the steering to get access to install the bolt that attaches the pinion coupling to the PAS rack.
19. Install and torque the bolt that attaches the pinion coupling to the PAS rack.

20. Connect the bottom universal joint for the column to the coupling.

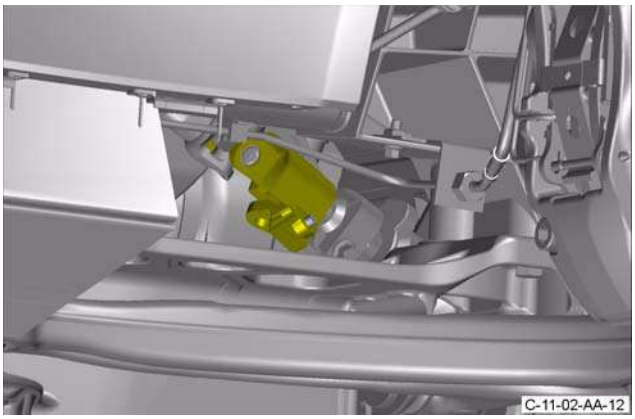

Figure 37

21. Move the lever on the universal joint to attach the joint to the coupling.
22. Install and torque the bolt that attaches the universal joint for the lower steering column to the pinion coupling.

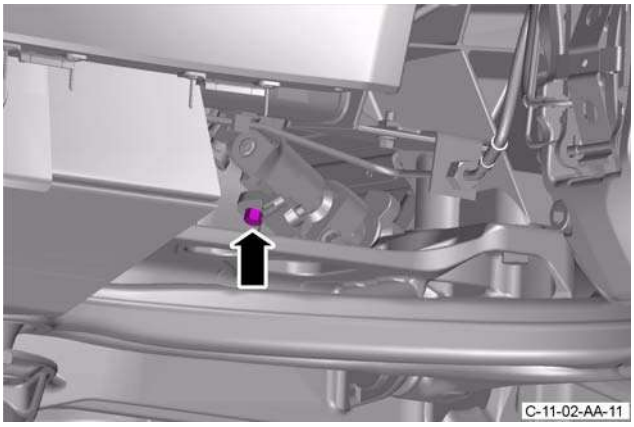

Figure 38

23. Lower the vehicle.

CAUTION
Be careful when you install the oil tank in the step that follows. If you are not, the air conditioning switch and wiring harness can be damaged.

24. Put the the oil tank in position.

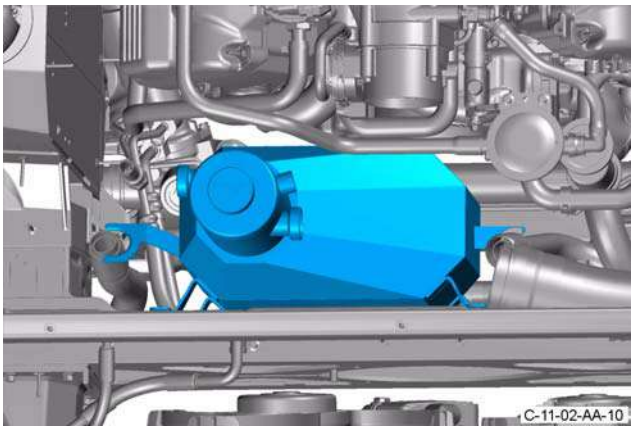

Figure 39

25. Loosely install the two top screws that attach the oil tank to the body.

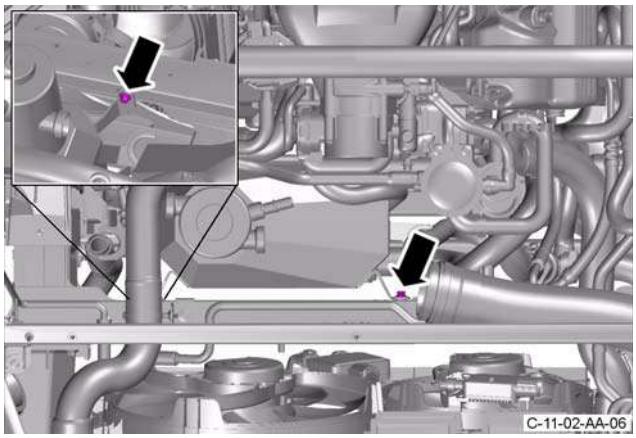

Figure 40

26. Lift the vehicle.
27. Install and tighten the two bottom screws that attach the oil tank to the body.

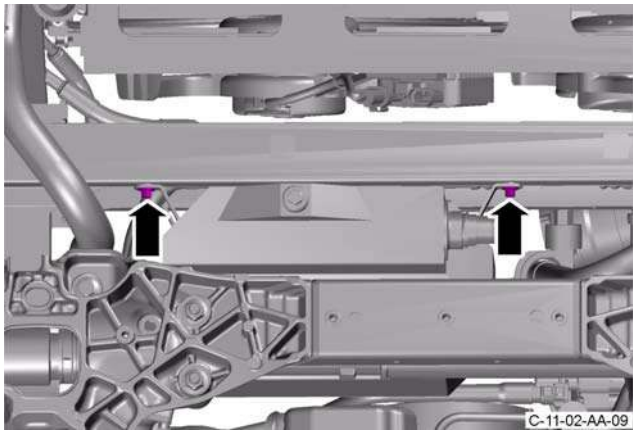

Figure 41

28. Remove and discard the sealing plugs from the oil tank and the pipes.
29. Connect the bottom oil pipe to the oil tank and tighten the union.

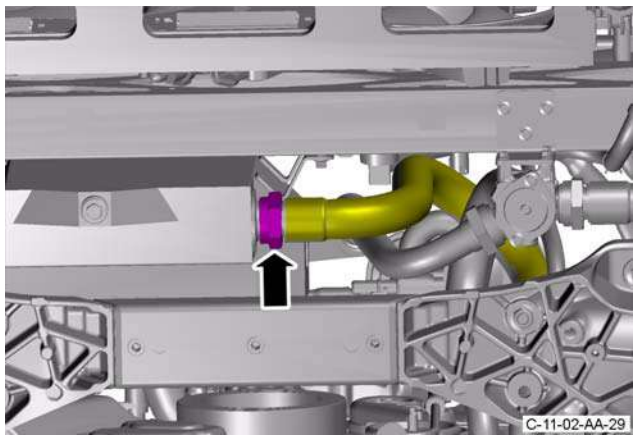

Figure 42

30. Remove and discard the cable tie to release the anti-roll bar.

31. Put the anti-roll bar into position.

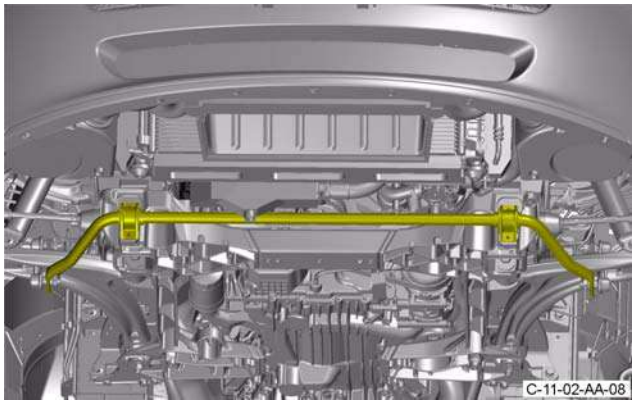

Figure 43

32. Install and torque the four screws that attach the anti-roll bar to the front subframe.
33. Lower the vehicle.
34. Tighten the two top screws that attach the oil tank to the body.

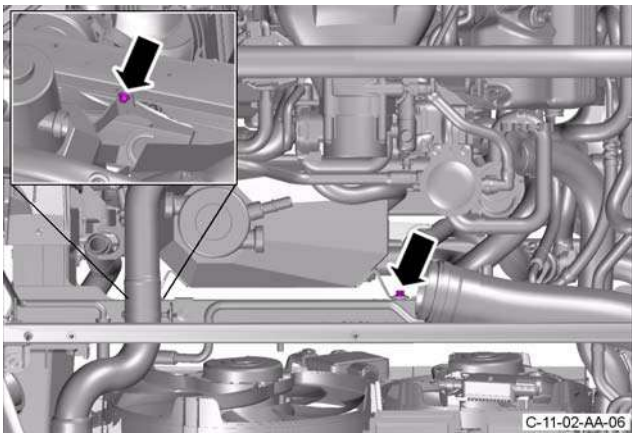

Figure 44

35. Remove and discard the sealing plugs from the upper oil pipe and the oil tank.
36. Install the top oil pipe onto the oil tank and tighten the union that attaches it to the oil tank.

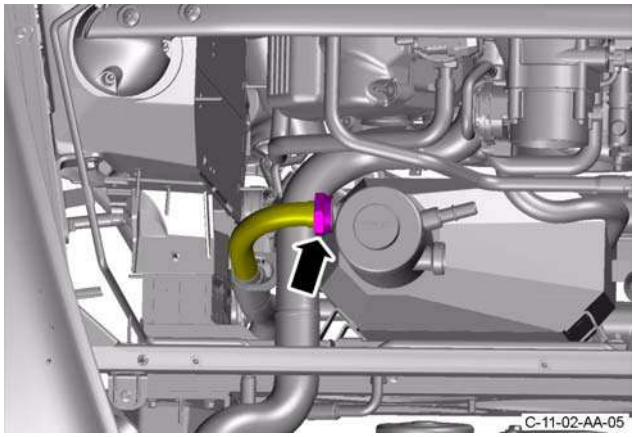

Figure 45

37. Remove and discard the caps from the oil breather pipes and the oil tank.
38. Connect the two oil breather pipes to the oil tank.

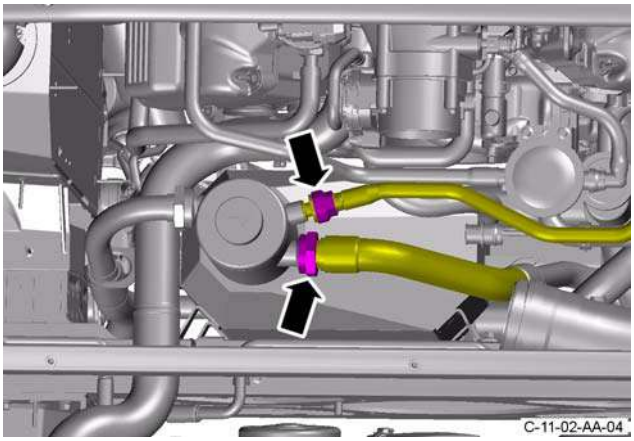

Figure 46

39. Connect the air intake pipe to the throttle body and the outlet pipe for the right side air cleaner.

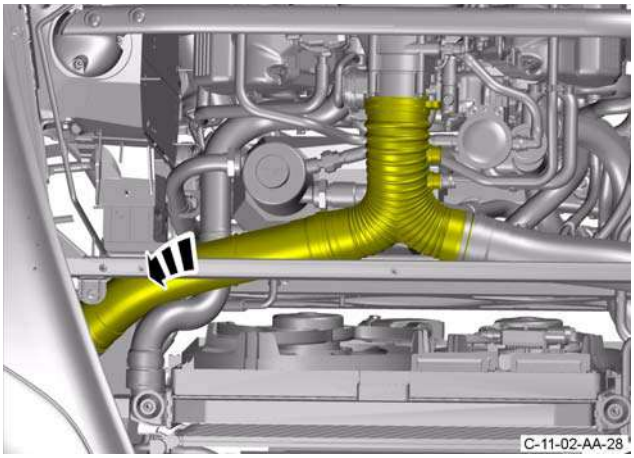

Figure 47

40. Install the clip that attaches the air intake pipe to the outlet pipe for the right side air cleaner.

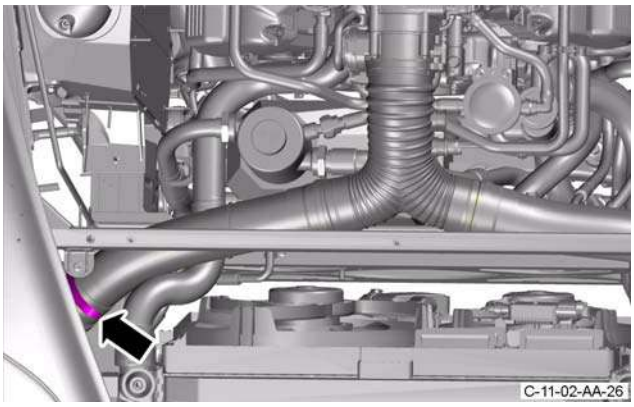

Figure 48

41. Install the clip that attaches the air intake pipe to the throttle body.

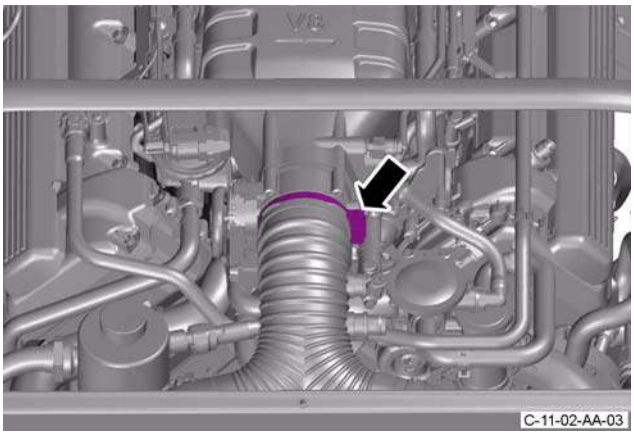

Figure 49

42. Remove and discard the sealing plugs from the two breather pipes and the air intake pipe.
43. Connect the two breather pipes to the air intake pipe.

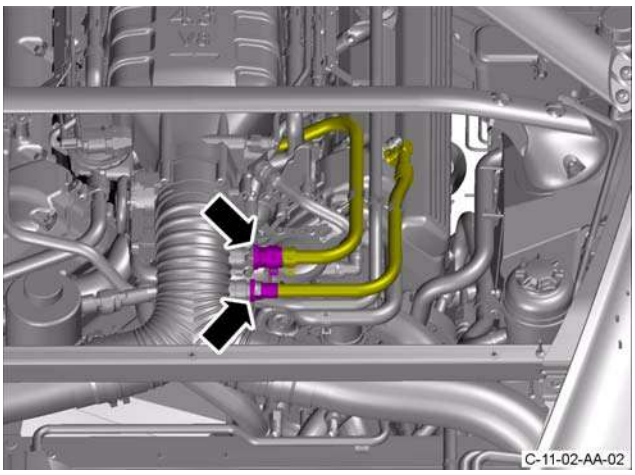

Figure 50

44. Install the radiator closing panel (refer to Workshop Manual procedure 01.02.AA - Radiator Closing Panel).
45. Fill the oil tank with the correct quantity of oil.
46. Fill the PAS fluid reservoir with the correct quantity of PAS fluid.
47. Connect the battery ground cable.
48. Bleed the PAS system.
49. Do a check of the engine oil level. Add oil if necessary.
50. Lift the vehicle.
51. Install the front right side wheel-arch liner (refer to Workshop Manual procedure 01.02.GB - Front Right Side Wheel-Arch Liner).
52. Install the front wheels and tyres (refer to Workshop Manual procedure 04.04.ED - Wheel and Tyre - Pair)
53. Do a check of the four-wheel alignment.
54. Use the applicable equipment to lift the vehicle and make it safe.
55. Install the front undertray (refer to Workshop Manual procedure 01.02.NB - Front Undertray).

RH/LH Track Rod End-Renew

Repair Operation Time (ROT)		
Item		**Code**
Track Rod End	RH	**11.02.AC**
Track Rod End	LH	**11.02.AB**

Removal

1. Raise vehicle on ramp.
2. Remove road wheel(s).
3. Loosen tie rod locknut.
4. Install tool (204 - 524) on front hub, install and tighten wheel nuts.

Caution
Do Not use a hammer, to 'shock' the track rod end. Always use the special service tool.

5. Lower vehicle to raise suspension sufficient to install ball joint removing tool (204 - 523).
6. Remove nut, track rod end to vertical link.
7. Using (204-523 Ball Joint Splitter), release track rod end from vertical link.
8. Remove tool (204 - 524) from front hub.
9. Count number of turns and remove track rod end from tie rod.

Installation

1. Clean track rod end taper and mating face on vertical link.
2. Install track rod end on tie rod the same amount of turns.
3. Install track rod end in vertical link.
4. Install road wheel(s).
5. Lower vehicle on ramp.

WARNING
DO NOT DRIVE THE VEHICLE UNTIL THE STEERING GEOMETRY HAS BEEN SET AND ALL FIXINGS HAVE BEEN SECURED.

6. Carry out full vehicle geometry check/adjust.
7. Torque tie rod ball joint locknut(s).

Power Steering Pump to Rack Hose Assembly-Renew

Repair Operation Time (ROT)		
Item		**Code**
Power Steering Pump to Rack Hose Assembly-Renew	LHD	**11.02.EA**
Power Steering Pump to Rack Hose Assembly-Renew	RHD	**11.02.EE**

Removal

WARNING
AVOID EXCESSIVE SKIN CONTACT WITH MINERAL OIL. MINERAL OILS REMOVE THE NATURAL FATS FROM THE SKIN, LEADING TO DRYNESS, IRRITATION AND DERMATITIS.

1. Remove PAS fluid from reservoir (syringe).
2. Remove throttle body duct for access. (clips x3).
3. Remove top bolts (x2) from engine oil tank and loosen bottom bolts (x2) (allows tank to move to access pipe support fixings).
4. Remove bolts (x2) securing pipe to body.
5. Disconnect sensor multiplug.

Caution
Always plug pipes and hoses to prevent ingress of dirt or moisture into the system.

6. Remove hose from pump union.
7. Remove pipes from steering rack (bolt x1).
8. Remove pipe from vehicle.

Installation

1. Renew o-rings on PAS pipes and pump pipe.
2. Install hose to vehicle.
3. Install bolts brackets to body.
4. Install PAS pipes to rack (bolt x1).
5. Connect sensor multiplug.
6. Install pipe to pump union.
7. Install bolts and tighten oil tank fixings (torque).
8. Install throttle body duct. (clips x3).
9. Bleed PAS system (see Workshop Manual procedure 11.01.AA Power Assisted Steering System - Bleed).

Power Steering Rack to Cooler Hose-Renew

Repair Operation Time (ROT)		
Item		**Code**
Power Steering Rack to Cooler Hose-Renew	LHD	**11.02.EB**
Power Steering Rack to Cooler Hose-Renew	RHD	**11.02.EF**

Removal

1. Remove radiator grille (see Workshop Manual procedure 01.08.AA Grille - Radiator - Renew).

WARNING
AVOID EXCESSIVE SKIN CONTACT WITH MINERAL OIL. MINERAL OILS REMOVE THE NATURAL FATS FROM THE SKIN, LEADING TO DRYNESS, IRRITATION AND DERMATITIS.

2. Remove PAS fluid from reservoir (syringe).

Caution
Always plug pipes and hoses to prevent ingress of dirt or moisture into the system.

3. Remove hose from cooler (clip x1) and support clips (x2).
4. Remove undertray (see Workshop Manual procedure 01.02.NB Undertray - Front - Renew).
5. Remove bolt, bracket to lower radiator crossmember.
6. Lower ramp.
7. Remove throttle body duct for access. (clips x3).

Caution
Always plug pipes and hoses to prevent ingress of dirt or moisture into the system.

8. Remove pipes from steering rack (bolt x1).
9. Remove hose from vehicle (support clips x2).

Installation

1. Renew the O-rings on the PAS pipes.
2. Install hose to vehicle (support clips).
3. Install PAS pipes to rack (bolt x1).
4. Install throttle body duct. (clips x3).
5. Raise ramp.
6. Install support clip bolt to radiator crossmember.
7. Install hose to cooler and support clips (x2).
8. Install undertray (see Workshop Manual procedure 01.02.NB Undertray - Front - Renew).
9. Install radiator grille (see Workshop Manual procedure 01.08.AA Grille - Radiator - Renew).
10. Top up PAS fluid.

Steering (11.00)

Steering Column (11.04)

Description

The steering column has reach and tilt functions. These let the driver manually set the position of the steering column. by using the reach / tilt lever that is on the underside of the steering column.This is independent of the ignition switch position .

The steering intermediate shaft has two parts. The lower shaft is attached to both the steering gear and the upper shaft.

The Electronic Steering Column Lock (ESCL) is attached to the upper casting of the steering column and has a locking pin. The steering column is electrically unlocked when the ignition key is installed and operated to position 2. The lock engages when the ignition switch is removed and the steering wheel is turned to the centre position.

Specifications

Torque Figures			
Description	Nm.	lb/ft	Nominal
Steering Column to cross car beam	21-27	15.5-19.9	24Nm
Upper column to I-shaft	27.3-32.7	20-24.1	30Nm
Vee-yoke to pinion extension shaft	15.5-18.5	11.4-21.2	17Nm
Power coupling to pinion	21.2-28.8	15.6-21.2	25Nm

Maintenance

Top Shroud for the Steering Column - Remove and Install

Repair Operation Time (ROT)	
Item	**Code**
Top Shroud for the Steering Column - Remove and Install	**11.04.AA**

Remove

1. Release the steering column adjustment lever.
2. Move the steering wheel to the longest column position.
3. Push the adjustment lever back to lock the steering wheel.
4. Release the seven clips and remove the lower panel from the driver's side of the instrument panel.

For Pre-08MY vehicles:

5. Put the key in the ignition switch and turn it to position 1 to release the Electronic Steering Column Lock (ESCL).

For 08MY vehicles or newer:

6. Put the Emotion Control Unit (ECU) into the docking station at position 2 to release the ESCL.
7. Turn the steering wheel to get access to the top screw in the front face of the shroud at the left side .

Note: The top screw goes through the top shroud and a tab on the bottom shroud to attach it.

8. Remove the screw.
9. Turn the steering wheel to get access to the top screw in the front face of the shroud at the right side .

Note: The top screw goes through the top shroud and a tab on the bottom shroud to attach it.

10. Remove the screw.
11. Remove the top shroud.

Install

1. Put the top shroud in position on the steering column.

For Pre-08MY vehicles:

2. Put the key in the ignition switch and turn it to position1 to release the Electronic Steering Column Lock (ESCL).

For 08MY vehicles or newer:

3. Put the Emotion Control Unit (ECU) into the docking station at position 2 to release the ESCL.
4. Turn the steering wheel to get access to the top screw hole in the front face of the shroud at the left side.
5. Install the screw.
6. Turn the steering wheel to get access to the top screw hole in the front face of the shroud at the right side.
7. Install the screw.

Bottom Shroud for the Steering Column - Remove and Install

Repair Operation Time (ROT)	
Item	**Code**
Bottom Shroud for the Steering Column - Remove and Install	**11.04.AB**

Remove

1. Release the seven clips and remove the lower panel from the driver's side of the instrument panel.

For Pre-08MY vehicles:

2. Put the key in the ignition switch and turn it to position 1 to release the Electronic Steering Column Lock (ESCL).

For 08MY vehicles or newer:

3. Install the Emotion Control Unit (ECU) into the docking station at position 2 to release ESCL.
4. Turn the steering wheel to get access to the two screws in the front face of the shrouds at the left side (refer to Figure 1).

Note: The top screw goes through the top shroud and a tab on the bottom shroud to attach it.

Figure 1

5. Remove the two screws at the left side of the front face of the column shrouds.
6. Turn the steering wheel to get access to the two screws in the front face of the shrouds at the right side.

Note: The top screw goes through the top shroud and a tab on the bottom shroud to attach it.

7. Remove the two screws at the right side of the front face of the column shrouds.
8. Remove the three screws that attach the bottom shroud to the steering column.
9. On pre-08MY vehicles remove the ignition key from the igniiton switch.
10. Remove the bottom shroud.
11. If a new shroud is to be installed on pre-08MY vehicles, remove the ignition switch grommet.

Install

1. If necessary, install the ignition switch grommet on the bottom column shroud (shroud).
2. Put the shroud in position on the steering column.
3. Install the three screws that attach the shroud to the steering column.

For Pre-08MY vehicles:

4. Put the key in the ignition switch and turn it to position 1 to release the ESCL.

For 08MY vehicles or newer:

5. Put the Emotion Control Unit (ECU) into the docking station at position 2 to release the ESCL.
6. Turn the steering wheel to get access to the two screws in the front face of the shrouds at the left side.

Note: The top screw goes through the top shroud and a tab on the bottom shroud to attach it.

7. Install the two screws at the left side of the front face of the column shrouds.
8. Turn the steering wheel to get access to the two screws in the front face of the shrouds at the right side.

Note: The top screw goes through the top shroud and a tab on the bottom shroud to attach it.

9. Install the two screws at the right side of the front face of the column shrouds.
10. Put the lower panel on the driver's side of the instrument panel and engage the seven clips.

Steering Column Gaiter-Renew

Repair Operation Time (ROT)	
Item	**Code**
Steering Column Gaiter-Renew	**11.04.BB**

Remove

1. Power driver's seat to its lowest and most rearward position.
2. Remove the top and bottom shrouds from the steering column (Refer to 'Top and Bottom Shrouds for the Steering Column - Remove and Install', page 11-4-4).
3. Centralise the steering wheel until the steering lock engages.
4. Remove the ignition key.

WARNING
LEAVE THE VEHICLE FOR TWO MINUTES AFTER YOU DISCONNECT THE BATTERY ,BEFORE YOU DO WORK ON THE AIRBAG SYSTEM. IF YOU DO NOT, THE AIRBAG SYSTEM CAN OPERATE AND CAUSE INJURY.

5. Disconnect the vehicle battery.
6. Remove the steering wheel (see Workshop Manual procedure 11.06.AB Steering Wheel - Renew).
7. Attach the rotary coupling in position with masking tape.
8. Release the two clips that attach the column switch harness to the load-spread plate.
9. Pull back steering column bulkhead gaiter.
10. Remove and discard pinch bolt, upper column to intermediate shaft.
11. Remove the four Torx bolts that attach the upper column mounting.
12. Release upper column from intermediate shaft.
13. Support steering column assembly.
14. Remove gaiter from steering column.

Install

1. Install the gaiter on the steering column.
2. Put the upper steering column assembly in position and connect it to the intermediate shaft.
3. Position the upper column to the mounting, install and torque the four Torx bolts.
4. Install and torque the column pinch bolt.
5. Put the steering column gaiter in position.
6. Remove masking tape from the rotary coupler.
7. Install steering wheel (see Workshop Manual procedure 11.06.AB Steering Wheel - Renew).

8. Connect vehicle battery.
9. Install the steering column shrouds (Refer to 'Top and Bottom Shrouds for the Steering Column - Remove and Install', page 11-4-4).
10. Put the driver's seat and the steering column in their initial positions.

Upper Steering Column Assembly-Renew

Repair Operation Time (ROT)	
Item	**Code**
Upper Steering Column Assembly-Renew	**11.04.CB**

Remove

1. Power driver's seat to its lowest and most rearward position.
2. Remove the top and bottom shrouds from the steering column (Refer to 'Top and Bottom Shrouds for the Steering Column - Remove and Install', page 11-4-4).
3. Disconnect vehicle battery.
4. Centralise the steering wheel until the steering lock engages.
5. Remove the ignition key.

WARNING
LEAVE THE VEHICLE FOR TWO MINUTES AFTER YOU DISCONNECT THE BATTERY BEFORE YOU DO WORK ON THE AIRBAG SYSTEM. IF YOU DO NOT, THE AIRBAG SYSTEM CAN OPERATE AND CAUSE INJURY.

6. Disconnect the battery.
7. Remove the steering wheel (Refer to 'Steering Wheel-Renew', page 11-6-1).
8. Attach the rotary coupling in position with masking tape.
9. Disconnect steering column switch multiplugs (x5).
10. Remove screw securing load-spread plate to column and collect column shrouds mounting bracket.
11. Release clips (x2) from column switch harness to load-spread plate.
12. Pull back steering column bulkhead gaiter.
13. Remove and discard pinch bolt from upper column to intermediate shaft.

Figure 1

14. Remove the four Torx screws from the upper column mounting.
15. Release upper column from intermediate shaft.
16. Disconnect multiplug from steering sensor and remove steering column assembly.
17. Unclip steering column switches from column and remove switch gear.
18. Mark fitted position of rotary coupler and remove rotary coupler.
19. Remove gaiter from steering column.
20. Remove Torx screws (x3) from securing steering sensor to mounting bracket.
21. Remove sensor.
22. Remove Torx screws (x3) that secure steering sensor mounting bracket to column and remove bracket.

Install

1. Position steering sensor mounting bracket, install and tighten Torx screws (x3).
2. Install the steering sensor, install and tighten Torx screws (x3).
3. Install gaiter on steering column.
4. Install steering column switch gear and secure clips.
5. Install the rotary coupler to marked position and secure with masking tape.
6. Position upper steering column assembly and connect to intermediate shaft.
7. Connect multiplug to steering sensor.
8. Position upper column to mounting bracket, install and torque tighten Torx bolts (x4).
9. Install and torque tighten column pinch bolt.
10. Connect multiplugs (x5).
11. Position load-spread plate and secure harness clips (x2).
12. Install load-spread plate and secure with screw.

13. Remove masking tape from rotary coupler.

Caution
Align the steering wheel and the rack to the centre position during assembly. If you do not, the rotary coupling can be damaged. Also, it can be difficult to align the steering wheel in the straight-ahead position.

14. Install the steering wheel (Refer to 'Steering Wheel-Renew', page 11-6-1).
15. Install air temperature pipe to lower instrument panel and install panel.
16. Connect the vehicle battery.
17. Install the steering column shrouds (Refer to 'Top and Bottom Shrouds for the Steering Column - Remove and Install', page 11-4-4).
18. Put the driver's seat and the steering column in their initial positions.

Top and Bottom Shrouds for the Steering Column - Remove and Install

Repair Operation Time (ROT)	
Item	**Code**
Top and Bottom Shrouds for the Steering Column - Remove and Install	**11.04.DB**

Remove the Bottom Shroud

1. Release the seven clips and remove the lower panel from the driver's side of the instrument panel.

For Pre-08MY vehicles:

2. Put the key in the ignition switch and turn it to position 1 to release the Electronic Steering Column Lock (ESCL).

For 08MY vehicles or newer:

3. Put the Emotion Control Unit (ECU) into the docking station at position 2 to release the ESCL.
4. Turn the steering wheel to get access to the one or two screws in the front face of the shrouds at the left side.

Note: The top screw goes through the top shroud and a tab on the bottom shroud to attach it.

Figure 1

5. Remove the one or two screws at the left side of the front face of the column shrouds.
6. Turn the steering wheel to get access to the one or two screws in the front face of the shrouds at the right side.

Note: The top screw goes through the top shroud and a tab on the bottom shroud to attach it.

7. Remove the one or two screws at the right side of the front face of the column shrouds.
8. Remove the three screws that attach the bottom shroud to the steering column.
9. On pre-08MY vehicles remove the ignition key from the ignition switch.
10. Remove the bottom shroud.
11. If a new shroud is to be installed on pre-08MY vehicles, remove the ignition switch grommet.

Remove the Top Shroud

1. Release the steering column adjustment lever.
2. Move the steering wheel to the longest column position.
3. Push the adjustment lever back to lock the steering wheel.
4. Remove the top shroud.

Install the Top Shroud

1. Put the top shroud in position on the steering column.

Install the Bottom Shroud

1. If necessary, install the ignition switch grommet on the bottom column shroud (shroud).
2. Put the shroud in position on the steering column.
3. Install the three screws that attach the shroud to the steering column.

For Pre-08MY vehicles:

4. Put the key in the ignition switch to release the ESCL.

For 08MY vehicles or newer:

5. Put the Emotion Control Unit (ECU) into the docking station at position 2 to release the ESCL.
6. Turn the steering wheel to get access to the one or two screws in the front face of the shrouds at the left side.

Note: The top screw goes through the top shroud and a tab on the bottom shroud to attach it.

7. Install the one or two screws at the left side of the front face of the column shrouds.
8. Turn the steering wheel to get access to the one or two screws in the front face of the shrouds at the right side.

Note: The top screw goes through the top shroud and a tab on the bottom shroud to attach it.

9. Install the one or two screws at the right side of the front face of the column shrouds.
10. Put the lower panel on the driver's side of the instrument panel and engage the seven clips.

Steering Column Lower Shaft Assembly-Renew

Repair Operation Time (ROT)	
Item	**Code**
Steering Column Lower Shaft Assembly-Renew	**11.04.DD**

Remove

1. Operate the driver's seat to its lowest and most rearward position.
2. Raise the vehicle and make it safe.
3. Remove the left side front wheel arch liner (see Workshop Manual procedure 01.02.FB Wheel Arch Liner - Front - LH - Renew).
4. Remove and discard the link bolt that attaches the lower steering column shaft to the coupling.
5. Release the shaft link for the lower steering column from the coupling.
6. Lower the vehicle.
7. Remove the top and bottom shrouds from the steering column (Refer to 'Top and Bottom Shrouds for the Steering Column - Remove and Install', page 11-4-4).
8. Disconnect the vehicle battery.
9. Turn the steering to the centre posiiton to engage the column lock and remove the ignition key.
10. Remove the steering wheel (Refer to 'Steering Wheel-Renew', page 11-6-1).
11. Use masking tape to hold the rotary coupling in position.
12. Release the two clips that attach the column switch harness to the load-spread plate.
13. Pull back the steering column bulkhead gaiter.
14. Remove and discard the pinch bolt that attaches the upper column to the intermediate shaft.
15. Remove the four Torx bolts that attach the upper column mounting.
16. Release the upper column from lower steering column shaft.
17. Use an applicable support to hold the steering column assembly.
18. Remove the lower steering column shaft.

Installation

1. Install the lower steering column shaft.
2. Raise the vehicle and make it safe.
3. Connect the lower steering shaft to the coupling.
4. Install a new bolt but do not torque at this stage.
5. Lower the vehicle.
6. Put the upper steering column assembly in posiiton.
7. Connect it to the intermediate shaft.
8. Put the upper column in position on its mounting.
9. Install and torque the four Torx bolts.
10. Install and torque column pinch bolt.
11. Put the steering column gaiter in position.
12. Remove the masking tape from the rotary coupler.

Caution

Align the steering wheel and the rack to the centre position during assembly. If you do not, the rotary coupling can be damaged. Also, it can be difficult to align the steering wheel in the straight-ahead position.

13. Install steering wheel (Refer to 'Steering Wheel-Renew', page 11-6-1).
14. Install the steering column shrouds (Refer to 'Top and Bottom Shrouds for the Steering Column - Remove and Install', page 11-4-4).
15. Raise the vehicle and make it safe.
16. Torque tighten lower steering column shaft link bolt.
17. Install LH front wheel arch liner (see Workshop Manual procedure 01.02.FB Wheel Arch Liner - Front - LH - Renew).
18. Lower the vehicle.
19. Connect the vehicle battery.
20. Put the driver's seat and the steering column in their initial positions.

ASTON MARTIN
ASTON MARTIN

Steering (11.00)

Steering Column Switches (11.05)

Maintenance

Ignition Switch-Renew (Pre-08 MY Only)

Repair Operation Time (ROT)	
Item	**Code**
Ignition Switch-Renew	**11.05.AB**

Remove

1. Operate the driver's seat to its lowest and most rearward position.
2. Remove the steering column shrouds (Refer to 'Top and Bottom Shrouds for the Steering Column - Remove and Install', page 11-4-4).

WARNING
LEAVE THE VEHICLE FOR TWO MINUTES AFTER YOU DISCONNECT THE BATTERY BEFORE YOU DO WORK. IF YOU DO NOT, THE AIRBAG SYSTEM CAN OPERATE AND CAUSE INJURY

3. Disconnect the vehicle battery.
4. Turn the steering wheel to the centre position until the steering lock engages.
5. Remove the screw that attaches the load-spread plate to the column.
6. Remove the mounting bracket for the column shrouds.
7. Release the two clips that attach the column switch harness to the load-spread plate.
8. Release the steering column switch from the column (to give access).
9. Release the ignition switch from the column.
10. Disconnect the electrical connector from the ignition switch.

Install

1. Connect the electrical connector to the ignition switch.
2. Install the ignition switch onto the column.
3. Install the steering column switch.
4. Put the load-spread plate in position and attach the two harness clips.
5. Install the screw that attaches the load-spread plate.
6. Install the steering column shrouds (Refer to 'Top and Bottom Shrouds for the Steering Column - Remove and Install', page 11-4-4).
7. Connect the vehicle battery.
8. Operate the driver's seat to its initial position.

Steering Column Stalk Assembly Switch-Renew (Pre-08 MY Only)

Repair Operation Time (ROT)	
Item	**Code**
Steering Column Stalk Assembly Switch-Renew	**11.06.BK**

Remove

1. Operate the driver's seat to its lowest and most rearward position.
2. Remove the top and bottom shrouds from the steering column (Refer to 'Top and Bottom Shrouds for the Steering Column - Remove and Install', page 11-4-4).
3. Remove the screw that attaches the load-spread plate to the steering column and remove the load-spread plate.

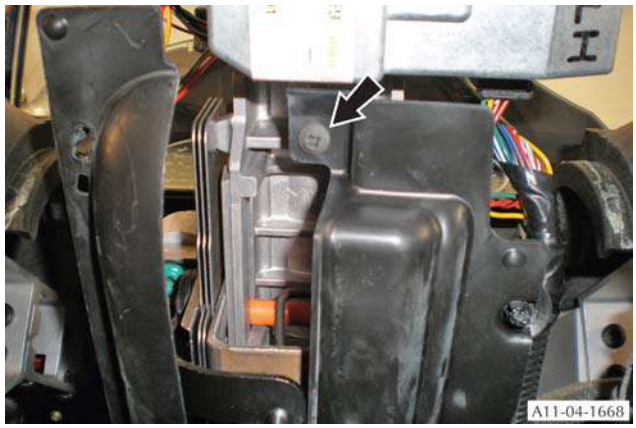

Figure A11-04-1668

4. Collect the mounting bracket for the column shrouds.
5. Release the two clips that attach the column switch harness to the load-spread plate.
6. Disconnect the three electrical connectors from the steering column switches.
7. Release the clips and remove steering column switches from the column.

Install

1. Install the steering column switches and make sure that the clips engage.
2. Connect the three electrical connectors to the column switches.
3. Put the load-spread plate in position and install the two harness clips.
4. Install the screw to attach the load-spread plate.
5. Install the top and bottom steering column shrouds (Refer to 'Top and Bottom Shrouds for the Steering Column - Remove and Install', page 11-4-4).
6. Connect the vehicle battery.
7. Put the drivers seat and the steering column back to their initial positions.

Cruise Control Switch-Renew

Repair Operation Time (ROT)	
Item	**Code**
Cruise Control Switch-Renew	**11.06.BL**

Remove

WARNING
LEAVE THE VEHICLE FOR TWO MINUTES AFTER YOU DISCONNECT THE BATTERY BEFORE YOU DO WORK. IF YOU DO NOT, THE AIRBAG SYSTEM CAN OPERATE AND CAUSE INJURY.

1. Remove airbag module (Refer to 'Driver's Airbag Module - Remove and Install', page 11-6-1).
2. Remove the cruise control switch.

Install

1. Install the cruise control switch.
2. Make sure that the routing of the switch harness is correct.
3. Install the airbag module (Refer to 'Driver's Airbag Module - Remove and Install', page 11-6-1).

Indicator Switch for the Steering Column - Remove and Install

Repair Operation Time (ROT)	
Item	**Code**
Indicator Switch for the Steering Column - Remove and Install	**11.06.CK**

Remove

1. Remove the top shroud from the steering column (Refer to 'Top Shroud for the Steering Column - Remove and Install', page 11-4-1).
2. Release the clips that attach the indicator switch to its mounting.
3. Release the indicator switch from its mounting.
4. Disconnect the electrical connector for the indicator switch.
5. Remove the indicator switch.

Install

1. Connect the electrical connector to the indicator switch.
2. Install the indicator switch in the mounting.
3. Make sure that the clips that attach the switch are correctly engaged.
4. Install the top shroud to the steering column (Refer to 'Top Shroud for the Steering Column - Remove and Install', page 11-4-1).

Airbag Rotary Coupler Assembly - Remove and Install

Repair Operation Time (ROT)	
Item	**Code**
Airbag Rotary Coupler Assembly - Remove and Install	**11.06.CM**

Remove

For Pre-08MY vehicles:

1. Put the key in the ignition switch and turn it to position 1 to release the Electronic Steering Column Lock (ESCL).

For 08MY vehicles or newer:

2. Put the Emotion Control Unit (ECU) into the docking station at position 2 to release the ESCL..

WARNING
LEAVE THE VEHICLE FOR TWO MINUTES AFTER YOU DISCONNECT THE BATTERY BEFORE YOU DO WORK. IF YOU DO NOT, THE AIRBAG SYSTEM CAN OPERATE AND CAUSE INJURY.

3. Disconnect the vehicle battery.
4. Turn the steering wheel to get access to one of the two M6 screws that attach the airbag module (Refer to FIgure 1).

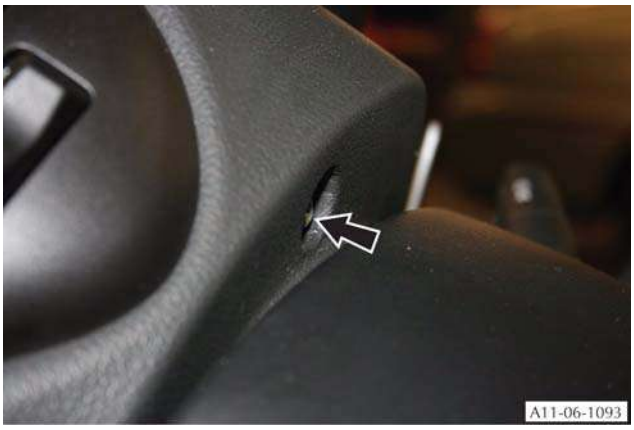

Figure 1

5. Remove the M6 screw.
6. Turn the steering wheel to get access to the second M6 screw that attaches the airbag module.
7. Remove the second M6 screw.

8. Move the airbag module to get access to the two electrical connectors (Refer to FIgure 2).

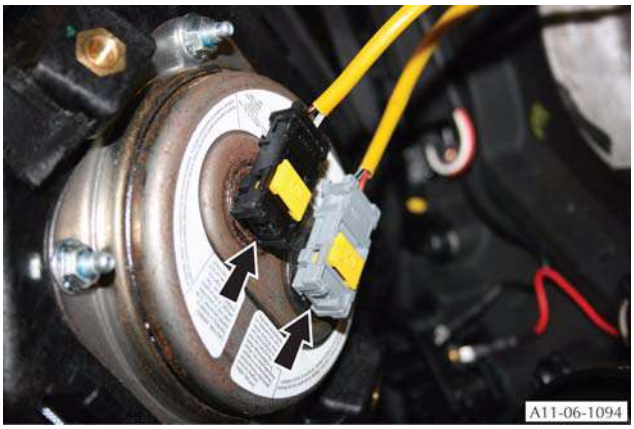

Figure 2

9. Disconnect the two electrical connector for the airbag module.
10. Remove the airbag module and keep it in an approved storage area.
11. Turn the steering to the centre position.
12. Disconnect the electrical connector for the steering wheel harness (Refer to FIgure 3).

Figure 3

13. Remove the M10 Torx screw that attaches the steering wheel (Refer to FIgure 4).

Figure 4

14. Remove the steering wheel assembly.
15. Apply tape to hold the rotary coupler in its central position (Refer to FIgure 5).

Figure 5

16. Remove the top and bottom steering column shrouds (Refer to 'Top and Bottom Shrouds for the Steering Column - Remove and Install', page 11-4-4).
17. Remove the screw that attaches the load-spread plate to the steering column (Refer to FIgure 6).

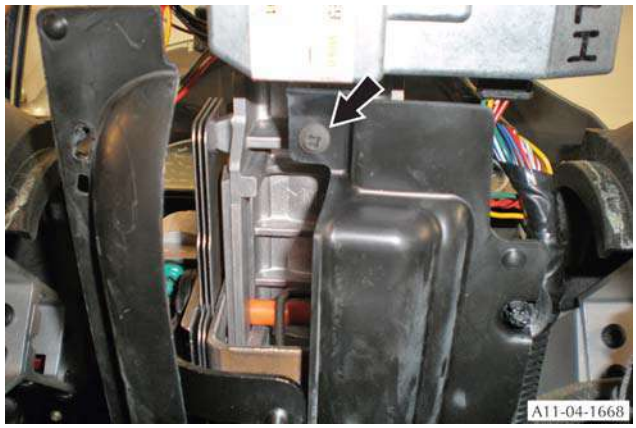

Figure 6

18. Remove the load-spread plate.
19. Release the clips that attach the column switches to the rotary coupler.
20. Remove the column switches from the rotary coupler.

21. Remove the electrical connector (1) from the rotary coupler (Refer to FIgure 7).

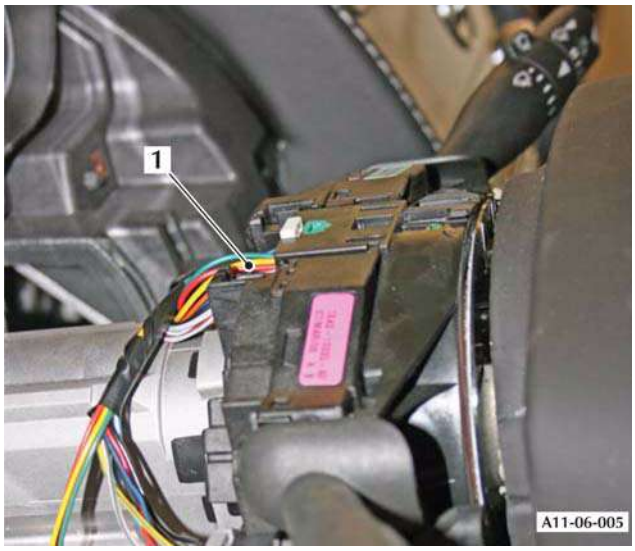

Figure 7

22. Release the two clips that attach the rotary coupler to the steering column and remove the rotary coupler.

Install

1. Put tape on the rotary coupler to hold it in its central position.
2. Push the rotary coupler onto the steering column until the two clips engage.
3. Install the electrical connector (1) for the rotary coupler.
4. Install the column switches into the rotary coupler.
5. Connect the electrical connectors for the column switches.
6. Put the load-spread plate in position on the steering column.
7. Install the screw that attaches the load-spread plate.
8. If a rotary coupler is to be installed that is not new, remove the tape used to hold it in its central position.
9. For a new rotary coupler, remove the locking key.
10. Install the top and bottom steering column shrouds (Refer to 'Top and Bottom Shrouds for the Steering Column - Remove and Install', page 11-4-4).
11. Put the electrical cables from the rotary coupler through the steering wheel.

Caution

Align the steering wheel and the rack to the centre position during assembly. If you do not, the rotary coupling can be damaged. Also, it can be difficult to align the steering wheel in the straight-ahead position.

12. Align and install the steering wheel assembly.
13. Install and torque the M10 screw that attaches the steering wheel (Refer to 'Specifications', page 11-6-1).
14. Connect the electrical connector for the steering wheel harness.
15. Connect the two electrical cables to the airbag module.
16. Put the airbag module in position.
17. Turn the steering wheel to get access to install one of the two airbag module M6 attachment screws.
18. Install the first M6 attachment screw.
19. Turn the steering wheel to get access to install the second airbag module M6 attachment screw.
20. Install the second M6 attachment screw.
21. Connect the vehicle battery.

Wiper Switch for the Steering Column - Remove and Install

Repair Operation Time (ROT)	
Item	**Code**
Wiper Switch for the Steering Column - Remove and Install	**11.06.EL**

Remove

1. Remove the top shroud from the steering column (Refer to 'Top Shroud for the Steering Column - Remove and Install', page 11-4-1).
2. Release the clips that attach the wiper switch to its mounting.
3. Release the wiper switch from its mounting.
4. Disconnect the electrical connector for the wiper switch.
5. Remove the wiper switch.

Install

1. Connect the electrical connector to the wiper switch.
2. Install the wiper switch in the mounting.
3. Make sure that the clips that attach the switch are correctly engaged.
4. Install the top shroud to the steering column (Refer to 'Top Shroud for the Steering Column - Remove and Install', page 11-4-1).

Steering (11.00)

Steering Wheel (11.06)

Specifications

Torque Figures		
Description	Nm.	lb/ft
Steering Wheel Attachment Screw	40	29.5
Airbag Module Attachment Screws	9	6.6

Maintenance

Steering Wheel-Renew

Repair Operation Time (ROT)	
Item	**Code**
Steering Wheel-Renew	**11.06.AB**

Remove

1. Remove the driver's airbag module (Refer to 'Driver's Airbag Module - Remove and Install', page 11-6-1).
2. Turn the steering to the centre position.
3. Disconnect the vehicle battery.
4. Disconnect the electrical connector for the steering wheel harness.

Figure A11-06-1096

Caution

Do not use steering lock to hold the wheel when you remove the attachmnet screw. The steering lock can be permanently damaged.

5. Remove the M10 Torx screw that attaches the steering wheel.

Figure A11-06-1095

6. Remove the steering wheel assembly.
7. Apply tape to hold the rotary coupler in its central position.

Installation

1. Put the electrical cables from the rotary coupler through the steering wheel.

Caution

Align the steering wheel and the rack to the centre position during assembly. If you do not, the rotary coupling can be damaged. Also, it can be difficult to align the steering wheel in the straight-ahead position.

2. Align and install the steering wheel assembly.
3. Install and torque the M10 screw that attaches the steering wheel (Refer to 'Specifications', page 11-6-1).
4. Connect the electrical connector for the steering wheel harness.
5. Install the driver's airbag module (Refer to 'Driver's Airbag Module - Remove and Install', page 11-6-1).
6. Connect vehicle battery.

Driver's Airbag Module - Remove and Install

Repair Operation Time (ROT)	
Item	**Code**
Driver's Airbag Module remove and Install	**11.06.BC**

Remove

For Pre-08MY vehicles:

1. Put the key in the ignition switch and turn it to position 1 to release the Electronic Steering Column Lock (ESCL).

For 08MY vehicles or newer:

2. Put the Emotion Control Unit (ECU) into the docking station at position 2 to release the ESCL..

WARNING
LEAVE THE VEHICLE FOR TWO MINUTES AFTER YOU DISCONNECT THE BATTERY BEFORE YOU DO WORK. IF YOU DO NOT, THE AIRBAG SYSTEM CAN OPERATE AND CAUSE INJURY.

3. Disconnect the vehicle battery.
4. Turn the steering wheel to get access to one of the two M6 screws that attach the airbag module.

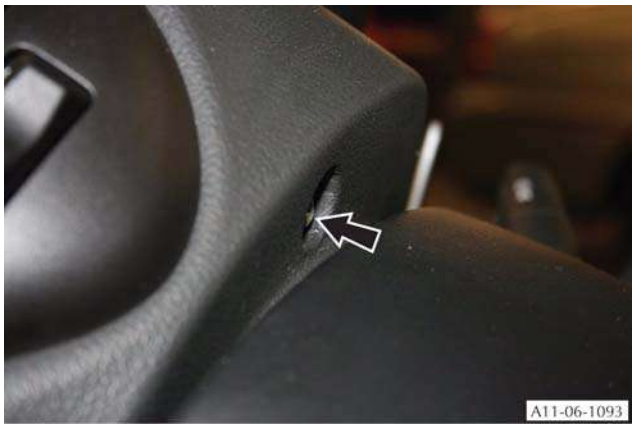

Figure A11-06-1093

5. Remove the M6 screw.
6. Turn the steering wheel to get access to the second M6 screw that attaches the airbag module.
7. Remove the second M6 screw.
8. Move the airbag module to get access to the two electrical connectors.

Figure A11-06-1094

9. Disconnect the two electrical connector for the airbag module.
10. Remove the airbag module and keep it in an approved storage area.

Install

1. Connect the two electrical cables to the airbag module.
2. Put the airbag module in position.
3. Turn the steering wheel to get access to install one of the two airbag module M6 attachment screws.
4. Install and torque the first M6 attachment screw.
5. Turn the steering wheel to get access to install the second airbag module M6 attachment screw.
6. Install and torque the second M6 attachment screw.
7. Connect the vehicle battery.

Climate Control (12.00)

Contents

Body Ventilation (12.01) 12-1-2
Air Intake & Distribution System 1-2
Air Intake Actuator 1-3
Air Mix Actuator 1-3
Airflow Mode Actuator 1-4
Heater System (12.02) 12-2-1
Maintenance 2-1
RHD/LHD Heater Unit (Including ECU)-Renew 2-1
Air Conditioning (A/C) System (12.03) 12-3-1
Major Components 3-2
Refrigerant System 3-3
Storing Refrigerant 3-4
Handling Insufficient Refrigerant Level 3-4
Handling Compressor Oil 3-4
Refrigeration Cycle 3-4
Specifications 3-5
Refrigerant and Lubricant 3-5
Capacities 3-5
Torque Figures 3-5
Diagnostics 3-6
Electrical Connectors 3-6
DTC Inspection 3-7
Single Fault Codes 3-7
Multiple Fault Codes 3-8
Maintenance 3-9
Connections 3-9
Recovery 3-9
Evacuation 3-10
Charging 3-10
A/C System Testing 3-11
Leaks 3-12
System Pressure Fault Classification 3-12
Maintenance 3-13
Condenser-Renew 3-13
Air Conditioning Compressor-Renew 3-13
Blower Assembly-Renew 3-14
Compressor to Condenser Tube Assembly-Renew 3-14
Troubleshooting 3-16

Climate Control (12.00)

Body Ventilation (12.01)

Air Intake & Distribution System

Outside air enters the plenum via inlets at the base of the windscreen.

Fresh mode - Air is drawn in through the plenum and into the blower unit. From the blower unit air enters the A/C unit where it is cooled and dehumidified as it passes through the evaporator. It is then 'reheated' to the selected temperature as it passes through the heater matrix,.

Air flows from the cabin into the boot via air vent grilles and through apertures in the rear parcel shelf. The air is exhausted from the vehicle through extraction vent assemblies (incorporating one way flaps) in the lower part of the rear bumpers, concealed by the bumper trim.

Recirculation mode - The air in the passenger compartment is drawn into the A/C system via the re-circulation air inlets on the blower unit.

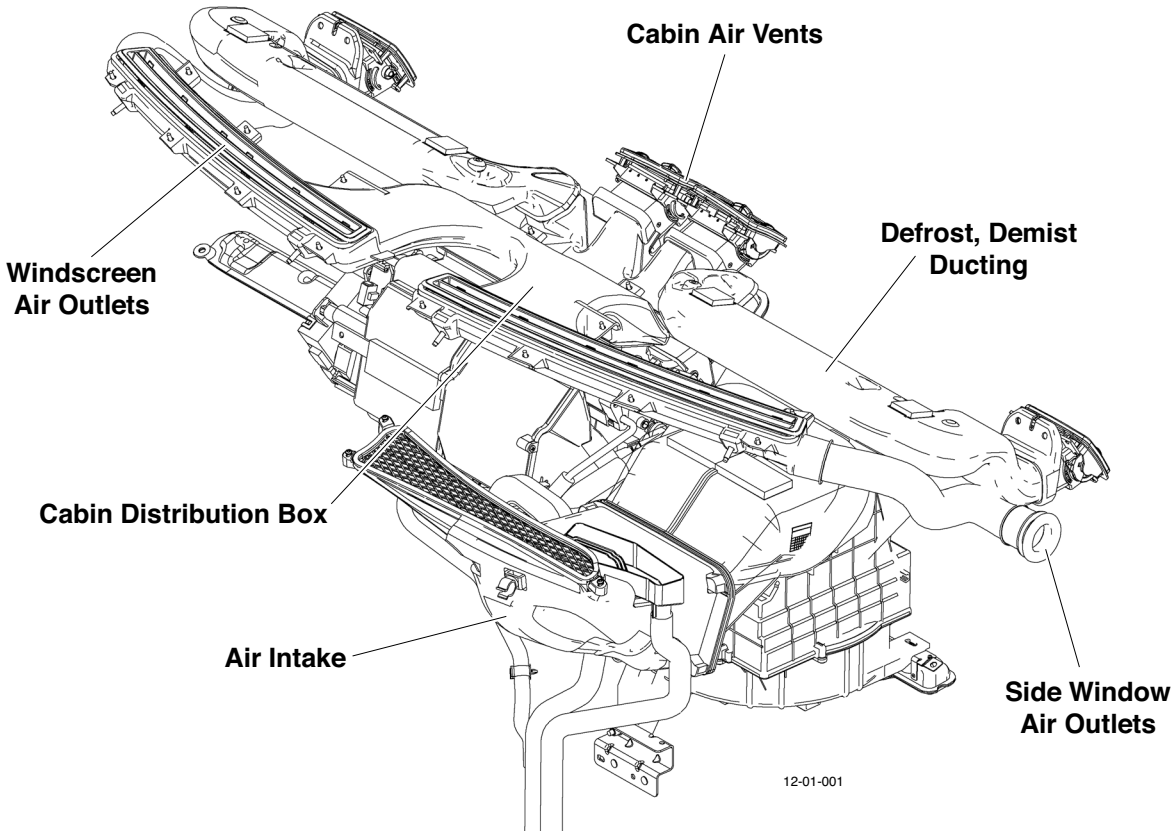

The A/C unit is linked and sealed to the defrost / demisting and cabin air ducting assemblies. The A/C unit incorporates two actuator operated flaps which regulate airflow to the selected air flow mode and temperature blend.

The centre vent duct incorporates a baffle plate which balances the volume of airflow of the centre and end of dash vents.

Air Intake Actuator

Inspection

1. Connect the battery positive voltage to Intake Actuator terminal 1 (or 3), and ground to terminal 3 (or 1).
2. Verify that the Air Intake Actuator operates as shown.

If the operation condition is not normal, replace the Air Intake Actuator.

Terminal (C0149)		Air Intake Actuator Operation
1	3	
Ground	B+	Fresh > Recirculate
B+	Ground	Recirculate > Fresh

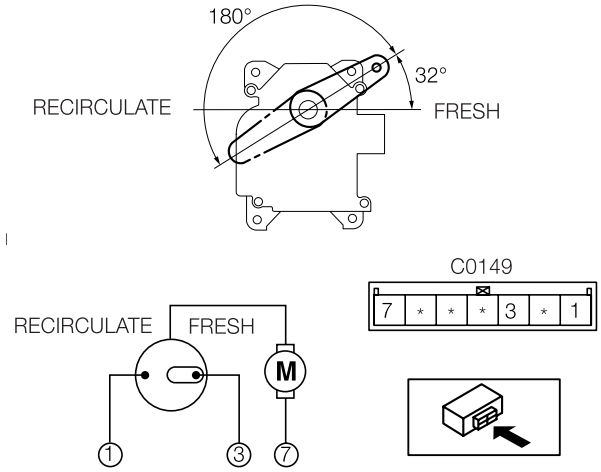

Air Mix Actuator

Inspection

1. Connect the battery positive voltage to Air Mix Actuator terminal 6 (or 7), and ground to terminal 7 (or 6). Verify that the Air Mix Actuator operates as shown.

If the operation condition is not normal, replace the Air Mix Actuator.

Terminal (C2130)		Air Intake Actuator Operation
1	3	
B+	Ground	Cold - Hot (LHD) Hot - Cold (RHD)
Ground	B+	Hot - Cold (LHD) Cold - Hot (RHD)

2. Check that the resistance between terminals 3 and 5, and 1 and 5 matches the Air Mix Actuator operation as shown in the graph below.

If the operation condition and resistance are not normal, replace the Air Mix Actuator.

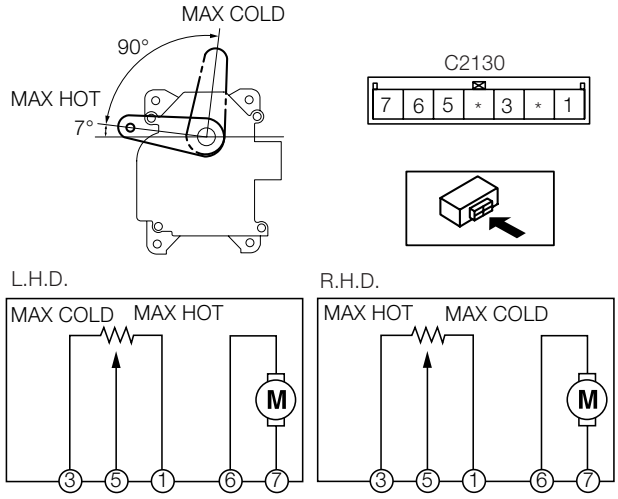

LHD

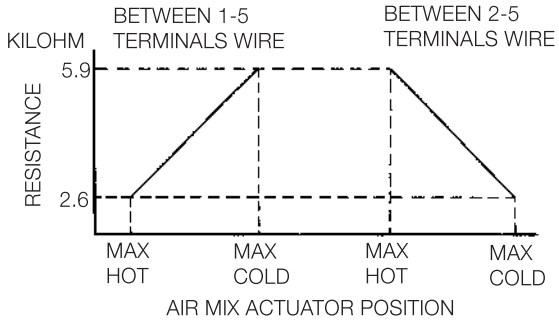

RHD

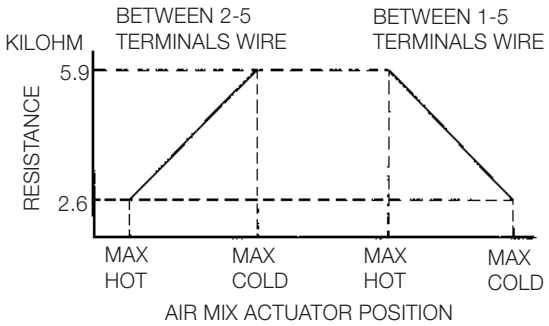

Airflow Mode Actuator

Inspection

1. Connect the battery positive voltage to the Airflow Mode Actuator terminal 6 (or 7), and ground to terminal 7 (or 6). Verify that the Airflow Mode Actuator operates as shown.

If the operation condition is not normal, replace the Airflow Mode Actuator.

Terminal		**Airflow Mode Actuator operation**
6	**7**	
B+	Ground	Defroster - Vent
Ground	B+	Vent - Defroster

2. Verify that the resistance between terminals 1 and 5, and 3 and 5 matches the Airflow Mode Actuator operation as shown in the graph below.

If the operation condition and resistance are not normal, replace the Airflow Mode Actuator.

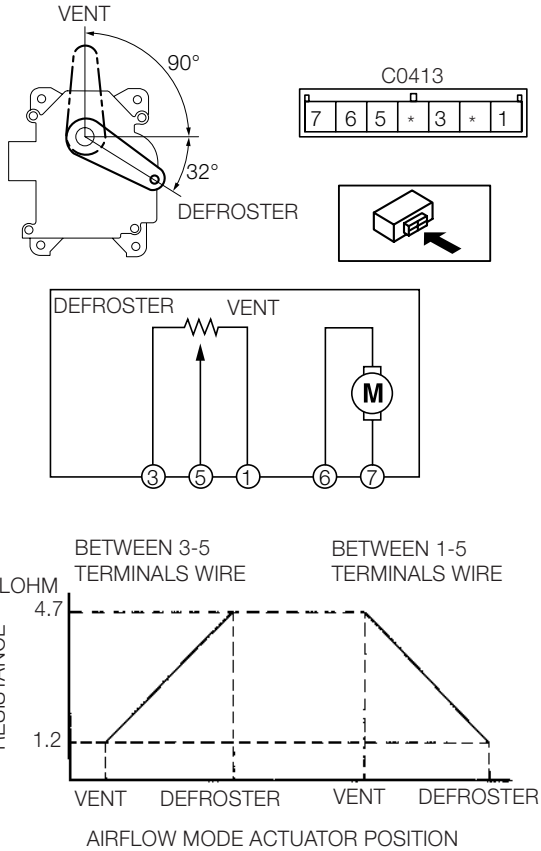

Climate Control (12.00)

Heater System (12.02)

Maintenance

RHD/LHD Heater Unit (Including ECU)-Renew

Repair Operation Time (ROT)		
Item		**Code**
Heater Unit (Including ECU)-Renew	RHD	**12.03.AF**
Heater Unit (Including ECU)-Renew	LHD	**12.03.AD**

Removal

Warning
To prevent damage to electrical components, always disconnect the vehicle battery when working on the vehicle's electrical system. The earth lead (- ve) must be disconnected first and reconnected last.

1. Remove IP unit from vehicle (see Workshop Manual procedure 01.12.AB Facia Assembly LHD Remove for Access and Refit).
2. Disconnect multiplugs (x6) from heater unit.
3. Remove nuts (x2) and bolt (x1) securing heater unit to IP unit.
4. Disconnect tube from 'In car' temperature sensor unit and remove heater unit from IP.

Installation

1. Connect tube to 'In car' temperature sensor, install heater unit in position on IP.
2. Position heater unit in IP. Install and torque tighten bolt and nuts (x2).
3. Connect multiplugs (x6) to heater unit.
4. Install IP unit in vehicle (see Workshop Manual procedure 01.12.AB Facia Assembly LHD Remove for Access and Refit).

Warning
Always connect the battery earth (- ve) terminal last.

Climate Control (12.00)

Air Conditioning (A/C) System (12.03)

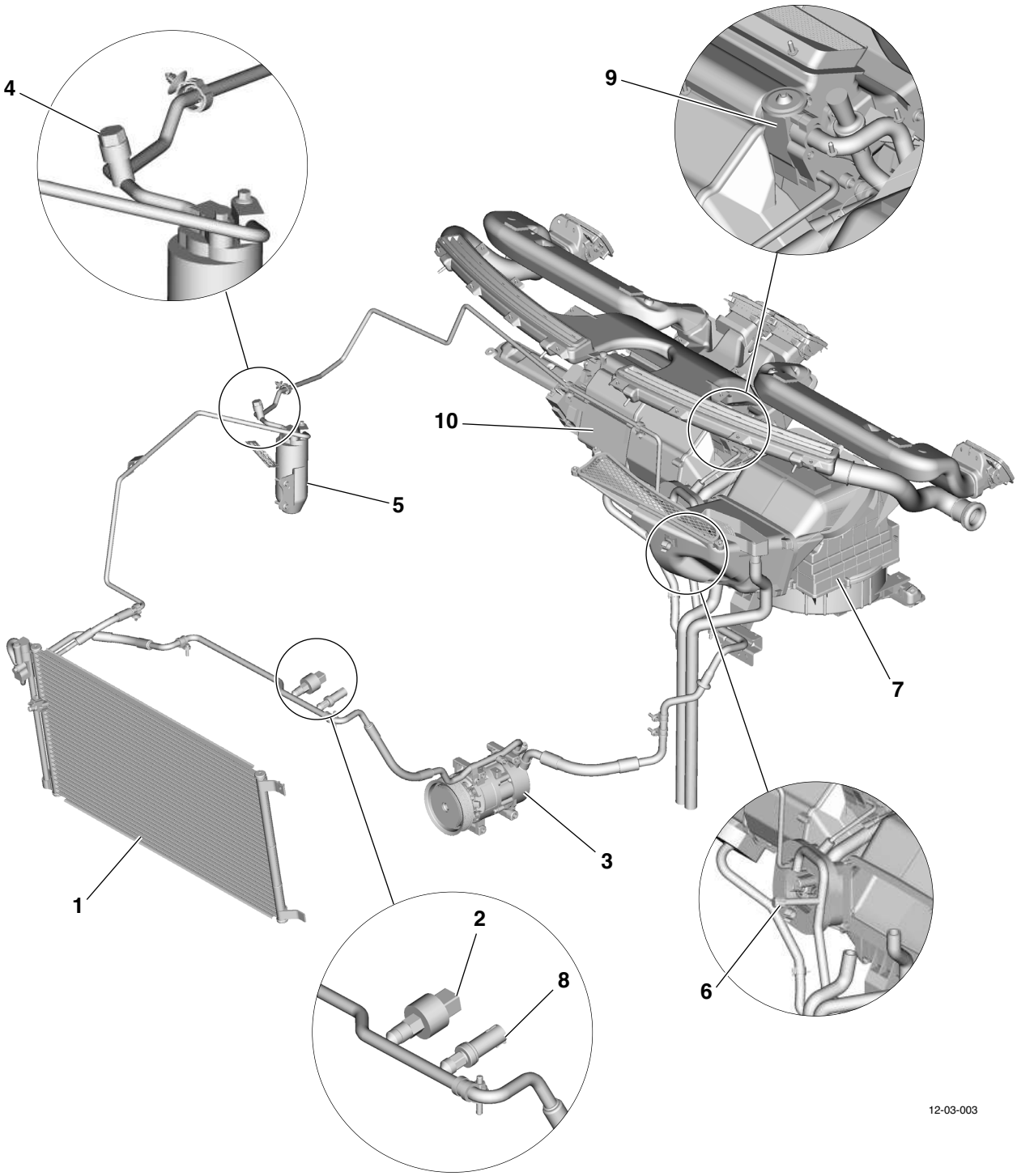

Item	
1. Condenser	6. Low-side charge
2. Trinary switch	7. Blower Unit
3. Compressor assembly	8. Switch, A/C Cut-Off
4. High-side charge port	9. Expansion valve
5. Receiver drier	10. A/C Unit

Major Components

Compressor

- Engine mounted, driven by the accessory drive belt
- Variable displacement type
- High-pressure relief valve, to avoid system over-pressure
- ECU controlled clutch energised via a relay

Receiver drier

- Vertically mounted on the right-hand side of the engine bay
- The high-side charge port is installed to the high side entry pipe to the receiver drier

Condenser

- Multi-pass fin-over-tube type, mounted in front of the engine cooling pack and directly to the radiator

Trinary switch

Located in the compressor discharge pipe

- Provides a signal, via the A/C module, to the PCM, to disengage the compressor clutch should the refrigerant pressure be less than 2 bar or greater than 30 bar
- Provides a hard-wired signal to the PCM, to switch the cooling fans to HIGH speed at 22 bar rising pressure and to LOW speed at 17,5 bar falling pressure
- Provides a hard-wired signal to the PCM, to switch the radiator cooling fans to LOW speed at 12 bar rising pressure and to switch the fans OFF at 8 bar falling pressure

Expansion Valve

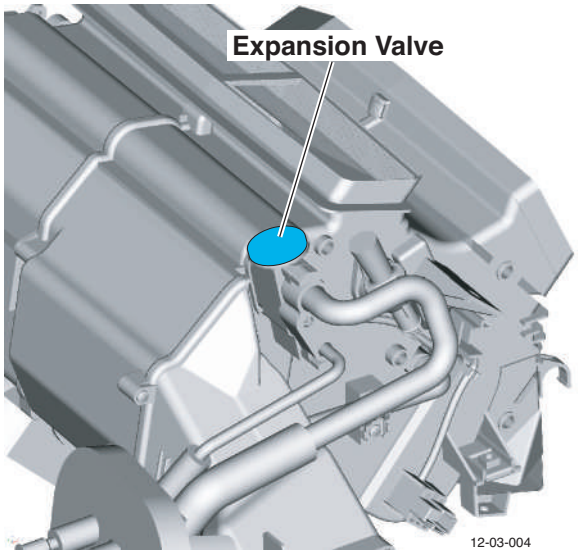

The expansion valve is located on the outside of the A/C unit and comprises of a diaphragm, connected by a capillary tube to a temperature sensing bulb, which regulates the valve according to temperature variations at the evaporator outlet pipe. This component is **not** serviceable.

A/C Unit

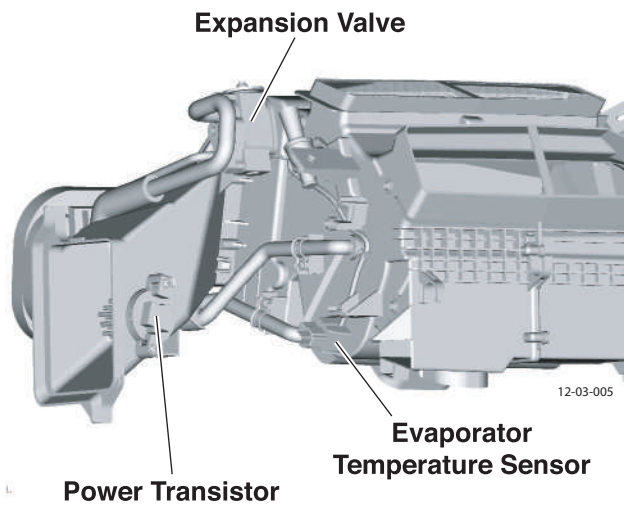

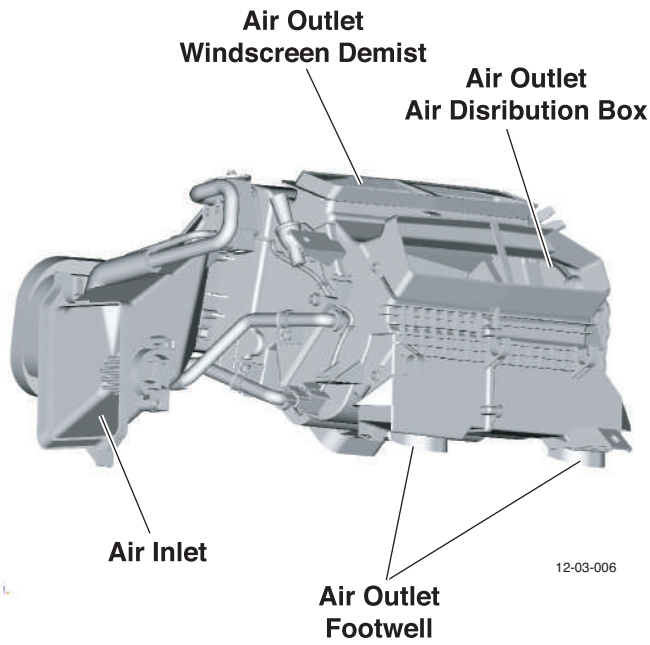

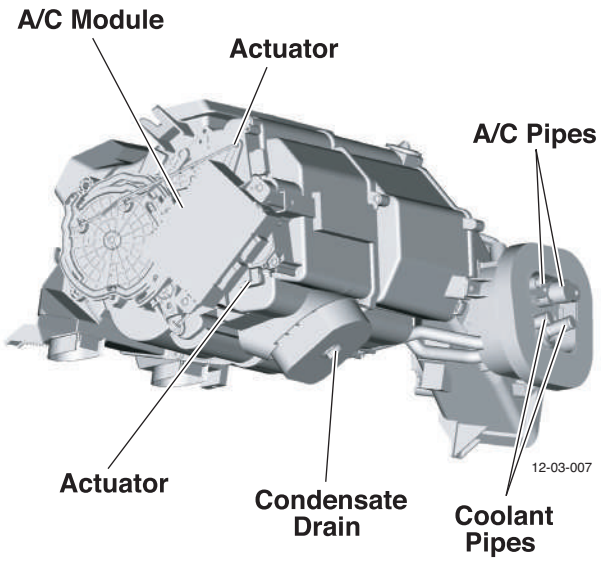

The A/C unit houses the evaporator, heater matrix and air flow flaps.

The unit also incorporates two servo motor operated air distribution flaps.

1. Regulates airflow to the cabin vents.
2. Regulates airflow to the defrost / demist air ducting.

When the cabin air flap is open, air is ducted to the cabin via face and foot level air vents.

Condensate (water) which forms on the evaporator fins is drained out of the unit case through a drain hose, located at underneath / rear of the evaporator.

Refrigerant System

Warning
Do not perform a pressure test or leak test for R-134a service equipment and or vehicle A/C using compressed air. Some mixtures of air and R-134a have been shown to be combustible at elevated pressures. These mixtures, if ignited, may cause injury or property damage. Additional health and safety information may be obtained from refrigerant manufacturers.

Warning
Do not allow refrigerant to leak near a fire or any kind of heat. A poisonous gas may be generated if refrigerant gas contacts fire or heat such as from cigarettes and heaters. When carrying out any operation that can cause refrigerant leakage, extinguish or remove the above mentioned heat sources and maintain adequate ventilation.

Warning
Handling liquid refrigerant is dangerous. A drop of refrigerant on the skin can result in localized frostbite. When handling refrigerant, wear gloves and safety goggles. If refrigerant splashes into the eyes, immediately wash them with clean water and consult a doctor.

Warning
Avoid breathing A/C refrigerant or lubricant vapor. Exposure may irritate eyes, nose and throat. Also, due to environmental concerns, Aston Martin recommend the use of a recovery/recycling/recharging unit when draining R-134a from the A/C system. If accidental A/C system discharge occurs, ventilate the work area before resuming service.

Storing Refrigerant

Warning
The refrigerant container is highly pressurized. If it is subjected to high heat, it could explode, scattering metal fragments and liquid refrigerant that can seriously injure personnel. Store refrigerant at temperatures below 40 °C (104 °F).

Handling Insufficient Refrigerant Level

Caution
If an insufficient refrigerant level is detected while troubleshooting, do not charge (add) the refrigerant. Because an accurate amount of refrigerant cannot be determined from the pressure indicated on the recovery / recycling / recharging unit, never charge the refrigerant.

Caution
If there is too much or too little refrigerant from the refilling, there may be secondary problems such as damage to the refrigerant cycle parts, or a decrease of cooling performance. Therefore, if it is determined that the refrigerant level is insufficient, completely remove refrigerant from the refrigerant cycle and refill with refrigerant to the specified amount.

Handling Compressor Oil

Caution
Use only ND8 compressor oil for this vehicle. Using a PAG oil other than DENSO OIL8 compressor oil will damage the A/C compressor.

Caution
Do not spill the ND8 compressor oil on the vehicle. A drop of compressor oil on the vehicle surface can damage the paint work. If oil gets on the vehicle, wipe it off immediately.

Caution
ND8 compressor oil has a high moisture absorption efficiency. If moisture mixes with the compressor oil, the refrigerant system could be damaged. Ensure caps are installed immediately after using the compressor oil or removing refrigerant system parts to prevent moisture absorption.

Refrigeration Cycle

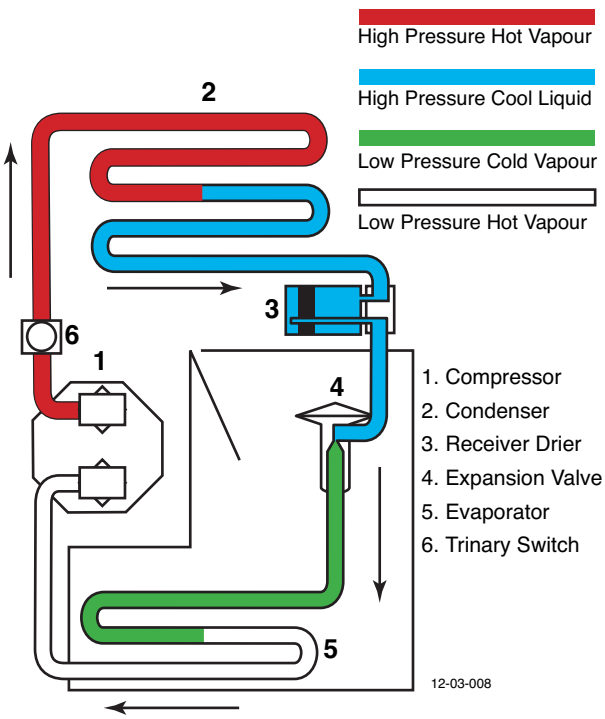

Operation

1. The Compressor (1) draws low pressure, low temperature, refrigerant vapour from the evaporator (5) and compresses it, raising the refrigerant pressure and temperature.
2. This high pressure, hot, refrigerant vapour enters the condenser (2), where it is cooled by the flow of ambient air and changes state into a cooler, high pressure liquid.
3. From the condenser, the liquid passes into the receiver drier (3) which has three functions:
   - Removes moisture from the refrigerant using a desiccant
   - Filters the refrigerant to remove system contaminants
   - Stores the refrigerant to cope with varying system refrigerant demands
4. The filtered liquid refrigerant, still at high pressure, then enters the expansion valve (4). Here it passes through a controlled orifice and emerges as an atomised liquid spray. This has the effect of reducing the refrigerant pressure and temperature. The cold refrigerant spray now flows into the evaporator (5).
5. As refrigerant passes through the evaporator core, it cools the incoming airflow. Heat is absorbed by the refrigerant, during this process and it once again changes state, from an atomised cool liquid into a vapour. The refrigerant vapour then returns to the compressor for the cycle to be repeated.

An automatic safety valve is incorporated in the compressor, which will open if the system pressure rises above 41 bar. The valve will reseat when the pressure drops below 27,6 bar. When the safety valve is open, the compressor will 'free

wheel' and the excess pressure will be dissipated through the expansion valve. When the pressure drops below 27.6 bar, the safety valve will close again and the compressor will be operative.

The terms 'high' and 'low' pressure (or side) refer to the pressure differential between the compressor and expansion valve ports. This differential is critical to system fault diagnosis and efficiency checks.

The high side starts at the compressor and includes the trinary switch, condenser, receiver drier and expansion valve.

The low side starts at the expansion valve outlet and includes the evaporator and all connections back to the compressor.

The trinary switch (6) monitors system pressure between the compressor and condenser. If the pressure rises above 30 bar or falls below 2 bar the compressor clutch is de-energised to prevent damage to system components.

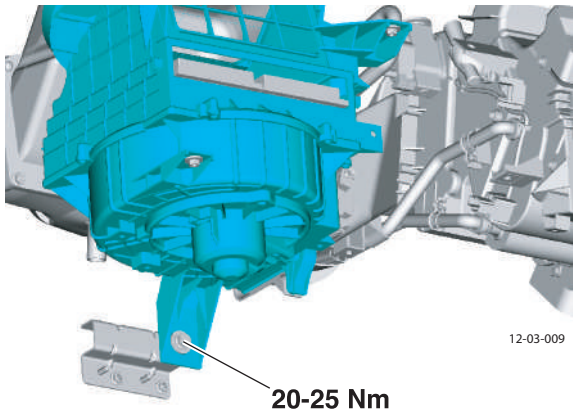

Specifications

Refrigerant and Lubricant

Refrigerant	R-134a
Compressor Lubricant	ND8

Capacities

Refrigerant charge	Weight 750g (26.5oz.)
Compressor Lubricant	Sealed volume (approx. quantity) 150 cc (pre-charged)

Torque Figures

Torque Figures	
Description	Nm.
AC unit Mounitng	20-25
Compressor Mounting	23-27
A/C pipes to condenser	8-10

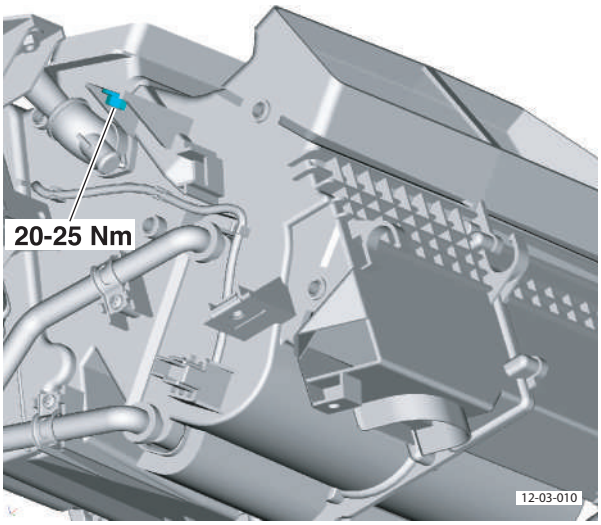

Diagnostics

Electrical Connectors

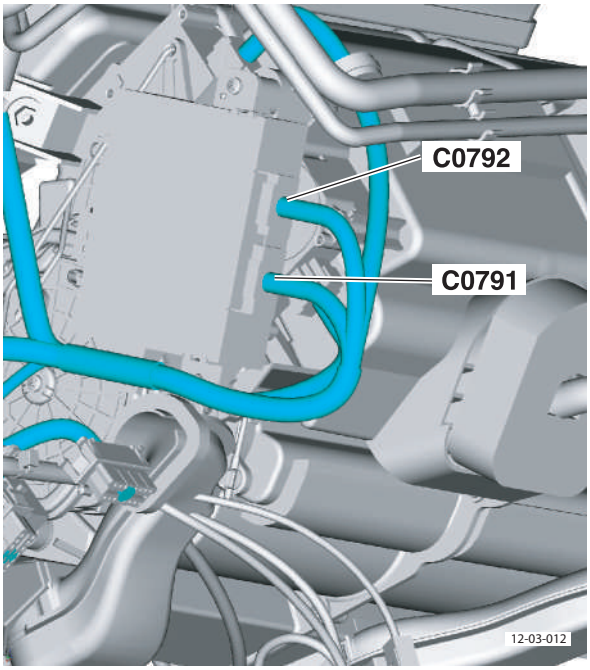

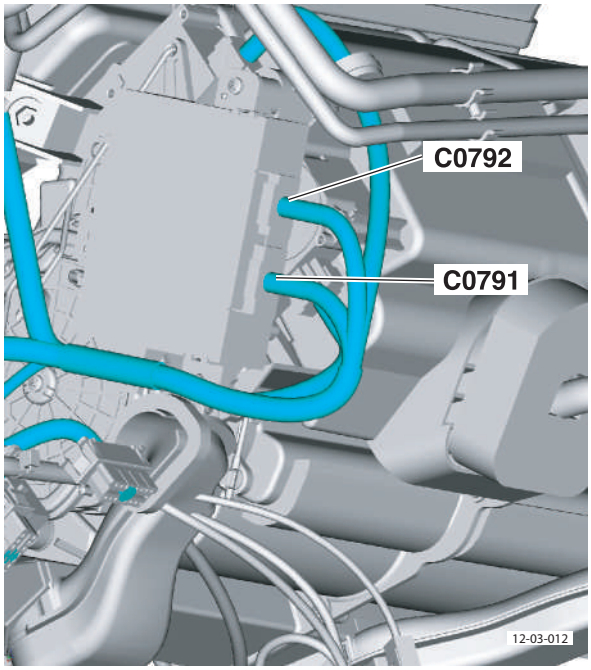

A/C Module (C0792)	
Pin	**Specification**
1	V Battery (from CCM)
2	V Ignition (from comfort relay)
	Recirculation acutuator
3	Blank
4	Air flow mode actuator (input)
5	Solar sensor (input)
6	Ambient Temperature sensor
7	Engine coolant temperature (input)
8	Ref. voltage - Solar sensor (output)
	Ref. voltage - Temperature actuator (output)
	Ref. voltage - Air flow mode actuator (output)
9	Blank
10	Blank
11	Blank
12	Temperature actuator (input)
13	Evaporation sensor (input)
14	In-vehicle temperature sensor (input)
15	Ground
16	Sensor ground (In-vehicle, Evaporator, Air flow mode actuator, Temperature mode actuator)

A/C Module (C0791)	
Pin	**Specification**
1	Air flow mode actuator (output)
2	Temperature actuator (output)
3	Blank
4	Blank
5	Blank
6	A/C On (A/C pressure sensor)
7	Blank
8	Recirculation actuator (output)
9	Blank
10	Blank
11	Temperature level (RHD)
12	Blower speed regulator (Output)
13	Air flow mode actuator (output)
14	Temperature actuator (output)
15	Blank
16	Output
17	HAVAC ECU (input)
18	Blank
19	Blower relay (engine bay fusebox)
20	Recirculation actuator (output)
21	Blank
22	blank
23	Temperature level (LHD)
24	Blower speed regulator input)

DTC Inspection

Using WDS

1. Connect the WDS to the **body** diagnostic socket (Refer to 'Appendix & Glossary', page 20-1-2).
2. Select 'Air-Con' from the menu.
3. Read the fault codes from the WDS screen.

Single Fault Codes

Code	Description	Possible Cause
02	Solar radiation sensor system inspection **Present fault.**	1. Solar radiation sensor fault. 2. Open or short circuit in the wiring harness between the A/C module and the solar radiation sensor.

Code	Description	Possible Cause
06	Cabin temperature sensor system inspection.	1. Cabin temperature sensor fault 2. Open or short circuit in wiring harness between A/C module and cabin temperature sensor

Code	Description	Possible Cause
07	Cabin temperature sensor system inspection.	1. Cabin temperature sensor fault 2. Open or short circuit in wiring harness between A/C module and cabin temperature sensor

Code	Description	Possible Cause
10	Evaporator temperature sensor system inspection	1. Evaporator temperature sensor fault 2. Open or short circuit in the wiring harness between the A/C module and the evaporator temperature sensor

Code	Description	Possible Cause
12	Ambient temperature sensor system inspection	1. Ambient temperature sensor fault 2. Open or short circuit in the wiring harness between the A/C module and the ambient temperature sensor

Code	Description	Possible Cause
14	ECT sensor system inspection	1. ECT fault 2. A/C module fault 3. PCM fault 4. Open or short circuit in the wiring harnesses between the A/C module, the ECT sensor, and the PCM

Code	Description	Possible Cause
18	Air mix actuator (potentiometer) system inspection	1. Air mix actuator fault 2. Open circuit in the wiring harness between the A/C module and the air mix actuator 3. Short circuit in the wiring harness between the A/C module (C0792-12) and the air mix actuator (terminal 5)

Code	Description	Possible Cause
21	Airflow mode actuator (potentiometer) system inspection	1. Airflow mode actuator fault 2. Open circuit in wiring harness between A/C module and airflow mode actuator 3. Short circuit in wiring harness between A/C module (C0792-4) and airflow mode actuator (terminal 5)

Code	Description	Possible Cause
11	Evaporator temperature sensor system inspection.	1. Evaporator temperature sensor fault 2. Open or short circuit in wiring harness between A/C module and evaporator temperature sensor

Code	Description	Possible Cause
13	Ambient temperature sensor system inspection.	1. Ambient temperature sensor fault 2. Open or short circuit in the wiring harness between the A/C module and the ambient temperature sensor

Code	Description	Possible Cause
15	ECT sensor system inspection. **Past fault.**	1. ECT fault 2. Open or short circuit in the wiring harness between the A/C module and the ECT sensor

Code	Description	Possible Cause
19	Air mix actuator (potentiometer) system inspection. **Past fault.**	1. Air mix actuator fault 2. Open circuit in the wiring harness between the A/C module and the air mix actuator 3. Short circuit in the wiring harness between the A/C module (C0792-12) and air mix actuator (C2130-5)

Code	Description	Possible Cause
22	Airflow mode actuator (potentiometer) system inspection. **Past fault.**	1. Airflow mode actuator fault 2. Open circuit in wiring harness between A/C module and airflow mode actuator 3. Short circuit in the wiring harness between the A/C module (C0792-4) and the air mix actuator (C2130-5)

Code	Description	Possible Cause
58	Air mix actuator (motor lock) system inspection **Past fault.**	1. Air mix actuator fault 2. A/C unit (air mix link and air mix crank) fault 3. Open or short circuit in the wiring harness between the A/C module and the air mix actuator

Code	Description	Possible Cause
59	Airflow mode actuator (motor lock) system inspection. **Past fault.**	1. Airflow mode actuator fault 2. A/C unit (airflow mode link and airflow mode crank) fault 3. Open or short circuit in the wiring harness between the A/C module and the airflow mode actuator

Multiple Fault Codes

Code	Description	Possible Cause
06 / 10 / 12 / 18 / 21	A/C module (+5 V power supply or sensor ground) system inspection.	1. Open circuit in wiring harnesses between A/C module and each temperature sensor, air mix actuator, or airflow mode actuator

Code	Description	Possible Cause
02 / 18 / 21	A/C module (5 V power supply) system inspection.	1. Open or short circuit in the wiring harnesses between the A/C module and solar radiation sensor, air mix actuator, or airflow mode actuator

Code	Description	Possible Cause
07 / 11 / 13 / 19 / 22	A/C module (5 V power supply or sensor ground) system inspection.	1. Open circuit in the wiring harnesses between the A/C module and each temperature sensor, air mix actuator, or airflow mode actuator

Code	Description	Possible Cause
19 / 22	A/C module (5 V power supply) system inspection.	• Open or short circuit in wiring harnesses between the A/C module and the solar radiation sensor, air mix actuator, or airflow mode actuator

Maintenance

Assessment of the A/C system operating efficiency and fault classification may be achieved by using the facilities on a Recovery / Recycling / Recharging unit.

Follow the manufacturer's instructions implicitly and observe all safety considerations.

Connections

Only use hoses with connectors which are dedicated to HFC 134a charge ports.

Warning
Under no circumstances should connections be made with the A/C system in operation or valves open. Should valves be open and a vacuum pump or refrigerant container attached, an explosion could occur as a result of high pressure refrigerant being forced back into the vacuum pump or container.

Recovery

Warning
Handling liquid refrigerant is dangerous. A drop of refrigerant on the skin can result in localized frostbite. When handling refrigerant, wear gloves and safety goggles. If refrigerant splashes into the eyes, immediately wash them with clean water and consult a doctor.

Caution
Do not attempt to adapt this unit for R-12 as an A/C system failure will result. Recovery / Recycle / Recharging equipment has special connections to avoid cross contamination with R-12 systems.

The A/C unit's overfill limitation mechanism has been calibrated specifically for use with the 50 lb. (23 Kg) refillable refrigerant tank.

Run the A/C system for a few minutes before starting the recovery procedure as this will enable more refrigerant to be recovered. Turn the A/C system off before starting the procedure.

Ensure the A/C system has pressure in it before beginning the recovery process; if there is no system pressure there is no refrigerant to recover.

Ensure that the oil drain valve is closed.

Read manufacture's instructions and warnings before completing any recovery / evacuating and charging operations.

Caution
The Recovery / Recycling / Recharging unit relies on a weighing mechanism to weight the quantity of oil removed. Ensure that the Recovery / Recycle / Recharging unit is not disturbed during the recovery procedure.

1. Connect an R-134a Recovery / Recycling / Recharging unit to the vehicle A/C system.
2. Follow the Recovery / Recycling / Recharging unit manufacturer's instructions to evacuate the A/C system.

Compressor oil may be drawn out during this process, take note of the quantity recovered so that it may be replaced.

Evacuation

The removal of unwanted air and moisture, is critical to the correct operation of the A/C system. Moisture in the system can be highly destructive and may cause internal blockages due to freezing; water suspended in the lubricating oil will damage the compressor. Once the A/C system has been dismantled, or the refrigerant charge recovered, all traces of moisture must be removed before charging.

It is recommended that initially only the high-side valve be opened at the start of the procedure. After a short time a small depression should be seen on the low-side, at which point the low-side valve may be opened and the evacuation process completed. If a vacuum is not registered on the low-side, it may indicate that the expansion valve is permanently closed or that the system is blocked. This simple check may save time and effort when the system is recharged.

Read manufacture's instructions and warnings before completing any Recovery / Recycling / Recharging operation.

1. Connect an R-134a Recovery / Recycling / Recharging unit to the vehicle A/C system.
2. Follow the Recovery / Recycling / Recharging unit manufacturer's instructions to evacuate the A/C system.

Charging

Caution

Do not exceed the specification when charging the A/C system with refrigerant. Doing so will decrease the efficiency of the A/C unit or damage the refrigeration cycle parts.

Caution

Always start the charging of refrigerant from the high-pressure side. If charging starts from the low-pressure side, vanes of the A/C compressor will not be released and abnormal noise may result.

Read manufacture's instructions and warnings before completing any Recovery / Recycling / Recharging operation.

1. Connect an R-134a Recovery / Recycling / Recharging unit to the vehicle A/C system.
2. Follow the Recovery / Recycling / Recharging unit manufacturer's instructions to charge the A/C system.

A/C System Testing

It is recommended that a free standing air mover is placed in front of the condenser / cooling system.

Pressure Check

1. Connect the Recovery / Recycling / Recharging unit.
2. Start the engine. Allow to warm up then run at a constant 1,500 rpm.
3. Set the following A/C controls:
   - Air Circulation to 'Recirculate'
   - Temperature to 'Max' Cold
   - Air Flow to 'Vent'
4. Close all the vehicle doors and windows.
5. Measure the ambient temperature and high / low pressure side reading of Recovery / Recycling / Recharging unit gauges.
6. Verify that the intersection of the pressure reading of the Recovery / Recycling / Recharging unit gauges and the ambient temperature is in the shaded zone.

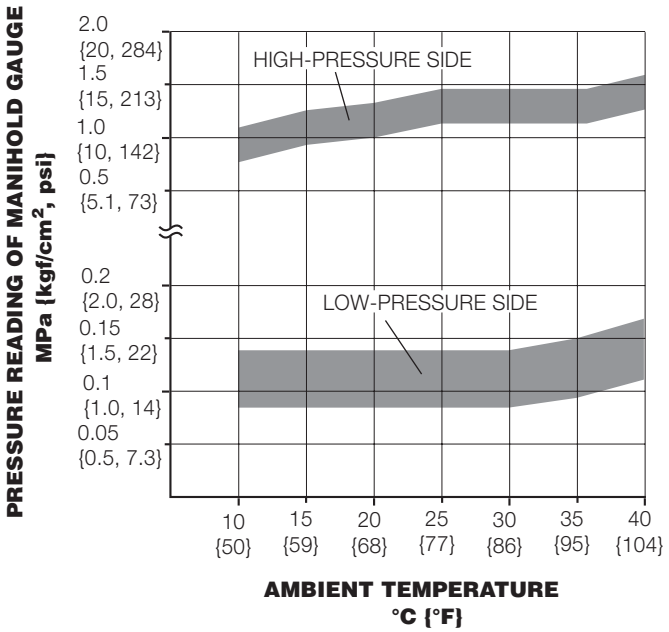

If there is any fault, inspect the refrigerant system according to the troubleshooting chart.

Performance Test

1. Check the refrigerant pressure.
2. Place a dry-bulb thermometer in the driver-side center ventilator outlet.
3. Start the engine. Allow to warm up then run at a constant 1,500 rpm.
4. Set the A/C unit fan speed to 'Max Hi'.
5. Turn the A/C system on.
6. Set the following A/C controls:
   - Air Circulation to 'Recirculate'
   - Temperature to 'Max' Cold
   - Air Flow to 'Vent'
7. Close all the doors and windows.
8. Wait until the A/C output temperature stabilizes.

Stabilized condition.
The A/C compressor repeatedly turns on and off at regular intervals.

9. After the blower air is stabilized, read the dry-bulb thermometer.
10. Verify the ambient temperature.
11. Verify the temperature is in the shaded zone.

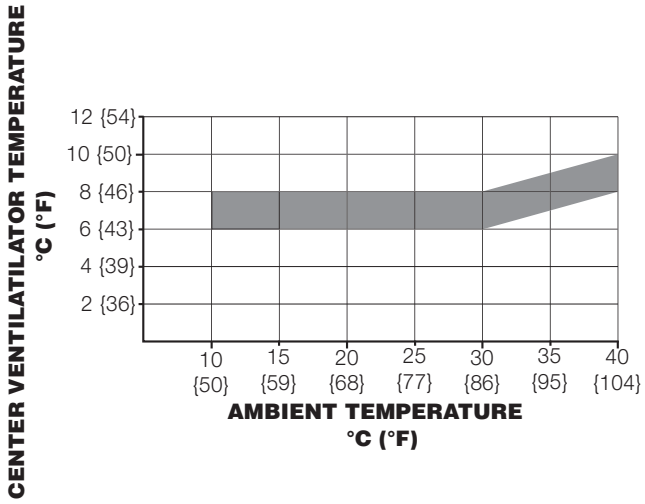

If there is any fault, inspect the refrigerant system according to the troubleshooting chart.

Vacuum Check

1. Stop the vacuum pump, note the high and low pressure side readings of the Recovery / Recycling / Recharging unit gauges and wait for 5 min.
2. Check the high and low pressure side readings of the Recovery / Recycling / Recharging unit gauges.
   1 If the readings have changed, inspect for leaks and go to Evacuation (Refer to 'Evacuation', page 12-3-10).
   2 If the readings have not changed, go to Charging (Refer to 'Charging', page 12-3-10).

Leaks

Faults associated with low refrigerant charge weight and low pressure may be caused by leakage. Leaks traced to mechanical connections may be caused by torque relaxation or joint face contamination. Evidence of oil around such areas is an indicator of leakage.

Leak Detection

Fluorescent Tracer Dye - A fluorescent tracer dye is incorporated into the refrigeration system and can be checked for non-apparent leaks by scanning with a high intensity ultraviolet lamp. The location of leaks can be pinpointed by the bright yellow glow of the tracer dye.

Caution
Observe ALL safety precautions associated with ultraviolet equipment.

Automatic Refrigerant Leak Detector - (various manufacturers) Hand-held, portable, battery operated leak detector. Place in and around A/C system to detect refrigerant leaks.

System Pressure Fault Classification

If erratic or unusual gauge movements occur, check the equipment against known Recovery / Recycling / Recharging unit gauges.

This table should be used in conjunction with the graphical representations of 'High side' pressure / ambient temperature and 'Low side' pressure / evaporator temperature.

Low side gauge reading	High side gauge reading	Fault	Cause
Normal	Normal	Discharge air initially cool then warms up	Moisture in system
Normal to low	Normal	As above	As above
Low	Low	Discharge air slightly cool	Refrigerant charge low
Low	Low	Discharge air warm	Refrigerant charge very low
Low	Low	Discharge air slightly cool or frost build up at expansion valve	Expansion valve stuck closed
Low	Low	Discharge air slightly cool, sweating or frost after point of restriction	Restriction in High side of system
High	Low	Compressor noisy	Defective compressor reed valve
High	High	Discharge air warm and high side pipes hot	Refrigerant charge high or inefficient condenser cooling due to air flow blockage or engine cooling fans not working
High	High	Discharge air warm Sweating or frost at evaporator	Expansion valve stuck open

Maintenance

Condenser-Renew

Repair Operation Time (ROT)	
Item	**Code**
Condenser-Renew	**12.03.BB**

Removal

1. Recover refrigerant gas from A/C system (see Workshop Manual procedure 12.03.FA Tank - Receiver Drier - Renew).
2. Remove front grille (see Workshop Manual procedure 01.08.AA Grille - Radiator - Renew).
3. Remove slam panel (screws x12).
4. Remove bolts (x4) that secure PAS fluid cooler to bonnet latch cross member and position fluid cooler aside.
5. Remove bolts (x6) that secure bonnet latch cross member to body and position aside.

Caution

Ensure open A/C pipe ends are plugged immediately after disconnecting refrigeration parts. If moist air or foreign material enters the refrigeration cycle, cooling ability will be lowered and abnormal noise or other faults may occur.

6. Remove bolts (x2) that secure condenser pipe connections.
7. Plug pipes and block connections.
8. Remove and discard 'O' rings (x2) from pipe connections.
9. Remove bolts (x2) that secure condenser to radiator and remove condenser.

Installation

If a new condenser is to be installed, ensure that the correct amount o A/C oil is added.

1. Install condenser to radiator and install and torque tighten bolts (x2).
2. Clean pipe connections and remove plugs.
3. Install new 'O' rings to pipe connections.
4. Connect pipes to condenser and install and torque tighten bolts (x2).
5. Install bonnet latch cross member and install and torque tighten bolts (x6).
6. Position PAS fluid cooler to cross member and install and torque tighten bolts (x4).
7. Install slam panel.
8. Install front grille (see Workshop Manual procedure 01.08.AA Grille - Radiator - Renew).
9. Refrigerant gas re-charge A/C system (see Workshop Manual procedure 12.03.FA Tank - Receiver Drier - Renew).

Air Conditioning Compressor-Renew

Repair Operation Time (ROT)	
Item	**Code**
Air Conditioning Compressor-Renew	**03.05.BE**

Removal

1. Battery isolation switch 'OFF'.
2. Recover A/C refrigerant (see Workshop Manual procedure 12.03.FA Refrigerant Gas - Recover/Recharge - Renew).
3. Disconnect breather pipe quickfits (x2) from air cleaner duct.
4. Remove throttle body duct for access (clips x3).
5. Release tensioner and slip belt from idler.
6. Move belt off compressor pulley.
7. Raise vehicle on ramp.
8. Remove road wheel/s
9. Remove LH wheel arch liner (see Workshop Manual procedure 01.02.FB Wheel Arch Liner - Front - LH - Renew).
10. Disconnect clutch multiplug.
11. Remove bolt HP pipe to bracket.
12. Loosen oil pipe support bolt on bracket.

Caution

Ensure open A/C pipe ends are plugged immediately after disconnecting refrigeration parts. If moist air or foreign material enters the refrigeration cycle, cooling ability will be lowered and abnormal noise or other faults may occur.

13. Remove pipes from compressor (bolts x2) and move aside.
14. Remove compressor (bolts x4) release from bracket.

Installation

If replacing a faulty A/C compressor with internal mechanical damage, also replace the receiver drier which could also be contaminated with mechanical debris.

1. Fit new o-rings to A/C pipes (lubricate).
2. Install compressor (bolts x4) (torque) align to oil pipe bracket.
3. Install pipes to compressor (bolts x2) (torque).
4. Tighten oil pipe support bolt on bracket.
5. Install bolt HP pipe to bracket.
6. Connect clutch multiplug.
7. Install LH wheel arch liner (see Workshop Manual procedure 01.02.FB Wheel Arch Liner - Front - LH - Renew).
8. Install road wheel/s.
9. Lower vehicle on ramp.
10. Fit belt to compressor pulley.
11. Release tensioner and slip belt on idler.
12. Install throttle body duct.
13. Connect breather pipe quickfits (x2) to air cleaner duct.

14. Recharge A/C refrigerant (see Workshop Manual procedure 12.03.FA Refrigerant Gas - Recover/Recharge - Renew).
15. Battery isolation switch 'ON'.

Blower Assembly-Renew

Repair Operation Time (ROT)	
Item	**Code**
Blower Assembly-Renew	**12.03.AB**

Removal

1. Remove IP assembly (see Workshop Manual procedure 01.12.AB Facia Assembly - LHD - Remove for access and refit).
2. Disconnect multiplugs (x2) from blower motor (see Fig. 1).

Fig. 1

3. Release harness clip from blower motor.
4. Remove nuts (x3) securing blower motor assembly to IP.
5. Remove bolt and nuts (x2) securing heater unit to IP (see Fig. 2).

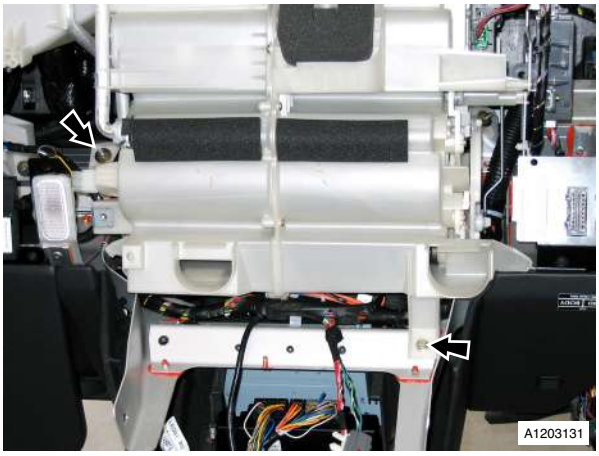

Fig. 2

6. Release and remove blower motor assembly from heater unit.

Installation

1. Install blower motor assembly to heater unit.
2. Align blower motor assembly and heater unit onto studs.
3. Install and torque tighten bolt and nuts (x5) securing heater and blower assemblies to IP.
4. Install harness clip in blower motor assembly.
5. Connect multiplugs (x2) to blower motor.
6. Install IP assembly (see Workshop Manual procedure 01.12.AB Facia Assembly - LHD - Remove for access and refit).

Compressor to Condenser Tube Assembly-Renew

Repair Operation Time (ROT)	
Item	**Code**
Compressor to Condenser Tube Assembly-Renew	**12.03.GA**

Removal

1. Remove PAS pump (see Workshop Manual procedure 03.05.AA Pump - Power Steering - Renew).
2. Remove condenser (see Workshop Manual procedure 03.03.EC Air Con - Condenser - Renew).
3. Disconnect breather pipe quickfits (x2) from air cleaner duct.
4. Remove throttle body duct for access (clips x3).
5. Disconnect sensor multiplugs (x2) (see Fig. 1).

Fig. 1

Caution

Ensure open A/C pipe ends are plugged immediately after disconnecting refrigeration parts. If moist air or foreign material enters the refrigeration cycle, cooling ability will be lowered and abnormal noise or other faults may occur.

6. Remove (bolts x2) pipe support P-clips and pipe.
7. Mark relative position of p-clips (x2), remove from pipe.

Installation

1. Install P-clips (x2) to pipe in same position as from old pipe.
2. Install pipe and (bolts x2) pipe support P-clips.
3. Connect sensor multiplugs (x2).

4. Install throttle body duct.
5. Connect breather pipe quickfits (x2) to air cleaner duct.
6. Install condenser (see Workshop Manual procedure 03.03.EC Air Con - Condenser - Renew).
7. Install PAS pump (see Workshop Manual procedure 03.05.AA Pump - Power Steering - Renew).

Troubleshooting

The areas for inspection (steps) are given according to various circuit malfunctions. Use the following chart to verify the symptoms of the trouble in order to diagnose the appropriate area.

Symptom(1)	Description	Possible Cause
Insufficient air (or no air) blown from vents.	Problem with each vent / duct or both. Airflow mode does not change.	• Fault in Airflow Mode Actuator • Fault in 'Vent' mode system • Fault in 'Heat' mode system • Fault in 'Defroster' mode system

Symptom (2)	Description	Possible Cause
Amount of air blown from vents does not change.	Fault in blower system.	• Blower motor fault • Blower unit fault • Power transistor system fault • Climate control unit fault
Shake the wiring harness and connectors while performing the inspection to discover whether poor contact points are the cause of any intermittent malfunctions. If there is a problem, check to make sure connectors, terminals and wiring harnesses are connected correctly and undamaged.		

Symptom (4)	Description	Possible Cause
Air intake mode does not change.	Air intake mode does not change when switching REC FRESH mode.	• Air Intake Actuator fault • Air intake door fault
Shake the wiring harness and connectors while performing the inspection to discover whether poor contact points are the cause of any intermittent malfunctions. If there is a problem, check to make sure connectors, terminals and wiring harnesses are connected correctly and undamaged.		

Symptom (5)	Description	Possible Cause
No temperature control with A/C Module.	Temperature does not change with operating temperature control dial	• Air Mix Actuator (5 V signal) system fault • A/C Module (potentiometer GND signal) system fault • Air Mix Actuator (potentiometer input signal) system fault • Air Mix Actuator (potentiometer GND signal, motor drive signal) system fault • Air Mix Actuator system fault • A/C unit air mix door fault
Shake the wiring harness and connectors while performing the inspection to discover whether poor contact points are the cause of any intermittent malfunctions. If there is a problem, check to make sure connectors, terminals and wiring harnesses are connected correctly and undamaged.		

Symptom (6)	Description	Possible Cause
Windshield fogged.	• A/C compressor does not operate while airflow mode is in DEFROSTER or HEAT DEF modes • Air intake mode does not change to FRESH while airflow mode is in DEFROSTER or HEAT DEF modes	• A/C Module (B+ signal) system fault • Air intake actuator fault • A/C Module (RECIRCULATE, FRESH signal) system fault • Fault in blower unit air intake doors
Shake the wiring harness and connectors while performing the inspection to discover whether poor contact points are the cause of any intermittent malfunctions. If there is a problem, check to make sure connectors, terminals and wiring harnesses are connected correctly and undamaged.		

Symptom (7)	Description	Possible Cause
Air from vents not cold enough.	Magnetic clutch operates but A/C system malfunctions.	• Drive belt fault • Fault in blower unit or condenser • Fault in Receiver / Drier or expansion valve (valve closes too much) • Fault in refrigerant lines • A/C compressor system fault, insufficient compressor oil • Over filling of compressor oil, fault in expansion valve or A/C unit air mix link system

Symptom (8)	Description	Possible Cause
No cool air.	Magnetic clutch does not operate.	• Fault in PCM A/C cut control system • Fault in A/C Module • Fault in refrigerant pressure switch • Fault in PCM (A/C signal) • Fault in PCM (IG1 signal) • Fault in A/C compressor • Fault in A/C relay • Fault in Evaporator Temperature Sensor
Shake the wiring harness and connectors while performing the inspection to discover whether poor contact points are the cause of any intermittent malfunctions. If there is a problem, check to make sure connectors, terminals and wiring harnesses are connected correctly and undamaged.		

Symptom (9)	Description	Possible Cause
Noise while operating A/C system.	Noise from magnetic clutch, A/C compressor, hose or refrigerant line.	• Magnetic clutch operation noise • A/C compressor slippage noise • Hose or refrigerant line interference noise

1 Information, Gauge and Warning (13.00)

Contents

Instrument Cluster (13.01) 13-1-2
Description 1-2
Information and Warning Lamps 1-3
DIM Display layout 1-4

Information, Gauge and Warning (13.00)

Instrument Cluster (13.01)

Description

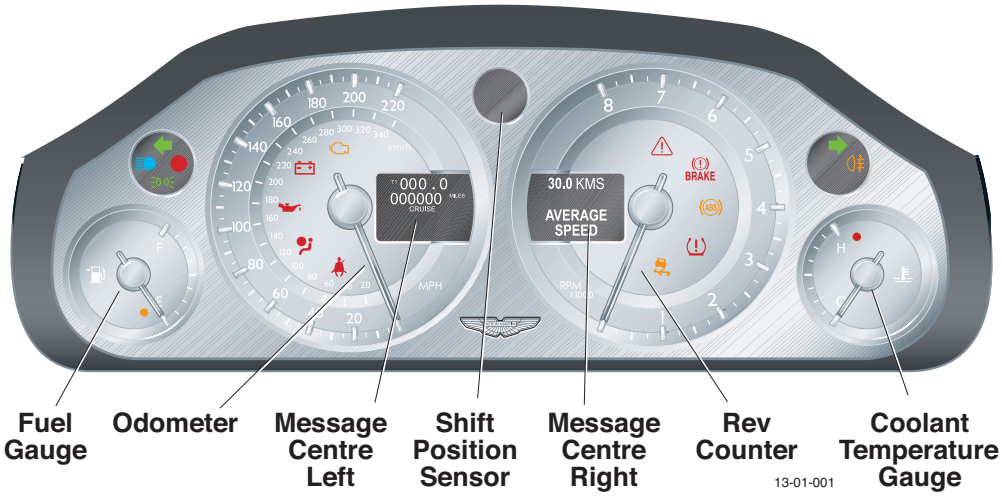

The Driver Information module contains the necessary electronic control units and memories to control, process and present all necessary vehicle information to the driver.

1. Information on vehicle performance is presented in visible form using the instruments and gauges. These devices present such information as Vehicle Speed, Engine Speed, Fuel Level and Coolant Temperature.
2. Information on vehicle status is presented by an array of warning lights.
   - Red - indicate immediate danger warnings
   - Amber - indicate conditions which are serious but not immediately dangerous
   - Green and Blue - indicate normal actuation of items such as turn signals or fog lamps

   The message centres and the shift position Sensor display are used to present information on the distance recorders (trip meters), current gear mode and current gear engaged.
3. The right message centre is used to display any warning/ information message text. These text messages may be reinforced in some cases by illumination of the appropriate warning lamps.

The following table defines all information and warning lamps and their significance:

Information and Warning Lamps

Name / Function	Description	Symbol	Input Signal	Power On Check
General Warning – Amber/Red	Controlled internally by the DIM. It is used in conjunction with several text messages to indicate information to the driver.		Internal	
SRS (Airbag)	Controlled externally by the SRS module and indicates a fault in the SRS module.		CAN	Yes (5 Seconds)
High Engine Coolant Temp.	This tell tale is controlled internally by the DIM. Activated when the engine coolant temperature signal from the CAN bus reaches a pre defined value. (The actual symbol is not lit, only the red LED.)		CAN	
DSC	Controlled externally by the ABS/DSC module. Indicates when the system is in operation or when it is turned off. The tell tale is triggered by a CAN signal.		CAN	Yes (5 Seconds)
ABS	Controlled externally by the ABS/DSC module. Indicates a fault in the ABS system. The tell tale is triggered by a CAN signal.	ABS	CAN	Yes (5 Seconds)
Rear Fog Lights	Controlled externally by the SRS module. Indicates that the rear fog lights are turned on. The tell tale is triggered by a CAN signal.		CAN	Yes (5 Seconds)
Seat Belts	Controlled externally by the CEM. Indicates that the seat belts are not fastened properly. The tell tale is triggered by a CAN signal.		CAN	Yes (5 Seconds)
Brake (General)	Controlled externally by either the CEM or the ABS / DSC module. It indicates low brake fluid level, brake fault and park brake. The tell tale is triggered by two low side inputs or a CAN signal.	BRAKE	Low side x 2 **and** CAN	Yes (5 Seconds)
Side Lights	Controlled externally by the CEM. Indicates that the side lights are on.		High side	
Oil Pressure	Controlled externally by the PCM. Indicates low oil pressure. The tell tale is triggered by a CAN signal.		CAN	Yes (5 Seconds)
Battery Charge	Controlled externally by the CEM. Indicates that the alternator is no longer charging the battery properly. The tell tale is triggered by a CAN signal.		CAN	Yes (5 Seconds)
Fuel Level Low	Controlled internally by the DIM. Activated when the fuel level drops below a pre defined value. The fuel information is provided from the CAN bus. The symbol is not lit, only the amber LED.		CAN	
Turn Left/Right	Controlled externally by the CEM. The tell tale is triggered by a CAN signal.		CAN	
High Beam	Controlled externally by the CEM. Indicates that the high beam is switched on. The tell tale is triggered by a CAN signal.		CAN	
Check Engine	Controlled externally by the PCM. Indicates a fault in the engine management system. The tell tale is not connected to the microprocessor.		Low side	
Tyre Pressure	Controlled by the DIM. Indicates a low or rapid change in the tyre pressure or a tyre pressure monitoring system fault.		Low side	Yes (5 Seconds)
Not Used				
PATS	Controlled externally by the PCM. Indicates key acceptance status.		Low side	

DIM Display layout

The DIM contains two message centres, which are used to inform the driver about the vehicles status.

Message Centre Left | Shift Position Sensor | Message Centre Right

Message Centres

The left Message Centre is used to display the odometer (C), the Cruise control status (C) and the T1 or T2 trip distance (A).

Shift Position Sensor

The Shift Position Sensor display indicates when the shift lights are activated. The display is duel colour.

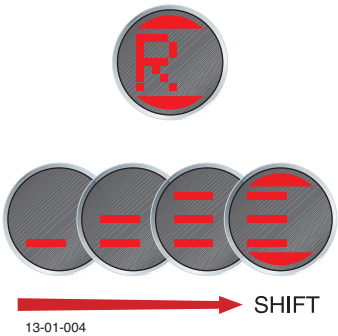

Green - normal operation

Red - defined situations.

Message Centre Right

The Message Centre Right is used to display the trip function information and warning/information messages.

Power Supply (14.00)

Contents

Battery System (14.01).....14-1-2
Description.....1-2
Battery Connect Switch.....1-2
Battery Disconnection and Alarm Activation.....1-2
Charging Circuit.....1-3
+12 Volt Distribution.....1-3
Specifications.....1-4
Maintenance.....1-4
Battery Disconnect Switch-Renew.....1-4
Battery Conditioner-Renew.....1-4
Battery Disconnect Switch to Bulkhead Stud Cable Assembly-Renew.....1-5
Battery to Battery Disconnect Switch Cable Assembly-Renew.....1-6
Bulkhead to Starter Jump Terminal Harness-Renew.....1-7
BDS to Bulkhead Dirty Feed Harness-Renew.....1-8
Alternator and Regulator System (14.02).....14-2-1
Description.....2-1
Specifications.....2-1
Maintenance.....2-1
Alternator-Renew.....2-1

Power Supply (14.00)

Battery System (14.01)

Description

The 12 volt negative earth ('-' ve) battery is located under the RH side rear seat and is grounded to the vehicle body.

The battery positive ('+' ve) terminal is connected to a battery connect switch. The connect switch may be accessed by raising the rear seat cushion.

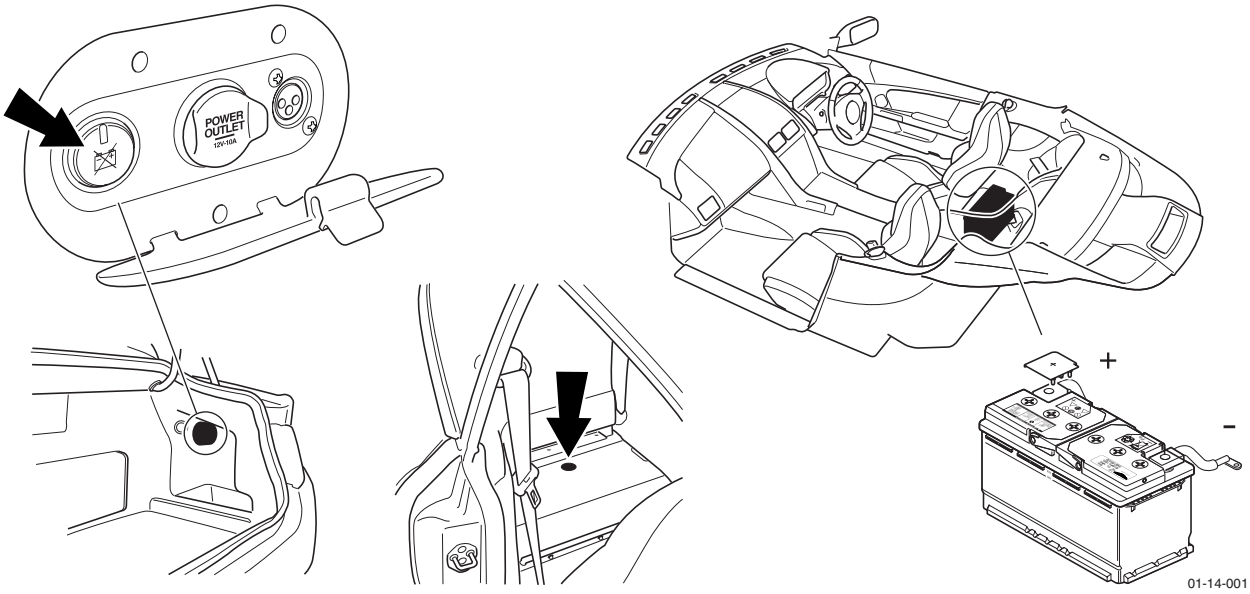

Battery Connect Switch

When the battery connect switch is in an 'open' state it isolates electrical power from all systems except the 'keep alive memory' functions in the PCMs, TCU, radio, navigation system and door modules.

This function isolates electrical power from vehicle circuits under all normal service conditions with the following exceptions:

- Before any welding or other work which may induce high voltages into the electronic control modules
- Before disconnecting any of the control modules with 'keep alive memory'
- Before any major service task (e.g. engine removal)
- Before installing any accessory which involves modification of vehicle wiring

In the above four exceptions the battery earth ('-' ve) lead should be disconnected.

When the battery earth ('-' ve) terminal is disconnected, data held in keep alive memories will be lost.

After connecting the battery, the radio preset stations and the door window controllers will require to be reset (adaptive learning data in the PCM module will require to be re-learned by driving the vehicle for some miles in a range of driving conditions), **driveability may be slightly compromised until the vehicle systems have completed their adaptive learning routines again.**

Battery Disconnection and Alarm Activation

The vehicle is installed with an alarm which will be activated if the battery is disconnected. This alarm is driven by a back up battery within the alarm sounder unit.

To prevent the alarm from sounding when the battery is disconnected (for workshop procedures), disconnect the battery within 10 seconds of switching off the ignition. Always carry out the following procedures upon connection of the battery.

- Reset the clock
- Reset the radio preset programmes.
- Reset the window maximum up and maximum down settings.

Charging Circuit

Electrical power generated at the alternator flows via two 'T Piece' connectors to the engine bay 'Dirty Feed' stud. It then flows via the Battery Disconnect Switch (BDS) to the battery positive terminal. Both the alternator and the battery are earthed via the vehicle body to complete the charging circuit.

The starter motor and the 'jump start terminal' are also fed directly from the charging circuit.

Go to page 18-X-XX for complete power distribution circuit diagram (Circuit Sheet 25).

+12 Volt Distribution

The +12 volt supply comes from the battery to the battery disconnect switch (BDS). Assuming that this switch is not activated, 12 volt power is then available from C0046-8 on the BDS to all of the clean feed battery studs.

The following clean feeds are then live:

- Boot fuse box clean feed
- Under bonnet fuse box clean feed
- CEM busbars 1, 2, 3 and 4 clean feeds

12V power to all systems and components is then controlled by the CEM and the under bonnet / boot fuse boxes.

Specifications

Torque Figures		
Description	Nm.	lb. / ft.
Battery clamp	9	7
Battery Terminals	9	7

Maintenance

Battery Disconnect Switch-Renew

Repair Operation Time (ROT)	
Item	**Code**
Switch Battery Disconnect-Renew	**14.01.CJ**

Removal

1. Power RH seat fully forward.
2. Remove rear compartment cover.

> ***Warning***
> ***To prevent damage to electrical components, always disconnect the vehicle battery when working on the vehicle's electrical system. The earth lead (- ve) must be disconnected first and reconnected last.***

3. Disconnect vehicle battery.
4. Remove panel assembly - quarter trim middle - RH (see Workshop Manual procedure 01.05.CL Panel Assembly - Quarter Trim Middle Section - RH - Renew).
5. Release rear carpet studs (x2), move carpet aside.
6. Remove screws (x2), battery compartment cover to support rail.
7. Remove nuts (x2), RH rear heel board to body. Remove heel board.
8. Remove nuts/washers (x2), securing battery cables to battery disconnect switch (see Fig. 1).

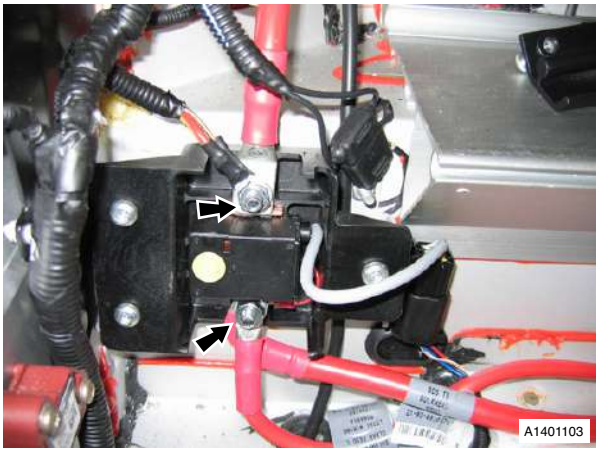

Fig. 1

9. Release battery cables (x4) from battery disconnect switch. Note fitted position of spacer washer between RH battery cables.
10. Remove Torx screws (x3), securing battery disconnect switch to mounting bracket.
11. Release multiplug from bracket, disconnect multiplug, remove battery disconnect switch.
12. Remove battery cable bolts from battery disconnect switch.

Installation

1. Install battery cable bolts in disconnect switch.
2. Position battery disconnect switch, connect multiplug, install multiplug on bracket.
3. Install and torque tighten Torx screws (x3).
4. Install battery cables (x4), install washers (x2), install and torque tighten nuts (x2).
5. Install RH rear heel board, install and tighten screws (x2) and nuts (x2).
6. Position rear carpet, install on studs (x2).

> ***Warning***
> ***Always connect the earth (- ve) terminal last.***

7. Connect vehicle battery.
8. Install panel assembly - quarter trim middle - RH (see Workshop Manual procedure 01.05.CL Panel Assembly - Quarter Trim Middle Section - RH - Renew).
9. Install rear compartment cover.
10. Power RH seat to original position.

Battery Conditioner-Renew

Repair Operation Time (ROT)	
Item	**Code**
Battery Conditioner-Renew	**14.01.DL**

Removal

> ***Warning***
> ***To prevent damage to electrical components, always disconnect the vehicle battery when working on the vehicle's electrical system. The earth lead (- ve) must be disconnected first and reconnected last.***

1. Disconnect vehicle battery.
2. Remove carpet - RH side luggage compartment (see Workshop Manual procedure 01.05.FB Carpet Assembly - Luggage Compartment - Side - RH - Renew).
3. Remove tyre sealant bottle.
4. Remove mobility kit from storage rack.
5. Remove bolt, loosen nuts (x2), power socket bracket.
6. Slide luggage compartment fusebox rearwards, release from mounting bracket.
7. Release terminal cover, remove nut securing main battery lead to fusebox.
8. Release harness clips (x2) from power socket bracket.

9. Disconnect harness multiplug, battery conditioner (see Fig. 1).

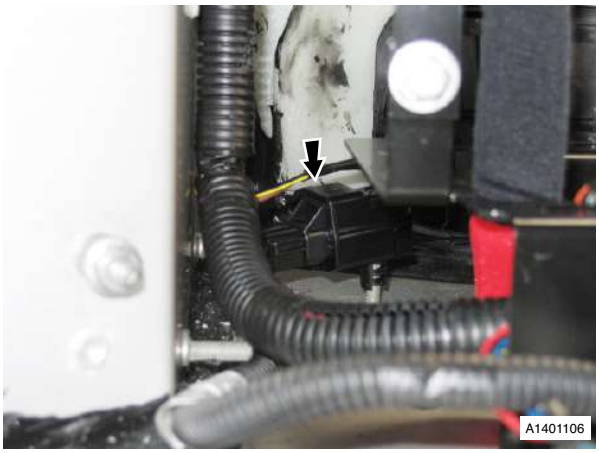

Fig. 1

10. Remove screws (x2), battery conditioner to power socket bracket. Remove battery conditioner (see Fig. 2).

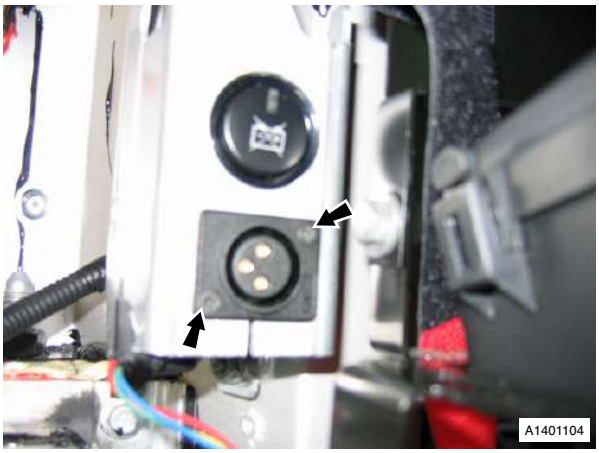

Fig. 2

Installation

1. Install battery conditioner, install and tighten screws (x2).
2. Connect multiplug, battery conditioner.
3. Install harness clips (x2) on power socket bracket.
4. Position main battery cable, install and torque tighten nut, install terminal cover.
5. Install fusebox in mounting bracket.
6. Install harness clips (x2) on power socket bracket.
7. Position power socket bracket, install bolt. torque tighten bolt and nuts (x2).
8. Install mobility kit.
9. Install tyre sealant bottle.
10. Install carpet - RH side luggage compartment. (see Workshop Manual procedure 01.05.FB Carpet Assembly - Luggage Compartment - Side - RH - Renew).

> ***Warning***
> ***Always connect the earth (- ve) terminal last.***

11. Connect vehicle battery.

Battery Disconnect Switch to Bulkhead Stud Cable Assembly-Renew

Repair Operation Time (ROT)		
Item		**Code**
Battery Disconnect Switch to Bulkhead Stud-Cable Assembly-Renew	LHD	**14.01.EE**
Battery Disconnect Switch to Bulkhead Stud-Cable Assembly-Renew	RHD	**14.01.ED**

Removal

1. Remove RH seat (see Workshop Manual procedure 01.10.AA Seat Assembly - Front - RH - Remove for Access and Refit).

> ***Warning***
> ***To prevent damage to electrical components, always disconnect the vehicle battery when working on the vehicle's electrical system. The earth lead (- ve) must be disconnected first and reconnected last.***

2. Disconnect vehicle battery.
3. Remove screws (x4) front floor carpet retaining brackets (x2) to floor.
4. Release RH front floor carpet from fasteners (x4), remove carpet.
5. Release RH rear floor carpet from fasteners (x4), remove carpet.
6. Release and remove RH tunnel carpet.
7. Remove moulding assembly - quarter trim upper RH (see Workshop Manual procedure 01.05.CX Moulding Assembly - Quarter Trim Upper - RH - Renew).
8. Remove nuts (x2) and screws (x2) securing RH heel board to body and support rail. Remove heel board.
9. Remove nuts (x3) and screws (x6) securing CEM cover plate to body, remove cover plate.
10. Remove screws (x2) securing CEM to mounting bracket. Position CEM aside.
11. Release cover, remove nut securing battery cables (x3) to bulkhead stud (see Fig. 1).

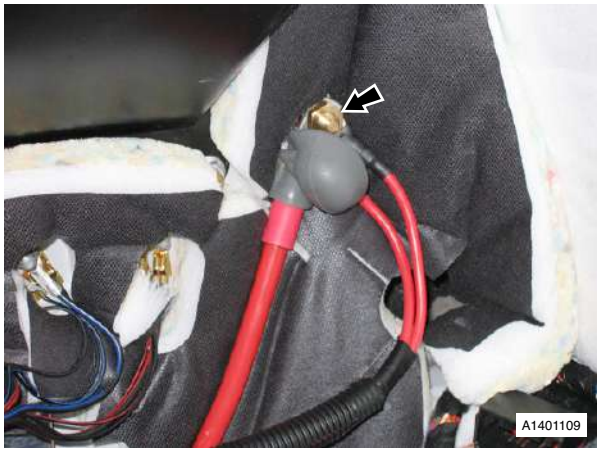

Fig. 1

12. Note fitted position and remove battery cables (x3) from bulkhead stud.
13. Release clips (x2) securing main harness to body.
14. Release battery cable clips (x22) from body.
15. Remove nut securing battery cable to BDS, release cable from BDS (see Fig. 2).

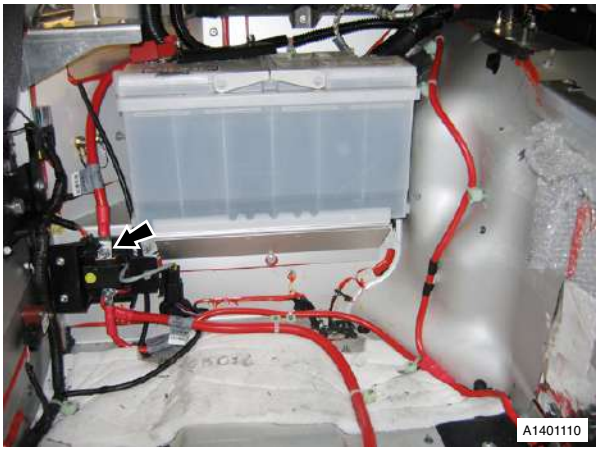

Fig. 2

16. Remove power amplifier assembly (see Workshop Manual procedure 15.01.AB Power Amplifier - Renew).
17. Remove tyre sealant bottle.
18. Remove mobility kit from storage rack.
19. Release terminal cover, remove nut securing battery cable to luggage compartment fuse box (see Fig. 3).

Fig. 3

20. Release battery cable from fuse box and clips (x7).
21. Manoeuvre and remove battery cable from vehicle.

Installation

1. Manoeuvre and install battery cable in vehicle.
2. Connect battery cable to luggage compartment fuse box, install and torque tighten nut. Install terminal cover.
3. Install clips (x7), secure battery cable to body.
4. Install mobility kit in storage rack.
5. Install tyre sealant bottle.
6. Install power amplifier assembly (see Workshop Manual procedure 15.01.AB Power Amplifier - Renew).
7. Connect battery cable to BDS, install and torque tighten nut.
8. Install clips (x22), secure battery cable to body.
9. Secure main harness to body with clips (x2).
10. Connect battery cables (x3) to bulkhead stud, install and torque tighten nut. Install terminal cover.
11. Position CEM to mounting bracket, install and torque tighten screws (x2).
12. Install CEM cover plate, Install and torque tighten nuts (x3) and screws (x6).
13. Install RH heel board, install and torque tighten nuts (x2) and screws (x2).
14. Install moulding assembly - quarter trim upper RH (see Workshop Manual procedure 01.05.CX Moulding Assembly - Quarter Trim Upper - RH - Renew).
15. Install and secure tunnel carpet RH.
16. Install RH rear floor carpet and secure with fasteners (x4).
17. Install RH front floor carpet and secure with fasteners (x4).
18. Install front floor carpet retaining brackets (x2)
19. Install RH seat (see Workshop Manual procedure 01.10.AA Seat Assembly - Front - RH - Remove for Access and Refit).

Warning
Always connect the earth (- ve) terminal last.

20. Connect vehicle battery.

Battery to Battery Disconnect Switch Cable Assembly-Renew

Repair Operation Time (ROT)	
Item	**Code**
Battery to Battery Disconnect Switch Cable Assembly-Renew	**14.01.EF**

Removal

1. Power RH seat fully forward.
2. Remove rear compartment cover.

Warning
To prevent damage to electrical components, always disconnect the vehicle battery when working on the vehicle's electrical system. The earth lead (- ve) must be disconnected first and reconnected last.

3. Disconnect vehicle battery.
4. Remove panel assembly - quarter trim middle - RH (see Workshop Manual procedure 01.05.CL Panel Assembly - Quarter Trim Middle Section - RH - Renew).
5. Release rear carpet studs (x2), move carpet aside.
6. Remove screws (x2), battery compartment cover to support rail.

7. Remove nuts (x2), battery compartment cover to body. Remove cover.
8. Loosen terminal nut, disconnect main battery cable (see Fig. 1).

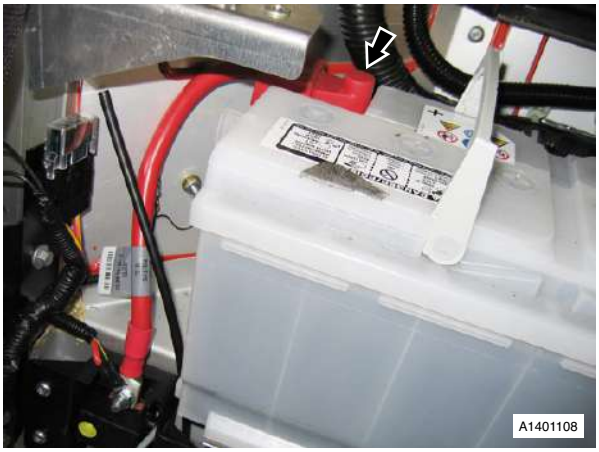

Fig. 1

9. Remove nut and washer securing battery cable to battery disconnect switch.
10. Release cable and main battery cable from battery disconnect switch.
11. Loosen terminal nut, disconnect main battery cable (positive), remove cable.

Installation

1. Install battery cables (x2), install washer, install and torque tighten nut.
2. Install battery compartment cover, install and tighten screws (x2) and nuts (x2).
3. Position rear carpet, install on studs (x2).

> ***Warning***
> ***Always connect the earth (- ve) terminal last.***

4. Connect vehicle battery.
5. Install panel assembly - quarter trim middle section - RH (see Workshop Manual procedure 01.05.CL Panel Assembly - Quarter Trim Middle Section - RH - Renew).
6. Install rear compartment cover.
7. Power RH seat to original position.

Bulkhead to Starter Jump Terminal Harness-Renew

Repair Operation Time (ROT)	
Item	**Code**
Bulkhead to Starter Jump Terminal Harness-Renew	**14.01.EJ**

Removal

> ***Warning***
> ***To prevent damage to electrical components, always disconnect the vehicle battery when working on the vehicle's electrical system. The earth lead (- ve) must be disconnected first and reconnected last.***

1. Disconnect vehicle battery.
2. Remove terminal jump start (see Workshop Manual procedure 14.01.EA Terminal - Jump Start - Renew).
3. Raise vehicle on ramp.
4. Remove RH front wheel arch liner (see Workshop Manual procedure 01.02.GB Wheel Arch Liner - Front - RH - Renew).
5. Release battery cable clips (x6), from body (see Fig. 1).

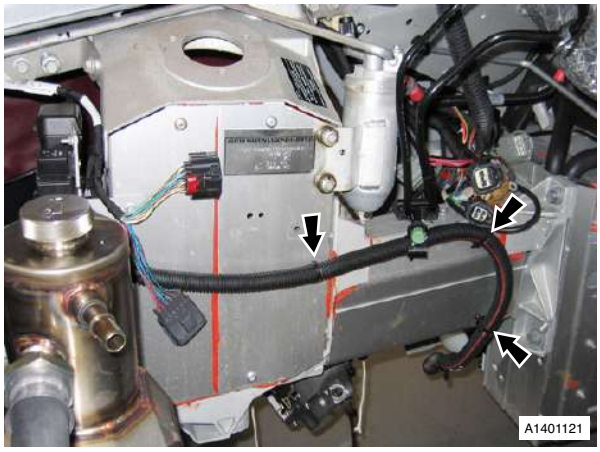

Fig. 1

6. Release battery cable clips (x2) from screen washer reservoir (see Fig. 2).

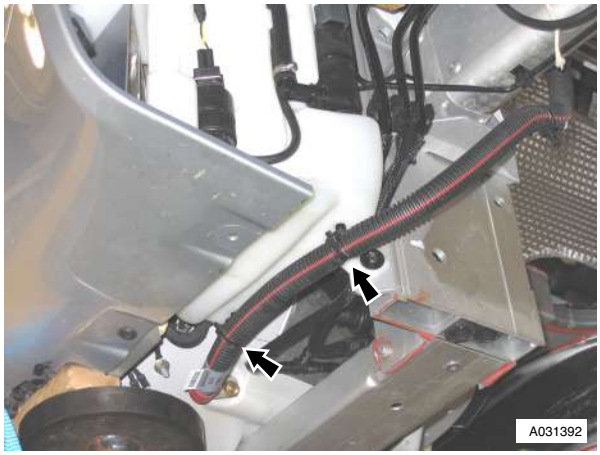

Fig. 2

7. Release cover, remove nut securing harness to bulkhead stud.
8. Release harness from bulkhead stud, manoeuvre and remove harness.

Installation

1. Position harness to bulkhead stud, install and torque tighten nut, install cover.
2. Secure harness to body and screen washer reservoir with clips (x8).
3. Install RH front wheel arch liner (see Workshop Manual procedure 01.02.GB Wheel Arch Liner - Front - RH - Renew).
4. Lower vehicle on ramp.
5. Install terminal jump start (see Workshop Manual procedure 14.01.EA Terminal - Jump Start - Renew).

> ***Warning***
> ***Always connect the earth (- ve) terminal last.***

6. Connect vehicle battery.

BDS to Bulkhead Dirty Feed Harness-Renew

Repair Operation Time (ROT)	
Item	**Code**
BDS to Bulkhead Dirty Feed Harness-Renew	**14.01.EK**

Removal

1. Remove RH seat (see Workshop Manual procedure 01.10.AA Seat Assembly - Front - RH - Remove for Access and Refit).

> ***Warning***
> ***To prevent damage to electrical components, always disconnect the vehicle battery when working on the vehicle's electrical system. The earth lead (- ve) must be disconnected first and reconnected last.***

2. Disconnect vehicle battery.
3. Remove screws (x4), retaining brackets securing front floor carpet, remove brackets (x2).
4. Release RH rear floor carpet from fasteners (x4), remove carpet.
5. Remove nuts (x2) and screws (x2) securing RH rear heel board to body and support rail then remove heel board.
6. Remove nuts (x3) and screws (x6) securing CEM cover plate to body, remove cover plate.
7. Release cover, remove nut securing battery dirty feed cable to bulkhead stud (see Fig. 1).

Fig. 1

8. Release battery dirty feed cable clips (x9) from body.
9. Remove nut securing battery dirty feed cable to battery disconnection switch, release cable from battery disconnection switch (see Fig. 2).

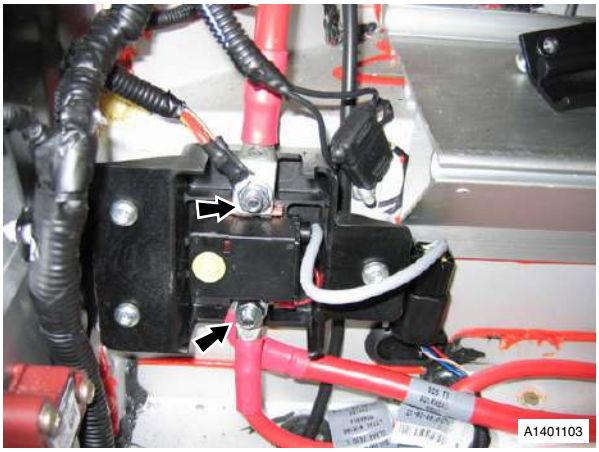

Fig. 2

10. Remove battery dirty feed cable from vehicle.

Installation

1. Install battery dirty feed cable in vehicle.
2. Connect battery dirty feed cable to battery disconnection switch, install and torque tighten nut.
3. Secure battery dirty feed cable to body with clips (x9).
4. Connect battery dirty feed cable to bulkhead stud, install and torque tighten nut.
5. Install terminal cover.
6. Install CEM cover plate, Install and torque tighten nuts (x3) and screws (x6).
7. Install RH rear heel board, install and torque tighten nuts (x2) and screws (x2).
8. Install RH rear floor carpet and secure with fasteners (x4).

9. Install front floor carpet retaining brackets (x2), install and tighten screws (x4)
10. Install RH seat (see Workshop Manual procedure 01.10.AA Seat Assembly - Front - RH - Remove for Access and Refit).

Warning
Always connect the earth (- ve) terminal last.

11. Connect vehicle battery.

Power Supply (14.00)

Alternator and Regulator System (14.02)

Description

The alternator installed to this vehicle is a Denso, SC1, 120 amp rating, with a 14.4 volt regulator.

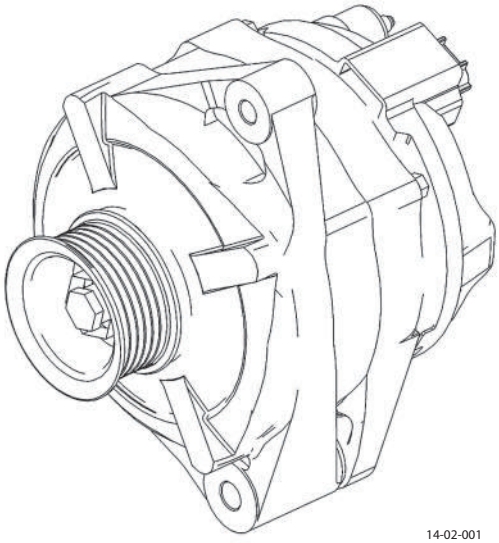

The Alternator has an 'Altmon' signal that goes to and from the PCM via a wire in the 3 way connector.

The 'Altmon' signal is monitored by the PCM which adjusts ignition timing and fuelling if necessary to maintain idle speed when the alternator is charging.

Specifications

Torque Figures		
Description	Nm	lb/ft
Alternator mounts	43-52	32-38.5

Maintenance

Alternator-Renew

Repair Operation Time (ROT)	
Item	**Code**
Alternator-Renew	**03.05.BC**

Removal

1. Battery isolation switch 'OFF'.
2. Disconnect breather pipe quickfits (x2) from air cleaner duct.
3. Remove throttle body duct for access (clips x3).
4. Release tensioner and slip belt from idler.
5. Move belt off alternator pulley.
6. Reposition oil tank (to release alternator).
7. Remove breather pipe (quick fit).
8. Remove pipes (x2) from oil tank, tie aside.
9. Remove bolts (x4) securing tank to body, support tank and move aside to left side of engine bay.
10. Disconnect top hose from engine (clip x1) tie aside (catch coolant).
11. Raise vehicle on ramp.
12. Remove undertray (see Workshop Manual procedure 01.02.NB Undertray - Front - Renew).
13. Remove bolts (x3) securing oil thermostat to body (allows oil tank more sideways movement).
14. Remove road wheel/s.
15. Remove oil filter and renew (see Workshop Manual procedure 03.02.AB Filter - Oil Canister Renew).
16. Reposition heatsheild to gain access to top bolt.
17. Unclip harness from bracket for access to top bolt and move aside.
18. Remove top securing nut and bolt.
19. Remove nut from bottom fixing and withdraw bolt (will foul on front subframe).
20. Lever alternator forward to release clamping of sliding bushes.
21. Using suitable grips remove bottom/ front sliding bush together with bolt.
22. Position alternator for access, disconnect battery (nut x1) lead and multiplug.
23. Lower ramp.
24. Remove alternator via front of engine (oil tank).

Installation

1. Install alternator.
2. Raise ramp.
3. Connect battery lead and multiplug to alternator.
4. Position alternator to bracket, install top fixing nut and bolt (do not tighten).
5. Install bottom bolt with sliding bush into bracket (through alternator).
6. Install nut to bottom bolt and tighten (torque).
7. Tighten top nut and bolt (torque)
8. Install oil filter and renew (see Workshop Manual procedure 03.02.AB Filter - Oil Canister Renew).
9. Clip harness to bracket.
10. Reposition heatsheild to original position.
11. Install bolts (x3) securing oil thermostat to body (torque).
12. Install undertray (see Workshop Manual procedure 01.02.NB Undertray - Front - Renew).
13. Install road wheel/s
14. Lower vehicle on ramp.
15. Reposition oil tank.
16. Connect top hose to engine (clip x1).
17. Position tank to body and fit bolts (x4) (torque).
18. Install oil pipes to tank.
19. Connect breather hose.
20. Fit belt to alternator pulley.

21. Release tensioner and slip belt on idler.
22. Install throttle body duct.
23. Connect breather pipe quickfits (x2) to air cleaner duct.
24. Battery isolation switch 'ON'.
25. Top up coolant.

Vehicle Entertainment (15.00)

Contents

Audio System (15.01).....15-1-2
Maintenance.....1-2
Power Amplifier-Renew.....1-2
Subwoofer Premium Amplifier-Renew.....1-3
Centre Stack Assembly-Remove for Access/Refit.....1-3
Centre Stack assembly-Renew.....1-4
GPS Tuner-Renew.....1-5
Multi Media Module-Renew.....1-6
Antenna (15.02).....15-2-1
Maintenance.....2-1
GPS Antenna-Renew.....2-1
ICE System Antenna-Renew.....2-1

Vehicle Entertainment (15.00)

Audio System (15.01)

Maintenance

Power Amplifier-Renew

Repair Operation Time (ROT)	
Item	**Code**
Power Amplifier-Renew	**15.01.AB**

Removal

1. Battery isolation switch 'OFF'.
2. Remove RH luggage compartment carpet (see Workshop Manual procedure 01.05.FB Carpet Assembly - Luggage Compartment - Side - RH - Renew).
3. Remove RH rear upper pillar panel assembly (see Workshop Manual procedure 01.05.BF Panel Assembly - Rear Pillar - Upper - RH - Renew).
4. Remove bolt (x1) and nuts (x2) from power socket bracket to body (see Fig. 1).

Fig. 1

5. Release power socket bracket and position aside.
6. Remove Torx screws (x6) from amplifier bracket to body (see Fig. 2).

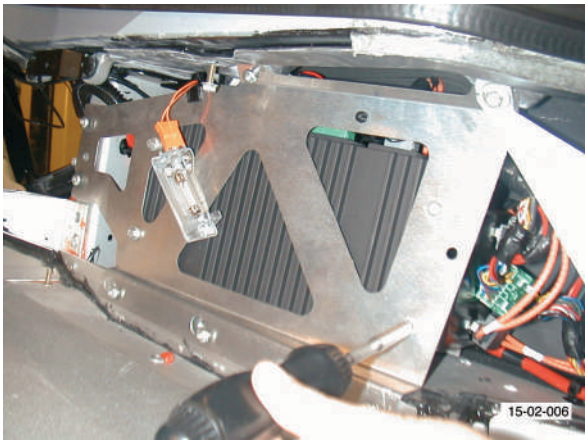

Fig. 2

7. Release clip securing lamp harness to amplifier bracket.
8. Disconnect harness to luggage compartment lamp and remove lamp assembly.
9. Release power amplifier bracket from body and disconnect harness multiplugs (x3).
10. Remove amplifier and bracket assembly.
11. Disconnect multiplugs (x3) from amplifier to audio harness.
12. Remove nuts and bolts (x4) that secure power amplifier to mounting plate and remove amplifier (see Fig. 3).

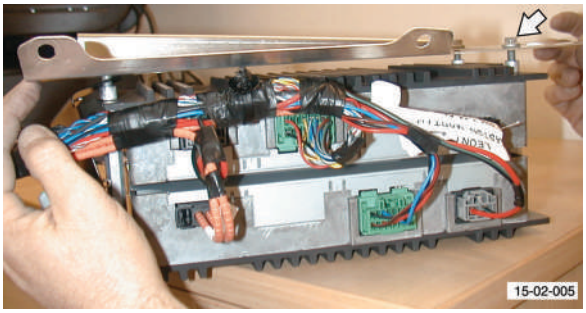

Fig. 3

13. Collect spacers between amplifier and mounting plate (see Fig. 4).

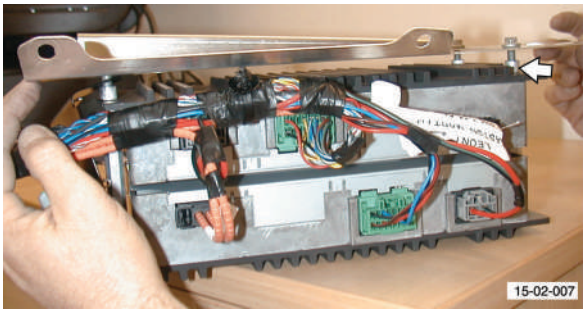

Fig. 4

Installation

1. Position amplifier and spacers to mounting plate.
2. Install nuts and bolt amplifier to mounting plate.
3. Connect multiplugs (x3) from amplifier to audio harness.
4. Position amplifier and bracket assembly to body and connect multiplugs (x3).
5. Secure luggage compartment lamp harness and connect and install lamp assembly.
6. Install Torx screws (x6) from amplifier bracket to body.
7. Position power socket bracket to body and install bolt (x1) and nuts (x2).
8. Install RH rear upper pillar panel assembly (see Workshop Manual procedure 01.05.BF Panel Assembly - Rear Pillar - Upper - RH - Renew).
9. Install RH luggage compartment carpet (see Workshop Manual procedures 01.05.FB Carpet Assembly - Luggage Compartment - Side - RH - Renew).
10. Battery isolation switch 'ON'.

Subwoofer Premium Amplifier-Renew

Repair Operation Time (ROT)	
Item	**Code**
Subwoofer Premium Amplifier-Renew	**15.01.AC**

Removal

1. Battery isolation switch 'OFF'.
2. Remove RH luggage compartment carpet (see Workshop Manual procedure 01.05.FB Carpet Assembly - Luggage Compartment - Side - RH - Renew).
3. Remove RH rear upper pillar panel assembly (see Workshop Manual procedure 01.05.BF Panel Assembly - Rear Pillar - Upper - RH - Renew).
4. Remove bolt (x1) and nuts (x2) from power socket bracket to body (see Fig. 1).

Fig. 1

5. Release power socket bracket and position aside.
6. Remove Torx screws (x6) from amplifier bracket to body (see Fig. 2).

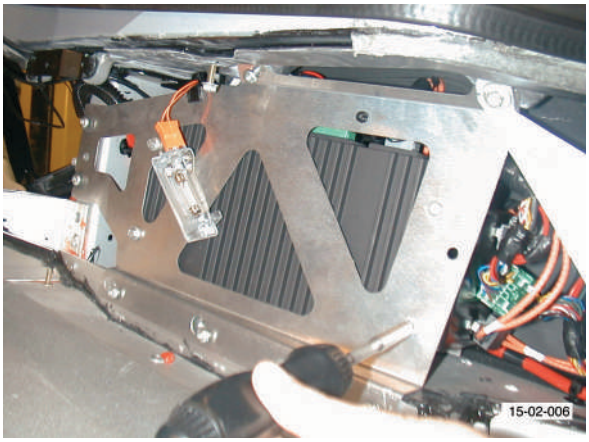

Fig. 2

7. Release clip that secures lamp harness to amplifier bracket.
8. Disconnect harness to luggage compartment lamp and remove lamp assembly.
9. Release power amplifier bracket from body and disconnect harness multiplugs (x3).
10. Remove amplifier and bracket assembly.
11. Disconnect multiplugs (x3) from amplifier to audio harness.
12. Remove bolts (x4) that secure subwoofer amplifier to mounting plate and remove amplifier (see Fig. 3).

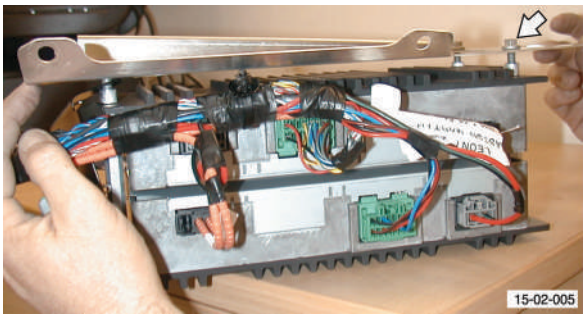

Fig. 3

Installation

1. Install amplifier to mounting plate.
2. Connect multiplugs (x3) from amplifier to audio harness.
3. Position amplifier and bracket assembly to body and connect multiplugs (x3).
4. Secure luggage compartment lamp harness and connect and install lamp assembly.
5. Install Torx screws (x6) from amplifier bracket to body.
6. Position power socket bracket to body and install bolt (x1) and nuts (x2).
7. Install RH rear upper pillar panel assembly (see Workshop Manual procedure 01.05.BF Panel Assembly - Rear Pillar - Upper - RH - Renew).
8. Install RH luggage compartment carpet (see Workshop Manual procedure 01.05.FB Carpet Assembly - Luggage Compartment - Side - RH - Renew).
9. Battery isolation switch 'ON'.

Centre Stack Assembly-Remove for Access/Refit

Repair Operation Time (ROT)	
Item	**Code**
Centre Stack Assembly-Remove/Refit	**15.01.CB**

Removal

1. Remove panel assembly - console (see Workshop Manual procedure 01.12.DB Panel Assembly Console - Renew).
2. Remove bezel assembly instrument panel (see Workshop Manual procedure 01.12.AV Bezel Assembly - Instrument Panel - Renew).

3. Remove screws (x4) that secure centre stack assembly to IP (see Fig. 1).

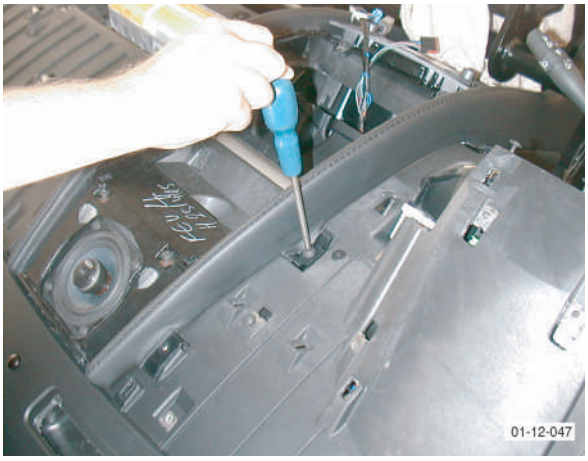

Fig. 1

4. Release centre stack assembly and disconnect multiplugs (x12).

Installation

1. Position centre stack assembly and install multiplugs (x12).
2. Install and torque tighten screws (x4).
3. Install bezel assembly instrument panel (see Workshop Manual procedure 01.12.AV Bezel Assembly - Instrument Panel - Renew).
4. Install panel assembly - console (see Workshop Manual procedure 01.12.DB Panel Assembly Console - Renew).

Centre Stack assembly-Renew

Repair Operation Time (ROT)	
Item	**Code**
Centre Stack Assembly-Renew	**15.01.CD**

Removal

1. Remove centre stack assembly (see Workshop Manual procedure 15.01.CB Centre Stack Assembly - Remove for Access and Refit).
2. Depress clips and remove A/C request switch (see Fig. 1).

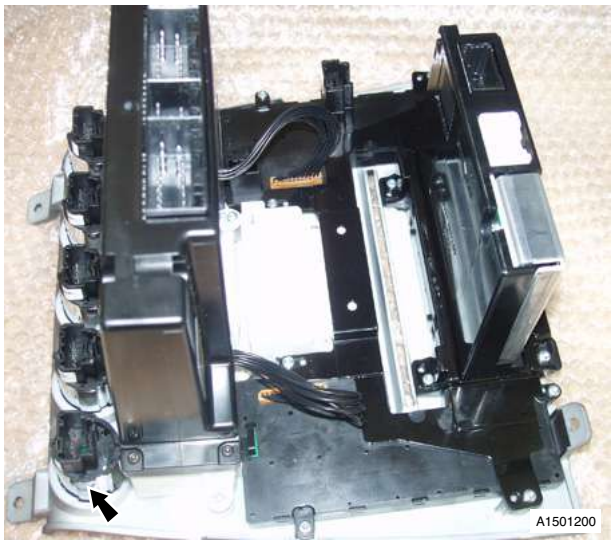

Fig. 1

3. Depress clips and remove A/C re-circulation switch.
4. Depress clips and remove hazard warning switch.
5. Depress clips and remove IDV switch.
6. Depress clips and remove rear fog guard switch.
7. Rotate HVAC control knobs to vertical position.
8. Remove screws (x6) securing HVAC control unit (see Fig. 2).

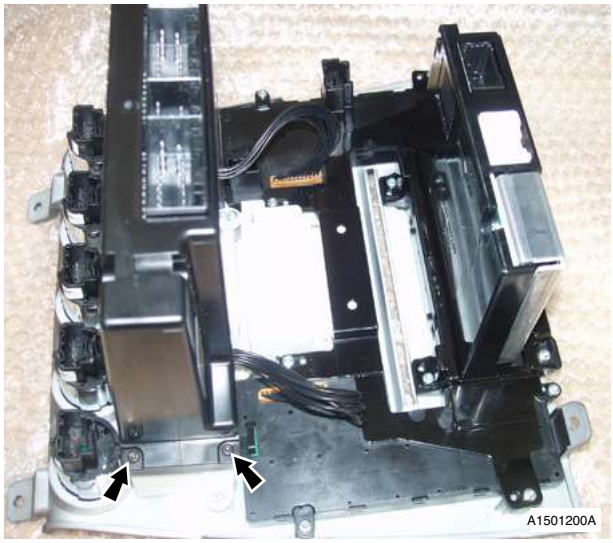

Fig. 2

9. Disconnect multiplugs (x2) (lever HVAC unit from rear to remove control knobs).

10. Remove screws (x8) securing centre stack support bracket, remove bracket (see Fig. 3).

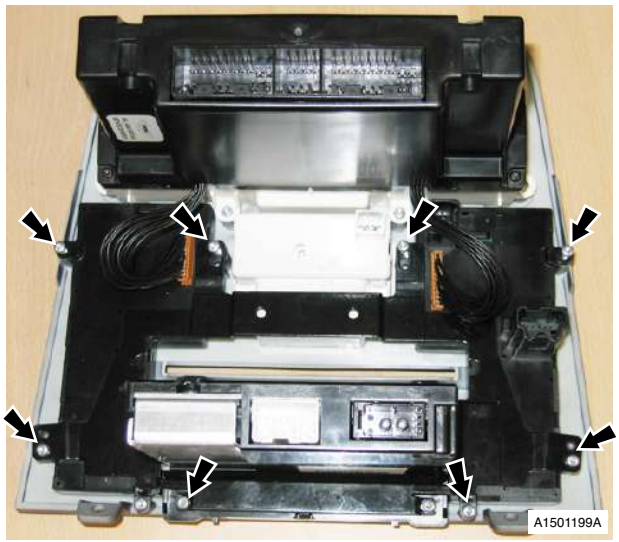

Fig. 3

11. Remove ICM interface driver.
12. Remove screws (x2) securing clock unit, remove clock unit (see Fig. 4).

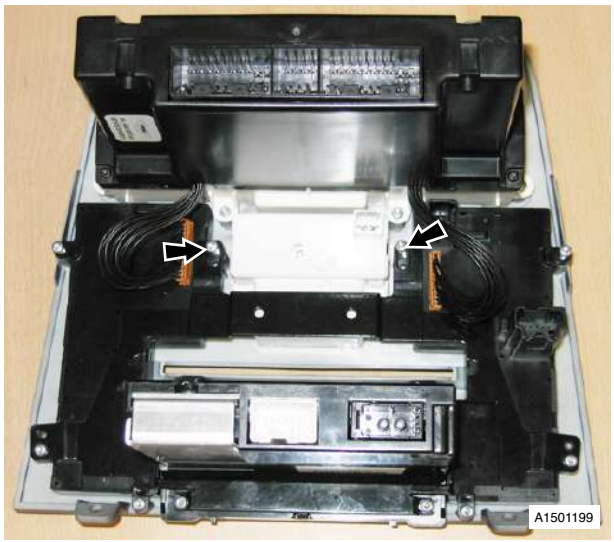

Fig. 4

13. Remove screws (x2) securing telephone switchpack, remove switchpack.
14. Remove screws (x2) securing satellite navigation switchpack, remove switchpack.

Installation

1. Install satellite navigation switchpack, install and tighten screws (x2).
2. Install telephone switchpack, install and tighten screws (x2).
3. Install clock unit, install and tighten screws (x2).
4. Install ICM interface driver, install centre stack support bracket, install and tighten screws (x8).
5. Install HVAC unit, install and tighten screws (x6). Install control knobs (x3), connect multiplugs (x2).
6. Install rear fog guard switch and secure with clips.
7. Install IDV switch and secure with clips.
8. Install hazard warning switch and secure with clips.
9. Install A/C re-circulation switch and secure with clips.
10. Install A/C request switch and secure with clips.
11. Install centre stack assembly (see Workshop Manual procedure 15.01.CB Centre Stack Assembly - Remove for Access and Refit).

GPS Tuner-Renew

Repair Operation Time (ROT)	
Item	**Code**
GPS Tuner-Renew	**19.07.CD**

1. Remove RH rear wheel arch liner (see Workshop Manual procedure 01.02.HB Wheel Arch Liner - Rear - RH - Renew).
2. Remove bolts (x4) from tuner base plate to wheel arch (see Fig. 1).

Fig. 1

3. Remove bolts (x2) from GPS tuner to bracket (see Fig. 2).

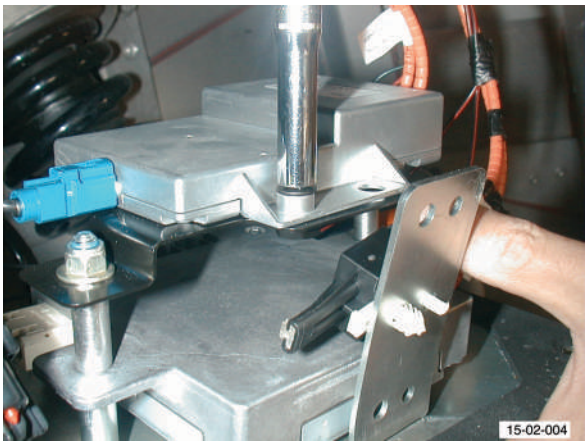

Fig. 2

4. Disconnect harness connections and remove GPS tuner.

Installation

1. Position GPS tuner to bracket and install bolts (x2).
2. Connect harness multiplugs.
3. Position base plate and secure with bolts (x4).
4. Install RH rear wheel arch liner (see Workshop Manual procedure 01.02.HB Wheel Arch Liner - Rear - RH - Renew).

Multi Media Module-Renew

Repair Operation Time (ROT)	
Item	**Code**
Multimedia Module-Renew	**19.07.BB**

Removal

1. Disconnect vehicle battery.
2. Remove LH rear pillar upper panel assembly (see Workshop Manual procedure 01.05.BG Panel Assembly - Rear Pillar - Upper - LH - Renew).
3. Release boot carpet LH side rear (see Workshop Manual procedure 01.05.FM Carpet Assembly - Side Front - LH - Renew).
4. Disconnect multiplug (x1) tailgate switch.
5. Release tailgate switch harness from stud.
6. Remove bolts (x3) securing multi media module to body.
7. Remove module and disconnect multiplugs (x3).
8. Remove screws (x4) bracket to multi media module.

Installation

1. Install bracket to module.
2. Secure harness and connect multiplug (x1) boot switch.
3. Connect multiplugs (x3) module.
4. Install module.
5. Install LH rear pillar upper panel assembly (see Workshop Manual procedure 01.05.BG Panel Assembly - Rear Pillar - Upper - LH - Renew).
6. Install boot carpet (see Workshop Manual procedure 01.05.FM Carpet Assembly - Side Front - LH - Renew).
7. Connect vehicle battery.

Vehicle Entertainment (15.00)

Antenna (15.02)

Maintenance

GPS Antenna-Renew

Repair Operation Time (ROT)	
Item	**Code**
GPS Antenna-Renew	**19.07.DA**

Removal

1. Remove tailgate trim panel (see Workshop Manual procedure 01.05.EF Trim - Tailgate Lid Assembly - Renew).
2. Release multiplug from antenna plate, disconnect multiplug.
3. Remove Torx screws (x3) securing GPS antenna plate to tailgate.
4. Release harness clip, remove GPS antenna plate assembly.
5. Release harness clip, remove GPS antenna plate assembly.
6. Release GPS antenna from mounting plate.

Installation

1. Clean GPS antenna mounting plate.
2. Install GPS antenna to mounting plate.
3. Position GPS antenna assembly to tailgate, install and tighten screws (x3).
4. Install harness clip in GPS antenna plate, connect multiplug, install multiplug on antenna plate.
5. Install tailgate trim panel (see Workshop Manual procedure 01.05.EF Trim - Tailgate Lid Assembly - Renew).

ICE System Antenna-Renew

Repair Operation Time (ROT)	
Item	**Code**
ICE System Antenna-Renew	**15.02.AB**

Removal

1. Battery isolation switch 'OFF'.
2. Remove RH rear wheel arch liner (see Workshop Manual procedure 01.02.HB Wheel Arch Liner - Rear - RH - Renew).
3. Remove bolts (x2) securing AM antenna to body (see Fig. 1).

Fig. 1

4. Remove nut securing AM antenna earth connection to body.
5. Release AM antenna cable from clips (x4).
6. Remove bolts (x4) securing tuner base plate to wheel arch (note position of earth lead) (see Fig. 2).

Fig. 2

7. Disconnect antenna multiplugs (x4) from tuners (see Fig. 3).

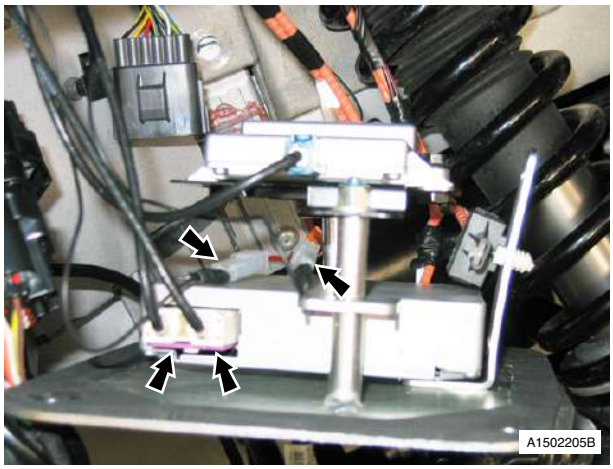

Fig. 3

8. Lower vehicle on ramp.
9. Pull antenna cables into luggage compartment.
10. Remove power amplifier assembly (see Workshop Manual procedure 15.01.AB Power Amplifier - Renew).
11. Release AM antenna cable from clips (x3), luggage compartment (see Fig. 4).

Fig. 4

12. Mark fitted position, release clip, remove AM antenna cable from multiplug (see Fig. 5).

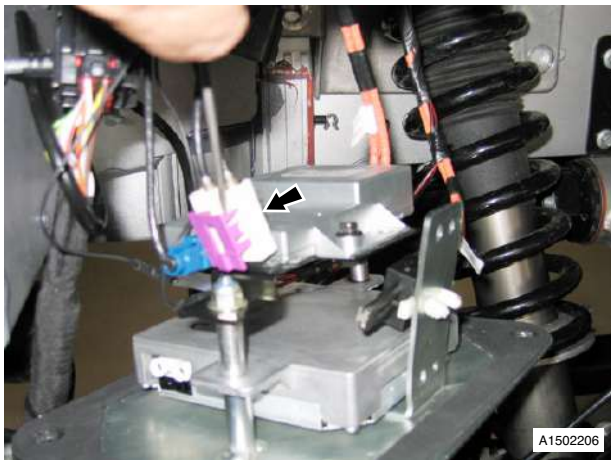

Fig. 5

13. Pull AM antenna cable into wheel arch, remove AM antenna assembly.
14. Remove rear header (see Workshop Manual procedure 01.05.BK Panel Assembly - Rear Header - Renew).
15. Mark fitted position, release FM antenna from body (see Fig. 6).

Fig. 6

16. Release FM antenna cable from roof clip.
17. Mark fitted position, release clip, remove FM antenna cable from multiplug.
18. Remove FM antenna assembly.

Installation

1. Clean old adhesive from body.
2. Apply adhesive to FM antenna.
3. Install FM antenna, align to mark on body.
4. Secure FM antenna cable in roof clip.
5. Correctly route FM antenna cable, connect to marked position in multiplug, secure with clip.
6. Install rear header (see Workshop Manual procedure 01.05.BK Panel Assembly - Rear Header - Renew).

7. Position AM antenna to body, install and torque tighten bolts (x2).
8. Position AM antenna earth connector, install and torque tighten nut.
9. Route AM antenna cable through grommet into luggage compartment.
10. Correctly route AM antenna cable, connect to marked position in multiplug, secure with clip.
11. Feed multiplugs into wheel arch and connect to tuner assemblies.
12. Secure antenna cables in clips (x3), luggage compartment.
13. Install power amplifier assembly (see Workshop Manual procedure 15.01.AB Power Amplifier - Renew).
14. Raise vehicle on ramp.
15. Position tuner base plate, position earth lead, install and torque tighten bolts (x4).
16. Install RH rear wheel arch liner (see Workshop Manual procedure 01.02.HB Wheel Arch Liner - Rear - RH - Renew).
17. Lower vehicle on ramp.
18. Battery isolation switch ‘ON’.

Vacuum Distribution (16.00)

Contents

Body Vacuum System (16.01) 16-1-2
Description 1-2

Vacuum Distribution (16.00)

Body Vacuum System (16.01)

Description

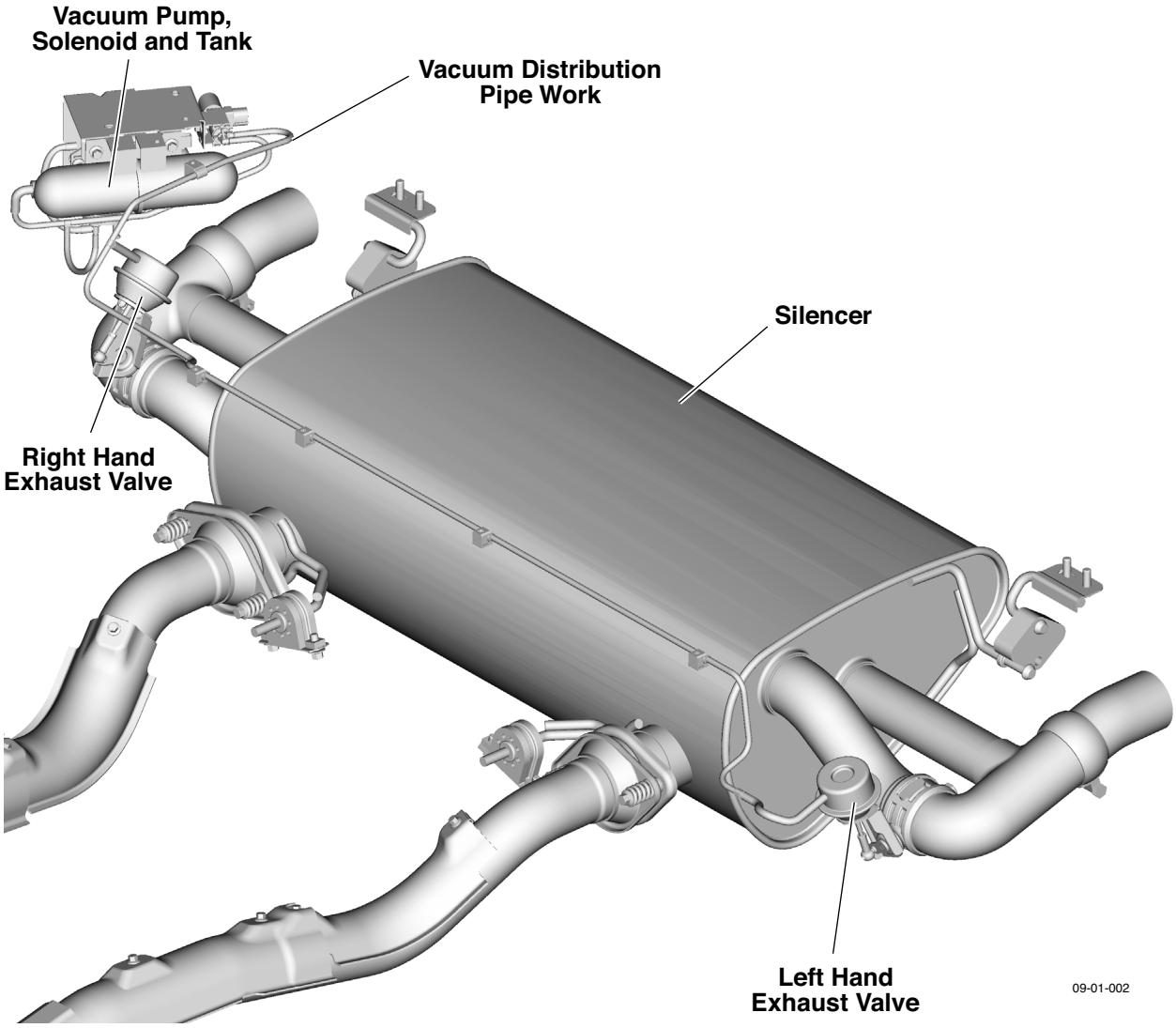

The exhaust system consists of four twin-branch manifold assemblies which direct exhaust gases through two under-floor catalysts (before feeding) via under-floor pipework to a two-stage rear silencer.

The two-stage rear silencer directionally varies the flow of exhaust gas to give acceptable exhaust noise levels at low engine speeds and reduce exhaust back pressure for engine protection at high engine speeds.

The exhaust valves are linked and operated via the engines ECU by means of a vacuum distribution system consisting of an electrically operated pump, solenoid, vacuum storage tank and connecting pipework.

An illustration of the vacuum distribution system can be seen above.

Lighting (17.00)

Contents

Front Lights (17.01) 17-1-2
Specifications.....1-2
Maintenance.....1-2
RH/LH Headlamp Assembly-Renew.....1-2
Headlamp Alignment-Adjust 1-3
Interior Lighting (17.02) 17-2-1
Specifications.....2-1
Rear Lights (17.03).....17-3-1
Specifications.....3-1
Lighting Mechanisms (17.04) 17-4-1
Headlamp Levelling (HID Only).....4-1

Lighting (17.00)

Front Lights (17.01)

Specifications

Bulbs			
	Rating	Type (European)	Type (Federal)
Headlight dipped beam-HID	35W	D1S	D1S
Headlight dipped beam-Halogen	55W	H11LL	H11LL
Headlight main beam	65W	H9	H9
Side Repeater	5W	WY5W	WY5W
Side marker (front and rear)	3W	N/A	W3W

Headlamp Alignment	European	Federal
Main Beam Alignment	1% Down	0.7% Down Vol.
Dipped Beam Alignment	1% Down	0.7% Down Vol.

Main beam is fixed to the Dipped beam.

Maintenance

RH/LH Headlamp Assembly-Renew

Repair Operation Time (ROT)		
Item		**Code**
Headlamp Assembly-Renew	RH	**17.01.AB**
Headlamp Assembly-Renew	LH	**17.01.BB**

Removal

1. Disconnect vehicle battery.
2. Raise vehicle on ramp.
3. Remove LH/RH road wheel.
4. Remove intake air filter box (see Workshop Manual procedure 03.12.AB/03.12.BB Air Filter Box LH/RH Renew).
5. Disconnect headlamp multiplug (see Fig. 1).

Fig. 1

6. Remove bolts (x3) from headlamp to bracket.

Fig. 3

7. Disconnect headlamp washer supply hose (see Fig. 2).

Fig. 2

8. Remove headlamp unit (see Fig. 4).

Fig. 4

Installation

1. Connect multiplug and washer hose.

2. Position headlamp unit.
3. Install 3 Bolts from headlamp to bracket.
4. Install intake air filter box (see Workshop Manual procedure 03.12.AB/03.12.BB Air Filter Box LH/RH Renew).
5. Install road wheel.
6. Lower vehicle on ramp.
7. Connect vehicle battery
8. Check headlamp alignment (see Workshop Manual procedure 17.01.BC Headlamp Alignment - Adjust).

Headlamp Alignment-Adjust

Repair Operation Time (ROT)	
Item	**Code**
Headlamp Alignment-Adjust	**17.01.BC**

1. Top up all fluids to correct level.
2. Ensure fuel tank is 'FULL'.
3. Position 37.5 kg in each seat.
4. Remove the access panel from wheel arch liner.
5. Position beam setting equipment to vehicle.
6. Switch ignition to position 2 and back to 0 (to set headlights).
7. Check headlamp alignment.
8. Switch ignition to position 2 and back to 0 (to set headlights).
9. Check headlamp alignment.
10. Adjust headlights
11. Check headlamp alignment.
12. Remove beam setting equipment from vehicle.
13. Install the access panel to wheel arch liner.
14. Remove the 37.5 kg weights.

Front Side Repeater Lamp Assembly - Remove and Install

Repair Operation Time (ROT)	
Item	**Code**
Front Side Repeater Lamp Assembly - Remove and Install.	**17.01.KC**

Remove

1. Raise the vehicle and make it safe.
2. Remove the two M6 Torx head screws that attach the wheelarch liner at the middle of the wheelarch.
3. Move the wheelarch liner to get access to the repeater lamp assembly.
4. Disconnect the electrical connector for the side repeater lamp.
5. Turn the side repeater lamp assembly clockwise (When you look from outside the wing) and pull the assembly out of the wing.

Install

1. Install the side repeater lamp assembly into the wing. Turn the assembly counterclockwise to attach it.
2. Install the electrical connector to the side repeater lamp.
3. Put the wheelarch liner back into position.
4. Install the two M6 Torx head screws that attach the wheelarch liner.
5. Lower the vehicle.

Front Side Repeater Bulb - Remove and Install

Repair Operation Time (ROT)	
Item	**Code**
Front Side Repeater Bulb - Remove and Install.	**17.01.KD**

Remove

1. Raise the vehicle and make it safe.
2. Remove the two M6 Torx head screws that attach the wheelarch liner at the middle of the wheelarch.
3. Move the wheelarch liner to get access to the repeater lamp assembly.
4. Hold the side repeater body and turn the bulb holder assembly counterclockwise and pull it out of the body.

> ⚠ ***WARNING*** ⚠
> ***BE CAREFUL WHEN YOU INSTALL AND REMOVE THE BULB. THE GLASS OF THE BULB CAN BREAK AND CAUSE INJURY.***

5. Pull the bulb to release it from the bulb holder.

Install

> ⚠ ***WARNING*** ⚠
> ***BE CAREFUL WHEN YOU INSTALL AND REMOVE THE BULB. THE GLASS OF THE BULB CAN BREAK AND CAUSE INJURY.***

1. Push the bulb into the bulb holder.
2. Align the bulb holder assembly with the side repeater body.
3. Push the bulb holder assemby into the side repeater body and turn it clockwise to lock it.
4. Put the wheelarch liner back into position.
5. Install the two M6 Torx head screws that attach the wheelarch liner.
6. Lower the vehicle.

ASTON MARTIN
ASTON MARTIN

Lighting (17.00)

Interior Lighting (17.02)

Specifications

Bulbs		
	Rating	**Type**
Reading lamp	3W	W3W
Boot lamp	10W	C10W

ASTON MARTIN
ASTON MARTIN

Lighting (17.00)

Rear Lights (17.03)

The rear light cluster is a sealed unit. If any light which fails to illuminate is traced back to the rear light cluster, replace the whole unit.

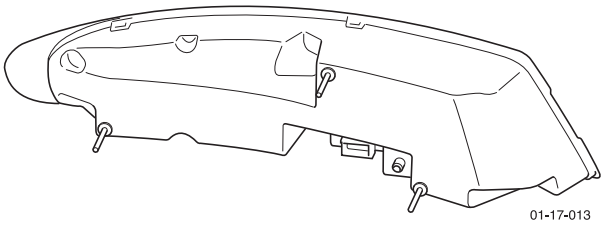

Specifications

Bulbs		
	Rating	Type
Rear light cluster		LED
Rear side marker	3W	W3W
Number plate	5W	W5W
High Mounted Stop Lamp		LED

Maintenance

Licence Plate Illumination Bulb - Remove and Install

Repair Operation Time (ROT)		
Item		Code
Licence Plate Illumination Bulb - Renew	Left	17.03.DB
	Right	17.03.DC

Remove

CAUTION:
YOU MUST USE THE SPECIAL TOOL AT THE END OF THE LAMP ASSEMBLY THAT HAS THE CUT-OUT OR THE LENS ON THE LAMP ASSEMBLY WILL BREAK.

1. Only use the special tool No.43-28094 (see Figure 17-01-001 with the side of the lamp assembly that has the cut-out (see Figure 17-01-002).

Figure 17-03-001

Note: This is because of the design of the lamp retaining mechanism in the bumper.

Note: The tool that is supplied will have a wooden handle and not a plastic one as shown in Figure 17-03-001

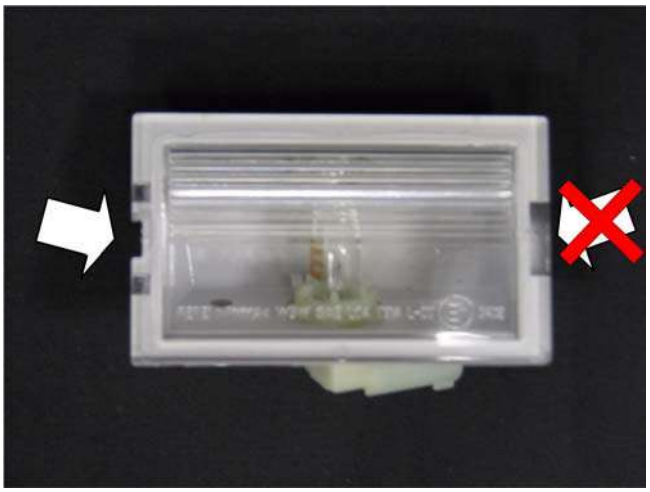

Figure 17-03-002

2. Put the tip of the tool between the lamp assembly and the bumper (see Figure 17-03-003).

Figure17-03-003

3. Lever against the bumper to pull the lamp assembly from the bumper.

Note: There will be a loud noise when the lamp assembly is released. This is usual.

⚠ WARNING ⚠
BE CAREFUL WHEN YOU INSTALL AND REMOVE THE BULB. THE GLASS OF THE BULB CAN BREAK AND CAUSE INJURY.

4. Turn and pull the bulb holder out of the lamp assembly.
5. Carefully pull the bulb out of the bulb holder.

Install

⚠ WARNING ⚠
BE CAREFUL WHEN YOU INSTALL AND REMOVE THE BULB. THE GLASS OF THE BULB CAN BREAK AND CAUSE INJURY.

1. Push the bulb fully into the bulb holder.
2. Push the bulb holder into the lamp assembly and turn it to lock it in position.
3. Put the lamp assembly into position and push it to engage the attachment clips.

Lighting (17.00)

Lighting Mechanisms (17.04)

Headlamp Levelling (HID Only)

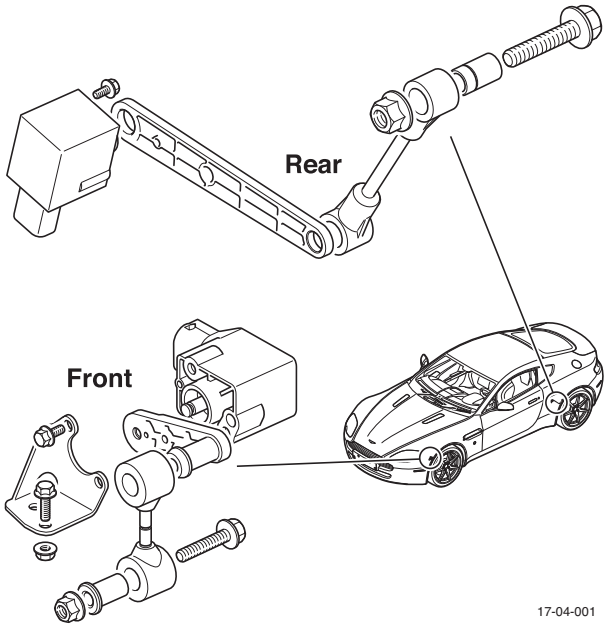

The 'Automatic Dynamic Headlamp Levelling System' consists of:

- An Automatic Dynamic Headlamp Levelling System ECU
- A level sensor for the front suspension
- A level sensor for the rear suspension
- A bi-polar stepper motor mounted in the housing of each headlamp

The Automatic Dynamic Headlamp Levelling System prevents the dipped beam dazzling oncoming road traffic by varying the angular position of the dipped (and main beam) headlamp units relative to the position of the vehicles suspension.

Static condition - Compensates for boot or occupant load condition.

Dynamic condition - Compensates for suspension movements due to acceleration and deceleration. The sensitivity of the system is dependent on vehicle speed and the rate of change of the vehicle speed.

High amplitude low frequency inputs such as those caused by potholes are filtered out to desensitise the system in constant speed situations.

Electric Distribution/Electronic Control (18.00)

Contents

Wiring and Circuit Protection (18.01) 18-1-2
Fuse Boxes 1-2
Engine Bay Fuse/Relay Box.....1-2
Central Electronics Module Fusebox.....1-3
How to Read the Circuits.....1-4
Wires.....1-4
Controller Area Network (CAN).....1-5
Media Oriented System Transport (MOST).....1-6
Connectors 1-6
Splices 1-7
Relays 1-8
Busbars.....1-8
Fuses 1-8
Resistors.....1-9
Lamps.....1-9
Switches 1-9
Motors and Pumps.....1-9
Diodes.....1-10
Transistor 1-10
Earth / Ground 1-10
Maintenance 1-11
Forward Harness-Renew 1-11
Header Latch Harness-Renew
(Roadster Only).....1-12
Roof Cylinder Wiring Harness-Renew
(Roadster Only).....1-14
Transaxle Harness-Renew 1-21
Engine Wiring Harness-Renew 1-22
Facia Harness-Renew.....1-25
Cabin Harness Assembly-Renew 1-26
Passenger Door Harness-Renew.....1-36
Driver's Door Harness-Renew.....1-36
Rear Bumper Harness-Renew 1-37
Transaxle Harness-Renew 1-37
Axle Transmission Harness-Renew
-Sportshift Only.....1-38
Tailgate Harness-Renew.....1-38
Vehicle Control System (18.08) 18-2-1
Module Configuration 2-1
Principles of Operation 2-1
Market Configuration 2-1
Customer Configuration 2-1
Data Buses.....2-1
Network Bus 2-1
MOST.....2-1
Module Locations 2-2

Electric Distribution/Electronic Control (18.00)

Wiring and Circuit Protection (18.01)

Fuse Boxes

From the clean 12V output terminal of the battery disconnect switch, electrical power is distributed to three fuse boxes:

- Engine bay fuse box (LH side of engine bay on LH drive vehicles)
- Boot fuse box
- Central electronic module (CEM) fuse box, via a CEM protection fuse box (Passenger side)

The fuse boxes also contain the switching relays.

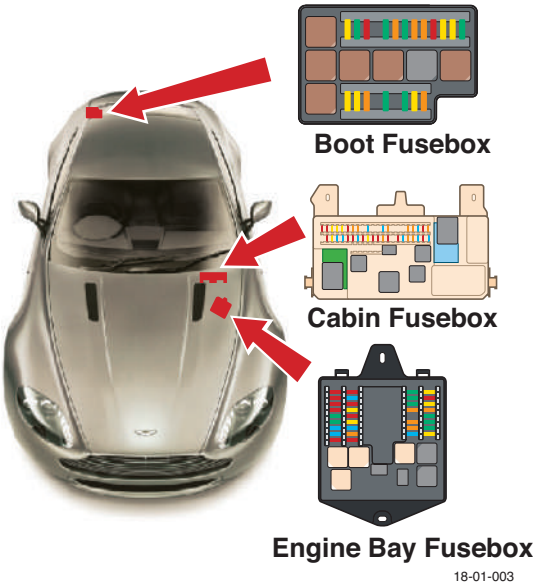

Always ensure that the fusebox covers are located correctly to prevent ingress of water or foreign materials

The Central Electronic Module (CEM) fuse box is always located on the passenger side.

Fuse Listings

Engine Bay Fuse/Relay Box

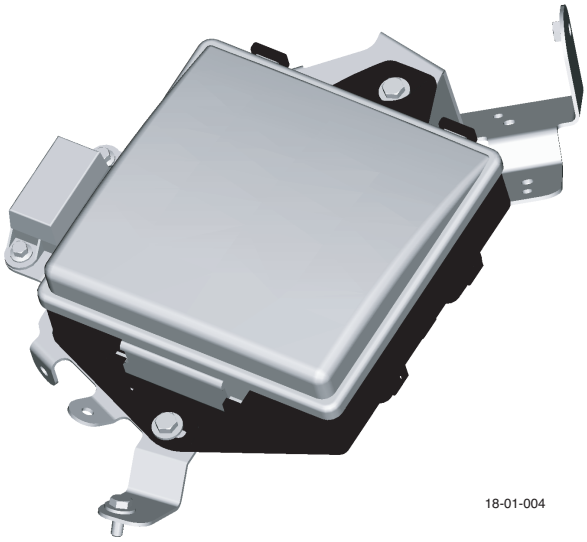

Fuse/ Relay	Rating	Function
F1	10A	Spare
F2	10A	Tracker (option)/Clock
F3	10A	Cooling fan module
F4	20A	Engine management Module - ABS/Key Reader and Steering angle sensors
F5	20A	Spare
F6	15A	Spare
F7	15A	Spare
F8	10A	Engine coolant level sensor/Valve
F9	20A	Spare
F10	10A	A/C clutch
F11	15A	Horn
F12	10A	Keep alive power PCM
F13	20A	Injectors
F14	10A	EGR Module
F15	25A	Starter motor
F16	15A	Coils/Suppressor solenoids
F17	5A	Glove box release
F18	15A	Exhaust Gas Oxygen (HEGO) sensors/ Variable valve timing solenoids/Catalyst monitor sensor (CMS)
F19	30A	ABS module/Battery feed
F20	30A	ABS module/Battery feed
F21	30A	Heated front screen
F22	5A	MAF Sensors/Solenoid vacuum
F23		Blank
F24	5A	Alternator
F25	5A	Spare

F26	20A	Headlamp wash pump (HID Only)
F27	25A	Spare
F28	10A	Module - ABS/Key Reader and Steering angle sensors
F29	25A	Spare
F30	5A	Alternator battery sensing
F31	30A	Heated front screen
F32	30A	Wiper (slow)
F33	30A	Wiper (fast)
F34	20A	Heater Blower motor
F35	60A	Cooling fan module

Central Electronics Module Fusebox

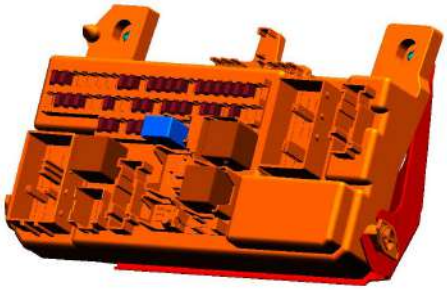

Fuse/ Relay	Rating	Function
F43	10A	Multi media module display/Phone/GPS tuner/Media player
F44	10A	Airbag module
F45	15A	Accessory socket and illumination
F46	5A	Driver Information/Master light switch/Glove box relay/Master lock switch Battery Off switch/Boot release switch/Speaker-switch/ JBFB-R7/Centre console module/Bluetooth module
F47	5A	Interior lamps (front)/Seat switches/Fuel flap switch/glovebox switch/Rear power illumination
F48	15A	Windscreen wash pump
F49	10A	Occupant detect (Driver and passenger seat)/Airbag module
F50		
F51	10A	Diagnostic connectors/Centre stack switches
F52	5A	Start button
F53	10A	Module - HID lighting
F54	10A	Engine fuse box/Boot fuse box/Tyre pressure monitor module/Satellite navigation relay
F55		
F56	10A	Centre console module/Sounder module/ Hazard switch
F57	15A	Diagnostic connectors/Brake pedal switch
F58	10A	High beam (RH)
F59	10A	High beam (LH)
F60	15A	Drivers seat power (Heating)
F61	15A	Passenger seat power (Heating)
F62	20A	A/C module
F63	20A	
F64	5A	AM/FM receiver module/Traffic Monitoring Control module (TMC)
F65	5A	Media player/Multi media module and display/Audio amplifier
F66	10A	Centre console module/Infotainment control module
F67		
F68		
F69	5A	BFB-R5
F70		
F71		
F72		
F73		
F74	15A	Fuel pump
F75		
F76		
F77	15A	Boot power socket
F78		
F79	5A	Reversing lamps/Module - Parking aid
F80	5A	Battery ‘Off’ switch
F81	20A	Ignition switch
F82	25A	Passenger door module
F83	25A	Driver door module
F84	25A	Passenger seat power/Passenger seat switchpack
F85	25A	Driver seat power/Driver seat switchpack
F86	5A	Start button, Driver and passenger seats

Boot Fusebox

Fuse/ Relay	Rating	Function
F1	5A	Spare
F2	20A	Spare
F3	30A	Heated rear window
F4	20A	Spare
F5	30A	Spare
F6	20A	Spare
F7	5A	Battery disconnect switch (BDS) power
F8	20A	Spare
F9	20A	Tracker
F10	30A	Spare
F11	20A	Spare
F12	20A	Spare
F13	10A	Spare
F14	5A	Rear parking assistance module (optional)
F15	5A	Spare
F16	30A	Spare
F17	5A	Spare
F18	30A	Audio amplifier
F19	5A	Spare
F20	10A	Canister vent
F21	30A	Spare
F22	20A	Exhaust by-pass and vacuum pump

How to Read the Circuits

Below is a simple guide to what symbols mean on the circuit diagrams. For some of the symbols there are descriptions as to how they function.

Wires

Wire numbers have been deleted from the original engineering circuits. This allows the type size to be increased for improved legibility of the service circuits.

Wires vary in size to allow different current to be carried. For example a wire with a diameter of 0.50mm (This is the diameter of all the internal copper strands together) will carry 11A (dependant on ambient temperature) whilst a wire with a diameter of 2.00mm will carry 25A.

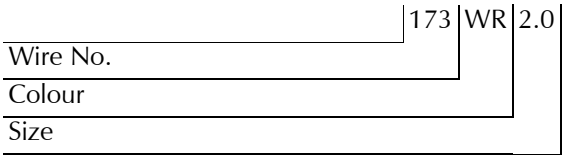

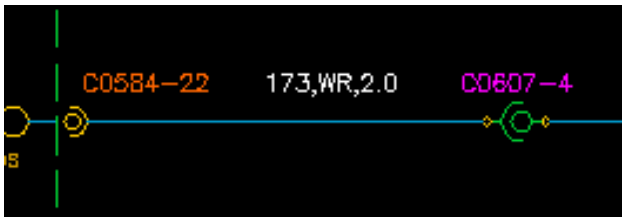

Twisted Wires

The 'figure of 8' shown on circuits as below denotes a twisted wire and shows the wires that are twisted together. A wire generates a certain amount of 'electrical noise' when a current is passed through it. By twisting the 2 wires together the 'electrical noise' is cancelled out on each wire by the opposing wire. This is used more on sensors and audio speakers.

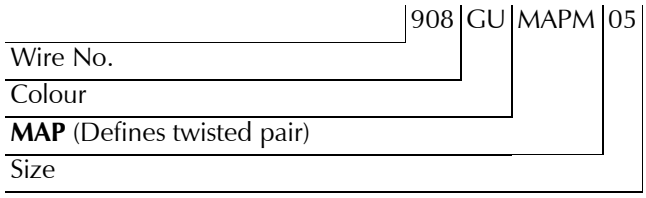

Screened and Twisted Screen Wires

The signals through a wire can be affected by externally generated electrical noise. To reduce the external interference the wires are placed inside a conductive sleeve. One end of the conductive sleeve is always open whilst the other end can be terminated to a ground, to a component, or left open.

The symbol for the screen is an oval with the wires that are to be screened inside it. The letters 'SCR' define the screen.

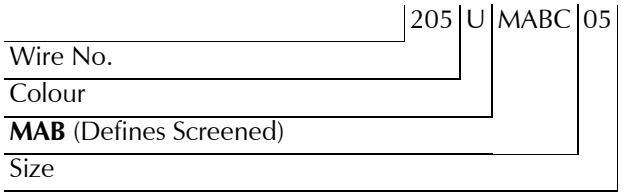

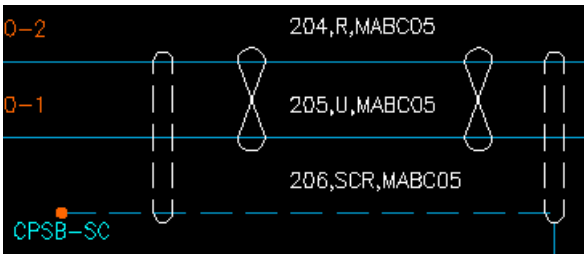

Controller Area Network (CAN)

Controller Area Network (CAN) is the wiring between intelligent modules of the vehicle. This wiring carries the electronic data around the vehicle allowing the various modules and components to interrogate the network and read their specific data signals.

There are 2 different speeds of network.

Low speed - Transmits at 125,000 bits per second. Mainly for body controller systems such as seats and doors

High speed - Transmits at 500,000 bits per second. Mainly for engine management and powertrain associated systems such as ABS.

All wiring in the CAN is twisted. The twisted wires always consist of one wire with a black trace in it for the negative side and one with a brown trace in it for the positive.

High Speed CAN wire

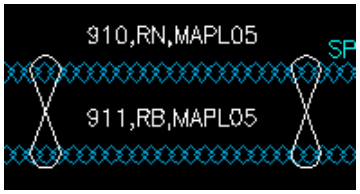

Low Speed CAN wire

The symbol below shows a module or a component connector with the pin numbers that have CAN wires coming from them.

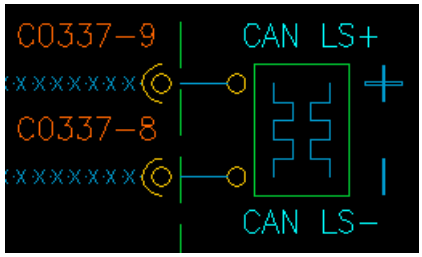

'CAN LS+' **-** Low speed CAN positive side

'CAN LS-' **-** Low speed CAN Negative Side

This naming convention also applies to the High Speed CAN network.

To aid identification of the different speed CAN's in the vehicle different colours of wire have been used, e.g. the Low Speed Volcano is GB twisted with GN, the High Speed Volcano is RB twisted with RN.

There is attached on a separate page a list for wire colour abbreviations and what colour they refer to.

Media Oriented System Transport (MOST)

A fibre optic carries out a similar function to that of a wire in that it transmits data signals. The differences being that where a wire is made up of copper strands in an insulated sleeve a fibre optic is a plastic tube with a highly polished reflective inside surface.

The fibre optic carries the data in the form of a pulse of light, which is sent via an infrared transmitter and picked up at the next component in the loop via an infrared receiver. The light pulse is then converted to an electrical signal that is used by that module or component.

The CAN sends signals around the vehicle where the modules or components remove their specific signals. The fibre optic is in a loop with the module components in that loop, one fibre goes in and one fibre goes out. This is shown below.

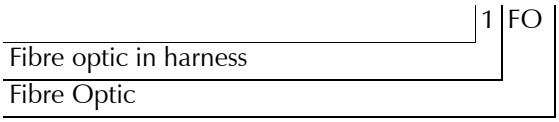

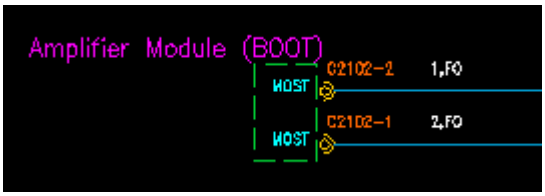

Connectors

There are 2 types of interconnect shown on the circuits. Each connector is given a dedicated 'C' number. The number after the dash is the pin number, also known as the cavity number. The example below is C0582 that when checked on the attached list refers to the CEM Connector Cockpit 2 (C3).

The 1st type is shown for a **connector** that is on a module or component with a mating harness connector attached to it.

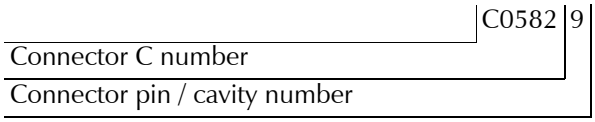

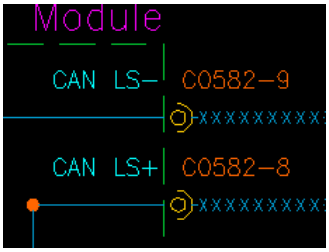

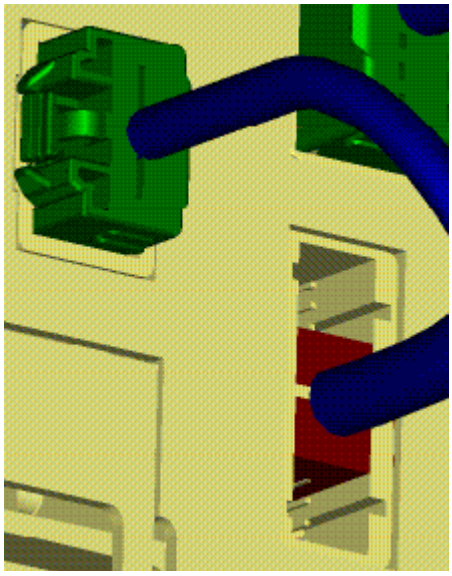

The 2nd type is shown for a connector on a harness with the mating connector on another harness. This is known as an **Inline**. Again the above naming convention applies.

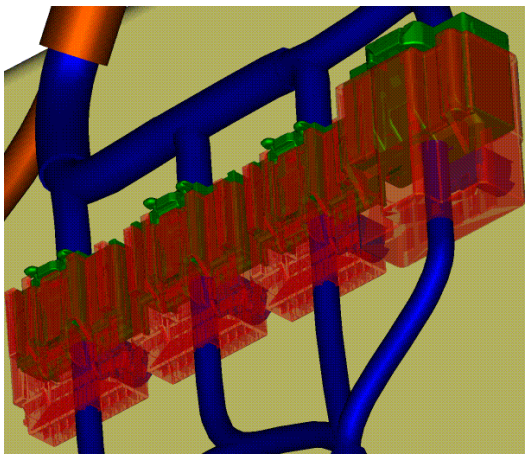

The terminals in a connector housing can have a special coating on them. This coating if required is selected using the following criteria.

- A specific coating requested by component / system owner.

Or

- The current passing through the terminal.
- The environment the connector is to be situated with respect to temperature.
- The open circuit voltage passing through the terminal at a given.

Depending on the above criteria the coating, if required, can either be gold, silver, phosphor bronze. Generally tin is the common plating on the terminals but there are some that are gold. These are identified in the circuits with the letter '**G**' which stands for gold after the connector number. An example of this is shown below.

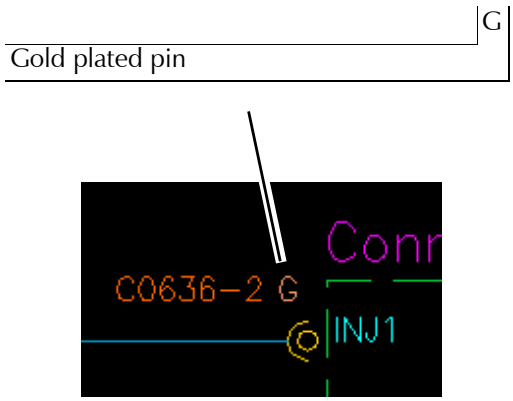

Splices

A splice is used where more than 2 wires that have the same requirement i.e. they need the same signal and meet in the same harness. In the example below the Front Position Lamp-LH and Front Side marker-LH require the same output signal from the CEM. Therefore the 2 wires for the lamps are spliced into the output wire from the CEM on the Forward Harness.

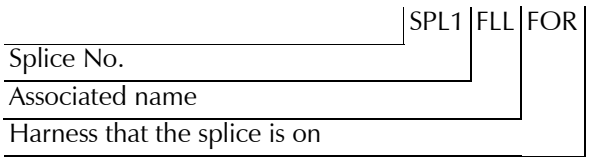

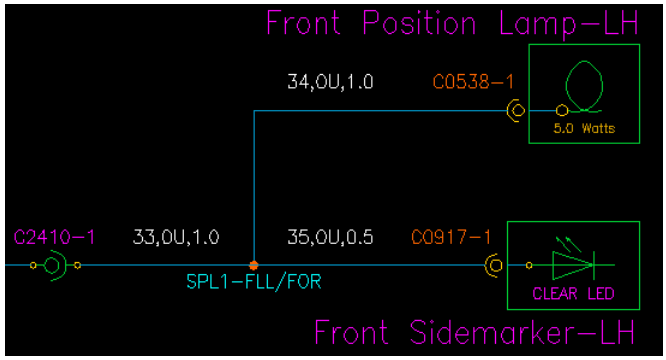

Tracing Spliced Wires

Some splices appear on pages as a wire that goes to one spot and seems to terminate in space. An example of this is shown below.

Splice Origin Page

(e.g.P9)

Other Page(s) on which the splice occurs.

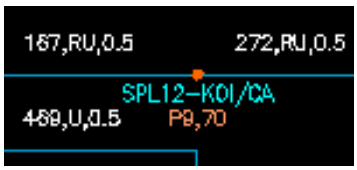

A separate page is attached containing a list of splice abbreviations and the harness to which they refer.

Relays

Another significant component in the circuits is a relay, this is in simple terms a switch that operates on the principal of electromagnetism. Below is the circuit symbol for a typical relay. The relay shown below is a normally open relay in its inoperative state i.e The arm is in the open position.

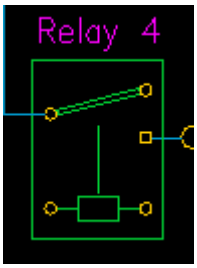

Relays can have either 4 or 5 terminals on the base. The circuit of the relay is shown on the base or the side of the housing. There are 2 types of numbering convention for the relay terminals, both of which are shown below.

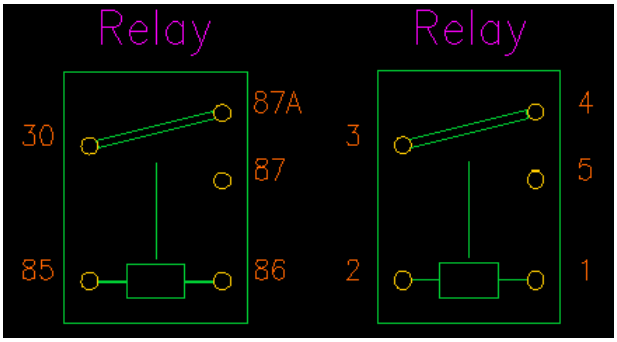

Below is a circuit diagram to show the function and operation of a relay in a simple circuit.

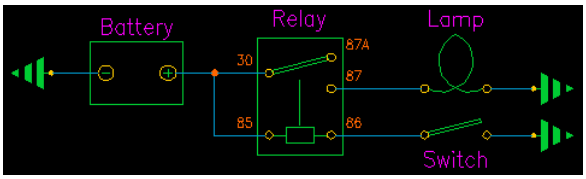

The current from a battery for example flows through the wires to the high power normally open switch (The arm between pins 30 & 87A) and the low power coil (The box between pins 85 & 86). As you can see in the example above the lamp is in not illuminated, because the switch is open.

For the relay to operate there needs to be current flow through the low power coil i.e Current in to the coil then through to an earth. The current passes through the relay coil and creates a magnetic field, this magnetic field is strong enough to 'grab' the high power normally open switch.

The magnetic field pulls the switch from it's normally open contact to a normally closed contact. The normally closed contact has a path to an earth, in this case it goes through a lamp.

The high power current then flows through the high power normally open switch through the lamp and then to an earth. This can be seen more clearly in the diagram below.Lamp Illuminates

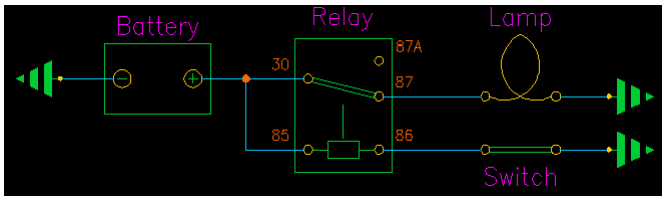

Busbars

A busbar is where a electrical supply is fed into a conductive bar, wire or pcb track and various modules or components 'tap' into this busbar to draw their required power. The Central Electronic Module has 4 of these busbars internally, each of which is supplied from an external power supply, that supply can be a battery feed, ignition feed or a switched supply.

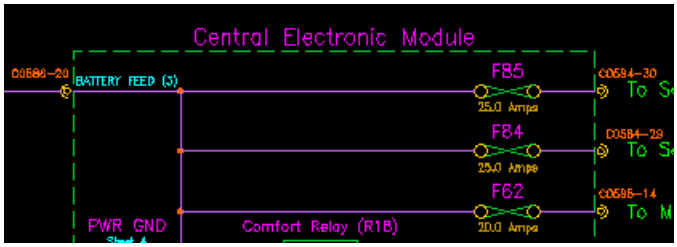

The symbol shown below is the symbol used on the circuits for a busbar, the number inside the box refers to the busbar number in the Central Electronic Module.

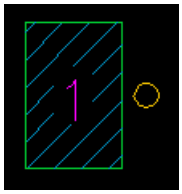

Fuses

A fuse is a device used to protect a module or component from excessive electrical current which can cause damage or destroy that module or component. In practice the fuse is placed in between the power source and the module or component that is being protected.

The size or 'Rating' of the fuse in amps is calculated according to the power requirements of the module or component it is protecting with other factors being taken into consideration. If the rating has been calculated correctly then the fuse will 'blow' when excessive current passes through it before any harm or permanent damage occurs to the module or component it is protecting.

In a correctly protected circuit, the fuse is placed '**Inline**' between the power source in this case the battery and the lamp. If the lamp goes 'short circuit', a massive current will begin to flow and the fuse will fail causing an open circuit. The battery and wiring are protected from over current damage.

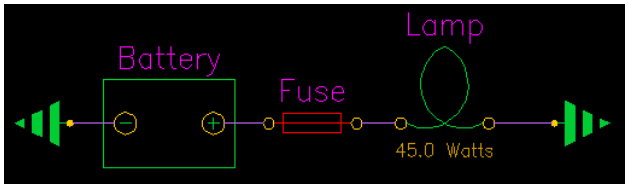

Below is the fuse symbol as shown on the circuit diagrams. The number above the fuse symbol is the fuse number; allocated to this fuse. The number below the fuse symbol is the rating.

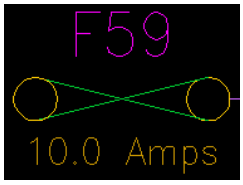

Resistors

A resistor is an electronic component that by way of its construction reduces the current flowing through it. A resistors unit of measure is the Ohm.

The diagrams below show a resistor and a variable resistor.

Variable Resistors

A variable resistor works in the same manner as a normal resistor but the resistance values can fluctuate. The construction of a variable resistor depends upon its use and environment.

One example is for the fuel tank level sensor. The tank full level is 10 ohms and the tank empty level is 204 ohms, the resistance will vary between 10 and 204 ohms depending on how much fuel is in the tank.

Lamps

Below is the symbol for a light bulb, shown below the symbol is the power of the bulb in watts.

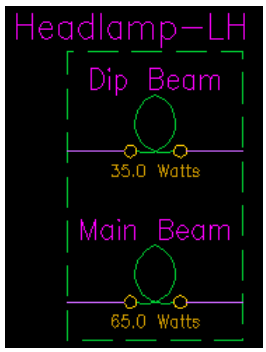

Switches

There are numerous of types of switch, several of examples are shown below.

Normally Open Switch

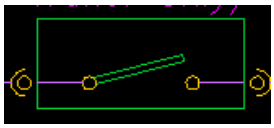

2 Position Switch

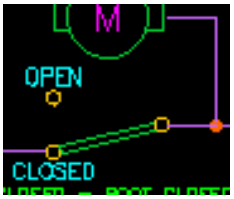

3 Position Switch

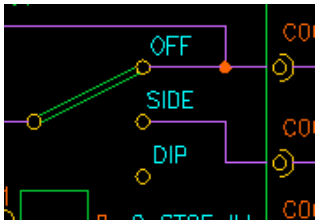

Motors and Pumps

The same symbol is used for a pump or a motor, the description differentiates between them.

Pump

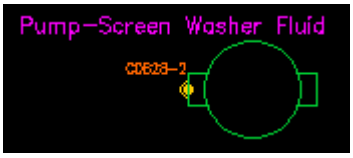

Motor

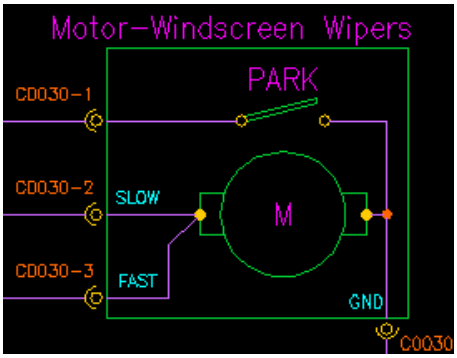

Diodes

The simplest way of describing a diode is 'a non return valve'. The current will flow through the diode from the anode to the cathode, due to the construction of it though current cannot come back. Diodes are used to reduce the possibilities of 'back feed'. This is where current comes through the circuit the wrong way for one reason or another. Below is the circuit symbol for a diode.

Anode

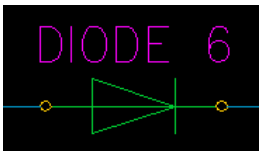

Cathode

Light Emitting Diode (LED)

The light emitting diode (LED) works on the same principal as the diode. The main difference is that in the manufacturing process one of the materials is replaced by another. This replacement material has certain properties that when a certain voltage passes through it glows.

Arrow Symbol indicating light emission

Anode

LED Colour

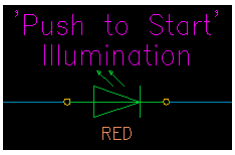

Cathode

Transistor

A transistor in simplistic terms is a switch with no moving parts. The 'switching' is controlled by electronics and currents etc. rather than a physical switch being operated. Below is the circuit symbol for it. The example shown below is one of the most common basic type used called a 'Bipolar'.

Field Effect Transistor (FET)

A field effect transistor (FET) is, in simplistic terms, a switch with no moving parts. The 'switching' is controlled by electronics and currents etc. rather than a physical switch being operated. The main difference between this and the type of transistor shown above is this one operates using a magnetic field.

Earth / Ground

For an electrical current to 'flow' around a circuit it has to start from a power source and go to an earth / ground. If there are any breaks in this circuit then current will not flow, this is called an 'Open circuit'

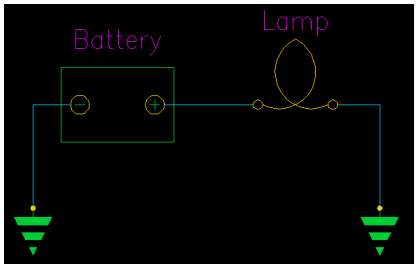

There are 2 types of earth, Signal Earth and Chassis Earth, these are referred to sometimes as a Quiet Earth and Noisy Earth respectively.

Some sensors for example specify a Signal / Quiet Earth. While components such as pumps and motors can have a Chassis / Noisy Earth. The reason behind this is that pumps, motors and the like can generate 'electrical noise' by the way of their operation. Some of this 'electrical noise can be transferred through wires, it is this 'electrical noise' that can have an adverse effect on sensor signals and affect the control readings.

Keeping Signal / Quiet and Chassis / Noisy earths separate reduces the effect of 'electrical noise' being transferred from component to component.

This symbol is a standard symbol for earths.

On the circuit diagrams some earths are shown as eyelets with the description of Earth-**** next to it, the earths also comply with the 4 digit C number. An example of this is shown below.

Maintenance

Forward Harness-Renew

Repair Operation Time (ROT)	
Item	**Code**
Forward Harness-Renew	**18.01.AA**

Removal

Warning
To prevent damage to electrical components, always disconnect the vehicle battery when working on the vehicle's electrical system. The earth lead (- ve) must be disconnected first and reconnected last.

1. Disconnect vehicle battery.
2. Remove LH headlamp (see Workshop Manual procedure 17.01.AB Headlamp Assembly - LH - Renew).
3. Remove RH headlamp (see Workshop Manual procedure 17.01.BB Headlamp Assembly - RH - Renew).
4. Release grommet from body, feed harness from inside of vehicle.
5. Disconnect multiplugs (x2) LH and RH side repeaters.
6. Disconnect multiplugs (x2) LH and RH pad wear indicators.
7. Disconnect multiplug (x2) LH and RH wheel speed sensors.
8. Disconnect multiplugs (x2) LH and RH air flow meters.
9. Disconnect multiplugs (x2) LH and RH headlamp bulb monitoring resistors.
10. Remove nuts (x6) securing LH and RH earth leads to body (x6).
11. Remove screws (x4) LH and RH harness plate to body and release harness from plate.
12. Remove screen washer reservoir (see Workshop Manual procedure 01.16.DA Reservoir and Motor Assembly - Windshield Wash - Renew).
13. Remove fusebox (see Workshop Manual procedure 18.01.KD Fuse Box - Engine Bay - Renew).
14. Disconnect multiplug (x1) purge valve.
15. Disconnect multiplug (x1) ABS modulator.
16. Disconnect multiplug (x1) load level sensor.
17. Disconnect multiplugs (x4) forward harness to cabin harness.
18. Remove wiper motor and linkage (see Workshop Manual procedure 01.16.BA Linkage Assembly - Wiper - Renew).
19. Remove cross member front latch mounting (see Workshop Manual procedure 01.14.BD Latch Assembly - Hood - Renew).
20. Remove nuts (x2) securing earth leads to body (x2).
21. Disconnect multiplug (x1) heated front windshield.
22. Disconnect multiplug PAS sensor.
23. Disconnect multiplugs (x2) A/C compressor.
24. Disconnect multiplug (x1) horn.
25. Release forward harness to engine harness multiplug (x1) from inner wing and disconnect multiplugs (x2).
26. Disconnect multiplug (x2) cooling fans.
27. Disconnect multiplug (x1) ambient air temperature sensor.
28. Disconnect multiplugs (X2) crash sensors.
29. Release harness clips (70) and remove harness.

Installation

1. Layout harness around engine bay, feed harness into cabin area and secure grommet.
2. Secure forward harness clips (x70) to body.
3. Connect multiplug (x2) LH and RH side repeaters.
4. Connect multiplug (x2) LH and RH pad wear indicators.
5. Connect multiplugs (X2) LH and RH wheel speed sensors.
6. Connect multiplugs (x2) LH and RH air flow meters.
7. Connect multiplugs (x2) LH and RH headlamp bulb monitoring resistors.
8. Position earth leads (x6), install and torque tighten nuts (x6).
9. Secure harness to plates (x2) and install plates to body.
10. Connect multiplug (x1) purge valve.
11. Install washer reservoir (see Workshop Manual procedure 01.16.DA Reservoir and Motor Assembly - Windshield Wash - Renew).
12. Install fuse box (see Workshop Manual procedure 18.01.KD Fuse Box - Engine Bay - Renew).
13. Connect multiplug (x1) ABS connector.
14. Connect multiplug (x1) load level sensor.
15. Disconnect multiplug (x4) forward harness to cabin harness.
16. Connect multiplug (x1) heated front screen.
17. Connect multiplug (x1) PAS sensor.
18. Connect multiplugs (x2) A/C.
19. Connect multiplug (x1) horn
20. Position earth leads (x2), install and torque tighten nuts (x2).
21. Secure forward harness multiplug (x1) to inner wing and connect multiplugs (x2).
22. Connect multiplug (x2) cooling fans.
23. Connect multiplug (x1) ambient air temperature sensor.
24. Connect multiplugs (X2) crash sensors.
25. Install cross member front latch mounting 01.14.BD Latch Assembly - Hood - Renew).
26. Install wiper motor and linkage (see Workshop Manual procedure 01.16.BA Linkage Assembly - Wiper - Renew).
27. Install LH headlamp (see Workshop Manual procedure 17.01.AB Headlamp Assembly - LH - Renew).
28. Install RH headlamp (see Workshop Manual procedure 17.01.BB Headlamp Assembly - RH - Renew).
29. Connect vehicle battery.

Header Latch Harness-Renew (Roadster Only)

Repair Operation Time (ROT)	
Item	**Code**
Header Latch Harness-Renew	**18.01.AB**

Removal

> ***Warning***
> ***To prevent damage to electrical components, always disconnect the vehicle battery when working on the vehicle's electrical system. The earth lead (- ve) must be disconnected first and reconnected last.***

1. Remove header assembly (see Workshop Manual procedure 01.05.BB Panel Assembly - Header - Renew).
2. Release insulation from header latch motor (see Fig. 1).

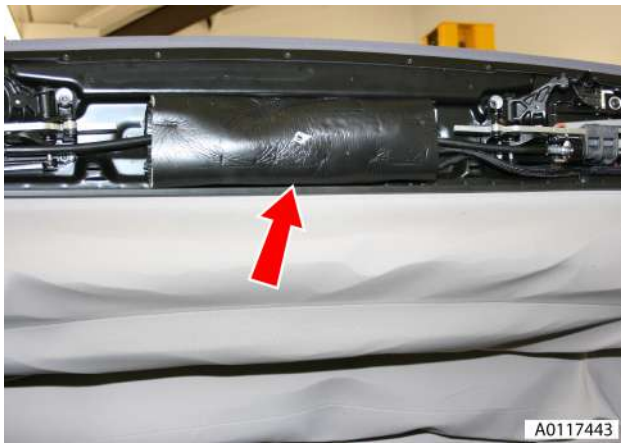

Fig. 1

3. Cut 2 cable ties securing wiring harness to motor mounting bracket (see Fig. 2).

Fig. 2

4. Disconnect 2 motor multiplugs.
5. Remove 3 P-clip screws securing harness to roof header, release clips from harness (see Fig. 3).

Fig. 3

6. Release 4 Velcro straps securing harness to tension strap (see Fig. 4).

Fig. 4

7. Remove 1 of the screws securing harness to roof frame.
8. Mark position of B-post trim.

9. Remove 2 screws securing B-post trim to roof frame, position trim aside (see Fig. 5).

Fig. 5

10. Remove 3 P-clip screws securing harness to inside of roof frame, release clips from harness (see Fig. 6).

Fig. 6

11. Lower the rear of the roof and secure.

12. Remove 3 screws securing harness cover plate to roof frame and remove (see Fig. 7).

Fig. 7

13. Return the roof to halfway position and secure (see Fig. 8).

Fig. 8

14. Remove P-clip screw securing harness to roof mounting bracket, release clip from harness (see Fig. 9).

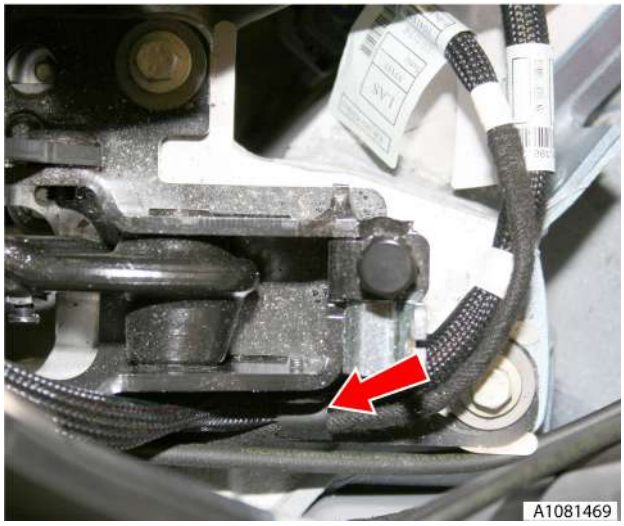

Fig. 9

15. Disconnect header latch harness multiplug (see Fig. 10).

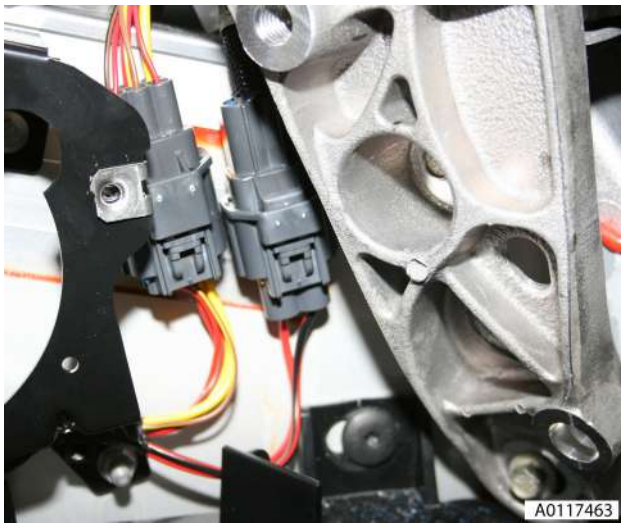

Fig. 10

16. Remove header latch harness.

Installation

1. Route header latch harness and connect to vehicle harness.
2. Attach P-clip to harness, secure to roof mounting bracket with screw.
3. Lower the rear of the roof and secure.
4. Route harness along roof frame, fit cover plate and secure with screws.
5. Return the roof to halfway position and secure.
6. Attach P-clips to harness, route inside roof frame and secure with screws.
7. Align B-post trim and secure to roof frame with screws.
8. Route harness under strap and secure to roof frame with screw.
9. Route harness along tension strap and secure with Velcro straps.
10. Attach P-clips to harness and secure to roof header with screws.
11. Connect motor multiplugs.
12. Secure wiring harness to motor mounting bracket with cable ties.
13. Secure insulation to header latch motor.
14. Install header assembly (see Workshop Manual procedure 01.05.BB Panel Assembly - Header - Renew).

Roof Cylinder Wiring Harness-Renew (Roadster Only)

Repair Operation Time (ROT)	
Item	**Code**
Roof Cylinder Wiring Harness-Renew	**18.01.AC**

Removal

1. Operate roof to halfway position with tonneau open. Support roof when hydraulic pressure drops with suitable straps and support tonneau cover with suitable prop (see Fig. 1).

Fig. 1

Warning
Approximately 20 seconds after the open/close operation has been interrupted the roof may suddenly drop due to loss of hydraulic pressure. If this happens ensure no body parts are close to the roof mechanism. If the roof requires maintenance, support properly using suitable props and straps.

2. Remove Quarter trim LH (see Workshop Manual procedure 01.05.CS Panel Assembly - Quarter Trim Lower - LH - Renew).
3. Remove Quarter trim RH (see Workshop Manual procedure 01.05.CR Panel Assembly - Quarter Trim Lower - RH - Renew).

4. Disconnect battery.
5. Cut cable ties securing pipes and wires to cylinder (see Fig. 2).

Fig. 2

6. Release clips securing hall effect sensors to cylinder, disconnect sensors and remove cylinder.
7. Release fir tree clip and cable tie securing pipes and harness to roof frame.
8. Attach string to cylinder end of both pipes to aid installation.
9. Feed pipes through to tonneau area by carefully guiding through roof mechanism and release string (see Fig. 3).

Fig. 3

10. Cut cable ties securing pipes and wires to cylinder (see Fig. 4).

Fig. 4

11. Release clips securing hall effect sensors to cylinder, disconnect sensors and remove cylinder.
12. Release fir tree clip and cable tie securing pipes and harness to roof frame.
13. Attach string to cylinder end of both pipes to aid installation.
14. Feed pipes through to tonneau area by carefully guiding through roof mechanism and release string (see Fig. 5).

Fig. 5

15. Remove lower cover RH (screw x1) (see Fig. 6).

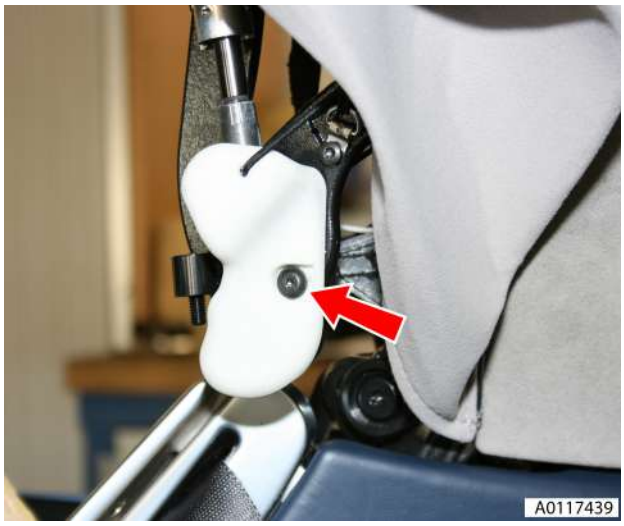

Fig. 6

16. Cut cable ties securing pipes and wires to cylinder (see Fig. 7).

Fig. 7

17. Release clips securing hall effect sensors to cylinder and disconnect sensors.

18. Remove cable ties securing pipes/harness to roof frame (see Fig. 8).

Fig. 8

19. Remove screws securing P-clips and strap to frame and release harness.
20. Remove screw of pipe/harness keeper plate, loosen other and release pipe.
21. Attach string to cylinder end of harness to aid installation.
22. Feed harness through to tonneau area by carefully guiding through roof mechanism and release string (see Fig. 9).

Fig. 9

23. Disconnect heated rear windscreen multiplug.

24. Disconnect multiplugs (x2) and feed into tonneau area (LH) (see Fig. 10).

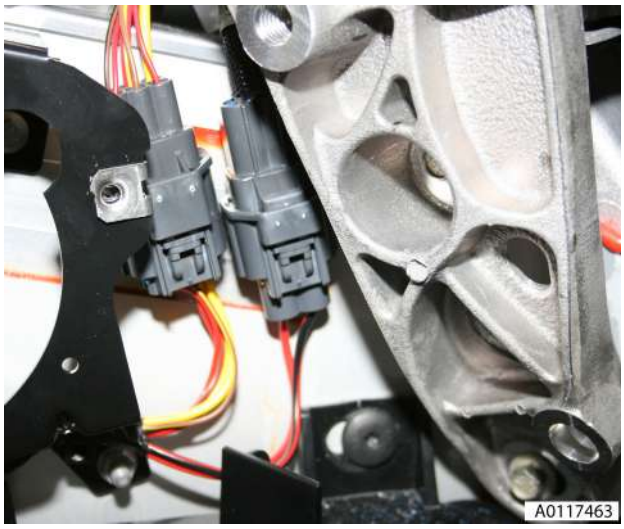

Fig. 10

25. Disconnect multiplug (RH).
26. Release multiplug from body and disconnect and feed through into tonneau area (RH) (see Fig. 11).

Fig. 11

27. Remove harness/pipe retaining clips (x2) (LH) (see Fig. 12).

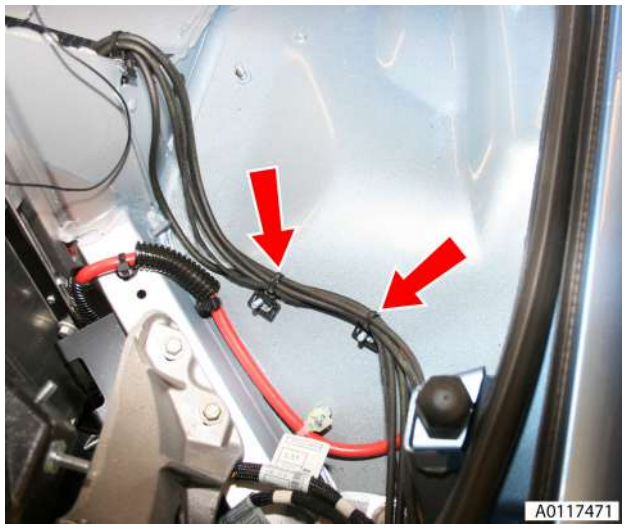

Fig. 12

28. Remove harness/pipe retaining clips (x9) behind Roll Over Protection System (ROPS) units (see Fig. 13).

Fig. 13

29. Remove harness/pipe retaining clips (x3) LH side (see Fig. 14).

Fig. 14

30. Cut cable tie securing valve to bracket (see Fig. 15).

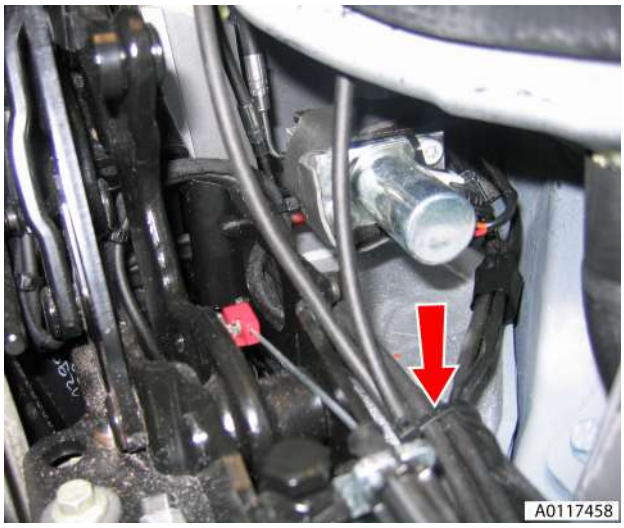

Fig. 15

31. Release valve from support bracket, the bracket may need bending slightly.

32. Disconnect multiplug (see Fig. 16).

Fig. 16

33. Cut cable ties securing pipes to cylinder.
34. Release clips securing hall effect sensors to cylinder, disconnect sensors and remove cylinder (see Fig. 17).

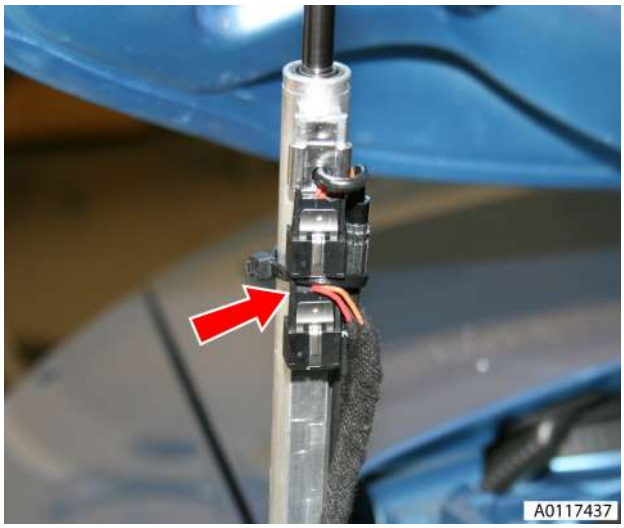

Fig. 17

35. Remove trim clip and release tonneau lining stiffening rod (see Fig. 18).

Fig. 18

36. Release velcro and move tonneau well liner aside to expose lower cylinder fixing and motor casing.
37. Release cylinder lower retaining clip and disconnect cylinder from body (see Fig. 19).

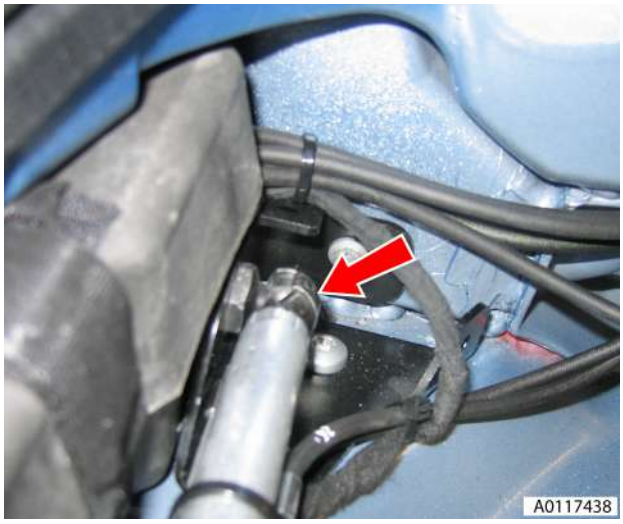

Fig. 19

38. Remove cylinder pivot bracket from body (bolts x3).
39. Release pump and casing from under tonneau body side (see Fig. 20).

Fig. 20

40. Release velcro around pump casing and remove casing (see Fig. 21).

Fig. 21

41. Remove harness/pipe cable ties (see Fig. 22).

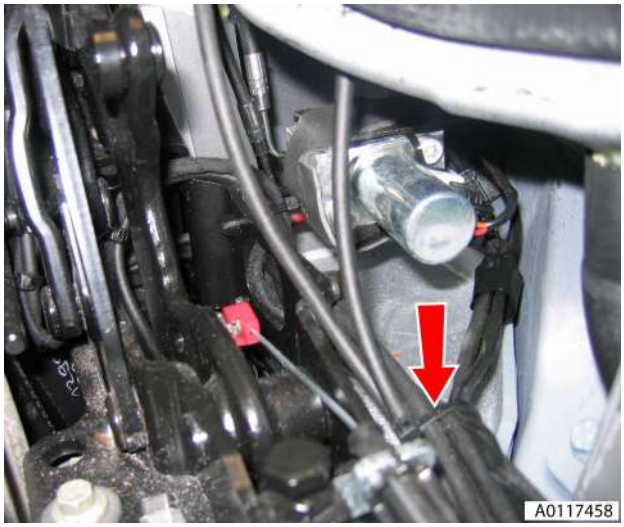

Fig. 22

42. Disconnect pump multiplug (see Fig. 23).

Fig. 23

43. Disconnect pump multiplug (see Fig. 24).

Fig. 24

44. Remove pump relays.
45. Remove end cover (locating tabs x2).
46. Disconnect pump lucar connectors (x2) (see Fig. 25).

Fig. 25

47. Remove harness from vehicle.

Installation

1. Install harness to approximate route on vehicle.
2. Connect pump lucar connectors.
3. Install pump end cover.
4. Connect pump multiplugs (x2).
5. Install pump relays (x2).
6. Install pump casing and secure velcro.
7. Install harness/pipe cable ties.
8. Install motor and casing under tonneau onto location posts.
9. Install cylinder pivot bracket and connect cylinder to bracket.

10. Move tonneau well liner around lower cylinder fixing and motor casing and secure velcro
11. Install trim clip and position tonneau lining stiffening rod.
12. Install Hall sensors and secure with clips.
13. Secure pipes/wires to cylinder with cable ties.
14. Connect multiplug.
15. Install valve to support bracket, reposition bracket.
16. Install cable tie securing valve to bracket. Ensure no pipes or wiring will foul roof mechanism.
17. Install harness/pipe retaining clips (x9) behind ROPS units.
18. Install harness/pipe retaining clips LH (x2).
19. Install harness/pipe retaining clips RH (x3).
20. Feed harness into passenger compartment and connect multiplugs (LH).
21. Feed harness into passenger compartment, connect multiplugs and secure to body (RH).
22. Connect multiplug (RH).
23. Connect HRW multiplug.
24. Attach pipes to guide string, feed harness through roof frame and remove string.
25. Position Hall sensors to cylinder and secure with clips.
26. Secure pipes and wires to cylinder with cable ties
27. Install p-clips and strap to harness and secure to frame with screws.
28. Install harness under keeper plate, install and tighten screws
29. Install new clips securing pipes to roof frame.
30. Install lower cover.
31. Attach pipes to guide string, feed harness through roof frame and remove string.
32. Position Hall sensors to cylinder and secure with clips.
33. Secure pipes and wires to cylinder with cable tie.
34. Install new clips securing pipes to roof frame.
35. Attach pipes to guide string, feed harness through roof frame and remove string.
36. Position Hall sensors to cylinder and secure with clips.
37. Secure pipes and wires to cylinder with cable tie.
38. Install new clips securing pipes to roof frame.
39. Connect battery.
40. Install Quarter trim LH (see Workshop Manual procedure 01.05.CS Panel Assembly - Quarter Trim Lower - LH - Renew).
41. Install Quarter trim RH (see Workshop Manual procedure 01.05.CR Panel Assembly - Quarter Trim Lower - RH - Renew).
42. Restore roof and tonneau to original position

Transaxle Harness-Renew

Repair Operation Time (ROT)	
Item	**Code**
Transaxle Harness-Renew	**18.01.DL**

Removal

Warning
To prevent damage to electrical components, always disconnect the vehicle battery when working on the vehicle's electrical system. The earth lead (- ve) must be disconnected first and reconnected last.

1. Remove RH Wheel arch liner (see Workshop Manual procedure 01.02.HB Wheel Arch Liner - Rear - RH - Renew).
2. Remove rear undertray (see Workshop Manual procedure 01.02.PB Undertray - Rear - Renew).
3. Disconnect transaxle multiplug from body harness.
4. Release harness from RH wheel arch (clips x2).
5. Disconnect LH and RH pad wear sensor multiplug (X2).
6. Disconnect load level sensor multiplug.
7. Disconnect LH and RH ABS sensor multiplugs (x2)
8. Disconnect reverse light switch and release harness from transaxle (clips x2).
9. Release harness clips (x23) from subframe and toe control arms.

Installation

1. Secure harness clips (x23) to subframe and toe control arms.
2. Connect reverse light switch multiplug and secure harness clips (x2) to transaxle.
3. Connect ABS sensors
4. Connect load level sensor.
5. Connect pad wear sensor multiplugs.
6. Connect transaxle multiplug and secure harness to wheel arch.
7. Install rear undertray (see Workshop Manual procedure 01.02.PB Undertray - Rear - Renew).
8. Install RH rear wheel arch liner (see Workshop Manual procedure 01.02.HB Wheel Arch Liner - Rear - RH - Renew).

Warning
Always connect the battery earth (- ve) terminal last.

Engine Wiring Harness-Renew

Repair Operation Time (ROT)	
Item	**Code**
Engine Wiring Harness-Renew	**18.01.EA**

Removal

Warning
To prevent damage to electrical components, always disconnect the vehicle battery when working on the vehicle's electrical system. The earth lead (- ve) must be disconnected first and reconnected last.

1. Remove engine (see Workshop Manual procedure 03.00.AC Engine Assembly - Remove for access and refit).
2. Disconnect vacuum pipe and multiplug from EGR module (see Fig. 1).

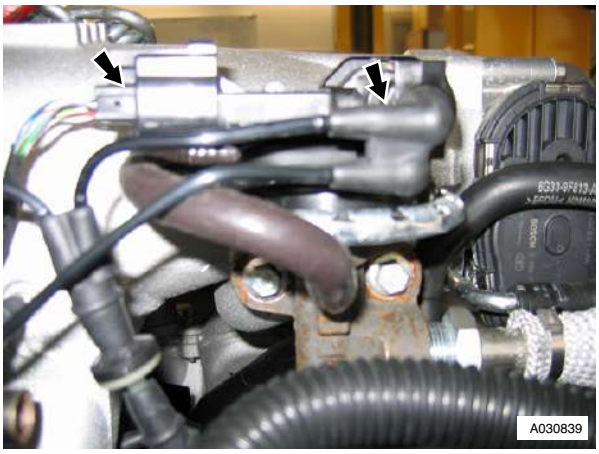

Fig. 1

3. Loosen and disconnect EGR pipe union (see Fig. 2).

Fig. 2

4. Remove bolts (x2) securing EGR module to inlet manifold, remove EGR valve, remove and discard gasket (see Fig. 3).

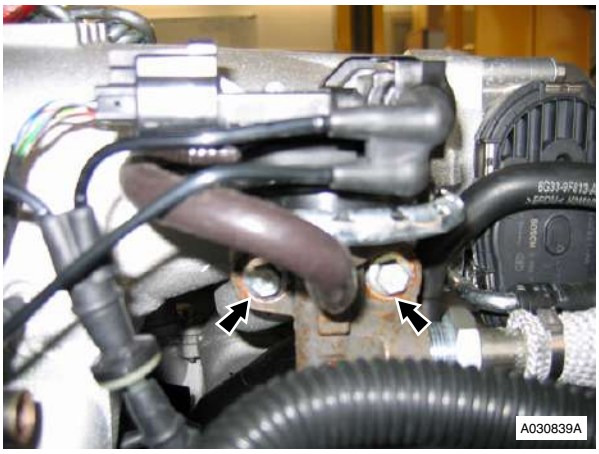

Fig. 3

5. Install engine lifting brackets, (303-749) to front of engine and (303-536) to rear of engine.
6. Connect suitable slings to engine lifting brackets.
7. Connect hoist to slings, raise hoist to take weight of engine.
8. Remove nuts (x2) securing engine hydramounts to subframe.
9. Raise hoist and remove engine from subframe.
10. Lower engine onto work bench, disconnect hoist from slings, move hoist aside.
11. Remove nuts (X8), LH exhaust manifold to cylinder head, remove manifold (see Fig. 4).

Fig. 4

12. Remove nuts (x8) securing RH exhaust manifold to cylinder head, remove manifold (see Fig. 5).

Fig. 5

13. Remove coil covers (x2).
14. Disconnect multiplugs (x8) to ignition coils (see Fig. 6).

Fig. 6

15. Disconnect multiplug to VVT solenoids (x2).
16. Disconnect multiplugs (x8) to Injectors (see Fig. 7).

Fig. 7

17. Disconnect multiplug (x1) fuel rail pressure sensor (see Fig. 8).

Fig. 8

18. Remove bolt (x1) purge valve pipe to RH support bracket.
19. Release engine harness from RH support bracket (clips x3).
20. Remove cam cover nut (x1) and bolts (x2) and remove RH support bracket.
21. Release heater hose from heater hose bracket.
22. Release vacuum pipe from heater hose bracket clips (x2).
23. Release harness from heater hose bracket clips (x3).
24. Remove cam covers nuts (x2) and release RH heater hose bracket.
25. Disconnect multiplug (x1) alternator (see Fig. 9).

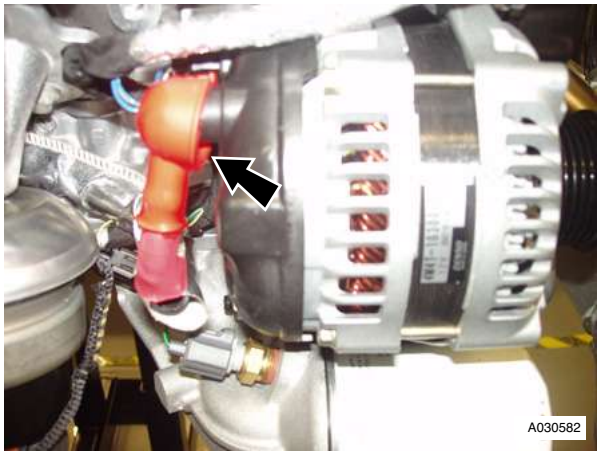

Fig. 9

26. Disconnect multiplugs (x2) oil pressure and temperature switches (see Fig. 10).

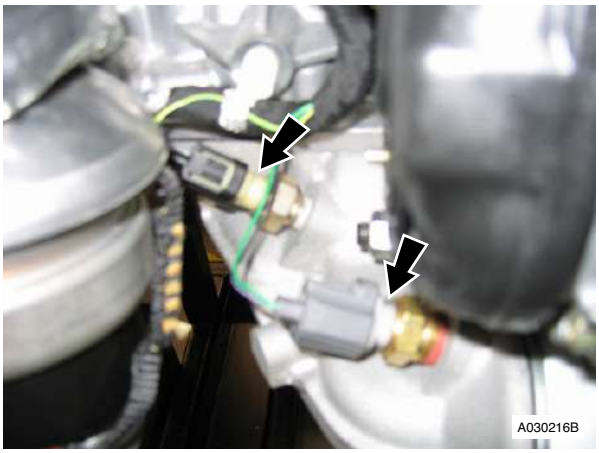

Fig. 10

27. Disconnect multiplug (x1) starter motor (see Fig. 11).

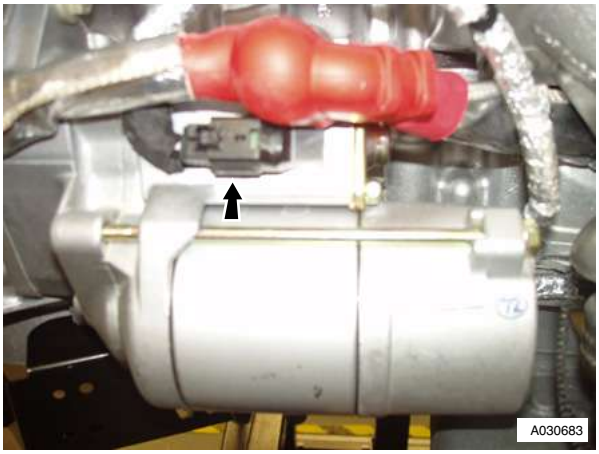

Fig. 11

28. Disconnect multiplug (x1) crankshaft sensor (see Fig. 12).

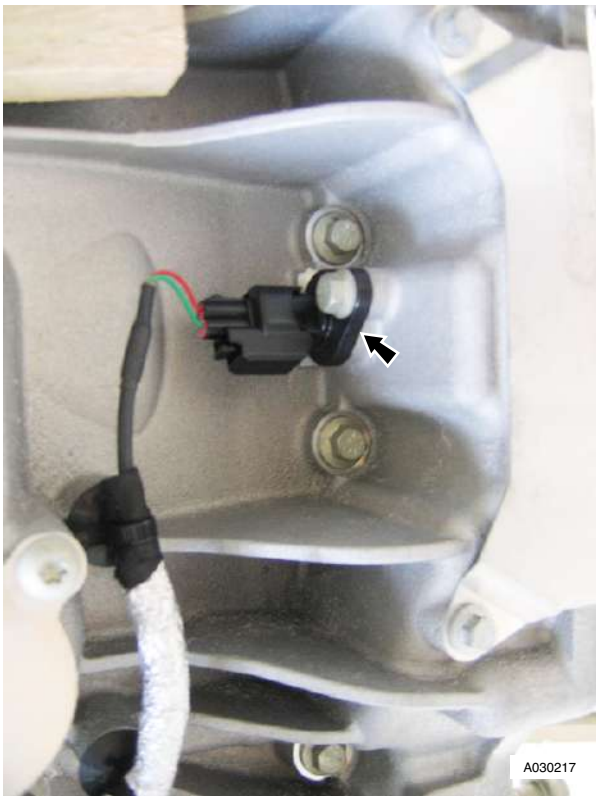

Fig. 12

29. Release HEGO engine harness connections (x4) from mounting brackets.
30. Release engine harness from clips (x10) and move harness aside.
31. Release VVT harness clip to cam cover.
32. Disconnect multiplug (x1) inlet air temperature sensor.
33. Disconnect multiplug (x1) throttle body.
34. Disconnect multiplug (x1) condenser.
35. Release engine harness from LH heater hose bracket.
36. Remove cam cover nut (x1) and bolts (x2) and remove LH support bracket.
37. Release servo hose from bracket clip.
38. Release heater hose from heater hose bracket.
39. Remove cam covers nuts (x2) and release heater hose bracket.
40. Disconnect breather hose from manifold.
41. Remove bolts (x10) inlet manifold.
42. Release engine harness from clips (x15) and move harness aside.
43. Disconnect multiplugs (x2) from CMP sensors.
44. Disconnect multiplug (x1) air control valve solenoid connection.

45. Disconnect multiplugs (x4) knock sensors (see Fig. 13).

Fig. 13

46. Disconnect multiplug (x1) secondary air pump.
47. Disconnect multiplug (x1) engine coolant temperature.
48. Disconnect earth lead.
49. Disconnect multiplugs (x2) suppressors
50. Remove bolts (x2) rear engine harness support bracket.
51. Cut cable ties (x7) harness to rear support bracket.
52. Release harness multiplugs (x4) from rear harness support bracket
53. Release and remove harness from remaining clip positions (x8).

Installation

1. Secure multiplugs (x4) and the harness with cable ties to rear support bracket.
2. Secure harness (x8) and install rear harness support bracket.
3. Connect multiplugs (x2) suppressors
4. Connect earth lead.
5. Connect multiplug (x1) engine coolant temperature.
6. Connect multiplug (x1) secondary air pump.
7. Connect multiplugs (x4) knock sensors.
8. Connect multiplug (x1) air control valve solenoid.
9. Connect multiplugs (x2) CMP sensors.
10. Position and secure engine harness in clips (x25)
11. Install inlet manifold
12. Install heater hose brackets (x2)
13. Secure engine harness to LH and RH heater hose brackets.
14. secure heater hose to heater hose brackets (x2).
15. Connect breather hose to manifold.
16. Secure servo hose.
17. Install LH and RH support brackets
18. Connect multiplug (x1) condenser.
19. Connect multiplug (x1) throttle body.
20. Connect multiplug (x1) inlet air temperature sensor.
21. Disconnect multiplug (8) to injectors.
22. Secure harness clip to ridge of cam covers (x2).
23. Connect multiplugs (x2) VVT solenoid.
24. Connect multiplugs (x8) to ignition coils.
25. Secure HEGO engine harness connections (x4) to mounting bracket.
26. Connect multiplug (x1) crankshaft sensor.
27. Connect multiplug (x1) starter motor.
28. Connect multiplugs (x2) oil pressure and temperature switches.
29. Connect multiplug (x1) alternator.
30. Secure vacuum pipe to heater hose bracket clips (x2).
31. install bolt (x1) purge valve pipe to RH support bracket.
32. Connect multiplug (x1) fuel rail pressure sensor.
33. Install coil covers.
34. Install LH and RH exhaust manifolds, install and torque tighten nuts (x16).
35. Install slings to engine lifting brackets, connect and raise hoist.
36. Lower engine onto subframe, align hydramounts, install and torque tighten nuts (x2).
37. Disconnect hoist from slings, move hoist aside.
38. Remove slings from engine.
39. Remove lifting brackets from engine, (303-749 and (303-536).
40. Clean EGR module, pipe union and mating faces.
41. Install new gasket, install EGR module, install and torque tighten bolts (x2)
42. Install EGR pipe, torque tighten union.
43. Connect multiplug and vacuum pipe to EGR module.
44. Install engine (see Workshop Manual procedure 03.00.AC Engine Assembly - Remove for access and refit).

Warning
Always connect the battery earth (- ve) terminal last.

Facia Harness-Renew

Repair Operation Time (ROT)	
Item	**Code**
Facia Harness-Renew	**18.01.FA**

Removal

Warning
To prevent damage to electrical components, always disconnect the vehicle battery when working on the vehicle's electrical system. The earth lead (- ve) must be disconnected first and reconnected last.

1. Remove IP assembly (see Workshop Manual procedure 01.12.AB Instrument Panel - Facia Assembly - Remove for access and refit).
2. Disconnect multiplugs (x6) from heater assembly.
3. Remove nuts (x2) and bolt (x1) heater assembly to facia.
4. Remove instrument panel bezel assembly (see Workshop Manual procedure 01.12.AV Bezel Assembly - Instrument Panel - Renew).

5. Remove screws (x4), securing centre stack assembly to IP.
6. Release centre stack assembly, disconnect multiplugs (x12).
7. Remove nuts (x3) securing blower assembly to instrument pack.
8. Disconnect multiplug and lucar connector to blower assembly.
9. Remove screws (x7), remove steering column shrouds.
10. Remove screw securing load spread plate to column. Collect column shrouds mounting bracket.
11. Release clips (x2), column switch harness to load spread plate.
12. Disconnect multiplugs (x3), steering column switches.
13. Disconnect multiplugs (x2) ignition switch assembly.
14. Remove DIP panel (see Workshop Manual procedure 13.01.AA Module - Driver Information - Renew).
15. Disconnect multiplug to RKE receiver.
16. Release facia harness to main harness multiplugs (x5) from IP bracket RH side.
17. Disconnect multiplug to glovebox latch motor.
18. Disconnect multiplug to passengers airbag on/off switch.
19. Disconnect multiplug to solar sensor.
20. Disconnect multiplug to centre speaker.
21. Disconnect multiplugs (x2) to footwell lamps.
22. Release diagnostic sockets (x2) from bracket.
23. Disconnect multiplug to CD player.
24. Disconnect multiplug to headlamp levelling unit.
25. Disconnect multiplug to PDC sounder.
26. Disconnect multiplugs (x2) to master lighting switch.
27. Disconnect multiplug to interior guard switch.
28. Disconnect multiplug to steering rotation sensor.
29. Release facia harness to main harness multiplugs (x6) from IP bracket LH side.
30. Release harness clips from instrument panel.
31. Remove harness assembly.

Installation

1. Position harness to IP and secure in clips (x21).
2. Install facia harness to main harness multiplugs (x6) to IP bracket LH side.
3. Connect multiplug (X1) to steering rotation sensor.
4. Connect multiplug (X1) to interior guard switch.
5. Connect multiplugs (x2) to master lighting switch.
6. Connect multiplug (x1) to PDC sounder.
7. Connect multiplug (x1) to headlamp levelling unit.
8. Connect multiplug (X1) to CD player.
9. install diagnostic sockets (x2) to bracket.
10. Connect multiplugs (x2) to footwell lamps.
11. Connect multiplug (X1) to centre speaker.
12. Connect multiplug (X1) to solar sensor.
13. Connect multiplug to passengers airbag on/off switch.
14. Connect multiplug (X1) to glovebox latch motor.
15. Install facia harness to main harness multiplugs (x5) from IP bracket RH side.
16. Connect multiplug to RKE receiver.
17. Install DIP panel (see Workshop Manual procedure 13.01.AA Module - Driver Information - Renew).
18. Connect multiplugs (x2) ignition switch assembly.
19. Connect multiplugs (x3), steering column switches.
20. Secure column switch harness in clips (x2) to load spread plate.
21. Position column shroud brackets and Install screw securing load spread plate to column.
22. Install steering column shrouds, (screws x7).
23. Connect multiplug (X1) and lucar connector (X1) to blower assembly.
24. Position blower assembly to IP and install nuts (x3)
25. Position centre stack assembly and connect multiplugs (x12).
26. install screws (x4), securing centre stack assembly to IP.
27. Install instrument panel bezel assembly (see Workshop Manual procedure 01.12.AV Bezel Assembly - Instrument Panel - Renew).
28. Connect tube from 'In-car' temperature sensor and install heater assembly.
29. Connect multiplugs (x6) heater assembly.
30. Install IP assembly (see Workshop Manual procedure 01.12.AB Instrument Panel - Facia Assembly - Remove for Access and Refit).

Warning
Always connect the battery earth (- ve) terminal last.

Cabin Harness Assembly-Renew

Repair Operation Time (ROT)	
Item	**Code**
Cabin Harness Assembly-Renew	**18.01.GB**

Removal

Warning
To prevent damage to electrical components, always disconnect the vehicle battery when working on the vehicle's electrical system. The earth lead (- ve) must be disconnected first and reconnected last.

1. Disconnect vehicle battery.
2. Remove instrument panel (see Workshop Manual procedure 01.12.AB Instrument Panel - Facia Assembly - Remove for Access and Refit).
3. Remove front header panel (see Workshop Manual procedure 01.05.BB Panel Assembly - Header - Renew).
4. Remove central electronic module (see Workshop Manual procedure 18.01.LC Module - Central Electronic - Renew).
5. Remove RH rear wheel arch liner (see Workshop Manual procedure 01.02.JB Wheel Arch Liner - Rear - LH - Renew).
6. Remove screw securing LH and RH quarter trim middle section to rear bulkhead cover.

7. Release/remove LH and RH quarter trim middle panel, fir tree clips (x8)
8. Remove bolts (x4) and screw (x2) securing LH and RH upper quarter trim moulding to body.
9. Disconnect multiplug (x2) LH and RH speaker.
10. Remove nuts (x6) LH and RH speaker to trim moulding and remove speakers.
11. Feed seatbelt/s through trim moulding aperture and remove moulding.
12. Remove bolts (x4) seat belt bracket to body and position bracket aside.
13. Remove rear floor carpet.
14. Remove nut (x1) and bolt (x1) subwoofer to body.
15. Lift subwoofer assembly and disconnect multiplug (x1) and remove assembly
16. Remove power amplifier (see Workshop Manual procedure 15.01.AB Power Amplifier - Renew).
17. Remove tyre sealant bottle.
18. Remove mobility kit from storage rack
19. Slide fusebox rearwards and release from bracket.
20. Release terminal cover, remove nut (x1) main battery lead to fusebox.
21. Disconnect multiplugs (x2) and remove fusebox.
22. Remove nuts (x6), Star washers (x6), plain washers (x6) and rubber seals (x6) rear lamp assembly.
23. Disconnect multiplug (x2) and remove LH and RH rear lamp assembly.
24. Remove multi-media module - LH side of luggage compartment (see Workshop Manual procedure 19.07.BB Module - Multi Media - Renew).
25. Remove front floor carpet and A lower post trim panel. - check procedure on refit.
26. Remove bolts (x4) handbrake lever bracket to floor and position lever aside.
27. Remove bolts (x4) footrest bracket to body and floor.
28. Remove brake booster (see Workshop Manual procedure 06.07.AB Brake Booster - RHD - Renew).
29. Disconnect throttle pedal multiplugs (x2) (see Fig. 1).

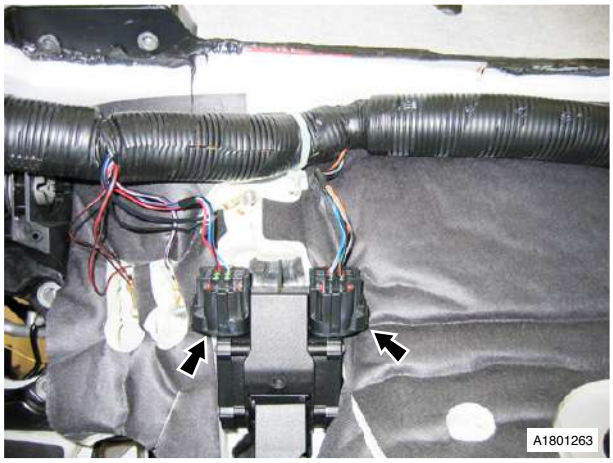

Fig. 1

30. Remove earth headers (x3) (see Fig. 2).

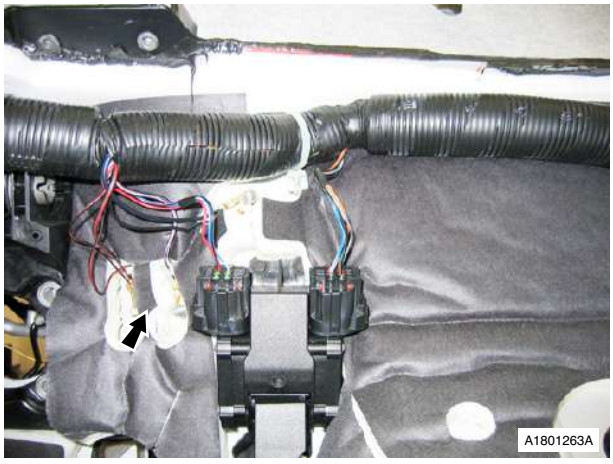

Fig. 2

31. Disconnect Stop light switch, Clutch UP switch and Clutch DOWN switch multiplugs Clipped to body x1) (see Fig. 3).

Fig. 3

32. Remove harness clips (x3) (see Fig. 4).

Fig. 4

33. Unclip multiplugs from sill (x2).
34. Release roof harness from clips (x4) and velcro (x2) (see Fig. 5).

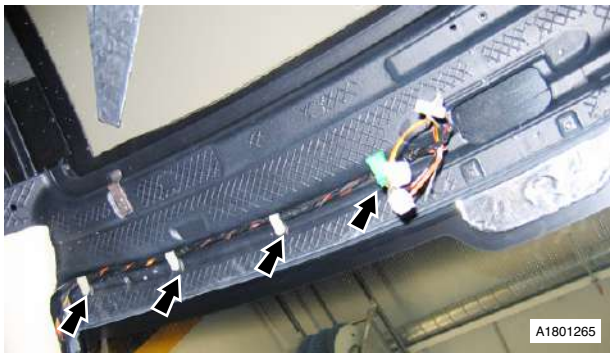

Fig. 5

35. Disconnect engine harness to main harness multiplugs (x4) (clipped to body) (see Fig. 6).

Fig. 6

36. Remove earth headers (x4) (see Fig. 7).

Fig. 7

37. Disconnect battery header (x1) (rubber boot) (see Fig.8).

Fig. 8

38. Release harness from clips (x3) (see Fig. 9).

Fig. 9

39. Release door harness boot and disconnect door harness to main harness multiplug.

40. Under vehicle
41. Disconnect petrol tank multiplug and release from body (see Fig. 10).

Fig. 10

42. Remove harness clips (x2) (see Fig. 11).

Fig. 11

43. Release grommet and push harness into passenger compartment.
44. Disconnect Fuel pump module, parking aid module (x2) and pre-tensioner multiplugs (clipped to body) (see Fig. 12).

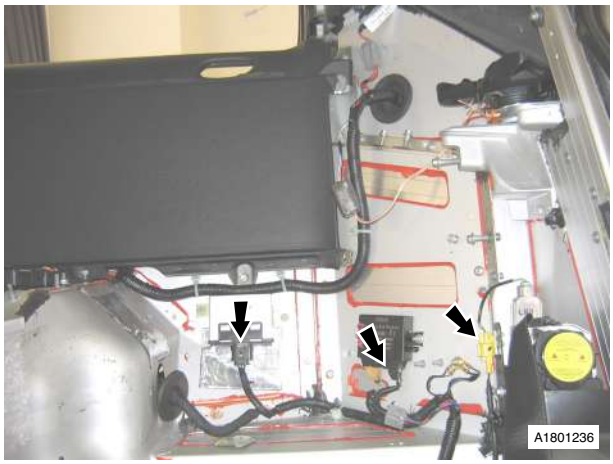

Fig. 12

45. Remove earth header (see Fig. 13).

Fig. 13

46. Disconnect crash sensor and parking brake multiplugs.
47. Remove clips (x13).

48. Disconnect crash sensor, battery disconnect unit and pre-tensioner multiplugs (clipped to body x2) (see Fig. 14).

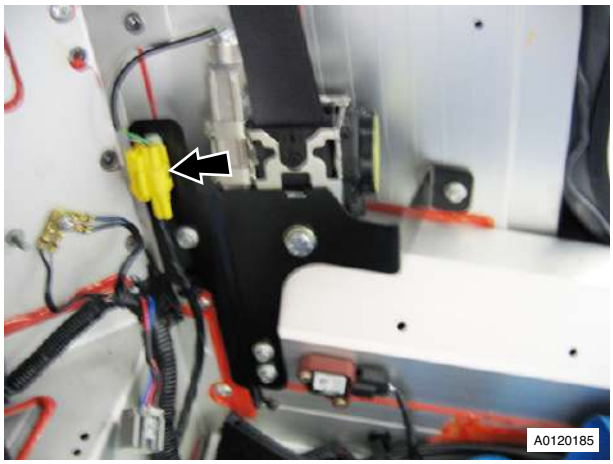

Fig. 14

49. Remove battery header (see Fig. 15).

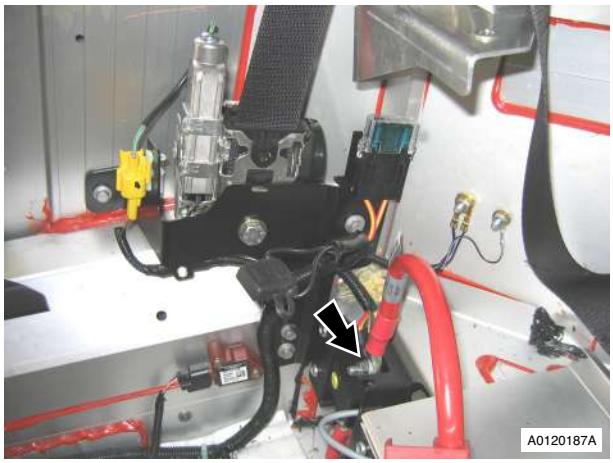

Fig. 15

50. Remove earth headers (x2) (see Fig. 16).

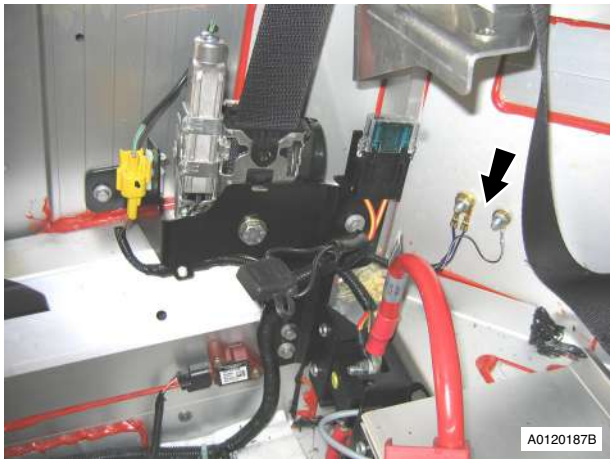

Fig. 16

51. Release in-line fuse from body (see Fig. 17).

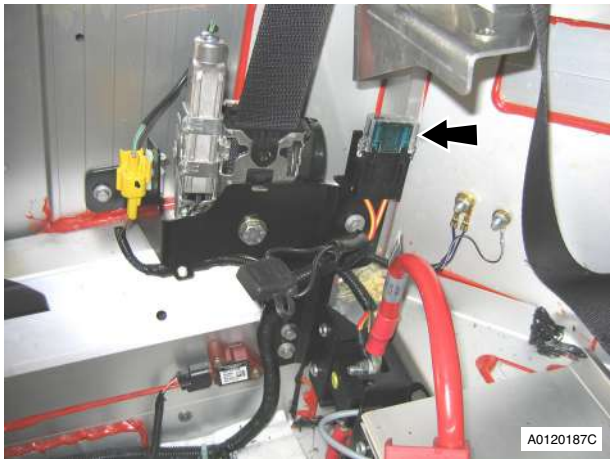

Fig. 17

52. Remove clips (x8).
53. Release harness from floor (bolts x4) and pull forward into footwell (see Fig. 18).

Fig. 18

54. Disconnect LH tailgate harness multiplug (clipped to body) (see Fig. 19).

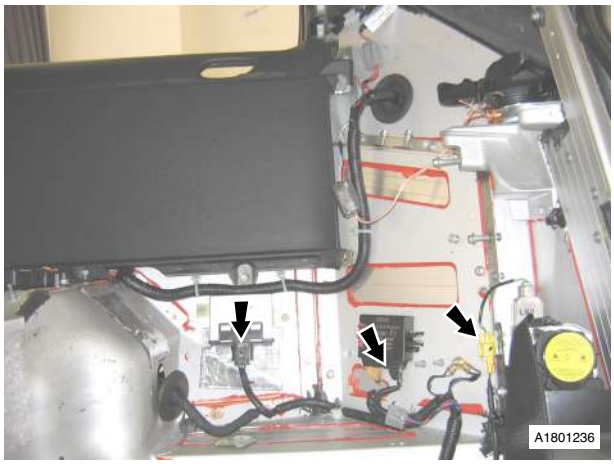

Fig. 19

55. Remove LH harness clips (x3) (see Fig. 20).

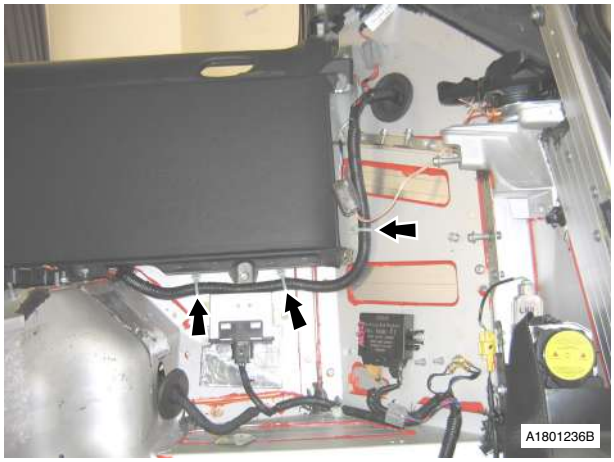

Fig. 20

56. Release LH grommet and feed harness from tailgate area (see Fig. 21).

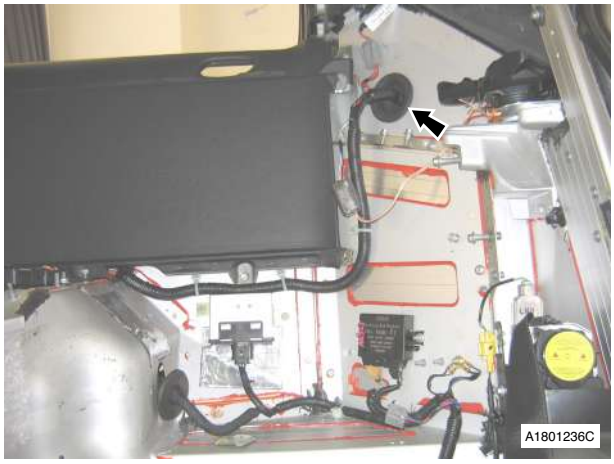

Fig. 21

57. Disconnect RH tailgate harness multiplug (clipped to body) (see Fig. 22).

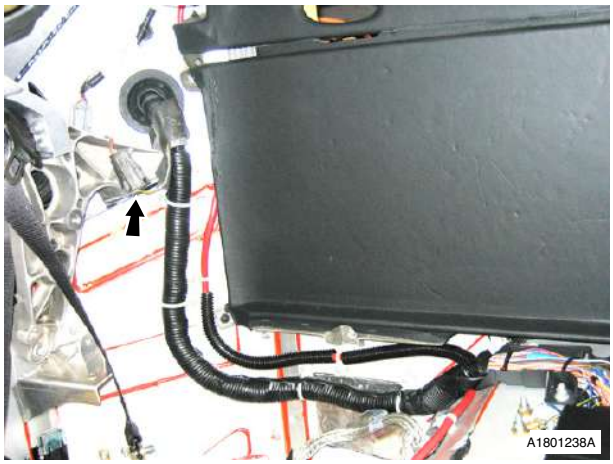

Fig. 22

58. Remove RH harness clips (x4) (see Fig. 23).

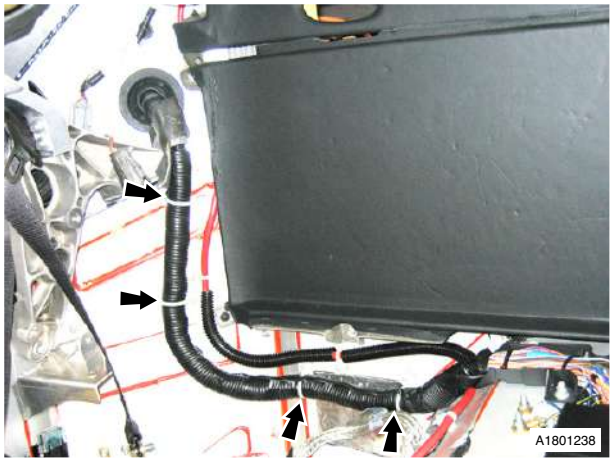

Fig. 23

59. Release RH grommet and feed harness from tailgate area.

60. Remove nuts (x7) harness to tunnel (see Fig. 24).

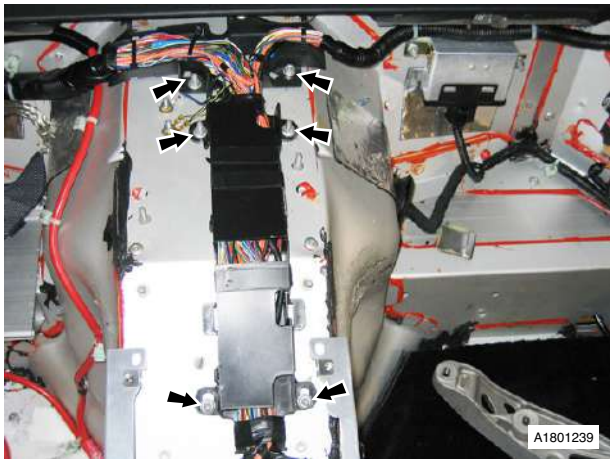

Fig. 24

61. Remove earth headers (x2) (see Fig. 25).

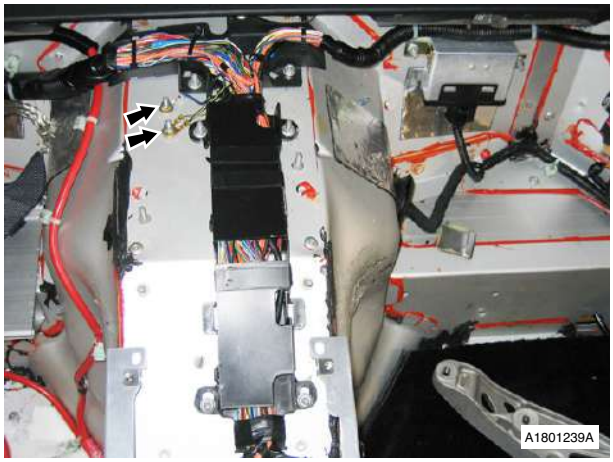

Fig. 25

62. Disconnect Airbag module (x2) multiplugs (see Fig. 26).

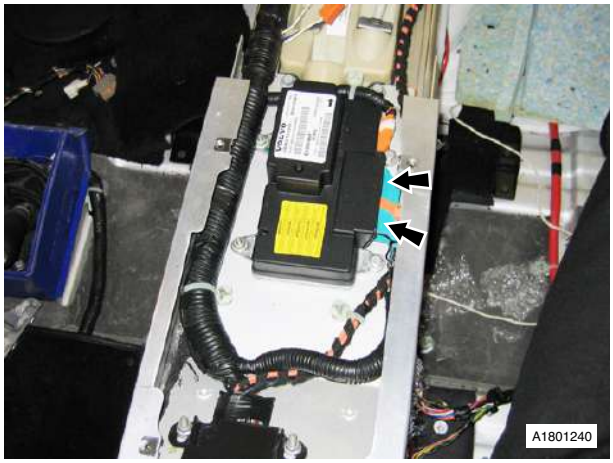

Fig. 26

63. Remove harness clips (x3) (see Fig. 27).

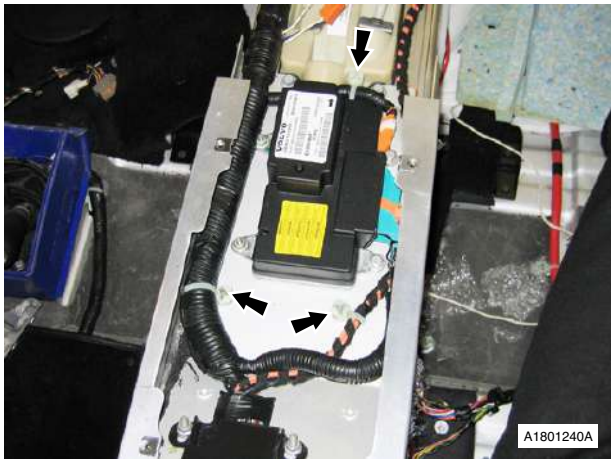

Fig. 27

64. Remove nuts (x3) harness to tunnel.
65. Remove earth headers (x2).
66. Disconnect Yaw sensor multiplug.
67. Remove earth headers (x2) (see Fig. 28).

Fig. 28

68. Remove nuts (x3) harness to front bulkhead (see Fig. 29).

Fig. 29

69. Remove harness clips (x4) (see Fig. 30).

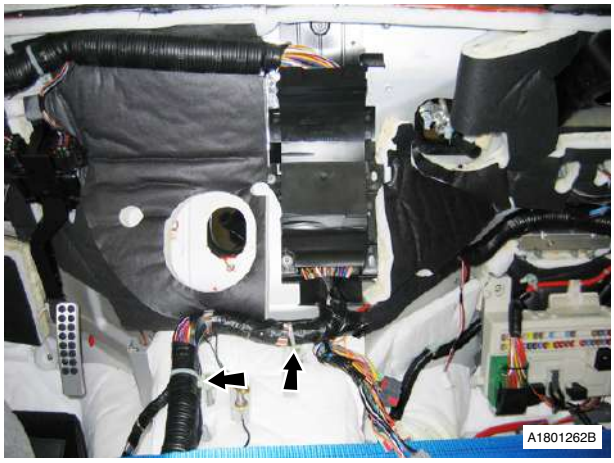

Fig. 30

70. Push rear light harness and grommet into vehicle.

71. Disconnect fuel filler flap release and interior light multiplugs (see Fig. 31).

Fig. 31

72. Remove harness clips (x7).
73. Disconnect Rear bumper harness (x2) and subframe harness multiplugs (clipped to body x1) (see Fig. 32).

Fig. 32

74. Remove bolts (x4) and earth strap for satellite navigation mounting plate access (tie aside) (see Fig. 33).

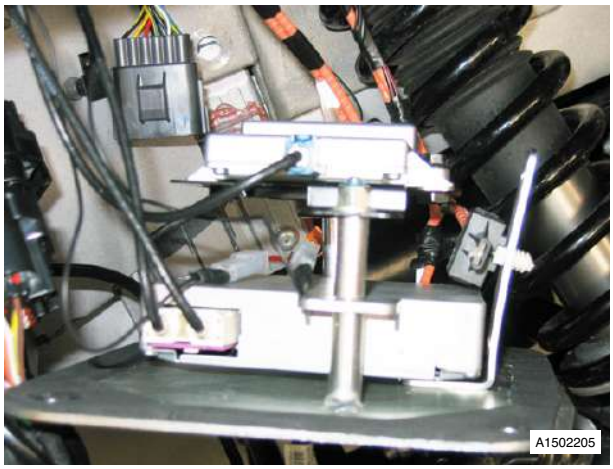

Fig. 33

75. Disconnect GPS (x2) and AM/FM tuner multiplugs.
76. Disconnect Lucar connectors (x2) from AM/FM tuner and unclip service loop and push harness into vehicle.
77. Push rear light harness and grommet into vehicle.
78. Remove harness clips (x4).
79. Remove wires from earth headers (x3).
80. Disconnect Interior light, accessory sockets (x2), battery disconnect switch, power plug and barometric sensor (clipped to body x4).
81. Release harness from body (x3).
82. Release grommet and pull harness from wheel arch area (see Fig. 34).

Fig. 34

83. Disconnect multiplugs forward harness to main harness (x3) (clipped to body x1) (see Fig. 35).

Fig. 35

84. Disconnect (bolted) multiplug forward harness to main harness (clipped to body).
85. Release grommet and feed harness from under bonnet through bulkhead into cabin.
86. Remove harness from vehicle.

Installation

1. Connect throttle pedal multiplugs (x2) (see Fig. 1).

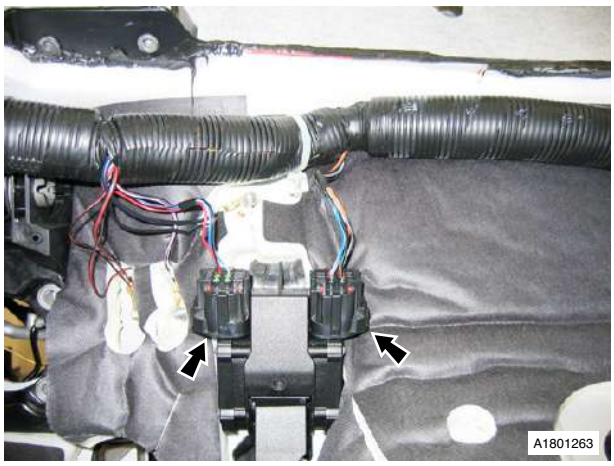

Fig. 1

2. Install earth headers (x3).
3. Connect Stop light switch, Clutch UP switch and Clutch DOWN switch multiplugs (x2) Clip to body (x1).
4. Install harness clips (x3).
5. Secure multiplugs to sill (x2).
6. Secure roof harness clips (x4) and velcro (x2) to body
7. Connect engine harness to main harness multiplugs (x4) (clip to body).
8. Install earth headers (x4).
9. Connect battery header (x1).
10. Secure harness from clips (x3).

11. Connect door harness to main harness multiplug and secure boot.
12. Connect Crash sensor and parking brake multiplugs.
13. Connect Fuel pump module, parking aid module (x2) and pre-tensioner multiplugs (clip to body).
14. Install earth header.
15. Install clips (x13).
16. Connect petrol tank multiplug and secure to body
17. Install harness clips (x2).
18. Pull harness from passenger compartment and secure grommet.
19. Connect crash sensor, battery disconnect switch and pre-tensioner multiplugs (clip to body x2).
20. Install battery header.
21. Install earth headers (x2).
22. Secure in-line fuse to body.
23. Secure harness to floor (bolts x4).
24. Install clips (x8).
25. Feed harness into tailgate area and secure grommet (LH).
26. Connect LH tailgate harness multiplug (clip to body).
27. Install LH harness clips (x3).
28. Connect RH tailgate harness multiplug (clipped to body).
29. Feed harness into tailgate area and secure grommet (RH).
30. Install RH harness clips (x4).
31. Install nuts (x7) harness to tunnel.
32. Install earth headers (x2).
33. Connect Airbag module (x2) multiplugs.
34. Install harness clips (x3).
35. Install nuts (x3) harness to tunnel.
36. Install earth headers (x2).
37. Connect Yaw sensor multiplug.
38. Install earth headers (x2).
39. Install nuts (x3) harness to front bulkhead.
40. Install harness clips (x4).
41. Connect fuel filler flap release and interior light multiplugs.
42. Push rear light harness through body and secure grommet.
43. Install new harness clips (x7).
44. Pull harness from interior, connect Lucar connectors (x2) to AM/FM tuner and clip service loop.
45. Connect GPS (x2) and AM/FM tuner multiplugs.
46. Install bolts (x4) and earth strap for Satellite Navigation mounting plate access.
47. Connect rear bumper harness (x2) and Subframe harness multiplugs (clipped to body x1).
48. Push harness into w/arch area and secure grommet.
49. Install wires to earth headers (x3).
50. Push rear light harness through body and fit grommet.
51. Secure harness to body (x3).
52. Connect Interior light, accessory sockets (x2), battery disconnect switch, power plug (clipped to body x4).
53. Install new harness clips (x4).
54. Feed harness from cabin through bulkhead into under bonnet area and secure grommet.
55. Connect multiplugs forward harness to main harness (x3) (clip to body).
56. Connect (bolted) multiplug forward harness to main harness (clip to body).
57. Install brake booster (see Workshop Manual procedure 06.07.AB Brake Booster - RHD - Renew
58. Install footrest (bolts x4).
59. Install handbrake lever (bolts x4).
60. Install front floor carpet and a post trim panel.
61. Install multimedia module (see Workshop Manual procedure 19.07.BB Module - Multi Media - Renew).
62. Position LH and RH rear lamp assemblies and connect multiplugs (x2).
63. Install rubber seals (x3), plain washers (x3), and star washers (x3). Install and tighten nuts (x3).
64. Position fusebox, connect main battery feed, install and torque tighten nut, install terminal cover.
65. Connect multiplugs (x2) and install fusebox in mounting bracket.
66. Install mobility kit.
67. Install tyre sealant bottle.
68. Install power amplifier (see Workshop Manual procedure 15.01.AB Power Amplifier - Renew).
69. Fit rear floor carpet - check procedure
70. Connect multiplug (x1) subwoofer.
71. Install subwoofer (nut x1 and bolt x1).
72. Install seat belt bracket (bolts x4).
73. Install speaker to LH and RH trim moulding (nuts x6).
74. Connect multiplug (x2) LH and RH speaker
75. Feed seatbelt/s through quarter trim moulding.
76. Install quarter trim moulding (bolts x2 and screw x1).
77. Install RH and LH quarter trim middle panel, secure with clips, Install and tighten screw.
78. Install RH rear wheel arch liner (see Workshop Manual procedure 01.02.JB Wheel Arch Liner - Rear - RH - Renew).
79. Install central electronic module (see Workshop Manual procedure 18.01.LC Module - Central Electronic - Renew).
80. Install instrument panel (see Workshop Manual procedure 01.12.AB Instrument Panel - Facia Assembly - Remove for Access and Refit).
81. Install front header panel (see Workshop Manual procedure 01.05.BB Panel Assembly - Header - Renew).
82. Connect vehicle battery.

Passenger Door Harness-Renew

Repair Operation Time (ROT)	
Item	**Code**
Passenger Door Harness-Renew	18.01.GD

Removal

Warning
To prevent damage to electrical components, always disconnect the vehicle battery when working on the vehicle's electrical system. The earth lead (- ve) must be disconnected first and reconnected last.

1. Remove LH door glass regulator (see Workshop Manual procedure 01.11.DB Regulator - Door Glass - LH - Renew).
2. Remove bolts (x4) door control module to door.
3. Disconnect multiplugs (x3) and remove door control module.
4. Remove bolts (x3) side impact mounting plate to door.
5. Disconnect multiplug to side impact sensor and remove plate.
6. Disconnect multiplug to door speaker.
7. Disconnect multiplug to door mirror.
8. Disconnect multiplug to door latch assembly.
9. Release harness from inner door casing clips (x10).
10. Release harness from outer door casing clips (x8).
11. Release harness grommets from door casing (x2).
12. Remove harness.

Installation

1. Position harness in door and install grommets (x2).
2. Secure harness in door casIng clips (x18).
3. Connect multiplug to door latch.
4. Connect multiplug to door mirror
5. Connect multiplug to door speaker.
6. Connect multiplug and install side impact mounting plate to door (x3).
7. Connect multiplugs (x3) and install door control module.
8. Install LH door glass regulator (see Workshop Manual procedure 01.11.DB Regulator - Door Glass - LH - Renew).

Warning
Always connect the battery earth (- ve) terminal last.

Driver's Door Harness-Renew

Repair Operation Time (ROT)	
Item	**Code**
Driver's Door Harness-Renew	18.01.GH

Removal

Warning
To prevent damage to electrical components, always disconnect the vehicle battery when working on the vehicle's electrical system. The earth lead (- ve) must be disconnected first and reconnected last.

1. Remove drivers door glass regulator (see Workshop Manual procedure 01.11.DA Regulator - Door Glass - RH - Renew).
2. Remove bolts (x4) drivers door control module to door.
3. Disconnect multiplugs (x3) and remove module.
4. Remove bolts (x3) plate to door.
5. Remove multiplug from side impact sensor and remove plate.
6. Disconnect multiplug to door speaker.
7. Disconnect multiplug to door mirror.
8. Disconnect multiplug to door latch assembly.
9. Release harness from inner door casing clips (x10).
10. Release harness from outer door casing clips (x8).
11. Release harness grommets from door casing (x2).
12. Remove harness.

Installation

1. Position harness in door and install grommets (x2).
2. Secure harness in door casing clips (x18).
3. Connect multiplug to door latch.
4. Connect multiplug to door mirror
5. Connect multiplug to door speaker.
6. Connect multiplug to side impact sensor and install plate assembly.
7. Connect multiplugs (x3) and install drivers door control module.
8. Install drivers door glass regulator (see Workshop Manual procedure 01.11.DA Regulator - Door Glass - RH - Renew).

Warning
Always connect the battery earth (- ve) terminal last.

Rear Bumper Harness-Renew

Repair Operation Time (ROT)	
Item	**Code**
Rear Bumper Harness-Renew	**18.01.HA**

Removal

Warning
To prevent damage to electrical components, always disconnect the vehicle battery when working on the vehicle's electrical system. The earth lead (- ve) must be disconnected first and reconnected last.

1. Remove rear bumper (see Workshop Manual procedure 01.19.BA Cover Assembly - Rear Bumper - Renew).
2. Disconnect harness multiplugs (x2) in RH wheel arch.
3. Disconnect multiplugs (x2), PDC sensors.
4. Disconnect multiplug from vacuum pump.
5. Disconnect multiplug from shift transfer retro control pdl rod.
6. Release clips (x8) securing harness to LH wheel arch.
7. Release clip securing harness to evaporative emission control module bracket.
8. Disconnect multiplug from evaporative emission control module.
9. Disconnect multiplug from siren control module.
10. Remove bumper harness.

Installation

1. Position bumper harness to body.
2. Secure harness clips (x8) in LH wheel arch.
3. Connect multiplug to evaporative emission control module.
4. Secure harness clip to evaporative emission control module bracket.
5. Connect multiplug to siren control module.
6. Connect multiplug to shift transfer retro control pdl rod.
7. Connect multiplug to vacuum pump.
8. Connect harness multiplugs in RH wheel arch.
9. Connect multiplugs (x2), PDC sensors.
10. Install rear bumper (see Workshop Manual procedure 01.19.BA Cover Assembly - Rear Bumper - Renew).

Warning
Always connect the battery earth (- ve) terminal last.

Transaxle Harness-Renew

Repair Operation Time (ROT)	
Item	**Code**
Transaxle Harness-Renew	**18.01.HB**

Removal

Warning
To prevent damage to electrical components, always disconnect the vehicle battery when working on the vehicle's electrical system. The earth lead (- ve) must be disconnected first and reconnected last.

1. Remove RH Wheel arch liner (see Workshop Manual procedure 01.02.HB Wheel Arch Liner - Rear - RH - Renew).
2. Remove rear undertray (see Workshop Manual procedure 01.02.PB Undertray - Rear - Renew).
3. Disconnect transaxle multiplug from body harness.
4. Release harness from RH wheel arch (clips x2).
5. Disconnect LH and RH pad wear sensor multiplug (X2).
6. Disconnect load level sensor multiplug.
7. Disconnect LH AND RH ABS sensor multiplugs (x2)
8. Disconnect reverse light switch and release harness from transaxle (clips x2).
9. Release harness clips (x23) from subframe and toe control arms.

Installation

1. Secure harness clips (x23) to subframe and toe control arms.
2. Connect reverse light switch multiplug and secure harness clips (x2) to transaxle.
3. Connect ABS sensors
4. Connect load level sensor.
5. Connect pad wear sensor multiplugs.
6. Connect transaxle multiplug and secure harness to wheel arch.
7. Install rear undertray (see Workshop Manual procedure 01.02.PB Undertray - Rear - Renew).
8. Install RH rear wheel arch liner (see Workshop Manual procedure 01.02.HB Wheel Arch Liner - Rear - RH - Renew).

Warning
Always connect the battery earth (- ve) terminal last.

Axle Transmission Harness-Renew-Sportshift Only

Repair Operation Time (ROT)	
Item	**Code**
Axle Transmission Harness-Renew	**18.01.HD**

Removal

1. Disconnect vehicle battery.

> ***Warning***
> ***Always disconnect the battery earth (- ve) terminal first.***

2. Raise vehicle on ramp.

> ***Warning***
> ***When raising the vehicle on a 'two post' ramp, ensure that the rear end of the vehicle is securely strapped to the ramp. Failure to strap the rear of the vehicle down may lead to the vehicle falling off the ramp.***

3. Remove torque tube (see Workshop Manual procedure 05.01.CA Torque Tube - Remove for Access & Refit).
4. Disconnect multiplug between propshaft speed sensor and transmission harness (see Fig. 1).

Fig. 1

5. Disconnect multiplug between clutch position sensor and transmission harness (see Fig. 2).

Fig. 2

6. Release clips (x4) securing clutch pipe to transmission harness.
7. Release clips (x5) securing transmission harness to torque tube.
8. Release clip securing transmission harness to clutch pipe bracket and remove harness (see Fig. 3).

Fig. 3

Installation

1. Secure transmission harness to clutch pipe bracket using clip.
2. Secure transmission harness to torque tube using clips.
3. Secure clutch pipe to transmission harness using clips.
4. Connect multiplug between clutch position sensor and transmission harness.
5. Connect multiplug between propshaft speed sensor and transmission harness.
6. Install torque tube (see Workshop Manual procedure 05.01.CA Torque Tube - Remove for Access & Refit).
7. Lower vehicle on ramp.
8. Connect vehicle battery.

> ***Warning***
> ***Always connect the battery earth (+ve) terminal first.***

Tailgate Harness-Renew

Repair Operation Time (ROT)	
Item	**Code**
Tailgate Harness-Renew	**18.01.JC**

Removal

> ***Warning***
> ***To prevent damage to electrical components, always disconnect the vehicle battery when working on the vehicle's electrical system. The earth lead (- ve) must be disconnected first and reconnected last.***

1. Battery isolator switch 'OFF'.
2. Remove trim - tailgate lid assembly (see Workshop Manual procedure 01.05.EF Trim - Tailgate Lid Assembly - Renew).
3. Disconnect multiplugs (x4), behind trim panel.
4. Disconnect Lucar connectors (x2), heated rear window.

5. Remove rear header panel assembly (see Workshop Manual procedure 01.05.BK Panel Assembly - Rear Header - Renew).
6. Disconnect multiplugs (x2), LH and RH side tailgate harness to main harness.
7. Release harness from clips (x4) LH side.
8. Disconnect blue multiplug behind RH side of rear header.
9. Release harness from clips (x5), RH side.
10. Disconnect lucar connectors (x4).
11. Release grommets from body and tailgate (x4).
12. Remove tailgate glass (see Workshop Manual procedure 01.11.BE Windshield - Rear - Renew).
13. Release clips (x17) securing harness to tailgate.
14. Manoeuvre and remove harness from tailgate.

Installation

1. Install harness in tailgate.
2. Secure harness clips (x17) in tailgate.
3. Install tailgate glass (see Workshop Manual procedure 01.11.BE Windshield - Rear - Renew).
4. Install grommets (x4), body and tailgate.
5. Connect Lucar connectors (x4).
6. Secure harness in clips (x5), RH side.
7. Connect multiplug (blue), RH side.
8. Secure harness with clips (x4), LH side.
9. Connect multiplugs (x2), tailgate harness to main harness RH and LH sides.
10. Install rear header panel assembly (see Workshop Manual procedure 01.05.BK Panel Assembly - Rear Header - Renew).
11. Connect Lucar connectors (x2), heated rear window.
12. Connect multiplugs (x4), tailgate rear.
13. Install trim - tailgate lid (see Workshop Manual procedure 01.05.EF Trim - Tailgate Lid Assembly - Renew).
14. Battery isolator switch 'ON'.

Warning
Always connect the battery earth (- ve) terminal last.

Electric Distribution/Electronic Control (18.00)

Vehicle Control System (18.08)

Module Configuration

Principles of Operation

All configurable modules are packaged in a kit which contains a warning label and a multi-language sheet re-emphasizing the requirements to configure replacement modules.

Replacement configurable modules must be configured using WDS.

Market Configuration

This data is required so that modules can interact with the vehicle correctly. By using WDS this data will be retrieved in the following ways:

- Indirectly from a mirrored image of the old modules data stored in an 'As is' database on DCS
- Indirectly from information stored in WDS

Configuration

The complexity of the electronics involved with module configuration and the multiplex communication network which they are connected to preclude the use of general workshop electrical test equipment.

WDS contains detailed instructions on module configuration.

Install the new module(s) and download the 'As is' data using the vehicle configuration software on WDS.

WDS will permanently retain the configuration information

Customer Configuration

There are certain modules / functions that the customer may or may not want reconfigured or enabled. Some of these preferences are accessed through the 'in-car' menus, available on the infotainment centre. Others are set in the vehicle configuration or specific software files, these items can be toggled or configured by WDS.

The 'As is' database (AML) holds customer original preferences. When a new module is installed to a previously upgraded or reconfigured vehicle these preferences can retrieved and re-applied as required through WDS

Data Buses

The primary data required for control and operation is carried on CAN data buses.

Two Can buses are used:

- High Speed CAN bus operates at 500 k bits / sec and is primarily used to transmit powertrain data
- The Powertrain (high speed) CAN bus operates at 500 k bits / sec and is only used to link the two PCMs
- Low Speed CAN bus operates at 125 k bits / sec and is used to transmit data relevant to the body system.

Network Bus

MOST

The MOST network bus is a fibre optical network used only for the Infotainment System

Module Locations

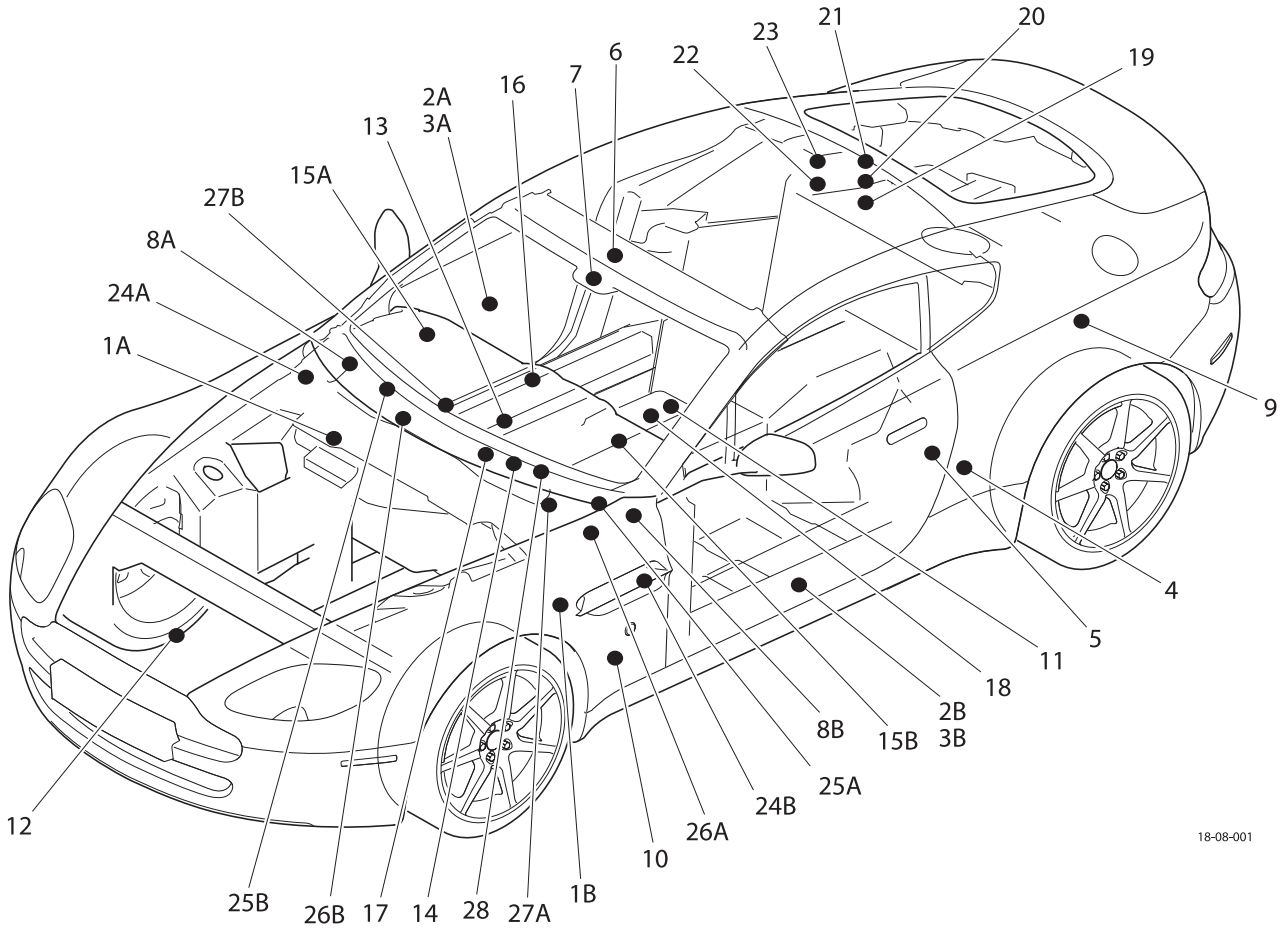

1A	Central Electronic Module (CEM) LHD	15B	Instrument Cluster Module LHD
1B	Central Electronic Module (CEM) RHD	16	Navigation Display Module RHD/LHD
2A	Driver's Door Module RHD	17	Yaw Rate Sensor Module RHD/LHD
2B	Driver's Door Module LHD	18	Restraint Module RHD/LHD
3A	Passenger Door Module LHD	19	AM/FM Tuner Module RHD/LHD
3B	Passenger Door Module RHD	20	Traffic Messaging Channel (TMC) Module RHD/LHD
4	Fuel Pump Module RHD/LHD	21	GPS Tuner Module RHD/LHD
5	Parking Aid Module RHD/LHD	22	Amplifier Module RHD/LHD
6	Remote Key Entry Module RHD/LHD	23	Amplifier Module RHD/LHD
7	Security Microwave RHD/LHD	24A	Powertrain Control Module (PCM) LHD
8A	Tyre Pressure Monitor Module LHD	24B	Powertrain Control Module (PCM) RHD
8B	Tyre Pressure Monitor Module RHD	25A	Telephone (GSM) Module LHD
9	Multi-media Module (MMM) RHD/LHD	25B	Telephone (GSM) Module RHD
10	ABS/Traction Control/Dynamic Stability Control (DSC) Module RHD/LHD	26A	Telephone (Bluetooth) Module LHD
11	Tracker Module RHD Only	26B	Telephone (Bluetooth) Module RHD
12	Fan Module RHD/LHD	27A	High Intensity Discharge (HID) Module LHD
13	HVAC Module RHD/LHD	27B	High Intensity Discharge (HID) Module RHD
14	Infotainment Control Module RHD/LHD	28	Centre Console Module (CCM)
15A	Instrument Cluster Module RHD		

Electronic Features (19.00)

Contents

Active Anti-Theft System (19.01) 19-1-2
Alarm System Overview 1-2
Component Descriptions 1-2
Functional Description 1-3
Overview – Alarm 1-3
General setting.....1-3
Door open.....1-3
Disable the Alarm 1-3
Reduced guard mode 1-3
Alarm Cycle 1-3
Panic Alarm 1-3
Remote Transmitter.....1-4
Key Learning Operations.....1-4
Integrated Passive Anti-Theft System (IPATS) 1-4
Description 1-4
Disarming IPATS 1-4
Arming IPATS.....1-4
IPATS LED 1-4
Key Programming.....1-5
Maintenance 1-5
Tracker-Renew 1-5
Mass Movement Sensor-Renew.....1-5
Pats Tranceiver ECU (Pre-08 MY Only)
- Remove and Install 1-5
Hood Latch Switch-Renew.....1-6
Alarm Siren Assembly - Remove and Install 1-6
Electronic Features Modules (19.05) 19-5-1
Maintenance 5-1
Electronic Passenger Door Module-Renew 5-1
Electronic Driver's Door Module-Renew 5-1

Electronic Features (19.00)

Active Anti-Theft System (19.01)

Alarm System Overview

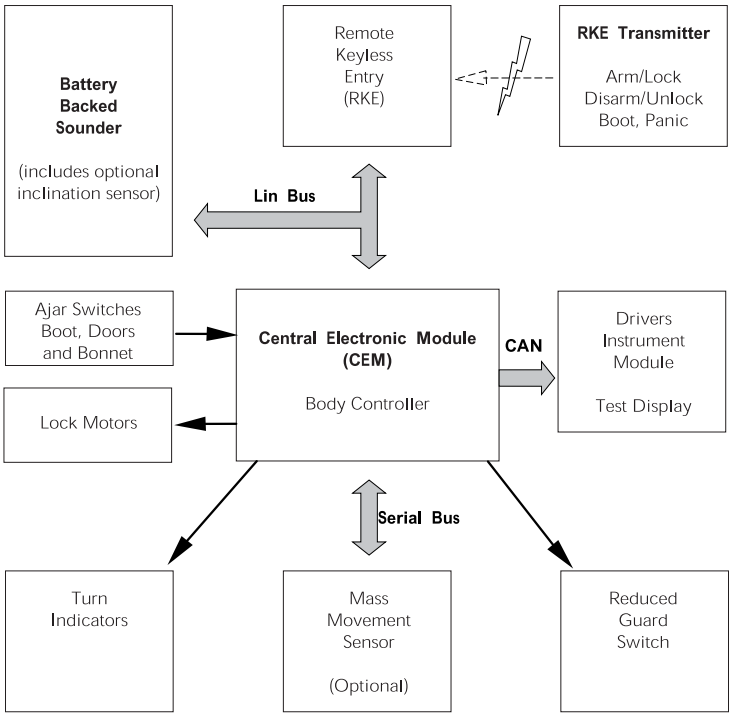

All alarm and central locking operations are controlled from within the Central Electronic Module (CEM).

Communications with the Mass Movement Sensor, the Instrument Module, the Remote Key Less Entry Function and the Battery Backed Sounder are via data buses.

Component Descriptions

Battery Backed Sounder

This device produces the audible out-put from the alarm system. The sounder can also house a tilt sensor to detect unauthorised vehicle movement.

Guard Reduction Switch

Used to disable the mass movement sensor, double locking and tilt sensor, so that people or animals can be left in the vehicle.

Mass Movement Sensor (optional)

Detects movement within the cabin of the car using microwaves. It is specifically designed to protect the ignition barrel and lock.

Central Electronics Module (CEM)

This module controls the vehicle alarm system. The CEM controls all alarm system inputs and outputs.

Driver Information Module (DIM)

Instrument Cluster

The message centre right provides text messages displaying alarm information to the user.

Ajar switches (perimeter sensors)

The car is equipped with ajar switches to sense unauthorised access to the following areas:

- Doors (Cabin area)
- Boot (Luggage compartment)
- Bonnet (Engine bay)

Remote Transmitter

Remote Key less Entry (RKE)

Controls the vehicle locking functionality (Refer to the vehicles Owner's Guide for operation).

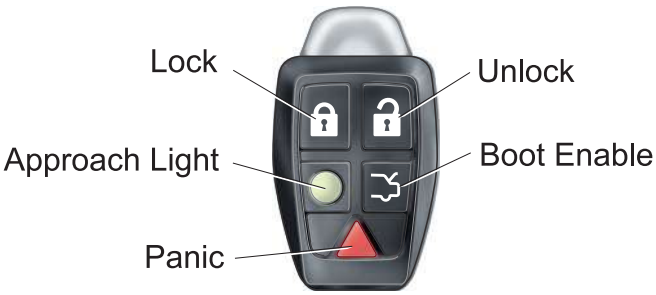

Functional Description

Overview – Alarm

The Vehicle Alarm System (VAS) will generate an audible and visual warning if the vehicle doors, bonnet or boot are opened without first disarming the system using an authorised remote transmitter key.

There are two types of alarm system:

- Standard
- High Specification (optional). Includes an interior movement sensor and tilt sensor

The interior movement sensor offers further protection of the ignition barrel and steering wheel lock, the tilt sensor will detect unauthorised angular movement of the vehicle.

A Battery Backup sounder (BBS) is used to protect the sounder from disconnection. The BBS will sound if any attempt is made to disconnect it from the rest of the alarm system when the vehicle is armed.

General setting

The system will be armed on the first press of the remote transmitter 'Lock' button. The alarm system will arm and deadlock 25 seconds after receiving the arm request.

Door open

If the alarm system is set when any door, bonnet or boot are left open, then the alarm will be armed on all closed doors only, 25 seconds after the alarm set command has been requested. The open door, bonnet or boot will not be armed. 5 seconds after the open door, bonnet or boot have been closed, the alarm will Arm on that door, bonnet or boot.

Disable the Alarm

The alarm will be disabled following the unlock or boot open commands from the remote transmitter key or by turning the ignition key in the ignition barrel.

Reduced guard mode

When the vehicle is in reduced guard mode the mass movement and tilt sensors are disabled. This allows people or animals to be left in the vehicle.

With doors, boot and bonnet closed, ignition key in position '0' or 'I' or within 60 sec after removing the keys the reduced guard button can be activated.

The ignition key must have been in position 'II' first.

When the alarm is set, the vehicle will enter reduced guard mode. To deactivate reduced guard mode simply insert and turn the ignition key to position 'II'.

If the alarm is deactivated and then activated without turning the ignition key to position 'II' first, then the reduced guard mode will remain active.

Alarm Cycle

When the alarm has been activated there will be two outputs, these are listed below:

Audible output device (Siren)

The audible alarm signal is generated by the battery backed sounder. Duration of one alarm cycle is 25 seconds. The maximum number of cycles is ten.

Visible output device DI's

The turn indicators are activated during and alarm cycle. The alarm signal is given by flashing all direction indicators for 5 minutes. Following an alarm cycle the vehicle alarm will remain set.

Panic Alarm

The Panic Alarm is to be used in emergency situations for attracting attention while in or outside the vehicle.

Activate Panic Alarm

The Panic Alarm can be activated using the Panic Alarm button on the remote transmitter, there are two ways to initiate the feature:

- Press the Panic Alarm button for a minimum time of 3 seconds.
- Press the Panic Alarm button twice, the second press must be made within 3 seconds from the first press.

Deactivate Panic Alarm

The panic alarm cannot be deactivated for the first 5 seconds of operation following its activation. Following the first 5 seconds of the panic alarm cycle, it can then be deactivated in following ways:

- Pressing the panic button on the remote transmitter.
- The activation time has exceeded (25 seconds).

Panic alarm cycle

When active, the DI's will flash and the vehicle horn will sound for 25 seconds.

Remote Transmitter

The security system allows up to eight remote transmitters to be used for controlling the system functions.

The remote transmitter come in packs of two. Each transmitter is associated with a series of numbers, which are shown on a label located on the transmitter packaging. These numbers are required to program the transmitter to a vehicle.

Caution
Do not lose the transmitter packaging, with the number label attached, before programming to the vehicle. The remote transmitters can not be programmed without the Seed and Key ID numbers.

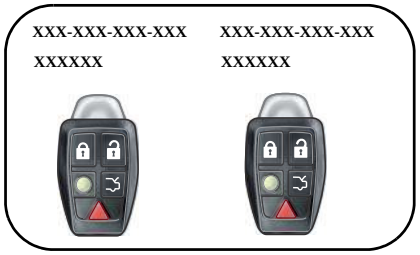

Key Learning Operations

Using WDS.

1. Select 'Set up and Configuration'.
2. Select either:
   - Transmitter add
   - Transmitter Delete
3. Follow the on screen instructions. Type in the Key ID and the Seed numbers when prompted.
4. If adding a transmitter.

   After programming, point a transmitter at the vehicle and attempt to lock / unlock the vehicle. If the vehicle does not lock / unlock, attempt to lock / unlock using the second transmitter from the pack.

   After a successful 'Transmitter add' operation delete the Key ID and Seed numbers taken from the packaging label.

   The remaining Key ID and Seed numbers are for the remaining remote transmitter. **Ensure that they remain together**.

If the CEM is required to be renewed then all remote transmitters must be renewed as well.

Integrated Passive Anti-Theft System (IPATS)

Description

IPATS (immobilisation system) is responsible for enabling / disabling engine functionality. The system is totally passive and requires no extra intervention from the user.

To prevent the engine from starting the IPATS disables the fuel pumps, injectors, and the crank circuit.

Disarming IPATS

When the ignition key is located in the ignition barrel and turned to position 'II', the key is validated. If successful, subsequent requests for crank and engine start will be allowed. If the key validation fails, then engine starting will be prevented.

Arming IPATS

To arm the system the user simply removes the ignition key.

IPATS LED

An IPATS LED is located in the DIM to display the immobilisation status and DTC's using flash codes.

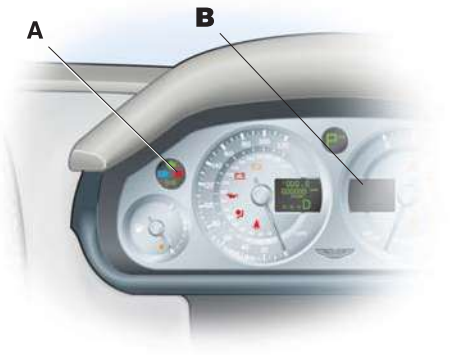

Normal behaviour following a successful key read is for the LED to illuminate for three seconds and then to extinguish.

If the self-test detects any problem with IPATS when the ignition is turned on, the IPATS LED will flash at 4Hz for 1 minute. The IPATS LED will then flash one of the following codes:

DTC	Flash Code	Description
B1681	11	Transceiver not connected
B2103	12	Transceiver antenna coil malfunction
B1600	13	No key-code from the key
B1602	14	Invalid/Partial key code from transceiver
B1601	15	Keycode not recognised (but correct format)
B1213	21	Less than two keys stored
B1342		EEPROM fault (failed store operation)
B2431		Key would not store, (key fault)

Key Programming

Note: You will need access to the Internet

All vehicle keys are required to perform key programming.

Using AMDS.

1. Insert the first key to the ignition.
2. Select 'Set up and Configuration' on AMDS.
3. Select either:
   - Key Learn
   - Key Delete
4. Follow the on screen instructions. You will be prompted to program successive keys as required.

Count Keys

Using AMDS.

Select Count keys to check how many keys are programmed into the vehicle security.

Maintenance

Tracker-Renew

Repair Operation Time (ROT)	
Item	**Code**
Tracker-Renew	**19.01.AB**

Removal

1. Remove IP assembly (see Workshop Manual procedure 01.12.AB Instrument Panel - Facia Assembly - Remove for Access and Refit).
2. Disconnect multiplugs (x2) from tracker horizon and GPS antenna assembly.
3. Remove nuts (x2) securing tracker assembly to mounting bracket.
4. Release GPS antenna from bracket, remove tracker assembly.
5. Remove screws (x2) securing tracker horizon to bracket.

Intallation

1. Position tracker horizon to bracket, install and tighten screws (x2).
2. Install tracker horizon assenbly, install and tighten nuts (x2).
3. Install tracker GPS antenna in bracket.
4. Connect multiplugs (x2).
5. Install IP assembly (see Workshop Manual procedure 01.12.AB Instrument Panel - Facia Assembly - Remove for Access and Refit).

Mass Movement Sensor-Renew

Repair Operation Time (ROT)	
Item	**Code**
Mass Movement Sensor-Renew	**19.01.BA**

Removal

1. Remove front header console assembly (see Workshop Manual procedure 01.05.BC Console Assembly - Front Header - Renew)
2. Remove RH front pillar upper trim panel (see Workshop Manual procedure 01.05.BD Trim - Upper Panel - Front Pillar - RH - Renew).
3. Remove LH front pillar upper trim panel (see Workshop Manual procedure 01.05.BE Trim - Upper Panel - Front Pillar - LH - Renew).
4. Remove sun visors Allen screws (x4).
5. Remove sunvisors.
6. Remove screws (x2) front header to body.
7. Remove front header panel.
8. Remove mass movement sensor from front header.

Installation

1. Install mass movement sensor.
2. Install front header panel.
3. Position sun visors and install screws (x4).
4. Install RH front pillar upper trim panel (see Workshop Manual procedure 01.05.BD Trim - Upper Panel - Front Pillar - RH - Renew).
5. Install LH front pillar upper trim panel (see Workshop Manual procedure 01.05.BE Trim - Upper Panel - Front Pillar - LH - Renew).
6. Install front header console assembly (see Workshop Manual procedure 01.05.BC Console Assembly - Front Header - Renew).

Pats Tranceiver ECU (Pre-08 MY Only) - Remove and Install

Repair Operation Time (ROT)	
Item	**Code**
Pats Tranceiver ECU (Pre-08 MY Only) - Remove and Install	**19.01.BB**

Removal

1. Remove the top and bottom shrouds for the steering column (Refer to 'Top and Bottom Shrouds for the Steering Column - Remove and Install', page 11-4-4).
2. Release the clips that attach the wiper switch to its mounting.
3. Release the wiper switch from its mounting.
4. Move the wiper switch away to give access.
5. Remove the self-tapping screw that attaches the PATS tranceiver ECU (ECU) to the steering column.
6. Disconnect the electrical connector for the ECU.
7. Remove the ECU.

Installation

1. Put the ECU in position on the steering column.
2. Install the self-tapping screw to attach the ECU.
3. Connect the electrical connector for the ECU.
4. Install the wiper switch in the mounting.

5. Make sure that the clips that attach the switch are correctly engaged.
6. Install the top and bottom steering column shrouds (Refer to 'Top and Bottom Shrouds for the Steering Column - Remove and Install', page 11-4-4).

Hood Latch Switch-Renew

Repair Operation Time (ROT)	
Item	**Code**
Hood Latch Switch-Renew	**19.01.BC**

Removal

1. Remove grille (see Workshop Manual procedure 01.08.AA Grille - Radiator - Renew).
2. Remove slam panel (bolts x12).
3. Remove bolts (x4) securing PAS oil cooler.
4. Remove bolts securing crossmember to inner wing (x4).
5. Remove bolts and spacers securing crossmember to wing (x2).
6. Move crossmember to one side and lift up clear of location (protect paintwork).
7. Disconnect bonnet latch multiplug.
8. Remove switch from latch body.

Installation

1. Install switch to latch body.
2. Connect bonnet latch multiplug.
3. Install crossmember (as removed).
4. Install bolts and spacers securing crossmember to wing (x2).
5. Install bolts securing crossmember to inner wing (x4).
6. Install bolts (x4) securing PAS oil cooler.
7. Install slam panel (bolts x12).
8. Install grille (see Workshop Manual procedure 01.08.AA Grille - Radiator - Renew).

Alarm Siren Assembly - Remove and Install

Repair Operation Time (ROT)	
Item	**Code**
Alarm Siren Assembly - Remove and Install	**19.01.CA**

Removal

1. Remove the left rear wheel (refer to Workshop Manual procedure 04.04.EC).
2. Remove the four self-tapping screws and the scrivet that attach the rear of the left, rear wheelarch liner.
3. Move the wheelarch liner away to get access to the alarm siren assembly (siren).
4. Remove the the drain hose for the fuel filler from the clips.
5. Move the drain hose for the fuel filler away.
6. Remove the two M6 nuts that attach the siren to the mounting bracket.
7. Disconnect the electrical connector from the siren.
8. Remove the siren.

Installation

1. Connect the electrical connector to the siren.
2. Put the siren in position into the mounting bracket.
3. Install the two M6 nuts to attach the siren to the mounitng bracket.
4. Install the drain hose for the fuel filler into the attachment clips,
5. Put the wheelarch liner into the fully installed position.
6. Install the four self-tapping screws and the scrivet that attach the wheelarch liner.
7. Install the left rear wheel(refer to Workshop Manual procedure 04.04.EC).

Electronic Features (19.00)

Electronic Features Modules (19.05)

Maintenance

Electronic Passenger Door Module-Renew

Repair Operation Time (ROT)	
Item	**Code**
Electronic Passenger Door Module-Renew	**19.10.BB**

Removal

1. Remove door trim panel (see Workshop Manual procedure 01.05.CB Trimboard Assembly - Door - Remove for Access and Refit).
2. Remove securing bolts (x4) and multiplugs (x3)

Installation

1. Connect multiplugs (x3) and secure control unit to door frame.
2. Replace door trim (see Workshop Manual procedure 01.05.CB Trimboard Assembly - Door - Remove for Access and Refit).

Electronic Driver's Door Module-Renew

Repair Operation Time (ROT)	
Item	**Code**
Electronic Driver's Door Module-Renew	**19.10.CB**

Removal

1. Remove door trim panel (see Workshop Manual procedure 01.05.CB Trimboard Assembly - Door - Remove for Access and Refit).
2. Remove securing bolts (x4) and multiplugs (x3)

Installation

1. Connect multiplugs (x3) and secure control unit to door frame.
2. Replace door trim (see Workshop Manual procedure 01.05.CB Trimboard Assembly - Door - Remove for Access and Refit).

Tyre Pressure Monitor Module-Renew

Repair Operation Time (ROT)	
Item	**Code**
Tyre Pressure Monitor Module-Renew	**19.10.DB**

Removal

1. Disconnect multiplug from tyre pressure monitor module.
2. Remove screws (x2) securing tyre pressure monitor module to IP bracket.
3. Remove tyre pressure monitor module.

Installation

1. Install tyre pressure monitor module, install and tighten screws (x2).
2. Connect multiplug to tyre pressure monitor module.

ASTON MARTIN
ASTON MARTIN

Appendix & Glossary

Contents

Diagnostic Ports 20-1-2
Fluids/Capacities.....20-1-3
Terms.....1-3
Special Tools.....20-1-4
Maintenance Schedules.....20-1-12
Torque Figures.....20-1-15
General Torque Figures.....1-15
Vehicle Torque Figures Torque
Conversion Tables.....1-16

Appendix & Glossary

Diagnostic Ports (20.01)

Diagnostic ports are provided for:

- OBD II
- Body - including

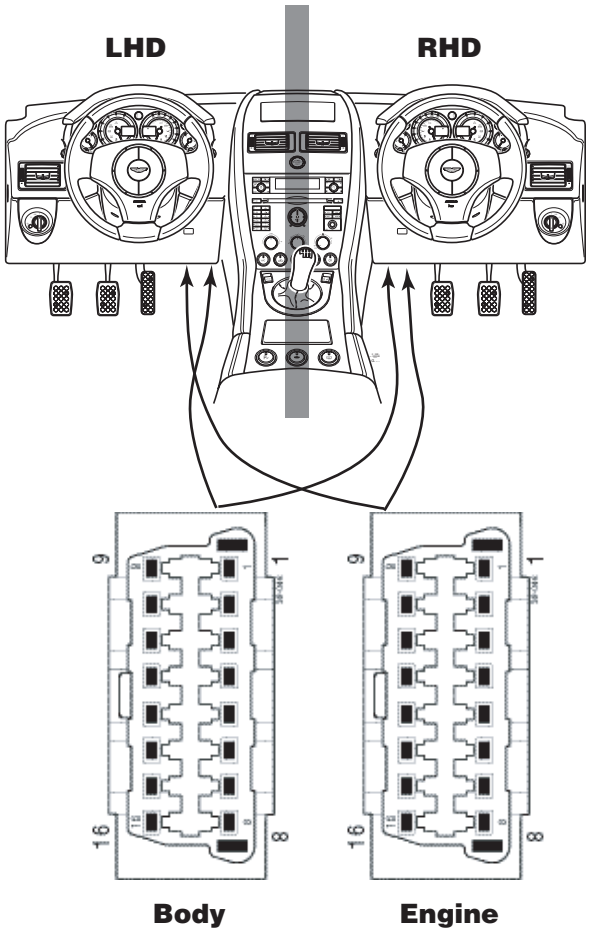

Fluids/Capacities

Capacities			
	Europe	**UK**	**USA**
Engine sump (incl. filter)	9.5 litres	16.7 pints	10.0 Qts
Engine sump (excl. filter)	8.5 litres	15.0 pints	9.0 Qts
Engine cooling system	12 litres	21 pints	14.4 Qts
Screen washer reservoir	2.0 litres	3.5 pints	2.2 Qts
Gearbox & Cooler	4.7 litres	7.9 pints	5.6 Qts
Final drive	2.0 litres	3.5 pints	2.2 Qts
Fuel tank	80.0 litres	17.6 galls	88.0 Qts

Recommended Fluids	
Engine oil (Initial fill)	Castrol Edge Sport 10w60
	Do not mix Engine oil with any mineral oils.
Engine coolant	50% water, 50% OAT Coolant (Arteco Havoline XLC only)
	Do not mix OAT coolant with any glycol based anti-freeze.
Gearbox oil	Shell Transaxle Oil 75w90
Final drive oil	Mobil 1 80w140
Brake fluid	Castrol Super Response DOT4
Power steering fluid	Esso Power steering Fluid
A/C Refrigerant	R134A (HFC134A)
A/C Compressor oil	ND8

Terms

Frequently used alternative names or spellings for vehicle components mentioned in this Workshop Manual.

UK English	US English
Bonnet	Hood
Boot	Trunk
Brake Disc	Rotor
Handbrake	Parking Brake
Petrol	Gasoline
Tyre	Tire
Wing	Fender
Windscreen	Windshield
Sill	Rocker Panel

Special Tools

Part No./Description

303-F715 (Multi-purpose Trolley x2)

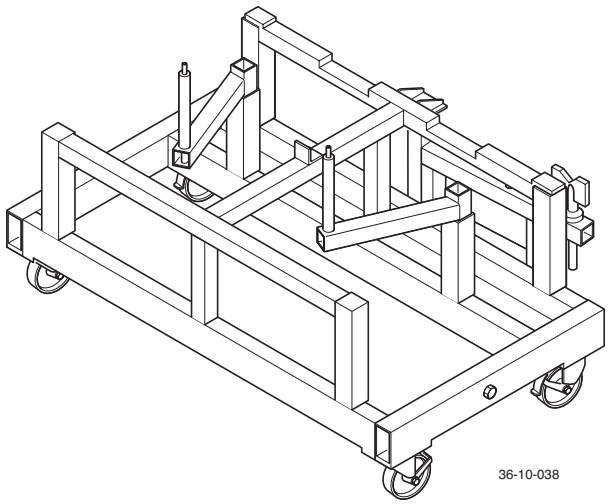

303-F715-06 (Trolley Link Bars)

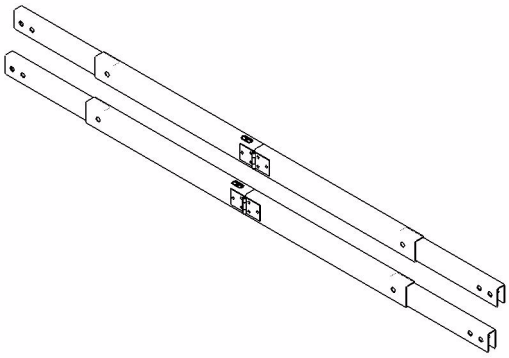

303-F715-04 (Rear Subframe Trolley Adaptors)

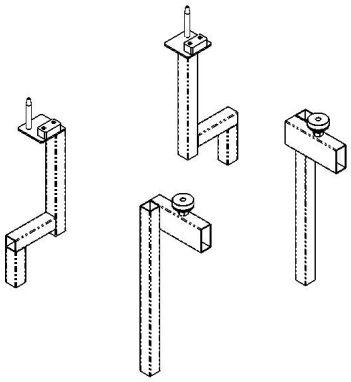

Part No./Description

303-F715-05 (Engine/Subframe Trolley Adaptors)

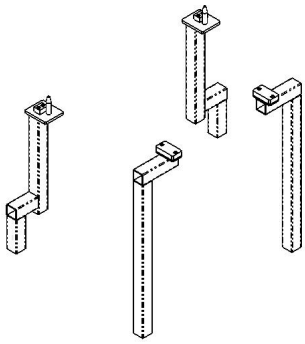

205-521 (Rear Subframe Bush Removal)

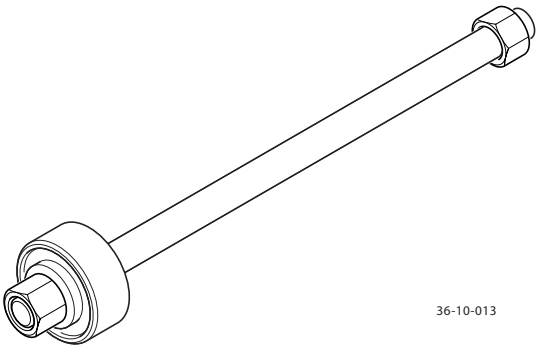

205-791 (Rear Subframe Bush Removal (use with 205-521))

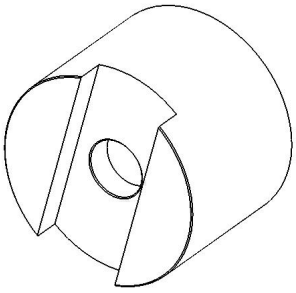

205-792 (Rear Subframe Receiver Cup)

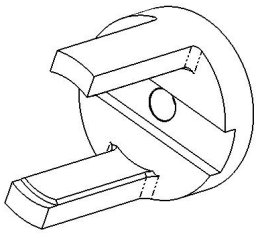

Part No./Description

205-793 (Rear Subframe Bush Installer)

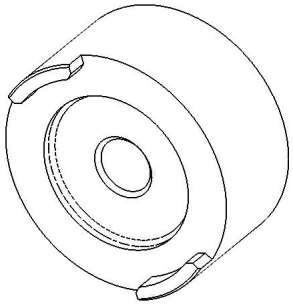

310-040 (Fuel Pipe Disconnect Tool)

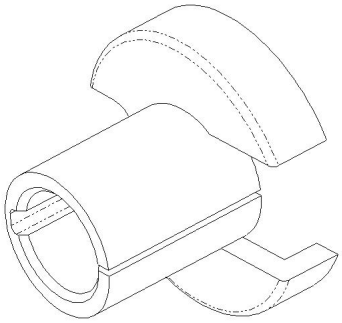

310-134 (Filler Neck Disconnect Tool)

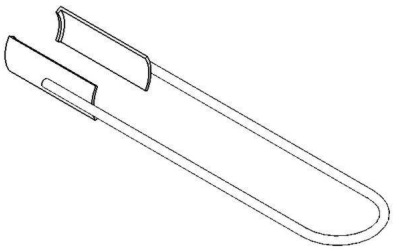

310-140A (Fuel Pump Install/Remove)

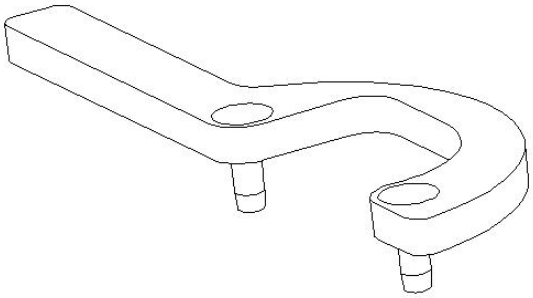

Part No./Description

303-667 (Clutch Alignment)

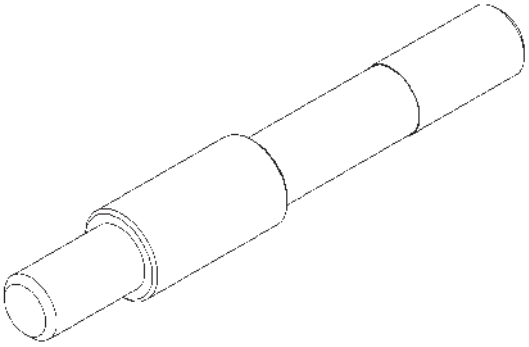

501-108 (IP Alignment Pins)

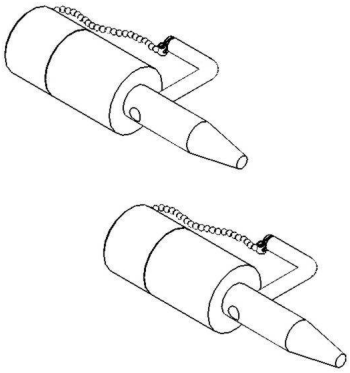

501-073A (Airbag Simulators)

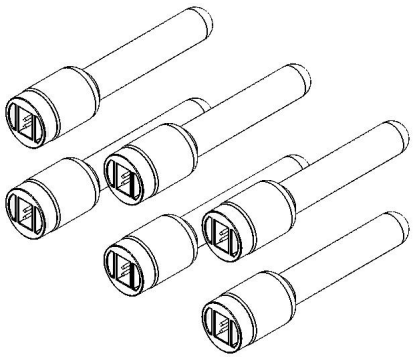

501-103 (Side Airbag and Pretensioner simulators)

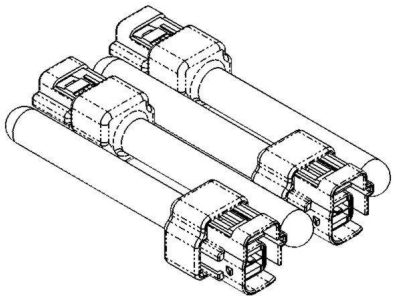

Part No./Description

501-104 (Trim Removal)

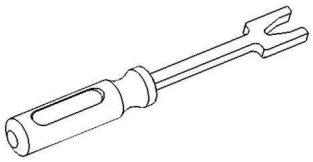

412-026 (Quick Disconnect Tool)

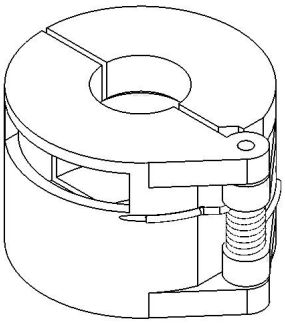

412-132 (Quick Disconnect Tool)

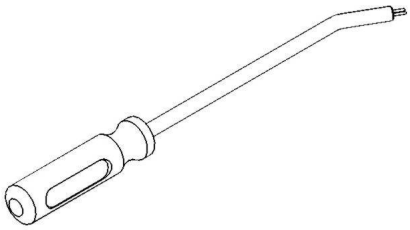

412-038 (Quick Disconnect Tool)

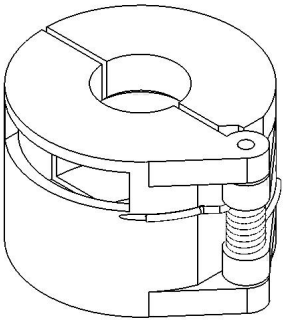

412-040 (Quick Disconnect Tool)

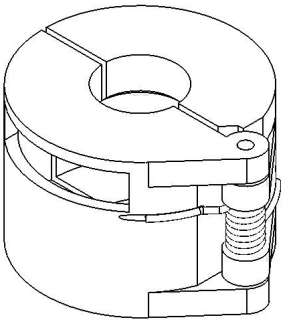

Part No./Description

43-27750 (MOST Tester)

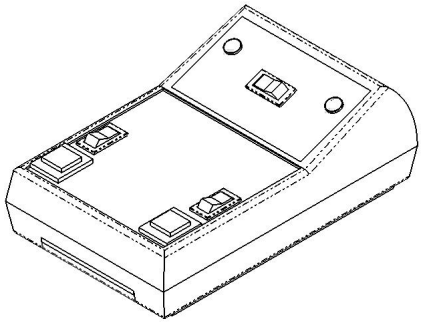

43-10047 (Wiring Harness Repair Kit)

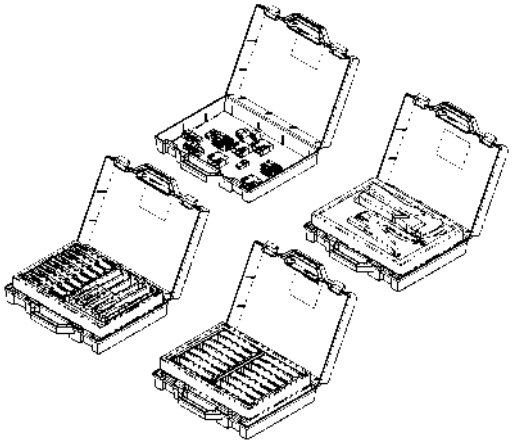

(Break-out Box to be used in conjunction with PCM II Test Lead - 43-10048)

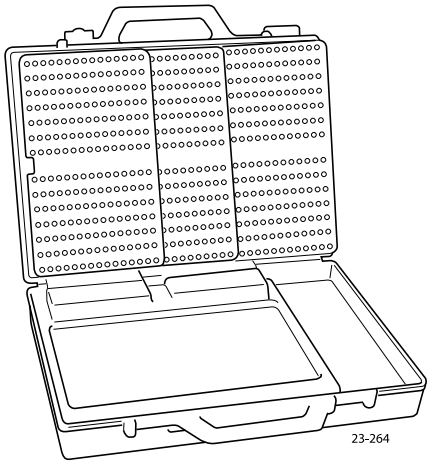

43-10048 (PCM II Test Lead)

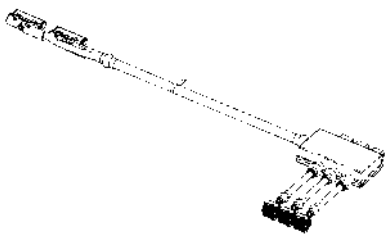

Part No./Description

204-523 (Ball Joint Splitter)

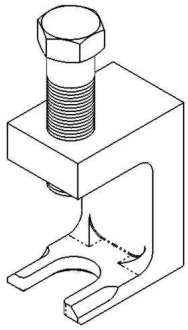

418-583 (Oxygen Sensor Diagnostic Lead)

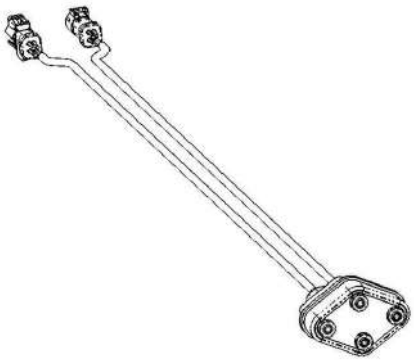

204-524 (Front Suspension Support)

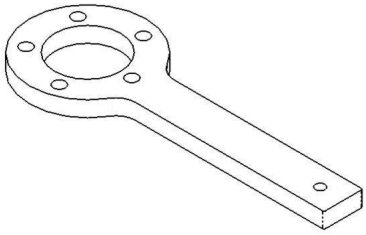

501-F111 (Door Service Trolley)

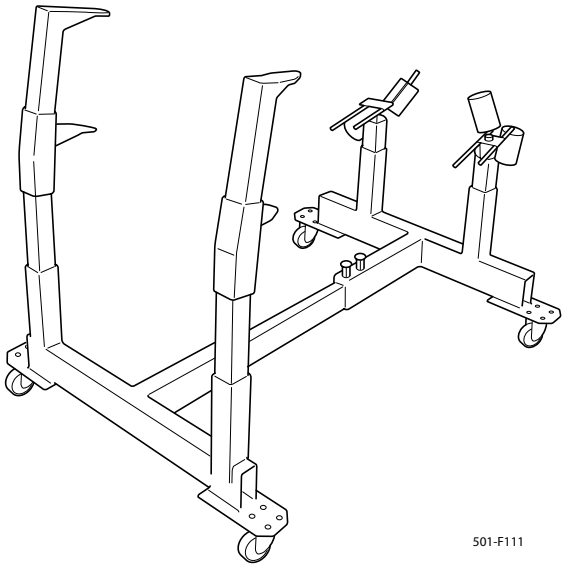

Part No./Description

501-115 (Front Veneer Removal)

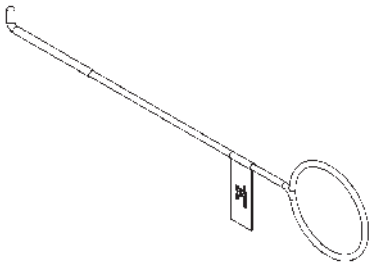

206-100 (Brake Hose Install)

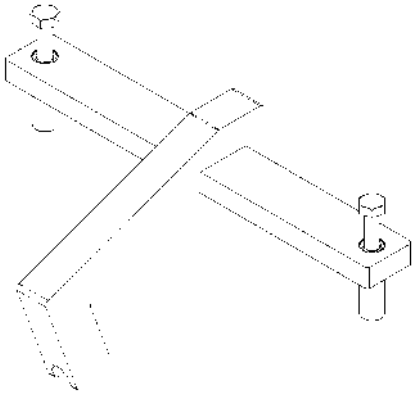

501-112 (Wiper Linkage to Wiper Motor)

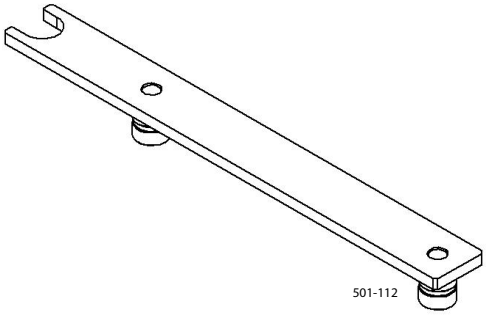

206-103 (Handbrake Cable Removal)

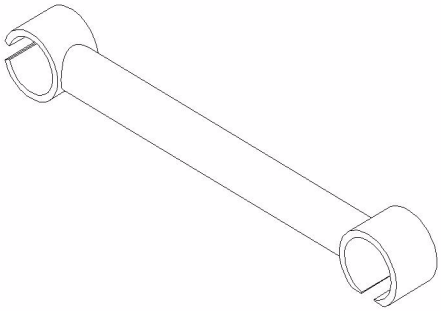

Part No./Description

501-F116 (IP Removal)

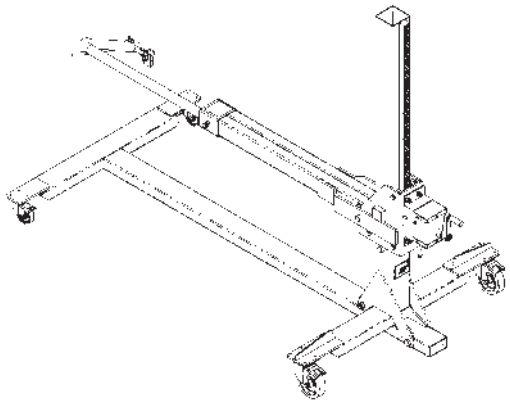

204-321-01 (Spring Compressor Adaptor Plate)

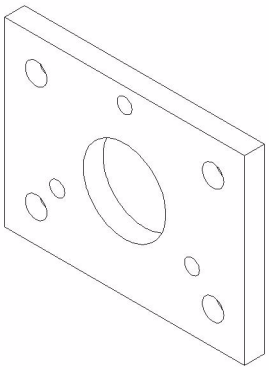

303-021-02 (Engine Support Brackets)

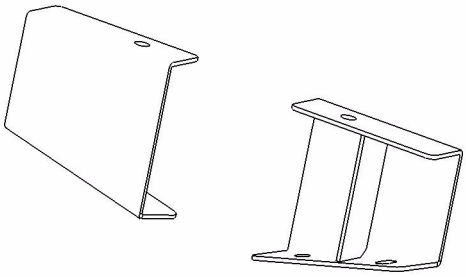

Part No./Description

303-1185 (Flywheel Locking Tool)

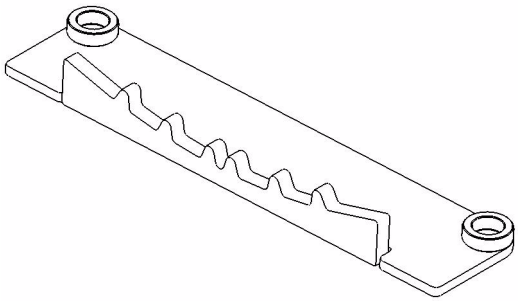

303-1186 (Crankshaft Vibration Damper Remover)

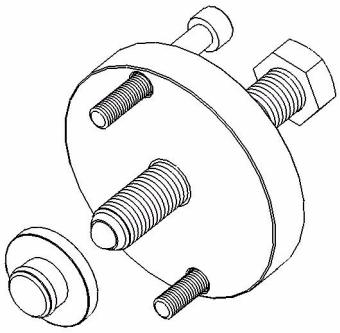

303-1187 (Oil Filter Wrench)

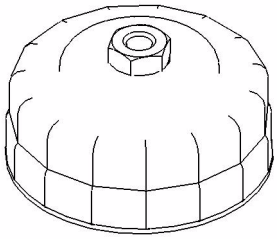

Part No./Description
303-1188 (Sump Filter Plug Tool)

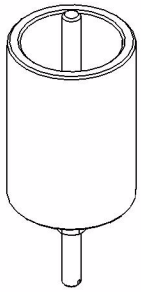

303-1189 (Crankshaft Rear Oil Seal Installer/Remover)

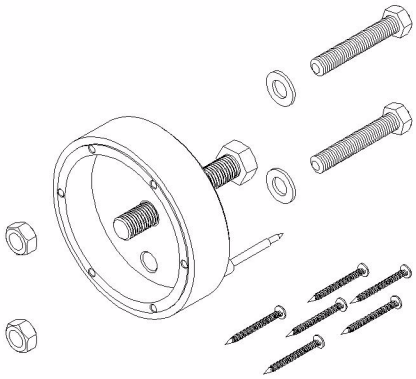

303-1190 (Crankshaft Front Oil Seal Remover)

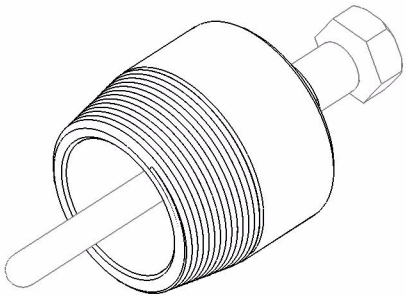

Part No./Description
303-536 (Engine Lifting Brackets)

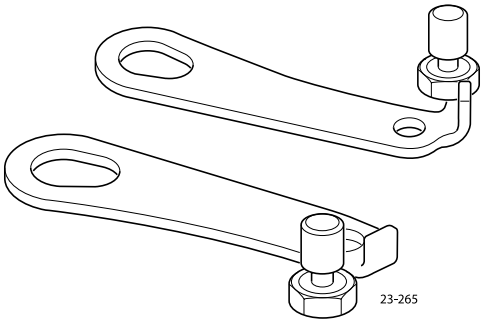

303-749 (Engine Lifting Brackets)

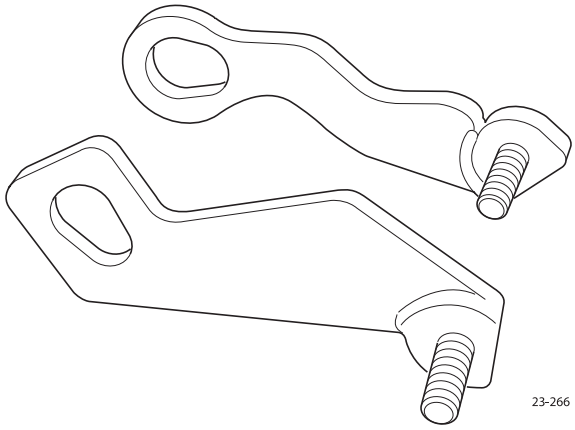

303-750 (Crankshaft Front Oil Seal Installer)

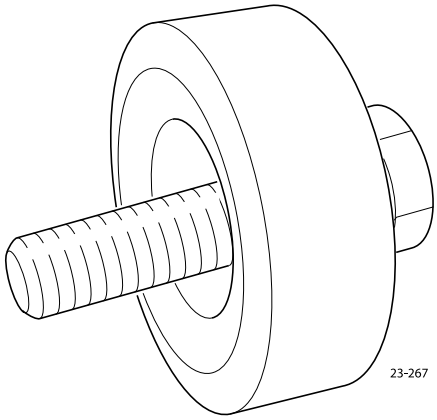

Part No./Description

303-F715-07 (Trolley Adaptor)

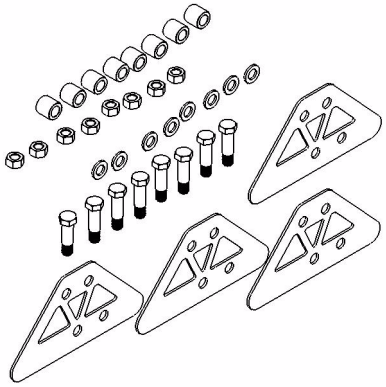

308-641 (Gear Shift Locking Tool)

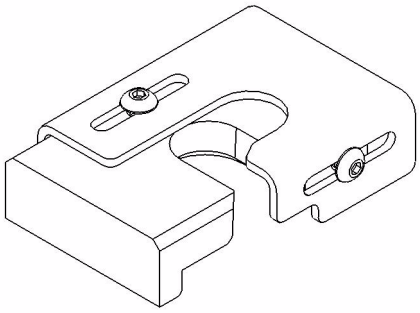

308-642 (Gear Shift Cable Release Tool)

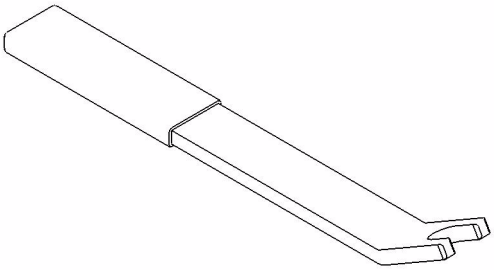

Part No./Description

310-155 (Fuel Tank Drain Adaptor)

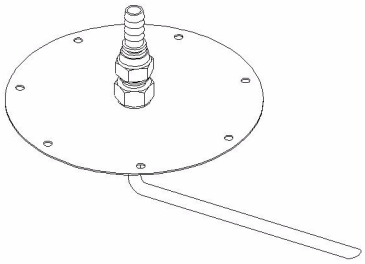

303-1215 (Camshaft Aligner)

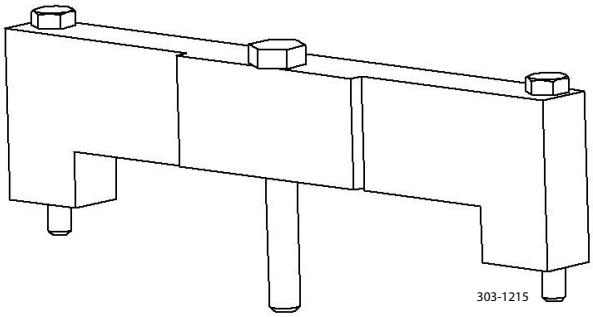

303-1216 Timing Chain Tensioner

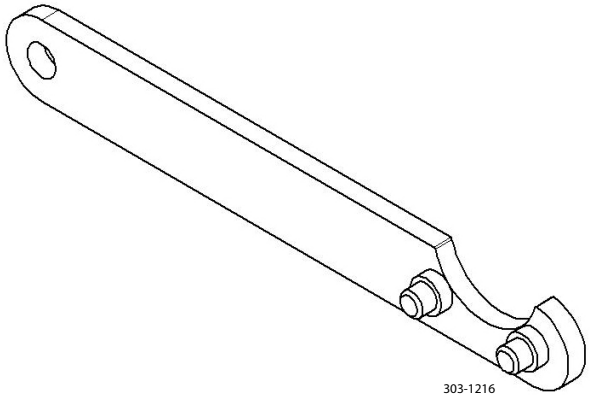

Part No./Description
303-534 Dummy Bearing Cap (Crankshaft Main Bearing)

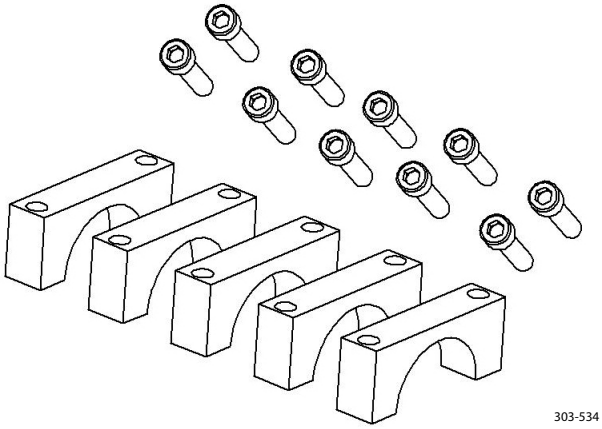

303-1217 TDC Setting Tool

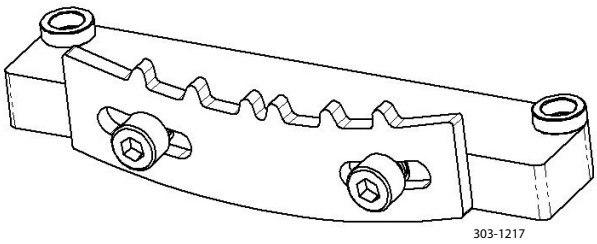

303-F715-08 Front Subframe Spacers (rears) 20mm

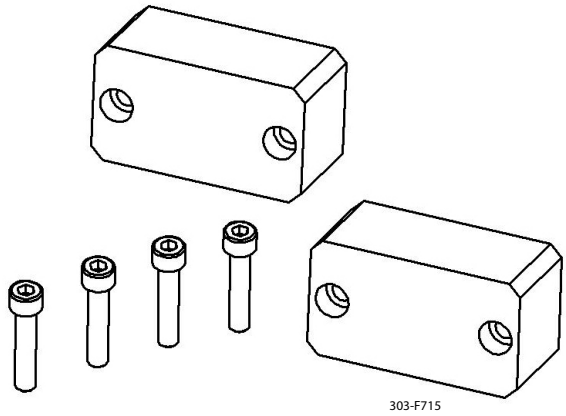

418-162 Battery Condition Tester

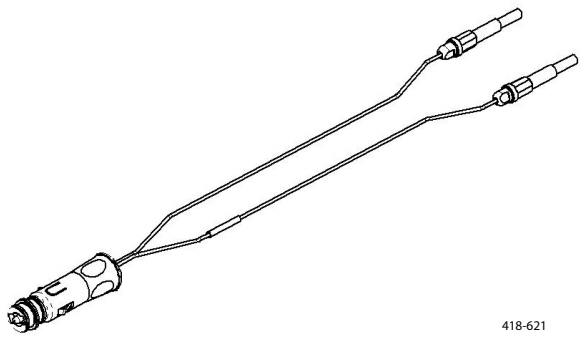

Maintenance Schedules

1000mls 1500km 3 months	10000mls 16000km 12 months	20000mls 32000km 24 months	
Pre-maintenance			
x	x	x	Pre-Maintenance Road Test Evaluation.
x	x	x	Install vehicle protection kit and wing covers.
x	x	x	Check Bulletins/Field Service Actions/Recall Status.
Fluids, Filters and Leaks Checks			
x	-	-	Check/top-up engine oil level.
-	x	x	Renew engine oil and filter. Clean sump filters.
x	x	x	Check for engine oil leaks.
Every 48,000km (30,000 miles)/3 Years			Renew air cleaner elements.
Every 32,000km (20,000 miles)/2 Years			Renew air cleaner elements - extreme environments.
x	x	-	Check transaxle for leaks.
Every 32,000km (20,000 miles)/3 Years	Every 96,000km (60,000 miles)/6 Years	Every 160,000km (100,000 miles)/10 years	Check/top-up transaxle oil levels.
Every 64,000km (40,000 miles)/4 Years			Renew transaxle oil and clean filter.
Every 160,000km (100,000 miles)/5 Years			Renew engine coolant-ensure 50/50 concentration.
x	x	x	Check/top-up engine coolant.
x	x	x	Check for fuel leaks.
Every 2 Years			Renew brake/clutch fluid.
-	x	x	Check/top-up brake/clutch fluid reservoir.
x	x	x	Check power steering system for leaks.
x	x	x	Check brake hoses, pipes and unions for leaks.
x	x	x	Check suspension dampers for leaks.
x	x	x	Top-up windscreen/headlamp washer reservoir.
x	x	x	Check exhaust system for leaks.
x	x	x	Check A/C system for leaks.
-	-	x	Renew pollen filter.
x	x	x	Check/top-up power steering fluid.

1000mls	10000mls	20000mls	
1500km	16000km	32000km	
3 months	12 months	24 months	
Mechanical Function Checks			
-	x	x	Lubricate the bonnet secondary latch.
-	x	x	Check security of the bonnet catch. Check that the secondary catch moves freely over its whole travel and returns smartly under spring pressure.
-	x	x	Lubricate the upper portion of the door seals.
x	x	x	Check/adjust accessory drive belt tension and renew if necessary.
Every 240,000km (150,000 miles)/15 Years			Replace the accessory drive belt.
x	-	-	Adjust handbrake cables if required.
-	x	x	Check condition of handbrake pads.
-	x	x	Inspect service brake pads and warning leads for wear. Replace if 60% worn.
-	x	-	Check wiper blade inserts and renew if necessary.
-	-	x	Renew wiper blades.
-	x	x	Inspect/clean out coolant radiator and A/C condenser.
x	x	x	Check security of exhaust system mountings and heat shields. Check by-pass valve operation.
x	x	x	Check brake hoses, pipes and unions.
-	-	x	Check power steering pipes and unions for corrosion and mechanical defects.
x	x	x	Check cooling system hoses security and condition.
x	x	x	Check A/C hoses security and condition.
x	-	x	Check condition and security of steering unit joints and gaiters (column and rack).
x	x	-	Check security and condition of suspension fixings.
x	x	-	Check security and condition of suspension ball joints, gaiters and bushings.
-	-	x	Check tightness of driveshaft bolts.
-	-	x	Check condition of underbody protection/wheel arch liners.
Every 64,000km (40,000 miles)/4 Years			Clean Throttle Butterfly
Electrical Function Checks			
Every 112,000km (70,000 miles)			Renew spark plugs.
x	x	x	Check/record battery voltage and quiescent drain.
x	x	x	Clean and grease battery connections if required.
x	x	x	Check the battery disconnect/connect switches.
x	-	x	Check and if necessary adjust headlamp alignment.
x	x	x	Check operation of all lamps.
x	x	x	Check operation of all warning indicators.
x	x	x	Check audible warnings including security system.
x	x	x	Check operation of the horns.
x	x	x	Check operation of the windows/headlamp washers/jets.
x	x	x	Check operation of the windscreen wipers.
x	x	x	Check rear view mirrors for security and function.
x	x	x	Check/operate power fold mirrors (option).
x	x	x	Check/operate electric windows.
x	x	x	Interrogate DTC P-codes and rectify if required
x	x	x	Check service interval indicator. Reset.

1000mls	10000mls	20000mls	
1500km	16000km	32000km	
3 months	12 months	24 months	
Wheels and Tyre Checks			
x	x	x	Check for correct tyre size, type and orientation.
x	x	x	Check and report tyre tread depth.
x	x	x	Check tyres for uneven/excessive wear or damage.
x	x	x	Check/adjust tyre pressures.
x	x	x	Check torque of road wheel nuts.
x	x	x	Check road wheel rims for inner and outer damage.
x	x	x	Check colour coded valve collars for correct location (tyre pressure monitoring) (not Japanese market)
x	x	x	Check 'Use by' date of tyre repair kit and replace if expired or expiry date is within 12 months
Anti Corrosion Check			
-	x	x	Check body panels and underbody for corrosion starting from the inside - out (excluding stone chips).
Final Checks			
x	x	x	Degrease windscreen.
x	x	x	Check clutch functionality.
x	x	x	Check operation/condition of all seat belts and buckles.
x	x	x	Check that the fuel filler bowl rain drain is clear.
x	x	x	Carry out road test.

Torque Figures

General Torque Figures

Nominal Dia.	Applied Torque (Nm)									
	4.6 & 4.82		8.8/8		9.8/9		10.9 & 10.9/10		12.9/12	
	Mean	+/-	Mean	+/-	Mean	+/-	Mean	+/-	Mean	+/-
M3	0.5	0.1	1.4	0.2	-	-	1.9	0.4	2.3	0.5
M4	1.2	0.2	3.1	0.6	-	-	4.5	0.8	5.2	1
M5	2.4	0.5	6.2	1.2	6.9	1.3	8.9	1.7	10.4	2
M6	4.1	0.8	10.4	2	11.8	2.3	15.2	2.7	17.5	3.3
M8	9.9	2	25	5	28	5.5	36	7	42	8
M10	19.5	3.9	50.5	9.5	56	10	72	13	84	16
M12	34.2	6.8	88	17	99	19	126	24	147	28
M14	54.4	10.9	140	28	157	30	200	40	235.5	46.5
M16	85	17.2	217.5	42.5	245	47	310	61	363.5	70.5
M18	116.7	23.4	313.5	58.5	-	-	433	80	509	94
M20	165	33	437.5	82.5	-	-	605	114	707	133
M22	225	45	602.5	102.5	-	-	832	157	974	187
M24	286	57	774	154	-	-	1070	213	1244	247
M27	417	83	1115	215	-	-	1547	298	1810	350
M30	567	113	1520	290	-	-	2102	402	2450	470
M33	722	154	2062	400	-	-	2856	551	3335	645
M36	994	199	2650	510	-	-	3664	703	4275	825
M39	1285	255	3435	660	-	-	4746	910	5545	1065

Stamped on bolt head

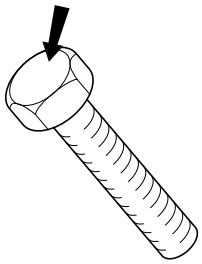

Vehicle Torque Figures Torque Conversion Tables

Newton Metres to Pounds Feet											
		Pounds Feet									
		0	1	2	3	4	5	6	7	8	9
Newton Metres	0	-	0.74	1.47	2.21	2.95	3.69	4.42	5.16	5.90	6.64
	10	7.38	8.11	8.85	9.59	10.33	11.06	11.80	12.54	13.28	14.01
	20	14.75	15.49	16.23	16.96	17.71	18.44	19.18	19.91	20.65	21.39
	30	22.13	22.86	23.60	24.34	25.08	25.81	20.55	27.29	28.03	28.76
	40	29.50	30.24	30.98	31.71	32.45	33.19	33.93	34.68	35.40	36.14
	50	36.88	37.62	38.35	39.09	39.83	40.57	41.30	42.04	42.78	43.52
	60	44.25	44.99	45.73	46.47	47.20	47.94	48.68	49.42	50.15	50.89
	70	51.63	52.37	53.10	53.84	54.58	55.32	56.06	56.79	57.53	58.27
	80	59.00	59.74	60.48	61.22	61.95	62.69	63.43	64.17	64.91	65.64
	90	66.38	67.12	67.86	68.59	68.33	70.07	70.81	71.54	72.28	73.02
	100	73.76	74.49	75.23	75.97	76.71	77.44	78.18	78.92	79.66	80.39
	110	81.13	81.87	82.61	83.34	84.08	84.82	85.56	86.29	87.03	87.77
	120	88.51	89.24	89.98	90.72	91.46	92.19	92.93	93.67	94.41	95.15
	130	95.88	96.62	97.36	98.09	98.83	98.58	100.3	101.00	101.78	102.52
	140	103.26	104.00	104.73	105.47	108.21	106.95	107.68	108.42	109.16	109.90
	150	110.63	111.37	112.11	112.85	113.59	114.33	115.06	115.80	116.54	117.27
	160	118.01	118.75	119.49	120.22	120.98	121.70	122.44	123.17	123.91	124.65
	170	125.39	126.12	126.86	127.60	128.34	129.07	129.81	130.55	131.29	132.02
	180	132.76	133.50	134.24	134.87	135.71	136.45	137.19	137.92	138.68	139.40
	190	140.14	140.87	141.61	142.35	143.09	143.83	144.56	145.30	146.04	140.78
	200	147.51	148.25	148.99	149.73	150.46	151.20	151.94	152.68	153.41	154.15
	210	154.89	155.63	156.36	157.10	157.83	158.58	159.31	160.05	160.79	161.53
	220	162.26	163.00	163.74	164.48	165.21	165.95	166.69	167.43	168.16	168.90
	230	169.64	170.38	171.11	171.85	172.59	173.33	174.07	174.80	175.54	176.28
	240	177.02	177.75	178.49	179.23	179.97	180.70	181.44	182.18	182.92	133.65
	250	184.39	185.13	185.87	186.60	187.34	158.08	188.82	189.55	190.29	191.03
	260	191.77	192.50	193.24	193.98	194.72	195.45	196.19	198.93	197.67	198.40
	270	198.14	198.58	200.62	201.35	202.09	202.83	203.57	204.31	205.10	205.78
	280	206.52	207.26	207.99	208.73	209.47	210.21	210.94	211.68	212.42	213.16
	290	213.89	214.63	215.37	216.11	216.84	217.58	218.32	219.06	219.79	220.53
	300	221.27	222.01	222.74	223.48	224.22	224.98	225.68	226.43	227.17	227.91
	310	228.64	229.38	230.12	230.86	231.68	232.33	233.07	233.81	234.55	235.28
	320	236.02	238.76	237.50	238.23	238.97	239.71	240.45	241.18	241.92	242.68
	330	243.40	244.13	244.87	245.61	246.35	247.08	247.82	248.56	249.20	250.03
	340	250.77	251.51	252.25	252.98	253.72	254.46	255.20	255.93	256.67	257.41
	350	258.15	258.68	259.62	260.36	261.10	261.84	262.57	263.31	264.05	264.79
	360	265.52	268.26	267.00	267.74	268.47	267.21	269.95	270.68	271.42	272.16
	370	272.90	273.64	274.37	275.11	275.85	276.59	277.32	278.06	278.80	279.54
	380	280.27	281.01	281.75	282.49	283.22	283.98	284.70	285.44	286.17	286.91
	390	287.65	298.38	289.12	289.86	298.68	291.34	292.08	292.81	293.55	294.29

Newton Metres to Pounds Feet (Continued)

Newton Metres	Pounds Feet 0	1	2	3	4	5	6	7	8	9
400	295.03	295.76	298.50	297.24	297.98	298.71	299.45	300.19	300.93	301.68
410	302.40	303.14	303.88	304.61	305.35	306.09	306.83	307.56	308.30	309.04
420	309.78	310.51	311.25	311.99	312.73	313.46	314.20	314.94	315.68	316.41
430	317.15	317.89	318.63	319.36	320.10	320.84	321.58	322.32	323.05	323.79
440	324.53	325.27	326.00	326.74	327.48	328.22	328.95	329.68	330.43	331.17
450	331.90	332.64	333.38	334.12	334.35	335.59	336.33	337.07	337.80	338.54
460	339.28	340.02	340.75	341.49	342.23	342.97	343.70	344.44	345.18	345.92
470	346.65	347.39	348.13	348.87	349.60	350.34	351.08	351.82	352.56	353.29
480	354.03	354.77	355.51	356.24	356.98	357.72	358.46	359.19	359.93	350.67
490	361.41	362.14	362.88	363.62	364.36	365.08	365.83	366.57	367.31	368.04
500	368.78	369.52	370.26	370.99	371.73	372.47	373.21	373.94	374.68	375.42
510	376.16	376.89	377.63	378.37	379.11	379.85	380.58	381.32	382.06	382.80
520	383.53	384.27	385.01	385.75	386.48	387.22	387.96	388.70	389.43	390.17
530	390.91	391.65	392.38	393.12	393.86	394.60	395.33	396.07	396.81	397.55
540	398.28	399.02	399.76	400.50	401.23	401.97	402.71	403.45	404.18	404.92
550	405.68	406.40	407.13	407.87	408.61	409.35	410.09	410.82	411.56	412.30
560	413.04	413.77	414.51	415.25	415.99	416.72	417.40	418.20	418.94	419.67
570	420.41	421.15	421.87	422.62	423.36	424.10	424.84	425.57	426.31	427.05
580	427.79	428.52	429.26	430.00	430.74	431.47	432.21	432.95	433.68	434.42
590	435.16	435.90	436.64	437.37	438.11	438.85	439.59	440.33	441.06	441.80
600	442.54	443.28	444.01	444.75	445.49	448.23	446.96	447.70	448.44	449.18
610	449.91	456.65	451.39	452.13	452.86	453.60	454.34	455.08	455.81	456.55
620	457.29	456.03	458.76	459.50	460.24	460.98	401.71	462.45	463.19	463.93
630	464.66	465.40	468.14	466.88	467.61	468.35	469.09	468.83	470.57	471.30
640	472.04	472.78	473.52	474.25	474.99	475.73	476.47	477.20	477.94	478.68
650	479.42	480.15	480.89	481.63	482.37	483.10	483.84	484.58	485.32	486.05
660	486.79	487.53	488.27	489.00	489.74	490.48	491.22	491.95	492.68	493.43
670	494.17	484.90	489.64	496.38	497.12	497.85	498.59	499.33	500.07	500.81
680	501.54	502.28	503.02	503.76	504.49	505.23	505.97	506.71	507.44	508.18
690	508.92	509.68	510.39	511.13	511.87	512.61	513.34	514.08	514.82	515.56
700	516.29	517.03	517.77	518.51	519.25	519.98	520.72	521.46	522.19	522.93
710	523.67	524.41	525.14	525.88	526.62	527.36	528.10	528.83	529.57	530.31
720	531.05	531.78	532.52	533.26	534.00	534.73	535.47	536.21	536.95	537.68
730	538.42	539.16	539.90	540.63	541.37	542.11	542.85	543.56	544.32	545.06
740	545.80	546.53	547.27	548.01	548.75	549.48	550.22	550.96	551.70	552.43
750	553.17	553.91	554.65	555.38	556.12	556.86	557.60	558.34	559.07	559.80
760	560.55	561.29	562.02	562.76	568.50	564.24	564.97	565.71	568.45	567.19
770	567.92	568.68	569.40	570.14	570.87	571.61	572.35	573.09	573.82	574.56
780	575.30	576.04	576.77	577.51	578.25	578.99	579.72	580.40	581.20	581.94
790	582.67	583.41	584.15	584.89	585.62	586.36	587.10	587.84	588.58	589.31

Newton Metres to Pounds Feet (Continued)											
		Pounds Feet									
		0	1	2	3	4	5	6	7	8	9
Newton Metres	800	590.79	591.53	592.26	593.00	593.74	594.48	595.21	595.95	596.58	596.68
	810	597.43	598.16	598.90	599.64	600.38	601.11	601.85	602.59	603.33	604.06
	820	604.80	605.54	606.28	607.01	607.75	608.49	609.23	609.96	610.70	611.44
	830	612.18	612.91	613.65	614.39	615.13	615.86	616.60	617.34	618.08	618.81
	840	619.55	620.29	621.03	621.77	622.50	623.24	623.98	624.72	625.45	626.19
	850	626.93	627.67	628.40	629.14	629.68	630.62	631.35	632.09	632.83	633.57
	860	634.30	635.04	635.78	636.52	637.25	637.99	638.73	639.47	640.20	640.94
	870	641.68	642.42	643.15	643.89	644.63	645.37	646.10	646.84	647.58	648.32
	880	649.06	649.79	650.53	651.27	652.01	652.74	653.48	654.22	654.96	655.69
	890	656.43	657.17	657.91	658.64	659.38	660.12	660.86	661.59	662.33	663.07
	900	663.81	664.54	665.28	666.02	666.76	667.49	668.23	668.97	669.71	670.44
	910	671.18	671.92	672.66	673.39	674.13	674.87	675.61	676.35	677.08	677.82
	920	678.56	679.30	680.03	680.77	681.51	682.25	682.98	683.72	683.46	685.20
	930	685.93	686.67	687.41	688.15	688.88	689.62	690.36	691.10	691.83	692.57
	940	693.31	694.05	684.78	695.52	696.26	697.00	697.73	698.47	699.21	699.95
	950	700.68	701.42	702.16	702.90	703.63	704.37	705.11	705.85	706.59	707.32
	960	708.06	708.80	708.54	710.27	711.01	711.75	712.49	713.22	713.96	714.70
	970	715.44	716.17	716.91	717.65	718.39	719.12	719.86	720.60	721.34	722.07
	980	722.81	723.55	724.29	725.02	725.76	726.50	727.24	727.97	728.71	729.45
	990	730.19	730.92	731.66	732.40	733.14	733.87	734.61	735.35	736.09	736.83

Pounds Feet to Newton Metres											
		Newton Metres									
		0	1	2	3	4	5	6	7	8	9
Pounds Feet	0	-	1.36	2.71	4.07	5.42	6.78	8.13	9.49	10.85	12.20
	10	13.56	14.91	16.27	17.63	18.98	20.34	21.69	23.05	24.40	25.76
	20	27.12	28.47	29.83	31.18	32.54	33.89	35.25	36.61	37.96	39.32
	30	40.67	42.03	43.39	44.74	46.10	47.45	48.81	50.16	51.52	52.88
	40	54.23	55.59	56.94	58.30	59.66	61.01	62.37	63.72	65.08	66.43
	50	67.79	69.15	70.50	71.86	73.21	74.57	75.93	77.28	78.64	79.99
	60	81.35	82.70	84.06	85.42	86.77	88.13	89.49	90.84	92.20	93.55
	70	94.91	96.26	97.62	98.97	100.33	101.68	103.04	104.40	105.75	107.11
	80	108.47	109.82	111.12	112.53	113.89	115.25	116.60	117.96	199.31	120.67
	90	122.02	123.38	124.74	126.09	127.45	128.80	130.16	131.51	132.87	134.23
	100	135.58	136.94	138.29	139.65	141.01	142.36	143.72	145.07	146.43	147.78
	110	149.14	150.50	151.85	153.21	154.56	155.92	157.28	158.63	159.99	161.34
	120	164.05	165.41	162.70	166.77	163.12	169.48	170.83	172.19	173.55	174.90
	130	176.26	177.61	178.97	180.32	181.68	183.04	184.39	185.75	187.10	188.46
	140	189.82	191.17	192.53	193.88	195.24	196.59	197.95	199.31	200.66	202.02
	150	203.37	204.73	206.08	207.44	208.80	210.15	211.51	212.86	214.22	215.58
	160	216.93	218.29	219.64	221.00	222.35	223.71	225.07	226.42	227.78	229.13
	170	230.49	231.85	233.20	234.56	235.91	237.27	238.64	239.98	241.34	242.69
	180	244.05	245.40	246.76	248.12	249.47	250.83	252.18	253.54	254.89	250.25
	190	257.61	258.96	260.32	261.67	263.03	264.38	265.74	267.10	263.45	269.81

Pounds Feet to Newton Metres (Continued)

Pounds Feet	Newton Metres 0	1	2	3	4	5	6	7	8	9
200	271.16	272.52	273.88	275.23	276.59	277.94	279.30	280.65	282.01	283.37
210	284.72	286.08	287.43	288.79	290.15	291.50	292.86	294.21	295.57	296.92
220	298.28	299.64	300.99	302.35	303.70	305.06	306.42	307.77	309.13	310.48
230	311.84	313.19	314.55	315.91	317.26	318.62	319.97	321.33	322.68	324.04
240	325.40	326.75	328.11	329.46	330.82	332.18	333.53	334.89	336.24	337.60
250	338.95	340.31	341.67	343.02	344.38	345.73	347.09	348.45	349.80	351.16
260	352.51	353.87	355.22	356.58	357.94	359.29	360.65	362.00	363.36	364.72
270	366.07	367.43	368.78	370.14	371.49	372.85	374.21	375.56	376.92	378.27
280	379.63	380.98	382.34	363.70	385.05	386.41	387.76	389.12	390.48	391.63
290	393.19	394.54	395.90	397.26	398.61	398.97	401.32	402.63	464.03	405.39
300	406.75	408.10	409.46	410.81	412.17	413.52	414.98	416.24	417.59	418.95
310	420.30	421.68	423.02	424.37	425.73	427.08	428.44	429.79	431.15	492.51
320	433.86	435.22	436.57	437.93	439.29	440.64	442.00	443.35	444.71	448.06
330	447.42	448.78	450.13	451.49	452.84	454.20	455.56	456.91	458.27	459.62
340	460.98	462.33	463.69	465.05	466.40	467.76	489.11	470.47	471.63	473.18
350	474.54	475.89	477.25	478.60	479.98	481.32	482.67	464.03	485.38	486.74
360	488.09	489.45	498.81	492.16	493.52	494.87	496.23	497.59	498.94	500.30
370	501.65	503.01	504.36	505.72	507.08	598.43	509.79	511.14	512.50	513.86
380	515.21	516.57	517.92	519.28	520.63	521.98	523.34	524.70	526.06	527.41
390	528.77	530.13	531.48	532.84	534.19	535.55	536.90	538.26	539.62	540.97
400	542.33	543.68	545.04	546.40	547.75	549.11	550.46	551.82	553.17	554.53
410	555.89	557.24	558.60	559.95	561.31	562.66	564.02	565.38	566.73	568.09
420	569.45	570.80	572.16	573.51	574.87	576.22	577.59	578.93	580.29	581.65
430	583.00	584.38	585.71	587.07	598.41	589.78	591.14	592.49	593.85	595.20
440	596.56	597.92	599.27	600.63	601.98	603.34	604.70	606.05	607.41	608.76
450	610.12	611.47	612.83	614.19	615.54	616.90	618.25	619.61	620.97	622.32
460	623.68	625.03	626.39	627.74	629.10	630.46	631.81	633.17	634.52	635.98
470	637.23	638.59	639.95	641.30	642.68	644.01	645.37	640.73	648.08	649.44
480	650.79	652.15	653.50	654.86	656.22	657.57	658.93	660.28	661.64	663.00
490	664.35	665.71	667.06	668.42	669.77	671.13	672.49	673.84	675.20	676.55
500	677.91	679.27	680.62	680.98	683.33	684.69	686.04	687.04	688.76	690.11
510	691.47	692.82	694.18	697.54	696.89	698.25	699.60	700.96	702.31	703.67
520	705.03	706.38	707.74	709.09	710.45	711.80	713.16	714.52	715.87	717.23
530	718.58	719.94	721.30	722.65	724.01	725.36	726.72	728.07	729.43	730.79
540	732.14	733.50	734.85	736.21	737.57	738.92	740.28	741.63	742.99	744.35
550	745.70	747.06	748.41	749.77	751.12	752.48	753.84	755.19	756.55	757.90
560	759.26	760.61	761.97	763.33	764.68	766.04	767.39	768.75	770.11	771.48
570	772.82	774.17	775.53	776.88	778.24	779.69	780.95	782.31	783.66	785.02
580	786.37	787.73	789.09	790.44	791.80	793.15	794.51	795.87	797.22	798.58
590	799.93	801.28	802.64	804.00	805.36	806.71	808.07	809.42	810.78	812.14

Pounds Feet to Newton Metres (Continued)											
		Newton Metres									
		0	1	2	3	4	5	6	7	8	9
Pounds Feet	600	813.49	814.85	816.20	817.56	818.91	820.27	821.63	822.98	824.34	825.69
	610	827.05	828.41	829.76	831.12	832.47	833.83	835.18	836.54	837.90	839.25
	620	840.61	841.96	844.32	844.68	848.03	847.39	848.74	850.10	851.45	852.81
	630	854.17	855.52	856.88	858.23	859.59	860.94	862.30	863.68	865.01	868.37
	640	867.72	868.08	870.44	871.79	873.15	874.50	875.86	877.21	878.57	879.93
	650	881.28	882.64	883.99	885.35	886.71	888.06	689.42	890.77	892.13	893.48
	660	894.84	896.20	897.55	898.91	900.26	901.62	902.98	904.33	905.68	907.04
	670	908.40	909.75	911.11	912.47	913.82	915.17	916.55	917.89	919.25	920.60
	680	921.96	923.31	924.67	926.02	927.38	928.74	930.09	931.45	932.80	934.16
	690	935.51	936.87	938.23	939.58	940.94	942.29	943.65	945.01	946.36	947.72
	700	949.07	956.43	951.78	953.14	954.50	955.85	957.21	958.56	959.92	961.28
	710	962.63	963.99	965.34	966.70	968.05	969.41	970.77	972.12	973.47	974.83
	720	976.19	977.55	978.90	980.26	981.61	982.97	984.32	985.68	987.04	988.39
	730	989.75	991.10	992.46	993.82	995.17	996.53	997.68	999.24	1000.6	1002.0
	740	1003.3	1004.7	1006.0	1007.4	1008.7	1010.1	1011.4	1012.8	1014.2	1015.5
	750	1016.9	1018.2	1019.6	1020.9	1022.3	1023.6	1025.0	1026.4	1027.7	1029.1
	760	1030.4	1031.8	1033.1	1034.5	1035.8	1037.2	1038.6	1039.9	1041.3	1042.6
	770	1044.0	1045.3	1048.7	1048.1	1049.4	1050.8	1052.1	1053.5	1054.8	1056.2
	780	1057.5	1058.9	1060.3	1061.6	1063.0	1064.3	1065.7	1067.0	1068.4	1069.7
	790	1071.1	1072.5	1073.8	1075.2	1076.5	1077.9	1079.2	1080.6	1081.9	1083.3
	800	1084.7	1086.0	1087.4	1088.7	1090.1	1091.4	1092.8	1094.2	1095.5	1096.9
	810	1098.2	1099.6	1100.9	1102.3	1103.6	1105.0	1106.4	1107.8	1109.1	1110.4
	820	1111.8	1113.1	1114.5	1115.8	1117.2	1118.6	1119.9	1121.3	1122.6	1124.0
	830	1125.3	1126.7	1128.0	1129.4	1130.8	1132.1	1133.5	1134.8	1136.2	1137.5
	840	1138.9	1140.2	1141.6	1143.0	1144.3	1145.7	1147.0	1148.4	1149.7	1151.1
	850	1152.5	1153.8	1155.2	1156.5	1157.9	1159.2	1160.6	1161.9	1163.3	1164.7
	860	1168.0	1167.4	1168.7	1170.1	1171.4	1172.8	1174.1	1175.5	1176.9	1178.2
	870	1179.6	1180.9	1182.3	1183.6	1185.0	1186.3	1187.7	1189.1	1190.4	1191.8
	880	1193.1	1194.5	1195.8	1197.2	1198.5	1199.9	1201.3	1202.6	1204.0	1205.3
	890	1206.7	1208.0	1209.4	1210.8	1212.1	1213.5	1214.8	1216.2	1217.5	1218.9
	900	1220.2	1221.6	1223.0	1224.3	1225.7	1227.0	1228.4	1229.7	1231.1	1232.4
	910	1233.8	1235.2	1236.5	1237.9	1239.2	1240.6	1241.9	1243.3	1244.6	1246.0
	920	1247.4	1248.7	1250.1	1251.4	1252.8	1254.1	1255.5	1256.8	1258.2	1259.6
	930	1260.9	1262.3	1263.6	1265.0	1266.3	1267.7	1269.1	1270.4	1271.8	1273.1
	940	1274.5	1275.8	1277.2	1278.5	1279.9	1281.3	1282.6	1284.0	1285.3	1286.7
	950	1288.0	1289.4	1290.7	1292.1	1293.5	1294.8	1296.2	1297.5	1298.9	1300.2
	960	1301.6	1302.9	1304.3	1305.7	1307.0	1308.4	1309.7	1311.1	1312.4	1313.8
	970	1315.1	1316.5	1317.9	1319.2	1320.6	1321.9	1323.3	1324.6	1326.0	1327.4
	980	1328.7	1330.1	1331.4	1332.8	1334.1	1335.5	1336.8	1338.2	1339.6	1340.9
	990	1342.3	1343.6	1345.0	1346.3	1347.7	1349.0	1350.4	1351.8	1353.1	1354.5

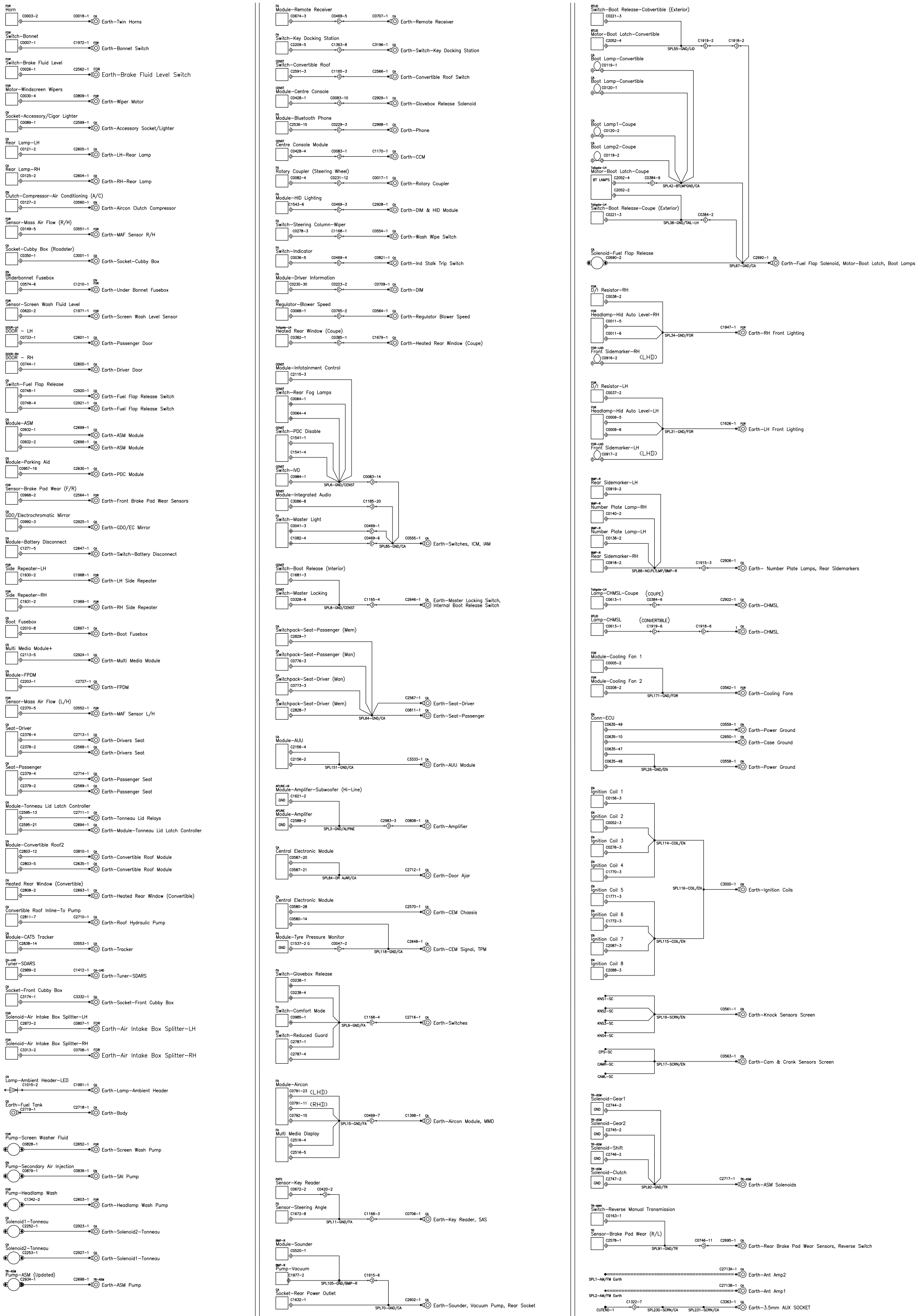

ASTON MARTIN	DRAWN BY Carl Beveridge	TITLE	PROJECT VH206 232	CPSC 00.06.51	AML DRG No.
	DATE 02-06-08	EARTHS	BUILD J1+90	REV LEVEL A	IL9G33-14T400-AB
A1 Circuit		SUB-SYSTEM TITLE			

1 OF 1

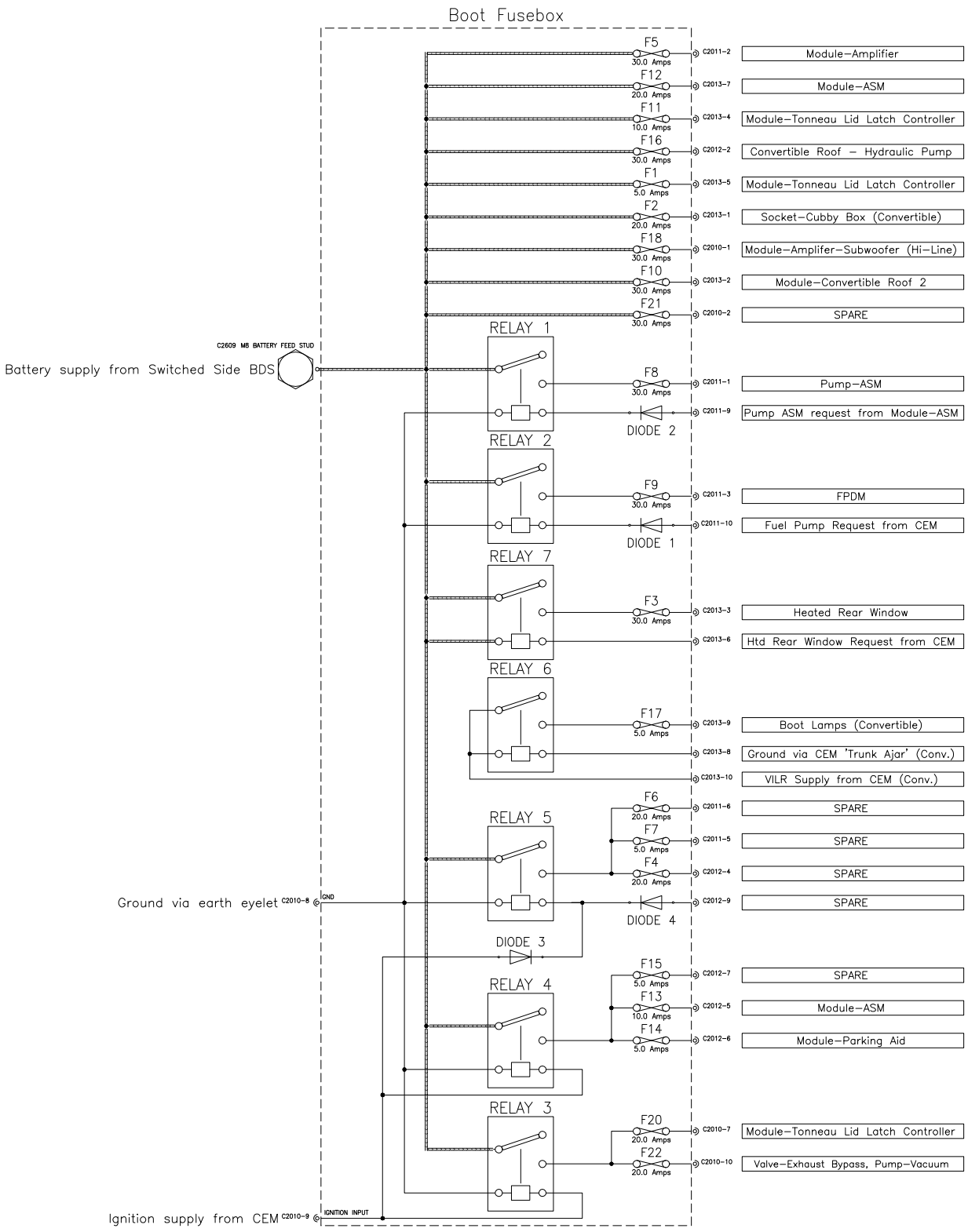

FUSEBOX CONNECTOR	CONNECTOR COLOUR	CIRCUIT C NUMBER
A	WHITE	C2010
B	BLACK	C2011
C	GREEN	C2012
D	BLUE	C2013

VIEW THROUGH LID

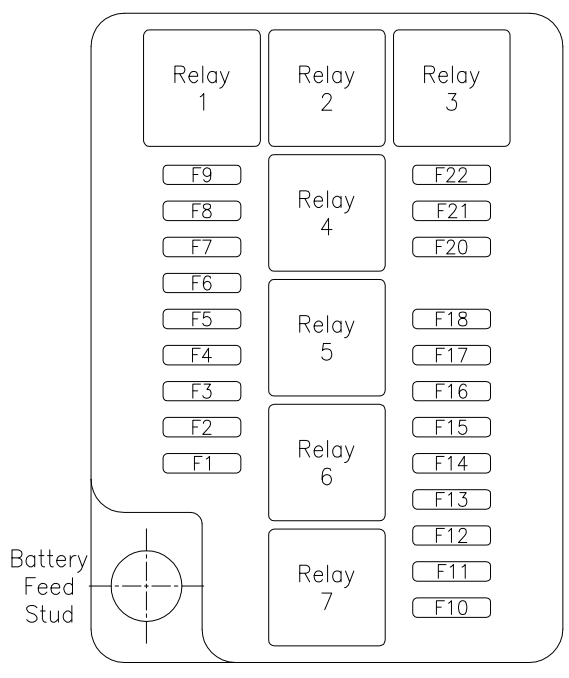

ASTON MARTIN	DRAWN BY Carl Beveridge	TITLE	REAR FUSEBOX 4G43–14A073–AJ	PROJECT VH206 232	CPSC 00.06.51	AML DRG No.
	DATE 02–06–08	SUB-SYSTEM TITLE		BUILD J1+90	REV LEVEL A	IL9G33–14T400–AB

A1 Circuit

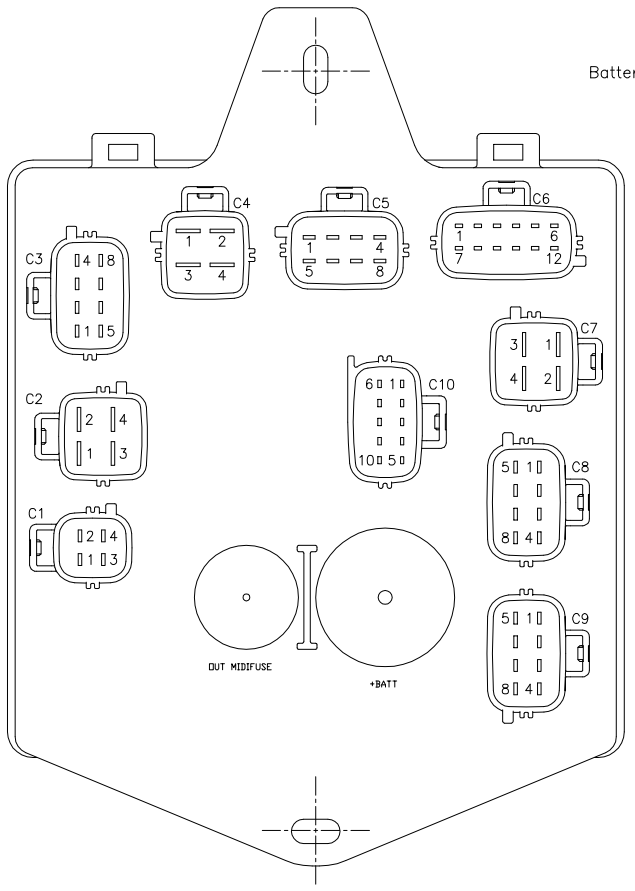

VIEW THROUGH BASE

FUSEBOX CONNECTOR	CIRCUIT C NUMBER	HARNESS
1	C0570	Forward
2	C0571	Forward
3	C0572	Forward
4	C0573	Forward
5	C0574	Forward
6	C0575	Forward
7	C0576	Engine
8	C0577	Engine
9	C0578	Engine
10	C0579	Forward

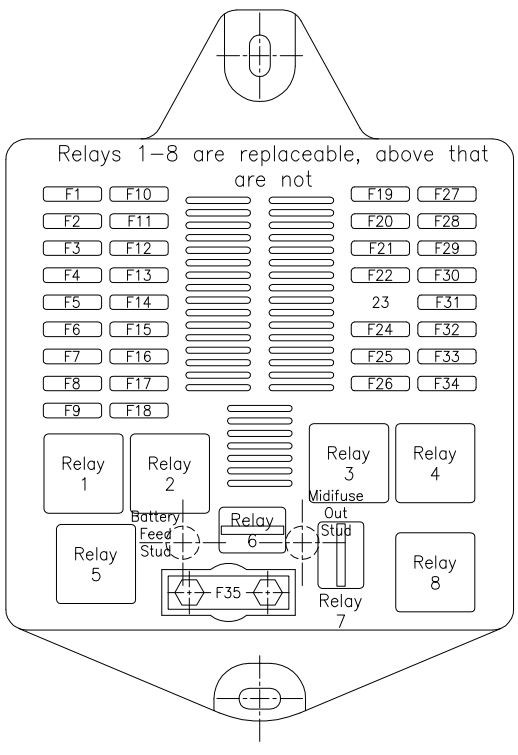

VIEW THROUGH LID

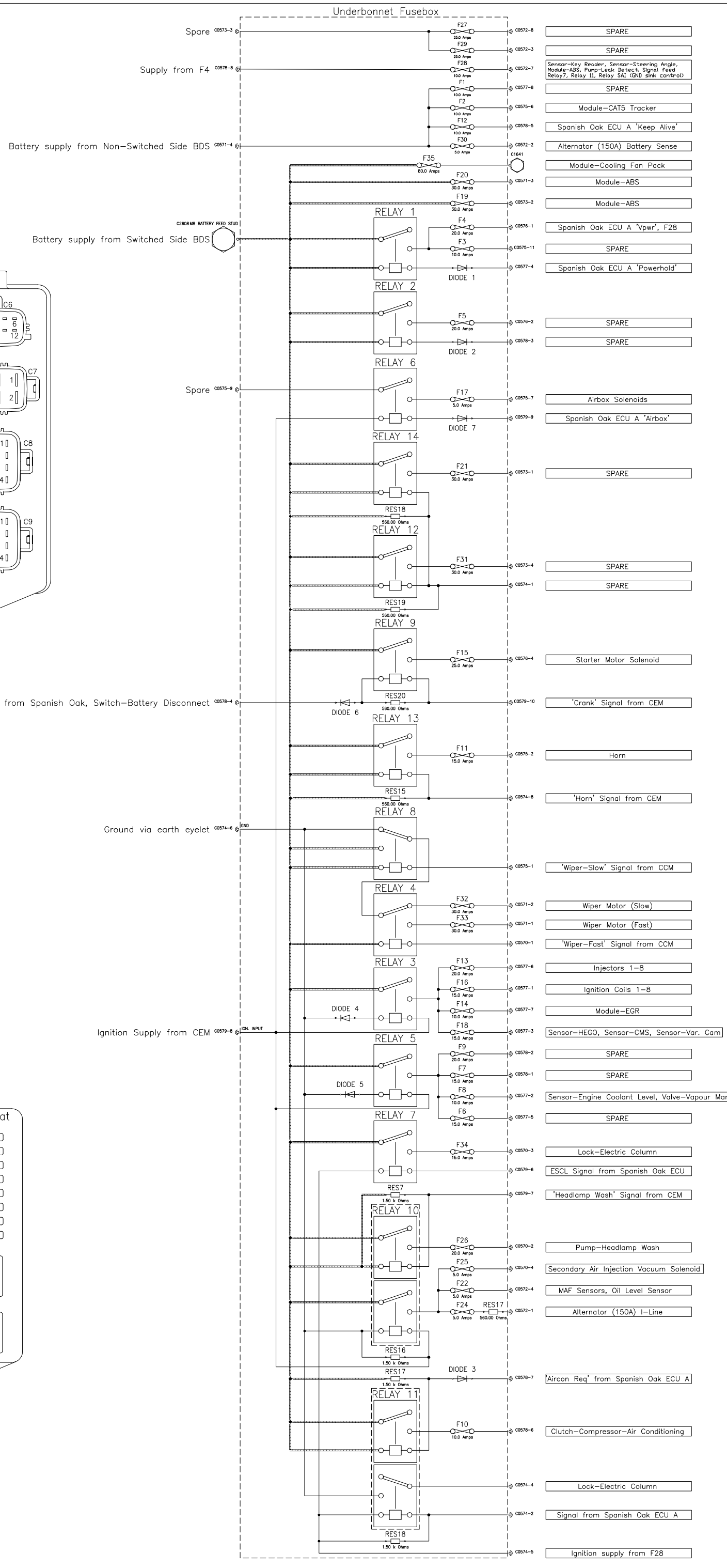

ASTON MARTIN	DRAWN BY Carl Beveridge	TITLE	ENGINE BAY FUSEBOX 8D33-14A173-AB	PROJECT VH206 232	CPSC 00.06.51	AML DRG No.
A1 Circuit	DATE 02-06-08	SUB-SYSTEM TITLE		BUILD J1+90	REV LEVEL A	IL9G33-14T400-AB

VIEW LOOKING INTO CONNECTORS ON MODULE

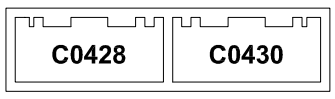

Module–Centre Console–Conn A

Pin	Signal	Destination
C0428–1	GND	Sht 7
C0428–2	GLOVEBOX(O)	Sht 7
C0428–3	2–STAGE ILL(O)	Sht 16
C0428–4	GND	Sht 15
C0428–5	SWITCH PWR(O)	Sht 3,12
C0428–6	PWR(I)	Sht 15
C0428–7	ILL PWR(I)	Sht 15
C0428–8	CAN LS– (IN)	Sht 13
C0428–9	CAN LS+ (IN)	Sht 13
C0428–10	HVAC ECU–RX	Sht 3
C0428–11	HVAC ECU–TX	Sht 3
C0428–12	INTERMITTENT(I)	Sht 12
C0428–13	ICE(I)	Sht 15
C0428–14	PASS DR DIODE(O)	Sht 8
C0428–15	WIPER SLOW(I)	Sht 12
C0428–16	WASH(I)	Sht 12
C0428–17	MLS(I)	Sht 11
C0428–18	DI LEFT(I)	Sht 11
C0428–19	DI RIGHT(I)	Sht 11
C0428–20	CAN LS– (OUT)	Sht 13
C0428–21	CAN LS+ (OUT)	Sht 13
C0428–22	SW–TRIP T1/T2	Sht 6
C0428–23	SW–READ MESSAGE	Sht 6
C0428–24	PASS DR DIODE(I)	Sht 8
C0428–25	GLOVEBOX(I)	Sht 7
C0428–26	WIPER PARK(I)	Sht 12
C0428–27	FLICK WIPE(I)	Sht 12
C0428–28	ECT(O)	Sht 3
C0428–29	EXT. AMB TEMP(O)	Sht 3
C0428–30	HAZ FL ILL(I)	Sht 11
C0428–31	HAZ SW(O)	Sht 11
C0428–32	DRVR DR DIODE(O)	Sht 8
C0428–33	DRVR DR DIODE(I)	Sht 8
C0428–34	IVD SW(I)	Sht 1

Module–Centre Console–Conn C

Pin	Signal	Destination
C0430–1	PWR(I)	Sht 15
C0430–2	WIPER SLOW(O)	Sht 12
C0430–3	LEFT MAP(O)	Sht 16
C0430–4	MAP DIM(I)	Sht 16
C0430–5	RIGHT MAP(O)	Sht 16
C0430–6	WIPER FAST(O)	Sht 12
C0430–7	PRND_TWO_STAGE(I)	Not used
C0430–8	PRND_GND(I)	Not used
C0430–9	PAD(O)	Sht 2
C0430–10	PRND_R_GND_SW(O)	Not used
C0430–11	IVD TT(O)	Sht 1
C0430–12	PRND_D_GND_SW(O)	Not used
C0430–13	TWILIGHT(O)	Sht 11
C0430–14	PRND_N_GND_SW(O)	Not used
C0430–15	WIPER FAST(I)	Sht 12
C0430–16	PRND_P_GND(O)	Not used
C0430–17	PRND_N_TT(O)	Not used
C0430–18	PRND_R_TT(O)	Not used
C0430–19	PRND_D_TT(I)	Not used
C0430–20	PRND_SUPPLY(I)	Not used
C0430–21	PRND_TCM	Not used
C0430–22	PRND_R_SW1(I)	Not used
C0430–23	PRND_D_SW1(I)	Not used
C0430–24	PRND_P_SW1(I)	Not used
C0430–25	PRND_BV_REF(I)	Not used
C0430–26	PRND_N_SW2(I)	Not used
C0430–27	PRND_R_SW2(I)	Not used
C0430–28	PRND_PCM_ENGOFF(O)	Not used
C0430–29	PRND_P_TT(O)	Not used
C0430–30	PRND_TCM	Not used
C0430–31	PRND_N_SW1(I)	Not used
C0430–32	PRND_1(O)	Not used
C0430–33	PRND_2(O)	Not used
C0430–34	PRND_P_SW2(I)	Not used
C0430–35	PRND_D_SW2(I)	Not used

ECU (E–Engine)

Pin	Signal	Destination
C0636–1	CD1(O)	Sht 9
C0636–2	INJ1(O)	Sht 9
C0636–3	INJ2(O)	Sht 9
C0636–4	INJ3(O)	Sht 9
C0636–5	INJ4(O)	Sht 9
C0636–6	EVR–CC	Sht 9
C0636–7	TPRTN	Sht 9
C0636–8	INJ5(O)	Sht 9
C0636–9	INJ2(O)	Sht 9
C0636–10	INJ7(O)	Sht 9
C0636–11	INJ8(O)	Sht 9
C0636–12	CD5(O)	Sht 9
C0636–13	IAT(I)	Sht 9
C0636–14	FC–V(O)	Sht 10
C0636–15	VRSRTN	Sht 9
C0636–16	VCT1(I)	Sht 9
C0636–17	VCT2(I)	Sht 9
C0636–18	THROTTLE POT BVREF	Sht 9
C0636–19	TP1–NS(I)	Sht 9
C0636–20	KS1–(I)	Sht 9
C0636–21	KS2+(I)	Sht 9
C0636–22	KS2–(I)	Sht 9
C0636–23	KS3–(I)	Sht 9
C0636–24	CD4(O)	Sht 9
C0636–25	CID1(I)	Sht 9
C0636–26	KS4–(I)	Sht 9
C0636–27	KS4+(I)	Sht 9
C0636–28	CID2(I)	Sht 9
C0636–29	TP2–PS(I)	Sht 9
C0636–30	FR HEGO11(I)	Sht 9
C0636–31	FR HEGO21(I)	Sht 9
C0636–32	KS1+(I)	Sht 9
C0636–33	ECT(I)	Sht 9
C0636–34	CKP+(I)	Sht 9
C0636–35	CD2(O)	Sht 9
C0636–36	FRTS(I)	Sht 9
C0636–37	FRPT(I)	Sht 9
C0636–38	CD6(O)	Sht 9
C0636–39	CD3(O)	Sht 9
C0636–40	BVREF	Sht 9
C0636–41	SIGRTN	Sht 9
C0636–42	CD7(O)	Sht 9
C0636–43	CD8(O)	Sht 9
C0636–44	DPFE	Sht 9
C0636–45	CRANK POS–(I)	Sht 9
C0636–46	KS3+(I)	Sht 9
C0636–47	THROTTLE MTR+(O)	Sht 9
C0636–48	THROTTLE MTR–(O)	Sht 9
C0636–49	FR HTR11(O)	Sht 9
C0636–50	FR HTR21(O)	Sht 9

ECU (C–Cowl)

Pin	Signal	Destination
C0635–2	STRT_EN(O)	Sht 19
C0635–4	APP1 BVREF	Sht 9
C0635–5	APP1(I)	Sht 9
C0635–6	APP1 RTN	Sht 9
C0635–7	BRAKE PEDAL SWITCH(I)	Sht 11
C0635–8	BRAKE ON/OFF SWITCH(I)	Sht 11
C0635–10	CASE GROUND	Sht 9
C0635–11	CB1+	Sht 13
C0635–12	MOTOR FUEL PUMP(O)	Sht 10
C0635–13	OIL LEVEL(I)	Sht 9
C0635–14	PSPT(I)	Sht 9
C0635–15	ACCS(I)	Sht 3
C0635–16	APP2 BVREF	Sht 9
C0635–17	APP2(I)	Sht 9
C0635–18	APP2 RTN	Sht 9
C0635–19	SCCS(I)	Sht 7
C0635–20	RESTRAINT DEPLOY IND(I)	Sht 2
C0635–21	FUEL PUMP MONITOR(I)	Sht 10
C0635–22	OIL PR SW(I)	Sht 9
C0635–23	CB1–	Sht 13
C0635–24	POWERHOLD(O)	Shts 1,9,19
C0635–25	ACCR(O)	Sht 3
C0635–26	ACPT(I)	Sht 9
C0635–28	APP3(I)	Sht 9
C0635–29	CSTT(I)	Sht 19
C0635–30	SCCS RTN	Sht 7
C0635–31	TXOUT(O)	Sht 19
C0635–34	EVMV(O)	Sht 9
C0635–35	VPOWER(I)	Shts 1,9
C0635–36	VPOWER(I)	Shts 1,9
C0635–37	PATIL(O)	Sht 6
C0635–38	PBI(O)	Sht 19
C0635–39	CSBT(I)	Sht 19
C0635–40	BVREFB	Sht 9
C0635–41	SIGRTNB	Shts 9,19
C0635–42	RXIN(I)	Sht 19
C0635–43	EBV(O)	Sht 10
C0635–44	FEPS	Sht 13
C0635–45	KEEP ALIVE POWER(I)	Sht 9
C0635–46	CTO(O)	Sht 4
C0635–47	POWER GROUND	Sht 9
C0635–48	POWER GROUND	Sht 9
C0635–49	POWER GROUND	Sht 9
C0635–50	IGNSNS(I)	Sht 9

ECU (T–Trans)

Pin	Signal	Destination
C0634–1	AIRBOX(O)	Sht –
C0634–2	EAIRM(I)	Sht 10
C0634–4	ECL(I)	Sht 9
C0634–7	MAP	Sht 9
C0634–8	EOT	Sht 9
C0634–9	MAF+(I)	Sht 9
C0634–10	MAF–(I)	Sht 9
C0634–11	MAF+(I)	Sht 9
C0634–12	IAT(I)	Sht 9
C0634–13	SOLENOID(O)	Sht 10
C0634–14	CB2+	Sht 13
C0634–17	DRIVE TT(O)	Sht 4
C0634–18	SPORT TT(O)	Sht 4
C0634–21	MIL(O)	Sht 6
C0634–23	MAF–(I)	Sht 9
C0634–24	HEGO12(I)	Sht 9
C0634–25	HEGO22(I)	Sht 9
C0634–26	CB2–	Sht 13
C0634–33	SPORT SW(I)	Sht 4
C0634–34	ESCL	Sht 19
C0634–36	BAP(I)	Sht 9
C0634–38	ALTMON(I)	Sht 10
C0634–40	BVREFC	Sht 9
C0634–41	SIGRTNC	Sht 9
C0634–42	ESCL	Sht 19
C0634–44	PUMP(O)	Sht 10
C0634–47	RR HTR12(O)	Sht 9
C0634–48	RR HTR22(O)	Sht 9
C0634–49	EAIR(O)	Sht 10
C0634–50	HTR(O)	Sht 10

ENGINE

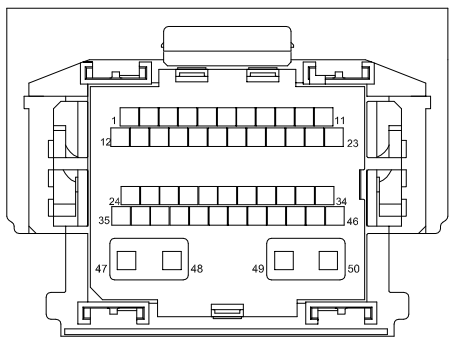

COWL

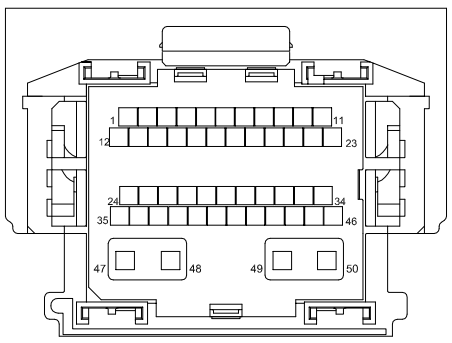

TRANSMISSION

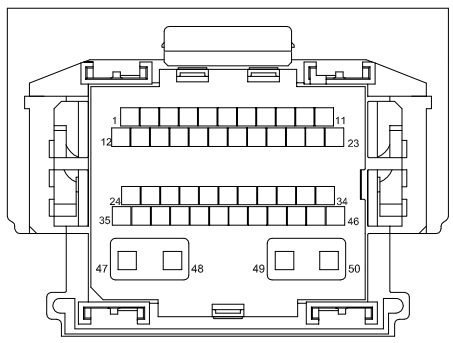

NOTES –
THE CONNECTOR VIEWS ARE LOOKING INTO THE ENGINE HARNESS CONNECTORS ON WIRE INSERTION SIDE.

THE SHADED AREAS ARE LOOKING INTO THE ENGINE HARNESS CONNECTORS ON THE TERMINAL SIDE.

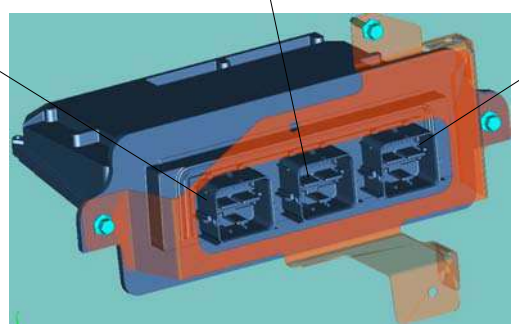

ASTON MARTIN	DRAWN BY Carl Beveridge	TITLE CENTRE CONSOLE MODULE, ENGINE ECU (SPANISH OAK) (PINOUTS)	PROJECT VH206 232	CPSC 00.06.51	AML DRG No.
A1 Circuit	DATE 02–06–08	SUB-SYSTEM TITLE	BUILD J1+90	REV LEVEL A	IL9G33–14T400–AB

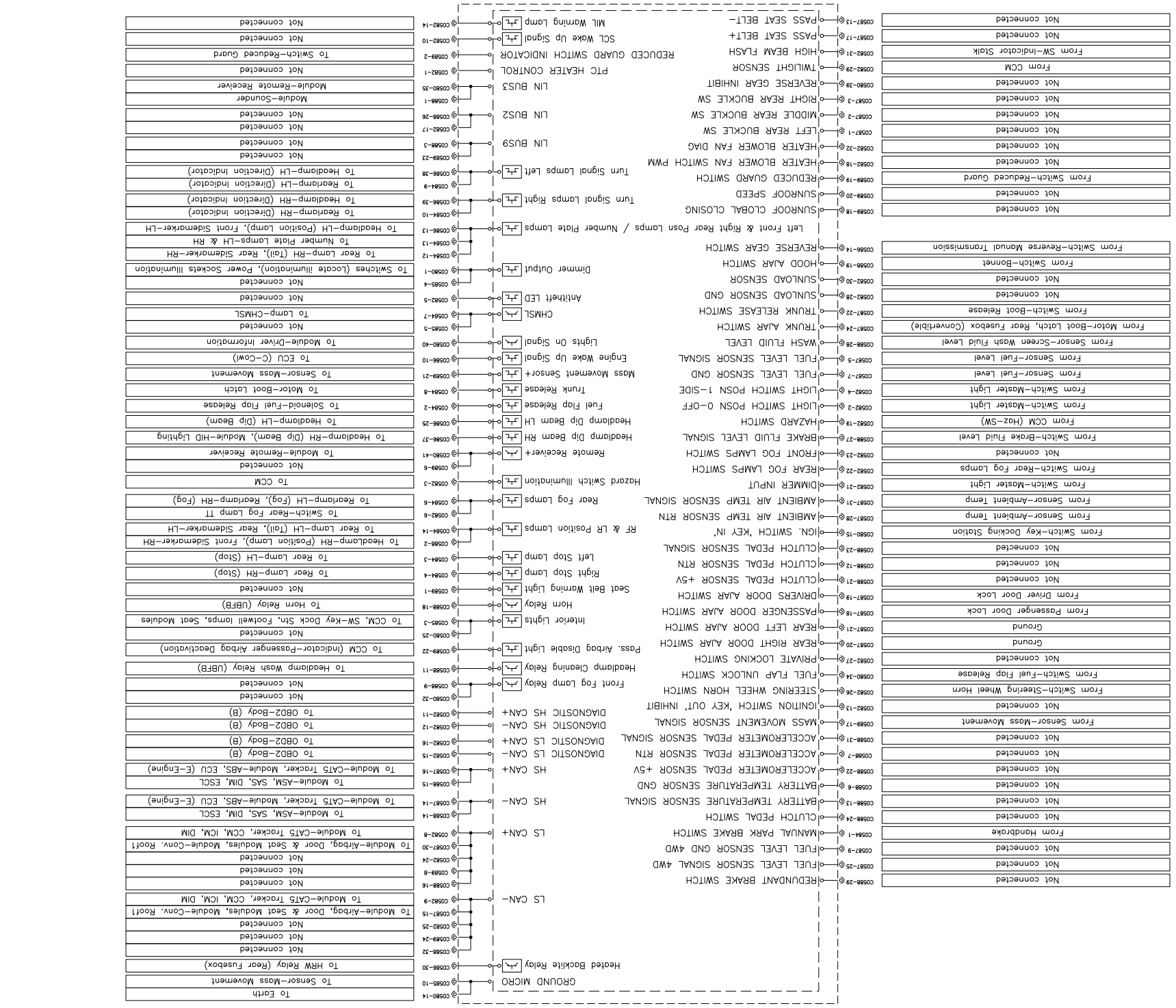
Not connected
Not connected
From Sensor–Mass Movement
Not connected
From Switch–Steering Wheel Horn
Not connected
From Switch–Fuel Flap Release
Not connected
Ground
Not connected
Ground
Not connected
Not connected
From Passenger Door Lock
From Driver Door Lock
Not connected
Not connected
Not connected
From Switch–Key Docking Station
From Sensor–Ambient Temp
From Sensor–Ambient Temp
From Switch–Master Light
From Switch–Rear Fog Lamps
Not connected
From Switch–Brake Fluid Level
From CCM (H2–SW)
From Switch–Master Light
From Switch–Master Light
From Sensor–Fuel Level
From Sensor–Fuel Level
From Sensor–Fuel Level
From Sensor–Screen Wash Fluid Level
From Motor–Boot Latch, Rear Fusebox (Convertible)
From Switch–Boot Release
Not connected
Not connected
Not connected
From Switch–Bonnet
From Switch–Reverse Manual Transmission
Not connected
Not connected
From Switch–Reduced Guard
Not connected
Not connected
Not connected

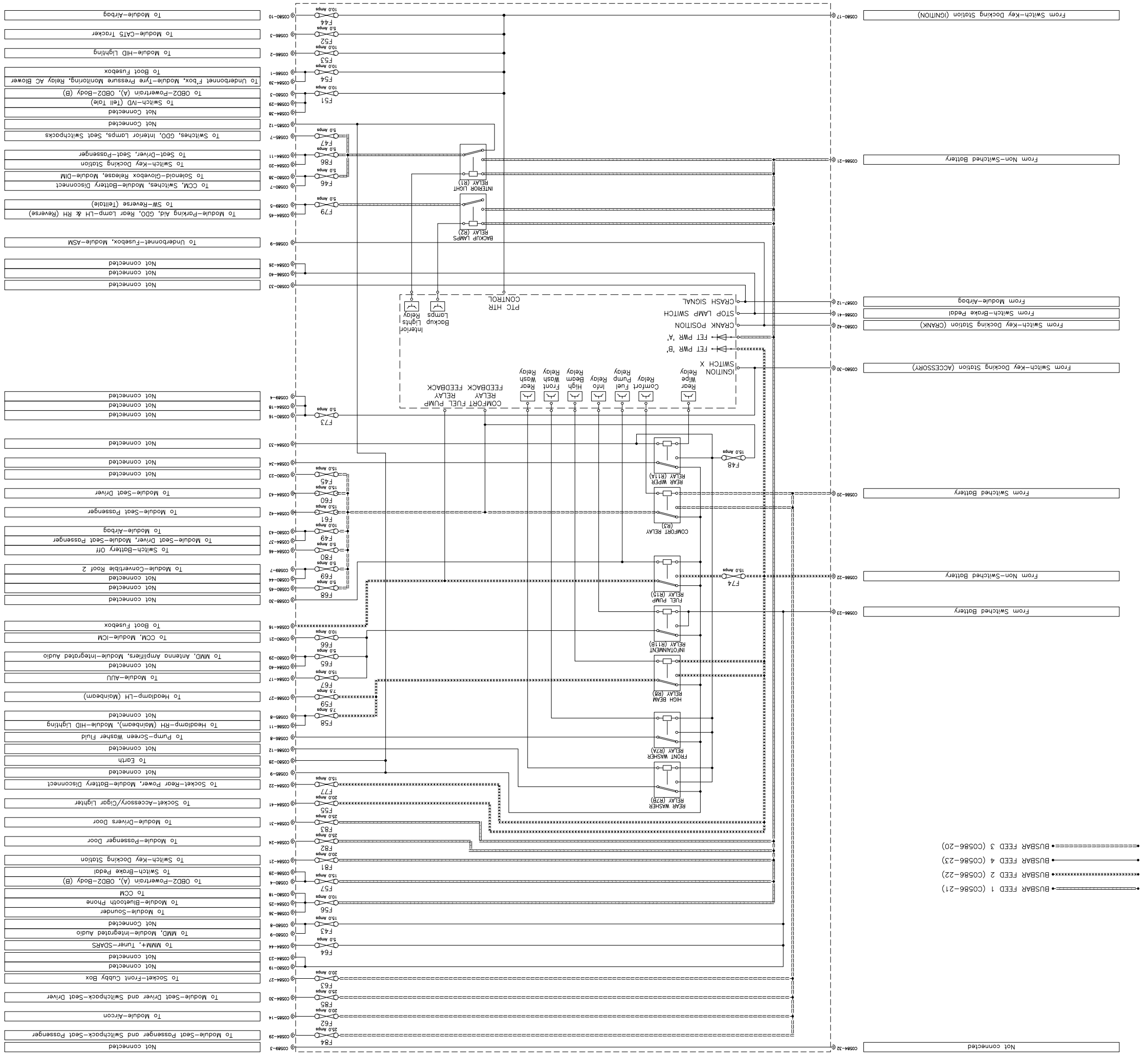

PROJECT	VH206 232
BUILD	J1+90
CPSC	00.06.51
REV LEVEL	A
AML DRG No.	IL9G33-14T400-AB
2 OF 2	

DRAWN BY Carl Beveridge
DATE 02-06-08
TITLE SUB-SYSTEM TITLE
CEM

ASTON MARTIN

A1 Circuit

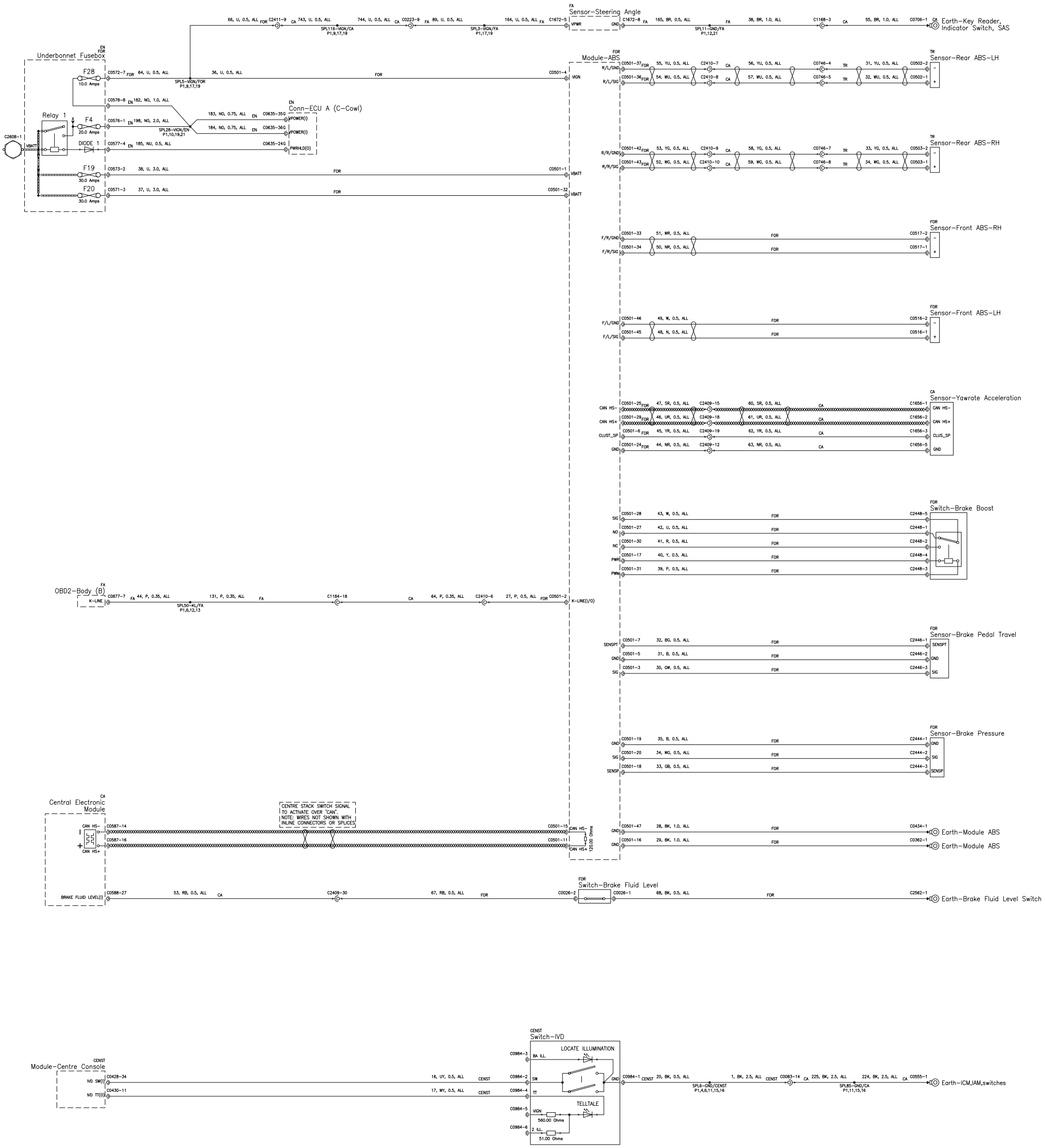

ASTON MARTIN	DRAWN BY Carl Beveridge	TITLE ABS / DSC / IVD	PROJECT VH206 232	CPSC 00.06.51	AML DRG No.
	DATE 02-06-08	SUB-SYSTEM TITLE	BUILD Job1+90	REV LEVEL A	IL9G33-14T400-AB

A1 Circuit

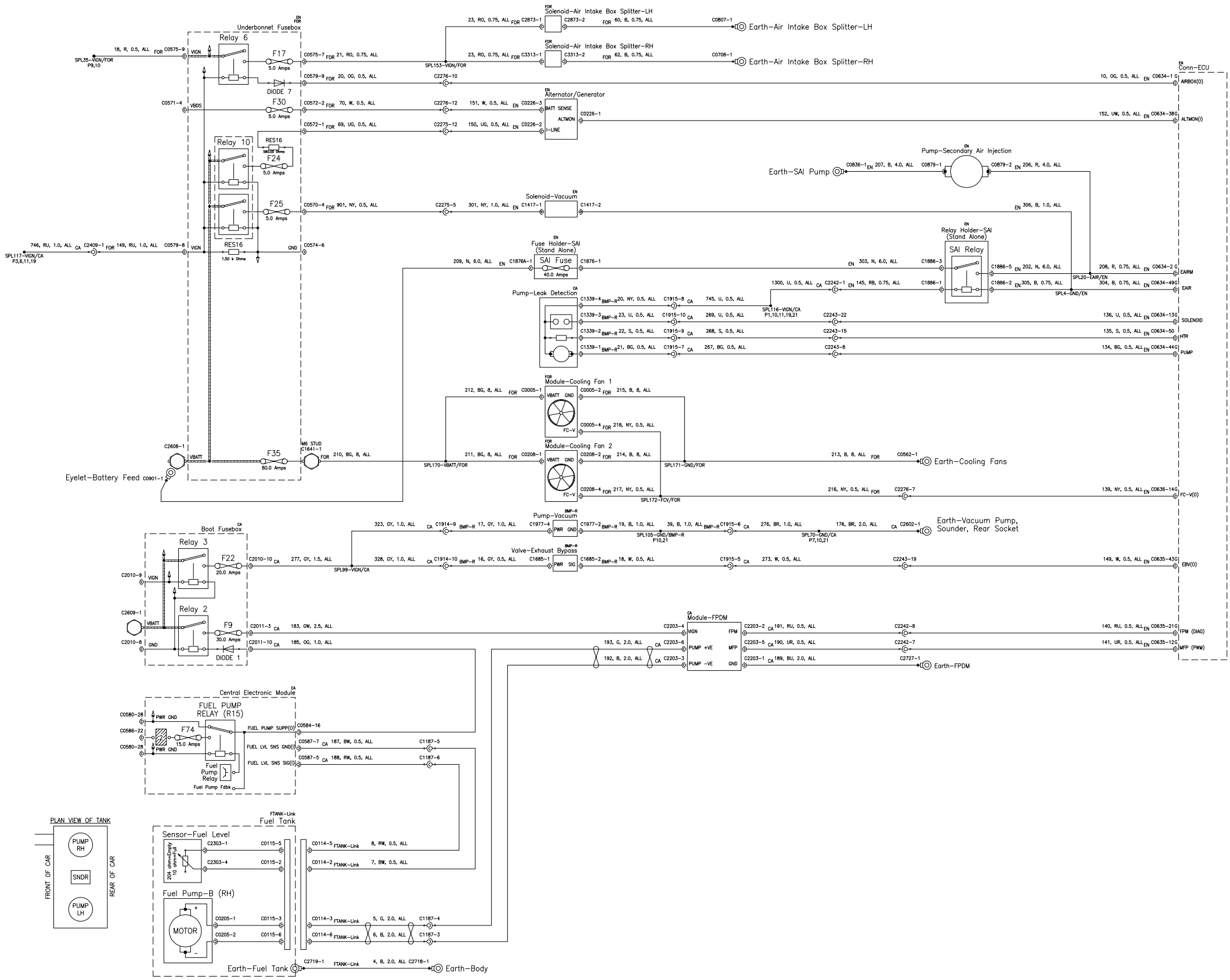

ASTON MARTIN	DRAWN BY Carl Beveridge	TITLE ENGINE OPERATED AUXILIARY SYSTEMS	PROJECT VH206 232	CPSC 00.06.51	AML DRG No.
	DATE 02–06–08	SUB-SYSTEM TITLE	BUILD Job1+90	REV LEVEL A	IL9G33–14T400–AB

A1 Circuit

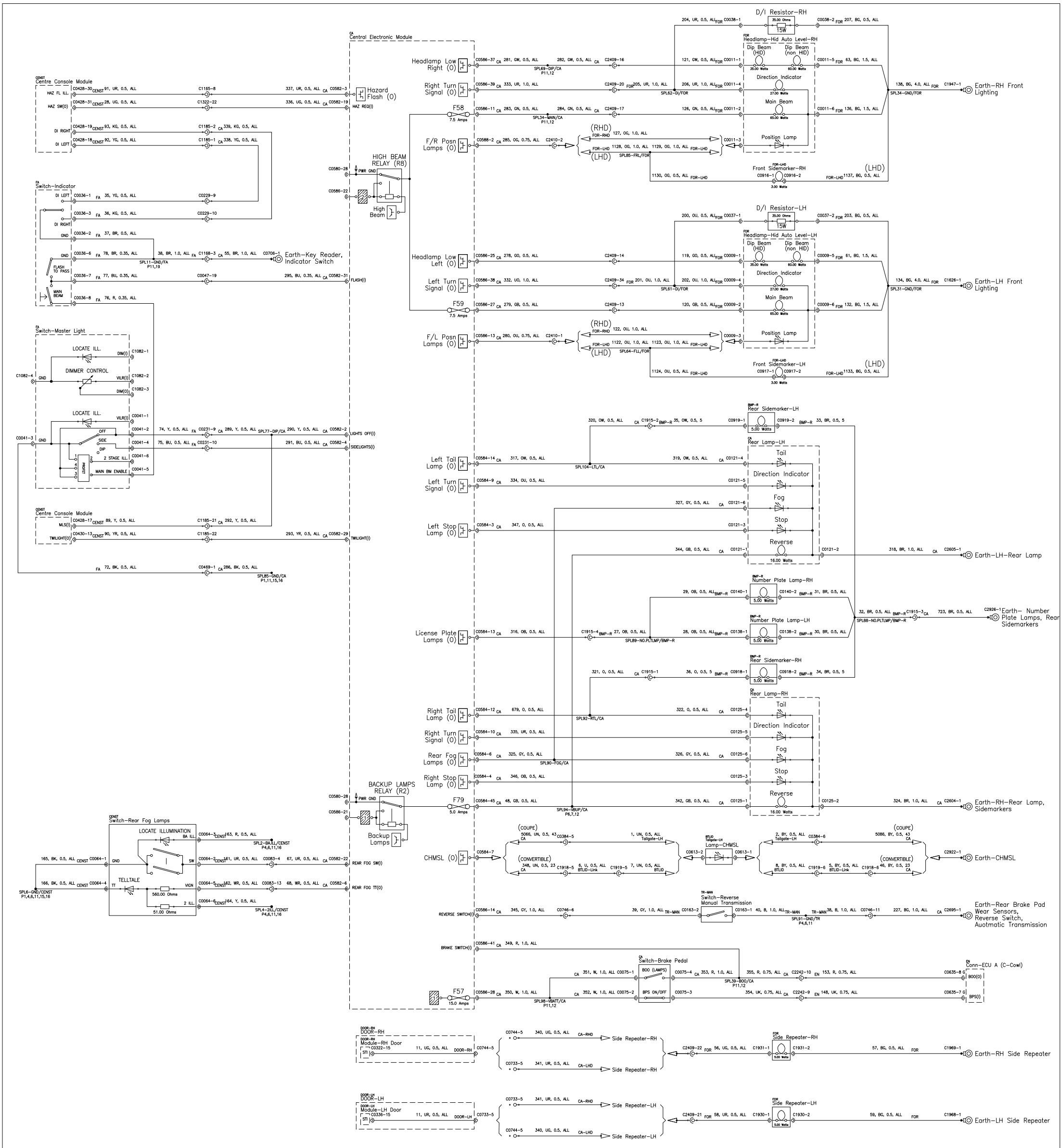

ASTON MARTIN	DRAWN BY Carl Beveridge	TITLE EXTERIOR LIGHTING	PROJECT VH206 232	CPSC 00.06.51	AML DRG No.
A1 Circuit	DATE 02-06-08	SUB-SYSTEM TITLE	BUILD Job1+90	REV LEVEL A	IL9G33-14T400-AB

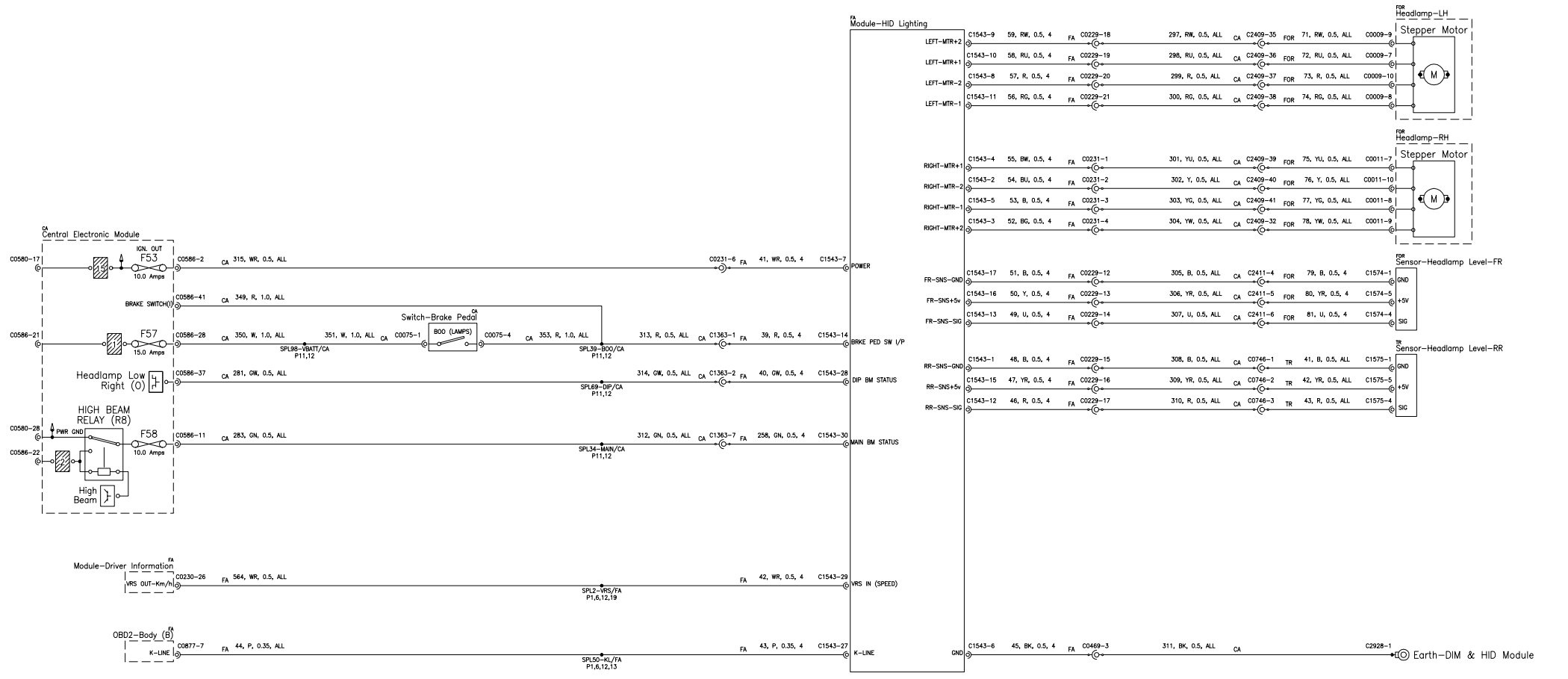

WINDSCREEN WIPERS WILL NOT OPERATE WITH THE BONNET OPEN.

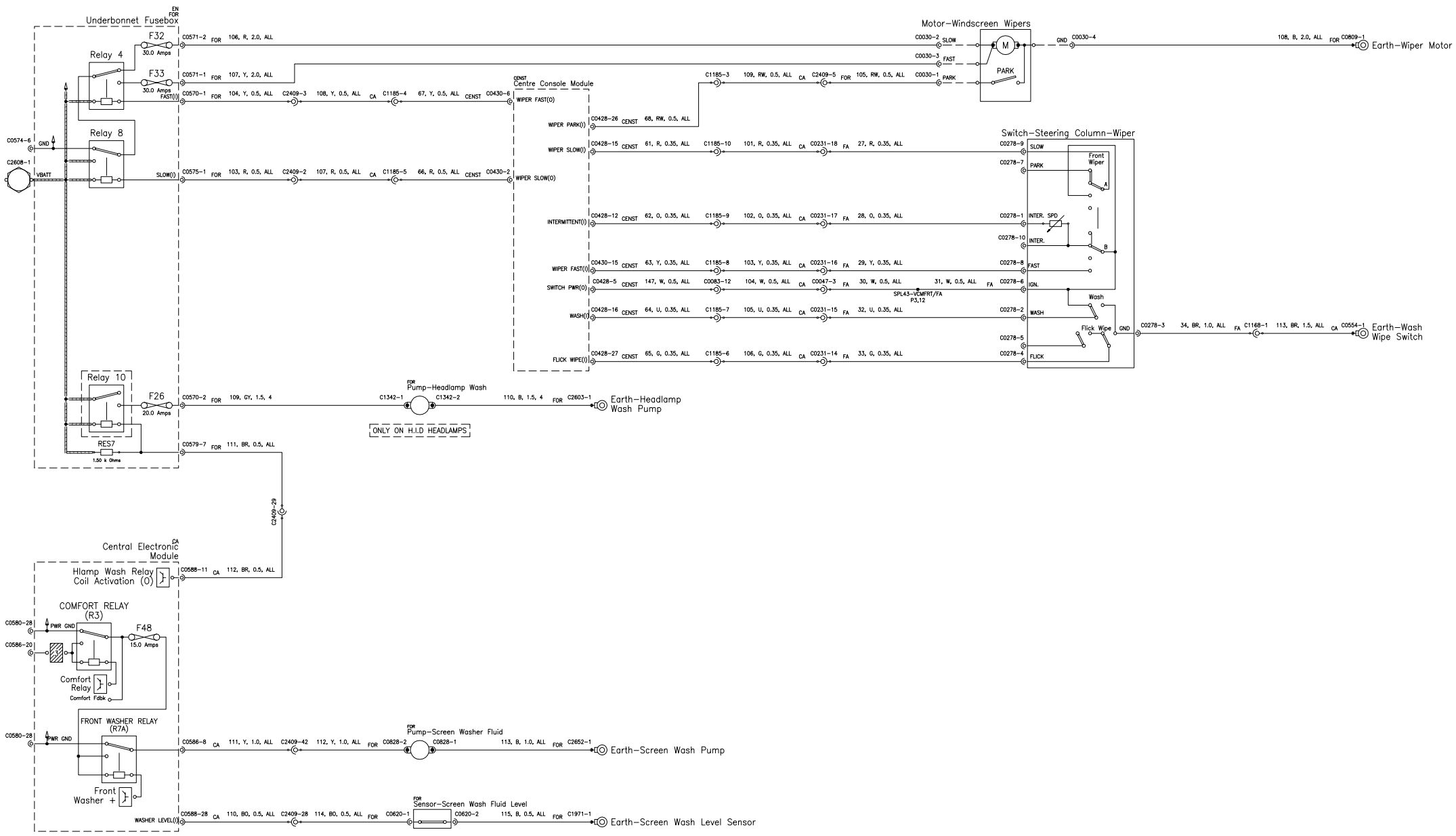

ASTON MARTIN	DRAWN BY Carl Beveridge	TITLE HID LIGHTING & WASH WIPE	PROJECT VH206 232	CPSC 00.06.51	AML DRG No.
	DATE 02-06-08	SUB-SYSTEM TITLE	BUILD Job1+90	REV LEVEL A	IL9G33-14T400-AB

A1 Circuit

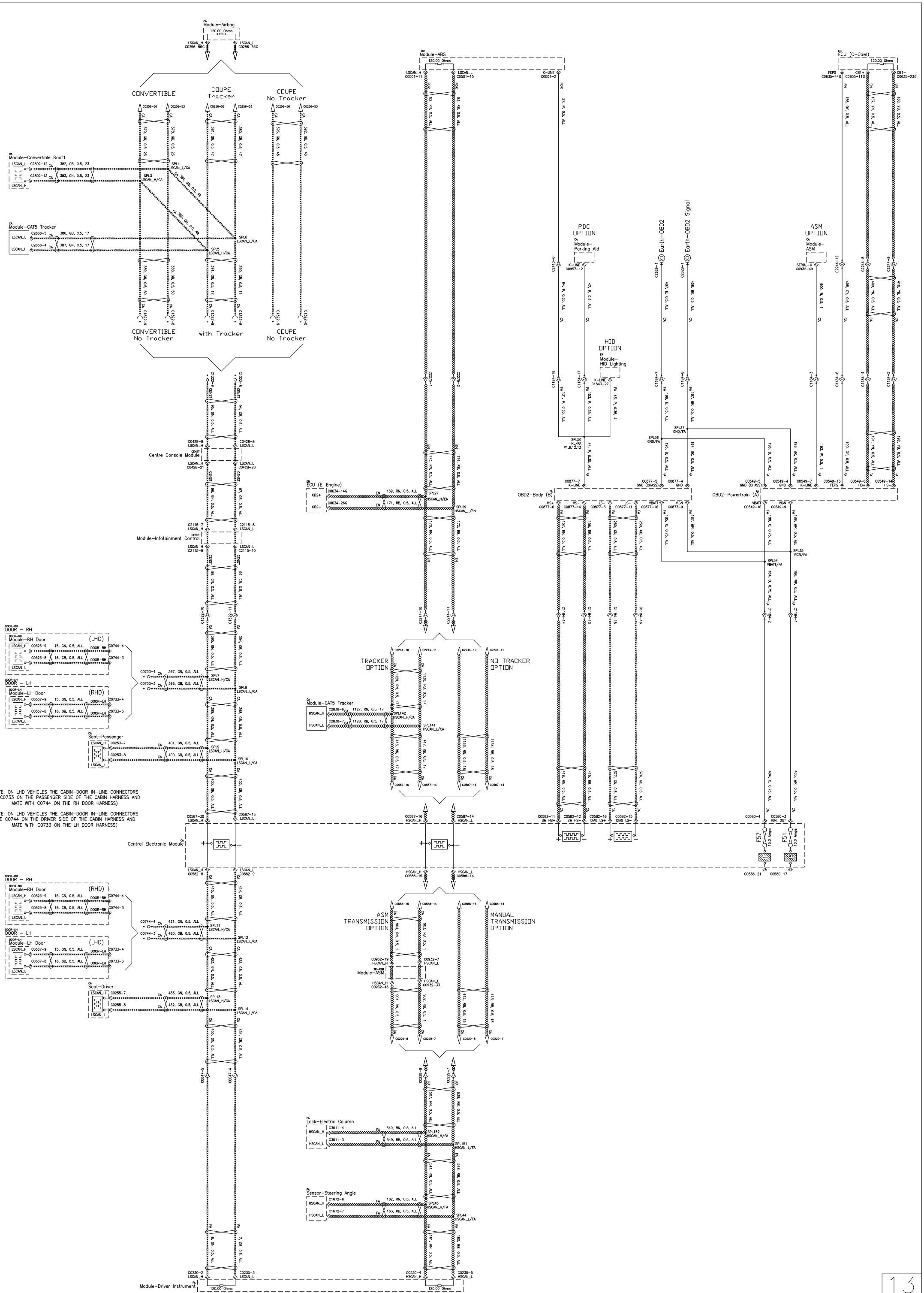

(NOTE: ON LHD VEHICLES THE CABIN-DOOR IN-LINE CONNECTORS ARE C0733 ON THE PASSENGER SIDE OF THE CABIN HARNESS AND MATE WITH C0744 ON THE RH DOOR HARNESS)

(NOTE: ON LHD VEHICLES THE CABIN-DOOR IN-LINE CONNECTORS ARE C0744 ON THE DRIVER SIDE OF THE CABIN HARNESS AND MATE WITH C0733 ON THE LH DOOR HARNESS)

ASTON MARTIN	DRAWN BY Carl Beveridge	TITLE	PROJECT VH206 232	CPSC 00.06.51	AML DRG No.
	DATE 16-06-08	SUB-SYSTEM TITLE	BUILD Job1+90	REV LEVEL A	IL9G33-14T400-AB

HIGH AND LOW SPEED CAN (INCLUDING OBD CONNECTORS)

A1 Circuit

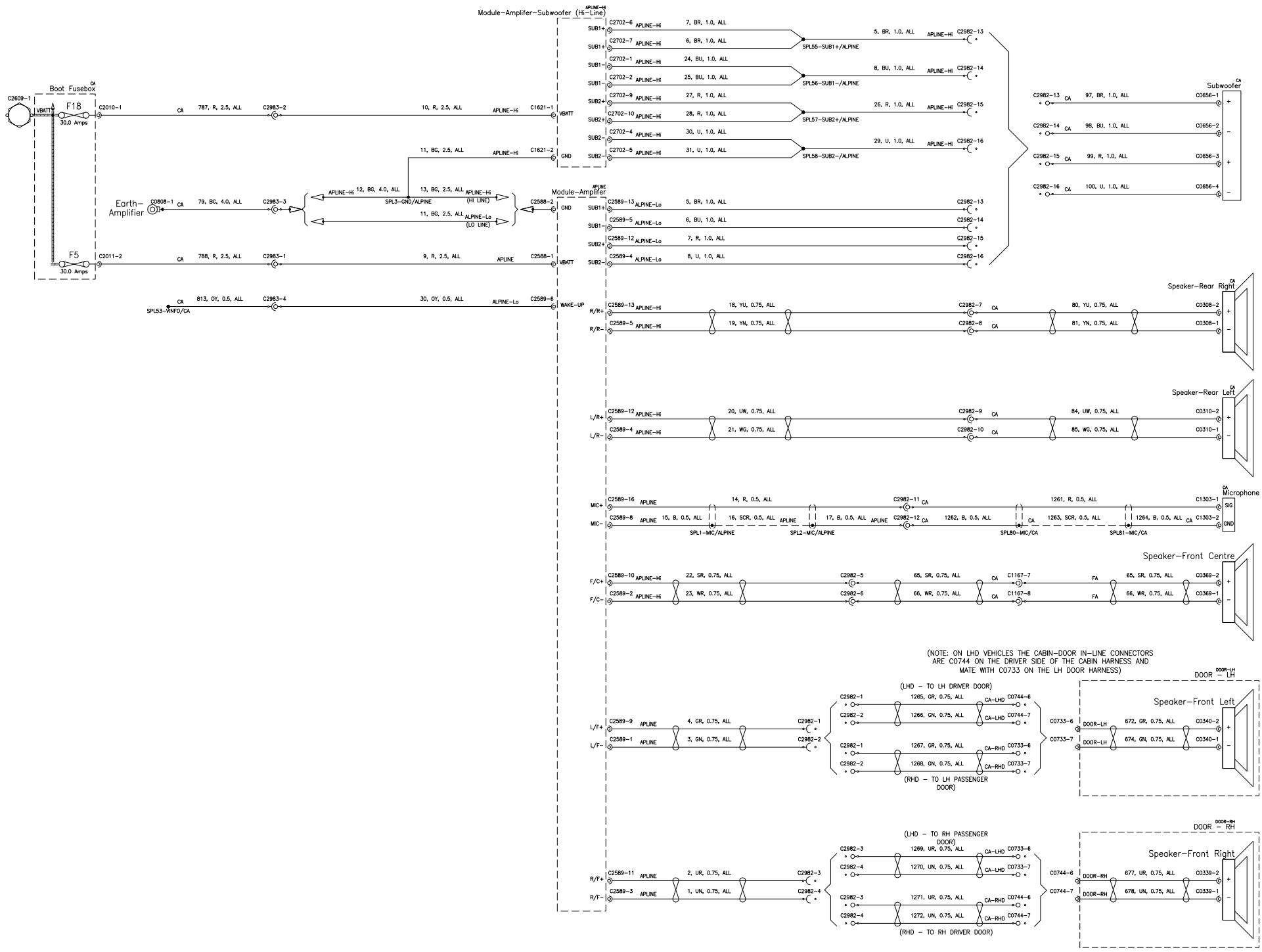

MOST – COMMON

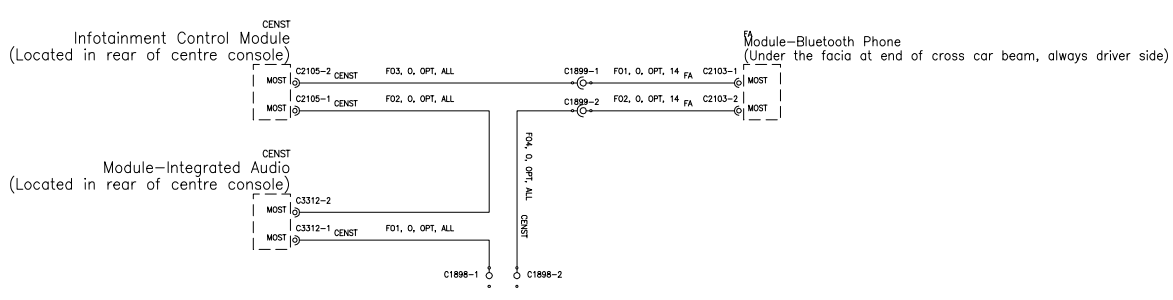

COUPE

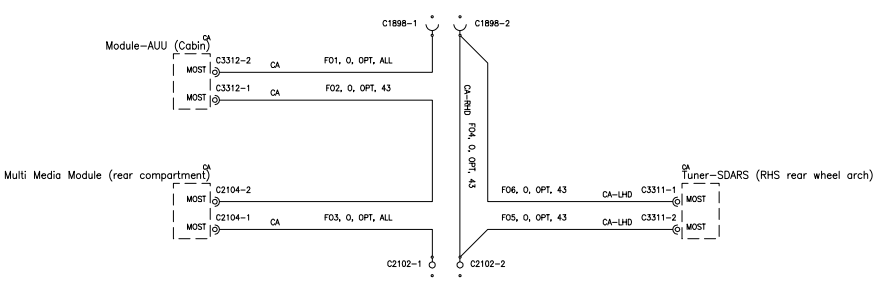

CONVERTIBLE

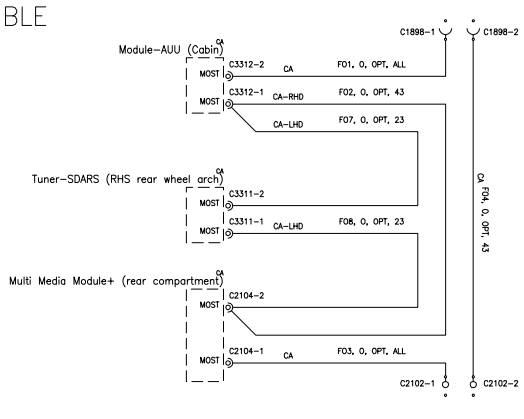

ALPINE – COMMON

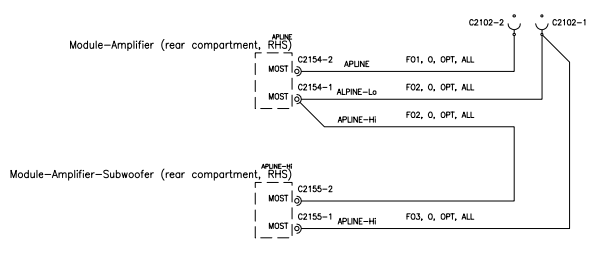

14 OF 19

ASTON MARTIN	DRAWN BY Carl Beveridge	TITLE	PROJECT VH206 232	CPSC 00.06.51	AML DRG No.
A1 Circuit	DATE 02–06–08	SUB-SYSTEM TITLE INFOTAINMENT (AUDIO SYSTEM & MOST CIRCUIT)	BUILD Job1+90	REV LEVEL A	IL9G33–14T400–AB

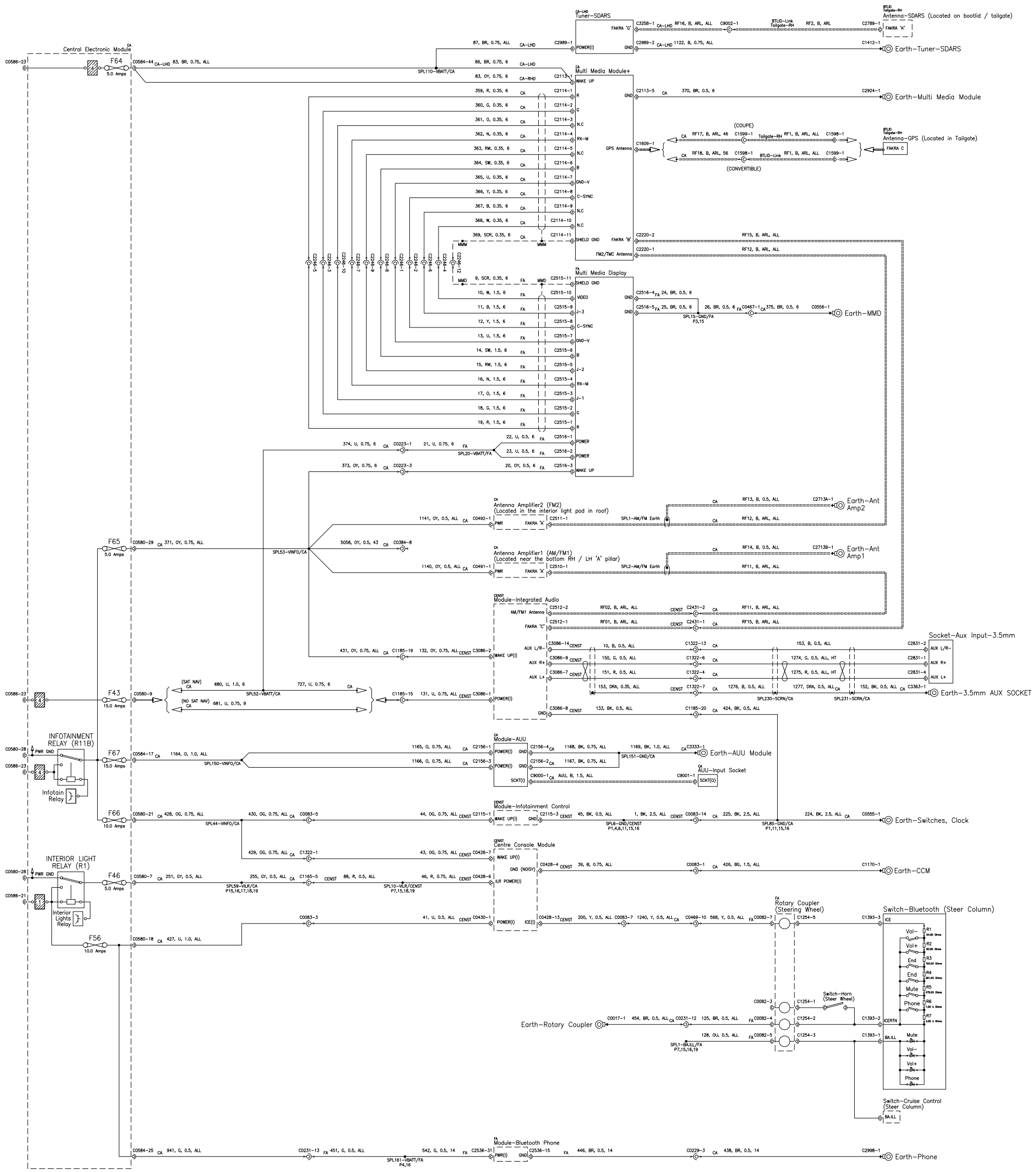

ASTON MARTIN	DRAWN BY Carl Beveridge	TITLE	PROJECT VH206 232	CPSC 00.06.51	AML DRG No.
	DATE 02-06-08	SUB-SYSTEM TITLE INFOTAINMENT (INCLUDING SAT NAV)	BUILD Job1+90	REV LEVEL A	IL9G33-14T400-AB

A1 Circuit

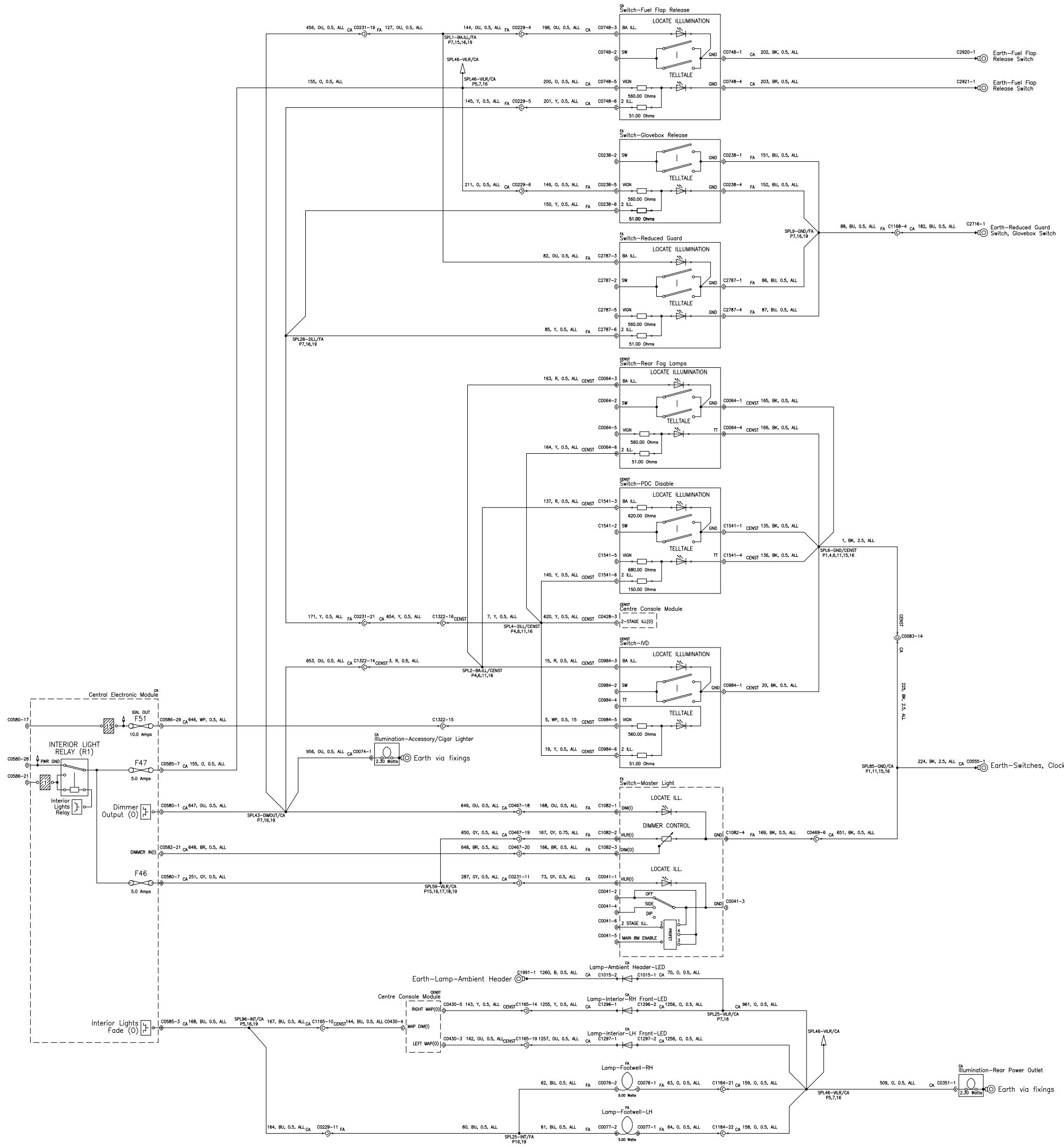

FOR BOOTLAMPS
SEE PAGE 7

ASTON MARTIN	DRAWN BY Carl Beveridge	TITLE	PROJECT VH206 232	CPSC 00.06.51	AML DRG No.
A1 Circuit	DATE 02-06-08	SUB-SYSTEM TITLE INTERIOR ILLUMINATION (BACKGROUND & INTERIOR, EXCLUDING BOOT LAMPS)	BUILD Job1+90	REV LEVEL A	IL9G33-14T400-AB

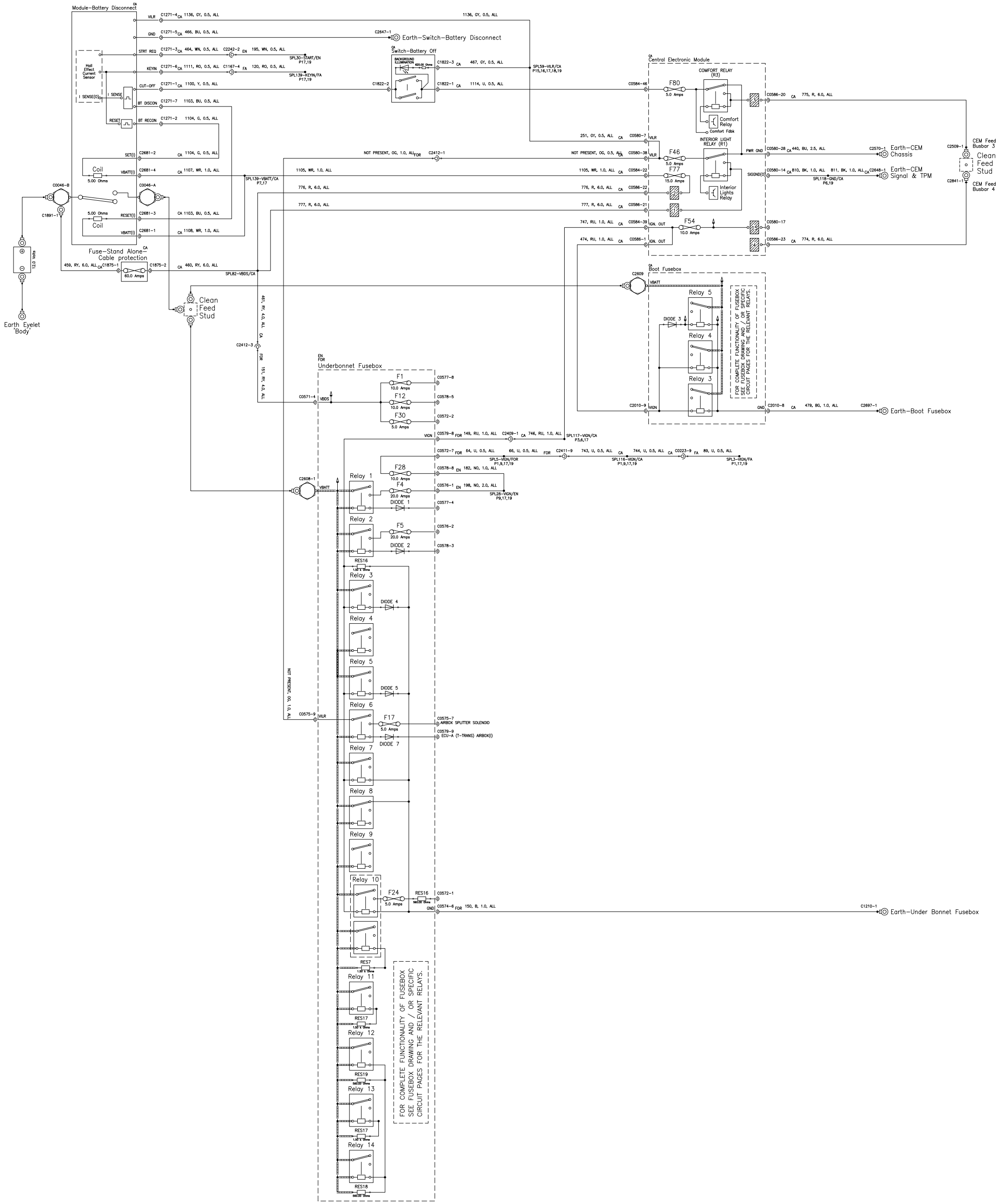

ASTON MARTIN	DRAWN BY Carl Beveridge	TITLE	PROJECT VH206 232	CPSC 00.06.51	AML DRG No.
	DATE 02–06–08	SUB-SYSTEM TITLE	BUILD Job1+90	REV LEVEL A	IL9G33–14T400–AB

POWER DISTRIBUTION

A1 Circuit

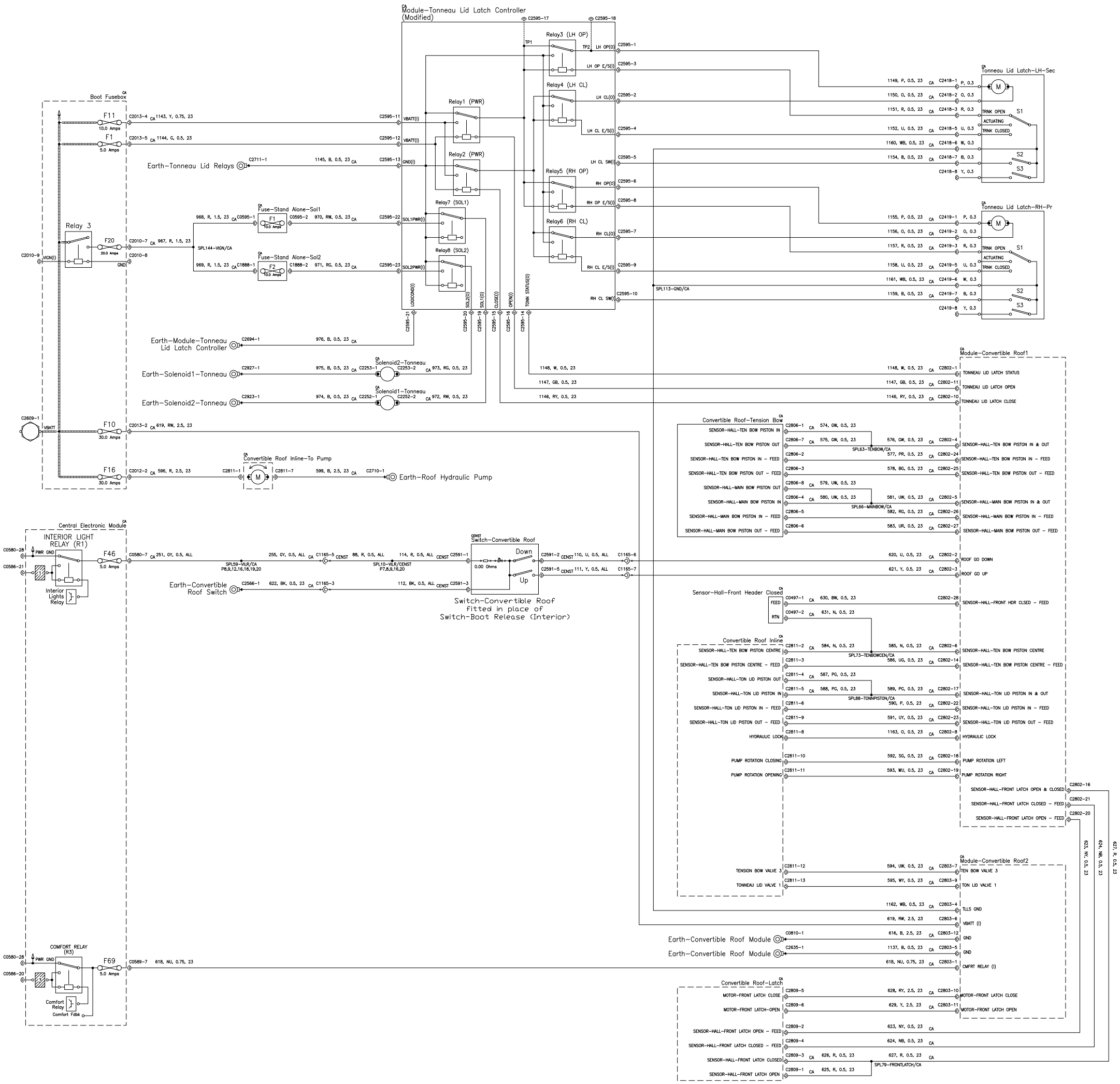

ASTON MARTIN	DRAWN BY Carl Beveridge	TITLE	CONVERTIBLE ROOF SYSTEM	PROJECT VH206 232	CPSC 00.06.51	AML DRG No.
	DATE 02–06–08	SUB-SYSTEM TITLE		BUILD Job1+90	REV LEVEL A	IL9G33–14T400–AB

A1 Circuit

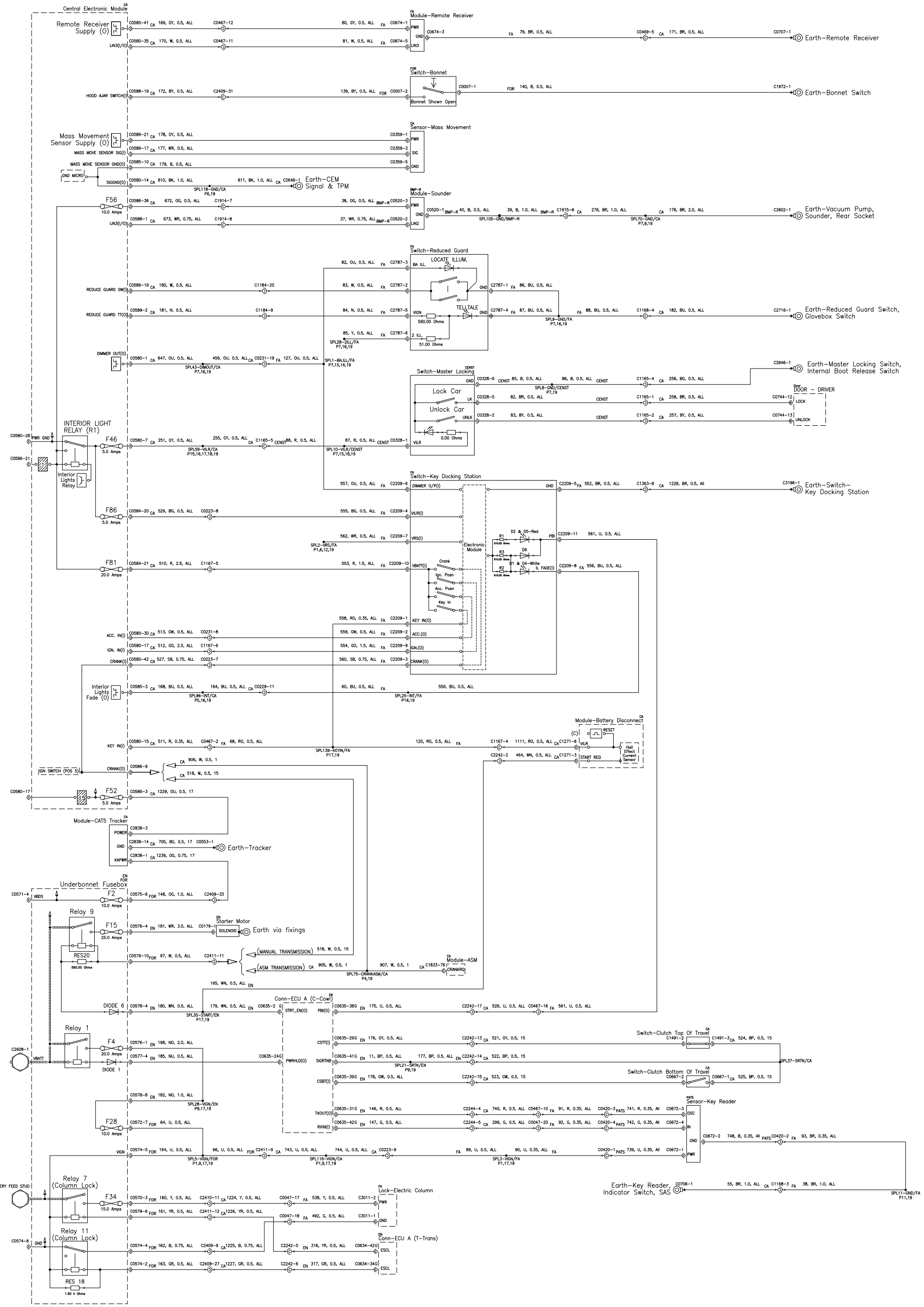

ASTON MARTIN	DRAWN BY Carl Beveridge	TITLE	STARTING AND SECURITY SYSTEM (INCLUDING TRACKER)	PROJECT VH206 232	CPSC 00.06.51	AML DRG No.
	DATE 02–06–08	SUB-SYSTEM TITLE		BUILD Job1+90	REV LEVEL A	IL9G33–14T400–AB

A1 Circuit

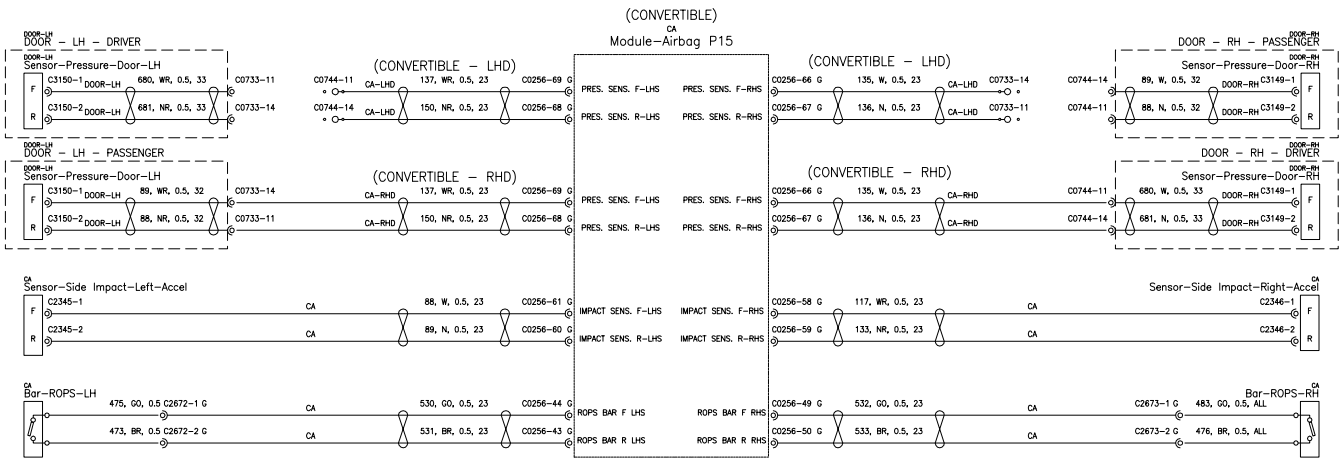

(NOTE: ON LHD VEHICLES THE CABIN–DOOR IN–LINE CONNECTORS ARE C0744 ON THE DRIVER SIDE OF THE CABIN HARNESS AND MATE WITH C0733 ON THE LH DOOR HARNESS)

(NOTE: ON LHD VEHICLES THE CABIN–DOOR IN–LINE CONNECTORS ARE C0733 ON THE PASSENGER SIDE OF THE CABIN HARNESS AND MATE WITH C0744 ON THE RH DOOR HARNESS)

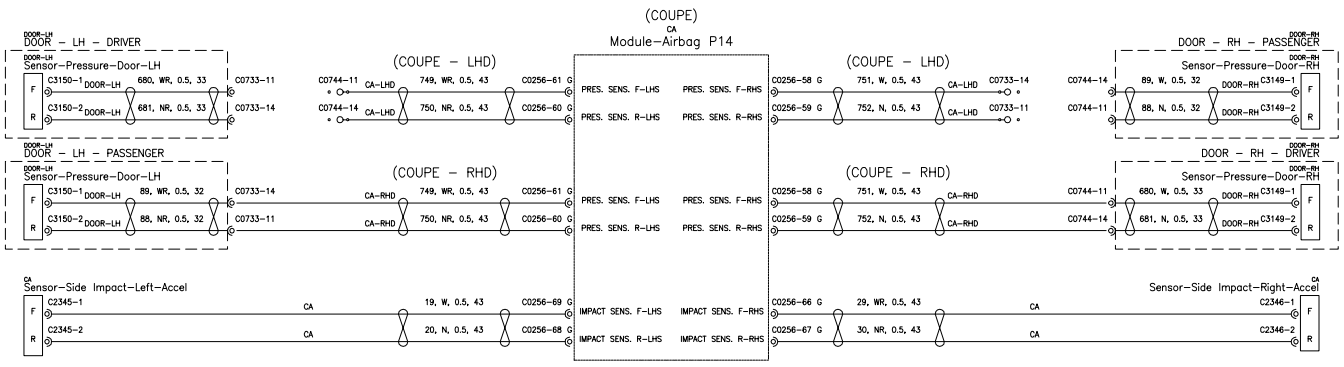

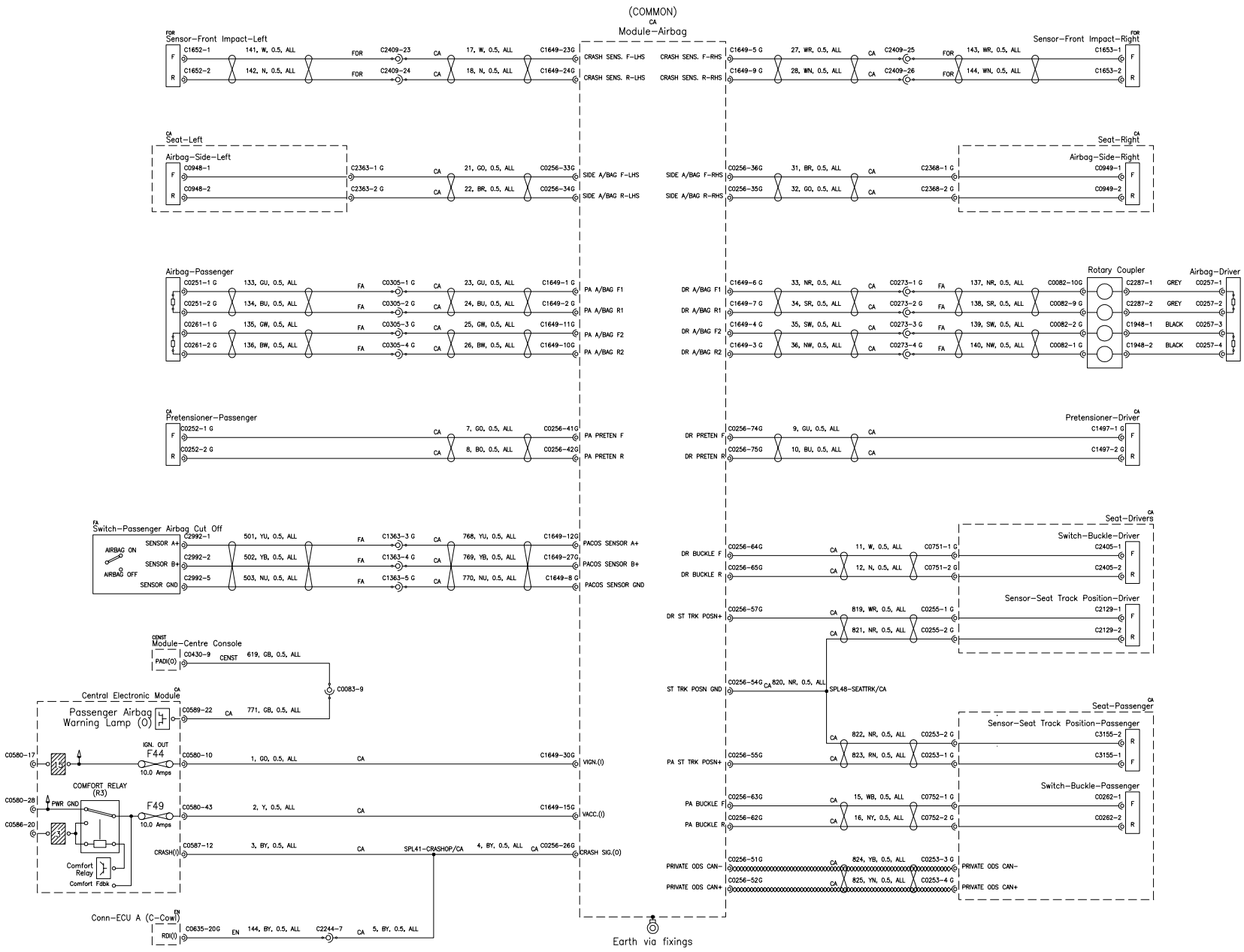

ASTON MARTIN	DRAWN BY Carl Beveridge	TITLE ACTIVE RESTRAINT SYSTEM	PROJECT VH206 232	CPSC 00.06.51	AML DRG No.
A1 Circuit	DATE 02–06–08	SUB-SYSTEM TITLE COUPE (P14) & CONVERTIBLE (P15) MODULES	BUILD Job1+90	REV LEVEL A	IL9G33–14T400–AB

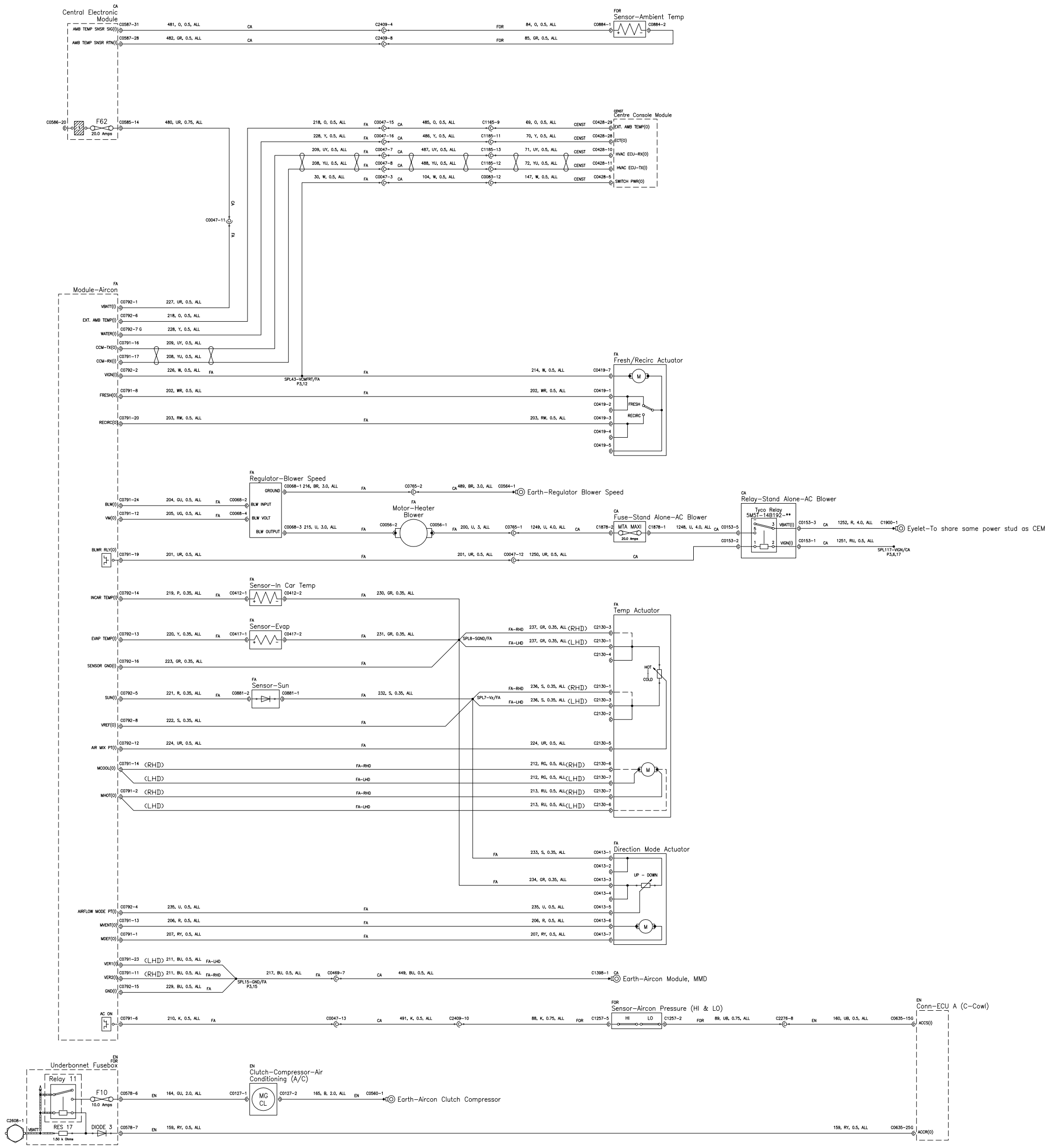

ASTON MARTIN	DRAWN BY Carl Beveridge	TITLE	PROJECT VH206 232	CPSC 00.06.51	AML DRG No.
	DATE 02–06–08	AIR CONDITIONING	BUILD Job1+90	REV LEVEL A	IL9G33–14T400–AB
A1 Circuit		SUB-SYSTEM TITLE			

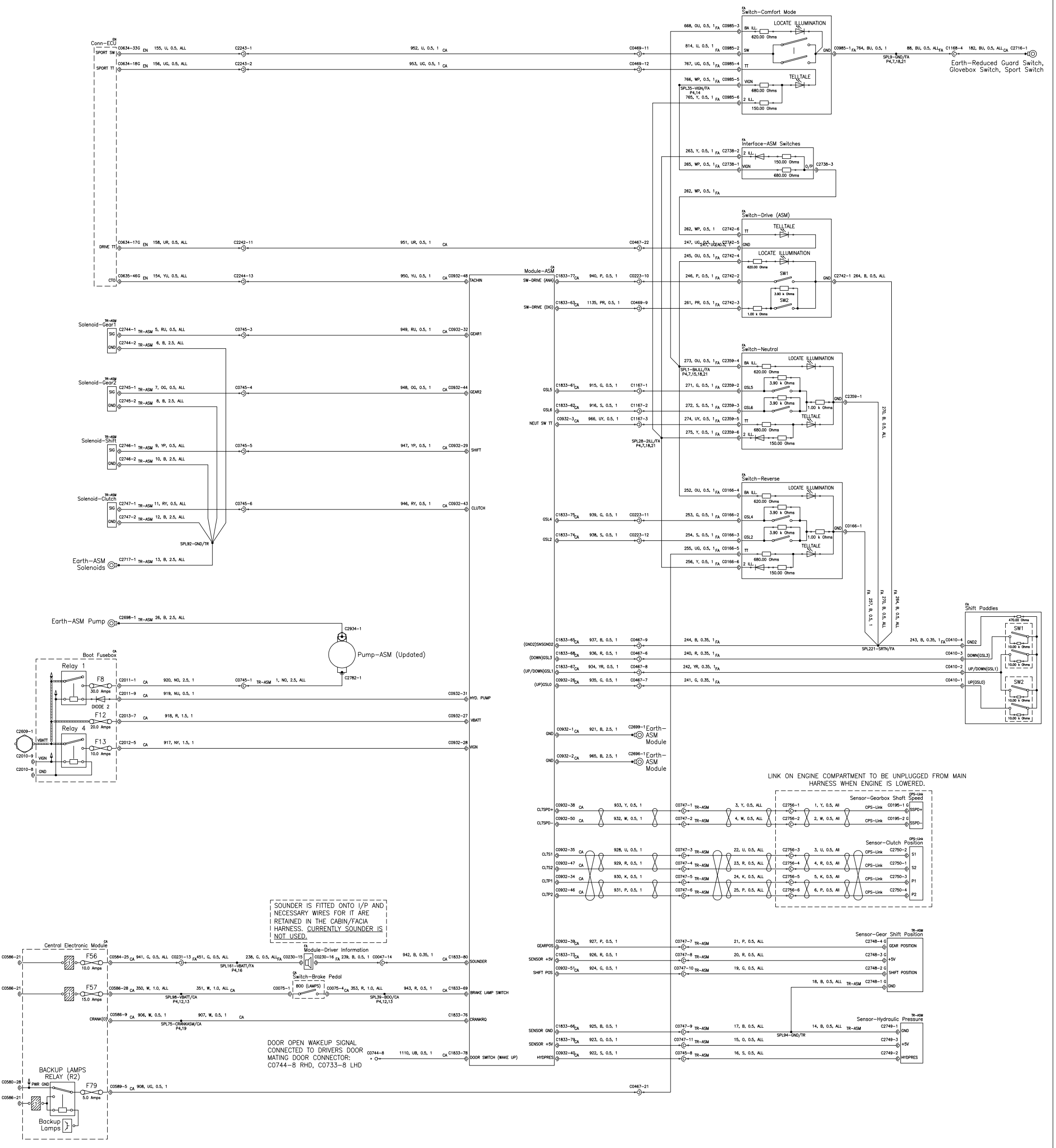

4
OF 19

ASTON MARTIN	DRAWN BY Carl Beveridge	TITLE ASM TRANSMISSION	PROJECT VH206 232	CPSC 00.06.51	AML DRG No.
	DATE 02–06–08	SUB-SYSTEM TITLE	BUILD Job1+90	REV LEVEL A	IL9G33–14T400–AB

A1 Circuit

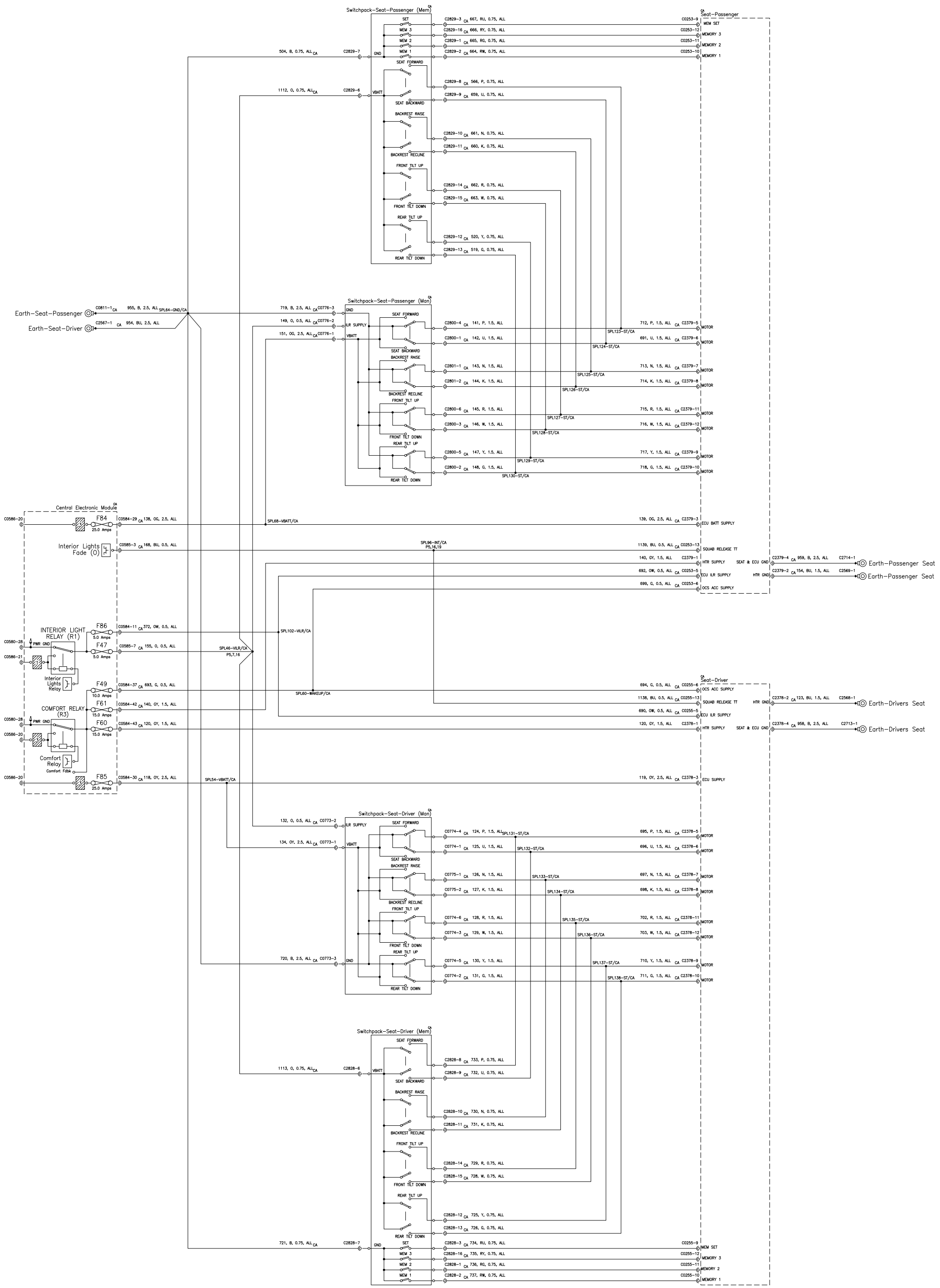

ASTON MARTIN	DRAWN BY Carl Beveridge	TITLE	PROJECT VH206 232	CPSC 00.06.51	AML DRG No.
	DATE 02–06–08	DRIVER AND PASSENGER SEAT	BUILD Job1+90	REV LEVEL A	IL9G33–14T400–AB
		SUB-SYSTEM TITLE			

A1 Circuit

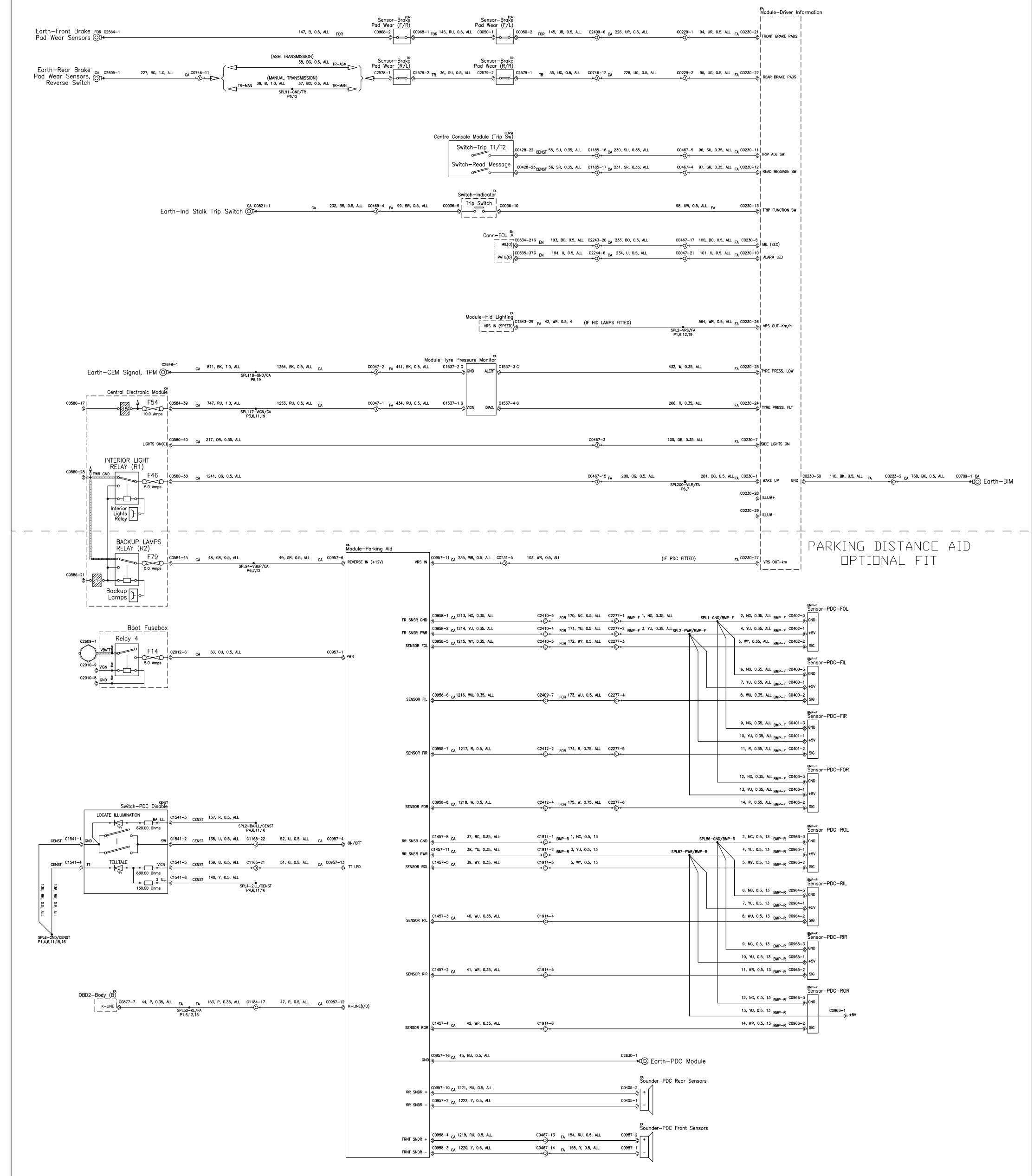

ASTON MARTIN	DRAWN BY Carl Beveridge	TITLE DRIVER INFORMATION MODULE (DIM)	PROJECT VH206 232	CPSC 00.06.51	AML DRG No.
	DATE 02–06–08	SUB-SYSTEM TITLE (INC. PARKING DISTANCE AID, FRONT & REAR)	BUILD Job1+90	REV LEVEL A	IL9G33–14T400–AB

A1 Circuit

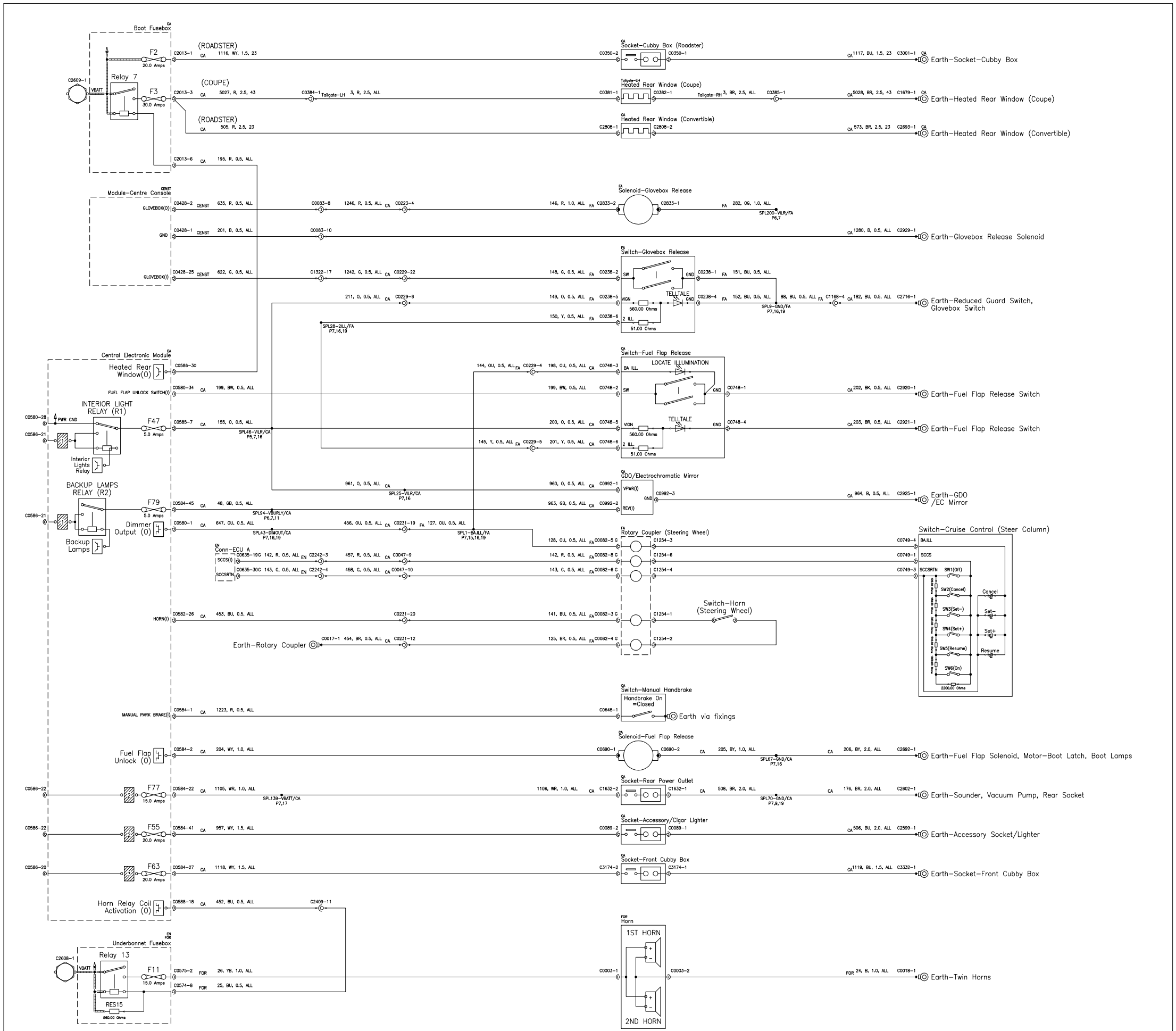

ASTON MARTIN	DRAWN BY Carl Beveridge	TITLE DRIVER OPERATED AUXILIARY SYSTEMS	PROJECT VH206 232	CPSC 00.06.51	AML DRG No.
	DATE 02-06-08	SUB-SYSTEM TITLE	BUILD Job1+90	REV LEVEL A	IL9G33-14T400-AB

A1 Circuit

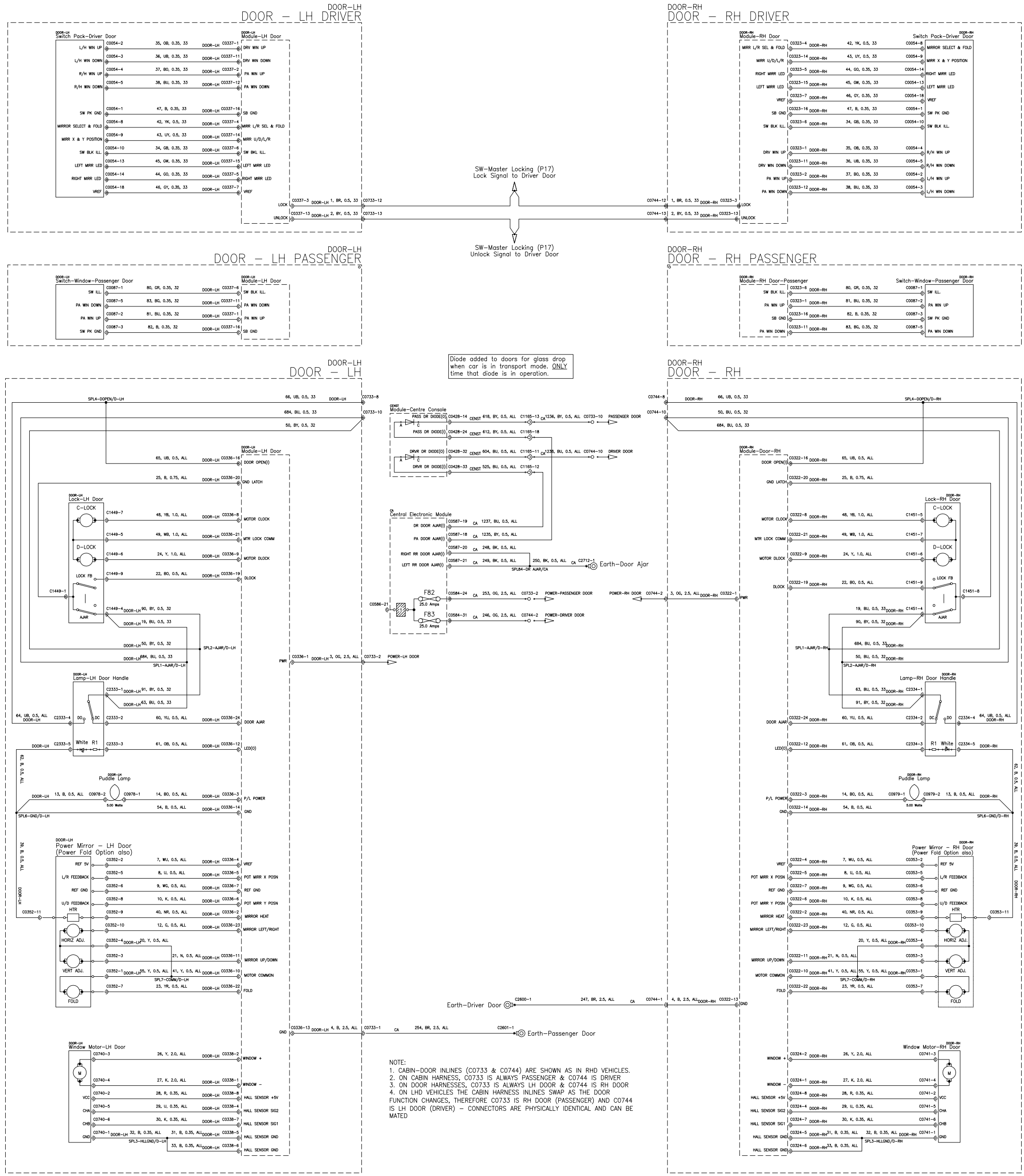

ASTON MARTIN	DRAWN BY Carl Beveridge	TITLE DRIVER/PASSENGER DOORS	PROJECT VH206 232	CPSC 00.06.51	AML DRG No.
	DATE 02-06-08	SUB-SYSTEM TITLE	BUILD Job1+90	REV LEVEL A	IL9G33-14T400-AB

A1 Circuit

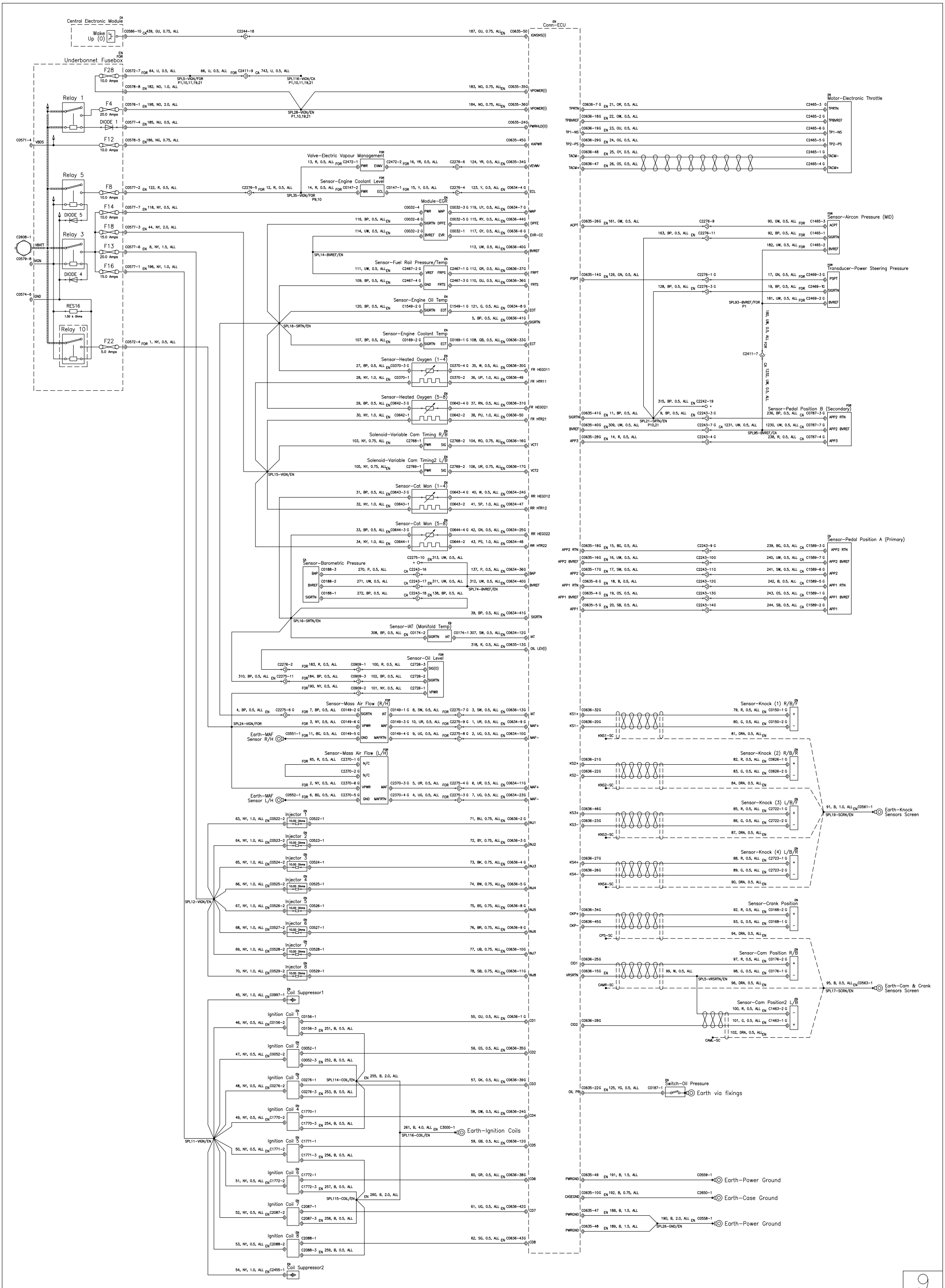

ASTON MARTIN	DRAWN BY Carl Beveridge	TITLE ENGINE MANAGEMENT	PROJECT VH206 232	CPSC 00.06.51	AML DRG No.
A1 Circuit	DATE 02-06-08	SUB-SYSTEM TITLE	BUILD Job1+90	REV LEVEL A	IL9G33-14T400-AB

ASTON MARTIN

Squeaks and Rattles Repair Manual

Issue 3 July 2010

Issued by Aston Martin Technical Publications, Banbury Road, Gaydon, Warwickshire, England, CV35 0DB

Copyright ©2010 Aston Martin Lagonda Ltd.

All rights reserved. No part of this publication may be reproduced, stored in a retrieval system or transmitted in any form, electronic, mechanical, recording or other means without written prior permission from Aston Martin Lagonda Ltd.

Contents

Contents **3**
Evaluation Drives - Squeak & Rattle Feedback Guidelines **4**
Squeak and Rattle Terminology **5**
Squeaks 5
Rattles 5
NVH 6
Steering Wheel Airbag Rattle 7
Repair: 7
Sat-Nav Lid Rattles **9**
Sat-Nav Tapping Noise 9
Repair 9
Sat-Nav Chatter 13
Repair: 13
Sat-Nav Rattle (Loose in the aperture) 17
Repair 17
Door Noises **21**
Door Trim Panel Assembly Rattle 21
Repair: 21

Evaluation Drives - Squeak & Rattle Feedback Guidelines

When you evaluate the vehicle, please make comments about all Squeak and Rattle problems that you find. Do this if the problem is caused by dynamic road inputs or the functional operation of components.

Please give as much data as possible about the incident to help the analysis of the cause. If possible include the data that follows in your comments:

- The noise type (refer to the examples that follow)
- The specific area of the vehicle (Lest side / Right side, Underbody, Parcel shelf, Rear environment, Doors / Casings, Seats, Header, IP, Front End)
- The road surface (Broken tarmac, Motorway - concrete or tarmac, Cobblestones, Gravel etc.)
- A specific road input (Painted lines, cats-eyes or speed bumps)
- The vehicle temperature (Ambient / Cold / Hot, or the specific temperature in °C)
- The vehicle speed.

Squeak and Rattle Terminology

Squeaks

CHIRP	High-pitched rapidly repeating sound, like chirping birds.
CREAK	Metallic squeak, like the back of a seat flexing.
GRIND	Abrasive sound, like a grinding wheel or sandpaper rubbing against wood.
GRAUNCH	Metallic abrasive sound, like two cast components rubbing together.
SQUEAK	High-pitched sound, like rubbing a clean window.
TICK	Audible rhythmic tap – clock noise.

Rattles

BRUSH	Swish sound as contact parts touch lightly.
BUZZ	Low-pitched sound, similar to a bee. Usually associated with vibrations. Often metallic or hard plastic humming.
CHATTER	Rapidly repeating metallic sound.
CHUCK	Rapid noise that sounds like a stick against the spokes of a spinning bicycle wheel.
CLICK	light sound, like a ball point pen being clicked.
CLINK	Usually a high frequency sound, like a sharp hard input to ceramic or glass.
CLANK	Usually a mid-frequency. A sharp, hard, metallic knock.
CLUNK	Usually a low-frequency, heavy sound, like something stressed being released under pressure.
DING	Ringing noise like a bell.
HUM	Continuous sound of varying frequencies, like a wire humming in the wind.
KNOCK	Heavy, loud, repeating sound like a knock on a door.
OIL CANNING	Metallic "in/out" noise from metal surfaces rebounding in response to forced input like slamming doors/hood.
PING	Similar to knock, but at higher frequency.
RATTLE	A sound that suggests looseness, such as marbles rolling around in a can.
SLAP	Resonance from flat surfaces (seat belt webbing or door trim panels).
TAP	Light hammering sound like tapping pencil on edge of table. Can be rhythmic or intermittent.
THUMP/THUD	Dull beat caused by two items striking together.
TIZZ	Rapid low-pitched diminishing sound often a secondary loose vibration after an impact.

NVH

BOOM	Rhythmic sound like a drum roll or distant thunder. Can cause pressure on the ear drum.
GROAN/MOAN	Continuous, low-pitched humming sound.
GROWL/HOWL	Low, guttural sound, like an angry dog.
HISS	Continuous sound like air escaping from a balloon.
ROAR	Deep, long, prolonged sound like an animal, or winds and ocean waves.
RUMBLE	Low, heavy continuous sound like that made by wagons or thunder.
SQUEAL	Continuous, high-pitched sound like running finger nails across a chalkboard.
WHIRR/WHINE	High-pitched buzzing sound, like an electric motor or drill.
WHISTLE	Sharp, shrill sound, like wind passing a small opening.

Steering Wheel Airbag Rattle

SRO: 01.20.CJ

Safe VINs: **DBS** - E01082, **V8 Vantage** - D13104, **DB9** - A12179

Repair:

1. Put the Emotion Control Unit (ECU) into the docking station at position 2 to release the Electronic Steering Column Lock (ESCL)
2. Disconnect the battery (refer to Workshop Manual procedure 14.01.CA).

WARNING:
WAIT FOR TWO MINUTES BEFORE YOU CONTINUE WITH THIS PROCEDURE. THIS IS TO MAKE SURE THAT THERE IS NO POWER TO THE AIRBAG SYSTEM. IF YOU DO NOT DO THIS, THE AIRBAG CAN OPERATE SUDDENLY AND CAUSE INJURY

WARNING:
BE CAREFUL WHEN YOU HOLD AND MOVE THE AIRBAG UNIT. THE AIRBAG UNIT HAS AN EXPLOSIVE CHARGE IN IT. IF YOU DO NOT HOLD THE UNIT CAREFULLY, THE CHARGE CAN OPERATE AND CAUSE INJURY.

3. Turn the steering wheel to get access to the screws that attach the driver's airbag to the steering wheel.

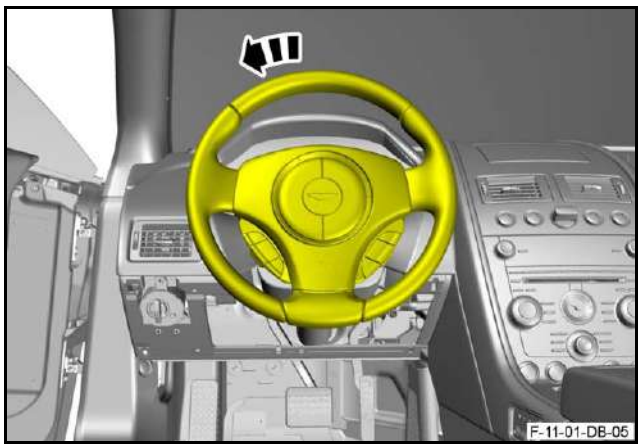

Figure 1

4. Remove the screw that attaches the driver's airbag to the steering wheel.

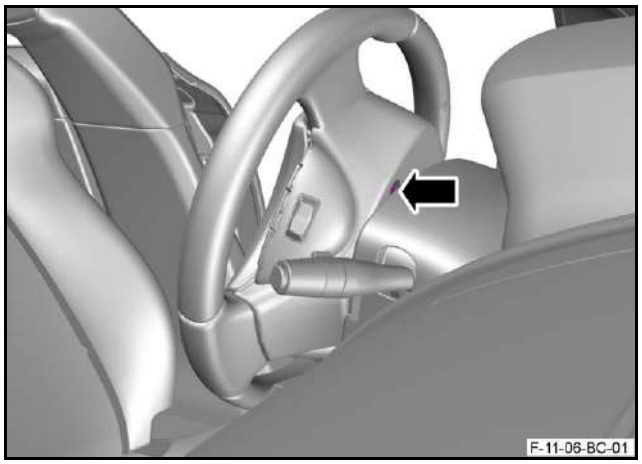

Figure 2

5. Install a bush (Part Number 9G43-33698-AA) onto the airbag attachment screw (refer to Figures 3).

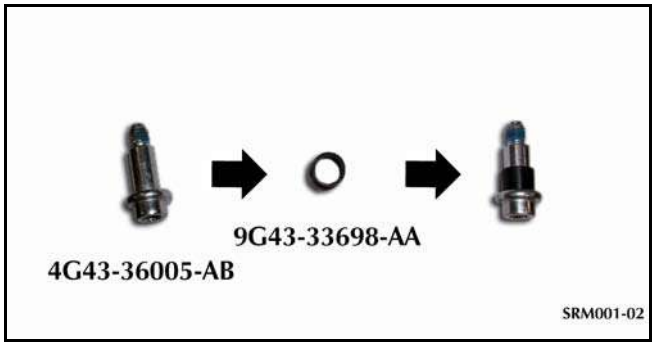

Figure 3

6. Install the screw and torque it to 9 Nm.
7. Turn the steering wheel to get access to the second airbag attachment screw.
8. Do steps 4 thru 6 again for the second airbag attachment screw.
9. Connect the battery (refer to Workshop Manual procedure 14.01.CA).

Satellite Navigation (Sat-Nav) Lid Rattles

Sat-Nav Tapping Noise

SRO:10.07.CH

Safe VINs: **DB9** - A12390, **V8 Vantage** - C13317, **DBS** - E01313

Repair

CAUTION:
BE CAREFUL WHEN YOU RELEASE THE INSTRUMENT PANEL VENEER BEZEL. THE SURFACE FINISH CAN BE EASILY DAMAGED.

1. Release the clips that attach the centre-stack instrument panel (refer to Figure 1).

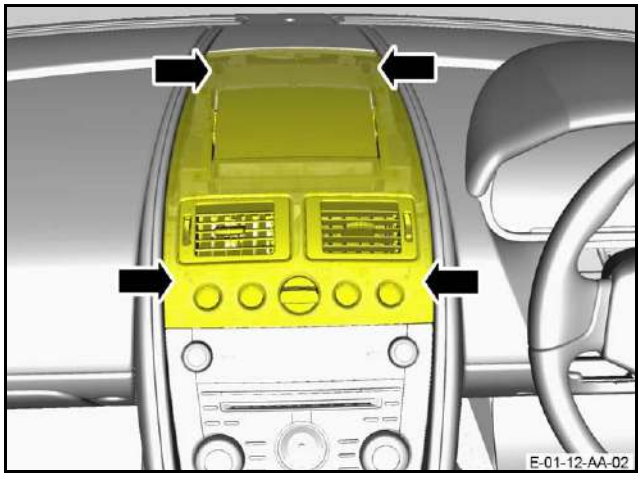

Figure 1

2. Disconnect the electrical connectors from each of the four transmission control switches (refer to Figure 2).

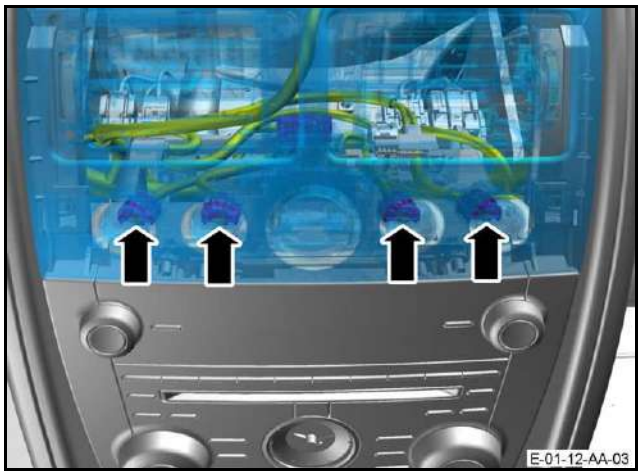

Figure 2

3. Disconnect the electrical connector from the ignition start/stop switch (refer to Figure 3).

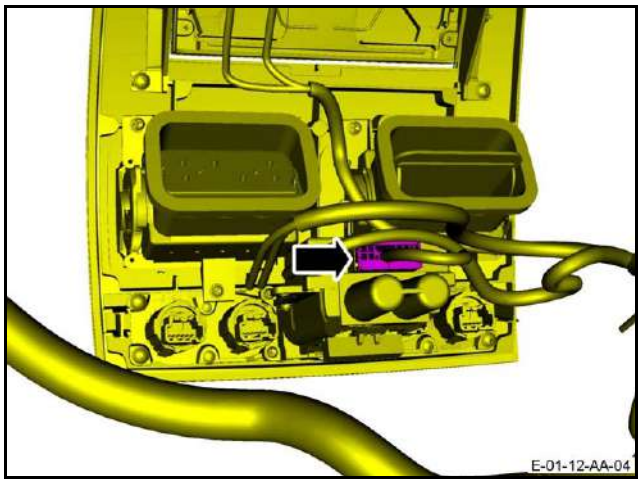

Figure 3

4. Remove the centre-stack instrument panel (panel).
5. Put the panel on a work bench that has protective material to prevent damage.
6. Remove the screw that attaches the locating peg bracket to the veneer bezel (refer to Figure 4).

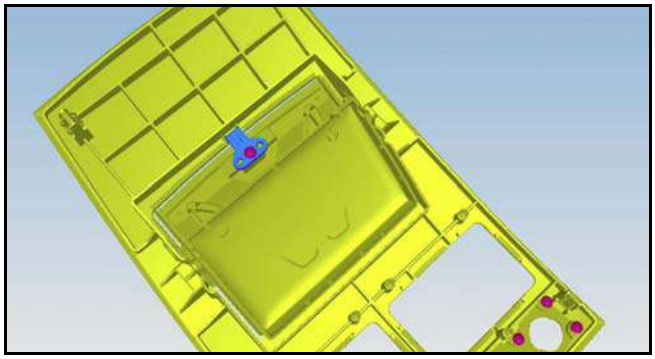

Figure 4

7. Replace the installed locating peg (type "A") with the new flocked peg (type "B") (refer to Figure 5).

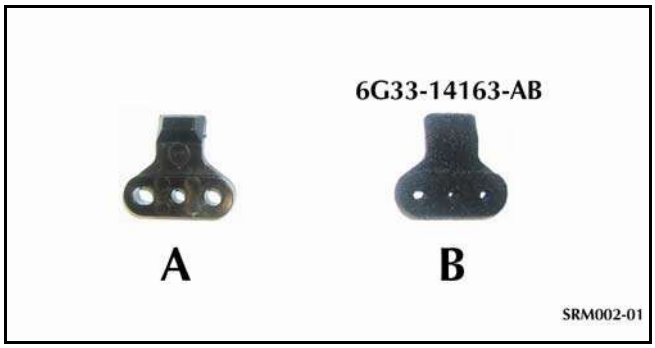

Figure 5

8. Install and torque the screw to 2 Nm.
9. Put the panel into position (refer to Figure 6).

Figure 6

10. Connect the electrical connector to ignition start/stop switch (refer to Figure 7).

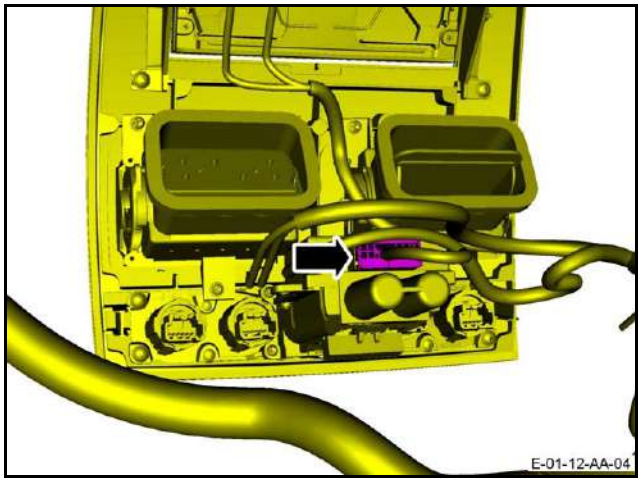

Figure 7

11. Connect the electrical connectors to each of the four transmission control switches (refer to Figure 8).

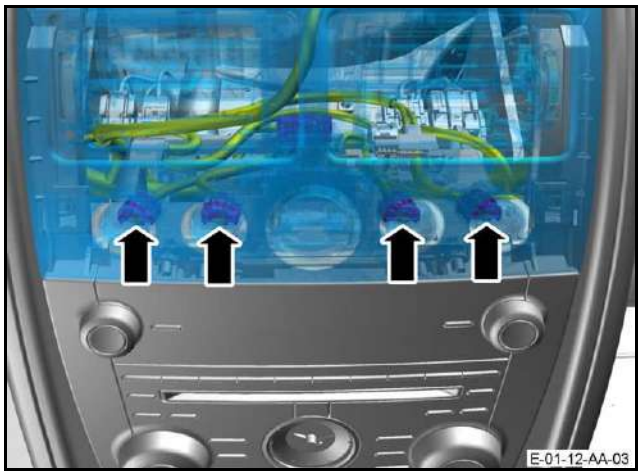

Figure 8

12. Make sure that the heater vents are correctly aligned.

13. Push the centre-stack instrument panel until it engages with the four retaining clips.

Sat-Nav Chatter

SRO: 19.07.CG

Safe VINs: **DBS** - E01840, **DB9** - A12676, **V8 Vantage** - C13743

Repair:

Pre safe VIN

CAUTION:
BE CAREFUL WHEN YOU RELEASE THE INSTRUMENT PANEL VENEER BEZEL. THE SURFACE FINISH CAN BE EASILY DAMAGED.

1. Release the four clips that attach the centre-stack instrument panel (refer to Figure 1).

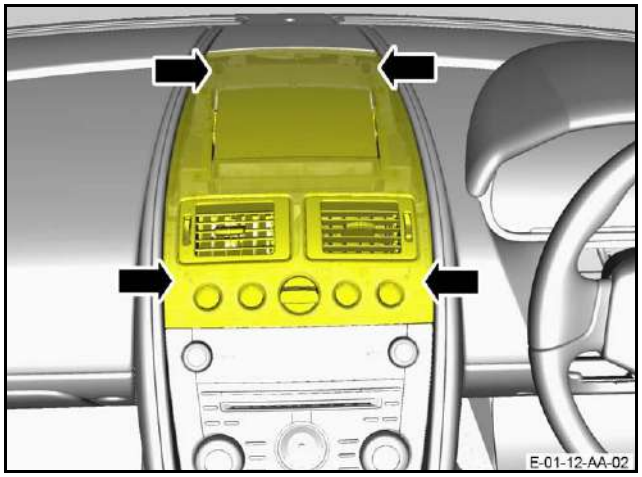

Figure 1

2. Disconnect the electrical connectors from each of the four transmission control switches (refer to Figure 2).

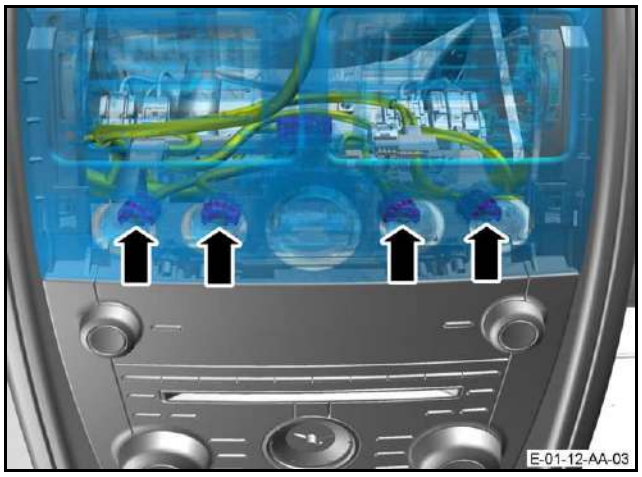

Figure 2

3. Disconnect the electrical connector from the ignition start/stop switch (refer to Figure 3).

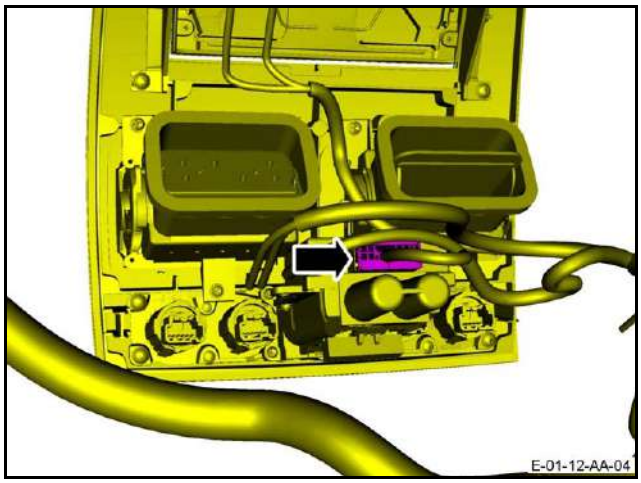

Figure 3

4. Remove the centre-stack instrument panel (instrument panel) (refer to Figure 4).

Figure 4

5. Put the instrument panel on a work bench that has protective material to prevent damage.
6. Release the sat-nav top panel.
7. Remove the spring type "A" (refer to Figure 5).
8. Install the new spring type "B" in the top panel (refer to Figures 5 and 6).

   Note: The wire of the spring has a larger diameter and the spring has a different shape.

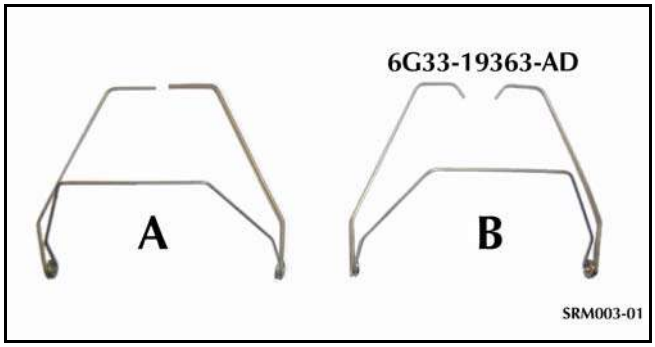

Figure 5

Figure 6

9. Install the sat-nav top panel.
10. Put the instrument panel into position (refer to Figure 7).

Figure 7

11. Connect the electrical connector to ignition start/stop switch (refer to Figure 8).

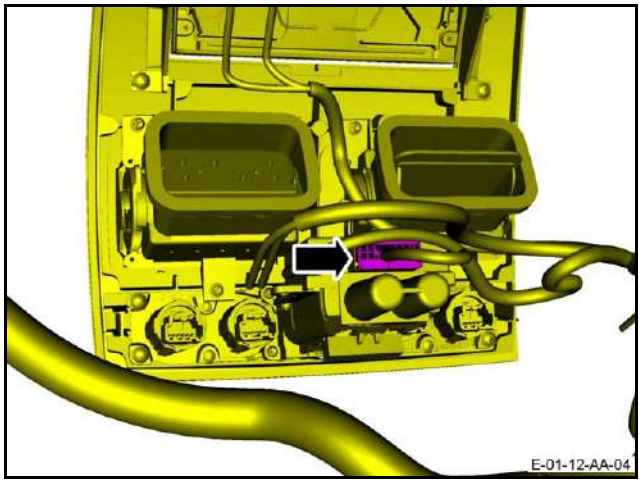

Figure 8

12. Connect the electrical connectors to each of the four transmission control switches (refer to Figure 9).

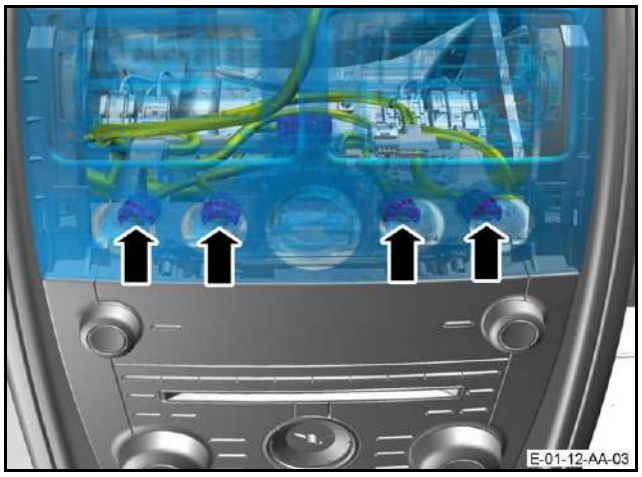

Figure 9

13. Make sure that the heater vents are correctly aligned.
14. Push the centre-stack instrument panel until it engages with the four retaining clips.

Sat-Nav Rattle (Loose in the aperture)

SRO: 19.07.CJ

Safe VINs: **DBS** - E01610, **DB9** - A12546, **V8 Vantage** - C13503, **V12 Vantage -** S00185

Repair

CAUTION:
BE CAREFUL WHEN YOU RELEASE THE INSTRUMENT PANEL VENEER BEZEL. THE SURFACE FINISH CAN BE EASILY DAMAGED.

1. Release the four clips that attach the centre-stack instrument panel (refer to Figure 1).

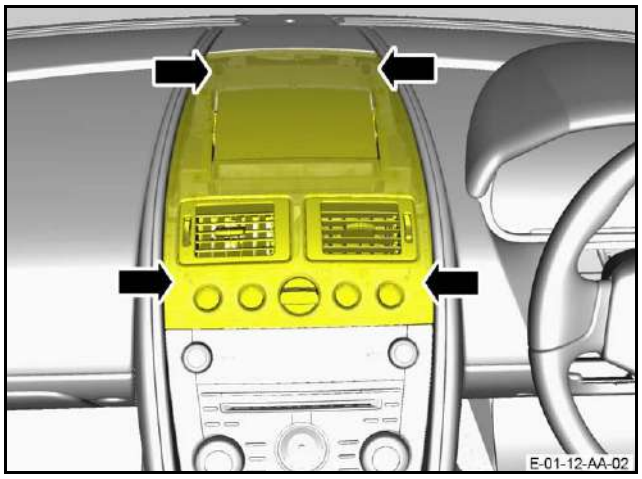

Figure 1

2. Disconnect the electrical connectors from each of the four transmission control switches (refer to Figure 2).

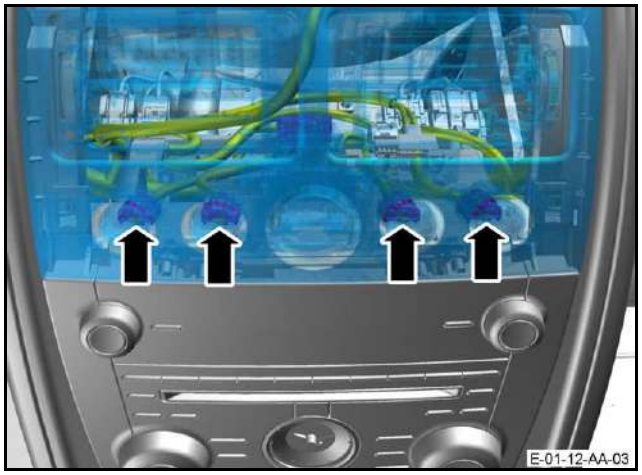

Figure 2

3. Disconnect the electrical connector from the ignition start/stop switch (refer to Figure 3).

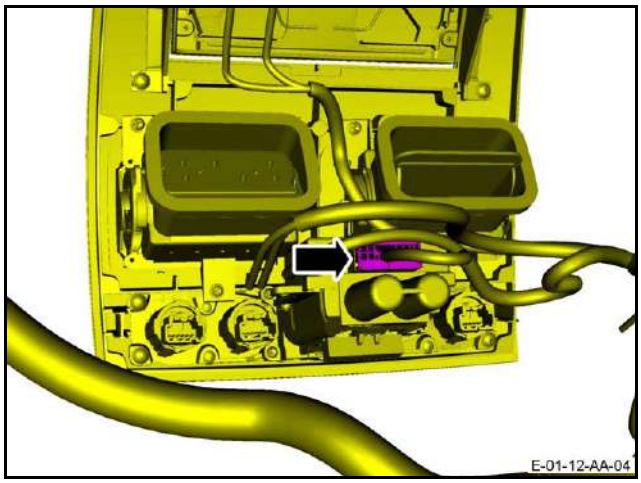

Figure 3

4. Remove the centre-stack instrument panel (panel) (refer to Figure 4).

Figure 4

5. Put the panel on a work bench that has protective material to prevent damage.
6. Remove the screws that attach the left and right navigation door hinge brackets to the panel. Remove the brackets (refer to Figure 5).

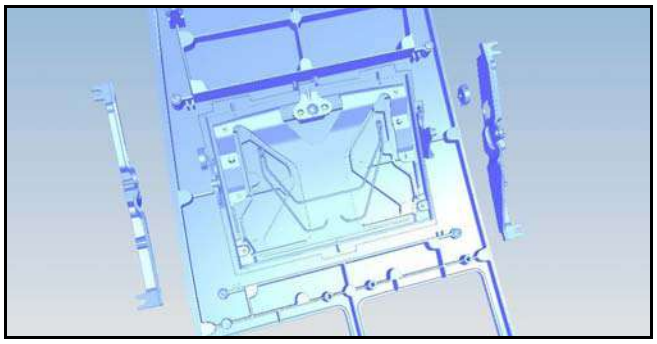

Figure 5

7. Remove the hinge bracket gear from the left hinge bracket (refer to Figure 6).

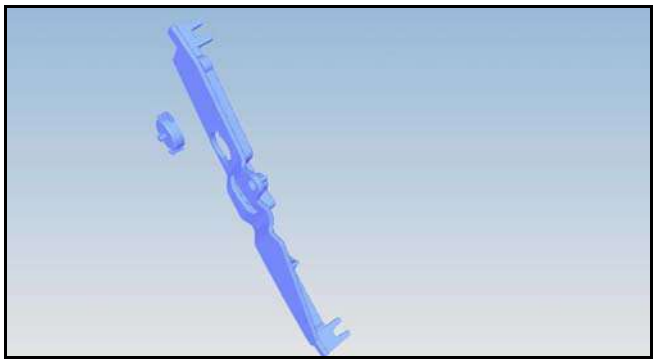

Figure 6

8. Install the hinge bracket gear onto the new left hinge bracket.
9. Install the new left and right side brackets onto the panel and torque the screws to 3 Nm (refer to Figure 7).

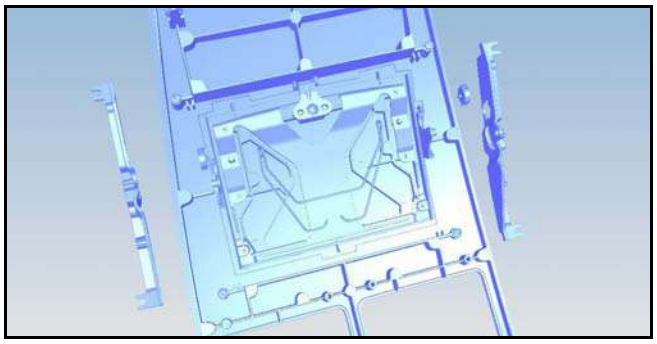

Figure 7

10. Put the centre-stack instrument panel into position (refer to Figure 8).

Figure 8

11. Connect the electrical connector to ignition start/stop switch (refer to Figure 9).

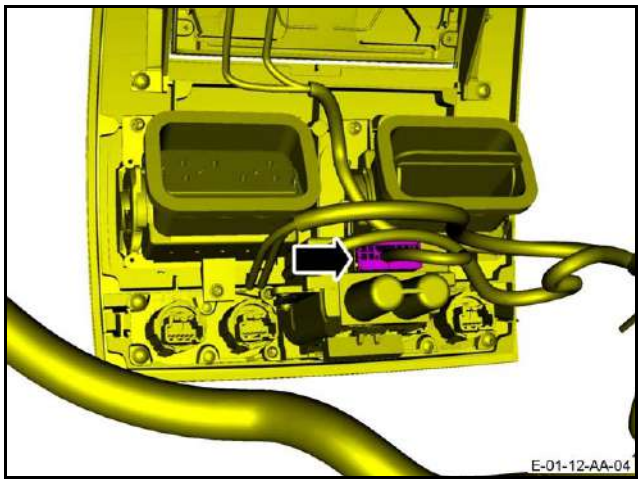

Figure 9

12. Connect the electrical connectors to each of the four transmission control switches (refer to Figure 10).

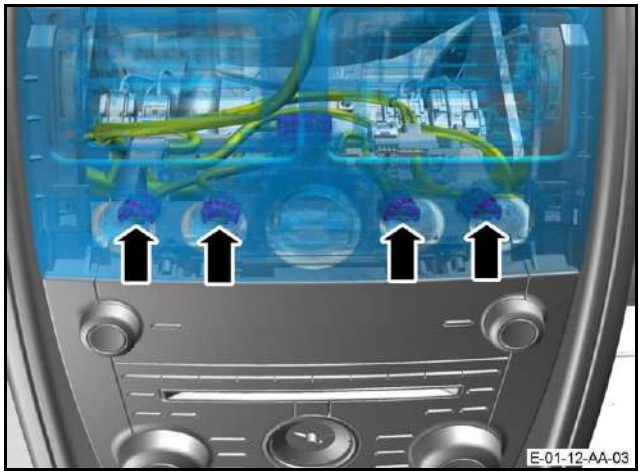

Figure 10

13. Make sure that the heater vents are correctly aligned.
14. Push the centre-stack instrument panel until it engages with the four retaining clips.

Door Noises

Door Trim Panel Assembly Rattle

SRO: 01.05.GY

Safe VINs: **DB9** - B10337, **V8 Vantage** - C10283

Repair:

1. Remove the front door trim panel from the door (refer to Workshop Manual procedure 01.05.CB).
2. Install three anti-rattle pads (SPD5596) onto the door at the positions shown in Figures 1 and 2.

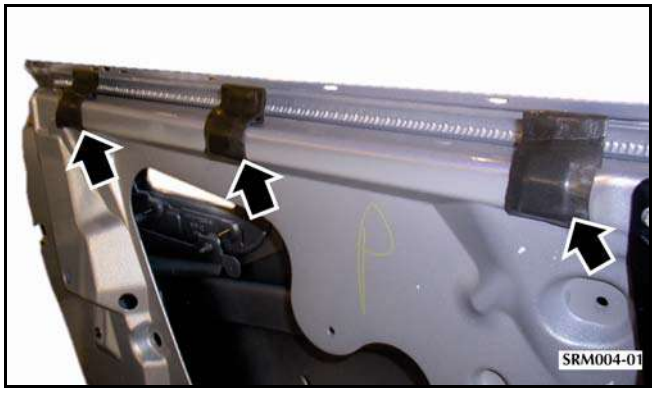

Figure 1 – Left Door

Figure 2 – Right Door

3. Install the door trim panel onto the door (refer to Workshop Manual procedure 01.05.CB).

ASTON MARTIN

Technical Guide

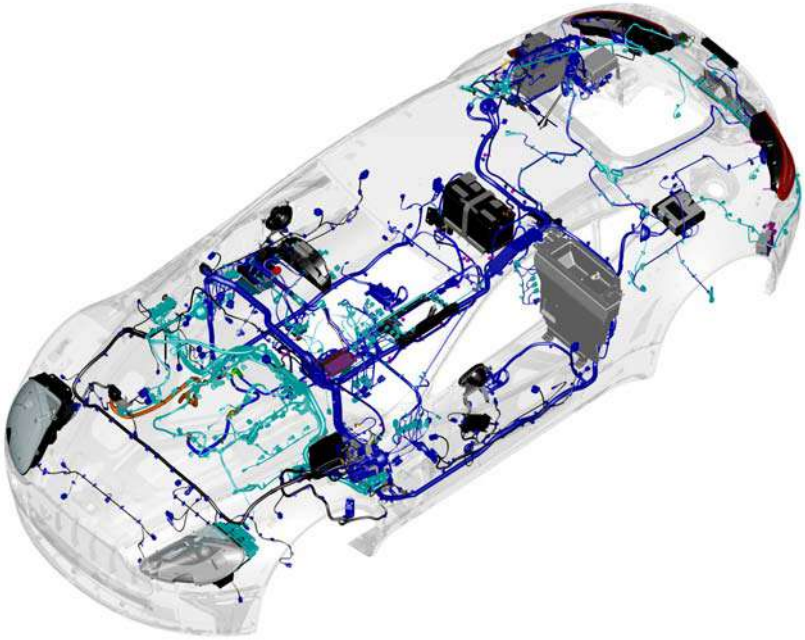

Bluetooth

Aston Martin are constantly seeking to improve the specification, design and production of their vehicles and alterations take place accordingly. While every effort has been made to ensure the accuracy of this Manual, it should not be regarded as an infallible guide to current specifications of any particular vehicle.

All rights reserved. No part of this publication may be reproduced, stored in a retrieval system or transmitted, in any form, electronic, mechanical, photocopying, recording or other means without prior written permission from Aston Martin Lagonda Limited.

The manufacturer reserves the right to vary specifications without notice in accordance with its policy of continual product improvement.

Produced by the Technical Training Department.

Aston Martin Lagonda Limited
Banbury Road
Gaydon
WARWICK
Warwickshire
England
CV35 0DB

Printed in England
© 2006 Aston Martin Lagonda Limited
All rights reserved

CONTENTS

INTRODUCTION 7
Description 9
SYSTEM LAYOUT 11
V8 Vantage Layout 11
DB9 Layout 13
INPUTS 15
V8 Vantage Power Supplies 15
DB9 Power Supplies 15
V8 Vantage Signal Inputs 15
DB9 Signal Inputs 15
Screens 15
OUTPUTS 17
V8 Vantage Outputs to Amplifier 17
DB9 Outputs To Amplifier 17
LED Indicator Outputs 17
SYSTEM OPERATION 19
Controls 19
Getting Help 21
Connecting A Phone 21
Selecting a Phone 22
List Paired Phones 22
Removing A Paired Phone 22
Removing All Phones 22
Making Calls 23
Answering Incoming Calls 25
Ending Calls 25
Transfer A Call 25
Rejecting A Call 25
Mute A Call 26
Un-mute A Call 26
Call Waiting 26
Touch-Tone System 26
Bluetooth Contact List 27
Switching Voice Prompts On/Off 28
Selecting A Language 28
DIAGNOSTICS 31
V8 Vantage Connector Pin Allocation 31
DB9 Connector Pin Allocation 32
Troubleshooting 33
V8 Vantage Wiring Diagrams 35
DB9 Wiring Diagrams 39

APPENDIX 1
APPENDIX 2

INTRODUCTION

The Bluetooth system offers the following features:

- Seamless, wireless handsfree audio through a Bluetooth connection
- Digital audio interface with high quality, full-duplex, handsfree speech
- Speaker Independent Voice Recognition (VR)
- Voice-driven menu prompts
- Automatically mutes the radio
- Automatically pauses the CD player during calls
- Noise reduction and acoustic echo cancellation
- Compliance with Bluetooth Hands Free 0.96 and 1.0 profiles
- Audio through the door speakers

The Bluetooth system is standard fitment on DB9 and is optional on the V8 Vantage. The control and operation of the Bluetooth system is identical on all models, however the electrical architecture of the cars audio does differ. To identify if Bluetooth is fitted, look for the LED Indicator located as shown below:

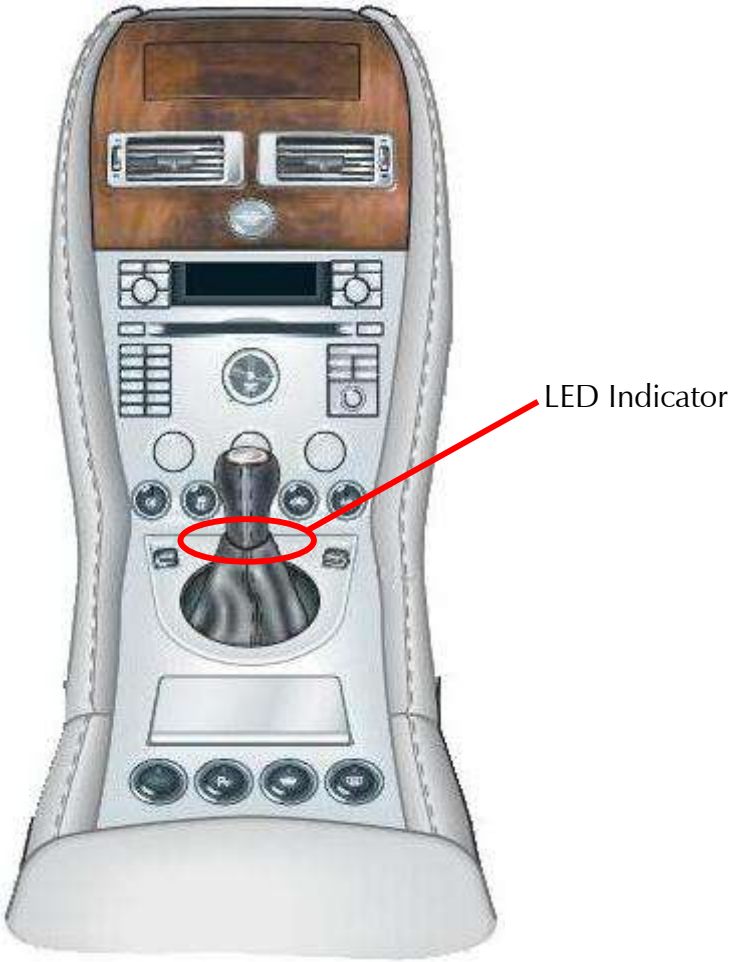

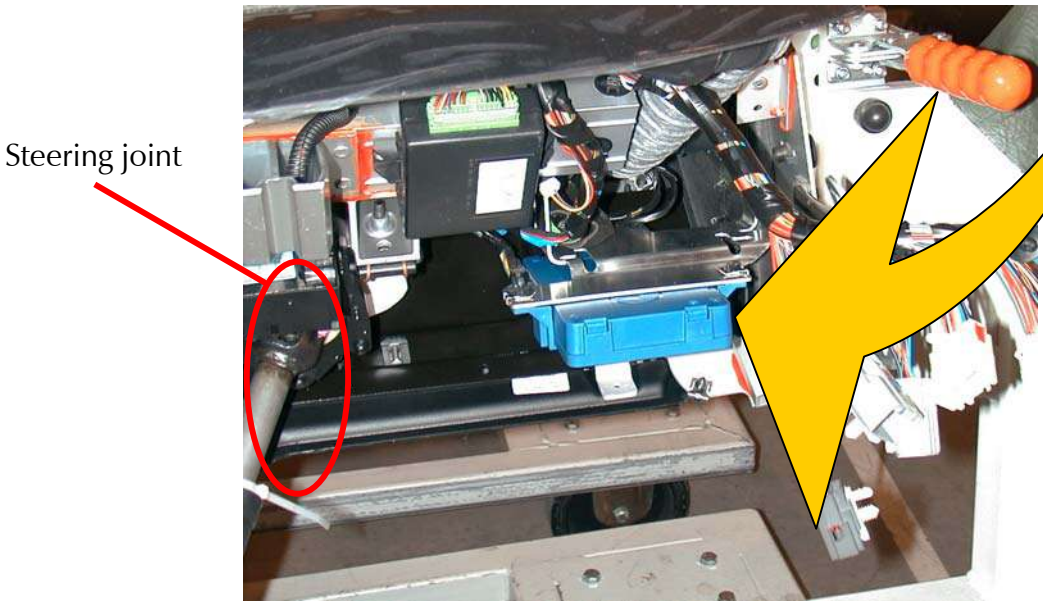
Steering joint

Description
The Bluetooth Module controls the Bluetooth system on all cars. This module is a stand-alone unit, which is not connected to any communication network on the car. The module is located on the drivers side of the Instrument Pack (IP) just above the pedals (see page opposite).

The components of the system are:
1. Microphone
2. Bluetooth switches (steering wheel)
3. LED Indicator
4. Bluetooth Module
5. Amplifier (audio)
6. Switcher box (V8 Vantage only)

If a DB9 is installed with both the 'in-car' phone and the Bluetooth systems and both systems are active then the Bluetooth system will override the 'in-car' phone system. An active call on the 'in-car' phone will be ended if a call is received on the Bluetooth system or any of the Bluetooth menus are used.

The Bluetooth system is only active when the vehicle ignition is switched to position II (ignition on). If, during a call, the ignition is switched to 0 (ignition off) the call will transfer to the mobile phone after approximately six seconds.

The Bluetooth module has been designed to meet the following parameters:

Parameter	Units	Nominal	Lower Limit	Upper Limit
Battery Voltage	Volts	N/A	10.5	16.0
Nominal Voltage	Volts	13.2	12.2	14.2
Over Voltage (for 1 minute)	Volts	24.0	18.0	25.0
Operating Current	mA	225-300	<300uA (sleep)	<1.5A
Room Temperature	°C	25	15	35
Operating Temperature	°C	N/A	-30	70
Storage Temperature	°C	N/A	-40	85

SYSTEM LAYOUT
V8 Vantage Layout

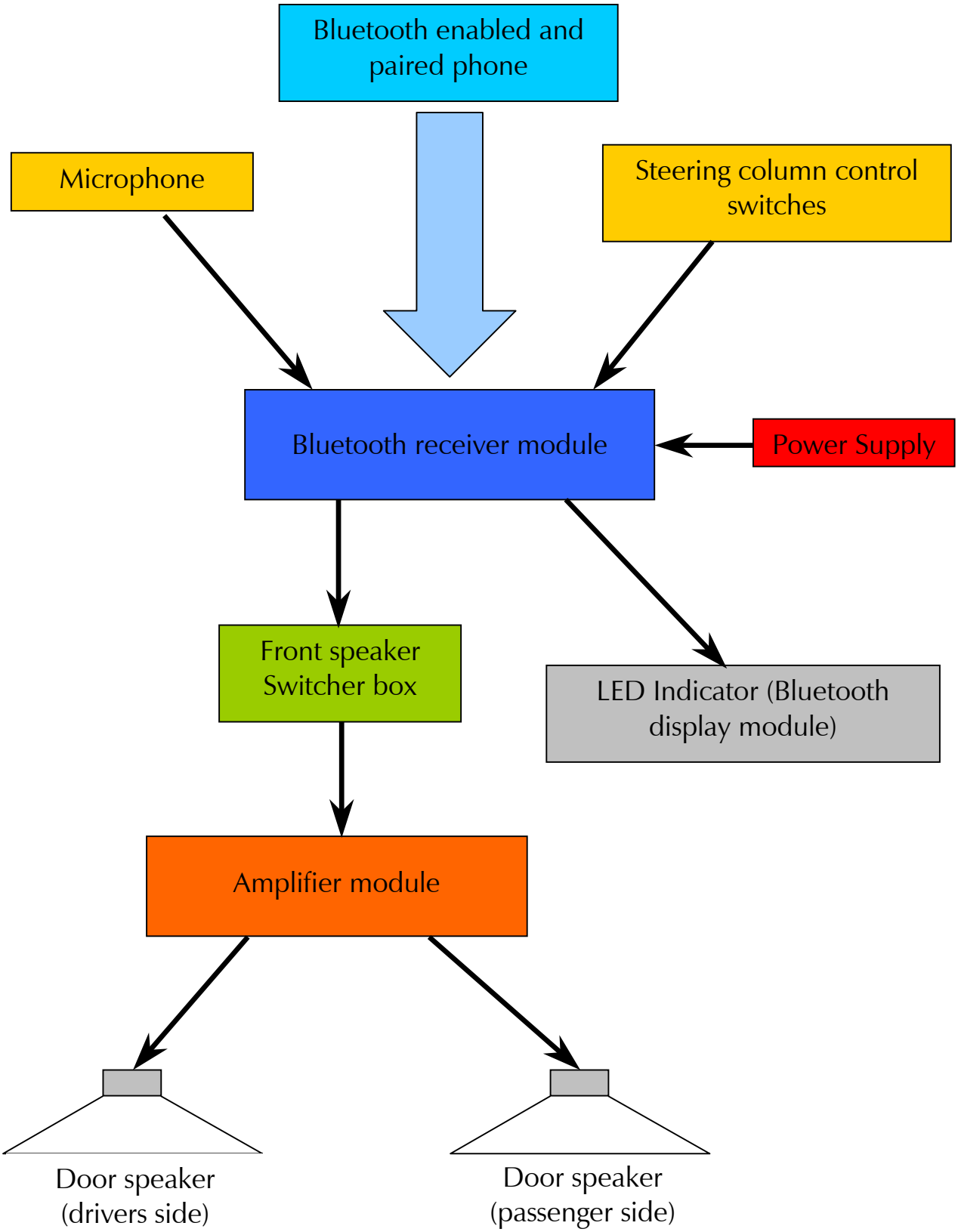

DB9 Layout

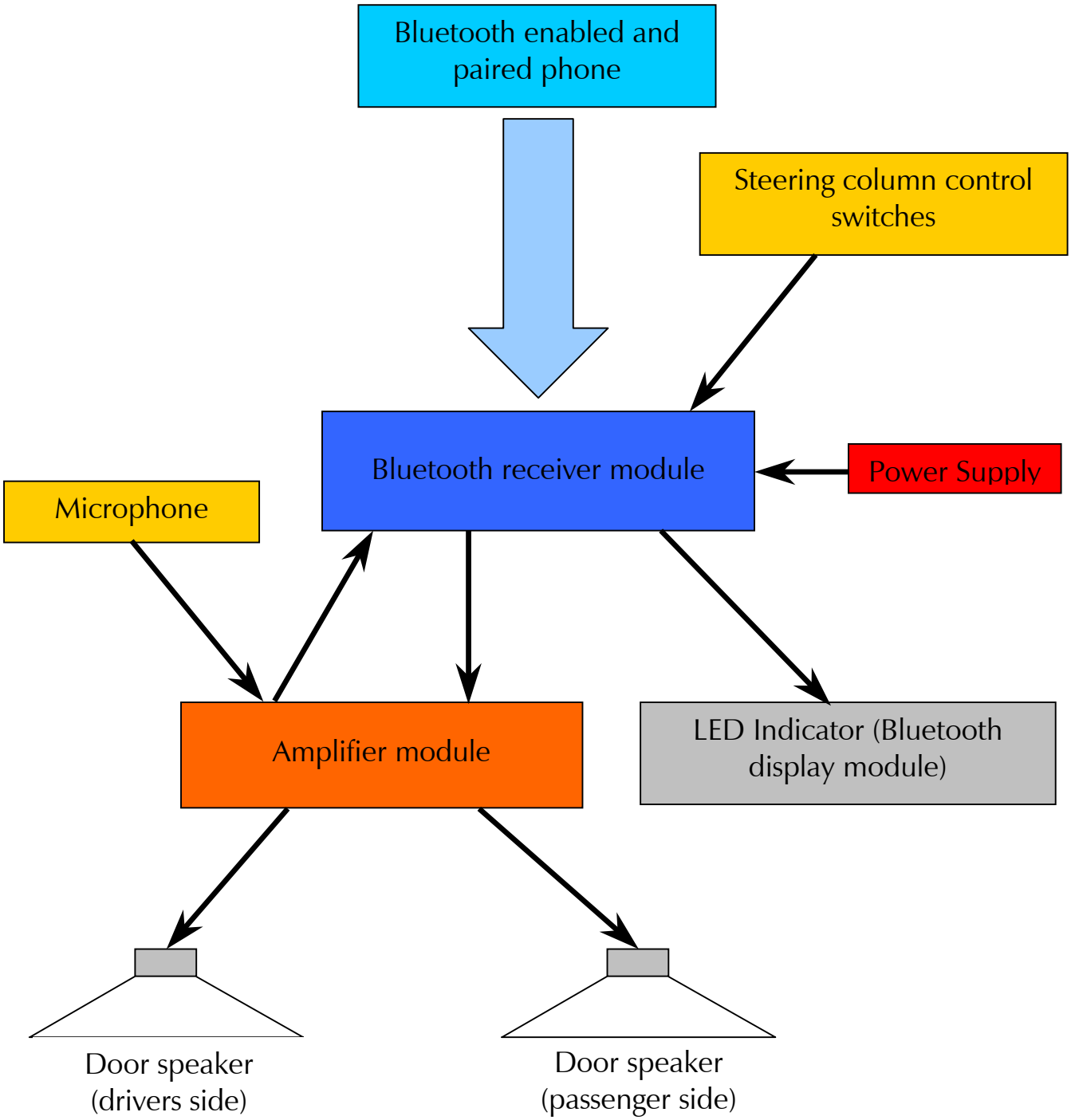
Bluetooth enabled and paired phone
Steering column control switches
Bluetooth receiver module
Power Supply
Microphone
Amplifier module
LED Indicator (Bluetooth display module)
Door speaker (drivers side)
Door speaker (passenger side)

INPUTS

The Bluetooth system relies on a number of signals it receives either from the car (via hard wiring) or the users phone (via wireless Bluetooth communication network).

The Bluetooth system will only function if the users mobile phone has Bluetooth enabled and it is 'paired' to the car. For more information refer to the user's guide for your mobile phone.

V8 Vantage Power Supplies

Description	Supplied From	Source	Protection
Wakeup signal	Central Electronic Module	Comfort Relay	F68 (5 Amp)
Power supply 1	Central Electronic Module	Interior Lights Relay	F46 (5Amp)
Power supply 2	Central Electronic Module	Interior Lights Relay	F46 (5Amp)

DB9 Power Supplies

Description	Supplied From	Source	Protection
Wakeup signal	Central Electronic Module	Comfort Relay	F69 (5 Amp)
Power supply 1	Central Electronic Module	Interior Lights Relay	F46 (5Amp)
Power supply 2	Central Electronic Module	Interior Lights Relay	F46 (5Amp)

V8 Vantage Signal Inputs

Input	Description	Signal Characteristic
MIC In	Input signal from microphone	Varying current signal direct from microphone
Keypad	Steering wheel controls input	Variable resistance to earth signal

DB9 Signal Inputs

Input	Description	Signal Characteristic
MIC In +	Input signal from microphone	Varying current signal supplied via amplifier
MIC In -	Input signal from microphone	Varying current signal supplied via amplifier
Keypad	Steering wheel controls input	Variable resistance to earth

Screens

Some of the signals in and out of the Bluetooth module require screening to avoid interference being picked up. A signal screen is a single wire running along side the signal wire(s) which will absorb electro magnetic interference (EMI).

The Bluetooth module on the V8 Vantage features only one screen so as to protect the signal from the microphone. This screen wire is simply an earth but it is also used as a datum from which to reference the microphone signal.

The Bluetooth module used on DB9's features two screens. One is as on the V8 Vantage but is used only as a screen (because the microphone signal from the amplifier has two signal wires) and no datum is required. The second screen on the module is used to screen the 'Lineout' signals to the amplifier. As with the microphone screen this wire is connected to earth.

OUTPUTS

V8 Vantage Outputs To Amplifier

The Bluetooth module in the V8 Vantage has three outputs sent directly to the audio amplifier. These outputs are:

1. Radio mute.
2. Speaker +
3. Speaker –

The combination of these three signals allows the amplifier to control the audio output and phone output through all or some of the speakers.

DB9 Outputs To Amplifier

As with the Bluetooth module in the V8 Vantage, the DB9 Bluetooth module has three outputs it sends directly to the audio amplifier. It should be remembered that all DB9's feature a Linn amplifier and therefore the Bluetooth output requirements are different. These outputs are:

1. Radio mute.
2. Lineout -
3. Lineout +

The combination of these three signals allows the Linn Amplifier to control the audio output and phone output through all or some of the speakers.

LED Indicator Outputs

The DB9 and V8 Vantage use the same LED Indicator (Bluetooth display) controlled in the same way by the Bluetooth module. The outputs from the Bluetooth module are:

- UIM LED - For Active Call LED (amber)
- UIM LED - For Active Call LED (blue)

These two outputs individually control the status LED's (amber and blue) earth signal therefore switching the LED's on and off independently.

SYSTEM OPERATION

Controls

1. LED Indicator Outputs – System status
2. Steering column control switches

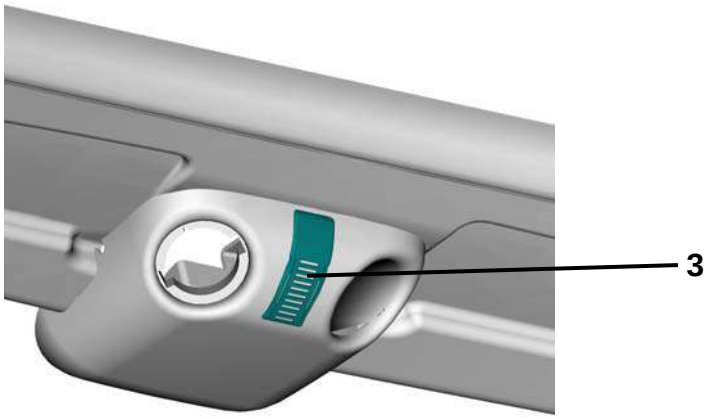

3. Integrated microphone (behind the rear view mirror).
4. Audio amplifier (not shown).

The Bluetooth system is voice activated on all models. When in voice recognition (VR) mode:

- Always speak normally. The system reacts to a normal voice pattern.
- Do not shout or speak erratically.
- When prompted to speak, speak after the 'beep'.

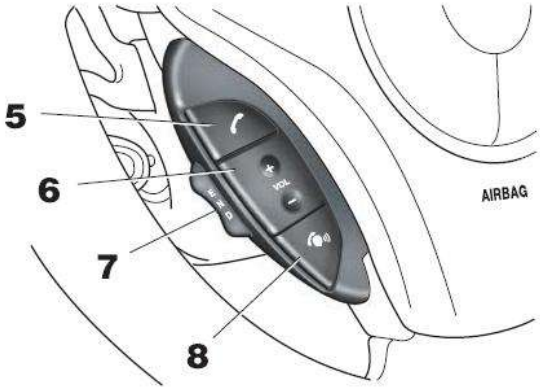

5. Answer.		• When receiving a call – Press once to answer that call. • When the system is not on a call- Press once to make a call using the last number dialled • While a call is in progress – Press once to toggle between hold and resume. While on a call and after a call waiting notification is received- Press once to answer the waiting call. • With two active calls – Press once to toggle between calls. • During an active call – Press and hold to switch audio between handsfree and privacy modes.
6. Volume	VOL	• During a call – Press once to increase or decrease the Bluetooth speaker volume. • If the microphone is muted – Press once to un-mute. • During a call – Press and hold to mute the microphone
7. End	END	• During an active call – Press once to end that call. • When the system is in voice recognition (VR) mode – Press once to cancel VR mode. • When receiving an in coming call – Press once to reject that call. • When in a pairing session – Press once to cancel that pairing session. • During an active call(including multi-party calls) – Press and hold to end all calls. • When the system is not on a call – Press and hold to terminate the Bluetooth connection.
8. Talk		• During normal operation – Press once to initiate a voice recognition (VR) session. When a VR session starts, you will hear a prompt and then a short 'beep'. The 'beep' indicates that the system is waiting for a verbal command. • A prompt is being played – Press once to skip the prompt and go to the 'beep'. • Pressing and holding initiates the paring process.

Getting Help
If you require help while learning to use the system, or whenever a reminder is required when prompted for a yes/no answer. Say 'Help' into the microphone. The system includes help prompts in every menu. Alternatively if you say 'repeat' the system will repeat the question.

Connecting A Phone
A connection between the vehicle Bluetooth system and a phone is called a 'Paired Link'.

When a paired link is set up the Bluetooth system remembers the phone's ID. Once the Bluetooth system and the phone are paired, the Bluetooth system automatically connects to your phone every time you start your vehicle or power up the vehicle's Bluetooth system.

This system supports paired links with up to four phones.

Note: *The process of initiating a Bluetooth connection with a phone varies per phone manufacturer. For more information refer to the user's guide for your mobile phone.*

Use the following procedure only if there are no handsets paired to the system:

1. Press the button. When prompted say 'Pair phone'. The system responds with 'Set your phone in scan mode and enter 1234 when prompted for the 'passcode'.
2. When the phone displays 'Aston Martin' select the device. The phone displays the passcode entry screen.
3. Enter the passkey (1234). The phone displays 'PIN verified' and the system will say 'Pairing complete. Connection in progress'.

Note: *Some phones will ask you to accept the BT link. Enter Yes.*
Upon successful completion the system say's 'Connection is complete. Phone <n> ready for use'.

To pair additional phones to the system:

1. Press the button. When prompted say 'Set-up menu'. The system responds with 'Set-up menu. Please say a command'.
2. Say 'Pair phone'. The system responds with 'Set your phone in scan mode and enter 1234 when prompted for the passcode'.
3. When the phone displays 'Aston Martin', select the device. The phone will display the passcode entry screen.
4. Enter the passkey value provided by the system. The phone confirms that the PIN is verified and the system will say 'Pairing complete. Connection in progress'.

Note: *Some phones will ask you to accept the BT link. Enter Yes.*
Upon successful completion the system will say 'Connection is complete. Phone <n> ready for use'.

The Bluetooth system will not recognise a mobile phone even if it is 'paired', if the mobile phone does not have Bluetooth enabled. For more information refer to the user's guide for your mobile phone.

Selecting a Phone

To select a paired phone to use simply complete the following:

1. Press the button. When prompted say 'Set-up menu'. The system responds with 'Set-up menu. Please say a command'.
2. Say 'Connect phone <n>'. The system responds with 'Connecting phone <n>'. Upon successful completion the system says 'Connection complete'.

List Paired Phones

1. Press the button. When prompted say *'Set-up menu'*. The system responds with *'Set-up menu. Please say a command'*.
2. Say *'List phones'*. The system responds with *'The following phones have been paired: phone 1, etc.'*.

Removing a Paired Phone

1. Press the button. When prompted say 'Set-up menu'. The system responds with 'Set-up menu. Please say a command'.
2. Say 'Remove phone <n>'. The system responds with 'Removing phone <n>. Are you sure?'.
3. Say 'Yes'. The system responds with 'Phone <n> removed'.

Removing All Phones

1. Press the button. When prompted say 'Set-up menu'. The system responds with 'Set-up menu. Please say a command'.
2. Say 'Remove all phones'. The system responds with 'Are you sure you want to remove all phones?'.
3. Say 'Yes'. The system responds with 'All phones have been removed'.

Making Calls

When connected, all calls are handsfree. Terminate a VR session at any time by pressing the button.

A phone number can be entered as a whole number or by two or more segments. A segment can include up to 15 digits. An entire number can include no more than 32 digits. If required a number can also begin by saying either 'Star' (*), 'Hash' (#) or 'Plus' (+).

Note: Speak numbers as continuous digits. For example, dictate 555-2211 as '5-5-5-2-2-1-1', not '5-5-5-twenty-two-eleven'.

To make a call using a whole number:

1. Press the button. When prompted, say 'Dial Number'. The system responds with 'Number please?'.
2. Dictate the phone number as a single set of digits (without pauses between digits). The system recites the digits heard.
3. If the number recited by the system is correct, say 'Dial'. The system responds with 'Dialling'.

To make a call using a number segment:

1. Press the button. When prompted, say 'Dial Number'. The system responds with 'Number please?'.
2. Dictate the first segment of the whole number (For example, say the 1st three numbers.) The system recites the numbers heard.
3. Dictate the next segment of the whole number. The system recites the numbers heard. Repeat until you have entered the complete phone number.
4. When the complete number is recited by the system, say 'Dial'. The system responds: 'Dialling'.

Note: *To delete a phone number segment, say 'Clear' when prompted for the next segment. The system responds with 'Last String Entry Cleared', echoes any remaining segments, and waits for you to dictate a new segment.*

Note: *To clear all phone number segments dictated so far, say 'Clear All' when prompted for the next segment. The system clears all segments and returns to the 'Number please?' prompt.*

To call a number from the Bluetooth Contact List:

1. Press the button. When prompted, say 'Call <contact>'. The system responds with 'Do you want to call < contact>?'.
2. If the number recited by the system is correct, say 'Yes'. The system responds with 'Calling'.

Note: *The contact must be a valid contact stored in the Contact List*

To call a Number Using Phone Voice Name:

1. Ensure the voice name is stored in the mobile phone.
2. Press the button. When prompted, say 'Phone voice name'. The system responds with 'Phone voice name, please'.
3. Say '<voice name>'. The system calls the number associated with the phone voice name.

To make a call using speed dial:

1. Press the button. When prompted, say *'Speed Dial'*. The system responds with *'Speed dial number, please'*.
2. Recite the speed dial number. The system repeats the number it heard and asks: *'Is this correct?'*.
3. If the number recited is correct, say *'Yes'*. The system responds with *'Dialling'*, and places the call.

Note: *Speak speed dial numbers as continuous digits. For example, dictate speed dial location 22 as '2-2', not 'twenty-two'.*

To use the redial function:

- Press the button. When prompted, say *'Redial'*. The system responds with *'Redialling'*.

Or:

- Press the button.

Answering Incoming Calls
When receiving an incoming call, the system responds with 'Call from < Caller ID>', if available. If Caller ID is not available:

- The system plays the 'in-band' ring tone, if the phone supports it.
- If no 'in-band' ring tone is supported, the system generates a local ring tone.

There are two methods of answering an incoming call:

1. Press the button.
2. Press the 'answer call' key on the phone's handset.

Ending Calls
Use one of the following three methods to end a call:

1. Press the button. When prompted say 'Hang Up'. The responds with 'Call ended'.
2. Press the button.
3. Pres the 'end call' key on the phone's handset.

Transfer A Call
If you wish t transfer a call from the car to your phone either:

- Press the button. When prompted say 'privacy mode'.

Or

- Press and hold the button.
- Turn the vehicle ignition to 0 (off) (If your phone asks to switch to handset mode press yes.).

To transfer a call from your phone to the car either:

- Press the button. When prompted say 'handsfree mode'.

Or

- Press the button.
- Turn the car ignition to position II (on).

Note: *Some mobile phones will end the Bluetooth connection. If this happens the only way of transferring to the vehicle is by the mobile phone menu (if supported).*

Rejecting A Call
To reject an incoming call either:

- Press the button. The system will respond 'call rejected'.

Or

- Press the ignore, end or hang-up key on the phone handset.. The system responds with 'call ended'.

Mute A Call
There are two ways to mute a call:

1. Press and hold either of the VOL Up/Down buttons.

Or

2. Press the button. When prompted say 'mute'.

Un-mute A Call
Again there are two ways to un-mute a call:

1. Press and release either of the VOL Up/Down buttons.

Or

2. Press the button. When prompted say 'un-mute'.

Call Waiting
To answer an incoming call while already on a call:

1. Press and release the button to place the active call on hold and answer the incoming call.
2. Press and release the button to toggle between active calls.

Touch-Tone System
If when using the Bluetooth system you are requested to select options using a touch-tone system (e.g. To speak to customer services press 1, to speak to sales press 2, etc.) please use one of the following options:

1. Press the button. When prompted, say 'enter <digits>' to send the relevant touch-tone signal.

Or

2. Use the phones keypad.

Bluetooth Contact List

A list of names and phone numbers can be stored within the Bluetooth systems contact list. The list can include up to 20 entries.

Note: *A phone must be connected to the system before the contacts list can be accessed.*

To add a new contact to the Bluetooth contact list:

Warning: *When adding, deleting or listing contacts ensure that the vehicle is stationary with the handbrake applied, and the gear selector in 'P' or 'N' (Automatic) or Neutral (Manual).*

1. Press the button. When prompted, say 'Contact List'.
   a) If the system responds with 'Contact list is empty. Do you wish to add a contact?', say 'Yes'.
   b) If the system responds with 'Contact list. Please say a command', say 'Add contact'.

If the name sounds like one that is already stored, or if an error is detected, the system asks you to try again.

2. The system responds with 'Please say the name', recite the contact to be stored.
   If the name is accepted, the system responds with 'Please say the number for <contact>'.
3. Dictate the phone number either as:
   - An entire number (without pauses between digits)
   - A series of segments (for example, say the 1st 3 digits, then the next 3, etc.), until you have dictated the entire number

   The system repeats the number it heard.
4. When the entire number has been correctly entered say 'Store'. The system responds with 'Contact added. Would you like to add another contact?'.
   Say 'No' to return to the system's ready state.
   Say 'Yes' to add another entry.

To delete an entry:

1. Press the button. When prompted, say 'Contact List'.
   a) If the system responds with 'Contact list. Please say a command', say 'Delete <contact>'.
   b) If the system responds with 'Contact list is empty. Do you wish to add a contact?', say 'No'. The system then exits to ready state.
2. When the system responds with 'Are you sure you want to delete the contact <contact>?', say 'Yes'. The system responds with 'Contact deleted'.

To retrieve a list of stored contacts:

- Press the button. When prompted, say 'Contact List'.
  a) If the system responds with 'Contact list'. Please say a command', say 'List contacts'. The system begins to list the stored entries.
  b) If the system responds with 'Contact list is empty. Do you wish to add a contact?', say 'No'. The system exits to ready state.

Switching Voice Prompts On/Off
Use the following procedure to switch voice prompts on/off:

1. Press the button. When prompted, say 'Set-up menu'.
2. Say 'Prompts On' or 'Prompts Off'. The system responds with 'Prompts On' or 'Prompts Off'.

To switch the 'Caller Announce' function on/off:

1. Press the button. When prompted, say 'Set-up menu'.
2. Say 'Caller Announce On' or 'Caller Announce Off'. The system responds with 'Caller Announce On' or 'Caller Announce Off'.

Selecting a language
It is possible to change the language of the voice prompts within the Bluetooth system. Before attempting to change the language please ensure that the module supports your new language choice. The module part numbers and language split is as follows:

Module Part No.	Model	Languages Supported	Default Fitment In
4G43-19C112-AA	DB9	English UK US English Spanish French German	UK USA Canada Eire Spain
4G43-19C112-BA	DB9	English UK French German Italian US English	France Germany Italy Switzerland Austria Belgium
6G33-19C112-AA	V8 Vantage	English UK US English Spanish French German Italian	All countries

The procedure to change the selected language is:
Warning: *When changing the system's language, all contacts in the Bluetooth contacts list are deleted.*

1. Press and hold the END button while turning on the vehicle ignition. Continue holding the END button for at least 10 seconds.

The system enters language selection mode and responds with 'Language Menu. Press volume up or down to change language'.

2. Use the volume Up / Down button to scroll through the language choices. As a language appears, the system plays the prompt for that language (For example: 'English. To choose this language, restart the vehicle'.).

When the desired language has been selected, turn the vehicle ignition to 0 (off). Wait for 6 seconds, then switch the ignition to II (on), the new language is then loaded.

DIAGNOSTICS

V8 Vantage Connector Pin Allocation

Pin Number	Signal Name	Input or Output	Description
3	WAKEUP	I	Module ignition input from Comfort Relay via F68
4	MIC (SCRN)	I	Microphone GND
5	MIC IN+	I	Signal input for single-ended microphone direct from microphone
8	KEYPAD	I	Input signal from keypad on steering wheel
12	UIM LED	O	For Active Call LED (amber) – Earth side switch
13	RADIO MUTE	O	Mute line to radio (active Low)
14	UIM LED	O	For Bluetooth Status LED(Blue) – Earth side switch
15	GND	I	Main Battery Ground
16	GND	I	Main Battery Ground
23	HF_SPKR +	O	Audio Output +
24	HF_SPKR +	O	Audio Output -
31	VPWR	I	Power supply from Interior Light Relay via F46
32	VPWR	I	Power supply from Interior Light Relay via F46

DB9 Connector Pin Allocation

Pin Number	Signal Name	Input or Output	Description
3	IGN	I	Module ignition input from Comfort Relay via F69
4	MIC (SCRN)	I	Microphone GND or Shield
5	MIC IN+	I	Signal input for single-ended or differential mic.
6	MIC IN-	I	Signal input for differential microphone
8	KEYPAD	I	Input signal from keypad on steering wheel
12	UIM LED	O	For Active Call LED (amber) – Earth side switch
13	RADIO MUTE	O	Mute line to radio (active Low)
14	UIM LED	O	For Bluetooth Status LED(Blue) – Earth side switch
15	GND	I	Main Battery Ground
16	GND	I	Main Battery Ground
22	LINEOUT (SCRN)	I	Audio output screen
25	LINEOUT+	O	Audio Output +
26	LINEOUT-	O	Audio Output -
31	VPWR	I	Power supply from Interior Light Relay via F46
32	VPWR	I	Power supply from Interior Light Relay via F46

Troubleshooting

Symptom	Action
New phones will not pair with the vehicle system	• The phone must support Bluetooth Handsfree Profile 0.96 or 1.0. • The system supports a maximum of 4 phones at once. Make sure this limit is not exceeded. • Remove all previous pairings using the 'Remove All' command. The system should then be restarted. • Delete the pairing information on the phone and ensure that the phone is removed from any other systems with which it is paired.
Poor VR Performance	• Enter the digits in segments • Speak with no pauses • Talk louder • Speak towards the direction of the microphone • Check that the centre air vents are not facing directly up to the microphone
System does not respond	• Check LED Indicator connection • Check the connection to the Bluetooth module.

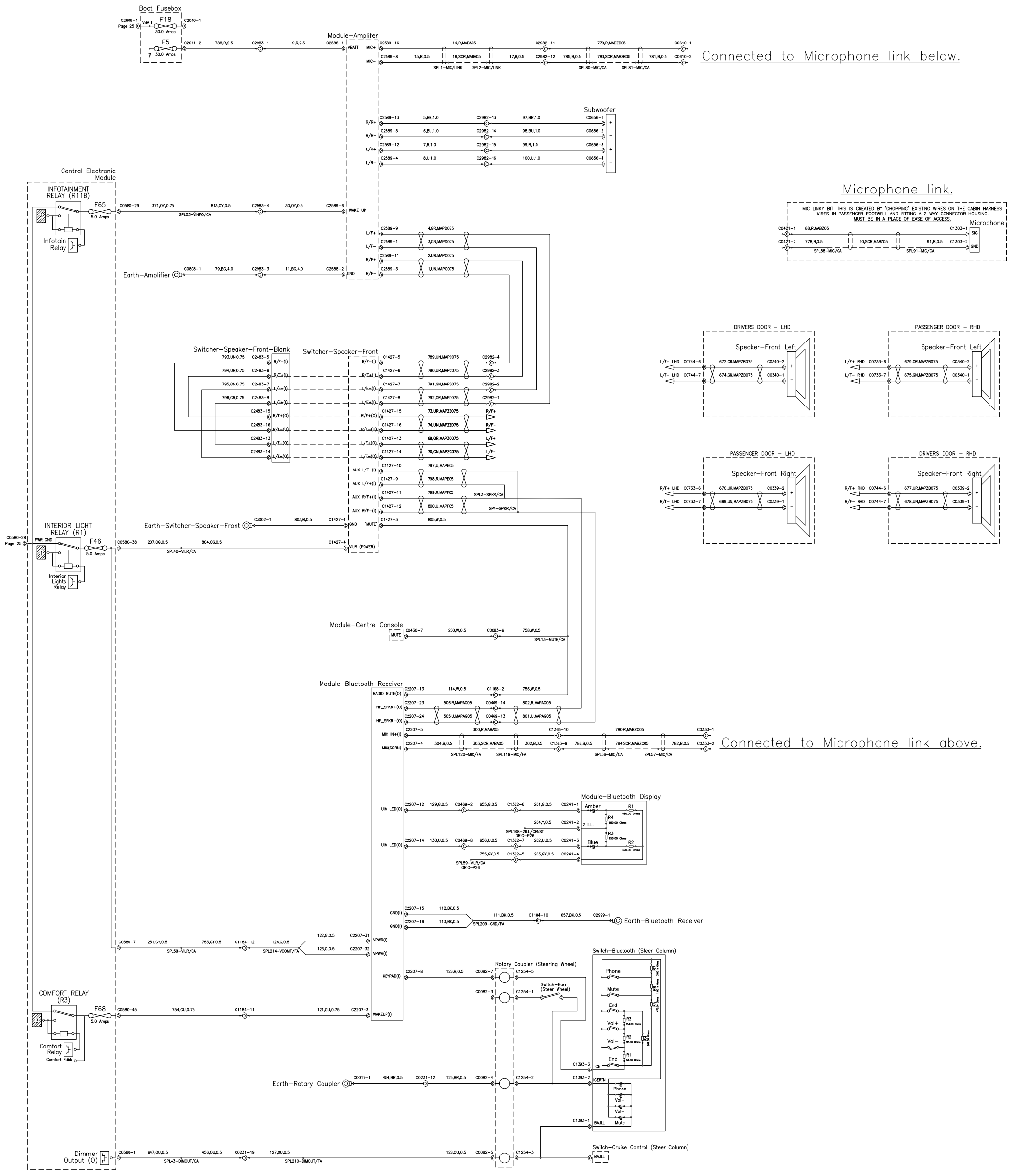

CHANGE HISTORY
04–03–04
KTM F22782
DEV449/450
DEV469/470
DEV465/466
DEV467/468

ASTON MARTIN	DRAWN BY ALEX PEARSON	TITLE	PROJECT AM305	ISSUE LEVEL A	AML DRG No.
	DATE 15–07–05	SUB-SYSTEM TITLE AUDIO SYSTEM (ALPINE LO–LINE & BLUETOOTH)	BUILD JOB1	REV LEVEL 01	2005MY

A1 Circuit

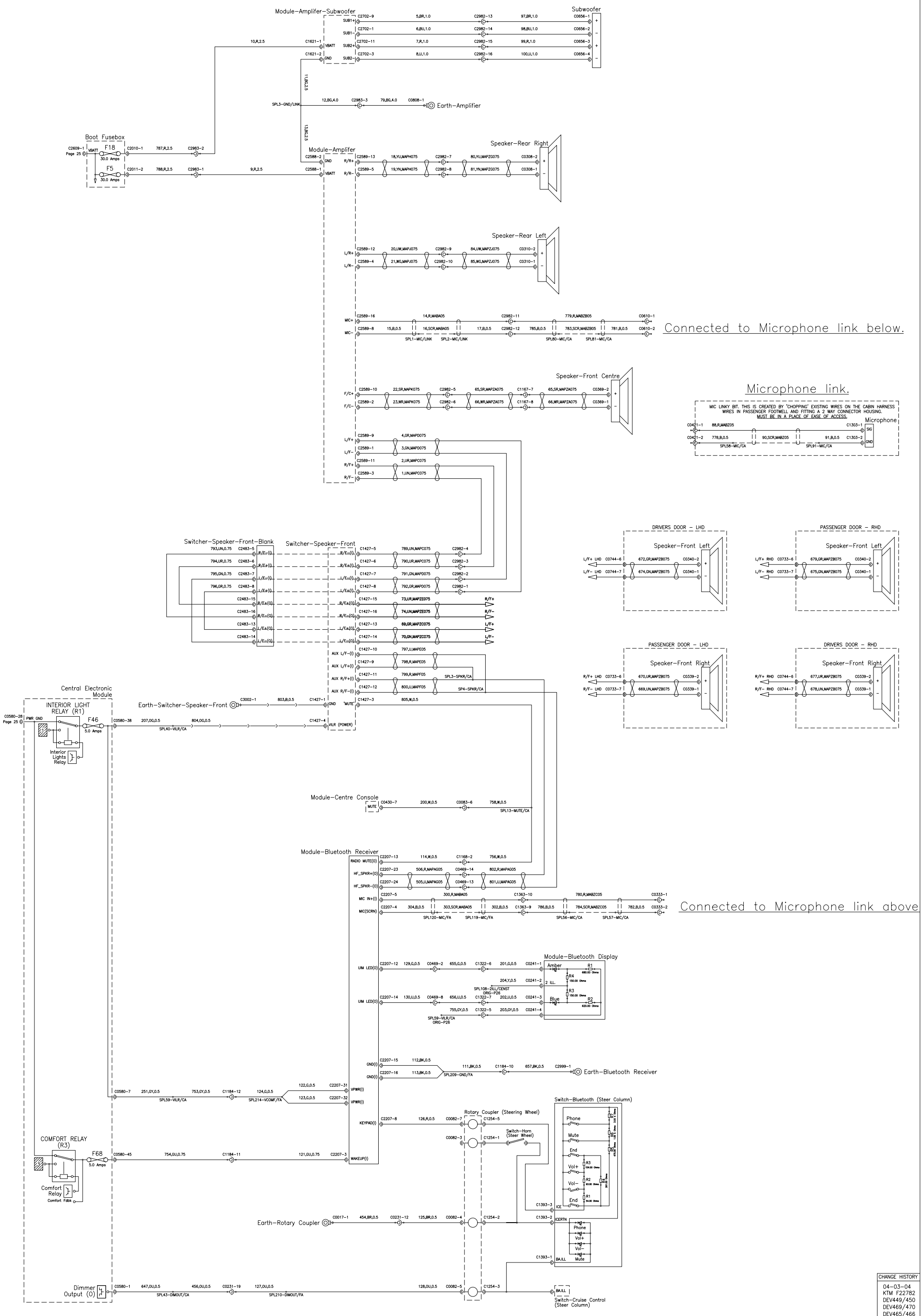

CHANGE HISTORY
04-03-04
KTM F22782
DEV449/450
DEV469/470
DEV465/466
DEV467/468

ASTON MARTIN	DRAWN BY ALEX PEARSON	TITLE	PROJECT AM305	ISSUE LEVEL A	AML DRG No.
	DATE 15-07-05	SUB-SYSTEM TITLE AUDIO SYSTEM (ALPINE HI-LINE & BLUETOOTH)	BUILD JOB1	REV LEVEL 01	2005MY

A1 Circuit

ALL PRINTED & COPIED ARE UNCONTROLLED

ASTON MARTIN CIRCUIT DIAGRAM

CONFIDENTIAL

CHANGE HISTORY
20-09-04
KTM G24187
DEV624/625
DEV626/627
DEV649/650
DEV651/652
DEV653/654

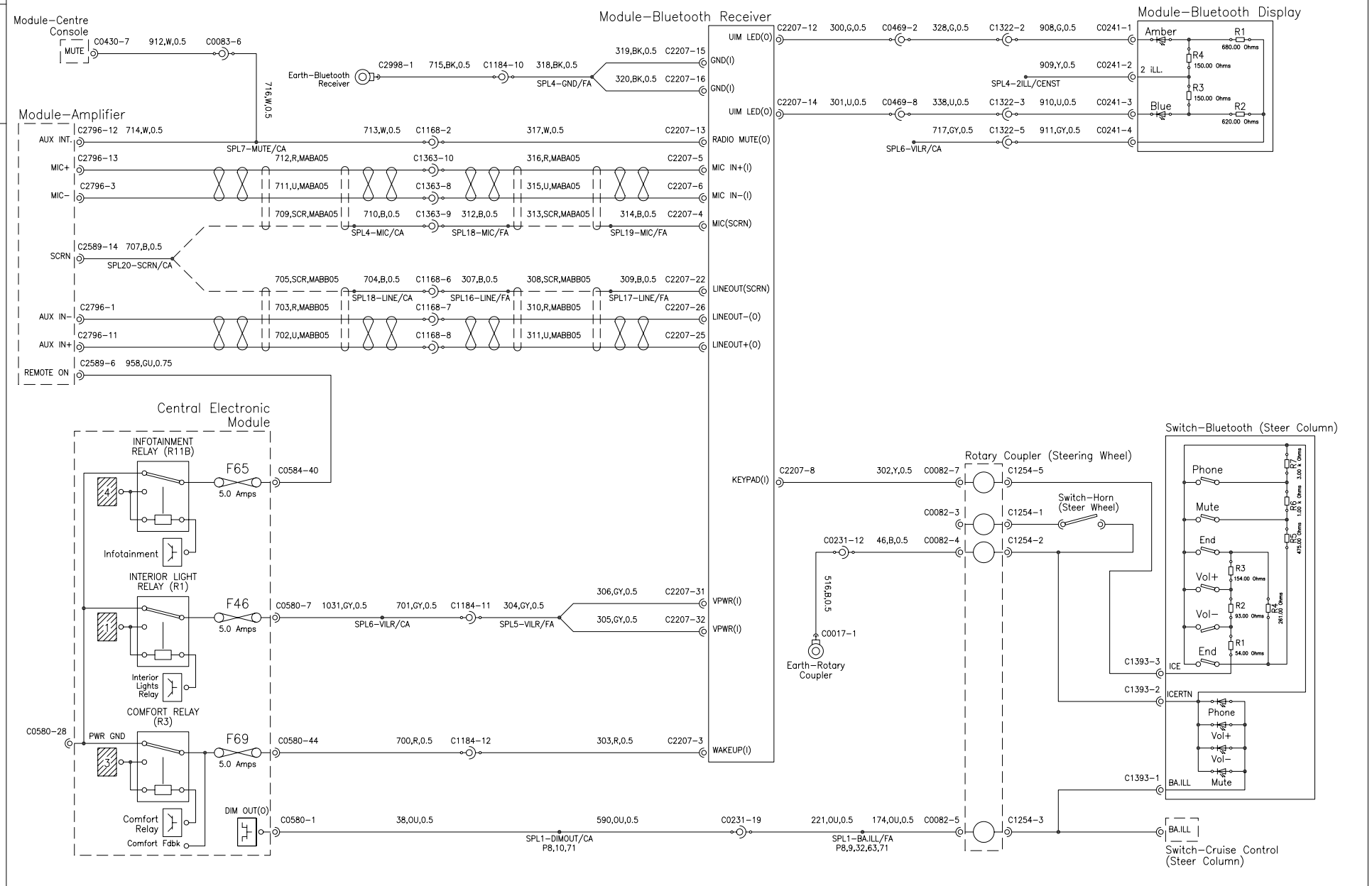

DRAWN BY A.PEARSON	SIGNATURE A.PEARSON	DATE 27-11-03	SYSTEM BLUETOOTH		PROJECT AM803	BUILD JOB1 / CPSC CODE XX.XX.XX
CHECKED BY	SIGNATURE	DATE	SUB SYSTEM (FINAL PRODUCTION INTENT 13-07-04)		DRAWING No. AM803 JOB1	ISSUE LEVEL A
APPROVED BY	SIGNATURE	DATE	VARIANT RHD/LHD	SYSTEM OWNER SUE BAILEY	SHEET No. 76 / No OF SHEETS 77	DATE 25-Jun-04

ASTON MARTIN

Aston Martin On Board Diagnostics (OBD) Summary Documentation

Contents

Item	No. of Pages
1. EOBD Monitors Summary Dated 1st May 2009	43
2. 09MY V8 Vantage EOBD Documentation	
a. Data Tables	13
b. Function Tables	1
c. Notes	1
d. ASM Transmission Data Tables	6
3. V12 Family EOBD Documentation V12 Vantage, 09MY DBS & 09MY DB9 EOBD Documentation	
e. Data Tables	16
f. Function Tables	2
g. Notes	2
h. 09MY DB9 & DBS Automatic Transmission Summary	4

Note: The V12 EOBD engine family is certified as a single submission. The calibration content and therefore the data is identical for each model with the V12 engine; V12 Vantage, DBS and DB9.
The Automatic Transmission summary is included but does not apply to the V12 Vantage.

AML EOBD System Operation Summary

ASTON MARTIN

AML EOBD System Operation Summary for Gasoline Engines.

Contents

Introduction 3
Catalyst Efficiency Monitor 4
Misfire Monitor 6
Fuel System Monitor 9
HO2S Monitor 10
Differential Pressure Feedback EGR System Monitor 13
Electronic Throttle Monitor 16
Dual MAF Diagnostic 18
SAIR Monitor 22
VCT Monitor 25
Comprehensive Component Monitor - Engine 27
Comprehensive Component Monitor - Manual Transmission. 30
Comprehensive Component Monitor - Automatic Transmission 31
6HP26 Automatic Transmission 34
Auto Shift Manual (ASM) Transmission 34
Inspection Maintenance Readiness Code 35
Tamper Protection 35
Serial Data Link Connector 35
Serial Data Link Communication Protocol 35
Serial Data Link MIL Illumination 36
Glossary of Terms 37
MIL Code List 39
MIL Symbol 43

Introduction

This document describes in detail the operation of the AML (Aston Martin Lagonda) EOBD System.

The AML EOBD System consists of a series of Monitors designed to observe the operation of strategic aspects of the Emission Control System. For each of the Monitors there is a detailed functional review of the monitor's operation, a listing of the relevant malfunction codes, typical Monitor entry conditions followed by typical malfunction thresholds.

The AML EOBD System also incorporates a Malfunction Indicator Lamp or MIL (symbol shown on the last page). The MIL will only be used to report emission related failures and to indicate emergency start-up or Limp Home routines. It will not be used for any other purpose.

Although this document describes all the Monitors contained within the AML EOBD System, not ALL of these monitors may be utilised on every vehicle built with the AML EOBD System. This is primarily due to the hardware configuration of the particular vehicle in question e.g. Auto vs. Man Transmission OR EGR vs. No EGR. Please refer to the vehicle specific documentation for details of those Monitors that will be operational.

It is important to note that to illuminate the MIL, the failure condition must be observed at least twice. The first occurrence will set a 'pending code' and the second occurrence will illuminate the MIL. The only exception to this is the Type A Misfire failure, which will 'flash' the MIL at the first occurrence of the failure condition. Therefore, if an OBD reset is performed, a minimum of two trips is required to illuminate the MIL, although the Misfire Monitor does require pre-conditioning to learn 'Profile Correction' and will utilize three trips.

De-activation of the MIL can be achieved if, no further separate failure conditions are detected and 3 subsequent and sequential trips have been completed where the original failure condition which illuminated the MIL initially, is no longer detected.

The MIL code will be completely erased if the same failure condition is not detected after 40 trips.

Catalyst Efficiency Monitor

The Catalyst Efficiency Monitor uses an oxygen sensor before and after the catalyst to infer Hydrocarbon conversion efficiency, based on oxygen storage capacity. Under normal closed-loop fuel conditions, high efficiency catalysts have significant oxygen storage, which makes the switching frequency of the rear HO2S quite slow compared with the switching frequency of the front HO2S. As catalyst efficiency deteriorates, its ability to store oxygen declines and the post-catalyst HO2S signal begins to switch more rapidly, approaching the switching frequency of the pre-catalyst HO2S.

In order to assess catalyst oxygen storage, the monitor compares front and rear HO2S signals during closed-loop fuel conditions after the engine is warmed-up and inferred catalyst temperature is within limits. Front H02S signals are accumulated in up to nine different air mass regions or cells although 3 air mass regions is typical. Rear H02S signals are counted in a single cell for all air mass regions. Currently there are two algorithms that can be used to compare the front and rear HO2S signals:

1. Switch Ratio method;
   The Switch Ratio method compares the 'switch frequencies' of the front and rear HO2S sensors. A 'switch' is counted every time the HO2S voltage output passes through a defined threshold (0.45 V). The catalyst condition is diagnosed by dividing the number of rear H02S switches by the number of front HO2S switches.

2. Index Ratio method.
   The Index Ratio method calculates and compares the length of the front and rear HO2S signals. The catalyst condition is diagnosed by dividing the length of the rear HO2S signal by the length of the front HO2S signal.

A Switch / Index Ratio near 0.0 indicates high oxygen storage capacity, hence high HC efficiency. A Switch / Index Ratio near 1.0 indicates low oxygen storage capacity, hence low efficiency. To improve the robustness of the monitor, the Switch / Index Ratio is calculated using an Exponentially Weighted Moving Average (EWMA) algorithm. If the Switch / Index Ratio exceeds the threshold, the catalyst is considered failed.

Catalyst Monitor Operation:	
DTCs	P0420 Bank 1, P0430 Bank 2 for Series System (and P0420 Complete System for 'Y pipe' configuration).
Monitor execution	once per driving cycle
Monitor Sequence	HO2S monitor complete and OK
Sensors OK	ECT, IAT, TP, VSS, CPS
Monitoring Duration	Approximately 900 seconds during appropriate conditions (approximately 200 to 600 oxygen sensor switches are collected).

Typical catalyst monitor entry conditions:	Minimum	Maximum
Time since engine start-up (70 ^{o}F start)	240 seconds	
Engine Coolant Temp	160 ^{o}F	230 ^{o}F
Intake Air Temp	20 ^{o}F	180 ^{o}F
Engine Load	10%	
Throttle Position	Part Throttle	Part Throttle
Time since entering closed loop fuel	30 sec	
Vehicle Speed	5 mph	70 mph
Steady Air Mass Flow	1.0 lb/min	5.0 lb/min
(Note: 25 - 35 mph steady state driving must be performed to complete the monitor)		

Typical malfunction thresholds:
Rear-to-front O2 sensor switch-ratio/ Index Ratio > 0.75

Catalyst Monitor temporary disablement conditions (other than entry requirements) :
EGR, Secondary air, Front and Rear O2 sensor, Engine Coolant Temperature, Mass Air Flow sensor, Air Charge Temperature sensor, Profile Ignition Pickup & Throttle Position monitor failure.

Misfire Monitor

Neural Network Misfire detection is used in order to achieve "full-range" capability. All software allows for detection of any misfires that occur 6 engine revolutions after initially cranking the engine. This meets the new OBD-II requirement to identify misfires within 2 engine revolutions after exceeding the warm drive, idle rpm.

.

Neural Network System

The Neural Net Misfire (NNM) monitor uses a dedicated microprocessor in the PCM along with crankshaft position, (36–tooth wheel), camshaft position, and engine load to determine engine misfire. A neural network is different way of computing that uses a large number of simple processing elements with a high degree of interconnection to process complex information. It is based on the parallel architecture of the brain. The processing elements have adaptive characteristics (coefficients) that must be learned through a process called training. During training, the network is fed a sample set of data that consists of the inputs along with the desired output (e.g. misfire/no misfire). The network coefficients are recursively optimized so that the correct output is generated from the set of inputs and error is minimized. Once the coefficients have been learned, the network can process "real" data.

Misfire Monitor (continued)

NNM uses a Motorola Star 12 microprocessor in the PCM to perform the NNM calculations. The Motorola Star 12 is used in all markets for the Aston Martin application. The neural network size is 23 nodes and 469 coefficients.

Inputs to Neural Net

- Crankshaft acceleration from the crank position (CKP) sensor
- RPM (calculated from CKP)
- LOAD (normalized for air mass and rpm)
- Indication of cam position from camshaft position (CMP) sensor

Output from Neural Net

- Misfire Call: - 0 (indicating no misfire) or 1 (indicating misfire)

NNM System Hardware Design

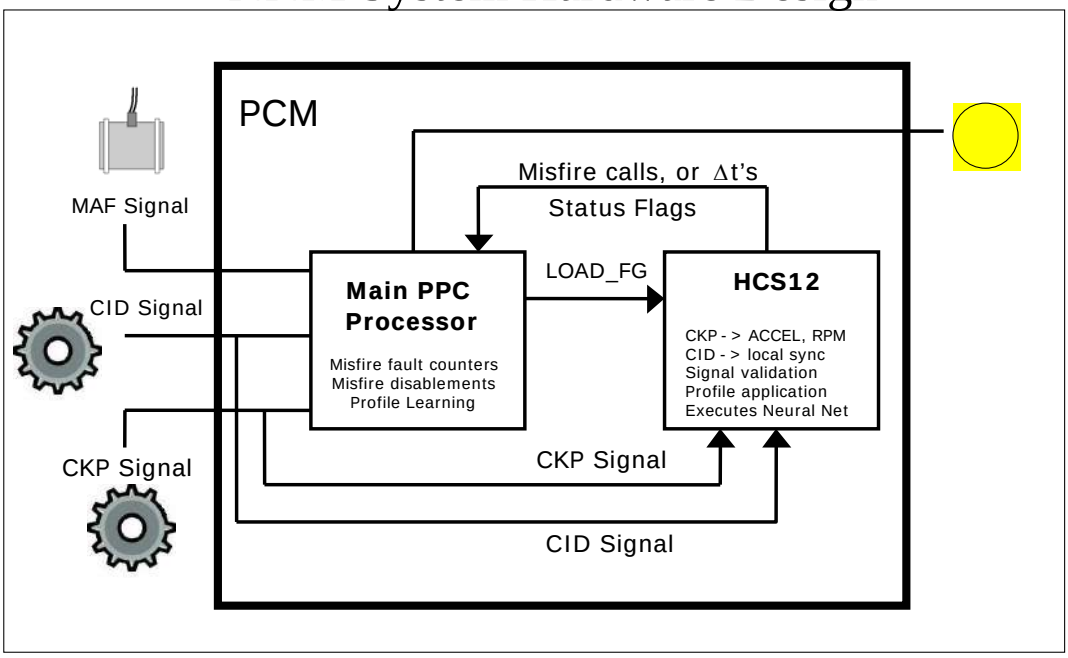

Generic Misfire Algorithm Processing.

The acceleration that a piston undergoes during a normal firing event is directly related to the amount of torque that cylinder produces. The calculated piston/cylinder acceleration value(s) are compared to a misfire threshold that is continuously adjusted based on inferred engine torque. Deviant accelerations exceeding the threshold are conditionally labeled as misfires.

The calculated deviant acceleration value(s) are also evaluated for noise. Normally, misfire results in a non-symmetrical loss of cylinder acceleration. Mechanical noise, such as rough roads or high rpm/light load conditions, will produce symmetrical acceleration variations. Cylinder events that indicate excessive

deviant accelerations of this type are considered noise. Noise-free deviant acceleration exceeding a given threshold is labeled a misfire.

The number of misfires are counted over a continuous 200 revolution and 1000 (or 4000) revolution period. (The revolution counters are not reset if the misfire monitor is temporarily disabled such as for negative torque mode, etc.) At the end of the evaluation period, the total misfire rate and the misfire rate for each individual cylinder is computed. The misfire rate evaluated every 200 revolution period (Type A) and compared to a threshold value obtained from an engine speed/load table. This misfire threshold is designed to prevent damage to the catalyst due to sustained excessive temperature. If the misfire threshold is exceeded and the catalyst temperature model calculates a catalyst mid-bed temperature that exceeds the catalyst damage threshold, the MIL blinks at a 1 Hz rate while the misfire is present. If the threshold is again exceeded on a subsequent driving cycle, the MIL is illuminated. If a single cylinder is indicated to be consistently misfiring in excess of the catalyst damage criteria, the fuel injector to that cylinder may be shut off for a period of time to prevent catalyst damage. Up to two cylinders may be disabled at the same time. This fuel shut-off feature is used on many 8-cylinder engines. It is never used on a 4-cylinder or 6-cylinder engine. Next, the misfire rate is evaluated every 1000 (or 4000) rev period and compared to a single (Type B) threshold value to indicate an emission-threshold malfunction. If a 1000 rev period is calibrated, a single 1000 rev exceedence from startup or four subsequent 1000 rev exceedences on a drive cycle after start-up is used as the malfunction criteria. If a 4000 rev period is calibrated, a single 4000 rev exceedence is used to indicate an emission-threshold malfunction.

Misfire Monitor Operation :	
DTCs	P0300 to P0312, P316 ,P1309, P1310, P1311
Monitor execution	Continuous, misfire rate calculated every 200 and 1000 or 4000 revs
Monitor Sequence	none
Sensors OK	CKP, CMP, ECT
Monitoring Duration	Entire driving cycle (see disablement conditions below)

Typical misfire monitor entry conditions	Minimum	Maximum
Time since engine start-up	5 seconds	
Engine Coolant Temp	20 ^{o}F	250 ^{o}F
RPM Range	idle	as per Directive
Profile correction factors learned in KAM	Yes	

Misfire Monitor temporary disablement conditions (other than entry requirements)
Closed throttle decels (negative torque, engine being driven)
Engine Torque Reduction Modes
Accessory load-state change (A/C, power steering)
EGR Monitor Flow Test

Typical misfire monitor malfunction thresholds :	
Type A (catalyst damaging misfire rate)	misfire rate is an rpm/load table ranging from 40% at idle to 4% at high rpm and loads.
Type B (emission threshold rate)	1% to 5%

Fuel System Monitor

As fuel system components age or otherwise change over the life of the vehicle, the adaptive fuel strategy learns deviations from stoichiometry while running in closed loop fuel. These learned corrections are stored in Keep Alive Memory as long term fuel trim corrections. They may be stored into an 8x10 rpm/load table or they may be stored as a function of air mass. As components continue to change beyond normal limits or if a malfunction occurs, the long term fuel trim values will reach a calibratable rich or lean limit where the adaptive fuel strategy is no longer allowed to compensate for additional fuel system changes. Long term fuel trim corrections at their limits, in conjunction with a calibratable deviation in short term fuel trim, indicate a rich or lean fuel system malfunction.

Fuel Monitor Operation:	
DTCs	P0171 Bank 1 Lean, P0174 Bank 2 Lean P0172 Bank 1 Rich, P0175 Bank 2 Rich
Monitor execution	continuous while in closed loop fuel
Monitor Sequence	none
Monitoring Duration	2 seconds to register malfunction

Typical fuel monitor entry conditions	Minimum	Maximum
RPM Range	idle	4,000 rpm
Air Mass Range	0.75 lb/min	8.0 lb/min
Purge Duty Cycle	0%	0%

Typical fuel monitor malfunction thresholds:
Long Term Fuel Trim correction cell currently being utilized in conjunction with Short Term Fuel Trim: Lean malfunction: LTFT > 25%, STFT > 5% Rich malfunction: LTFT < 25%, STFT < 10%

Fuel Monitor temporary disablement conditions (other than entry requirements) :
None.

HO2S Monitor

Front HO2S Signal

The time between HO2S switches is monitored after vehicle startup and during closed loop fuel conditions. Excessive time between switches or no switches since startup indicate a malfunction. Since 'lack of switching' malfunctions can be caused by HO2S sensor malfunctions or by shifts in the fuel system, DTCs are stored that provide additional information for the 'lack of switching' malfunction. Different DTCs indicate whether the sensor was stuck lean/disconnected (P1131, P1151), stuck rich (P1132, P1152) or stopped switching due to excessive long term fuel trim corrections (P1130, P1150).

HO2S 'Lack of Switching' Operation:	
DTCs	Bank 1 – P0132, P2195, P2196 Bank 2 – P0152, P2197, P2198
Monitor execution	continuous, from startup and while in closed loop fuel
Monitor Sequence	none
Sensors OK	TP, MAF, MAP, ECT, CHT, ACT, IAT
Monitoring Duration	30 to 60 seconds to register a malfunction

Typical HO2S 'Lack of Switching' entry conditions :	Minimum	Maximum
Throttle Position	part throttle	
Idle State (not at idle, part throttle)		
Engine Load	20%	60%
Time since engine start-up	180 seconds	
Inferred Exhaust Temperature	800 ^{o}F	

Typical HO2S 'Lack of Switching' malfunction thresholds:
< 5 switches since startup after 30 seconds in test conditions > 60 seconds since last switch while closed loop > 30 seconds since last switch while closed loop at Short Term Fuel Trim limit

HO2S lack of switching temporary disablement conditions (other than entry requirements) :
Air Charge Temperature, ACT (or IAT) < -20 °F (minimum Cold Climate Test Temperature). Failure of the sensors mentioned in the above “Sensors OK” section.

The HO2S is also tested functionally. The response rate is evaluated by entering a fixed frequency square wave, fuel control routine. This routine drives the air/fuel ratio around stoichiometry at a calibratable frequency and magnitude, producing predictable oxygen sensor signal amplitude. A slow sensor will show a reduced amplitude. Oxygen sensor signal amplitude below a minimum threshold indicates a slow sensor malfunction (P0133 Bank 1, P0153 Bank 2).

HO2S Response Rate Operation:	
DTCs	Bank 1 - P0133, Bank 2 - P0153
Monitor execution	once per driving cycle
Monitor Sequence	none
Sensors OK	ECT, IAT, MAF, MAP, VSS, CKP, TP, CMP, no misfire DTCs
Monitoring Duration	4 seconds

Typical HO2S response rate entry conditions :	Minimum	Maximum
Short Term Fuel Trim Range	90%	110%
Engine Coolant Temp	150 ^{o}F	240 ^{o}F
Intake Air Temp		140 ^{o}F
Engine Load	20%	50%
Vehicle Speed	37 mph	55 mph
Engine RPM	1500 rpm	3000 rpm
Time since entering closed loop fuel	10 seconds	

Typical HO2S response rate malfunction thresholds:
Voltage amplitude: < 0.4 volts

HO2S response rate temporary disablement conditions (other than entry requirements) :
Disabled if a lack of switching fault is present, also sensors noted in “Sensors OK” section.

Rear HO2S Signal.

A functional test of the rear HO2S sensors is done during normal vehicle operation. The peak rich and lean voltages are continuously monitored. Voltages that exceed the calibratable rich and lean thresholds indicate a functional sensor. If the voltages have not exceeded the thresholds after a long period of vehicle operation, the air/fuel ratio may be forced rich or lean in an attempt to get the rear sensor to switch. This situation normally occurs only with a green catalyst (< 500 miles). If the sensor does not exceed the rich and lean peak thresholds, a malfunction is indicated.

Rear HO2S Check Operation:	
DTCs	Bank 1 - P0136, Bank 2 - P0156
Monitor execution	once per driving cycle
Monitor Sequence	after 'Upstream Response' test
Monitoring Duration	20sec for excursion

Typical Rear HO2S check entry conditions :	Minimum	Maximum
Inferred exhaust temperature range	400 ^{o}F	1600 ^{o}F
Rear HO2S heater-on time	120 seconds	
Throttle position	part throttle	
Engine RPM (forced excursion only)	1000 rpm	none

Typical Rear HO2S check malfunction thresholds:	
Does not exceed rich and lean threshold envelope:	Rich < 0.25 volts Lean > 0.65 volts

Rear HO2S temporary disablement conditions (other than entry requirements) :
None.

HO2S Heaters, front and rear.

The HO2S heaters are monitored for circuit continuity. A HO2S heater fault is determined by turning the heater on and off and looking for corresponding voltage or current change in the heater output driver circuit in the PCM.

HO2S Heater Monitor Operation:	
DTCs	Bank 1 - P0135 Front, P0141 Rear Bank 2 - P0155 Front, P0161 Rear
Monitor execution	Change of Heater state (at least once per drive cycle).
Monitor Sequence	none
Monitoring Duration	< 5 seconds

Typical HO2S heater check malfunction thresholds:
Indicated voltage or current does not match commanded state.

HO2S heater temporary disablement conditions (other than entry requirements) :
None.

Differential Pressure Feedback EGR System Monitor

Where a vacuum driven EGR valve is used on the base application, the EGR System Monitor will consist of a series of electrical and functional tests for the various aspects of system operation. First, the Differential Pressure Feedback EGR (DPFE) sensor input circuit is checked for out of range values (P1400 P1401). The Electronic Vacuum Regulator (EVR) output circuit is checked for opens and shorts (P1409).

EGR Electrical Check Operation:	
DTCs	P1400, P1401, P1409
Monitor execution	continuous, during EGR monitor
Monitor Sequence	none
Monitoring Duration	4 seconds to register a malfunction

Typical EGR electrical check entry conditions:
EGR system enabled

Typical EGR electrical check malfunction thresholds:
DPFE sensor outside voltage: > 4.96 volts, < 0.195 volts EVR solenoid smart driver status indicates open/short

The differential pressure indicated by the DPFE sensor is also checked at idle with zero requested EGR flow to perform the high flow check. If the differential pressure exceeds a calibratable limit, it indicates a stuck open EGR valve or debris temporarily lodged under the EGR valve seat (P0402).

EGR Stuck open Check Operation:	
DTCs	P0402
Monitor execution	once per driving cycle
Monitor Sequence	Done after P1400 and P1401 tests
Sensors OK	CPS, ECT, IAT, MAF, MAP, TP
Monitoring Duration	10 seconds to register a malfunction

Typical EGR stuck open check entry conditions :	Minimum	Maximum
EVR Duty Cycle (EGR commanded off)	0%	0%
Engine RPM (after EGR enabled)	at idle	at idle

Typical EGR stuck open check malfunction thresholds:
DPFE sensor voltage at idle versus engine-off signal: > 0.6 volts

After the vehicle is started, during vehicle acceleration, the differential pressure indicated by the DPFE sensor at zero EGR flow is checked to ensure that both hoses to the DPFE sensor are connected. Under this condition, the differential pressure should be zero. If the differential pressure indicated by the DPFE sensor exceeds a maximum threshold or falls below a minimum threshold, an upstream or downstream DPFE hose malfunction is indicated (P1405 P1406).

EGR Hose Check Operation:	
DTCs	P1405, P1406
Monitor execution	once per driving cycle
Monitor Sequence	Done after P0402 test
Sensors OK	MAF, MAP
Monitoring Duration	2 seconds to register a malfunction

Typical EGR hose check entry conditions :	Minimum	Maximum
EVR duty Cycle (EGR commanded off)	0%	0%
Mass Air Flow		8 lb/min
Inferred exhaust back pressure	13 in H_2O	

Typical EGR hose check malfunction thresholds:
DPFE sensor voltage: < -7 in H_2O, > 7 in H_2O

After the vehicle has warmed up and normal EGR rates are being commanded by the PCM, the low flow check is performed. Since the EGR system is a closed loop system, the EGR system will deliver the requested EGR flow as long as it has the capacity to do so. If the EVR duty cycle is very high (greater than 80% duty cycle), the differential pressure indicated by the DPFE sensor is evaluated to determine the amount of EGR system restriction. If the differential pressure is below a calibratable threshold, a low flow malfunction in indicated (P0401).

EGR Flow Check Operation:	
DTCs	P0401
Monitor execution	once per driving cycle
Monitor Sequence	Done after P1405 and P1406 tests
Sensors OK	CPS, ECT, IAT, MAF, MAP, TP
Monitoring Duration	minimum 70 seconds to register a malfunction

Typical EGR flow check entry conditions:	Minimum	Maximum
EVR Duty Cycle	80%	100%
Engine RPM		2500 rpm
Mass Air Flow Rate of Change		6% prog. loop
Inferred manifold vacuum	6 in Hg	10 in Hg

Typical EGR flow check malfunction thresholds:
DPFE sensor voltage: < 6 in H_2O

EGR Monitor temporary disablement conditions (other than entry requirements) :
Non-operational when base feature disabled, including matching base feature temperature disablement.
Low Barometric Pressure Conditions.
Reporting of faults suppressed below 32°F to prevent mis-diagnosis due to ice. Monitor is still operational and continues to check, reporting any faults when temperature > 32°F.

If the above temporary disablement conditions (inferred ambient temperature and low barometric pressure) are encountered, the flow test will be suspended and a timer will accumulate. Whenever the temporary disablement conditions are no longer present the timer will decrement, and the flow test will operate as normal. However, in extended temporary disablement conditions if the timer reaches a calibrated threshold (typically 800 seconds), the EGR flow test is disabled for the remainder of the current drive cycle, and the EGR monitor I/M readiness bit will be set.

Electronic Throttle Monitor

Where ETC is used, the system monitor incorporates a complex safety strategy. The main ETC feature is based around a driver demand torque that is delivered as an output shaft torque through the correct positioning of the throttle plate. The Independent Plausibility Check (IPC) feature performs the primary monitoring function. This resides within the main microprocessor and is responsible for determining the driver demand torque and comparing it to an estimate of the actual brake torque delivered. If the generated torque exceeds the driver demanded torque by a specified amount, then the appropriate FMEM action is taken.

With the IPC feature being on the main processor, an intelligent VQZ watchdog is incorporated on a separate processor to monitor the performance of the IPC and the main processor. If the VQZ determines that the IPC function is impaired in any way then it takes the appropriate FMEM action.

Electronic Throttle:	
DTCs	P0606 PCM Microprocessor fault (MIL) P2110 Forced limit RPM mode (MIL) (Default throttle, if this is the only code set then it implies that the IPC detected a power greater then demand occurrence)
Monitor execution	continuous
Monitor Sequence	none
Monitoring Duration	Less than 200ms to register a fault

The Throttle Plate Position Controller (TPPC) controls the throttle plate to the desired throttle angle. It is embedded within a separate chip within the PCM. The output of the TPPC is a voltage signal to the H-bridge driver.

Throttle Plate Position Controller:	
DTCs	P2100 Throttle actuator control motor circuit open (MIL) P2101 Throttle actuator control motor circuit range/performance (MIL) (ETB mis-wired, detected at start-up only) P2107 Throttle actuator control motor processor (MIL) (TP_CMD or H-Bridge or TPPC self test fault) P2111 Throttle actuator control system – stuck open (MIL) P2112 Throttle actuator control system – stuck closed (MIL)
Monitor execution	continuous
Monitor Sequence	none
Monitoring Duration	Less than 1s to register a fault

The system monitor also determines the validity of any inputs to the electronic throttle control feature by checking for opens, shorts, out-of-range values and inconsistencies.

Throttle Position Sensors:	
DTCs	P0121 Throttle position sensor A circuit range/performance (Closed in bore out of range fault) P0122 Throttle position sensor A circuit low input P0123 Throttle position sensor A circuit high input P0124 Throttle position sensor A circuit intermittent P0221 Throttle position sensor B circuit range/performance (Closed in bore out of range fault) P0222 Throttle position sensor B circuit low input P0223 Throttle position sensor B circuit high input P0224 Throttle position sensor B circuit intermittent P2135 Throttle position sensor A/B voltage correlation
Monitor execution	continuous
Monitor Sequence	none
Monitoring Duration	Less than 200ms to register a fault

Accelerator Pedal Position Sensors:	
DTCs	P2121 Pedal position sensor D circuit range/performance P2122 Pedal position sensor D circuit low input P2123 Pedal position sensor D circuit high input P2124 Pedal position sensor D circuit intermittent P2126 Pedal position sensor E circuit range/performance P2127 Pedal position sensor E circuit low input P2128 Pedal position sensor E circuit high input P2129 Pedal position sensor E circuit intermittent P2138 Pedal position sensor D/E voltage correlation
Monitor execution	continuous
Monitor Sequence	none
Monitoring Duration	Less than 200ms to register a fault

Brake Pedal Switches:	
DTCs	P0504 Brake switch A/B correlation (BPS on when BLS is off) P0571 Brake switch A circuit (BPS failed) P0703 Brake switch B circuit (BLS failed) P1572 Brake system input failure (BLS failed then BPS failed) P1703 Brake switch out of self test range (Set when brake is on for KOEO test or when brake on or off state is not seen for KOER test)
Monitor execution	continuous
Monitor Sequence	none
Monitoring Duration	Not time dependent

Dual MAF Diagnostic

Dual MAF Hardware

The V8 uses a common dirty air pick-up, which feeds twin air filters and MAF meters before recombining the two air streams in a junction prior to the throttle.

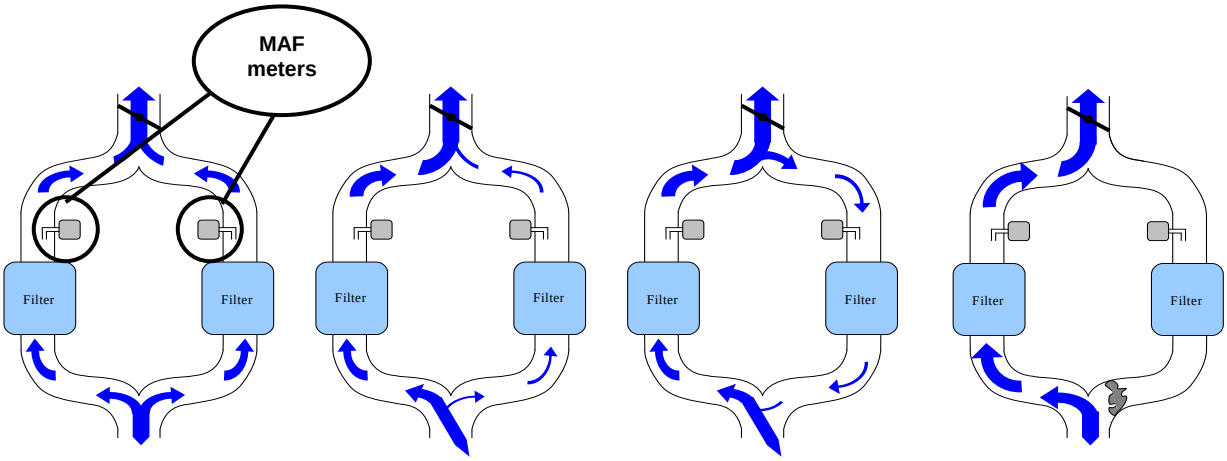

Normal Operation
MAF meters receive an equal share of the airflow.

Side Wind or Partial Blockage
MAF meters receive unequal airflows.
This can either be due to a side wind or a partial blockage.
Low engine airflow conditions are particularly susceptible to side wind.
Fault judgement is dependant on severity.

Backflow
One MAF meter receives an airflow greater than the total engine consumption.
This is due to severe side wind.
One MAF meter will measure zero airflow and this needs to be determined to prevent false circuit faults.
Fault judgement is dependant on severity.

Total Blockage
One MAF meter receives airflow equal to the total airflow.
Fault judgement is dependant on severity.

Dual MAF Diagnostic Overview

The dual MAF diagnostic performs 11 separate tests on the measured MAF values. Each test is designed to identify specific faults many of which, are only applicable to the dual MAF hardware configuration. Many of the tests compare the measured MAF values to the estimated MAF (calculated from throttle position, barometric pressure, act and engine speed). The tests are performed continuously (apart from the conditions outlined later) and are always completed in the same sequence:

Test1	-	Does MAF1+MAF2 = estimated MAF
Test2	-	Does MAF1 = ½ estimated MAF
Test3	-	Does MAF2 = ½ estimated MAF
Test4	-	Is MAF1<MAF2
Test5	-	MAF1 low voltage
Test6	-	MAF2 low voltage
Test7	-	MAF1 high voltage
Test8	-	MAF2 high voltage
Test9	-	Is MAF1> estimated MAF
Test10	-	Is MAF2> estimated MAF
Test11	-	Does MAF1 = MAF2

By pass/fail combinations of the above tests a variety of conditions can be detected discretely on each MAF:

Partly blocked MAF

Fully blocked MAF

Electrical short to ground MAF

Electrical short high MAF

Backflow

Failed in range MAF

Fault Matrix

Condition	MAF 1 + MAF 2 = EST	MAF 1 = ½ EST	MAF 2 = ½ EST	MAF 1 < MAF 2	MAF 1 low voltage	MAF 2 low voltage	MAF 1 high voltage	MAF 2 high voltage	MAF 1 > EST	MAF 2 > EST	MAF 1 = MAF 2	Air Charge	P-codes
Normal operating.	Y	Y	Y									f(maf_raw)	None
MAF 1 partly blocked.	Y	N	N	Y	N	-	N					f(maf_raw)	P010F, P0100
MAF 1 fully blocked @ low load.	Y	N	N	Y	Y	-	N					f(maf_raw)	P010F, P0100
MAF 2 partly blocked.	Y	N	N	N	-	N	-	N				f(maf_raw)	P010F, P010A
MAF 2 fully blocked @ low load.	Y	N	N	N	-	Y	-	N				f(maf_raw)	P010F, P010A
MAF 1 shorted to ground.	N	N	Y	-	Y	-	N					f(maf_raw)	P0102
MAF 1 shorted to high.	N	N	Y	-	N	-	Y					f(maf_raw)	P0103
MAF 1 failed in range.	N	N	Y	-	N	-	N					f(maf_raw)	P0101
MAF 2 shorted to ground.	N	Y	N	-	-	Y	-	N				f(maf_raw)	P010C
MAF 2 shorted high.	N	Y	N	-	-	N	-	Y				f(maf_raw)	P010D
MAF 2 failed in range.	N	Y	N	-	-	N	-	N				f(maf_raw)	P010B
Estimated value wrong.	N	N	N	-	N	N	N	N	-	-	Y	f(maf_raw)	None
MAF 1 and MAF 2 failed in range.	N	N	N	-	N	N	N	N	-	-	N	f(fmem)	P0101, P010B
Backflow via MAF 1.	N	N	N	-	Y	N	N	N	-	Y		f(fmem)	P0104
MAF 1 short to ground MAF 2 failed in rng.	N	N	N	-	Y	N	N	N	-	N		f(fmem)	P0102, P010B
MAF 1 shorted high, MAF 2 failed in rng.	N	N	N	-	N	N	Y	N	-			f(fmem)	P0103, P010B
Backflow via MAF 2.	N	N	N	-	N	Y	N	N	Y			f(fmem)	P010E
MAF 1 failed in rng, MAF2 short to ground.	N	N	N	-	N	Y	N	N	N			f(fmem)	P0101, P010C
MAF 1 failed in rng, MAF 2 shorted high.	N	N	N		N	N	N	Y				f(fmem)	P0101, P010D
MAF 1 & MAF 2 shorted to ground.	N	N	N	-	Y	Y	N	N				f(fmem)	P0102, P010C
MAF 1 & MAF 2 shorted high.	N	N	N	-	N	N	Y	Y				f(fmem)	P0103, P010D
Severe backflow via MAF 2.	N	N	N	-	N	Y	Y	N	Y			f(fmem)	P010E
MAF 2 fully blocked @ high load	N	N	N						N			f(fmem)	P010F, P010B
Severe backflow via MAF 1.	N	N	N	-	Y	N	N	Y	-	Y		f(fmem)	P0104
MAF 1 fully blocked @ high load.	N	N	N						-	N		f(fmem)	P010F, P0101

Dual MAF Diagnostic Operation:	
DTCs	P0100 – Mass Air Flow A Circuit P0101 – Mass Air Flow A Circuit Range/Performance P0102 – Mass Air Flow A Circuit Low Input P0103 – Mass Air Flow A Circuit High Input P0104 – Mass Air Flow A Circuit Intermittent/Erratic P010A – Mass Air Flow B Circuit P010B – Mass Air Flow B Circuit Range/Performance P010C – Mass Air Flow B Circuit Low Input P010D – Mass Air Flow B Circuit High Input P010E – Mass Air Flow B Circuit Intermittent/Erratic P010F – Mass Air Flow Sensors A/B Correlation
Monitor execution	Continuous (exceptions below)
Monitor Sequence	Continuous (exceptions below)
Sensors/Components OK	No Throttle Position Failure No Vehicle Speed Failure
Monitoring Duration	Continuous (exceptions below)

Global Entry Conditions		
Entry condition	Minimum	Maximum
Battery Voltage	11 volts	18 volt

Global Abort Conditions
SAIR monitor running

Abort Conditions for P0100,P0101,P010A,P010B,P010F
Throttle position < 3 degrees & Vehicle Speed > 15mph

SAIR Monitor

SAIR Hardware

The V8 uses SAIR to enhance the emissions performance. The SAIR pump is supplied with clean air from the 'Y' junction prior to the throttle. This air is then supplied to the exhaust via two vacuum operated valves, which are controlled from a common electrically operated control valve.

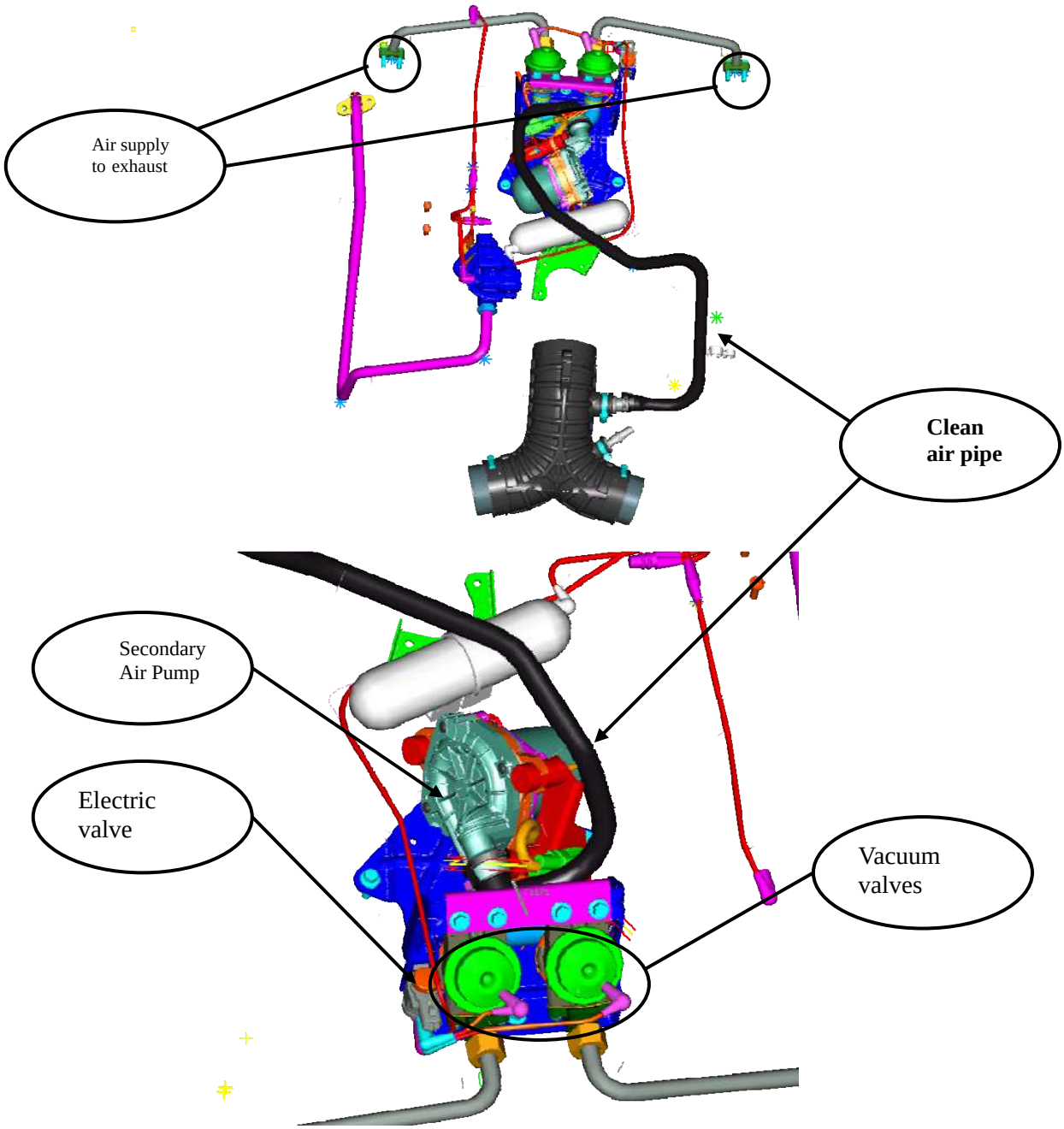

SAIR System Monitor – Flow Check

When the air pump is energized, the MAF sensor will show a corresponding increase in airflow. The SAIR pump flow check monitors the MAF sensor signal and two air flow models during normal secondary air system operation to determine if secondary air is being delivered into the exhaust system. The SAIR pump flow test compares the actual change in MAF during the pump on and off transitions to the expected change in airflow from the secondary air flow model. (A throttle body flow model is used to "zero out" errors in the air meter and to compensate for transient driving conditions.) The actual airflow is divided by the expected airflow to calculate an "On flow ratio" and an "Off flow ratio".

A flow ratio that is much less than 1.0 means that the air pump has no/low flow, or the inlet hose to the pump is disconnected. If secondary air system operation extends into closed loop fuel, fuel trim feedback is used to discriminate between low pump flow and inlet hose disconnection. A low flow ratio with a lean fuel system indicates a disconnected inlet hose. A flow ratio significantly higher than 1.0 (and/or a rich fuel system indication) indicates that the outlet hose from the pump is disconnected.

SAIR Diagnostic

The V8 uses the standard FORD non-intrusive monitor that has been adapted for use on a V-engine. The detection capability is detailed below with the V8 specific modifications highlighted

P0410 - Pump inlet hose disconnection.

P0491 - Low airflow into the exhaust on Bank1. Blocked hose OR failed to open vacuum valve.

P0492 - Low airflow into the exhaust on Bank 2. Blocked hose OR failed to open vacuum valve.

P2448 - Low airflow into the exhaust on Bank1. Disconnected outlet hose.

P2449 - Low airflow into the exhaust on Bank 2. Disconnected outlet hose.

P0412 - SAIR electrical circuit fault high/low on ecu control pin.

P2257 - SAIR electrical circuit fault high on monitor pin.

P2258 - SAIR electrical circuit fault low on monitor pin.

The determination of which bank is receiving low airflow is performed by monitoring the closed loop fuelling correction supplied from the oxygen sensors. The bank that has the highest enleaning correction is the bank that has the lowest SAIR flow. If closed loop fuelling is not active when the SAIR pump is disabled the diagnostic cannot determine which bank is receiving low flow and so a fault on both banks is raised.

The relative difference between the commanded lambda values for each bank is used to determine a restricted flow to either bank1 or 2 due to a restricted outlet. This enables P0491, P0492 to be raised if the flow ratio is calculated as in range.

The SAIR functional tests run when SAIR is active and the results are stored until the HEGO monitor has completed (150-200 seconds after SAIR is off on a typical FTP74). It is only when the HEGO monitor has completed successfully that any functional SAIR faults and SAIR monitor complete is reported.

SAIR Diagnostic High Level Flow

AIR Monitor Flow Check Operation:	
DTCs	P0491 Pump Low Flow Bank1 P0492 Pump Low Flow Bank2 P0410 Pump Inlet Hose Off P2448 Pump Outlet Hose Off Bank1 P2449 Pump Outlet Hose Off Bank2 P0412 primary side circuit check P2257, P2258 secondary side circuit checks
Monitor execution	Flow check - once per driving cycle, circuit checks – continuous
Monitor Sequence	Runs approx. 5 seconds after start during normal SAIR operation
Sensors OK	ECT, IAT, MAF, TP, ETC, and HO2S
Monitoring Duration	From 5 to 70 seconds

Typical AIR flow check entry conditions: (The monitor will run when the air pump runs, the entry conditions below are secondary air system entry conditions.)		
Entry condition	Minimum	Maximum
Time since engine start-up	5 seconds	70 seconds
Engine Coolant Temperature	-7°C (20°F)	35°C (90°F)
Predicted Pump Flow	18.5kg/h (0.68lb/min)	
Manifold Vacuum	13.2kPa (3.9”Hg)	
Catalyst Temperature		847°C (1558°F)
Inlet Air Temperature	-12°C (10°F)	
Battery Voltage	11 volts	18 volts
Note: There is a Throttle position stability check that can delay the calculation of the flow ratio. If the throttle is continuously moving, it is possible, to delay calculation of the flow ratio.		

Typical AIR functional check malfunction thresholds:
On Flow ratio < 0.75 (P0491, P0492 - Low Flow or, P0410 - Inlet Hose Off)
Off Flow ratio < 0.75 (P0491, P0492 - Low Flow or, P0410 - Inlet Hose Off)
Fuel Shift >0.3/Long term fuel shift bank1/bank2 (Clears possible outlet blocked P0491/92, but leaves valid P0410)
Bank1 – Bank2 lambda correction error >0.5 (P0491, P0492)
Closed Loop Fuel Control Active >10 seconds (P0491, P0492 – Low Flow)
On Flow ratio > 1.58 (P2448, P2449 – Outlet Hose Off)

VCT Monitor

VCT Hardware

Variable Cam Timing (VCT) enables rotation of the camshaft(s) relative to the crankshaft (phase-shifting) as a function of engine operating conditions. Intake Only (phase-shifting only the intake cam) is used in the AML application.

VCT is used primarily to increase internal residual dilution at part throttle to reduce NOx, and to improve fuel economy. With Intake Only VCT, the intake camshaft is advanced at part throttle and WOT (at low to mid-range engine speeds) to open the intake valve earlier for increased residual dilution and close the intake valve earlier in the compression stroke for increased power. When the engine is cold, opening the intake valve earlier warms the charge which improves fuel vaporization for less HC emissions; when the engine is warm, the residual burned gasses limit peak combustion temperature to reduce NOx formation.

The VCT system hardware consists of a control solenoid and a pulse ring on the camshaft. The PCM calculates relative cam position using the CMP input to process variable reluctance sensor pulses coming from the pulse ring mounted on the camshaft. Each pulse wheel has N + 1 teeth where N = the number of cylinders per bank. The N equally spaced teeth are used for cam phasing; the remaining tooth is used to determine cylinder # 1 position. Relative cam position is calculated by measuring the time between the rising edge of profile ignition pickup (PIP) and the falling edges of the VCT pulses.

VCT Diagnostic

The PCM continually calculates a cam position error value based on the difference between the desired and actual position and uses this information to calculate a commanded duty cycle for the VCT solenoid valve. When energized, engine oil is allowed to flow to the VCT unit thereby advancing and retarding cam timing. The VCT logic calculates the instantaneous variance in actual cam position (the squared difference between actual cam position and commanded cam position), then calculates the long term variance using a rolling average filter (Exponentially Weighted Moving Average).
If the VCT system is stuck or operates with an constant error relative to the target position, the monitor will detect a variance which will quickly accumulate. There are three variance indices that monitor cam variance in the retard direction, the advance direction, and for V engines, the difference between banks. If any variance index is greater than the malfunction threshold, a VCT target error malfunction will be indicated (P0011, P0012 Bank 1, P0021, P0022 Bank 2).

The VCT solenoid output driver in the PCM is checked electrically for open circuit and shorts (P0010 Bank 1, P0020 Bank 2).

VCT Monitor Operation:

DTCs	P0010 - Camshaft Position Actuator Circuit (Bank 1) P0011 - Cam Position Actuator Over Advanced (Bank 1) P0012 - Cam Position Actuator Over Retarded (Bank 1) P0020 - Camshaft Position Actuator Circuit (Bank 2) P0021 - Cam Position Actuator Over Advanced (Bank 2) P0022 - Cam Position Actuator Over Retarded (Bank 2)
Monitor execution	Continuous
Monitor Sequence	None
Sensors OK	IAT, ECT, EOT, IMRC, TP, MAF, CKP, and CMP
Monitoring Duration	5 seconds for circuit faults, 190 seconds for target error

Typical VCT response/functional monitor entry conditions:

Entry condition	Minimum	Maximum
Engine Coolant Temperature	-7 °C	
Engine Oil Temperature	-7 °C	121 °C
VCT control enabled and commanded to advance or retard cam **	n/a	n/a

** VCT control of advance and retard by the engine is disabled in crank mode, when engine oil is cold (< -7 °C), while learning the cam/crank offset, while the control system is "cleaning" the solenoid oil passages, throttle actuator control in failure mode, and if one of the following sensor failures occur: IAT, ECT, EOT, MAF, TP, CKP, CMP, or IMRC.

Typical VCT monitor malfunction thresholds:

VCT solenoid circuit: Open/short fault set by the PCM driver

Response/target error - VCT over-advance variance too high: >12.4°

Response/target error - VCT over-retard variance too high: >12.4°

Response/target error - Cam bank-to-bank variance too high: >18°

Comprehensive Component Monitor - Engine

General Inputs

Analog inputs such as Ambient Air Temperature (P0072, P0073), Intake Air Temperature (P0112, P0113), Engine Coolant Temperature (P0117, P0118), Cylinder Head Temperature (P1289, P1290), Mass Air Flow (P0102, P0103) and Manifold Absolute Pressure (P0107, P0108) are checked for opens, shorts, or out-of-range values by monitoring the analog -to-digital (A/D) input voltage.

Analog Sensor Check Operation:	
DTCs	P0072, P0073, P0112, P0113, P0117, P0118, P0102, P0103, P0107, P0108, P1289, P1290
Monitor execution	continuous
Monitor Sequence	none
Monitoring Duration	5 seconds to register a malfunction

Typical analog sensor check malfunction thresholds:
Voltage < 0.20 volts or voltage > 4.80 volts

On Vehicles fitted with Cylinder Head Temperature (CHT) Sensors, 'Fail Safe Cooling' can be applied if the cylinder head temperature is too high. The P1299 DTC will be set under these conditions.

Loss of Keep Alive Memory (KAM) power (a separate wire feeding the PCM) results in a P1633 DTC and immediate MIL illumination.

Loss or corruption of the Vehicle Identification (VID) Block in the PCM results in a P1639 DTC and immediate MIL illumination.

Ignition

Electronic Ignition systems (Electronic Distributorless Ignition System - EDIS or Coil on Plug - COP) systems are used on all applications.

The EDIS system, located in the PCM, processes the 36 (or 40) tooth crankshaft position signal to generate a low data rate PIP signal to control a 4 or 6 terminal 'double-ended' coil pack. The 'double ended' coils fire a pair of spark plugs simultaneously - one is on its compression stroke, the other on its exhaust stroke. The COP system also uses the EDIS system in the same way as described above, however each sparkplug has it’s own coil which is fired only once on the compression stroke.

The ignition system is checked by monitoring three ignition signals during normal vehicle operation:

> Profile Ignition Pickup (CKP, commonly known as PIP), the timing reference signal derived from the crankshaft 36-tooth wheel and processed by the EDIS system. PIP is a 50% duty cycle, square wave signal that has a rising edge at 10° BTDC.
>
> Camshaft IDentification (CMP, commonly known at CID), a signal derived from the camshaft to identify the #1 cylinder

Ignition Diagnostic Monitor (IDM), a signal which indicates that the primary side of the coil has fired. This signal is received as a digital pulsewidth signal from the EDIS system which process the high voltage flyback signal from the primary side coil.

The relationship between successive PIP events is evaluated to determine whether the PIP signal is rational. Too large a change in 3 successive PIP indicates a missing or noisy PIP signal (P0320 or P0321). Then the CMP edge count is compared to the PIP edge count. If the proper ratio of CMP events to PIP events is not being maintained (for example, 1 CMP edge for every 8 PIP edges for an 8-cylinder engine), it indicates a missing or noisy CMP signal (P0340). Finally, the relationship between IDM edges and PIP edges is evaluated. If there is not an IDM edge (coil firing) for every PIP edge (commanded spark event), the PCM will look for a pattern of failed IDM events to determine which ignition coil has failed circuit continuity (P0351-56).

Ignition System Check Operation:	
DTCs	P0320 / P0321 (CKP), P0340 (CMP), P0351 - P0358 (Coil Primary)
Monitor execution	continuous
Monitor Sequence	none
Monitoring Duration	< 5 seconds

Typical ignition check entry conditions :	Minimum	Maximum
Engine RPM for CKP, CMP	200 rpm	
Engine RPM for coil primary	200 rpm	

Typical ignition check malfunction thresholds:	
For PIP :	Time between PIP edges : > 350 milliseconds
	Ratio of current PIP period to last two periods : < 0.75 > 1.75
For CMP :	Ratio of PIP events to CMP events: 4:1, 6:1, 8:1 or 10:1 based on engine cyl.
For coils :	Ratio of PIP events to IDM events: 1:1

General Outputs

The Fuel Injectors are checked electrically for open and short circuit (P0201 to P0208).

The Idle Air Control (IAC) solenoid is checked electrically for open and shorts (P1504).

The Purge Solenoid or Vapour Management Valve output circuit is checked for opens and shorts (P0443).

Purge Solenoid / VMV Check Operation:	
DTCs	P0443
Monitor execution	continuous (5 seconds to identify malfunction/obtain smart driver status)
Monitor Sequence	none
Monitoring Duration	5 seconds for electrical malfunctions

Typical Purge Solenoid / VMV component malfunction thresholds:
P0443 open / shorted at 0 and 100% duty cycle

The Intake Manifold Runner Control (IMRC) is a system which uses dual intake runners to supply air to each cylinder. The secondary runners are normally closed, but the PCM opens them under high rpm conditions when the driver is demanding additional power from the engine. The IMRC system can be actuated using an electric motor or a vacuum motor. The IMRC system is functionally checked by monitoring the runner control plates using switches. If the actual position of the runner control plates does not match the commanded position, a malfunction of the IMRC system is indicated (P1518, P1519).

The Swirl Control Valve (SCV) is a system which uses different regions of the Intake plenum to influence the pattern of the airflow into the combustion chamber.

It is important to note that this functional / rationality check **may or may not** be a MIL Code. This is dependent on whether the EOBD Thresholds are exceeded.

IMRC / SCV System Check Operation:	
DTCs	P1520 (IMRC input switch electrical check) P1518, P 1519 (IMRC stuck open functional check)
Monitor execution	continuous
Monitor Sequence	none
Monitoring Duration	5 seconds

Typical IMRC functional check malfunction thresholds
IMRC plates do not match commanded position (functional) IMRC switches open/shorted (electrical)

Camshaft Position Control (also known as Variable Cam Timing) is a system which is able to advance and retard camshaft timing relative to the crankshaft. This phasing is controlled by a duty-cycled output. The output driver is checked electrically for opens and shorts (P1380). The system is checked functionally by monitoring the closed loop phase control correction. If the proper phasing cannot be maintained and the system has an advance or retard error greater than the malfunction threshold, a CPC control malfunction is indicated (P1381, P1383).

It is important to note that the functional / rationality checks **may or may not** be a MIL Code. This is dependent on whether the EOBD Thresholds are exceeded.

Camshaft Position Control System Check Operation:	
DTCs	P1380 (CPC output electrical check) P1381 (CPC timing over-advanced functional check) P1383 (CPC timing over-retarded functional check)
Monitor execution	continuous
Monitor Sequence	ECT > 150 ^{o}F
Monitoring Duration	5 seconds

Typical CPC functional check malfunction thresholds:
timing over-advanced/over-retarded by > 10 crankshaft degrees

Engine CCM temporary disablement conditions (other than entry requirements) :
None, except CPC does not operate (and is therefore not checked) if ACT/IAT, ECT/CHT, MAF/MAP or TP sensors are malfunctioning.

Comprehensive Component Monitor - Manual Transmission.

General.

The MIL is illuminated for all emissions related electrical component malfunctions. A manual transmission vehicle will have either a Vehicle Speed Sensor (VSS) or an Output Shaft Speed Sensor (OSS). The MIL will illuminate if the speed signal is declared as zero when the vehicle is inferred to be moving.

Transmission Inputs

Vehicle Speed Sensor Check Operation:	
DTCs	P0500
Monitor execution	continuous
Monitor Sequence	none
Monitoring Duration	30 seconds

Typical VSS check entry conditions :	Minimum	Maximum
Load	0.5	
Engine rpm	1900 rpm	4500 rpm

Typical VSS malfunction thresholds:
Vehicle is inferred to be moving with positive driving torque for 5 seconds.

Output Shaft Speed Sensor Functional Check Operation:	
DTCs	P0720
Monitor execution	continuous
Monitor Sequence	none
Monitoring Duration	30 seconds

Typical OSS check entry conditions :	Minimum	Maximum
Load	0.5	
Engine rpm	1900 rpm	4500 rpm
Output shaft rpm	100 rpm	

Typical OSS functional check malfunction thresholds:
Vehicle is inferred to be moving with positive driving torque and OSS < 100 to 200 rpm for 5 seconds.

Manual Transmission CCM temporary disablement conditions (other than entry requirements) :
None.

Comprehensive Component Monitor - Automatic Transmission

General

The MIL is illuminated for all emissions related electrical component malfunctions. For malfunctions attributable to a mechanical component (such as a clutch, gear, band, valve, etc.), some transmissions are capable of not commanding the mechanically failed component and providing the remaining maximum functionality (functionality is reassessed on each power up). In such case a non-MIL Diagnostic Trouble Code (DTC) will be stored and, if so equipped, a Transmission Control Indicator Light (TCIL) will flash. For example on the CD4E transmission, if a gear ratio is not properly obtained and verified due to a mechanical malfunction, the unobtainable gear is no longer commanded for that power up, the DTC is stored and the TCIL flashes.

Transmission Inputs

Transmission Range Sensor Check Operation:	
DTCs	P0705, P0708 (open/invalid pattern for digital TRS) P0707, P0708 (opens/shorts for analog TRS)
Monitor execution	continuous
Monitor Sequence	none
Monitoring Duration	30 seconds

Typical TRS check entry conditions :	Minimum	Maximum
Gear selector position	each position for up to 30 seconds	480 seconds

Typical TRS malfunction thresholds:	
For digital sensor :	Invalid pattern from 3 (or 5) digital inputs or 1 analog circuit open for 5 seconds
For analog sensor :	Voltage > 4.8 volts or < 0.2 voltage for 5 seconds

Output Shaft Speed Sensor Functional Check Operation:	
DTCs	P0720
Monitor execution	continuous
Monitor Sequence	none
Monitoring Duration	30 seconds

Typical OSS functional check entry conditions :	Minimum	Maximum
Gear selector position	drive	
Engine rpm (above converter stall speed) OR	3000 rpm	
Turbine shaft rpm (if available) OR	1500 rpm	
Output shaft rpm	650 rpm	
Vehicle speed (if available)	15 mph	

Typical OSS functional check malfunction thresholds:
Vehicle is inferred to be moving with positive driving torque and OSS < 100 to 200 rpm for 5 seconds

Turbine Shaft Speed Sensor Functional Check Operation:	
DTCs	P0715
Monitor execution	continuous
Monitor Sequence	none
Monitoring Duration	30 seconds

Typical TSS functional check entry conditions:	Minimum	Maximum
Gear selector position	drive	
Engine rpm (above converter stall speed) OR	3000 rpm	
Turbine shaft rpm (if available) OR	1500 rpm	
Output shaft rpm	650 rpm	
Vehicle speed (if available)	15 mph	
Torque converter lock-up (some applications)	3rd gear only	

Typical TSS functional check malfunction thresholds:
Vehicle is inferred to be moving with positive driving torque and TSS < 200 rpm for 5 seconds

Transmission Outputs

Shift Solenoid Check Operation:	
DTCs	SS A - P0750 electrical, P1714 ISIG functional, SS B - P0755 electrical, P1715 ISIG functional, SS C - P0760 electrical, P1716 ISIG functional, SS D - P0765 electrical, P1717 ISIG functional SS E - P0770 electrical
Monitor execution	electrical - continuous, functional - during off to on solenoid transitions
Monitor Sequence	none

Typical SS malfunction thresholds:
Output driver feedback circuit does not match commanded driver state for 5 seconds. ISIG functional check: ISIG chip hardware circuit does not detect characteristic current dip and rise produced by solenoid movement for 10 solenoid events.

Torque Converter Clutch Check Operation:	
DTCs	P0743 electrical, P1740 ISIG functional
Monitor execution	electrical – continuous, functional - during off to on solenoid transitions
Monitor Sequence	none

Typical TCC malfunction thresholds:
Output driver feedback circuit does not match commanded driver state for 5 seconds (> 1.0 volt if commanded on, < 2.0 volts if commanded off.) ISIG functional check: ISIG chip hardware circuit does not detect characteristic current dip and rise produced by solenoid movement.

Electronic Pressure Control Check Operation:	
DTCs	P1747 electrical, P1789, P0797 short to ground (low pressure) P0745, P0775, P0795 mechanical functional
Monitor execution	Continuous
Monitor Sequence	None
Monitoring Duration	Electrical: 5 seconds, Mechanical functional: up to 30 seconds

Typical EPC malfunction thresholds:
Current feedback circuit is less than commanded current for 5 seconds

Transmission CCM temporary disablement conditions (other than entry requirements) :
None.

6HP26 Automatic Transmission

This transmission is operated by a stand-alone transmission control module (TCM). The MIL related Diagnostic Trouble Codes will be transmitted via CAN to the Engine Control Module (ECM), and the MIL illuminated, for all emissions related electrical and mechanical component malfunctions. For malfunctions attributable to a mechanical component, this transmission may be capable of not commanding the mechanically failed component and providing the remaining maximum functionality (functionality may be reassessed on each power up). The TCM may be interrogated for transmission information attributable to setting either code. The TCM Diagnostic Trouble Codes are addressed via a separate document enclosed.

Auto Shift Manual (ASM) Transmission

The ASM system is based around a standard manual transmission with a clutch and mechanical selection of a set range of gear ratios (in this case 6 speeds). In this application both clutch and gear selection operations are controlled via a Transmission Control Module (TCM) which commands hydraulic actuators based on commands from a number of inputs.

The driver actions of depressing and releasing the clutch pedal to control clutch actuation and the shifting of gears using a gear lever have, in essence, been replaced by a TCM, hydraulic actuators and electronic switches.

With ASM the demand to shift gears can either be direct from the driver (as in a conventional manual transmission), or controlled automatically by the system based on parameters such as road speed, current gear selected and throttle demand.

The MIL is illuminated for all emissions related electrical component malfunctions. For malfunctions attributable to a mechanical component (such as a clutch, gear, actuator, etc.), functionality is reassessed on each power up. In such case a non-MIL or MIL Diagnostic Trouble Code (DTC) will be stored and, if so equipped, a Transmission Control Indicator Light will activate and/or a message will be displayed. For example on the ASM transmission, if a gear selection is not properly obtained and verified due to a mechanical malfunction, then the amber Transmission Control Indicator Light will activate and the message center will display 'GEARBOX FAULT'. In addition, the powertrain MIL will activate and a DTC will be stored. The TCM Diagnostic Trouble Codes are addressed via a separate document enclosed.

Inspection Maintenance Readiness Code

I/M readiness information indicates whether a full diagnostic check has been completed, i.e. the minimum number of driving cycles necessary for MIL illumination has been completed since computer memory was last cleared. Information available to the test equipment or diagnostic tool includes all the non-continuous monitors. Misfire, Fuel System and CCM monitors are assumed to complete if all the non-continues monitors have completed.

A P1000 DTC is stored after an OBD reset is performed, until the I/M readiness check is complete.

Tamper Protection

The AML EOBD System shall meet ISO DIS 15031-7 / SAE J2186 - Diagnostic Data Link Security requirements, to write-protect any re-programmable computer code. Additional data will be stored in the PCM Vehicle Identification Block to enable retrieval of VIN (although VIN may not be in the VID block for all vehicles), CALID (CALibration ID identifies the specific calibration) and CVN (Calibration Verification Number, similar to an encrypted checksum). CALID and CVN will be tracked for all initial releases, running changes and field fixes.

To achieve this data retrieval J1979 Mode 09 will be implemented for VIN, CALD and CVN.

Serial Data Link Connector

The connection between the vehicle and the diagnostic tester shall comply with ISO DIS 15031-3 / SAE J1962. Whereby the connector will be located in the passenger compartment in the area bounded by the driver's end of the instrument panel to 300mm beyond the vehicle center line, attached to the instrument panel and accessible from the driver's seat, and permit one handed / blind insertion of the mating connector.

Serial Data Link Communication Protocol

The Communication Protocol used by the AML EOBD system will conform to ISO DIS 15031-4 / SAE J1850, Class B Data Communication Network Interface (41.6kbps) / ISO DIS 15765-4 Diagnostics on Controller Area Network (CAN).

Basic diagnostic data and bi-directional control information will be provided using the format and units as described in ISO DIS 15031-5 / SAE J1979 and will be available to Test equipment and diagnostics tools meeting the requirements of ISO DIS 15031-4 / SAE J1850.

Serial Data Link MIL Illumination

The instrument cluster on some vehicles use the J1850 serial data link or CAN data link to receive and display various types of information from the PCM. For example, the engine coolant temperature information displayed on the instrument cluster comes from the same ECT sensor used by the PCM for all its internal calculations.

These same vehicles use the J1850 serial data link or CAN data link to illuminate the MIL rather than a circuit, hard-wired to the PCM. The PCM periodically sends the instrument cluster a message that tells it to turn on the MIL, turn off the MIL or blink the MIL. If the instrument cluster fails to receive a message within a 5-second timeout period, the instrument cluster itself illuminates the MIL. If communication is restored, the instrument cluster turns off the MIL after 5 seconds. Due to its limited capabilities, the instrument cluster does not generate or store Diagnostic Trouble Codes.

Glossary of Terms

A/D	Analogue to Digital
ASM	Auto Shift Manul
BTDC	Before Top Dead Centre
CALID	CALibration IDentification
CD4E	Automatic Transmission for Intermediate size Family saloon.
CID	Camshaft Identification.
CKP	Crankshaft Position
CMP	Camshaft Position
COP	Coil on Plug
CPC	Camshaft Position Control
CVN	Calibration Verification Number
DPFE	Delta Pressure Feedback
DTC	Diagnostic Trouble Code
ECT	Engine Coolant Temperature
EDIS	Electronic Distributorless Ignition System
EGR	Exhaust Gas Re-circulation.
EOBD	European On Bard Diagnostics
EPC	Electronic Pressure Control
ETC	Electronic Throttle Control
ETM	Electronic Throttle Monitor
EVR	Electronic Vacuum Regulator
EWMA	Exponentially Weighted Moving Average
FMEM	Failure Mode and Effects Management
FN	Automatic Transmission for Medium size Family Saloon
FWD	Front Wheel Drive
HDR	High Data Rate
HO2S	Heated Oxygen Sensor.
IAC	Idle Air Control
IDM	Ignition Diagnostic Monitor
IMRC	Inlet Manifold Runner Control
IPC	Independent Plausibility Checker
KAM	Keep Alive Memory
LDR	Low Data Rate
LTFT	Long Term Fuel Trim
MAF	Mass Air Flow
MAP	Manifold Absolute Pressure
MIL	Malfunction Indicator Lamp
OSS	Output Shaft Speed
PCM	Powertrain Control Module
PIP	Profile Ignition Pickup
RWD	Rear Wheel Drive
SAE	Society of Automotive Engineers
SAIR	Secondary AIR
SCV	Swirl Control Valve
STFT	Short Term Fuel Trim
TCC	Torque Converter Clutch
TCIL	Transmission Control Indicator Lamp
TP	Throttle Position
TPPC	Throttle Plate Position Controller
TRS	Transmission Range Sensor
TSS	Turbine Shaft Speed
VID	Vehicle IDentification
VIN	Vehicle Identification No.
VQZ	VQuizzer
VMV	Vapour Management Valve

MIL Code List

MIL	Code	Description
X	P0070	Ambient Air Temperature (AAT) Sensor out of range
X	P0106	Manifold Absolute Pressure (MAP) / Barometric Sensor Range/Performance Fault
X	P0107	Manifold Absolute Pressure (MAP) / Barometric Sensor Circuit Low Input
X	P0108	Manifold Absolute Pressure (MAP) / Barometric Sensor Circuit High Input
	P0109	Manifold Absolute Pressure (MAP) / Barometric Sensor Intermittent
X	P0112	Intake Air Temperature (IAT) Circuit Low Input
X	P0113	Intake Air Temperature (IAT) Circuit High Input
X	P0116	Engine Coolant Temperature (ECT) Circuit Range/Performance Fault
X	P0117	Engine Coolant Temperature (ECT) Circuit Low Input
X	P0118	Engine Coolant Temperature (ECT) Circuit High Input
	P0121	Throttle position sensor A circuit Range/Performance
	P0122	Throttle position sensor A circuit Low Input
	P0123	Throttle position sensor A circuit High Input
	P0124	Throttle position sensor A circuit Intermittent
	P0125	Insufficient coolant temperature for closed loop fuel control
X	P0131	Heated Oxygen Sensor (Bank 1, Sensor 1) Low Voltage
X	P0132	Heated Oxygen Sensor (Bank 1, Sensor 1) High Voltage
X	P0133	Heated Oxygen Sensor (Bank 1, Sensor 1) Slow Response
X	P0135	Heated Oxygen Sensor (Bank 1, Sensor 1) Heater Circuit Malfunction
X	P0136	Heated Oxygen Sensor (Bank 1, Sensor 2) Lack Of Switching
X	P0138	Heated Oxygen Sensor (Bank 1, Sensor 2) High Voltage
X	P0141	Heated Oxygen Sensor (Bank 1, Sensor 2) Heater Circuit Malfunction
X	P0171	System Too Lean [Bank 1]
X	P0172	System Too Rich [Bank 1]
X	P0201	Cylinder #1 Injector Circuit Malfunction
X	P0202	Cylinder #2 Injector Circuit Malfunction
X	P0203	Cylinder #3 Injector Circuit Malfunction
X	P0204	Cylinder #4 Injector Circuit Malfunction
	P0221	Throttle position sensor B circuit range/performance
	P0222	Throttle position sensor B circuit low input
	P0223	Throttle position sensor B circuit high input
	P0224	Throttle position sensor B circuit intermittent
	P0230	Fuel Pump Primary Circuit Fault
	P0231	Fuel Pump Secondary Circuit Low Fault
	P0232	Fuel Pump Secondary Circuit High Fault
	P0298	Engine Oil Over-temperature Condition
X	P0300	Random Cylinder Misfire Detected
X	P0301	Cylinder #1 Misfire Detected
X	P0302	Cylinder #2 Misfire Detected
X	P0303	Cylinder #3 Misfire Detected
X	P0304	Cylinder #4 Misfire Detected
X	P0305	Cylinder #5 Misfire Detected
X	P0306	Cylinder #6 Misfire Detected
X	P0307	Cylinder #7 Misfire Detected
X	P0308	Cylinder #8 Misfire Detected
X	P0309	Cylinder #9 Misfire Detected

X	P0310	Cylinder #10 Misfire Detected
X	P0311	Cylinder #11 Misfire Detected
X	P0312	Cylinder #12 Misfire Detected
X	P0316	Misfire Monitor Disabled; unable to Learn Trigger Wheel Profile
X	P0320	Ignition/Distributor Engine Speed Input Circuit
	P0325	Knock Sensor 1 Circuit
X	P0340	Camshaft Position Sensor (CMP) Circuit Malfunction
X	P0351	Ignition Coil A Primary/Secondary Circuit Malfunction
X	P0352	Ignition Coil B Primary/Secondary Circuit Malfunction
X	P0353	Ignition Coil C Primary/Secondary Circuit Malfunction
X	P0354	Ignition Coil D Primary/Secondary Circuit Malfunction
X	P0400	Exhaust Gas Recirculation Flow
X	P0403	Exhaust Gas Recirculation (EGR) Control Circuit
X	P0420	Catalyst System Efficiency Below Threshold (Bank 1)
X	P0430	Catalyst System Efficiency Below Threshold (Bank 2)
X	P0443	Evaporative Emission Control System (EVAP) Purge Control Valve Circuit Malfunction
**	P0460	Fuel Level (FLI) Sensor Circuit
	P0480	Fan 1 Control Circuit Malfunction
	P0504	Brake switch A/B correlation (BPS on when BLS is off)
	P0505	Idle Air Control System
	P0506	Idle Air Control System – RPM Lower Than Expected
	P0507	Idle Air Control System – RPM Higher Than Expected
	P0571	Brake switch A circuit (BPS failed)
	P0602	Powertrain Control Module Programming Error
	P0603	Powertrain Control Module Keep Alive Memory (KAM) Error
	P0605	Powertrain Control Module Read Only Memory (ROM) Error
X	P0607	Powertrain Control Module Performance
	P0610	Powertrain Control Module Vehicle Options Error
	P0703	Brake switch B circuit (BLS failed)
X	P0720	Output Shaft Speed Sensor (OSS) Circuit Malfunction
	P0721	Output Shaft Speed Sensor (OSS) Circuit Range/Performance
	P0722	Output Shaft Speed Sensor (OSS) Circuit No Signal
	P1000	EOBD System Readiness Test Not Complete
	P1001	KOER Test Not Able To Complete, KOER Aborted
	P1100	Mass Air Flow Sensor Circuit Intermittent
	P1112	Intake Air Temperature (IAT) Circuit Intermittent
	P1116	Engine Coolant Temperature Sensor Out of Self Test Range
	P1117	Engine Coolant Temperature Sensor Circuit Intermittent
	P1125	Throttle Position Sensor A Circuit Intermittent
	P1127	Exhaust Temperature Out of Range – O2 sensor tests not completed
	P1128	Upstream HO2S Sensors Swapped
	P1129	Downstream HO2S Sensors Swapped
X	P1130	Lack of Heated Oxygen Sensor (Bank 1, Sensor 1) Switches, Adaptive Fuel at Limit
X	P1131	Lack of Heated Oxygen Sensor (Bank 1, Sensor 1) Switches, Sensor Indicates Lean
X	P1132	Lack of Heated Oxygen Sensor (Bank 1, Sensor 1) Switches, Sensor Indicates Rich
	P1246	Alternator Load Input
	P1260	Theft Detected, Vehicle Immobilised
	P1270	Engine RPM or Vehicle Speed Limiter Reached
X	P1285	Cylinder Head OverTemperature Condition
X	P1299	Cylinder Head over Temperature Protection Active
	P1408	Exhaust Gas Recirculation Flow Out of Self Test Range

X	P1431	Misfire Monitor Disabled; unable to Learn Trigger Wheel Profile
	P1432	Thermostat Heater Control Circuit
	P1460	Wide Open Throttle A/C Cut-out Circuit
	P1461	A/C Pressure Sensor Circuit High Input
	P1462	A/C Pressure Sensor Circuit Low Input
	P1463	A/C Pressure Sensor Insufficient Pressure Change
	P1464	A/C Demand Out of Self Test Range
	P1500	Vehicle Speed Sensor
	P1501	Vehicle Speed Sensor Out of Self Test Range
	P1549	Intake Manifold Communication Control Circuit (Bank 1)
	P1572	Brake system input failure (BLS failed then BPS failed)
	P1610	Interactive Reprogramming Code – Replace Module
	P1611	Interactive Reprogramming Code – Diagnose Further
	P1615	Interactive Reprogramming Code – Erase Error
	P1616	Interactive Reprogramming Code – Erase Error, Low Voltage
	P1617	Interactive Reprogramming Code – Block Program Error
	P1618	Interactive Reprogramming Code – Block Program Error, Low Voltage
	P1631	Main Relay (Power Hold)
X	P1633	Keep Alive Power Voltage too Low
	P1635	Tyre/Axle Out of Acceptable Range
	P1639	Vehicle Identification (VID) Block Corrupted. Not Programmed
X	P1656	CAN Link PCM/PCM Circuit/Network
	P1703	Brake switch out of self test range
	P1709	Park/Neutral Position Switch Out of Self Test Range
X	P2008	Intake Manifold Runner Control Open (Bank 1)
X	P2100	Throttle Actuator Control Motor Circuit Open
X	P2101	Throttle Actuator Control Motor Circuit Range/Performance
X	P2107	Throttle actuator control motor processor
X	P2110	Forced limit RPM mode
X	P2111	Throttle actuator control system – stuck closed
X	P2112	Throttle actuator control system – stuck open
	P2121	Pedal position sensor D circuit range/performance
	P2122	Pedal position sensor D circuit low input
	P2123	Pedal position sensor D circuit high input
	P2124	Pedal position sensor D circuit intermittent
	P2126	Pedal position sensor E circuit range/performance
	P2127	Pedal position sensor E circuit low input
	P2128	Pedal position sensor E circuit high input
	P2129	Pedal position sensor E circuit intermittent
	P2135	Throttle position sensor A/B voltage correlation
	P2138	Pedal position sensor D/E voltage correlation
X	P2195	Lack of Heated Oxygen Sensor (Bank 1, Sensor 1) Switches, Sensor Indicates Lean
X	P2196	Lack of Heated Oxygen Sensor (Bank 2, Sensor 1) Switches, Sensor Indicates Lean
X	P2197	Lack of Heated Oxygen Sensor (Bank 1, Sensor 1) Switches, Sensor Indicates Rich
X	P2198	Lack of Heated Oxygen Sensor (Bank 2, Sensor 1) Switches, Sensor Indicates Rich

Note.
X MIL codes
* Can be non-mil if below EOBD threshold.

MIL Symbol

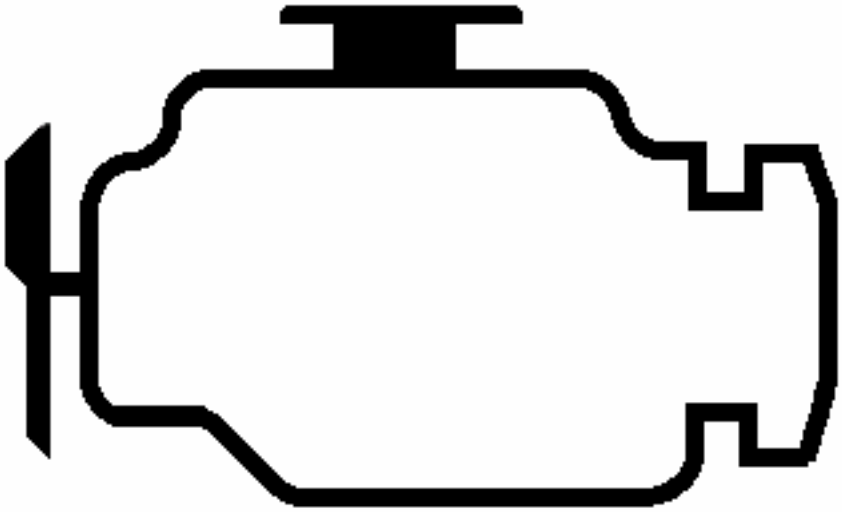

ISO MIL Symbol to be used on all AML EOBD Applications.

V8 4.7L EOBD Documentation

Summary Tables

Component/ System	Fault Code	Monitor Strategy Description	Malfunction Criteria	Threshold Parameter	Secondary Parameters	Entry Parameters	Time Required	DTC Storage	MIL Illumin-ation
Catalyst Efficiency Monitor									
Catalyst System Efficiency Below Threshold (Index Monitor)	P0420 (Bank 1)	HC efficiency inferred from oxygen storage capacity	Rear/Front HO2S switch ratio	> 0.396 (Unitless)	Engine coolant temp and ECT sensor OK (P0117/0118)	-7C < Engine coolant < 110C (20 - 230F)	Once per driving cycle	Footnote a)	Footnote c)
	P0430 (Bank 2)			>0.396 (Unitless)	Intake air temp and IAT sensor OK (P0112/0113)	-7C < Inlet Air Tmp < 82C (20-180F)	Approximately 600 sec during appropriate FTP74 conditions		
					Minimum time since start to run Catalyst Monitor	60 sec			
				Air mass range cell 1	HO2S11 switches : 1023 HO2S21 switches: 1023	3.76 - 18.8 g/s (0.5-2.49 lb/min)			
				Air mass range cell 2	HO2S11 switches : 1023 HO2S21 switches: 1023	18.9 - 27.8 g/sec (2.5-3.69 lb/min)			
				Air mass range cell 3	HO2S11 switches : 1023 HO2S21 switches: 1023	27.9 - 36.3 g/s (3.7-4.8 lb/min)			
					Maximum number of HO2S11 (Bank 1 front) switches to allow monitor completion	250			
					Maximum number of HO2S21 (Bank 2 front) switches to allow monitor completion	250			
				Load range for air mass cell 1	HO2S11 switches : 1023 HO2S21 switches: 1023	0.1 * 100 % - 1.99 * 100 %			
				Load range for air mass cell 2	HO2S11 switches : 1023 HO2S21 switches: 1023	0.1 * 100 % - 1.99 * 100 %			
				Load range for air mass cell 3	HO2S11 switches : 1023 HO2S21 switches: 1023	0.1 * 100 % - 1.99 * 100 %			
				Rpm range for air mass cell 1	HO2S11 switches : 1023 HO2S21 switches: 1023	1000 - 4000 rpm			
				Rpm range for air mass cell 2	HO2S11 switches : 1023 HO2S21 switches: 1023	1000 - 4000 rpm			
				Rpm range for air mass cell 3	HO2S11 switches : 1023 HO2S21 switches: 1023	1000 - 4000 rpm			
					Inferred midbed catalyst temp for air mass cell 1 (Bank1/Bank2)	400 - 1000 deg C (752-1832 deg F)			
					Inferred midbed catalyst temp for air mass cell 2 (Bank1/Bank2)	400 - 1000 deg C (752-1832 deg F)			
					Inferred midbed catalyst temp for air mass cell 3 (Bank1/Bank2)	400 - 1000 deg C (752-1832 deg F)			
					Time constant to determine throttle position rate	1.0 (Unitless)			
					Maximum throttle position rate of change	< 30 * 5/ 1024 volts per sec			
					Minimum inferred rear HO2S12/HO2S22 temp to enter test	400 deg C (752 deg F)			
					Time since part-throttle decel	> 1.0 sec			
					Vehicle speed	8 - 76 mph			
					Crankshaft position circuit (PIP) OK (P0320)				
					HO2S Monitor COMPLETE with no DTCs prior to final switch ratio computation				
					Evap system OK, no Evap System DTCs				
					EWMA "fast" filter constant for first 2 driving cycles after KAM cleared	0.99 (Unitless)			
					EWMA "normal" filter constant after first 2 driving cycles	0.99 (Unitless)			
					Fuel level	> 0.15 * 100 %			

Component/ System	Fault Code	Monitor Strategy Description	Malfunction Criteria	Threshold Parameter	Secondary Parameters	Entry Parameters	Time Required	DTC Storage	MIL Illumin-ation
Misfire Monitor									
Cylinder Misfire Detected	P0300 to P0308	Deviations in crankshaft acceleration processed by Neural Network Misfire Monitor software and Catalyst Temperature model	Percentage misfire required to exceed Catalyst Damage Temperature 1000 deg c (1832 deg F) catalyst damage threshold, per engine bank		Type A: See RPM/Load Table FNMISPCT_97 %		Type A: 200 revs (Continuous)	Type A: Footnote b)	Type A: Footnote d)
			Percentage misfire required to exceed emission thresholds	Type B> 0.0323*100%			Type B: 1000 revs (Continuous)	Type B/C: Footnote a)	Type B: Footnote c)
			Percentage misfire required to clear emission pending code	< 0.001 * 100 %	Time since engine start, value based on time and IAT	0 + FNMISACT sec (See Transfer Functions)			
					Time since PCM power up	0 sec			
					Time for NNMM computation queue to fill	4 revs from initial crank (Meets 2 rev start delay requirement)			
					Engine coolant temp	-7 - 115 deg C (20 - 240 degF)			
					Engine rpm	600 - 7250 rpm			
					Net engine torque	> -81 Nm (-60 ft lbs)			
					Engine torque rate of change	> -33.9Nm (-25 ft lbs/sec) or < 33.9Nm (25 ft lbs/sec)			
					Throttle position rate of change	> -30 volts/background loop or < 30 * 5/1024 volts/background loop			
					Engine rpm/load range	See RPM/Load Table FNMISOK_97: Monitor disabled when less than 0.5			
					Crankshaft position circuit (PIP) OK (P0320)				
					Fuel shutoff for rpm or vehicle speed limiting	No fuel cutoff occurring			
					Fuel level	> 0.15 * 100 %			
Misfire Detected At Startup	P0316	Misfire detected during first 1000 engine revs since start	P0316 is set in addition to P0300 - P0308 DTC				1000 revs (Continuous)	Footnote a)	Footnote c)
AICE chip failure in PCM	P0606	NNMM chip to CPU communication fault	Number of attempts	10			Continuous	Footnote a)	Footnote c)
Camshaft/crankshaft synchronization failure	P1336	AICE chip reports inability to synchronize camshaft and crankshaft signals (Replaces P1309)	Number of attempts	> 255			Continuous	Footnote a)	Footnote c)
Unable to learn crankshaft profile	P0315	Unable to learn stable crankshaft profile	Number of attempts	> 6 attempts	Engine speed	>1550rpm <2275rpm	Continuous within profile learning entry conditions	Footnote a)	Footnote c)
					Engine load	>0.075 <0.225			
					Engine coolant temperature	>68.3degC (155degF)			
					Transmission in 6th gear				
					Vehicle speed	>30mph <70mph			
					Maximum rate of engine speed change	<500rpm/second			
					In decel fuel cut				
ROM checksum error	P260F	NNP ROM checksum error	Checksum from NNP does not equal mainline strategy		None		Continuous	Footnote a)	Footnote c)

Component/ System	Fault Code	Monitor Strategy Description	Malfunction Criteria	Threshold Parameter	Secondary Parameters	Entry Parameters	Time Required	DTC Storage	MIL Illumin-ation
Fuel System Monitor									
Fuel System Too Rich Or Too Lean	P0171 (Bank 1 Lean)	Excessive long and short term fuel trim corrections	Long term fuel trim cell currently being utilized exceeds lean limits	> 1.225 * 100 %	Engine rpm	550 - 8000 rpm	Continuous	Footnote a)	Footnote c)
			Short term fuel trim exceeds lean limits	< 0.99 * 100%					
	P0172 (Bank 1 Rich)	Note: Long term fuel trim corrections are learned into an 8x10 cell table as a function of rpm and load or an 8x1 cell table as a function of rpm and air mass	Long term fuel trim cell currently being utilized exceeds rich limits	< 0.805 * 100 %	Engine air mass	0 - 484 g/sec (0 - 63.99 lbs/min)			
			Short term fuel trim exceeds rich limits	> 1.1 * 100 %	Coolant temp and ECT sensor OK (P0117/0118)	44.4C < Engine coolant < 110C (112 - 230F)			
					Intake air temp and IAT sensor OK (P0112/0113)	-28.8C < Intake air < 93.3C (-20 - 200F)			
					Fuel level	>0.15*100%			
					Closed loop fuel, adaptive fuel learning enabled (Purge dutycycle = 0 %)	Fuel trim learning enabled			
	P0174 (Bank 2 Lean)				Fuel Rail Pressure sensor OK (P0190/0192/0193)				
	P0175 (Bank 2 Rich)				Fuel trim learning enabled				
Entry Conditions for Closed Loop Fuel									
Initial Closed Loop Fuel Entry Condition					Time since engine start	> FN_TCSTRT sec (See Function)			
					Inferred HO2S temp	> 300 deg C (> 572 deg F) (Temp based on inferred exhaust temp model which is a function of IAT, ECT, MAF, commanded A/F ratio and engine rpm)			
Thermostat Monitor									
Insufficient Coolant Temperature For Closed Loop Fuel Control	P0128	Time to reach minimum engine coolant temp	Time within test entry conditions	See Transfer Function FN654S	Vehicle speed	See transfer function FNWUT_VS	Once per driving cycle	Footnote a)	Footnote c)
			Engine coolant temp	See transfer function FNECTWUT	Engine load	See transfer function FNWUT_LD			
						Minimum soak time	> 60 min		

Component/ System	Fault Code	Monitor Strategy Description	Malfunction Criteria	Threshold Parameter	Secondary Parameters	Entry Parameters	Time Required	DTC Storage	MIL Illumin-ation
Secondary Air Monitor									
Secondary Air System Insufficient Flow	P0410 (Inlet hose disconnection)	Modelled pump flow higher than measured flow via HFM	Ratio of SAIR flow difference at SAIR pump off / on and on/off transition	off/on <0.524	Intake air temp sensor OK (P0112/0113)		Continuous during SAIR operation	Footnote l)	Footnote c)
				on/off <0.671	Engine coolant temp sensor OK (P0117/0118)		Approximately 500 sec during appropriate FTP74 conditions to complete HEGO monitor		
					Mass Air Flow sensor OK (P0101 to P010F)				
Outlet Hose Blockage	P0491 (Low flow Bank1)	Closed loop bank1 lambda correction at first switch AND low measured flow via HFM	First switch correction < threshold * corrected SAIR flow	<1+(0.246*Long term fuel trim)	Time in closed loop fuelling control (only used for bank to bank flow arbitration)	>10seconds			
			Ratio of SAIR flow difference at SAIR pump off / on and on/off transition	off/on <0.524	Intake air temp sensor OK (P0112/0113)				
				on/off <0.671	Engine coolant temp sensor OK (P0117/0118)				
					Mass Air Flow sensor OK (P0101 to P010F)				
		Closed loop bank1 vs bank2 lambda difference	Lambda difference> threshold AND bank1 lambda > bank2 lambda	lambda difference>0.435	Not in HEGO FMEM				
	P0492 (Low flow Bank2)	Closed loop bank2 lambda correction at first switch AND low measured flow via HFM	First switch correction < threshold * corrected SAIR flow	<1+(0.246*Long term fuel trim)	Time in closed loop fuelling control (only used for bank to bank flow arbitration)	>10seconds			
			Ratio of SAIR flow difference at SAIR pump off / on and on/off transition	off/on <0.524	Intake air temp sensor OK (P0112/0113)				
				on/off <0.671	Engine coolant temp sensor OK (P0117/0118)				
					Mass Air Flow sensor OK (P0101 to P010F)				
		Closed loop bank1 vs bank2 lambda difference	Lambda difference> threshold AND bank1 lambda < bank2 lambda	lambda difference>0.435	HEGO monitor complete				
Outlet Hose Disconnection	P2448 (Low flow Bank1)	Modelled pump flow higher than measured flow via HFM	Ratio of SAIR flow difference at SAIR pump off / on transition	off/on >1.44	Time with SAIR active	>2seconds			
	P2449 (Low flow Bank2)								
					SAIR off time before re-enable (if SAIR is disabled due to engine conditions)	>3seconds			
					Time in closed loop fuelling control (only used for bank to bank flow arbitration)	>10seconds			
					HEGO monitor complete				
SAIR circuit ecu output high/low	P0412	Circuit malfunction	PCM able to determine failure	Time with fault>5 seconds			Continuous (circuit checks)		
SAIR circuit relay high output	P2257	Circuit malfunction	PCM able to determine failure	Time with fault>5 seconds					
SAIR circuit relay low output	P2258	Circuit malfunction	PCM able to determine failure	Time with fault>5 seconds					

Component/ System	Fault Code	Monitor Strategy Description	Malfunction Criteria	Threshold Parameter	Secondary Parameters	Entry Parameters	Time Required	DTC Storage	MIL Illumin-ation
ESM (EGR System Module) Exhaust Gas Recirculation Monitor									
Electronic Vacuum Regulator (EVR) Electrical	P0403	Circuit Malfunction - Short to Vbat	PCM able to determine failure		EGR duty cycle	egrdc>0.2*100	Once per driving cycle	Footnote a)	Footnote c+f)
					EGR valve valve warm	cumulative time with egr enabled > 40 seconds			
			Time with circuit malfunction	>2 seconds					
Pressure Differential Sensor	P0405 Low Input	Circuit malfunction	Signal circuit voltage	<0.049 (4.8kPa) 10*(5/1024)	Ambient Temperature	> -7c (20f)	Continuous	Footnote a)	Footnote c+f)
			Time with circuit malfunction	>2.5 seconds					
	P0406 Low Input	Circuit malfunction	Signal circuit voltage	>4.956 (115.25kPa) 1015*(5/1024)	Ambient Temperature	> -7c (20f)	Continuous	Footnote a)	Footnote c+f)
			Time with circuit malfunction	>2.5 seconds					
EGR Valve	P0402 EGR Excess Flow	Excessive pressure differential across EGR orifice at idle	Pressure differential > Pressure differential at engine off + offset	> 0.366 volts 75*(5/1024)	EGR valve warm	cumulative time with egr enabled > 40 seconds	Once per driving cycle	Footnote a)	Footnote c+f)
			Forced valve actuation complete	2	P0403 test complete and no fault				
			Time exceeding threshold	>5 seconds	P0405 test complete and no fault				
					P0406 test complete and no fault				
					Ambient Temperature	> -7c (20f)			
					EGR valve commanded shut	>1.5seconds			
					In idle speed control				
	P0401 EGR Restricted flow	Low pressure differential across EGR orifice with high valve duty commanded	Low pressure differential	<FN202 (See function)	EGR duty cycle	egrdc>0.75*100	Once per driving cycle	Footnote a)	Footnote c+f)
			Time with fault	>0.7*50 seconds	Manifold vacuum	> 20.3 kPa (6"Hg)			
					Ambient Temperature	> -7c (20f)			
					Not in transient condition (air charge rate of change)	< 0.04 (lb/stk)			
					Engine speed	<3000rpm			
					Air mass	<60.47g/sec (8lb/min)			
					P0403 test complete and no fault				
					P0405 test complete and no fault				
					P0406 test complete and no fault				
					P0402 test complete and no fault				

Component/ System	Fault Code	Monitor Strategy Description	Malfunction Criteria	Threshold Parameter	Secondary Parameters	Entry Parameters	Time Required	DTC Storage	MIL Illumin-ation
Variable Cam Timing Monitor									
VCT actuator malfunction	P0010 (Bank1)	Circuit Malfunction	PCM able to determine failure				Continuous	Footnote a)	Footnote c)
			Time with failure	>5seconds					
	P0020(Bank2)	Circuit Malfunction	PCM able to determine failure						
			Time with failure	>5seconds					
VCT target error	P0011 (Bank1)	Measured Cam Position Over advanced	Cam position error vs target	>12.4deg CRK	Engine coolant temperature	>-7c (20f)			
	P0021 (Bank2)		Cam position error bank1 vs bank2	>16deg CRK	Engine oil temperature	>-7c (20f) <121c (250f)			
			Time exceeding threshold	>5 seconds	Cam angle sensitivity modifier for cam position bank1 vs bank2	CAM_RANGE_SENS (See function)			
					Cam angle error filter for target error calculation	FNCAM_ACT_FK (See function)			
					Filter for target error calculation	0.25*100%			
					Intake air temp sensor OK (P0112/0113)				
					Engine coolant temp sensor OK (P0117/0118)				
					Engine oil temp sensor OK (P0197/0198)				
					Throttle Position Sensor OK (P0122/0123)				
					Crankshaft position circuit (PIP) OK (P0320)				
					Mass Air Flow sensor OK (P0101 to P010F)				
					Camshaft ID circuit (CMP) OK (P0340)				
VCT target error	P0012 (Bank1)	Measured Cam Position Over retarded	Cam position error vs target	>12.4deg CRK	Engine coolant temperature	>-7c (20f)			
	P0022 (Bank2)		Cam position error bank1 vs bank2	>16deg CRK	Engine oil temperature	>-7c (20f) <121c (250f)			
			Time exceeding threshold	>5 seconds	Cam angle sensitivity modifier for cam position bank1 vs bank2	CAM_RANGE_SENS (See function)			
					Cam angle error filter for target error calculation	FNCAM_ACT_FK (See function)			
					Filter for target error calculation	0.25*100%			
					Intake air temp sensor OK (P0112/0113)				
					Engine coolant temp sensor OK (P0117/0118)				
					Engine oil temp sensor OK (P0197/0198)				
					Throttle Position Sensor OK (P0122/0123)				
					Crankshaft position circuit (PIP) OK (P0320)				
					Mass Air Flow sensor OK (P0101 to P010F)				
					Camshaft ID circuit (CMP) OK (P0340)				
CAM / CRANK Misalignment	P0016 (Bank1)	Measured Cam Position with VCT locked fully retarded	Cam position error	>8deg CRK	Engine speed	>600rpm <1100rpm	Once per driving cycle	Footnote a)	Footnote c)
	P0018 (Bank2)				Indicated torque	>25 Nm (18.4ftlb) <95 Nm (70ftlb)			
					Time after start	>25sec <16383sec			
					Engine coolant temperature	>71.1degC (160degF) <104.4degC (220degF)			
					Filter for position error	1.5			
					Air charge temperature	>-17.7degC (0degF) <65.5degC (150degF)			

Component/ System	Fault Code	Monitor Strategy Description	Malfunction Criteria	Threshold Parameter	Secondary Parameters	Entry Parameters	Time Required	DTC Storage	MIL Illumin-ation
HO2S Monitor									
Stream 1 (Front) O2 Sensor Signal Stuck Lean	P2195 (Bank 1, Sensor 1)	Lack of HO2S switches	**Stage 1: (Look for short term fuel trim stuck)**		Fuel control	Closed loop or Closed loop desired	Continuous	Footnote a)	Footnote c)
	P2197 (Bank 2, Sensor 1)		Short term fuel trim	> 1 - 0.26 * 100%	Intake air temp sensor OK (P0112/0113)				
			Time with short term fuel trim at limit	> 20 * 1 sec	Engine coolant temp sensor OK (P0117/0118)				
			Stage 2: (Look for HO2S stuck at startup)		Mass Air Flow sensor OK (P0102/0103)				
			Cumulative time in test mode since start up	> 30 sec	Throttle Position Sensor OK (P0122/0123)				
			Number of switches since start up	< 6					
			Fuel control	In FMEM at start up	Fuel level above minimum level	> 0.15 * 100 %			
					Time entry conditions have been present	> 10 sec			
Stream 1 (Front) O2 Sensor Signal Stuck Rich	P2196 (Bank 1, Sensor 1)	Lack of HO2S switches	**Stage 1: (Look for short term fuel trim stuck)**		Fuel control	Closed loop or Closed loop desired	Continuous	Footnote a)	Footnote c)
	P2198 (Bank 2, Sensor 1)		Short term fuel trim	> 1 + 0.26 * 100%	Intake air temp sensor OK (P0112/0113)				
			Time with short term fuel trim at limit	> 20 * 1 sec	Engine coolant temp sensor OK (P0117/0118)				
			Stage 2: (Look for HO2S stuck at startup)		Mass Air Flow sensor OK (P0102/0103)				
			Cumulative time in test mode since start up	> 30 sec	Throttle Position Sensor OK (P0122/0123)				
			Number of switches since start up	< 6					
			Fuel control	In FMEM at start up	Fuel level above minimum level	> 0.15 * 100 %			
					Time entry conditions have been present	> 10 sec			
Stream 1 (Front) HO2S Overvoltage	P0132 (Bank 1) P0152 (Bank 2)	Monitor HO2S voltage	Voltage greater than malfunction threshold	> 1.1 volts	Fuel control	Closed loop or Closed loop desired	Continuous	Footnote a)	Footnote c)
			Time with sensor voltage out of range	> 18 sec	Stream 1 HO2S: Inferred sensor temp	> 204 deg C (> 400 deg F)			
					HO2S heater OK (P0135, P0053-bank1) (P0155, P0059-bank2)				
Stream 1 (Front) HO2S Circuit Slow Response	P0133 (Bank 1)	Monitor HO2S switching frequency and amplitude (Forced at 1.5 Hz fixed rate)	Switching frequency (Indicates gross failure)	< 0.0 Hz	Time since entering closed loop fuel control	> 10 sec	< 8 sec once per driving cycle	Footnote a)	Footnote c)
	P0153 (Bank 2)		Switching frequency difference from desired (Test run at correct frequency)	< 0.44875 Hz	Short term fuel trim	0.85 - 1.15 * 100 %			
			Signal voltage amplitude	< 0.518 volts	Engine coolant temp and ECT sensor OK (P0117/0118)	65 - 116 deg C (150 - 240 deg F)			
					Fuel level above minimum level	> 0.15 * 100 %			
					Intake air temp and IAT sensor OK (P0112/0113)	< 60 deg C (< 140 deg F)			
					Engine load and MAF sensor OK (P0102/0103)	0.2 - 0.4 * 100 %			
					Vehicle speed and VSS (P0500) sensor OK	37 - 65 mph			
					Engine rpm and crankshaft position circuit (PIP) OK (P0230)	1800 - 2450 rpm			
					Throttle position sensor OK (P0122/0123)				
					Camshaft ID circuit (CMP) OK (P0340)				
					No Misfire Monitor DTCs				
					Fuel rail pressure sensor OK (P0190/0192/0193)				
					Not transitioning into/out of Characteristic Shift Down				
					No Purge System reset				
					Maximum change in engine rpm while running	< 165 rpm			
					Maximum change in engine load while running monitor	< 0.11 * 100%			
					Maximum change in vehicle speed while running monitor	< 10 mph			

Component/ System	Fault Code	Monitor Strategy Description	Malfunction Criteria	Threshold Parameter	Secondary Parameters	Entry Parameters	Time Required	DTC Storage	MIL Illumin-ation
Rear HO2S Circuit Malfunction	P2270 (Bank 1)	Monitor normal signal voltage envelope; forced A/F excursion if required for green catalyst (Rationality check)	HO2S maximum signal voltages stuck lean	< 0.48 volts	Inferred exhaust temp	71 - 792 deg C (160 - 1458 deg F)	Once per driving cycle	Footnote a)	Footnote c)
	P2272 (Bank 2)				Downstream heater on time	> 120 sec			
					Pedal position	Part throttle			
					Engine rpm - for forced excursion only	> 1200 rpm			
					Inferred exhaust temp - for forced excursion only	< 815 deg C (< 1500 deg F)			
					Flex fuel composition not changing				
					Upstream sensor(s) tested				
	P2271 (Bank 1)	Monitor normal signal voltage envelope; forced A/F excursion if required for green catalyst (Rationality check)	HO2S minimum signal voltages stuck rich	> 0.42 volts	Inferred exhaust temp	71 - 792 deg C (160 - 1458 deg F)	Once per driving cycle	Footnote a)	Footnote c)
	P2273 (Bank 2)				Downstream heater on time	> 120 sec			
					Pedal position	Part throttle			
					Engine rpm - for forced excursion only	> 1200 rpm			
					Inferred exhaust temp - for forced excursion only	< 815 deg C (< 1500 deg F)			
					Flex fuel composition not changing				
					Upstream sensor(s) tested				
Stream 2 (CMS) HO2S Overvoltage	P0138 (Bank 1) P0158 (Bank 2)	Monitor HO2S voltage	Voltage greater than malfunction threshold	> 1.1 volts	Stream 2 HO2S heater on time	> 90 sec	Continuous	Footnote a)	Footnote c)
			Time with sensor voltage out of range	> 18 sec	Stream 2 HO2S: Inferred sensor temp	> 204 deg C (> 400 deg F)			
					HO2S heater OK (P0141, P0054-bank1) (P0161, P0060-bank2)				
HO2S Heater Circuit Malfunction	P0135 (HO2S11)	Circuit continuity check, monitor voltage for opens and shorts	Feedback circuit state matches commanded output state (Digital signal)	Feedback circuit high or low	Stream 1 HO2S: Inferred sensor temp	26.6 - 630.5 deg C (80 - 1167 deg F)	Continuous	Footnote a)	Footnote c)
	P0155 (HO2S21)		Monitor retries allowed for malfunction (Background loops)	RETRY_ALLOW					
	P0053 (HO2S11)	Functional check, monitor min. and max. heater current	Heater circuit current	< 0.465 amps or > 3.0 amps	Stream 1 HO2S: Inferred sensor temp	121 - 593 deg C (250 - 1100 deg F)	Once per driving cycle		
	P0059 (HO2S21)				Stream 1 HO2S heater on time	> 30 sec			
					Stream 1 sensor(s) tested (P0133/P0153 tests completed)				
					Stream2 sensor (s) tested P0136, P0156				
	P0141 (HO2S12)	Circuit continuity check, monitor voltage for opens and shorts	Feedback circuit state matches commanded output state (Digital signal)	Feedback circuit high or low	Stream 2 HO2S: Inferred sensor temp	149 - 760 deg C (300 - 1400 deg F)	Continuous		
	P0161 (HO2S22)		Monitor retries allowed for malfunction (Background loops)	RETRY_ALLOW					
	P0054 (HO2S12)	Functional check, monitor min. and max. heater current	Heater circuit current	< 0.22 amps	Stream 2 HO2S: Inferred sensor temp	121 - 732 deg C (250 - 1350 deg F)	Once per driving cycle		
	P0060 (HO2S22)			> 3.0 amps	Stream 2 HO2S heater on time	> 30 sec			
					Stream 1 sensor(s) tested (P0133/P0153 tests completed)				
					Stream2 sensor (s) tested P0136, P0156				

Component/ System	Fault Code	Monitor Strategy Description	Malfunction Criteria	Threshold Parameter	Secondary Parameters	Entry Parameters	Time Required	DTC Storage	MIL Illumin-ation
Comprehensive Component Monitor									
MAF Sensor Input	P0100 (MAF A Airpath)	Rationality Check - Compares measured MAF vs modelled airflow	MAF1 vs MAF2 low airflow	MAF1< 0.5*estimate - max (0.5*30.23g/sec) OR (0.35* (0.5*estimate))	Vehicle speed VSS (P0500) sensor OK		Continuous	Footnote a)	Footnote c)
					Throttle position sensor TPS OK (P0122/0123)				
					Vehicle speed and TPS in range	VSS<30mph OR TPS>5.27deg (60cnts)			
					Battery Voltage	11< Voltage <18			
					SAIR not commanded	>3 seconds			
					Time with fault	>5 seconds			
	P0101 (MAF A Range)	Rationality Check - Compares measured MAF vs modelled airflow	MAF1+MAF2 not equal to estimate AND MAF1 vs MAF2 low airflow	MAF1+MAF2 <estimate - max(30.23g/sec) OR (0.35*estimate)	Vehicle speed VSS (P0500) sensor OK				
				MAF1< 0.5*estimate - max (0.5*30.23g/sec) OR (0.35* (0.5*estimate))	Throttle position sensor TPS OK (P0122/0123)				
					Vehicle speed and TPS in range	VSS<30mph OR TPS>5.27deg (60cnts)			
					Battery Voltage	11< Voltage <18			
					SAIR not commanded	>3 seconds			
					Time with fault	>5 seconds			
	P0102 (Low)	Circuit Check	Sensor signal voltage	< 0.024 volts (0g/sec)	Time since last PIP signal (Engine not stalled)	< 150 msec			
			Fault filter routine	> 1 sec					
	P0103 (High)	Circuit Check	Sensor signal voltage	> 4.88 volts (293g/sec)	Time since last PIP signal (Engine not stalled)	< 150 msec			
			Fault filter routine	> 1 sec					
	P0104 (Backflow)	Rationality Check	MAF1+MAF2 not equal to estimate AND MAF1 & 2 do not equal estimate. MAF1 voltage low.	MAF1+MAF2 <estimate - max(30.23g/sec) OR (0.35*estimate)	Vehicle speed VSS (P0500) sensor OK				
				MAF1< 0.5*estimate - max (0.5*30.23g/sec)	Throttle position sensor TPS OK (P0122/0123)				
				MAF2< 0.5*estimate - max (0.5*30.23g/sec) OR (0.35* (0.5*estimate))	Vehicle speed and TPS in range	VSS<30mph OR TPS>5.27deg (60cnts)			
				MAF1 voltage < 0.024 (0g/sec)	Battery Voltage	11< Voltage <18			
					SAIR not commanded	>3 seconds			
					Time with fault	>5 seconds			
	P010A (MAF B Airpath)	Rationality Check - Compares measured MAF vs modelled airflow	MAF2 vs MAF1 low airflow	MAF2< 0.5*estimate - max (0.5*30.23g/sec) OR (0.35* (0.5*estimate))	Vehicle speed VSS (P0500) sensor OK				
					Throttle position sensor TPS OK (P0122/0123)				
					Vehicle speed and TPS in range	VSS<30mph OR TPS>5.27deg (60cnts)			
					Battery Voltage	11< Voltage <18			
					SAIR not commanded	>3 seconds			
					Time with fault	>5 seconds			
	P010B MAF B Range)	Rationality Check - Compares measured MAF vs modelled airflow	MAF1+MAF2 not equal to estimate AND MAF2 vs MAF1 low airflow	MAF1+MAF2 <estimate - max(xg/sec) OR (0.35*estimate)	Vehicle speed VSS (P0500) sensor OK				
				MAF2< 0.5*estimate - max (0.5*30.23g/sec) OR (0.35* (0.5*estimate))	Throttle position sensor TPS OK (P0122/0123)				
					Vehicle speed and TPS in range	VSS<30mph OR TPS>5.27deg (60cnts)			
					Battery Voltage	11< Voltage <18			
					SAIR not commanded	>3 seconds			
					Time with fault	>5 seconds			
	P010C (Low)	Circuit Check	Sensor signal voltage	< 0.024 volts (0g/sec)	Time since last PIP signal (Engine not stalled)	< 150 msec			
			Fault filter routine	> 1 sec					
	P010D (High)	Circuit Check	Sensor signal voltage	> 4.88 volts (293g/sec)	Time since last PIP signal (Engine not stalled)	< 150 msec			
			Fault filter routine	> 1 sec					
	P010E Backflow)	Rationality Check	MAF1+MAF2 not equal to estimate AND MAF1 & 2 do not equal estimate. MAF2 voltage low.	MAF1+MAF2 <estimate - max(30.23g/sec) OR (0.35*estimate)	Vehicle speed VSS (P0500) sensor OK				
				MAF1< 0.5*estimate - max (0.5*30.23g/sec) OR (0.35* (0.5*estimate))	Throttle position sensor TPS OK (P0122/0123)				
				MAF2< 0.5*estimate - max (0.5*30.23g/sec) OR (0.35* (0.5*estimate))	Vehicle speed and TPS in range	VSS<30mph OR TPS>5.27deg (60cnts)			
				MAF2 voltage < 0.024 (0g/sec)	Battery Voltage	11< Voltage <18			
					SAIR not commanded	>3 seconds			
					Time with fault	>5 seconds			
	P010F (MAFA/B Correlation)	Rationality Check	MAF codes raised	P0100,P0101,P0104, P010A,P010B,P010E	Time with fault	>5 seconds			

Component/ System	Fault Code	Monitor Strategy Description	Malfunction Criteria	Threshold Parameter	Secondary Parameters	Entry Parameters	Time Required	DTC Storage	MIL Illumin-ation
Manifold Pressure Input	P0106 (Rationality)	Rationality Check	Error between inferred manifold pressure and measure manifold pressure	>26.75kPa (7.899"Hg)	Engine speed	>600rpm <8000rpm	Continuous	Footnote a)	Footnote c)
			Time with fault	>1.25 seconds	Throttle position sensor TPS OK (P0122/0123)				
					Throttle position in range	>0cnts (0volts) <1023cnts (4.99volts)			
					Engine not in transient load condition	<0.39*100			
					Manifold pressure sensor OK (P0107/0108)				
	P0107 (Low)	Range check	Sensor signal voltage	< 0.04 volts 4.64kPa(1.37"Hg)	Battery Voltage	11< Voltage <18			
			Fault filter routine	> 5.0 sec					
	P0108 (High)	Range check	Sensor signal voltage	> 4.9 volts 114kPa(33.66"Hg)					
			Fault filter routine	> 5.0 sec					
Barometric Pressure Input	P0069 (Rationality)	Rationality Check	Barometric pressure below manifold pressure	(BP-2.9kPa [0.859"Hg])<MAP	Barometric pressure sensor OK (P2228/2229)		Continuous	Footnote a)	Footnote c)
			Time with fault	>8 seconds	Manifold pressure sensor OK (P0106/0107/0108)				
	P2228 (Low)	Range check	Sensor signal voltage	<2.3 volts 55.13kPa(16.28"Hg)	Battery Voltage	11< Voltage <18			
			Fault filter routine	> 5.0 sec					
	P2229 (High)	Range check	Sensor signal voltage	>4.9 volts 107.28kPa (31.68"Hg)					
			Fault filter routine	> 5.0 sec					
IAT Sensor Input	P0112 (Low)	Range check	Sensor input	< 0.2 volts 134.3degC (273.7degF)	Battery Voltage	11< Voltage <18	Continuous	Footnote a)	Footnote c)
			Time with sensor input out of range	> 5.0 sec					
	P0113 (High)	Range check	Sensor input	> 4.9 volts -40.7degC(-41.3F)					
			Time with sensor input out of range	> 5.0 sec					
	P0111	IAT Rationality check	Air Charge Temperature stuck	+ / - 16.6degC (30degf) from ECT	IAT_RAT_THRES	soak > 360 min, ECT >-31.6degC (-25F)	Once per drive cycle	Footnote a)	Footnote c)
			Vehicle speed ROA check	VSPD > 12.5 mph	time > 5.5 secs		once per drive cycle / <30 mins		
		IAT Absurdity	IAT>Threshold	>FNIA_RAT_OOR	Vehicle Speed	>12.5 mph	Continuous	Footnote a)	Footnote c)
					Time above min speed	>5 seconds			
					Change in IAT	<2.2degC (4degF)			
					Number of failure events	>2			
MATF Sensor Input	P0097 (High)	Range check	Sensor signal voltage	> 4.9 volts -40.7degC(-41.25degF)	Battery Voltage	11< Voltage <18	Continuous	Footnote a)	Footnote c)
			Fault filter routine	> 5.0 sec					
	P0098 (Low)	Range check	Sensor signal voltage	< 0.13 volts 150.4degC (302.75degF)					
			Fault filter routine	> 5.0 sec					
	P009A	Rationality Check - error between manifold temperature and IAT after long soak	Manifold temperature - IAT	>< +/- 26degC (80degF)	Engine off soak time	>360 minutes			
					IAT sensor OK (P0112/0113)				
EOT Sensor Input	P0197 (Low)	Range check	Sensor input	< 0.2 volts 134.27degC (273.7degF)	Battery Voltage	11< Voltage <18	Continuous	Footnote a)	Footnote c)
			Time with sensor input out of range	> 5.0 sec					
	P0198 (High)	Range check	Sensor input	> 4.9 volts -40.7degC (-41.3degF)					
			Time with sensor input out of range	> 5.0 sec					
	P0196	Rationality	EOT error vs model	> +/-38degC (100degF)					
			Time with fault	>30seconds					
ECT Sensor Input	P0117 (Low)	Range check	Sensor input	< 0.2 volts 136.8degC (273.7degF)	Battery Voltage	11< Voltage <18	Continuous	Footnote a)	Footnote c)
			Time with sensor input out of range	> 5.0 sec					
	P0118 (High)	Range check	Sensor input	> 4.9 volts -40.7degC (-41.3degF)					
			Time with sensor input out of range	> 5.0 sec					
	P0116	Rationality check (Stuck high)	Engine coolant temp	110 deg C (> 230 deg F)	Continuous time with engine off prior to start	> 360 min	Once per driving cycle	Footnote a)	Footnote c)
			Time with high sensor signal	> 30 sec	ECT at start differs from IAT at start	>28 deg C (> 50 deg F)			
					Catalyst, Misfire, Fuel				
Engine-Off (Soak) Timer Rationality Test	P0606	Rationality check, Engine-Off timer inoperative	ECT at startup cooler than ECT at previous keyoff	Error>= 27.8degC (50 degF)	ECT at previous keyoff was hot	>32.3degC (90degF)	Once per driving cycle	Footnote a)	Footnote b)
			Soak timer value at startup	< 0.5 * 60 sec (Timer indicates that short soak has occurred)					

Component/ System	Fault Code	Monitor Strategy Description	Malfunction Criteria	Threshold Parameter	Secondary Parameters	Entry Parameters	Time Required	DTC Storage	MIL Illumin-ation
Fuel Temperature Sensor Input	P0180	Circuit Malfunction - range check	Sensor input	< 0.2 volts 132.8degC (271.1degF) or > 4.9 volts -41.2degC(-42.1degF)	Battery Voltage	11< Voltage <18	Continuous	Footnote a)	Footnote c)
			Time with sensor input out of range	> 5.0 sec					
	P0182 (Low)	Circuit Malfunction - range check	Sensor input	< 0.2 volts 132.8degC (271.1degF)					
			Time with sensor input out of range	> 5.0 sec					
	P0183 (High)	Circuit Malfunction - range check	Sensor input	> 4.9 volts -41.2degC(-42.1degF)					
			Time with sensor input out of range	> 5.0 sec					
	P0181	Rationality check	ECT-Fuel rail temperature	<> +/-12.3degC (54.1degF)	Engine off time	>360minutes	Once per driving cycle	Footnote a)	Footnote c)
					ECU power up timer	>0.1seconds			
Fuel Rail Pressure Input	P0190	Circuit malfunction	Sensor input stuck	103 +/- 59 kPa	Battery Voltage	11< Voltage <18	Continuous	Footnote a)	Footnote c)
			Large control error	> +/-103 kPa (> 15 psig)					
			Time with sensor input out of range	> 8.0 sec					
	P0191	Range/Performance check	(Demand - sensed) error too large	> 137 kPa (20 psig)	Demand pressure within limits	< 413 kPa or > 344 kPa (< 60 psig or > 50 psig)			
			Time with sensor input out of range	> 8 sec	Fuel level above minimum level	> 0.15 * 100 %			
	P0192 (Low)	Range check	Sensor input	< 0.95 volts 174.23kPa (25.33psig)	Battery Voltage	11< Voltage <18			
			Time with sensor input out	> 8 sec					
	P0193 (High)	Range check	Sensor input	> 4.88 volts 647kPa (93.95psig)					
			Time with sensor input out	> 8 sec					
Fuel Pump	P1233	Fuel pump driver module	Time with failure	> 5.0 seconds			Continuous	Footnote a)	Footnote c)
	P1235	Fuel pump control out of	Time with failure	> 5.0 seconds					
	P1237	Fuel pump circuit malfunction	Time with failure	> 5.0 seconds					
Fuel Injectors	P0201 P0202 P0203 P0203 P0204 P0205 P0206 P0207 P0208	Circuit continuity check, open or shorted	Smart power driver status	1 = malfunction	Battery voltage	> 11.0 volts	Continuous	Footnote a)	Footnote c)
				Increment fault counter by 1 on each event. Set code when counter exceeds 40 (> 8 sec @ 600rpm)	Engine coolant temp	< 116 deg C (< 240 deg F)			
					Intake air temp	<66 deg C (< 150 deg F)			
Ignition System- CKP Circuit Malfunction	P0320	Intermittent/Noisy CKP signal check	Engine rpm (Used to determine crank mode)	> FN384 rpm (See Function)	None		Continuous	Footnote a)	Footnote c)
			Number of CKP edges incorrect, missing tooth in unexpected location. SW loses synchronization with missing tooth location	None	Increment fault counter by 10 on each event. Set code when counter exceeds 100				
					Engine Speed	>550rpm <5000rpm			
Camshaft Position Input	P0340 (BankA)	Rationality check	Ratio of PIP events to CID events	n to 1 (To pass test)	Increment fault counter by 2 on each event. Set code when counter exceeds 50	N/A	Continuous	Footnote a)	Footnote c)
					Engine speed	>550 rpm <2200rpm			
	P0345 (BankB)	Rationality check	Ratio of PIP events to CID events	n to 1 (To pass test)	Increment fault counter by 2 on each event. Set code when counter exceeds 50	N/A			
					Engine speed	>550 rpm <2200rpm			

Component/ System	Fault Code	Monitor Strategy Description	Malfunction Criteria	Threshold Parameter	Secondary Parameters	Entry Parameters	Time Required	DTC Storage	MIL Illumin-ation
Ignition System-Ignition Coil Primary Circuit Malfunction	P0351 P0352 P0353 P0354 P0355 P0356 P0357 P0358	Rationality check	Ratio of PIP events to spark events seen	1 to 1 (To pass test)	Increment fault counter by 20 on each event. Set code when counter exceeds 200	N/A	Continuous	Footnote a)	Footnote c)
			PCM able to determine coil	Yes	Battery Voltage	11.5< Voltage			
					Above neutral torque axis	See RPM/Load Table FNMISOK_97: Monitor disabled when less than 0.5			
IAC Solenoid Overspeed Error	P0507	Functional check - overspeed error	Difference between actual and desired rpm	> -200 rpm	Engine coolant temp	-40 deg C (> -40 deg F)	Continuous	Footnote a)	Footnote c)
			Time with solenoid at limit	> 5 sec	Time since engine start	> 60 sec			
					Fuel control	Closed loop			
					Idle state	At idle			
IAC Solenoid Underspeed Error	P0506	Functional check - underspeed error	Difference between actual and desired rpm	> 100 rpm	Engine coolant temp	-40 deg C (> -40 deg F)			
			Time with solenoid at limit	> 5 sec	Time since engine start	> 60 sec			
					Fuel control	Closed loop			
					Idle state	At idle			
Vehicle ID block not programmed	P1639	VID block not programmed with tire/axle ratio	Time with error present	> 0 sec	None	None	Continuous	Footnote a)	Footnote c)
VID Block checksum	P0602	VID block checksum test failed	Time with error present	> 0 sec	None	None	Continuous		
KAM Failed / reset	P0603	Keep Alive Memory check failed / memory was reset	Time with error present	> 0 sec	None	None	Continuous	Footnote a)	Footnote c)
RAM memory failed	P0604	Random Access Memory test has failed.	Time with error present	> 0 sec	None	None	Continuous	Footnote a)	Footnote c)
ROM checksum test failed	P0605	Read Only Memory test failed	Time with error present	> 0 sec	None	None	Continuous	Footnote a)	Footnote c)
CPU Fault detected	P0607	General fault with the CPU has been detected	Time with error present	> 0 sec	None	None	Continuous		
Keep Alive Memory Power Input	P1633	KAM power input voltage too low/open circuit	Time with error present	> 20 sec	None	None	Continuous	Footnote k)	Footnote i)
Vehicle Speed Sensor	P0500	Invalid / missing data from BCM	BCM reports VSS failure OR no data on CAN bus	1	Time after start	>2 seconds	Continuous	Footnote a)	Footnote c)
Vapor Management Valve Circuit Malfunction	P0443	Circuit continuity test, open or shorted	Commanded duty cycle on or full-off	>=0.5 * 100 % or = 0%	None	N/A	Continuous	Footnote a)	Footnote e)
			Signal circuit voltage	Refer to Appendix for threshold calculation					
			Time with circuit malfunction	> 5 sec					
KNKS Sensor	P0330 Bank1 Sensor1	Sensor range check	Calculated sensor noise (peak to peak variation)	>0.25	Engine speed	>1000rpm	Continuous	Footnote a)	Footnote c)
	P0325 Bank1 Sensor2	Sensor range check			Engine coolant temp	>55degC (131degF)			
	P130A Bank2 Sensor2	Sensor range check							
	P130B Bank2 Sensor2	Sensor range check							
Fuel Level Input Out Of Range	P0460 (Range Check)	Sensor range check	Sensor input	<= 7 or >= 254 A/D counts w/in a range of 256 A/D counts	None	N/A	Continuous	Footnote a)	Footnote j)
	P0462 (Low)	Circuit Check	Sensor input	< 7 A/D counts					
	P0463 (High)	Circuit Check	Sensor input	> 254 A/D counts					
			Time with sensor out of range	> 30 sec					
Fuel Level Input Stuck	P0460 (Rationality)	Sensor rationality check (Stuck sensor)	Compare fuel mass consumed versus observed change in gauge readings (Min. and max. reading)		Fuel consumed (Fuel consumed and fuel gauge reading range are both stored in KAM and reset after a refuelling event or DTC storage)	> 10 %	Continuous	Footnote a)	Footnote e)
		"Fuel consumed" is continuously calculated based on PCM fuel pulse width summation as a percent of fuel tank capacity	Fuel consumed (%) - Range of fuel gauge readings (%)	> 0.125 * 100 % threshold at fuel tank fill from 15% to 85%					
			Fuel consumed (%) - Range of fuel gauge readings (%)	> 0.054 + 0.125 * 100 % threshold if tank overfilled (> 85%)					
			Fuel consumed (%) - Range of fuel gauge readings (%)	> 0.175 + 0.125 * 100 % threshold if tank on reserve (< 15%)					
Fuel Level Input Noisy	P0461 (Rationality)	Sensor rationality check (Noisy sensor)	Change in fuel level	> 0.1925*100%	Fuel level on the data bus	N/A	Continuous	Footnote a)	Footnote e)
			Number of intermittent events	> 5					
I/M Readiness			Number of driving cycles to clear I/M readiness flag at extreme ambient conditions	> 1 driving cycle(s)					

Component/ System	Fault Code	Monitor Strategy Description	Malfunction Criteria	Threshold Parameter	Secondary Parameters	Entry Parameters	Time Required	DTC Storage	MIL Illumin-ation
Electronic Throttle Control									
TPPC chip failure in PCM	P0606	TPPC chip to CPU communication fault	Number of attempts	> 1			Continuous	Footnote a)	Footnote c)
TP Sensor Inconsistent With MAF Sensor	P0068	Rationality check vs. MAF input	Engine rpm	> 1000 rpm	Engine coolant temp	> 15 deg C (> 60 deg F)	Continuous	Footnote a)	Footnote c)
			Sensor signal voltage	< 1.22 volts or > 3.42 volts					
			Engine load	> 0.7 * 100% or < 0.2 * 100%					
			Time with sensor out of range	> 3.0 sec					
TP Sensor 'A' Input Out Of Range	P0122 (Low)	Range check	Time with low throttle voltage at TPPC or PCM	>= 0.176 seconds	None	N/A	Continuous	Footnote a)	Footnote c)
			Sensor signal voltage	< 0.2 volts					
	P0123 (High)		Time with high throttle voltage at TPPC or PCM	>= 0.176 seconds					
			Sensor signal voltage	> 4.87 volts					
TP Sensor 'B' Input Out Of Range	P0222 (Low)	Range check	Time with low throttle voltage at TPPC or PCM	>= 0.176 seconds	None	N/A	Continuous	Footnote a)	Footnote c)
			Sensor signal voltage	< 0.08 volts					
	P0223 (High)		Time with high throttle voltage at TPPC or PCM	>= 0.176 seconds					
			Sensor signal voltage	> 4.80 volts					
TP Sensor A/B Correlation	P2135	Rationality check	Time with correlation failure from the TPPC or PCM or Equizzer	>= 240 sec	None	N/A	Continuous	Footnote a)	Footnote c)
			Magnitude of the difference of the relative readings of the sensor signal voltage	> 0.073 volts (6.533deg)					
Throttle Actuator Control System	P2104	ETC FMEM – forced idle	Two or three pedal sensors failed, throttle plate stuck	>= 100 to 400 msec	None	N/A	Continuous	Footnote a)	Footnote c)
	P2105	ETC FMEM – forced engine shutdown	Equizzer detected fault	>= 16 to 960 msec	None	N/A	Continuous	Footnote a)	Footnote c)
	P2106	ETC FMEM – pedal-follower mode	Sensor fault: MAF, one TP, CKP, TSS, OSS, stuck throttle, throttle actuator circuit fault	>= 16 to 960 msec	None	N/A	Continuous	Footnote a)	Footnote c)
	P2110	ETC FMEM – default throttle angle	Two TPs failed; TPPC detected fault	>= 600 to 800 msec	None	N/A	Continuous	Footnote a)	Footnote c)
Throttle Plate Position Controller (TPPC)	P2111 (Stuck Open)	Functional test	Desired throttle angle vs. actual throttle angle measured in a rolling average routine during throttle tip-in	> 3.5 degrees	None	N/A	Continuous	Footnote a)	Footnote c)
	P2112 (Stuck Closed)	Functional test	Desired throttle angle vs. actual throttle angle measured in a rolling average routine during throttle tip-out	> 3.5 degrees	None	N/A	Continuous	Footnote a)	Footnote c)
	P2107	TPPC processor check	Internal processor test, lost communication with main CPU	>= 60 msec	None	N/A	Continuous	Footnote a)	Footnote c)
Throttle Actuator Control Motor	P2100	Circuit check	Throttle actuator circuit open	>= 1750 msec	None	N/A	Continuous	Footnote a)	Footnote c)
	P2101	Range check	Throttle actuator range/performance test, throttle plate angle does not followed commanded angle	>= 500 msec	None	N/A	Continuous	Footnote a)	Footnote c)

Signal circuit voltage threshold calculation for DTC P0443
At 98% DC: [(42 x Battery voltage) - 150] x 5.0/1024 volts
At 0% DC: [(32 x Battery voltage) - 200] x 5.0/1024 volts

FNMISPCT_97

Load \ RPM	700	950	1500	2000	2500	3000	4000	5000	6000	7500
0.1	0.20	0.20	0.20	0.20	0.20	0.20	0.17	0.12	0.12	0.10
0.15	0.20	0.20	0.20	0.20	0.20	0.20	0.17	0.12	0.12	0.10
0.2	0.20	0.20	0.20	0.20	0.20	0.20	0.17	0.12	0.12	0.10
0.3	0.20	0.20	0.20	0.20	0.20	0.16	0.15	0.11	0.12	0.09
0.4	0.20	0.20	0.20	0.20	0.16	0.14	0.12	0.10	0.10	0.09
0.5	0.20	0.20	0.20	0.16	0.16	0.14	0.12	0.09	0.09	0.08
0.7	0.20	0.20	0.20	0.16	0.14	0.13	0.12	0.08	0.08	0.08
0.9	0.20	0.20	0.20	0.16	0.14	0.13	0.12	0.08	0.08	0.08

Misfire Monitor Time Delay Since Engine Start Up = 0 seconds + FNMISACT value

FNMISACT

ACT (degC)	-40	-29	-7	60	66	93
output_axis [s]	180	180	0	0	0	0

FNMISOK_97

Load \ RPM	700	950	1500	2000	2500	3000	4000	5000	6000	7500
0.1	0.043	0.043	0.001	0.043	0	0	0	0	0	0
0.15	0.614	0.614	0.833	0.614	1	0.444	0	0	0	0
0.2	1	1	1	1	1	1	0.474	0.029	0	0
0.3	1	1	1	1	1	1	1	0.885	0.474	0.043
0.4	1	1	1	1	1	1	1	1	1	0.614
0.5	1	1	1	1	1	1	1	1	1	1
0.7	1	1	1	1	1	1	1	1	1	1
0.9	1	1	1	1	1	1	1	1	1	1

FN_TCSTRT (sec)

TCSTRT [degC]	-28.8	-17.7	-6.6	10	26.6	37.7	46.1	82.2	93.3
output_axis [s]	120	93	58	10	8	6	5	5	5

FN384 (RPM)

ECT [degC]	-160	-17.7	10	15.5	32.2	123.3
output_axis [RPM]	200	200	250	250	250	250

FN202 ("H20)

SYS_DELPR (kPa)	29.09	33.86	40.63	54.18	67.72	88.04
output_axis [kPa]	6.77	6.97	9.41	16.52	26.71	47.74

FN654S (sec)

TCSTRT [degC]	-160	-34.4	-23.3	-15	-6.6	10	48.8	123.3
output_axis [s]	1400	1400	1150	990	870	670	340	340

FNECTWUT (degF)

TCSTRT [degC]	-160	-9.4	-6.6	123.3
output_axis [degC]	71.1	71.1	77.2	77.2

FNWUT_LD

TCSTRT [degC]	-160	-17.7	-6.6	123.3
output_axis	0.3	0.3	0.3	0.3

FNWUT_VS (mph)

TCSTRT [degC]	-160	-17.7	10	26.6	123.3
output_axis [mph]	20	20	25	30	30

FNCAM_ACT_FK

DEG CRK	0	0.2	2	2.8	60
output_axis [mph]	0.01	0.04	0.4	1	1

CAM_RANGE_SENS

DEG CRK	-50	-30	-15	0	20
output_axis	2	2	2	2	2

DMTL total small leak threshold = TDMKLGTF+TDMKLGTF
DMTL total small leak threshold = TDMKLGTF+TDMKLGTF+FN_KFTDSTAB

TDMKLGTF

GVTAF	0.15	0.25	0.5	0.75	0.85
output_axis [s]	115	125	150	188	210

TDMGLGTF

GVTAF	0.15	0.25	0.5	0.75	0.85
output_axis [s]	0.1	0.1	0.1	0.1	0.1

FIPTGLR

IPTGH [A]	0	1	2	3	4	5	6	7	8
output_axis [s]	0.5	0.5	0.5	0.5	0.5	0.5	0.5	0.5	0.5

FIPTGLR

IPTGH [A]	0	1	2	3	4	5	6	7	8
output_axis [s]	1	1	1	1	1	1	1	1	1

FN_KFTDSTAB

GVTAF/IPTGH	0	1	2	3	4	5	6	7	8
0.15	76	76	76	76	76	76	76	76	76
0.25	105	105	105	105	105	105	105	105	105
0.35	135	135	135	135	135	135	135	135	135
0.45	167	167	167	167	167	167	167	167	167
0.55	205	205	205	205	205	205	205	205	205
0.65	262	262	262	262	262	262	262	262	262
0.75	318	318	318	318	318	318	318	318	318
0.85	380	380	380	380	380	380	380	380	380

Notes:

1) "Continuous" under the "Time Required" column indicates that the specified test cycles at a frequency greater than once every 0.5 seconds whenever the test entry conditions are met.
2) "Once per driving cycle" under the "Time Required" column indicates that the specified test will complete during the first 2 bags of an FTP as well as under the test entry conditions specified, on the road.
3) All test entry condition parameters are measured instantaneously unless otherwise indicated.

Footnotes

Secondary Parameters

p) If a 6 hour soak is met, some strategies will not require another continuous 6 hour soak if the customer performs a brief key-off. This has been put into effect to improve evap monitor completion frequency.
q) Some strategies will have the ability to base evap monitor soak length on the CARB cold soak criteria which consists of an ECT range and ACT/ECT differential.
r) A minimum soak time has been added to CARB's cold soak criteria (footnote q) to allow calibrators to set a minimum soak time if longer soak times are needed than given by the ACT/ECT-based CARB soak criteria.

DTC Storage:

a) A pending code will be stored after a malfunction has been detected on one driving cycle; a DTC will be stored after the same malfunction has been detected on the second consecutive driving cycle. The DTC will be erased after 40 warm-up cycles with no malfunction present, after the MIL has been extinguished for the DTC.
b) A DTC will be stored immediately upon detection of a malfunction. The DTC will be erased after 40 warm-up cycles with no malfunction present, after the MIL has been extinguished for the DTC.
k) A DTC will be stored after a malfunction has been detected on one drive cycle.The DTC will be erased after 40 warm-up cycles with no malfunction present, after the MIL has been extinguished for that DTC.
l) A DTC will be stored after a malfunction has been detected on six consecutive drive cycles. The DTC will be erased after 40 warm-up cycles with no malfunction present, after the MIL has been extinguished for that DTC.
o) For intake air temperatures below 20 deg F, no DTC will set for indicated AIR malfunction.
s) A DTC will be stored after an evaporative system leak has been detected and the refueling debounce check has been completed on the subsequent driving cycle

MIL Illumination:

c) The MIL will be illuminated after a malfunction has been detected on two consecutive driving cycles.
The MIL will be extinguished after three consecutive driving cycles where the monitor was run without a malfunction.
d) The MIL will blink immediately upon detection of a misfire rate that exceeds the catalyst damage threshold, regardless of whether fuel is shut off or not.
If the misfire rate drops below the catalyst damage threshold, the MIL will stay on solidly.
The MIL will be extinguished after three consecutive drive cycles where similar conditions have been seen without the malfunction.
e) The MIL will be illuminated after a malfunction has been detected on two consecutive driving cycles.
The MIL will be extinguished after three consecutive drive cycles where similar conditions have been seen without the malfunction.
f) For intake air temperatures below 32 deg F, the MIL will not illuminate for the indicated EGR DTCs.
For barometric pressures below 22.5"Hg, the MIL will not illuminate for the indicated EGR DTCs.
For intake air temperatures below 20 deg F, the MIL will not illuminate for the indicated AIR DTCs.
This prevents false MIL illumination due to ice in the EGR hoses or AIR switching valve(s).
g) This monitor employs EWMA.
The MIL will be illuminated after a malfunction has been detected on two consecutive driving cycles after DTCs have been erased or Keep Alive Memory has been erased (battery disconnect).
The MIL will be illuminated after a malfunction has been detected on up to six consecutive driving cycles during subsequent, "normal" customer driving.
The MIL will be extinguished after up to six consecutive driving cycles without a malfunction.
h) Some automatic transmission monitors are demonstrated following the USCAR Abbreviated On-Board Diagnostic Test Procedure for Vehicles Equipped with Automatic Transmissions.
This prevents false MIL illumination on this non-turbine speed sensor transmission application.
i) The MIL will be illuminated after a malfunction has been detected on the first driving cycle.
The MIL will be extinguished after three consecutive driving cycles where the monitor was run without a malfunction.
j) A DTC will be set after a malfunction has been detected on two consecutive driving cycles.
m) MIL will be illuminated after a malfunction has been detected on two consecutive driving cycles. MIL will be extinguished after the monitor has run without a malfunction (same or subsequent drive cycle).
n) A check cap light will be illuminated after a malfunction has been detected on one driving cycle. The check cap light will be extinguished after the monitor has run without a malfunction (same or subsequent drive cycle).

V8 4.7L EOBD Documentation

ASM Gearbox Tables

ASTON MARTIN

Component	P Codes	Malfunction Strategy Description	Malfunction Criteria (Fault)	Fault condition (Internal labels)	Threshold Value (Fault condition)	Entry conditions	Entry conditions values	Filter Time to log DTC
Gear Position sensor	P0916	Gear Position sensor short to GND	Gear Position signal low	Output Voltage < th_low	th_low = 0,5V	(Key ON) AND NOT (cranking) AND VSupply inside proper	VSupply range = 7V-24.5V	500ms
Gear Position sensor	P0917	Gear Position sensor short to battery or open circuit	Gear position signal high	Output Voltage > th_high	th_high = 4,5V	(Key ON) AND NOT (cranking) AND VSupply inside proper	VSupply range = 7V-24.5V	500ms
Gear Position sensor	P0915	Mechanical damage of magnet holder; Electrical offset. Internal sensor failure	Gear position signal wrong value	The calculated gear from the gear and shift position sensors is different than the last engaged gear (See annexed Chart 1)	th = 3%	(Key ON) AND NOT (cranking) AND VSupply inside proper range	VSupply range = 7V-24.5V	500ms
Shift position	P0907	Gear Position sensor short to battery or open circuit	Shift position signal high	Output Voltage > th_high	th_high = 4,5V	(Key ON) AND NOT (cranking) AND VSupply inside proper	VSupply range = 7V-24.5V	500ms
Shift position	P0906	Gear Position sensor short to GND	Shift position signal low	Output Voltage < th_low	th_low = 0,5V	(Key ON) AND NOT (cranking) AND VSupply inside proper	VSupply range = 7V-24.5V	500ms
Shift position	P0905	Mechanical damage of magnet holder; Electrical offset. Internal sensor failure	Shift position signal wrong value	The shift position signal is not coherent with the self tuned value for at least one gear. ShiftPosition (i) - ShiftPositionSelfTuned (i) > th for a timeout where i=1,2,…,7	th = 50 bit timeout = 3s	(Key ON) AND NOT (cranking) AND VSupply inside proper range	VSupply range = 7V-24.5V	500ms
Clutch position sensor	P0807	P1/ P2 wire short circuit to GND	Clutch position sensor - Primary Circuit low	The asic UH05 inside the TCU detects the fault and communicate it to the uP Output Voltage < th_low	th_low = 0,5V	(Key ON) AND NOT (cranking) AND VSupply inside proper range	VSupply range = 7V-24.5V	50ms
Clutch position sensor	P0808	P1/ P2 wire short circuit to battery or open circuit	Clutch position sensor - Primary Circuit high	The asic UH05 inside the TCU detects the fault and communicate it to the uP Output Voltage > th_high	th_high = 4,5V	(Key ON) AND NOT (cranking) AND VSupply inside proper range	VSupply range = 7V-24.5V	50ms
Clutch position sensor	P173A	S1/ S2 wire short circuit to GND	Clutch position sensor - Secondary Circuit low	The asic UH05 inside the TCU detects the fault and communicate it to the uP Output Voltage < th_low	th_low = 0,5V	(Key ON) AND NOT (cranking) AND VSupply inside proper range	VSupply range = 7V-24.5V	50ms

ASTON MARTIN

Component	P Codes	Malfunction Strategy Description	Malfunction Criteria (Fault)	Fault condition (Internal labels)	Threshold Value (Fault condition)	Entry conditions	Entry conditions values	Filter Time to log DTC
Clutch position sensor	P173B	S1/ S2 wire short circuit to battery or open circuit	Clutch position sensor - Secondary Circuit high	The asic UH05 inside the TCU detects the fault and communicate it to the uP Output Voltage > th_high	th_high = 4,5V	(Key ON) AND NOT (cranking) AND VSupply inside proper range	VSupply range = 7V-24.5V	50ms
Clutch position sensor	P0805	Short circuit between P1 and P2 or short circuit between S1 and S2	Clutch position sensor - Primary Secondary short circuit	The clutch position signal is a fixed value (around 2.5 V) See annexed Chart 2	th_1= 5 km/h th_2= 2000 bit timeout_1=100ms timeout_2=50ms	(Key ON) AND NOT (cranking) AND VSupply inside proper range	VSupply range = 7V-24.5V	50ms
Hydraulic pressure sensor	P0935	Hydraulic pressure sensor short to GND or open circuit	Hydraulic pressure signal circuit high	Output Voltage < th_low	th_low = 0,39V	(Key ON) AND NOT (cranking) AND VSupply inside proper	VSupply range = 7V-24.5V	500ms
Hydraulic pressure sensor	P0934	Hydraulic pressure sensor short to battery	Hydraulic pressure signal circuit low	Output Voltage > th_high	th_high = 4,79V	(Key ON) AND NOT (cranking) AND VSupply inside proper	VSupply range = 7V-24.5V	500ms
Hydraulic pressure sensor	P0932	Internal Sensor Damage or open circuit on the ground sensor wire	Hydraulic pressure signal wrong value	Wrong constant pressure value detected through a correlation between the pressure variation and an estimation of the oil flow		(Key ON) AND NOT (cranking) AND VSupply inside proper range	VSupply range = 7V-24.5V	500ms
Kl.30 Power Supply	P1794	Open circuit or broken fuse on TCU supply	Kl.30 Power Supply open circuit	Power Supply < V_th	V_th = 3V	(Key ON) AND NOT (cranking)		500ms
External sensors power supply or sensor ground	P0641	Failure of the sensor power voltage supply	External sensors power supply or sensor ground open circuit or short circuit	V_Sensor_Supply inside proper range	V_Sensor_Supply range = 4V-5V	(Key ON) AND NOT (cranking) AND VSupply inside proper range	VSupply range = 7V-24.5V	2500ms
Engine speed from CAN	U0401	Internal Problem on Engine Control System	Engine ECU: Engine speed from CAN. Signal not valid	CAN engine sp = inv_th	inv_th = FFFFh	NOT (Cranking) AND (ECU ON since t_on)	t_on = 200 ms	1000ms
Engine speed from CAN	U1900	Internal Problem on Engine Control System	Engine ECU: Engine speed from CAN. Signal absent (wrong zero rpm signal)	(CAN engine sp = 0) AND (Engine ON)		Engine ON		1000ms
Engine speed from CAN	U1920	Internal Problem on Engine Control System	Engine ECU: Engine speed from CAN. Signal wrong	(CAN engine speed different form Clutch speed) AND (CAN engine speed different from Driveline speed x gear ratio)	Seed tollerance= 500rpm	(Engine ON) AND (clutch closed) AND (gear engaged)		1000ms

ASTON MARTIN

Component	P Codes	Malfunction Strategy Description	Malfunction Criteria (Fault)	Fault condition (Internal labels)	Threshold Value (Fault condition)	Entry conditions	Entry conditions values	Filter Time to log DTC
Clutch speed	P0717	Sensor not properly installed on the gearbox or damaged.	Clutch speed. Signal absent (wrong zero rpm signal)	(Clutch speed = 0) AND [(Clutch closed) OR (Driveline speed > Th) AND (Gear engaged))]	Th= 50 rpm	(Key ON) AND NOT (cranking) AND VSupply inside proper range	VSupply range = 7V-24.5V	1000ms
Clutch speed	P0716	Sensor not properly installed on the gearbox or damaged.	Clutch speed. Signal wrong	(Clutch speed different form Engine speed) AND (Clutch speed different from driveline speed x gear ratio)	Seed tollerance= 500rpm	(Key ON) AND NOT (cranking) AND VSupply inside proper range	VSupply range = 7V-24.5V	1000ms
Driveline speed	U2005	Internal Problem on ESP system	ESP: Driveline speed. Signal absent (wrong zero rpm signal)	(Driveline speed = 0) AND [((Clutch closed) AND (Gear engaged)) OR ((Clutch speed > Th) AND (Gear engaged))]	Th= 1300 rpm	(Key ON) AND NOT (cranking) AND VSupply inside proper range	VSupply range = 7V-24.5V	5000ms
Driveline speed	U2511	Internal Problem on ESP system	ESP: Driveline speed. Signal wrong	(Driveline speed different from Engine speed/gear ratio) AND (Driveline speed different from clutch speed/gear ratio)	Seed tollerance= 500rpm	(Key ON) AND NOT (cranking) AND VSupply inside proper range	VSupply range = 7V-24.5V	5000ms
Driveline speed	U0415	Internal Problem on ESP system	ESP: Driveline speed. Signal not valid	Rear wheels sp = inv_th	inv_th = FFFFh	(Key ON) AND NOT (cranking) AND VSupply inside proper	VSupply range = 7V-24.5V	5000ms
CAN Engine ECU communication	U0100	Disconnection from CAN line of engine	CAN Timeout Engine ECU	CAN engine frames not received within timeout	timeout = 500ms	NOT (Cranking) AND (ECU ON since t_on)	t_on = 200 ms	
CAN ESP communication	U0129	Disconnection from CAN line of ESP	CAN Timeout ESP	CAN ESP frames not received within timeout	timeout = 500ms	NOT (Cranking) AND (ECU ON since t_on)	t_on = 200 ms	
Odd gear electrovalve	P0920	Odd gear electrovalve disconnected	Odd gear electrovalve. Open circuit	The asic UH04 inside the TCU detects the fault and communicate it to the uP Driver output voltage > th1 and < th2 during valve off phase	th1= 2.2V th2= 3.2V	NOT (Cranking)		200ms
Odd gear electrovalve	P0923	Odd gear electrovalve connected to battery	Odd gear electrovalve. Short circuit to Vsupply	The asic UH04 inside the TCU detects the fault and communicate it to the uP Driver output voltage > th2 during valve off phase	th2= 3.2V	NOT (Cranking)		200ms

ASTON MARTIN

Component	P Codes	Malfunction Strategy Description	Malfunction Criteria (Fault)	Fault condition (Internal labels)	Threshold Value (Fault condition)	Entry conditions	Entry conditions values	Filter Time to log DTC
Odd gear electrovalve	P0922	Odd gear electrovalve connected to GND	Odd gear electrovalve. Short circuit to GND	The asic UH04 inside the TCU detects the fault and communicate it to the uP Driver output current > th3 during valve on phase	th3= 3.7A	NOT (Cranking)		200ms
Even gear electrovalve	P0924	Even gear electrovalve disconnected	Even gear electrovalve. Open circuit	The asic UH04 inside the TCU detects the fault and communicate it to the uP Driver output voltage > th1 and < th2 during valve off phase	th1= 2.2V th2= 3.2V	NOT (Cranking)		200ms
Even gear electrovalve	P0927	Even gear electrovalve connected to battery	Even gear electrovalve. Short circuit to Vsupply	The asic UH04 inside the TCU detects the fault and communicate it to the uP Driver output voltage > th2 during valve off phase	th2= 3.2V	NOT (Cranking)		200ms
Even gear electrovalve	P0926	Even gear electrovalve connected to GND	Even gear electrovalve. Short circuit to GND	The asic UH04 inside the TCU detects the fault and communicate it to the uP Driver output current > th3 during valve on phase	th3= 3.7A	NOT (Cranking)		200ms
Clutch electrovalve	P0900	Clutch electrovalve disconnected	Clutch electrovalve. Open circuit	The asic UH04 inside the TCU detects the fault and communicate it to the uP Driver output voltage > th1 and < th2 during valve off phase	th1= 2.2V th2= 3.2V	NOT (Cranking)		200ms
Clutch electrovalve	P0903	Clutch electrovalve connected to battery	Clutch electrovalve. Short circuit to Vsupply	The asic UH04 inside the TCU detects the fault and communicate it to the uP Driver output voltage > th2 during valve off phase	th2= 3.2V	NOT (Cranking)		200ms

ASTON MARTIN

Component	P Codes	Malfunction Strategy Description	Malfunction Criteria (Fault)	Fault condition (Internal labels)	Threshold Value (Fault condition)	Entry conditions	Entry conditions values	Filter Time to log DTC
Clutch electrovalve	P0902	Clutch electrovalve connected to GND	Clutch electrovalve. Short circuit to GND	The asic UH04 inside the TCU detects the fault and communicate it to the uP Driver output current > th3 during valve on phase	th3= 3.7A	NOT (Cranking)		200ms
Shift brake electrovalve. Open circuit	P0928	Shift brake electrovalve disconnected	Shift brake electrovalve. Open circuit	The asic UH04 inside the TCU detects the fault and communicate it to the uP Driver output voltage > th1 and < th2 during valve off phase	th1= 2.2V th2= 3.2V	NOT (Cranking)		200ms
Shift brake electrovalve	P0931	Shift brake electrovalve connected to battery	Shift brake electrovalve. Short circuit to Vsupply	The asic UH04 inside the TCU detects the fault and communicate it to the uP Driver output voltage > th2 during valve off phase	th2= 3.2V	NOT (Cranking)		200ms
Shift brake electrovalve	P0930	Shift brake electrovalve connected GND	Shift brake electrovalve. Short circuit to GND	The asic UH04 inside the TCU detects the fault and communicate it to the uP Driver output current > th3 during valve on phase	th3= 3.7A	NOT (Cranking)		200ms
Pump relay	P0945	Pump relay disconnected	Pump relay Open circuit	The asic UH04 inside the TCU detects the fault and communicate it to the uP Driver output voltage > th1 and < th2 during valve off phase	th1= 2.2V th2= 3.2V	NOT (Cranking)		200ms
Pump relay	P0948	Pump relay connected to battery	Pump relay Short circuit to Vsupply	The asic UH04 inside the TCU detects the fault and communicate it to the uP Driver output voltage > th2 during valve off phase	th2= 3.2V	NOT (Cranking)		200ms

ASTON MARTIN

Component	P Codes	Malfunction Strategy Description	Malfunction Criteria (Fault)	Fault condition (Internal labels)	Threshold Value (Fault condition)	Entry conditions	Entry conditions values	Filter Time to log DTC
Pump relay	P0947	Pump relay connected GND	Pump relay Short circuit to GND	The asic UH04 inside the TCU detects the fault and communicate it to the uP Driver output current > th3 during valve on phase	th3= 3.7A	NOT (Cranking)		200ms
Clutch system	P186D	Clutch or actuator or valve damaged	Clutch not opening before gear shifting	Clutch not open in a timeout	timeout = 500ms	(Gear shifting in progress) AND (Clutch opening		
Gear Box system	P1734	Mechanical or hydraulic problem	Gear Box. Disengage failed (mechanical causes)	Gear not disengaged in a timeout	timeout = 500ms	(Gear shifting phase) AND (disengage phase)		
Gear Box system	P1701	Mechanical or hydraulic problem	Gear Box. Wrong gear engagement	The gear which is going to be engaged is not the requested one		(Gear shifting phase)		
Hydraulic circuit	P0868	Hydraulic leakage	Hydraulic circuit. Pressure low	Comparison between sensor pressure signal and threshold = f(oil temperature) pressure < th	Th= 25 bar @ -30°C Th= 40 bar @120°C linear interpolation	(Engine ON) AND NOT (cranking)		200ms
Power grounds	P1710	Power grounds. Disconnection both ground pins	Power grounds. Disconnection both ground pins	The diagnosis is based on the battery voltage modification during the activation of the clutch electrovalve. Ubatt < Ubatt0 - DltUbatt	Ubatt0 = Ubatt before starting the test DltUbatt = 2,5V	Wake-up phase		

V12 Family EOBD Documentation

Data Table

Aston Martin Lagonda Ltd.

Component/ System	Fault Code	Monitor Strategy Description	Malfunction Criteria	Threshold Parameter	Secondary Parameters	Entry Parameters	Time Required	DTC Storage	MIL Illumin-ation
Catalyst Efficiency Monitor									
Catalyst System Efficiency Below Threshold (Index Monitor)	P0420 (Bank 1)	HC efficiency inferred from oxygen storage capacity	Rear/Front HO2S switch ratio	> 0.76 (Unitless)	Engine coolant temp and ECT sensor OK (P0117/0118)	65C < Engine coolant < 110C (150 - 230F)	Once per driving cycle	Footnote a)	Footnote c)
	P0430 (Bank 2)	HC efficiency inferred from oxygen storage capacity	Rear/Front HO2S switch ratio	>0.76 (Unitless)	Intake air temp and IAT sensor OK (P0112/0113)	-7C < Inlet Air Tmp < 82C (20-180F)	Approximately 900 sec		
					Minimum time since start to run Catalyst Monitor	60 sec			
				Air mass range cell 1	HO2S11 switches : 200 HO2S21 switches: 200	3.78 - 11.3 g/s (0.5-1.5 lb/min)			
				Air mass range cell 2	HO2S11 switches : 200 HO2S21 switches: 200	11.3 - 18.9 g/sec (1.5-2.5 lb/min)			
				Air mass range cell 3	HO2S11 switches : 200 HO2S21 switches: FEGO2_MX_CT3	18.9 - 26.5 g/s (2.5-3.5 lb/min)			
					Maximum number of HO2S11 (Bank 1 front) switches to allow monitor completion	300			
					Maximum number of HO2S21 (Bank 2 front) switches to allow monitor completion	300			
				Load range for air mass cell 1	HO2S11 switches : 200 HO2S21 switches: 200	0.1 * 100 % - 1.0 * 100 %			
				Load range for air mass cell 2	HO2S11 switches : 200 HO2S21 switches: 200	0.1 * 100 % - 1.0 * 100 %			
				Load range for air mass cell 3	HO2S11 switches : 200 HO2S21 switches: 200	0.1 * 100 % - 1.0 * 100 %			
				Rpm range for air mass cell 1	HO2S11 switches : 200 HO2S21 switches: 200	0 - 4000 rpm			

Component/ System	Fault Code	Monitor Strategy Description	Malfunction Criteria	Threshold Parameter	Secondary Parameters	Entry Parameters	Time Required	DTC Storage	MIL Illumin-ation
				Rpm range for air mass cell 2	HO2S11 switches : 200 HO2S21 switches: 200	0 - 4000 rpm			
				Rpm range for air mass cell 3	HO2S11 switches : 200 HO2S21 switches: 200	0 - 4000 rpm			
					Inferred midbed catalyst temp for air mass cell 1 (Bank1/Bank2)	371 - 871 deg C (700-1600 deg F)			
					Inferred midbed catalyst temp for air mass cell 2 (Bank1/Bank2)	371 - 871 deg C (700-1600 deg F)			
					Inferred midbed catalyst temp for air mass cell 3 (Bank1/Bank2)	371 - 871 deg C (700-1600 deg F)			
					Time constant to determine throttle position rate	1.0 (Unitless)			
					Maximum throttle position rate of change	< 50 * 5/ 1024 volts per sec			
					Minimum inferred rear HO2S12/HO2S22 temp to enter test	349 deg C (660 deg F)			
					Time since part-throttle decel	> 1.0 sec			
					Vehicle speed	20 - 80 mph			
					Crankshaft position circuit (PIP) OK (P0320)				
					HO2S Monitor COMPLETE with no DTCs prior to final switch ratio computation				
					Evap system OK, no Evap System DTCs				
					EWMA "fast" filter constant for first 2 driving cycles after KAM cleared	0.99 (Unitless)			
					EWMA "normal" filter constant after first 2 driving cycles	0.99 (Unitless)			
					Fuel level	> .15 * 100 %			

Component/ System	Fault Code	Monitor Strategy Description	Malfunction Criteria	Threshold Parameter	Secondary Parameters	Entry Parameters	Time Required	DTC Storage	MIL Illumin-ation
Misfire Monitor									
Cylinder Misfire Detected	P0300 to P0312	Deviations in crankshaft acceleration processed by Neural Network Misfire Monitor software and Catalyst Temperature model	Percentage misfire required to exceed Catalyst Damage Temperature 900 deg c (1650 deg F) catalyst damage threshold, per engine bank		Type A: See RPM/Load Table FNMISPCT_97 %		Type A: 200 revs (Continuous)	Type A: Footnote b)	Type A: Footnote d)
		Full-range misfire capability	Percentage misfire required to exceed emission thresholds	Type B: > 0.01 * 100 %			Type B: 1000 revs (Continuous)	Type B/C: Footnote a)	Type B: Footnote c)
			Percentage misfire required to clear emission pending code	< 0.001 * 100 %	Time since engine start, value based on time and IAT	0 + FNMISACT sec (See Transfer Functions)			
			Full-range misfire redline: 6900 rpm		Time since PCM power up	0 sec			
					Time for NNMM computation queue to fill	4 revs from initial crank (Meets 2 rev start delay requirement)			
					Engine coolant temp	-7 - 121 deg C (20 - 250 deg)			
					Engine rpm	500 - 4000rpm			
					Engine rpm in neutral (Auto trans. only)	< 3100 rpm			
					Net engine torque	> -68 Nm (-50 ft lbs)			
					Engine torque rate of change	> -34 Nm/s or < 41 Nm/s (> -25 ft lbs/sec or < 30 ft lbs/sec)			
					Throttle position rate of change	> -20 volts/background loop or < 30 * 5/1024 volts/background loop			
					Closed throttle deceleration (Dashpot mode)	Closed throttle, vehicle speed < 4 mph, dashpot airflow adder present			
					Engine rpm/load range	See RPM/Load Table FNMISOK_97: Monitor disabled when less than 0.5			
					Crankshaft position circuit (PIP) OK (P0320)				
					Fuel shutoff for rpm or vehicle speed limiting	No fuel cutoff occurring			
					Fuel level	> 0.15 * 100 %			

Component/ System	Fault Code	Monitor Strategy Description	Malfunction Criteria	Threshold Parameter	Secondary Parameters	Entry Parameters	Time Required	DTC Storage	MIL Illumin-ation
Misfire Detected At Startup	P0316	Misfire detected during first 1000 engine revs since start	P0316 is set in addition to P0300 - P0310 DTC				1000 revs (Continuous)	Footnote a)	Footnote c)
AICE chip failure in PCM	P0606	NNMM chip to CPU communication fault	Number of attempts	10			Continuous	Footnote a)	Footnote c)
Camshaft/crankshaft synchronization failure	P1336	AICE chip reports inability to synchronize camshaft and crankshaft signals (Replaces P1309)	Number of attempts	> 255			Continuous	Footnote a)	Footnote c)
Unable to learn crankshaft profile	P0315	Unable to learn stable crankshaft profile	Number of attempts	> 6 attempts			Continuous within profile learning entry conditions	Footnote a)	Footnote c)
ROM checksum error	P260F	NNP ROM checksum error	Checksum from NNP does not equal mainline strategy		None		Continuous	Footnote a)	Footnote c)

Fuel System Monitor

Fuel System Too Rich Or Too Lean	P0171 (Bank 1 Lean)	Excessive long and short term fuel trim corrections	Long term fuel trim cell currently being utilized exceeds lean limits	> 1.24 * 100 %	Engine rpm	600 - 4000 rpm	Continuous	Footnote a)	Footnote c)
			Short term fuel trim exceeds lean limits	< 0.96 * 100%					
	P0172 (Bank 1 Rich)	Note: Long term fuel trim corrections are learned into an 8x10 cell table as a function of rpm and load or an 8x1 cell table as a function of rpm and air mass	Long term fuel trim cell currently being utilized exceeds rich limits	< 0.76 * 100 %	Engine air mass	3.4 - 484 g/sec (0.45 - 63.99 lbs/min)			
			Short term fuel trim exceeds rich limits	> 1.1 * 100 %					
	P0174 (Bank 2 Lean)				Closed loop fuel, adaptive fuel learning enabled (Purge dutycycle = 0 %)	Fuel trim learning enabled	Fuel trim learning enabled		
	P0175 (Bank 2 Rich)				Fuel Rail Pressure sensor OK (P0190/0192/0193)				

Component/ System	Fault Code	Monitor Strategy Description	Malfunction Criteria	Threshold Parameter	Secondary Parameters	Entry Parameters	Time Required	DTC Storage	MIL Illumin-ation
HO2S Monitor									
Stream 1 (Front) O2 Sensor Signal Stuck Lean	P2195 (Bank 1, Sensor 1)	Lack of HO2S switches	**Stage 1: (Look for short term fuel trim stuck)**		Fuel control	Closed loop or Closed loop desired	Continuous	Footnote a)	Footnote c)
	P2197 (Bank 2, Sensor 1)		Short term fuel trim	> 1 + 0.3 * 100%	Intake air temp sensor OK (P0112/0113)				
			Time with short term fuel trim at limit	> 22 * 2 sec	Engine coolant temp sensor OK (P0117/0118)				
			Stage 2: (Look for HO2S stuck at startup)		Mass Air Flow sensor OK (P0102/0103)				
			Cumulative time in test mode since start up	> 30 sec	Throttle Position Sensor OK (P0122/0123)				
			Number of switches since start up	< 4	Fuel tank pressure low enough and sensor OK (P0451, P0452, P0453)	< 2,491 Pa (< 10 in H2O)			
			Fuel control	In FMEM at start up	Fuel level above minimum level	> 0.15 * 100 %			
					Stuck sensor recovery efforts failed				
					Time entry conditions have been present	> 10 sec			
Stream 1 (Front) O2 Sensor Signal Stuck Rich	P2196 (Bank 1, Sensor 1)	Lack of HO2S switches	**Stage 1: (Look for short term fuel trim stuck)**		Fuel control	Closed loop or Closed loop desired	Continuous	Footnote a)	Footnote c)
	P2198 (Bank 2, Sensor 1)		Short term fuel trim	< 1 - 0.3 * 100%	Intake air temp sensor OK (P0112/0113)				
			Time with short term fuel trim at limit	> 22 * 2 sec.	Engine coolant temp sensor OK (P0117/0118)				
			Stage 2: (Look for HO2S stuck at startup)		Mass Air Flow sensor OK (P0102/0103)				
			Cumulative time in test mode since start up	> 30 sec	Throttle Position Sensor OK (P0122/0123)				
			Number of switches since start up	< 4	Fuel tank pressure low enough and sensor OK (P0451, P0452, P0453)	< 2,491 Pa (< 10 in H2O)			
			Fuel control	In FMEM at start up	Fuel level above minimum level	> 0.15 * 100 %			
					Stuck sensor recovery efforts failed				
					Time entry conditions have been present	> 10 sec			

Component/ System	Fault Code	Monitor Strategy Description	Malfunction Criteria	Threshold Parameter	Secondary Parameters	Entry Parameters	Time Required	DTC Storage	MIL Illumin-ation
Stream 1 (Front) HO2S Circuit Slow Response	P0133 (Bank 1)	Monitor HO2S switching frequency and amplitude (Forced at 1.5 Hz fixed rate)	Switching frequency (Indicates gross failure)	< 0.0 Hz	Time since entering closed loop fuel control	> 10 sec	< 4 sec once per driving cycle	Footnote a)	Footnote c)
	P0153 (Bank 2)		Switching frequency difference from desired (Test run at correct frequency)	< 0.19 Hz	Short term fuel trim	0.9 - 1.1 * 100 %			
			Signal voltage amplitude	< 0.55 volts	Engine coolant temp and ECT sensor OK (P0117/0118)	55 - 116 deg C (130 - 240 deg F)			
					Fuel level above minimum level	> 0.15 * 100 %			
					Intake air temp and IAT sensor OK (P0112/0113)	< 71 deg C (< 160 deg F)			
					Engine load and MAF sensor OK (P0102/0103)	0.15 - 0.4 * 100 %			
					Vehicle speed and VSS (P0500) or OSS (P0720) sensor OK	30 - 60 mph			
					Engine rpm and crankshaft position circuit (PIP) OK (P0230)	1000 - 2200 rpm			
					Throttle position sensor OK (P0122/0123)				
					Camshaft ID circuit (CMP) OK (P0340)				
					No Misfire Monitor DTCs				
					Fuel rail pressure sensor OK (P0190/0192/0193)				
					Flex fuel composition not changing				
					Not transitioning into/out of Characteristic Shift Down				
					Not in Phase 0 of Evap Monitor				
					No Purge System reset				
					Maximum change in engine rpm while running monitor	< 160 rpm			
					Maximum change in engine load while running monitor	< 0.13 * 100%			
					Maximum change in vehicle speed while running monitor	< 2.0 mph			
					Maximum change in short term fuel trim while running monitor (PTEC only)	< 0.1			

Component/ System	Fault Code	Monitor Strategy Description	Malfunction Criteria	Threshold Parameter	Secondary Parameters	Entry Parameters	Time Required	DTC Storage	MIL Illumin-ation
Stream 1 (Front) HO2S Overvoltage	P0132 (Bank 1) P0152 (Bank 2)	Monitor HO2S voltage	Voltage greater than malfunction threshold	> 1.1 volts	Fuel control	Closed loop or Closed loop desired	Continuous	Footnote a)	Footnote c)
			Time with sensor voltage out of range	> 25 sec	Stream 1 HO2S: Inferred sensor temp	> 204 deg C (> 400 deg F)			
					HO2S heater OK (P0135, P0053-bank1) (P0155, P0059-bank2)				
Rear HO2S Circuit Malfunction	P0136 (Bank 1)	Monitor normal signal voltage envelope; forced A/F excursion if required for green catalyst (Rationality check)	HO2S min and max signal voltages	Rich- < 0.48 volts Lean- > 0.42 volts	Inferred exhaust temp	149 - 760 deg C (300 - 1400 deg F)	Once per driving cycle	Footnote a)	Footnote c)
	P0156 (Bank 2)				Downstream heater on time	> 90 sec			
					Throttle position	Part throttle			
					Engine rpm - for forced excursion only	> 1000 rpm			
					Inferred exhaust temp - for forced excursion only	< 871 deg C (< 1600 deg F)			
					Flex fuel composition not changing				
					Upstream sensor(s) tested				

Component/ System	Fault Code	Monitor Strategy Description	Malfunction Criteria	Threshold Parameter	Secondary Parameters	Entry Parameters	Time Required	DTC Storage	MIL Illumin-ation
Stream 2 (CMS) O2 Sensor signal Stuck Lean	P2270 (Bank 1)	Monitor normal signal voltage envelope; forced A/F excursion if required for green catalyst (Rationality check)	HO2S maximum signal voltage	< 0.42 volts	Inferred exhaust temp	149 - 760 deg C (300 - 1400 deg F)	Once per driving cycle	Footnote a)	Footnote c)
	P2272 (Bank 2)				Stream 2 heater on time	> 90 sec			
					Fuel level above minimum level	> 0.15 * 100 %			
					Throttle position	Part throttle			
					Engine rpm - for forced excursion only	> 1000 rpm			
					Inferred exhaust temp - for forced excursion only	< 871 deg C (< 1600 deg F)			
					Flex fuel composition not changing				
					Upstream sensor(s) tested				
Stream 2 (CMS) O2 Sensor signal Stuck Rich	P2271 (Bank 1)	Monitor normal signal voltage envelope; forced A/F excursion if required for green catalyst (Rationality check)	HO2S minimum signal voltage	> 0.48 volts	Inferred exhaust temp	149 - 760 deg C (300 - 1400 deg F)	Once per driving cycle	Footnote a)	Footnote c)
	P2273 (Bank 2)				Stream 2 heater on time	> 90 sec			
					Fuel level above minimum level	> 0.15 * 100 %			
					Throttle position	Part throttle			
					Engine rpm - for forced excursion only	> 1000 rpm			
					Inferred exhaust temp - for forced excursion only	< 871 deg C (< 1600 deg F)			
					Flex fuel composition not changing				
					Upstream sensor(s) tested				
Stream 2 (CMS) HO2S Overvoltage	P0138 (Bank 1)	Monitor HO2S voltage	Voltage greater than malfunction threshold	> 1.1 volts	Stream 2 HO2S heater on time	> 90 sec	Continuous	Footnote a)	Footnote c)
	P0158 (Bank 2)		Time with sensor voltage out of range	> 25 sec	Stream 2 HO2S: Inferred sensor temp	> 204 deg C (> 400 deg F)			
					HO2S heater OK (P0141, P0054-bank1) (P0161, P0060-bank2)				

Component/ System	Fault Code	Monitor Strategy Description	Malfunction Criteria	Threshold Parameter	Secondary Parameters	Entry Parameters	Time Required	DTC Storage	MIL Illumin-ation
HO2S Heater Circuit Malfunction	P0135 (HO2S11)	Circuit continuity check, monitor voltage for opens and shorts	Feedback circuit state matches commanded output state (Digital signal)	Feedback circuit high or low	Stream 1 HO2S: Inferred sensor temp	19 - 649 deg C (67 - 1200 deg F)	Continuous	Footnote a)	Footnote c)
	P0155 (HO2S21)		Monitor retries allowed for malfunction (Background loops)	RETRY_ALLOW					
	P0053 (HO2S11)	Functional check, monitor min and max. heater current	Heater circuit current	< 0.465 amps or > 3.0 amps	Stream 1 HO2S: Inferred sensor temp	121 - 593 deg C (250 - 1100 deg F)	Once per driving cycle		Footnote c)
	P0059 (HO2S21)				Stream 1 HO2S heater on time	> 30 sec			
					Stream 1 sensor(s) tested (P0133/P0153 tests completed)				
					Stream 2 sensor(s) tested (P2270, P2271, 2272, and P2273 tests completed)				
	P0141 (HO2S12)	Circuit continuity check, monitor voltage for opens and shorts	Feedback circuit state matches commanded output state (Digital signal)	Feedback circuit high or low	Stream 2 HO2S: Inferred sensor temp	149 - 760 deg C (300 - 1400 deg F)	Continuous	Footnote a)	Footnote c)
	P0161 (HO2S22)		Monitor retries allowed for malfunction (Background loops)	RETRY_ALLOW					
	P0054 (HO2S12)	Functional check, monitor min and max. heater current	Heater circuit current	< 0.22 amps	Stream 2 HO2S: Inferred sensor temp	121 - 732 deg C (250 - 1350 deg F)	Once per driving cycle		Footnote c)
	P0060 (HO2S22)			> 3.0 amps	Stream 2 HO2S heater on time	> 30 sec			
					Stream 1 sensor(s) tested (P0133/P0153 tests completed)				
					Stream 2 sensor(s) tested (P2270, P2271, 2272, and P2273 tests completed)				
					Stream 3 sensor(s) tested (P2274, P2275, 2276, and P2277 tests completed)				

Component/ System	Fault Code	Monitor Strategy Description	Malfunction Criteria	Threshold Parameter	Secondary Parameters	Entry Parameters	Time Required	DTC Storage	MIL Illumin-ation
Comprehensive Component Monitor- Engine									
MAF Sensor Input	P0102 (Low)	Range check	Sensor signal voltage	< 0.25 volts (0.4498g/sec)	Time since last PIP signal (Engine not stalled)	< 150 msec	Continuous	Footnote a)	Footnote c)
			Fault filter routine	> 5.0 sec	Relative throttle position	> 10 * 5/1024 volts (6.025degrees)			
					Engine mode	Run mode			
	P0103 (High)	Range check	Sensor signal voltage	> 4.39 volts (217g/sec)	Engine rpm	< 6000 rpm			
			Fault filter routine	> 5.0 sec					
Barometric Pressure Input	P0107 (Low)	Range check	Sensor signal voltage	< 2.0 volts (49.13kPa)	None	N/A	Continuous	Footnote a)	Footnote c)
	P0108 (High)	Range check		> 4.8 volts (105.3kPa)					
IAT Sensor Input	P0112 (Low)	Range check	Sensor input	< 0.2 volts (134degC)	None	N/A	Continuous	Footnote a)	Footnote c)
			Time with sensor input out of range	> 5.0 sec					
	P0113 (High)		Sensor input	> 4.93 volts (-45degC)					
			Time with sensor input out of range	> 5.0 sec					
	P0111	IAT Rationality check	Air Charge Temperature stuck	+ / - 16.6degC from ECT	IAT_RAT_THRES	soak > 360 min, ECT >-31c	Once per drive cycle	Footnote a)	Footnote c)
			Vehicle speed ROA check	VSPD > 12.5 mph	time > 5.5 secs		once per drive cycle / <30 mins		
ECT Sensor Input	P0117 (Low)	Range check	Sensor input	< 0.2 volts (134degC)	None	N/A	Continuous	Footnote a)	Footnote c)
			Time with sensor input out of range	> 5.0 sec					
	P0118 (High)		Sensor input	> 4.93 volts (-45degC)					
			Time with sensor input out of range	> 5.0 sec					

Component/ System	Fault Code	Monitor Strategy Description	Malfunction Criteria	Threshold Parameter	Secondary Parameters	Entry Parameters	Time Required	DTC Storage	MIL Illumin-ation
ECT Sensor Input	P0116	Rationality check (Stuck high)	Engine coolant temp	110 deg C (> 230 deg F)	Continuous time with engine off prior to start	> 360 min	Once per driving cycle	Footnote a)	Footnote c)
			Time with high sensor signal	> 100 sec	ECT at start differs from IAT at start	>28 deg C (> 50 deg F)			
					Catalyst, Misfire, Fuel System or HO2S Monitors				
MATF Sensor Input	P0097 (High)	Range check	Sensor signal voltage	> 4.9 volts (-41.25degF)	Battery Voltage	11< Voltage <18	Continuous	Footnote a)	Footnote c)
			Fault filter routine	> 5.0 sec					
	P0098 (Low)	Range check	Sensor signal voltage	< 0.13 volts (302.75degF)					
			Fault filter routine	> 5.0 sec					
	P009A	Rationality Check - error between manifold temperature and IAT after long soak	Manifold temperature - IAT	>< +/- 26degC (80degF)	Engine off soak time	>360 minutes			
					IAT sensor OK (P0112/0113)				
Engine-Off (Soak) Timer Rationality Test	P0606	Rationality check, Engine-Off timer inoperative	Soak timer value at startup	< 0.5 * 60 sec (Timer indicates that short soak has occurred)	Engine coolant temperature at previous key-off	>90degC (indicates hot engine)	Once per driving cycle	Footnote a)	Footnote b)
					Engine coolant temperature at previous key-off - coolant at start	> 55 deg C (> 100 deg F) (Degree of cooling indicates that a long soak has occurred)			
Vehicle ID block not programmed	P1639	VID block not programmed with tire/axle ratio	Time with error present	> 0 sec	None	None	Continuous	Footnote a)	Footnote c)
VID Block checksum	P0602	VID block checksum test failed	Time with error present	> 0 sec	None	None	Continuous		
KAM Failed / reset	P0603	Keep Alive Memory check failed / memory was reset	Time with error present	> 0 sec	None	None	Continuous	Footnote a)	Footnote c)
RAM memory failed	P0604	Random Access Memory test has failed.	Time with error present	> 0 sec	None	None	Continuous	Footnote a)	Footnote c)
ROM checksum test failed	P0605	Read Only Memory test failed	Time with error present	> 0 sec	None	None	Continuous	Footnote a)	Footnote c)
CPU Fault detected	P0607	General fault with the CPU has been detected	Time with error present	> 0 sec	None	None	Continuous		
Keep Alive Memory Power Input	P1633	KAM power input voltage too low/open circuit	Time with error present	> 20 sec	None	None	Continuous	Footnote k)	Footnote i)
Loss of Communication with TCM	U0101	Monitors CAN bus between ECM and TCM	Time with fault present	> 1.36 seconds			Continuous		
Fuel Temperature Sensor Input	P0180	Circuit Malfunction - range check	Sensor input	< 0.21 volts (131degC) or > 4.93 volts(-45degC)	None	N/A	Continuous	Footnote a)	Footnote c)
			Time with sensor input out of range	> 3.0 sec					
	P0182 (Low)	Circuit Malfunction - range check	Sensor input	< 0.21 volts (131degC)					
			Time with sensor input out of range	> 3.0 sec					
	P0183 (High)		Sensor input	> 4.93 volts (-45degC)					
			Time with sensor input out of range	> 3.0 sec					

Component/ System	Fault Code	Monitor Strategy Description	Malfunction Criteria	Threshold Parameter	Secondary Parameters	Entry Parameters	Time Required	DTC Storage	MIL Illumin-ation
Fuel Rail Pressure Input	P0190	Circuit malfunction	Sensor input stuck midrange	123 +/- 34 kPa (17.9 +/- 5.0 psig)	None	N/A	Continuous	Footnote a)	Footnote c)
			Large control error	34 kPa (> 5.0 psig)					
			Sensor value not moving	5.5 kPa/second (< 0.8 psig/second)					
			Time with sensor input out of range	> 8.0 sec					
	P0191	Range/Performance check	(Demand - sensed) error too large	> 172 kPa (25.0 psig)	Demand pressure within limits	< 448 kPa or > 241 kPa (< 65.0 psig or > 35.0 psig)			
			Time with sensor input out of range	> 8.0 sec	Fuel level above minimum level	> 0.15 * 100 %			
	P0192 (Low)	Range check	Sensor input	< 0.05 volts (<0kPa)	None	N/A			
			Time with sensor input out of range	> 8.0 sec					
	P0193 (High)		Sensor input	> 4.88 volts (>517kPa)					
			Time with sensor input out of range	> 8.0 sec					
Fuel Pump	P1233	Fuel pump driver module disabled or off line	Time with failure	> 3.0 seconds			Continuous	Footnote a)	Footnote c)
	P1235	Fuel pump control out of range	Time with failure	> 3.0 seconds					
Fuel Injectors	P0201	Circuit continuity check, open or shorted	Smart power driver status	1 = malfunction	Battery voltage	> 11.0 volts	Continuous	Footnote a)	Footnote c)
	P0202		Time with circuit malfunction	> 3.5 sec	Engine coolant temp	< 116 deg C (< 240 deg F)			
	P0203				Intake air temp	66 deg C (< 150 deg F)			
	P0204								
	P0205								
	P0206								
Ignition System- CKP Circuit Malfunction	P0320		Engine rpm (Used to determine crank mode)	> FN384A rpm (See Function)	None		Continuous	Footnote a)	Footnote c)
		Intermittent/Noisy CKP signal check	Number of CKP edges incorrect, missing tooth in	None	Increment fault counter by 25 on each event. Set				
	P0322	Engine speed input circuit no signal	Compares engine rpm on one bank to engine rpm or	None	Increment fault counter by 4 on each event. Set				
Camshaft Position Input	P0340	Rationality check	Ratio of PIP events to CID events	n to 1 (To pass test)	None	N/A			Footnote c)

Component/ System	Fault Code	Monitor Strategy Description	Malfunction Criteria	Threshold Parameter	Secondary Parameters	Entry Parameters	Time Required	DTC Storage	MIL Illumin-ation
Ignition System-Ignition Coil Primary Circuit Malfunction	P0351(Coil A)	Rationality check	Ratio of PIP events to spark events seen	1 to 1 (To pass test)	Battery voltage	> 11.0 volts or < 18.0 volts	Continuous	Footnote a)	Footnote c)
	P0352(Coil B)		PCM able to determine coil	Yes					
	P0353(Coil C)								
	P0354(Coil D)								
	P0355(Coil E)								
	P0356(Coil F)								
IAC Solenoid Overspeed Error	P0507	Functional check - overspeed error	Difference between actual and desired rpm	> -200 rpm	Engine coolant temp	-7 deg C (> 20 deg F)	Continuous	Footnote a)	Footnote c)
					Time since engine start	> 100 sec			
			Time with solenoid at limit	> 15 sec	Fuel control	Closed loop			
					Idle state	At idle			
IAC Solenoid Underspeed Error	P0506	Functional check - underspeed error	Difference between actual and desired rpm	> 100 rpm	Engine coolant temp	-7 deg C (> 20 deg F)	Continuous	Footnote a)	Footnote c)
			Closed loop MAF correction	> 4.5 g/sec (> 0.6 lbs/min)	Time since engine start	> 100 sec			
			Time with solenoid at limit	> 10 sec	Fuel control	Closed loop			
					Idle state	At idle			
Vehicle Speed Sensor	P0500	Functional check - operational	Evaluates CAN source VS	> 3 mph	> 4 seconds	Vehicle moving			
Vapor Management Valve Circuit Malfunction	P0443	Circuit continuity test, open or shorted	Commanded dutycycle on or full-off	>=0.135 * 100 % or = 0%	None	N/A	Continuous	Footnote a)	Footnote e)
			Signal circuit voltage	Refer to Appendix for threshold calculation					
			Time with circuit malfunction	> 5 sec					
Fuel Level Input Out Of Range	P0460 (Range Check)	Sensor range check	Sensor input	<= 7 or >= 254 A/D counts w/in a range of 256 A/D counts	None	N/A	Continuous	Footnote a)	Footnote j)
	P0462 (Low)			< 7 A/D counts					
	P0463 (High)			> 254 A/D counts					
			Time with sensor out of range	> 30 sec					

Component/ System	Fault Code	Monitor Strategy Description	Malfunction Criteria	Threshold Parameter	Secondary Parameters	Entry Parameters	Time Required	DTC Storage	MIL Illumin-ation
Fuel Level Input Stuck	P0460 (Rationality)	Sensor rationality check (Stuck sensor)	Compare fuel mass consumed versus observed change in gauge readings (Min. and max. reading)		Fuel consumed (Fuel consumed and fuel gauge reading range are both stored in KAM and reset after a refueling event or DTC storage)	> 10 %	Continuous	Footnote a)	Footnote e)
		"Fuel consumed" is continuously calculated based on PCM fuel pulsewidth summation as a percent of fuel tank capacity	Fuel consumed (%) - Range of fuel gauge readings (%)	> 0.05 * 100 % threshold at fuel tank fill from 15% to 85%					
			Fuel consumed (%) - Range of fuel gauge readings (%)	> 0.05 + 0.05 * 100 % threshold if tank overfilled (> 85%)					
			Fuel consumed (%) - Range of fuel gauge readings (%)	> 0.05 + 0.2 * 100 % threshold if tank on reserve (< 15%)					
Fuel Level Input Noisy	P0461 (Rationality)	Sensor rationality check (Noisy sensor)	Change in fuel level	> 0.3	Fuel level on the data bus	N/A	Continuous	Footnote a)	Footnote e)
			Number of intermittent events	> 100					
I/M Readiness			Number of driving cycles to clear I/M readiness flag at extreme ambient conditions	> 1 driving cycle(s)	Monitors which must complete prior to clearing I/M readiness bit for Evap Monitor	Catalyst, Misfire, Secondary Air, HO2S, Fuel System, CCM, EGR	N/A		N/A
					Time within Evap Monitor entry condition except IAT and BARO	> 180 sec			

Component/ System	Fault Code	Monitor Strategy Description	Malfunction Criteria	Threshold Parameter	Secondary Parameters	Entry Parameters	Time Required	DTC Storage	MIL Illumin-ation
Electronic Throttle Control									
TPPC chip failure in PCM	P0606	TPPC chip to CPU communication fault	Number of attempts	> 1			Continuous	Footnote a)	Footnote c)
TP Sensor Inconsistent With MAF Sensor	P0068	Rationality check vs. MAF input	Engine rpm	> 1000 rpm	Engine coolant temp	> 15 deg C (> 60 deg F)	Continuous	Footnote a)	Footnote c)
			Sensor signal voltage	< 0.73 volts or > 3.0 volts					
			Engine load	> 0.7 * 100% or < 0.2 * 100%					
			Time with sensor out of range	> 5.0 sec					
TP Sensor 'A' Input Out Of Range	P0122 (Low)	Range check	Time with low throttle voltage at TPPC or PCM	>= 0.254 seconds	None	N/A	Continuous	Footnote a)	Footnote c)
			Sensor signal voltage	< 0.2 volts					
	P0123 (High)		Time with high throttle voltage at TPPC or PCM	>= 0.254 seconds					
			Sensor signal voltage	> 4.87 volts					
TP Sensor 'B' Input Out Of Range	P0222 (Low)	Range check	Time with low throttle voltage at TPPC or PCM	>= 0.254 seconds	None	N/A	Continuous	Footnote a)	Footnote c)
			Sensor signal voltage	< 0.08 volts					
	P0223 (High)		Time with high throttle voltage at TPPC or PCM	>= 0.254 seconds					
			Sensor signal voltage	> 4.80 volts					
TP Sensor A/B Correlation	P2135	Rationality check	Time with correlation failure from the TPPC or PCM or Equizzer	>= 240 sec	None	N/A	Continuous	Footnote a)	Footnote c)
			Magnitude of the difference of the relative readings of the sensor signal voltage	> 0.25 volts (10.25degrees)					
Throttle Actuator Control System	P2104	ETC FMEM – forced idle	Two or three pedal sensors failed, throttle plate stuck	>= 100 to 400 msec	None	N/A	Continuous	Footnote a)	Footnote c)
	P2105	ETC FMEM – forced engine shutdown	Equizzer detected fault	>= 16 to 960 msec	None	N/A	Continuous	Footnote a)	Footnote c)
	P2106	ETC FMEM – pedal-follower mode	Sensor fault: MAF, one TP, CKP, TSS, OSS, stuck throttle, throttle actuator circuit fault	>= 16 to 960 msec	None	N/A	Continuous	Footnote a)	Footnote c)
	P2110	ETC FMEM – default throttle angle	Two TPs failed; TPPC detected fault	>= 600 to 800 msec	None	N/A	Continuous	Footnote a)	Footnote c)

Component/ System	Fault Code	Monitor Strategy Description	Malfunction Criteria	Threshold Parameter	Secondary Parameters	Entry Parameters	Time Required	DTC Storage	MIL Illumin-ation
Throttle Plate Position Controller (TPPC)	P2111 (Stuck Open)	Functional test	Desired throttle angle vs. actual throttle angle measured in a rolling average routine during throttle tip-in	> 6 degrees	None	N/A	Continuous	Footnote a)	Footnote c)
	P2112 (Stuck Closed)	Functional test	Desired throttle angle vs. actual throttle angle measured in a rolling average routine during throttle tip-out	> 6 degrees	None	N/A	Continuous	Footnote a)	Footnote c)
	P2107	TPPC processor check	Internal processor test, los communication with main CPU	>= 60 msec	None	N/A	Continuous	Footnote a)	Footnote c)
Throttle Actuator Control Motor	P2100	Circuit check	Throttle actuator circuit open	>= 1750 msec	None	N/A	Continuous	Footnote a)	Footnote c)
	P2101	Range check	Throttle actuator range/performance test, throttle plate angle does not followed commanded angle	>= 500 msec	None	N/A	Continuous	Footnote a)	Footnote c)

Signal circuit voltage threshold calculation for DTC P0443

At 98% DC: [(42 x Battery voltage) - 150] x 5.0/1024 volts
At 0% DC: [(32 x Battery voltage) - 200] x 5.0/1024 volts

Misfire Monitor Time Delay Since Engine Start Up = 0 seconds + FNMISACT value

FNMISPCT_97

Load \ RPM	500	850	1000	1500	1750	2000	3000	5000	6000	7000
0.1	0.16	0.16	0.16	0.16	0.16	0.16	0.11	0.07	0.07	0.07
0.15	0.16	0.16	0.16	0.16	0.16	0.16	0.11	0.06	0.06	0.06
0.2	0.16	0.16	0.16	0.16	0.16	0.16	0.11	0.06	0.06	0.06
0.25	0.16	0.16	0.16	0.16	0.16	0.13	0.08	0.07	0.07	0.06
0.3	0.16	0.16	0.16	0.16	0.15	0.10	0.07	0.07	0.08	0.08
0.35	0.16	0.16	0.16	0.16	0.11	0.09	0.07	0.08	0.08	0.07
0.4	0.15	0.15	0.15	0.11	0.07	0.07	0.08	0.07	0.06	0.05
1	0.10	0.10	0.10	0.09	0.08	0.07	0.07	0.06	0.05	0.05

FNMISACT

ACT (C)	-160	-40	-29	82	88	123
output_axis [s]	180	180	0	0	180	180

FNMISOK_97

Load \ RPM	500	850	1000	1500	1750	2000	3000	7000	6000	7000
0.05	0	0	0	0	0	0	0	0	0	0
0.1	0.72	0.72	0.72	0.8	0.8	0.8	0.2	0	0	0
0.15	1	1	1	1	1	1	0.7	0	0	0
0.2	1	1	1	1	1	1	1	0.3	0	0
0.25	1	1	1	1	1	1	1	0.8	0.3	0
0.3	1	1	1	1	1	1	1	1	0.8	0.4
0.35	1	1	1	1	1	1	1	1	1	0.9
0.4	1	1	1	1	1	1	1	1	1	1

FN654S (sec)

NONE [degC]	-29	-7	21	38	60	123
output_axis [s]	1400	900	475	325	300	300

FN_TCSTRT (sec)

TCSTRT [degc]	-40	-18	-7	4	15	38	60	104	123
output_axis [s]	100	70	24	20	18	15	15	15	20

FN384A (RPM)

ECT [DEG. C]	-160	-160	-29	-18	10	123
output_axis [RPM]	450	450	450	350	350	350

FN_FL_DT_MX (%)

PGM_FUEL_LVL [%]	0	1	1	1	1	1	1
output_axis [%]	0.2	0.2	0.2	0.2	0.2	0.2	0.2

IAT_RAT_THRES (deg F)

BLANK_STRING	0	1	2	3	4	5	6	7	8	9
output_axis [degF]	30	30	30	30	30	-30	-30	-30	-30	-30

Notes:

1) "Continuous" under the "Time Required" column indicates that the specified test cycles at a frequency greater than once every 0.5 seconds whenever the test entry conditions are met.
2) "Once per driving cycle" under the "Time Required" column indicates that the specified test will complete during the first 2 bags of an FTP as well as under the test entry conditions specified, on the road.
3) All test entry condition parameters are measured instantaneously unless otherwise indicated.

Footnotes:

Secondary Parameters:

p) If a 6 hour soak is met, some strategies will not require another continuous 6 hour soak if the customer performs a brief key-off. This has been put into effect to improve evap monitor completion frequency.
q) Some strategies will have the ability to base evap monitor soak length on the CARB cold soak criteria which consists of an ECT range and ACT/ECT differential.
r) A minimum soak time has been added to CARB's cold soak criteria (footnote q) to allow calibrators to set a minimum soak time if longer soak times are needed than given by the ACT/ECT-based CARB soak criteria.

DTC Storage:

a) A pending code will be stored after a malfunction has been detected on one driving cycle; a DTC will be stored after the same malfunction has been detected on the second consecutive driving cycle. The DTC will be erased after 40 warm-up cycles with no ma
b) A DTC will be stored immediately upon detection of a malfunction. The DTC will be erased after 40 warm-up cycles with no malfunction present, after the MIL has been extinguished for the DTC.
k) A DTC will be stored after a malfunction has been detected on one drive cycle.The DTC will be erased after 40 warm-up cycles with no malfunction present, after the MIL has been extinguished for that DTC.
l) A DTC will be stored after a malfunction has been detected on six consecutive drive cycles. The DTC will be erased after 40 warm-up cycles with no malfunction present, after the MIL has been extinguished for that DTC.
o) For intake air temperatures below 20 deg F, no DTC will set for indicated AIR malfunction.
s) A pending code will be stored after a malfunction has been detected on upto the 6th trip depending on the size of the fault deviation; a DTC will be stored after the same malfunction has been detected on a second driving cycle. The DTC will be erased after 40 warm-up cycles with no malfunction. This monitor employs EVMA.

MIL Illumination:

c) The MIL will be illuminated after a malfunction has been detected on two consecutive driving cycles.
The MIL will be extinguished after three consecutive driving cycles where the monitor was run without a malfunction.
d) The MIL will blink immediately upon detection of a misfire rate that exceeds the catalyst damage threshold, regardless of whether fuel is shut off or not.
If the misfire rate drops below the catalyst damage threshold, the MIL will stay on solidly.
The MIL will be extinguished after three consecutive drive cycles where similar conditions have been seen without the malfunction.
e) The MIL will be illuminated after a malfunction has been detected on two consecutive driving cycles.

The MIL will be extinguished after three consecutive drive cycles where similar conditions have been seen without the malfunction.

f) For intake air temperatures below 32 deg F, the MIL will not illuminate for the indicated EGR DTCs.
For intake air temperatures below 20 deg F, the MIL will not illuminate for the indicated AIR DTCs.
This prevents false MIL illumination due to ice in the EGR hoses or AIR switching valve(s).

g) This monitor employs EWMA.
The MIL will be illuminated after a malfunction has been detected on two consecutive driving cycles after DTCs have been erased or Keep Alive Memory has been erased (battery disconnect).
The MIL will be illuminated after a malfunction has been detected on up to six consecutive driving cycles during subsequent, "normal" customer driving.
The MIL will be extinguished after up to six consecutive driving cycles without a malfunction.

h) Some automatic transmission monitors are demonstrated following the USCAR Abbreviated On-Board Diagnostic Test Procedure for Vehicles Equipped with Automatic Transmissions.
This prevents false MIL illumination on this non-turbine speed sensor transmission application.

i) The MIL will be illuminated after a malfunction has been detected on the first driving cycle.
The MIL will be extinguished after three consecutive driving cycles where the monitor was run without a malfunction.

j) A DTC will be set after a malfunction has been detected on two consecutive driving cycles.

m) MIL will be illuminated after a malfunction has been detected on two consecutive driving cycles. MIL will be extinguished after the monitor has run without a malfunction (same or subsequent drive cycle).

n) A check cap light will be illuminated after a malfunction has been detected on one driving cycle. The check cap light will be extinguished after the monitor has run without a malfunction (same or subsequent drive cycle).

t) The MIL will be illuminated after a pending code has been confirmed. The MIL will be extinguished after three consecutive driving cycles where the monitor was run without a malfunction. This monitor employs EWMA.

ASTON MARTIN

2009MY DB9 & DBS Auto Gearbox Summary

System	Component	P Codes (AML)	Malfunction Strategy Description	Malfunction Criteria (Fault)	Fault condition (internal labels)	Threshold Value (Fault condition)	Entry conditions	Entry conditions values	Filter Time to log DTC (AML)	EMS controlled MIL Illumination (AML)
CAN Link	Engine	P0725	Engine speed signal	Engine Speed signal QF ≠ 3			No CAN BUS error. No CAN level error and No EMS timeout.		600mS	1 DTC
CAN Link	CAN level	P0614	Incorrect configuration ID received	CANid does not match that stored in the TCM			Engine not in crank. No CAN BUS error Ignition on & Timer after ignition passed. Battery Voltage > threshold	7v	250mS	1 DTC
CAN Link	CAN bus off	P1796	Monitors the CAN for Bus or RAM faults. TCM CAN driver detects CAN bus fault.	Bit, stuff, CRC or form error, (CAN-wiring or CAN-module defective, EMC radiation.)			Battery voltage > Threshold	7v	100mS	1 DTC
Sensor	Temperature Sensor	P0711	ATF temperature sensor short circuit	ATF sensor faulty - Sensor input signals (Vcgt_plus and Vcgt_minus) out of acceptable range	utmsm2_Gt<vcgt_plus<utmsm1_Gt and utmsm2_Gt<vcgt_minus<utmsm1_Gt	utmsm2_Gt = 2.3v utmsm1_Gt = 2.7v and utmsm2_Gt =2.3v utmsm1_Gt =2.7v			1.5s	2 DTC
Sensor	Temperature Sensor	P0711	ATF Sensor - stuck value	Stuck Temperature value - ATF temperature is out of an acceptable range of tolerance when compared to the TCM chip temperature sensor value. Range of tolerance is depending on the heating up velocity of transmission .	[*Fast heating = wide range of tolerance* : Chip sensor temp +/- cgt_tolwt <> ATF temperature OR *Slow heating = narrow range of tolerance* : Chip sensor temp +/- cgt_toleng <> ATF temperature.] AND Temperature cgtf_Neu out of allowed range of tolerance for > zgts_CgtPlausiErr * 100ms	cgt_tolwt = 40degC cgt_toleng = 25degC AML: zgts_CgtPlausiErr= 6000 (= 10min) Jag+LR: zgts_CgtPlausiErr= 9000 (= 15min)	Chip sensor OK Engine speed > threshold Turbine speed > threshold	450rpm 450rpm	1.5s	2 DTC
Sensor	Temperature Sensor	P0713	ATF Sensor short to battery	ATF sensor faulty - Sensor input signals (Vcgt_plus and Vcgt_minus) out of acceptable range	vcgt_plus > utmso_Gt and vcgt_minus > utmsu_Gt	utmso_Gt = 4.5v utmsu_Gt =0.5v			1.5s	2 DTC
Sensor	Temperature Sensor	P0712	ATF Sensor short to GND	ATF sensor faulty - Sensor input signals (Vcgt_plus and Vcgt_minus) out of acceptable range	vcgt_plus < utmso_Gt and vcgt_minus < utmsu_Gt	utmso_Gt = 4.5v utmsu_Gt =0.5v			1.5s	2 DTC
Sensor	Temperature Sensor	P0714	ATF sensor open cct (circuit break)	ATF sensor faulty - Sensor input signals (Vcgt_plus and Vcgt_minus) out of acceptable range	vcgt_plus > utmso_Gt and vcgt_minus < utmsu_Gt	utmso_Gt = 4.5v utmsu_Gt =0.5v			1.5s	2 DTC
Sensor	Temperature Sensor	P0713	ATF temperature sensor value jump or ATF value not warming up quickly enough	Unacceptable temperature jump (lOld value - new value <> threshold) within a period of 100ms or ATF temperature (cgt_neu) not warming up quickly enough within a specified time period	|cgt_Neu - cgta1_CUew| > cgtd1_Cuew or (cgt_Neu(t=tgtd_CUew) - cgt_Neu(t=0)) < cgtd2_Cuew	cgtd1_Cuew = 20DegC cgtd2_Cuew = 4DegC tgtd_CUEW = 240s	Output speed > Threshold Engine speed > Threshold No Output speed & Engine speed error Temperature cgt_Neu < Threshold at t=0	Jag + AML / LR 800 / 11000rpm 400 / 11000rpm 20DegC	1.5s	2 DTC
TCM Internal	Impossible substitute functions (monitoring contradictory substitute functions)	P0701	Two Priority 2 faults present at the same time (Currently not possible)						20ms	2 DTC
TCM Internal	Impossible substitute functions (monitoring contradictory substitute functions)	P0701	OSS fault and wheel speed faults present concurrently (Priority 3)	Wheel speed and output speed sensor faults present concurrently.					20ms	2 DTC
TCM Internal	Impossible substitute functions (monitoring contradictory substitute functions)	P0701	Bosch solenoid current monitoring fault						20ms	2 DTC
TCM Internal	EEPROM Flash emulation	P062F	EEPROM emulation lifetime exceeded	Communication disturbed, lifetime exceeded	EEError !=0	=1 400000 Write/Erase-cycles possible. At temperatures over 135°C no EEProm update is made.	always active	no	0mS	1 DTC
TCM Internal	FLASH checksum	P1603	Checksum incorrect	Calculated checksum does not match stored checksum					0mS	2 DTC
CAN Link	Engine	P1719	Engine Torque signal inaccurate	Engine torque signal QF 0 = 3	fcn_MmmErr	=1	No CAN BUS error. No CAN level error and No EMS timeout.		600ms	2 DTC
CAN Link	Engine Speed	P1920	Engine speed too high	Engine Speed > Engine speed threshold> for a time threshold	n_mot > NS_MOTUEB & Timer_nmotueb > T_FNMOTUEB	NS_MOTUEB = 7100rpm T_FNMOTUEB=2550mS			T_FNMOTUEB=2550mS	2 DTC
Speed Sensors	Turbine speed sensor	P0715	Turbine speed sensor s/c to battery supply	Turbine speed sensor s/c to battery supply	sgt_DiNtu = 2 (short circuit to plus)	2 (Status of turbine speed sensor signal.	Sensor supply voltage OK	0	600mS	2 DTC
Speed Sensors	Turbine speed sensor	P0717	Turbine speed sensor s/c to gnd or O/C	Turbine speed sensor s/c to gnd or O/C	sgt_DiNtu = 0 (short to gnd or OC)	0 (Status of turbine speed sensor signal.	Sensor supply voltage OK	0	600mS	2 DTC
Speed Sensors	Turbine speed sensor	P0716	Turbine Speed Value too high	Value too high	NTU >= NTUmax	ntumax = 8000rpm	Sensor supply voltage OK No electrical error	0	600mS	2 DTC
Speed Sensors	Turbine speed sensor	P0716	Turbine Speed Value too low	Value too low	NTU < ntu_Min	ntu_min = 20 rpm	Sensor supply voltage OK No electrical error engine speed NMO is higher than a threshold: status of NMO-signal is alright output speed NAB is higher than a threshold: status of NAB-signal is alright or substitute	nmos_TuUew = 600rpm nabs_TuUew = 250rpm	600mS	2 DTC

System	Component	P Codes (AML)	Malfunction Strategy Description	Malfunction Criteria (Fault)	Fault condition (Internal labels)	Threshold Value (Fault condition)	Entry conditions	Entry conditions values	Filter Time to log DTC (AML)	EMS controlled MIL Illumination (AML)
Position Detection	Position Signal Error (AML)	P0705	Position signal error CAN & Serial Line - Implausible code or Timeout	Invalid position information			Sensor supply OK Sensor supply > threshold	>7v	100mS	
Sensors	Temperature Sensor	P0634	TCM temperature too high resulting in an overtemp shut down of the TCU.	Chip temperature > Threshold	ccu_chip > Cgto_EgsHot rgt_HotErr = KGT_HOTMODE_ERR or rgt_HotErr = KGT_HOTMODE_BAT or fgt_InitHot != 0 (TCM is hot in the initialisation)	2D map Battery volts Vs temp - Appendix A, Ref 2	Test condition is always fulfilled.		0ms	1 DTC
System Voltage	Battery Voltage	P1793	Power Supply too low	Battery voltage	ugt_Batt < ugtu_Batt or ugtu_BattDef	< 7V < 7V	Engine speed > Turbine speed > Transmission position Mechanical limp home active	1400rpm 1400rpm Park or Neutral False	30ms	2 DTC
Mechatronic Unit	Shift Solenoid	P0771	Solenoid / Valve stuck	Stuck off Solenoid 1 or 2	timer_MV12mechdef <= KL_TUEBCGMV12MECHDEF and (GET_P_SENSOR = 0 or GET_P_SENSOR = 2)	500ms	pumpendruck_vorhanden Park sensor = P (GET_P_SENSOR)	0->1	0ms	2 DTC
System Voltage	Pressure regulator and solenoid power supply	P0657	Pressure regulator supply too low (power supply cannot be switched on)	Sensor voltage too low because power supply cannot be switched ON.	FET off	= true	Battery Voltage >	7v	30mS	2 DTC
System Voltage	Pressure regulator and solenoid power supply	P0659	Voltage applied without activation of the controlling FET	FET cannot be switched on (Short circuit to battery)	Vbatt > udrmv_batt	7v			30mS	2 DTC
System Voltage	Pressure regulator and solenoid power supply	P0658	Sensor supply voltage < threshold or Voltage drop across FET is too big	PR supply voltage too low	ugt_drmv < udrmv_ksm or lugt_batt-ugt_drmvl > ugtd_fet	0.5v or 1v	Battery Voltage > udrmv_batt	7v	30mS	2 DTC
System Voltage	Pressure regulator and solenoid power supply	P0657	Voltage too low due to reset.	PR supply voltage too low	ugt_drmv < Ugtu_bat fgt_Dreset =	Ugtu_bat = 2D map (V vs C) Appendix A, ref 3 True	FET control OK Battery Voltage > udrmv_batt	1 7v	30mS	2 DTC
TCM Internal	TCM Watchdog	P0613	Error counter does not reach required value during initialisation	Error counter does not reach required value	sdi_Ufet=1 or sdi_Ufet=4 or sdi_Ufet=5 or sdi_Ufet=8		Battery Voltage > ugt_UfetIni TCU in initialisation phase	7v	0ms	2 DTC
TCM Internal	TCM Watchdog	P0613	Error counter exceeds limit	Error counter exceeds limit	Zs_errorCountForUC > 4.	4	Cyclic (operation): Debug-mode not active	0	0ms	2 DTC
TCM Internal	TCM Watchdog	P0613	FET cannot be switched off	FET cannot be switched off (DReset line is high)	DReset line is high (fgtr_Dreset = False)	FALSE	Battery Voltage > ugt_UfetIni TCU in initialisation phase	7v	0ms	2 DTC
TCM Internal	TCM Watchdog	P0613	FET cannot be switched On	FET cannot be switched On (DReset line is low)	Reset Line is low. (Fgtr_Dreset = True)	TRUE	Battery Voltage > ugt_UfetIni TCU in initialisation phase	7v	0ms	2 DTC
TCM Internal	TCM Watchdog	P0613	Safety circuit reset line between CG115 and CG120 is active.	Safety circuit reset line between CG115 and CG120 is active.	Reset line = high (fgtr_Dreset!=0)	!=0	Cyclic (operation): Debug-mode not active	0	0ms	2 DTC
TCM Internal	TCM Watchdog	P0613	Watchdog function taking too long.	Watchdog function taking too long.	tgts_UewFetGes > Threshold	300ms	Battery Voltage > ugt_UfetIni TCU in initialisation phase	7v	0ms	2 DTC
TCM Internal	TCM Watchdog	P0613	FET cannot be switched off at ErrorCountForUC >= 5	FET cannot be switched off at ErrorCountForUC >= 5	FET cannot be switched off at ErrorCountForUC >= 5	5	Battery Voltage > ugt_UfetIni TCU in initialisation phase	7v	0ms	2 DTC
TCM Internal	TCM Watchdog	P0613	FET cannot be switched on at Zsk_ErrorCountForUC<=4	FET cannot be switched on at Zsk_ErrorCountForUC<=4	FET cannot be switched on at Zsk_ErrorCountForUC<=4	4	Battery Voltage > ugt_UfetIni TCU in initialisation phase	7v	0ms	2 DTC
TCM Internal	TCM Watchdog	P0613	CPU watchdog error counter threshold exceeded. (WD to CPU)	CPU watchdog error counter threshold exceeded. (Zsk_ErrorCountForWD>3)	CPU watchdog error counter threshold exceeded. (Zsk_ErrorCountForWD>3)	3	Cyclic (operation): Debug-mode not active	0	0ms	2 DTC
Torque Converter	Torque Converter	P0741	Torque converter slip too high	Torque converter slip > threshold.	KL_NDSKPLDEFEKT	25rpm	Slip too high timer expired Closed or Closed Loop Control		10.0s	2 DTC
Pressure Regulators	PR1	P0973	Pressure regulator 1 short circuit to ground or o/c.	current > threshold or current = 0	idr_Mess1 > idr1 + idrs_high or idr1=0mA	idrs_high = 2D map (Current vs Temp) 0mA	Solenoid Supply > threshold Engine running 0% or 100% measured current PWM	udrso_prf = 2D map (V vs Temp) See App A, Ref 1	30mS	2 DTC
Pressure Regulators	PR1	P0972	Pressure regulator 1 current too high	current > threshold	idr_Mess1 > idr1 + idrs_high	idrs_high = 2D map (Current vs Temp)	Solenoid Supply > threshold Measured control PWM not = 0 or 100%	udrso_prf = 2D map (V vs Temp) See App A, Ref 1	30mS	2 DTC
Pressure Regulators	PR1	P0974	Pressure regulator 1 short to battery	current < threshold	idr_Mess1 < idr1 + idrs_low	idrs_low = 2D map (Current vs Temp)	Solenoid Supply > threshold Engine not running Measured control signal PWM = 0%	udrso_prf = 2D map (V vs Temp) See App A, Ref 1	30mS	2 DTC
Pressure Regulators	PR2	P0976	Pressure regulator 2 short circuit to ground or o/c.	current > threshold or current = 0	idr_Mess2 > idr2 + idrs_high or idr1=0mA	idrs_high = 2D map (Current vs Temp) 0mA	Solenoid Supply > threshold Engine running 0% or 100% measured current PWM	udrso_prf = 2D map (V vs Temp) See App A, Ref 1	50mS	2 DTC
Pressure Regulators	PR2	P0975	Pressure regulator 2 current too low	current < threshold	idr_Mess2 < idr2 + idrs_low	idrs_low = 2D map (Current vs Temp)	Solenoid Supply > threshold Meassured control PWM not = 0 or 100%	udrso_prf = 2D map (V vs Temp) See App A, Ref 1	50mS	2 DTC
Pressure Regulators	PR2	P0977	Pressure regulator 2 short to battery	current < threshold	idr_Mess2 < idr2 + idrs_low	idrs_low = 2D map (Current vs Temp)	Solenoid Supply > threshold Engine not running Measured control signal PWM = 0%	udrso_prf = 2D map (V vs Temp) See App A, Ref 1	50mS	2 DTC
Pressure Regulators	PR3	P0979	Pressure regulator 3 short circuit to ground or o/c.	current > threshold or current = 0	idr_Mess3 > idr3 + idrs_high or idr1=0mA	idrs_high = 2D map (Current vs Temp) 0mA	Solenoid Supply > threshold Engine running 0% or 100% measured current PWM	udrso_prf = 2D map (V vs Temp) See App A, Ref 1	50mS	2 DTC
Pressure Regulators	PR3	P0978	Pressure regulator 3 current too high	current > threshold	idr_Mess3 > idr3 + idrs_high	idrs_high = 2D map (Current vs Temp)	Solenoid Supply > threshold Measured control PWM not = 0 or 100%	udrso_prf = 2D map (V vs Temp) See App A, Ref 1	50mS	2 DTC
Pressure Regulators	PR3	P0980	Pressure regulator 3 short to battery	current < threshold	idr_Mess3 < idr3 + idrs_low	idrs_low = 2D map (Current vs Temp)	Solenoid Supply > threshold Engine not running Measured control signal PWM = 0%	udrso_prf = 2D map (V vs Temp) See App A, Ref 1	50mS	2 DTC
Pressure Regulators	PR4	P0982	Pressure regulator 4 short circuit to ground or o/c.	current > threshold or current = 0	idr_Mess4 > idr4 + idrs_high or idr1=0mA	idrs_high = 2D map (Current vs Temp) 0mA	Solenoid Supply > threshold Engine running 0% or 100% measured current PWM	udrso_prf = 2D map (V vs Temp) See App A, Ref 1	50mS	2 DTC

System	Component	P Codes (AML)	Malfunction Strategy Description	Malfunction Criteria (Fault)	Fault condition (Internal labels)	Threshold Value (Fault condition)	Entry conditions	Entry conditions values	Filter Time to log DTC (AML)	EMS controlled MIL Illumination (AML)
Pressure Regulators	PR4	P0981	Pressure regulator 4 current too low	current < threshold	idr_Mess4 < idr4 + idrs_low	idrs_low = 2D map (Current vs Temp)	Solenoid Supply > threshold Measured control PWM not = 0 or 100%	udrso_prf = 2D map (V vs Temp) See App A, Ref 1	50mS	2 DTC
Pressure Regulators	PR4	P0983	Pressure regulator 4 short to battery	current < threshold	idr_Mess4 < idr4 + idrs_low	idrs_low = 2D map (Current vs Temp)	Solenoid Supply > threshold Engine not running Measured control signal PWM = 0%	udrso_prf = 2D map (V vs Temp) See App A, Ref 1	50mS	2 DTC
Pressure Regulators	PR5	P0962	Pressure regulator 5 short to ground	current > threshold	idr_Mess5 > idr5 + idrs_high	idrs_high = 2D map (Current vs Temp)	Solenoid Supply > threshold Engine not running Measured control signal PWM = 0%	udrso_prf = 2D map (V vs Temp) See App A, Ref 1	50mS	2 DTC
Pressure Regulators	PR6	P2764	Pressure regulator 6 short to ground	current > threshold	idr_Mess6 > idr6 + idrs_high	idrs_high = 2D map (Current vs Temp)	Solenoid Supply > threshold Engine not running Measured control signal PWM = 0%	udrso_prf = 2D map (V vs Temp) See App A, Ref 1	50mS	2 DTC
Pressure Regulators	PR6	P2763	Pressure regulator 6 short to battery	current < threshold	idr_Mess6 < idr6 + idrs_low	idrs_low = 2D map (Current vs Temp)	Solenoid Supply > threshold Engine not running Measured control signal PWM = 0%	udrso_prf = 2D map (V vs Temp) See App A, Ref 1	50mS	2 DTC
Pressure Regulators	PR6	P0740	Pressure regulator 6 open cct	current < threshold	idr_Mess6 < idr6 + idrs_low	idrs_low = 2D map (Current vs Temp)	Solenoid Supply> threshold Engine not running Measured control signal PWM = 0% Solenoid driver error flag set Timer expired	udrso_prf = 2D map (V vs Temp)App A, Ref 1 1 30mS	50mS	2 DTC
Mechatronic Unit	Shift Solenoid	P0985	SV1 S/C Gnd	Target max.7.6%	Hardware register fault or umv1_RLo	<7.6%	FET turned on lowside drivers unlocked	True True	20mS	2 DTC
Mechatronic Unit	Shift Solenoid	P0986	SV1 S/C Battery	PWM target max. 92.4%	umv1_Rhi	>92.4%	FET turned on lowside drivers unlocked	True True	20mS	2 DTC
Mechatronic Unit	Shift Solenoid	P0770	SV1 O/C	PWM target max 7.6	umv1_Rlo	<7.6%	FET turned on lowside drivers unlocked	True True	20mS	2 DTC
Mechatronic Unit	Shift Solenoid	P0998	SV2 S/C Gnd	Target max.7.6%	Hardware register fault or umv2_RLo	<7.6%	FET turned on lowside drivers unlocked	True True	20mS	2 DTC
Mechatronic Unit	Shift Solenoid	P0998	SV2 O/C or S/C Gnd	PWM target max. 92.4%	Hardware register fault	=100%	FET turned on lowside drivers unlocked	True True	20mS	2 DTC
Mechatronic Unit	Shift Solenoid	P0999	SV2 S/C Battery	PWM target max. 92.4%	umv2_Rhi	>92.4%	FET turned on lowside drivers unlocked	True True	20mS	2 DTC
Mechatronic Unit	Shift Solenoid	P2706	SV2 O/C	PWM target max 7.6	umv2_Rlo	<7.6%	FET turned on lowside drivers unlocked	True True	20mS	2 DTC
Mechatronic Unit	Park Solenoid	P2814	SV3 S/C Gnd	Target max.7.6%	Hardware register fault or umv3_RLo	<7.6%	FET turned on lowside drivers unlocked	True True	100mS	2 DTC
Mechatronic Unit	Park Solenoid	P2814	SV3 O/C or S/C Gnd	PWM target max. 92.4%	Hardware register fault	=100%	FET turned on lowside drivers unlocked	True True	100mS	2 DTC
Gear monitoring	1st Gear ratio	P0731	1st Gear slip too high	1st gear slip > threshold	nd_syn > KL_NDUWG1	Outputspeed 0.0 1000 2000 Ndsyn> 400 400 640	ATF temp > threshold output speed > threshold Engine Speed > threshold Turbine Speed > threshold	0DegC 0rpm 550rpm 416rpm	3 Symptoms	2 DTC
Gear monitoring	2nd gear ratio	P0732	2nd Gear slip too high	2nd gear slip > threshold	nd_syn > KL_NDUWG2	Outputspeed 0.0 1000 3300 Ndsyn> 400 400 640	ATF temp > threshold output speed > threshold Engine Speed > threshold Turbine Speed > threshold	0DegC 0rpm 550rpm 416rpm	3 Symptoms	2 DTC
Gear monitoring	3rd gear ratio	P0733	3rd Gear slip too high	3rd gear slip > threshold	nd_syn > KL_NDUWG3	Output speed 0.0 1000 5000 Ndsyn> 400 400 640	ATF temp > threshold output speed > threshold Engine Speed > threshold Turbine Speed > threshold	0DegC 0rpm 550rpm 416rpm	3 Symptoms	2 DTC
Gear monitoring	4th gear ratio	P0734	4th Gear slip too high	4th gear slip > threshold	nd_syn > KL_NDUWG4	Output speed 0.0 1000 6500 Ndsyn> 400 400 640	ATF temp > threshold output speed > threshold Engine Speed > threshold Turbine Speed > threshold	0DegC 0rpm 550rpm 416rpm	3 Symptoms	2 DTC
Gear monitoring	5th gear ratio	P0735	5th Gear slip too high	5th gear slip > threshold	nd_syn > KL_NDUWG5	Output speed 0.0 1000 8160 Ndsyn> 400 400 640	ATF temp > threshold output speed > threshold Engine Speed > threshold Turbine Speed > threshold	0DegC 0rpm 550rpm 416rpm	3 Symptoms	2 DTC
Gear monitoring	6th gear ratio	P0729	6th Gear slip too high	6th gear slip > threshold	nd_syn > KL_NDUWG6	Output speed 0.0 1000 8160 Ndsyn> 400 400 640	ATF temp > threshold output speed > threshold Engine Speed > threshold Turbine Speed > threshold	0DegC 0rpm 550rpm 416rpm	3 Symptoms	2 DTC
Shift Monitoring	Gear load 1-2 shift	P0781	Gear load error during 1-2 shift. Clutch C does not close.	(input speed - output speed x ratio) > threshold	ND_TSUEA12Z	>400rpm	outputspeed > threshold transmission oil temperature > threshold engine speed range position	256rpm 10DegC 1200rpm no P, R, N	5 Symptoms	2 DTC
Shift Monitoring	Gear load 1-2 shift	P0781	Gear load error during 1-2 shift. Clutch D does not open.	(input speed - output speed x ratio) (t) - (input speed - output speed x ratio) (0) < threshold	ND_TUNSUEB	<30rpm	output speed > threshold transmission oil temperature > threshold engine speed range position	256rpm 10DegC 1200rpm no P, R, N	5 Symptoms	2 DTC
Shift Monitoring	Gear load 2-3 shift	P0782	Gear load error during 2-3 shift. Clutch C does not close.	(input speed - output speed x ratio) > threshold	ND_TSUEA23Z	>300rpm	output speed > threshold transmission oil temperature > threshold engine speed range position	256rpm 10DegC 1200rpm no P, R, N	5 Symptoms	2 DTC

System	Component	P Codes (AML)	Malfunction Strategy Description	Malfunction Criteria (Fault)	Fault condition (Internal labels)	Threshold Value (Fault condition)	Entry conditions	Entry conditions values	Filter Time to log DTC (AML)	EMS controlled MIL Illumination (AML)
Shift Monitoring	Gear load 2-3 shift	P0782	Gear load error during 2-3 shift. Clutch B does not open.	(input speed - output speed x ratio) (t) - (input speed - output speed x ratio) (0) < threshold	ND_TUNSUEB	<30rpm	output speed > threshold transmission oil temperature > threshold engine speed range position	256rpm 10DegC 1200rpm no P, R, N	5 Symptoms	2 DTC
Shift Monitoring	Gear load 3-4 shift	P0783	Gear load error during 3-4 shift. Clutch E does not close.	(input speed - output speed x ratio) > threshold	ND_TSUEA34Z	>500rpm	output speed > threshold transmission oil temperature > threshold engine speed range position	256rpm 10DegC 1200rpm no P, R, N	5 Symptoms	2 DTC
Shift Monitoring	Gear load 3-4 shift	P0783	Gear load error during 3-4 shift. Clutch B does not open.	(input speed - output speed x ratio) (t) - (input speed - output speed x ratio) (0) < threshold	ND_TUNSUEB	<30rpm	output speed > threshold transmission oil temperature > threshold engine speed range position	256rpm 10DegC 1200rpm no P, R, N	5 Symptoms	2 DTC
Shift Monitoring	Gear load 4-5 shift	P0784	Gear load error during 4-5 shift. Clutch B does not close.	(input speed - output speed x ratio) > threshold	ND_TSUEA45Z	>300rpm	output speed > threshold transmission oil temperature > threshold engine speed range position	256rpm 10DegC 1200rpm no P, R, N	5 Symptoms	2 DTC
Shift Monitoring	Gear load 4-5 shift	P0784	Gear load error during 4-5 shift. Clutch E does not open.	(input speed - output speed x ratio) (t) - (input speed - output speed x ratio) (0) < threshold	ND_TUNSUEB	<30rpm	output speed > threshold transmission oil temperature > threshold engine speed range position	256rpm 10DegC 1200rpm no P, R, N	5 Symptoms	2 DTC
Shift Monitoring	Gear load 5-6 shift	P0829	Gear load error during 5-6 shift. Clutch C does not close.	(input speed - output speed x ratio) > threshold	ND_TSUEA56Z	>300rpm	output speed > threshold transmission oil temperature > threshold engine speed range position	256rpm 10DegC 1200rpm no P, R, N	5 Symptoms	2 DTC
Shift Monitoring	Gear load 5-6 shift	P0829	Gear load error during 5-6 shift. Clutch B does not open.	(input speed - output speed x ratio) (t) - (input speed - output speed x ratio) (0) < threshold	ND_TUNSUEB	<30rpm	output speed > threshold transmission oil temperature > threshold engine speed range position	256rpm 10DegC 1200rpm no P, R, N	5 Symptoms	2 DTC
Shift Monitoring	Gear load 2-1 shift	P0781	Gear load error during 2-1 down shift.	(input speed - output speed x ratio) (t) - (input speed - output speed x ratio) (0) < threshold	ND_TUNSUEB	<30rpm	output speed > threshold transmission oil temperature > threshold engine speed range position	256rpm 10DegC 1200rpm no P, R, N	5 Symptoms	2 DTC
Shift Monitoring	Gear load 3-2 shift	P0782	Gear load error during 3-2 down shift.	(input speed - output speed x ratio) (t) - (input speed - output speed x ratio) (0) < threshold	ND_TUNSUEB	<30rpm	output speed > threshold transmission oil temperature > threshold engine speed range position	256rpm 10DegC 1200rpm no P, R, N	5 Symptoms	2 DTC
Shift Monitoring	Gear load 4-3 shift	P0783	Gear load error during 4-3 down shift.	(input speed - output speed x ratio) (t) - (input speed - output speed x ratio) (0) < threshold	ND_TUNSUEB	<30rpm	output speed > threshold transmission oil temperature > threshold engine speed range position	256rpm 10DegC 1200rpm no P, R, N	5 Symptoms	2 DTC
Shift Monitoring	Gear load 5-4 shift	P0784	Gear load error during 5-4 down shift.	(input speed - output speed x ratio) (t) - (input speed - output speed x ratio) (0) < threshold	ND_TUNSUEB	<30rpm	output speed > threshold transmission oil temperature > threshold engine speed range position	256rpm 10DegC 1200rpm no P, R, N	5 Symptoms	2 DTC
Shift Monitoring	Gear load 6-5 shift.	P0829	Gear load error during 6-5 down shift.	(input speed - output speed x ratio) (t) - (input speed - output speed x ratio) (0) < threshold	-30 > calculated value	<30rpm	output speed > threshold transmission oil temperature > threshold engine speed range position	256rpm 10DegC 1200rpm no P, R, N	5 Symptoms	2 DTC
CAN Link	ECM	P1797	CAN timeout EMS	No EMS CAN messages for a time threshold	off time >= tcn_EcmOff	750mS	Battery voltage > threshold No engine crank in progress No CAN bus off or CAN lvl fault logged	9v	500mS	1 DTC
System Voltage	Battery Voltage	P1789	Power Supply too low	Battery voltage	ugt_Batt < ugts_Ulow	< 9V	Engine speed > Turbine speed > Transmission position Mechanical limphome active	1400rpm 1400rpm Park or Neutral False	1.0s	2 DTC
TCM Internal	Flash Checksum	P062F	Continual EEPROM emulation checksum monitoring	EEPROM emulation checksum error					0mS	1 DTC
Temperature sensors	Chip Temperature Sensor	P0667	Chip temperature too big	Chip temp > threshold	ucu_Chip > utmso_CcuChip	4.95v			1.5s	2 DTC
Temperature sensors	Chip Temperature Sensor	P0667	Chip temperature too low	Chip temp < threshold	ucu_Chip < utmsu_CcuChip	0.1v			1.5s	2 DTC

System	Component	P Codes (AML)	Malfunction Strategy Description	Malfunction Criteria (Fault)	Fault condition (Internal labels)	Threshold Value (Fault condition)	Entry conditions	Entry conditions values	Filter Time to log DTC (AML)	EMS controlled MIL Illumination (AML)
System Voltage	Sensor Supply	P0641	Supply voltage of sensors. Sensor voltage too high	Sensor Voltage > threshold	ugt_Sens >= ugto_Sens	8v	Battery voltage has to be higher than the lower sensor voltage threshold plus the drop-voltage at the sensor voltage		100ms	2 DTC
System Voltage	Sensor Supply	P0641	Supply voltage of sensors. Sensor voltage too low	Sensor voltage < threshold	ugt_Sens <= ugtu_Sens	6.421v	Battery voltage has to be higher than the lower sensor voltage threshold plus the drop-voltage at the sensor voltage		100ms	2 DTC
Software Monitoring	Positive Tq Strategy	P1608	Processor Fault	Invalid processor calculation	HPYSys error Positive Torque	True	always active	no	0mS	2 DTC
Software Monitoring	SBW Strategy	P1608	Processor Fault	Invalid processor calculation	ssk_Level2Error SBW	True	always active	no	0mS	2 DTC
Software Monitoring	Positive Tq Strategy	P1608	Processor Fault	Invalid processor calculation	ssk_Level2Error Positive Torque	True	always active	no	0mS	2 DTC
TCM Internal	Micro controller	P0613	Processor Fault	RAM error	zsk_errorCountTPURAM >= kwd_TPURAM	3			0mS	2 DTC
TCM Internal	Micro controller	P0613	Processor Fault	Processing lockup	zsk_errorCountTPUAlive >= kwd_TPUAlive	6			0mS	2 DTC
TCM Internal	Micro controller	P0613	Processor Fault	ADC conversion errors	zsk_errorCountQADCtest_slight >= kwd_Qadc_slight	5			0mS	2 DTC
TCM Internal	Micro controller	P0613	Processor Fault	ADC conversion errors due to TCM overheat	zsk_errorCountQADCtest_strong >= kwd_Qadc_strong	10	TCM temperature > threshold	137DegC	0mS	2 DTC
System Voltage	Battery Voltage	P1794	Power Supply too high	Battery voltage	ugt_Batt >= ugto_Batt	>=16V	Engine speed >= No Jumpstart Mechanical limphome active	450rpm True False	2.5s	2 DTC
Speed Sensors	Output speed sensor	P0501	Change in output speed too high	Output speed - turbine speed > threshold AND Output speed difference from last measured value > threshold	lNABE-ntuel > Nrsv2_NabNtu AND lnabe-nabe_rsv2l > nrsv2_nab	nrsv2_NabNtu = 200rpm AND nrsv2_nab = 1000rpm	Downshift prevention timer expired Gear engaged or shift in progress	200mS	400ms	2 DTC
Mechatronic Unit	Pressure Regulator	P1745	TCM internal fault Short Circuits with high resistance	Current deviation on Pressure Regulator#1	idrs_High (powered) idrs_Low (unpowered)	> 120 mA (powered) > 170 mA (unpowered)	Fault already detected on Pressure regulator 1 Target Current > Battery Voltage > Supply Voltage >	True 500 mA 9V 9V	20ms	2 DTC
Gear monitoring	Reverse gear	P0736	Reverse Gear slip too high	R gear slip > threshold	nd_syn > KL_NDUWGR	Output speed 0.0 1000 6000 Ndsyn> 400 400 640	ATF temp > threshold output speed > threshold Engine Speed > threshold Turbine Speed > threshold	0DegC 0rpm 550rpm 416rpm	1 Symptom	2 DTC
Level2 calculation Pressure regulators at **high** speed	PR1, PR2, PR3, PR4	P0785	Check of activation pressure regulator 1, 2, 3, 4 Incorrect pressure regulator current i_eds1, i_eds2, i_eds3, i_eds4	Position Output speed	Position N or P n_ab > = NS_ABNSTOERPOSN	Engaged 1500rpm	Ignition ON Engine speed > threshold	True 430 rpm	0mS	2 DTC
Level2 calculation Pressure regulators at **high** speed	PR1	P0750	Check of activation pressure regulator 1 Incorrect pressure regulator current i_eds1	Position Output speed	Position N or P n_ab > = NS_ABNSTOERPOSN	Engaged 1500rpm	Ignition ON Engine speed > threshold	True 430 rpm	0mS	2 DTC
Level2 calculation Pressure regulators at **high** speed	PR2	P0755	Check of activation pressure regulator 2 Incorrect pressure regulator current i_eds2	Position Output speed	Position N or P n_ab > = NS_ABNSTOERPOSN	Engaged 1500rpm	Ignition ON Engine speed > threshold	True 430 rpm	0mS	2 DTC
Level2 calculation Pressure regulators at **high** speed	PR3	P0760	Check of activation pressure regulator 3 Incorrect pressure regulator current i_eds3	Position Output speed	Position N or P n_ab > = NS_ABNSTOERPOSN	Engaged 1500rpm	Ignition ON Engine speed > threshold	True 430 rpm	0mS	2 DTC
Level2 calculation Pressure regulators at **high** speed	PR4	P0765	Check of activation pressure regulator 4 Incorrect pressure regulator current i_eds4	Position Output speed	Position N or P n_ab > = NS_ABNSTOERPOSN	Engaged 1500rpm	Ignition ON Engine speed > threshold	True 430 rpm	0mS	2 DTC

SERVICE BULLETIN

To: **For the attention of:** **Please copy to:**	**All Dealers** **Service Manager/After Sales Manager** **The Dealer Principal** **The Warranty Administrator** **Aston Martin Technician(s)** **The Parts Manager**	**Reference** **SB-17-0298** **Issued:** **26 February 2009**
Model:	**DBS, DB9, V8 and V12 Vantage**	
VIN Range:	**All**	
Subject:	**Headlamp Drying Out Procedure**	**Page 1 of 5**

Reason for this Service Bulletin

The headlamps of DBS, DB9, V8 and V12 Vantage models can get condensation on the inside surface of the lens. If a customer complains that their vehicle has condensation in a headlamp, do the applicable procedure that follows to remove the condensation.

Workshop Procedures

DBS and DB9 Vehicles

1. Turn the steering to get access to the headlamp access panel for the correct headlamp.
2. Lift the vehicle and make it safe.
3. Release the quarter-turn fastener and remove the headlamp access panel (refer to Figure 1).

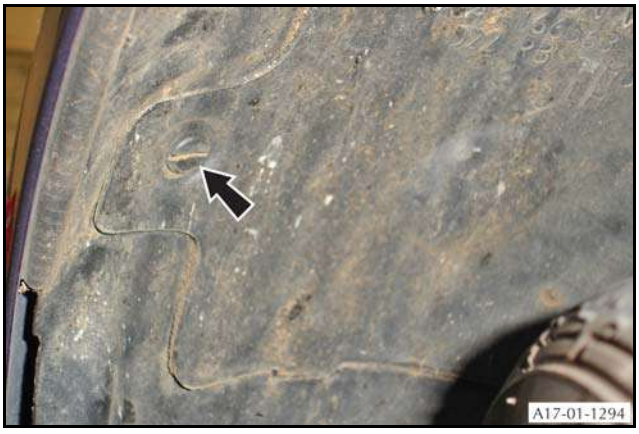

Figure 1

4. Remove the dip-beam bulb cover from the headlamp.
5. Install a battery vent tube (part number 1R12-372635-AA) (1) into the headlamp in the position shown in Figure 2 and Figure 3.

Figure 2

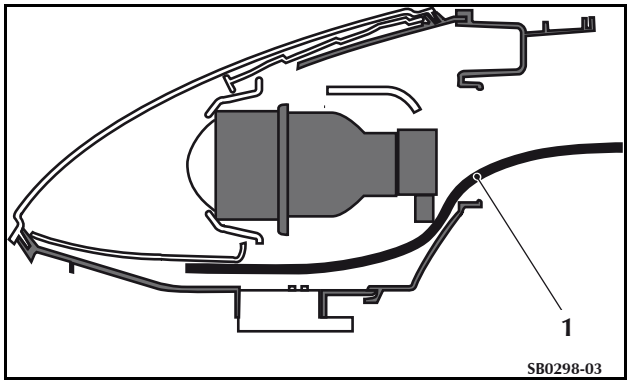

Figure 3

6. Attach an airline that has dry air, without oil to the battery vent tube (refer to Figure 4)

   CAUTION: MAKE SURE THAT THE AIRLINE PRESSURE IS 2 BAR OR LESS. IF YOU DO NOT, DAMAGE TO THE HEADLAMP CAN OCCUR.

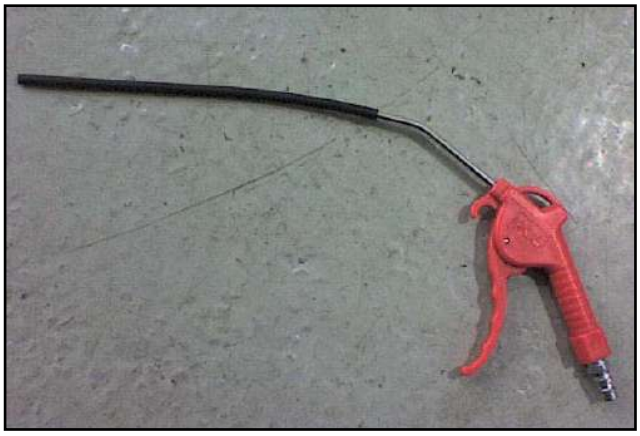

Figure 4

7. Make sure that the opposite end of the vent tube has not moved inside the headlamp. If necessary, adjust its position.

8. Blow air through the headlamp until you can see no condensation remaining on the lens.

9. Let the air flow for 20 minutes more.

10. Remove the vent tube from the headlamp then do steps 11 to 13 that follow quickly before more moisture can get into the headlamp.

11. Remove the cover for the main-beam bulb.

12. Install two silica gel bags into the headlamp at the positions shown in Figure 5.

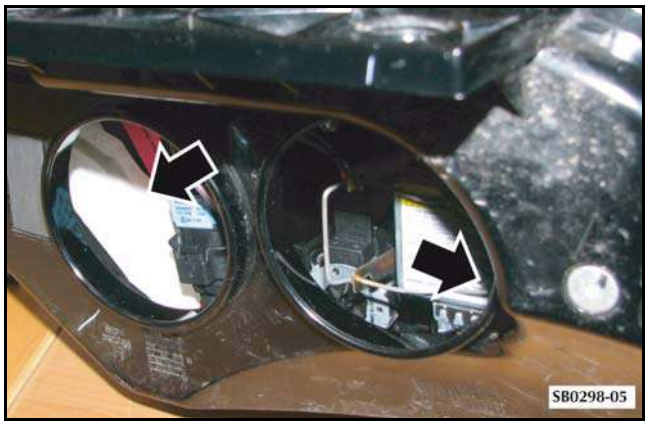

Figure 5

13. Install the two bulb covers. Make sure that the covers are fully installed correctly.

14. Install the headlamp access panel and turn the quarter turn fastener to attach it.

15. Lower the vehicle.

16. Adjust the steering to the straight forward position.

V8 and V12 Vantage Vehicles

1. Turn the steering to get access to the headlamp access panel for the correct headlamp.

2. Lift the vehicle and make it safe.

3. Release the quarter-turn fastener and remove the headlamp access panel.

4. Remove the two screws (1) that attach the bulb cover (2) to the headlamp (refer to Figure 6).

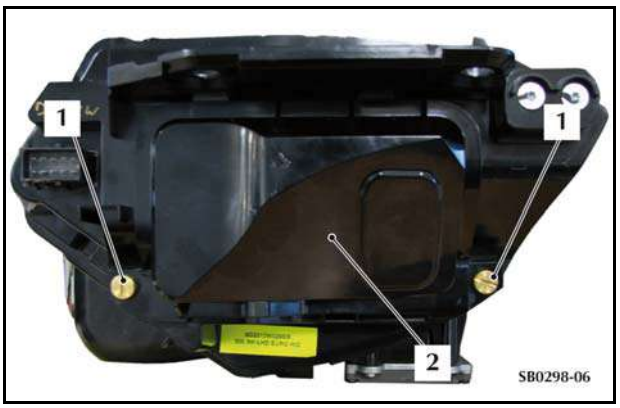

Figure 6

5. Remove the bulb cover from the headlamp.

6. Install a battery vent tube (1) into the headlamp in the position shown in Figure 7 and Figure 8.

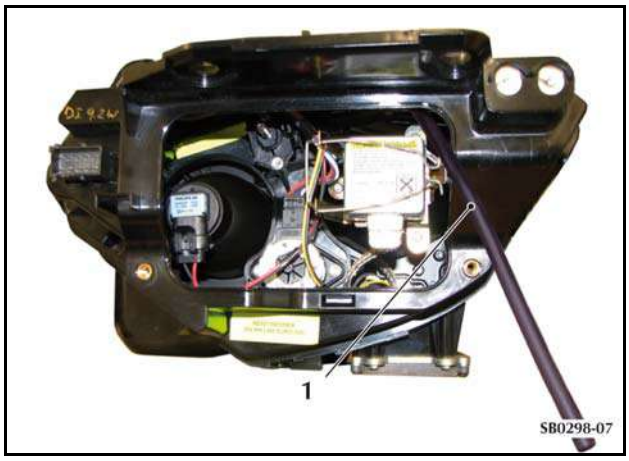

Figure 7

Figure 8

7. Attach an airline that has dry air, without oil to the battery vent tube (refer to Figure 9)

   CAUTION: MAKE SURE THAT THE AIRLINE PRESSURE IS 2 BAR OR LESS. IF YOU DO NOT, DAMAGE TO THE HEADLAMP CAN OCCUR.

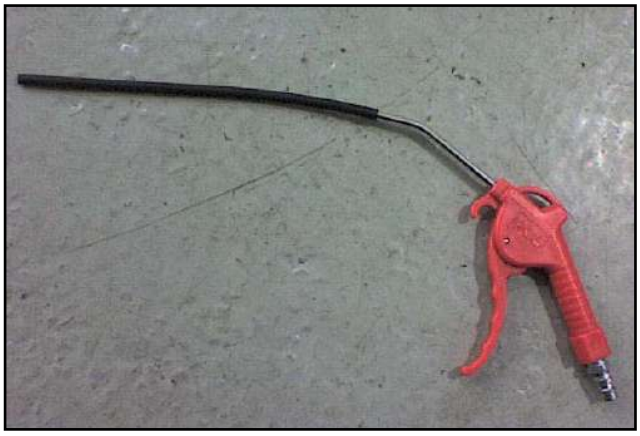

Figure 9

8. Blow air through the headlamp until you can see no condensation on the lens.
9. Let the air flow for 20 minutes more.
10. Remove the vent tube from the headlamp then do steps 11 and 12 that follow quickly before more moisture can get into the headlamp.
11. Install two silica gel bags into the headlamp (refer to Figure 10 – right headlamp shown).

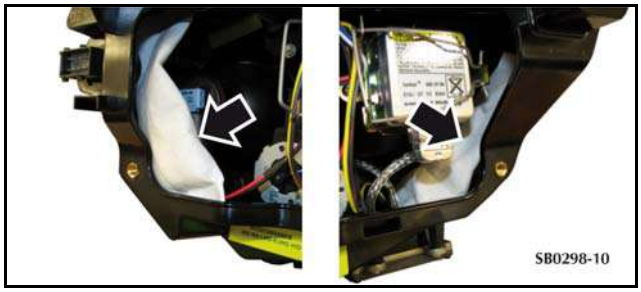

Figure 10

12. Install the bulb cover.
13. Install and tighten the two screws that attach the bulb cover.
14. Install the headlamp access panel and turn the quarter turn fastener to attach it.
15. Lower the vehicle.
16. Adjust the steering to the centre.

Part Data

Description	Part Number	Quantity
25g Silica Gel Bag (2 each pack)	9G43-37-11095-PK	2 per headlamp
Battery Vent Tube	1R12-372635-AA	1

Warranty Data

DBS and DB9, Coupe and Volante

Description	Time Allowed	Labour Code
Headlamp Condensation Drying Procedure – The two sides	0.9 hrs.	17.01.BG
Headlamp Condensation Drying Procedure – One Side	0.45 hrs.	17.01.BH

Vantage Coupe and Roadster

Description	Time Allowed	Labour Code
Headlamp Condensation Drying Procedure – The two sides.	1.0 hrs.	17.01.BG
Headlamp Condensation Drying Procedure – One Side	0.5 hrs.	17.01.BH

If you have any queries related to this Service Bulletin, please contact: Aston Martin Technical Services on: +44 (0) 1926 644720 or facsimile: +44 (0) 1926 644733.
E-mail: amtech@astonmartin.com. Or contact your After Sales Manager.

The English version of this Service Bulletin is written in Simplified Technical English to ASD STE-100™.

SERVICE BULLETIN

To:	**All Dealers**	**Reference**
For the attention of:	**Service Manager/After Sales Manager**	**SB0286V2**
Please copy to:	**The Dealer Principal**	
	Aston Martin Technician(s)	**Issued:**
	The Parts Manager	**25 December 2009**
Model:	**All Models**	
VIN Range:	**All**	
Subject:	**Rear Lamp Assembly Condensation Removal and Repair Procedure**	**Page 1 of 5**

Reason for Version 2 of this Service Bulletin (SB0286)

Version 2 of this Service Bulletin has been issued to change the criteria for the quantity of water in the rear lamp, before you change the lamp. Amendments to this document have a black line against them in the left-side margin. Please destroy all copies of SB0286 that you have and replace them with this Service Bulletin SB0286V2.

Reason for this Service Bulletin

This Service Bulletin has been issued to give a procedure to dry out and repair a rear lamp assembly (lamp) that has condensation inside. If a rear lamp has condensation inside, do the Workshop Procedure that follows:

Note: ***If there is moisture inside the lamp then there must be some damage.***

Note: ***Before you do the Workshop Procedure you must make sure that the lamp unit operates correctly because it is possible that water can have caused a short in the circuitry. It is also possible that if the unit does not operate correctly, this drying out procedure can repair the problem.***

Workshop Procedure

1. Do a check of the operation of the lamp.
2. If two or more functions of the lamp do not operate correctly, install a new lamp.
3. Do a check for moisture in the rear lamp. If you can see water in the rear lamp that is not condensation on the lens, install a new lamp.

CAUTION: WHEN YOU WORK ON THE LAMP MAKE SURE THAT IT IS ON A PROTECTIVE SURFACE TO PREVENT DAMAGE.

4. Remove the rear lamp assembly (Refer to the Workshop Manual procedure 17.02.AA (Left Side) or 17.02.AB (Right Side)).
5. If you do not replace the lamp because of the conditions in steps 2 or 3, do the procedure that follows to dry the lamp.

6. On the bottom of the lamp, make a mark for the centre-point of the hole. The hole must be 40mm from the outside edge and at the centre of the area shown in Figure 1.

Figure 1

CAUTION: WHEN YOU DRILL THE HOLE AT STEP 7, DO NOT DRILL THROUGH INTO THE LAMP UNIT MORE THAN 10 MM. IF YOU DO, DAMAGE TO THE INTERNAL FITTINGS CAN OCCUR.

7. Use a sharp 12 to 13 mm drill bit to drill a hole at the position marked in Step 6. Drill slowly and carefully to make sure that no swarf goes into the lamp unit (Refer to Figure 2).

Figure 2

~~8~~ ~~Turn the lamp unit to let the water drain out of the hole.~~

8. Find the location of the water leak (see the example in Figure 3). Refer to *'Water Leak Locations'* after this Workshop Procedure for the usual crack or split locations.

Figure 3

Note: ***The location of the water leak can be difficult to find.***

9. Install a battery vent tube (part number 1R12-372635-AA) onto an airline that has **dry air, without oil** (Refer to the example in Figure 4).

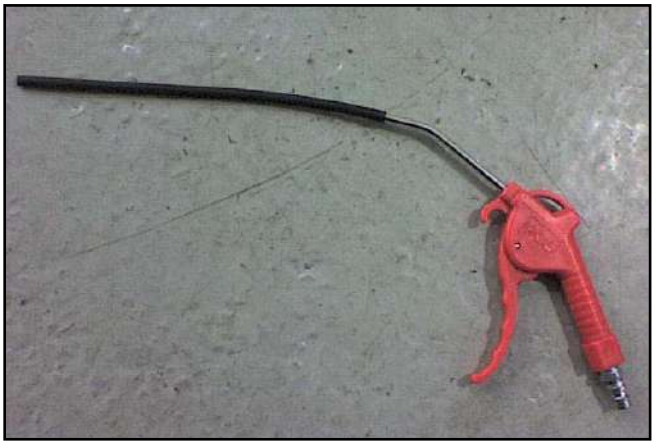

Figure 4

10. Push the vent tube into the lamp unit in the direction of the condensation (Refer to Figure 5).

Figure 5

Note: ***If the condensation is at the two ends of the lamp unit, move the vent tube around as necessary.***

11. Blow air into the unit until all of the condensation has been dried out (approximately 6 - 10 minutes).

Note: ***At this time it is possible that water can come out of the cracked or damaged area to show the location of the damage.***

Note: ***When the electrical connector is disconnected from the lamp unit, the unit is not sealed. Air and water can go through the electrical terminal. Make sure that all water has gone from both the lamp and the connector.***

12. When the lamp is dry, examine it for marks inside. Install a new lamp if there are marks inside.

CAUTION: DO NOT GET ADHESIVE ON THE LAMP LENS IN THE STEPS THAT FOLLOW. ADHESIVE CAN DAMAGE THE SURFACE OF THE LAMP LENS.

13. Dry the damaged area with an airline.

14. Degrease the damaged area.

15. Use cyanoacrylate adhesive to seal all small cracks found and make sure that you fully seal the crack. For larger holes use an applicable 2-part epoxy adhesive.

16. Clean the area around the drilled hole with applicable alcohol cleaner and cloth.

17. Apply the adhesive patch (part number 4G43-L20220-AA) to seal the hole (refer to Figure 6).

Figure 6

CAUTION: INSTALL NEW FOAM SEALS ON THE ATTACHMENT SCREWS WHEN YOU DO THE STEP THAT FOLLOWS. IF YOU DO NOT, WATER CAN LEAK INTO THE VEHICLE.

18. Install the rear lamp assembly (Refer to the Workshop Manual procedure 17.02.AA (Left Side) or 17.02.AB (Right Side).

Water Ingress Locations

Possible areas include:

- A crack in the lens under the infill panel (Figure 7 and Figure 8).
- Cracks in the housing around the mounting points (Item A, Figure 9), rub-through on the edge of the lens (Item B, Figure 9) and lens/housing separation because of load between the lens and the panel (Figure 10).

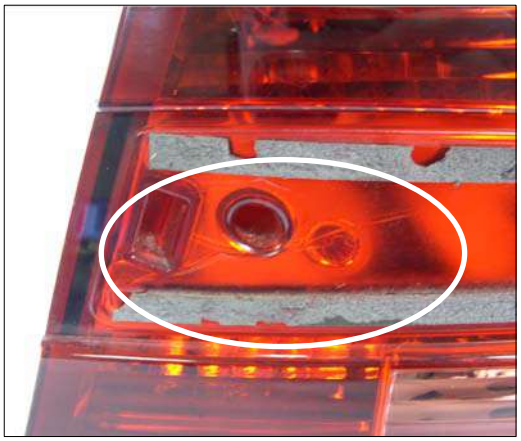

Figure 7

Figure 8

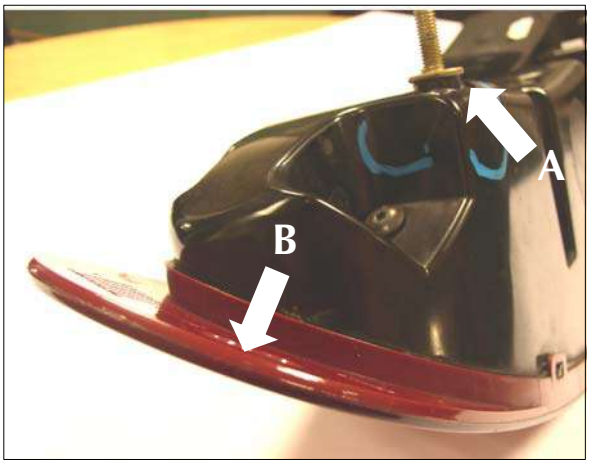

Figure 9

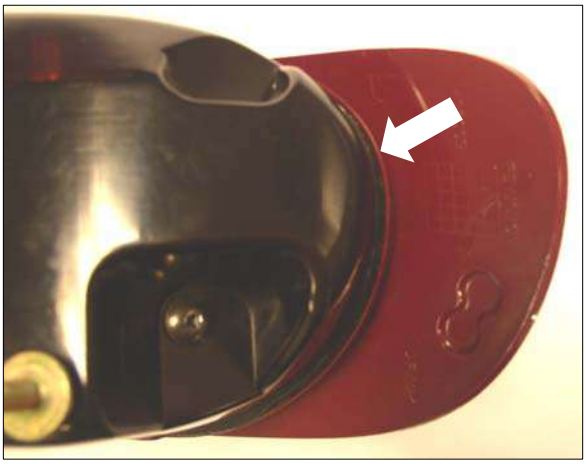

Figure 10

Parts Data

Description	Part Number	Quantity
Battery Vent Tube	1R12-372635-AA	1
Adhesive Sealing Patch	4G43-L20220-AA	1

Warranty Data

DB9 Coupe and Volante

Description	Time Allowed	Labour Code
Rear Lamp Unit – Left Side - Drying Procedure	0.8	17.03.AC
Rear Lamp Unit – Right Side - Drying Procedure	0.8	17.03.AD

V8 Vantage and Roadster

Description	Time Allowed	Labour Code
Rear Lamp Unit – Left Side - Drying Procedure	0.65	17.03.AC
Rear Lamp Unit – Right Side - Drying Procedure	0.70	17.03.AD

DBS

Description	Time Allowed	Labour Code
Rear Lamp Unit – Left Side - Drying Procedure	0.8	17.03.AC
Rear Lamp Unit – Right Side - Drying Procedure	0.8	17.03.AD

If you have any queries related to this Service Bulletin, please contact: Aston Martin Technical Services on: +44 (0) 1926 644720 or facsimile: +44 (0) 1926 644733.
E-mail: amtech@astonmartin.com. Or contact your After Sales Manager.

The English version of this Service Bulletin is written in Simplified Technical English to ASD STE-100™.