2003-06 DRIVELINE/AXLE

Rear Differential - MDX

SPECIAL TOOLS

Ref. No.	Tool Number	Description	Qty
①	07SAZ-001000A	Backprobe Set	2
②	07AAD-S3VA000	Driveshaft Remover	1

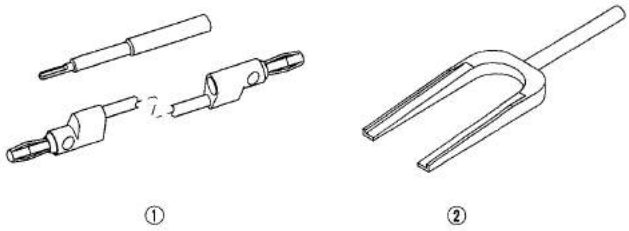

Fig. 1: Identifying Special Service Tool
Courtesy of AMERICAN HONDA MOTOR CO., INC.

COPYRIGHT FIXYOURCAR2009@GMAIL.COM
NOT TO BE COPIED OR RESOLD

COMPONENT LOCATION INDEX

cardiagn.com

COPYRIGHT FIXYOURCAR2009@GMAIL.COM
NOT TO BE COPIED OR RESOLD

Fig. 2: Component Location Index
Courtesy of AMERICAN HONDA MOTOR CO., INC.

GENERAL TROUBLESHOOTING INFORMATION

VTM-4 INDICATOR

The VTM-4 indicator comes on under certain conditions even if the 4WD system is working normally. Here are some examples:

- When you use high-powered wireless equipment such as a CB or Ham radio in the vehicle.
- When you keep spinning the rear wheels while the vehicle is stuck in sand, mud, snow, etc.
- When the battery voltage suddenly drops below 8 Volts or rises above 16 Volts.

After the VTM-4 indicator comes on, it stays on until you turn the ignition switch off.

DIAGNOSTIC TROUBLE CODE (DTC)

- The VTM-4 control unit can memorize up to seven different DTCs. The system displays the DTCs by blinking the VTM-4 indicator. Multiple DTCs are displayed in the order they occurred, beginning with the most recent.

cardiagn.com

- If the same DTC is detected more than once, the most recent DTC is written over the earlier one. Therefore, when the same problem is detected more than once, it is memorized as a single DTC.
- The DTCs are memorized in the EEPROM (non-volatile memory). Therefore, the memorized DTCs are not cleared when the battery is disconnected or the VTM-4 control unit is disconnected.
- If there is a problem in the central processing unit (CPU) of the VTM-4 control unit, the VTM-4 indicator comes on, but no DTC is memorized.

SELF-DIAGNOSIS

When a problem is detected by self-diagnosis, the system does the following:

- Turns the VTM-4 indicator on.
- Memorizes the DTC.
- Stops 4WD control and puts the vehicle back in 2WD (FWD).
- Reduces engine torque to suit the driving conditions when the abnormality was detected.

INITIALIZATION OF THE VTM-4 CONTROL UNIT

Whenever the VTM-4 control unit is replaced, it must be initialized to make the 4WD system function.

1. With the ignition switch OFF, connect the HDS to the 16P DLC (A) behind the driver's dashboard lower cover.

COPYRIGHT FIXYOURCAR2009@GMAIL.COM
NOT TO BE COPIED OR RESOLD
cardiagn.com

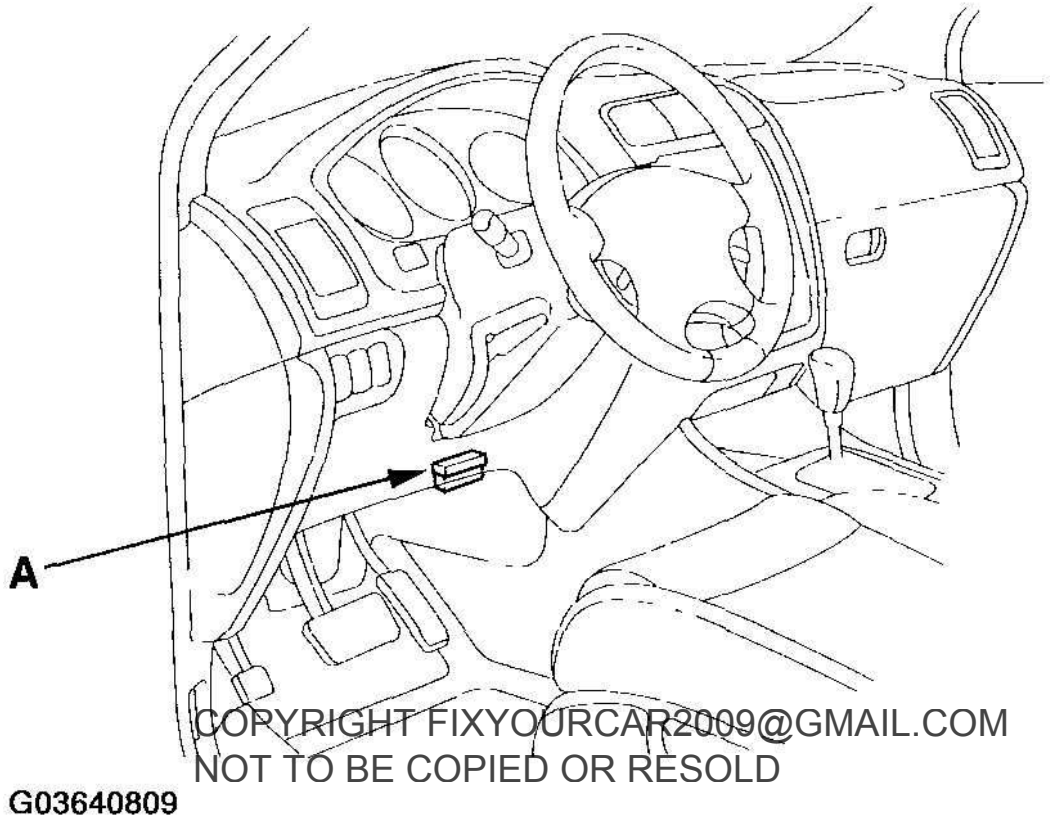

COPYRIGHT FIXYOURCAR2009@GMAIL.COM
NOT TO BE COPIED OR RESOLD

cardiagn.com

Fig. 3: Identifying 16P DLC (A) Location
Courtesy of AMERICAN HONDA MOTOR CO., INC.

2. Turn the ignition switch ON (II), and follow the prompts on the HDS screen.

NOTE: See the HDS help menu for specific instruction.

HOW TO CHECK FOR DIAGNOSTIC TROUBLE CODES (DTCS)

When the VTM-4 control unit senses an abnormality in the input or output systems, the VTM-4 indicator in the gauge assembly will usually come on, and the malfunction indicator lamp (MIL), the D5 indicator, and/ or the ABS indicator may also come on.

1. With the ignition switch OFF, connect the HDS to the 16P DLC (A) behind the driver's dashboard lower cover.

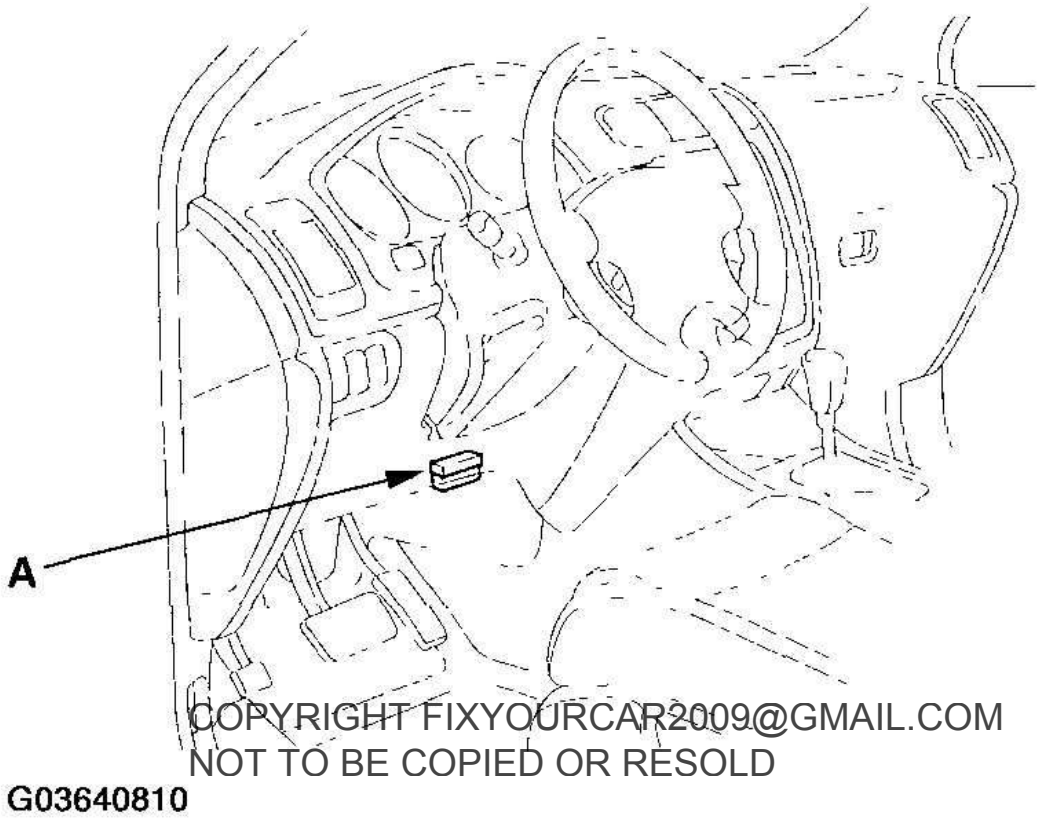

COPYRIGHT FIXYOURCAR2009@GMAIL.COM
NOT TO BE COPIED OR RESOLD

cardiagn.com

Fig. 4: Identifying 16P DLC (A) Location
Courtesy of AMERICAN HONDA MOTOR CO., INC.

2. Turn the ignition switch ON (II), and follow the prompts on the HDS to display the DTC(s) on the screen. After determining the DTC(s), refer to the DTC Troubleshooting .

NOTE: See the HDS help menu for specific instruction.

3. If there are fuel and emission DTCs, A/T DTCs, and vehicle stability assist (VSA) DTC's at the same time, troubleshoot the fuel and emission DTCs first.
4. After recording the DTCs, clear all DTCs.
5. Test-drive the vehicle for several minutes in 4WD mode, and check for DTCs. If the DTC returns, refer to the DTC Troubleshooting . If the DTC does not return, there was an intermittent problem within the circuit. Make sure all connectors and terminals in the circuit are tight.

HOW TO TROUBLESHOOT CIRCUITS AT THE VTM-4 CONTROL UNIT

Special Tools Required

Backprobe set 07SAZ-001000A (two required)

1. Remove the front mounting bolts from the right third row seat, and fold the seat cushion back.
2. Remove the cover from the right rear side trim panel to gain access to the VTM-4 control unit (see **VTM-4 CONTROL UNIT REPLACEMENT**).
3. Inspect the circuit on the VTM-4 control unit according to the DTC Troubleshooting using the special tools and a digital multimeter or an analog circuit tester.
4. Connect the backprobe adapters (A) to the stacking patch cords (B), and connect the cords to the multimeter or an analog circuit tester (C). Using the wire insulator as a guide for the contoured-tip of the backprobe adapter, gently slide the tip into the connector from the wire side until it comes in contact with the terminal end of the wires.

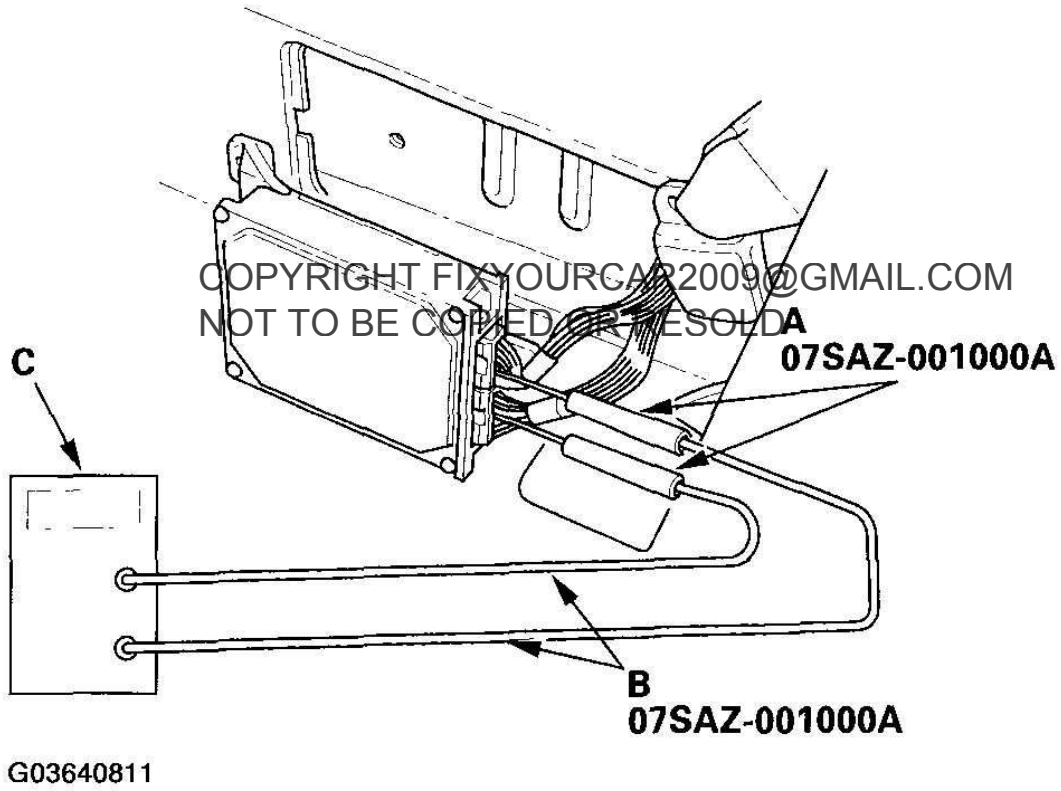

COPYRIGHT FIXYOURCAR2009@GMAIL.COM
NOT TO BE COPIED OR RESOLD

cardiagn.com

Fig. 5: Connecting Backprobe Adapters
Courtesy of AMERICAN HONDA MOTOR CO., INC.

HOW TO CLEAR THE VTM-4 CONTROL UNIT MEMORY

1. With the ignition switch OFF, connect the HDS to the 16P DLC (A) behind the driver's dashboard lower cover.

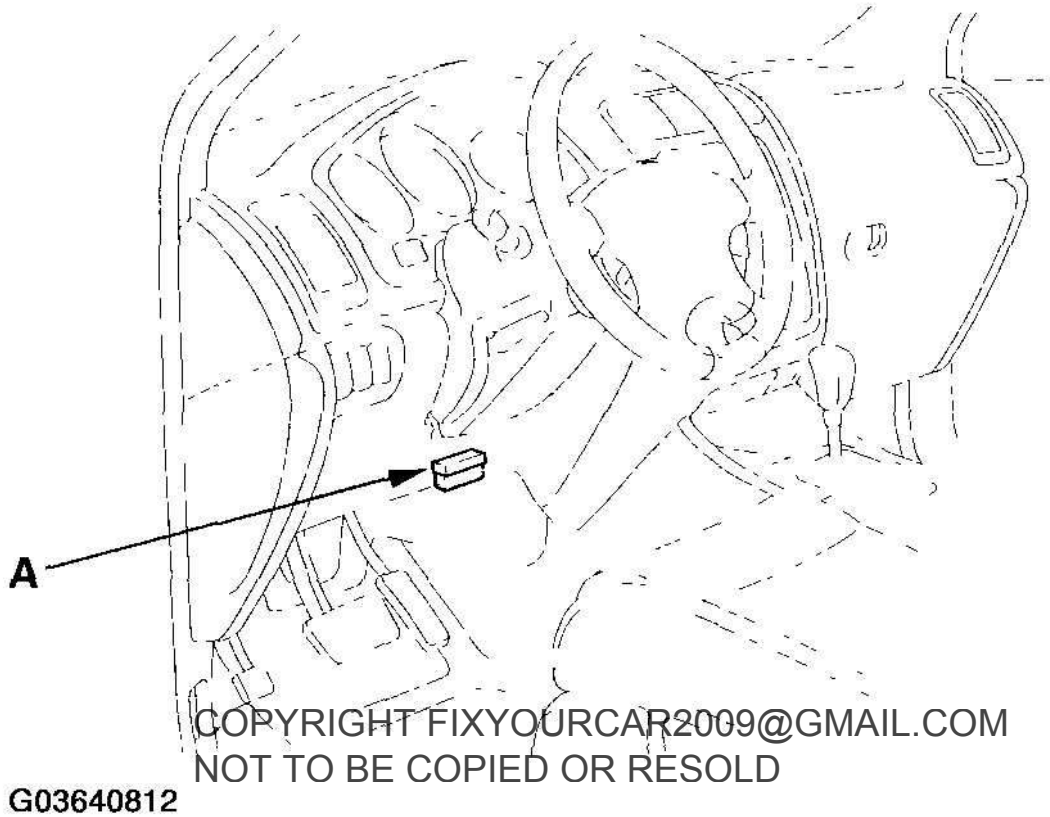

COPYRIGHT FIXYOURCAR2009@GMAIL.COM
NOT TO BE COPIED OR RESOLD

cardiagn.com

Fig. 6: Identifying 16P DLC (A) Location
Courtesy of AMERICAN HONDA MOTOR CO., INC.

2. Turn the ignition switch ON (II), and follow the prompts on the HDS screen to clear the DTC(s).

NOTE: See the HDS help menu for specific instruction.

HOW TO END A TROUBLESHOOTING SESSION (REQUIRED AFTER ANY TROUBLESHOOTING)

1. Turn the ignition switch OFF.
2. Clear the DTCs from the VTM-4 control unit memory.
3. Disconnect the HDS from the 16P DLC.
4. Verify that the problem has been repaired by test-driving the vehicle for several minutes in 4WD mode.

DTC TROUBLESHOOTING INDEX

DTC TROUBLESHOOTING INDEX

DTC (1)	VTM-4 Indicator Light	Detection Item	
21-1	ON	Left-front wheel sensor	• Sensor is defective • Open or short in the wire harness • VTM-4 control unit is defective • VSA modulator-control unit is defective
22-1	ON	Right-front wheel sensor	
23-1	ON	Left-rear wheel sensor	
24-1	ON	Right-rear wheel sensor	
26-1	ON	VSA modulator control unit or wire harness	• Open or short in the wire harness from the VTM-4 control unit to VSA modulator-control unit • VSA modulator-control unit is defective
37-1	ON	Engine RPM signal circuit	• Open or short in the wire harness • VTM-4 control unit or PCM is defective • Gauge assembly is defective
38-1	ON		
41-1	ON	CAN communication	• Open or short in the wire harness of VTM-4 control unit to PCM/VSA/NAVI • VTM-4 control unit or PCM is defective or VSA is defective or NAVI is defective
42-1	ON	Differential oil temperature sensor	• Sensor is defective • Open or short in the wire harness • VTM-4 control unit is defective
43-1	ON		
44-1	ON	VTM-4 relay	• Relay is defective • Open or short in the wire harness • VTM-4 control unit is defective
51-1	ON	Left clutch electromagnetic coil	• Electromagnetic coil is defective • Open or short in the wire harness • VTM-4 control unit is defective
52-1	ON	Left clutch electromagnetic coil	
53-1	ON	Left clutch electromagnetic coil	
54-1	ON	Left clutch electromagnetic coil	
55-1	ON	Right clutch electromagnetic coil	• Electromagnetic coil is defective
56-1	ON	Right clutch electromagnetic coil	

COPYRIGHT FIXYOURCAR2009@GMAIL.COM
NOT TO BE COPIED OR RESOLD

cardiagn.com

57-1	ON	Right clutch electromagnetic coil	• Open or short in the wire harness • VTM-4 control unit is defective
58-1	ON	Right clutch electromagnetic coil	
59-1	ON	Right/left clutch electromagnetic coil power supply	• Battery is out of specification • Abnormality in the charging system • VTM-4 control unit is defective
73-1	ON	MAP (manifold absolute pressure) sensor or PCM	Abnormality in the PCM system/MAP (manifold absolute pressure) sensor is defective
76-1	ON	Rear differential clutch warning system	• Sensor is defective • Open or short in the wire harness • VTM-4 control unit is defective • VSA modulator-control unit is defective
77-1	ON	PCM	PCM is defective
78-1	ON	VTM-4 control unit	VTM-4 control unit is defective
41-1	ON	CAN communication	Open or short in the wire harness from VTM-4 control unit to PCM (or VSA, NAVI)
42-2	ON	Differential oil temperature sensor	• Sensor is defective • Open or short in the wire harness • VTM-4 control unit is defective
21-2	ON	Left-front wheel sensor	• Sensor is defective • Open or short in the wire harness • VTM-4 control unit is defective • VSA modulator-control unit is defective
22-2	ON	Right-front wheel sensor	
23-2	ON	Left-rear wheel sensor	
24-2	ON	Right-rear wheel sensor	
53-2	ON	Left or Right clutch electromagnetic coil	• Electromagnetic coil is defective • Open or short in the wire harness • VTM-4 control unit is defective
(1) DTCs are indicated by the VTM-4 indicator when the 16P data link connector (DLC) is connected to the HDS.			

COPYRIGHT FIXYOURCAR2009@GMAIL.COM
NOT TO BE COPIED OR RESOLD
cardiagn.com

SYMPTOM TROUBLESHOOTING INDEX

SYMPTOM TROUBLESHOOTING INDEX

Symptom	Diagnostic Procedure	Also check for
The VTM-4 indicator comes on,	Symptom troubleshooting (see **SYMPTOM**	

but no DTCs are stored in any system: VTM-4, VSA, or PGM-FI	**TROUBLESHOOTING**).	
The VTM-4 indicator does not come on	Symptom troubleshooting (see **THE VTM-4 INDICATOR DOES NOT COME ON**).	
The VTM-4 LOCK indicator does not come on when the VTM-4 LOCK button is pressed	Symptom troubleshooting (see **THE VTM-4 LOCK INDICATOR DOES NOT COME ON WHEN THE VTM-4 LOCK BUTTON IS PRESSED**).	
The VTM-4 LOCK indicator comes on when the ignition switch is turned ON (II) and does not go off	Symptom troubleshooting (see **THE VTM-4 LOCK INDICATOR COMES ON WHEN THE IGNITION SWITCH IS TURNED ON (II) AND DOES NOT GO OFF**).	
The VTM-4 LOCK indicator does not come on for about 4 seconds when the ignition switch is turned ON (II)	Symptom troubleshooting (see **THE VTM-4 LOCK INDICATOR DOES NOT COME ON FOR ABOUT 4 SECONDS WHEN THE IGNITION SWITCH IS TURNED ON (II)**).	

SYSTEM DESCRIPTION

This vehicle is equipped with a rear differential system called the variable torque management 4WD (VTM-4) system. The VTM-4 control unit controls the currents flowing through electromagnetic coils to engage and disengage the right and left clutches in the rear differential assembly.

COPYRIGHT FIXYOURCAR2009@GMAIL.COM
NOT TO BE COPIED OR RESOLD

The operation of the VTM-4 system consists of the following functions:

- Vehicle acceleration torque control (VATC)
- Limited slip differential (LSD)
- Lock control

These functions automatically combine to distribute driving torque between the front and rear wheels when the vehicle accelerates or when the wheels are slipping. When the vehicle speed is about 18 mph (30 km/h) or below, and the transmission is in R, 2, or 1, the system will manually engage the rear differential clutches when the VTM-4 LOCK switch is pressed. By design, in lock mode, the torque is reduced gradually at speeds above 6 mph (10 km/h) to minimize the load on the 4WD system.

The VTM-4 control unit has a fail-safe function, a self-diagnosis function, and a provision to communicate with the HDS.

cardiagn.com

COPYRIGHT FIXYOURCAR2009@GMAIL.COM
NOT TO BE COPIED OR RESOLD

Fig. 7: Identifying VTM-4 Control Unit Function
Courtesy of AMERICAN HONDA MOTOR CO., INC.

- VATC Control

  The torque to be delivered to the rear wheels is calculated based on the acceleration of the vehicle calculated in the VTM-4 control unit.

cardiagn.com

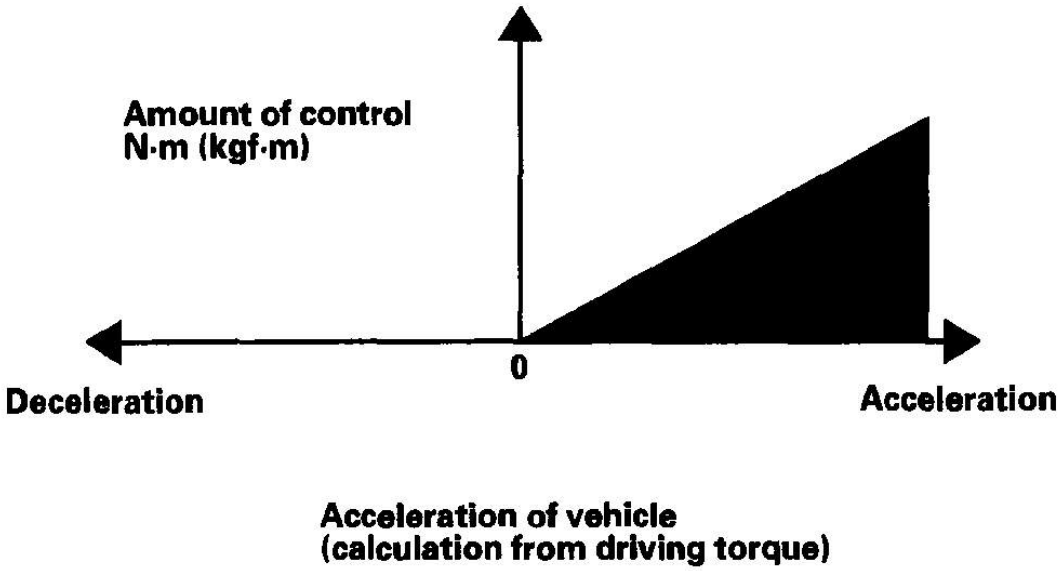

G03640814

Fig. 8: Identifying Calculated Torque
Courtesy of AMERICAN HONDA MOTOR CO., INC.

COPYRIGHT FIXYOURCAR2009@GMAIL.COM
NOT TO BE COPIED OR RESOLD

- LSD Control

  The torque to be delivered to the rear wheels is calculated based on the differences in speed and acceleration between the front and rear wheels.

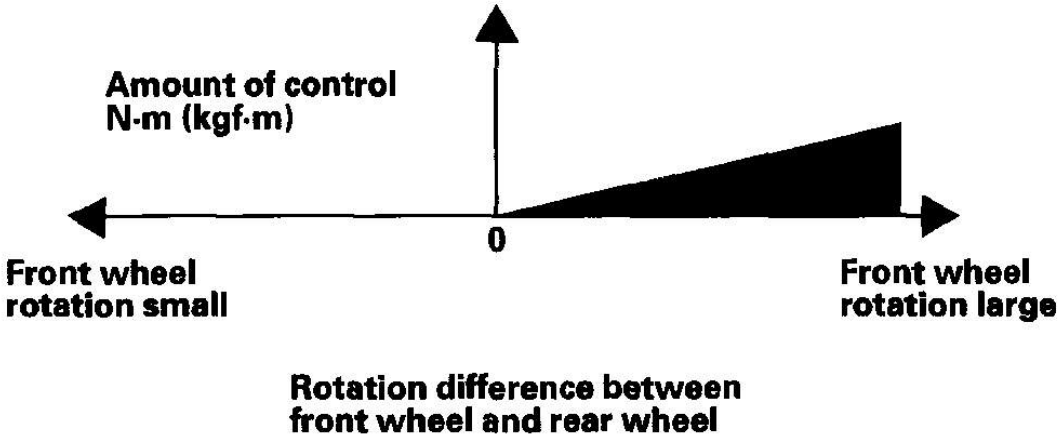

G03640815

cardiagn.com

Fig. 9: Identifying Differences In Speed And Acceleration Between Front And Rear Wheels
Courtesy of AMERICAN HONDA MOTOR CO., INC.

- LOCK Control

  Rear differential clutch lock control is done by pushing the VTM-4 LOCK switch manually when the shift lever is in R, 1, or 2.

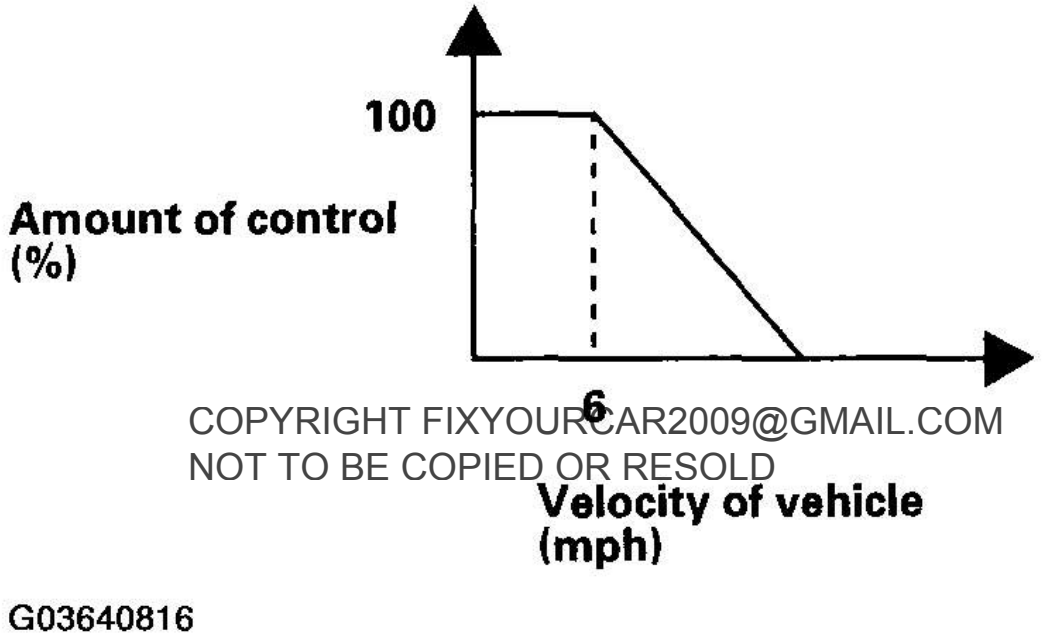

COPYRIGHT FIXYOURCAR2009@GMAIL.COM
NOT TO BE COPIED OR RESOLD

Fig. 10: Identifying Amount Of Control/ Vehicle Velocity
Courtesy of AMERICAN HONDA MOTOR CO., INC.

ELECTRIC CONTROL SYSTEM

VTM-4 Control Unit Electrical Connections

cardiagn.com

COPYRIGHT FIXYOURCAR2009@GMAIL.COM
NOT TO BE COPIED OR RESOLD

cardiagn.com

Fig. 11: Identifying Electric Control System Chart
Courtesy of AMERICAN HONDA MOTOR CO., INC.

VTM-4 Control Unit Inputs and Outputs

The VTM-4 control unit terminal voltage and measuring conditions for the 4WD control system are shown.

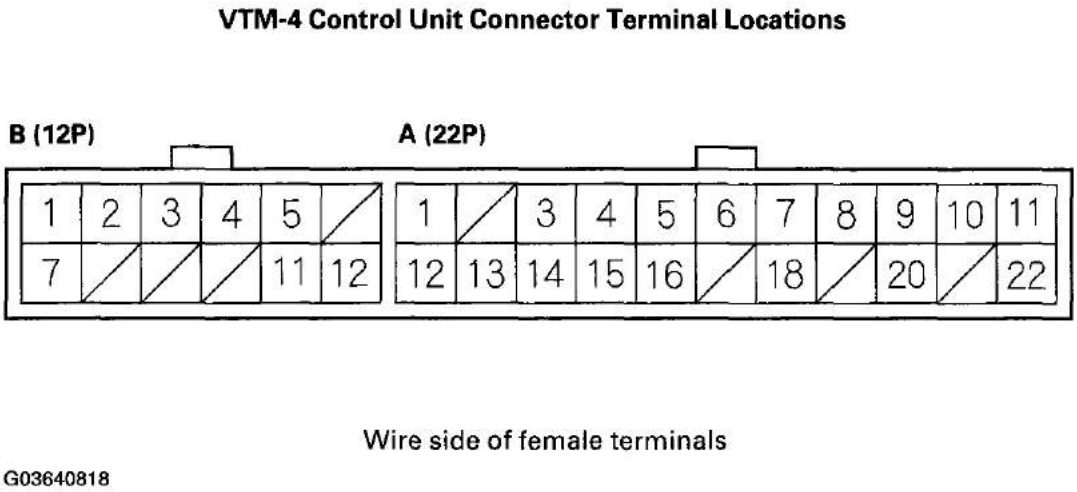

Fig. 12: Identifying VTM-4 Control Unit Inputs And Outputs
Courtesy of AMERICAN HONDA MOTOR CO., INC.

TERMINAL CONDITION SPECIFICATION

Terminal number	Wire color	Terminal sign (Terminal name)	Description	Measurement	
				Conditions	Voltage
A1	YEL	IG1 (Ignition 1)	Power supply for activating the system	Ignition switch ON (II)	Battery Voltage
A3	GRY/RED	RRP (Rear right pulse)	Detect right-rear wheel sensor signal	Turn wheel at 1 rotation/second	2-3 V Turn real slow 5V Faster pulse 0-5 V
A4	ORN/GRN	FSR (Fail-safe relay)	Drives VTM-4 relay	Ignition switch ON (II)	Battery Voltage
				Engine running	Below 1 V
A5	GRY/YEL	RLP (Rear left pulse)	Detects left-rear wheel sensor signal	Turn wheel at 1 rotation/second	2-3 V Turn real slow 5V Faster pulse 0-5 V
A6	GRN/RED	PARBRK (Parking brake)	Detects parking brake signal	Parking brake on	Below 2 V
				Parking brake off	Battery Voltage
A7	LT GRN	FRP (Front right pulse)	Detects right-front wheel sensor signal	Turn wheel at 1 rotation/second	2-3 V Turn real slow 5V Faster pulse

COPYRIGHT FIXYOURCAR2009@GMAIL.COM
NOT TO BE COPIED OR RESOLD
cardiagn.com

					0-5 V
A8	BRN/WHT	LOCKSW (Lock button)	Detects VTM-4 LOCK button signal	Ignition switch ON (II)	Below 1 V
				VTM-4 lock mode	Battery Voltage
A9	WHT/RED	FLP (Front left pulse)	Detects left-front wheel sensor signal	Turn wheel at 1 rotation/second	2-3 V Turn real slow 5V Faster pulse 0-5 V

VTM-4 Control Unit Inputs and Outputs

The VTM-4 control unit terminal voltage and measuring conditions for the 4WD control system are shown.

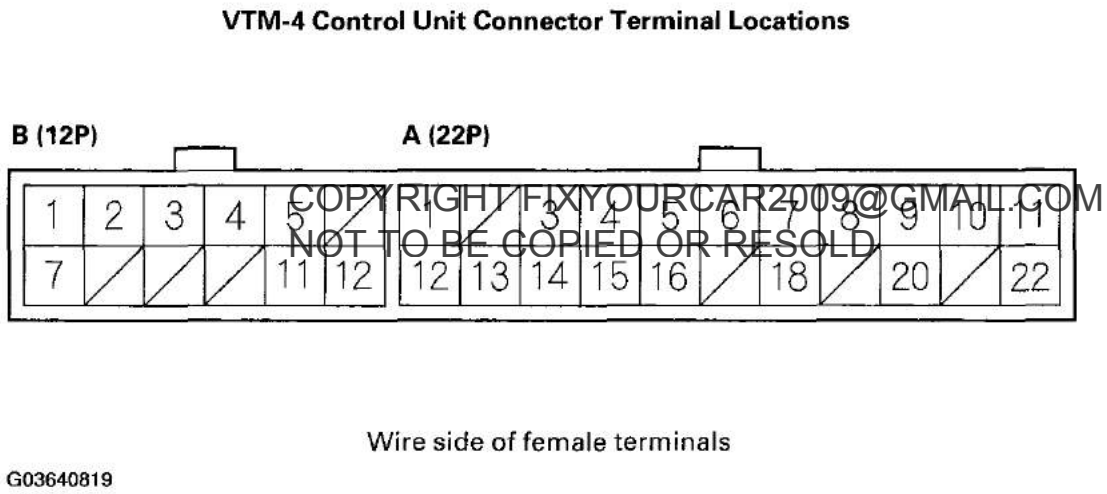

COPYRIGHT FIXYOURCAR2009@GMAIL.COM
NOT TO BE COPIED OR RESOLD

Fig. 13: Identifying VTM-4 Control Unit Inputs And Outputs
Courtesy of AMERICAN HONDA MOTOR CO., INC.

TERMINAL CONDITION SPECIFICATION

Terminal number	Wire color	Terminal sign (Terminal name)	Description	Measurement	
				Conditions	Voltage
A10	BLK	LG1 (Logic ground)	Ground		Below 1 V
A11	WHT	CANH (CAN communication signal high)	CAN communication signal	Ignition switch ON (II)	2.0-4.5 V
A12	GRN/BLU	NEP (Engine revolution)	Detects engine revolution signal	Ignition switch ON (II)	Above 8 V
				Engine running at	5-8 V

cardiagn.com

				1,000 rpm	
A13	BLK	TCL (Temperature coil low)	Detects differential oil temperature sensor signal	Check at normal temperature with the ignition switch ON (II)	1-3.6 V
A14	RED/WHT	WARN 1 (Warning 1)	Drives VTM-4 indicator	VTM-4 indicator on	Below 4 V
				VTM-4 indicator off	Battery Voltage
A15	WHT	TCH (Temperature coil high)	Power supply for differential oil temperature sensor	Check at normal temperature with the ignition switch ON (II)	4-5 V
A16	YEL/BLK	LOCKL (Lock lamp)	Drives VTM-4 LOCK indicator	VTM-4 LOCK indicator on	Below 4 V
				VTM-4 LOCK indicator off	Battery Voltage
A18	LT BLU	LET (Line end tester)	Communication signal to HDS	Ignition switch ON (II) (Not connected to HDS)	About 5 V
A20	BRN	SCS (Service check signal)	Detects service check connector signal	SCS circuit shorted	Below 2 V
				SCS circuit opened	About 5 V
A22	RED	CANL (CAN communication signal low)	CAN communication signal	Ignition switch ON (II)	0.5-3.0 V
B1	BLK/RED	LCOH (Left coil high)	Drives left clutch electromagnetic coil (positive)	Ignition switch ON (II)	Below 1 V
				Engine running	Below 1 V
				VTM-4 lock mode	Above 3 V
B2	BLK/WHT	LCOL (Left coil low)	Drives left clutch electromagnetic coil (negative)	Ignition switch ON (II)	Below 1 V
				Engine running	Below 1 V
				VTM-4 lock mode	Below 1 V
B3	BRN	RCOH (Right coil high)	Drives right clutch electromagnetic coil (positive)	Ignition switch ON (II)	Below 1 V
				Engine running	Below 1 V
				VTM-4 lock mode	Above 3 V
B4	GRN	RCOL (Right coil low)	Drives right clutch electromagnetic coil (negative)	Ignition switch ON (II)	Below 1 V
				Engine running	Below 1 V
				VTM-4 lock mode	Below 1 V
B5	BLK	PG (Power ground)	Ground		Below 0.5 V

COPYRIGHT FIXYOURCAR2009@GMAIL.COM
NOT TO BE COPIED OR RESOLD
cardiagn.com

B7	RED/BLU	PWR (Power)	Power supply for VTM-4 control unit	10 seconds after ignition switch ON (II)	Below 3 V
				Engine running	Battery Voltage
				VTM-4 lock mode	Above 8 V
B11	RED/WHT	WARN 2 (Warning 2)	Drives VTM-4 indicator	VTM-4 indicator on	Below 4 V
				VTM-4 indicator off	Battery Voltage
B12	BLK	LG2 (Logic ground)	Ground		Below 1 V

CIRCUIT DIAGRAM

COPYRIGHT FIXYOURCAR2009@GMAIL.COM
NOT TO BE COPIED OR RESOLD

cardiagn.com

COPYRIGHT FIXYOURCAR2009@GMAIL.COM
NOT TO BE COPIED OR RESOLD

cardiagn.com

Fig. 14: Circuit Diagram (1 Of 2)
Courtesy of AMERICAN HONDA MOTOR CO., INC.

COPYRIGHT FIXYOURCAR2009@GMAIL.COM
NOT TO BE COPIED OR RESOLD

cardiagn.com

Fig. 15: Circuit Diagram (2 Of 2)
Courtesy of AMERICAN HONDA MOTOR CO., INC.

DTC TROUBLESHOOTING

DTC 21-1, 21-2, 22-1, 22-2: FRONT WHEEL SENSORS

1. Clear the DTCs (see **HOW TO CLEAR THE VTM-4 CONTROL UNIT MEMORY**).
2. Test-drive the vehicle, and watch the VTM-4 indicator.

   Does the VTM-4 indicator come on?

   YES - Go to step 3.
   NO - The system is OK at this time.
3. Watch the VSA indicator.

   Does the VSA indicator come on?

   YES - Check the VSA system for DTCs (see **GENERAL TROUBLESHOOTING INFORMATION**).
   NO - Go to step 4.
4. Raise the vehicle, and make sure it is securely supported.
5. Spin the rear wheels by hand, and check for rear brake drag.

   Are the rear brakes dragging?

   YES - Repair cause of rear brake drag, and retest.
   NO - Go to step 6.

COPYRIGHT FIXYOURCAR2009@GMAIL.COM
NOT TO BE COPIED OR RESOLD

6. Turn the ignition switch ON (II).
7. Measure the voltage between the A7 and A9 terminals of the VTM-4 control unit and body ground while rotating the appropriate wheel (1 rotation/second).

TERMINAL CONDITION SPECIFICATION

DTC Appropriate	Terminal
21 (Left-front)	A9
22 (Right-front)	A7

cardiagn.com

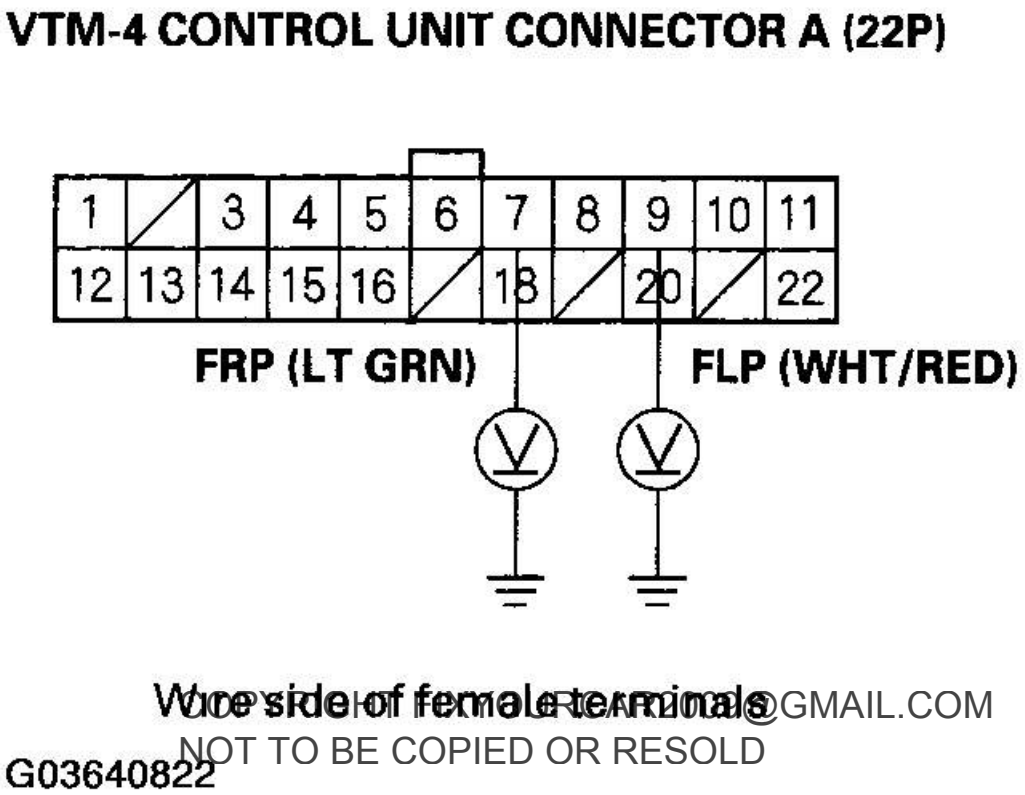

COPYRIGHT FAMILIARCAR2003@GMAIL.COM
NOT TO BE COPIED OR RESOLD

cardiagn.com

Fig. 16: Measuring Voltage Between A7 And A9 Terminals
Courtesy of AMERICAN HONDA MOTOR CO., INC.

Is there 2 V to 3 V?

YES - Go to step 13 .

NO - Go to step 8.

8. Turn the ignition switch OFF.
9. Disconnect the VTM-4 control unit and the VSA modulator-control unit connectors.
10. Check the same terminal of VTM-4 control unit connector A (22P) for continuity to body ground.

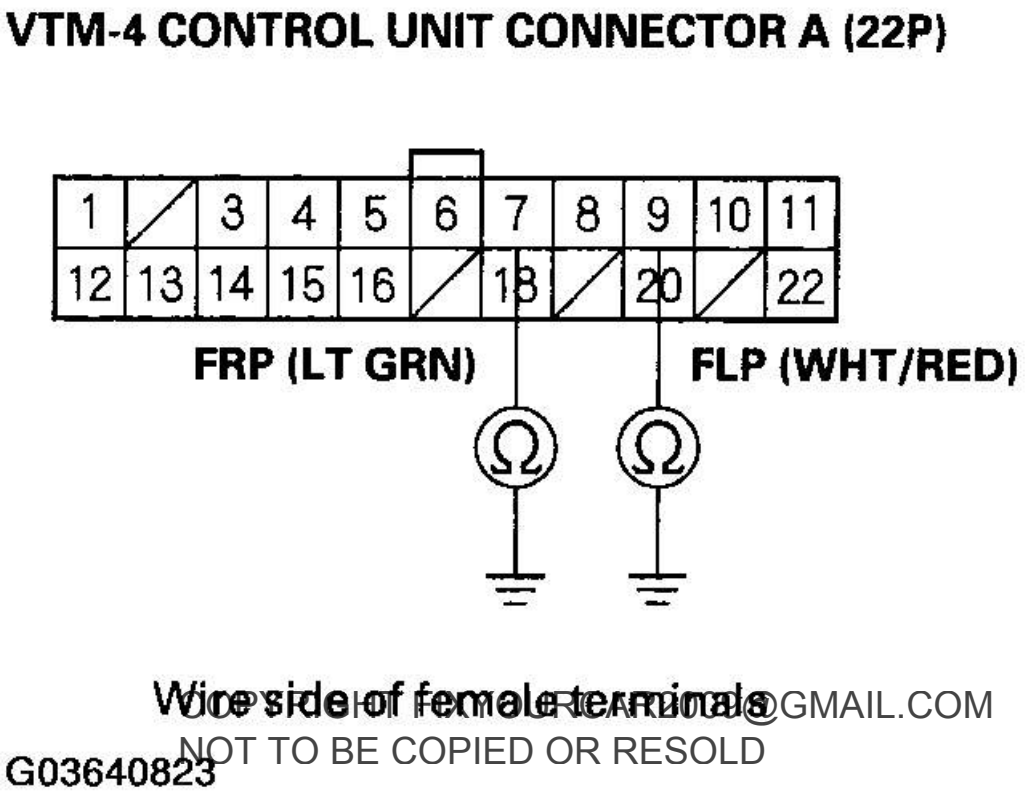

COPYRIGHT FAYOUR CARDIAG@GMAIL.COM
NOT TO BE COPIED OR RESOLD

cardiagn.com

Fig. 17: Checking Same Terminal Of VTM-4 Control Unit Connector
Courtesy of AMERICAN HONDA MOTOR CO., INC.

Is there continuity?

YES - Repair short to ground in the wire between the A7 and/or A9 terminals of the VTM-4 control unit and the VSA modulator-control unit.

NO - Go to step 11.

11. Connect the same terminals of VTM-4 control unit connector A (22P) to body ground with the jumper wires.

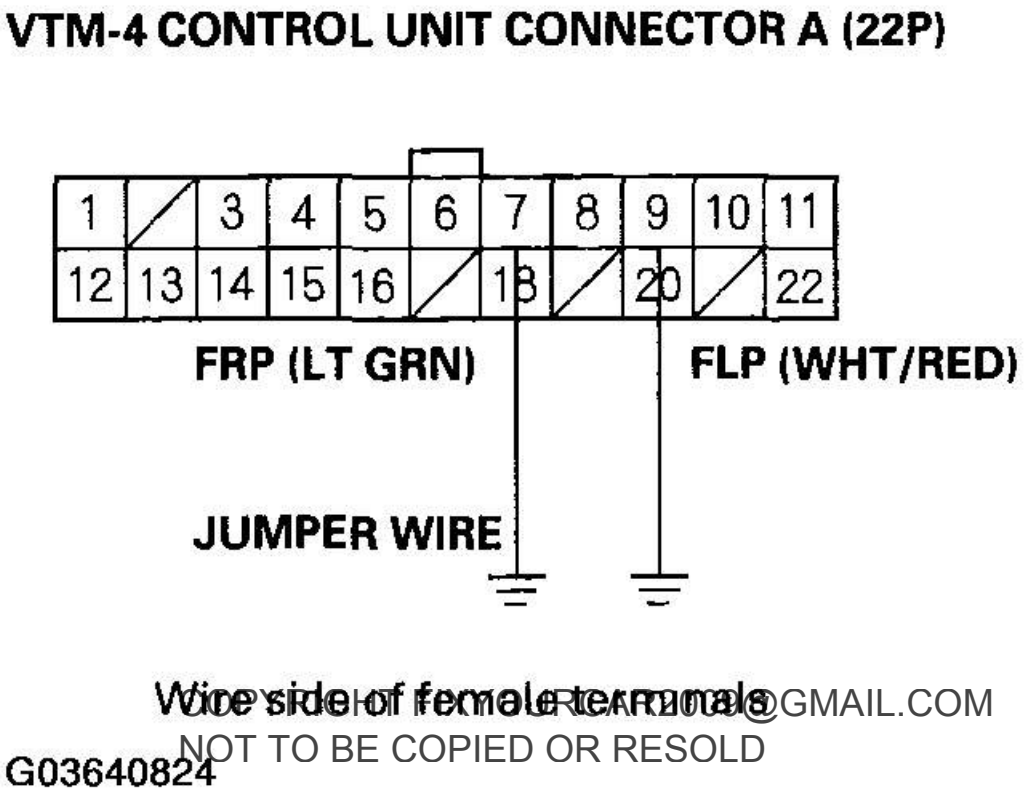

COPYRIGHT FAYOURCAR2008@GMAIL.COM
NOT TO BE COPIED OR RESOLD

cardiagn.com

Fig. 18: Connecting Same Terminals Of VTM-4 Control Unit Connector
Courtesy of AMERICAN HONDA MOTOR CO., INC.

12. Check for continuity between the VSA modulator-control unit connector terminals and body ground.

TERMINAL CONDITION SPECIFICATION

Appropriate wheel	Appropriate Terminal	
	VTM-4 Control Unit	VSA modulator
Right-front	A7	26
Left-front	A9	42

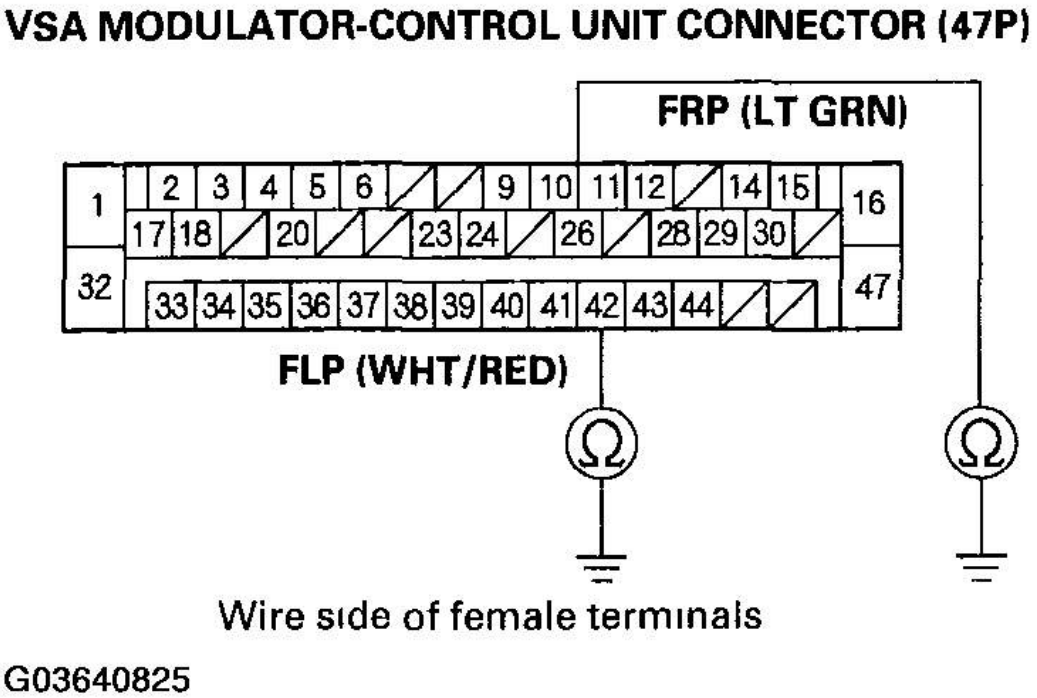

COPYRIGHT FIXYOURCAR2009@GMAIL.COM
NOT TO BE COPIED OR RESOLD

Fig. 19: Checking For Continuity Between VSA Modulator-Control Unit Connector Terminals And Body Ground
Courtesy of AMERICAN HONDA MOTOR CO., INC.

Is there continuity?

YES - Go to step 13.

NO - Repair open in the wire between the A7 and/or A9 terminals of the VTM-4 control unit and the VSA modulator-control unit.

13. Check for loose terminal fit in the VTM-4 control unit and the VSA modulator-control unit connectors. If it is normal, replace the VTM-4 control unit. Test-drive the vehicle, and watch the VTM-4 indicator.

Does the VTM-4 indicator come on?

YES - Replace the VSA modulator-control unit.

NO - The system is OK at this time.

DTC 23-1, 23-2, 24-1, 24-2: REAR WHEEL SENSORS

1. Clear the DTCs (see **HOW TO CLEAR THE VTM-4 CONTROL UNIT MEMORY**).
2. Start the engine, shift the transmission into D. Drive the vehicle at speeds over 25 mph (40 km/h), while

cardiagn.com

keeping the engine rpm below 2,500 for at least 30 seconds. Watch the VTM-4 indicator.

NOTE: Be careful not to overheat the rear differential clutch system.

3. Watch the VTM-4 indicator.

   Does the VTM-4 indicator come on?

   YES - Go to step 4.

   NO - The system is OK at this time.

4. Watch the ABS indicator.

   Does the ABS indicator come on?

   YES -Check the VSA system for DTCs (see **GENERAL TROUBLESHOOTING INFORMATION**).

   NO - Go to step 5.

5. Raise the vehicle, and make sure it is securely supported.
6. Spin the rear wheels by hand, and check for rear brake drag.

   Are the rear brakes dragging?

COPYRIGHT FIXYOURCAR2009@GMAIL.COM
NOT TO BE COPIED OR RESOLD

   YES - Repair cause of rear brake drag, and retest.

   NO - Go to step 7.

7. Turn the ignition switch ON (II).
8. Measure the voltage between the A3 and A5 terminal of the VTM-4 control unit and body ground while rotating the appropriate wheel (1 rotation/ second).

TERMINAL CONDITION SPECIFICATION

DTC Appropriate	Terminal
23 (Left-rear)	A5
24 (Right-rear)	A3

cardiagn.com

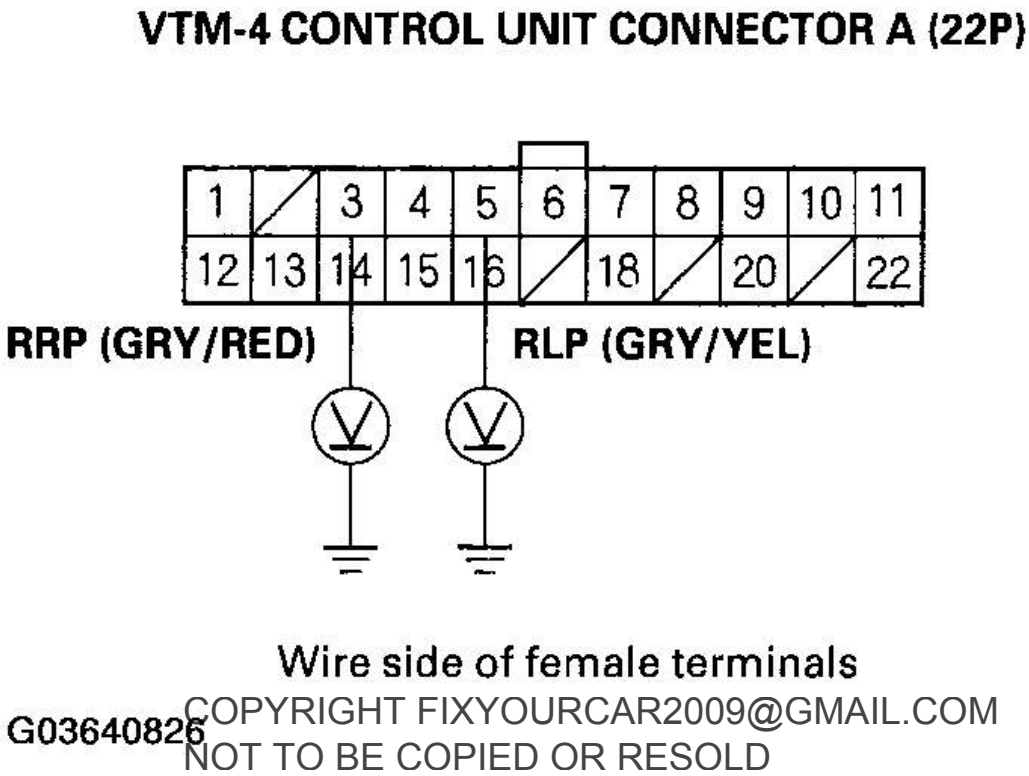

COPYRIGHT FIXYOURCAR2009@GMAIL.COM
NOT TO BE COPIED OR RESOLD

Fig. 20: Measuring Voltage Between A3 And A5 Terminal
Courtesy of AMERICAN HONDA MOTOR CO., INC.

Is there 2 V to 3 V?

YES - Go to step 15 .

NO - Go to step 9.

9. Turn the ignition switch OFF.
10. Disconnect the VTM-4 control unit and the VSA modulator-control unit connectors.
11. Check the same terminal of VTM-4 control unit connector A (22P) for continuity to body ground.

cardiagn.com

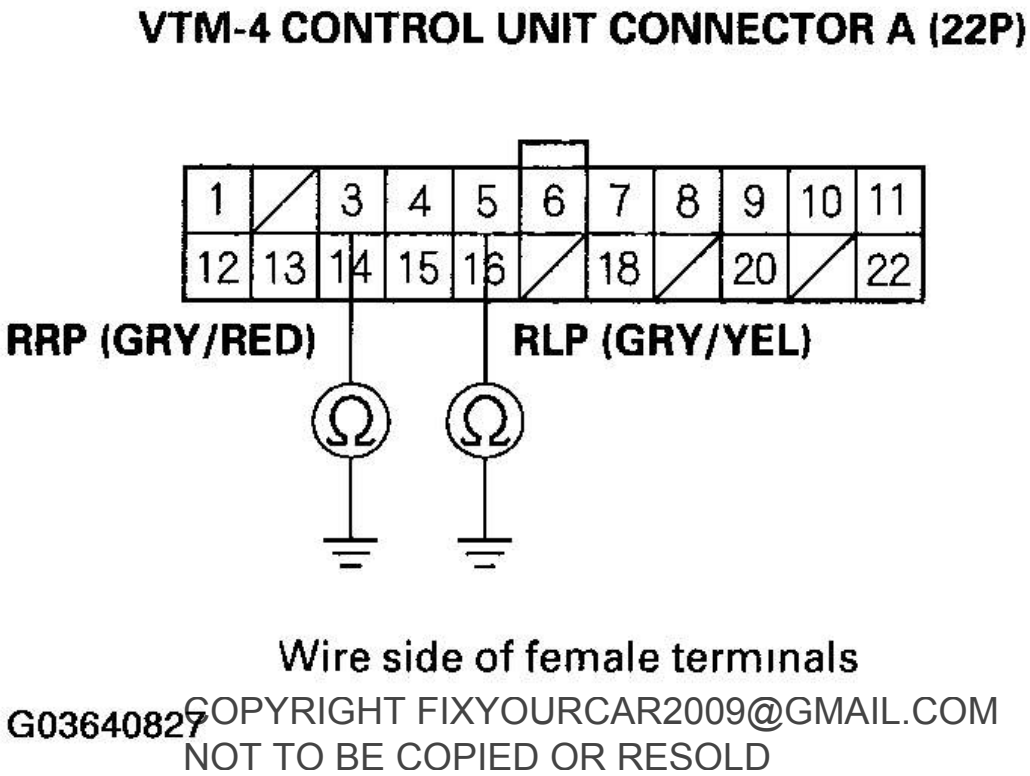

COPYRIGHT FIXYOURCAR2009@GMAIL.COM
NOT TO BE COPIED OR RESOLD

cardiagn.com

Fig. 21: Checking Same Terminal Of VTM-4 Control Unit Connector A (22P) For Continuity To Body Ground
Courtesy of AMERICAN HONDA MOTOR CO., INC.

Is there continuity?

YES - Repair short to ground in the wire between the A3 and/or A5 terminals of the VTM-4 control unit and the VSA modulator-control unit.

NO - Go to step 12.

12. Connect the same terminals of VTM-4 control unit connector A (22P) to body ground with the jumper wires.

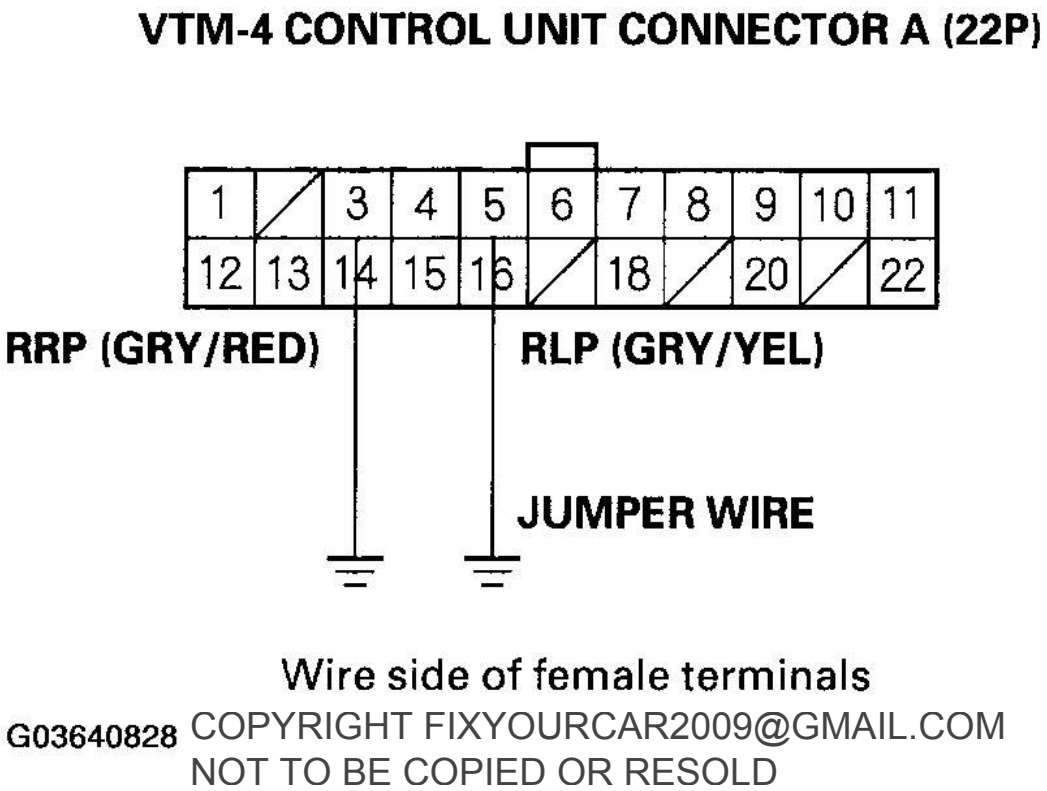

COPYRIGHT FIXYOURCAR2009@GMAIL.COM
NOT TO BE COPIED OR RESOLD

Fig. 22: Connecting Same Terminals Of VTM-4 Control Unit Connector A (22P) To Body Ground With Jumper Wires
Courtesy of AMERICAN HONDA MOTOR CO., INC.

13. Check for continuity between the VSA modulator-control unit connector terminals and body ground.

TERMINAL CONDITION SPECIFICATION

Appropriate wheel	Appropriate Terminal	
	VTM-4 Control Unit	VSA modulator
Right-rear	A3	41
Left-rear	A5	9

cardiagn.com

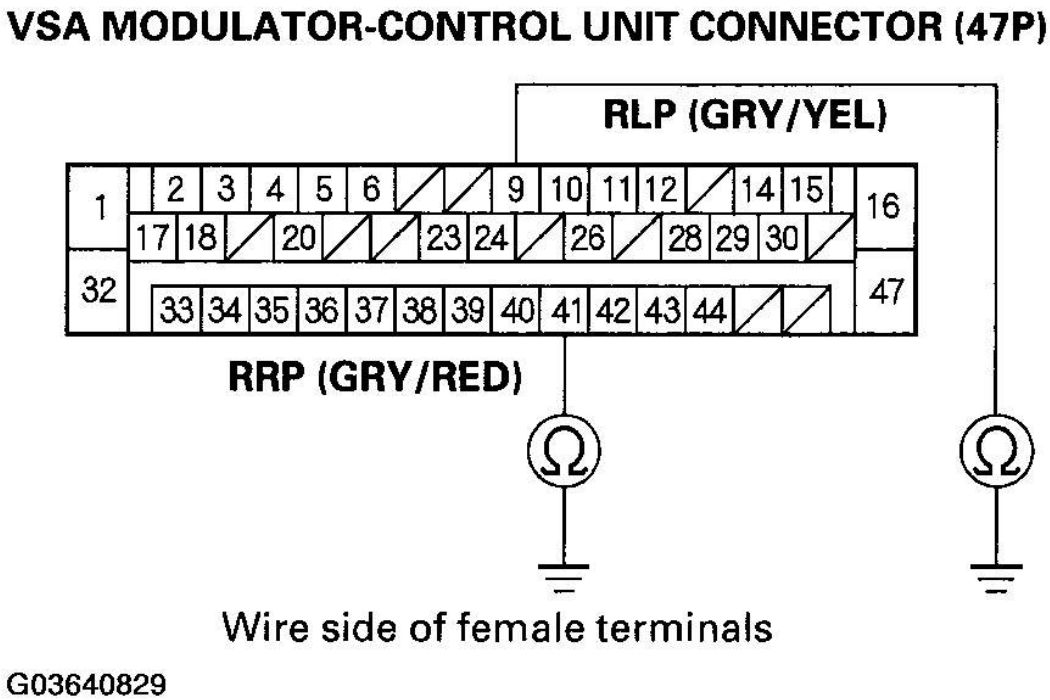

COPYRIGHT FIXYOURCAR2009@GMAIL.COM
NOT TO BE COPIED OR RESOLD

Fig. 23: Checking For Continuity Between VSA Modulator-Control Unit Connector Terminals And Body Ground
Courtesy of AMERICAN HONDA MOTOR CO., INC.

Is there continuity?

YES - Go to step 14.

NO - Repair open in the wire between the A3 and/or A5 terminals of the VTM-4 control unit and the VSA modulator-control unit.

14. Check for loose terminal fit in the VTM-4 control unit and the VSA modulator-control unit connectors. If it is normal, replace the VTM-4 control unit, then go to step 15.
15. Start the engine, shift the transmission into D. Drive the vehicle at speeds over 25 mph (40 km/h), while keeping the engine rpm below 2,500 for at least 30 seconds. Watch the VTM-4 indicator.

NOTE: Be careful not to overheat the rear differential clutch system.

Does the VTM-4 indicator come on?

YES - Replace the VSA modulator-control unit.

NO - The system is OK at this time.

cardiagn.com

DTC 26-1: VSA MODULATOR-CONTROL UNIT OR WIRE HARNESS

1. Clear the DTCs (see **HOW TO CLEAR THE VTM-4 CONTROL UNIT MEMORY**).
2. Test-drive the vehicle, and watch the VTM-4 indicator.

   Does the VTM-4 indicator come on?

   YES - Go to step 3.

   NO - The system is OK at this time.
3. Watch the VSA indicator.

   Does the VSA indicator come on?

   YES - Check the VSA system for DTCs (see **GENERAL TROUBLESHOOTING INFORMATION**).

   NO - Go to step 4.
4. Raise the vehicle, and make sure it is securely supported.
5. Turn the ignition switch ON (II).
6. Measure the voltage between the A3, A5, A7, and A9 terminals of the VTM-4 control unit and body ground while rotating the appropriate wheel one rotation a second.

COPYRIGHT FIXYOURCAR2009@GMAIL.COM
NOT TO BE COPIED OR RESOLD

TERMINAL CONDITION SPECIFICATION

Appropriate wheel	Appropriate Terminal
Left-front	A9
Right-front	A7
Left-rear	A5
Right-rear	A3

cardiagn.com

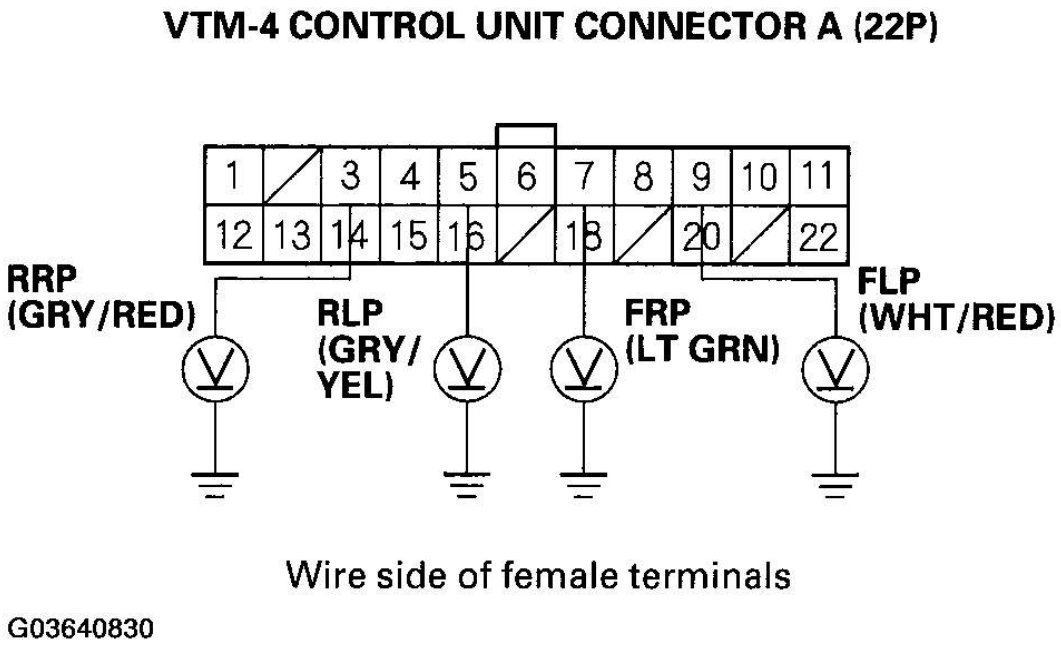

Fig. 24: Measuring Voltage Between A3, A5, A7, And A9 Terminals
Courtesy of AMERICAN HONDA MOTOR CO., INC.

COPYRIGHT FIXYOURCAR2009@GMAIL.COM
NOT TO BE COPIED OR RESOLD

Are all four readings 2 V to 3 V?

YES - Check for loose terminal fit in the VTM-4 control unit. If it is normal, replace the VTM-4 control unit.

NO - Check for loose wires or poor connections between the VTM-4 control unit and the VSA modulator-control unit. If it is normal, replace the VSA modulator-control unit.

DTC 37-1, 38-1: ENGINE RPM SIGNAL CIRCUIT

1. Clear the DTCs (see **HOW TO CLEAR THE VTM-4 CONTROL UNIT MEMORY**).
2. Test-drive the vehicle, and watch the VTM-4 indicator.

   Does the VTM-4 indicator come on?

   YES - Go to step 3.

   NO - The system is OK at this time.
3. Watch the MIL.

   Does the MIL come on?

cardiagn.com

YES - Check the fuel and emission system for DTCs (see **GENERAL TROUBLESHOOTING INFORMATION**).

NO - Go to step 4.

4. Disconnect connector A (22P) from the VTM-4 control unit.
5. Measure the voltage between the A12 terminal of the VTM-4 control unit and body ground with the engine running.

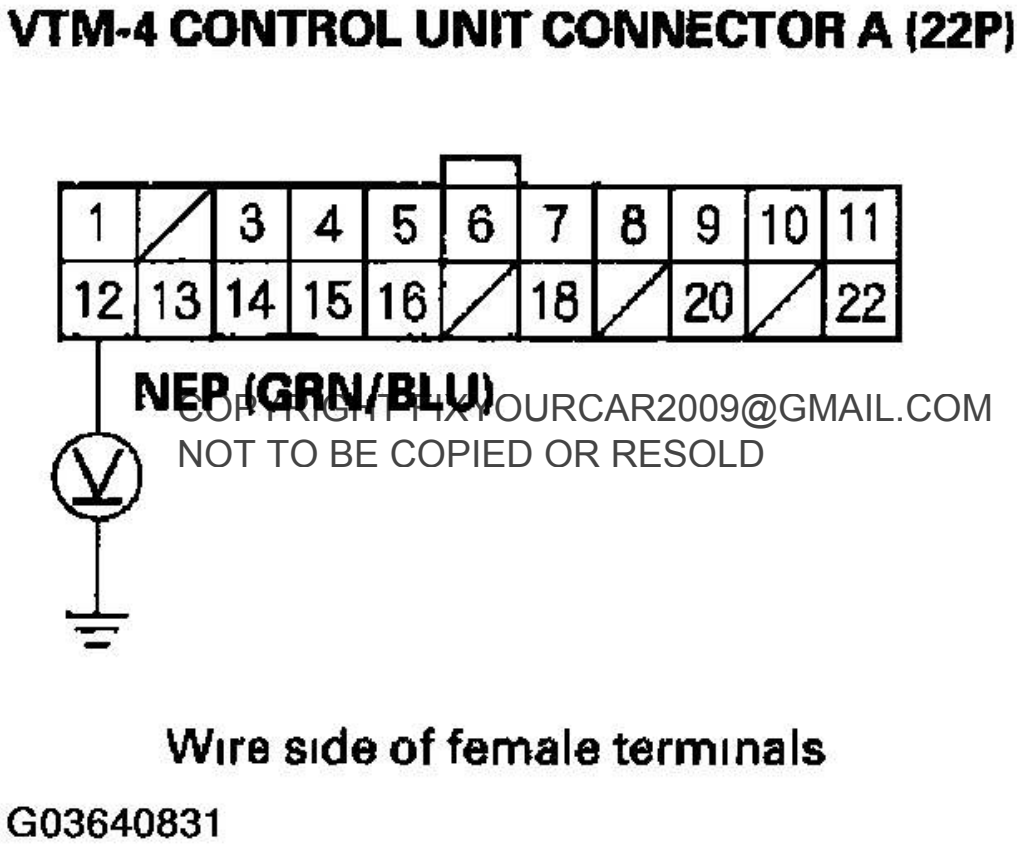

COPYRIGHT FIXYOURCAR2009@GMAIL.COM
NOT TO BE COPIED OR RESOLD
cardiagn.com

Fig. 25: Measuring Voltage Between A12 Terminal Of VTM-4 Control Unit And Body Ground
Courtesy of AMERICAN HONDA MOTOR CO., INC.

VOLTAGE CONDITION SPECIFICATION

Condition	Voltage
Ignition switch ON (II)	Above 8 V
Engine running at 1,000 rpm	5-8 V

Is the voltage correct?

YES - Go to step 13 .
NO - Go to step 6.

6. Turn the ignition switch OFF.
7. Disconnect PCM connector B (56P) and gauge assembly connector A (30P).
8. Turn the ignition switch ON (II).
9. Measure the voltage between the A12 terminal of the VTM-4 control unit and body ground.

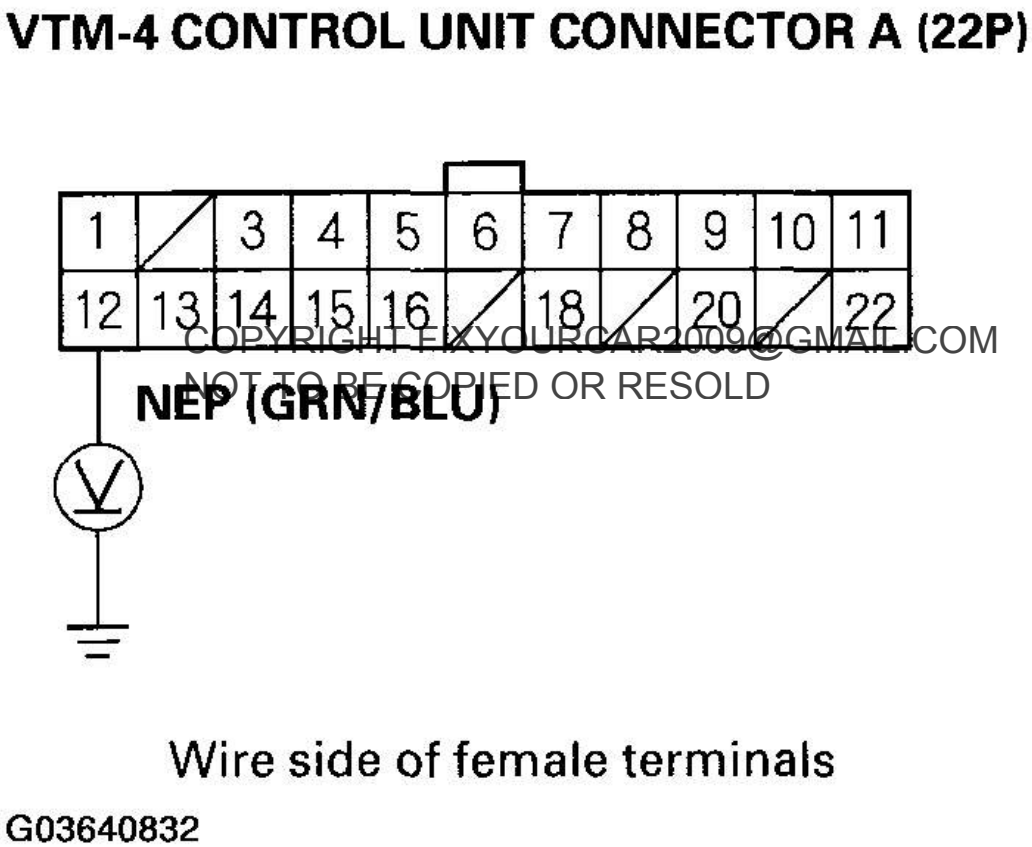

COPYRIGHT FIXYOURCAR2009@GMAIL.COM
NOT TO BE COPIED OR RESOLD

cardiagn.com

Fig. 26: Measuring Voltage Between A12 Terminal Of VTM-4 Control Unit And Body Ground
Courtesy of AMERICAN HONDA MOTOR CO., INC.

Is there voltage?

YES - Repair short to power in the wire between the A12 terminal of the VTM-4 control unit and the B27 terminal of the PCM.

NO - Go to step 10.

10. Turn the ignition switch OFF.
11. Check for continuity between the A12 terminal of the VTM-4 control unit and body ground.

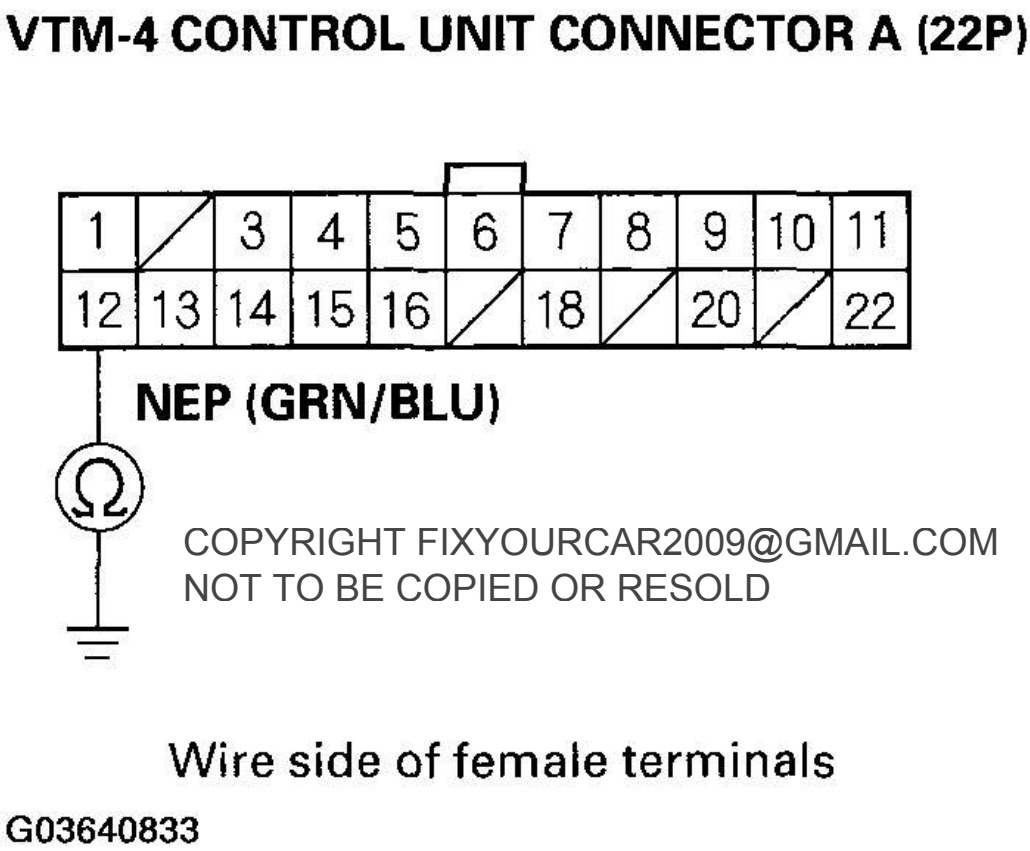

COPYRIGHT FIXYOURCAR2009@GMAIL.COM
NOT TO BE COPIED OR RESOLD

cardiagn.com

Fig. 27: Checking For Continuity Between A12 Terminal Of VTM-4 Control Unit And Body Ground
Courtesy of AMERICAN HONDA MOTOR CO., INC.

Is there continuity?

YES - Repair short to ground in the wire between the A12 terminal of the VTM-4 control unit, the B27 terminal of the PCM, and the A13 terminal of the gauge assembly.

NO - Go to step 12.

12. Connect the A12 terminal of the VTM-4 control unit connector A (22P) to body ground with the jumper wire, then check for continuity between the B27 terminal of the PCM, the A13 terminal of the gauge assembly, and body ground.

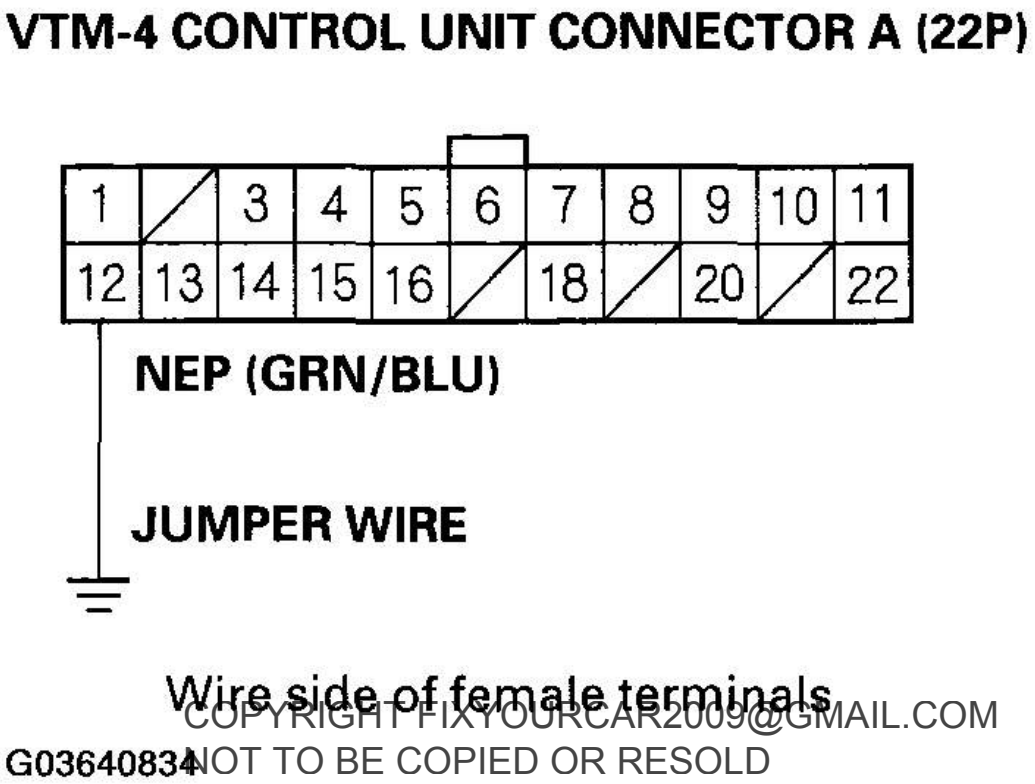

COPYRIGHT FIXYOURCAR2009@GMAIL.COM
NOT TO BE COPIED OR RESOLD

cardiagn.com

Fig. 28: Connecting A12 Terminal Of VTM-4 Control Unit Connector
Courtesy of AMERICAN HONDA MOTOR CO., INC.

2003 model:

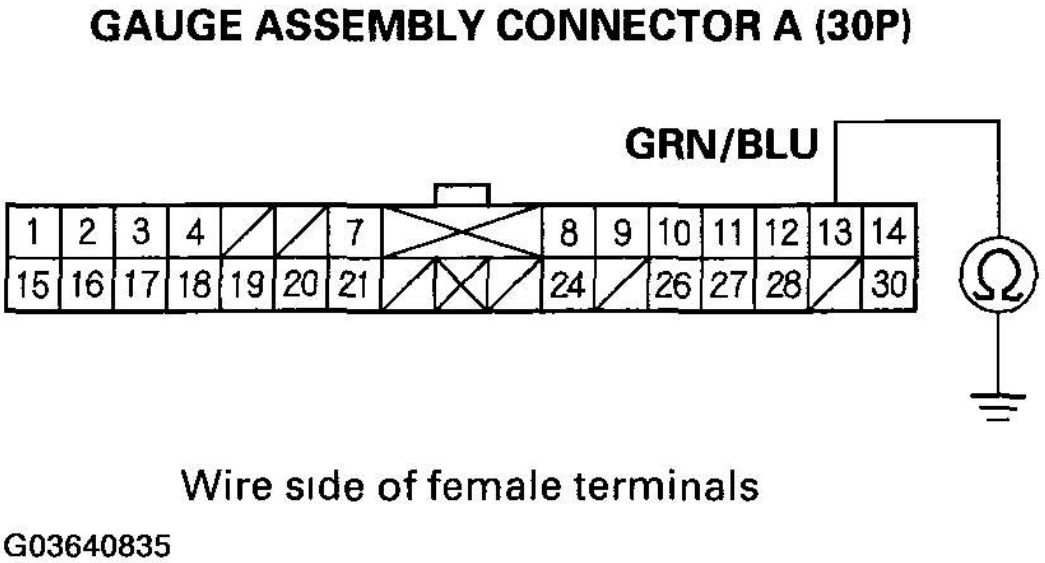

Fig. 29: Gauge Assembly Connector 2003 Model
Courtesy of AMERICAN HONDA MOTOR CO., INC.

COPYRIGHT FIXYOURCAR2009@GMAIL.COM
NOT TO BE COPIED OR RESOLD

2004-2006 models:

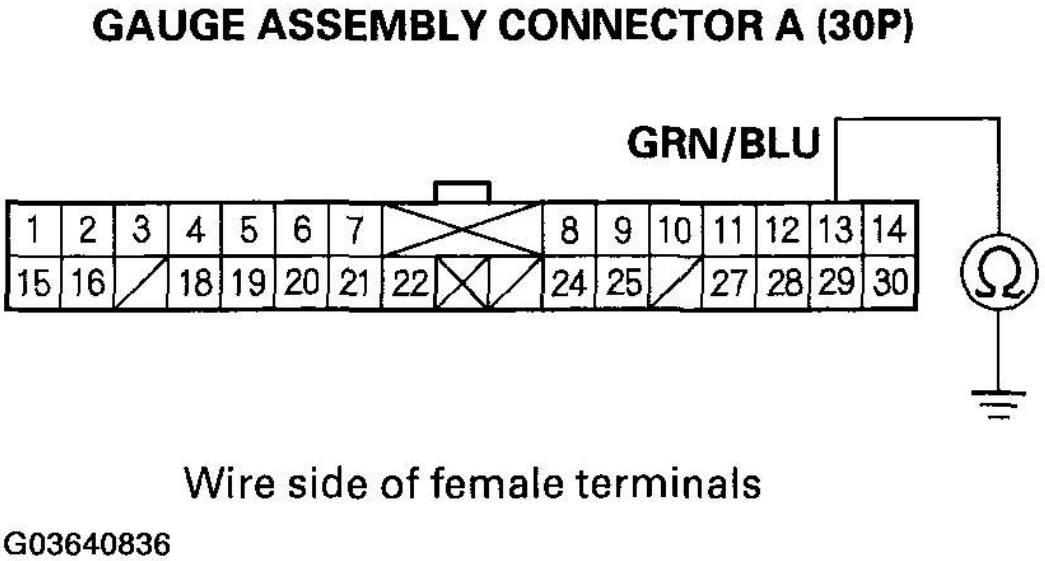

cardiagn.com

Fig. 30: Gauge Assembly Connector 2004-2006 Model (1 Of 2)
Courtesy of AMERICAN HONDA MOTOR CO., INC.

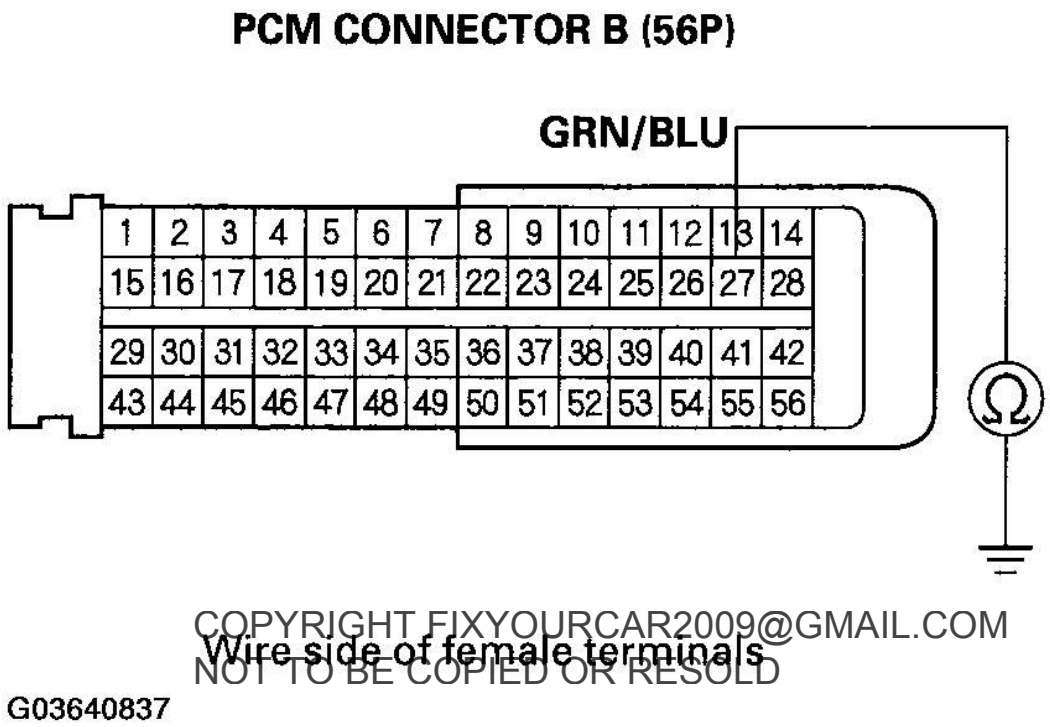

COPYRIGHT FIXYOURCAR2009@GMAIL.COM
NOT TO BE COPIED OR RESOLD

cardiagn.com

Fig. 31: Gauge Assembly Connector 2004-2006 Model (2 Of 2)
Courtesy of AMERICAN HONDA MOTOR CO., INC.

Is there continuity?

YES - Go to step 13.

NO - Repair open in the wire between the A12 terminal of the VTM-4 control unit, the B27 terminal of the PCM, and the A13 terminal of the gauge assembly.

13. Check for loose terminal fit in the VTM-4 control unit, PCM connectors, and the gauge assembly connectors. If it is normal, replace the VTM-4 control unit. Test-drive the vehicle, and watch the VTM-4 indicator.

Does the VTM-4 indicator come on?

YES - Replace the PCM or gauge assembly.

NO - The system is OK at this time.

DTC 41-1, 41-2: CAN COMMUNICATION (PCM/ VSA SYSTEM)

1. Clear the DTC (see **HOW TO CLEAR THE VTM-4 CONTROL UNIT MEMORY**).
2. Test-drive the vehicle, and watch the VTM-4 indicator.

   Does the VTM-4 indicator come on?

   YES - Go to step 3.
   NO - The system is OK at this time.
3. Connect the HDS to the 16P Data Link Connector (DLC), and check for a PCM/VSA system DTC.

   Is there a DTC?

   YES - Troubleshoot the PCM/VSA system for the cause of the DTC.
   NO - Go to step 4.
4. Disconnect connector A (22P) from the VTM-4 control unit, connector B (56P) from the PCM, the 47P connector from the VSA modulator-control unit, and connector A (20P) from the navigation unit.
5. Turn the ignition switch ON (II).
6. Measure the voltage between the A11 terminal of the VTM-4 control unit and body ground.

COPYRIGHT FIXYOURCAR2009@GMAIL.COM
NOT TO BE COPIED OR RESOLD

cardiagn.com

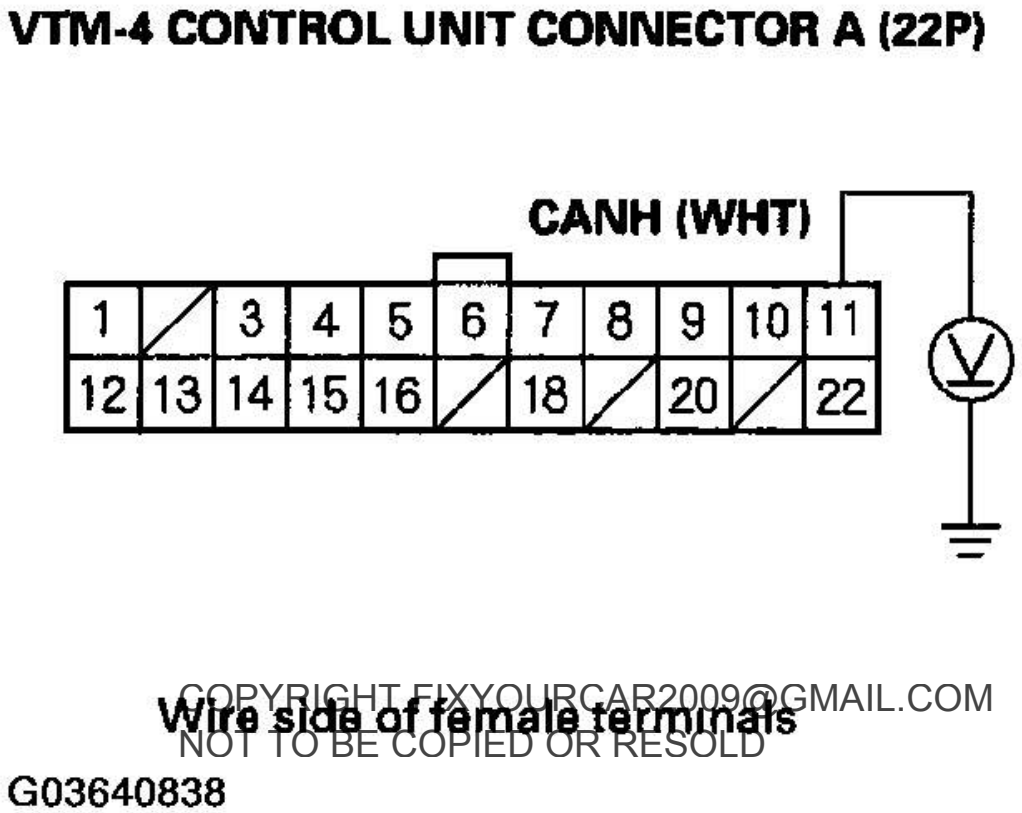

COPYRIGHT FIXYOURCAR2009@GMAIL.COM
NOT TO BE COPIED OR RESOLD

cardiagn.com

Fig. 32: Measuring Voltage Between A11 Terminal Of VTM-4 Control Unit And Body Ground
Courtesy of AMERICAN HONDA MOTOR CO., INC.

Is there voltage?

YES - Repair short to power in the wire between the A11 terminal of the VTM-4 control unit and the B16 terminal of the PCM, the 14 terminal of the VSA modulator-control unit, the A8 terminal of the navigation unit.

NO - Go to step 7.

7. Turn the ignition switch OFF.
8. Check for continuity between the A11 terminal of the VTM-4 control unit and body ground.

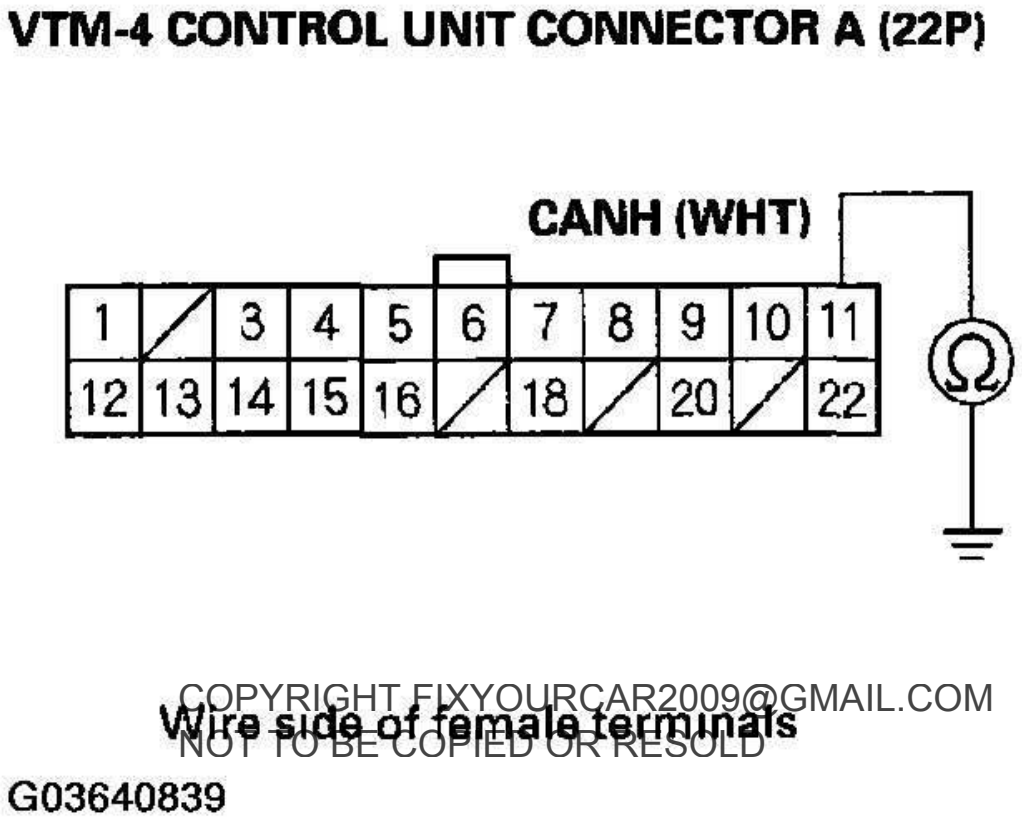

COPYRIGHT FIXYOURCAR2009@GMAIL.COM
NOT TO BE COPIED OR RESOLD

cardiagn.com

Fig. 33: Checking For Continuity Between A11 Terminal Of VTM-4 Control Unit And Body Ground
Courtesy of AMERICAN HONDA MOTOR CO., INC.

Is there continuity?

YES - Repair short to ground in the wire between the A11 terminal of the VTM-4 control unit and the B16 terminal of the PCM, the 14 terminal of the VSA modulator-control unit, the A8 terminal of the navigation unit.

NO - Go to step 9.

9. Connect the A11 terminal of the VTM-4 control unit connector A (22P) to body ground with a jumper wire, then check for continuity between the B16 terminal of the PCM, the 14 terminal of the VSA modulator-control unit, the A8 terminal of the navigation unit and body ground.

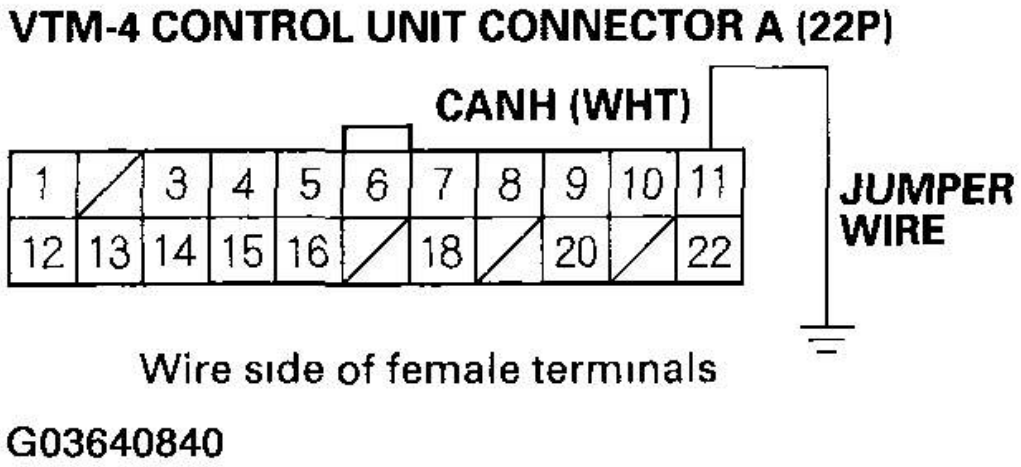

Fig. 34: Connecting Terminal Of VTM-4 Control Unit Connector (1 Of 4)
Courtesy of AMERICAN HONDA MOTOR CO., INC.

COPYRIGHT FIXYOURCAR2009@GMAIL.COM
NOT TO BE COPIED OR RESOLD

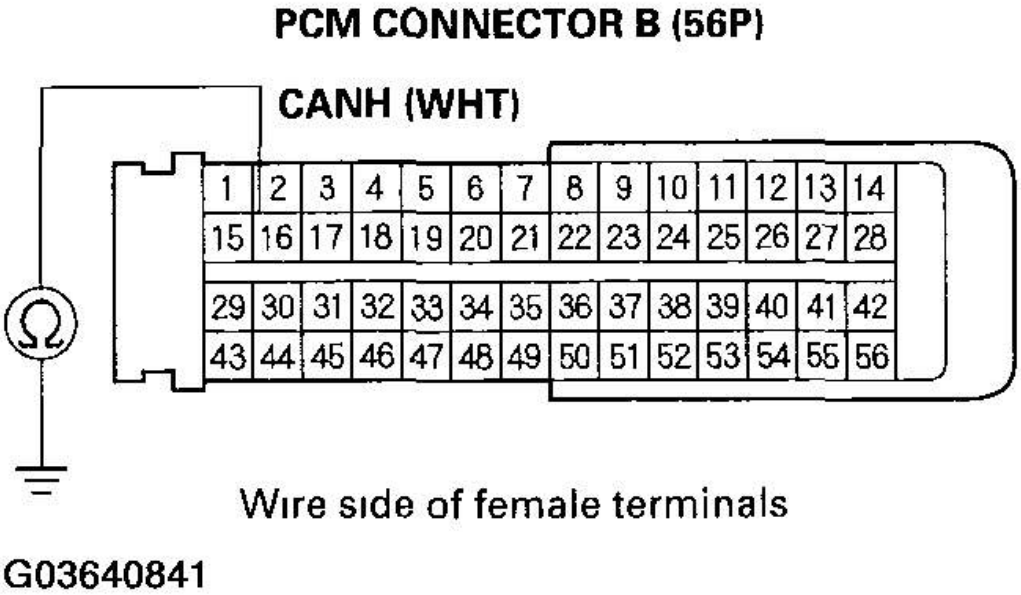

Fig. 35: Connecting Terminal Of VTM-4 Control Unit Connector (2 Of 4)

cardiagn.com

Courtesy of AMERICAN HONDA MOTOR CO., INC.

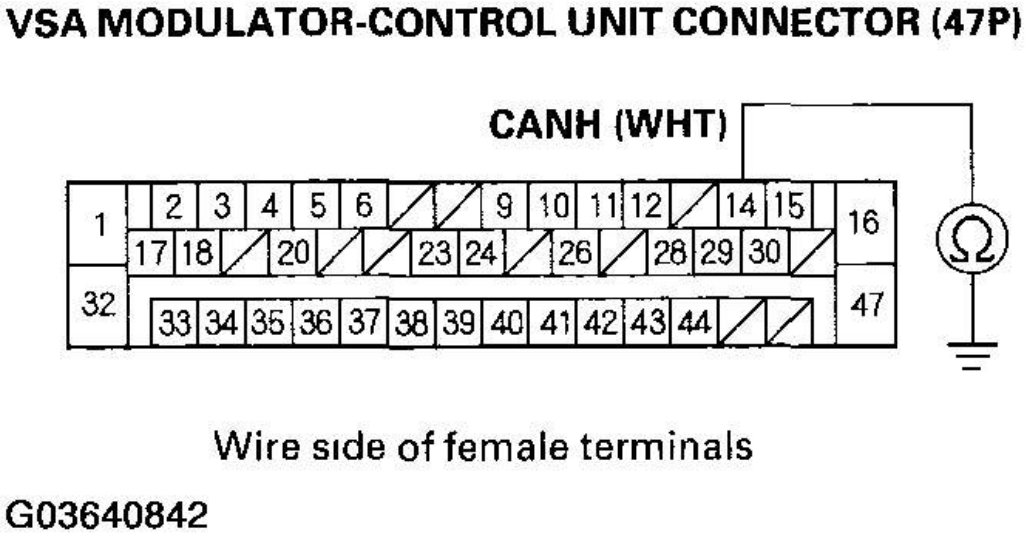

COPYRIGHT FIXYOURCAR2009@GMAIL.COM
NOT TO BE COPIED OR RESOLD

Fig. 36: Connecting Terminal Of VTM-4 Control Unit Connector (3 Of 4)
Courtesy of AMERICAN HONDA MOTOR CO., INC.

cardiagn.com

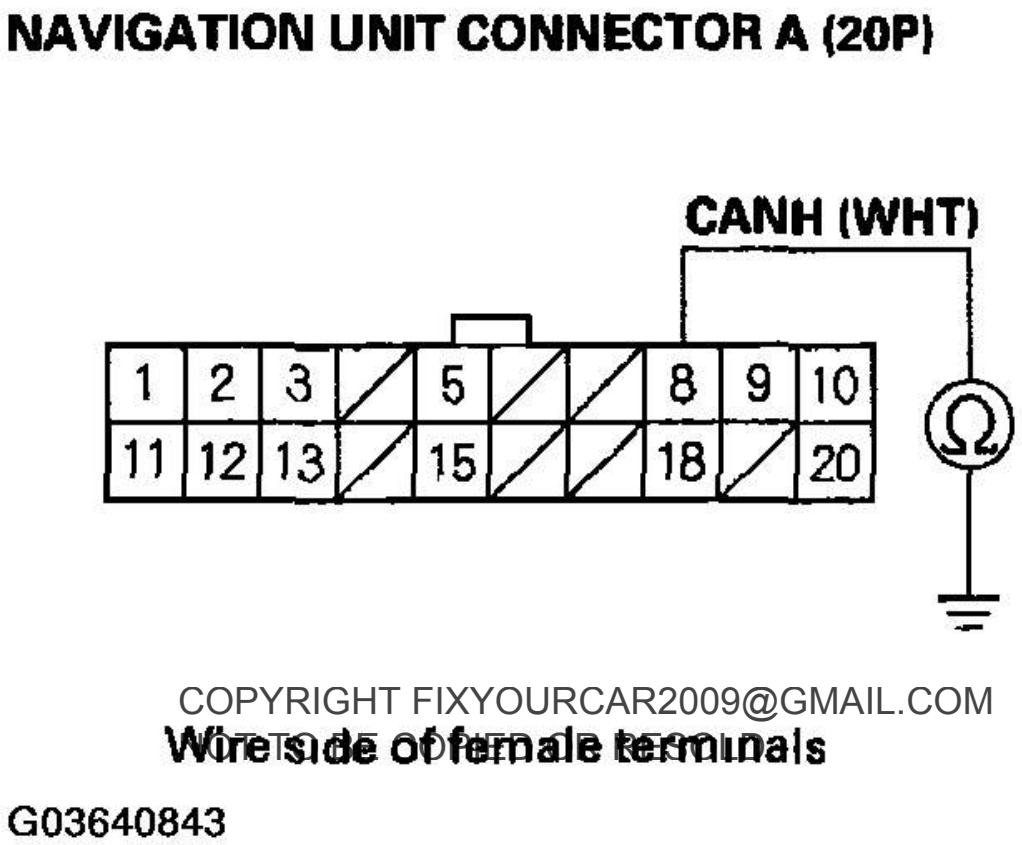

COPYRIGHT FIXYOURCAR2009@GMAIL.COM
NOT TO BE SOLD OR REPRODUCED

cardiagn.com

Fig. 37: Connecting Terminal Of VTM-4 Control Unit Connector (4 Of 4)
Courtesy of AMERICAN HONDA MOTOR CO., INC.

Is there continuity?

YES - Go to step 10.

NO - Repair open in the wire between the A11 terminal of the VTM-4 control unit and B16 terminal of the PCM, the 14 terminal of the VSA modulator-control unit, the A8 terminal of the navigation unit.

10. Disconnect the A (22P) connector from the VTM-4 control unit, the B (56P) connector from the PCM, the 47P connector from the VSA modulator-control unit, and the A (20P) connector from the navigation unit.
11. Turn the ignition switch ON (II).
12. Measure the voltage between the A22 terminal of the VTM-4 control unit and body ground.

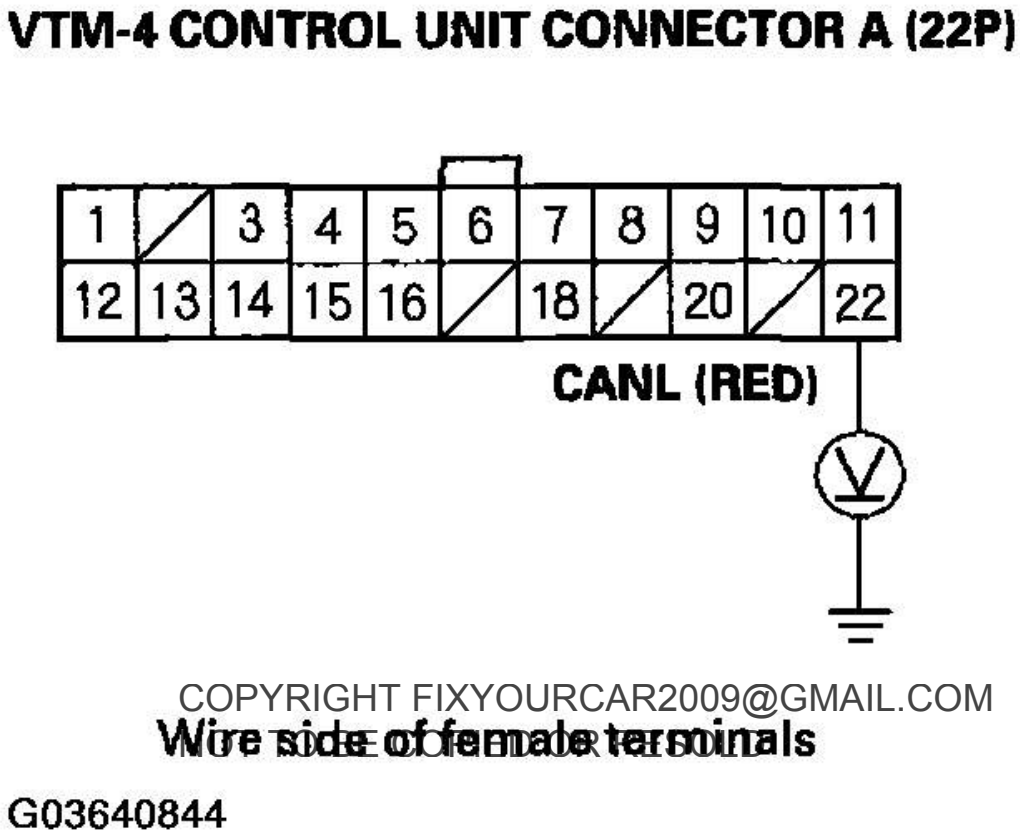

COPYRIGHT FIXYOURCAR2009@GMAIL.COM

cardiagn.com

Fig. 38: Measuring Voltage Between A22 Terminal Of VTM-4 Control Unit And Body Ground
Courtesy of AMERICAN HONDA MOTOR CO., INC.

Is there voltage?

YES - Repair short to power in the wire between the A22 terminal of the VTM-4 control unit and the B15 terminal of the PCM, the 30 terminal of the VSA modulator-control unit, the A18 terminal of the navigation unit.

NO - Go to step 13.

13. Turn the ignition switch OFF.
14. Check for continuity between the A22 terminal of the VTM-4 control unit and body ground.

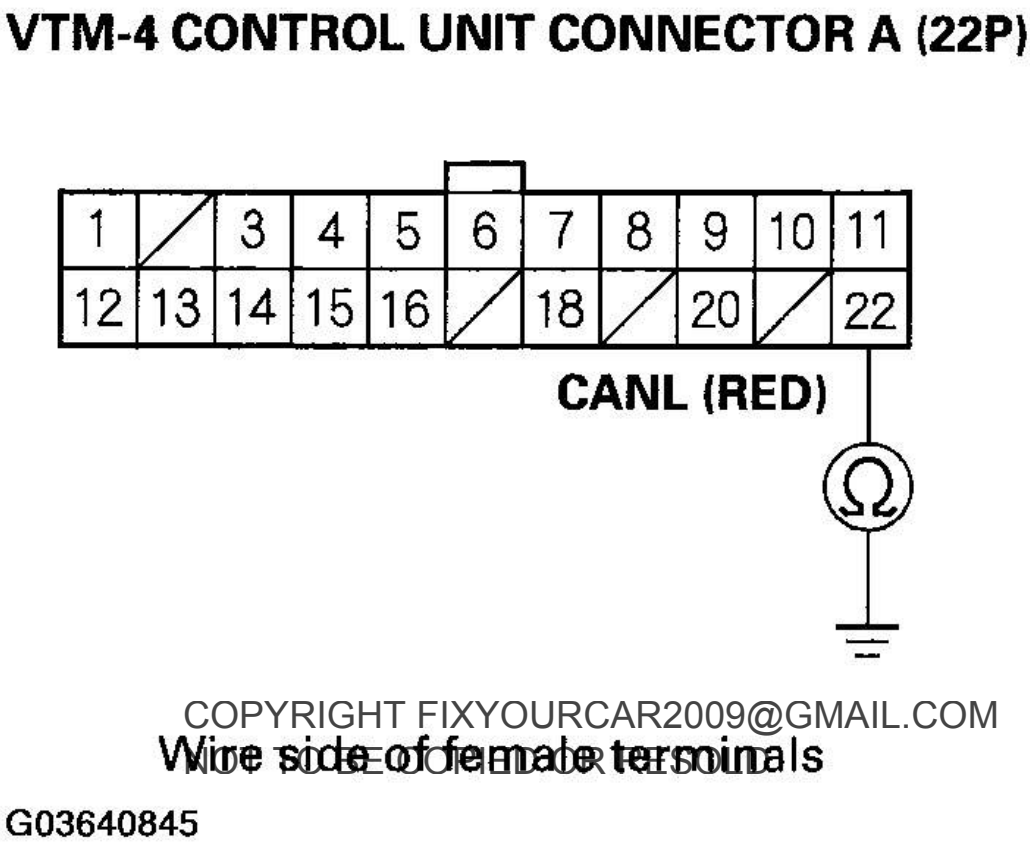

COPYRIGHT FIXYOURCAR2009@GMAIL.COM
NOT TO BE SOLD OR REPRODUCED

cardiagn.com

Fig. 39: Checking For Continuity Between A22 Terminal Of VTM-4 Control Unit And Body Ground
Courtesy of AMERICAN HONDA MOTOR CO., INC.

Is there continuity?

YES - Repair short to ground in the wire between the A22 terminal of the VTM-4 control unit and the B15 terminal of the PCM, the 30 terminal of the VSA modulator-control unit, the A18 terminal of the navigation unit.

NO - Go to step 15.

15. Connect the A22 terminal of the VTM-4 control unit connector A (22P) to body ground with a jumper wire, then check for continuity between the B15 terminal of the PCM, the 30 terminal of the VSA modulator-control unit, the A18 terminal of the navigation unit and body ground.

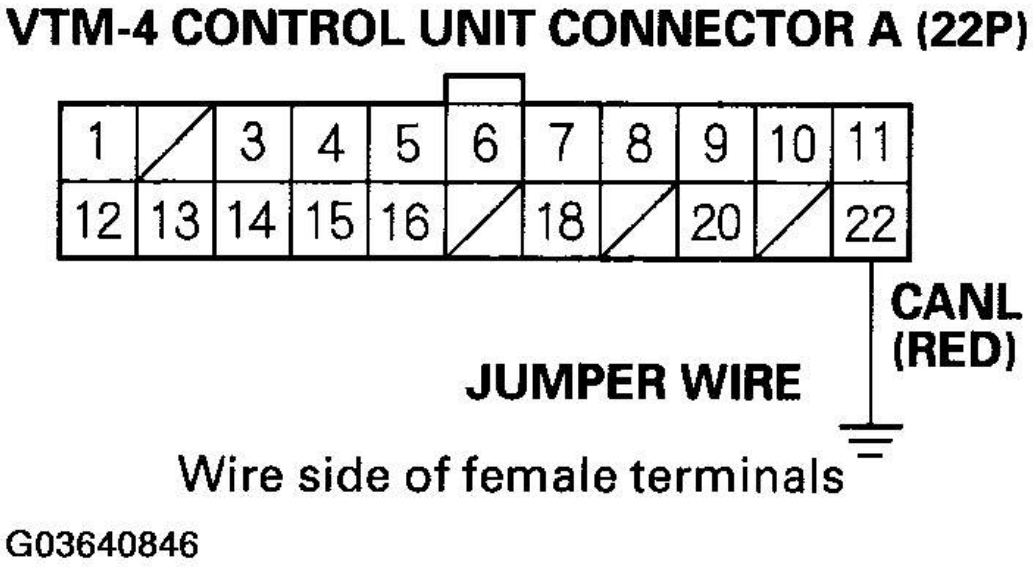

Fig. 40: Connecting A22 Terminal Of VTM-4 Control Unit Connector (1 Of 4)
Courtesy of AMERICAN HONDA MOTOR CO., INC.

COPYRIGHT FIXYOURCAR2009@GMAIL.COM
NOT TO BE COPIED OR RESOLD

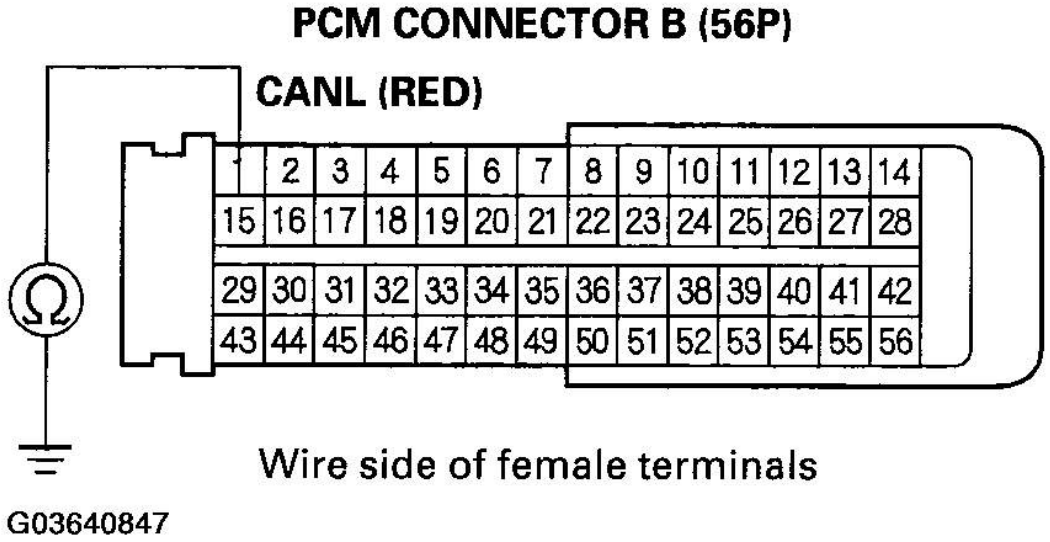

Fig. 41: Connecting A22 Terminal Of VTM-4 Control Unit Connector (2 Of 4)
Courtesy of AMERICAN HONDA MOTOR CO., INC.

cardiagn.com

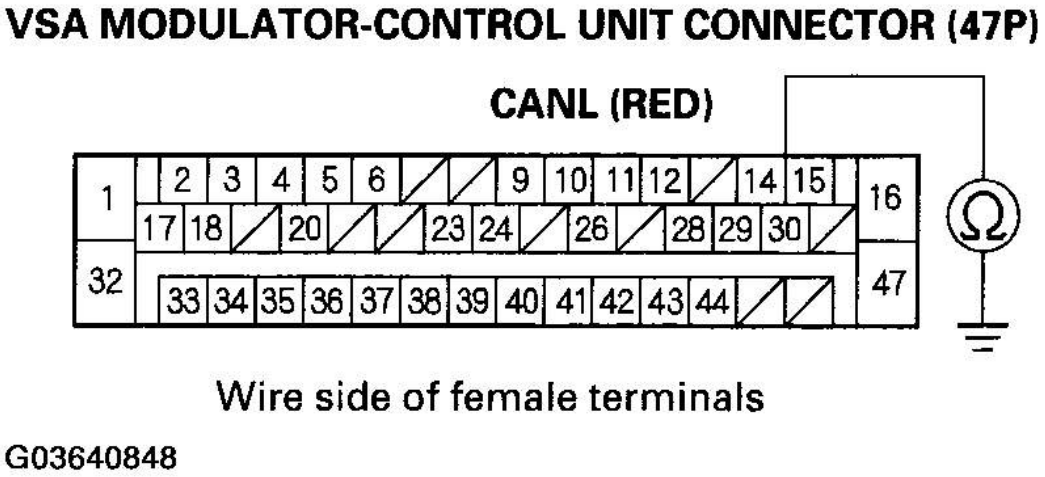

Fig. 42: Connecting A22 Terminal Of VTM-4 Control Unit Connector (3 Of 4)
Courtesy of AMERICAN HONDA MOTOR CO., INC.

COPYRIGHT FIXYOURCAR2009@GMAIL.COM
NOT TO BE COPIED OR RESOLD

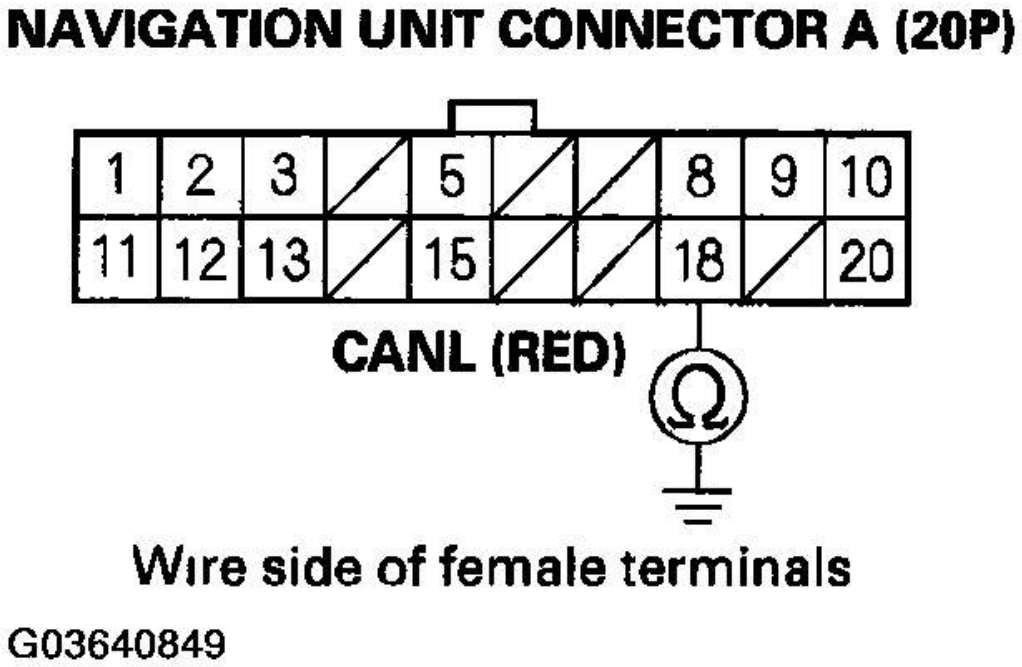

cardiagn.com

Fig. 43: Connecting A22 Terminal Of VTM-4 Control Unit Connector (4 Of 4)
Courtesy of AMERICAN HONDA MOTOR CO., INC.

Is there continuity?

YES - Go to step 16.

NO - Repair open in the wire between the A22 terminal of the VTM-4 control unit and B15 terminal of the PCM, the 30 terminal of the VSA modulator-control unit, the A18 terminal of the navigation unit.

16. Check for loose terminal fit in the VTM-4 control unit, PCM, VSA, navigation connectors. If it is normal, replace the VTM-4 control unit. Test-drive the vehicle, and watch the VTM-4 indicator.

Does the VTM-4 indicator come on?

YES - Go to step 17.

NO - The system is OK at this time.

17. Watch the ABS indicator.

Does the ABS indicator come on?

YES - Check the VSA system.

NO - Go to step 18.

COPYRIGHT FIXYOURCAR2009@GMAIL.COM
NOT TO BE COPIED OR RESOLD

18. Connect the HDS to the 16P Data Link Connector (DLC), and check for the PCM system DTC.

Is there the DTC?

YES - Check the PCM system.

NO - Check the navigation system.

DTC 42-1, 42-2, 43-1: DIFFERENTIAL OIL TEMPERATURE SENSOR

1. Clear the DTCs (see **HOW TO CLEAR THE VTM-4 CONTROL UNIT MEMORY**).
2. Test-drive the vehicle, and watch the VTM-4 indicator.

Does the VTM-4 indicator come on?

YES - Go to step 3.

NO - The system is OK at this time.

3. Turn the ignition switch OFF.
4. Remove the wire harness cover from the rear differential.
5. Disconnect the 2P connector from the differential oil temperature sensor, then measure the resistance of the differential oil temperature sensor.

cardiagn.com

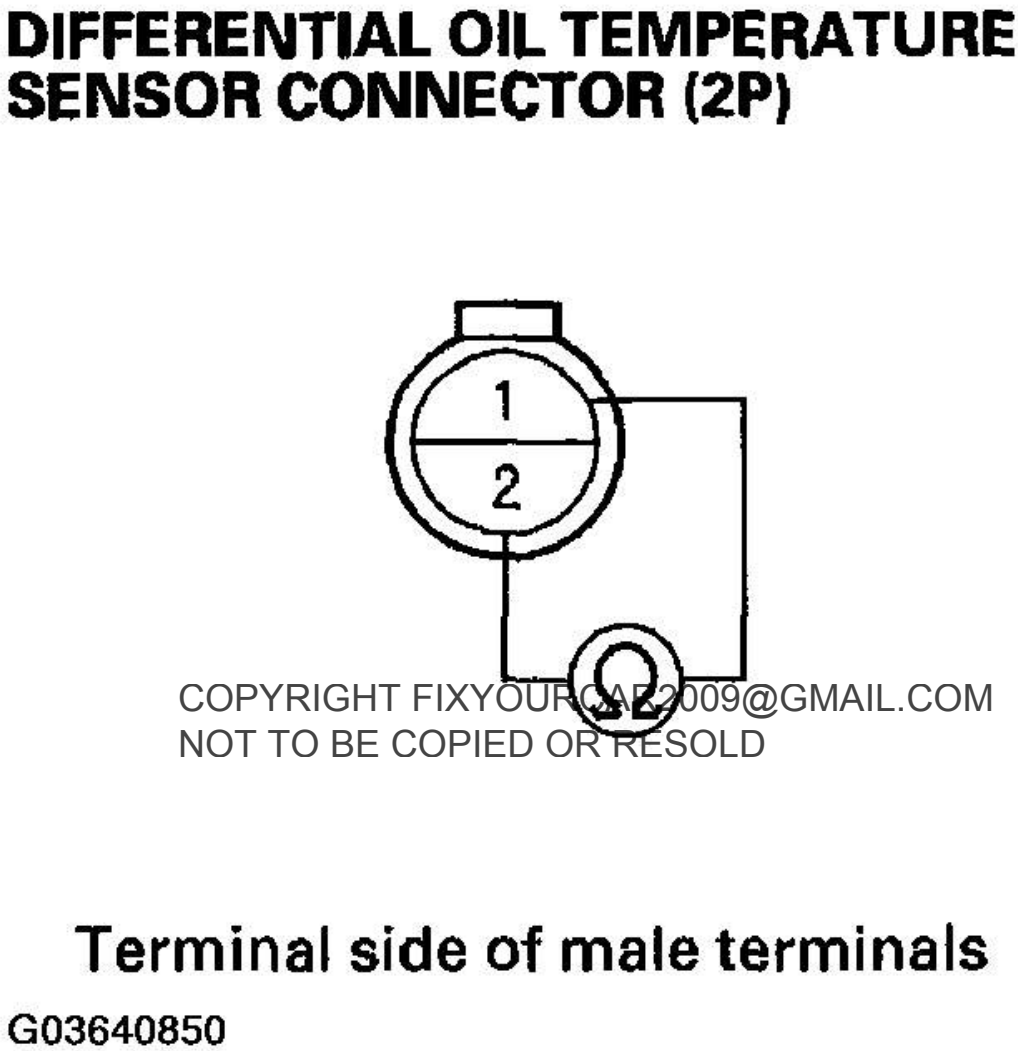

COPYRIGHT FIXYOURCAR2009@GMAIL.COM
NOT TO BE COPIED OR RESOLD

cardiagn.com

Fig. 44: Disconnecting 2P Connector From Differential Oil Temperature Sensor
Courtesy of AMERICAN HONDA MOTOR CO., INC.

OIL TEMPERATURE SENSOR SPECIFICATION

Oil temperature	Resistance
32 °F (0 °C)	5.82 kohm to 7.26 kohm
86 °F (30 °C)	1.53 kohm to 1.83 kohm
212°F(100°C)	148 ohm to 162 ohm
284°F(140°C)	52 ohm to 61 ohm

Is the resistance correct?

YES - Go to step 6.

NO - Replace the differential oil temperature sensor.

6. Disconnect connector A (22P) from the VTM-4 control unit.
7. Turn the ignition switch ON (II).
8. Measure the voltage between the A13 and A15 terminals of the VTM-4 control unit and body ground.

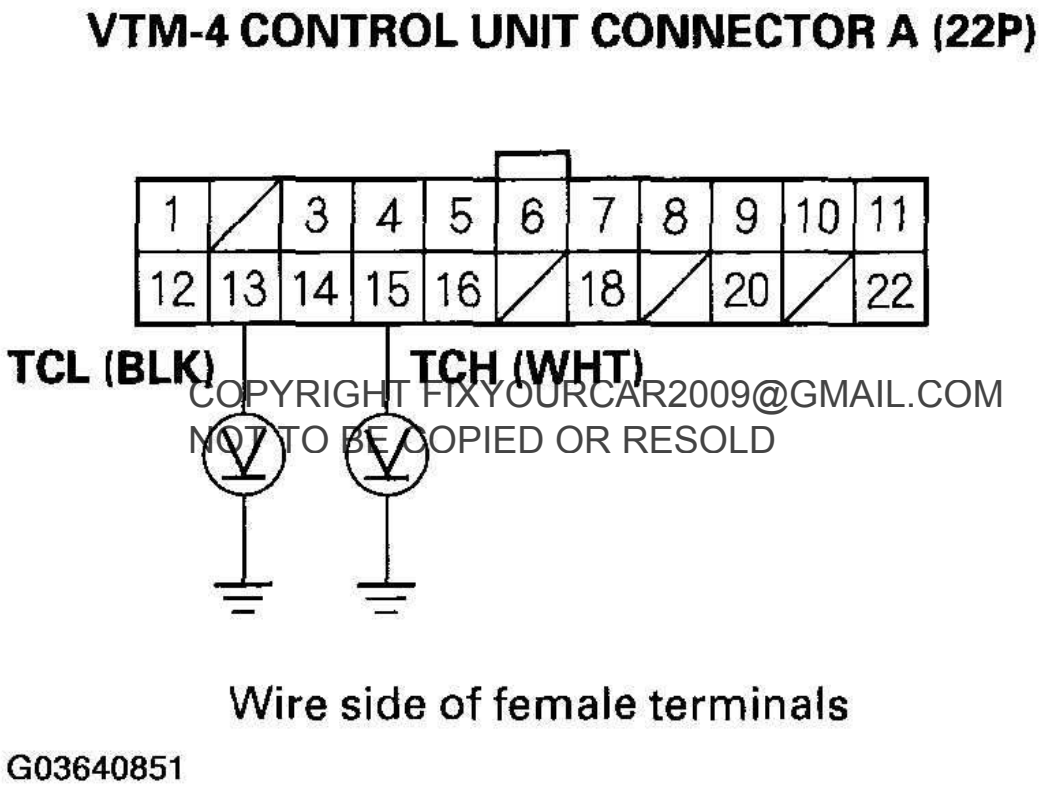

COPYRIGHT FIXYOURCAR2009@GMAIL.COM
NOT TO BE COPIED OR RESOLD

cardiagn.com

Fig. 45: Measuring Voltage Between A13 And A15 Terminals
Courtesy of AMERICAN HONDA MOTOR CO., INC.

Is there voltage?

YES - Repair short to power in the wire between the A13 or A15 terminals of the VTM-4 control unit and the differential oil temperature sensor.

NO - Go to step 9.

9. Turn the ignition switch OFF.
10. Check for continuity between the A13 and A15 terminals of the VTM-4 control unit and body ground.

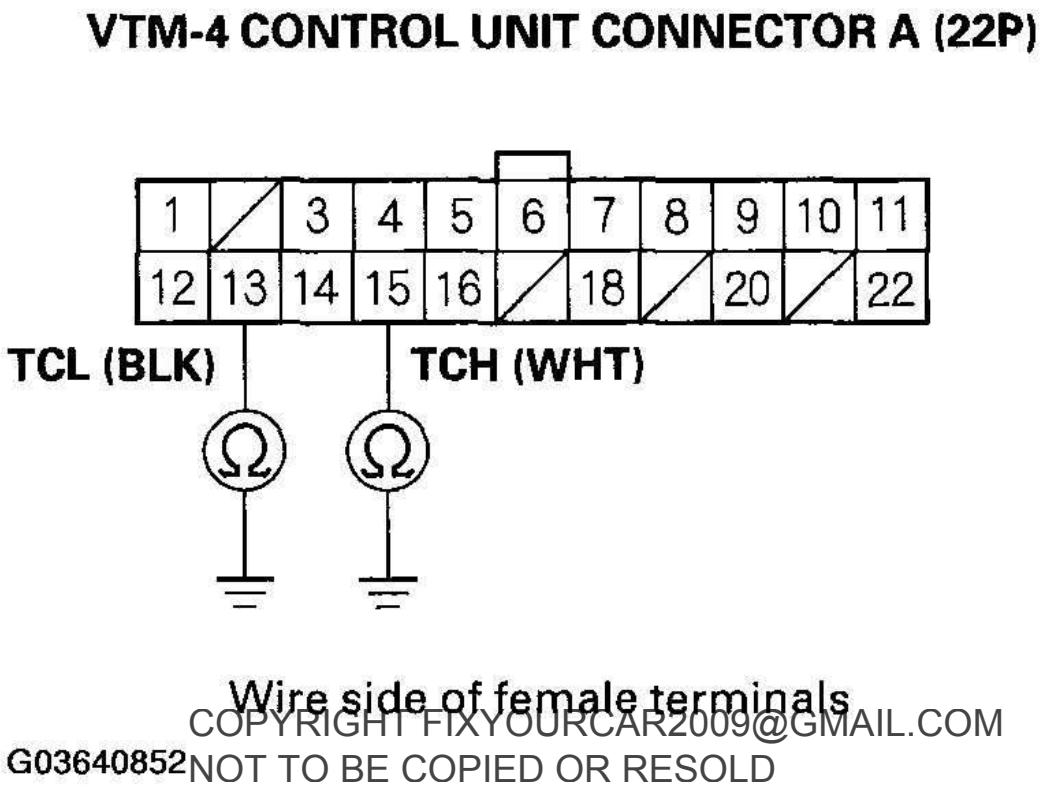

COPYRIGHT FIXYOURCAR2009@GMAIL.COM
NOT TO BE COPIED OR RESOLD

cardiagn.com

Fig. 46: Checking For Continuity Between A13 And A15 Terminals Of VTM-4 Control Unit And Body Ground
Courtesy of AMERICAN HONDA MOTOR CO., INC.

Is there continuity?

YES - Repair short to ground in the wire between the A13 or A15 terminals of the VTM-4 control unit and the differential oil temperature sensor.

NO - Go to step 11.

11. Connect the differential oil temperature sensor connector terminals to body ground with jumper wires, then check for continuity between the A13 and A15 terminals of the VTM-4 control unit and body ground.

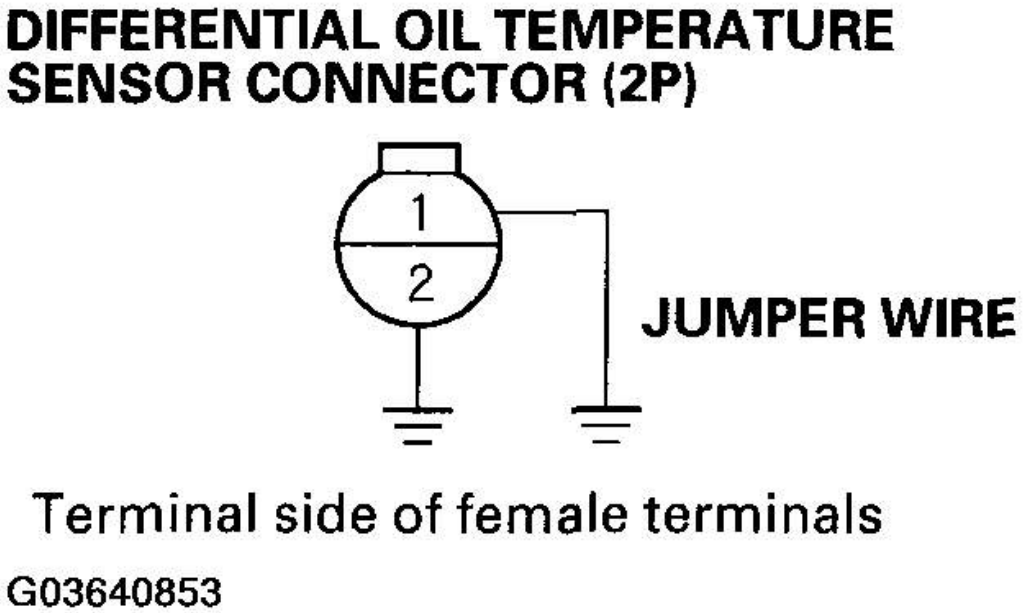

COPYRIGHT FIXYOURCAR2009@GMAIL.COM
NOT TO BE COPIED OR RESOLD

Fig. 47: Connecting Differential Oil Temperature Sensor Connector Terminals (1 Of 2)
Courtesy of AMERICAN HONDA MOTOR CO., INC.

cardiagn.com

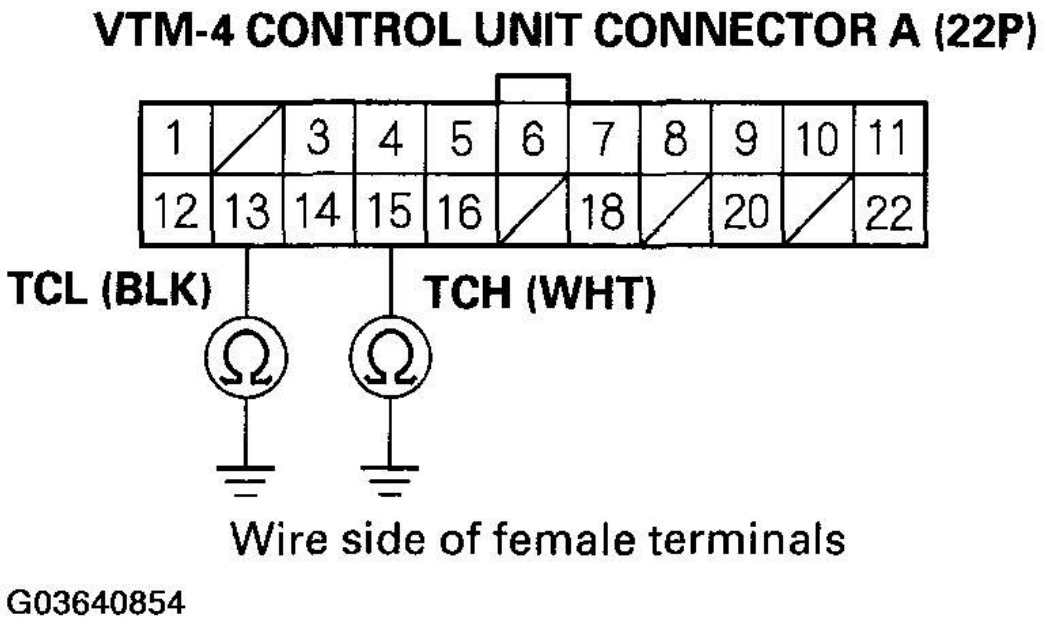

COPYRIGHT FIXYOURCAR2009@GMAIL.COM
NOT TO BE COPIED OR RESOLD

Fig. 48: Connecting Differential Oil Temperature Sensor Connector Terminals (2 Of 2)
Courtesy of AMERICAN HONDA MOTOR CO., INC.

Is there continuity?

YES - Check for loose terminal fit in the VTM-4 control unit and the differential oil temperature sensor connectors. If it is normal, replace the VTM-4 control unit.

NO - Repair open in the wire between the A13 or A15 terminals of the VTM-4 control unit and the differential oil temperature sensor.

DTC 44-1: VTM-4 RELAY

1. Clear the DTCs (see **HOW TO CLEAR THE VTM-4 CONTROL UNIT MEMORY**).
2. Test-drive the vehicle, and watch the VTM-4 indicator.

   Does the VTM-4 indicator come on?

   YES - Go to step 3.

   NO - The system is OK at this time.
3. Turn the ignition switch OFF with the VTM-4 control unit still connected, measure the voltage between the A4 and B7 terminals of the VTM-4 control unit and body ground with the ignition switch ON (II), and after the engine starts.

cardiagn.com

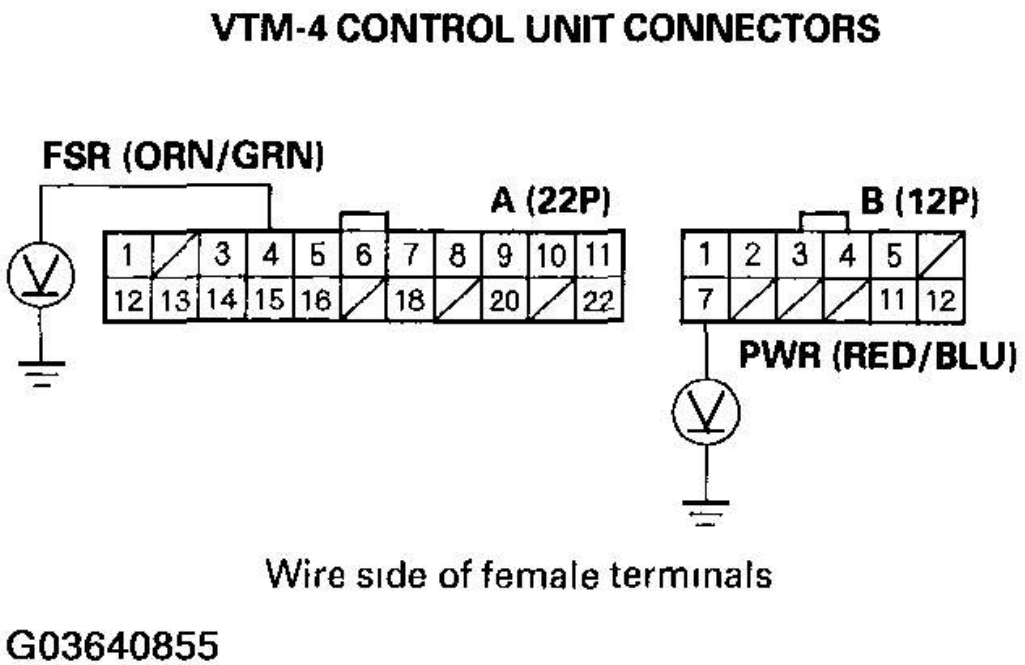

COPYRIGHT FIXYOURCAR2009@GMAIL.COM
NOT TO BE COPIED OR RESOLD

Fig. 49: Measuring Voltage Between A4 And B7 Terminals Of VTM-4 Control Unit
Courtesy of AMERICAN HONDA MOTOR CO., INC.

TERMINAL CONDITION SPECIFICATION

Condition	B7 (PWR)	A4 (FSR)
Ignition switch ON (II)	Below 3 V	Battery voltage
Engine start	Battery voltage	Below 1 V

Is the voltage correct?

YES - Go to step 15 .
NO - Go to step 4.

4. Turn the ignition switch OFF.
5. Remove the VTM-4 relay, and test it (see **POWER RELAY TEST**).

Is the VTM-4 relay OK?

YES - Go to step 6.
NO - Replace the VTM-4 relay.

6. Turn the ignition switch ON (II) with the VTM-4 relay removed.

cardiagn.com

7. Measure the voltage between the No. 1 and No. 5 terminals of the VTM-4 relay 5P connector and body ground.

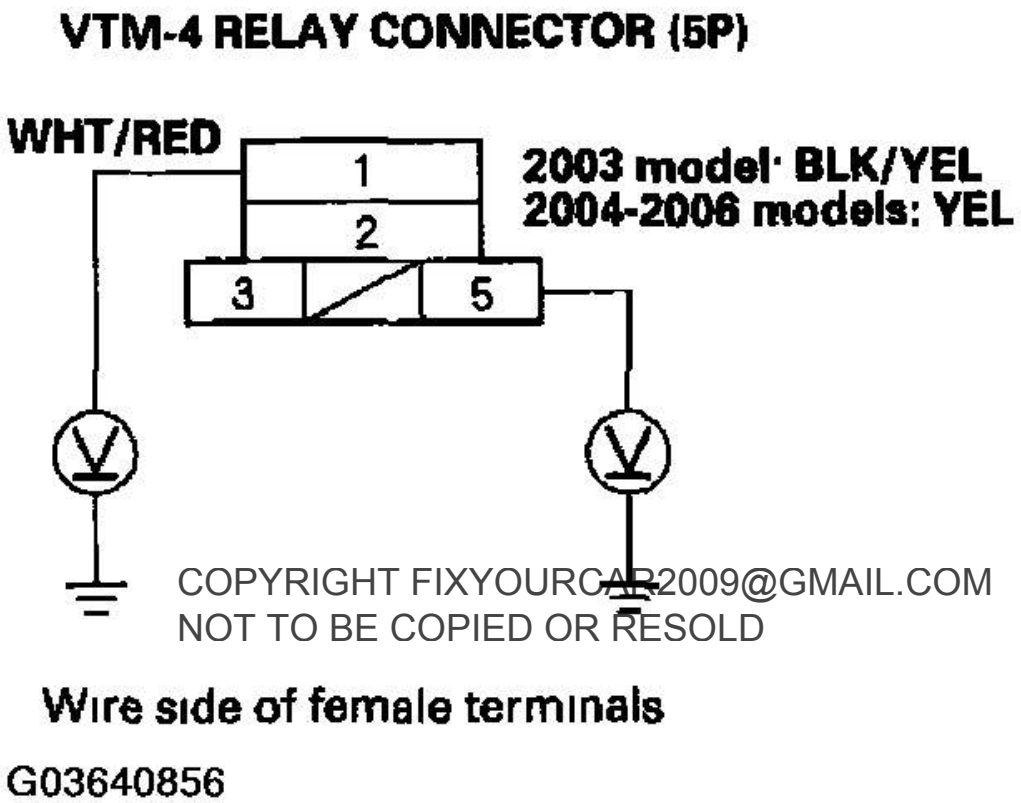

COPYRIGHT FIXYOURCAR2009@GMAIL.COM
NOT TO BE COPIED OR RESOLD

cardiagn.com

Fig. 50: Measuring Voltage Between No. 1 And No. 5 Terminals Of VTM-4 Relay 5P Connector And Body Ground
Courtesy of AMERICAN HONDA MOTOR CO., INC.

Is there battery voltage?

YES - Go to step 8.

NO - 2003 model: Check for blown No. 92 (7.5 A) fuse in the auxiliary fuse box or No. 6 (15 A) fuse in the driver's underdash fuse/relay box. 2004-2006 models: Check for blown No. 9 (10 A) fuse in the driver's underdash fuse/relay box. If the fuses are OK, repair open in the wire between the auxiliary fuse box or the driver's underdash fuse/relay box and the VTM-4 relay.

8. Turn the ignition switch OFF.
9. Disconnect connector A (22P) and connector B (12P) from the VTM-4 control unit.
10. Turn the ignition switch ON (II).

11. Measure the voltage between the A4 and B7 terminals of the VTM-4 control unit and body ground.

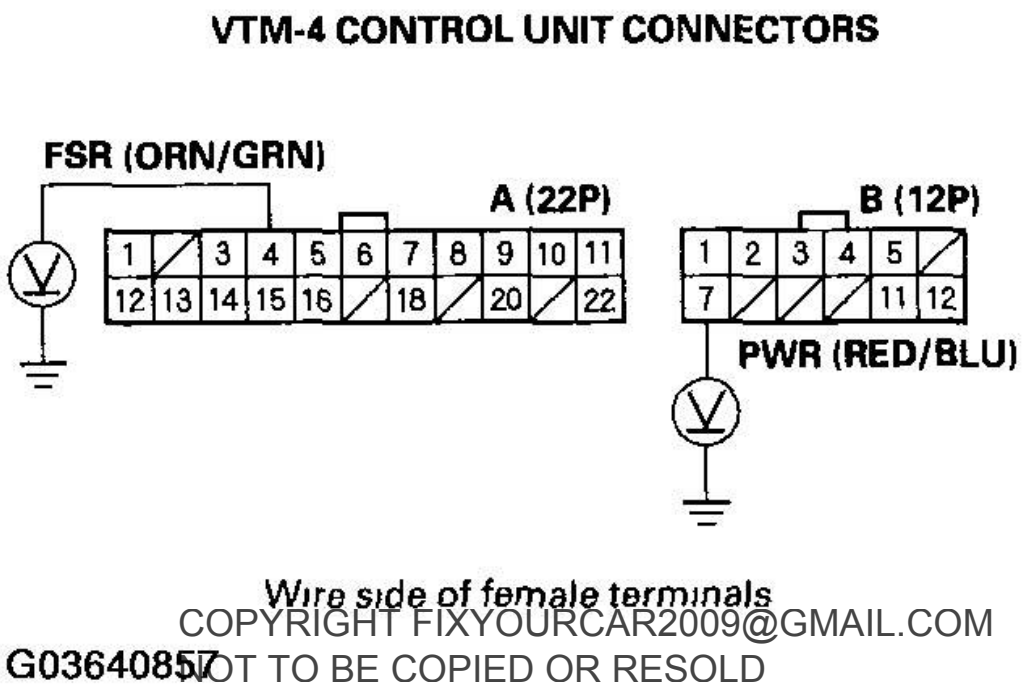

COPYRIGHT FIXYOURCAR2009@GMAIL.COM
NOT TO BE COPIED OR RESOLD

cardiagn.com

Fig. 51: Measuring Voltage Between A4 And B7 Terminals Of VTM-4 Control Unit And Body Ground
Courtesy of AMERICAN HONDA MOTOR CO., INC.

Is there voltage?

YES - Repair short to power in the wire between the A4 or B7 terminals of the VTM-4 control unit and the VTM-4 relay.

NO - Go to step 12.

12. Turn the ignition switch OFF.
13. Check for continuity between the A4 and B7 terminals of the VTM-4 control unit and body ground.

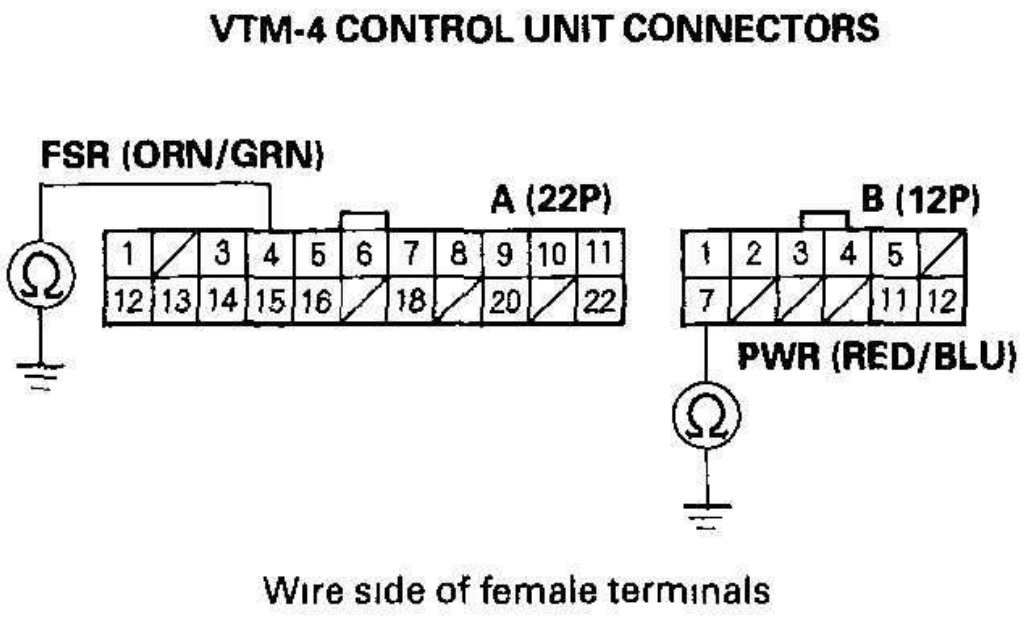

COPYRIGHT FIXYOURCAR2009@GMAIL.COM
NOT TO BE COPIED OR RESOLD

Fig. 52: Checking For Continuity Between A4 And B7 Terminals Of VTM-4 Control Unit And Body Ground
Courtesy of AMERICAN HONDA MOTOR CO., INC.

Is there continuity?

YES - Repair short to ground in the wire between the A4 or B7 terminals of the VTM-4 control unit and the VTM-4 relay.

NO - Go to step 14.

14. Check for continuity between the B7 terminal of the VTM-4 control unit and the No. 2 terminal of the VTM-4 relay, and between the A4 terminal of the VTM-4 control unit and the No. 3 terminal of the VTM-4 relay.

cardiagn.com

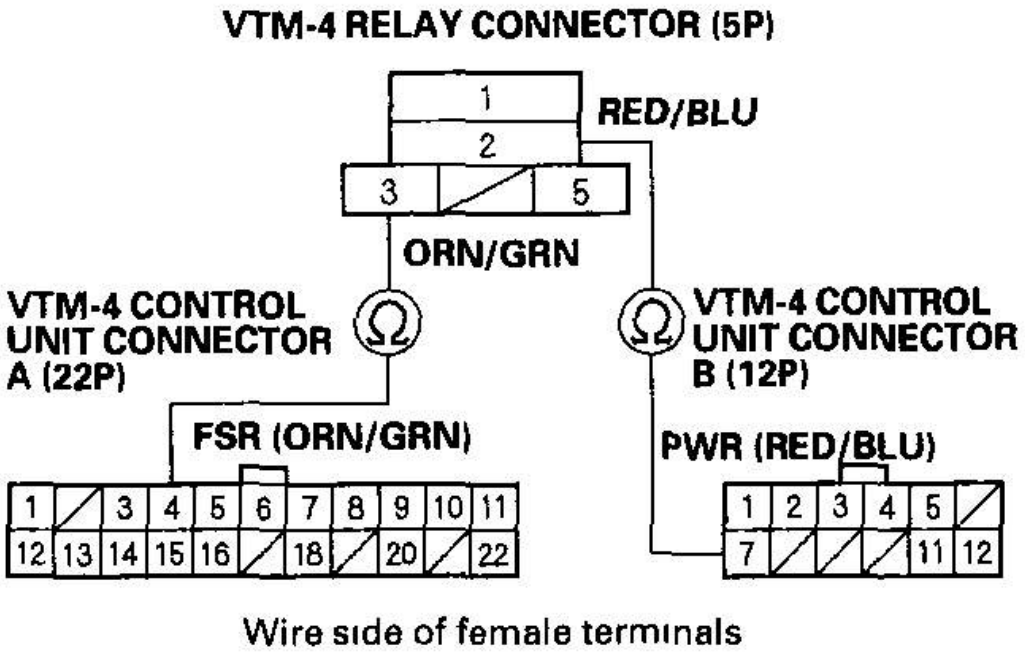

59 COPYRIGHT FIXYOURCAR2009@GMAIL.COM
NOT TO BE COPIED OR RESOLD

cardiagn.com

Fig. 53: Checking For Continuity Between B7 Terminal Of VTM-4 Control Unit And No. 2 Terminal Of VTM-4 Relay
Courtesy of AMERICAN HONDA MOTOR CO., INC.

Is there continuity?

YES - Go to step 15.

NO - Repair open in the wire between A4 or B7 terminals of the VTM-4 control unit and the VTM-4 relay.

15. Check for loose terminal fit in the VTM-4 control unit and the VTM-4 relay connectors. If it is normal, test-drive the vehicle, and watch the VTM-4 indicator.

Does the VTM-4 indicator come on?

YES - Replace the VTM-4 control unit.

NO - The system is OK at this time.

DTC 51-1, 52-1, 53-1, 53-2, 54-1: LEFT CLUTCH ELECTROMAGNETIC COIL

1. Clear the DTCs (see **HOW TO CLEAR THE VTM-4 CONTROL UNIT MEMORY**).

2. Test-drive the vehicle, and watch the VTM-4 indicator.

   Does the VTM-4 indicator come on?

   YES - Go to step 3.
   NO - The system is OK at this time.
3. Turn the ignition switch OFF.
4. Disconnect the left clutch electromagnetic coil 2P connector on the differential. Then measure the resistance between the No. 1 and No. 2 terminals of the left clutch electromagnetic coil connector.

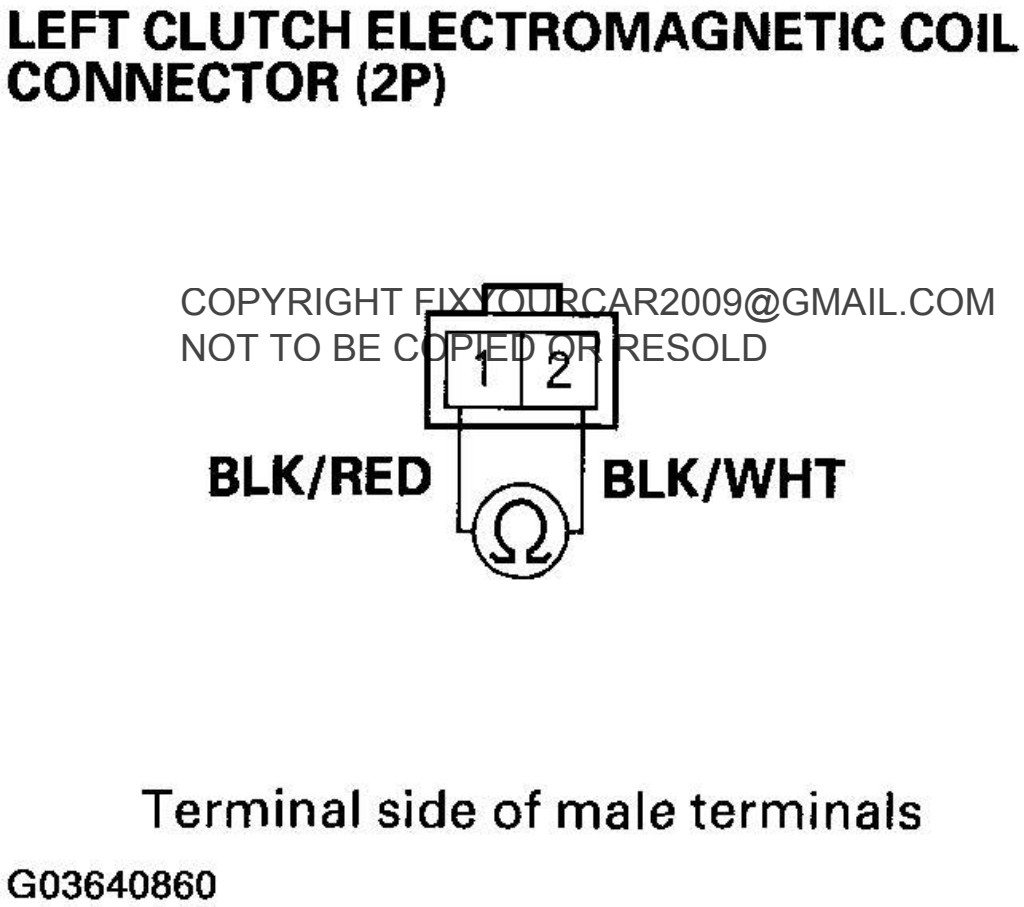

COPYRIGHT FIXYOURCAR2009@GMAIL.COM
NOT TO BE COPIED OR RESOLD

cardiagn.com

Fig. 54: Disconnecting Left Clutch Electromagnetic Coil 2P Connector On Differential
Courtesy of AMERICAN HONDA MOTOR CO., INC.

Is there 1 ohm to 3 ohm?

YES - Go to step 5.

NO - Replace the rear differential assembly.

5. Measure the resistance between the No. 1 terminal of the left clutch electromagnetic coil and differential carrier assembly.

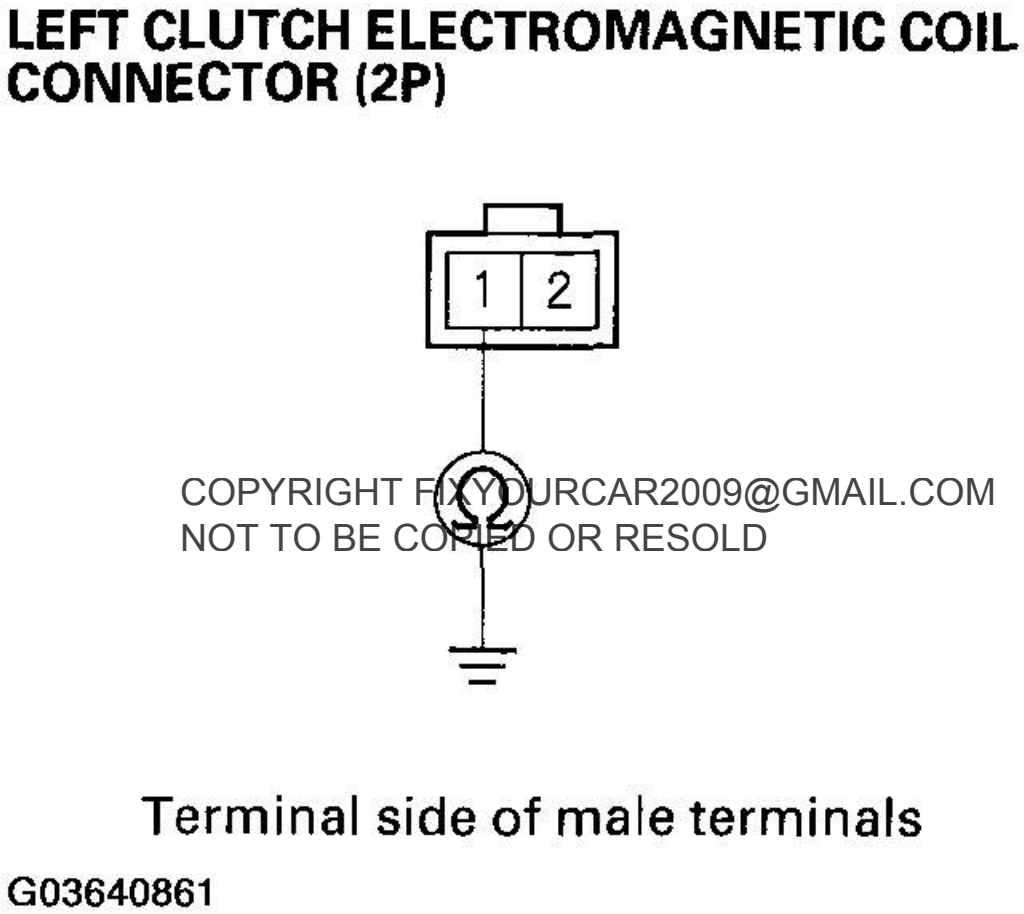

COPYRIGHT FIXYOURCAR2009@GMAIL.COM
NOT TO BE COPIED OR RESOLD

cardiagn.com

Fig. 55: Measuring Resistance Between No. 1 Terminal Of Left Clutch Electromagnetic Coil And Differential Carrier Assembly
Courtesy of AMERICAN HONDA MOTOR CO., INC.

Is there 50 Mohm or more?

YES - Go to step 6.

NO - Replace the rear differential assembly.

6. Disconnect the B (12P) connector from the VTM-4 control unit.

7. Turn the ignition switch ON (II).
8. Measure the voltage between the B1 and B2 terminals of the VTM-4 control unit and body ground.

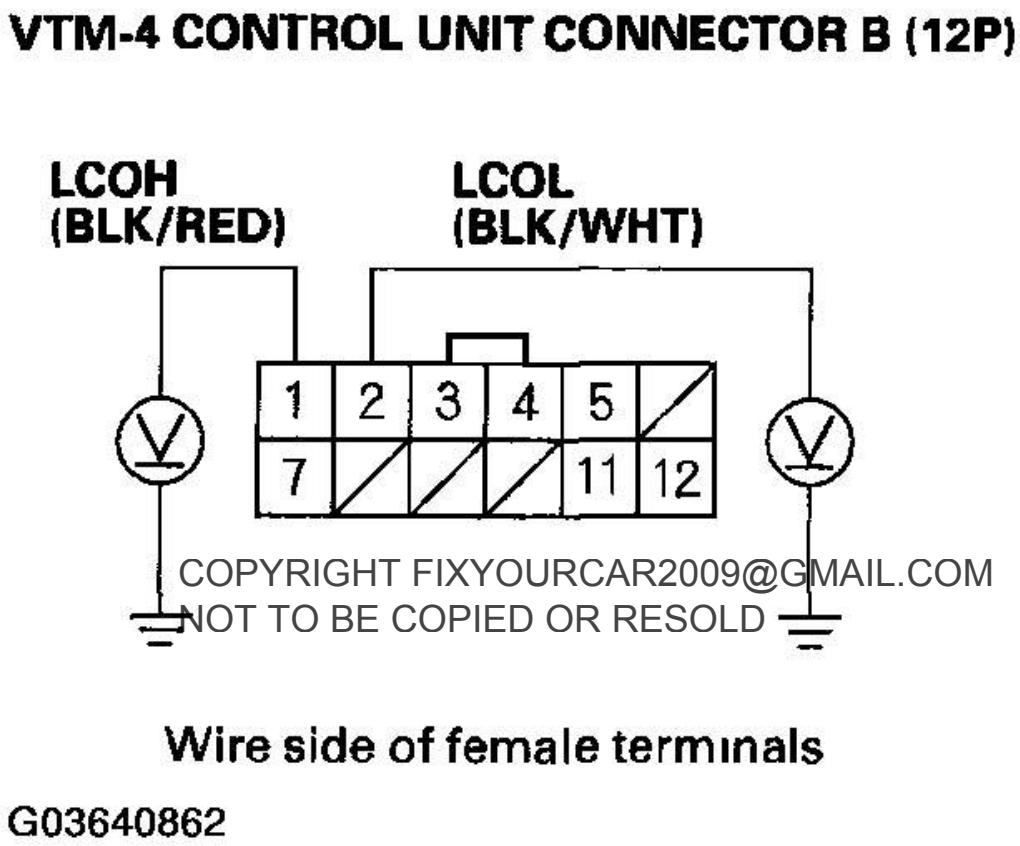

COPYRIGHT FIXYOURCAR2009@GMAIL.COM
NOT TO BE COPIED OR RESOLD

cardiagn.com

Fig. 56: Measuring Voltage Between B1 And B2 Terminals Of VTM-4 Control Unit And Body Ground
Courtesy of AMERICAN HONDA MOTOR CO., INC.

Is there voltage?

YES - Repair short to power in the wire between the B1 or B2 terminals of the VTM-4 control unit and the left clutch electromagnetic coil.

NO - Go to step 9.

9. Turn the ignition switch OFF.
10. Check for continuity between the B1 and B2 terminals of the VTM-4 control unit and body ground.

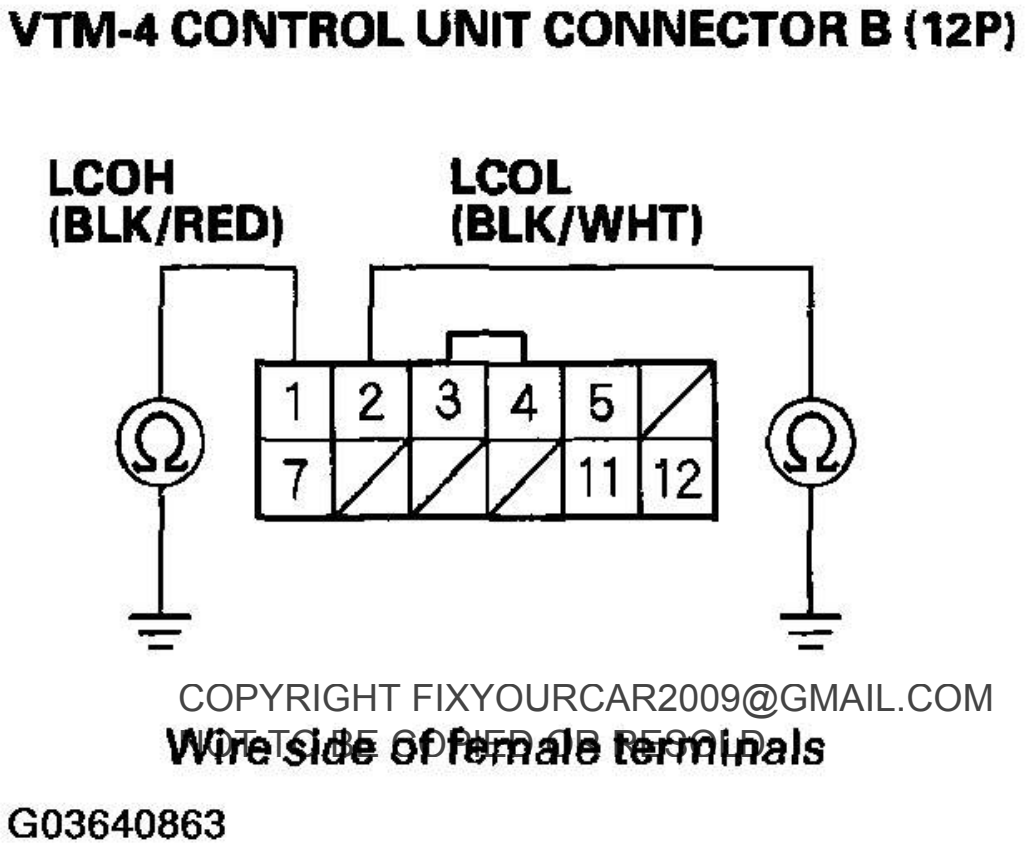

COPYRIGHT FIXYOURCAR2009@GMAIL.COM
NOT TO BE COPIED OR RESOLD

cardiagn.com

Fig. 57: Checking For Continuity Between B1 And B2 Terminals Of VTM-4 Control Unit And Body Ground
Courtesy of AMERICAN HONDA MOTOR CO., INC.

Is there continuity?

YES - Repair short to ground in the wire between the B1 or B2 terminals of the VTM-4 control unit and the left clutch electromagnetic coil.

NO - Go to step 11.

11. Connect a jumper wire between the No. 1 and No. 2 terminals of the 2P connector of the left clutch electromagnetic coil. Then check for continuity between the B1 and B2 terminals of the VTM-4 control unit.

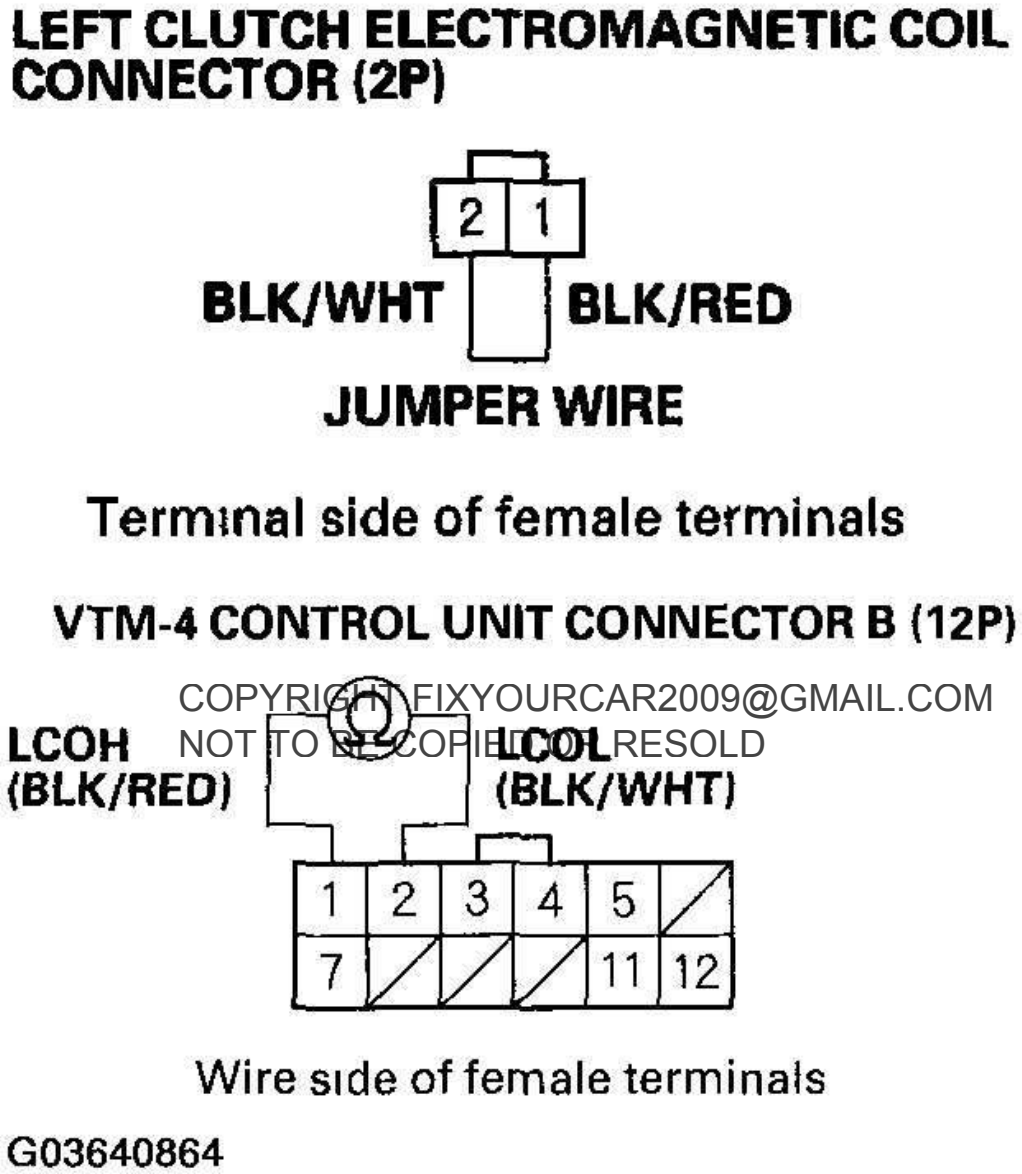

COPYRIGHT FIXYOURCAR2009@GMAIL.COM
NOT TO BE COPIED OR RESOLD

cardiagn.com

Fig. 58: Checking For Continuity Between B1 And B2 Terminals Of VTM-4 Control Unit
Courtesy of AMERICAN HONDA MOTOR CO., INC.

Is there continuity?

YES - Do the troubleshooting for the right clutch electromagnetic coil (see **DTC 53-2,55-1,56-1,57-1,58-1: RIGHT CLUTCH ELECTROMAGNETIC COIL**). If it is normal, replace the VTM-4 control unit.

NO - Repair open in the wire between the B1 or B2 terminals of the VTM-4 control unit and the left clutch electromagnetic coil.

DTC 53-2, 55-1, 56-1, 57-1, 58-1: RIGHT CLUTCH ELECTROMAGNETIC COIL

1. Clear the DTCs (see **HOW TO CLEAR THE VTM-4 CONTROL UNIT MEMORY**).
2. Test-drive the vehicle, and watch the VTM-4 indicator.

   Does the VTM-4 indicator come on?

   YES - Go to step 3.

   NO - The system is OK at this time.
3. Turn the ignition switch OFF.
4. Disconnect the right clutch electromagnetic coil 6P connector on the differential. Then measure the resistance between the No. 3 and No. 6 terminals of the right clutch electromagnetic coil 6P connector.

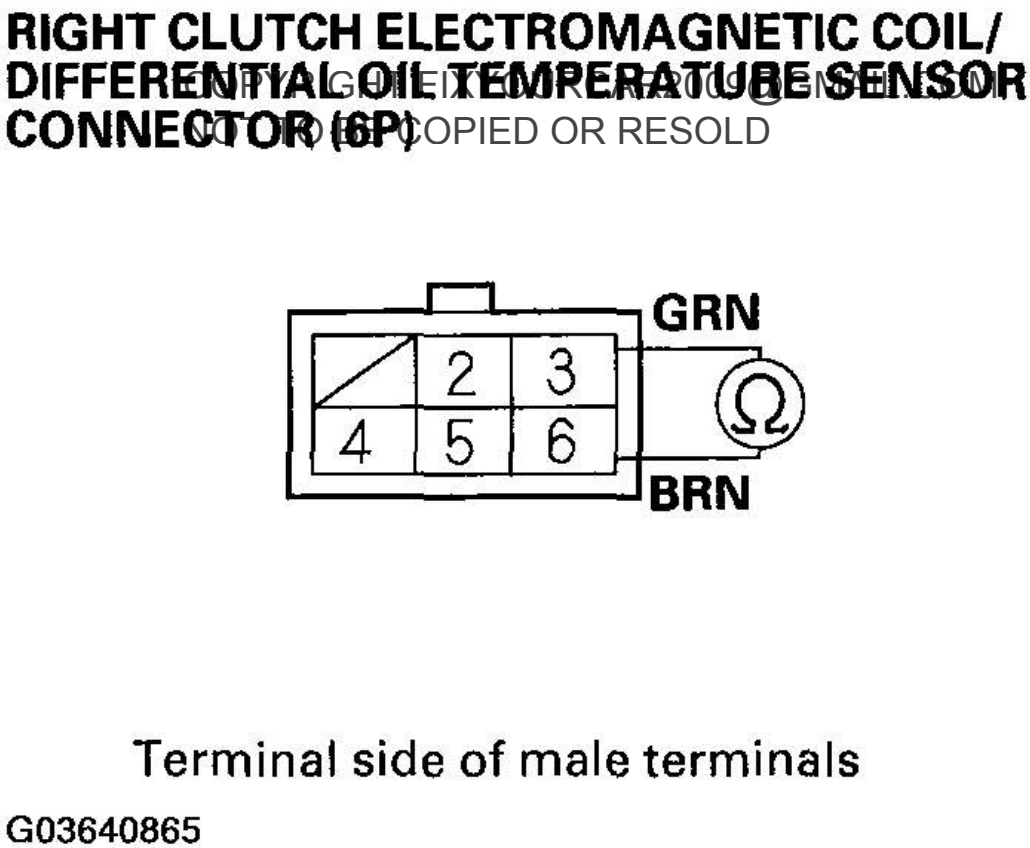

COPYRIGHT EXTOURCAR 2009@GMAIL.COM
NOT TO BE COPIED OR RESOLD
cardiagn.com

Fig. 59: Disconnecting Right Clutch Electromagnetic Coil 6P Connector
Courtesy of AMERICAN HONDA MOTOR CO., INC.

Is there 10 ohm to 3 ohm ?

YES - Go to step 5.

NO - Replace the rear differential assembly.

5. Measure the resistance between the No. 3 terminal and the differential carrier assembly.

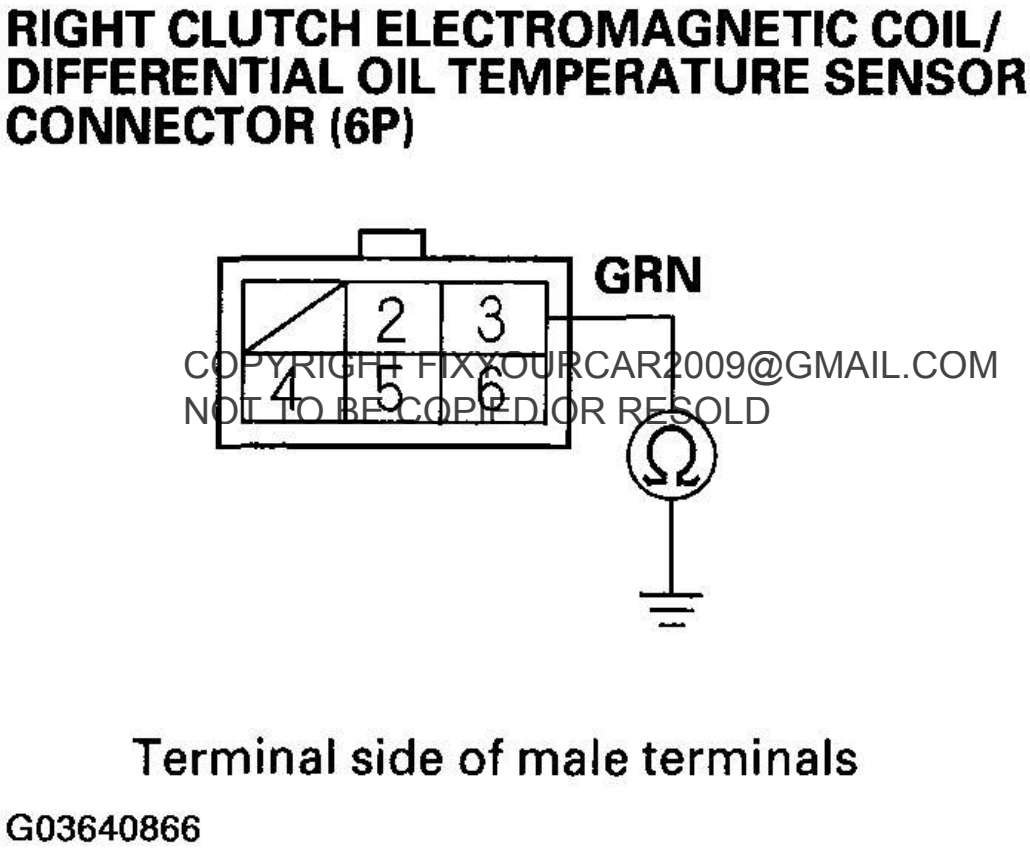

COPYRIGHT FIXXOURCAR2009@GMAIL.COM
NOT TO BE COPIED OR RESOLD

cardiagn.com

Fig. 60: Measuring Resistance Between No. 3 Terminal And Differential Carrier Assembly
Courtesy of AMERICAN HONDA MOTOR CO., INC.

Is there 50 Mohm or more?

YES - Go to step 6.

NO - Replace the rear differential assembly.

6. Disconnect the B (12P) connector from the VTM-4 control unit.
7. Turn the ignition switch ON (II).
8. Measure the voltage between the B3 and B4 terminals of the VTM-4 control unit and body ground.

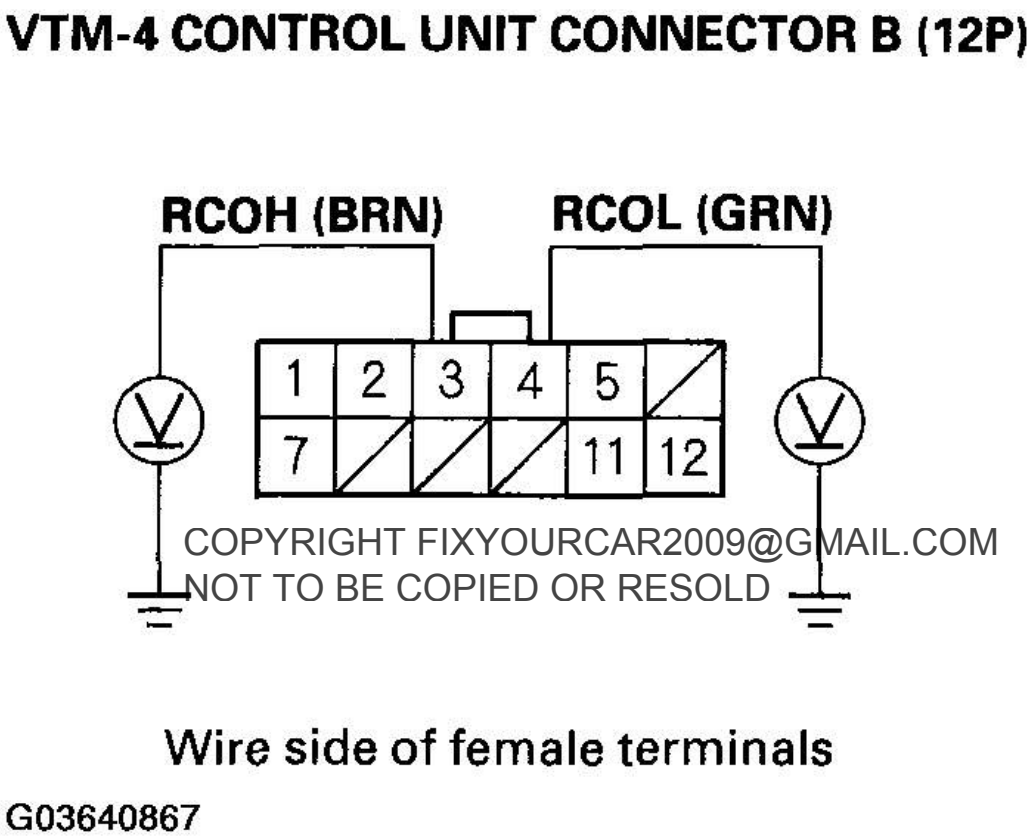

COPYRIGHT FIXYOURCAR2009@GMAIL.COM
NOT TO BE COPIED OR RESOLD

cardiagn.com

Fig. 61: Measuring Voltage Between B3 And B4 Terminals Of VTM-4 Control Unit And Body Ground
Courtesy of AMERICAN HONDA MOTOR CO., INC.

Is there voltage?

YES - Repair short to power in the wire between the B3 or B4 terminals of the VTM-4 control unit and the right clutch electromagnetic coil.

NO - Go to step 9.

9. Turn the ignition switch OFF.
10. Check for continuity between the B3 and B4 terminals of the VTM-4 control unit and body ground.

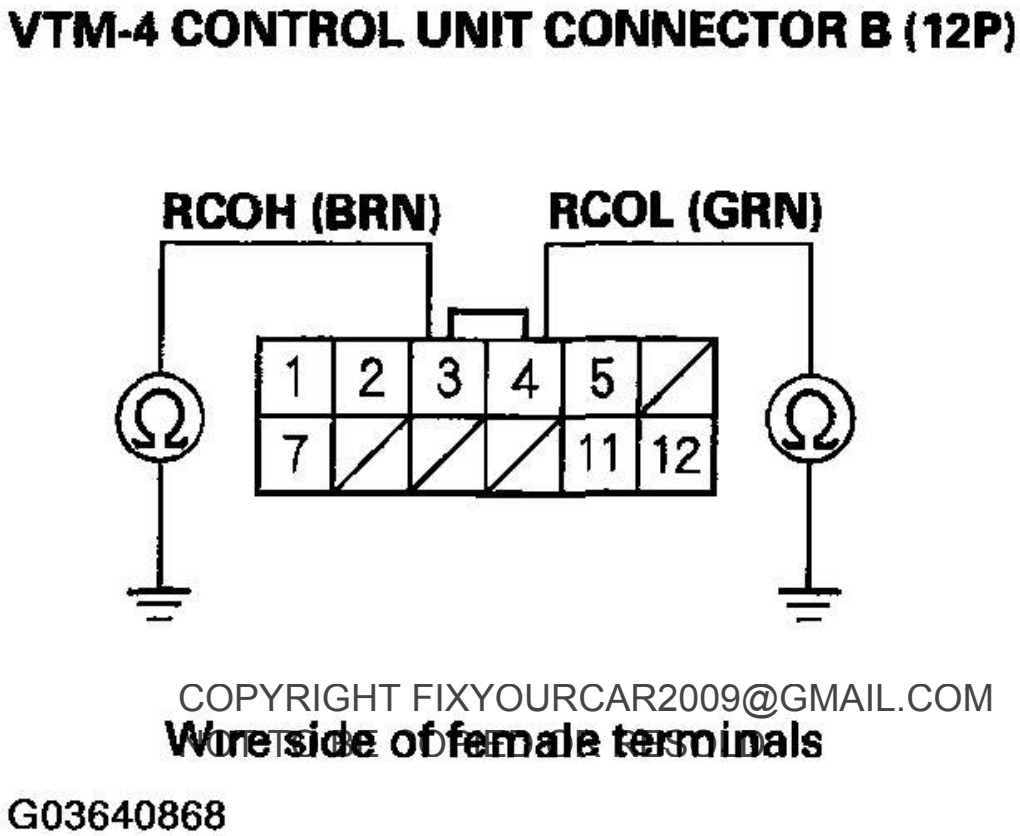

COPYRIGHT FIXYOURCAR2009@GMAIL.COM

Fig. 62: Checking For Continuity Between B3 And B4 Terminals Of VTM-4 Control Unit And Body Ground
Courtesy of AMERICAN HONDA MOTOR CO., INC.

Is there continuity?

YES - Repair short to ground in the wire between the B3 or B4 terminals of the VTM-4 control unit and the right clutch electromagnetic coil.

NO - Go to step 11.

11. Connect a jumper between the No. 3 and No. 6 terminals of the right clutch electromagnetic coil 6P connector. Then check for continuity between the B3 and B4 terminals of the VTM-4 control unit.

cardiagn.com

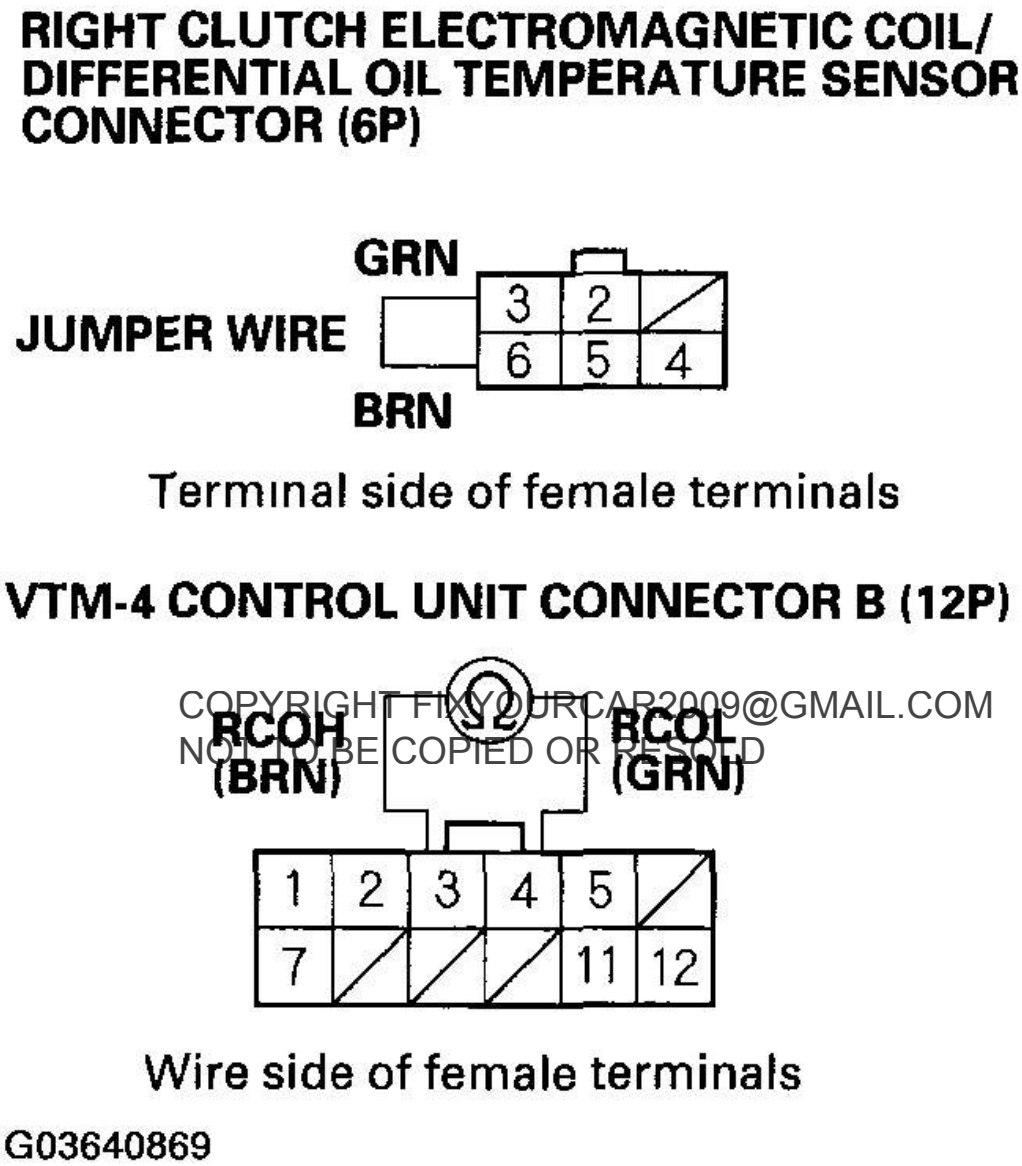

COPYRIGHT FIXY@URCAR2009@GMAIL.COM
NOT TO BE COPIED OR RESOLD

cardiagn.com

Fig. 63: Checking For Continuity Between B3 And B4 Terminals Of VTM-4 Control Unit
Courtesy of AMERICAN HONDA MOTOR CO., INC.

Is there continuity?

YES - Do the troubleshooting for the left clutch electromagnetic coil (see **DTC 51-1,52-1,53-1,53-2,54-1: LEFT CLUTCH ELECTROMAGNETIC COIL**). If it is normal, replace the VTM-4 control unit.

NO - Repair open in the wire between the B3 or B4 terminals of the VTM-4 control unit and the right clutch electromagnetic coil.

DTC 59-1: RIGHT/LEFT CLUTCH ELECTROMAGNETIC COIL POWER SUPPLY

1. Clear the DTCs (see **HOW TO CLEAR THE VTM-4 CONTROL UNIT MEMORY**).
2. Test-drive the vehicle, and watch the VTM-4 indicator.

   Does the VTM-4 indicator come on?

   YES - Go to step 3.

   NO - The system is OK at this time.
3. Check the battery.

   Is the specified battery installed, and is it fully charged?

   YES - Go to step 4.

   NO - Replace the battery.
4. Watch the charging system indicator.

   Does the charging system indicator come on with the ignition switch ON (II), and after the engine starts, does the indicator go off?

COPYRIGHT FIXYOURCAR2009@GMAIL.COM
NOT TO BE COPIED OR RESOLD

   YES - Check for loose terminal fit in the VTM-4 control unit connectors. If it is normal, replace the VTM-4 control unit.

   NO - Check the charging system.

DTC 73-1: MAP (MANIFOLD ABSOLUTE PRESSURE) SENSOR, OR PCM

1. Clear the DTCs (see **HOW TO CLEAR THE VTM-4 CONTROL UNIT MEMORY**).
2. Test-drive the vehicle, and watch the VTM-4 indicator.

   Does the VTM-4 indicator come on?

   YES - Go to step 3.

   NO - The system is OK at this time.
3. Watch the MIL.

   Does the MIL come on?

   YES - Check the Fuel and Emissions system for DTCs (see **GENERAL TROUBLESHOOTING INFORMATION**).

   NO - Check for loose terminal fit in the VTM-4 control unit and the PCM connectors. If it is normal, replace the VTM-4 control unit.

cardiagn.com

DTC 76-1: REAR DIFFERENTIAL CLUTCH WARNING SYSTEM

1. Clear the DTCs (see **HOW TO CLEAR THE VTM-4 CONTROL UNIT MEMORY**).
2. Start the engine, shift the transmission into D. Drive the vehicle at speeds over 25 mph (40 km/h), while keeping the engine rpm below 2,500 for at least 30 seconds. Watch the VTM-4 indicator.

   NOTE: Be careful not to overheat the rear differential clutch system.

3. Watch the VTM-4 indicator.

   Does the VTM-4 indicator come on?

   YES - Go to step 4.

   NO - The system is OK at this time.

4. Watch the VSA indicator.

   Does the VSA indicator come on?

   YES - Check the VSA system for DTCs (see **GENERAL TROUBLESHOOTING INFORMATION**).

   NO - Go to step 5.

COPYRIGHT FIXYOURCAR2009@GMAIL.COM
NOT TO BE COPIED OR RESOLD

5. Raise the vehicle, and make sure it is securely supported.
6. Spin the rear wheels by hand, and check for rear brake drag.

   Are the rear brakes dragging?

   YES - Repair cause of rear brake drag, and retest.

   NO - Go to step 7.

7. Turn the ignition switch ON (II).
8. Measure the voltage between the A3 and A5 terminals of the VTM-4 control unit and body ground while rotating the appropriate wheel (1 rotation/second).

TERMINAL CONDITION SPECIFICATION

DTC	Appropriate Terminal
23 (Left-rear)	A5
24 (Right-rear)	A3

cardiagn.com

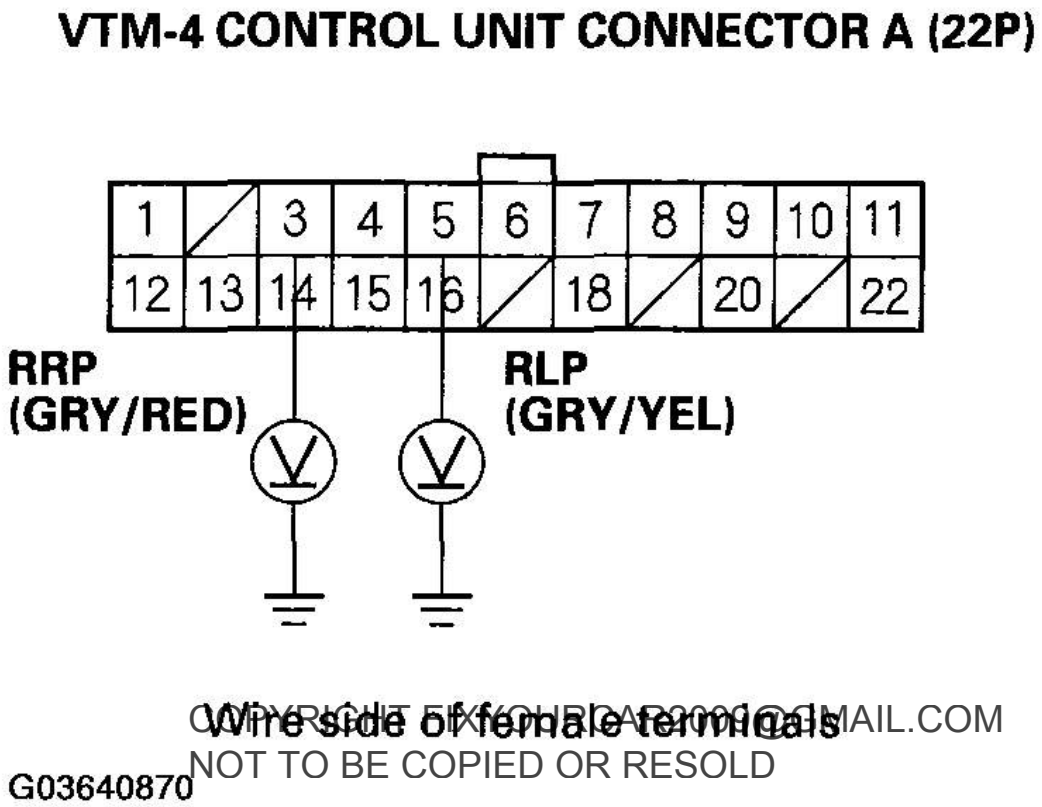

COPYRIGHT FIXYOURCAR2009@GMAIL.COM
NOT TO BE COPIED OR RESOLD

cardiagn.com

Fig. 64: Measuring Voltage Between A3 And A5 Terminals Of VTM-4 Control Unit And Body Ground
Courtesy of AMERICAN HONDA MOTOR CO., INC.

Is there 2 V to 3 V?

YES - Go to step 15 .

NO - Go to step 9.

9. Turn the ignition switch OFF.
10. Disconnect the VTM-4 control unit and the VSA modulator-control unit connectors.
11. Check the A3 and A5 terminals of the VTM-4 control unit connector A (22P) for continuity to body ground.

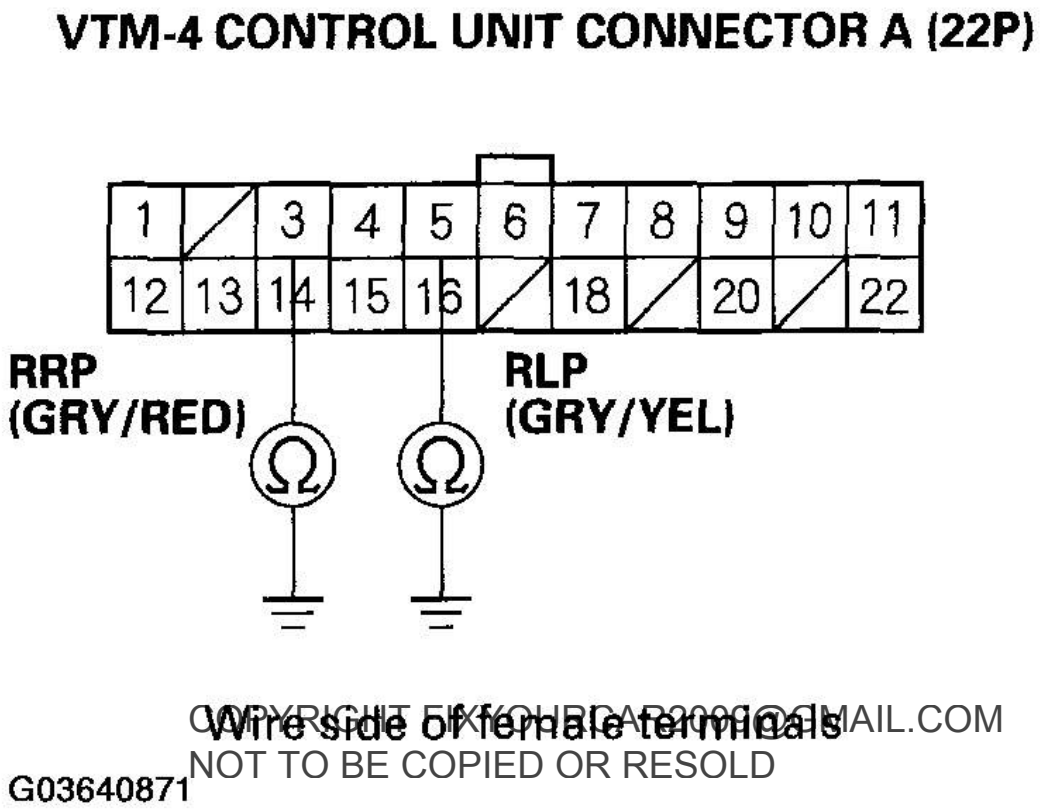

COPYRIGHT EKKOHRDA2006@GMAIL.COM
NOT TO BE COPIED OR RESOLD

cardiagn.com

Fig. 65: Checking A3 And A5 Terminals Of VTM-4 Control Unit Connector A (22P) For Continuity To Body Ground
Courtesy of AMERICAN HONDA MOTOR CO., INC.

Is there continuity?

YES - Repair short to ground in the wire between the A3 and/or A5 terminals of the VTM-4 control unit and the VSA modulator-control unit.

NO - Go to step 12.

12. Connect the same terminals of VTM-4 control unit connector A (22P) to body ground with the jumper wires.

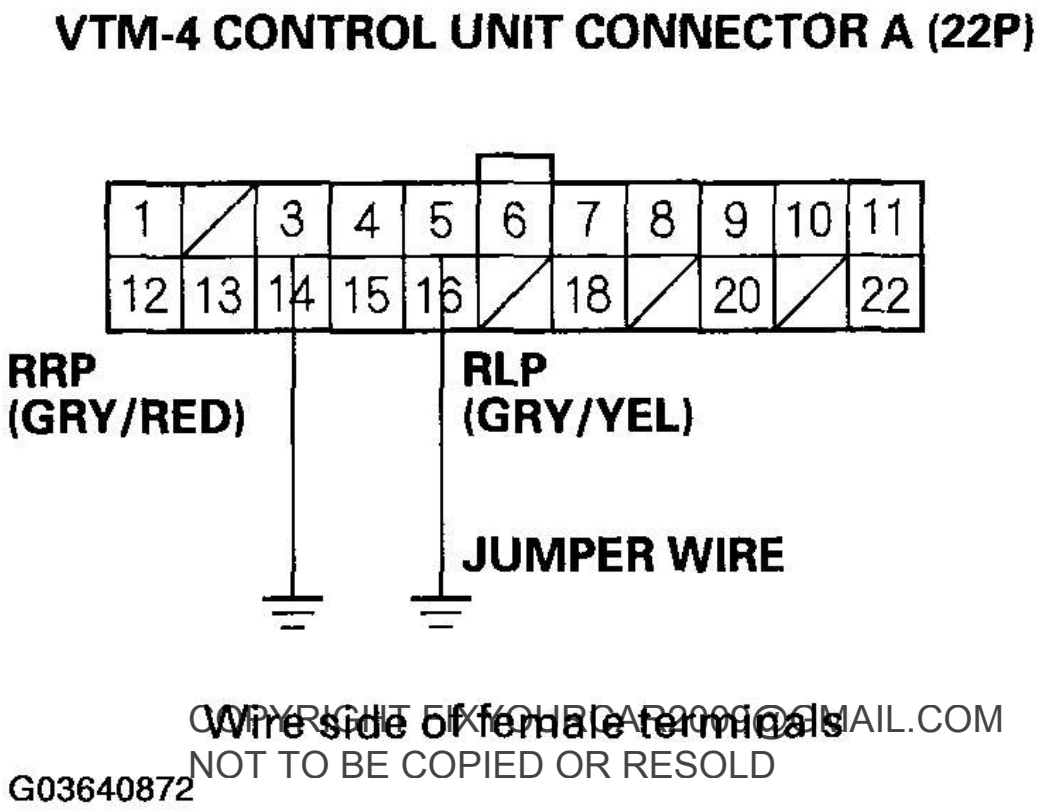

COPYRIGHT FIXHONDA2006@GMAIL.COM
NOT TO BE COPIED OR RESOLD

cardiagn.com

Fig. 66: Connecting Same Terminals Of VTM-4 Control Unit Connector
Courtesy of AMERICAN HONDA MOTOR CO., INC.

13. Check for continuity between the VSA modulator-control unit connector terminals and body ground.

TERMINAL CONDITION SPECIFICATION

Appropriate wheel	Appropriate Terminal	
	VTM-4 Control Unit	VSA modulator
Right-rear	A3	41
Left-rear	A5	9

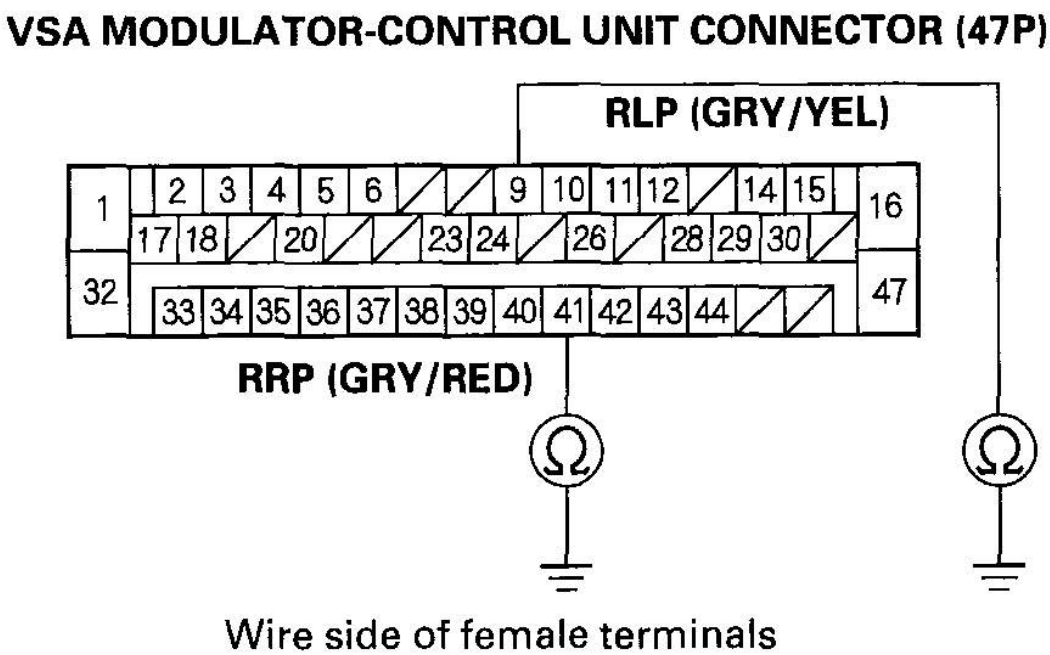

COPYRIGHT FIXYOURCAR2009@GMAIL.COM
NOT TO BE COPIED OR RESOLD

Fig. 67: Checking For Continuity Between VSA Modulator-Control Unit Connector Terminals And Body Ground
Courtesy of AMERICAN HONDA MOTOR CO., INC.

Is there continuity?

YES - Go to step 14.

NO - Repair the open in the wire between the A3 and/or A5 terminals of the VTM-4 control unit and the VSA modulator-control unit.

14. Check for loose terminal fit in the VTM-4 control unit and the VSA modulator-control unit connectors. If it is normal, replace the VTM-4 control unit, then go to step 15.
15. Start the engine, shift the transmission into D. Drive the vehicle at speeds over 25 mph (40 km/h), while keeping the engine rpm below 2,500 for at least 30 seconds. Watch the VTM-4 indicator.

NOTE: Be careful not to overheat the rear differential clutch system.

Does the VTM-4 indicator come on?

YES - Replace the VSA modulator-control unit.

NO - The system is OK at this time.

cardiagn.com

DTC 77-1: PCM

Check the PCM for DTCs. Fix the PCM DTCs before troubleshooting DTC 77.

1. Clear the DTCs (see **HOW TO CLEAR THE VTM-4 CONTROL UNIT MEMORY**).
2. Test-drive the vehicle, and watch the VTM-4 indicator.

   Does the VTM-4 indicator come on?

   YES - Go to step 3.

   NO - The system is OK at this time.
3. Replace the PCM. Test-drive the vehicle, and watch the VTM-4 indicator.

   Does the VTM-4 indicator come on?

   YES - Check for loose terminal fit in the VTM-4 control unit. If it is normal, replace the VTM-4 control unit.

   NO - The system is OK at this time.

DTC 78-1: VTM-4 CONTROL UNIT

COPYRIGHT FIXYOURCAR2009@GMAIL.COM
NOT TO BE COPIED OR RESOLD

1. Clear the DTC (see **HOW TO CLEAR THE VTM-4 CONTROL UNIT MEMORY**).
2. Test-drive the vehicle, and watch the VTM-4 indicator.

   Does the VTM-4 indicator come on?

   YES - Go to step 3.

   NO - The system is OK at this time.
3. Check the battery.

   Is the specified battery installed, and is it fully charged?

   YES - Go to step 4.

   NO - Replace the battery.
4. Watch the charging system indicator.

   Does the charging system indicator come on with ignition switch ON (II), and after the engine starts, does the indicator go off?

   YES - Go to step 5.

   NO - Check the charging system.
5. Check for installation of any aftermarket CB or Ham radios which may cause an RF signal interference.

cardiagn.com

Is there an aftermarket radio installed?

YES - Disconnect the aftermarket radio, and retest.

NO - Check for loose terminal fit in the VTM-4 control unit connectors. If it is normal, replace the VTM-4 control unit.

SYMPTOM TROUBLESHOOTING

THE VTM-4 INDICATOR COMES ON, BUT NO DTCS ARE STORED IN ANY SYSTEM: VTM-4, VSA, OR PGM-FI

1. Check the No. 9 (10 A) fuse in the driver's underdash fuse/relay box.

   Is the fuse OK?

   YES - Go to step 2.

   NO - Replace the fuse, and recheck.

2. Reinitializes the VTM-4 control unit, and watch the VTM-4 indicator (see **INITIALIZATION OF THE VTM-4 CONTROL UNIT**).

   Does the VTM-4 indicator come on and stay on?

   COPYRIGHT FIXYOURCAR2009@GMAIL.COM
   NOT TO BE COPIED OR RESOLD

   YES - Go to step 3.

   NO - The system is OK at this time.

3. Turn the ignition switch OFF.
4. Measure the voltage between the A1 and A10 terminals of the VTM-4 control unit, and between the A1 and B12 terminals of the VTM-4 control unit.

cardiagn.com

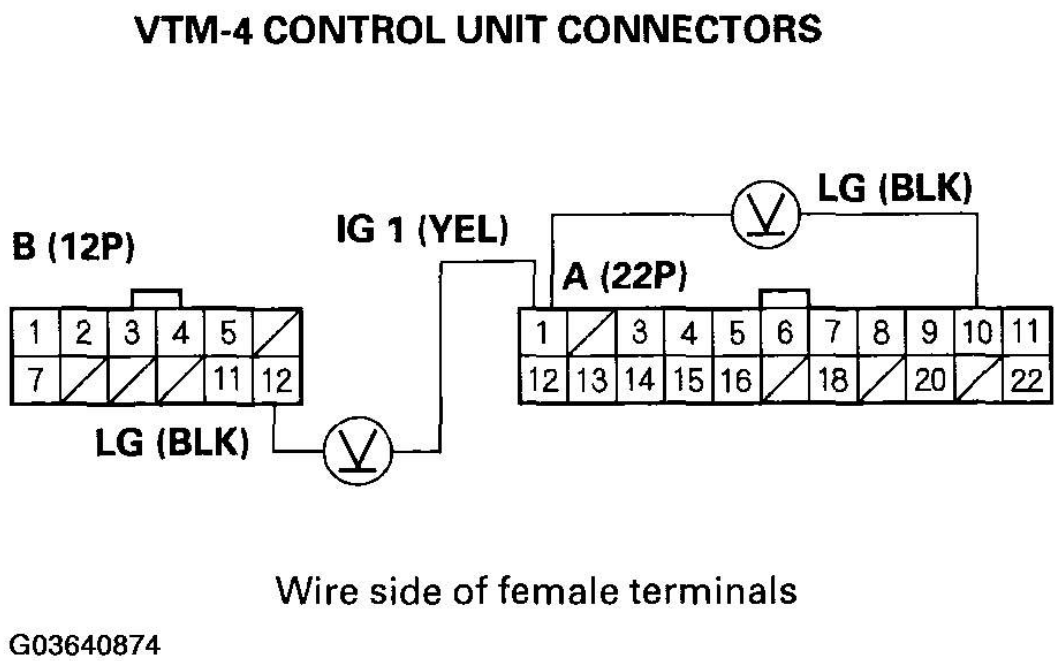

COPYRIGHT FIXYOURCAR2009@GMAIL.COM
NOT TO BE COPIED OR RESOLD

Fig. 68: Measuring Voltage Between A1 And A10 Terminals Of VTM-4 Control Unit
Courtesy of AMERICAN HONDA MOTOR CO., INC.

Is there battery voltage?

YES - Go to step 5.

NO - Repair open in the wire between A1 terminal of the VTM-4 control unit and the driver's underdash fuse/relay box, or repair open in the wire between A10 or B12 terminals of the VTM-4 control unit and body ground.

5. Turn the ignition switch OFF.
6. Disconnect the VTM-4 control unit and the gauge assembly connectors.
7. Check for continuity between the A14 and B11 terminals of the VTM-4 control unit and body ground.

cardiagn.com

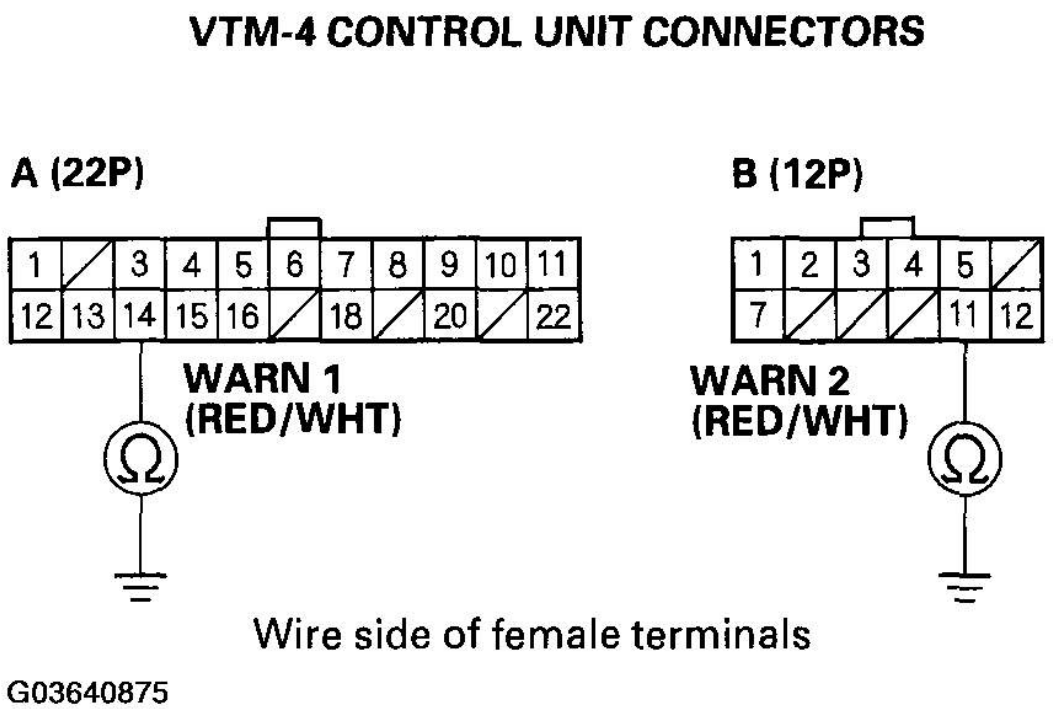

COPYRIGHT FIXYOURCAR2009@GMAIL.COM
NOT TO BE COPIED OR RESOLD

Fig. 69: Checking For Continuity Between A14 And B11 Terminals Of VTM-4 Control Unit And Body Ground
Courtesy of AMERICAN HONDA MOTOR CO., INC.

Is there continuity?

YES - Repair short to ground in the wire between the A14 or B11 terminals of the VTM-4 control unit and the gauge assembly.

NO - Go to step 8.

8. Reconnect the gauge assembly connectors only, then turn the ignition switch ON (II).

Does the VTM-4 indicator come on?

YES - Replace the gauge assembly.

NO - Check for loose terminal fit in VTM-4 connectors. If it is normal, replace the VTM-4 control unit.

THE VTM-4 INDICATOR DOES NOT COME ON

1. Turn the ignition switch ON (II), and check for operation of all gauge assembly indicators.

cardiagn.com

Do the indicators come on?

YES - Go to step 2.

NO - Check for open or short in the power and ground circuits in the gauge assembly.

- 2003 model (see **CIRCUIT DIAGRAM**)
- 2004-2006 models (see **'04-06 MODELS**)

2. Disconnect the A (22P) and B (12P) connectors from the VTM-4 control unit.
3. Turn the ignition switch ON (II).
4. Connect the A14 or B11 terminals of the VTM-4 control unit to body ground with a jumper wire, and watch the VTM-4 indicator.

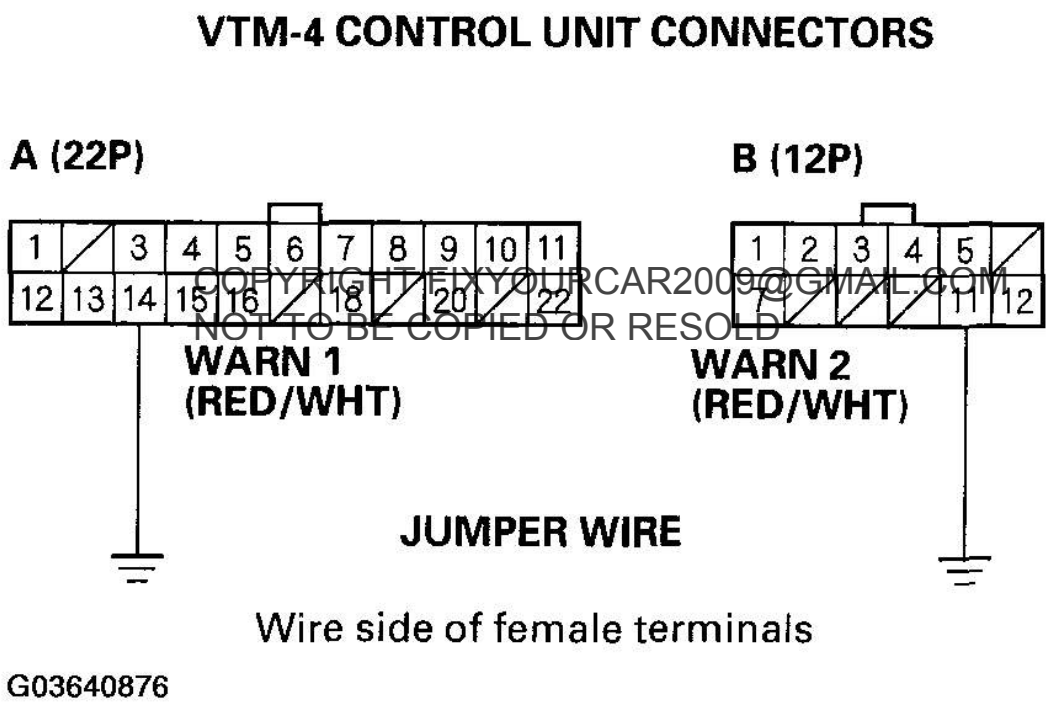

COPYRIGHT FIXYOURCAR2009@GMAIL.COM
NOT TO BE COPIED OR RESOLD

cardiagn.com

Fig. 70: Connecting A14 Or B11 Terminals Of VTM-4 Control Unit To Body Ground
Courtesy of AMERICAN HONDA MOTOR CO., INC.

Does the VTM-4 indicator come on?

YES - Check for loose terminal fit in the VTM-4 control unit connectors. If it is normal, replace the VTM-4 control unit.

NO - Go to step 5.

5. Turn the ignition switch OFF.

6. Disconnect connector A (30P) from the gauge assembly.
7. Connect the A20 terminal of the gauge assembly to body ground with a jumper wire, then check for continuity between the A14 and B11 terminals of the VTM-4 control unit and body ground.

2003 model:

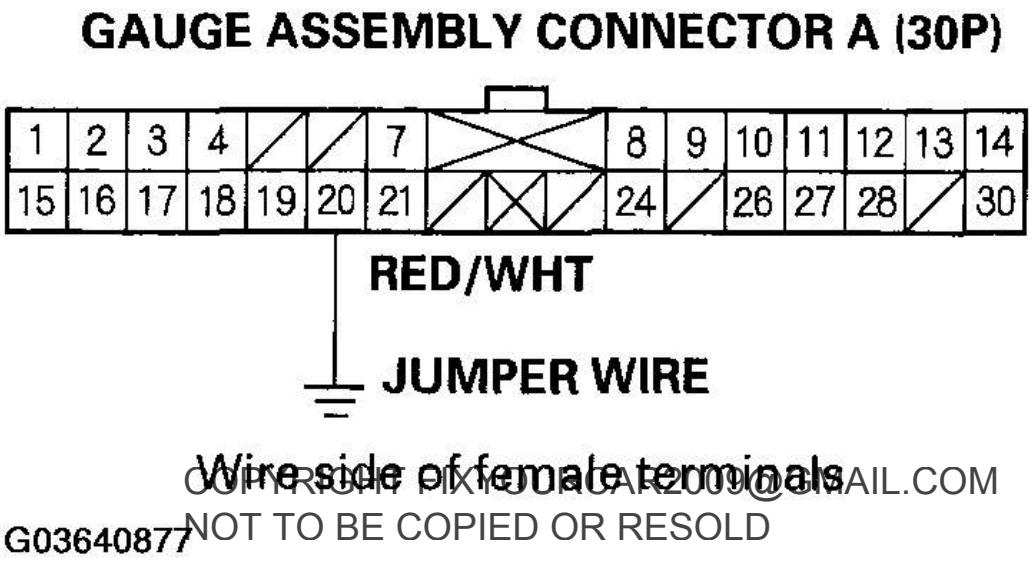

COPYRIGHT FIXYOURCAR2009@GMAIL.COM
NOT TO BE COPIED OR RESOLD

cardiagn.com

Fig. 71: Checking For Continuity Between A14 And B11 Terminals Of VTM-4 Control Unit And Body Ground
Courtesy of AMERICAN HONDA MOTOR CO., INC.

2004-2006 models:

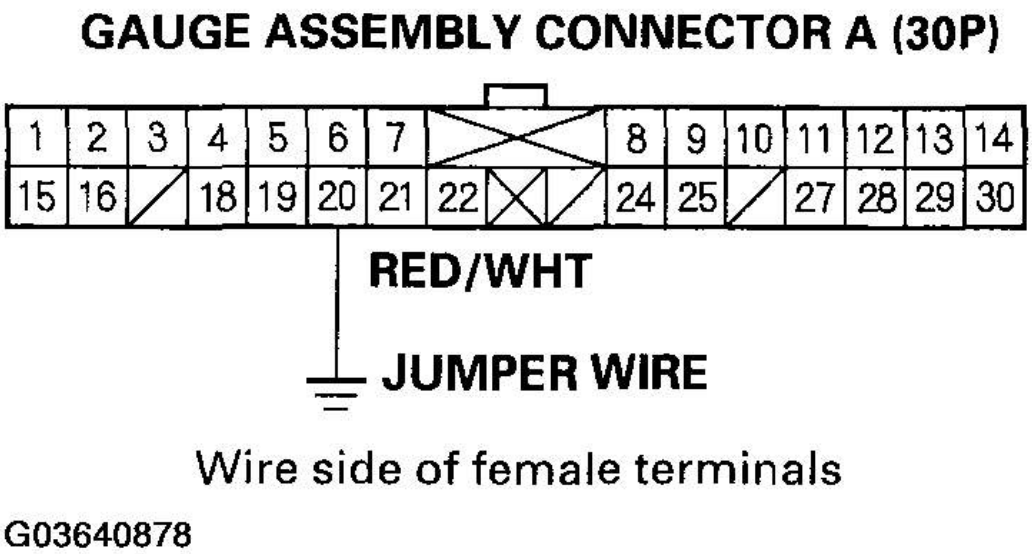

Fig. 72: Identifying VTM-4 Control Unit 2004-2006 Models (1 Of 2)
Courtesy of AMERICAN HONDA MOTOR CO., INC.

COPYRIGHT TAYOUKCAR2009@GMAIL.COM
NOT TO BE COPIED OR RESOLD

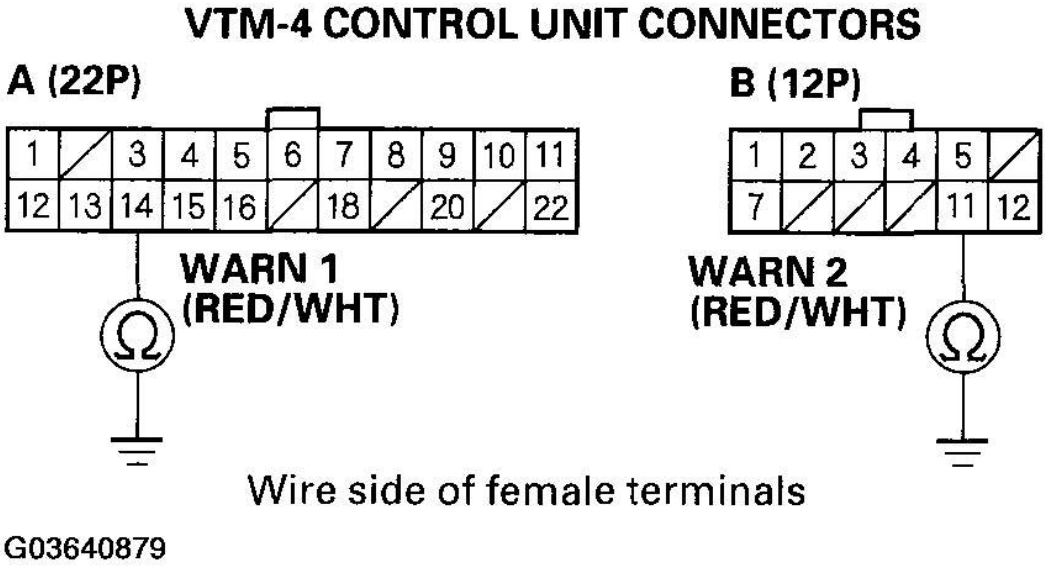

Fig. 73: Identifying VTM-4 Control Unit 2004-2006 Models (2 Of 2)
Courtesy of AMERICAN HONDA MOTOR CO., INC.

cardiagn.com

Is there continuity?

YES - Check for a blown bulb in the VTM-4 indicator or a problem in the gauge assembly.

NO - Repair open in the wire between the A20 terminal of the gauge assembly and the driver's underdash fuse/relay box.

THE VTM-4 LOCK INDICATOR DOES NOT COME ON WHEN THE VTM-4 LOCK BUTTON IS PRESSED

NOTE: The VTM-4 LOCK indicator will only come on when the engine is running and the transmission is in R, 1, or 2 before the switch is pressed.

1. Check the No. 9 (10 A) fuse in the driver's underdash fuse/relay box.

   Is the fuse OK?

   YES - Go to step 2.

   NO - Replace the fuse, and recheck.

2. Turn the ignition switch ON (II), and watch the VTM-4 LOCK indicator.

   Does the VTM-4 LOCK indicator come on with the ignition switch ON (II), and does it go off 4 seconds later?

COPYRIGHT FIXYOURCAR2009@GMAIL.COM
NOT TO BE COPIED OR RESOLD

   YES - Go to step 3.

   NO - Go to step 10 .

3. Start the engine, and move the shift lever to R, 1, and 2, then watch the VTM-4 LOCK indicator.

   Does the VTM-4 LOCK indicator come on when the VTM-4 LOCK button is pushed?

   YES - The system is OK at this time.

   NO - Go to step 4.

4. Check for an A/T system DTC.

   Is there a DTC?

   YES - Troubleshoot the A/T system for the cause of the DTC.

   NO - Go to step 5.

5. Turn the ignition switch OFF.
6. Disconnect connector A (22P) from the VTM-4 control unit.
7. Turn the ignition switch ON (II).
8. Connect a voltmeter between the A8 terminal of the VTM-4 control unit and body ground.

cardiagn.com

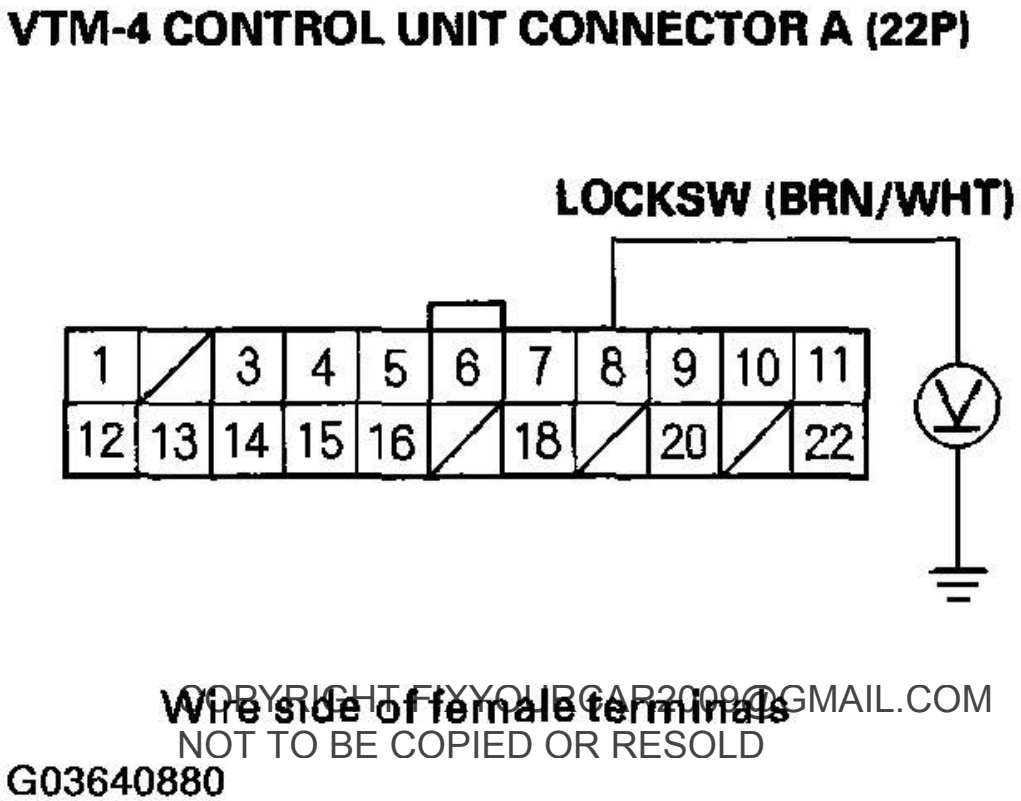

COPYRIGHT FIXYOURCAR2009@GMAIL.COM
NOT TO BE COPIED OR RESOLD

cardiagn.com

Fig. 74: Connecting Voltmeter Between A8 Terminal Of VTM-4 Control Unit And Body Ground
Courtesy of AMERICAN HONDA MOTOR CO., INC.

Is there battery voltage when the VTM-4 LOCK button is pushed?

YES - Check for loose terminal fit in the VTM-4 control unit connector. If it is normal, replace the VTM-4 control unit.

NO - Go to step 9.

9. Test the VTM-4 LOCK button (see **DIFFERENTIAL OIL TEMPERATURE SENSOR REPLACEMENT**).

Is the VTM-4 LOCK button OK?

YES - Repair open in the wire between the VTM-4 LOCK button and the VTM-4 control unit.

NO - Replace the VTM-4 LOCK button.

10. Connect the A16 terminal of the VTM-4 control unit to body ground with a jumper wire, and watch the VTM-4 LOCK indicator.

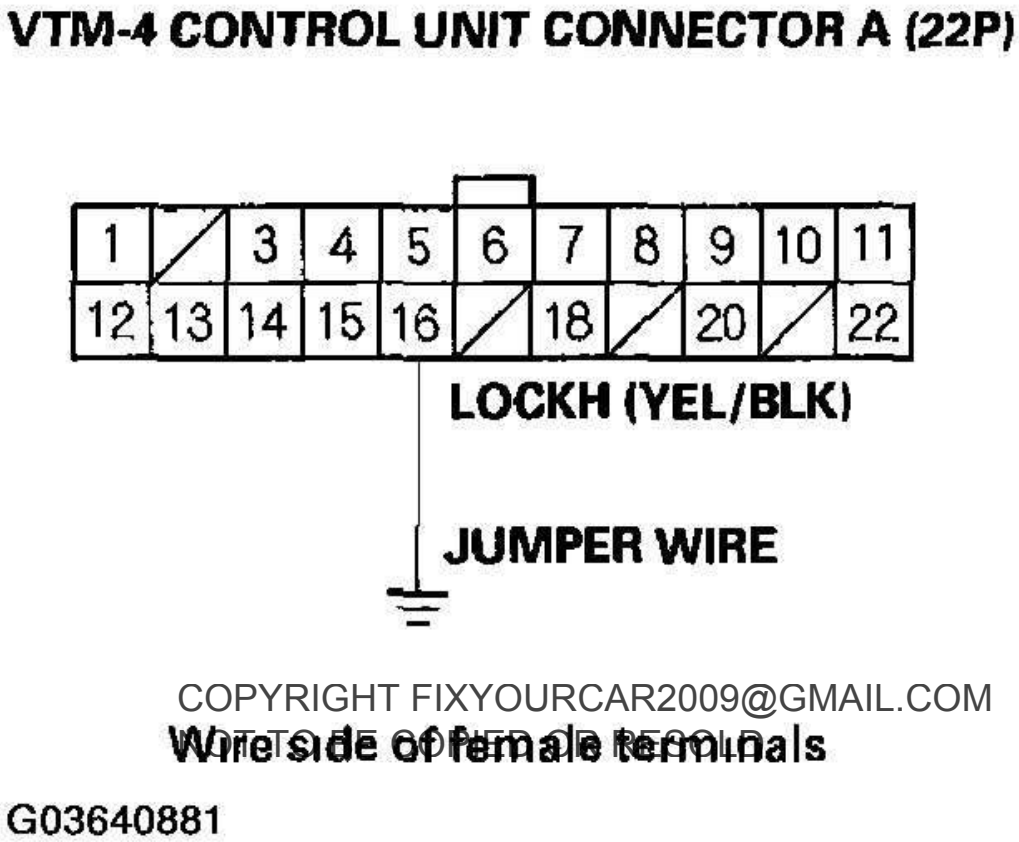

COPYRIGHT FIXYOURCAR2009@GMAIL.COM
NOT TO BE COPIED OR RESOLD

cardiagn.com

Fig. 75: Connecting A16 Terminal Of VTM-4 Control Unit To Body Ground With A Jumper Wire
Courtesy of AMERICAN HONDA MOTOR CO., INC.

Does the VTM-4 LOCK indicator come on?

YES - Check for loose terminal fit in the VTM-4 control unit connector. If it is normal, replace the VTM-4 control unit.

NO - Go to step 11.

11. Turn the ignition button OFF.
12. Remove the VTM-4 LOCK button.
13. Connect the No. 1 terminal of the VTM-4 LOCK button 6P connector to body ground with a jumper wire. Check for continuity between the A16 terminal of the VTM-4 control unit and body ground.

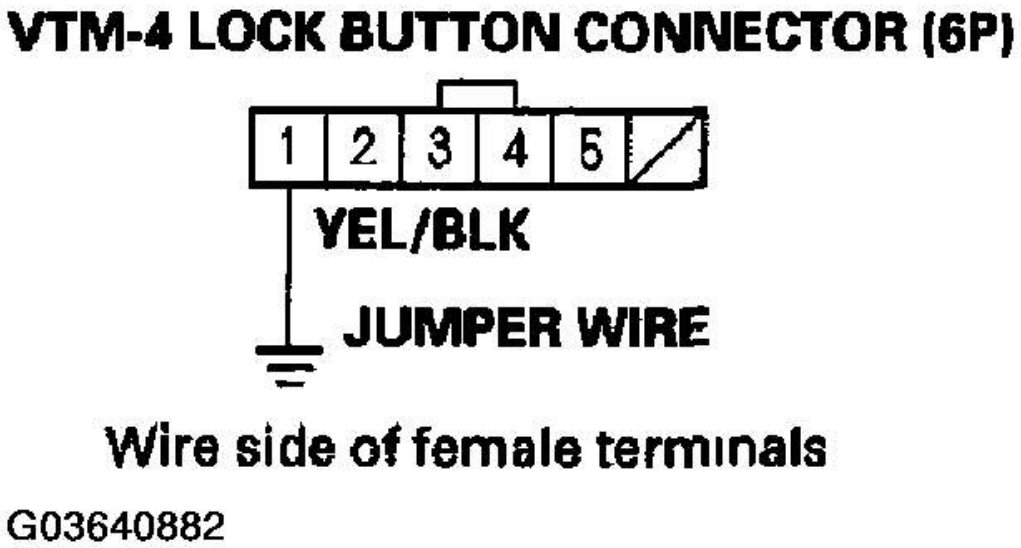

Fig. 76: Connecting No. 1 Terminal Of VTM-4 Lock Button 6P Connector To Body Ground With A Jumper Wire (1 Of 2)
Courtesy of AMERICAN HONDA MOTOR CO., INC.

COPYRIGHT FIXYOURCAR2009@GMAIL.COM
NOT TO BE COPIED OR RESOLD
cardiagn.com

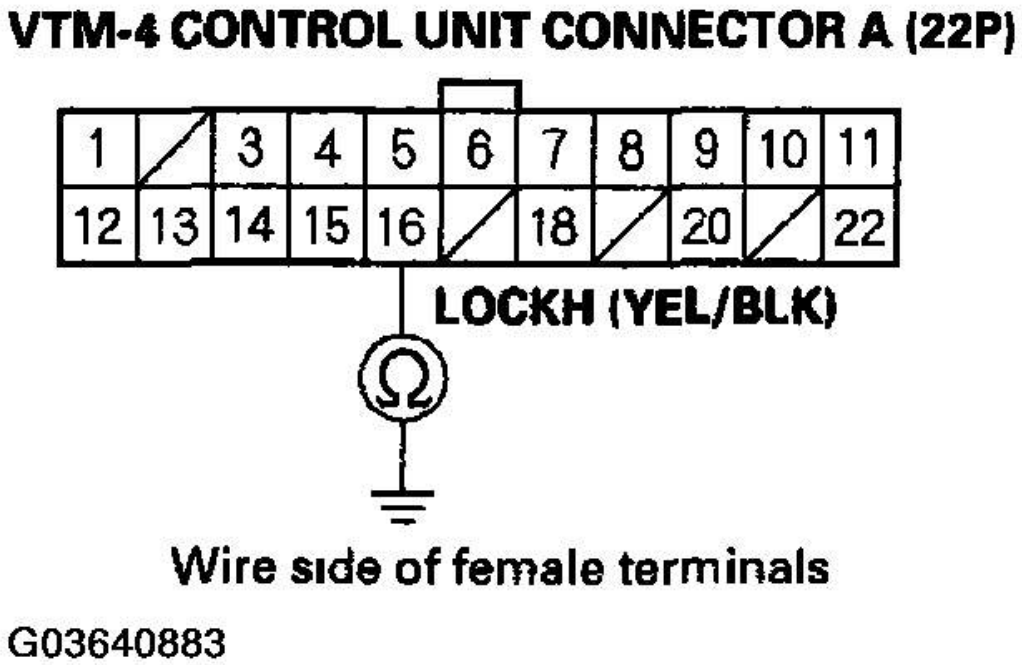

COPYRIGHT FIXYOURCAR2009@GMAIL.COM
NOT TO BE COPIED OR RESOLD

Fig. 77: Connecting No. 1 Terminal Of VTM-4 Lock Button 6P Connector To Body Ground With A Jumper Wire (2 Of 2)
Courtesy of AMERICAN HONDA MOTOR CO., INC.

Is there continuity?

YES - Go to step 14.

NO - Repair open in the wire between the A16 terminal of the VTM-4 control unit and the VTM-4 LOCK button.

14. Turn the ignition switch ON (II).
15. Measure the voltage between the No. 2 terminal of the VTM-4 LOCK button 6P connector and body ground.

cardiagn.com

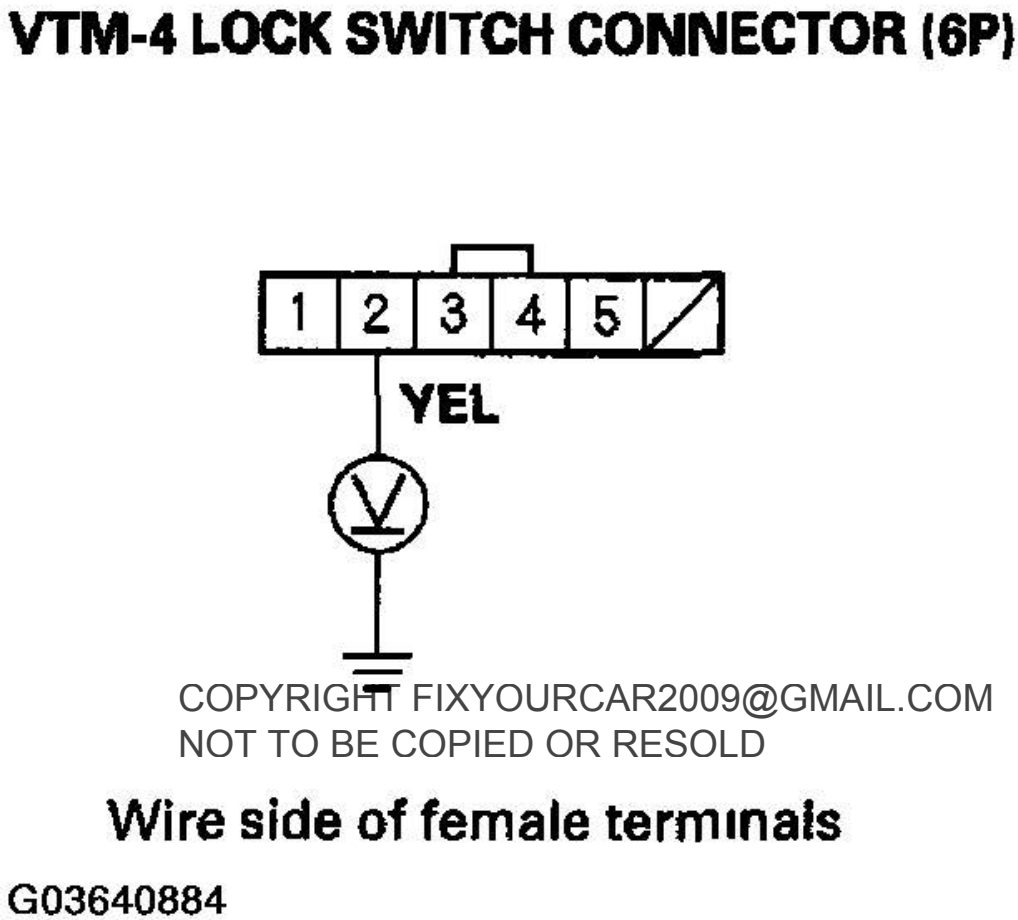

COPYRIGHT FIXYOURCAR2009@GMAIL.COM
NOT TO BE COPIED OR RESOLD

cardiagn.com

Fig. 78: Measuring Voltage Between No. 2 Terminal Of VTM-4 Lock Button 6P Connector And Body Ground
Courtesy of AMERICAN HONDA MOTOR CO., INC.

Is there battery voltage?

YES - Replace the VTM-4 LOCK indicator bulb.

NO - Repair open in the wire between the No. 2 terminal of the VTM-4 LOCK button 6P connector and the driver's underdash fuse/relay box.

THE VTM-4 LOCK INDICATOR COMES ON WHEN THE IGNITION SWITCH IS TURNED ON (II) AND DOES NOT GO OFF

1. Disconnect connector A (22P) from the VTM-4 control unit.

2. Turn the ignition switch ON (II), and watch the VTM-4 LOCK indicator.

   Does the VTM-4 LOCK indicator come on with the ignition switch ON (II)?

   YES - Go to step 3.

   NO - Check for loose terminal fit in the VTM-4 control unit connectors. If it is normal, replace the VTM-4 control unit.
3. Turn the ignition switch OFF.
4. Disconnect the VTM-4 LOCK button connector.
5. Check for continuity between the A16 terminal of the VTM-4 control unit and body ground.

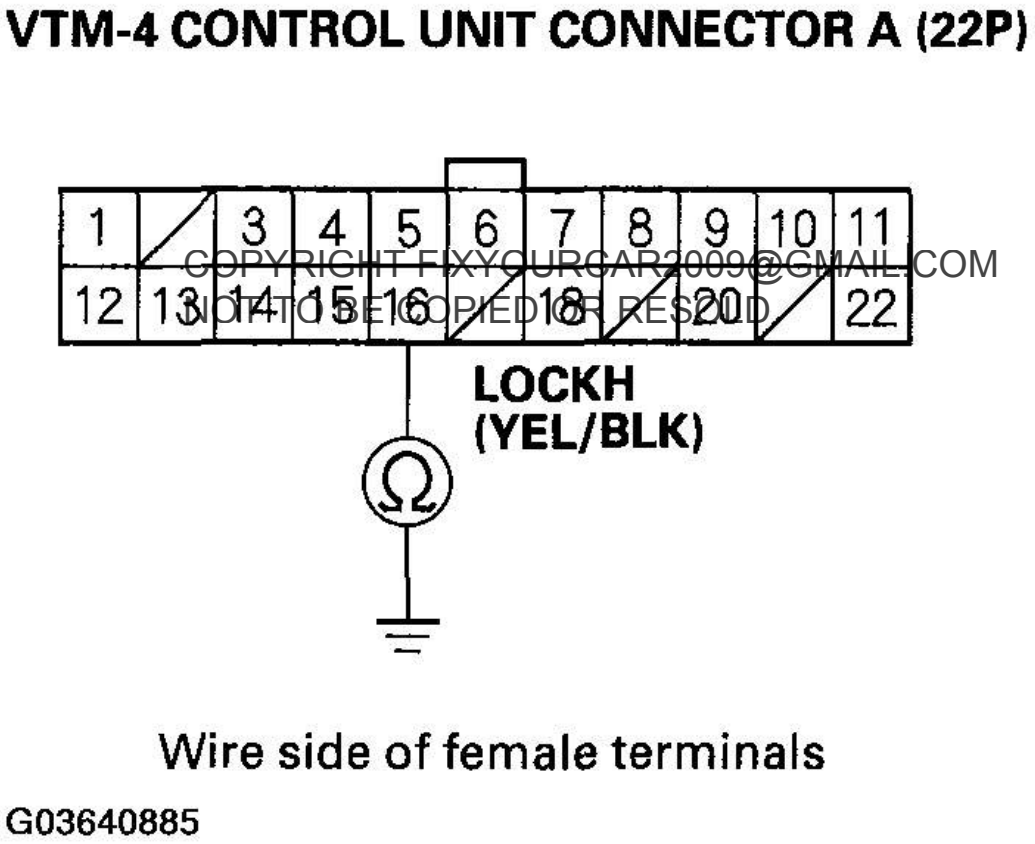

COPYRIGHT FIXYOURCAR2009@GMAIL.COM
NOT TO BE COPIED OR RESOLD

cardiagn.com

Fig. 79: Checking For Continuity Between A16 Terminal Of VTM-4 Control Unit And Body Ground
Courtesy of AMERICAN HONDA MOTOR CO., INC.

Is there continuity?

YES - Repair short to ground in the wire between the A16 terminal of the VTM-4 control unit and the VTM-4 LOCK button.

NO - Replace the VTM-4 LOCK button.

THE VTM-4 LOCK INDICATOR DOES NOT COME ON FOR ABOUT 4 SECONDS WHEN THE IGNITION SWITCH IS TURNED ON (II)

1. Disconnect connector A (22P) from the VTM-4 control unit.
2. Turn the ignition switch ON (II).
3. Connect the A16 terminal of the VTM-4 control unit to body ground with a jumper wire, and watch the VTM-4 LOCK indicator.

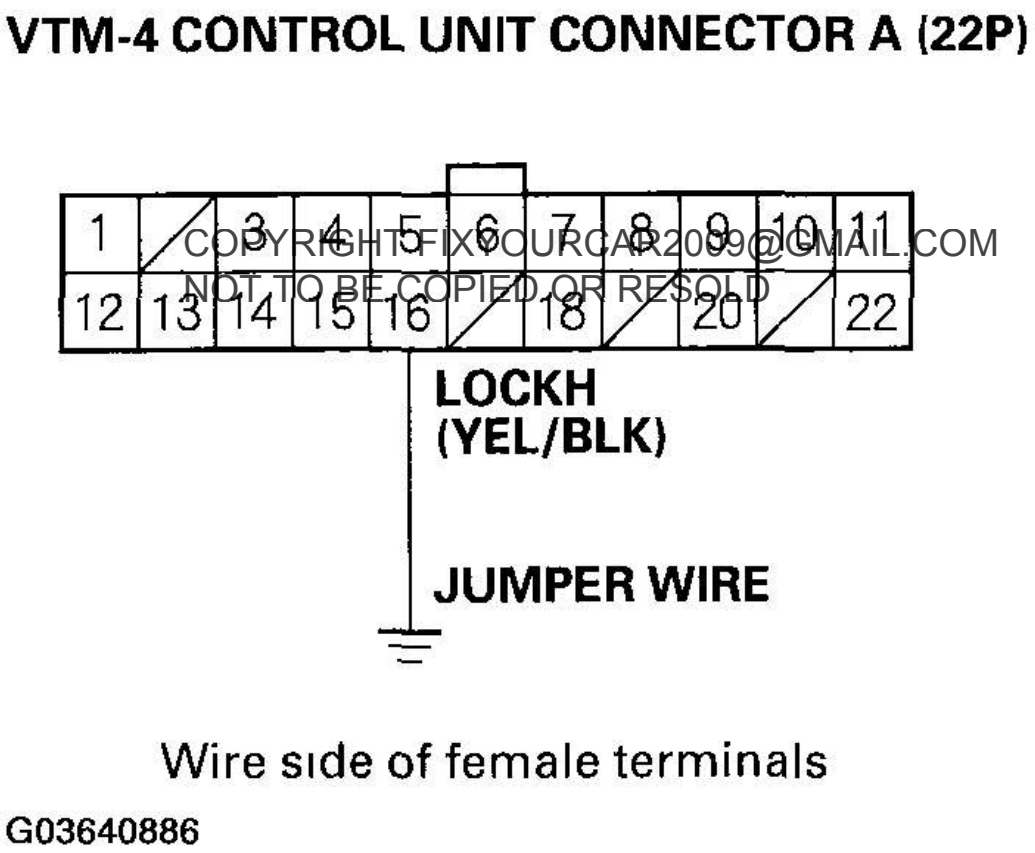

COPYRIGHT: FIXYOURCAR2009@GMAIL.COM
NOT TO BE COPIED OR RESOLD

cardiagn.com

Fig. 80: Connecting A16 Terminal Of VTM-4 Control Unit To Body Ground With Jumper Wire, And Watch VTM-4 Lock Indicator
Courtesy of AMERICAN HONDA MOTOR CO., INC.

Does the VTM-4 LOCK indicator come on?

YES - Check for loose terminal fit in the VTM-4 control unit connectors. If it is normal, replace the VTM-4 control unit.

NO - Go to step 4.

4. Turn the ignition switch OFF.
5. Remove the VTM-4 LOCK button.
6. Connect the No. 1 terminal of the VTM-4 LOCK button 6P connector to body ground with a jumper wire. Check for continuity between the A16 terminal of the VTM-4 control unit connector and body ground.

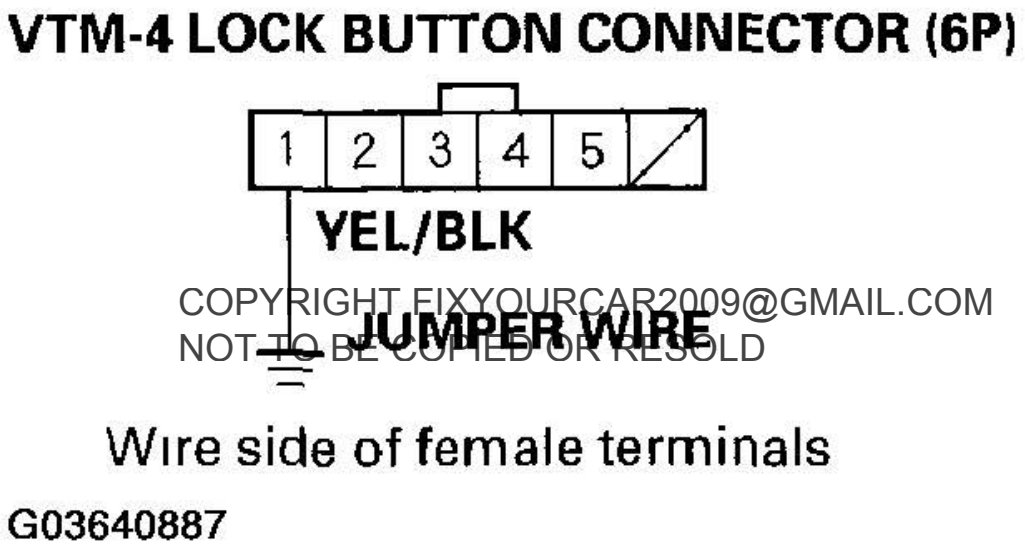

COPYRIGHT FIXYOURCAR2009@GMAIL.COM
NOT TO BE COPIED OR RESOLD

cardiagn.com

Fig. 81: Connecting No. 1 Terminal Of VTM-4 Lock Button 6P Connector To Body Ground With A Jumper Wire (1 Of 2)
Courtesy of AMERICAN HONDA MOTOR CO., INC.

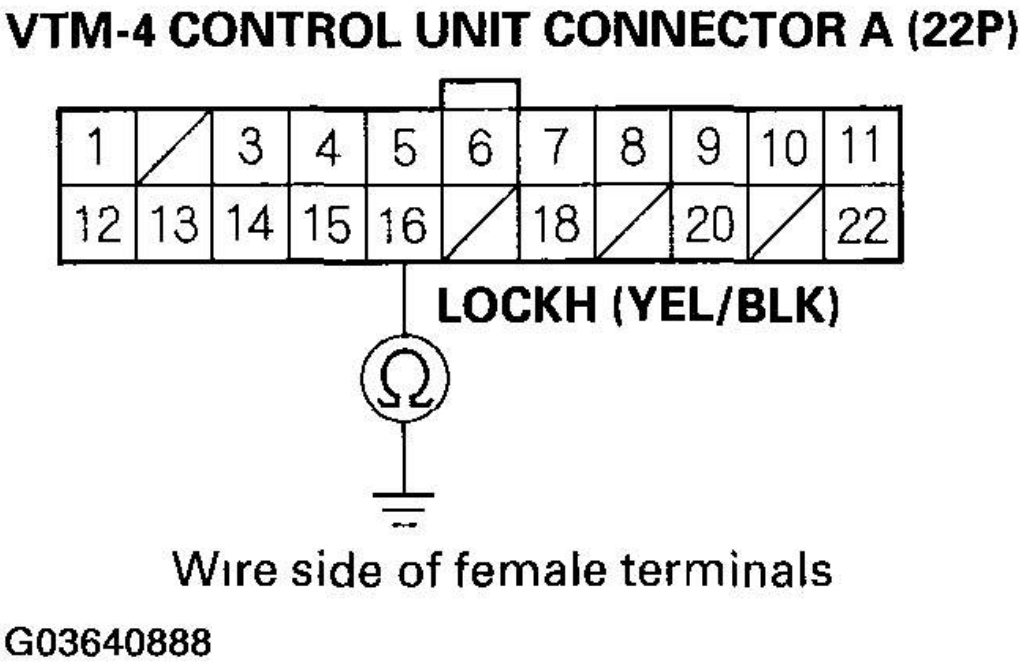

COPYRIGHT FIXYOURCAR2009@GMAIL.COM
NOT TO BE COPIED OR RESOLD

Fig. 82: Connecting No. 1 Terminal Of VTM-4 Lock Button 6P Connector To Body Ground With A Jumper Wire (2 Of 2)
Courtesy of AMERICAN HONDA MOTOR CO., INC.

Is there continuity?

YES - Go to step 7.

NO - Repair open in the wire between the A16 terminal of the VTM-4 control unit and the VTM-4 LOCK button.

7. Turn the ignition switch ON (II).
8. Measure the voltage between the No. 2 terminal of the VTM-4 LOCK button 6P connector and body ground.

cardiagn.com

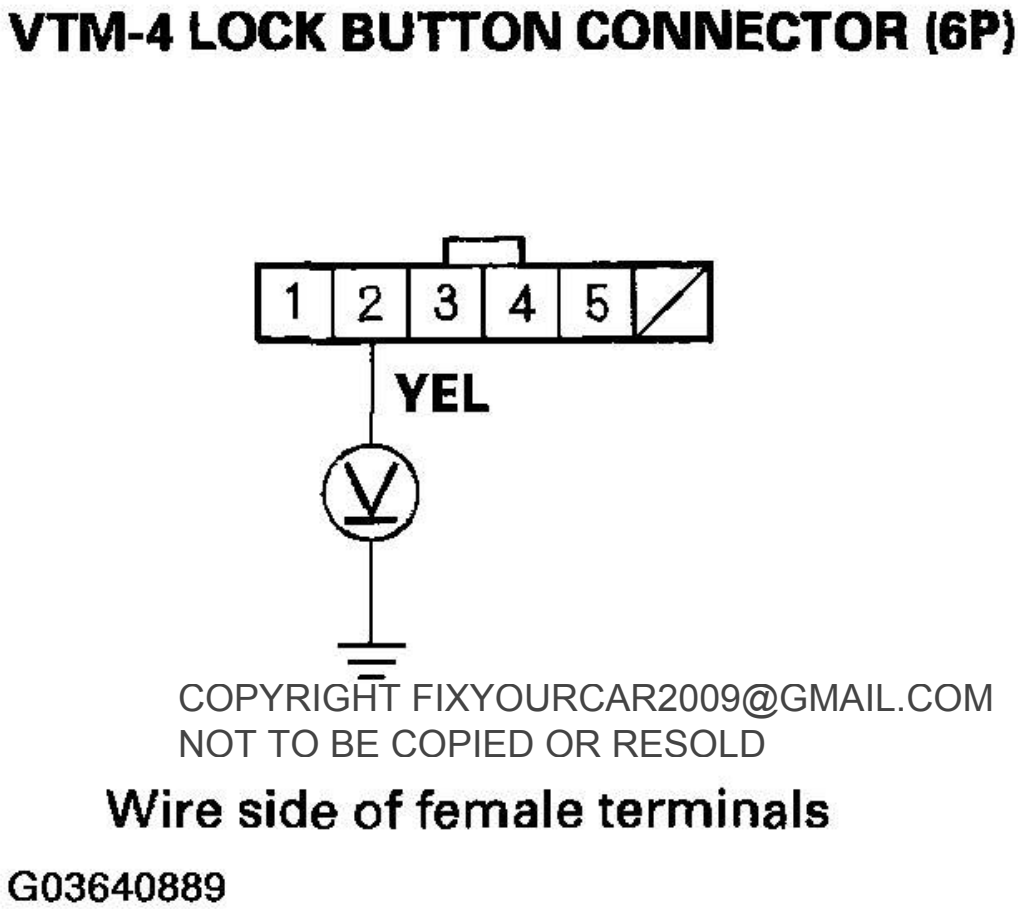

COPYRIGHT FIXYOURCAR2009@GMAIL.COM
NOT TO BE COPIED OR RESOLD

cardiagn.com

Fig. 83: Measuring Voltage Between No. 2 Terminal Of VTM-4 Lock Button 6P Connector And Body Ground
Courtesy of AMERICAN HONDA MOTOR CO., INC.

Is there battery voltage?

YES - Replace the VTM-4 LOCK indicator bulb.

NO - Repair open in the wire between the No. 2 terminal of the VTM-4 LOCK button 6P connector and the driver's underdash fuse/relay box.

DIFFERENTIAL FLUID INSPECTION AND REPLACEMENT

1. With the vehicle on level ground, inspect the differential fluid with the ignition switch OFF.
2. Remove the oil filler plug (A) and sealing washer (B), then check the condition of the fluid, and make

sure the fluid is at the proper level (C).

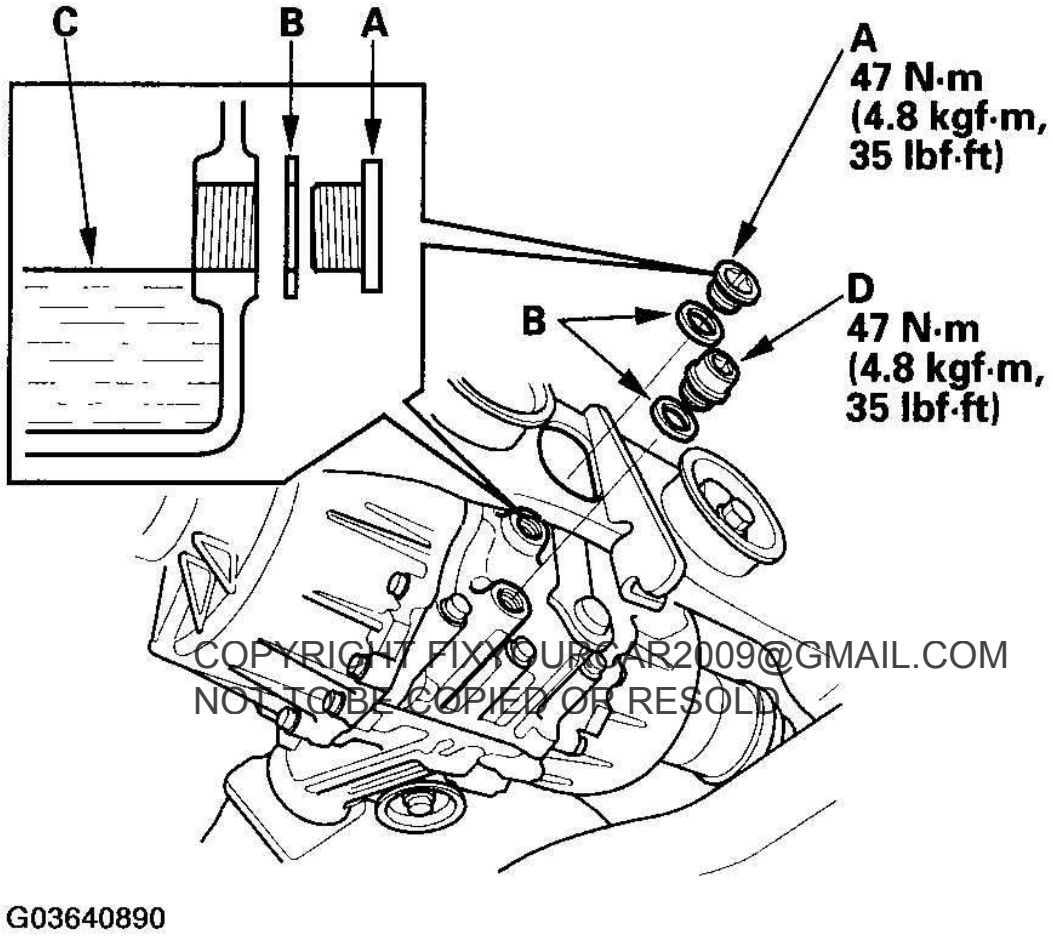

COPYRIGHT FIXYOURCAR2009@GMAIL.COM
NOT TO BE COPIED OR RESOLD

cardiagn.com

Fig. 84: Removing Oil Filler Plug
Courtesy of AMERICAN HONDA MOTOR CO., INC.

3. The fluid level must be up to the fill hole. If it is below the hole, add the recommended fluid until it runs out, then reinstall the oil filler plug with a new sealing washer.
4. If the differential fluid is dirty, remove the drain plug (D) and sealing washer, then drain the fluid.
5. Clean the drain plug, then reinstall with a new washer, and refill the differential with the recommended fluid to the proper level.

Fluid capacity: 2.64 L (2.79 US.qt) at oil change

Recommended fluid: VTM-4 Differential Fluid

6. Reinstall the oil filler plug with a new washer.

DIFFERENTIAL FUNCTION TEST

NOTE: Before doing the Differential Function Test, make sure these conditions are met:

- No DTCs are detected
- The engine is OFF
- The VTM-4 control unit is initialized

1. Connect the HDS to the DLC.
2. Turn the ignition switch ON, and confirm that the temperature of the differential oil is between 20 °C (68 °F) and 60 °C (140 °F) with the HDS.
3. Turn the ignition switch OFF with the shift lever in P.
4. Lift up the vehicle so all four wheel are off the ground (see **LIFT AND SUPPORT POINTS**).
5. Remove the rear wheels (see **KNUCKLE/HUB/WHEEL BEARING REPLACEMENT**).
6. Release the parking brake.
7. Turn the ignition switch ON.
8. Select MISCELLANEOUS TEST, then select the LEFT CLUTCH ELECTROMAGNETIC COIL TEST with the HDS, and follow the screen prompts. If the results are NORMAL, the left clutch is OK, go to step 9. If the results are ABNORMAL, replace the rear differential.
9. Select MISCELLANEOUS TEST, then select the RIGHT CLUTCH ELECTROMAGNETIC COIL TEST with the HDS, and follow the screen prompts. If the results are NORMAL, the right clutch is OK. If the results are ABNORMAL, replace the rear differential.

COPYRIGHT FIXYOURCAR2009@GMAIL.COM
NOT TO BE COPIED OR RESOLD
cardiagn.com

DIFFERENTIAL OIL TEMPERATURE SENSOR REPLACEMENT

1. Remove the wire harness cover (A), then disconnect the differential oil temperature sensor 2P connector (B).

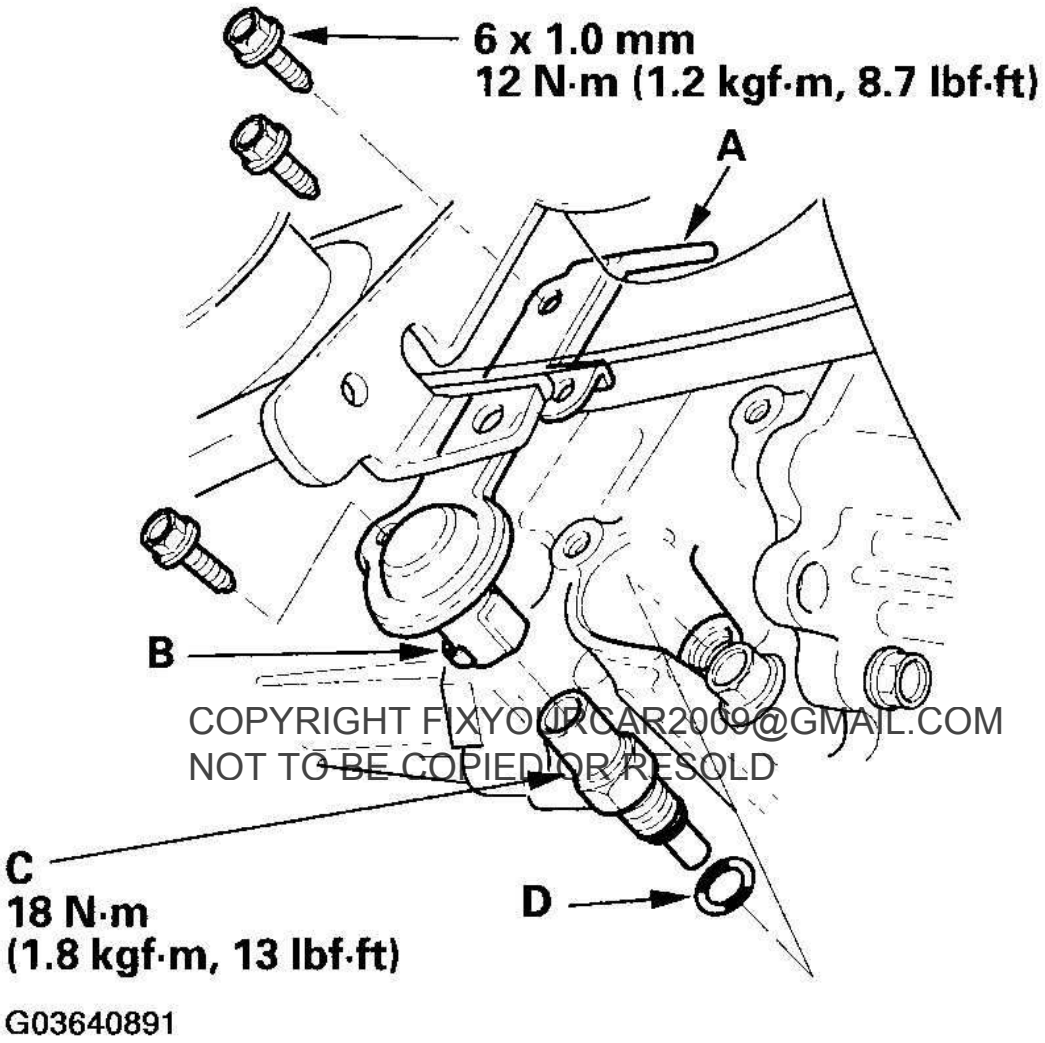

COPYRIGHT FIXYOURCAR2009@GMAIL.COM
NOT TO BE COPIED OR RESOLD

cardiagn.com

Fig. 85: Removing Wire Harness Cover
Courtesy of AMERICAN HONDA MOTOR CO., INC.

2. Remove the differential oil temperature sensor (C).
3. Install the differential oil temperature sensor in the reverse order of removal, with a new O-ring (D).

VTM-4 LOCK BUTTON TEST/ REPLACEMENT

1. Remove the instrument panel (see **INSTRUMENT PANEL REMOVAL/INSTALLATION**).
2. Disconnect the 6P connector (A) from the VTM-4 LOCK button (B), then remove the two screws and the switch.

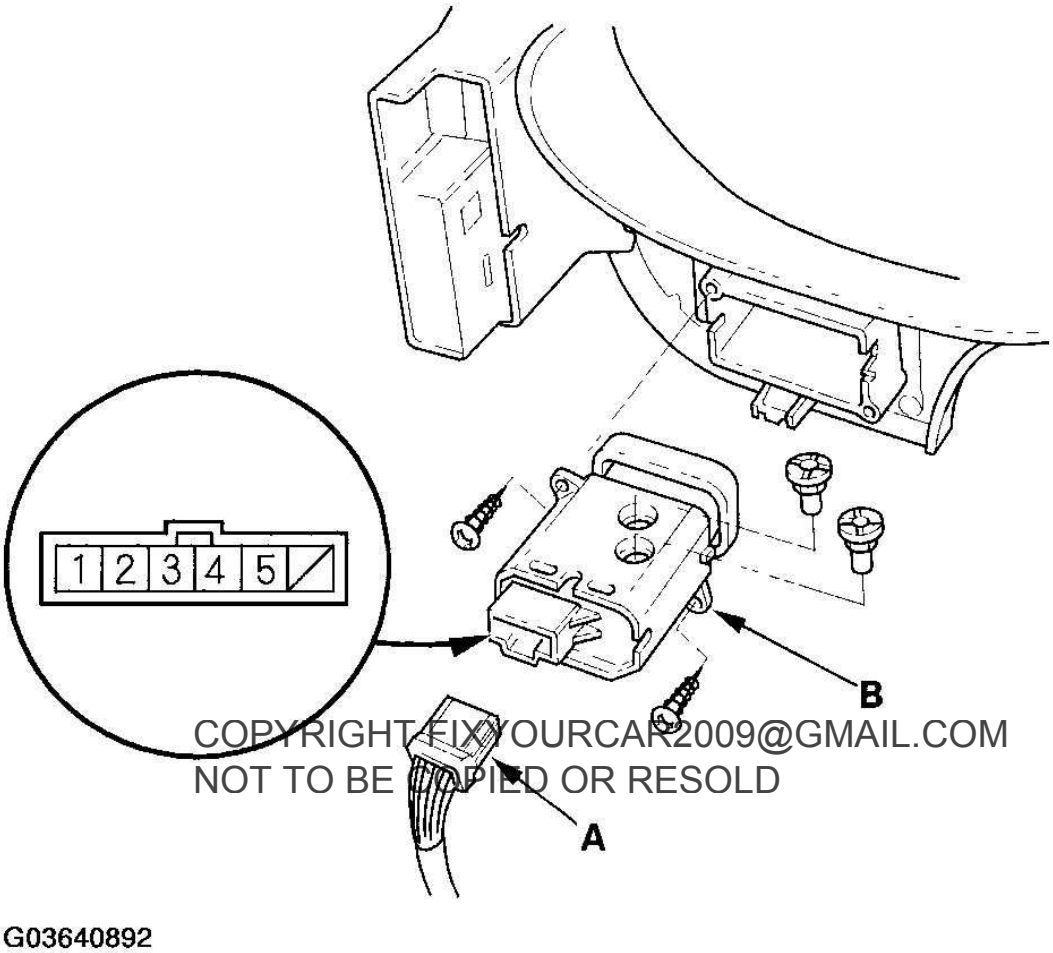

COPYRIGHT FIXYOURCAR2009@GMAIL.COM
NOT TO BE COPIED OR RESOLD

cardiagn.com

Fig. 86: Removing Instrument Panel
Courtesy of AMERICAN HONDA MOTOR CO., INC.

3. Check for continuity between the terminals in each button position according to the table. If the button fails any continuity check, replace the button.

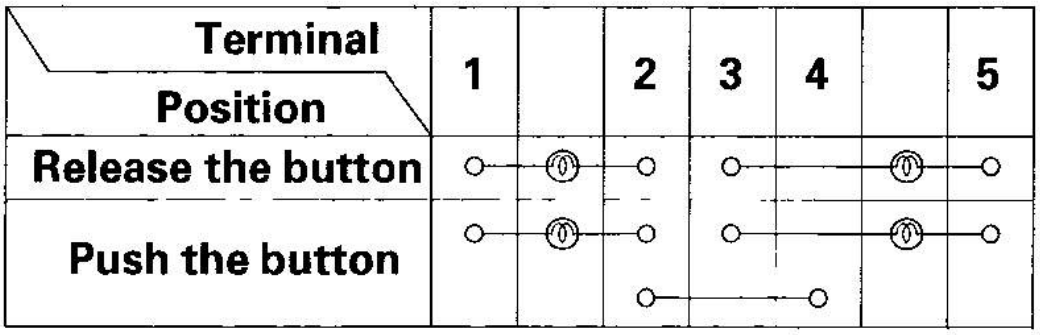

G03640893

Fig. 87: Checking For Continuity Between Terminals
Courtesy of AMERICAN HONDA MOTOR CO., INC.

VTM-4 CONTROL UNIT REPLACEMENT

NOTE: **The VTM-4 control unit must be initialized (see INITIALIZATION OF THE VTM-4 CONTROL UNIT) after replacement, otherwise the 4WD system will not function.**

COPYRIGHT FIXYOURCAR2009@GMAIL.COM
NOT TO BE COPIED OR RESOLD

1. Remove the front mounting bolts from the right third row seat, and fold the seat cushion back (see **THIRD ROW SEAT REMOVAL/INSTALLATION**).
2. Remove the cover (A) from the right rear side trim panel to gain access to the VTM-4 control unit (B).

cardiagn.com

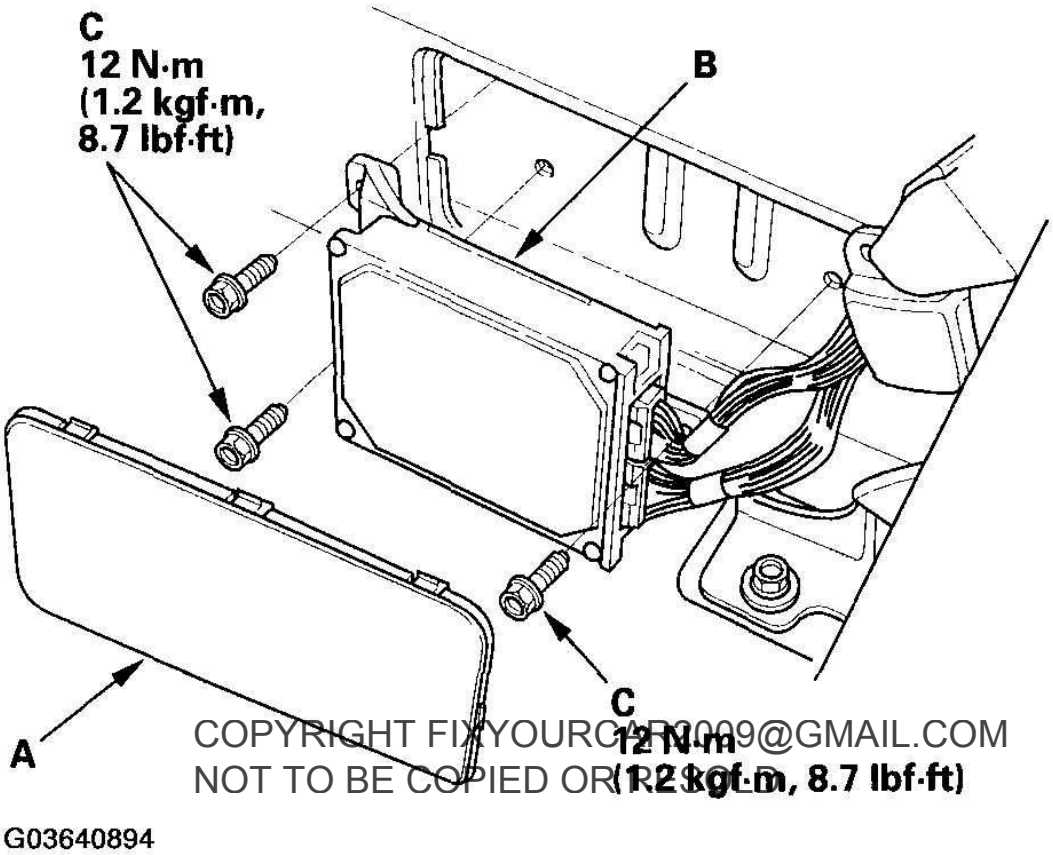

COPYRIGHT FIXYOURCAR2009@GMAIL.COM
NOT TO BE COPIED OR RESOLD

cardiagn.com

Fig. 88: Removing Cover
Courtesy of AMERICAN HONDA MOTOR CO., INC.

3. Remove the three bolts (C) from the VTM-4 control unit.
4. Disconnect the VTM-4 control unit connectors.
5. Install the VTM-4 control unit in the reverse order of removal.

VTM-4 RELAY REPLACEMENT

1. Remove the right rear side trim panel (see **TRIM REMOVAL/INSTALLATION - REAR SIDE LOWER AREA**).
2. Remove the VTM-4 relay (A).

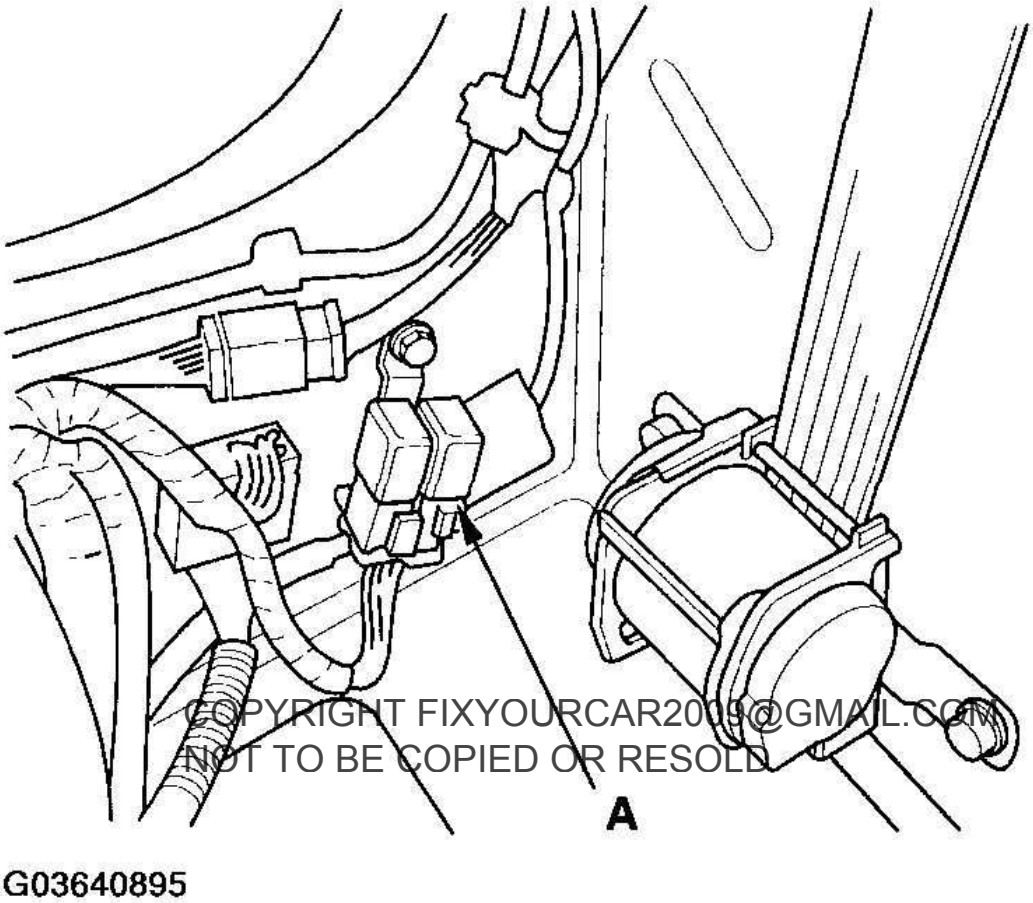

COPYRIGHT FIXYOURCAR2009@GMAIL.COM
NOT TO BE COPIED OR RESOLD

cardiagn.com

Fig. 89: Removing VTM-4 Relay
Courtesy of AMERICAN HONDA MOTOR CO., INC.

3. Install the VTM-4 relay in the reverse order of removal.

DIFFERENTIAL MOUNT REPLACEMENT