## Electric Cooling Fans - Cars

# MODEL IDENTIFICATION

**NOTE:** **For electric cooling fan diagnosis on 1998 Prizm, see appropriate MANUAL A/C-HEATER SYSTEMS article.**

**MODEL IDENTIFICATION - CARS**

| Body Code (1) | Model |
|---|---|
| "C" | Park Avenue |
| "E" | Eldorado |
| "F" | Camaro & Firebird |
| "G" | Aurora & Riviera |
| "H" | Bonneville, Eighty Eight, LeSabre, LSS & Regency |
| "J" | Cavalier & Sunfire |
| "K" | (2) DeVille & Seville |
| "M" | Metro |
| "N" | Achieva, Alero, Cutlass, Grand Am, Malibu & Skylark |
| "S" | Prizm |
| "V" | Catera |
| "W" | Century, Grand Prix, Intrigue, Lumina, Monte Carlo & Regal |
| "Y" | Corvette |
| "Z" | Saturn |

(1) Vehicle body code is fourth character of VIN.

(2) Includes Concours and D'Elegance.

# DESCRIPTION & OPERATION

### ELECTRIC COOLING FAN CONTROL

**All Models Except Catera**

All FWD and some RWD vehicles use an electric cooling fan. The electric cooling fan is used for radiator and A/C condenser cooling. Cooling fan operates when A/C is on and when engine coolant temperature exceeds a specific value. One or more cooling fan relays may be used. For cooling fan relay location, see **COOLING FAN RELAY LOCATION** table.

**Catera**

Electric cooling fan circuits consist of one engine cooling fan, 2 auxiliary cooling fans, 2 temperature switches,

cardiagn.com

A/C pressure switch, Engine Control Module (ECM) cooling blower, timing control pump, auxiliary water pump, 5 fan control relays, one ECM relay, one auxiliary water pump relay and one engine cooling fan resistor. Relays are located at left front of engine compartment, in ECM housing. Auxiliary water pump is provided with battery voltage with ignition on and when coolant temperature reaches 194°F (90°C).

At 212°F (100°C), primary temperature switch stage one contacts will close, enabling ECM relay (K48) and cooling fan control relay (K26) to energize. When ECM relay energizes, ignition voltage is applied to ECM cooling blower, allowing it to operate.

When cooling fan control relay (K26) energizes, battery voltage is applied to auxiliary cooling fan No. 1 and to auxiliary cooling fan No. 2 through the normally open contacts of fan control relay (K52). This allows auxiliary cooling fans to operate in series at half speed.

Fan control relay (K26) supplies battery voltage to engine cooling fan through the engine cooling fan resistor. The engine cooling fan resistor limits engine cooling fan operation to half speed. Fan control relay (K26) will also supply battery voltage to timing control pump through normally closed contacts of the auxiliary water pump relay (K22). This will allow timing control pump to operate.

When cooling fan control relay (K26) energizes, battery voltage is applied to auxiliary cooling fan No. 1 and to auxiliary cooling fan No. 2 through the normally open contacts of fan control relay (K52). This allows auxiliary cooling fans to operate in series at half speed.

Fan control relay (K26) supplies battery voltage to engine cooling fan through the engine cooling fan resistor. The engine cooling fan resistor limits engine cooling fan operation to half speed. Fan control relay (K26) will also supply battery voltage to timing control pump through normally closed contacts of the auxiliary water pump relay (K22). This will allow timing control pump to operate.

If temperature reaches 221°F (105°C), temperature switch contacts will close, enabling fan control relays (K52 and K28) to energize. When fan control relay (K52) energizes, auxiliary cooling fan No. 1 runs at full speed as it is no longer in series with auxiliary cooling fan No. 2. When fan control relay (K28) energizes, battery voltage is applied to auxiliary cooling fan No. 2 which runs at full speed.

With primary temperature switch stage one contacts closed, ECM cooling blower, timing control pump and engine cooling fan (half speed) will continue to operate. Secondary temperature switch contacts will open when coolant temperature reaches 212°F (100°C) and cause operation of auxiliary cooling fans to operate differently as designated by primary temperature switch.

If coolant temperature reaches 230°F (110°C), secondary temperature switch stage two contacts will close, enabling fan control relay (K67) to energize. When fan control relay (K67) energizes, battery voltage is applied directly to engine cooling fan, causing it to run at full speed. All other operations that were taking place before coolant temperature reached 230°F (110°C) remain in effect. Primary temperature switch stage 2 contacts open when coolant temperature reaches 221°F (105°C) and engine cooling fan will return to half speed.

At coolant temperatures greater than about 230°F (110°C), all 3 cooling fans run at full speed. ECM cooling blower, timing control pump and auxiliary water pump are also operating. Only 6 of the 7 relays operate at this time, unless A/C system is on. In this case, fan control relay (K87) and A/C clutch relay (K60) will also operate.

cardiagn.com

To prevent excessively high refrigerant pressure, auxiliary cooling fans are switched from first speed to second speed at refrigerant pressures greater than about 276 psi (19.4 kg/cm$^2$ ). When pressure drops to less than about 218 psi (15.3 kg/cm$^2$ ), auxiliary cooling fans are switched back to first speed.

**COOLING FAN RELAY LOCATION**

| Application | Location |
|---|---|
| "C" Body(1) | Right Front Of Engine Compartment, In Fuse/Relay Block |
| "E" & "K" Bodies | Mounted On Lower Radiator Support |
| "F" Body | In Underhood Electrical Center, On Left Inner Fender Panel |
| "G" Body | |
| Relay No. 1 | On Center Of Firewall |
| Relays No. 2 & 3 | In Underhood Relay Center, At Right Front Of Engine Compartment |
| "H" Body(1) | Center Rear Of Engine Compartment, Below Right-Side Maxifuse Block |
| "J" Body(2) | In Underhood Fuse/Relay Block At Left Front Corner Of Engine Compartment |
| "N" Body | In Underhood Junction Block At Right Rear Of Engine Compartment |
| "W" Body | |
| Chevrolet | Inside Electrical Centers At Right & Left Front Of Engine Compartment |
| Except Chevrolet | Inside Electrical Center At Right Front Of Engine Compartment |
| "Y" Body | In Underhood Electrical Center In Front Of Battery |
| Metro | In Engine Compartment Relay Box Near Battery |
| Prizm | |
| Fuse/Relay Block No. 1 | Left Front Of Engine Compartment, To Left Of Air Cleaner |
| Fuse/Relay Block No. 2 | Left Front Of Engine Compartment, To Left Of Battery |

(1) See **Fig. 1**
.
(2) See **Fig. 2**
.

**SCAN TOOL**

A variety of information is transmitted through Data Link Connector (DLC). This data is transmitted at a high frequency which requires the use of Tech 1 Scan Tool (94-00101A), appropriate cartridge kit and vehicle interface module kit. Other types of scan tools are available and may function and provide adequate information for diagnostic work. Always refer to scan tool manufacturer's instructions.

## TROUBLE SHOOTING

**PRELIMINARY INFORMATION**

cardiagn.com

This article contains only the text required to test electric cooling fans. Other diagnostic information may be referenced while performing electric cooling fan diagnosis. See appropriate ENGINE PERFORMANCE articles for complete information on engine control systems.

Some truck models are equipped with an auxiliary electric cooling fan. The auxiliary electric cooling fan is not controlled by Powertrain Control Module (PCM).

Trouble shoot cooling fan using appropriate diagnostic information provided. For cooling fan relay location, see **COOLING FAN RELAY LOCATION** table.

To help save diagnostic time, always check for blown fuses or fusible links before proceeding with any testing. If fuses are blown, locate and repair short circuit before replacing fuses. Ensure all related relay and wire harness connections are clean and tight. Repair as necessary. See **WIRING DIAGRAMS** for component, terminal and wire color identification.

**NOTE:** **Vehicles may be equipped with a PCM/VCM using an Electronically Erasable Programmable Read Only Memory (EEPROM). When replacing PCM/VCM, the new PCM/VCM must be programmed.**

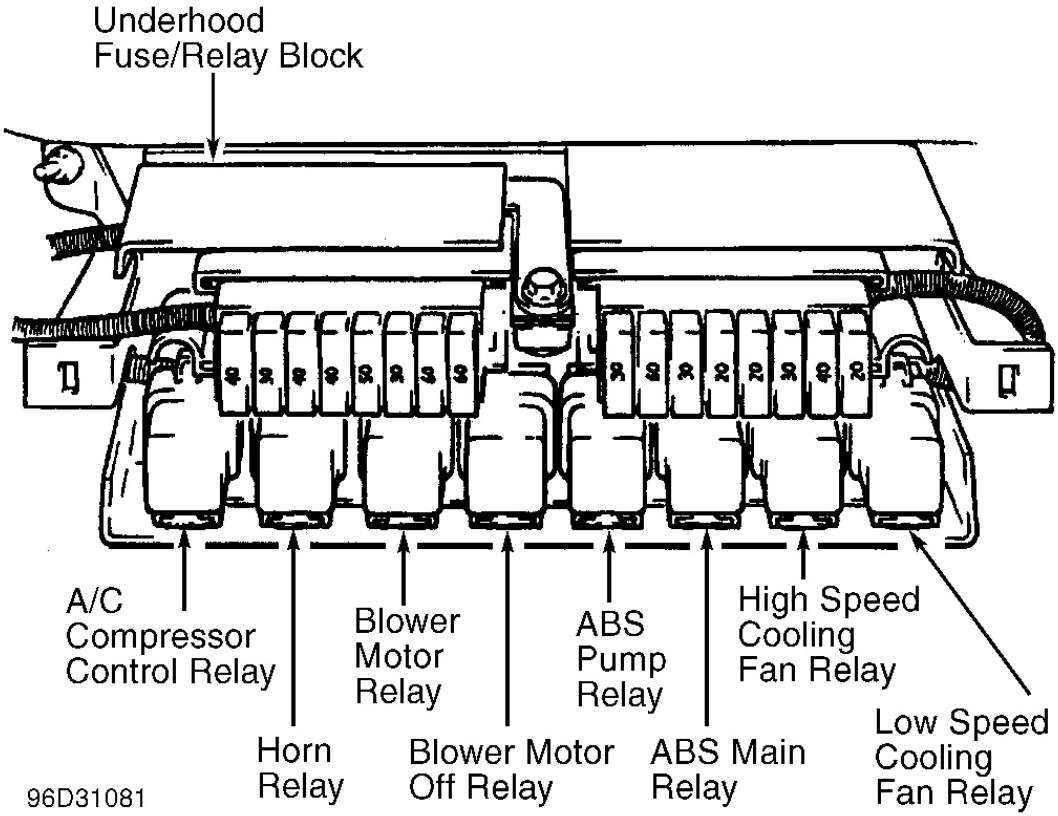


**Fig. 1: "C" & "H" Bodies Cooling Fan Relay Location**

cardiagn.com

**Courtesy of GENERAL MOTORS CORP.**

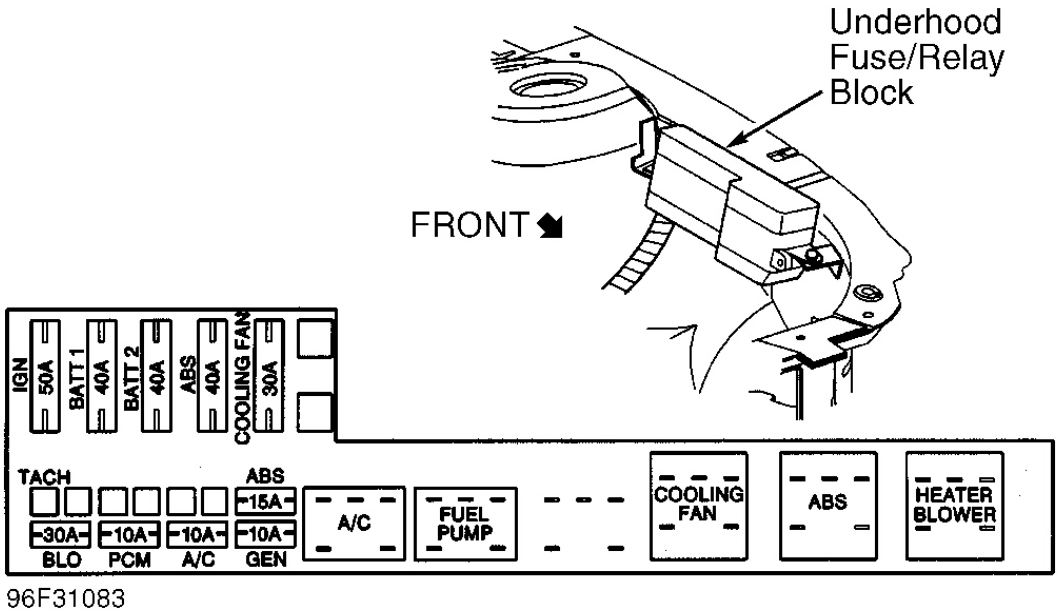


**Fig. 2: "J" Body Cooling Fan Relay Location**
**Courtesy of GENERAL MOTORS CORP.**

## ELECTRIC COOLING FAN CIRCUIT DIAGNOSIS

To help save diagnostic time, check cooling system fluid level, water pump belt condition and tension. always check for blown fuses or fusible links before proceeding with any testing. If fuses are blown, locate and repair short circuit before replacing fuses. Ensure all related relay and wire harness connections are clean and tight. Repair as necessary. See **WIRING DIAGRAMS** .

WARNING: **Vehicles may be equipped with a PCM using an Electronically Erasable Programmable Read Only Memory (EEPROM). When replacing PCM, the new PCM must be programmed.**

### 1.0L & 1.3L METRO

#### Description

Cooling fan is controlled by Powertrain Control Module (PCM) through cooling fan relay based on inputs from engine coolant temperature sensor. PCM turns on the cooling fan when coolant temperature sensor rises above 208°F (97.5°C) and turns off cooling fan when coolant temperature sensor drops below 199°F (92.5°C). PCM controls cooling fan motor by grounding cooling fan relay control circuit which closes fan relay contacts.

cardiagn.com

**Diagnosis**

1. If On-Board Diagnostic (OBD) System Check has not been performed, see OBD SYSTEM CHECK in appropriate SELF-DIAGNOSTICS article in ENGINE PERFORMANCE. If OBD System Check has been performed, for 1998 models go to next step. For 1999 models, go to step **6)** .
2. Start engine and run until operating temperature is reached. Turn off all accessories. Install scan tool. Monitor engine cooling temperature (ECT) temperature parameters. If cooling fan comes on when ECT reaches 208°F (97.5°C), go to next step. If cooling fan does not operate as specified, go to step **10)** .
3. If cooling fan shuts off when ECT drops below 199°F (92.5°C), see **DIAGNOSTIC AIDS** . If cooling fan does not shut off as specified, go to next step.
4. Ensure ECT is below 199°F (92.5°C) for 1998 models or 194°F (90°C) for 1999 models. Disconnect cooling fan relay located in relay box near battery. If cooling fan is not operating, go to next step. If cooling fan is operating, go to step **8)** .
5. Using test light connected to battery voltage, probe cooling fan relay connector cavity No. 2 (Blue wire). If test light illuminates, go to step **9)** . If test light does not illuminate, go to step **20)** .
6. Install scan tool. Turn ignition on, engine off. Verify ECT sensor reading is below 194°F (90°C). If cooling fan is not operating, go to next step . If cooling fan is operating, go to step **4)** .
7. Turn ignition on, engine off. Using scan tool, clear DTCs. Command fan on and then off. If cooling fan operated when commanded on and shut off when commanded off, go to **DIAGNOSTIC AIDS** . If fan did not operate when commanded on and shut off when commanded off, go to step **11)**
8. Repair short to power in Blue or Blue/Red wire between cooling fan relay and cooling fan motor. See **WIRING DIAGRAMS** . After repairs, go to step **23)** .
9. Check for short to ground in Blue wire between PCM and cooling fan relay. repair as necessary. After repairs, go to step **23)** . If repair was not necessary, go to step **21)** .
10. Start engine. Ensure ECT reads above 208°F (97.5°C). Disconnect cooling fan relay located in relay box near battery. Using test light connected to battery voltage, probe cooling fan relay cavity No. 2 (Blue wire). If test light illuminates, go to next step. If test light does not illuminate, go to step **15)** .
11. Turn ignition on. Using test light connected to ground, probe cooling fan relay cavity No. 1 (Black/White wire). If test light illuminates, go to next step. If test light does not illuminate, go to step **18)** .
12. Using test light connected to ground, probe cooling fan relay cavity No. 4 (Black/Blue wire). If test light illuminates, go to next step. If test light does not illuminate, go to step **19)** .
13. Connect a fused jumper between cooling fan relay connector cavities No. 3 (Blue/Red wire) and No. 4 (Black/White wire). If cooling fan operates, go to step **20)** . If cooling fan does not operate, for 1998 models, go to step **16)** . If cooling fan does not operate, for 1999 models go to next step.
14. Using test light connected to battery voltage, probe cooling fan connector cavity No. 2 (Blue wire). Using scan tool, command cooling fan on. If test light illuminates, go to step **20)** . If test light does not illuminate, go to next step.
15. Check for open in Blue wire between PCM and cooling fan relay. Repair as necessary. After repairs, go to step **23)** . If repair was not necessary, go to step **21)** .
16. Check for open in Blue or Blue/Red wire between cooling fan relay and cooling fan motor. Repair as necessary. See **WIRING DIAGRAMS** . After repairs, go to step **23)** . If repair was not necessary, go to next step.
17. Check for open or poor terminal contact in Black wire between cooling fan motor and ground. Repair as

cardiagn.com

necessary. After repairs, go to step **23)** . If repair was not necessary, go to step **22)** .

18. Repair open in Black/White wire between cooling fan relay terminal No. 1 and junction block. After repairs, go to step **23)** .
19. Repair open in Black/Blue wire between cooling fan relay terminal No. 4 and fuse box. After repairs, go to step **23)** .
20. Replace cooling fan relay. After repairs, go to step **23)** .
21. Replace PCM. After repairs, go to step **23)** .
22. Replace cooling fan motor. After repairs, go to next step.
23. Using scan tool, clear any DTCs and road test vehicle within freeze frame conditions that caused DTC to set. If any DTCs set, go to appropriate DTC. See appropriate SELF-DIAGNOSTICS article in ENGINE PERFORMANCE. If no DTCs are stored, system is okay at this time.

**Diagnostic Aids**

Whenever vehicle owner complains of an overheating problem, determine if complaint was due to an actual boilover, or TEMP light or gauge indicated overheating. Whenever gauge or light indicates overheating, but no boilover is detected, gauge or light circuit should be checked. Gauge accuracy can also be checked by comparing engine coolant temperature sensor reading with gauge reading.

If engine is actually overheating, and gauge indicates overheating, but cooling fan is not coming on, ECT sensor has probably shifted out of calibration and should be replaced. Whenever engine is overheating and cooling fan is on, cooling system should be checked.

## 1999 1.8L PRIZM

**Description**

When ignition switch is in ON or START position, voltage is supplied to ENGINE MAIN relay and FAN No. 1 relay, located in fuse/relay box No. 1, through EGU-IG fuse (10-amp) in junction block No. 2. When engine coolant temperature reaches 199°F (93°C), fan control switch opens and ground is lost to fan relay No. 1. Fan relay No. 1 de-energizes, applying voltage to radiator fan motor, which operates at full speed.

When coolant temperature reaches 181°F (83°C), fan control switch closes, providing ground to fan No. 1 relay, stopping cooling fan operation. Radiator cooling fan will cycle on and off in conjunction with engine temperate increases and decreases.

**Cooling Fan System Check**

1. Start and run engine until temperature reaches 199°F (93°C). Main radiator fan motor and auxiliary fan motor (if equipped with A/C) should operate at full speed. Main and auxiliary radiator fan should stop when coolant temperature drops below 181°F (83°C). If cooling fan does not operate as specified, go to **MAIN COOLING FAN INOPERATIVE** . If auxiliary fan does not operate as specified, go to **AUXILIARY COOLING FAN INOPERATIVE** .
2. Start and run engine. Turn blower speed to any position except off. Main and auxiliary fan motor (if equipped with A/C) should operate at half speed. Press A/C switch to ON position (if equipped). When

cardiagn.com

temperature reaches 199°F (93°C), main and auxiliary fan should operate at full speed. Turn A/C switch on. If A/C system pressure exceeds 220 psi at A/C pressure switch, both fans should operate at high speed. If cooling fan does not operate as specified, go to **MAIN COOLING FAN INOPERATIVE AT LOW SPEED** .

3. Turn A/C switch off. When coolant temperature drops below 181°F (83°C), main and auxiliary fan should stop operating. If fans do not operate as specified, go to **AUXILIARY COOLING FAN OPERATES CONTINUOUSLY** .

**Main Cooling Fan Inoperative**

1. If cooling fan system check was performed, go to next step. If cooling fan system check was not performed, go to **COOLING FAN SYSTEM CHECK** .
2. Start engine and run until operating temperature is reached. Ensure thermostat is open. Turn engine off. Disconnect main fan motor harness connector. Connect test light between main fan motor harness connector terminals. Start engine. If test light illuminates, go to next step. If test light does not illuminate, go to step **4)** .
3. Replace main fan motor. After repair, go to **COOLING FAN SYSTEM CHECK** .
4. Check for open in White/Black wire between radiator fan motor and ground. If open is not found, go to next step. If open is found, repair as necessary. See **WIRING DIAGRAMS** . After repair, go to **COOLING FAN SYSTEM CHECK** .
5. Check for open in Black/Red wire between main fan motor terminal No. 2 and fan relay No. 1. If open was not found, go to next step. If open in found, go to step **7)** .
6. Check for open in Black/Red wire between main fan motor terminal No. 2 and fuse/relay block No. 1 connector C3 terminal No. 1. Also check for an open between fuse/relay block No. 1 connector C3 terminal No. 1 fan relay No. 1 terminal No. 23. If open was found, repair as necessary. After repair, go to **COOLING FAN SYSTEM CHECK** . If open was not found, replace fuse/relay block No. 1. After repair, go to **COOLING FAN SYSTEM CHECK** .
7. Start engine. Using DVOM connected to ground, check voltage at fan relay No. 1 terminal No. 22. If battery voltage does not exist, go to next step. If battery voltage exists, replace fan relay No. 1. After repair, go to **COOLING FAN SYSTEM CHECK** .
8. Check for open in circuit between fan relay No. 1 terminal No. 22 and engine main relay terminal No. 14. If open was not found, go to next step. If open was found, replace fuse/relay block No. 1. After repair, go to **COOLING FAN SYSTEM CHECK** .
9. Start engine. Using DVOM connected to ground, check voltage at main fan relay terminal No. 16. If battery voltage exists, go to step **11)** . If battery voltage does not exist, go to next step.
10. Check for open in Black/Yellow wire between fuse/relay block No. 1 connector C5 terminal No. 6 and fuse/relay block No. 2. If open was not found, replace fuse/relay block No. 1. After repair, go to **COOLING FAN SYSTEM CHECK** . If open was found, repair as necessary. After repair, go to **COOLING FAN SYSTEM CHECK** .
11. With engine running, check voltage at ENGINE MAIN relay terminal No. 13. If battery voltage exists, go to step **13)** . If battery voltage does not exist, go to next step.
12. Check for open in White wire between fuse/relay block No. 1 connector C4 terminal No. 2 and splice. See **WIRING DIAGRAMS** . If an open was found, repair as necessary. After repair, go to **COOLING FAN SYSTEM CHECK** .

cardiagn.com

13. Check for open in White/Black wire between fuse/relay block No. 1 and ground. If open was found, repair as necessary. After repair, go to **COOLING FAN SYSTEM CHECK** . If open was not found, replace ENGINE MAIN relay in fuse/relay block No. 1. After repair, go to **COOLING FAN SYSTEM CHECK** .

**Auxiliary Cooling Fan Inoperative**

1. If cooling fan system check was performed, go to next step. If cooling fan system check was not performed, go to **COOLING FAN SYSTEM CHECK** .
2. Start engine and run until operating temperature is reached. Ensure thermostat is open. Turn engine off. Disconnect auxiliary fan motor harness connector. Connect test light between auxiliary fan motor harness connector terminals. Start engine. If test light illuminates, go to next step. If test light does not illuminate, go to step **4)** .
3. Replace auxiliary fan motor. After repair, go to **COOLING FAN SYSTEM CHECK** .
4. Using DVOM connected to ground, measure voltage at auxiliary fan motor connector terminal No. 2 (Black/Red wire). If battery voltage exists, go to step **8)** .
5. Check CDS fuse (30-amp) in fuse/relay block No. 2 for open. If fuse is blown, go to next step. If fuse is okay, go to step **7)** .
6. Repair short to ground in Red/Blue wire between auxiliary fan motor and CDS fuse. See **WIRING DIAGRAMS** . After repair, go to **COOLING FAN SYSTEM CHECK** .
7. Repair open in Blue wire between auxiliary fan motor and CDS fuse. After repair, go to **COOLING FAN SYSTEM CHECK** .
8. Remove A/C fan relay No. 2 in fuse/relay block No. 2. Check for open in White wire between auxiliary cooling fan and A/C fan relay No. 2. Also check for open in White/Black wire between A/C fan relay No. 2 and ground. If open was found, go to step **10)** . If open was not found, go to next step.
9. Replace cooling fan relay No. 2. After repair, go to **COOLING FAN SYSTEM CHECK** .
10. Repair open in appropriate wire as necessary. After repair, go to **COOLING FAN SYSTEM CHECK** .

**Main Cooling Fan Inoperative At Low Speed**

1. If cooling fan system check was performed, go to next step. If cooling fan system check was not performed, go to **COOLING FAN SYSTEM CHECK** .
2. Start engine. Set blower speed switch to any position except off. If blower motor operates, go to next step. If blower motor does not operate, see appropriate MANUAL A/C-HEATER SYSTEMS article in AIR CONDITIONING & HEATING.
3. Turn A/C switch on. If compressor clutch engages, go to next step. If compressor clutch does not engage, see appropriate A/C CLUTCH DIAGNOSIS in A/C COMPRESSOR CLUTCH CONTROLS article in AIR CONDITIONING & HEATING.
4. Turn ignition off. Remove A/C fan relay No. 3 from fuse/relay block No. 2. Start engine. Set blower speed switch to any position except off. Measure voltage between A/C fan relay No. 3 cavity No. 1 and ground. If battery voltage exists, go to step **6)** . If battery voltage does not exist, go to next step.
5. Repair open in White/Black wire between A/C fan relay No. 3 cavity No. 1 and ground. See **WIRING DIAGRAMS** . After repair, go to **COOLING FAN SYSTEM CHECK** .

cardiagn.com

6. Check for open in White/Black wire between A/C fan relay No. 3 cavity No. 2 and ground. If an open was found, repair as necessary. After repair, go to **COOLING FAN SYSTEM CHECK** . If an open was not found, go to next step.
7. Check for open in White/Red wire between A/C fan relay No. 3 cavity No 3 and A/C fan relay No. 2 cavity No. 5. If open was found, repair as necessary. After repair, go to **COOLING FAN SYSTEM CHECK** . If an open was not found, go to next step.
8. Check for open in White wire between A/C fan relay No. 3 cavity No. 5 and fuse/relay block No. 1 connector C3 terminal No. 7. If an open was found, repair as necessary. After repair, go to **COOLING FAN SYSTEM CHECK** . If an open was not found, replace A/C fan relay No. 3 in fuse/relay block No. 2. After repair, go to **COOLING FAN SYSTEM CHECK** .

**Auxiliary Fan Operates Continuously**

1. If cooling fan system check was performed, go to next step. If cooling fan system check was not performed, go to **COOLING FAN SYSTEM CHECK** .
2. If both fans are operating continuously with ignition in run position, go to step **12)** . If both fans are not operating continuously, go to next step.
3. If only main cooling fan motor operates continuously, go to step **8)** . If only main cooling fan is not operating continuously, to next step.
4. If only auxiliary cooling fan operates continuously, go to next step. If only auxiliary cooling fan is not operating continuously, go to step **1)** .
5. Ensure coolant temperature is below 199°F (93°C). Remove A/C fan relay No. 2 from fuse/relay block No. 2. Start engine. Turn A/C off. If auxiliary cooling fan motor operates, go to next step. If auxiliary cooling fan does not operate, go to step **7)** .
6. Repair short in White wire between auxiliary cooling fan motor terminal No. 1 and fuse/relay block No. 2. See **WIRING DIAGRAMS** . After repair, go to **COOLING FAN SYSTEM CHECK** .
7. Replace A/C fan relay No. 2. After repair, go to **COOLING FAN SYSTEM CHECK** .
8. Ensure coolant temperature is below 199°F (93°C). Remove cooling fan relay No. 1 from fuse/relay block No. 1. Start engine. Turn A/C off. If main cooling fan motor operates, go to next step. If main cooling fan motor does not operate, go to step **10)** .
9. Repair short to power in Black/Red wire between main cooling fan motor terminal No. 2 and fuse/relay block No. 1. After repair, go to **COOLING FAN SYSTEM CHECK** .
10. Check for open in Blue/Black wire between cooling fan relay No. 1 and fuse/relay block and A/C fan relay No. 2 in fuse/relay block No. 2. If an open was found, repair as necessary. After repair, go to **COOLING FAN SYSTEM CHECK** .
11. Replace cooling fan relay No. 1 in fuse/relay block No. 1. After repair, go to **COOLING FAN SYSTEM CHECK** .
12. Remove cooling fan relay No. 3 from fuse/relay block No. 2. Start engine. Turn A/C off. If both fan motors operate, go to step **16)** . If both cooling fan motors do not operate, go to next step.
13. Remove A/C MG relay located in fuse/relay block No. 2. Check for continuity between A/C MG relay terminals No. 3 and No. 5. Remove A/C fan relay No. 3. Check for continuity between A/C fan relay terminals No. 3 and No. 5. If continuity exists in either case, go to next step. If continuity does not exist in either case, go to step **15)** .

cardiagn.com

14. Replace faulty relay. After repair, go to **COOLING FAN SYSTEM CHECK** .
15. Repair short to power in Black/White wire between A/C fan relay No. 3 in fuse/relay block No. 2 and A/C MG relay terminal No. 3. After repair, go to **COOLING FAN SYSTEM CHECK** .
16. Check for open in Blue/Black wire between A/C fan relay No. 2 and A/C pressure switch connector. Check for open in Light Green wire between A/C pressure switch connector and fan control switch. If an open was found, go to step **18)** . If an open was not found, go to next step.
17. Check for open in A/C pressure switch (if equipped). Check for and open in A/C pressure switch connector shorting clip (if equipped). If an open was found, go to step **19)** . If an open was not found, go to step **20)** .
18. Repair open or short in appropriate wire. After repair, go to **COOLING FAN SYSTEM CHECK** .
19. Replace A/C pressure switch (if equipped). Repair or replace shorting bar (if equipped). After repair, go to **COOLING FAN SYSTEM CHECK** .
20. Replace fan control switch. After repair, go to **COOLING FAN SYSTEM CHECK** .

## 2.2L & 2.4L "J" BODIES (CAVALIER & SUNFIRE) 2.4L "N" BODIES (ACHIEVA, GRAND AM & SKYLARK)

### Description

Cooling fan is controlled by Powertrain Control Module (PCM) through cooling fan relay based on inputs from engine coolant temperature sensor, intake air temperature sensor, A/C control switch, A/C refrigerant pressure sensor and Vehicle Speed Sensor (VSS). PCM controls cooling fan motor by grounding cooling fan relay control circuit which closes fan relay contacts.

Cooling fan relay is commanded on when the following conditions are met:

- Engine coolant temperature reaches 223°F (106°C) or greater.
- A/C operation has been requested.
- Vehicle speed is less than 38 MPH.

Cooling fan relay is commanded on regardless of vehicle speed when:

- Any DTC is set and Malfunction Indicator Light (MIL) is on
- Engine coolant temperature is 304°F (151°C).
- A/C refrigerant pressure is high.

Cooling fan motor may be commanded on when engine is not running.

### Diagnosis

1. If On-Board Diagnostic (OBD) System Check has not been performed, see OBD SYSTEM CHECK in appropriate SELF-DIAGNOSTICS article in ENGINE PERFORMANCE. If OBD System Check has been performed, go to next step.
2. Install scan tool. Turn ignition on. Check for DTCs with scan tool. If DTCs are stored, go to appropriate

cardiagn.com

DTC. See appropriate SELF-DIAGNOSTICS article in ENGINE PERFORMANCE. If no DTCs are stored, go to next step.

3. Check cooling system fluid level, water pump belt condition and tension. If any repair was necessary, go to step **27)** . If no repair was necessary, go to next step.
4. Turn ignition on. Ensure engine coolant temperature is less than 209°F (98°C). If cooling fan is off, go to next step. If cooling fan is operating, go to step **6)** .
5. Using scan tool, select RELAY CONTROL function. Command cooling fan on. If cooling fan operates, go to step **27)** . If cooling fan does not operate, go to step **7)** .
6. Turn ignition off. Disconnect PCM harness connectors. If cooling fan turns off, go to step **26)** . If cooling fan remains on, go to step **8)** .
7. Disconnect cooling fan relay. With a test light connected to ground, probe cooling fan relay battery feed circuits (Red wires) at cooling fan relay connector. See **WIRING DIAGRAMS** . If test light comes on at both circuits, go to step **9)** . If test light does not come on at both circuits, go to step **10)** .
8. Disconnect cooling fan relay. With a test light connected to ground, probe cooling fan battery feed circuit (Light Blue wire) at cooling fan relay connector. If test light illuminates, go to step **12)** . If test light does not illuminate, go to step **13)** .
9. Using a fused jumper wire, connect cooling fan relay battery feed circuit (Red wire) and cooling fan battery feed circuit (Light Blue wire). If cooling fan operates, go to step **14)** . If cooling fan does not operate, leave jumper wire in place and go to step **15)** .
10. Check for open or short to ground in cooling fan relay battery feed circuit (Red wires). If repair was needed, go to step **27)** . If circuit is okay, go to next step.
11. Disconnect cooling fan connector. Connect a test light to battery voltage and probe cooling fan relay connector terminal No. 87 (Light Blue wire). If test light illuminates, go to step **25)** . If test light does not illuminate, go to step **23)** .
12. Repair cooling fan battery feed circuit (Light Blue wire) for a short to power. Go to step **27)** .
13. With a test light connected to battery voltage, probe cooling fan relay control circuit (Dark Green wire) at cooling fan relay connector. If test light illuminates, go to step **16)** . If test light does not illuminate, go to step **24)** .
14. With a test light connected to battery voltage, probe cooling fan relay control circuit. Using scan tool, select RELAY CONTROL function. Command cooling fan relay on. If test light illuminates, go to step **17)** . If test light does not illuminate, go to step **18)** .
15. With fused jumper still connected, disconnect cooling fan harness connector. With a test light connected to ground, probe cooling fan battery feed circuit (Light Blue wire) at cooling fan harness connector. If test light illuminates, go to step **19)** . If test light does not illuminate, go to step **20)** .
16. Turn ignition off. Repair short to ground in cooling fan relay control circuit (Dark Green wire). Go to step **27)** .
17. Inspect cooling fan relay connections and repair as necessary. If repair was needed, go to step **27)** . If connectors are okay, go to step **24)** .
18. Inspect cooling fan relay control circuit (Dark Green wire) for an open or poor connection. If repair was needed, go to step **27)** . If circuit is okay, go to step **26)** .
19. With a test light connected to battery voltage, probe cooling fan ground circuit (Black wire) at cooling fan harness connector. If test light illuminates, go to step **21)** . If test light does not illuminate, go to step **22)** .
20. Check for open or poor connection in cooling fan battery feed circuit (Light Blue wire). Repair as

cardiagn.com

necessary. Go to step **27)** .

21. Check for poor connections at cooling fan harness connector. Repair as necessary. Go to step **27)** . If connections are okay, go to step **23)** .
22. Turn ignition off. Check for open or poor connection in cooling fan ground circuit (Black wire). Repair as necessary. Go to step **27)** .
23. Replace cooling fan motor. Go to step **27)** .
24. Turn ignition off. Replace cooling fan relay. Go to step **27)** .
25. Repair short to ground in cooling fan battery feed circuit (Light Blue wire). Go to step **27)** .
26. Replace PCM and program. See COMPUTER RELEARN PROCEDURES article in GENERAL INFORMATION. Go to next step.
27. Turn ignition on, engine off. Using scan tool, select RELAY CONTROL function. Command cooling fan on, then off. If cooling fan operates as commanded, system is operating normally at this time. See **DIAGNOSTIC AIDS** . If cooling fan does not operate as commanded, go to step **2)** .

**Diagnostic Aids**

Whenever owner complains of an overheating problem, determine if complaint was due to an actual boilover, or TEMP light or gauge indicated overheating. Whenever gauge or light indicates overheating, but no boilover is detected, gauge or light circuit should be checked. Gauge accuracy can also be checked by comparing engine coolant temperature sensor reading with gauge reading.

If engine is actually overheating, and gauge indicates overheating, but cooling fan is not coming on, ECT sensor has probably shifted out of calibration and should be replaced. Whenever engine is overheating and cooling fan is on, cooling system should be checked.

## 1998 2.4L "N" BODY (CUTLASS & MALIBU)

**Description**

Electric cooling fans are controlled by Body Function Controller (BFC), which sends a signal to the PCM to turn fans on. The PCM controls the ground circuit for the 3 cooling fan relays. The relay(s) are used to control the high current flow to power the cooling fan motors.

When minimum cooling is required, the BFC will command the PCM to energize cooling fan relay No. 1, since both fans are connected in series through the mode control relay, both fans will operate at low speed.

When maximum cooling is required, BFC will command PCM to energizes all 3 relays. Power is supplied to the left fan through cooling fan relay No. 1 and is grounded through the mode control relay. The right fan is powered directly through cooling fan relay No. 2, causing both fans to operate at high speed.

**Cooling Fan Functional Check**

1. If Powertrain On-Board Diagnostic (OBD) system check has not been performed, see appropriate SELF-DIAGNOSTICS article in ENGINE PERFORMANCE. If OBD system check has been performed, go to next step.

cardiagn.com

2. Check for PCM related Diagnostic Trouble Codes (DTCs). If any DTCs are present, perform testing for applicable DTC before proceeding with testing. See appropriate SELF-DIAGNOSTICS article in ENGINE PERFORMANCE. If no DTCs are present, go to next step.
3. Ensure engine coolant temperature is less than 212°F (100°C). Turn A/C off. Turn ignition on, with engine off. If cooling fans are off, go to next step. If cooling fans operate, go to **COOLING FAN DIAGNOSIS NO. 1** .
4. Using scan tool, command fans to Low Speed On. If both cooling fans operate, go to next step. If both cooling fans do not operate, go to **COOLING FAN DIAGNOSIS NO. 2** .
5. Using scan tool, command cooling fans to High Speed On. If both cooling fans operate at high speed, go to next step. If fans do not operate at high speed, go to **COOLING FAN DIAGNOSIS NO. 3** .
6. Exit scan tool OUTPUT TESTS. Start engine. Turn A/C off. If cooling fans operate, go to step 8 . If cooling fans do not operate, go to next step.
7. Turn A/C on. If cooling fans operate, system is okay. If cooling fans do not operate, go to next step.
8. Check if scan tool displays A/C request as YES. If YES is displayed, diagnose A/C compressor clutch. See appropriate A/C CLUTCH DIAGNOSIS in A/C COMPRESSOR CLUTCH CONTROLS article in AIR CONDITIONING & HEATING. If YES is not displayed, go to step 10 .
9. If scan tool displays A/C request as YES, diagnose A/C system DTC P0530. See appropriate A/C COMPRESSOR CLUTCH CONTROLS article in AIR CONDITIONING & HEATING. If scan tool does not display YES, diagnose compressor clutch. See A/C COMPRESSOR CLUTCH CONTROLS article in AIR CONDITIONING & HEATING.
10. Replace PCM. Program replacement PCM using required equipment.

**Cooling Fan Diagnosis No. 1**

1. Perform cooling fan functional check. See **COOLING FAN FUNCTIONAL CHECK** . If functional check has been performed, go to next step.
2. Turn ignition on. Disconnect cooling fan control relay No. 1. If both cooling fans are not operating, go to step 6 . If both cooling fans are operating, go to next step.
3. Disconnect mode control relay. If both cooling fans are not operating, go to next step. If both cooling fans are operating, go to step 8 .
4. Using a test light connected to battery voltage, probe mode control relay harness connector for right side fan control circuit. If test light illuminates, go to next step. If test light does not illuminate, go to step 9 .
5. Turn ignition off. Disconnect PCM connector C2. With test light still connected to mode control relay, turn ignition on. If test light illuminates, go to step 10 . If test light does not illuminate, go to step 11 .
6. Using test light connected to battery voltage, probe fan control relay No. 1 harness connector for left side fan control circuit. If test light illuminates, go to next step. If test light does not illuminate, go to step 9 .
7. Turn ignition off. Ensure test light is still connected to left side fan control circuit. Disconnect PCM harness connector C2. Turn ignition on. If test light illuminates, go to step 10 . If test light does not illuminate, go to step 11 .
8. Repair affected left fan circuit for short to voltage. See **WIRING DIAGRAMS** . After repairs, perform **COOLING FAN FUNCTIONAL CHECK** .
9. Replace cooling fan relay. After replacing relay, perform **COOLING FAN FUNCTIONAL CHECK** .
10. Repair affected fan control circuit for short to ground. See **WIRING DIAGRAMS** . After repairs,

cardiagn.com

perform **COOLING FAN FUNCTIONAL CHECK** .

11. Replace PCM. Program replacement PCM using required equipment. After replacing PCM, perform **COOLING FAN FUNCTIONAL CHECK** .

**Cooling Fan Diagnosis No. 2**

1. Perform cooling fan functional check. See **COOLING FAN FUNCTIONAL CHECK** . If functional check has been performed, go to next step.
2. Turn ignition on. If either fan operated when fans, Low Speed was commanded on, go to next step. If either fan does not operate, go to step **5)** .
3. Using scan tool, command fans Low Speed On. If the other cooling fan turns off, go to step **19)** . If other cooling fan does not turn off, go to next step.
4. Disconnect cooling fan relay No. 2. If cooling fan turns off, go to step **20)** . If cooling fans do not turn off, go to step **21)** .
5. Using scan tool, command cooling fans to Low Speed On. Disconnect cooling fan relay No. 1. Using a test light connected to battery voltage, probe left fan control circuit in fan control relay No. 1 harness connector. If test light illuminates, go to next step. If test light does not illuminate, go to step **13)** .
6. Connect test light to ground and probe fan control relay No. 1 harness connector battery rail feed and power circuits. If test light illuminates on both circuits, go to next step. If test light does not illuminate, go to step **22)** .

**NOTE: Leave jumper wire in place for remainder of this test.**

7. Using a fused wire, connect jumper between fan control relay No. 1 harness connector battery power circuit and left fan control circuit. If both fans operate, go to step **23)** . If both fans do not operate, go to next step.
8. Disconnect left fan harness connector. Using test light connected to ground, probe fan harness connector terminal "B". If test light illuminates, go to next step. If test light does not illuminate, go to step **24)** .
9. Connect a second fused jumper wire between fan harness connector terminals "A" and "B". If the right fan operates, go to step **16)** . If right fan does not operate, go to next step.
10. Reconnect left fan harness connector. Disconnect mode control relay connector. Using test light connected to ground, probe mode control relay harness connector battery circuit terminal. If test light illuminates, go to next step. If test light does not illuminate, go to step **25)** .
11. Using a second jumper wire, jumper mode control relay harness connector battery circuit terminal and right cooling fan circuit. If cooling fans operate, go to step **26)** . If cooling fan do not operate, go to next step.
12. Reconnect mode control relay connector. Disconnect right fan harness connector. Using test light connected to ground, probe cooling fan harness connector terminal "B". If left cooling fan operates, go to step **16)** . If left cooling fan does not operate, go to step **18)** .
13. Turn ignition off. Disconnect PCM harness connector C2. Turn ignition on. With test light still connected, connect jumper wire between ground and left cooling fan control circuit at PCM harness connector. If test light illuminates, go to step **20)** . If test light does not illuminate, go to step **21)** .
14. Check PCM connections. Repair as necessary. After repairs, perform **COOLING FAN FUNCTIONAL CHECK** . If connections are okay, go to step **27)** .

cardiagn.com

15. Repair left cooling fan control circuit for open or short to battery voltage. See **WIRING DIAGRAMS** . After repairs, perform **COOLING FAN FUNCTIONAL CHECK** .
16. Check fan motor connections and repair as necessary. After repairs, perform **COOLING FAN FUNCTIONAL CHECK** . If connections are okay, go to next step.
17. Replace cooling fan motor. After replacing cooling fan motor, perform **COOLING FAN FUNCTIONAL CHECK** .
18. Repair open in ground circuit. After repairs, perform **COOLING FAN FUNCTIONAL CHECK** .
19. Replace the non-operational cooling fan. After replacing cooling fan, perform **COOLING FAN FUNCTIONAL CHECK** .
20. Replace fan control relay No. 2. After replacing relay, perform **COOLING FAN FUNCTIONAL CHECK** .
21. Repair right cooling fan motor circuit for a short to ground. After repairs, perform **COOLING FAN FUNCTIONAL CHECK** .
22. Repair open or grounded circuit where test light did not illuminate. After repairs, perform **COOLING FAN FUNCTIONAL CHECK** .
23. Replace fan control relay No. 1. After replacing relay, perform **COOLING FAN FUNCTIONAL CHECK** .
24. Repair open in left cooling fan motor circuit. After repairs, perform **COOLING FAN FUNCTIONAL CHECK** .
25. Repair open in right cooling fan motor circuit. After repairs, perform **COOLING FAN FUNCTIONAL CHECK** .
26. Replace mode control relay. After replacing relay, perform **COOLING FAN FUNCTIONAL CHECK** .
27. Replace PCM. Program replacement PCM using required equipment. After replacing PCM, perform **COOLING FAN FUNCTIONAL CHECK** .

**Cooling Fan Diagnosis No. 3**

1. Perform cooling fan functional check. See **COOLING FAN FUNCTIONAL CHECK** . If functional check has been performed, go to next step.
2. Turn ignition on. Using scan tool, command cooling fans to Low Speed On, and then command cooling fans to High Speed On. If both fans operate with no change in speed, go to step **8)** . If both fans operated with a change of speed, go to next step.
3. If left cooling fan stopped operating, go to step **9)** . If left cooling fan did not stop operating, go to next step.
4. Disconnect fan control relay No. 2. Using a test light connected to battery voltage, probe fan control relay harness connector terminal to right fan control circuit. Using scan tool, command cooling fans to High Speed On. If test light illuminates, go to next step. If test light does not illuminate, go to step **12)** .
5. Using test light connected to ground, probe fan control relay No. 2 harness connector battery rail feed circuit terminal. If test light illuminates, go to next step. If test light does not illuminate, go to step **13)** .
6. Probe fan control relay No. 2 harness connector battery power circuit terminal. If test light illuminates, go to next step. If test light does not illuminate, go to step **14)** .
7. Using a fused jumper wire, jumper fan control relay No. 2 harness connector battery power circuit

cardiagn.com

terminal and right cooling fan control circuit terminal. If the right cooling fan operates, go to step **15)** . If right cooling fan does not operate, go to step **16)** .

8. Turn ignition off. Disconnect PCM harness connector C2. Disconnect fan control relay No. 1. Jumper relay harness connector battery power circuit terminal and right cooling fan control circuit terminal. Turn ignition on. Connect another fused jumper wire between ground and right cooling fan control terminal at PCM harness connector. If cooling fans switches from low to high speed, go to step **22)** . If speed does not change, go to step **17)** .
9. Disconnect mode control relay. Using test light connected to battery voltage, probe cooling fan relay right fan control circuit terminal at harness connector. Using scan tool, command cooling fans to High Speed On. If test light illuminates, go to next step. If test light does not illuminate, go to step **18)** .
10. Using test light connected to battery voltage, probe mode control relay harness connector ground circuit terminal. If test light illuminates, go to next step. If test light does not illuminate, go to step **19)** .
11. Using test light connected to ground, probe mode control relay harness connector battery rail feed circuit terminal. If test light illuminates, go to step **20)** . If test light does not illuminate, go to step **21)** .
12. Repair open between right cooling fan control circuit between control relay No. 2 and splice. See **WIRING DIAGRAMS** . After repairs, perform **COOLING FAN FUNCTIONAL CHECK** .
13. Repair open in battery rail feed circuit to fan control relay No. 2. After repairs, perform **COOLING FAN FUNCTIONAL CHECK** .
14. Repair open in battery power circuit to fan control relay No. 2. After repairs, perform **COOLING FAN FUNCTIONAL CHECK** .
15. Replace fan control relay No. 2. After replacing relay, perform **COOLING FAN FUNCTIONAL CHECK** .
16. Repair open in circuit between left cooling fan motor and fan control relay No. 2. See **WIRING DIAGRAMS** . After repairs, perform **COOLING FAN FUNCTIONAL CHECK** .
17. Repair open or short in right fan control circuit. After repairs, perform **COOLING FAN FUNCTIONAL CHECK** .
18. Repair open between right fan control and mode control relay, or splice. After repairs, perform **COOLING FAN FUNCTIONAL CHECK** .
19. Repair open in ground circuit. After repairs, perform **COOLING FAN FUNCTIONAL CHECK** .
20. Replace mode control relay. After repairs, perform **COOLING FAN FUNCTIONAL CHECK** .
21. Repair open in battery rail feed circuit to fan mode control relay. After repairs, perform **COOLING FAN FUNCTIONAL CHECK** .
22. Check PCM connections. Repair as necessary. After repairs, perform **COOLING FAN FUNCTIONAL CHECK** . If connections are okay, go to next step.
23. Replace PCM. Program replacement PCM using required equipment. After replacing PCM, perform **COOLING FAN FUNCTIONAL CHECK** .

**Diagnostic Aids**

Check for poor connections at PCM, cooling fan relays and cooling fan motors. Inspect harness connectors for damaged, corroded or backed-out terminal pins. Inspect related wiring harnesses for damage or improper routing.

cardiagn.com

## 1999 2.4L: ALERO, GRAND AM & MALIBU

### Description

Electric cooling fans are controlled by Body Control Module (BCM), which sends a signal to the PCM to turn fans on. Relays are energized when PCM grounds appropriate relay control circuit. Current flows from COOL FAN fuse No. 1 (30-amp) and COOL FAN fuse No. 2 (15-amp) in underhood electrical center through cooling fan relay contacts. This supplies battery voltage to cooling fan motors. When cooling fan relay No. 1 control circuit is grounded, both cooling fan motors run at low speed. When both relay control circuits are grounded, all 3 relays are energized, allowing both cooling fan motors to run at high speed.

### Diagnosis

**NOTE: For any procedures that require a DVOM, test light, or connecting a fused jumper wire, use Connector Test Adapter Kit (J-35616-A).**

1. If Powertrain On-Board Diagnostic (OBD) System Check has not been performed, see appropriate SELF-DIAGNOSTICS article in ENGINE PERFORMANCE. If OBD System Check has been performed, go to next step.
2. Turn ignition on. Connect scan tool to DLC. Check for DTCs. If any DTCs are set, perform testing for applicable DTC. See appropriate SELF-DIAGNOSTICS article in ENGINE PERFORMANCE. If no DTCs are set, go to next step.
3. Ensure engine coolant temperature is less than 212°F (100°C). Turn A/C off. Start engine and allow it to idle. If both cooling fans operate, go to step 32 . If cooling fans do not operate, go to next step.
4. Using scan tool, select RELAY CONTROL function. Command low speed cooling fan operation. If both cooling fans operate at low speed, go to next step. If both cooling fans do not operate at low speed, go to step 8 .
5. Using scan tool OUTPUT TESTS, select RELAY CONTROL function. Command high speed cooling fan operation. If both cooling fans operate at high speed, go to next step. If both cooling fans do not operate at high speed, go to step 58 .
6. Ensure ambient temperature is greater than 48°F (9°C). Exit scan tool OUTPUT TESTS. Start engine and allow it to idle. Turn A/C on. If both cooling fans operate, system is okay at this time. Go to **DIAGNOSTIC AIDS** . If both cooling fans do not operate, go to next step.
7. Using scan tool, view A/C REQUEST on display. If YES is displayed, go to step 78 . If YES is not displayed, diagnose A/C compressor controls. See A/C COMPRESSOR CLUTCH CONTROLS - ALL MODELS article in AIR CONDITIONING & HEATING.
8. If either cooling fan operates, go to next step. If neither cooling fan operates, go to step 16 .
9. If left cooling fan operates, go to next step. If left cooling fan does not operate, go to step 14 .
10. Turn ignition off. Disconnect right cooling fan harness connector. Turn ignition on. Using scan tool, select RELAY CONTROL function. Command low speed cooling fan operation. If left cooling fan operates, go to next step. If left cooling fan does not operate, go to step 81 .
11. Remove mode control relay from underhood electrical center. If left cooling fan operates, go to next step. If left cooling fan does not operate, go to step 13 .
12. Locate and repair short to ground in White wire between left cooling fan motor and mode control relay.

cardiagn.com

See **WIRING DIAGRAMS** . Go to step 82 .

13. Check Gray wire between right cooling fan motor and cooling fan relay No. 2 for short to ground and repair as necessary. If repair was made, go to step 82 . If circuit is okay, go to step 71 .
14. Turn ignition off. Disconnect left cooling fan harness connector. Turn ignition on. Using scan tool, select RELAY CONTROL function. Command low speed cooling fan operation. If right cooling fan operates, go to next step. If right cooling fan does not operate, go to step 72 .
15. Repair short to voltage in left cooling fan motor wiring harness (Light Blue wire and White wire). Also, check for a shorted cooling fan motor, or defective cooling fan relay, and repair as necessary. If repair was made, go to step 82 . If circuit is okay, go to step 80 .
16. Turn ignition on, engine off. Remove cooling fan relay No. 1 from underhood electrical center. With a test light connected to ground, probe cavity No. 30 (battery feed circuit) at cooling fan relay No. 1 connector. If test light illuminates, go to step 18 . If test light does not illuminate, go to next step.
17. Check for blown COOL FAN fuse No. 1 (30-amp). If fuse is blown, locate and repair short circuit. Possible causes for a short circuit are:
    - Seized cooling fan motor.
    - Shorted cooling fan motor windings.
    - Short to ground between fuse, left side cooling fan motor, and cooling fan relay circuits.

    If fuse is okay, check for an open in battery feed circuit between fuse and cooling fan relay No. 1. Repair as necessary. Go to step 82 .
18. With a test light connected to ground, probe cavity No. 86 (battery feed circuit) to cooling fan relay No. 1. If test light illuminates, go to step 20 . If test light does not illuminate, go to next step.
19. Repair cause of no battery voltage to cooling fan relay No. 1, cavity No. 86. Possible causes are:
    - Open or short in circuit No. 440 (battery feed circuit) to cooling fan relay No. 1.
    - Shorted relay coils in cooling fan relays No. 1 or 2.
    - Shorted relay coil in mode control relay.
    - Circuit unrelated to cooling fans. See appropriate diagram in POWER DISTRIBUTION article in WIRING DIAGRAMS.

    Repair as necessary. Go to step 82 .
20. Turn ignition off. Disconnect both cooling fan motor harness connectors. Using fused jumper wires, jumper terminals "A" and "B" together at both harness connectors. Connect a test light between cavities No. 30 (battery feed circuit) and No. 87 (Light Blue wire) at cooling fan relay No. 1 connector. If test light illuminates, go to next step. If test light does not illuminate, go to step 27 .
21. Connect a test light between cavities No. 85 (Dark Green wire) and No. 86 (battery feed circuit) at cooling fan relay No. 1 connector. Turn ignition on. Using scan tool, select RELAY CONTROL function. Command low speed fan operation. If test light illuminates, go to next step. If test light does not illuminate, go to step 25 .
22. Turn ignition off. Remove jumper wires and reconnect cooling fan motor harness connectors. Connect a fused jumper wire between cavities No. 30 (battery feed circuit) and No. 87 (Light Blue wire) at cooling fan relay No. 1 connector. Turn ignition on. If both cooling fans operate, go to next step. If both cooling fans do not operate, go to step 24 .
23. Check for poor connections at cooling fan relay No. 1 in underhood electrical center. Repair as necessary. If repair was made, go to step 82 . If connector is okay, go to step 37 .

cardiagn.com

24. Check for poor connections at both cooling fan motor harness connectors. Repair as necessary. If repair was made, go to step 82 . If connector is okay, go to step 64 .
25. Turn ignition off. Disconnect PCM harness Blue connector C2. Connect a fused jumper wire between cavities No. 86 (battery feed circuit) and No. 85 (Dark Green wire) at cooling fan relay No. 1 connector. Turn ignition on. With a test light connected to ground, probe PCM harness connector C2 Dark Green wire terminal. If test light illuminates, go to step 78 . If test light does not illuminate, go to next step.
26. Repair open in Dark Green wire between cooling fan relay No. 1 and PCM harness connector C2. Go to step 82 .
27. Turn ignition off. Remove jumper wires and reconnect cooling fan motor harness connectors. Connect a fused jumper wire between cavities No. 30 (battery feed circuit) and No. 87 (Light Blue wire) at cooling fan relay No. 1 connector. Remove mode control relay from underhood electrical center. With a test light connected to ground, probe cavity No. 30 (White wire) at mode control relay connector. If test light illuminates, go to next step. If test light does not illuminate, go to step 31 .
28. Connect a test light between cavities No. 30 (White wire) and 87A (Gray wire) at mode control relay connector. If test light illuminates, go to step 30 . If test light does not illuminate, go to next step.
29. Check for an open in White wire between mode control relay cavity No. 30 and left cooling fan motor. Repair as necessary. If repair was made, go to step 82 . If circuit is okay, go to step 57 .
30. Check for poor connections at cavities No. 30 and 87A of mode control relay connector. Repair as necessary. If repair was made, go to step I82 . If connections are okay, go to step 71 .
31. Check for an open in Light Blue wire between cooling fan relay No. 1 and left cooling fan motor. Repair as necessary. If repair was made, go to step 82 . If circuit is okay, go to step 56 .
32. Using scan tool, view A/C REQUEST on display. If YES is displayed, diagnose A/C compressor clutch controls. See A/C COMPRESSOR CLUTCH CONTROLS - ALL MODELS article in AIR CONDITIONING & HEATING. If YES is not displayed, go to next step.
33. If both cooling fans are operating at low speed, go to next step. If both cooling fans are not operating at low speed, go to step 40 .
34. Remove cooling fan relay No. 1 from underhood electrical center. If both cooling fans operate, go to next step. If both cooling fans do not operate, go to step 36 .
35. Repair Light Blue wire for a short to power between cooling fan relay No. 1 and left cooling fan motor. Go to step 82 .
36. With a test light connected to battery voltage, probe cooling fan relay No. 1 connector terminal No. 85 (Dark Green wire). If test light illuminates, go to step 38 . If test light does not illuminate, go to next step.
37. Replace cooling fan relay No. 1. Go to step 82 .
38. Turn ignition off. Disconnect PCM harness connector C2. With a test light connected to battery voltage, probe cooling fan relay No. 1 connector terminal No. 85 (Dark Green wire). If test light illuminates, go to next step. If test light does not illuminate, go to step 78 .
39. Repair short to ground in Dark Green wire between cooling fan relay No. 1 and PCM harness connector C2. See **WIRING DIAGRAMS** . Go to step 82 .
40. If both cooling fans operate at high speed, go to next step. If both cooling fans do not operate at high speed, go to step 42 .
41. Using scan tool, view A/C PRESSURE on display. If reading on scan tool is less than 1.2 volts, go to step 78 . If reading on scan tool is 1.2 volts or greater, go to step 44 .

cardiagn.com

42. Turn ignition off. Disconnect PCM harness connectors. Turn ignition on. If right cooling fan operates at high speed, go to next step. If right cooling fan does not operate at high speed, go to step 78 .
43. Check Dark Blue wire for a short to ground between mode control relay, cooling fan relay No. 2 and PCM harness connector C2. Repair as necessary. If repair was made, go to step 82 . If circuit is okay, go to step 52 .
44. Turn ignition off. Disconnect A/C pressure sensor harness connector. Turn ignition on. Using scan tool, view A/C PRESSURE on display. If reading is near zero volts, go to step 46 . If reading is not as specified, go to next step.
45. Using a DVOM, measure voltage between ground and Red/Black wire at A/C pressure sensor harness connector. If reading is near zero volts, go to step 78 . If reading is not as specified, go to step 51 .
46. With a test light connected to battery voltage, probe Black wire at A/C pressure sensor harness connector. If test light illuminates, go to next step. If test light does not illuminate, go to step 49 .
47. Using a DVOM, measure voltage between ground and 5 volt reference signal (Gray wire) at A/C pressure sensor harness connector. If reading is near 5 volts, go to next step. If reading is not a specified, go to step 50 .
48. Replace A/C pressure sensor. Go to step 82 .
49. Repair Black wire for an open or short to power between A/C pressure sensor and PCM. See **WIRING DIAGRAMS** . Go to step 82 .
50. Repair Gray wire for an open or short to ground between A/C pressure sensor and PCM. Go to step 82 .
51. Repair Red/Black wire for a short to power between A/C pressure sensor and PCM. Go to step 82 .
52. Remove mode control relay from underhood electrical center. If right cooling fan operates at high speed, go to next step. If right cooling fan does not operate at high speed, go to step 71 .
53. Remove fan relay No. 2 from underhood electrical center. If right cooling fan operates at high speed, go to next step. If right cooling fan does not operate at high speed, go to step 55 .
54. Repair Gray wire for a short to power between mode control relay, cooling fan relay No. 2 and right cooling fan motor. Go to step 82 .
55. Check Dark Blue wire for a short to power between PCM, mode control and fan control relay No. 2. Repair as necessary. If repair was made, go to step 82 . If circuit is okay, go to step 77 .
56. Check White wire for an open or poor connection between left cooling fan motor and mode control relay. Repair as necessary. If repair was made, go to step 82 . If circuit is okay, go to step 80 .
57. Check Gray wire for an open between right cooling fan motor and mode control relay. Check White wire for an open between left cooling fan motor and mode control relay. Repair as necessary. If repair was made, go to step 82 . If circuit is okay, go to step 81 .
58. Remove mode control relay. If cooling fans turn off, go to step 62 . If cooling fans do not turn off, go to next step.
59. Connect a test light between cavities No. 85 and No. 86 at mode control relay connector. Using scan tool, select RELAY CONTROL function. Command high speed cooling fan operation. Wait 5-6 seconds. If test light illuminates, go to step 62 . If test light does not illuminate, go to next step.
60. Remove fan control relay No. 2 from underhood electrical center. Connect a test light between cavities No. 85 and No. 86 at fan control relay No. 2 connector. Using scan tool, select RELAY CONTROL function. Command high speed cooling fan operation. Wait 5-6 seconds. If test light illuminates, go to step 79 . If test light does not illuminate, go to next step.

cardiagn.com

61. Turn ignition off. Disconnect PCM harness connector C2. Using a DVOM, check Dark Blue wire for an open or short to power between mode control relay, cooling fan relay No. 2, and PCM harness connector C2. Repair as necessary. If repair was made, go to step 82 . If circuit is okay, go to step 78 .
62. Turn ignition off. Reinstall mode control relay. Disconnect both cooling fan motor harness connectors. With a test light connected to ground, probe Gray wire at right cooling fan motor harness connector. Turn ignition on. Using scan tool, select RELAY CONTROL function. Command high speed cooling fan operation. Wait 10 seconds. If test light illuminates, go to next step. If test light does not illuminate, go to step 65 .
63. With a test light connected to battery voltage, probe White wire at left cooling fan motor harness connector. If test light illuminates, go to next step. If test light does not illuminate, go to step 72 .
64. Check for a seized cooling fan motor or open motor windings. Replace cooling fan motor. Go to step 82 .
65. Turn ignition off. Remove mode control relay from underhood electrical center. Turn ignition on. With a test light connected to ground, probe cavity No. 85 (battery feed circuit) at mode control relay connector. If test light illuminates, go to step 67 . If test light does not illuminate, go to next step.
66. Locate and repair open in battery feed circuit to mode control relay. Go to step 82 .
67. Remove cooling fan relay No. 2 from underhood electrical center. With a test light connected to ground, probe cavity No. 30 (battery feed circuit) at cooling fan relay No. 2 connector. If test light illuminates, go to step 69 . If test light does not illuminate, go to next step.
68. Repair open in battery feed circuit to cooling fan relay No. 2. See **WIRING DIAGRAMS** . Go to step 82 .
69. Check Gray wire for an open between right cooling fan motor and cooling fan relay No. 2. Repair as necessary. If repair was made, go to step 82 . If circuit is okay, go to next step.
70. Check for poor connections at cooling fan relay No. 2 in underhood electrical center. Repair as necessary. If repair was made, go to step 82 . If connections are okay, go to next step.
71. Replace mode control relay. Go to step 82 .
72. Turn ignition off. Remove cooling fan relay No. 2 from underhood electrical center. Turn ignition on. With a test light connected to ground, probe cavity No. 86 (battery feed circuit) in cooling fan relay No. 2 connector. If test light illuminates, go to step 74 . If test light does not illuminate, go to next step.
73. Repair open in battery feed circuit to cooling fan relay No. 2. Go to step 82 .
74. With a test light connected to battery voltage, probe cavity No. 87 (Gray wire) at cooling fan relay No. 2 connector. If test light illuminates, go to step 76 . If test light does not illuminate, go to next step.
75. Check for open in Gray wire between cooling fan relay No. 2, right cooling fan motor, and mode control relay. Check for open in Gray wire between mode control relay and ground. Go to step 82 .
76. Check for poor connections at cooling fan relay No. 2 in underhood electrical center. Repair as necessary. If repair was made, go to step 82 . If connections are okay, go to next step.
77. Replace cooling fan relay No. 2. Go to step 82 .
78. Replace PCM and program. See COMPUTER RELEARN PROCEDURES article in GENERAL INFORMATION. Go to step 82 .
79. Repair Dark Blue wire for an open between mode control relay, cooling fan relay No. 2, and PCM harness connector C2. Go to step 82 .
80. Replace left cooling fan motor. Go to step 82 .
81. Replace right cooling fan motor. Go to next step.

cardiagn.com

82. Reconnect all disconnected components. Use scan tool to command relay off. Ensure coolant temperature is below 212°F (100°C). Turn A/C off. Start engine and let idle. If cooling fans operates, go to step 32 . If cooling fans do not operate, go to next step.
83. Using scan tool, select RELAY CONTROL function. Command low speed cooling fan operation. If both cooling fans operate at low speed, go to next step. If both cooling fans do not operate at low speed, go to step 8 .
84. Using scan tool, command high speed cooling fan operation. Wait 6 seconds. If both cooling fans operate at high speed, system is okay. If both cooling fans do not operate at high speed, go to step 58 .

**Diagnostic Aids**

Whenever vehicle operator complains of an overheating problem, determine if complaint was due to an actual boil over, or if TEMP light or gauge indicated overheating. Whenever gauge or light indicates overheating, but no boil over is detected, gauge or light circuit should be checked. Gauge accuracy can also be checked by comparing engine coolant temperature sensor reading with gauge reading.

If engine is actually overheating and gauge also indicates overheating, but cooling fans are not coming on, Engine Coolant Temperature (ECT) sensor has probably shifted out of calibration and should be replaced. If engine is overheating and cooling fans are on, cooling system should be checked.

The BCM will command the PCM to turn fans on to low speed at 223°F (106°C) and off at 217°F (103°C). High speed operation comes on at 232°F (111°C) and off at 226°F (108°C).

## 3.0L: CATERA

**NOTE: The following test is divided into separate categories relating to a particular symptom. Perform the appropriate symptom diagnostic procedure.**

**Cooling Fan System Check**

1. Turn ignition on. If heater water auxiliary pump (located in left front of engine compartment) operates, go to next step. If heater water auxiliary pump does not operate, go to step 3 .
2. Ensure engine coolant temperature is below 203°F (95°C). If auxiliary cooling fans and/or electric cooling fan is inoperative with engine coolant temperature below 203°F (95°C), go to step 4 . If auxiliary cooling fans and/or electric cooling fan operates with engine coolant temperature below 203°F (95°C), go to step 5 .
3. Diagnose and repair water auxiliary pump. See AUTOMATIC A/C-HEATER SYSTEMS - CATERA article in AIR CONDITIONING & HEATING. After repairs, go to step 27 .
4. Locate cooling fan test connector (6-pin) in ECM housing, at left front of engine compartment. Connect a fused jumper between ground and cooling fan test connector terminal No. 1 (Brown/Blue wire). This simulates closing of primary cooling fan switch and energizes fan control relay K26. If both auxiliary cooling fans operate, go to step 6 . If both auxiliary cooling fans fail to operate, go to step 7 .
5. Go to **AUXILIARY COOLING FAN RUNS CONTINUOUSLY** . After repairs, go to step 27 .
6. If electric cooling fan is operating at low speed, go to step 9 . If electric cooling fan does not operate at medium speed, go to step 8 .

cardiagn.com

7. Go to **AUXILIARY COOLING FANS NO. 1 & 2 INOPERATIVE** . After repairs, go to step 27 .
8. Go to **ENGINE COOLING FAN LOW SPEED INOPERATIVE** . After repairs, go to step 27 .
9. Verify that water auxiliary pump is operating. If pump operates, go to next step. If pump does not operate, go to step 11 .
10. With all other jumper wires still connected, connect a fused jumper between cooling fan test connector terminal No. 5 (Brown/White wire) and ground. Grounding this terminal will energize relays K28 and K52 as if the secondary cooling fan temperature switch was closed. If auxiliary cooling fan No. 1 operates at high speed, go to step 12 . If auxiliary cooling fan No. 1 does not operate at high speed, go to step 13 .
11. Diagnose and repair water auxiliary pump. See AUTOMATIC A/C-HEATER SYSTEMS - CATERA article in AIR CONDITIONING & HEATING. After repairs, go to step 27 .
12. If auxiliary engine cooling fan No. 2 is operating at high speed, go to step 14 . If auxiliary engine cooling fan No. 2 is not operating at high speed, go to step 15 .
13. Go to **AUXILIARY ENGINE COOLING FAN NO. 1 INOPERATIVE** . After repairs, go to step 27 .
14. With all other jumper wires still connected, connect a fused jumper between cooling fan test connector terminal No. 4 (Brown/White wire) and ground. Grounding this terminal will energize relay K67 as if the primary cooling fan temperature switch stage 2 contacts were closed. If electric cooling fan operates at high speed, go to step 16 . If electric cooling fan does not operate at high speed, go to step 17 .
15. Go to **AUXILIARY ENGINE COOLING FAN NO. 2 INOPERATIVE** . After repairs, go to step 27 .
16. Remove all fused jumper wires. Start engine and allow to idle. Turn A/C to on position. If auxiliary engine cooling fans No. 1 and No. 2 operate at low speed, go to step 19 . If auxiliary engine cooling fans No. 1 and No. 2 do not operate at low speed, go to step 18 .
17. Go to **ENGINE COOLING FAN INOPERATIVE** . After repairs, go to step 27 .
18. Go to **AUXILIARY COOLING FANS INOPERATIVE AT LOW SPEED** . After repairs, go to step 27 .
19. Install scan tool and monitor engine coolant temperature. Remove fused jumper wires. Turn A/C to off position. Allow engine to run until the primary cooling fan temperature switch reaches 212°F (100°C). At this temperature, the stage 1 contacts should close and energize fan control relay K26. If auxiliary cooling fans No. 1 and No. 2 operate at low speed, go to next step. If auxiliary cooling fans No. 1 and No. 2 do not operate at low speed, go to step 21 .
20. Allow engine to continue operating until secondary cooling fan temperature switch reaches 221°F (105° C). Secondary cooling fan temperature switch should close and energize fan control relays K28 and K52. If auxiliary cooling fans No. 1 and No. 2 operate at high speed, go to step 22 . If auxiliary cooling fans No. 1 and No. 2 do not operate at high speed, go to step 23 .
21. Check for open or high resistance in Brown/Blue wire between primary cooling fan temperature switch and splice S116. S116 is located in A/C control wiring harness, inside ECM housing. Check for open or high resistance in Black wire between primary cooling fan temperature switch and ground. Repair as necessary. If circuits are okay, replace primary cooling fan temperature switch. After repairs, go to step 27 .
22. Allow engine to run until primary cooling fan temperature switch reaches 230°F (110°C). Stage 2 contact should close and energize fan control relay K67. If electric cooling fan operates at high speed, go to step 25 . If electric cooling fan does not operate at high speed, go to step 24 .
23. Check for open or high resistance in Brown/White wire between secondary cooling fan temperature

cardiagn.com

switch and splice S118. Splice S118 is located in A/C control wiring harness, inside ECM housing. If circuit is okay, replace secondary cooling fan temperature switch. After repairs, go to step 27 .

24. Check for open or high resistance in Brown/White wire between primary cooling fan temperature switch and fan control relay K67. If circuit is okay, replace primary cooling fan temperature switch. After repairs, go to step 27 .
25. Turn A/C to on position. Operate engine until A/C system pressure switch reaches 275 psi (19.3 kg/cm$^2$ ). If auxiliary cooling fans No. 1 and No. 2 operate at high speed, go to step 27 . If auxiliary cooling fans No. 1 and No. 2 do not operate at high speed, go to next step.
26. Go to **AUXILIARY COOLING FANS INOPERATIVE AT HIGH SPEED** . After repairs, go to next step.
27. Recheck that water auxiliary pump and cooling fans operate properly. If one or more components do not operate properly, go to step 1 .

**Engine Cooling Fan Inoperative**

1. Perform **COOLING FAN SYSTEM CHECK** . Go to next step.
2. Turn ignition on. Disconnect fan control relay (K67). Locate cooling fan test connector (6-pin) in ECM housing, at left front of engine compartment. Using a DVOM, measure resistance of Brown/White wire between terminal No. 4 of test connector and terminal No. 6 of fan control relay (K67). See **WIRING DIAGRAMS** . If resistance is less than 5 ohms, go to step **4)** . If resistance is not as specified, go to next step.
3. Check Brown/White wire for an open or high resistance. Repair as necessary. After repairs, go to step **15)** .
4. Using a DVOM, measure voltage between ground and terminal No. 2 (Brown wire) at fan control relay (K67). If battery voltage exists, go to step **6)** . If battery voltage does not exist, go to next step.
5. Repair open or high resistance in Brown wire between fan control relay (K67) and splice S115. Splice S115 is located in A/C control wiring harness, inside ECM housing. After repairs, go to step **15)** .
6. Using a DVOM, measure voltage between ground and terminal No. 4 (Red wire) at fan control relay (K67). If battery voltage exists, go to step **8)** . If battery voltage does not exist, go to next step.
7. Inspect fuse No. 42 (40-amp). If fuse is okay, repair open or high resistance in Red wire between fan control relay (K67), fuse and battery. Go to step **15)** .
8. Connect a fused jumper wire between terminals No. 4 (Red wire) and No. 8 (Red/White wire) at fan control relay (K67) connector. If engine cooling operates, go to next step. If engine cooling fan does not operate, go to step **10)** .
9. Replace fan control relay (K67). Go to step **15)** .
10. Disconnect engine cooling fan harness connector. Using a DVOM, measure voltage between ground and terminal "A" (Red/White wire) at engine cooling fan harness connector. If battery voltage exists, go to step **12)** . If battery voltage does not exist, go to next step.
11. Repair open, high resistance, or short to ground in Red/White wire between fan control relay (K67) and engine cooling fan. Go to step **15)** .
12. Using a DVOM, measure resistance between ground and terminal "B" (Black wire) at engine cooling fan harness connector. If resistance is less than 5 ohms, go to step **14)** . If resistance is not as specified, go to next step.

cardiagn.com

13. Repair open or high resistance in Black wire between ground and engine cooling fan. Go to step **15)** .
14. Replace engine cooling fan motor. Go to next step.
15. Reconnect all components and harness connectors. Verify system operation. If engine cooling fan operates properly, system is okay. If engine cooling fan does not operate properly, go to step **1)** .

**Engine Cooling Fan Low Speed Inoperative**

1. Perform **COOLING FAN SYSTEM CHECK** . Go to next step.
2. Disconnect fan control relay (K26). Using a DVOM, measure resistance of Brown/Blue wire between test terminals No. 1 and No. 6 of fan control relay (K26). See **WIRING DIAGRAMS** . If resistance is less than 5 ohms, go to step **4)** . If resistance is not as specified, go to next step.
3. Repair open or high resistance in Brown/Blue wire between terminal No. 1 of test connector and terminal No. 6 of fan control relay (K26). After repairs, go to step **17)** .
4. Using a DVOM, measure voltage between ground and terminal No. 3 (Red wire) of fan control relay (K26). If battery voltage exists, go to step **6)** . If battery voltage does not exist, go to next step.
5. Inspect fuse No. 50 (10-amp), located in ECM housing, at left front of engine compartment. If fuse is okay, repair open or high resistance in Red wire between fan control relay (K26), fuse, and battery. After repairs, go to step **17)** .
6. Using a DVOM, measure voltage between ground and terminal No. 4 (Red wire) at fan control relay (K26). If battery voltage exists, go to step **8)** . If battery voltage does not exist, go to next step.
7. Inspect fuse No. 52 (30-amp), located in ECM housing, at left front of engine compartment. If fuse is okay, repair open or high resistance in Red wire between fan control relay (K26), fuse, and battery. After repairs, go to step **17)** .
8. Connect a fused jumper wire between terminals No. 4 (Red wire) and No. 5 (Red/Blue wire) at fan control relay (K26) connector. If cooling fan operates at low speed, go to next step. If cooling fan does not operate at low speed, go to step **10)** .
9. Replace fan control relay (K26). After repairs, go to step **17)** .
10. With fused jumper wire still connected, disconnect engine cooling fan resistor harness connector. Using a DVOM, measure voltage between ground and Red/Blue wire terminal of engine cooling fan resistor harness connector. If battery voltage exists, go to step **12)** . If battery voltage does not exist, go to next step.
11. Repair open, high resistance or short to ground in Red/Blue wire between fan control relay (K26) and engine cooling fan resistor. Go to step **17)** .
12. Disconnect engine cooling fan motor harness connector. Using a DVOM, measure resistance of Red/White wire between engine cooling fan resistor harness connector and engine cooling fan motor harness connector. If resistance is less than 5 ohms, go to step **14)** . If resistance is not as specified, go to next step.
13. Repair open or high resistance in Red/White wire between engine cooling fan resistor and engine cooling fan motor. Go to step **17)** .
14. Using a DVOM, measure resistance between ground and terminal "B" (Black wire) at engine cooling fan motor harness connector. If resistance is less than 5 ohms, go to step **17)** . If resistance is not as specified, go to next step.
15. Repair open or high resistance in Black wire between engine cooling fan motor and ground. After repairs,

cardiagn.com

go to step **17)** .

16. Using a DVOM, check for continuity in engine cooling fan resistor. If continuity exists, replace engine cooling fan motor. If continuity does not exist, replace engine cooling fan resistor. Go to next step.
17. Reconnect all components and harness connectors. Verify system operation. If engine cooling fan operates at low speed, system is okay. If engine cooling fan does not operate at low speed, go to step **1)** .

**Auxiliary Engine Cooling Fan No. 1 Inoperative**

1. Perform **COOLING FAN SYSTEM CHECK** . Go to next step.
2. Turn ignition off. Locate cooling fan test connector (6-pin) in ECM housing, at left front of engine compartment. Using a fused jumper wire, connect terminal No. 1 (Brown/Blue wire) of test connector to ground. If auxiliary cooling fans No. 1 and No. 2 operate at low speed, go to next step. If neither fan operates at low speed, go to **AUXILIARY COOLING FANS NO. 1 & 2 INOPERATIVE** .
3. Disconnect fan control relay (K52). Using a DVOM, measure voltage between ground and terminal No. 4 (Brown wire) at fan control relay (K52). See **WIRING DIAGRAMS** . If battery voltage exists, go to step **5)** . If battery voltage does not exist, go to next step.
4. Repair open or high resistance in Brown wire between fan control relay (K52) and fuse block. After repairs, go to step 8 .
5. Using a DVOM, measure resistance between ground and terminal No. 8 (Black wire) at fan control relay (K52) connector. If resistance is less than 5 ohms, go to step 7 . If resistance is not as specified, go to next step.
6. Repair open or high resistance in Black wire between fan control relay (K52) and ground. After repairs, go to step 8 .
7. Check Brown/White wire for an open or high resistance between fan control relay (K52) and secondary cooling fan temperature switch. Repair as necessary. If circuit is okay, replace fan control relay (K52). After repairs, go to next step.
8. Reconnect all components and harness connectors. Verify system operation. If auxiliary engine cooling fan No. 1 operates, system is okay. If auxiliary engine cooling fan No. 1 does not operate, go to step 1 .

**Auxiliary Engine Cooling Fan No. 2 Inoperative**

1. Perform **COOLING FAN SYSTEM CHECK** . Go to next step.
2. Turn ignition off. Locate cooling fan test connector (6-pin) in ECM housing, at left front of engine compartment. Using a fused jumper wire, connect terminal No. 1 (Brown/Blue wire) of test connector to ground. If auxiliary cooling fans No. 1 and No. 2 operate at low speed, go to next step. If neither fan operates at low speed, go to **AUXILIARY COOLING FANS NO. 1 & 2 INOPERATIVE** .
3. Disconnect fan control relay (K28). Using a DVOM, measure voltage between ground and terminal No. 4 (Red wire) at fan control relay (K28). See **WIRING DIAGRAMS** . If battery voltage exists, go to step 5 . If battery voltage does not exist, go to next step.
4. Check fuse No. 40 (30-amp), located in ECM housing at left front of engine compartment. Check for a short to ground and replace fuse if necessary. If fuse is okay, check for and open or high resistance in Red wire between fan control relay (K28) and fuse. Also, check for an open or high resistance in Red wire between fuse and battery. Repair as necessary. After repairs, go to step 10 .
5. Using a DVOM, measure voltage between ground and terminal No. 2 (Brown wire) of fan control relay

cardiagn.com

(K28). If battery voltage exists, go to step 7 . If battery voltage does not exist, go to next step.

6. Repair open or high resistance in Brown wire between fan control relay (K28) and fuse block. After repairs, go to step 10 .
7. Disconnect auxiliary cooling fan No. 2 harness connector. Using a DVOM, measure resistance between fan control relay terminal No. 8 and auxiliary cooling fan No. 2 harness connector (Red/White wire). If reading is less than 5 ohms, go to next step. If reading is greater than 5 ohms, go to step 9 .
8. Check Brown/White wire for an open or high resistance between secondary temperature switch and fan control relay (K28). Repair as necessary. After repairs, go to step 10 . If no problem is found, replace fan control relay (K28).
9. Repair open, high resistance or short to ground in Red/White wire between fan control relay (K28) and splice S108. After repairs, go to next step.
10. Reconnect all components and harness connectors. Verify system operation. If auxiliary engine cooling fan No. 2 operates, system is okay. If auxiliary engine cooling fan No. 2 does not operate, go to step 1 .

**Auxiliary Cooling Fans No. 1 & 2 Inoperative**

1. Perform **COOLING FAN SYSTEM CHECK** . Go to next step.
2. Disconnect fan control relay (K26). Using a DVOM, measure voltage between ground and terminal No. 3 (Red wire) at fan control relay (K26) connector. See **WIRING DIAGRAMS** . If battery voltage exists, go to step **4)** . If battery voltage does not exist, go to next step.
3. Inspect fuse No. 50 (10-amp), located in ECM housing, at left front of engine compartment. If fuse is okay, repair open or high resistance in Red wire between fan control relay (K26), fuse, and battery. After repairs, go to step **17)** .
4. Using a DVOM, measure voltage between ground and terminal No. 2 (Red wire) at fan control relay (K26) connector. If battery voltage exists, go to step **6)** . If battery voltage does not exist, go to next step.
5. Inspect fuse No. 52 (30-amp), located in ECM housing, at left front of engine compartment. If fuse is okay, repair open or high resistance in Red wire between fan control relay (K26), fuse, and battery. After repairs, go to step **17)** .
6. Locate cooling fan test connector (6-pin) in ECM housing, at left front of engine compartment. Connect a fused jumper between terminal No. 1 of cooling fan test connector and known-good ground. Use a DVOM to measure resistance between ground and fan control relay (K26) terminal No. 6 (Brown/Blue wire). If reading is 5 ohms or less, go to step **8)** . If reading is greater than 5 ohms, go to next step.
7. Repair open in Brown/Blue wire between fan control relay (K26) and cooling fan test connector. After repairs, go to step **17)** .
8. Reinstall fan control relay (K26) in ECM housing. With fused jumper wire still connected between test connector terminal No. 1 and ground, disconnect auxiliary engine cooling fan No. 1 connector. Use a DVOM to measure voltage between auxiliary engine cooling fan No. 1 connector terminal "A" (Red/White wire) and ground. If battery voltage exists, go to step **10)** . If battery voltage does not exist, go to next step.
9. Repair open or high resistance in Red/White wire between auxiliary engine cooling fan No. 1 and fan control relay (K26). If circuit is okay, replace fan control relay (K26). After repairs, go to step **17)** .
10. Remove fan control relay (K52). Reconnect auxiliary engine cooling fan No. 1 connector. Connect a fused jumper between ground and fan control relay (K52) terminal No. 2 (Brown/Green wire). If auxiliary engine cooling fan No. 1 operates, go to step **12)** . If auxiliary engine cooling fan No. 1 does not

cardiagn.com

operate, go to next step.

11. Repair open or high resistance in Brown/Green wire between fan control relay (K52) and auxiliary engine cooling fan No. 1. If circuits are okay, replace auxiliary engine cooling fan No. 1. After repairs, go to step **17)** .
12. Using a DVOM, measure resistance between ground and terminal "B" (Black wire) at auxiliary engine cooling fan No. 2 harness connector. If reading is 5 ohms or less, go to step 14 . If reading is greater than 5 ohms, go to next step.
13. Repair open in Black wire between auxiliary engine cooling fan No. 2 and ground. After repairs, go to step **17)** .
14. Remove fan control relay (K52) and use DVOM to measure resistance between relay terminals No. 2 and No. 5. If reading is 5 ohms or less, go to next step. If reading is greater than 5 ohms, go to step **16)** .
15. Repair open or high resistance in Red/White wire between auxiliary engine cooling fan No. 2 and fan control relay (K52). If circuit is okay, replace auxiliary engine cooling fan No. 2. After repairs, go to step **17)** .
16. Replace fan control relay (K52). After repairs, go to next step.
17. Reconnect all components and harness connectors. Verify system operation. If auxiliary engine cooling fans No. 1 and No. 2 operate, system is okay. If auxiliary engine cooling fans No. 1 and No. 2 do not operate, go to step **1)** .

**Auxiliary Cooling Fans Inoperative At Low Speed**

1. Perform **COOLING FAN SYSTEM CHECK** . Go to next step.
2. Turn ignition off. Locate cooling fan test connector (6-pin) in ECM housing, at left front of engine compartment. Using a fused jumper wire, connect terminal No. 1 (Brown/Blue wire) of test connector to ground. See **WIRING DIAGRAMS** . If auxiliary cooling fans No. 1 and No. 2 operate at low speed, go to next step. If neither fan operates at low speed, go to **AUXILIARY COOLING FANS NO. 1 & 2 INOPERATIVE** .
3. Remove fused jumper wire and turn ignition on. Disconnect fan control relay (K87). Use a DVOM to measure voltage between fan control relay (K87) connector terminal No. 4 (Red wire) and ground. If battery voltage exists, go to step 5 . If battery voltage does not exist, go to next step.
4. Repair open or high resistance in Red wire between fan control relay (K87) and fuse No. 52 (30-amp). After repairs, go to step 10 .
5. Use a DVOM to measure resistance between ground and fan control relay (K87) connector terminal No. 6 (Black wire). If reading is 5 ohms or less, go to step 7 . If reading is greater than 5 ohms, go to next step.
6. Repair open or high resistance in Black wire between fan control relay (K87) and ground. After repairs, go to step 10 .
7. Turn A/C to on position. Use a DVOM to measure voltage between ground and fan control relay (K87) connector terminal No. 2 (Green wire). If battery voltage exists, go to step 9 . If battery voltage does not exist, go to next step.
8. Repair open or high resistance in Green wire between fan control relay (K87) and HVAC compressor controls. If circuit is okay, go to A/C COMPRESSOR CLUTCH CONTROLS - ALL MODELS article in AIR CONDITIONING & HEATING.
9. Repair open in Red/White wire between fan control relay (K87) and splice S111. After repairs, go to next

cardiagn.com

step.

10. Reconnect all components and harness connectors. Verify system operation. If auxiliary engine cooling fans No. 1 and No. 2 operate at low speed, system is okay. If auxiliary engine cooling fans No. 1 and No. 2 do not operate at low speed, go to step 1 .

**Auxiliary Cooling Fans Inoperative At High Speed**

1. Perform **COOLING FAN SYSTEM CHECK** . Go to next step.
2. Turn ignition off. Locate cooling fan test connector (6-pin) in ECM housing, at left front of engine compartment. Using a fused jumper wire, connect terminal No. 2 (Brown/White wire) of test connector to ground. See **WIRING DIAGRAMS** . If auxiliary cooling fans No. 1 and No. 2 operate at high speed, go to step 4 . If neither fan operates at high speed, go to next step.
3. Repair open or high resistance in Brown/White wire between fan control relay (K28) and cooling fan test connector. If circuit is okay, replace fan control relay (K28). After repairs, go to step 5 .
4. Repair open or high resistance in Brown/White wire between A/C compressor refrigerant pressure switch and fan control relay (K28). Repair open or high resistance in Black wire between A/C compressor refrigerant pressure switch and ground. If circuits are okay, replace A/C compressor refrigerant pressure switch. After repairs, go to next step.
5. Reconnect all components and harness connectors. Verify system operation. If auxiliary engine cooling fans No. 1 and No. 2 operate at high speed, system is okay. If auxiliary engine cooling fans No. 1 and No. 2 do not operate at high speed, go to step 1 .

**Auxiliary Cooling Fan Runs Continuously**

1. Perform **COOLING FAN SYSTEM CHECK** . Go to next step.
2. Turn ignition off. Connect scan tool to DLC connector. Verify that engine coolant temperature is below 203°F (95°C) and that A/C compressor refrigerant pressure switch reading is below 217 psi (15.2 $kg/cm^2$ ). If all 3 cooling fans operate at low speed, go to next step. If one or more cooling fans operate, go to step 4 .
3. Repair short to ground in Brown/Blue wire between fan control relay (K26), cooling fan test connector, and primary cooling fan temperature switch. See **WIRING DIAGRAMS** . After repairs, go to step 21 .
4. If engine cooling fan operates at low speed, go to step 10 . If engine cooling fan does not operate at low speed, go to next step.
5. If auxiliary engine cooling fans No. 1 and No. 2 operate at low speed, go to next step. If auxiliary engine cooling fans No. 1 and No. 2 do not operate at low speed, go to step 11 .
6. Disconnect fan control relay (K26). Use a DVOM to measure voltage between fan control relay (K26) connector terminal No. 8 (Red/White wire) and ground. If battery voltage exists, go to next step. If battery voltage does not exist, go to step 8 .
7. Disconnect fan control relay (K87). Use a DVOM to measure voltage between fan control relay (K87) connector terminal No. 2 (Green wire) and ground. If battery voltage exists, check A/C compressor clutch control circuit. See A/C COMPRESSOR CLUTCH CONTROLS - ALL MODELS article in AIR CONDITIONING & HEATING. If battery voltage does not exist, go to step 9 .
8. Replace fan control relay (K26). After repairs, go to step 21 .
9. Repair short to battery voltage in Red/White wire between fan control relays (K26 and K87) and auxiliary

cardiagn.com

engine cooling fan No. 1. If circuit is okay, replace fan control relay (K87). After repairs, go to step 21 .

10. Repair short to battery voltage in Red/Blue wire between fan control relays (K26 and K22) and engine cooling fan resistor. If circuit is okay, replace fan control relay (K26). After repairs, go to step 21 .
11. Turn ignition on. If auxiliary engine cooling fan No. 2 operates at high speed, go to next step. If auxiliary engine cooling fan No. 2 does not operate at high speed, go to step 17 .
12. Disconnect fan control relay (K28). Use a DVOM to measure resistance between ground and fan control relay (K28) connector terminal No. 6 (Brown/White wire). If reading is 5 ohms or less, go to next step. If reading is greater than 5 ohms, go to step 14 .
13. Repair short to ground in Brown/White wire between fan control relays (K28 and K52), cooling fan test connector, and secondary cooling fan temperature switch. If circuits are okay, replace secondary cooling fan temperature switch. After repairs, go to step 21 .
14. Use a DVOM to measure resistance between ground and fan control relay (K28) connector terminal No. 5 (Red/White wire). If reading is 5 ohms or less, go to next step. If reading is greater than 5 ohms, go to step 16 .
15. Repair short to ground in Brown/White wire between fan control relay (K28), cooling fan test connector, and A/C compressor refrigerant pressure switch. If circuits are okay, replace A/C compressor refrigerant pressure switch. After repairs, go to step 21 .
16. Repair short to battery voltage in Red/White wire between fan control relays (K28 and K52) and auxiliary engine cooling fan No. 2. Repair short to battery voltage in Brown/Green wire between fan control relay (K52) and auxiliary engine cooling fan No. 1. If circuits are okay, replace fan control relay (K28). After repairs, go to step 21 .
17. If engine cooling fan operates at high speed, go to next step. If engine cooling fan does not operate at high speed, go to step 1 .
18. Use a DVOM to measure resistance between ground and cooling fan test connector terminal No. 4 (Brown/White wire). If reading is 5 ohms or less, go to next step. If reading is greater than 5 ohms, go to step 20 .
19. Repair short to ground in Brown/White wire between fan control relay (K67), cooling fan test connector, and primary cooling fan temperature switch. If circuits are okay, replace primary cooling fan temperature switch. After repairs, go to step 21 .
20. Repair short to battery voltage in Red/White wire between fan control relay (K67), engine cooling fan, and engine cooling fan resistor. If circuit is okay, replace fan control relay (K67). After repairs, go to next step.
21. Reconnect all disconnected components. Verify that auxiliary cooling fans No. 1 and No. 2 operate properly. If fans do not operate properly, go to step 1 .

## 1998 3.1L "N" BODY (ACHIEVA, GRAND AM & SKYLARK)

### Description

Relay coils are energized when Powertrain Control Module (PCM) completes ground a path. PCM is grounded for cooling fan operation. During cooling fan operation, PCM supplies a ground path for cooling fan relay through an Output Driver Module (ODM). This closes cooling fan relay contacts and current flows through relay and to cooling fan motor. Cooling fan motor is grounded at engine block.

cardiagn.com

**Cooling Fan Circuit Diagnosis**

1. If Powertrain On-Board Diagnostic (OBD) System Check has not been performed, see appropriate ENGINE PERFORMANCE article. If OBD SYSTEM CHECK has been performed, go to next step.
2. Check for PCM Diagnostic Trouble Codes (DTCs). If any DTCs are present, perform testing for applicable DTC. Some DTCs will cause cooling fans to operate at all times. Repair all DTCs that are set before proceeding with testing. See appropriate ENGINE PERFORMANCE article. If no DTCs are present, go to next step.
3. Ensure coolant temperature is less than 212°F (100°C). Turn A/C off. Turn ignition on. If cooling fan operates, go to next step. If cooling fan does not operate, go to step **22)** .
4. Using scan tool, select RELAY CONTROL function. Command cooling fan on. If cooling fan operates, go to **DIAGNOSTIC AIDS** . If cooling fan does not operate, go to next step.
5. Remove cooling fan 1 relay. Turn ignition on. Connect a test light between battery voltage and cooling fan relay harness connector terminal No. 86. Using scan tool, select RELAY CONTROL function. Command cooling fan on. If test light illuminates, go to next step. If test light does not illuminate, go to step **14)** .
6. Check for blown CLG FAN fuse (40-amp) in fuse block and repair as necessary. If fuse was blown, go to step **18)** . If fuse was not blown, go to next step.
7. Using a test light connected to ground, probe cooling fan relay harness connector terminals No. 30 and 85. If test light illuminates, go to step **9)** . If test light does not illuminate, go to next step.
8. Locate and repair open in battery feed circuit to cooling fan relay harness connector terminals. After repairs, go to step **29)** .
9. Turn ignition off. Connect a fused jumper wire between battery voltage and cooling fan relay harness connector terminal No. 87. If cooling fan operates, go to step **28)** . If cooling fan does not operate, go to next step.
10. Disconnect cooling fan motor harness connector. With jumper wire still in place, connect a test light between cooling fan harness connector terminals. If test light illuminates, go to step **27)** . If test light does not illuminate, go to next step.
11. Using a test light connected to battery voltage, probe cooling fan motor ground circuit at cooling fan motor harness connector terminal "A" (Black wire). If test light illuminates, go to next step. If test light does not illuminate, go to step **13)** .
12. Locate and repair open in cooling fan motor power feed circuit. After repairs, go to step **29)** .
13. Locate and repair open in cooling fan motor ground circuit. After repairs, go to step **29)** .
14. Using a test light connected to ground, probe cooling fan relay harness connector terminal No. 85. If test light illuminates, go to next step. If test light does not illuminate, go to step **16)** .
15. Turn ignition off. Disconnect PCM harness connector C1. Connect a test light between cooling fan relay harness connector terminals No. 85 and 86. Using a fused jumper wire, jump cooling fan relay driver circuit to ground at PCM harness connector C1, terminal No. 32 (Dark Green wire). If test light illuminates, go to step **26)** . If test light does not illuminate, go to step **17)** .
16. Locate and repair open in battery power feed circuit to cooling fan relay harness connector terminal No. 85. After repairs, go to step **29)** .
17. Locate and repair open in cooling fan relay driver circuit (Dark Green wire). After repairs, go to step **29)** .
18. Remove cooling fan relay fuse. Using a test light connected to ground, probe cooling fan relay harness

cardiagn.com

connector terminal No. 30. If test light illuminates, go to next step. If test light does not illuminate, go to step **20)** .

19. Locate and repair short to ground in battery power feed circuit to cooling fan relay harness connector terminal No. 30. After repairs, go to step **29)** .
20. Disconnect cooling fan motor harness connector. Using a test light connected to battery positive, probe cooling fan relay harness connector terminal No. 87. If test light illuminates, go to next step. If test light does not illuminate, go to step **27)** .
21. Locate and repair short to ground in cooling fan motor power feed circuit. After repairs, go to step **29)** .
22. Using scan tool, monitor A/C pressure. If pressure reading is greater than 190 psi (13.3 kg/$cm^2$ ), go to next step. If pressure reading is 190 psi (13.3 kg/$cm^2$ ) or less, go to step **24)** .
23. Disconnect A/C pressure sensor. Using scan tool, monitor A/C pressure. If A/C pressure is zero psi, go to step **25)** . If A/C pressure is not zero psi, go to step **26)** .
24. Locate and repair short to voltage in cooling fan motor power feed circuit. After repairs, go to step **29)** .
25. Replace A/C pressure sensor. After replacing A/C pressure sensor, go to step **29)** .
26. Replace PCM. After replacing PCM, go to step **29)** .
27. Replace cooling fan motor. After replacing motor, go to step **29)** .
28. Replace cooling fan relay. After replacing relay, go to next step.
29. Ensure coolant temperature is less than 212°F (100°C). Turn A/C select switch off. Turn ignition on. If cooling fan turns off, system is operating normally at this time. If cooling fan does not turn off, go to step **3)** .

**Diagnostic Aids**

Check for poor connections at PCM, cooling fan relay and cooling fan motor. Inspect harness connectors for damaged, corroded or backed-out terminal pins. Inspect related wiring harnesses for damage or improper routing.

## 3.1L "N" BODY (CUTLASS & MALIBU); 3.4L (ALERO & GRAND AM)

**Description**

Power for cooling fan motors is supplied through underhood electrical center. Cooling fan relays are energized when current flows from COOL FAN fuse No. 1 (30-amp) and COOL FAN fuse No. 2 (15-amp) in underhood electrical center, then through relay coils to ground through Powertrain Control Module (PCM). No. 1 Cooling fan relay control circuit is grounded for low speed operation. Both fan control circuits and all 3 relays are grounded for high speed fan operation.

During low speed cooling fan operation, PCM supplies a ground path for No. 1 cooling fan relay. As a result, relay contacts close, allowing current to flow from underhood electrical center through relay to cooling fan motor No. 1 (left side). During low speed operation, ground path for cooling fan No. 1 is through No. 2 cooling fan relay and cooling fan motor No. 2 (right side). This results in a series circuit with both fans operating at low speed.

During high speed cooling fan operation, PCM supplies a ground path for all 3 cooling fan relays. As a result,

cardiagn.com

relay contacts close in all relays, allowing both cooling fan motors to operate at high speed. Both cooling fans are supplied current from underhood electrical center. Each cooling fan has a separate ground path when operating in high speed mode.

**Diagnosis**

1. If Powertrain On-Board Diagnostic (OBD) System Check has not been performed, see appropriate ENGINE PERFORMANCE article. If OBD SYSTEM CHECK has been performed, go to next step.
2. Check for PCM Diagnostic Trouble Codes (DTCs). If any DTCs are present, perform testing for applicable DTC. Repair all DTCs that are set before proceeding with testing. See appropriate ENGINE PERFORMANCE article. If no DTCs are present, go to next step.
3. Ensure engine coolant temperature is less than 212°F (100°C). Turn A/C off. Start engine. If cooling fans operate, go to step **32)** . If cooling fans do not operate, go to next step.
4. Using scan tool, select RELAY CONTROL function. Command low speed fans on. If both cooling fans operate at low speed, go to next step. If both cooling fans do not operate at low speed, go to step **8)** .
5. Using scan tool, select RELAY CONTROL function. Command high speed fans on. Wait 20 seconds. If both cooling fans operate at high speed, go to next step. If fans do not operate at high speed, go to step **58)** .

**NOTE: Ensure ambient temperature is greater than 48°F (9°C) before proceeding.**

6. Exit scan tool OUTPUT TESTS. Start engine. Turn A/C on. If both cooling fans operate, go to **DIAGNOSTIC AIDS** . If both cooling fans do not operate, go to next step.
7. Using scan tool, view A/C REQUEST on display. If YES is displayed, go to step **77)** . If YES is not displayed, go to appropriate A/C CLUTCH CIRCUIT DIAGNOSIS TEST in A/C COMPRESSOR CLUTCH CONTROLS article in AIR CONDITIONING & HEATING.
8. If either cooling fan is operating, go to next step. If neither cooling fan operates, go to step **16)** .
9. If left cooling fan operates, go to next step. If cooling fan No. 1 does not operate, go to step **14)** .
10. Turn ignition off. Disconnect cooling fan No. 2 harness connector. Turn ignition on. Using scan tool, select RELAY CONTROL function. Command low speed fans on. If left cooling fan operates, go to next step. If left cooling fan does not operate, go to step **80)** .
11. Remove mode control relay from underhood electrical center. If left cooling fan operates, go to next step. If left cooling fan does not operate, go to step **13)** .
12. Repair short to ground in White wire between left cooling fan motor and mode control relay. See **WIRING DIAGRAMS** . After repairs, go to step **81)** .
13. Check for a short to ground in Gray wire between mode control relay, cooling fan control relay No. 2, and right cooling fan motor. Repair as necessary and go to step **81)** . If no problem was found, go to step **70)** .
14. Turn ignition off. Disconnect cooling fan No. 1 harness connector. Turn ignition on. Using scan tool, select RELAY CONTROL function. Command low speed fans on. If right cooling fan operates, go to next step. If right cooling fan does not operate, go to step **71)** .
15. Check for a short to ground in circuit between left cooling fan motor and right cooling fan motor (White wire and/or Gray wire). After repairs, go to step **81)** . If no problem was found, go to step **79)** .
16. Turn ignition on. Remove cooling fan relay No. 1 from underhood electrical center. Using a test light

cardiagn.com

connected to ground, probe cavity No. 30 (battery feed circuit) at cooling fan relay No. 1 connector. If test light illuminates, go to step **18)** . If test light does not illuminate, go to next step.

17. Check for blown COOL FAN fuse No. 1 (30-amp) that supplies power to No. 1 cooling fan relay. If fuse is blown, locate and repair short circuit. Possible causes for short circuit are:
    - Seized cooling fan motors.
    - Shorted cooling fan motor windings.
    - Short to ground in circuits between fuse and left cooling fan motor, or in circuit between mode control relay, cooling fan relay No. 2 and right cooling fan motor.

    If fuse is not blown, check for an open in power feed circuit No. 742 between fuse and cooling fan relay No. 1. Repair as necessary. After repairs, go to step **81)** .

18. Using a test light connected to ground, probe cavity No. 86 (battery feed circuit) to cooling fan relay No. 1. If test light illuminates, go to step **20)** . If test light does not illuminate, go to next step.
19. Identify cause of no battery voltage to cavity No. 86 at cooling fan relay No. 1. Possible causes are:
    - Open or short in circuit to cavity No. 86 at cooling fan relay No. 1.
    - Short in cooling fan relay coils.
    - Short in mode control relay coil.
    - Circuit unrelated to cooling fans. See appropriate diagram in POWER DISTRIBUTION article in WIRING DIAGRAMS.

    Repair as necessary. After repairs, go to step **81)** .
20. Turn ignition off. Disconnect both cooling fan harness connectors. Using fused jumper wires, connect terminals "A" and "B" together at both harness connectors. Connect a test light between cavities No. 30 (battery feed circuit) and No. 87 (Light Blue wire) at cooling fan relay No. 1. If test light illuminates, go to next step. If test light does not illuminate, go to step **27)** .
21. Connect a test light between cavities No. 85 (Dark Green wire) and No. 86 (battery feed circuit) at cooling fan relay No. 1 connector. Turn ignition on. Using scan tool, select RELAY CONTROL function. Command low speed fans on. If test light illuminates, go to next step. If test light does not illuminate, go to step **25)** .
22. Turn ignition off. Remove jumper wires. Reconnect cooling fan harness connectors. Connect jumper wire between cavities No. 30 (battery feed circuit) and No. 87 (Light Blue wire) at cooling fan relay No. 1 connector. Turn ignition on. If both cooling fans operate, go to next step. If both cooling fans do not operate, go to step **24)** .
23. Check for poor connections at No. 1 cooling fan relay in underhood electrical center. Repair as necessary. After repairs, go to step **81)** . If no problem was found, go to step **37)** .
24. Check for poor connections at both cooling fan motors. Repair as necessary. After repairs, go to step **81)** . If no problem was found, go to step **63)** .
25. Turn ignition off. Disconnect PCM harness connector C1. Install a fused jumper wire between cavities No. 85 (Dark Green wire) and No. 86 (battery feed circuit) at cooling fan relay No. 1 connector. Turn ignition on. Using a test light connected to ground, probe PCM harness connector C1, terminal No. 6 (Dark Green wire). If test light illuminates, go to step **77)** . If test light does not illuminate, go to next step.
26. Locate and repair open in Dark Green wire between cooling fan relay No. 1 and PCM harness connector

cardiagn.com

C1, terminal No. 6. After repairs, go to step **81)** .

27. Turn ignition off. Remove jumper wires and reconnect cooling fan harness connectors. Connect a fused jumper wire between cavities No. 30 (battery feed circuit) and No. 87 (Light Blue wire) at cooling fan relay No. 1 connector. Remove mode control relay from underhood electrical center. Using a test light connected to ground, probe mode control relay cavity No. 30 (White wire). If test light illuminates, go to next step. If test light does not illuminate, go to step **31)** .
28. Connect a test light between mode control relay cavities No. 30 (White wire) and cavity 87A (Gray wire). If test light illuminates, go to step **30)** . If test light does not illuminate, go to next step.
29. Check for open in White wire between left cooling fan motor and cavity No. 30 at mode control relay connector. Repair as necessary. After repairs, go to step **81)** . If no problem was found, go to step **57)** .
30. Check for poor connections at mode control relay cavities No. 30 or 87A in underhood electrical center. Repair as necessary. After repairs, go to step **81)** . If no problem was found, go to step **70)** .
31. Check for an open in Light Blue wire between left cooling fan motor and cavity No. 87 at cooling fan relay No. 1 connector. Repair as necessary. After repairs, go to step **81)** . If no problem was found, go to step **56)** .
32. Using scan tool, view A/C REQUEST. If YES is displayed, diagnose A/C compressor controls. See A/C COMPRESSOR CLUTCH CONTROLS - ALL MODELS article in AIR CONDITIONING & HEATING. If YES is not displayed, go to next step.
33. If both cooling fans are operating at low speed, go to next step. If both cooling fans do not operate at low speed, go to step **40)** .
34. Remove cooling fan relay No. 1 from underhood electrical center. If both cooling fans operate, go to next step. If both cooling fans do not operate, go to step **36)** .
35. Repair short to power in Light Blue wire between left cooling fan motor and cooling fan relay No. 1. After repairs, go to step **81)** .
36. Using a test light connected to battery voltage, probe cavity No. 86 (battery feed circuit) at cooling fan relay No. 1 connector. If test light illuminates, go to step **38)** . If test light does not illuminate, go to next step.
37. Replace cooling fan relay No. 1. After replacing cooling fan relay, go to step **81)** .
38. Turn ignition off. Disconnect PCM harness connector C1. With a test light connected to battery voltage, probe cavity No. 85 (Dark Green wire) at cooling fan relay No. 1 connector. If test light illuminates, go to next step. If test light does not illuminate, go to step **77)** .
39. Repair short to ground in Dark Green wire between cooling fan relay No. 1 and PCM harness connector C1 terminal No. 6. After repairs, go to step **81)** .
40. If both cooling fans operate at high speed, go to next step. If both cooling fans do not operate at high speed, go to step **42)** .
41. Using scan tool, view A/C PRESSURE on display. If reading is less than 1.2 volts, go to step **77)** . If reading is 1.2 volts or greater, go to step **44)** .
42. Turn ignition off. Disconnect PCM harness connector C1. Turn ignition on. If right cooling fan operates at high speed, go to next step. If right cooling fan does not operate at high speed, go to step **77)** .
43. Check for a short to ground in Dark Blue wire between mode control relay, cooling fan relay No. 2 and PCM harness connector C1 terminal No. 5. Repair as necessary. After repairs, go to step **81)** . If no problem was found, go to step **52)** .
44. Turn ignition off. Disconnect A/C pressure sensor harness connector. Turn ignition on. Using scan tool,

cardiagn.com

view A/C PRESSURE on display. If reading is near zero volts, go to step **46)** . If reading is not as specified, go to next step.

45. Using a DVOM, check voltage between A/C pressure sensor signal circuit (Red/Black wire) and ground circuit (Black wire) at A/C pressure sensor harness connector. If reading is near zero volts, go to step **77)** . If reading is not as specified, go to step **51)** .
46. Using a test light connected to battery positive, probe ground circuit (Black wire) at A/C pressure sensor harness connector. If test light illuminates, go to next step. If test light does not illuminate, go to step **49)** .
47. Using a voltmeter, check voltage between A/C pressure sensor 5-volt reference circuit (Gray wire) and sensor ground (Black wire). If reading is near 5 volts, go to next step. If reading is not as specified, go to step **50)** .
48. Replace A/C pressure sensor. After replacing A/C pressure sensor, go to step **81)** .
49. Repair open or short to power in A/C pressure sensor ground circuit (Black wire). After repairs, go to step **81)** .
50. Repair open or short to ground in A/C pressure sensor 5-volt reference circuit (Gray wire). After repairs, go to step **81)** .
51. Repair short to power in A/C pressure sensor signal circuit (Red/Black wire). After repairs, go to step **81)** .
52. Remove mode control relay from underhood electrical center. If right cooling fan operates at high speed, go to next step. If right cooling fan does not operate at high speed, go to step **70)** .
53. Remove cooling fan relay No. 2 from underhood electrical center. If right cooling fan operates at high speed, go to next step. If right cooling fan does not operate at high speed, go to step **55)** .
54. Repair short to power in Gray wire between mode control relay and right cooling fan motor. After repairs, go to step **81)** .
55. Check for a short to ground in Dark Blue wire between mode control relay, cooling fan relay No. 2, and PCM harness connector C1 terminal No. 5. Repair as necessary. After repairs, go to step **81)** . If no problem is found, go to step **76)**
56. Check for an open in White wire between mode control relay and left cooling fan motor. Repair as necessary. After repairs, go to step **81)** . If no problem was found, go to step **79)** .
57. Check for an open in Black wire between right cooling fan motor and ground. Also, check for an open in Gray wire between mode control relay and right cooling fan motor. Repair as necessary. After repairs, go to step **81)** . If no problem was found, go to step **80)** .
58. Turn ignition on. Remove mode control relay from underhood electrical center. Connect a test light between battery voltage and cavity No. 86 (Dark Blue wire) at mode control relay connector. Using scan tool, select RELAY CONTROL function. Command high speed fan operation. Wait 5-6 seconds. If test light illuminates, go to step **61)** . If test light does not illuminate, go to next step.
59. Remove cooling fan relay No. 2 from underhood electrical center. Connect a test light between battery voltage and cavity No. 85 (Dark Blue wire) at cooling fan relay No. 2 connector. Using scan tool, select RELAY CONTROL function. Command high speed fans on. Wait 6 seconds. If test light illuminates, go to step **78)** . If test light does not illuminate, go to next step.
60. Turn ignition off. Disconnect PCM harness connector C1. Turn ignition on. Check for a short to power in Dark Blue wire between mode control relay, cooling fan relay No. 2, and PCM harness connector C1 terminal No. 5. Repair as necessary. After repairs, go to step **81)** . If no problem is found, go to step **77)** .
61. Turn ignition off. Reinstall mode control relay. Disconnect both cooling fan motor harness connectors.

cardiagn.com

Turn ignition on. Turn ignition on. Using scan tool, select RELAY CONTROL function. Command high speed cooling fan operation. Wait 5-6 seconds. With a test light connected to ground, probe Gray wire at right cooling fan motor harness connector. If test light illuminates, go to next step. If test light does not illuminate, go to step **64)** .

62. Using a test light connected to battery voltage, probe White wire at left cooling fan motor harness connector. If test light illuminates, go to next step. If test light does not illuminate, go to step **71)** .
63. Check for a seized cooling fan motor or open motor winding. Replace appropriate cooling fan motor. After repairs, go to step **81)** .
64. Remove mode control relay from underhood electrical center. Using a test light connected to ground, probe cavity No. 85 (battery feed circuit) at mode control relay connector. If test light illuminates, go to step **66)** . If test light does not illuminate, go to next step.
65. Repair open in battery positive circuit to cavity No. 85 at mode control relay connector. After repairs, go to step **81)** .
66. Using a test light connected to ground, probe mode control relay cavity No. 30 (White wire). If test light illuminates, go to step **68)** . If test light does not illuminate, go to next step.
67. Repair open in White wire between mode control relay and left cooling fan motor. After repairs, go to step **81)** .
68. Check for an open in Gray wire between right cooling fan motor and cavity 87A at mode control relay connector. Repair as necessary. After repairs, go to step **81)** . If no problem was found, go to next step.
69. Check for poor connections at mode control relay in underhood electrical center. Repair as necessary. After repairs, go to step **81)** . If no problem was found, go to next step.
70. Replace mode control relay. After replacing relay, go to step **81)** .
71. Remove cooling fan relay No. 2 from underhood electrical center. Using a test light connected to ground, probe cavity No. 86 (battery feed circuit) at cooling fan relay No. 2 connector. If test light illuminates, go to step **73)** . If test light does not illuminate, go to next step.
72. Locate and repair open in battery feed circuit to cooling fan relay No. 2 cavity No. 86. After repairs, go to step **81)** .
73. Using a test light connected to battery voltage, probe cooling fan relay No. 2 cavity No. 87. If test light illuminates, go to step **75)** . If test light does not illuminate, go to next step.
74. Repair open in circuit No. 532 between cooling fan relay No. 2 cavity 87 and mode control relay cavity 87A. After repairs, go to step **81)** .
75. Check for poor connections at cooling fan relay No. 2 in underhood electrical center. Repair as necessary. After repairs, go to step **81)** . If no problem was found, go to step **76)** .
76. Replace cooling fan relay No. 2. After replacing cooling fan relay, go to step **81)** .
77. Replace PCM and program. See COMPUTER RELEARN PROCEDURES article in GENERAL INFORMATION. Go to step **81)** .
78. Repair open in Dark Blue wire between PCM harness connector, mode control relay and fan control relay No. 2. After repairs, go to step **81)** .
79. Replace left cooling fan motor. After replacing left cooling fan motor, go to step **81)** .
80. Replace right cooling fan motor. After replacing right cooling can motor, go to next step.
81. Ensure coolant temperature is below 212°F (100°C). Turn A/C off. Start engine and let idle. If cooling fans operates, go to step **32)** . If cooling fans do not operate, go to next step.

cardiagn.com

82. Using scan tool, select RELAY CONTROL function. Command low speed fans on. If both cooling fans operate at low speed, go to next step. If both cooling fans do not operate at low speed, go to step **8)** .
83. Command high speed cooling fans on. Wait 6 seconds. If both cooling fans operate at high speed, system is okay at this time. If both cooling fans do not operate at high speed, go to step **58)** .

**Diagnostic Aids**

Check for poor connections at PCM, cooling fan relays and cooling fan motors. Inspect harness connectors for damaged, corroded or backed-out terminal pins. Inspect related wiring harnesses for damage or improper routing.

## 3.1L & 3.8L "W" BODY (CENTURY, 1998 INTRIGUE & REGAL)

**Description**

Power for cooling fan motors is supplied through Maxi-fuses in underhood electrical center. Cooling fan relays are energized when current flows from fuse through relay coils, then to ground through Powertrain Control Module (PCM). No. 1 cooling fan relay control circuit is grounded for low speed operation. Both fan control circuits and all 3 relays are grounded for high speed fan operation.

During low speed cooling fan operation, PCM supplies a ground path for No. 1 cooling fan relay. As a result, relay contacts close, allowing current to flow through relay to cooling fan No. 1 (left side). During low speed operation, ground path for cooling fan No. 1 is through No. 2 cooling fan relay and cooling fan motor No. 2 (right side). This results in a series circuit with both fans operating at low speed.

During high speed cooling fan operation, PCM supplies 2 ground paths for all 3 cooling fan relays. As a result, relay contacts close in all relays, allowing both cooling fan motors to operate at high speed. Both cooling fans are supplied current from 2 Maxi-fuses. Each cooling fan motor has a separate ground path when operating in high speed mode.

**Diagnosis**

1. If Powertrain On-Board Diagnostic (OBD) System Check has not been performed, see appropriate SELF-DIAGNOSTICS article in ENGINE PERFORMANCE. If OBD SYSTEM CHECK has been performed, go to next step.
2. Check for PCM Diagnostic Trouble Codes (DTCs). If any DTCs are present, perform testing for applicable DTC. Repair all DTCs that are set before proceeding with testing. See appropriate SELF-DIAGNOSTICS article in ENGINE PERFORMANCE. If no DTCs are present, go to next step.
3. Ensure engine coolant temperature is less than 212°F (100°C). Turn A/C off. Turn ignition on. If cooling fans do not operate, go to next step. If cooling fans operate, go to step **32)** .
4. Using scan tool, select RELAY CONTROL function. Command low speed fans on. If fans operate at low speed, go to next step. If fans do not operate as specified, go to step **8)** .
5. Command high speed fans on. Wait 6 seconds. If fans operate at high speed, go to next step. If fans do not operate as specified, go to step **58)** .

cardiagn.com

**NOTE: Ensure ambient temperature is greater than 48°F (9°C) before proceeding.**

6. Exit scan tool OUTPUT TESTS. Start engine. Turn A/C on. If cooling fans operate, go to **DIAGNOSTIC AIDS** . If cooling fan motors do not operate, go to next step.
7. Using scan tool, view A/C REQUEST display. If YES is displayed, go to step **77)** . If YES is not displayed, go to appropriate A/C CLUTCH CIRCUIT DIAGNOSIS TEST in A/C COMPRESSOR CLUTCH CONTROLS article in AIR CONDITIONING & HEATING.
8. If either cooling fan motor is operating, go to next step. If neither cooling fan motor operates, go to step **16)** .
9. If cooling fan motor No. 1 operates, go to next step. If cooling fan motor No. 1 does not operate, go to step **14)** .
10. Turn ignition off. Disconnect cooling fan No. 2 harness connector. Turn ignition on. Using scan tool, select RELAY CONTROL function. Command low speed fans on. If cooling fan motor No. 1 operates, go to next step. If cooling fan motor No. 1 does not operate, go to step **80)** .
11. Remove No. 2 cooling fan relay from underhood electrical center. If cooling fan motor No. 1 operates, go to next step. If cooling fan No. 1 does not operate, go to step **13)** .
12. Repair short to ground in Gray wire between cooling fan relay No. 2 and cooling fan motor No. 1. After repairs, go to step **81)** .
13. Check for a short to ground in White or Light Blue wire between cooling fan relay No. 1 and cooling fan motor No. 1. Repair as necessary. After repairs, go to step **81)** . If no problem was found, go to step **70)** .
14. Turn ignition off. Disconnect cooling fan motor No. 1 harness connector. Turn ignition on. Using scan tool, select RELAY CONTROL function. Command low speed fans on. If cooling fan motor No. 2 operates, go to next step. If cooling fan motor No. 2 does not operate, go to step **71)** .
15. Repair short to power in White wire or Light Blue wire between cooling fan relay No. 1 and cooling fan motor No. 1, and/or Gray wire between cooling fan relay No. 2 and cooling fan motor No. 1. After repairs, go to step **81)** . If no problem was found, go to step **79)** .
16. Turn ignition on, engine off. Remove No. 1 cooling fan relay from underhood electrical center. Using a test light connected to ground, probe No. 1 cooling fan relay cavity No. 30 (battery feed circuit). If test light illuminates, go to step **18)** . If test light does not illuminate, go to next step.
17. Check for blown COOL FAN 1 fuse (25 or 40-amp) that supplies power to No. 1 cooling fan relay. If fuse is blown, locate and repair short circuit. Possible causes for short circuit are:
    - Seized cooling fan motors.
    - Shorted cooling fan motor windings.
    - Short to ground in circuits between COOL FAN 1 and cooling fan relay No. 1 or White or Light Blue wire between cooling fan relay No. 1 and cooling fan motor No. 1.
    - Shorted relay coil in cooling fan relays.
    - Short to ground in battery feed circuit between fuse and cooling fan relay No. 1.

    If fuse is not blown, check for an open in battery feed circuit between fuse and No. 1 cooling fan relay. Repair as necessary. After repairs, go to step **81)** .

18. Using a test light connected to ground, probe No. 1 cooling fan relay cavity No. 85 (battery feed circuit). If test light illuminates, go to step **20)** . If test light does not illuminate, go to next step.

cardiagn.com

19. Check for blown COOL FAN fuse No. 1 (25 or 40-amp). If fuse is blown, locate and repair short circuit. Possible causes for a short circuit are:
    - Seized cooling fan motors.
    - Shorted cooling fan motor windings.
    - Short to ground in White or Light Blue wire between cooling fan relay No. 1 and cooling fan motor No. 1.
    - Shorted relay coil in cooling fan relays.
    - Short to ground in battery feed circuit between fuse and No. 1 cooling fan relay.

    If fuse is not blown, check for an open in battery feed circuit between fuse and No. 1 cooling fan relay. Repair as necessary. After repairs, go to step **81)** .

20. Turn ignition off. Disconnect both cooling fan motor harness connectors. Using fused jumper wires, connect terminals "A" and "B" together at both harness connectors. Connect a test light between No. 1 cooling fan relay cavities No. 30 (battery feed circuit) and No. 87 (White or Light Blue wire). If test light illuminates, go to next step. If test light does not illuminate, go to step **27)** .
21. Connect a test light between No. 1 cooling fan relay cavities No. 85 (battery feed circuit) and No. 86 (Dark Green wire). Turn ignition on. Using scan tool, select RELAY CONTROL function. Command low speed fans on. If test light illuminates, go to next step. If test light does not illuminate, go to step **25)** .
22. Turn ignition off. Remove jumper wires. Reconnect cooling fan motor harness connectors. Connect a fused jumper wire between No. 1 cooling fan relay cavities No. 30 (battery feed circuit) and No. 87 (White or Light Blue wire). Turn ignition on. If both cooling fans operate, go to next step. If both cooling fans do not operate, go to step **24)** .
23. Check for poor connections at No. 1 cooling fan relay in underhood electrical center. Repair as necessary. After repairs, go to step **81)** . If no problem was found, go to step **37)** .
24. Check for poor connections at both cooling fan motors. Repair as necessary. After repairs, go to step **81)** . If no problem was found, go to step **63)** .
25. Turn ignition off. Disconnect PCM harness Blue connector C1. Install a fused jumper wire between No. 1 cooling fan relay cavities No. 85 (battery feed circuit) and No. 86 (Dark Green wire). Turn ignition on. Using a test light connected to ground, probe PCM harness connector C1, terminal No. 6 (Dark Green wire). If test light illuminates, go to step **77)** . If test light does not illuminate, go to next step.
26. Repair open in Dark Green wire between cooling fan relay No. 1 and PCM harness connector C1 terminal No. 6. After repairs, go to step **81)** .
27. Turn ignition off. Remove jumper wires and reconnect cooling fan motor harness connectors. Connect a fused jumper wire between cooling fan relay No. 1 cavities No. 30 (battery feed circuit) and No. 87 (White or Light Blue wire). Remove cooling fan relay No. 2 from underhood electrical center. Using a test light connected to ground, probe No. 2 cooling fan relay cavity No. 30 (Gray wire). If test light illuminates, go to next step. If test light does not illuminate, go to step **31)** .
28. Connect a test light between No. 2 cooling fan relay cavities No. 30 (Gray wire) and 87A (Light Blue or White wire). If test light illuminates, go to step **30)** . If test light does not illuminate, go to next step.
29. Check for open in Light Blue or White wire between cooling fan relay No. 2 cavity No. 87A and harness connector terminal "B" at cooling fan motor No. 2. Repair as necessary. After repairs, go to step **81)** . If no problem was found, go to step **57)** .

cardiagn.com

30. Check for poor connections at cooling fan relay No. 2 cavities No. 30 and 87A in underhood electrical center. Repair as necessary. After repairs, go to step **81)** . If no problem was found, go to step **70)** .
31. Check for an open in Light Blue or White wire between cooling fan relay No. 1 cavity No. 87 and cooling fan motor No. 1 harness connector terminal "B". Repair as necessary. After repairs, go to step **81)** . If no problem was found, go to step **56)** .
32. Using scan tool, view A/C REQUEST on display. If YES is displayed, diagnose A/C compressor controls. See A/C COMPRESSOR CLUTCH CONTROLS - ALL MODELS article in AIR CONDITIONING & HEATING. If YES is not displayed, go to next step.
33. If both cooling fans are operating at low speed, go to next step. If both cooling fans do not operate at low speed, go to step **40)** .
34. Remove cooling fan relay No. 1 from underhood electrical center. If both cooling fans operate, go to next step. If both cooling fans do not operate, go to step **36)** .
35. Repair White or Light Blue wire for a short to power between cooling fan relay No. 1 and cooling fan motor No. 1. After repairs, go to step **81)** .
36. Using a test light connected to battery positive, probe cooling fan relay No. 1 cavity No. 86 (Dark Green wire). If test light illuminates, go to step **38)** . If test light does not illuminate, go to next step.
37. Replace cooling fan relay No. 1. After repairs, go to step **81)** .
38. Turn ignition off. Disconnect PCM harness Blue connector C1. Using a test light connected to battery positive, probe cooling fan relay No. 1 cavity No. 86 (Dark Green wire). If test light illuminates, go to next step. If test light does not illuminate, go to step **77)** .
39. Repair short to ground in Dark Green wire between cooling fan relay No. 1 and PCM harness connector C1 terminal No. 6. After repairs, go to step **81)** .
40. If both cooling fans operate at high speed, go to next step. If both cooling fans do not operate at high speed, go to step **42)** .
41. Using scan tool, view A/C PRESSURE on display. If reading is less than 1.2 volts (3.1L) or less than 1.5 volts (3.8L), go to step **77)** . If reading is 1.2 volts or greater, go to step **44)** .
42. Turn ignition off. Disconnect PCM harness Blue connector C1. Turn ignition on. If cooling fan No. 2 operates at high speed, go to next step. If cooling fan No. 2 does not operate at high speed, go to step **77)** .
43. Check for a short to ground in Dark Blue wire between PCM, cooling fan relay No. 2 and cooling fan No. 3. Repair as necessary. After repairs, go to step **81)** . If no problem was found, go to step **52)** .
44. Turn ignition off. Disconnect A/C pressure sensor harness connector. Turn ignition on. Using scan tool, view A/C PRESSURE on display. If reading is near zero volts, go to step **46)** . If reading is not as specified, go to next step.
45. Using a voltmeter, check voltage between A/C pressure sensor signal and ground circuits. If reading is near zero volts, go to step **77)** . If reading is not as specified, go to step **51)** .
46. Using a test light connected to battery positive, probe A/C pressure sensor ground circuit. If test light illuminates, go to next step. If test light does not illuminate, go to step **49)** .
47. Using a voltmeter, check voltage between A/C pressure sensor 5-volt reference and sensor ground. If reading is near 5 volts, go to next step. If reading is not as specified, go to step **50)** .
48. Replace A/C pressure sensor. After repairs, go to step **81)** .
49. Repair open or short to power in A/C pressure sensor ground circuit (Black wire). After repairs, go to step **81)** .

cardiagn.com

50. Repair open or short to ground in A/C pressure sensor 5-volt reference circuit (Gray wire). After repairs, go to step **81)** .
51. Repair short to power in A/C pressure sensor signal circuit (Red/Black wire). After repairs, go to step **81)** .
52. Remove cooling fan relay No. 2 from underhood electrical center. If cooling fan No. 2 operates at high speed, go to next step. If cooling fan No. 2 does not operate at high speed, go to step **70)** .
53. Remove cooling fan relay No. 3 from underhood electrical center. If cooling fan No. 2 operates at high speed, go to next step. If cooling fan No. 2 does not operate at high speed, go to step **55)** .
54. Repair short to power in Light Blue wire between cooling fan relay No. 3 and cooling fan motor No. 2. After repairs, go to step **81)** .
55. Repair short to power in Gray wire between cooling fan relay No. 2 and cooling fan motor No. 1. After repairs, go to step **81)** .
56. Check for an open in Gray wire between No. 2 cooling fan relay cavity No. 30 and terminal "A" of cooling fan motor No. 1 harness connector. Repair as necessary. After repairs, go to step **81)** . If no problem was found, go to step **79)** .
57. Check for an open in Black wire between cooling fan motor No. 2 harness connector terminal "A" and ground. Repair as necessary. After repairs, go to step **81)** . If no problem was found, go to step **80)** .
58. Turn ignition on. Remove cooling fan relay No. 2 from underhood electrical center. Connect a test light between cooling fan relay No. 2 cavity No. 86 and battery voltage. Using scan tool, select RELAY CONTROL function. Command high speed fans on. Wait 6 seconds. If test light illuminates, go to step **61)** . If test light does not illuminate, go to next step.
59. Remove cooling fan relay No. 3 from underhood electrical center. Connect a test light between cooling fan relay No. 3 cavity No. 86 and battery voltage. Using scan tool, select RELAY CONTROL function. Command high speed fans on. Wait 6 seconds. If test light illuminates, go to step **78)** . If test light does not illuminate, go to next step.
60. Turn ignition off. Disconnect PCM harness Blue connector C1. Check high speed fan control circuit (Dark Blue wire) for an open circuit or short to power. Repair as necessary. After repairs, go to step **81)** . If no problem is found, go to step **77)** .
61. Turn ignition off. Reinstall cooling fan relay No. 2. Disconnect both cooling fan motor harness connectors. Turn ignition on. Using scan tool, select RELAY CONTROL function. Command high speed fans on. Wait 6 seconds. Using a test light connected to ground, probe terminal "B" of cooling fan motor No. 2 harness connector. If test light illuminates, go to next step. If test light does not illuminate, go to step **64)** .
62. Using a test light connected to battery voltage, probe terminal "A" of cooling fan motor No. 1 harness connector. If test light illuminates, go to next step. If test light does not illuminate, go to step **71)** .
63. Check for a seized cooling fan motor or open motor winding. Replace appropriate cooling fan motor. After repairs, go to step **81)** .
64. Turn ignition off. Remove cooling fan relay No. 2 from underhood electrical center. Turn ignition on. Using a test light connected to ground, probe cooling fan relay No. 2 cavity No. 85 (battery feed circuit). If test light illuminates, go to step **66)** . If test light does not illuminate, go to next step.
65. Repair open or short in ignition battery voltage circuit to cooling fan relay No. 2. Check for blown Maxi-fuse (30-amp). Repair short to ground if blown. Replace fuse. After repairs, go to step **81)** .
66. Using a test light connected to ground, probe cooling fan relay No. 2 cavity No. 30. If test light

cardiagn.com

illuminates, go to step **68)** . If test light does not illuminate, go to next step.

67. Repair open in Gray wire between cooling fan No. 1, harness connector "A" and No. 2 cooling fan relay cavity No. 30. After repairs, go to step **81)** .
68. Check for open in Light Blue wire between cooling fan motor No. 2 harness connector terminal "B" and cooling fan relay No. 2 cavity No. 87A. Repair as necessary. After repairs, go to step **81)** . If no problem was found, go to next step.
69. Check for poor connections at cooling fan relay No. 2 in underhood electrical center. Repair as necessary. After repairs, go to step **81)** . If no problem was found, go to next step.
70. Replace cooling fan relay No. 2. After repairs, go to step **81)** .
71. Turn ignition off. Remove cooling fan relay No. 3 from underhood electrical center. Turn ignition on. Using a test light connected to ground, probe cooling fan relay No. 3 cavity No. 85 (battery feed circuit). If test light illuminates, go to step **73)** . If test light does not illuminate, go to next step.
72. Repair open in battery feed circuit to No. 3 cooling fan relay cavity No. 85. After repairs, go to step **81)** .
73. Using a test light connected to battery voltage, probe cooling fan relay No. 3 cavity No. 87. If test light illuminates, go to step **75)** . If test light does not illuminate, go to next step.
74. Repair open in circuit between cooling fan relay No. 3 cavity No. 87 and cooling fan relay No. 2 cavity No. 87A. After repairs, go to step **81)** .
75. Check for poor connections at cooling fan relay No. 3 in underhood electrical center. Repair as necessary. After repairs, go to step **81)** . If no problem was found, go to step **76)** .
76. Replace cooling fan relay No. 3. After repairs, go to step **81)** .
77. Replace PCM. See COMPUTER RELEARN PROCEDURES article in GENERAL INFORMATION. After replacing PCM, go to step **81)** .
78. Repair open in Dark Blue wire between PCM harness connector C1, terminal No. 5 and cooling fan relays No. 2 and No. 3, cavity No. 86. After repairs, go to step **81)** .
79. Replace cooling fan motor No. 1. After replacing cooling fan motor, go to step **81)** .
80. Replace cooling fan motor No. 2. After replacing motor, go to next step.
81. Ensure coolant temperature is below 212°F (100°C). Turn A/C off. Start engine and let idle. If cooling fans are operating, go to step **32)** . If cooling fans are not operating, go to next step.
82. Using scan tool, select RELAY CONTROL function. Command low speed fans on. If both cooling fans operate at low speed, go to next step. If both cooling fans do not operate at low speed, go to step **8)** .
83. Command high speed cooling fans on. Wait 6 seconds. If both cooling fans operate at high speed, system is okay at this time. If both cooling fans do not operate at high speed, go to step **58)** .

**Diagnostic Aids**

Check for poor connections at PCM, cooling fan relays and cooling fan motors. Inspect harness connectors for damaged, corroded or backed-out terminal pins. Inspect related wiring harnesses for damage or improper routing.

## 1998 3.1L & 3.8L "W" BODY (LUMINA & MONTE CARLO)

**Description**

cardiagn.com

Power for cooling fan motors is supplied through 2 Maxi-fuses (30-amp) in underhood electrical center. Cooling fan relays are energized when current flows from fuse through relay coils, then to ground through Powertrain Control Module (PCM). Cooling fan relay No. 1 control circuit is grounded for low speed cooling fan operation. Both fan control circuits and all 3 relays are grounded for high speed cooling fan operation.

During low speed cooling fan operation, PCM supplies a ground path for cooling fan relay No. 1. As a result, relay contacts close, allowing current to flow through relay to cooling fan motor No. 1. During low speed cooling fan operation, ground path for cooling fan motor No. 1 is through cooling fan relay No. 2 and cooling fan motor No. 2. This results in a series circuit with both cooling fans running at low speed

During high speed cooling fan operation, PCM supplies 2 ground paths for all 3 cooling fan relays. As a result, relay contacts close in all relays, allowing both cooling fan motors to run at high speed. Both cooling fan motors are supplied current from 2 separate Maxi-fuses. Each cooling fan motor has a separate ground path when operating in high speed mode.

**Diagnosis**

1. If On-Board Diagnostic (OBD) System Check has not been performed, see appropriate SELF-DIAGNOSTICS article in ENGINE PERFORMANCE. If OBD system check has been performed, go to next step.
2. Install scan tool. Check for DTCs. If any DTCs are set, perform testing for applicable DTC. See appropriate SELF-DIAGNOSTICS article in ENGINE PERFORMANCE. Repair all DTCs that are set before proceeding with testing. If no DTCs are set, go to next step.
3. Ensure engine coolant temperature is less than 212°F (100°C). Turn A/C off. Start engine. If cooling fans are operating, go to next step. If cooling fans do not operate, go to step **32)** .
4. Using scan tool, select RELAY CONTROL function. Command low speed cooling fans on. If both cooling fans operate at low speed, go to next step. If both cooling fans do not operate at low speed, go to step **8)** .
5. Command high speed cooling fans on. Wait 6 seconds. If both cooling fans operate at high speed, go to next step. If both cooling fans do not operate at high speed, go to step **58)** .

**NOTE: Ensure ambient temperature is greater than 48°F (9°C) before proceeding.**

6. Exit scan tool OUTPUT TESTS. Start engine. Turn A/C on. If both cooling fans operate, go to **DIAGNOSTIC AIDS** . If both cooling fans do not operate, go to next step.
7. Using scan tool, view A/C REQUEST display. If YES is displayed, go to step **77)** . If YES is not displayed, diagnose A/C compressor controls. See A/C COMPRESSOR CLUTCH CONTROLS - ALL MODELS article in AIR CONDITIONING & HEATING.
8. If either cooling fan is operating, go to next step. If neither cooling fan operates, go to step **16)** .
9. If cooling fan No. 1 operates, go to next step. If cooling fan No. 1 does not operate, go to step **14)** .
10. Turn ignition off. Disconnect cooling fan No. 2 harness connector. Turn ignition on. Using scan tool, select RELAY CONTROL function. Command low speed cooling fans on. If cooling fan No. 1 operates, go to next step. If cooling fan No. 1 does not operate, go to step **80)** .
11. Remove cooling fan relay No. 2 relay No. 2 from underhood electrical center. If cooling fan No. 1

cardiagn.com

operates, go to next step. If cooling fan No. 1 does not operate, go to step **13)** .

12. Repair short to ground in Black wire between cooling fan relay No. 2 and cooling fan motor No. 1. See **WIRING DIAGRAMS** . After repairs, go to step **81)** .
13. Check for a short to ground in White wire between cooling fan motor No. 2 and cooling fan relays No. 2 and 3. Repair as necessary. Repair as necessary and go to step **81)** . If no problem was found, go to step **70)** .
14. Turn ignition off. Disconnect cooling fan No. 1 harness connector. Turn ignition on. Using scan tool, select RELAY CONTROL function. Command low speed cooling fans on. If cooling fan No. 2 operates, go to next step. If cooling fan No. 2 does not operate, go to step **71)** .
15. Repair short to power in White wire between fan control relay No. 2 and cooling fan No. 2, or Black wire between cooing fan No. 1 and cooling fan No. 2. After repairs, go to step **81)** . If no problem was found, go to step **79)** .
16. Turn ignition on. Remove cooling fan relay No. 1 from underhood electrical center. Using a test light connected to ground, probe No. 1 cooling fan relay cavity C4 (red Wire). If test light illuminates, go to step **18)** . If test light does not illuminate, go to next step.
17. Repair open in battery feed circuit (Red wire) between cooling fan relay No. 1 connector cavity C4 and fuse No. 1.
18. Using a test light connected to ground, probe cooling fan relay No. 1 cavity C6 (Orange wire). If test light illuminates, go to step **20)** . If test light does not illuminate, go to next step.
19. Repair open in battery feed circuit (Orange wire) between FAN CONT No. 1 relay connector cavity C6 and PCM BAT fuse (20-amp). Repair as necessary. After repairs, go to step **81)** .
20. Turn ignition off. Disconnect both cooling fan harness connectors. Using fused jumper wires, connect terminals "A" and "B" together at both harness connectors. Connect a test light between cooling fan relay No. 1 cavities No. C4 (Red wire) and B6 (Light Blue wire). If test light illuminates, go to next step. If test light does not illuminate, go to step **27)** .
21. Connect a test light between cooling fan relay No. 1 cavities C6 (Orange wire) and B4 (Dark Green wire). Turn ignition on. Using scan tool, select RELAY CONTROL function. Command cooling fan No. 1 on. If test light illuminates, go to next step. If test light does not illuminate, go to step **25)** .
22. Turn ignition off. Remove jumper wires. Reconnect cooling fan harness connectors. Connect a fused jumper wire between No. 1 cooling fan relay cavities C4 (Red wire) and B6 (Light Blue wire). Turn ignition on. If both cooling fans operate, go to next step. If both cooling fans do not operate, go to step **24)** .
23. Check for poor connections at cooling fan relay No. 1 in underhood electrical center. Repair as necessary. After repairs, go to step **81)** . If no problem was found, go to step **37)** .
24. Check for poor connections at both cooling fan motors. Repair as necessary. After repairs, go to step **81)** . If no problem was found, go to step **63)** .
25. Turn ignition off. Disconnect PCM harness Blue connector C1. Install a fused jumper wire between cooling fan relay No. 1 cavities C6 (Orange wire) and B4 (Dark Green wire). Turn ignition on. Using a test light connected to ground, probe PCM harness connector C1, terminal No. 6 (Dark Green wire). If test light illuminates, go to step **77)** . If test light does not illuminate, go to next step.
26. Repair open in Dark Green wire between No. 1 cooling fan relay and PCM harness Blue connector C1, terminal No. 6. After repairs, go to step **81)** .
27. Turn ignition off. Remove jumper wires and reconnect cooling fan harness connectors. Connect a fused

cardiagn.com

jumper wire between cooling fan relay No. 1 cavities C4 (Red wire) and B6 (Light Blue wire). Remove cooling fan relay No. 2 from underhood electrical center. Using a test light connected to ground, probe cooling fan relay No. 2 cavity C8 (Black wire). If test light illuminates, go to next step. If test light does not illuminate, go to step **31)** .

28. Connect a test light between cooling fan relay No. 2 cavities C8 (Black wire) and B9 (White wire). If test light illuminates, go to step **30)** . If test light does not illuminate, go to next step.
29. Check for open in White wire between cooling fan relay No. 2 cavity B9 and harness connector terminal "B" at cooling fan motor No. 2. Repair as necessary. After repairs, go to step **81)** . If no problem was found, go to step **57)** .
30. Check for a poor connection at cooling fan relay No. 2 cavities C8 (Black wire) or B9 (White wire) in underhood electrical center. Repair as necessary. After repairs, go to step **81)** . If no problem was found, go to step **70)** .
31. Check for an open in Light Blue wire between cooling fan relay No. 1 cavity B6 and harness connector terminal "B" at cooling fan motor No. 1. Repair as necessary. After repairs, go to step **81)** . If no problem was found, go to step **56)** .
32. Using scan tool, view A/C REQUEST. If YES is displayed, See A/C COMPRESSOR CLUTCH CONTROLS - ALL MODELS article in AIR CONDITIONING & HEATING. If YES is not displayed, go to next step.
33. If both cooling fans are operating at low speed, go to next step. If both cooling fans do not operate at low speed, go to step **40)** .
34. Remove cooling fan relay No. 1 from underhood electrical center. If both cooling fans are operating, go to next step. If both cooling fans are not operating, go to step **36)** .
35. Repair short to power in Light Blue wire between cooling fan relay No. 1 and cooling fan No. 1. After repairs, go to step **81)** .
36. Using a test light connected to battery voltage, probe cooling fan relay No. 1 cavity B4 (Dark Green wire). If test light illuminates, go to step **38)** . If test light does not illuminate, go to next step.
37. Replace cooling fan relay No. 1. After repairs, go to step **81)** .
38. Turn ignition off. Disconnect PCM harness Blue connector C1. Using a test light connected to battery voltage, probe cooling fan relay No. 1 cavity B4 (Dark Green wire). If test light illuminates, go to next step. If test light does not illuminate, go to step **77)** .
39. Repair short to ground in Dark Green wire between cooling fan relay No. 1 and PCM harness Blue connector C1, terminal No. 6. After repairs, go to step **81)** .
40. If both cooling fans operate at high speed, go to next step. If both cooling fans do not operate at high speed, go to step **42)** .
41. Using scan tool, view A/C PRESSURE on display. If reading is less than 1.2 volts (3.1L) or 1.5 volts (3.8L), go to step **77)** . If reading is 1.2 volts (3.1L) or 1.5 volts (3.8L) or greater, go to step **44)** .
42. Turn ignition off. Disconnect PCM harness Blue connector C1. Turn ignition on. If cooling fan No. 2 operates at high speed, go to next step. If cooling fan No. 2 does not operate at high speed, go to step **77)** .
43. Check for a short to ground in Dark Blue wire between cooing fan relays No. 2 and No. 3. Repair as necessary. After repairs, go to step **81)** . If no problem was found, go to step **52)** .
44. Turn ignition off. Disconnect A/C pressure sensor harness connector. Turn ignition on. Using scan tool, view A/C PRESSURE on display. If reading is near zero volts, go to step **46)** . If reading is not as specified, go to next step.

cardiagn.com

45. Using a voltmeter, check voltage between A/C pressure sensor signal and ground circuits. If reading is near zero volts, go to step **77)** . If reading is not as specified, go to step **51)** .
46. Using a test light connected to battery voltage, probe A/C pressure sensor ground circuit. If test light illuminates, go to next step. If test light does not illuminate, go to step **49)** .
47. Using a voltmeter, check voltage between A/C pressure sensor 5-volt reference and sensor ground. If reading is about 5 volts, go to next step. If reading is not a specified, go to step **50)** .
48. Replace A/C pressure sensor. After repairs, go to step **81)** .
49. Repair open or short to power in A/C pressure sensor ground circuit. After repairs, go to step **81)** .
50. Repair open or short to ground in A/C pressure sensor 5-volt reference circuit. After repairs, go to step **81)** .
51. Repair short to power in A/C pressure sensor signal circuit. After repairs, go to step **81)** .
52. Remove cooling fan relay No. 2 from underhood electrical center. If cooling fan No. 2 operates at high speed, go to next step. If cooling fan No. 2 does not operate at high speed, go to step **70)** .
53. Remove cooling fan relay No. 3 from underhood electrical center. If cooling fan No. 2 operates at high speed, go to next step. If cooling fan No. 2 does not operate at high speed, go to step **55)** .
54. Repair short to power in Black wire between cooling fan relay No. 2 and cooling fan motor No. 1. After repairs, go to step **81)** .
55. Repair short to power in White wire between cooling fan relays No. 2 or No. 3 and cooling fan motor No. 2. After repairs, go to step **81)** . If no problem was found, go to step **76)** .
56. Check for an open in Black wire between cooling fan relay No. 2 cavity C8 and terminal "A" of cooling fan motor No. 1 harness connector. Repair as necessary. After repairs, go to step **81)** . If no problem was found, go to step **79)** .
57. Check for an open in Black wire between cooling fan motor No. 2 harness connector terminal "A" and ground. Repair as necessary. After repairs, go to step **81)** . If no problem was found, go to step **80)** .
58. Turn ignition on. Remove cooling fan relay No. 2 from underhood electrical center. Connect a test light between cooling fan relay No. 2 cavity C6 (Dark Blue wire) and battery voltage. Using scan tool, select RELAY CONTROL function. Command high speed fans on. Wait 6 seconds. If test light illuminates, go to step **61)** . If test light does not illuminate, go to next step.
59. Remove cooling fan relay No. 3 from underhood electrical center. Connect a test light between cooling fan relay No. 3 cavity B8 (Dark Blue wire) and battery voltage. Using scan tool, select RELAY CONTROL function. Command high speed fans on. Wait 6 seconds. If test light illuminates, go to step **78)** . If test light does not illuminate, go to next step.
60. Turn ignition off. Disconnect PCM harness Blue connector C1. Using a DVOM, check Dark Blue wire for an open or short to power between PCM harness connector C1 terminal No. 5 and cooling fan relays No. 2 and 3. Repair as necessary. After repairs, go to step **81)** . If no problem is found, go to step **77)** .
61. Turn ignition off. Reinstall cooling fan relay No. 2. Disconnect both cooling fan motor harness connectors. Turn ignition on. Using scan tool, select RELAY CONTROL function. Command high speed fans on. Wait 6 seconds. Using a test light connected to ground, probe cooling fan motor No. 2 harness connector terminal "B" (White wire). If test light illuminates, go to next step. If test light does not illuminate, go to step **64)** .
62. Using a test light connected to battery voltage, probe cooling fan motor No. 1 harness connector terminal "A" (Black wire). If test light illuminates, go to next step. If test light does not illuminate, go to step **71)** .

cardiagn.com

63. Check for a seized cooling fan motor or open motor winding. Replace appropriate cooling fan motor. After repairs, go to step **81)** .
64. Turn ignition off. Remove cooling fan relay No. 3 from underhood electrical center. Turn ignition on. Using a test light connected to ground, probe cooling fan relay No. 2 cavity C4 (Red wire). If test light illuminates, go to step **66)** . If test light does not illuminate, go to next step.
65. Repair open or short to ground in Red wire between FAN fuse (25-amp) and cooling fan relay No. 3. After repairs, go to step **81)** .
66. Using a test light connected to ground, probe cooling fan relay No. 3 cavity C4 (Red wire). If test light illuminates, go to step **68)** . If test light does not illuminate, go to next step.
67. Repair open in battery feed circuit (Red wire) to cooling fan relay No. 3 cavity C4. After repairs, go to step **81)** .
68. Check for open in White wire between cooling fan motor No. 2 harness connector terminal l "B" and cooling fan relay No. 3 cavity B6. Repair as necessary. After repairs, go to step **81)** . If no problem was found, go to next step.
69. Check for poor connections at cooling fan relay No. 3 in underhood electrical center. Repair as necessary. After repairs, go to step **81)** . If no problem was found, go to next step.
70. Replace cooling fan relay No. 3. After repairs, go to step **81)** .
71. Turn ignition off. Remove No. 2 cooling fan relay from underhood electrical center. Turn ignition on. Using a test light connected to ground, probe cooling fan relay No. 2 cavity C10 (Orange wire). If test light illuminates, go to step **73)** . If test light does not illuminate, go to next step.
72. Repair open in Orange wire between PCM BAT fuse (20-amp) and cooling fan relay No. 2. After repairs, go to step **81)** .
73. Using a test light connected to battery voltage, probe cooling fan relay No. 2 cavity C8 (Black wire). If test light illuminates, go to step **75)** . If test light does not illuminate, go to next step.
74. Repair open in Black wire between cooling fan relay No. 2 and ground. After repairs, go to step **81)** .
75. Check for poor connections at cooling fan relay No. 2 in underhood electrical center. Repair as necessary. After repairs, go to step **81)** . If no problem was found, go to next step.
76. Replace cooling fan relay No. 2. After repairs, go to step **81)** .
77. Replace PCM and program. See COMPUTER RELEARN PROCEDURES article in GENERAL INFORMATION. After repairs, go to step **81)** .
78. Repair open in Dark Blue wire between PCM harness connector C1 terminal No. 5, and cooling fan relays No. 2 and No. 3. After repairs, go to step **81)** .
79. Replace cooling fan motor No. 1. After replacing cooling fan motor, go to step **81)** .
80. Replace cooling fan motor No. 2. After replacing motor, go to next step.
81. Ensure coolant temperature is below 212°F (100°C). Turn A/C off. Start engine and let idle. If cooling fans operate, go to step **32)** . If cooling fans do not operate, go to next step.
82. Using scan tool, select RELAY CONTROL function. Command low speed cooling fans on. If both cooling fans operate at low speed, go to next step. If both cooling fans do not operate at low speed, go to step **8)** .
83. Command high speed cooling fans on. Wait 6 seconds. If both cooling fans operate at high speed, system is okay at this time. If both cooling fans do not operate at high speed, go to step **58)** .

cardiagn.com

**Diagnostic Aids**

Check for poor connections at PCM, cooling fan relays and cooling fan motors. Inspect harness connectors for damaged, corroded or backed-out terminal pins. Inspect related wiring harnesses for damage or improper routing.

### 3.1L & 3.8L "W" BODY (GRAND PRIX)

**NOTE: Cooling fan circuit utilizes 3 cooling fan relays. Relays directly controlling fan motors are 4-pin type and are referred to as No. 1 and No. 2. Relay determining cooling fan motor low speed or high speed operation is referred to as 5-pin relay in this test. See WIRING DIAGRAMS .**

**Description**

Power for cooling fan motors is supplied through Maxi-fuses (30-amp) in underhood electrical center. Cooling fan relays are energized when current flows from fuse through relay coils, then to ground through Powertrain Control Module (PCM). No. 1 cooling fan relay control circuit is grounded for low speed operation. Both fan control circuits and all 3 relays are grounded for high speed fan operation.

During low speed cooling fan operation, PCM supplies a ground path for No. 1 cooling fan relay. As a result, relay contacts close, allowing current to flow through relay to cooling fan No. 1 (left side). During low speed operation, ground path for cooling fan No. 1 is through cooling fan relay (5-pin) and cooling fan motor No. 2 (right side). This results in a series circuit with both fans operating at low speed.

During high speed cooling fan operation, PCM supplies 2 ground paths for all 3 cooling fan relays. As a result, relay contacts close in all relays, allowing both cooling fan motors to operate at high speed. Both cooling fans are supplied current from 2 Maxi-fuses. Each cooling fan motor has a separate ground path when operating in high speed mode.

**Diagnosis**

1. If Powertrain On-Board Diagnostic (OBD) System Check has not been performed, see OBD SYSTEM CHECK in appropriate SELF-DIAGNOSTICS article in ENGINE PERFORMANCE. If OBD SYSTEM CHECK has been performed, go to next step.
2. Install scan tool. Check for DTCs. If any DTCs are set, perform testing for applicable DTC. Repair all DTCs that are set before proceeding with testing. See appropriate SELF-DIAGNOSTICS article in ENGINE PERFORMANCE. If no DTCs are set, go to next step.
3. Ensure engine coolant temperature is less than 212°F (100°C). Turn A/C off. Turn ignition on. If cooling fans are operating, go to next step. If cooling fans are not operating, go to step **32)** .
4. Using scan tool, select RELAY CONTROL function. Command low speed fans on. If fans operate at low speed, go to next step. If fans do not operate as specified, go to step **8)** .
5. Using scan tool, select RELAY CONTROL function. Command high speed fans on. Wait 6 seconds. If fans operate at high speed, go to next step. If fans do not operate at high speed, go to step **58)** .

cardiagn.com

**NOTE: Ensure ambient temperature is greater than 48°F (9°C) before proceeding.**

6. Exit scan tool OUTPUT TESTS. Start engine. Turn A/C on. If cooling fans operate, go to DIAGNOSTIC AIDS. If cooling fans do not operate, go to next step.
7. Using scan tool, view A/C REQUEST on display. If YES is displayed, go to step **77)** . If YES is not displayed, diagnose A/C compressor controls. See A/C COMPRESSOR CLUTCH CONTROLS - ALL MODELS article in AIR CONDITIONING & HEATING.
8. If either cooling fan is operating, go to next step. If neither cooling fans are operating, go to step **16)** .
9. If cooling fan No. 1 is operating, go to next step. If cooling fan No. 1 is not operating, go to step **14)** .
10. Turn ignition off. Disconnect cooling fan No. 2 harness connector. Turn ignition on. Using scan tool, select RELAY CONTROL function. Command low speed fans on. If cooling fan No. 1 operates, go to next step. If cooling fan No. 1 does not operate, go to step **80)** .
11. Remove cooling fan relay (5-pin) from underhood electrical center. If cooling fan No. 1 operates, go to next step. If cooling fan No. 1 does not operate, go to step **13)** .
12. Repair short to ground in Gray wire between cooling fan motor No. 1 and 5-pin cooing fan relay. After repairs, go to step **81)** .
13. Check for a short to ground in Light Blue wire between cooling fan relay No. 2 and cooling fan motor No. 2. Repair as necessary. After repairs, go to step **81)** . If no problem was found, go to step **70)** .
14. Turn ignition off. Disconnect cooling fan No. 1 harness connector. Turn ignition on. Using scan tool, select RELAY CONTROL function. Command low speed fans on. If cooling fan No. 2 operates, go to next step. If cooling fan No. 2 does not operate, go to step **71)** .
15. Repair short to power in Light Blue wire between cooling fan relay No. 2 and cooling fan motor No. 2. Also, check for a short to ground in Gray wire between cooling fan relay No. 2 and cooling fan motor No. 1 After repairs, go to step **81)** . If no problem was found, go to step **79)** .
16. Turn ignition on, engine off. Remove cooling fan relay No. 1 from underhood electrical center. Using a test light connected to ground, probe No. 1 cooling fan relay cavity No. 30 (battery feed circuit). If test light illuminates, go to step **18)** . If test light does not illuminate, go to next step.
17. Check for blown COOL FAN 1 Maxi-fuse (30-amp). If fuse is blown, locate and repair short circuit. Possible causes for short circuit are:
    - Seized cooling fan motors.
    - Shorted cooling fan motor windings.
    - Short to ground in battery feed circuit between fuse and relay.
    - Short to ground in White wire between cooling fan relay No. 1 and cooling fan motor No. 1.
    - Short to ground in Gray wire between cooling fan No. 1 and cooling fan relay (5-pin).
    - Short to ground in Light Blue wire between cooling fan relay (5-pin) and cooling fan motor No. 2.

    If fuse is not blown, check for an open in battery feed circuit between fuse and cooling fan relay No. 1. Repair as necessary. After repairs, go to step **81)** .

18. Using a test light connected to ground, probe cooling fan relay No. 1 cavity No. 85 (battery feed circuit). If test light illuminates, go to step **20)** . If test light does not illuminate, go to next step.
19. Check for blown COOL FAN 1 Maxi-fuse (30-amp). If fuse is blown, locate and repair short circuit.

cardiagn.com

Possible causes for a short circuit are:

- Seized cooling fan motors.
- Shorted cooling fan motor windings.
- Short to ground in battery feed circuit between fuse and relay.
- Shorted relay coil in cooling fan relay(s).
- Short to ground in White wire between cooling fan relay No. 1 and cooling fan motor No. 1.

If fuse is not blown, check for an open in power feed circuit between fuse and No. 1 cooling fan relay. Repair as necessary. After repairs, go to step **81)** .

20. Turn ignition off. Disconnect both cooling fan motor harness connectors. Using fused jumper wires, jumper terminals "A" and "B" together at both harness connectors. Connect a test light between cooling fan relay No. 1 cavities No. 30 (battery feed circuit) and 87 (White wire). If test light illuminates, go to next step. If test light does not illuminate, go to step **27)** .
21. Connect a test light between cooling fan relay No. 1 cavities No. 85 (battery feed circuit) and 86 (Dark Green wire). Turn ignition on. Using scan tool, select RELAY CONTROL function. Command low speed fans on. If test light illuminates, go to next step. If test light does not illuminate, go to step **25)** .
22. Turn ignition off. Remove jumper wires and reconnect cooling fan harness connectors. Connect a fused jumper wire between No. 1 cooling fan relay cavities No. 30 (battery feed circuit) and 87 (White wire). Turn ignition on. If both cooling fans operate, go to next step. If both cooling fans do not operate, go to step **24)** .
23. Check for poor connections at cooling fan relay No. 1 in underhood electrical center. Repair as necessary. After repairs, go to step **81)** . If no problem was found, go to step **37)** .
24. Check for poor connections at both cooling fan motors. Repair as necessary. After repairs, go to step **81)** . If no problem was found, go to step **63)** .
25. Turn ignition off. Disconnect PCM harness Blue connector C1. Install a fused jumper wire between cooling fan relay No. 1 cavities No. 85 (battery feed circuit) and 86 (Dark Green wire). Turn ignition on. Using a test light connected to ground, probe PCM harness connector C1, terminal No. 6 (Dark Green wire). If test light illuminates, go to step **77)** . If test light does not illuminate, go to next step.
26. Repair open in Dark Green wire between cooling fan relay No. 1 and PCM harness connector C1, terminal No. 6. After repairs, go to step **81)** .
27. Turn ignition off. Remove jumper wires and reconnect cooling fan harness connectors. Connect a fused jumper wire between No. 1 cooling fan relay cavities No. 30 (battery feed circuit) and 87 (White wire). Remove cooling fan relay (5-pin) from underhood electrical center. Using a test light connected to ground, probe cooling fan relay (5-pin) cavity No. 30 (White wire). If test light illuminates, go to next step. If test light does not illuminate, go to step **31)** .
28. Connect a test light between cooling fan relay (5-pin) cavities No. 30 (Gray wire) and 87A (Light Blue wire). If test light illuminates, go to step **30)** . If test light does not illuminate, go to next step.
29. Check for open in Light Blue wire between cooling fan relay (5-pin) and cooling fan motor No. 2. Repair as necessary. After repairs, go to step **81)** . If no problem was found, go to step **57)** .
30. Check for poor connections at cooling fan relay (5-pin) in underhood electrical center. Repair as necessary. After repairs, go to step **81)** . If no problem was found, go to step **70)** .
31. Check for an open in White wire between No. 1 cooling fan relay cavity No. 87 and harness connector

cardiagn.com

terminal "B" at cooling fan motor No. 1. Repair as necessary. After repairs, go to step **81)** . If no problem was found, go to step **56)** .

32. Using scan tool, view A/C REQUEST. If YES is displayed, diagnose A/C compressor controls. See A/C COMPRESSOR CLUTCH CONTROLS - ALL MODELS article in AIR CONDITIONING & HEATING. If YES is not displayed, go to next step.
33. If both cooling fans are operating at low speed, go to next step. If both cooling fans do not operate at low speed, go to step **40)** .
34. Remove No. 1 cooling fan relay from underhood electrical center. If both cooling fans operate, go to next step. If both cooling fans do not operate, go to step **36)** .
35. Locate and repair short to power in White wire between No. 1 cooling fan relay and cooling fan motor No. 1. After repairs, go to step **81)** .
36. Using a test light connected to battery positive, probe cooling fan relay No. 1 cavity No. 86 (Dark Green wire). If test light illuminates, go to step **38)** . If test light does not illuminate, go to next step.
37. Replace cooling fan relay No. 1. After replacing cooling fan relay, go to step **81)** .
38. Turn ignition off. Disconnect PCM harness Blue connector C1. Using a test light connected to battery positive, probe No. 1 cooling fan relay cavity No. 86 (Dark Green wire). If test light illuminates, go to next step. If test light does not illuminate, go to step **77)** .
39. Repair short to ground in Dark Green wire between cooling fan relay No. 1 and PCM harness connector C1, terminal No. 6. After repairs, go to step **81)** .
40. If both cooling fans operate at high speed, go to next step. If both cooling fans do not operate at high speed, go to step **42)** .
41. Using scan tool, view A/C PRESSURE on display. If reading is less than 1.2 volts (3.1L) or 1.5 volts (3.8L), go to step **77)** . If reading is not as specified, go to step **44)** .
42. Turn ignition off. Disconnect PCM harness Blue connector C1. Turn ignition on. If cooling fan No. 2 operates at high speed, go to next step. If cooling fan No. 2 does not operate at high speed, go to step **77)** .
43. Check for a short to ground in Dark Blue wire between PCM harness connector C1 terminal No. 5 and cooling fan relays No. 2 and 3. Repair as necessary. After repairs, go to step **81)** . If no problem was found, go to step **52)** .
44. Turn ignition off. Disconnect A/C pressure sensor harness connector. Turn ignition on. Using scan tool, view A/C PRESSURE on display. If reading is near zero volts, go to step **46)** . If reading is not as specified, go to next step.
45. Using a DVOM, measure voltage between Orange/Black wire (ground circuit) and Red/Black wire (signal circuit) at A/C pressure sensor harness connector. If reading is near zero volts, go to step **77)** . If reading is not as specified, go to step **51)** .
46. Using a test light connected to battery voltage, probe Orange/Black wire (ground circuit) at A/C pressure sensor harness connector. If test light illuminates, go to next step. If test light does not illuminate, go to step **49)** .
47. Using a DVOM, check voltage between Orange/Black wire (ground circuit) and Gray wire (5-volt reference circuit) at A/C pressure sensor harness connector, go to next step. If reading is not as specified, go to step **50)** .
48. Replace A/C pressure sensor. After replacing pressure sensor, go to step **81)** .
49. Repair open or short to power in A/C pressure sensor ground circuit (Orange/Black wire). After repairs, go to step **81)** .

cardiagn.com

50. Repair open or short to ground in A/C pressure sensor 5-volt reference circuit (Gray wire). After repairs, go to step **81)** .
51. Locate and repair short to power in A/C pressure sensor signal circuit (Red/Black wire). After repairs, go to step **81)** .
52. Remove cooling fan relay (5-pin) from underhood electrical center. If cooling fan No. 2 operates at high speed, go to next step. If cooling fan No. 2 does not operate at high speed, go to step **70)** .
53. Remove No. 2 cooling fan relay from underhood electrical center. If cooling fan No. 2 operates at high speed, go to next step. If cooling fan No. 2 does not operate at high speed, go to step **55)** .
54. Repair short to power in Light Blue wire between cooling fan motor No. 2 and cooling fan relays (5-pin and No. 2). After repairs, go to step **81)** .
55. Repair short to power in Gray wire between cooling fan relay (5-pin) and cooling fan motor No. 1. After repairs, go to step **81)** .
56. Check for an open in Gray wire between cooling fan relay (5-pin) and cooling fan motor No. 1. Repair as necessary. After repairs, go to step **81)** . If no problem was found, go to step **79)** .
57. Check for an open in Black wire between cooling fan motor No. 2 and ground. Repair as necessary. After repairs, go to step **81)** . If no problem was found, go to step **80)** .
58. Turn ignition on. Remove cooling fan relay (5-pin) from underhood electrical center. Connect a test light between cooling fan relay (5-pin) cavity No. 86 (Dark Blue wire) and battery voltage. Using scan tool, select RELAY CONTROL function. Command high speed fans on. Wait 6 seconds. If test light illuminates, go to step **61)** . If test light does not illuminate, go to next step.
59. Remove cooling fan relay No. 2 from underhood electrical center. Connect a test light between cooling fan relay No. 2 cavity No. 86 (Dark Blue wire) and battery voltage. Using scan tool, select RELAY CONTROL function. Command high speed fans on. Wait 6 seconds. If test light illuminates, go to step **78)** . If test light does not illuminate, go to next step.
60. Turn ignition off. Disconnect PCM harness Blue connector C1. Turn ignition on. Check Dark Blue wire for an open or short to power between PCM harness connector C1 terminal No. 5 and cooling fan relays No. 2 and 3.. Repair as necessary. After repairs, go to step **81)** . If no problem is found, go to step **77)** .
61. Turn ignition off. Reinstall cooling fan relay (5-pin). Disconnect both cooling fan motor harness connectors. Turn ignition on. Using scan tool, select RELAY CONTROL function. Command high speed fans on. Wait 6 seconds. Using a test light connected to ground, probe cooling fan motor No. 2 harness connector terminal "B" (Light Blue wire). If test light illuminates, go to next step. If test light does not illuminate, go to step **64)** .
62. Using a test light connected to battery voltage, probe cooling fan motor No. 1 harness connector terminal "A" (Gray wire). If test light illuminates, go to next step. If test light does not illuminate, go to step **71)** .
63. Check for a seized cooling fan motor or open motor winding. Replace affected cooling fan motor. After repairs, go to step **81)** .
64. Turn ignition off. Remove cooling fan relay (5-pin) from underhood electrical center. Turn ignition on. Using a test light connected to ground, probe cooling fan relay (5-pin) cavity No. 85. If test light illuminates, go to step **66)** . If test light does not illuminate, go to next step.
65. Repair open or short to ground in ignition battery feed circuit between COOL FAN 2 Maxi-fuse (30-amp) and cooling fan relay to cooling fan relay (5-pin). Replace fuse if necessary. After repairs, go to step **81)** .
66. Using a test light connected to ground, probe cooling fan relay (5-pin) cavity No. 30 (Gray wire). If test light illuminates, go to step **68)** . If test light does not illuminate, go to next step.

cardiagn.com

67. Repair open in Gray wire between cooling fan relay (5-pin) cavity No. 30 and cooling fan motor No. 1. After repairs, go to step **81)** .
68. Check for open in Light Blue wire between cooling fan motor No. 2 harness connector terminal "B" and cooling fan relay (5-pin) cavity No. 87A. Repair as necessary. After repairs, go to step **81)** . If no problem was found, go to next step.
69. Check for poor connections at cooling fan relay (5-pin) in underhood electrical center. Repair as necessary. After repairs, go to step **81)** . If no problem was found, go to next step.
70. Replace cooling fan relay (5-pin). After replacing cooling fan relay, go to step **81)** .
71. Turn ignition off. Remove No. 2 cooling fan relay from underhood electrical center. Turn ignition on. Using a test light connected to ground, probe No. 2 cooling fan relay cavity No. 85 (battery feed circuit). If test light illuminates, go to step **73)** . If test light does not illuminate, go to next step.
72. Repair open in battery feed circuit between COOL FAN 2 Maxi-fuse (30-amp) and cooling fan relay No. 2. After repairs, go to step **81)** .
73. Using a test light connected to battery positive, probe No. 2 cooling fan relay cavity No. 87 (Light Blue wire). If test light illuminates, go to step **75)** . If test light does not illuminate, go to next step.
74. Repair open in Light Blue wire between cooling fan No. 2, cooling fan relay (5-pin) and cooling fan relay No. 2. After repairs, go to step **81)** .
75. Check for poor connections at No. 2 cooling fan relay in underhood electrical center. Repair as necessary. After repairs, go to step **81)** . If no problem was found, go to step **76)** .
76. Replace No. 2 cooling fan relay. After replacing cooling fan relay, go to step **81)** .
77. Replace PCM. After replacing PCM, go to step **81)** .
78. Repair open in Dark Blue wire between PCM harness connector C1, terminal No. 5 and cooling fan relays (5-pin and No. 2) cavity No. 86. After repairs, go to step **81)** .
79. Replace cooling fan motor No. 1. After replacing cooling fan motor, go to step **81)** .
80. Replace cooling fan motor No. 2. After replacing motor, go to next step.
81. Ensure coolant temperature is below 212°F (100°C). Turn A/C off. Start engine and let idle. If cooling fans are operating, go to step **32)** . If cooling fans are not operating, go to next step.
82. Using scan tool, select RELAY CONTROL function. Command low speed fans on. If both cooling fans operate at low speed, go to next step. If both cooling fans do not operate at low speed, go to step **8)** .
83. Command high speed cooling fans on. Wait 6 seconds. If both cooling fans operate at high speed, system is okay at this time. If both cooling fans do not operate at high speed, go to step **58)** .

**Diagnostic Aids**

Check for poor connections at PCM, cooling fan relays and cooling fan motors. Inspect harness connectors for damaged, corroded or backed-out terminal pins. Inspect related wiring harnesses for damage or improper routing.

## 1999 3.5L & 3.8L: INTRIGUE

**Description**

The electric cooling fan system consists of 2 cooling fans and 3 relays. Power to engine cooling fans is supplied

cardiagn.com

through underhood junction block to 3 relays. Relays are controlled by Powertrain Control Module (PCM). PCM will send ground signal to appropriate relay, to send voltage to required fan.

During low speed operation, PCM grounds control circuit for COOL FAN 1 relay. Relay supplies voltage to engine cooling fan motor No. 1. Ground circuit for engine cooling fan motor No. 1 is through COOL FAN 2 and engine cooling fan motor No. 2. This series circuit causes both fan motors to operate at low speed. The PCM will command low speed fan motor operation under the following conditions:

- Engine coolant exceeds 229°F (106°C). The fans will switch from low to off as coolant drops below 216° F (102°C).
- A/C operation is requested (A/C is turned on).
- When engine is turned off, and coolant temperature is greater than 304°F (151°C) with system voltage greater than 12 volts. Fans will be energized for approximately 3 minutes.

For high speed operation PCM grounds all three relays. This creates a separate ground circuit for each fan motor. The result is full current to each motor and high speed operation is achieved. PCM will switch from low to high speed operation if the following conditions are met:

- Engine coolant temperature exceeds 234°F (112°C).
- A/C refrigerant pressure exceeds 240 psi (16.9 $kg/cm^2$ ). Fans will return to low speed operation once A/C pressure drops below 190 psi (13.4 $kg/cm^2$ ).
- If DTC P0480 or P0481 are set.

**Cooling Fan Functional Check**

**NOTE: Cooling fan functional check must be performed before and after any diagnostics are performed. See COOLING FAN FUNCTIONAL CHECK .**

1. If On-Board Diagnostic (OBD) System Check has not been performed, see SELF-DIAGNOSTICS article in ENGINE PERFORMANCE. If OBD System Check has been performed, go to next step.
2. Coolant temperature must be between 41-212°F (5-100°C). Turn A/C controls to OFF position. Start engine and allow to idle. Using scan tool, command all fans off. Command low speed fan on, high speed fan on, and all fans off. Allow about 25 seconds of operation for each command. If DTC P0480 or P0481 are set, go to appropriate DTC diagnosis. See appropriate SELF-DIAGNOSTICS article in ENGINE PERFORMANCE. If DTCs do not set, go to next step.
3. Turn A/C on (maximum cooling). If any DTCs set, go to appropriate DTC diagnosis. See appropriate SELF-DIAGNOSTICS article in ENGINE PERFORMANCE. If DTCs do not set, go to next step.
4. Turn A/C to OFF position. Turn engine off. Turn ignition on. Engine coolant temperature should be below 212°F (100°C). Observe fan operation while using scan tool to command all fans off, then low speed fan on, then high speed fan on, and finally all fans off. Fans should operate the same as commanded. If fans operate as specified, system is operating normally at this time. If fans do not operate as specified, go to next step.
5. If either cooling fan operates when fans are commanded off, go to **DIAGNOSTIC AIDS** . If neither cooling fan operates when fans are commanded off, go to next step.

cardiagn.com

6. If only engine cooling fan motor No. 1 operates when low speed is commanded on and both fans operate when high speed is commanded on, go to next step. If operation is other than specified, go to step 8 .
7. Repair short to ground in Gray wire between engine cooling fan motor No. 1 and cooling fan relay No. 2. See **WIRING DIAGRAMS** . After repairs, go to step 4 .
8. If neither cooling fan motor operates when low speed is commanded on and cooling fan motor No. 2 operates when high speed is commanded on, go to **COOLING FAN SYMPTOM TEST NO. 1** . If operation is other than specified, go to next step.
9. If neither cooling fan motor operates when low speed is commanded on and cooling fan motor No. 1 operates when high speed is commanded on, go to **COOLING FAN SYMPTOM TEST NO. 2** . If operation is other than specified, go to next step.
10. If both fans operate when low speed is commanded on and only cooling fan motor No. 2 operates when high speed is commanded on, go to **COOLING FAN SYMPTOM TEST NO. 3** . If operation is other than specified, go to next step.
11. If both fans operate when low speed is commanded on and only cooling fan motor No. 1 operates when high speed is commanded on, go to **COOLING FAN SYMPTOM TEST NO. 4** . If operation is other than specified, go to next step.
12. If neither cooling fan motor operates when low speed is commanded on and both fans operate when high speed is commanded on, go to **COOLING FAN SYMPTOM TEST NO. 5** . If operation is other than specified, go to next step.
13. If neither cooling fan motor operates when low and high speed is commanded on, go to next step. If operation is other than specified, go to **DIAGNOSTIC AIDS** .
14. Repair open in Black wire between ground and splice S105. Splice S105 is located in engine wiring harness, above center of radiator, approximately 4" (10 cm) from cooling fan harness breakout.

**Cooling Fan Symptom Test No. 1**

1. Perform **COOLING FAN FUNCTIONAL CHECK** . Go to next step.
2. Disconnect engine cooling fan motor No. 1 connector. Use scan tool to command cooling fans to low speed on. Use a DVOM to measure voltage between ground and engine cooling fan motor No. 1 connector terminal "B" (White wire). See **WIRING DIAGRAMS** . If battery voltage exists, go to next step. If battery voltage does not exist, go to step 5 .
3. Connect a fused jumper wire between engine cooling fan motor No. 1 connector terminals. If engine cooling fan motor No. 2 operates, go to step 7 . If engine cooling fan motor No. 2 does not operate, go to next step.
4. With engine cooling fan motor No. 1 jumper wire still connected, remove cooling fan relay No. 2 from underhood junction block. Use a DVOM to measure voltage between ground and cooling fan relay No. 2 cavity No. 30 (Gray wire). If battery voltage exists, go to step 9 . If battery voltage does not exist, go to step 8 .
5. Use scan tool to command all fans off. Remove cooling fan relay No. 1 from underhood junction block. Use a DVOM to measure voltage between ground and cooling fan relay No. 1 cavities No. 30 and 85 (battery feed circuit between relay can COOL FAN 1 fuse). If battery voltage exists, go to next step. If battery voltage does not exist, go to step 10 .
6. Connect a fused jumper wire between cooling fan relay No. 1 cavity No. 30 (battery feed circuit) and cavity No. 87 (White wire). Use a DVOM to measure voltage between ground and engine cooling fan

cardiagn.com

motor No. 1 connector terminal "B". If battery voltage exists, go to step 11 . If battery voltage does not exist, go to step 12 .

7. Replace engine cooling fan No. 1. After repairs, go to **COOLING FAN FUNCTIONAL CHECK** .
8. Repair open in White wire between engine cooling fan No. 1 and cooling fan relay No. 1. After repairs, go to **COOLING FAN FUNCTIONAL CHECK** .
9. Replace cooling fan relay No. 2. After repairs, go to **COOLING FAN FUNCTIONAL CHECK** .
10. Repair open in battery feed circuit between COOL FAN 1 fuse and cooling fan relay No. 1. After repairs, go to **COOLING FAN FUNCTIONAL CHECK** .
11. Replace cooling fan relay No. 1. After repairs, go to **COOLING FAN FUNCTIONAL CHECK** .
12. Repair open in Gray wire between cooling fan relay No. 2 and engine cooling fan No. 1. After repairs, go to **COOLING FAN FUNCTIONAL CHECK** .

**Cooling Fan Symptom Test No. 2**

1. Perform **COOLING FAN FUNCTIONAL CHECK** . Go to next step.
2. Disconnect engine cooling fan motor No. 2 connector. Connect a fused jumper wire between engine cooling fan motor No. 2 connector terminals. See **WIRING DIAGRAMS** . Use scan tool to command cooling fans to low speed on. If engine cooling fan motor No. 1 operates, go to step 4 . If engine cooling fan motor No. 1 does not operate, go to next step.
3. Use a DVOM to measure voltage between ground and engine cooling fan motor No. 2 connector terminal "B" (Light Blue wire). Use scan tool to command cooling fans to low speed on. If battery voltage exists, go to step 5 . If battery voltage does not exist, go to step 6 .
4. Replace engine cooling fan motor No. 2. After repairs, go to **COOLING FAN FUNCTIONAL CHECK** .
5. Repair open in Black wire between engine cooling fan motor No. 2 and ground. After repairs, go to **COOLING FAN FUNCTIONAL CHECK** .
6. Repair open in Light Blue wire between engine cooling fan motor No. 2 and cooling fan relay No. 3 and cooling fan relay No. 2. After repairs, go to **COOLING FAN FUNCTIONAL CHECK** .

**Cooling Fan Symptom Test No. 3**

1. Perform **COOLING FAN FUNCTIONAL CHECK** . Go to next step.
2. Remove cooling fan relay No. 2 from underhood junction block. Use scan tool to command cooling fans to high speed on. Use a DVOM to measure voltage between ground and cooling fan relay No. 2 cavity No. 86 (battery feed circuit between relay and COOL FAN 2 fuse). See **WIRING DIAGRAMS** . If battery voltage exists, go to next step. If battery voltage does not exist, go to step 5 .
3. Remove cooling fan relay No. 3. Use a DVOM to measure resistance of high speed fans control circuit between cooling fan relay No. 2 and cooling fan relay No. 3 (Dark Blue wire). If reading is 5 ohms or less, go to next step. If reading is greater than 5 ohms, go to step 6 .
4. Reinstall cooling fan relay No. 3. Connect a fused jumper wire between cooling fan relay No. 2 cavity No. 87 (Black ground feed wire to relay) and cavity No. 30 (Gray ground feed wire to engine cooling fan motor No. 1). Use scan tool to command cooling fans to high speed on. If both fans operate, go to step 8 . If both cooling fans do not operate, go to step 7 .

cardiagn.com

5. Repair open in battery feed circuit between cooling fan relay No. 2 and splice before COOL FAN 2 fuse (30-amp). After repairs, go to **COOLING FAN FUNCTIONAL CHECK** .
6. Repair open in high speed fans control circuit between cooling fan relay No. 2 and splice for circuit to PCM (Dark Blue wire). After repairs, go to **COOLING FAN FUNCTIONAL CHECK** .
7. Repair open in ground circuit between cooling fan relay No. 2 and splice (Black wire). After repairs, go to **COOLING FAN FUNCTIONAL CHECK** .
8. Replace cooling fan relay No. 2. After repairs, go to **COOLING FAN FUNCTIONAL CHECK** .

**Cooling Fan Symptom Test No. 4**

1. Perform **COOLING FAN FUNCTIONAL CHECK** . Go to next step.
2. Remove cooling fan relay No. 3 from underhood junction block. Use a DVOM to measure voltage between ground and cooling fan relay No. 3 cavities No. 30 and 85 (battery feed circuits). See **WIRING DIAGRAMS** . If battery voltage exists at both terminals, go to next step. If battery voltage does not exist at both terminals, go to step 5 .
3. Remove cooling fan relay No. 2. Use a DVOM to measure resistance in high speed fans control circuit (Dark Blue wire) between cooling fan relay No. 2 and cooling fan relay No. 3. If reading is 5 ohms or less, go to next step. If reading is greater than 5 ohms, go to step 6 .
4. Connect a fused jumper wire between cooling fan relay No. 3 cavity No. 30 (battery feed) and cavity No. 87 (Light Blue wire). If engine cooling fan motor No. 2 operates, go to step 8 . If engine cooling fan No. 2 does not operate, go to step 7 .
5. Repair open or short in battery feed circuit between splice to cooling fan relay No. 2 and faulty wire to cooling fan relay No. 3 cavities No. 30 and 85. After repairs, go to **COOLING FAN FUNCTIONAL CHECK** .
6. Repair open in high speed fans control circuit between cooling fan relay No. 2 and splice for circuit to PCM (Dark Blue wire). After repairs, go to **COOLING FAN FUNCTIONAL CHECK** .
7. Repair open in engine cooling fan motor No. 2 battery feed circuit (Light Blue wire) between cooling fan relay No. 3 battery feed and splice. After repairs, go to **COOLING FAN FUNCTIONAL CHECK** .
8. Replace cooling fan relay No. 3. After repairs, go to **COOLING FAN FUNCTIONAL CHECK** .

**Cooling Fan Symptom Test No. 5**

1. Perform **COOLING FAN FUNCTIONAL CHECK** . Go to next step.
2. Make sure cooling fan relay No. 2 is a 5-pin relay. cooling fan relay No. 1 and 3 relays are 4-pin, but will fit in connector for cooling fan relay No. 2. If relays are switched or cooling fan relay No. 2 is replaced with improper relay, this symptom will result. If wrong relay is installed, go to step 4 . If proper relay is installed, go to next step.
3. Remove cooling fan relay No. 2 from underhood junction block. Connect a fused jumper wire between cooling fan relay No. 2 cavity No 30 (Gray wire) and cooling fan relay No. 2 cavity No. 87 (Light Blue wire). See **WIRING DIAGRAMS** . If both fans operate at low speed, go to step 5 . If both fans do not operate at low speed, go to step 6 .
4. Replace cooling fan relay No. 2 with correct 5-pin relay. After repairs, go to **COOLING FAN FUNCTIONAL CHECK** .

cardiagn.com

5. Replace cooling fan relay No. 2. After repairs, go to **COOLING FAN FUNCTIONAL CHECK** .
6. Repair open in Light Blue wire between cooling fan relay No. 2, cooling fan relay No. 3 and cooling fan No. 2. After repairs, go to **COOLING FAN FUNCTIONAL CHECK** .

**Diagnostic Aids**

If cooling fans remain on when commanded off and no DTCs are set, most likely cause is either a stuck relay or short to voltage in cooling fan circuit. If a symptom is traced to faulty circuit in underhood junction block, block must be replaced as a unit. If symptom is intermittent, check for poor connections or bare wiring.

## 3.8L: BONNEVILLE, EIGHTY EIGHT, LESABRE, LSS & REGENCY

**Description**

Power for cooling fan motors is supplied by COOL FNS fuse No. 4 (40-amp) in Maxi-fuse junction block. Relays are energized when current flows from CLG FAN/TCC fuse 5C (10-amp) through relay coils to ground through PCM. Low speed cooling fan relay control circuit is grounded for low speed cooling fan operation. Both the low speed and high speed cooling fan relay control circuits are grounded for high speed cooling fan operation.

Cooling fan system consists of a right-side (single-speed) cooling fan motor and a left-side (dual-speed) cooling fan motor. While in low speed operation, Light Blue wire supplies battery power directly to right-side cooling fan motor. Left-side cooling fan motor is supplied battery power through a resistor, causing it to run at low speed. When high speed operation is commanded, right-side cooling fan motor continues to run at low speed as Black wire from high speed cooling fan relay supplies battery power directly to left-side cooling fan motor, allowing it to run at high speed.

Powertrain Control Module (PCM) commands low speed cooling fan operation when vehicle speed is less than 58 MPH and coolant temperature is greater than 212°F (100°C), or when vehicle speed is less than 40 MPH, intake air temperature is greater than 48°F (9°C), and A/C refrigerant pressure is greater than 190 psi (13.4 $kg/cm^2$ ).

High speed cooling fan operation is commanded when vehicle speed is less than 65 MPH and engine coolant is greater than 226°F (108°C), or when vehicle speed is less than 50 MPH and A/C refrigerant pressure is greater than 260 psi (18.3 $kg/cm^2$ ).

**Diagnosis**

1. If Powertrain On-Board Diagnostic (OBD) System Check has not been performed, see OBD SYSTEM CHECK in appropriate SELF-DIAGNOSTICS article in ENGINE PERFORMANCE. If OBD SYSTEM CHECK has been performed, go to next step.
2. Install scan tool. Check for DTCs. If any DTCs are set, perform testing for applicable DTC. Some DTCs will cause cooling fans to operate at all times. Repair all DTCs that are set before proceeding with testing. See appropriate SELF-DIAGNOSTICS article in ENGINE PERFORMANCE. If no DTCs are set, go to next step.
3. Ensure coolant temperature is less than 212°F (100°C). Turn A/C off. Start engine and let idle. If cooling

cardiagn.com

fans are operating, go to step **30)** . If cooling fans are not operating, go to next step.

4. Using scan tool, select RELAY CONTROL function. Command low speed cooling fan operation. If both cooling fans operate at low speed, go to next step. If both cooling fans do not operate at low speed, go to step **8)** .
5. Command high speed cooling fan operation. If left-side cooling fan operates at high speed, go to next step. If left-side cooling fan does not operate at high speed, go to step **18)** .
6. Ensure ambient temperature is greater than 48°F (9°C). Exit scan tool OUTPUT TESTS. Start engine and let idle. Turn A/C on. If cooling fans are operating, go to DIAGNOSTIC AIDS. If cooling fans are not operating, go to next step.
7. Using scan tool, view A/C REQUEST on display. If scan tool displays YES, go to step **44)** . If scan tool does not display YES, diagnose A/C compressor controls. See A/C COMPRESSOR CLUTCH CONTROLS - ALL MODELS article in AIR CONDITIONING & HEATING.
8. Turn ignition off. Disconnect low speed cooling fan relay. Turn ignition on. Using a test light connected to ground, probe low speed cooling fan relay connector terminal No. 85 (Brown wire). If test light illuminates, go to next step. If test light does not illuminate, go to step **28)** .
9. Using a test light connected to ground, probe low speed cooling fan relay connector terminal No. 30 (Red wire). If test light illuminates, go to next step. If test light does not illuminate, go to step **29)** .
10. Connect a fused jumper between at low speed cooling fan relay connector cavities No. 30 (Red wire) and No. 87 (Light Blue wire). If both cooling fans operate at low speed, go to next step. If both cooling fans do not operate at low speed, leave jumper wire connected and go to step **14)** .
11. Using scan tool, select RELAY CONTROL function. Command low speed cooling fan operation. Using a test light connected to battery voltage, probe low speed cooling fan relay connector cavity No. 86 (Dark Green wire). If test light illuminates, go to step **40)** . If test light does not illuminate, go to next step.
12. Turn ignition off. Disconnect PCM harness connector C1. Check for an open or short to power in Dark Green wire between PCM and low speed cooling fan relay. Repair as necessary. Go to step **46)** . If no problem is found, go to next step.
13. Check Dark Green wire for poor terminal connection at PCM. Repair as necessary. Go to step **46)** . If no problem is found, go to step **44)** .
14. Disconnect both cooling fan motor harness connectors. Using a test light connected to ground, probe Light Blue wire terminals at both cooling fan motor harness connectors. If test light illuminates at both terminals, go to next step. If test light does not illuminate at both terminals, go to step **16)** .
15. Connect a test light between Light Blue wire and Black wire at both cooling fan harness connectors. If test light illuminates at both harness connectors, go to step **45)** . If test light does not illuminate at both harness connectors, go to step **17)** .
16. Repair open in Light Blue wire between low speed cooling fan relay and left-side or right-side cooling fan motor. Go to step **46)** .
17. Repair open in Black wire (ground circuit) between ground and appropriate cooling fan motor. Go to step **46)** .
18. Disconnect high speed cooling fan relay. Turn ignition on. Using a test light connected to ground, probe high speed cooling fan relay harness connector terminal No. 30 (Red wire). If test light illuminates, go to next step. If test light does not illuminate, go to step **29)** .
19. Using a test light connected to ground, probe high speed cooling fan relay connector terminal No. 85 (Brown wire). If test light illuminates, go to next step. If test light does not illuminate, go to step **28)** .

cardiagn.com

20. Connect a fused jumper between high speed cooling fan relay connector cavities No. 30 (Red wire) and No. 87 (Brown wire). If left-side cooling fan operates at high speed, go to next step. If left-side cooling fan does not operate at high speed, leave jumper wire connected and go to step **24)** .
21. Using scan tool, select RELAY CONTROL function. Command high speed cooling fan operation. Using a test light connected to battery voltage, probe high speed cooling fan connector terminal No. 86 (Dark Blue wire). If test light illuminates, go to step **42)** . If test light does not illuminate, go to next step.
22. Turn ignition off. Disconnect PCM harness Blue connector C1. Turn ignition on. Using a DVOM, check for an open or short to power in Dark Blue wire between PCM and high speed cooling fan relay. Repair as necessary. Go to step **46)** . If no problem is found, go to next step.
23. Check Dark Blue wire terminal for poor terminal contact at PCM. Repair as necessary. Go to step **46)** . If no problem is found, go to step **44)** .
24. Disconnect left-side cooling fan motor harness connector. Using a test light connected to ground, probe left-side cooling fan motor harness connector terminal "B" (Gray wire). If test light illuminates, go to next step. If test light does not illuminate, go to step **27)** .
25. Connect a test light between left-side cooling fan motor harness connector terminals "B" (Gray wire) and "C" (Black wire). If test light illuminates, go to step **45)** . If test light does not illuminate, go to next step.
26. Repair open in Black wire (ground circuit) between left-side cooling fan motor and ground. Go to step **46)** .
27. Repair open in Gray wire between high speed cooling fan relay and left-side cooling fan motor. Go to step **46)** .
28. Repair open in Brown wire (battery feed circuit) to appropriate cooling fan relay. Go to step **46)** .
29. Repair cause for no power to appropriate cooling fan relay. Possible causes for no power are:
    - Open or short to ground in Red wire(s) between COOL FNS fuse (40-amp) and low or high speed cooling fan relays.
    - Shorted cooling fan motor windings.
    - Short to ground in Light Blue wire between low speed cooling fan relay and left-side and right-side cooling fan motors.
    - Short to ground in Gray wire between high speed cooling fan relay and left-side cooling fan motor.

    Repair as necessary. Go to step **46)** .

30. Disconnect high speed cooling fan relay. If either cooling fan is operating, go to step **35)** . If neither cooling fan is operating, go to next step.
31. Using a test light connected to battery voltage, probe high speed cooling fan relay connector terminal No. 86 (Dark Blue wire) . If test light illuminates, go to next step. If test does not illuminate, go to step **43)** .
32. Using scan tool, observe A/C HIGH-SIDE PRESSURE on scan tool. If pressure is greater than 260 psi (18.2 kg/cm$^2$ ), diagnose A/C system. See appropriate MANUAL or AUTOMATIC A/C-HEATER SYSTEMS article in AIR CONDITIONING & HEATING. If pressure is not as specified, go to next step.
33. Turn ignition off. Disconnect PCM harness Blue connector C1. Turn ignition on. Using a test light connected to battery voltage, probe high speed cooling fan relay connector terminal No. 86 (Dark Blue wire). If test light illuminates, go to next step. If test light does not illuminate, go to step **44)** .
34. Repair short to ground in Dark Blue wire between high speed cooling fan relay and PCM connector C1

cardiagn.com

terminal No. 5. Go to step **46)** .

35. Disconnect low speed cooling fan relay. If either cooling fan is operating, go to step **39)** . If neither cooling fan is operating, go to next step.
36. Using a test light connected to battery voltage, probe low speed cooling fan relay connector terminal No. 86 (Dark Green wire). If test light illuminates, go to next step. If test light does not illuminate, go to step **41)** .
37. Turn ignition off. Disconnect PCM harness Blue connector C1. Turn ignition on. Using a test light connected to battery voltage, probe low speed cooling fan relay connector terminal No. 86 (Dark Green wire). If test light illuminates, go to next step. If test light does not illuminate, go to step **44)** .
38. Repair short to ground in Dark Green wire between low speed cooling fan relay and PCM connector C1 terminal No. 6. Go to step **46)** .
39. Repair short to power in battery feed circuit (Light Blue wire or Gray wire) to affected cooling fan motor. Go to step **46)** .
40. Check for poor connections at low speed cooling fan relay. Repair as necessary. Go to step **46)** . If no problem is found, go to next step.
41. Replace low speed cooling fan relay. Go to step **46)** .
42. Check for poor connections at high speed cooling fan relay. Repair as necessary. Go to step **46)** . If no problem is found, go to next step.
43. Replace high speed cooling fan relay. Go to step **46)** .
44. Replace PCM. Go to step **46)** .
45. Replace affected cooling fan motor. Go to step **46)** .
46. Ensure engine coolant temperature is less than 212°F (100°C). Turn A/C off. Start engine and let idle. If cooling fans operate, go to step **30)** . If cooling fans do not operate, go to next step.
47. Using scan tool, select RELAY CONTROL function. Command low speed cooling fan operation. If both cooling fans operate at low speed, go to next step. If both cooling fans do not operate at low speed, go to step **8)** .
48. Command high speed cooling fan operation. If left-side cooling fan operates at high speed, system is operating normally at this time. If left-side cooling fan does not operating at high speed, go to step **18)** .

**Diagnostic Aids**

Check for poor connections at PCM, cooling fan relays and cooling fan motors. Inspect harness connectors for damaged, corroded or backed-out terminal pins. Inspect related wiring harnesses for damage or improper routing.

## 3.8L "C" BODY (PARK AVENUE)

**Description**

Power for cooling fan motors is supplied by COOL FAN 1 fuse (30-amp) and COOL FAN 2 fuse (30-amp), located in underhood fuse block. PCM controls ground path for relays. Low speed cooling fan relay (cooling fan No. 2 relay) control circuit is grounded for low speed cooling fan operation. Relay control circuits for all 3 cooling fan relays are grounded for high speed cooling fan operation. If engine coolant temperature is above 284°F (140°C) when ignition switch is turned off, cooling fans will continue to operate at low speed.

cardiagn.com

During low speed cooling fan operation, PCM supplies a ground path for low speed cooling fan relay. This closes relay contacts, allowing current to flow from fuses through relay, then to cooling fan motor No. 1. Ground path for cooling fan motor No. 1 is through series/parallel cooling fan relay and cooling fan motor No. 2. The result is a series circuit with both cooling fans running at low speed.

During high speed cooling fan operation, PCM supplies a ground path for all 3 cooling fan relays. As a result, relay contacts close in all relays, allowing both cooling fan motors to run at high speed. Both cooling fans are supplied current from fuses. Each cooling fan motor has a separate ground path when operating in high speed mode.

High speed fan operation is commanded when vehicle speed is less than 65 MPH and engine coolant is greater than 226°F (108°C), or vehicle speed is less than 50 MPH and A/C refrigerant pressure is greater than 260 psi (18.3 kg/cm$^2$ ).

**Cooling Fan Functional Check**

1. If On-Board Diagnostic (OBD) System Check has not been performed, see appropriate SELF-DIAGNOSTICS article in ENGINE PERFORMANCE. If OBD System Check has been performed, go to next step.
2. Install scan tool. Check if any DTCs are set. If DTCs are set, perform testing for applicable DTC. See appropriate SELF-DIAGNOSTICS article in ENGINE PERFORMANCE. If no DTCs are set, go to next step.
3. Ensure engine coolant temperature is less than 212°F (100°C). Turn A/C off. Start engine and let idle. If cooling fans are operating, go to **COOLING FAN SYMPTOM TEST NO. 1** . If cooling fans are not operating, go to next step.
4. Using scan tool OUTPUT TESTS, select RELAY CONTROL function. Command cooling fan relay No. 2 on (low speed). If both cooling fans are operating, go to next step. If both cooling fans do not operate, go to step
5. Command all 3 cooling fan relays on (high speed). If both cooling fans operate at high speed, go to next step. If both cooling fans do not operate at high speed, go to **COOLING FAN SYMPTOM TEST NO. 3** .
6. Exit scan tool OUTPUT TESTS. Start engine and let idle with A/C off. If cooling fans operate, go to step 8 . If cooling fans do not operate, go to next step.
7. Turn A/C on. If cooling fans operate, system is operating normally at this time. If cooling fans do not operate, go to step 9 .
8. Using scan tool, view A/C REQUEST on display. If scan tool displays YES, diagnose A/C compressor controls. See A/C COMPRESSOR CLUTCH CONTROLS - ALL MODELS article in AIR CONDITIONING & HEATING. If scan tool does not display YES, go to step 10 .
9. Using scan tool, view A/C REQUEST on display. If scan tool displays YES, diagnose A/C compressor controls. See A/C COMPRESSOR CLUTCH CONTROLS - ALL MODELS article in AIR CONDITIONING & HEATING. If scan tool does not display YES, go to AUTOMATIC A/C-HEATER SYSTEMS - PARK AVENUE article in AIR CONDITIONING & HEATING.
10. Replace PCM and program. See COMPUTER RELEARN PROCEDURES article in GENERAL INFORMATION. Recheck system operation.

cardiagn.com

**Cooling Fan Symptom Test No. 1**

1. Perform **COOLING FAN FUNCTIONAL CHECK** . Go to next step.
2. Remove cooling fan No. 2 relay from underhood fuse block. If both cooling fans are not operating, go to step 8 . If both cooling fans are operating, go to next step.
3. Remove cooling fan No. 2 relay from underhood fuse block. If both cooling fans are not operating, go to next step. If both cooling fans are operating, go to step 10 .
4. Disconnect left cooling fan connector. With a test light connected to ground, probe left cooling fan connector terminal "B" (Black wire). See **WIRING DIAGRAMS** . If test light illuminates, go to step 11 . If test light does not illuminate, go to next step.
5. With a test light connected to ground, probe left cooling fan connector terminal "A" (White wire). If test light illuminates, go to step 12 . If test light does not illuminate, go to next step.
6. With a test light connected to battery voltage, probe cooling fan relay (series/parallel) cavity No. 85 (PCM ground feed circuit). If test light illuminates, go to next step. If test light does not illuminate, go to step 13 .
7. Turn ignition off. With test light still connected, disconnect PCM Blue 80-pin connector C1. Turn ignition on. If test light illuminates, go to step 14 . If test light does not illuminates, go to step 16 .
8. With a test light connected to battery voltage, probe cool fan 2 cavity No. 85 (PCM ground feed circuit). If test light illuminates, go to next step. If test light does not illuminate, go to step 13 .
9. Turn ignition off. With test light still connected, disconnect PCM Blue 80-pin connector C1. Turn ignition on. If test light illuminate, go to step 14 . If test light does not illuminate, go to step 16 .
10. Repair short to voltage in Light Blue wire between right cooling fan, cooling fan relay, and cooling fan No. 1 relay. Repair as necessary and go to **COOLING FAN FUNCTIONAL CHECK** . If circuit is okay, go to step 15 .
11. Repair short to voltage in Black wire between left cooling fan and cooling fan No. 2 relay. Repair as necessary and go to **COOLING FAN FUNCTIONAL CHECK** .
12. Repair short to voltage in White wire between cool fan relay and left cooling fan. After repairs, go to **COOLING FAN FUNCTIONAL CHECK** .
13. Replace cooling fan No. 2 relay. After repairs, go to **COOLING FAN FUNCTIONAL CHECK** .
14. Repair short to ground in Dark Green wire between PCM and cooling fan No. 2 relay. Repair short to ground in Dark Blue wire between PCM, cooling fan relay, and cooling fan No. 1 relay. After repairs, go to **COOLING FAN FUNCTIONAL CHECK** .
15. Replace cooling fan No. 1 relay. After repairs, go to **COOLING FAN FUNCTIONAL CHECK** .
16. Replace PCM and program. See COMPUTER RELEARN PROCEDURES article in GENERAL INFORMATION. Recheck system operation. After repairs, go to **COOLING FAN FUNCTIONAL CHECK** .

**Cooling Fan Symptom Test No. 2**

1. Perform **COOLING FAN FUNCTIONAL CHECK** . Go to next step.
2. If either cooling fan operates when cooling fan No. 2 relay (low speed) is commanded on with scan tool, go to next step. If neither fan operates when cooling fan No. 2 relay is commanded on with scan tool, go to step 5 .

cardiagn.com

3. Using scan tool, command cooling fan No. 2 relay on. If either fan turns off, go to step 19 . If neither fan turns off, go to next step.
4. Remove cooling fan No. 1 relay from underhood fuse block. If fan turns off, go to step 20 . If fan does not turn off, go to step 21 .
5. Remove cooling fan No. 2 relay from underhood fuse block. With a test light connected to battery voltage, probe cooling fan No. 2 relay cavity No. 85 (Dark Green wire). See **WIRING DIAGRAMS** . Using scan tool, command cooling fan No. 2 relay on. If test light illuminates, go to next step. If test light does not illuminate, go to step 13 .
6. With a test light connected to ground, probe cool fan 2 relay cavities No. 30 and 86. If test light illuminates at both cavities, go to next step. If test light does not illuminate at both cavities, go to step 22 .
7. Connect a fused jumper wire between cooling fan No. 2 relay cavities No. 30 and 87 (Black wire). If both fans operate, go to step 23 . If both fans do not operate, go to next step.

**NOTE: Jumper wire will need to be left in cooling fan No. 2 relay cavities for remainder of test procedure.**

8. Disconnect left cooling fan connector. With a test light connected to ground, probe left cooling fan connector terminal "B" (Black wire). If test light illuminates, go to next step. If test light does not illuminate, go to step 24 .
9. Connect a fused jumper wire between left cooling fan connector terminals. If right cooling fan operates, go to step 16 . If right cooling fan does not operate, go to next step.
10. Remove fused jumper wire and reconnect left cooling fan connector. Remove cooling fan relay (series/parallel). With a test light connected to ground, probe cooling fan relay cavity No. 30 (White wire). If test light illuminates, go to next step. If test does not illuminate, go to step 25 .
11. Connect a fused jumper wire between cooling fan relay cavities No. 30 (White wire) and No. 87A (Light Blue wire). If fans operate, go to step 26 . If fans do not operate, go to next step.
12. Reinstall cooling fan relay. Disconnect right cooling fan connector. With a test light connected to ground, probe right fan connector terminal "B" (White wire). If test light illuminates, go to step 16 . If test light does not illuminate, go to step 18 .
13. With test light still connected, turn ignition off and disconnect PCM Blue connector C1. Connect a fused jumper wire between ground and cooling fan No. 2 relay cavity No. 85 (Dark Green wire). If test light illuminates, go to step 20 . If test light does not illuminate, go to step 21 .
14. Check for poor connections at PCM. Repair as necessary and go to **COOLING FAN FUNCTIONAL CHECK** . If connections are okay, go to step 27 .
15. Repair open or short to voltage in Dark Green wire between cooling fan No. 1 relay and PCM. After repairs, go to **COOLING FAN FUNCTIONAL CHECK** .
16. Check for poor connections at cooling fans. Repair as necessary and go to **COOLING FAN FUNCTIONAL CHECK** . If connections are okay, go to next step.
17. Replace cooling fan motor. After repairs, go to **COOLING FAN FUNCTIONAL CHECK** .
18. Repair open in Light Blue wire between right cooling fan and cooling fan relay. After repairs, go to **COOLING FAN FUNCTIONAL CHECK** .
19. Replace suspect cooling fan motor. After repairs, go to **COOLING FAN FUNCTIONAL CHECK** .

cardiagn.com

20. Replace cooling fan No. 1 relay. After repairs, go to **COOLING FAN FUNCTIONAL CHECK** .
21. Repair short to ground in White wire between cooling fan relay and left cooling fan. After repairs, go to **COOLING FAN FUNCTIONAL CHECK** .
22. Repair open or short to ground in suspect circuit. After repairs, go to **COOLING FAN FUNCTIONAL CHECK** .
23. Replace cooling fan No. 1 relay (high speed). After repairs, go to **COOLING FAN FUNCTIONAL CHECK** .
24. Repair open in Black wire between cooling fan No. 2 relay and left cooling fan. After repairs, go to **COOLING FAN FUNCTIONAL CHECK** .
25. Repair open in White wire between cooling fan relay and left cooling fan. After repairs, go to **COOLING FAN FUNCTIONAL CHECK** .
26. Replace cooling fan relay. After repairs, go to **COOLING FAN FUNCTIONAL CHECK** .
27. Replace PCM and program. See COMPUTER RELEARN PROCEDURES article in GENERAL INFORMATION. After repairs, go to **COOLING FAN FUNCTIONAL CHECK** .

**Cooling Fan Symptom Test No. 3**

1. Perform **COOLING FAN FUNCTIONAL CHECK** . Go to next step.
2. Using scan tool, command cooling fan No. 2 relay (low speed) on and note operation of cooling fans. Using scan tool, command all 3 relays on and note operation of cooling fans again. If both fans operate with no change, go to step 8 . If fans change operation, go to next step.
3. If left fan stopped operating, go to step 9 . If left fan did not stop operating, go to next step.
4. Remove cooling fan No. 1 relay (high speed). With a test light connected to battery voltage, probe cooling fan No. 1 relay cavity No. 86 (Dark Blue wire). See **WIRING DIAGRAMS** . Using scan tool, command cooling fan No. 1 relay on. If test light illuminates, go to next step. If test light does not illuminate, go to step 12 .
5. With a test light connected to ground, probe cooling fan No. 1 relay cavity No. 85. If test light illuminates, go to next step. If test light does not illuminate, go to step 13 .
6. With a test light connected to ground, probe cooling fan No. 1 relay cavity No. 30. If test light illuminates, go to next step. If test light does not illuminate, go to step 14 .
7. Connect a fused jumper wire between cooling fan No. 1 relay cavities No. 30 and 87 (Light Blue wire). If right cooling fan operates, go to step 15 . If right cooling fan does not operate, go to step 16 .
8. Turn ignition off. Disconnect PCM Blue 80-pin connector C1. Remove cooling fan No. 2 relay. Connect a fused jumper wire between cooling fan No. 2 relay cavities No. 30 and 87 (Black wire). Turn ignition on. Connect a fused jumper wire between ground and PCM connector C1 terminal No. 5 (Dark Blue wire). If fans switch from low to high speed operation, go to step 22 . If fans do not switch from low to high speed operation, go to step 17 .
9. Remove cooling fan relay (series/parallel). With a test light connected to battery voltage, probe cooling fan relay cavity No. 85 (Dark Blue wire). Using scan tool, command cooling fan relay and cooling fan No. 1 relay on (high speed cooling fan operation). If test light illuminates, go to next step. If test light does not illuminate, go to step 18 .
10. With a test light connected to battery voltage, probe cooling fan relay cavity No. 87 (Black wire). If test light illuminates, go to next step. If test light does not illuminate, go to step 19 .

cardiagn.com

11. With a test light connected to ground, probe cooling fan relay cavity No. 86. If test light illuminates, go to step 20 . If test light does not illuminate, go to step 21 .
12. Repair open in Dark Blue wire between cooling fan No. 1 relay and splice. After repairs, go to **COOLING FAN FUNCTIONAL CHECK** .
13. Repair open in wire between cooling fan No. 1 relay and battery supply voltage. After repairs, go to **COOLING FAN FUNCTIONAL CHECK** .
14. Repair open in wire between cooling fan No. 1 relay and COOL FAN 1 fuse (30-amp). After repairs, go to **COOLING FAN FUNCTIONAL CHECK** .
15. Replace cooling fan No. 1 relay. After repairs, go to **COOLING FAN FUNCTIONAL CHECK** .
16. Repair open in Light Blue wire between cooling fan No. 1 relay and splice. After repairs, go to **COOLING FAN FUNCTIONAL CHECK** .
17. Repair open or short to battery voltage in Dark Blue wire between PCM, cooling fan relay, and cooling fan No. 1 relay. After repairs, go to **COOLING FAN FUNCTIONAL CHECK** .
18. Repair open in Dark Blue wire between cooling fan relay and splice. After repairs, go to **COOLING FAN FUNCTIONAL CHECK** .
19. Repair open in Black wire between cooling fan relay and ground. After repairs, go to **COOLING FAN FUNCTIONAL CHECK** .
20. Replace cooling fan relay. After repairs, go to **COOLING FAN FUNCTIONAL CHECK** .
21. Repair open in wire between cooling fan relay and battery supply voltage. After repairs, go to **COOLING FAN FUNCTIONAL CHECK** .
22. Check for poor connections at PCM. Repair as necessary and go to **COOLING FAN FUNCTIONAL CHECK** . If connections are okay, go to next step.
23. Replace PCM and program. See COMPUTER RELEARN PROCEDURES article in GENERAL INFORMATION. After repairs, go to **COOLING FAN FUNCTIONAL CHECK** .

**Diagnostic Aids**

Check for poor connections at PCM, cooling fan relays, and cooling fan motors. Inspect harness connectors for damaged, corroded or backed-out terminal pins. Inspect related wiring harnesses for damage and improper routing.

## 1998 3.8L: CAMARO & FIREBIRD

**Description**

Power for cooling fan motors is supplied by COOL FAN Maxi-fuse (40-amp) and COOLING FAN Mini-fuse (10-amp) located in underhood electrical center. Relays are energized when current flows from fuses through relay coils to ground through Powertrain Control Module (PCM). Cooling fan relay No. 1 control circuit is grounded for low speed cooling fan operation. Relay control circuits for all 3 cooling fan relays are grounded for high speed cooling fan operation.

During low speed cooling fan operation, PCM supplies a ground path for cooling fan relay No. 1. This closes relay contacts, allowing current to flow from fuses through relay, then to left-side cooling fan motor. Ground path for left-side cooling fan motor is through cooling fan relay No. 3 and right-side cooling fan motor. The

cardiagn.com

result is a series circuit with both fans running at low speed.

During high speed cooling fan operation, PCM supplies a ground path for cooling fan relay No. 1. After a 6 second delay PCM provides ground path for cooling fan relays No. 2 and 3, allowing both cooling fan motors to run at high speed. Both cooling fans are supplied current from COOL FAN Maxi-fuse (40-amp) and COOLING FAN MiniFuse (10-amp). Each cooling fan motor has a separate ground path when operating in high speed mode.

**Diagnosis**

1. If On-Board Diagnostic (OBD) System Check has not been performed, see appropriate SELF-DIAGNOSTICS article in ENGINE PERFORMANCE. If OBD SYSTEM CHECK has been performed, go to next step.
2. Install scan tool. Check if any DTCs are set. If DTCs are set, perform testing for applicable DTC. See appropriate SELF-DIAGNOSTICS article in ENGINE PERFORMANCE. If no DTCs are set, go to next step.
3. Ensure engine coolant temperature is less than 212°F (100°C). Turn A/C off. Start engine and let idle. If cooling fans are operating, go to step **32)** . If cooling fans are not operating, go to next step.
4. Using scan tool, select RELAY CONTROL function. Command low speed cooling fan operation. If both cooling fans operate at low speed, go to next step. If both cooling fans do not operate at low speed, go to step **8)** .
5. Command high speed cooling fan operation. Wait 6 seconds. If both cooling fans operate at high speed, go to next step. If both cooling fans do not operate at high speed, go to step **58)** .
6. Ensure ambient temperature is greater than 48°F (9°C). Exit scan tool OUTPUT TESTS. Start engine and let idle. Turn A/C on. If cooling fans operate, go to **DIAGNOSTIC AIDS** . If cooling fans do not operate, go to next step.
7. Using scan tool, view A/C REQUEST on display. If scan tool displays YES, go to step **77)** . If scan tool does not display YES, diagnose A/C compressor controls. See A/C COMPRESSOR CLUTCH CONTROLS - ALL MODELS article in AIR CONDITIONING & HEATING.
8. If either cooling fan is operating, go to next step. If neither cooling fan is operating, go to step **16)** .
9. If left-side cooling fan is operating, go to next step. If left-side cooling fan is not operating, go to step **14)** .
10. Turn ignition off. Disconnect right-side cooling fan motor harness connector. Turn ignition on. Using scan tool, select RELAY CONTROL function. Command low speed cooling fan operation. If left-side cooling fan operates, go to next step. If left-side cooling fan does not operate, go to step **80)** .
11. Remove cooling fan relay No. 3 from underhood electrical center. If left-side cooling fan operates, go to next step. If left-side cooling fan does not operate, go to step **13)** .
12. Repair short to ground in Gray wire between left-side cooling fan motor and cooling fan relay No. 3. Go to step **81)** .
13. Check for short to ground in White wire between right cooling fan, cooling fan relay No. 2 and cooling fan relay No. 3. Repair as necessary. Go to step **81)** . If no problem is found, go to step **76)** .
14. Turn ignition off. Disconnect left-side cooling fan motor harness connector. Turn ignition on. Using scan tool, select RELAY CONTROL function. Command low speed cooling fan operation. If right-side cooling fan operates, go to next step. If right-side cooling fan does not operate, go to step **79)** .

cardiagn.com

15. Check for the following:
    - Short to power in Gray wire between left-side cooling fan motor and cooling fan relay No. 3.
    - Short to power in White wire between right-side cooling fan motor and cooling fan relays No. 2 and 3.
    - Faulty left-side cooling fan motor diode. Repair as necessary.

    Go to step **81)** .

16. Turn ignition on. Remove cooling fan relay No. 1 from underhood electrical center. Using a test light connected to ground, probe cooling fan relay connector cavity B3 (Red wire battery feed circuit). If test light illuminates, go to step **18)** . If test light does not illuminate, go to next step.
17. Check for blown COOL FAN Maxi-fuse (40-amp). If fuse is blown, locate and repair short circuit. Possible causes for a short circuit are:
    - Seized cooling fan motors.
    - Shorted cooling fan motor windings.
    - Short to ground in Red wire between fuse and cooling fan relays No. 1 and 2.
    - Short to ground in Light Blue wire between cooling fan relay No. 1 and left-side cooling fan motor.
    - Short to ground in White wire between right-side cooling fan motor and cooling fan relays No. 2 and 3.
    - Short to ground in Gray wire between left-side cooling fan motor and cooling fan relay No. 3.

    If fuse is okay, check for an open in Red wire between fuse and cooling fan relay No. 1. Repair as necessary. Go to step **81)** .

18. Using a test light connected to ground, probe cooling fan relay No. 3 cavity B8 (Orange wire battery feed circuit). If test light illuminates, go to step **20)** . If test light does not illuminate, go to next step.
19. Check for blown COOLING FAN Mini-fuse (10-amp). If fuse is blown, locate and repair short circuit. Possible causes for a short circuit are:
    - Short to ground in Orange wire between fuse and cooling fan relays.
    - Shorted cooling fan relay coils.
    - Short to ground in circuit unrelated to cooling fans. If fuse is okay, check for an open in Orange wire between fuse and cooling fan relay No. 1.

    Repair as necessary. Go to step **81)** .

20. Turn ignition off. Disconnect both cooling fan motor harness connectors. Using fused jumper wires, connect terminals "A" and "B" together at both harness connectors. Turn ignition on. Connect a test light between cooling fan relay No. 1 cavities B3 (Red wire) and C1 (Light Blue wire). If test light illuminates, go to next step. If test light does not illuminate, go to step **27)** .
21. Connect a test light between cooling fan relay No. 1 cavities C3 (Orange wire) and B1 (Dark Green wire). Turn ignition on. Using scan tool, select RELAY CONTROL function. Command low speed cooling fan operation. If test light illuminates, go to next step. If test light does not illuminate, go to step **25)** .

cardiagn.com

22. Turn ignition off. Remove jumper wires. Reconnect cooling fan motor harness connectors. Connect a fused jumper wire between cooling fan relay No. 1 cavities B3 (Red wire) and C1 (Light Blue wire). Turn ignition on. If both cooling fans operate, go to next step. If both cooling fans do not operate, go to step **24)** .
23. Check for poor connections at cooling fan relay No. 1 in underhood electrical center. Repair as necessary. Go to step **81)** . If no problem is found, go to step **37)** .
24. Check for poor connections at both cooling fan motors. Repair as necessary. Go to step **81)** . If no problem is found, go to step **63)** .
25. Turn ignition off. Disconnect PCM harness Blue connector C1. Install a fused jumper wire between cooling fan relay No. 1 cavities C3 (Orange wire) and B1 (Dark Green wire). Turn ignition on. Using a test light connected to ground, probe PCM harness connector C1 terminal No. 6. If test light illuminates, go to step **77)** . If test light does not illuminate, go to next step.
26. Repair open in Dark Green wire between cooling fan relay No. 1 and PCM harness connector C1. Go to step **81)** .
27. Turn ignition off. Remove jumper wires. Reconnect cooling fan motor harness connectors. Connect a fused jumper wire between cooling fan relay No. 1 cavities B3 (Red wire) and C1 (Light Blue wire). Remove cooling fan relay No. 3 from underhood electrical center. Using a test light connected to ground, probe cooling fan relay No. 3 cavity C8 (Gray wire). If test light illuminates, go to next step. If test light does not illuminate, go to step **31)** .
28. Connect a test light between cooling fan relay No. 2 terminals C4 (Red wire) and B6 (White wire). If test light illuminates, go to step **30)** . If test light does not illuminate, go to next step.
29. Check for open in White wire between cooling fan relay No. 3 and right-side cooling fan motor. Repair as necessary. Go to step **81)** . If no problem is found, go to step **57)** .
30. Check for poor connections at cooling fan relay No. 3 in underhood electrical center. Repair as necessary. Go to step **81)** . If no problem is found, go to step **76)** .
31. Check for an open in Light Blue wire between cooling fan relay No. 1 and left-side cooling fan motor. Repair as necessary. Go to step **81)** . If no problem is found, go to step **56)** .
32. Using scan tool, view A/C REQUEST on display. If YES is displayed, diagnose A/C compressor controls. See A/C CLUTCH CIRCUIT DIAGNOSIS. If YES is not displayed, go to next step.
33. If both cooling fans are operating at low speed, go to next step. If both cooling fans are not operating at low speed, go to step **40)** .
34. Remove cooling fan relay No. 1 from underhood electrical center. If both cooling fans operate, go to next step. If both cooling fans do not operate, go to step **36)** .
35. Repair short to power in Light Blue wire between cooling fan relay No. 1 and left-side cooling fan motor. Go to step **81)** .
36. Using a test light connected to battery voltage, probe cooling fan relay No. 1 cavity B1 (Dark Green wire). If test light illuminates, go to step **38)** . If test light does not illuminate, go to next step.
37. Replace cooling fan relay No. 1. Go to step **81)** .
38. Turn ignition off. Disconnect PCM harness Blue connector C1. Using a test light connected to battery voltage, probe cooling fan relay No. 1 cavity B1 (Dark Green wire). If test light illuminates, go to next step. If test light does not illuminate, go to step **77)** .
39. Repair short to ground in Dark Green wire between cooling fan relay No. 1 and PCM harness connector C1. Go to step **81)** .

cardiagn.com

40. If both cooling fans operate at high speed, go to next step. If both cooling fans do not operate at high speed, go to step **42)** .
41. Using scan tool, view A/C PRESSURE on display. If reading is less than 1.2 volts, go to step **77)** . If scan tool reading is not as specified, go to step **44)** .
42. Turn ignition off. Disconnect PCM harness Blue connector C1. Turn ignition on. If right-side cooling fan operates at high speed, go to next step. If right-side cooling fan does not operate at high speed, go to step **77)** .
43. Check for a short to ground in Dark Blue wire between PCM harness connector C1 terminal No. 5 and cooling fan relays No. 2 and 3. Repair as necessary. Go to step **81)** . If no problem is found, go to step **52)** .
44. Turn ignition off. Disconnect A/C pressure sensor harness connector. Turn ignition on. Using scan tool, view A/C PRESSURE on display. If reading is near zero volts, go to step **46)** . If reading is not as specified, go to next step.
45. Using a DVOM, measure voltage between signal circuit (Red/Black wire) and ground circuit (Black wire) at A/C pressure sensor harness connector. If reading is near zero volts, go to step **77)** . If reading is not as specified, go to step **51)** .
46. Using a test light connected to battery voltage, probe ground circuit (Black wire) at A/C pressure sensor harness connector. If test light illuminates, go to next step. If test light does not illuminate, go to step **49)** .
47. Using a DVOM, measure voltage between ground and 5-volt reference circuit (Gray wire) at A/C pressure sensor harness connector. If reading is near 5 volts, go to next step. If reading is not as specified, go to step **50)** .
48. Replace A/C pressure sensor. Go to step **81)** .
49. Repair open or short to power in A/C pressure sensor ground circuit (Black wire). Go to step **81)** .
50. Repair open or short to ground in A/C pressure sensor 5-volt reference circuit (Gray wire). Go to step **81)** .
51. Repair short to power in A/C pressure sensor signal circuit (Red/Black wire). Go to step **81)** .
52. Remove cooling fan relay No. 2 from underhood electrical center. If right-side cooling fan operates at high speed, go to next step. If right-side cooling fan does not operate at high speed, go to step **70)** .
53. Remove cooling fan relay No. 3 from underhood electrical center. If right-side cooling fan operates at high speed, go to next step. If right-side cooling fan does not operate at high speed, go to step **55)** .
54. Repair short to power in White wire between cooling fan relay No. 2 and right-side cooling fan motor. Go to step **81)** .
55. Repair short to power in Gray wire between cooling fan relay No. 3 and left-side cooling fan motor. Go to step **81)** .
56. Check for an open in Gray wire between cooling fan relay No. 3 and left-side cooling fan motor. Repair as necessary. Go to step **81)** . If no problem is found, go to step **79)** .
57. Check for an open in Black wire between right-side cooling fan motor and ground. Repair as necessary. Go to step **81)** . If no problem is found, go to step **80)** .
58. Turn ignition on. Remove cooling fan relay No. 2 from underhood electrical center. Using a test light connected to battery voltage, probe No. 2 cooling fan relay cavity B4 (Dark Blue wire). Using scan tool, select RELAY CONTROL function. Command high speed cooling fan operation. Wait 6 seconds. If test light illuminates, go to step **61)** . If test light does not illuminate, go to next step.

cardiagn.com

59. Remove cooling fan relay No. 3 from underhood electrical center. Using a test light connected to battery voltage, probe cooling fan relay No. 2 cavity (Dark Blue wire). Using scan tool, select RELAY CONTROL function. Command high speed cooling fan operation. Wait 6 seconds. If test light illuminates, go to step **78)** . If test light does not illuminate, go to next step.
60. Turn ignition off. Disconnect PCM harness Blue connector C1. Turn ignition on. Check for an open or short to power in Dark Blue wire between PCM and cooling fan relays No. 2 and 3. Repair as necessary. Go to step **81)** . If no problem is found, go to step **77)** .
61. Turn ignition off. Install cooling fan relay No. 2. Disconnect both cooling fan motor harness connectors. Turn ignition on. Using scan tool, select RELAY CONTROL function. Command high speed cooling fan operation. Wait 6 seconds. Using a test light connected to ground, probe right-side cooling fan motor harness connector terminal "B" (White wire). If test light illuminates, go to next step. If test light does not illuminate, go to step **64)** .
62. Using a test light connected to battery voltage, probe left-side cooling fan motor harness connector terminal "A" (Gray wire). If test light illuminates, go to next step. If test light does not illuminate, go to step **71)** .
63. Check for a seized cooling fan motor or open motor windings. Replace appropriate cooling fan motor. Go to step **81)** .
64. Turn ignition off. Remove cooling fan relay No. 2 from underhood electrical center. Turn ignition on. Using a test light connected to ground, probe cooling fan relay No. 2 cavity C4 (Red wire). If test light illuminates, go to step **66)** . If test does not illuminate, go to next step.
65. Check for an open in Red wire between underhood electrical center and cooling fan relay No. 2. Also, check for blown COOL FAN Maxi-fuse (40-amp). Repair short to ground if blown. Repair as necessary. Replace fuse. Go to step **81)** .
66. Using a test light connected to ground, probe cooling fan relay No. 2 cavity B9 (White wire). If test light illuminates, go to step **68)** . If test light does not illuminate, go to next step.
67. Check for an open in Red wire between underhood electrical center and cooling fan relay No. 2. Also, check for blown COOL FAN Maxi-fuse (40-amp). Repair short to ground if blown. Repair as necessary. Replace fuse. Go to step **81)** .
68. Check White wire for an open between right-side cooling fan motor and cooling fan relay No. 2. Repair as necessary. Go to step **81)** . If no problem is found, go to next step.
69. Check for poor connections at cooling fan relay No. 2 in underhood electrical center. Repair as necessary. Go to step **81)** . If no problem is found, go to next step.
70. Replace cooling fan relay No. 2. Go to step **81)** .
71. Turn ignition off. Remove cooling fan relay No. 3 from underhood electrical center. Turn ignition on. Using a test light connected to ground, probe at cooling fan relay No. 3 cavity B8 (Orange wire). If test light illuminates, go to step **73)** . If test light does not illuminate, go to next step.
72. Check for an open in Orange wire between underhood electrical center and cooling fan relay No. 3. Also, check for blown COOLING FAN Maxi-fuse (10-amp). Repair short to ground if blown. Repair as necessary. Replace fuse. Go to step **81)** .
73. Using a test light connected to battery voltage, probe at cooling fan relay No. 3 cavity B10 (Black wire). If test light illuminates, go to step **75)** . If test light does not illuminate, go to next step.
74. Repair Black wire for an open between cooling fan relay No. 3 and ground. Go to step **81)** .
75. Check for poor connections at cooling fan relay No. 3 in underhood electrical center. Repair as necessary.

cardiagn.com

Go to step **81)** . If no problem is found, go to next step.

76. Replace cooling fan relay No. 3. Go to step **81)** .
77. Replace PCM and program. See COMPUTER RELEARN PROCEDURES article in GENERAL INFORMATION. Go to step **81)** .
78. Repair open in Dark Blue wire between PCM and cooling fan relays No. 2 and 3. Go to step **81)** .
79. Replace left-side cooling fan motor. Go to step **81)** .
80. Replace right-side cooling fan motor. Go to next step.
81. Ensure coolant temperature is less than 212°F (100°C). Turn A/C off. Start engine and let idle. If cooling fans are operating, go to step **32)** . If cooling fans are not operating, go to next step.
82. Using scan tool, select RELAY CONTROL function. Command low speed cooling fan operation. If both cooling fans operate at low speed, go to next step. If both cooling fans do not operate at low speed, go to step **8)** .
83. Command high speed cooling fan operation. Wait 6 seconds. If both cooling fans operate at high speed, system is okay at this time. If both cooling fans do not operate at high speed, go to step **58)** .

**Diagnostic Aids**

Check for poor connections at PCM, cooling fan relays and cooling fan motors. Inspect harness connectors for damaged, corroded or backed-out terminal pins. Inspect related wiring harnesses for damage or improper routing.

## 1999 3.8L: CAMARO & FIREBIRD

**Description**

Power for cooling fan motors is supplied by COOL FAN fuse (40-amp) and COOLING FAN fuse (10-amp) located in underhood electrical center. Relays are energized when current flows from fuses, through relay coils, and then to ground through Powertrain Control Module (PCM). Cooling fan relay No. 1 control circuit is grounded for low speed cooling fan operation. Relay control circuits for all 3 cooling fan relays are grounded for high speed cooling fan operation. PCM will energize cooling fans, when ignition switch is off, if engine coolant temperature is greater than 284°F (140°C). The PCM will also energize cooling fans when certain DTCs are set.

During low speed cooling fan operation, PCM supplies a ground path for cooling fan relay No. 1. This closes relay contacts, allowing current to flow from fuses through relay, then to left cooling fan motor. Ground path for left cooling fan motor is through cooling fan relay No. 3 and right cooling fan motor. The result is a series circuit with both fans running at low speed.

During high speed cooling fan operation, PCM supplies a ground path for all 3 cooling fan relays. As a result, relay contacts close in all relays, allowing both cooling fan motors to run at high speed. Both cooling fans are supplied current from fuses. Each cooling fan motor has a separate ground path when operating in high speed mode.

**Cooling Fan Functional Check**

cardiagn.com

**NOTE:** **If cooling fans operate all the time, check for DTCs before diagnosing cooling fans.**

1. If On-Board Diagnostic (OBD) System Check has not been performed, see appropriate SELF-DIAGNOSTICS article in ENGINE PERFORMANCE. If OBD System Check has been performed, go to next step.
2. Connect scan tool to Data Link connector (DLC). Check if any DTCs are set. If DTCs are set, perform testing for applicable DTC. See appropriate SELF-DIAGNOSTICS article in ENGINE PERFORMANCE. If no DTCs are set, go to next step.
3. Ensure engine coolant temperature is less than 212°F (100°C). Turn A/C off. Start engine and let idle. If cooling fans are operating, go to **COOLING FAN SYMPTOM TEST NO. 1** . If cooling fans are not operating, go to next step.
4. Using scan tool OUTPUT TESTS, select RELAY CONTROL function. Command cooling fan relay No. 1 on (low speed). If both cooling fans operating, go to next step. If both cooling fans do not operate, go to step **COOLING FAN SYMPTOM TEST NO. 2** .
5. Command cooling fan relays No. 1, 2 and 3 on (high speed). If both cooling fans operate at high speed, go to next step. If both cooling fans do not operate at high speed, go to **COOLING FAN SYMPTOM TEST NO. 3** .
6. Exit scan tool OUTPUT TESTS. Start engine and let idle with A/C off. If cooling fans operate, go to step 8 . If cooling fans do not operate, go to next step.
7. Turn A/C on. If cooling fans operate, system is operating normally. If cooling fans do not operate, go to step 9 .
8. Using scan tool, view A/C REQUEST on display. If scan tool displays YES, diagnose A/C compressor controls. See A/C COMPRESSOR CLUTCH CONTROLS - ALL MODELS article in AIR CONDITIONING & HEATING. If scan tool does not display YES, go to step 10 .
9. Using scan tool, view A/C REQUEST on display. If scan tool displays YES, diagnose A/C compressor controls. See A/C COMPRESSOR CLUTCH CONTROLS - ALL MODELS article in AIR CONDITIONING & HEATING. If scan tool does not display YES, go to MANUAL A/C-HEATER SYSTEMS - CAMARO & FIREBIRD article in AIR CONDITIONING & HEATING.
10. Replace PCM and program. See COMPUTER RELEARN PROCEDURES article in GENERAL INFORMATION. Recheck system operation.

**Cooling Fan Symptom Test No. 1**

1. Perform **COOLING FAN FUNCTIONAL CHECK** . Go to next step.
2. Remove cooling fan relay No. 1. If both fans turn off, go to step 8 . If both fans do not turn off, go to next step.
3. Remove cooling fan relay No. 3. If both fans turn off, go to next step. If both fans do not turn off, go to step 10 .
4. Disconnect left engine cooling fan connector. With a test light connected to ground, probe left fan connector terminal "B" (Light Blue wire). See **WIRING DIAGRAMS** . If test light illuminates, go to step 11 . If test light does not illuminate, go to next step.
5. With a test light connected to ground, probe left fan connector terminal "A" (Gray wire). If test light illuminates, go to step 12 . If test light does not illuminate, go to next step.

cardiagn.com

6. With a test light connected to battery voltage, probe relay control circuit for cooling fan relays No. 2 and 3 at cooling fan relay No. 3 cavity C10 (Dark Blue wire). If test light illuminates, go to next step. If test light does not illuminate, go to step 13 .
7. Turn ignition to off. With test light still connected, disconnect PCM Blue connector C1. Turn ignition on. If test light illuminates, go to step 14 . If test light does not illuminate, go to step 16 .
8. With a test light connected to battery voltage, probe cooling fan relay No. 1 cavity B1 (Dark Green wire). If test light illuminates, go to next step. If test light does not illuminate, go to step 13 .
9. Turn ignition off. With test light still connected, disconnect PCM Blue connector C1. Turn ignition on. If test light illuminates, go to step 14 . If test light does not illuminate, go to step 16 .
10. Repair short to voltage in White wire between cooling fan relays No. 2 and 3 and right engine cooling fan. After repairs, go to **COOLING FAN FUNCTIONAL CHECK** . If circuit is okay, go to step 15 .
11. Repair short to voltage in Light Blue wire between cooling fan relay No. 1 and left engine cooling fan. After repairs, go to **COOLING FAN FUNCTIONAL CHECK** .
12. Repair short to voltage in Gray wire between cooling fan relay No. 3 and left engine cooling fan. After repairs, go to **COOLING FAN FUNCTIONAL CHECK** .
13. Replace cooling fan relay No. 1. After repairs, go to **COOLING FAN FUNCTIONAL CHECK** .
14. Repair short to ground in Dark Blue wire between cooling fan relays No. 2 and 3 and PCM. Repair short to ground in Dark Green wire between cooling fan relay No. 1 and PCM. After repairs, go to **COOLING FAN FUNCTIONAL CHECK** .
15. Replace cooling fan relay No. 2. After repairs, go to **COOLING FAN FUNCTIONAL CHECK** .
16. Replace PCM and program. See COMPUTER RELEARN PROCEDURES article in GENERAL INFORMATION. After repairs, go to **COOLING FAN FUNCTIONAL CHECK** .

**Cooling Fan Symptom Test No. 2**

1. Perform **COOLING FAN FUNCTIONAL CHECK** . Go to next step.
2. If either fan operates when cooling fan relay is commanded on, go to next step. If neither fan operates when cooling fan relay is commanded on, go to step 5 .
3. Install scan tool and command cooling fan relay No. 1 on (low speed). If other fan turns off, go to step 19 . If other fan does not turn off, go to next step.
4. Disconnect cooling fan relay No. 2. If fan turns off, go to step 20 . If fan does not turn off, go to step 21 .
5. Using scan tool, command cooling fan relay No. 1 on (low speed). Remove cooling fan relay No. 1. With a test light connected to battery voltage, probe cooling fan relay No. 1 cavity B1 (Dark Green wire). See **WIRING DIAGRAMS** . If test light illuminates, go to next step. If test light does not illuminate, go to step 13 .
6. With a test light connected to ground, probe cooling fan relay No. 1 cavities B3 (Red wire) and C3 (Orange wire) . If test light illuminates , go to next step. If test light does not illuminate, go to step 22 .
7. Connect a fused jumper wire between cooling fan relay No. 1 cavities B3 (Red wire) and C1 (Light Blue wire). If both fans operate, go to step 23 . If both fans do not operate, go to next step.

**NOTE:** **Jumper wire will need to be left in cooling fan relay No. 1 cavities for remainder of test procedure.**

cardiagn.com

8. Disconnect left engine cooling fan connector. With a test light connected to ground, probe left fan connector terminal "B" (Light Blue wire). If test light illuminates, go to next step. If test light does not illuminate, go to step 24 .
9. Connect a fused jumper wire between left engine cooling fan connector terminals. If right engine cooling fan operates, go to step 16 . If right engine cooling fan does not operate, go to next step.
10. Reconnect left engine cooling fan connector. Remove cooling fan relay No. 3. With a test light connected to ground, probe fan relay No. 3 cavity C8 (Gray wire). If test light illuminates, go to next step. If test light does not illuminate, go to step 25 .
11. Connect a fused jumper wire between cooling fan relay No. 3 cavities B9 (White wire) and C8 (Gray wire). If both fans operate, go to step 26 . If both fans do not operate, go to next step.
12. Reinstall cooling fan relay No. 3. Disconnect right engine cooling fan connector. With a test light connected to ground, probe right cooling fan connector terminal "B" (White wire). If left cooling fan operates, go to step 16 . If left cooling fan does not operate, go to step 18 .
13. With a test light still connected, turn ignition off and disconnect PCM Blue connector C1. Connect a fused jumper wire between ground and PCM connector C1 terminal No. 6 (Dark Green wire). If test light illuminates, go to step 20 . If test light does not illuminate, go to step 21 .
14. Check for poor connections at PCM connector C1. Repair as necessary. After repairs, go to **COOLING FAN FUNCTIONAL CHECK** . If connections are okay, go to step 27 .
15. Repair open or short to voltage in Dark Green wire between cooling fan relay No. 1 and PCM. After repairs, go to **COOLING FAN FUNCTIONAL CHECK** .
16. Check for poor connections or open in fan motor circuits. Repair as necessary. After repairs, go to **COOLING FAN FUNCTIONAL CHECK** . If connections and circuits are okay, go to next step.
17. Replace fan motor. After repairs, go to **COOLING FAN FUNCTIONAL CHECK** .
18. Repair open in White wire between cooling fan relays No. 2 and 3 and right engine cooling fan. After repairs, go to **COOLING FAN FUNCTIONAL CHECK** .
19. Replace suspect cooling fan. After repairs, go to **COOLING FAN FUNCTIONAL CHECK** .
20. Replace cooling fan relay No. 2. After repairs, go to **COOLING FAN FUNCTIONAL CHECK** .
21. Repair short to ground in Gray wire between cooling fan relay No. 3 and left engine cooling fan. After repairs, go to **COOLING FAN FUNCTIONAL CHECK** .
22. Repair open or short to ground in suspect circuit that did not turn test light on. After repairs, go to **COOLING FAN FUNCTIONAL CHECK** .
23. Replace cooling fan relay No. 1. After repairs, go to **COOLING FAN FUNCTIONAL CHECK** .
24. Repair short to ground in Light Blue wire between cooling fan relay No. 1 and left engine cooling fan. After repairs, go to **COOLING FAN FUNCTIONAL CHECK** .
25. Repair open in Gray wire between cooling fan relay No. 3 and left engine cooling fan. After repairs, go to **COOLING FAN FUNCTIONAL CHECK** .
26. Replace cooling fan relay No. 3. After repairs, go to **COOLING FAN FUNCTIONAL CHECK** .
27. Replace PCM and program. See COMPUTER RELEARN PROCEDURES article in GENERAL INFORMATION. After repairs, go to **COOLING FAN FUNCTIONAL CHECK** .

**Cooling Fan Symptom Test No. 3**

cardiagn.com

1. Perform **COOLING FAN FUNCTIONAL CHECK** . Go to next step.
2. Connect scan tool and command cooling fan relay No. 1 on. Note operation of cooling fans, and then command cooling fan relays No. 1, 2 and 3 on. If both fans continue operating at same speed, go to step 8 . If fans changed speed when all 3 relays were energized, go to next step.
3. If left cooling fan turned off, go to step 9 . If left cooling fan did not turn off, go to next step.
4. Remove cooling fan relay No. 2. With test light connected to ground, probe cooling fan relay No. 2 cavity B4 (Dark Blue wire). See **WIRING DIAGRAMS** . Using scan tool, command cooling fan relays No 2 and 3 on. If test light illuminates after a few seconds, go to next step. If test light does not illuminate after a few seconds, go to step 12 .
5. With a test light connected to ground, probe cooling fan relay No. 2 cavity C6 (Orange wire). If test light illuminates, go to next step. If test light does not illuminate, go to step 13 .
6. With a test light connected to ground, probe cooling fan relay No. 2 cavity C4 (Red wire). If test light illuminates, go to next step. If test light does not illuminate, go to step 14 .
7. Connect fused jumper between cooling fan relay No. 2 cavities B6 (White wire) and C4 (Red wire). If right fan operates, go to step 15 . If right fan does not operate, go to step 16 .
8. Turn ignition off and disconnect PCM Blue connector C1. Remove cooling fan relay No. 1. Connect a fused jumper wire between cooling fan relay No. 1 cavities B3 (Red wire) and C1 (Light Blue wire). Turn ignition on. Connect a fused jumper wire between ground and PCM connector C1 terminal No. 5 (Dark Blue wire). If cooling fans switch from low to high speed, go to step 22 . If cooling fans do not switch from low to high speed, go to step 17 .
9. Remove cooling fan relay No. 3. With a test light connected to ground, probe cooling fan No. 3 cavity C10 (Dark Blue wire). Using scan tool, command cooling fan relays No. 2 and 3 on. If test light illuminates, go to next step. If test light does not illuminate, go to step 18 .
10. With a test light connected to battery voltage, probe cooling fan relay No. 3 cavity B10 (Black wire). If test light illuminates, go to next step. If test light does not illuminate, go to step 19 .
11. With a test light connected to ground, probe cooling fan relay No. 3 cavity B8 (Orange wire). If test light illuminates, go to step 20 . If test light does not illuminate, go to step 21 .
12. Repair open in Dark Blue wire between cooling fan relays No. 2 and 3. After repairs, go to **COOLING FAN FUNCTIONAL CHECK** .
13. Repair open in Orange wire between cooling fan relay No. 2 and underhood electrical center No. 1. After repairs, go to **COOLING FAN FUNCTIONAL CHECK** .
14. Repair open in Red wire between cooling fan relay No. 2 and underhood electrical center No. 1. After repairs, go to **COOLING FAN FUNCTIONAL CHECK** .
15. Replace cooling fan relay No. 2. After repairs, go to **COOLING FAN FUNCTIONAL CHECK** .
16. Repair open in White wire between right engine cooling fan and splice. After repairs, go to **COOLING FAN FUNCTIONAL CHECK** .
17. Repair open or short to voltage in Dark Blue wire between cooling fan relays No. 2 and 3 and PCM. After repairs, go to **COOLING FAN FUNCTIONAL CHECK** .
18. Repair open in Dark Blue wire between cooling fan relay No. 3 and splice. After repairs, go to **COOLING FAN FUNCTIONAL CHECK** .
19. Repair open in Black wire between right engine cooling fan, cooling fan relay No. 3, and ground. After repairs, go to **COOLING FAN FUNCTIONAL CHECK** .

cardiagn.com

20. Replace cooling fan relay No. 3. After repairs, go to **COOLING FAN FUNCTIONAL CHECK** .
21. Repair open in Orange wire between cooling fan relay No. 3 and underhood electrical center No. 1. After repairs, go to **COOLING FAN FUNCTIONAL CHECK** .
22. Check for poor connections at PCM. Repair as necessary. After repairs, go to **COOLING FAN FUNCTIONAL CHECK** . If connections are okay, go to next step.
23. Replace PCM and program. See COMPUTER RELEARN PROCEDURES article in GENERAL INFORMATION. After repairs, go to **COOLING FAN FUNCTIONAL CHECK** .

**Diagnostic Aids**

If cooling fans operate all the time, check for DTC's before diagnosing cooling fans.

## 5.7L: CAMARO & FIREBIRD

**Description**

Power for cooling fan motors is supplied by COOL FAN Maxi fuse (40-amp) and COOLING FAN Mini fuse (10-amp) located in underhood electrical center No. 1. Relays are energized when current flows from fuses, through relay coils, and then to ground through Powertrain Control Module (PCM). Cooling fan relay No. 1 control circuit is grounded for low speed cooling fan operation. Relay control circuits for all 3 cooling fan relays are grounded for high speed cooling fan operation.

During low speed cooling fan operation, PCM supplies a ground path for cooling fan relay No. 1. This closes relay contacts, allowing current to flow from fuses, through relay, then to left cooling fan motor. Ground path for left cooling fan motor is through cooling fan relay No. 3 and right cooling fan motor. The result is a series circuit with both fans running at low speed. PCM will command low speed operation on at 226°F (108°C) and off at 217°F (103°C).

During high speed cooling fan operation, PCM supplies a ground path for all 3 cooling fan relays. As a result, relay contacts close in all relays, allowing both cooling fan motors to run at high speed. Both cooling fans are supplied current from fuses. Each cooling fan motor has a separate ground path when operating in high speed mode. PCM will command high speed operation on at 235°F (113°C) and off at 226°F (108°C).

**Cooling Fan Functional Check**

1. If On-Board Diagnostic (OBD) System Check has not been performed, see appropriate SELF-DIAGNOSTICS article in ENGINE PERFORMANCE. If OBD System Check has been performed, go to next step.
2. Install scan tool. Check if any DTCs are set. If DTCs are set, perform testing for applicable DTC. See appropriate SELF-DIAGNOSTICS article in ENGINE PERFORMANCE. If no DTCs are set, go to next step.
3. Ensure engine coolant temperature is less than 212°F (100°C). Turn A/C off. Start engine and let idle. If cooling fans are operating, go to **COOLING FAN SYMPTOM TEST NO. 1** . If cooling fans are not operating, go to next step.
4. Using scan tool, enter OUTPUT TEST and select RELAY CONTROL function. Command cool fan No.

cardiagn.com

1 relay on (low speed). If both cooling fans operate, go to next step. If both cooling fans do not operate, go to step **COOLING FAN SYMPTOM TEST NO. 2** .

5. Command cooling fan No. 1, 2 and 3 relays on (high speed). If both cooling fans operate at high speed, go to next step. If both cooling fans do not operate at high speed, go to **COOLING FAN SYMPTOM TEST NO. 3** .
6. Exit scan tool OUTPUT TESTS. Start engine and let idle with A/C off. If cooling fans operate, go to step 8 . If cooling fans do not operate, go to next step.
7. Turn A/C on. If cooling fans operate, system is operating normally. If cooling fans do not operate, go to step 9 .
8. Using scan tool, view A/C REQUEST on display. If scan tool displays YES, diagnose A/C compressor controls. See A/C COMPRESSOR CLUTCH CONTROLS - ALL MODELS article in AIR CONDITIONING & HEATING. If scan tool does not display YES, go to step 10 .
9. Using scan tool, view A/C REQUEST on display. If scan tool displays YES, diagnose A/C compressor controls. See A/C COMPRESSOR CLUTCH CONTROLS - ALL MODELS article in AIR CONDITIONING & HEATING. If scan tool does not display YES, go to MANUAL A/C-HEATER SYSTEMS - CAMARO & FIREBIRD article in AIR CONDITIONING & HEATING.
10. Replace PCM and program. See COMPUTER RELEARN PROCEDURES article in GENERAL INFORMATION. Recheck system operation.

**Cooling Fan Symptom Test No. 1**

1. Perform **COOLING FAN FUNCTIONAL CHECK** . Go to next step.
2. Remove cooling fan relay No. 1. If both fans turn off, go to step 6 . If both fans do not turn off, go to next step.
3. Remove cooling fan relay No. 3. If both fans turn off, go to next step. If both fans do not turn off, go to step 8 .
4. With a test light connected to battery voltage, probe cooling fan relay No. 3 cavity No. 86 (Dark Blue wire). See **WIRING DIAGRAMS** . If test light illuminates, go to next step. If test light does not illuminate, go to step 9 .
5. Turn ignition off. With test light still connected, disconnect PCM Red connector C1. Turn ignition on. If test light illuminates, go to step 10 . If test light does not illuminate, go to step 11 .
6. With a test light connected to battery voltage, probe cooling fan relay No. 1 cavity No. 86 (Dark Green wire). If test light illuminates, go to next step. If test light does not illuminate, go to step 9 .
7. Turn ignition off. With test light still connected, disconnect PCM Blue connector C2. Turn ignition on. If test light illuminates, go to step 10 . If test light does not illuminate, go to step 11 .
8. Repair short to voltage in Light Blue wire between cooling fan relay No. 1 and left engine cooling fan. Repair short to voltage in White wire between cooling fan No. 2 and 3 relays and right engine cooling fan. After repairs, go to **COOLING FAN FUNCTIONAL CHECK** .
9. Replace suspect cooling fan relay. After repairs, go to **COOLING FAN FUNCTIONAL CHECK** .
10. Repair short to ground in Dark Blue wire between PCM and cooling fan relays No. 2 and 3. Repair short to ground in Dark Green wire between PCM and cooling fan relay No. 1. After repairs, go to **COOLING FAN FUNCTIONAL CHECK** .
11. Replace PCM and program. See COMPUTER RELEARN PROCEDURES article in GENERAL

cardiagn.com

INFORMATION. After repairs, go to **COOLING FAN FUNCTIONAL CHECK** .

**Cooling Fan Symptom Test No. 2**

1. Perform **COOLING FAN FUNCTIONAL CHECK** . Go to next step.
2. If either cooling fan operates when cooling fan relay No. 1 is commanded on with scan tool, go to next step. If neither fan operates when cooling fan relay No. 1 is commanded on with scan tool, go to step 5 .
3. Using scan tool, command cooling fan relay No. 1 on. If either fan turns off, go to step 19 . If neither fan turns off, go to next step.
4. Remove cooling fan relay No. 2 from underhood electrical center. If fan turns off, go to step 20 . If fan does not turn off, go to step 21 .
5. Remove cooling fan relay No. 1 from underhood electrical center. With a test light connected to battery voltage, probe cooling fan relay No. 1 cavity No. 86 (Dark Green wire). See **WIRING DIAGRAMS** . Using scan tool, command cooling fan relay No 1 on. If test light illuminates, go to next step. If test light does not illuminate, go to step 13 .
6. With a test light connected to ground, probe cooling fan relay No. 1 cavities No. 30 (Red wire) and No. 85 (Orange wire). If test light illuminates at both cavities, go to next step. If test light does not illuminate at both cavities, go to step 22 .
7. Connect a fused jumper wire between cooling fan relay No. 1 cavities No. 30 (Red wire) and No. 87 (Light Blue wire). If both fans operate, go to step 23 . If both fans do not operate, go to next step.

**NOTE:** **Jumper wire will need to be left in cooling fan relay No. 1 cavities for remainder of test procedure.**

8. Disconnect left cooling fan connector. With a test light connected to ground, probe left cooling fan connector terminal "B" (Light Blue wire). If test light illuminates, go to next step. If test light does not illuminate, go to step 24 .
9. Connect a fused jumper wire between left cooling fan connector terminals. If right cooling fan operates, go to step 16 . If right cooling fan does not operate, go to next step.
10. Remove fused jumper wire and reconnect left cooling fan connector. Remove cooling fan relay No. 3. With a test light connected to ground, probe cooling fan relay No. 3 cavity No. 30 (Gray wire). If test light illuminates, go to next step. If test does not illuminate, go to step 25 .
11. Connect a fused jumper wire between cooling fan relay No. 3 cavities No. 30 (Gray wire) and No. 87A (White wire). If fans operate, go to step 26 . If fans do not operate, go to next step.
12. Reinstall cooling fan relay No. 3. Disconnect right cooling fan connector. With a test light connected to ground, probe right fan connector terminal "B" (White wire). If test light illuminates, go to step 16 . If test light does not illuminate, go to step 18 .
13. With test light still connected, turn ignition off and disconnect PCM Blue connector C2. Connect a fused jumper wire between ground and cooling fan relay No. 1 cavity No. 86 (Dark Green wire). If test light illuminates, go to step 20 . If test light does not illuminate, go to step 21 .
14. Check for poor connections at PCM. Repair as necessary and go to **COOLING FAN FUNCTIONAL CHECK** . If connections are okay, go to step 27 .
15. Repair open or short to voltage in Dark Green wire between cooling fan relay No. 1 and PCM. After

cardiagn.com

repairs, go to **COOLING FAN FUNCTIONAL CHECK** .

16. Check for poor connections at cooling fans. Repair as necessary and go to **COOLING FAN FUNCTIONAL CHECK** . If connections are okay, go to next step.
17. Replace cooling fan motor. After repairs, go to **COOLING FAN FUNCTIONAL CHECK** .
18. Repair open in White wire between right cooling fan and cooling fan relay No. 3. After repairs, go to **COOLING FAN FUNCTIONAL CHECK** .
19. Replace suspect cooling fan motor. After repairs, go to **COOLING FAN FUNCTIONAL CHECK** .
20. Replace cooling fan relay No. 2. After repairs, go to **COOLING FAN FUNCTIONAL CHECK** .
21. Repair short to ground in Gray wire between cooling fan relay No. 3 and left cooling fan. After repairs, go to **COOLING FAN FUNCTIONAL CHECK** .
22. Repair open or short to ground in suspect circuit. After repairs, go to **COOLING FAN FUNCTIONAL CHECK** .
23. Replace cooling fan relay No. 1. After repairs, go to **COOLING FAN FUNCTIONAL CHECK** .
24. Repair open in Light Blue wire between cooling fan relay No. 1 and left cooling fan. After repairs, go to **COOLING FAN FUNCTIONAL CHECK** .
25. Repair open in Gray wire between cooling fan relay No. 3 and left cooling fan. After repairs, go to **COOLING FAN FUNCTIONAL CHECK** .
26. Replace cooling fan relay No. 3. After repairs, go to **COOLING FAN FUNCTIONAL CHECK** .
27. Replace PCM and program. See COMPUTER RELEARN PROCEDURES article in GENERAL INFORMATION. After repairs, go to **COOLING FAN FUNCTIONAL CHECK** .

**Cooling Fan Symptom Test No. 3**

1. Perform **COOLING FAN FUNCTIONAL CHECK** . Go to next step.
2. Using scan tool, command cooling fan relay No. 1 on and note cooling fan operation. Using scan tool, command cooling fan relays No. 1, 2 and 3 on and note fan operation once again. If both fans operate with no change, go to step 8 . If both fans change speed, go to next step.
3. If left fan stopped operating, go to step 9 . If left fan did not stop operating, go to next step.
4. Remove cooling fan relay No. 2. With a test light connected to battery voltage, probe cooling fan relay No. 2 cavity No. 86 (Dark Blue wire). See **WIRING DIAGRAMS** . Using scan tool, command cooling fan relays No. 2 and 3 on. If test light illuminates, go to next step. If test light does not illuminate, go to step 12 .
5. With a test light connected to ground, probe cooling fan relay No. 2 cavity No. 85 (Orange wire). If test light illuminates, go to next step. If test light does not illuminate, go to step 13 .
6. With a test light connected to ground, probe cooling fan relay No. 2 cavity No. 30 (Red wire). If test light illuminates, go to next step. If test light does not illuminate, go to step 14 .
7. Connect a fused jumper wire between cooling fan relay No. 2 cavities No. 30 (Red wire) and No. 87 (White wire). If right cooling fan operates, go to step 15 . If right cooling fan does not operate, go to step 16 .
8. Turn ignition off. Disconnect PCM Blue connector C2. Remove cooling fan relay No. 1. Connect a fused jumper wire between cooling fan relay No. 1 cavities No. 30 (Red wire) and No. 87 (Light Blue wire). Turn ignition on. Connect a fused jumper wire between ground and PCM connector C2 terminal No. 33

cardiagn.com

(Dark Blue wire). If fans switch from low to high speed operation, go to step 22 . If fans do not switch from low to high speed operation, go to step 17 .

9. Remove cooling fan relay No. 3. With a test light connected to battery voltage, probe cooling fan relay No. 3 cavity No. 86 (Dark Blue wire). Using scan tool, command cooling fan No. 2 and 3 relays on. If test light illuminates, go to next step. If test light does not illuminate, go to step 18 .
10. With a test light connected to battery voltage, probe cooling fan relay No. 3 cavity No. 87 (Black wire). If test light illuminates, go to next step. If test light does not illuminate, go to step 19 .
11. With a test light connected to ground, probe cooling fan relay No. 3 cavity No. 85 (Orange wire). If test light illuminates, go to step 20 . If test light does not illuminate, go to step 21 .
12. Repair open in Dark Blue wire between cooling fan relay No. 2 and splice. After repairs, go to **COOLING FAN FUNCTIONAL CHECK** .
13. Repair open in Orange wire between cooling fan relay No. 2 and underhood electrical center No. 1. After repairs, go to **COOLING FAN FUNCTIONAL CHECK** .
14. Repair open in Red wire between cooling fan relay No. 2 and underhood electrical center No. 1. After repairs, go to **COOLING FAN FUNCTIONAL CHECK** .
15. Replace cooling fan relay No. 2. After repairs, go to **COOLING FAN FUNCTIONAL CHECK** .
16. Repair open in White wire between cooling fan relay No. 2 and splice. After repairs, go to **COOLING FAN FUNCTIONAL CHECK** .
17. Repair open or short to battery voltage in Dark Blue wire between PCM and cooling fan relays No. 2 and 3. After repairs, go to **COOLING FAN FUNCTIONAL CHECK** .
18. Repair open in Dark Blue wire between cooling fan relay No. 3 and splice. After repairs, go to **COOLING FAN FUNCTIONAL CHECK** .
19. Repair open in Black wire between cooling fan relay No. 3 and ground. After repairs, go to **COOLING FAN FUNCTIONAL CHECK** .
20. Replace cooling fan relay No. 3. After repairs, go to **COOLING FAN FUNCTIONAL CHECK** .
21. Repair open in Orange wire between cooling fan relay No. 3 and underhood electrical center No. 1. After repairs, go to **COOLING FAN FUNCTIONAL CHECK** .
22. Check for poor connections at PCM. Repair as necessary and go to **COOLING FAN FUNCTIONAL CHECK** . If connections are okay, go to next step.
23. Replace PCM and program. See COMPUTER RELEARN PROCEDURES article in GENERAL INFORMATION. After repairs, go to **COOLING FAN FUNCTIONAL CHECK** .

## 1998 3.8L "G" BODY (RIVIERA)

### Description

Power for cooling fan motors is supplied by COOLING FAN fuse (60-amp) in underhood electrical center. Relays are energized when current flows from CLNG FAN fuse (10-amp) in instrument panel fuse block through relay coils to ground through Powertrain Control Module (PCM). Primary cooling fan control circuit is grounded for low speed cooling fan operation. Both the primary and secondary cooling fan control circuits are grounded for high speed cooling fan operation.

During low speed cooling fan operation, PCM supplies a ground path for low speed cooling fan relay. The relay

cardiagn.com

contacts close, allowing current to flow from battery junction block through relay and to primary cooling fan. Ground path for primary cooling fan is through series/parallel cooling fan relay and secondary cooling fan motor. The result is a series circuit with both cooling fans running at low speed.

During high speed cooling fan operation, PCM supplies a ground path for low speed cooling fan relay through primary cooling fan control circuit. PCM also supplies a ground path for high speed cooling fan relay and series/parallel cooling fan relay through secondary cooling fan control circuit. This closes all 3 fan relays. At high speed, primary and secondary cooling fans are both supplied current from battery junction block and each fan has its own ground path.

**Diagnosis**

1. If On-Board Diagnostic (OBD) System Check has not been performed, see OBD SYSTEM CHECK in appropriate SELF-DIAGNOSTICS article in ENGINE PERFORMANCE. If OBD SYSTEM CHECK has been performed, go to next step.
2. Install scan tool. Check for DTCs. If any DTCs are set, see appropriate SELF-DIAGNOSTICS article in ENGINE PERFORMANCE. If no DTCs are set, go to next step.
3. Ensure engine coolant temperature is less than 212°F (100°C). Turn A/C off. Start engine and let idle. If cooling fans operate, go to step **32)** . If cooling fans do not operate, go to next step.
4. Using scan tool, select RELAY CONTROL function. Command low speed fans on. If both cooling fans operate at low speed, go to next step. If both cooling fans do not operate at low speed, go to step **8)** .
5. Command high speed fans on. If both fans operate at high speed, go to next step. If both fans do not operate at high speed, go to step **58)** .
6. Ensure ambient temperature is greater than 48°F (9°C). Exit scan tool OUTPUT TESTS. Start engine and let idle. Turn A/C on. If fans operate, go to **DIAGNOSTIC AIDS** . If fans do not operate, go to next step.
7. Using scan tool, view A/C REQUEST on display. If scan tool displays YES, go to step **77)** . If scan tool does not display YES, diagnose A/C compressor controls. See A/C COMPRESSOR CLUTCH CONTROLS - ALL MODELS article in AIR CONDITIONING & HEATING.
8. If either cooling fan is operating, go to next step. If neither cooling fan operates, go to step **16)** .
9. If primary cooling fan operates, go to next step. If primary cooling fan does not operate, go to step **14)** .
10. Turn ignition off. Disconnect secondary cooling fan harness connector. Turn ignition on. Using scan tool, select RELAY CONTROL function. Command low speed fans on. If primary cooling fan operates, go to next step. If primary cooling fan does not operate, go to step **80)** .
11. Remove series/parallel cooling fan relay from underhood electrical center. If primary cooling fan operates, go to next step. If primary cooling fan does not operate, go to step **13)** .
12. Repair short to ground in White wire between primary cooling fan motor and series/parallel cooling fan relay. After repairs, go to step **81)** .
13. Check for a short to ground in Light Blue wire between secondary cooling fan motor and series/parallel and high speed cooling fan relays. Repair as necessary. Repair as necessary and go to step **81)** . If no problem was found, go to step **76)** .
14. Turn ignition off. Disconnect primary cooling fan harness connector. Turn ignition on. Using scan tool, select RELAY CONTROL function. Command low speed fans on. If secondary cooling fan operates, go to next step. If secondary cooling fan does not operate, go to step **79)** .
15. Replace primary cooling fan diode. After replacing diode, go to step **81)** .

cardiagn.com

16. Turn ignition on. Remove low speed cooling fan relay from underhood electrical center. Using a test light connected to ground, probe low speed cooling fan relay cavity No. 30 (Red wire). If test light illuminates, go to step **18)** . If test light does not illuminate, go to next step.
17. Check for blown COOLING FAN fuse (60-amp). If fuse is blown, locate and repair short circuit. Possible causes for short circuit are:
    - Seized cooling fan motors.
    - Shorted cooling fan motor windings.
    - Short to ground in Light Blue wire between secondary cooling fan motor and series/parallel and high speed cooling fan relays.
    - Short to ground in Black wire between primary cooling fan motor and low speed cooling fan relay.
    - Short to ground in Red wire between COOLING FAN fuse (60-amp) and low speed cooling fan relay.

    If fuse is okay, check for an open in Red wire between COOLING FAN fuse (60-amp) and low speed cooling fan relay. Repair as necessary. Go to step **81)** .

18. Using a test light connected to ground, probe low speed cooling fan relay cavity No. 85 (Brown wire). If test light illuminates, go to step **20)** . If test light does not illuminate, go to next step.
19. Identify cause of no battery voltage to low speed cooling fan relay cavity No. 85. Possible causes are:
    - Open or short in Brown wire or Brown wire between CLNG FAN fuse (10-amp) and low speed cooling fan relay.
    - Shorted cooling fan relay coils. Repair as necessary.

    Go to step **81)** .

20. Turn ignition off. Disconnect both cooling fan harness connectors. Using fused jumper wires, connect terminals "A" and "B" together at both harness connectors. Connect a test light between low speed cooling fan relay cavities No. 30 (Red wire) and No. 87 (Black wire). If test light illuminates, go to next step. If test light does not illuminate, go to step **27)** .
21. Connect a test light between low speed cooling fan relay cavities No. 85 (Brown wire) and 86 (Dark Green wire). Turn ignition on. Using scan tool, select RELAY CONTROL function. Command low speed fans on. If test light illuminates, go to next step. If test light does not illuminate, go to step **25)** .
22. Turn ignition off. Remove jumper wires and reconnect cooling fan harness connectors. Connect a fused jumper wire between low speed cooling fan relay cavities No. 30 (Red wire) and 87 (Black wire). Turn ignition on. If both cooling fans operate, go to next step. If both cooling fans do not operate, go to step **24)** .
23. Check for poor connections at low speed cooling fan relay in underhood electrical center. Repair as necessary. After repairs, go to step **81)** . If no problem was found, go to step **37)** .
24. Check for poor connections at both cooling fan motors. Repair as necessary. After repairs, go to step **81)** . If no problem is found, go to step **63)** .
25. Turn ignition off. Disconnect PCM harness Blue connector C1. Install a fused jumper wire between low speed cooling fan relay cavities No. 85 (Brown wire) and 86 (Dark Green wire). Turn ignition on. Using a test light connected to ground, probe PCM harness connector C1, terminal No. 6 (Dark Green wire). If

cardiagn.com

test light illuminates, go to step **77)** . If test light does not illuminate, go to next step.

26. Repair open in Dark Green wire between low speed cooling fan relay and PCM harness connector C1, terminal No. 6. After repairs, go to step **81)** .
27. Turn ignition off. Remove jumper wires and reconnect cooling fan harness connectors. Connect a fused jumper wire between low speed cooling fan relay cavities No. 30 (Red wire) and 87 (Black wire). Remove series/parallel cooling fan relay from underhood electrical center. Using a test light connected to ground, probe series/parallel cooling fan relay cavity No. 30 (White wire). If test light illuminates, go to next step. If test light does not illuminate, go to step **31)** .
28. Connect a test light between series/parallel cooling fan relay cavities No. 30 (White wire) and 87A (Light Blue wire). If test light illuminates, go to step **30)** . If test light does not illuminate, go to next step.
29. Check for open in Light Blue wire between series/parallel cooling fan relay and secondary cooling fan motor. Repair as necessary. After repairs, go to step **81)** . If no problem was found, go to step **57)** .
30. Check for poor connections at series/parallel cooling fan relay in underhood electrical center. Repair as necessary. After repairs, go to step **81)** . If no problem was found, go to step **76)** .
31. Check for an open in Black wire between low speed cooling fan relay and primary cooling fan motor harness connector. Repair as necessary. After repairs, go to step **81)** . If no problem was found, go to step **56)** .
32. Using scan tool, view A/C REQUEST on display. If YES is displayed, diagnose A/C compressor controls. See A/C COMPRESSOR CLUTCH CONTROLS - ALL MODELS article in AIR CONDITIONING & HEATING. If YES is not displayed, go to next step.
33. If both cooling fans are operating at low speed, go to next step. If both cooling fans do not operate at low speed, go to step **40)** .
34. Remove low speed cooling fan relay from underhood electrical center. If both cooling fans operate, go to next step. If both cooling fans do not operate, go to step **36)** .
35. Repair short to power in Black wire between primary cooling fan motor and low speed cooling fan relay. After repairs, go to step **81)** .
36. Using a test light connected to battery positive, probe low speed cooling fan relay cavity No. 86 (Dark Green wire). If test light illuminates, go to step **38)** . If test light does not illuminate, go to next step.
37. Replace low speed cooling fan relay. After replacing relay, go to step **81)** .
38. Turn ignition off. Disconnect PCM harness Blue connector C1. Using a test light connected to battery positive, probe low speed cooling fan relay cavity No. 86 (Dark Green wire). If test light illuminates, go to next step. If test light does not illuminate, go to step **77)** .
39. Repair short to ground in Dark Green wire between low speed cooling fan relay and PCM harness connector C1, terminal No. 6. After repairs, go to step **81)** .
40. If both cooling fans operate at high speed, go to next step. If both cooling fans do not operate at high speed, go to step **42)** .
41. Using scan tool, view A/C PRESSURE on display. If reading is less than 1.2 volts, go to step **77)** . If reading is 1.2 volts or greater, go to step **44)** .
42. Turn ignition off. Disconnect PCM harness Blue connector C1. Turn ignition on. If secondary cooling fan operates at high speed, go to next step. If secondary cooling fan does not operate at high speed, go to step **77)** .
43. Check for short to ground in Dark Blue wire between high speed cooling fan relay, series/parallel cooling fan relay and PCM harness connector C1 terminal No. 5. Repair as necessary. After repairs, go to step

cardiagn.com

**81)** . If no problem was found, go to step **52)** .

44. Turn ignition off. Disconnect A/C pressure sensor harness connector. Turn ignition on. Using scan tool, view A/C PRESSURE on display. If reading is near zero volts, go to step **46)** . If reading is not as specified, go to next step.
45. Using a DVOM, measure voltage between signal circuit (Red/Black wire) and ground circuit (Black wire) at A/C pressure sensor harness connector. If reading is near zero volts, go to step **77)** . If reading is not as specified, go to step **51)** .
46. Using a test light connected to battery voltage, probe ground circuit (Black wire) at A/C pressure sensor harness connector. If test light illuminates, go to next step. If test light does not illuminate, go to step **49)** .
47. Using a DVOM, measure voltage between 5-volt reference circuit (Gray wire) and ground circuit (Black wire) at A/C pressure sensor harness connector. If reading is near 5 volts, go to next step. If reading is not a specified, go to step **50)** .
48. Replace A/C pressure sensor. After replacing pressure sensor, go to step **81)** .
49. Repair open or short to power in A/C pressure sensor ground circuit (Black wire). After repairs, go to step **81)** .
50. Repair open or short to ground in A/C pressure sensor 5-volt reference circuit (Gray wire). After repairs, go to step **81)** .
51. Repair short to power in A/C pressure sensor signal circuit (Red/Black wire). After repairs, go to step **81)** .
52. Remove high speed cooling fan relay from underhood electrical center. If secondary cooling fan operates at high speed, go to next step. If secondary cooling fan does not operate at high speed, go to step **70)** .
53. Remove series/parallel cooling fan relay from underhood electrical center. If secondary cooling fan operates at high speed, go to next step. If secondary cooling fan does not operate at high speed, go to step **55)** .
54. Repair short to power in Light Blue wire between series/parallel cooling fan relay and secondary cooling fan motor. After repairs, go to step **81)** .
55. Repair short to power in White wire between series/parallel cooling fan relay and primary cooling fan motor. After repairs, go to step **81)** .
56. Check for an open in White wire between series/parallel cooling fan relay and primary cooling fan motor harness connector. Repair as necessary. After repairs, go to step **81)** . If no problem was found, go to step **79)** .
57. Check for an open in Black wire between secondary cooling fan motor harness connector and ground. Repair as necessary. After repairs, go to step **81)** . If no problem was found, go to step **80)** .
58. Turn ignition on. Remove high speed cooling fan relay from underhood electrical center. Connect a test light between high speed cooling fan relay cavity No. 86 (Dark Blue wire) and battery positive. Using scan tool, select RELAY CONTROL function. Command high speed fans on. Wait 6 seconds. If test light illuminates, go to step **61)** . If test light does not illuminate, go to next step.
59. Remove series/parallel cooling fan relay from underhood electrical center. Connect a test light between series/parallel cooling fan relay cavity No. 86 (Dark Blue wire) and battery positive. Using scan tool, select RELAY CONTROL function. Command high speed fans on. Wait 6 seconds. If test light illuminates, go to step **78)** . If test light does not illuminate, go to next step.
60. Turn ignition off. Disconnect PCM harness Blue connector C1. Check for an open or short to power in Dark Blue wire between series/parallel cooling fan relay, high speed cooling fan relay control circuit and

cardiagn.com

PCM harness connector C1. Repair as necessary. After repairs, go to step **81)** . If no problem is found, go to step **77)** .

61. Turn ignition off. Install high speed cooling fan relay. Disconnect both cooling fan motor harness connectors. Turn ignition on. Using scan tool, select RELAY CONTROL function. Command high speed fans on. Wait 6 seconds. Using a test light connected to ground, probe secondary cooling fan motor harness connector terminal "B" (Light Blue wire). If test light illuminates, go to next step. If test light does not illuminate, go to step **64)** .
62. Using a test light connected to battery voltage, probe primary cooling fan motor harness connector terminal "A" (White wire). If test light illuminates, go to next step. If test light does not illuminate, go to step **71)** .
63. Check for a seized cooling fan motor or open motor winding. Replace appropriate cooling fan motor. After replacing motor, go to step **81)** .
64. Turn ignition off. Remove high speed cooling fan relay from underhood electrical center. Turn ignition on. Using a test light connected to ground, probe high speed cooling fan relay cavity No. 85 (Brown wire). If test light illuminates, go to step **66)** . If test light does not illuminate, go to next step.
65. Repair open in Brown wire between CLNG FAN fuse (10-amp) and high speed cooling fan relay. Go to step **81)** .
66. Using a test light connected to ground, probe high speed cooling fan relay cavity No. 87 (Red wire). If test light illuminates, go to step **68)** . If test light does not illuminate, go to next step.
67. Repair open in Red wire (battery feed circuit) between COOLING FAN fuse (60-amp) and high speed cooling fan relay. After repairs, go to step **81)** .
68. Check for open in Light Blue wire between secondary cooling fan motor harness connector and high speed cooling fan relay. Repair as necessary. After repairs, go to step **81)** . If no problem was found, go to next step.
69. Check for poor connections at high speed cooling fan relay in underhood electrical center. Repair as necessary. After repairs, go to step **81)** . If no problem was found, go to next step.
70. Replace high speed cooling fan relay. After replacing relay, go to step **81)** .
71. Turn ignition off. Remove series/parallel cooling fan relay from underhood electrical center. Turn ignition on. Using a test light connected to ground, probe series/parallel cooling fan relay cavity No. 85 (Brown wire). If test light illuminates, go to step **73)** . If test light does not illuminate, go to next step.
72. Repair open in Brown wire between CLNG FAN fuse (10-amp) and series/parallel cooling fan relay. After repairs, go to step **81)** .
73. Using test light connected to battery voltage, probe series/parallel cooling fan relay cavity No. 87 (Black wire). If test light illuminates, go to step **75)** . If not, go to next step.
74. Repair open in Black wire between series/parallel cooling fan relay and ground. After repairs, go to step **81)** .
75. Check for poor connections at series/parallel cooling fan relay in underhood electrical center. Repair as necessary. After repairs, go to step **81)** . If no problem was found, go to next step.
76. Replace series/parallel cooling fan relay. After replacing relay, go to step **81)** .
77. Replace PCM. After replacing PCM, go to step **81)** .
78. Repair open in Dark Blue wire between PCM harness connector C1 terminal No. 5 and series/parallel and high speed cooling fan relays. Go to step **81)** .

cardiagn.com

79. Replace primary cooling fan motor. After replacing motor, go to step **81)** .
80. Replace secondary cooling fan motor. After replacing motor, go to next step.
81. Ensure coolant temperature is less than 212°F (100°C). Turn A/C off. Start engine and let idle. If cooling fans operate, go to step **32)** . If cooling fans do not operate, go to next step.
82. Using scan tool, select RELAY CONTROL. Command low speed fans on. If both cooling fans operate at low speed, go to next step. If both cooling fans do not operate at low speed, go to step **8)** .
83. Command high speed cooling fans on. Wait 6 seconds. If both cooling fans operate at high speed, system is okay at this time. If both cooling fans do not operate at high speed, go to step **58)** .

**Diagnostic Aids**

Check for poor connections at PCM, cooling fan relays and cooling fan motors. Inspect harness connectors for damaged, corroded or backed-out terminal pins. Inspect related wiring harnesses for damage or improper routing.

## 3.8L: RIVIERA

**Description**

Power for cooling fan motors is supplied by COOLING FAN fuse (60-amp), in underhood electrical center. Relays are energized when current flows from CLNG FAN fuse (10-amp) in instrument panel fuse block, through relay coils, and to ground through Powertrain Control Module (PCM). Primary cooling fan control circuit is grounded by PCM for low speed cooling fan operation. Both the primary and secondary cooling fan control circuits are grounded by PCM for high speed cooling fan operation. PCM will engage cooling fans if certain DTCs are set. If coolant temperature at key-off is greater than 304°F (151°C), with system voltage greater than 12 volts, cooling fans will remain on at low speed for about 3 minutes.

During low speed cooling fan operation, PCM supplies a ground path for low speed cooling fan relay. The relay contacts close, allowing current to flow from battery junction block, through relay, and to primary cooling fan. Ground path for primary cooling fan is through series/parallel cooling fan relay and secondary cooling fan motor. The result is a series circuit with both cooling fans running at low speed.

During high speed cooling fan operation, PCM supplies a ground path for low speed cooling fan relay through primary cooling fan control circuit. PCM also supplies a ground path for high speed cooling fan relay, and series/parallel cooling fan relay, through secondary cooling fan control circuit. This closes all 3 fan relays. At high speed, primary and secondary cooling fans are both supplied current from battery junction block and each fan has its own ground path.

**Cooling Fan Functional Check**

1. If On-Board Diagnostic (OBD) System Check has not been performed, see appropriate SELF-DIAGNOSTICS article in ENGINE PERFORMANCE. If OBD System Check has been performed, go to next step.
2. Install scan tool. Check if any DTCs are set. If DTCs are set, perform testing for applicable DTC. See appropriate SELF-DIAGNOSTICS article in ENGINE PERFORMANCE. If no DTCs are set, go to next step.

cardiagn.com

3. Ensure engine coolant temperature is less than 212°F (100°C). Turn A/C off. Start engine and let idle. If cooling fans are operating, go to **COOLING FAN SYMPTOM TEST NO. 1** . If cooling fans are not operating, go to next step.
4. Using scan tool OUTPUT TESTS, select RELAY CONTROL function. Command cooling fan relay No. 1 on (low speed). If both cooling fans operate, go to next step. If both cooling fans do not operate, go to step **COOLING FAN SYMPTOM TEST NO. 2** .
5. Command cooling fan relays No. 1, 2 and 3 on (high speed). If both cooling fans operate at high speed, go to next step. If both cooling fans do not operate at high speed, go to **COOLING FAN SYMPTOM TEST NO. 3** .
6. Exit scan tool OUTPUT TESTS. Start engine and let idle with A/C off. If cooling fans operate, go to step 8 . If cooling fans do not operate, go to next step.
7. Turn A/C on. If cooling fans operate, system is operating normally at this time. If cooling fans do not operate, go to step 9 .
8. Using scan tool, view A/C REQUEST on display. If scan tool displays YES, diagnose A/C compressor controls. See A/C COMPRESSOR CLUTCH CONTROLS - ALL MODELS article in AIR CONDITIONING & HEATING. If scan tool does not display YES, go to step 10 .
9. Using scan tool, view A/C REQUEST on display. If scan tool displays YES, diagnose A/C compressor controls. See A/C COMPRESSOR CLUTCH CONTROLS - ALL MODELS article in AIR CONDITIONING & HEATING. If scan tool does not display YES, go to AUTOMATIC A/C-HEATER SYSTEMS - AURORA & RIVIERA article in AIR CONDITIONING & HEATING.
10. Replace PCM and program. See COMPUTER RELEARN PROCEDURES article in GENERAL INFORMATION. Recheck system operation.

**Cooling Fan Symptom Test No. 1**

1. Perform **COOLING FAN FUNCTIONAL CHECK** . Go to next step.
2. Remove low speed fan relay. If both fans turn off, go to step 8 . If both fans do not turn off, go to next step.
3. Remove series/parallel fan relay. If both fans turn off, go to next step. If both fans do not turn off, go to step 10 .
4. Disconnect left engine cooling fan connector. With a test light connected to ground, probe left fan connector terminal "B" (Black wire). See **WIRING DIAGRAMS** . If test light illuminates, go to step 11 . If test light does not illuminate, go to next step.
5. With a test light connected to ground, probe left fan connector terminal "A" (White wire). If test light illuminates, go to step 12 . If test light does not illuminate, go to next step.
6. With a test light connected to battery voltage, probe relay control circuit for series/parallel fan relay at cavity C1 (Dark Blue wire). If test light illuminates, go to next step. If test light does not illuminate, go to step 13 .
7. Turn ignition to off. With test light still connected, disconnect PCM Blue connector C1. Turn ignition on. If test light illuminates, go to step 14 . If test light does not illuminate, go to step 16 .
8. With a test light connected to battery voltage, probe relay control circuit for low speed fan relay Dark Green wire cavity. If test light illuminates, go to next step. If test light does not illuminate, go to step 13 .
9. Turn ignition off. With test light still connected, disconnect PCM Blue connector C1. Turn ignition on. If

cardiagn.com

test light illuminates, go to step 14 . If test light does not illuminate, go to step 16 .

10. Repair short to voltage in Light Blue wire between series/parallel cooling fan relay, high speed cooling fan relay, and right engine cooling fan. After repairs, go to **COOLING FAN FUNCTIONAL CHECK** . If circuit is okay, go to step 15 .
11. Repair short to voltage in Black wire between low speed fan relay and left engine cooling fan. After repairs, go to **COOLING FAN FUNCTIONAL CHECK** .
12. Repair short to voltage in White wire between high speed fan relay and left engine cooling fan. After repairs, go to **COOLING FAN FUNCTIONAL CHECK** .
13. Replace low speed fan relay. After repairs, go to **COOLING FAN FUNCTIONAL CHECK** .
14. Repair short to ground in Dark Blue wire between series/parallel fan relay, high speed fan relay, and PCM. Repair short to ground in Dark Green wire between low speed fan relay and PCM. After repairs, go to **COOLING FAN FUNCTIONAL CHECK** .
15. Replace high speed cooling fan relay. After repairs, go to **COOLING FAN FUNCTIONAL CHECK** .
16. Replace PCM and program. See COMPUTER RELEARN PROCEDURES article in GENERAL INFORMATION. After repairs, go to **COOLING FAN FUNCTIONAL CHECK** .

**Cooling Fan Symptom Test No. 2**

1. Perform **COOLING FAN FUNCTIONAL CHECK** . Go to next step.
2. If either fan operates when low speed cooling fan relay is commanded on, go to next step. If neither fan operates when low speed cooling fan relay is commanded on, go to step 5 .
3. Install scan tool and command low speed cooling fan relay on. If other fan turns off, go to step 19 . If other fan does not turn off, go to next step.
4. Disconnect high speed fan relay. If fan turns off, go to step 20 . If fan does not turn off, go to step 21 .
5. Remove low speed fan relay. Using scan tool, command low speed fan relay on. With test light connected to battery voltage, probe low speed fan relay Dark Green wire cavity. See **WIRING DIAGRAMS** . If test light illuminates, go to next step. If test light does not illuminate, go to step 13 .
6. With a test light connected to ground, probe both ignition feed circuits at low speed fan relay (Red wire and Brown wire) cavities. If test light illuminates, go to next step. If test light does not illuminate, go to step 22 .
7. Connect a fused jumper wire between low speed fan relay Red wire and Black wire cavities. If both fans operate, go to step 23 . If both fans do not operate, go to next step.

**NOTE: Jumper wire will need to be left in low speed fan relay cavities for remainder of test procedure.**

8. Disconnect left engine cooling fan connector. With a test light connected to ground, probe left fan connector terminal "B" (Black wire). If test light illuminates, go to next step. If test light does not illuminate, go to step 24 .
9. Connect a fused jumper wire between left engine cooling fan connector terminals. If right engine cooling fan operates, go to step 16 . If right engine cooling fan does not operate, go to next step.
10. Reconnect left engine cooling fan connector. Remove series/parallel fan relay. With a test light connected to ground, probe series/parallel fan relay cavity C3 (White wire). If test light illuminates, go to next step.

cardiagn.com

If test light does not illuminate, go to step 25 .

11. Connect a fused jumper wire between series/parallel fan relay cavities B2 (Light Blue wire) and C3 (White wire). If both fans operate, go to step 26 . If both fans do not operate, go to next step.
12. Reinstall series/parallel fan relay. Disconnect right engine cooling fan connector. With a test light connected to ground, probe right cooling fan connector terminal "B" (Light Blue wire). If left cooling fan operates, go to step 16 . If left cooling fan does not operate, go to step 18 .
13. With test light still connected, turn ignition off and disconnect PCM Blue connector C1. Connect fused jumper between ground and PCM connector C1 terminal No. 6 (Dark Green wire). If test light illuminates, go to step 20 . If test light does not illuminate, go to step 21 .
14. Check for poor connections at PCM connector C1. Repair as necessary. After repairs, go to **COOLING FAN FUNCTIONAL CHECK** . If connections are okay, go to step 27 .
15. Repair open or short to voltage in Dark Green wire between low speed fan relay and PCM. After repairs, go to **COOLING FAN FUNCTIONAL CHECK** .
16. Check for poor connections or open in fan motor circuits. Repair as necessary. After repairs, go to **COOLING FAN FUNCTIONAL CHECK** . If connections and circuits are okay, go to next step.
17. Replace fan motor. After repairs, go to **COOLING FAN FUNCTIONAL CHECK** .
18. Repair open in Light Blue wire between series/parallel cooling fan relay, high speed cooling fan relay, and right engine cooling fan. After repairs, go to **COOLING FAN FUNCTIONAL CHECK** .
19. Replace suspect cooling fan. After repairs, go to **COOLING FAN FUNCTIONAL CHECK** .
20. Replace high speed cooling fan relay. After repairs, go to **COOLING FAN FUNCTIONAL CHECK** .
21. Repair short to ground in White wire between series/parallel fan relay and left engine cooling fan. After repairs, go to **COOLING FAN FUNCTIONAL CHECK** .
22. Repair open or short to ground in suspect circuit that did not illuminate test light. After repairs, go to **COOLING FAN FUNCTIONAL CHECK** .
23. Replace low speed cooling fan relay. After repairs, go to **COOLING FAN FUNCTIONAL CHECK** .
24. Repair short to ground in Black wire between low speed cooling fan relay and left engine cooling fan. After repairs, go to **COOLING FAN FUNCTIONAL CHECK** .
25. Repair open in White wire between series/parallel cooling fan relay and left engine cooling fan. After repairs, go to **COOLING FAN FUNCTIONAL CHECK** .
26. Replace series/parallel cooling fan relay. After repairs, go to **COOLING FAN FUNCTIONAL CHECK** .
27. Replace PCM and program. See COMPUTER RELEARN PROCEDURES article in GENERAL INFORMATION. After repairs, go to **COOLING FAN FUNCTIONAL CHECK** .

**Cooling Fan Symptom Test No. 3**

1. Perform **COOLING FAN FUNCTIONAL CHECK** . Go to next step.
2. Connect scan tool and command low speed cooling fan relay on. Note operation of cooling fans, and then command all 3 cooling fan relays on. If both fans continued operating at same speed, go to step 8 . If fans changed speed when all 3 relays were energized, go to next step.
3. If left cooling fan stopped, go to step 9 . If left cooling fan did not stop, go to next step.
4. Remove high speed fan relay. With a test light connected to ground, probe high speed fan relay cavity C5

cardiagn.com

(Dark Blue wire). See **WIRING DIAGRAMS** . Using scan tool, command series/parallel fan relay and high speed fan relay on. If test light illuminates after a few seconds, go to next step. If test light does not illuminate after a few seconds, go to step 12 .

5. With a test light connected to ground, probe high speed fan relay cavity B7 (Brown wire). If test light illuminates, go to next step. If test light does not illuminate, go to step 13 .
6. With a test light connected to ground, probe high speed fan relay cavity B5 (Red wire). If test light illuminates, go to next step. If test light does not illuminate, go to step 14 .
7. Connect a fused jumper wire between high speed fan relay cavities C7 (Light Blue wire) and B5 (Red wire). If right fan operates, go to step 15 . If right fan does not operate, go to step 16 .
8. Turn ignition off and disconnect PCM connector C1. Remove low speed fan relay. Connect a fused jumper wire between low speed fan relay Red and Black wire cavities. Turn ignition on. Connect a fused jumper wire between ground and PCM connector C1 terminal No. 5 (Dark Blue wire). If cooling fans switch from low to high speed, go to step 22 . If cooling fans do not switch from low to high speed, go to step 17 .
9. Remove series/parallel fan relay. With a test light connected to ground, probe left and right cooling fans control circuit at series/parallel fan relay cavity C1 (Dark Blue wire). Using scan tool, command series/parallel fan relay and high speed fan relay on. If test light illuminates, go to next step. If test light does not illuminate, go to step 18 .
10. With a test light connected to battery voltage, probe series/parallel fan relay cavity C7 (Light Blue wire). If test light illuminates, go to next step. If test light does not illuminate, go to step 19 .
11. With a test light connected to ground, probe series/parallel fan relay cavity B3 (Brown wire). If test light illuminates, go to step 20 . If test light does not illuminate, go to step 21 .
12. Repair open in Dark Blue wire between high speed fan relay and splice. After repairs, go to **COOLING FAN FUNCTIONAL CHECK** .
13. Repair open in Brown wire between high speed fan relay and instrument panel fuse block. After repairs, go to **COOLING FAN FUNCTIONAL CHECK** .
14. Repair open in Red wire between high speed fan relay and engine compartment junction block. After repairs, go to **COOLING FAN FUNCTIONAL CHECK** .
15. Replace high speed fan relay. After repairs, go to **COOLING FAN FUNCTIONAL CHECK** .
16. Repair open in Light Blue wire (right fan feed circuit) between high speed fan relay and splice. After repairs, go to **COOLING FAN FUNCTIONAL CHECK** .
17. Repair open or short to voltage in Dark Blue wire between high speed fan relay and series/parallel fan relay and PCM. After repairs, go to **COOLING FAN FUNCTIONAL CHECK** .
18. Repair open in Dark Blue wire between series/parallel fan relay and splice. After repairs, go to **COOLING FAN FUNCTIONAL CHECK** .
19. Repair open in Black wire between right engine cooling fan, series/parallel fan relay, and ground. After repairs, go to **COOLING FAN FUNCTIONAL CHECK** .
20. Replace series/parallel fan relay. After repairs, go to **COOLING FAN FUNCTIONAL CHECK** .
21. Repair open in Brown wire between series/parallel fan relay and instrument panel fuse block. After repairs, go to **COOLING FAN FUNCTIONAL CHECK** .
22. Check for poor connections at PCM. Repair as necessary. After repairs, go to **COOLING FAN FUNCTIONAL CHECK** . If connections are okay, go to next step.

cardiagn.com

23. Replace PCM and program. See COMPUTER RELEARN PROCEDURES article in GENERAL INFORMATION. After repairs, go to **COOLING FAN FUNCTIONAL CHECK** .

**Diagnostic Aids**

Check for poor connections at PCM, cooling fan relays, and cooling fan motors. Inspect harness connectors for damaged, corroded or backed-out terminal pins. Inspect related wiring harnesses for damage or improper routing.

**1998 4.0L: "G" BODY (AURORA)**

**NOTE: Check for, and repair any A/C-related DTCs before proceeding with COOLING FAN FUNCTIONAL CHECK. See ACM SELF-DIAGNOSTICS in appropriate AUTOMATIC A/C-HEATER SYSTEMS article in AIR CONDITIONING & HEATING. If DTC P1660 is set or sets during COOLING FAN FUNCTIONAL CHECK, DTC must be diagnosed before proceeding. See appropriate SELF-DIAGNOSTICS article in ENGINE PERFORMANCE.**

**Description**

When PCM commands low speed fan operation, low speed cooling fan relay is grounded, allowing current to flow through both cooling fans in a series circuit to ground. If PCM commands high speed fan operation, all 3 cooling fan relays are grounded, changing circuit to a parallel circuit to ground. If a fault occurs, certain symptoms will occur due to series/parallel circuit design.

To determine if a fault is present, perform **COOLING FAN FUNCTIONAL CHECK** . If DTC P1660 is set, or sets during functional check, it must be diagnosed before proceeding with symptom checks.

PCM will command low speed fan operation when engine coolant temperature exceeds 229°F (109°C), transmission fluid temperature exceeds 302°F (150°C), A/C operation is requested, or coolant temperature at key-off is greater than 304°F (151°C) with system voltage greater than 12 volts. Fans will remain on for about 3 minutes.

PCM will command high speed fan operation when engine coolant temperature reaches 234°F (112°C), transmission fluid temperature is greater than 304°F (151°C), or when certain DTCs set. Fans will switch from high to low (except when DTCs set) when coolant temperature drops to less than 229°F (109°C). Fans will switch from low to off when coolant temperature drops to less than 216°F (102°C).

**NOTE: Left-side cooling fan is primary, and right-side cooling fan is secondary.**

**Cooling Fan Functional Check**

1. If On-Board Diagnostic (OBD) System Check has not been performed, see OBD SYSTEM CHECK in appropriate SELF-DIAGNOSTICS article in ENGINE PERFORMANCE. If OBD SYSTEM CHECK has been performed, go to next step.
2. Ensure engine coolant temperature is 41-212°F (5-100°C). Turn A/C controls off. Start engine and let

cardiagn.com

idle. Using scan tool, select RELAY CONTROL function. Monitor QUAD DRIVER 1 display. Command all relays off for 15 seconds, then on for 15 seconds. If QUAD DRIVER 1 display indicates a fault, go to DTC P1660. See appropriate SELF-DIAGNOSTICS article in ENGINE PERFORMANCE. If no fault is indicated, go to next step.

3. With engine idling, turn A/C on to maximum cooling. If any other DTCs have failed this ignition, diagnose DTCs set. See appropriate SELF-DIAGNOSTICS article in ENGINE PERFORMANCE. If no DTCs have failed this ignition, go to next step.
4. Turn engine off, key on. Ensure engine coolant temperature is less than 212°F (100°C). Observe fan operation while individually commanding low speed cooling fan relay on, then all relays on, then all relays off. With low speed cooling fan relay on, both fans should operate at low speed. With all relays commanded on, both fans should operate at high speed. With all relays commanded off, both fans should not operate (unless PCM detects a fault or high temperature condition). If both cooling fans operate as commanded, system is operating normally at this time. If both cooling fans do not operate as commanded, go to next step.
5. If only primary cooling fan operates with low speed cooling fan relay commanded on, then both fans operate when all relays are commanded on, go to next step. If operation is not as specified, go to step **7)** .
6. Repair short to ground White wire between primary cooling fan motor and series/parallel cooling fan relay. After repairs, go to step **8)** .
7. If neither cooling fan operates with low speed cooling fan relay commanded on, then only secondary cooling fan operates with all relays commanded on, perform **COOLING FAN SYMPTOM CHECK NO. 1** . If system does not operate as specified, go to next step.
8. If neither cooling fan operates with low speed cooling fan relay commanded on, then only primary cooling fan operates with all relays commanded on, go to **COOLING FAN SYMPTOM CHECK NO. 2** . If system does not operate as specified, go to next step.
9. If both cooling fans operate with low speed cooling fan relay commanded on, then only secondary cooling fan operates with all relays commanded on, go to **COOLING FAN SYMPTOM CHECK NO. 3** . If system does not operate as specified, go to next step.
10. If both cooling fans operate with low speed cooling fan relay commanded on, then only primary cooling fan operates with all relays commanded on, go to **COOLING FAN SYMPTOM CHECK NO. 4** . If system does not operate as specified, go to next step.
11. If neither cooling fan operates with low speed cooling fan relay commanded on, and also when all relays is commanded on, go to **COOLING FAN SYMPTOM CHECK NO. 5** . If system does not operate as specified, go to next step.
12. If either cooling fan operates when all relays are commanded off, go to **DIAGNOSTIC AIDS** . If system does not operate as specified, go to step **4)** .

**Cooling Fan Symptom Check No. 1**

1. If cooling fan functional check has been performed, go to next step. If cooling fan functional check has not been performed, go to **COOLING FAN FUNCTIONAL CHECK** .
2. Disconnect primary cooling fan motor harness connector. Turn ignition on. Using scan tool, select RELAY CONTROL function. Command low speed cooling fan relay No. 1 on. Using a DVOM, check voltage between primary cooling fan motor harness connector terminal "B" (Black wire) and ground. If reading is 10 volts or greater, go to next step. If reading is not as specified, go to step **6)** .

cardiagn.com

3. Using a fused jumper wire, jumper primary cooling fan motor harness connector terminals together. If secondary cooling fan operates, go to step **8)** . If secondary cooling fan does not operate, go to next step.
4. With primary cooling fan motor harness connector terminals still jumpered, remove series/parallel cooling fan relay. Using a DVOM, check voltage between series/parallel cooling fan relay cavity No. 30 (Red wire) and ground. If reading is 10 volts or greater, go to next step. If reading is not as specified, go to step **9)** .
5. Using a fused jumper wire, jumper series/parallel cooling fan relay cavities No. 30 (White wire) and 87A (Light Blue wire) together. If secondary cooling fan operates, go to step **10)** . If secondary cooling fan not operate, go to step **11)** .
6. Using scan tool, exit RELAY CONTROL. Remove low speed cooling fan relay. Using a DVOM, check voltage between cooling fan relay No. 1 cavity No. 30 (Red wire) and ground. If reading is 10 volts or greater, go to next step. If reading is not as specified, go to step **12)** .
7. Using a fused jumper wire, jumper cooling fan relay No. 1 cavities No. 30 (Red wire) and 87 (Black wire) together. Using a DVOM, check voltage between primary cooling fan motor harness connector terminal "B" (Black wire) and ground. If reading is 10 volts or greater, go to step **13)** . If reading is not as specified, go to step **14)** .
8. Replace primary cooling fan motor. After replacing motor, perform **COOLING FAN FUNCTIONAL CHECK** .
9. Repair open in White wire between primary cooling fan motor and series/parallel cooling fan relay. After repairs, perform **COOLING FAN FUNCTIONAL CHECK** .
10. Replace series/parallel cooling fan relay. After replacing relay, perform **COOLING FAN FUNCTIONAL CHECK** .
11. Repair open in Light Blue wire between series/parallel cooling fan relay and splice. After repairs, perform **COOLING FAN FUNCTIONAL CHECK** .
12. Repair open in Red wire between cooling fan relay No. 1 and COOL FAN fuse (60-amp). After repairs, perform **COOLING FAN FUNCTIONAL CHECK** .
13. Replace cooling fan relay No. 1. After replacing relay, perform **COOLING FAN FUNCTIONAL CHECK** .
14. Repair open in Black wire between cooling fan relay No. 1 and primary cooling fan motor. After repairs, perform **COOLING FAN FUNCTIONAL CHECK** .

**Cooling Fan Symptom Check No. 2**

1. If cooling fan functional check was performed, go to next step. If cooling fan functional check was not performed, go to **COOLING FAN FUNCTIONAL CHECK** .
2. Disconnect secondary cooling fan motor harness connector. Turn ignition on. Using scan tool, select RELAY CONTROL function. Command cooling fan relay No. 1 on. Using a fused jumper wire, jumper secondary cooling fan motor harness connector terminals together. If primary cooling fan operates, go to step **5)** . If primary cooling fan does not operate, go to next step.
3. With cooling fan relay No. 1 still commanded on, remove series/parallel cooling fan relay. Using a fused jumper wire, jumper series/parallel cooling fan relay cavities No. 30 (White wire) and 87A (Light Blue wire) together. If primary cooling fan operates, go to step **6)** . If primary cooling fan does not operate, go to next step.

cardiagn.com

4. With series/parallel cooling fan relay cavities still jumpered, use a DVOM and check voltage between secondary cooling fan motor harness connector terminal "B" (Light Blue wire) and ground. If reading is 10 volts or greater, go to step **7)** . If reading is not as specified, go to step **8)** .
5. Replace secondary cooling fan motor. After replacing motor, perform **COOLING FAN FUNCTIONAL CHECK** .
6. Replace series/parallel cooling fan relay. After replacing relay, perform **COOLING FAN FUNCTIONAL CHECK** .
7. Repair open in Black wire between secondary cooling fan motor and splice. After repairs, perform **COOLING FAN FUNCTIONAL CHECK** .
8. Repair open in Light Blue wire between series/parallel cooling fan rely and splice. After repairs, perform **COOLING FAN FUNCTIONAL CHECK** .

**Cooling Fan Symptom Check No. 3**

1. If cooling fan functional check was performed, go to next step. If cooling fan functional check was not performed, go to **COOLING FAN FUNCTIONAL CHECK** .
2. Turn ignition on. Using scan tool, select RELAY CONTROL function. Command all relays on. Remove fan series/parallel cooling fan relay. Using a voltmeter, check voltage between series/parallel cooling fan relay cavity No. 85 (Orange wire) and ground. If reading is 10 volts or greater, go to next step. If reading is not as specified, go to step **5)** .
3. Remove high speed cooling fan relay. Using an ohmmeter, check resistance between series/parallel cooling fan relay cavity No. 86 and high speed cooling fan relay cavity No. 86 (Dark Blue wire). If resistance is 5 ohms or less, go to next step. If resistance is not as specified, go to step **6)** .
4. Reconnect high speed cooling fan relay. With all 3 relays still commanded on, use a fused jumper wire and jumper series/parallel cooling fan relay cavities No. 30 (White wire) and 87 (Black wire) together. If both cooling fans operate, go to step **8)** . If not, go to step **7)** .
5. Repair open in Orange wire between series/parallel cooling fan relay cavity No. 85 and splice. After repairs, perform **COOLING FAN FUNCTIONAL CHECK** .
6. Repair open in Dark Blue wire between series/parallel cooling fan relay cavity No. 86 and splice. After repairs, perform **COOLING FAN FUNCTIONAL CHECK** .
7. Repair open in Black wire between series/parallel cooling fan relay cavity No. 87 and splice. After repairs, perform **COOLING FAN FUNCTIONAL CHECK** .
8. Replace series/parallel cooling fan relay. After replacing relay, perform **COOLING FAN FUNCTIONAL CHECK** .

**Cooling Fan Symptom Check No. 4**

1. If cooling fan functional check was performed, go to next step. If cooling fan functional check was not performed, go to **COOLING FAN FUNCTIONAL CHECK** .
2. Turn ignition on. Using scan tool, select RELAY CONTROL function. Command all 3 relays on. Remove series/parallel cooling fan relay. Using a DVOM, check voltage between high speed cooling fan relay cavity No. 85 (Orange wire) and ground. If reading is 10 volts or greater, go to next step. If reading is not as specified, go to step **6)** .
3. Check voltage between high speed cooling fan relay cavity No. 30 (Light Blue wire) and ground. If

cardiagn.com

reading is 10 volts or greater, go to next step. If reading is not as specified, go to step **7)** .

4. Remove high speed cooling fan relay. Using an ohmmeter, check resistance between high speed cooling fan relay cavity No. 86 and series/parallel cooling fan relay cavity No. 86 (Dark Blue wire). If resistance is 5 ohms or less, go to next step. If resistance is not as specified, go to step **8)** .
5. Reconnect series/parallel cooling fan relay. With all 3 relays still commanded on, use a fused jumper wire and jumper high speed cooling fan relay cavities No. 30 (Red wire) and 87 (Light Blue wire) together. If secondary cooling fan operates, go to step **10)** . If secondary cooling fan does not operate, go to step **9)** .
6. Repair open in Red wire between high speed cooling fan relay and COOLING FAN fuse (60-amp). After repairs, perform **COOLING FAN FUNCTIONAL CHECK** .
7. Repair open in Orange wire between high speed cooling fan relay and splice. After repairs, perform **COOLING FAN FUNCTIONAL CHECK** .
8. Repair open in Dark Blue wire between high speed cooling fan relay and splice. After repairs, perform **COOLING FAN FUNCTIONAL CHECK** .
9. Repair open in Light Blue wire between high speed cooling fan relay and splice. After repairs, perform **COOLING FAN FUNCTIONAL CHECK** .
10. Replace high speed cooling fan relay. After replacing relay, perform **COOLING FAN FUNCTIONAL CHECK** .

**Cooling Fan Symptom Check No. 5**

1. If cooling fan functional check was performed, go to next step. If cooling fan functional check was not performed, go to **COOLING FAN FUNCTIONAL CHECK** .
2. Check COOLING FAN fuse (60-amp). If fuse is okay, go to next step. If fuse is blown, go to step **4)** .
3. Remove cooling fan relay No. 1. Using a DVOM, check voltage between cooling fan relay No. 1 cavity No. 30 (Red wire) and ground. If reading is 10 volts or greater, go to step **8)** . If reading is not as specified, go to step **9)** .
4. Turn ignition switch to LOCK position. Replace COOLING FAN fuse (60-amp). If fuse immediately blows, go to step **10)** . If fuse does not immediately blow, go to next step.
5. Turn ignition on. Using scan tool, select RELAY CONTROL function. Command cooling fan relay No. 1 on. If fuse blows, go to step **11)** . If fuse does not blow, go to next step.
6. Command all 3 relays on. If fuse blows, go to next step. If fuse does not blow, system is operating normally at this time.
7. Using scan tool, exit RELAY CONTROL function. Replace COOLING FAN fuse (60-amp). Using scan tool, select RELAY CONTROL. Command cooling fan relay No. 1 on. If primary cooling fan operates, go to step **12)** . If primary cooling fan does not operate, go to step **13)** .
8. Repair open in Black wire between series/parallel cooling fan relay cavity No. 87 and ground, or between secondary cooling fan motor and ground. After repairs, perform **COOLING FAN FUNCTIONAL CHECK** .
9. Repair open in Red wire between COOLING FAN fuse (60-amp) and either cooling fan relay No. 1 or high speed cooling fan relay. After repairs, perform **COOLING FAN FUNCTIONAL CHECK** .
10. Repair short to ground in Red wire between COOLING FAN fuse (60-amp) and either cooling fan relay No. 1 or high speed cooling fan relay. After repairs, perform **COOLING FAN FUNCTIONAL CHECK** .

cardiagn.com

11. Repair short to ground in Black wire between cooling fan relay No. 1 and primary cooling fan motor. After repairs, perform **COOLING FAN FUNCTIONAL CHECK** .
12. Replace secondary cooling fan motor. After replacing motor, perform **COOLING FAN FUNCTIONAL CHECK** .
13. Replace primary cooling fan motor. After replacing motor, perform **COOLING FAN FUNCTIONAL CHECK** .

**Diagnostic Aids**

If cooling fans operate when all cooling fan relays are commanded off, and DTC P1660 is not set, either a cooling fan relay is stuck on or a cooling fan circuit is shorted to power. Whenever a repair is completed repeat cooling fan functional check. This will help diagnose possible multiple failures.

**1999 4.0L: AURORA, & 1998-99 4.6L: DEVILLE, ELDORADO & SEVILLE**

**Description**

**NOTE:** **Check for, and repair any A/C-related DTCs before proceeding with COOLING FAN FUNCTIONAL CHECK . See ACM SELF-DIAGNOSTICS in appropriate AUTOMATIC A/C-HEATER SYSTEMS article in AIR CONDITIONING & HEATING. If DTC P1660 is set or sets during COOLING FAN FUNCTIONAL CHECK, DTC must be diagnosed before proceeding. See appropriate SELF-DIAGNOSTICS article in ENGINE PERFORMANCE.**

When PCM commands low speed cooling fan operation, low speed cooling fan relay is grounded, allowing current to flow through both cooling fans in a series circuit to ground. If PCM commands high speed cooling fan operation, all 3 cooling fan relays are grounded, changing circuit to a parallel circuit to ground. If a fault occurs, certain symptoms will occur due to series/parallel circuit design.

The PCM will command low speed cooling fan operation under the following conditions:

- Engine coolant temperature exceeds 229°F (109°C).
- Transmission fluid temperature exceeds 302°F (150°C).
- A/C operation is requested.
- If coolant temperature at key-off is greater than 304°F (151°C), with system voltage greater than 12 volts, cooling fans will remain on for about 3 minutes.

The PCM will command high speed cooling fan operation under the following conditions:

- Engine coolant temperature reaches 234°F (112°C).
- Transmission fluid temperature is greater than 304°F (151°C).
- When certain DTCs set.

Cooling fans will switch from high speed to low speed, except when DTCs are set, when coolant temperature

cardiagn.com

drops to less than 229°F (109°C). Cooling fans will switch from low speed to off when coolant temperature drops to less than 216°F (102°C).

**Cooling Fan Functional Check**

1. If On-Board Diagnostic (OBD) System Check has not been performed, see appropriate SELF-DIAGNOSTICS article in ENGINE PERFORMANCE. If OBD System Check has been performed, go to next step.
2. Ensure engine coolant temperature is between 41-212°F (5-100°C). Turn A/C controls off. Start engine and let idle. Using scan tool, select RELAY CONTROL function. Monitor DRIVER 1 display on scan tool. Command all relays off for 15 seconds, then on for 15 seconds. If DRIVER 1 display indicates a fault, go to DTC P1660. See appropriate SELF-DIAGNOSTICS article in ENGINE PERFORMANCE. If no fault is indicated, go to next step.
3. With engine idling, turn A/C on to maximum cooling. If any other DTCs set, diagnose DTCs before continuing this procedure. See appropriate SELF-DIAGNOSTICS article in ENGINE PERFORMANCE. If no DTCs are set, go to next step.
4. Turn ignition off. Disconnect PCM connector C2. With a test light connected to ground, probe PCM connector C2 terminals No. 32 (Dark Green wire) and No. 33 (Dark Blue wire). If test light illuminates at both terminals, go to next step. If test light does not illuminate, go to step 14 .
5. Reconnect PCM connector C2 (if disconnected). Ensure engine coolant temperature is less than 212°F (100°C). Observe cooling fan operation while individually commanding fan relay No. 1 on, then all relays on, then all relays off. With fan relay No. 1 on, both cooling fans should operate at low speed. With all relays commanded on, both cooling fans should operate at high speed. With all relays commanded off, both cooling fans should not operate (unless PCM detects a fault or high temperature condition). If both cooling fans operate as commanded, system is operating normally at this time. If both cooling fans do not operate as commanded, go to next step.
6. If only cooling fan No. 1 (left) runs with fan relay No. 1 commanded on, and then both cooling fans operate when all relays are commanded on, go to next step. If operation is not as specified, go to step 8 .
7. Repair White wire for a short to ground between cooling fan No. 1 and series/parallel cooling fan relay. Go to step 5 .
8. If neither cooling fan operates with fan relay No. 1 commanded on, and only cooling fan No. 2 (right) operates with all relays commanded on, go to **COOLING FAN SYMPTOM TEST NO. 1** . If system does not operate as specified, go to next step.
9. If neither cooling fan operates with fan relay No. 1 commanded on, and only cooling fan No. 1 operates with all relays commanded on, go to **COOLING FAN SYMPTOM TEST NO. 2** . If system operated other than as specified, go to next step.
10. If both cooling fans operate with fan relay No. 1 commanded on, and only cooling fan No. 2 operates with all relays commanded on, go to **COOLING FAN SYMPTOM TEST NO. 3** . If system operated other than as specified, go to next step.
11. If both cooling fans operate with fan relay No. 1 commanded on, and only cooling fan No. 1 operates with all relays commanded on, go to **COOLING FAN SYMPTOM TEST NO. 4** . If system operated other than as specified, go to next step.
12. If neither cooling fan operates with either fan relay No. 1 or all relays commanded on, go to **COOLING FAN SYMPTOM TEST NO. 5** . If system does not operate as specified, go to next step.

cardiagn.com

13. If either cooling fan operates when all relays are commanded off, go to **DIAGNOSTIC AIDS** . If system does not operate as specified, go to step 5 .
14. Check for cause of no power. Possible causes for no power are:
    - Blown cooling fan relay battery feed fuse.
    - Open in cooling fan relay coil.
    - Open in cooling fan relay control circuit.

    After repairs, go to step 5 .

**Cooling Fan Symptom Test No. 1**

**NOTE: Cooling fan symptom test No. 1 is to be used if neither cooling fan operates when low speed operation is requested, and only right cooling fan operates with high speed request. DTC P1660 is not set.**

1. Perform **COOLING FAN FUNCTIONAL CHECK** . Go to next step.
2. Disconnect cooling fan No. 1 (left) connector. Turn ignition on. Using scan tool, select RELAY CONTROL function. Command relay No. 1 on. Using a DVOM, measure voltage between ground and cooling fan No. 1 connector terminal "B" (Black wire). See **WIRING DIAGRAMS** . If reading is 10 volts or greater, go to next step. If reading is not as specified, go to step 6 .
3. Using a fused jumper wire, jumper cooling fan No. 1 connector terminals together. If cooling fan No. 2 (right) operates, go to step 8 . If cooling fan No. 2 does not operate, go to next step.
4. With cooling fan No. 1 connector terminals still jumpered, remove fan relay No. 2 (series/parallel) from engine compartment junction block. Use a DVOM to measure voltage between ground and fan relay No. 2 connector terminal No. 30 (White wire). If reading is 10 volts or greater, go to next step. If reading is not as specified, go to step 9 .
5. Connect a fused jumper wire between fan relay No. 2 (series/parallel) connector terminals No. 30 (White wire) and No. 87A (Light Blue wire). If cooling fan No. 2 operates, go to step 10 . If cooling fan No. 2 does not operate, go to step 11 .
6. Using scan tool, exit RELAY CONTROL function. Remove fan relay No. 1 (low speed). Use a DVOM to measure voltage between ground and fan relay No. 1 connector terminal No. 30 (Red wire). If reading is 10 volts or greater, go to next step. If reading is not as specified, go to step 12 .
7. Connect a fused jumper wire between fan relay No. 1 (low speed) connector terminals No. 30 (Red wire) and No. 87 (Black wires). Use DVOM to measure voltage between ground and Black wire at cooling fan No. 1 connector terminal "B". If reading is 10 volts or greater, go to step 13 . If reading is not as specified, go to step 14 .
8. Replace cooling fan No. 1 (left). Go to **COOLING FAN FUNCTIONAL CHECK** .
9. Repair open in White wire between cooling fan No. 1 and fan relay No. 2 (series/parallel). Go to **COOLING FAN FUNCTIONAL CHECK** .
10. Replace fan relay No. 2 (series/parallel). Go to **COOLING FAN FUNCTIONAL CHECK** .
11. Repair open in Light Blue wire between series/parallel cooling fan relay, and splice between high speed cooling fan relay and secondary cooling fan motor. Go to **COOLING FAN FUNCTIONAL CHECK** .
12. Repair open in Red wire between fan relay No. 1 (low speed) and COOLING FAN fuse (60-amp). Go to

cardiagn.com

**COOLING FAN FUNCTIONAL CHECK** .

13. Replace fan relay No. 1 (low speed). Go to **COOLING FAN FUNCTIONAL CHECK** .
14. Repair open in Black wire between fan relay No. 1 (low speed) and cooling fan No. 1 (left). Go to **COOLING FAN FUNCTIONAL CHECK** .

**Cooling Fan Symptom Test No. 2**

**NOTE:** **Cooling fan symptom test No. 2 is to be used if neither cooling fan operates when low speed operation is requested, and only cooling fan No. 1 (left) operates with high speed request. DTC P1660 is not set.**

1. Perform **COOLING FAN FUNCTIONAL CHECK** . Go to next step.
2. Disconnect cooling fan No. 2 (right) connector. Turn ignition on. Using scan tool, select RELAY CONTROL function. Command fan relay No. 1 on. Connect a fused jumper wire between cooling fan No. 2 connector terminals. See **WIRING DIAGRAMS** . If cooling fan No. 1 (left) operates, go to step **5)** . If cooling fan No. 1 does not operate, go to next step.
3. With fan relay No. 1 still commanded on, remove fan relay No. 2 (series/parallel). Connect a fused jumper wire between fan relay No. 2 connector terminals No. 30 (White wire) and No. 87A (Light Blue wire). If cooling fan No. 1 (left) operates, go to step **6)** . If cooling fan No. 1 does not operate, go to next step.
4. With fan relay No. 2 (series/parallel) terminals still jumpered, use a DVOM to measure voltage between ground and cooling fan No. 2 connector terminal "B" (Light Blue wire). If reading is 10 volts or greater, go to step **7)** . If reading is not as specified, go to step **8)** .
5. Replace cooling fan No. 2. Go to **COOLING FAN FUNCTIONAL CHECK** .
6. Replace fan relay No. 2 (series/parallel). Go to **COOLING FAN FUNCTIONAL CHECK** .
7. Repair open in Black wire between cooling fan No. 2 and splice. Go to **COOLING FAN FUNCTIONAL CHECK** .
8. Repair open in Light Blue wire between fan relay No. 2 (series/parallel) and splice. Go to **COOLING FAN FUNCTIONAL CHECK** .

**Cooling Fan Symptom Test No. 3**

**NOTE:** **Cooling fan symptom test No. 3 is to be used if both cooling fans operate when low speed operation is requested, and only cooling fan No. 2 (right) operates with high speed request. DTC P1660 is not set.**

1. Perform **COOLING FAN FUNCTIONAL CHECK** . Go to next step.
2. Turn ignition on. Using scan tool, select RELAY CONTROL function. Command all relays on. Remove fan relay No. 2 (series/parallel). Use a DVOM to measure voltage between ground and fan relay No. 2 connector terminal No. 85 (Orange wire). See **WIRING DIAGRAMS** . If reading is 10 volts or greater, go to next step. If reading is not as specified, go to step 5 .
3. Remove fan relay No. 3 (high speed). Use a DVOM to measure resistance of Dark Blue wire between fan relay No. 2 connector terminal No. 86 and fan relay No. 3 connector terminal No. 86. If resistance is 5 ohms or less, go to next step. If resistance is not as specified, go to step 6 .

cardiagn.com

4. Reconnect fan relay No. 3. With all 3 relays still commanded on, connect a fused jumper wire between fan relay No. 2 connector terminals No. 30 (White wire) and No. 87 (Black wire). If both cooling fans operate, go to step 8 . If both cooling fans do not operate, go to step 7 .
5. Repair open in Orange wire between fan relay No. 2 (series/parallel) and splice. Go to **COOLING FAN FUNCTIONAL CHECK** .
6. Repair open in Dark Blue wire between fan relay No. 2 (series/parallel) and splice. Go to **COOLING FAN FUNCTIONAL CHECK** .
7. Repair open in Black wire between fan relay No. 2 (series/parallel) and splice. Go to **COOLING FAN FUNCTIONAL CHECK** .
8. Replace fan relay No. 2 (series/parallel). Go to **COOLING FAN FUNCTIONAL CHECK** .

**Cooling Fan Symptom Test No. 4**

**NOTE:** **Cooling fan symptom test No. 4 is to be used if both cooling fans operate when low speed operation is requested, and only cooling fan No. 1 (left) operates with high speed request. DTC P1660 is not set.**

1. Perform **COOLING FAN FUNCTIONAL CHECK** . Go to next step.
2. Turn ignition on. Using scan tool, select RELAY CONTROL function. Command all 3 relays on. Remove fan relay No. 3 (high speed). Use a DVOM to measure voltage between ground and fan relay No. 3 connector terminal No. 85 (Orange wire). See **WIRING DIAGRAMS** . If reading is 10 volts or greater, go to next step. If reading is not as specified, go to step 6 .
3. Use a DVOM to measure voltage between ground and fan relay No. 3 connector terminal No. 30 (Light Blue wire). If reading is 10 volts or greater, go to next step. If reading is not as specified, go to step 7 .
4. Remove fan relay No. 2 (series/parallel). Use a DVOM to measure resistance of Dark Blue wire between fan relay No. 3 connector terminal No. 86 and fan relay No. 2 connector terminal No. 86. If resistance is 5 ohms or less, go to next step. If resistance is not as specified, go to step 8 .
5. Reconnect fan relay No. 2. With all 3 relays still commanded on, connect a fused jumper wire between fan relay No. 3 connector terminals No. 30 (Red wire) and No. 87 (Light Blue wire). If cooling fan No. 2 operates, go to step 10 . If cooling fan No. 2 does not operate, go to step 9 .
6. Repair open in Red wire or circuit between fan relay No. 3 and COOLING FAN fuse (60-amp) or COOL FANS fuse (50-amp). Go to **COOLING FAN FUNCTIONAL CHECK** .
7. Repair open in Orange wire between fan relay No. 3 and splice. Go to **COOLING FAN FUNCTIONAL CHECK** .
8. Repair open in Dark Blue wire between fan relay No. 3 and splice. Go to **COOLING FAN FUNCTIONAL CHECK** .
9. Repair open in Light Blue wire between fan relay No. 3 and splice. Go to **COOLING FAN FUNCTIONAL CHECK** .
10. Replace fan relay No. 3 (high speed). Go to **COOLING FAN FUNCTIONAL CHECK** .

**Cooling Fan Symptom Test No. 5**

**NOTE:** **Cooling fan symptom test No. 5 is to be used if neither cooling fan operates**

cardiagn.com

**when low or high speed operation is requested and DTC P1660 is not set.**

1. Perform **COOLING FAN FUNCTIONAL CHECK** . Go to next step.
2. Check COOLING FAN fuse (60-amp) or COOL FANS fuse (50-amp). If fuse is okay, go to next step. If fuse is blown, go to step 4 .
3. Remove fan relay No. 1 (low speed). Use a DVOM to measure voltage between ground and fan relay No. 1 connector terminal No. 30 (Red wire). See **WIRING DIAGRAMS** . If reading is 10 volts or greater, go to step 8 . If reading is not as specified, go to step 9 .
4. Turn ignition switch to LOCK position. Replace COOLING FAN fuse (60-amp) or COOL FANS fuse (50-amp). If fuse blows, go to step 10 . If fuse does not blow, go to next step.
5. Turn ignition on. Using scan tool, select RELAY CONTROL function. Command fan relay No. 1 on. If fuse blows, go to step 11 . If fuse does not blow, go to next step.
6. Command all 3 relays on. If fuse blows, go to next step. If fuse does not blow, system is operating normally at this time.
7. Exit RELAY CONTROL function. Replace COOLING FAN fuse (60-amp) or COOL FANS fuse (50-amp). Using scan tool, select RELAY CONTROL function. Command fan relay No. 1 on. If cooling fan No. 1 operates, go to step 12 . If cooling fan No. 1 does not operate, go to step 13 .
8. Repair open in Black wire between fan relay No. 2 (series/parallel) and ground, or between cooling fan No. 2 and ground. Go to **COOLING FAN FUNCTIONAL CHECK** .
9. Repair open in Red wire between COOLING FAN fuse (60-amp) or COOL FANS fuse (50-amp) and either fan relay No. 1 (low speed) or fan relay No. 3 (high speed). Go to **COOLING FAN FUNCTIONAL CHECK** .
10. Repair short to ground in Red wire between COOLING FAN fuse (60-amp) or COOL FANS fuse (50-amp) and either fan relay No. 1 (low speed) or fan relay No. 3 (high speed). Go to **COOLING FAN FUNCTIONAL CHECK** .
11. Repair short to ground in Black wire between fan relay No. 1 and cooling fan No. 1. Go to **COOLING FAN FUNCTIONAL CHECK** .
12. Replace cooling fan No. 1. Go to **COOLING FAN FUNCTIONAL CHECK** .
13. Replace cooling fan No. 2. Go to **COOLING FAN FUNCTIONAL CHECK** .

**Diagnostic Aids**

If cooling fans run when all cooling fan relays are commanded off, and DTC P1660 is not set, either a cooling fan relay is stuck on, or a cooling fan circuit is shorted to power. Whenever a repair is completed, repeat **COOLING FAN FUNCTIONAL CHECK** . This will help diagnose possible multiple failures.

## 5.7L: CORVETTE

**Description**

Cooling fans are controlled by PCM based on various inputs. Mini relays are used to control cooling fan operation. Battery voltage is supplied to coil of cool fan 1 mini relay No. 45 (low speed), ignition voltage is supplied to coil of cool fan 2 mini relay No. 43 (high speed), and cool fan 3 mini relay No. 44 (series/parallel). Powertrain Control Module (PCM) controls low speed operation by providing a ground path for cool fan 1 mini

cardiagn.com

relay No. 45. PCM controls high speed operation by providing an additional ground path for cool fan 2 relay No. 43 and cool fan 3 mini relay No. 44.

Left and right cooling fan motors are connected in series when cool fan 1 mini relay No. 45 is energized. This allows both cooling fan motors to run at low speed. When all 3 cooling fan relays are energized, both cooling fan motors run at high speed. High speed is possible because fan relays are wired in a parallel circuit. When PCM detects that certain DTCs are set, PCM will enable cooling fans to run continuously.

The PCM will command low speed operation on at 226°F (108°C) and off at 217°F (103°C). PCM will command high speed operation on at 235°F (113°C) and off at 226°F (108°C).

**Cooling Fan Functional Check**

1. If On-Board Diagnostic (OBD) System Check has not been performed, see appropriate SELF-DIAGNOSTICS article in ENGINE PERFORMANCE. If OBD System Check has been performed, go to next step.
2. Install scan tool. Check for DTCs. If any DTCs are set, see appropriate SELF-DIAGNOSTICS article in ENGINE PERFORMANCE. If no DTCs are set, go to next step.
3. Ensure coolant temperature is less than 212°F (100°C). Turn ignition on, engine off. Turn A/C off. If cooling fans are not operating, go to next step. If cooling fans are operating, go to **COOLING FAN SYMPTOM TEST NO. 1** .
4. Using scan tool, select RELAY CONTROL function. Command cooling fan relay No. 1 on. If both cooling fans operate, go to next step. If both cooling fans do not operate, go to **COOLING FAN SYMPTOM TEST NO. 2** .
5. Using scan tool, select RELAY CONTROL function. Command all 3 cooling fan relays on. If both cooling fans operate at high speed, go to next step. If both cooling fans do not operate at high speed, go to **COOLING FAN SYMPTOM TEST NO. 3** .
6. Using scan tool, exit RELAY CONTROL function. With A/C off, start engine. If cooling fans operate, go to step 8 . If cooling fans do not operate, go to next step.
7. Turn A/C on. If cooling fans operate, system is operating normally at this time. If cooling fans do not operate, go to step 9 .
8. Using scan tool, view A/C REQUEST on display. If scan tool displays YES, diagnose A/C compressor controls. See A/C COMPRESSOR CLUTCH CONTROLS - ALL MODELS article in AIR CONDITIONING & HEATING. If scan tool does not display YES, go to step 10 .
9. Using scan tool, view A/C REQUEST on display. If scan tool displays YES, diagnose A/C refrigerant pressure sensor. See DTC P0530 in appropriate SELF-DIAGNOSTICS article in ENGINE PERFORMANCE. If scan tool does not display YES, diagnose A/C compressor controls. See A/C COMPRESSOR CLUTCH CONTROLS - ALL MODELS article in AIR CONDITIONING & HEATING.
10. Replace PCM and program. See COMPUTER RELEARN PROCEDURES article in GENERAL INFORMATION. Repeat **COOLING FAN FUNCTIONAL CHECK** .

**Cooling Fan Symptom Test No. 1**

1. Perform **COOLING FAN FUNCTIONAL CHECK** . Go to next step.

cardiagn.com

2. Disconnect cool fan 1 mini relay No. 45. If both cooling fans are off, go to step 6 . If both cooling fans are operating, go to next step.
3. Disconnect cool fan 3 mini relay No. 44. If both cooling fans are off, go to next step. If both cooling fans are operating, go to step 8 .
4. With a test light connected to battery voltage, probe cool fan 3 mini relay No. 44 connector terminal No. 86 (Dark Blue wire). See **WIRING DIAGRAMS** . If test light illuminates, go to next step. If test light does not illuminate, go to step 9 .
5. Turn ignition off. With test light still connected, disconnect PCM Blue connector C2. Turn ignition on. If test light illuminates, go to step 10 . If test light does not illuminate, go to step 11 .
6. With a test light connected to battery voltage, probe cool fan 1 mini relay No. 45 connector terminal No. 86 (Dark Green wire). If test light illuminates, go to next step. If test light does not illuminate, go to step 9 .
7. Turn ignition off. With test light still connected, disconnect PCM harness connector C1 (Red). Turn ignition on. If test light illuminates, go to step 10 . If test light does not illuminate, go to step 11 .
8. Check Light Blue wire for a short to power between cool fan 1 mini relay No. 45 and left cooling fan motor. Also, check White wire for a short to power between cool fan relay 3 mini relay No. 44 and right cooling fan motor. Repair as necessary. Go to **COOLING FAN FUNCTIONAL CHECK** .
9. Replace cool fan 3 mini relay No. 44. Go to **COOLING FAN FUNCTIONAL CHECK** .
10. Check Dark Blue wire for a short to ground between PCM harness connector C2 terminal No. 28 and cool fan 2 mini relay No. 43 and cool fan 3 mini relay No. 44. Also, check Dark Green wire for a short to power between PCM harness connector C1 terminal No. 43 and cool fan 1 mini relay No. 45. Repair as necessary. Go to **COOLING FAN FUNCTIONAL CHECK** .
11. Replace PCM and program. See COMPUTER RELEARN PROCEDURES article in GENERAL INFORMATION. Go to **COOLING FAN FUNCTIONAL CHECK** .

**Cooling Fan Symptom Test No. 2**

1. Perform **COOLING FAN FUNCTIONAL CHECK** . Go to next step.
2. If either cooling fan operates when cool fan 1 mini relay No. 45 is commanded on, go to next step. If neither cooling fan operates when cool fan 1 mini relay No. 45 is commanded on, go to step 5 .
3. Using scan tool, select RELAY CONTROL function. Command cool fan 1 mini relay No. 45 on. If other cooling fan stopped operating, go to step 19 . If other cooling fan did not stop operating, go to next step.
4. Disconnect cool fan 2 mini relay No. 43. If cooling fan stopped operating, go to step 20 . If cooling fan did not stop operating, go to step 21 .
5. Using scan tool, select RELAY CONTROL function. Command cool fan 1 mini relay No. 45. Disconnect cool fan 1 mini relay No. 45. With a test light connected to battery voltage, probe cool fan 1 mini relay No. 45 connector terminal No. 86 (Dark Green wire). See **WIRING DIAGRAMS** . If test light illuminates, go to next step. If test light does not illuminate, go to step 13 .
6. With a test light connected to ground, probe both battery feed circuits at cool fan 1 mini relay No. 45. If test light illuminates at both circuits, go to next step. If test light does not illuminate at both circuits, go to step 22 .

**NOTE: Jumper wire will need to be left in cool fan 1 mini relay No. 45 connector**

cardiagn.com

**for remainder of test procedure.**

7. Connect a fused jumper wire between cool fan 1 mini relay No. 45 connector terminals No. 87 (Light Blue wire) and No. 30 (battery feed circuit). If both cooling fans operate, go to step 23 . If both cooling fans do not operate, go to next step.
8. Disconnect left cooling fan motor connector. With a test light connected to ground, probe left cooling fan motor connector terminal "B" (Light Blue wire). If test light illuminates, go to next step. If test light does not illuminate, go to step 24 .
9. Connect a second fused jumper wire between left cooling fan connector terminals. If right cooling fan operates, go to step 16 . If right cooling fan does not operate, go to next step.
10. Reconnect left cooling fan motor connector. Disconnect cool fan 3 mini relay No. 44. With a test light connected to ground, probe cool fan 3 mini relay No. 44 connector terminal No. 30 (Black wire). If test light illuminates, go to next step. If test light does not illuminate, go to step 25 .
11. Using a second jumper wire, connect cool fan 3 mini relay No. 44 connector terminals No. 30 (battery feed circuit) and No. 87A (White wire) together. If cooling fans operate, go to step 26 . If cooling fans do not operate, go to next step.
12. Reconnect cool fan 3 mini relay No. 44. Disconnect right cooling fan motor connector. With a test light connected to ground, probe right cooling fan motor connector terminal "B" (White wire). If left cooling fan operates, go to step 16 . If left cooling fan does not operate, go to step 18 .
13. Ensure test light is still connected. Turn ignition off. Disconnect PCM harness connector C1 (Red). Connect a fused jumper wire between PCM connector C1 terminal No. 43 (Dark Green wire) and ground. If test light illuminates, go to step 20 . If test light does not illuminate, go to step 21 .
14. Check for poor PCM harness connections. Repair as necessary. Go to **COOLING FAN FUNCTIONAL CHECK** . If no problem is found, go to step 27 .
15. Repair open or short to power in Dark Green wire between PCM harness connector C1 terminal No. 43 and cool fan 1 mini relay No. 45. Go to **COOLING FAN FUNCTIONAL CHECK** .
16. Check for poor cooling fan motor connections. Repair as necessary. Go to **COOLING FAN FUNCTIONAL CHECK** . If no problem is found, go to next step.
17. Replace right cooling fan motor. Go to **COOLING FAN FUNCTIONAL CHECK** .
18. Repair open in Black wire between right cooling fan motor and ground. Go to **COOLING FAN FUNCTIONAL CHECK** .
19. Replace cooling fan motor which was not operating correctly. Go to **COOLING FAN FUNCTIONAL CHECK** .
20. Replace cool fan 2 mini relay No. 43. Go to **COOLING FAN FUNCTIONAL CHECK** .
21. Repair Black wire for a short to ground between cool fan 3 mini relay No. 44 and left cooling fan motor. Go to **COOLING FAN FUNCTIONAL CHECK** .
22. Repair open or short to ground in circuit that did not illuminate test light. Go to **COOLING FAN FUNCTIONAL CHECK** .
23. Replace cool fan 1 mini relay No. 45. Go to **COOLING FAN FUNCTIONAL CHECK** .
24. Repair open in Light Blue wire between cool fan 1 mini relay No. 45 and left cooling fan motor. Go to **COOLING FAN FUNCTIONAL CHECK** .
25. Repair open in Black wire between cool fan 3 mini relay No. 43 and left cooling fan motor. Go to

cardiagn.com

**COOLING FAN FUNCTIONAL CHECK** .

26. Replace cool fan 3 mini relay No. 43. Go to **COOLING FAN FUNCTIONAL CHECK** .
27. Replace PCM and program. See COMPUTER RELEARN PROCEDURES article in GENERAL INFORMATION. Go to **COOLING FAN FUNCTIONAL CHECK** .

**Cooling Fan Symptom Test No. 3**

1. Perform **COOLING FAN FUNCTIONAL CHECK** . Go to next step.
2. Using scan tool, select RELAY CONTROL function. Command cool fan 1 mini relay No 45 on and note operation of cooling fans. While observing cooling fans, command all 3 cooling fan relays on. If no change is noted in cooling fan operation, go to step 8 . If a change in cooling fan operation is noted, go to next step.
3. If left cooling fan motor stops operating, go to step 9 . If left cooling fan continues to operate, go to next step.
4. Disconnect cool fan 2 mini relay No. 43. With a test light connected to battery voltage, probe cool fan 2 mini relay No. 43 connector terminal No. 86 (Dark Blue wire). See **WIRING DIAGRAMS** . Using scan tool, select RELAY CONTROL function. Command cool fan relay 2 mini relay No. 43 and cool fan 3 mini relay No. 44 on. If test light illuminates, go to next step. If test light does not illuminate, go to step 12 .
5. With a test light connected to ground, probe cool fan 2 mini relay No. 43 connector terminal No. 85 (ignition feed circuit). If test light illuminates, go to next step. If test light does not illuminate, go to step 13 .
6. With a test light connected to ground, probe cool fan 2 mini relay No. 43 connector terminal No. 30 (battery feed circuit). If test light illuminates, go to next step. If test light does not illuminate, go to step 14 .
7. Connect a fused jumper wire between cool fan 2 mini relay No. 43 connector terminals No. 30 (battery feed circuit) and No. 87 (White wire). If right cooling fan operates, go to step 15 . If right cooling fan does not operate, go to step 16 .
8. Turn ignition off. Disconnect PCM Blue connector C2. Disconnect cool fan 1 mini relay No. 45. Connect a fused jumper wire between cool fan 1 mini relay No. 45 connector terminals No. 30 (battery feed circuit) and No. 87 (Light Blue wire). Turn ignition on. Using an additional jumper wire, connect PCM harness connector C2 terminal No. 28 (Dark Blue wire) to ground. If cooling fans switch from low speed to high speed, go to step 22 . If cooling fans do not switch from low speed to high speed, go to step 17 .
9. Disconnect cool fan 3 mini relay No. 44. With a test light connected to battery voltage, probe cool fan 3 mini relay No. 44 connector terminal No. 86 (Dark Blue wire). Using scan tool, select RELAY CONTROL function. Command cool fan relay 2 mini relay No. 43 and cool fan 3 mini relay No. 44 on. If test light illuminates, go to next step. If test light does not illuminate, go to step 18 .
10. With a test light connected to battery voltage, probe cool fan 3 mini relay No. 44 connector terminal No. 87 (Black wire). If test light illuminates, go to next step. If test light does not illuminate, go to step 19 .
11. With a test light connected to ground, probe cool fan 3 mini relay No. 44 connector terminal No. 86 (ignition feed circuit). If test light illuminates, go to step 20 . If test light does not illuminate, go to step 21 .
12. Repair open in Dark Blue between cool fan 2 mini relay No. 43 and splice. Go to **COOLING FAN FUNCTIONAL CHECK** .

cardiagn.com

13. Repair open in ignition feed circuit between COOL FAN 3 fuse No. 14 (10-amp) and cavity No. 86 at cool fan 2 mini relay No. 43. Go to **COOLING FAN FUNCTIONAL CHECK** .
14. Repair open in battery feed circuit between COOL FAN 2 fuse No. 46 (30-amp) and cavity No. 30 at cool fan 2 mini relay No. 43. Go to **COOLING FAN FUNCTIONAL CHECK** .
15. Replace cool fan 2 mini relay No. 43. Go to **COOLING FAN FUNCTIONAL CHECK** .
16. Repair open in White wire between cool fan 2 mini relay No. 43 and splice. Go to **COOLING FAN FUNCTIONAL CHECK** .
17. Repair open or short to power in Dark Blue wire between PCM connector C2 terminal No. 28 and cool fan 2 mini relay No. 43 and cool fan 3 mini relay No. 44. Go to **COOLING FAN FUNCTIONAL CHECK** .
18. Repair open in Dark Blue wire between cool fan 3 mini relay No. 44 and splice. Go to **COOLING FAN FUNCTIONAL CHECK** .
19. Repair open in Black wire between cool fan 3 mini relay No. 44 and ground. Go to **COOLING FAN FUNCTIONAL CHECK** .
20. Replace cool fan 3 mini relay No. 44. Go to **COOLING FAN FUNCTIONAL CHECK** .
21. Repair open in ignition feed circuit between COOL FAN 3 fuse No. 14 (10-amp) and cavity No. 86 at cool fan 3 mini relay No. 44. Go to **COOLING FAN FUNCTIONAL CHECK** .
22. Check PCM for poor harness connections. Repair as necessary. Go to **COOLING FAN FUNCTIONAL CHECK** . If no problem is found, go to next step.
23. Replace PCM and program. See COMPUTER RELEARN PROCEDURES article in GENERAL INFORMATION. Go to **COOLING FAN FUNCTIONAL CHECK** .

## REMOVAL & INSTALLATION

### COOLING FAN CAVALIER (2.2L)

**IMPORTANT: Usually, electric cooling fan motors, fans, shrouds, and brackets are available separately. Always consult a parts catalog**

**CAUTION: Before servicing any electrical component, the ignition key must be in the OFF or LOCK position and all electrical loads must be OFF, unless instructed otherwise in these procedures. If a tool or equipment could easily come in contact with a live exposed electrical terminal, also disconnect the negative battery cable. Failure to follow these precautions may cause personal injury and/or damage to the vehicle or its components.**

#### Removal

1. Disconnect the negative battery cable.
2. Disconnect the wiring harness electrical connector from the motor and the fan frame. See **Fig. 3** .
3. Remove the fan assembly from the radiator support. See **Fig. 4** .

cardiagn.com

**CAUTION: If a fan blade is bent or damaged in any way, do not repair or reuse the damaged part. Always replace a bent or damaged fan blade. Fan blades that have been damaged can not be assured of proper balance and could fail and fly apart during subsequent use. This creates an extremely dangerous situation.The fan blades must remain in proper balance. You cannot assure fan blade balance once a fan blade has been bent or damaged. A fan blade that is not in proper balance could fail and fly apart during use, creating an extremely dangerous situation.**

4. A fan blade that is not in proper balance could fail and fly apart during use, creating an extremely dangerous situation.

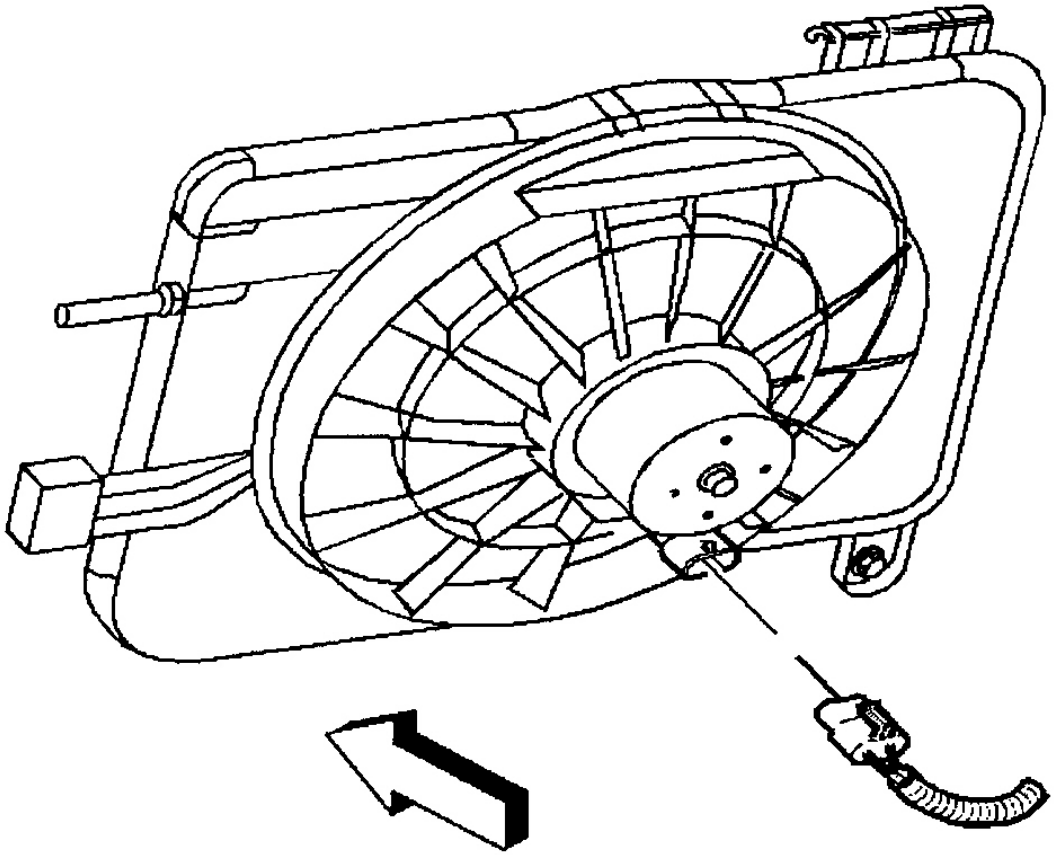


**Fig. 3: View Of Cooling Fan Assembly**

cardiagn.com

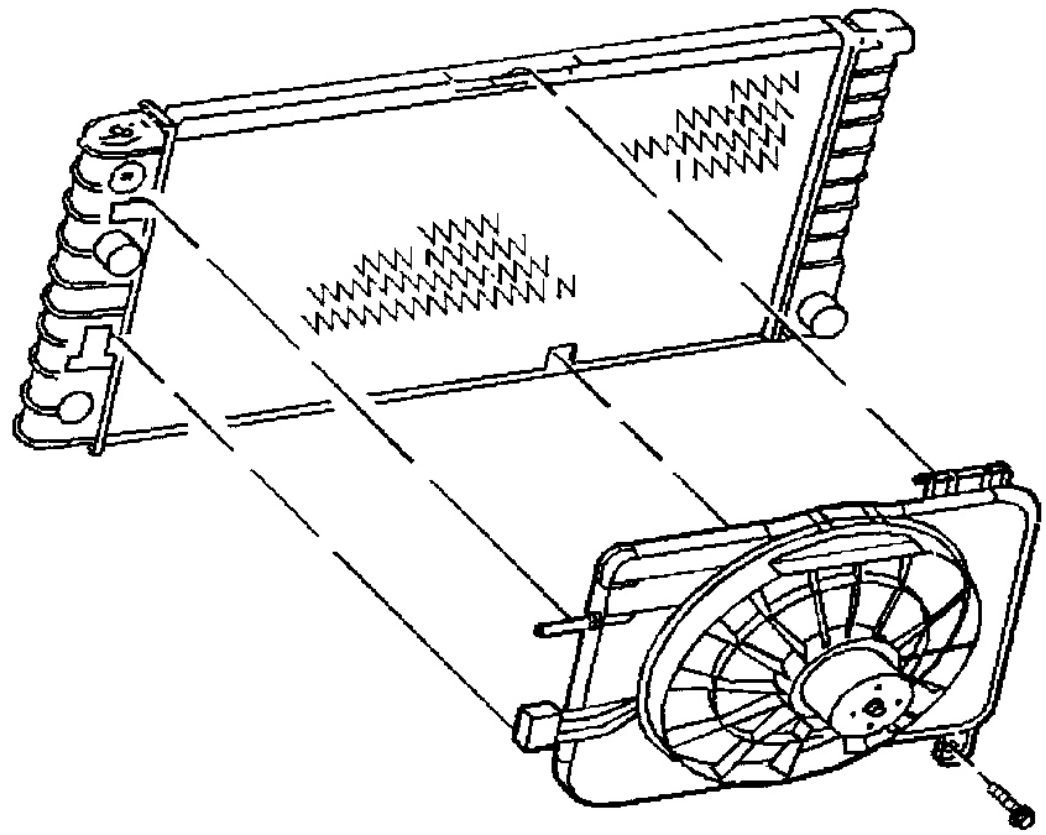

G00317798

**Fig. 4: Removing & Installing Cooling Fan**

**Installation**

1. Install the fan assembly to the radiator support. See **Fig. 4** .

**NOTE:** **Use the correct fastener in the correct location. Replacement fasteners must be the correct part number for that application. Fasteners requiring replacement or fasteners requiring the use of thread locking compound or sealant are identified in the service procedure. Do not use paints, lubricants, or corrosion inhibitors on fasteners or fastener joint surfaces unless specified. These coatings affect fastener torque and joint clamping force and may damage the fastener. Use the correct tightening sequence and specifications when installing fasteners in order to avoid damage to parts and systems.**

cardiagn.com

2. Connect the wiring harness. Tighten the bolt to 6 N.m (53 lb in). See **Fig. 3** .
3. Connect the negative battery cable. Tighten the negative battery cable bolt to 15 N.m (11 lb ft).

**COOLING FAN CAVALIER (2.4L)**

**CAUTION: Before servicing any electrical component, the ignition key must be in the OFF or LOCK position and all electrical loads must be OFF, unless instructed otherwise in these procedures. If a tool or equipment could easily come in contact with a live exposed electrical terminal, also disconnect the negative battery cable. Failure to follow these precautions may cause personal injury and/or damage to the vehicle or its components.**

**Removal**

1. Disconnect the negative battery cable.
2. Raise the vehicle.
3. Remove the cooling fan mounting bolts. See **Fig. 3** .
4. Disconnect the electrical connector from the cooling fan. See **Fig. 4** .
5. Remove the cooling fan assembly by pulling the fan assembly out through the bottom of the vehicle.

**Installation**

1. Install the cooling fan assembly to the radiator in through the bottom of the vehicle.
2. Connect the electrical connector to the cooling fan. See **Fig. 3** .

**NOTE: Use the correct fastener in the correct location. Replacement fasteners must be the correct part number for that application. Fasteners requiring replacement or fasteners requiring the use of thread locking compound or sealant are identified in the service procedure. Do not use paints, lubricants, or corrosion inhibitors on fasteners or fastener joint surfaces unless specified. These coatings affect fastener torque and joint clamping force and may damage the fastener. Use the correct tightening sequence and specifications when installing fasteners in order to avoid damage to parts and systems.**

3. Install the cooling fan mounting bolts. Tighten the fan mounting bolts to 6 N.m (53 lb in).
4. Lower the vehicle.
5. Connect the negative battery cable. Tighten the negative battery cable to 15 N.m (11 lb ft).

## WIRING DIAGRAMS

**NOTE: Wiring for 1999 Park Avenue is not available.**

cardiagn.com

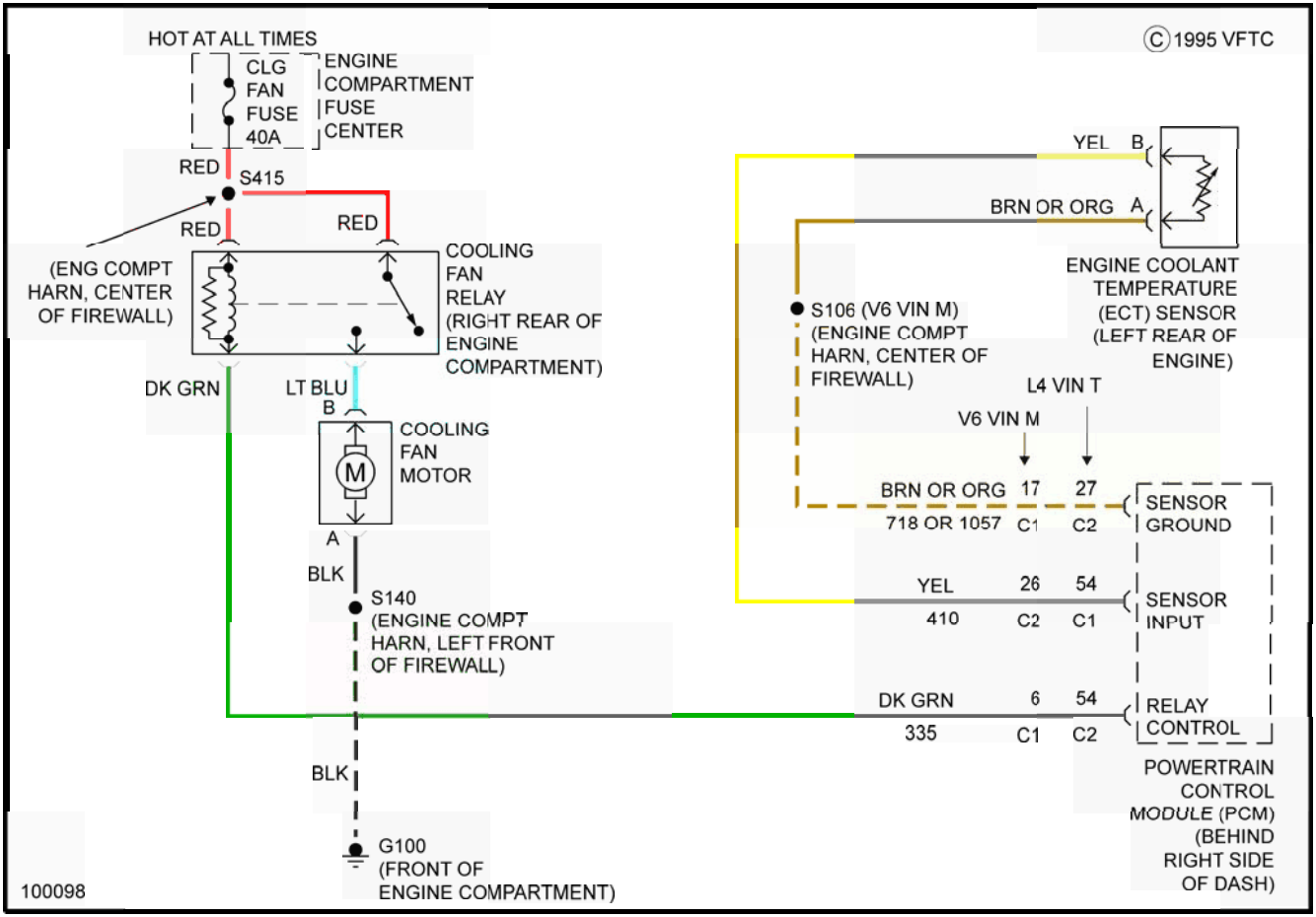


cardiagn.com

**Fig. 5: Cooling Fan System Wiring Diagram (1998 Achieva, Grand Am & Skylark)**

cardiagn.com

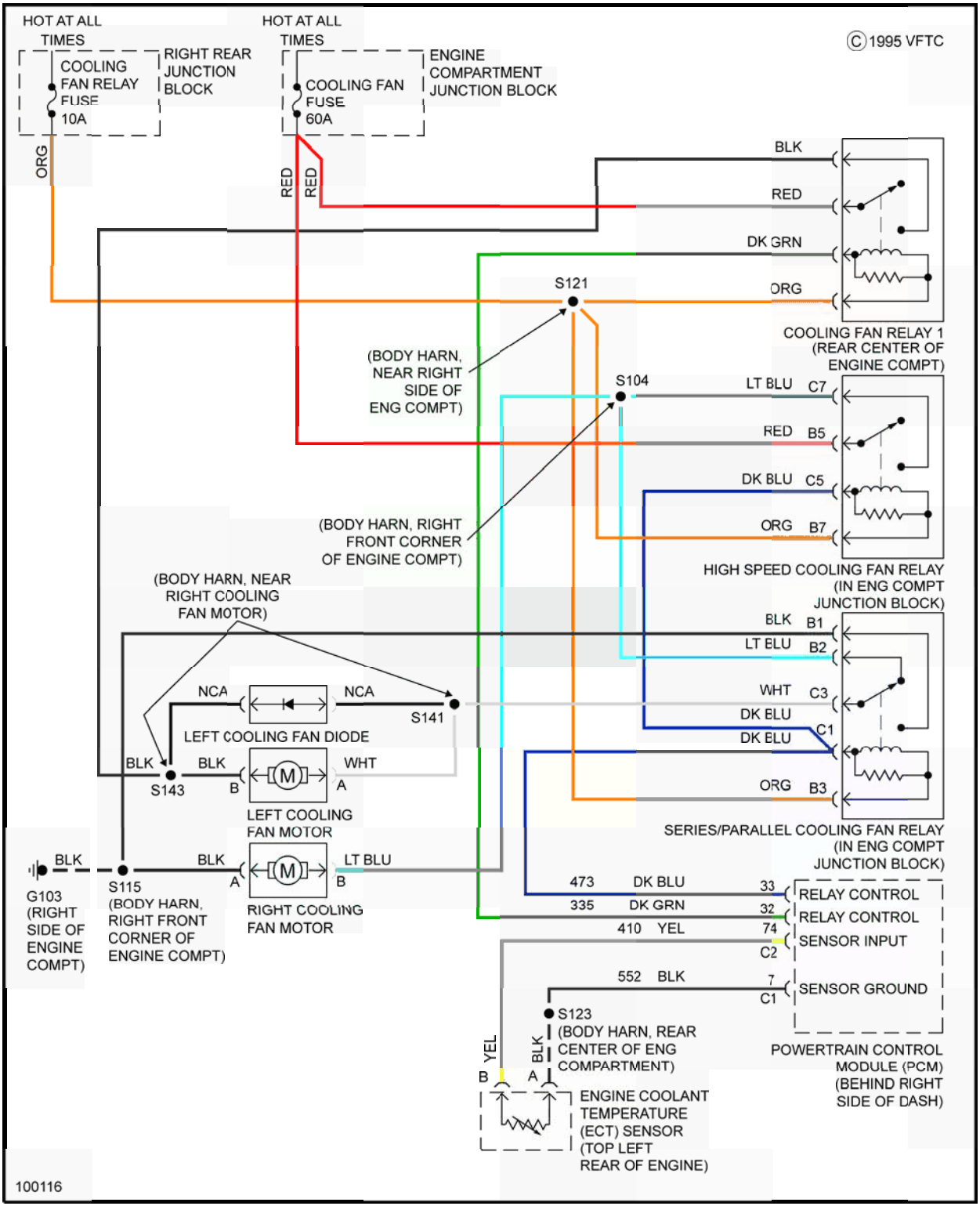


cardiagn.com

**Fig. 6: Cooling Fan System Wiring Diagram (1998 Aurora)**

cardiagn.com

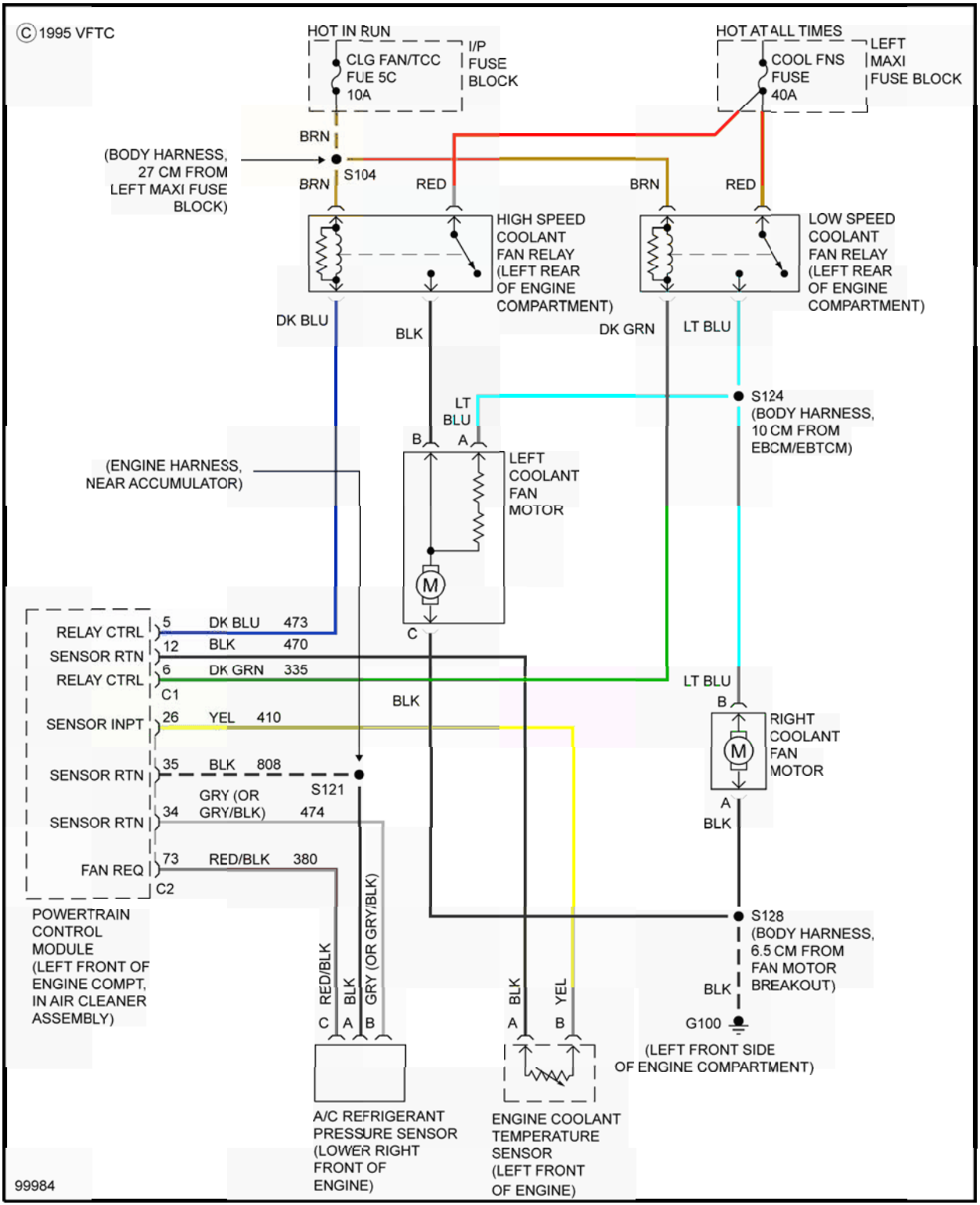


cardiagn.com

**Fig. 7: Cooling Fan System Wiring Diagram (1998 Bonneville, Eight Eight, LeSabre, LSS & Regency)**

cardiagn.com

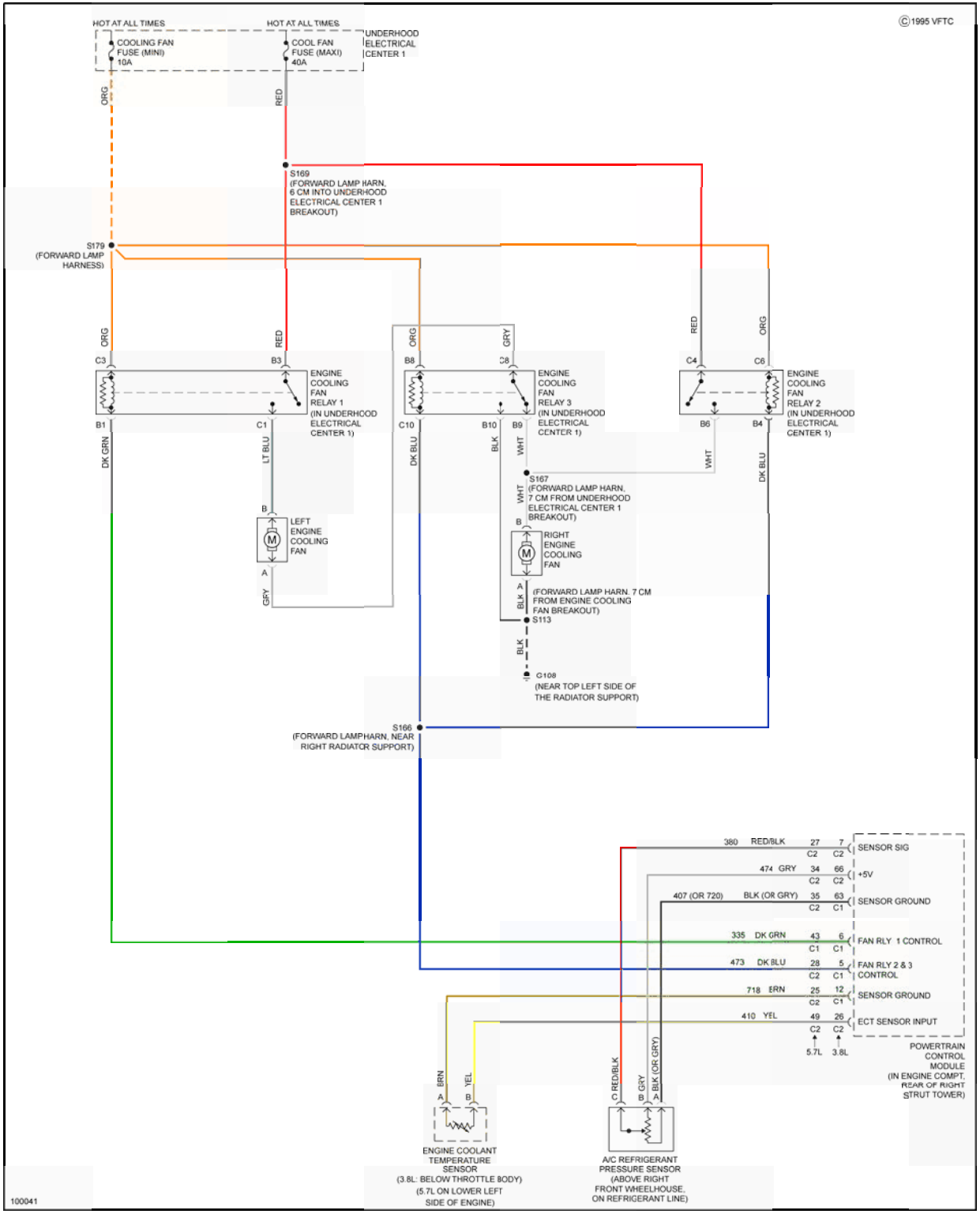


cardiagn.com

**Fig. 8: Cooling Fan System Wiring Diagram (1998 Camaro & Firebird)**

cardiagn.com

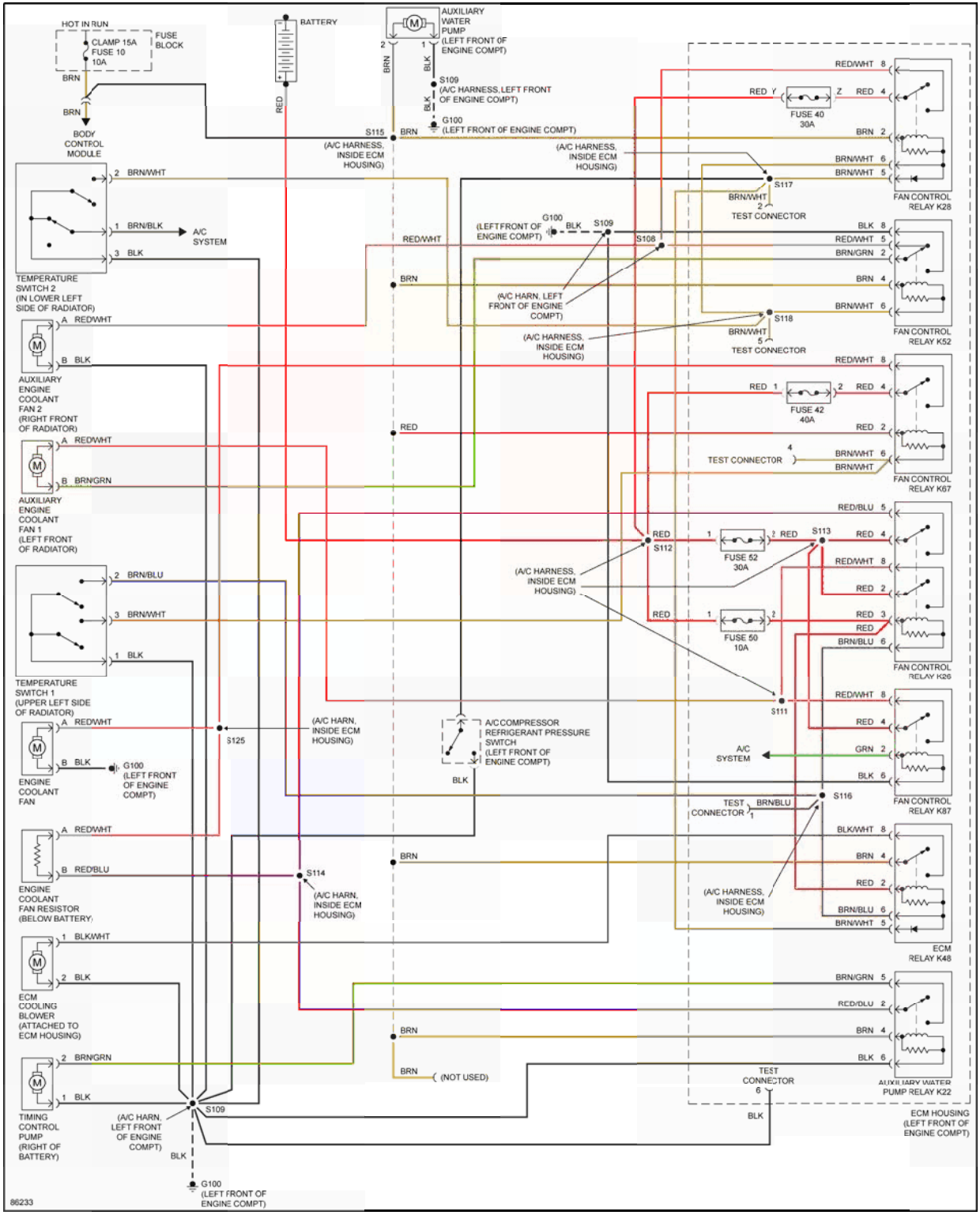


cardiagn.com

**Fig. 9: Cooling Fan System Wiring Diagram (1998 Catera)**

cardiagn.com

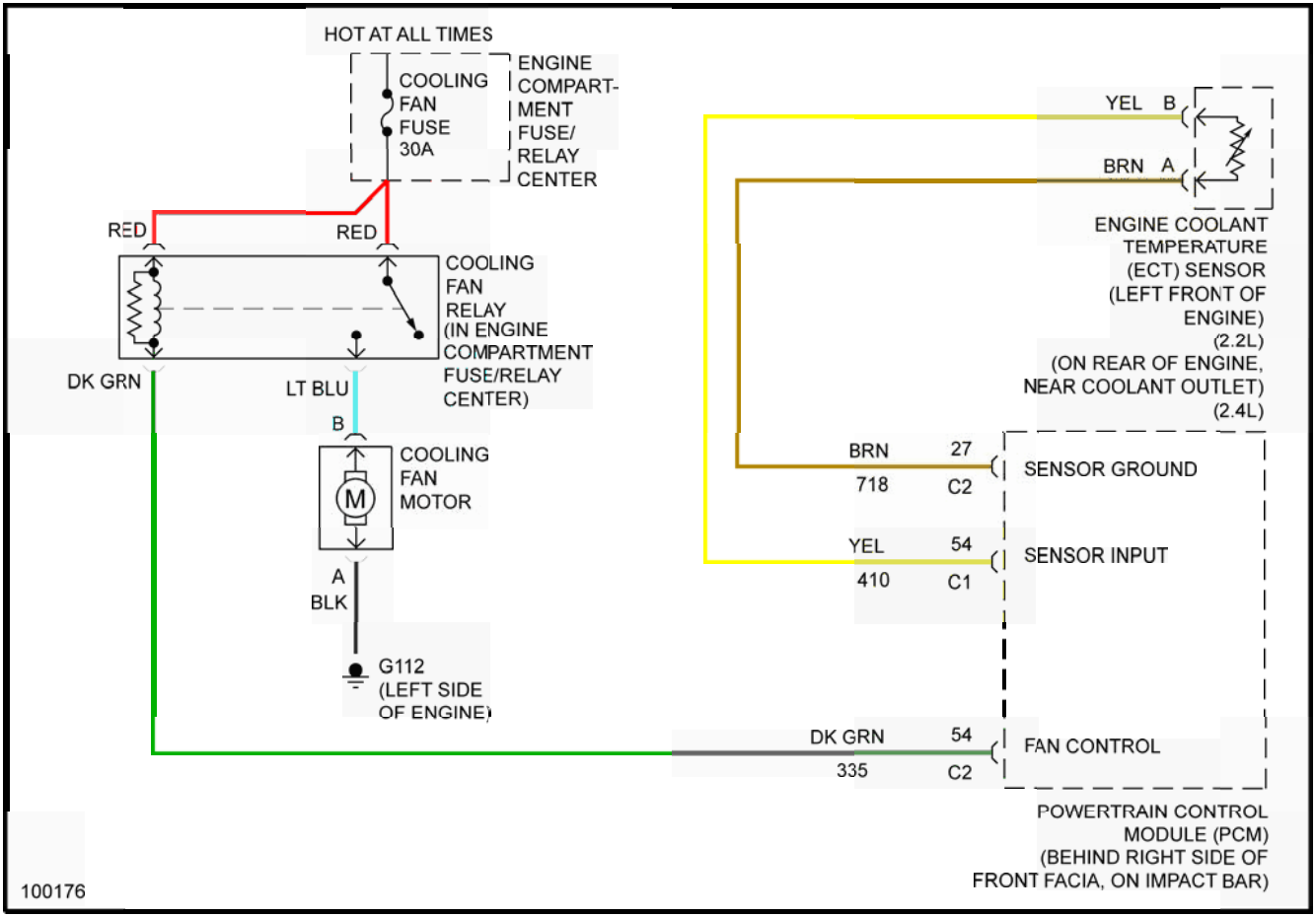


cardiagn.com

**Fig. 10: Cooling Fan System Wiring Diagram (1998-99 Cavalier & Sunfire)**

cardiagn.com

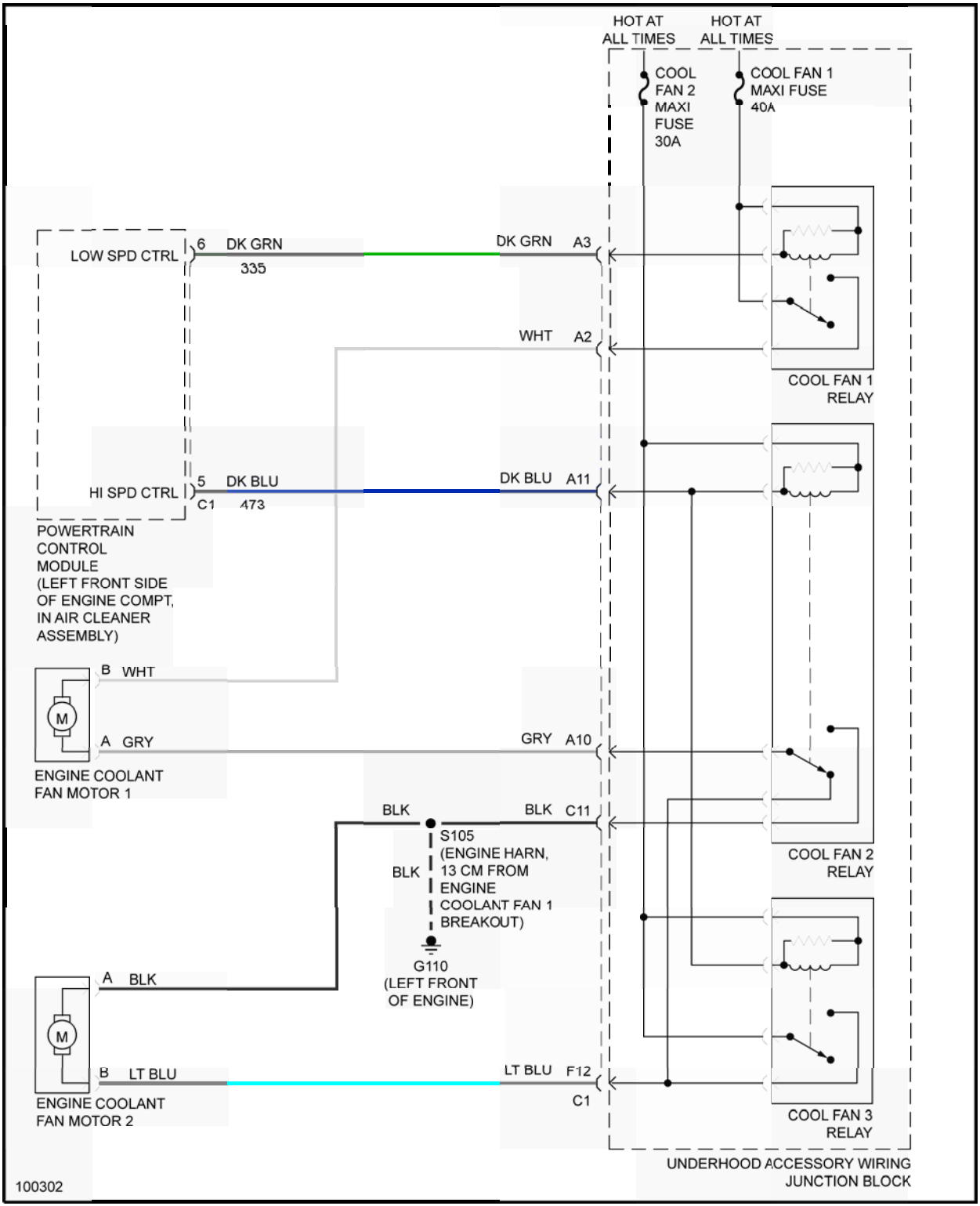


cardiagn.com

**Fig. 11: Cooling Fan System Wiring Diagram (1998 Century & Regal)**

cardiagn.com

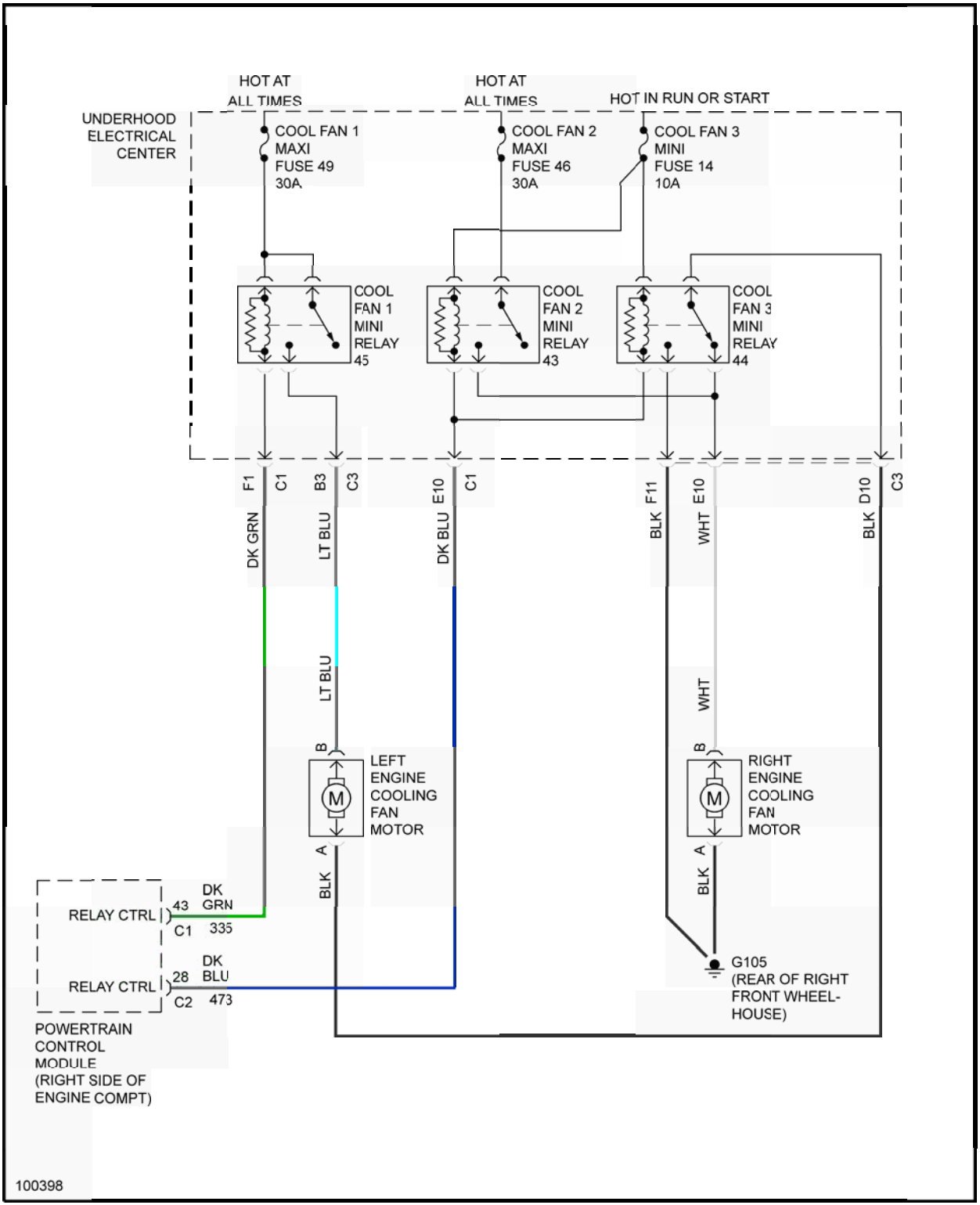


cardiagn.com

**Fig. 12: Cooling Fan System Wiring Diagram (1998 Corvette)**

cardiagn.com

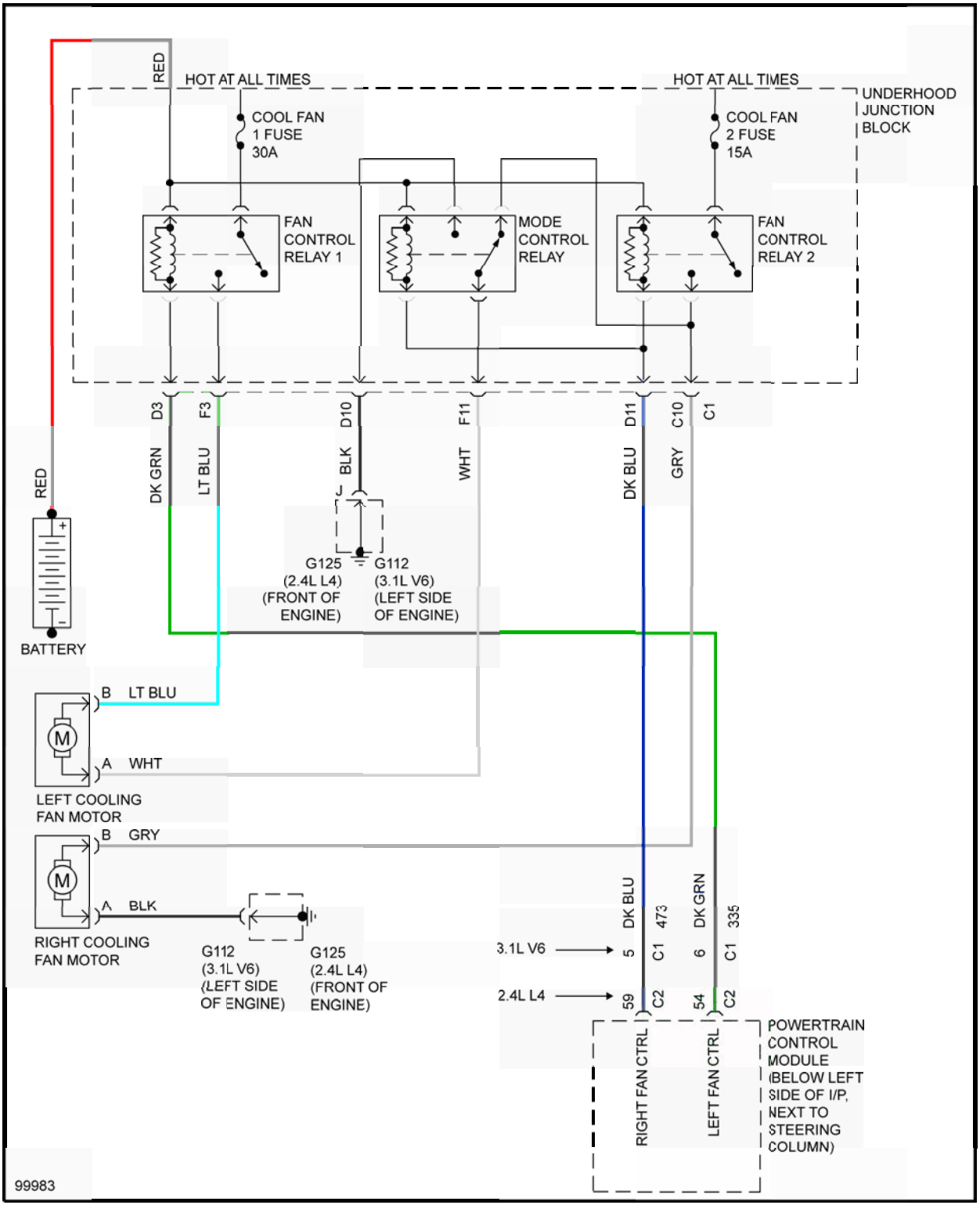


cardiagn.com

**Fig. 13: Cooling Fan System Wiring Diagram (1998 Cutlass & Malibu)**

cardiagn.com

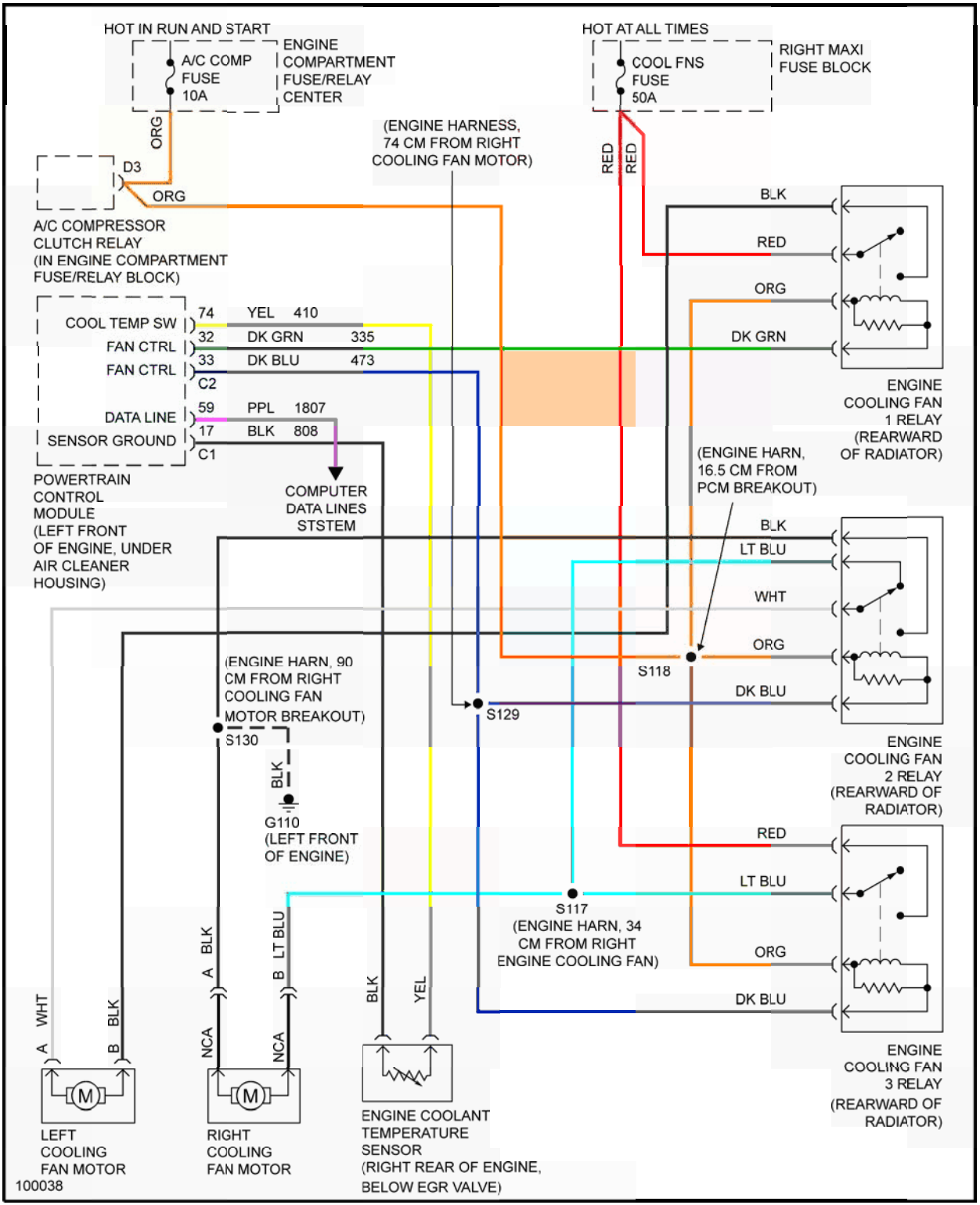


cardiagn.com

**Fig. 14: Cooling Fan System Wiring Diagram (1998 DeVille & Eldorado)**

cardiagn.com

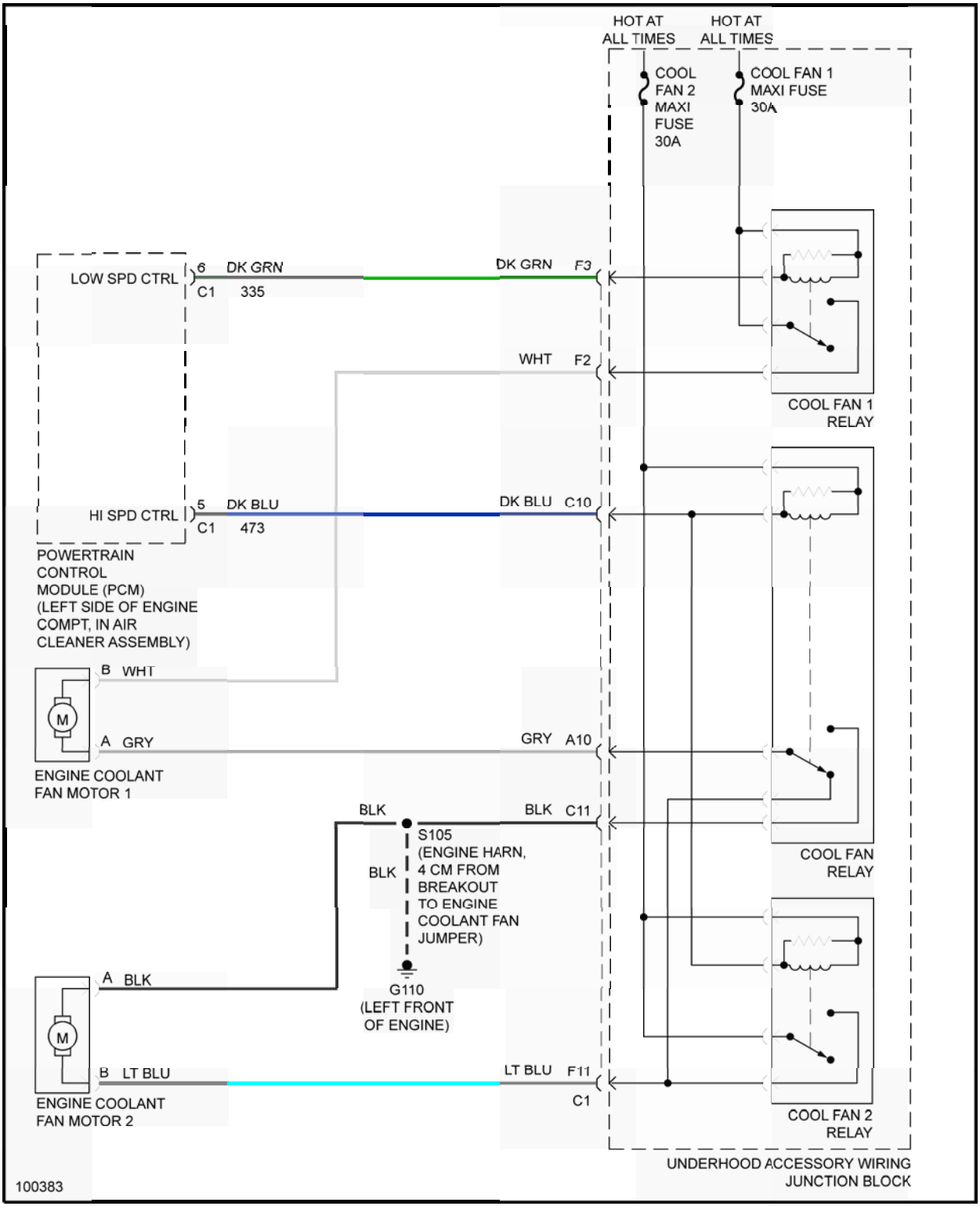


cardiagn.com

**Fig. 15: Cooling Fan System Wiring Diagram (1998 Grand Prix)**

cardiagn.com

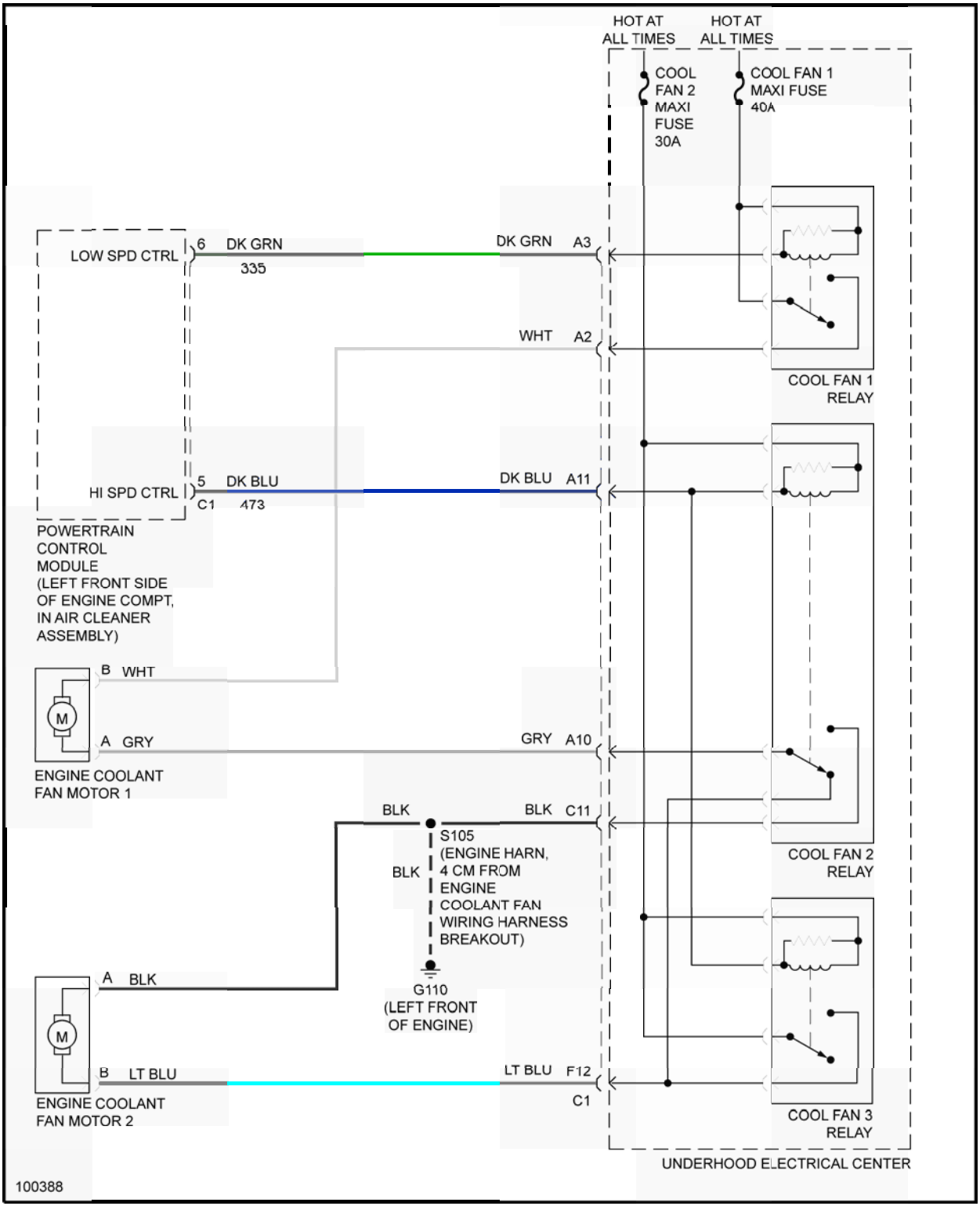


cardiagn.com

**Fig. 16: Cooling Fan System Wiring Diagram (1998 Intrigue)**

cardiagn.com

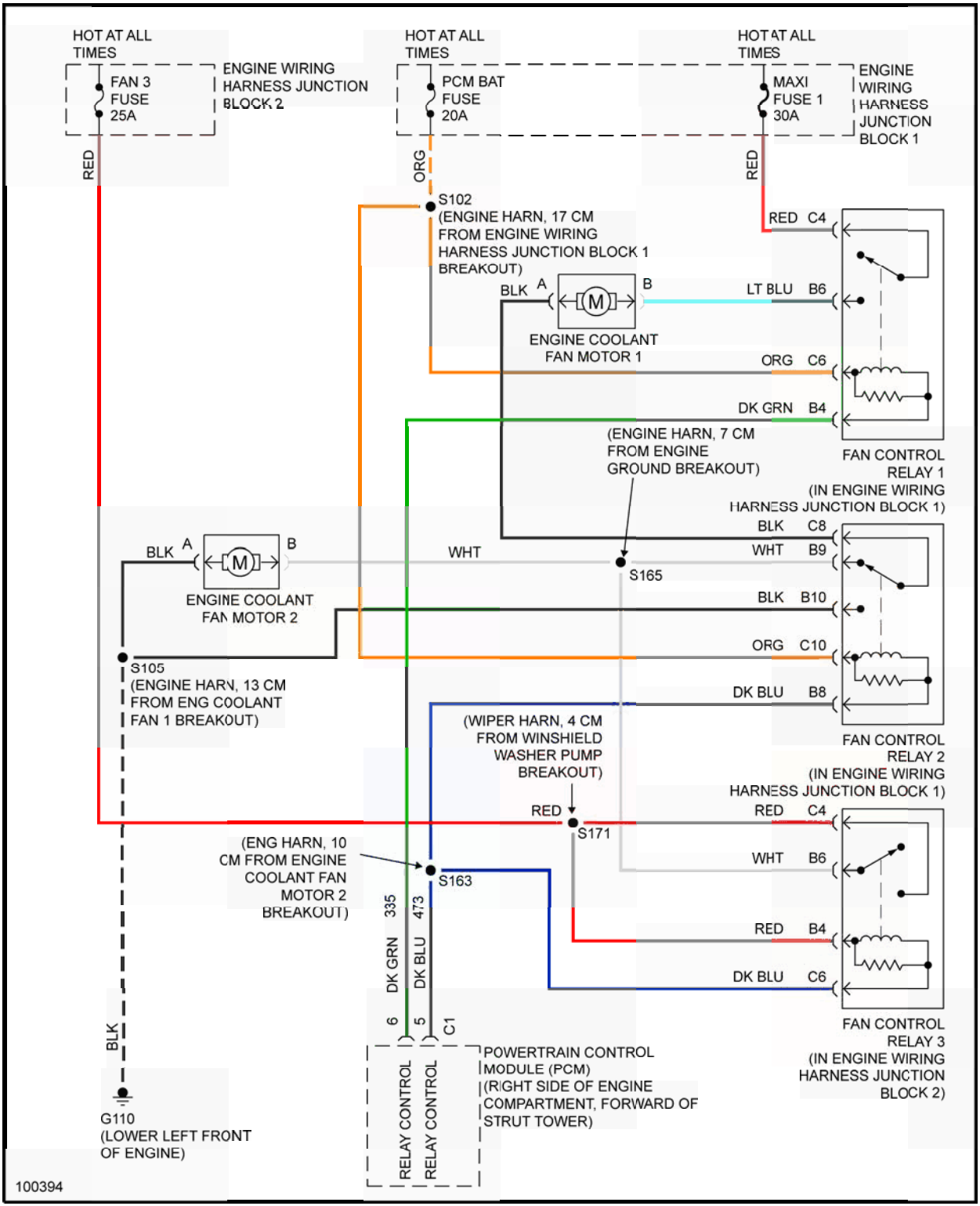


cardiagn.com

**Fig. 17: Cooling Fan System Wiring Diagram (1998 Lumina & Monte Carlo)**

cardiagn.com

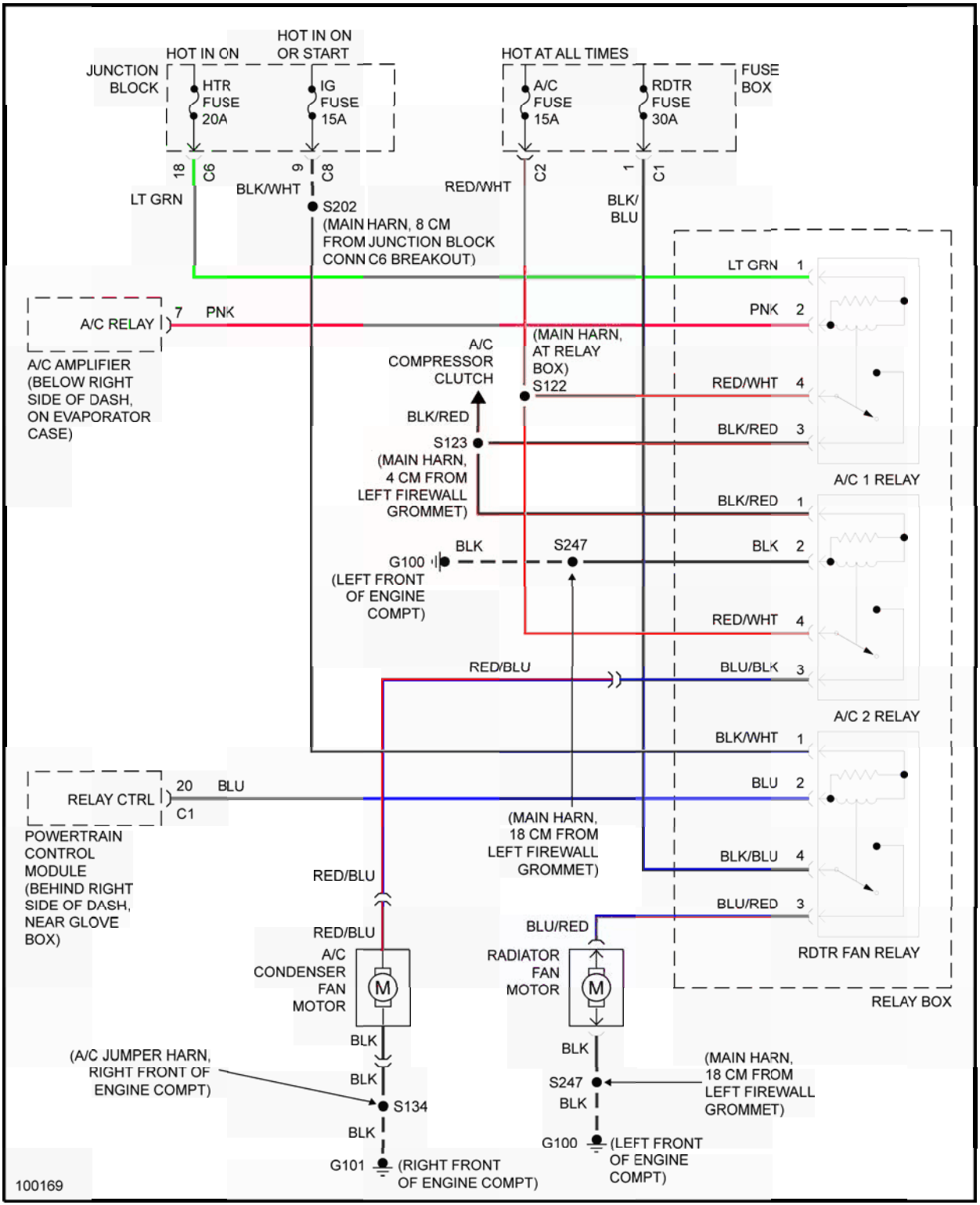


cardiagn.com

**Fig. 18: Cooling Fan System Wiring Diagram (1998 Metro)**

cardiagn.com

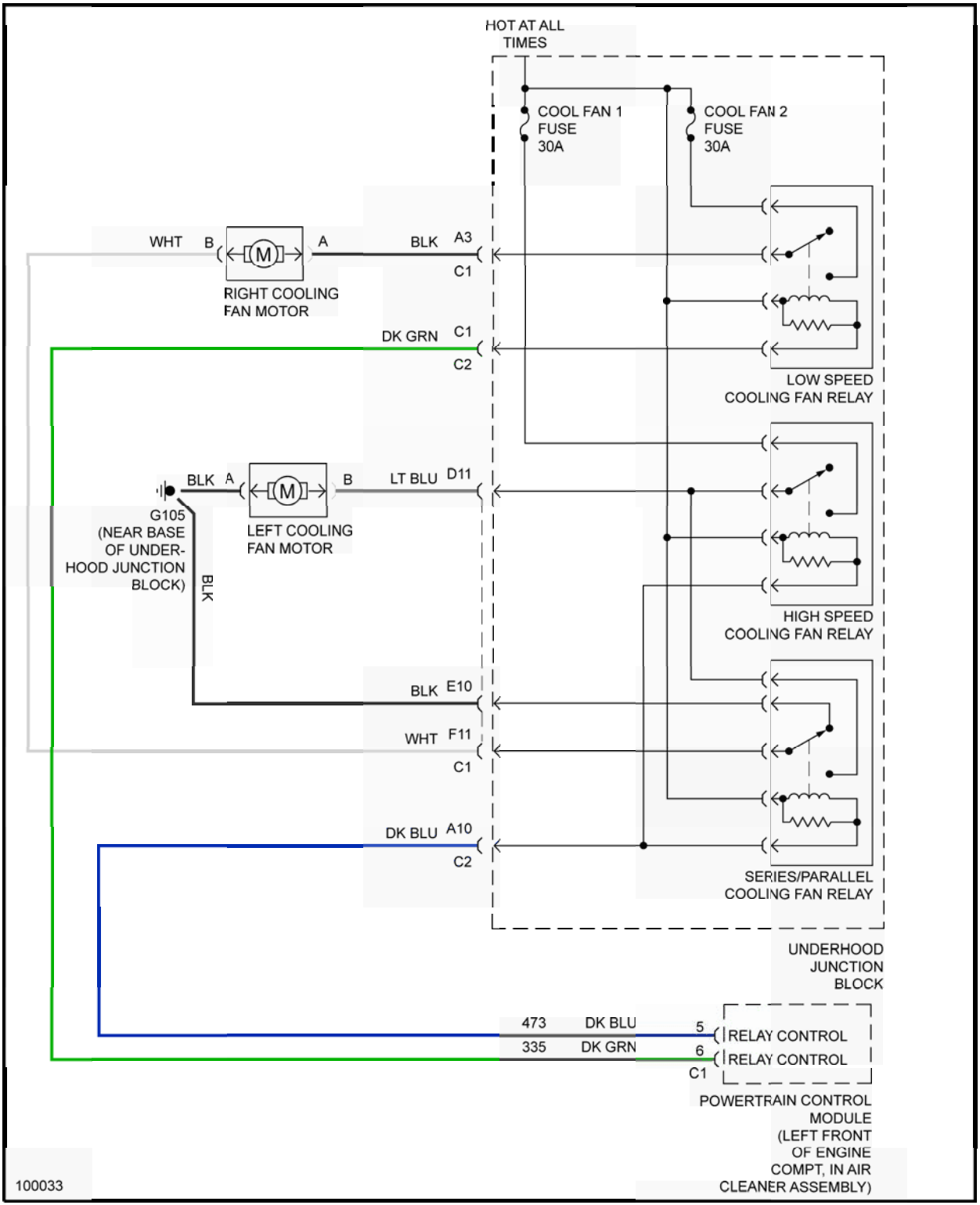


cardiagn.com

**Fig. 19: Cooling Fan System Wiring Diagram (1998 Park Avenue)**

cardiagn.com

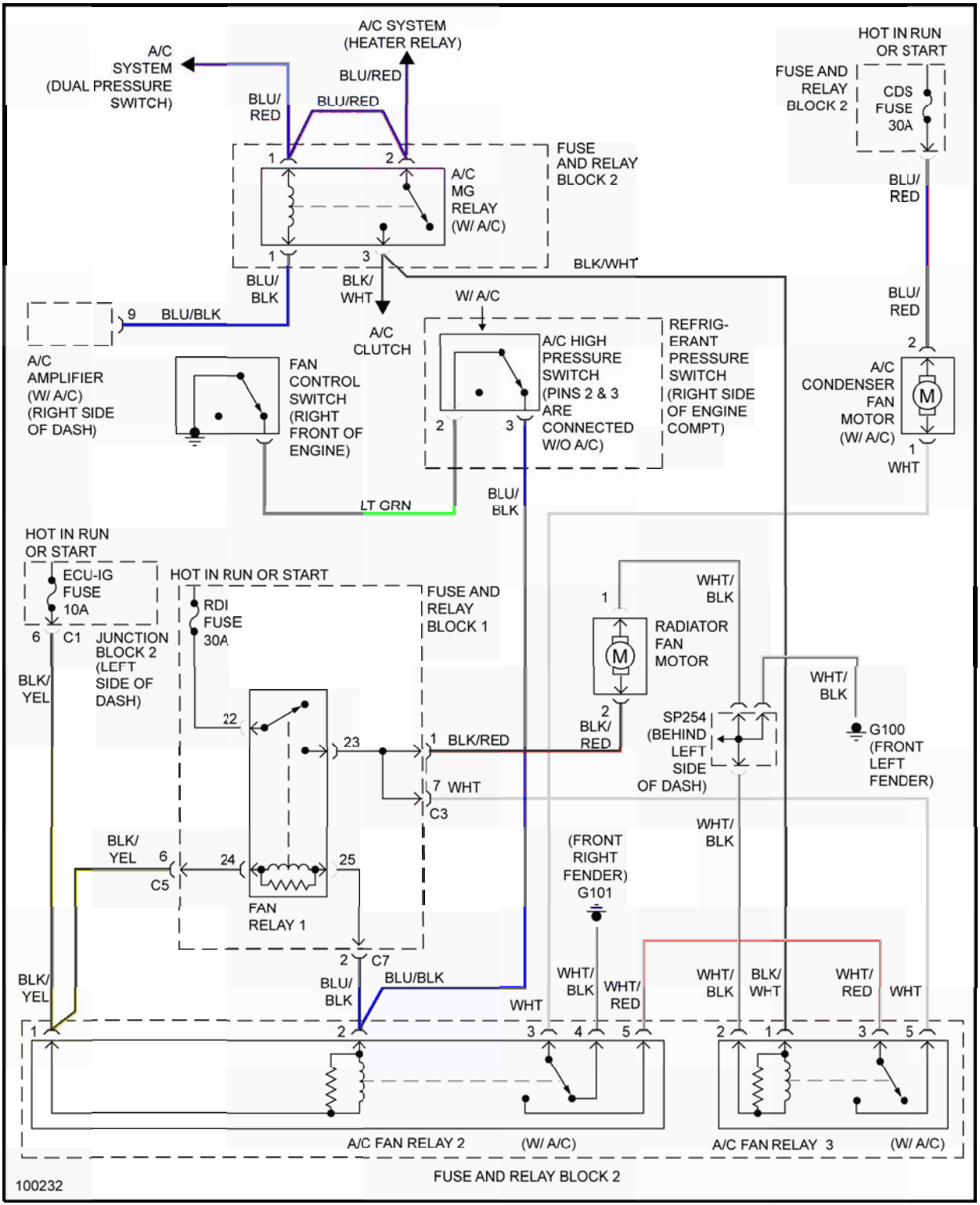


cardiagn.com

**Fig. 20: Cooling Fan System Wiring Diagram (1998-99 Prizm)**

cardiagn.com

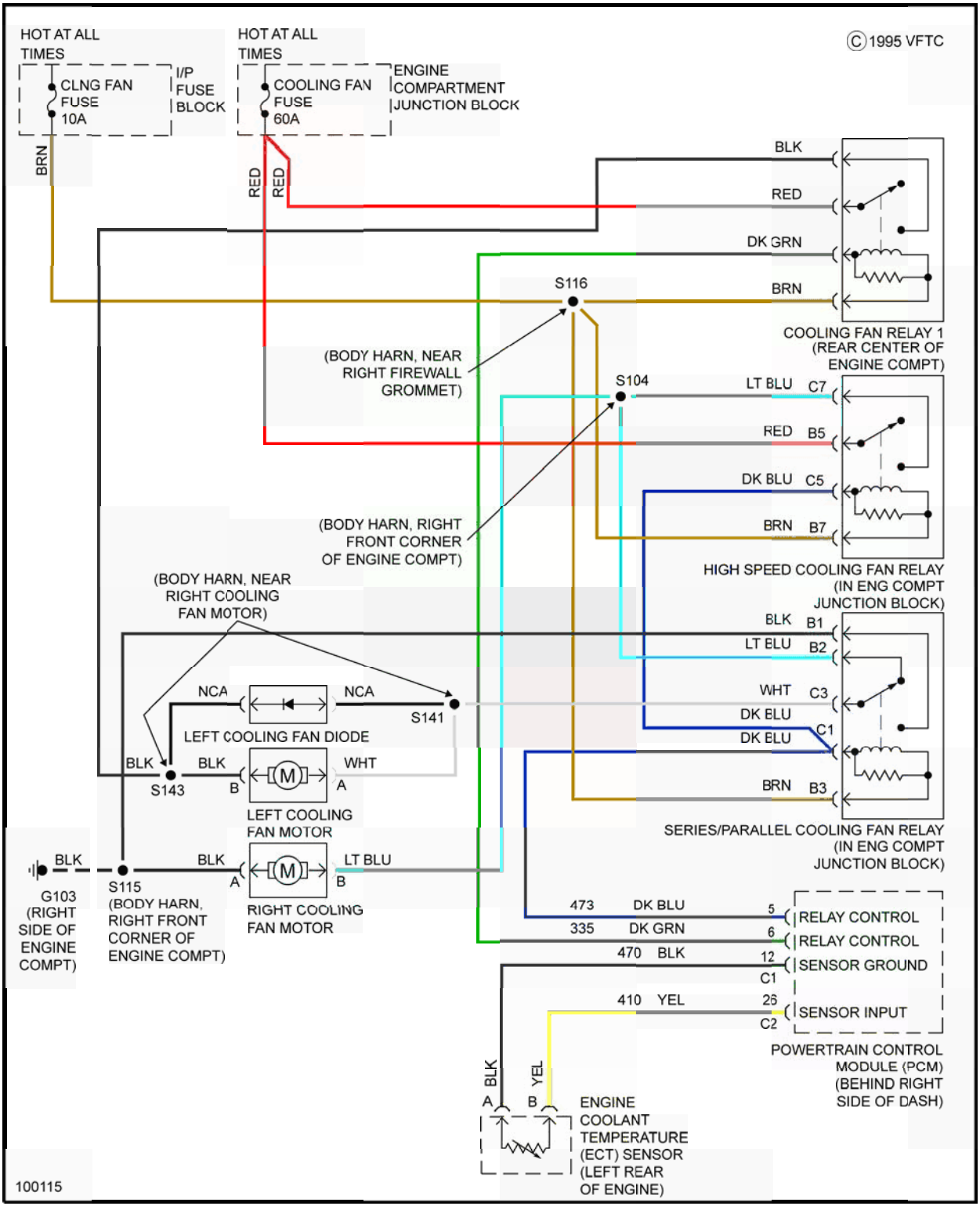


cardiagn.com

**Fig. 21: Cooling Fan System Wiring Diagram (1998 Riviera)**

cardiagn.com

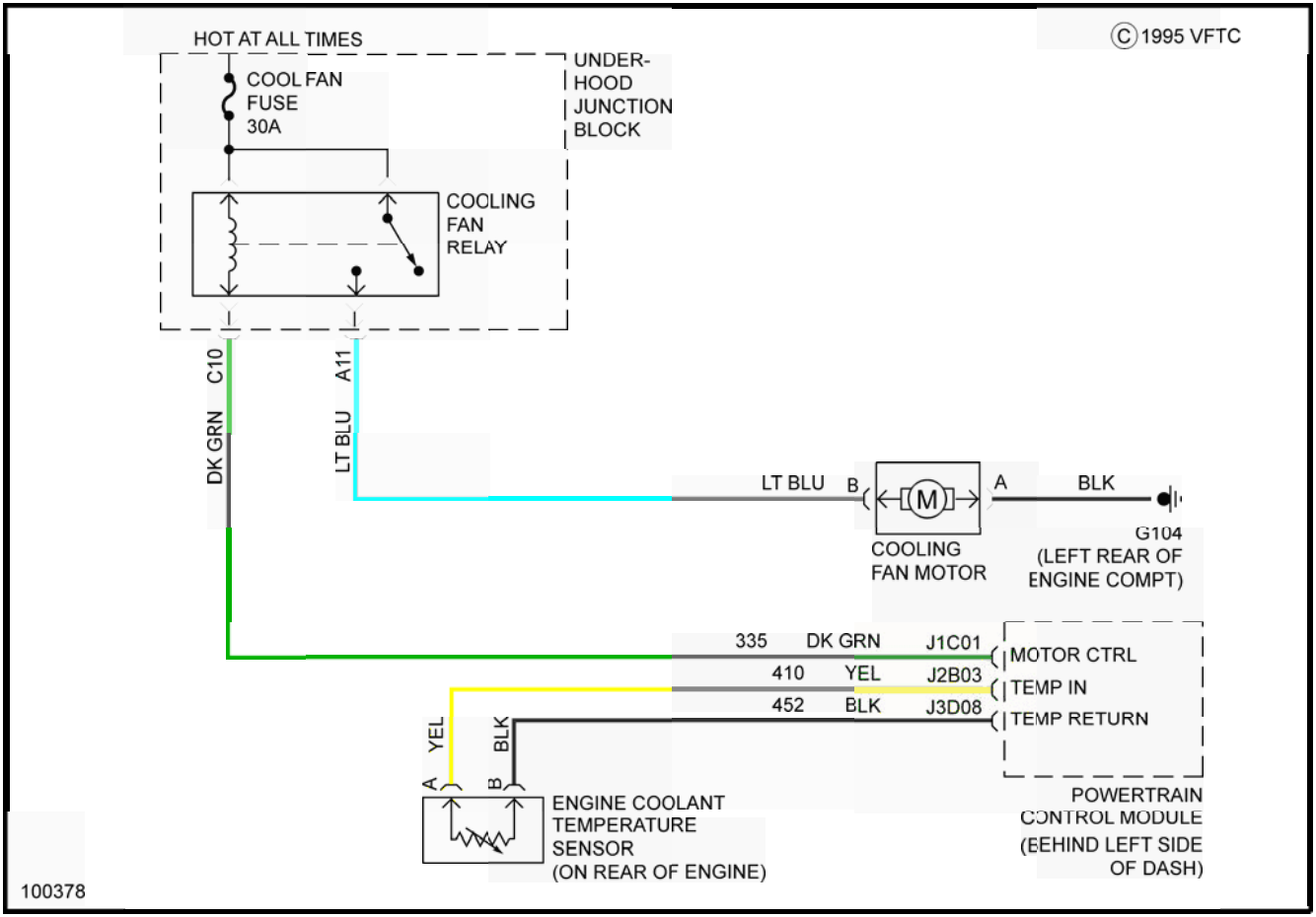


cardiagn.com

**Fig. 22: Cooling Fan System Wiring Diagram (1998 Saturn)**

cardiagn.com

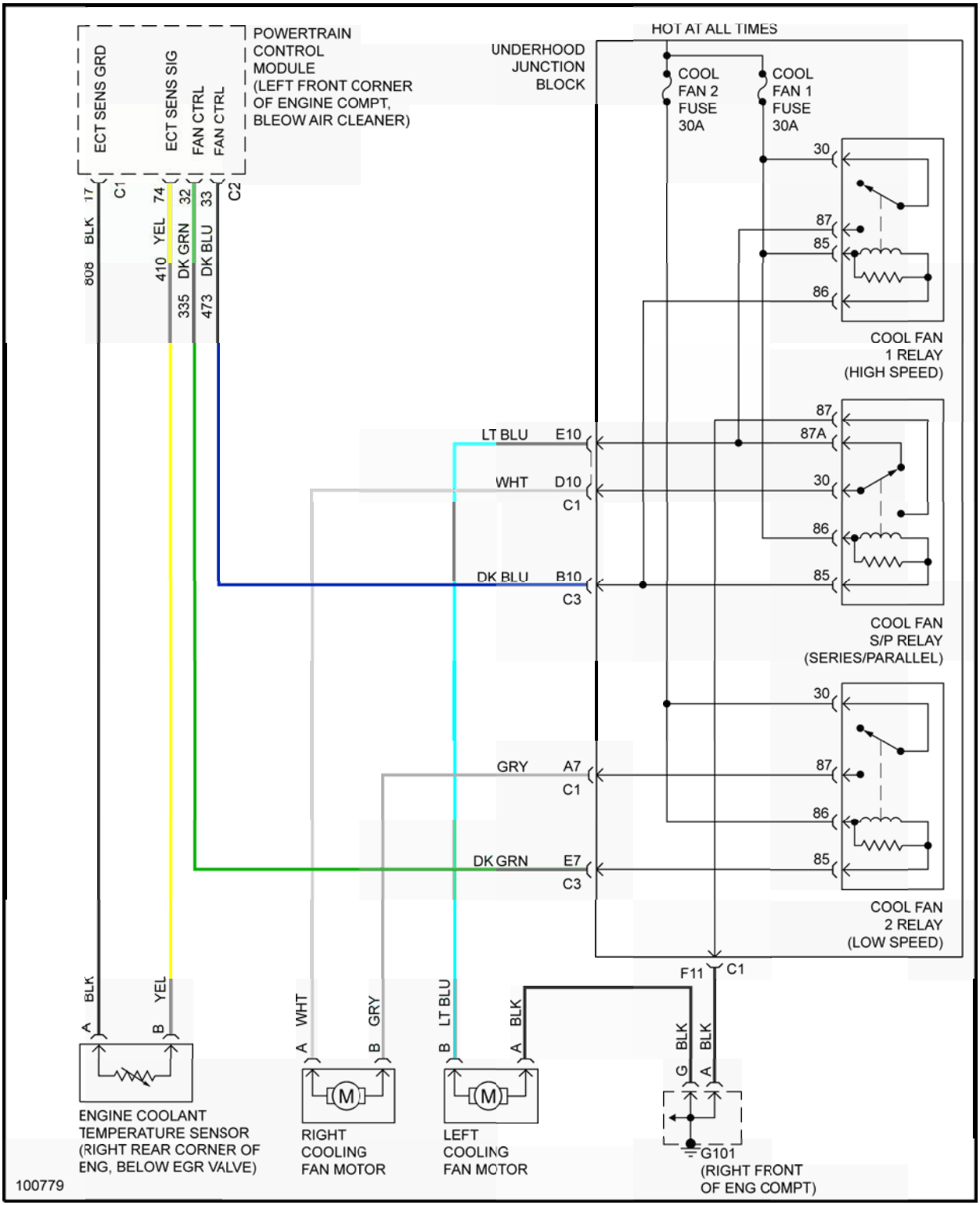


cardiagn.com

**Fig. 23: Cooling Fan System Wiring Diagram (1998 Seville)**

cardiagn.com

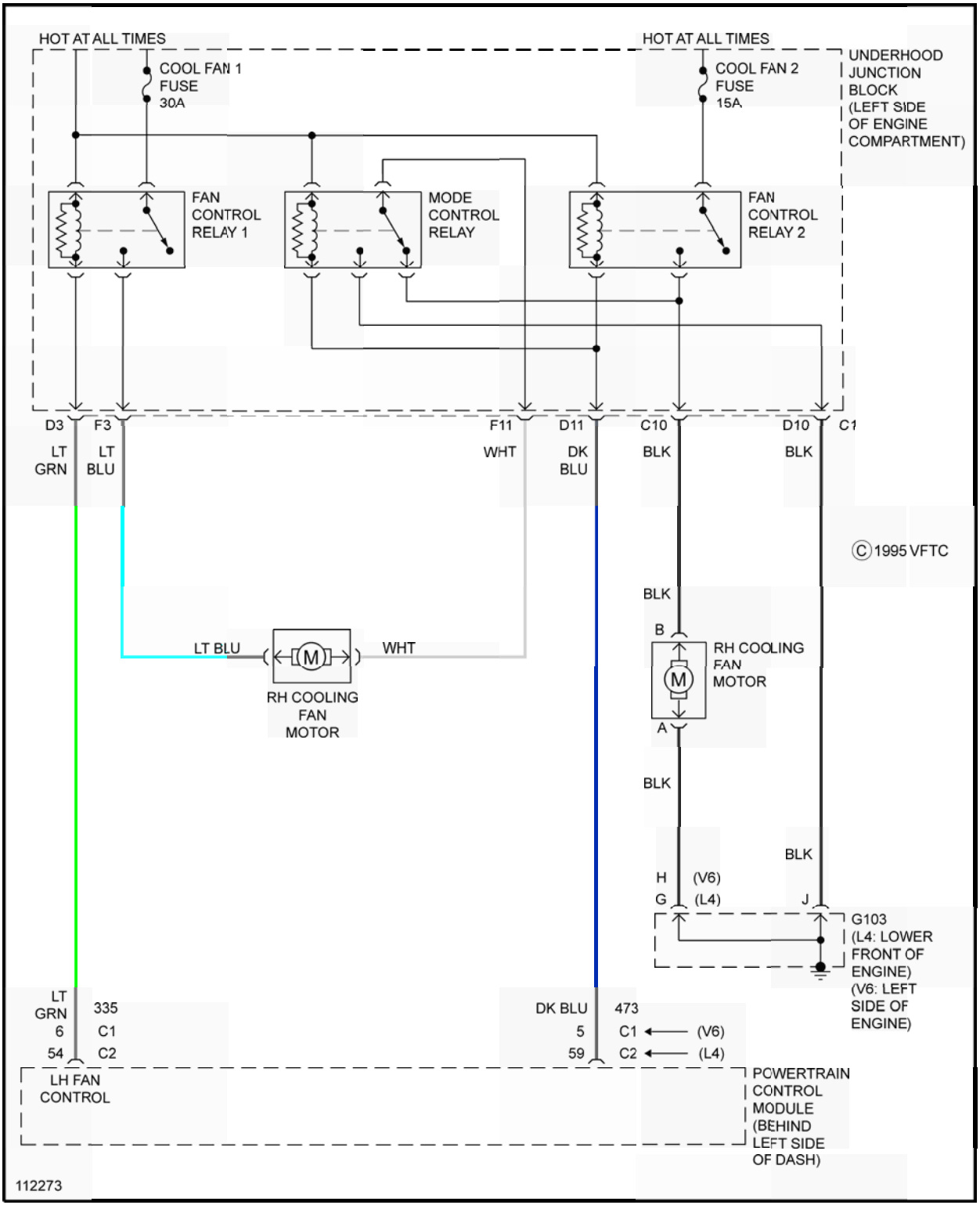


cardiagn.com

**Fig. 24: Cooling Fan System Wiring Diagram (1999 Alero & Grand Am)**

cardiagn.com

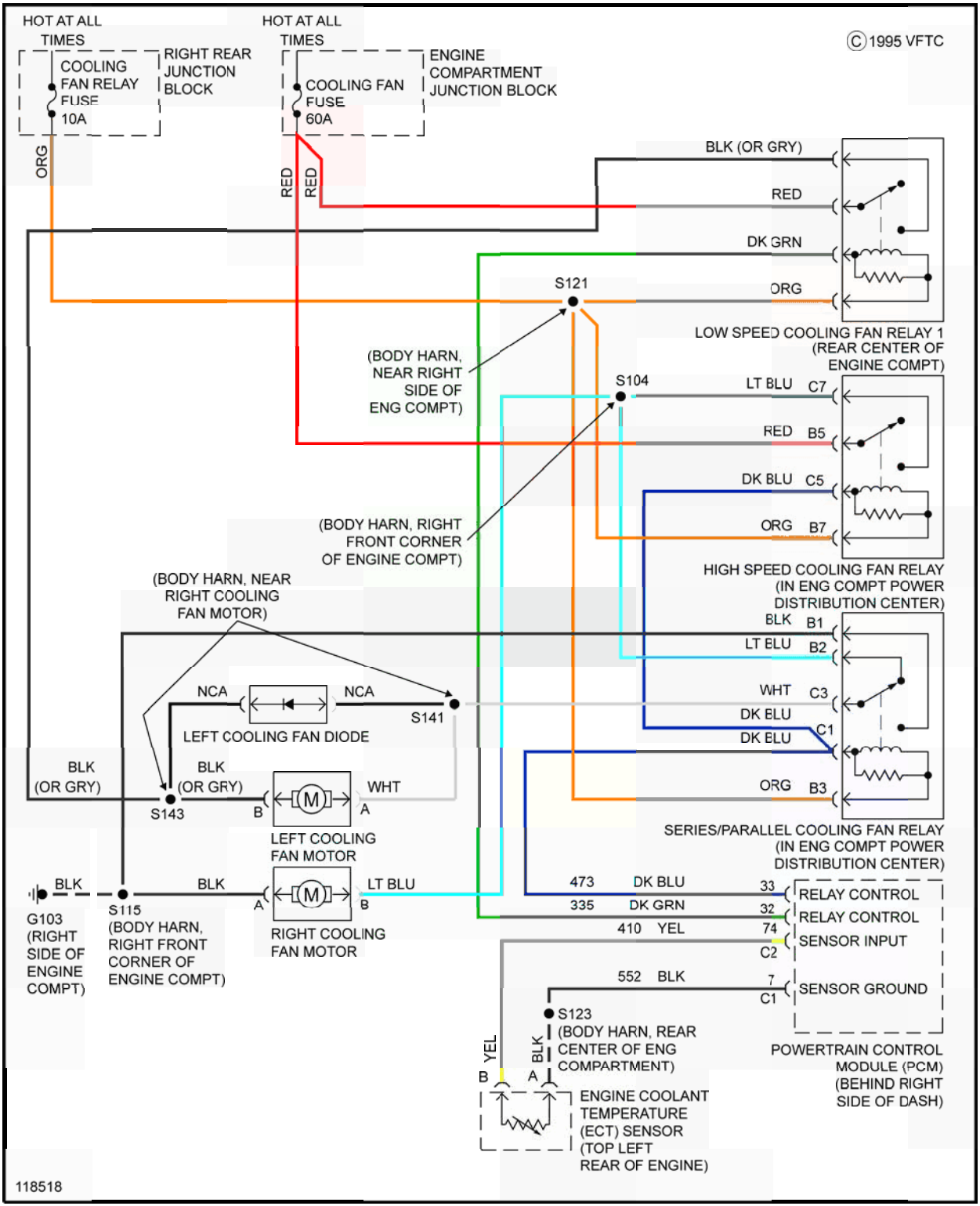


cardiagn.com

**Fig. 25: Cooling Fan System Wiring Diagram (1999 Aurora)**

cardiagn.com

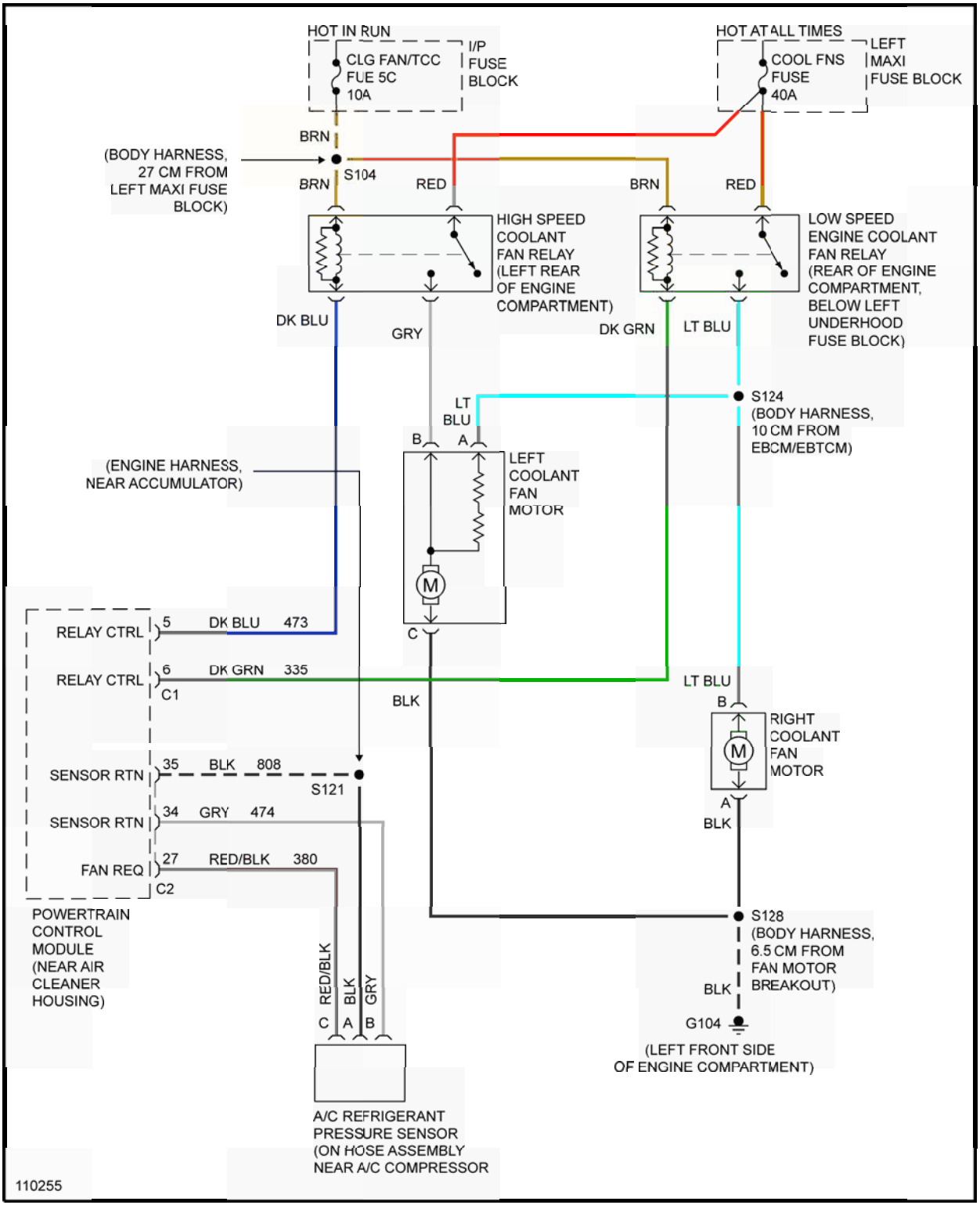


cardiagn.com

**Fig. 26: Cooling Fan System Wiring Diagram (1999 Bonneville, Eight Eight, LeSabre & LSS)**

cardiagn.com

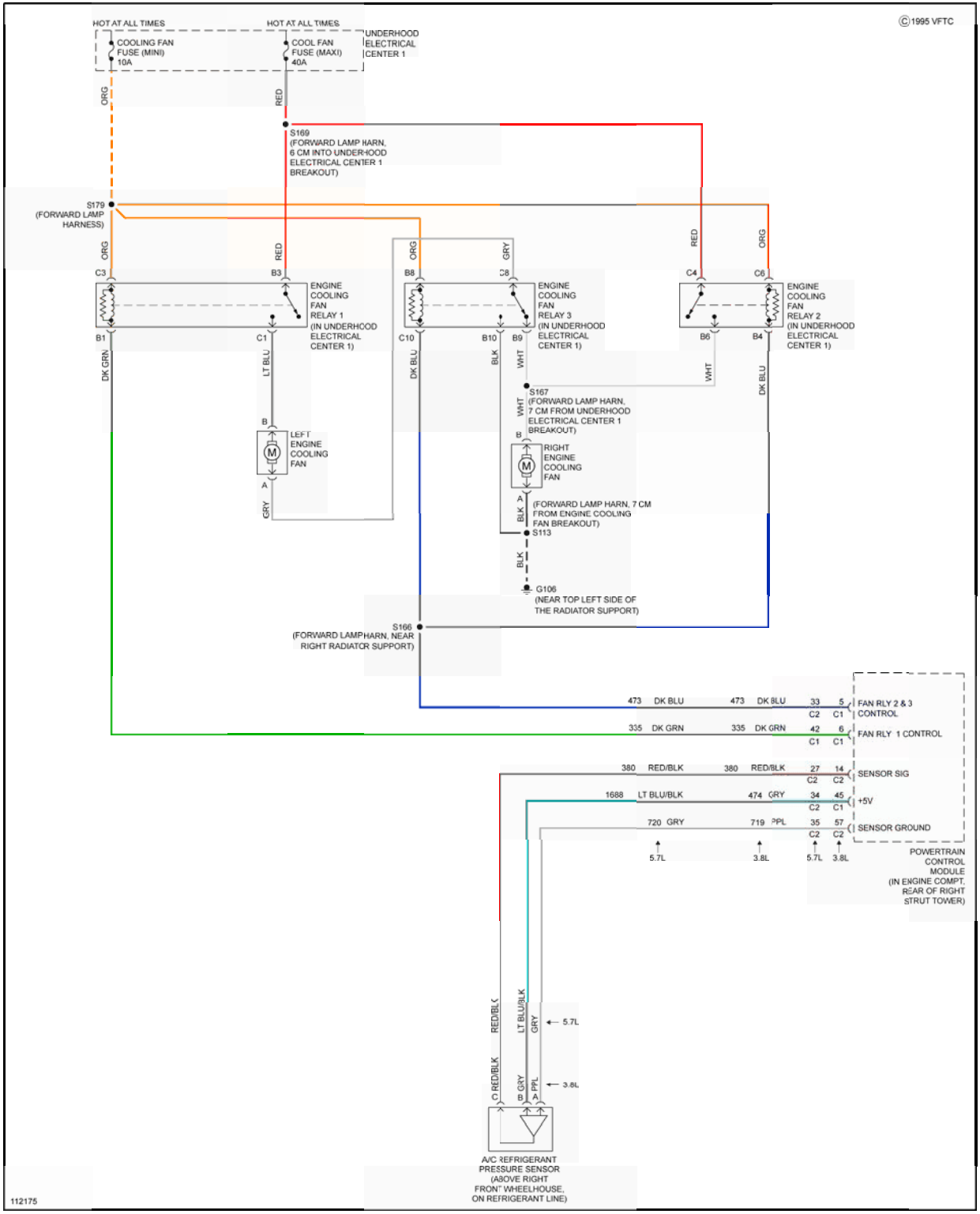


cardiagn.com

**Fig. 27: Cooling Fan System Wiring Diagram (1999 Camaro & Firebird)**

cardiagn.com

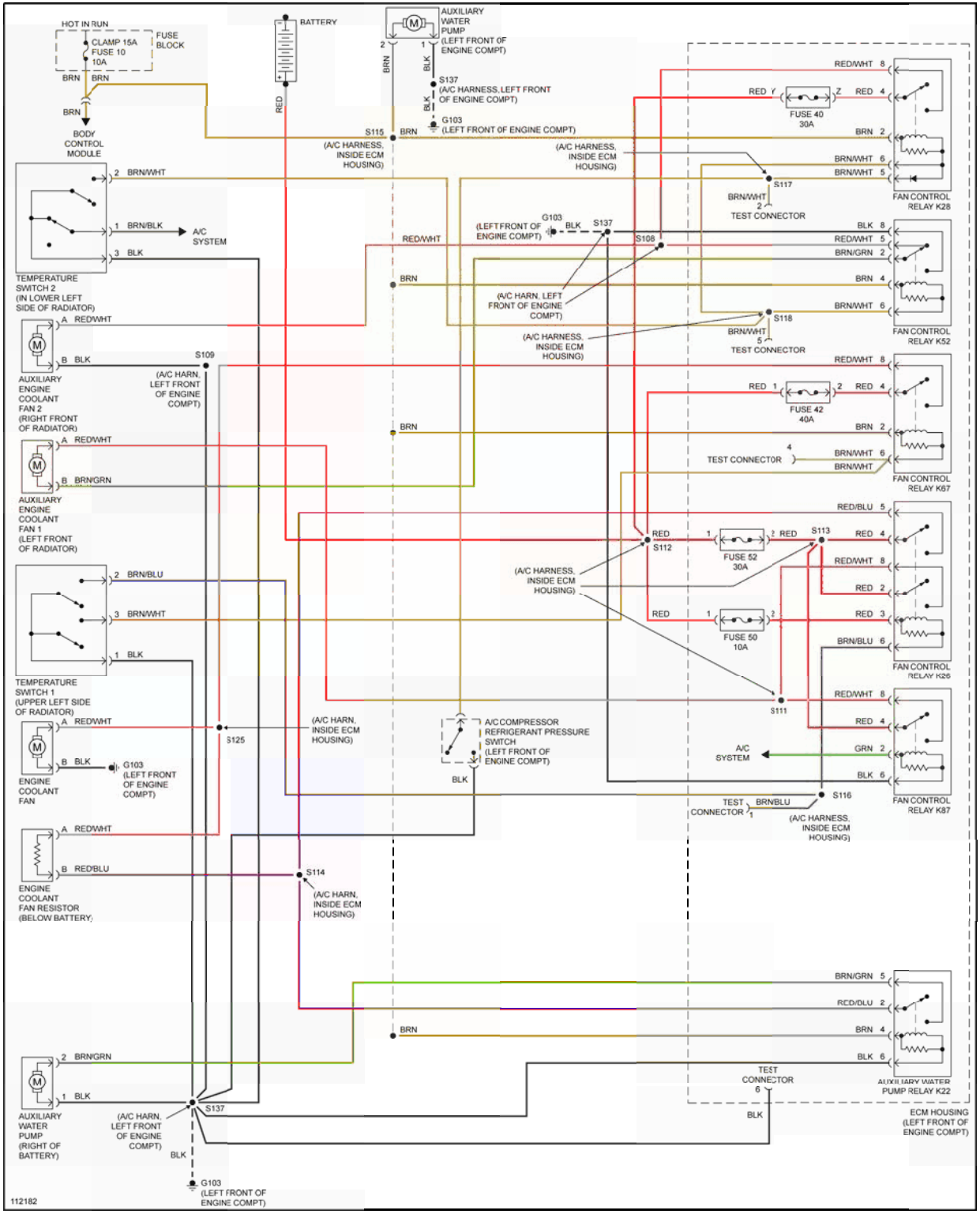


cardiagn.com

**Fig. 28: Cooling Fan System Wiring Diagram (1999 Catera)**

cardiagn.com

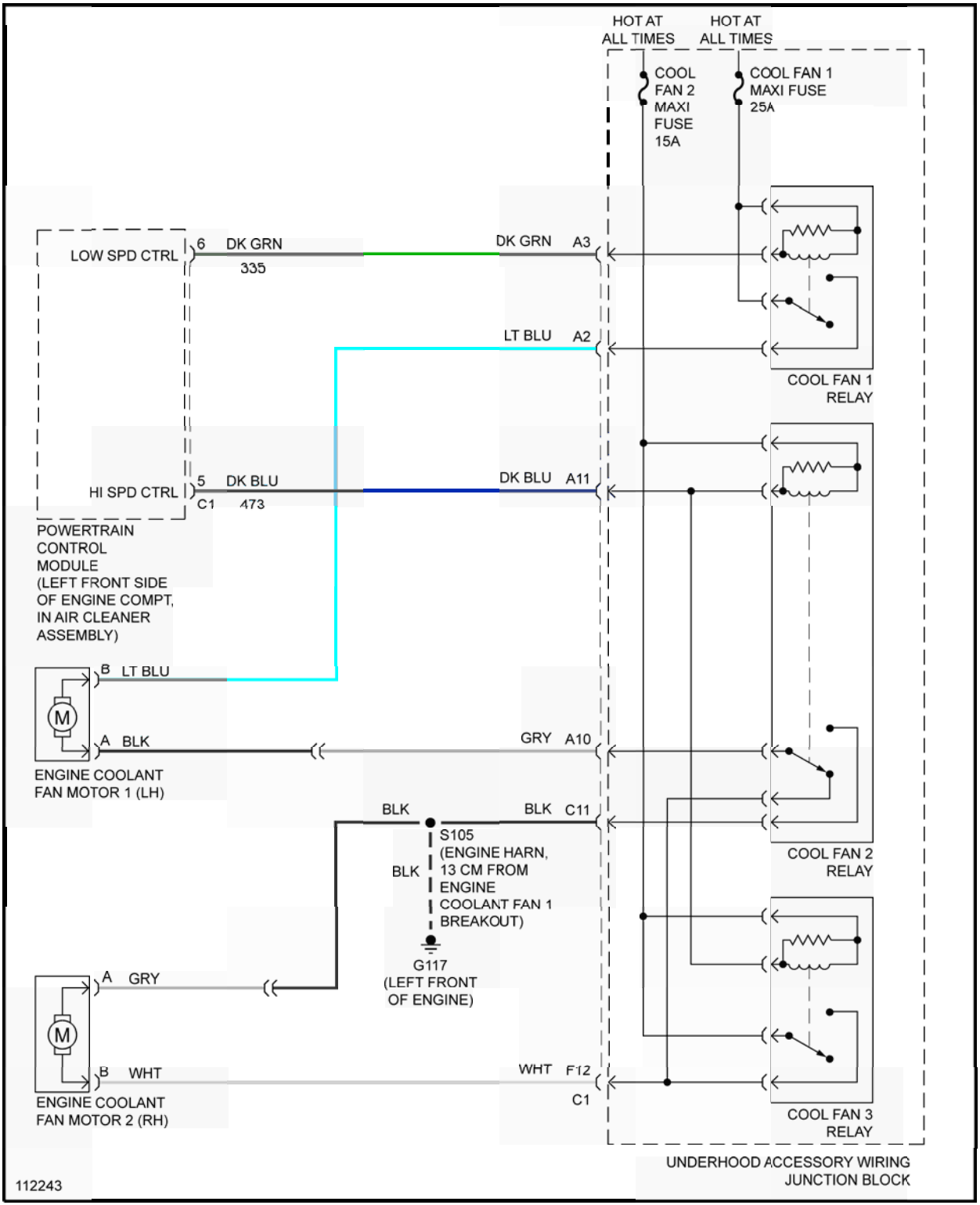


cardiagn.com

**Fig. 29: Cooling Fan System Wiring Diagram (1999 Century 3.1L VIN M)**

cardiagn.com

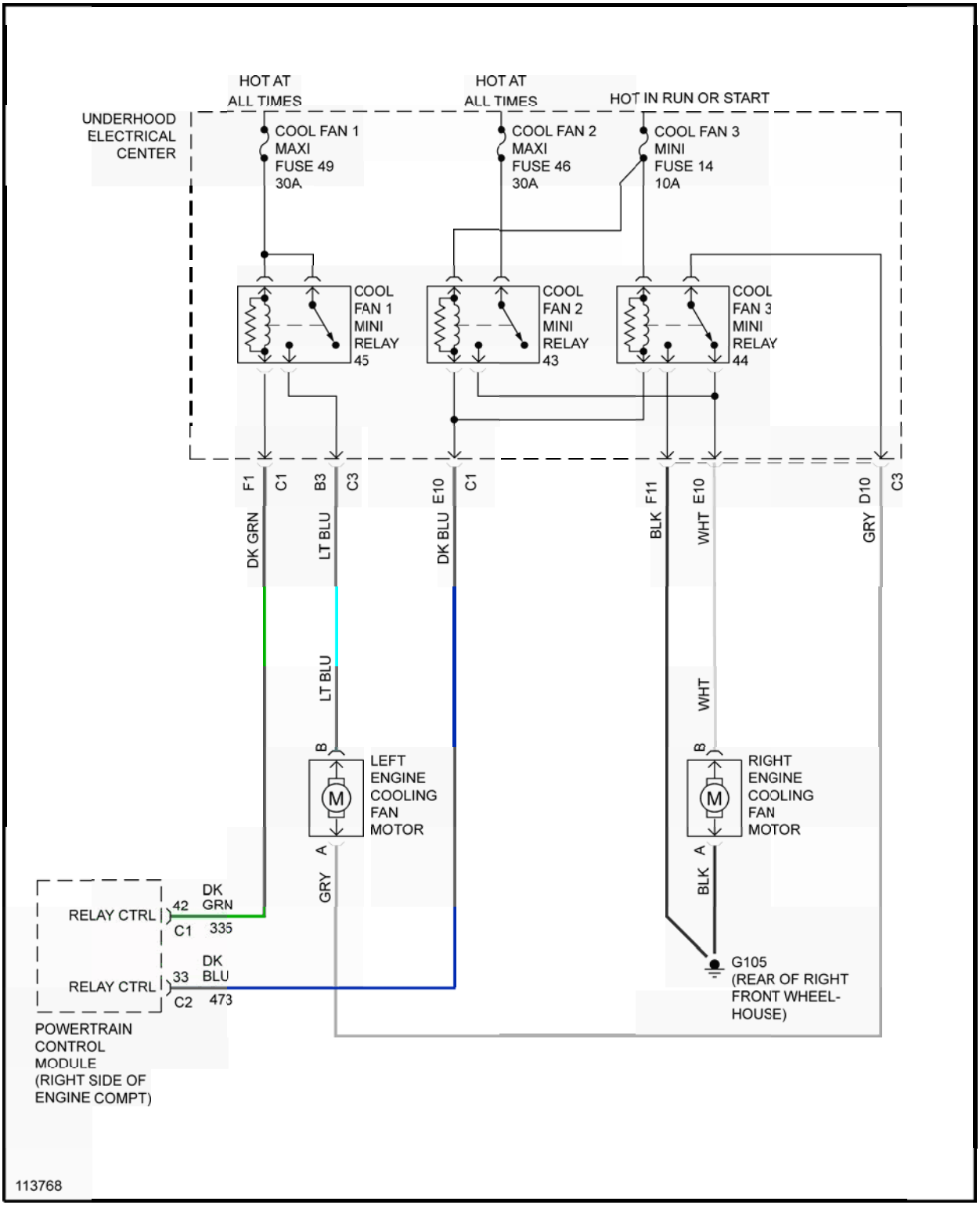


cardiagn.com

**Fig. 30: Cooling Fan System Wiring Diagram (1999 Corvette)**

cardiagn.com

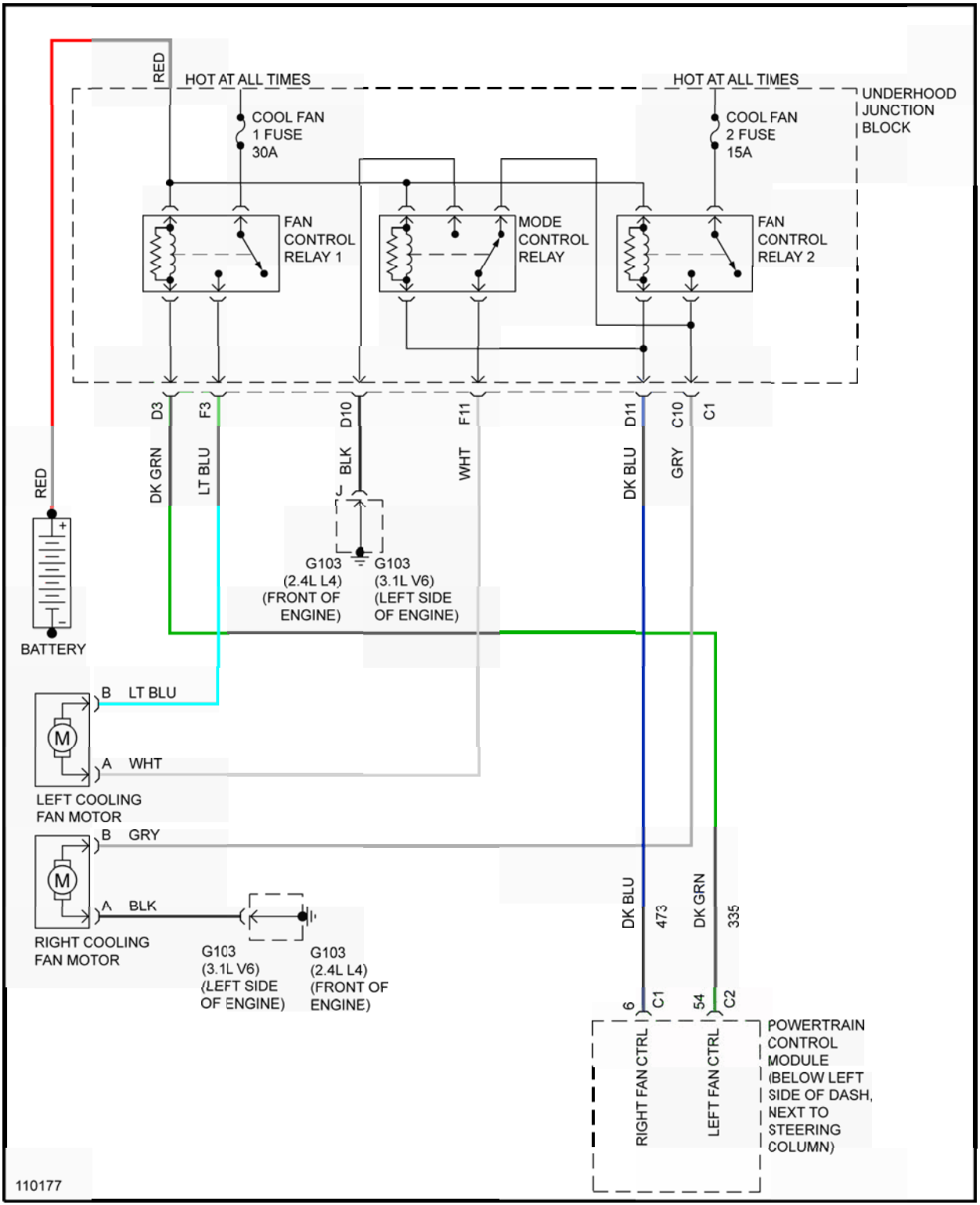


cardiagn.com

**Fig. 31: Cooling Fan System Wiring Diagram (1999 Cutlass & Malibu)**

cardiagn.com

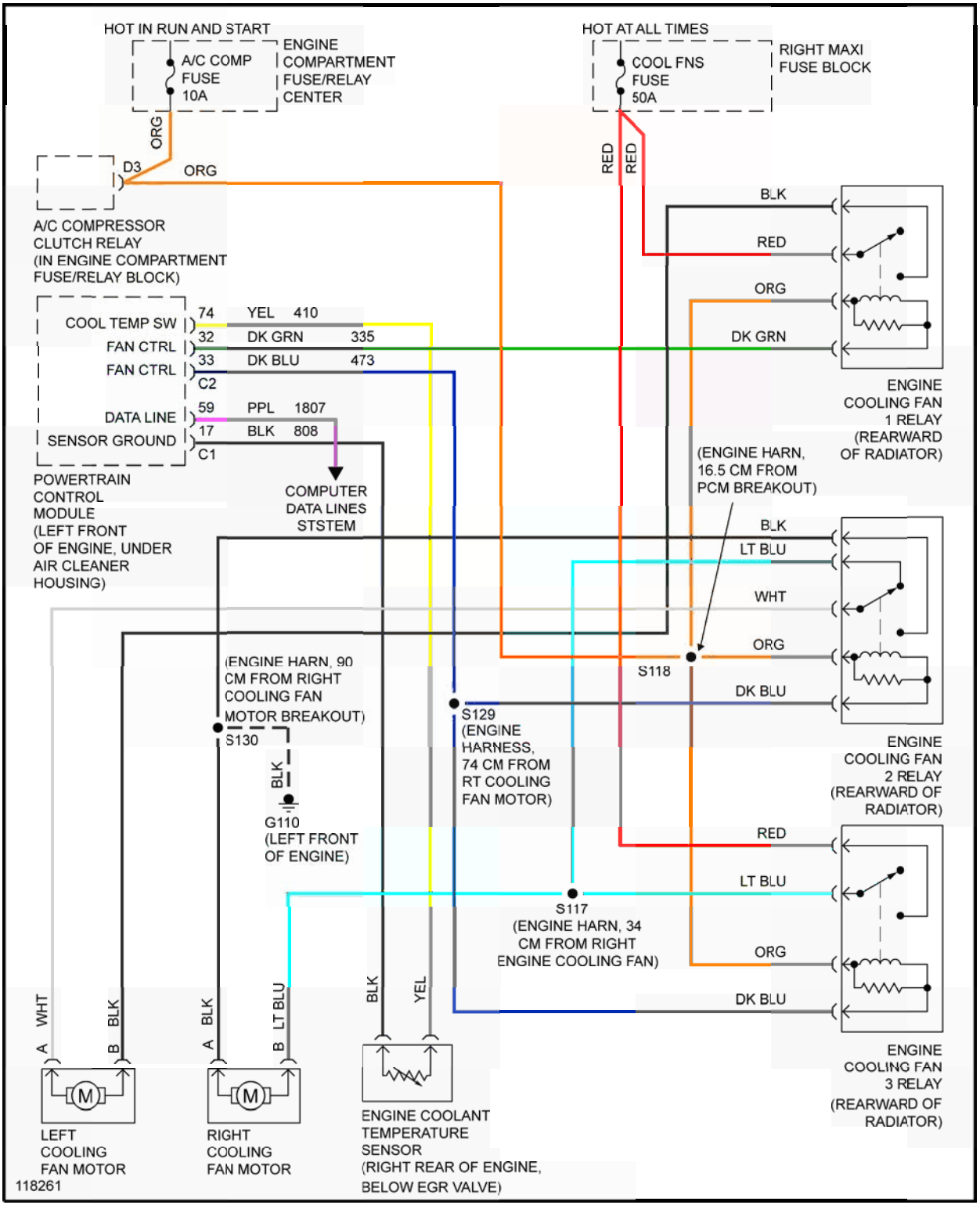


cardiagn.com

**Fig. 32: Cooling Fan System Wiring Diagram (1999 DeVille & Eldorado)**

cardiagn.com

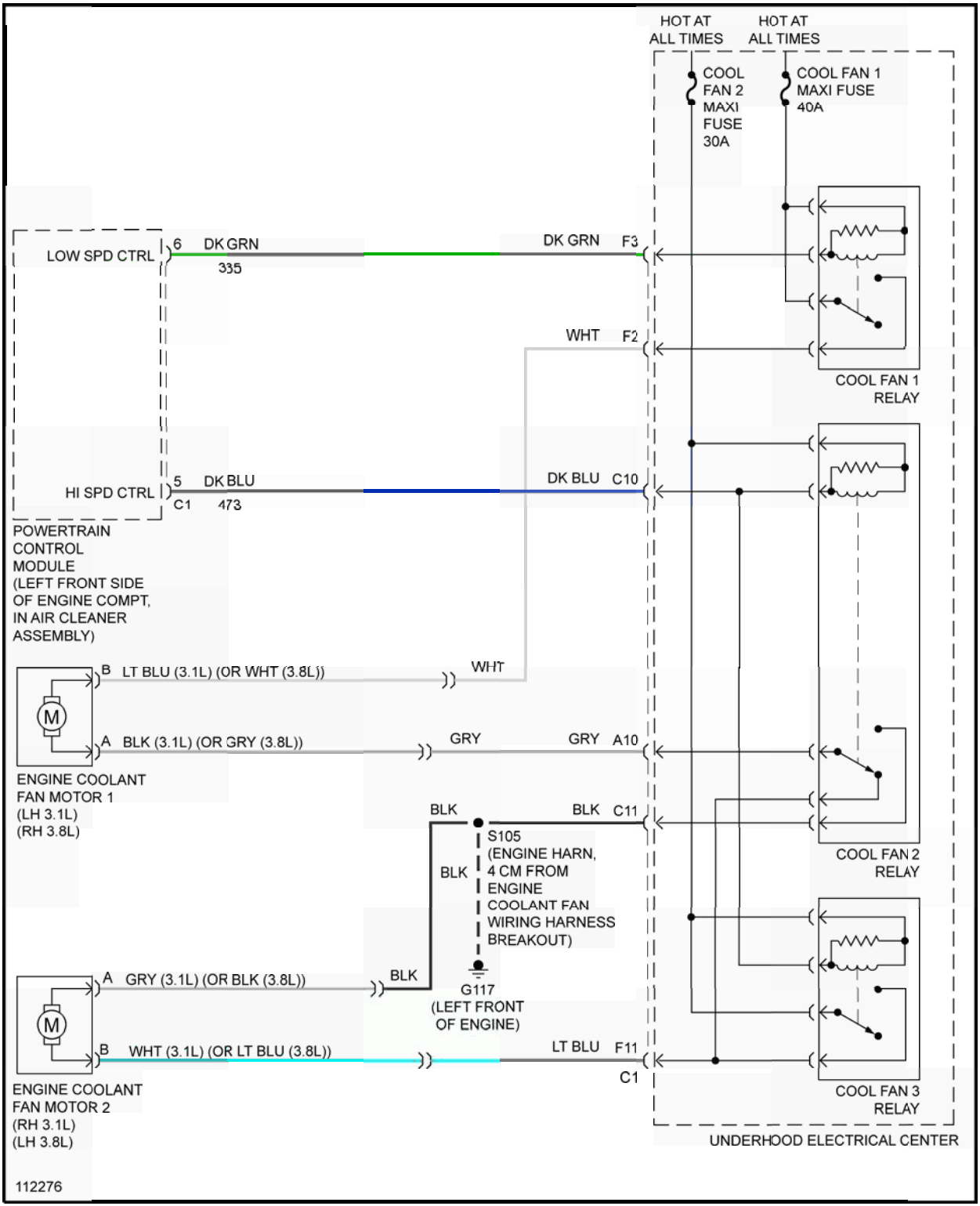


cardiagn.com

**Fig. 33: Cooling Fan System Wiring Diagram (1999 Grand Prix)**

cardiagn.com

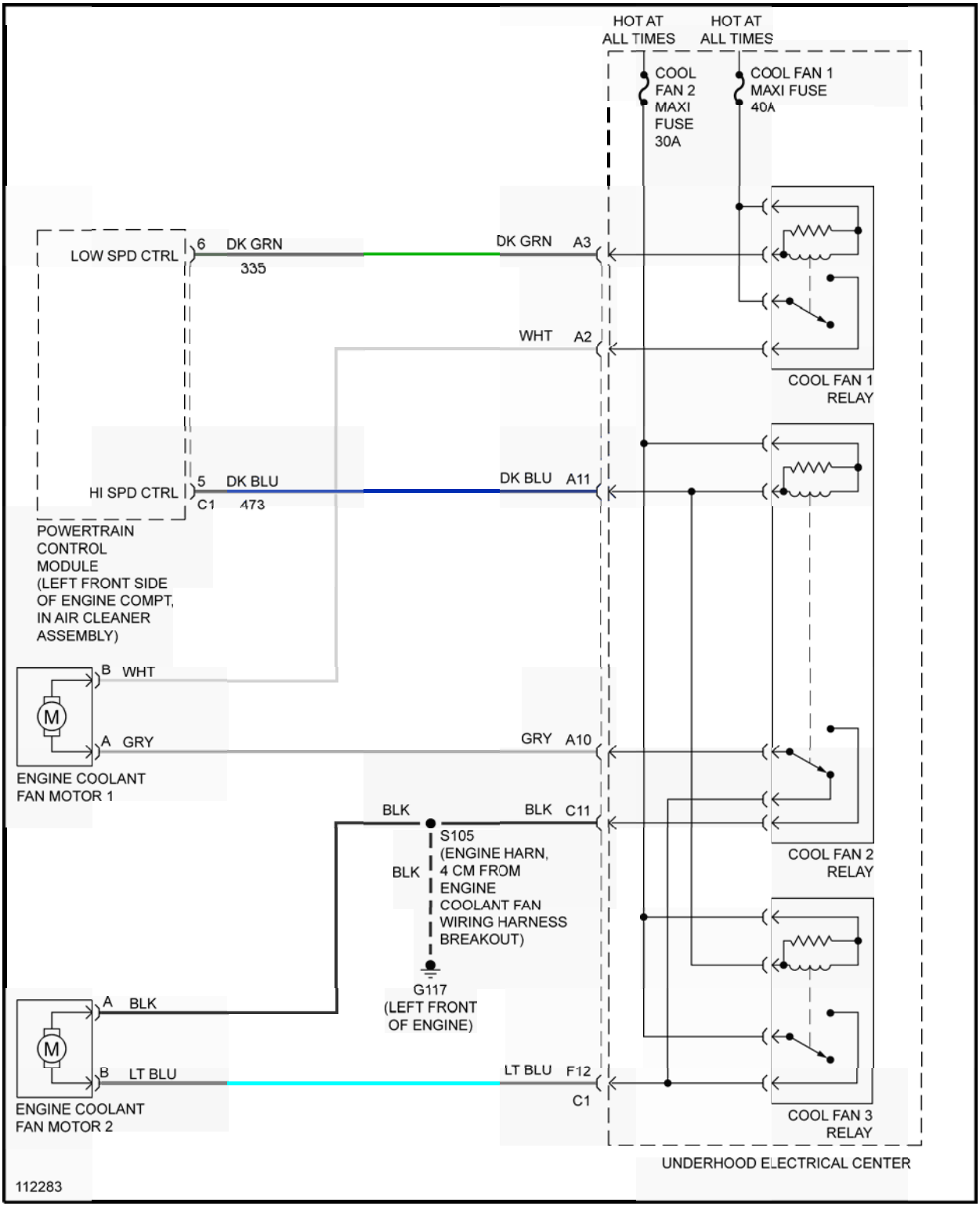


cardiagn.com

**Fig. 34: Cooling Fan System Wiring Diagram (1999 Intrigue)**

cardiagn.com

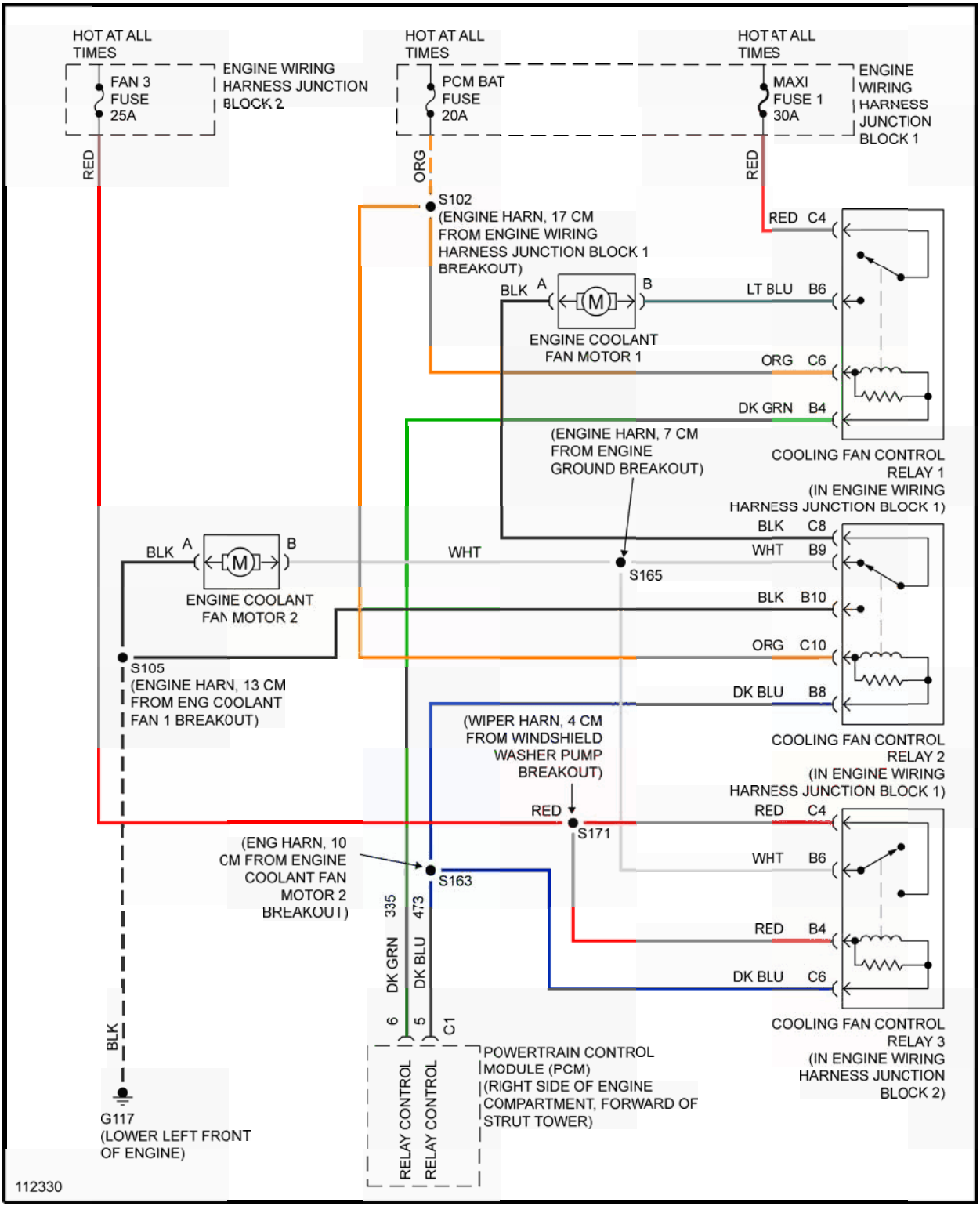


cardiagn.com

**Fig. 35: Cooling Fan System Wiring Diagram (1999 Lumina & Monte Carlo)**

cardiagn.com

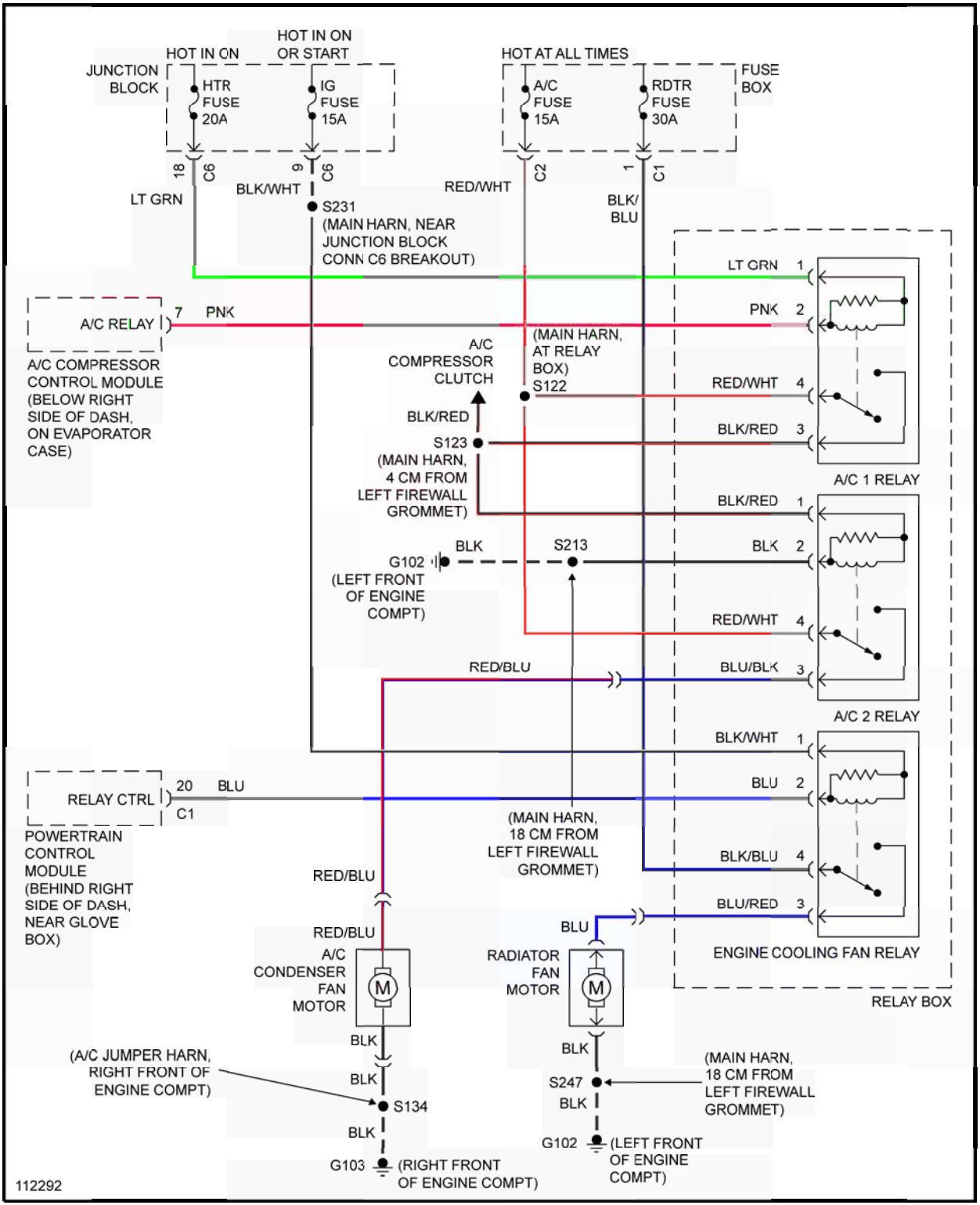


cardiagn.com

**Fig. 36: Cooling Fan System Wiring Diagram (1999 Metro)**

cardiagn.com

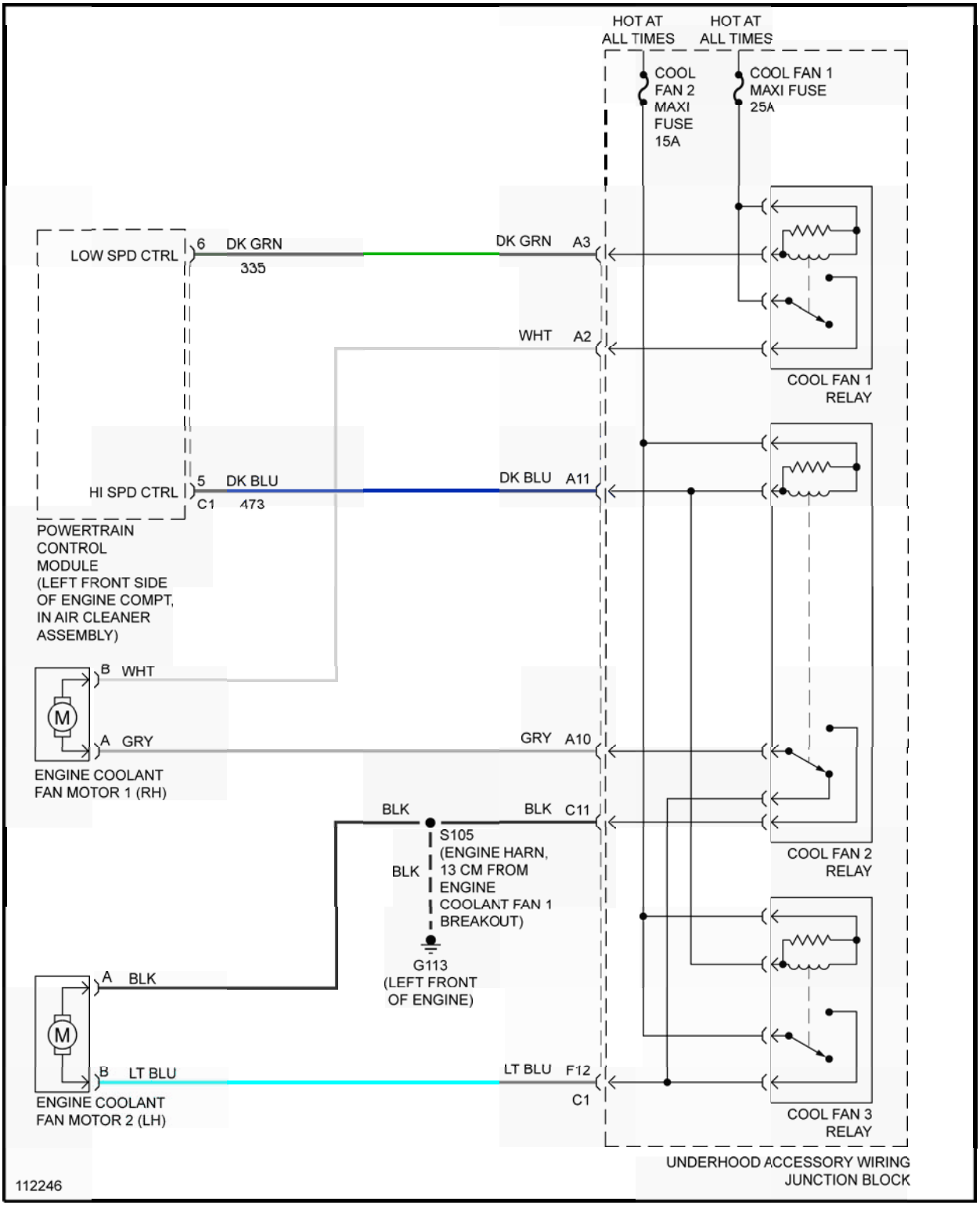


cardiagn.com

**Fig. 37: Cooling Fan System Wiring Diagram (1999 Regal 3.8L VIN K)**

cardiagn.com

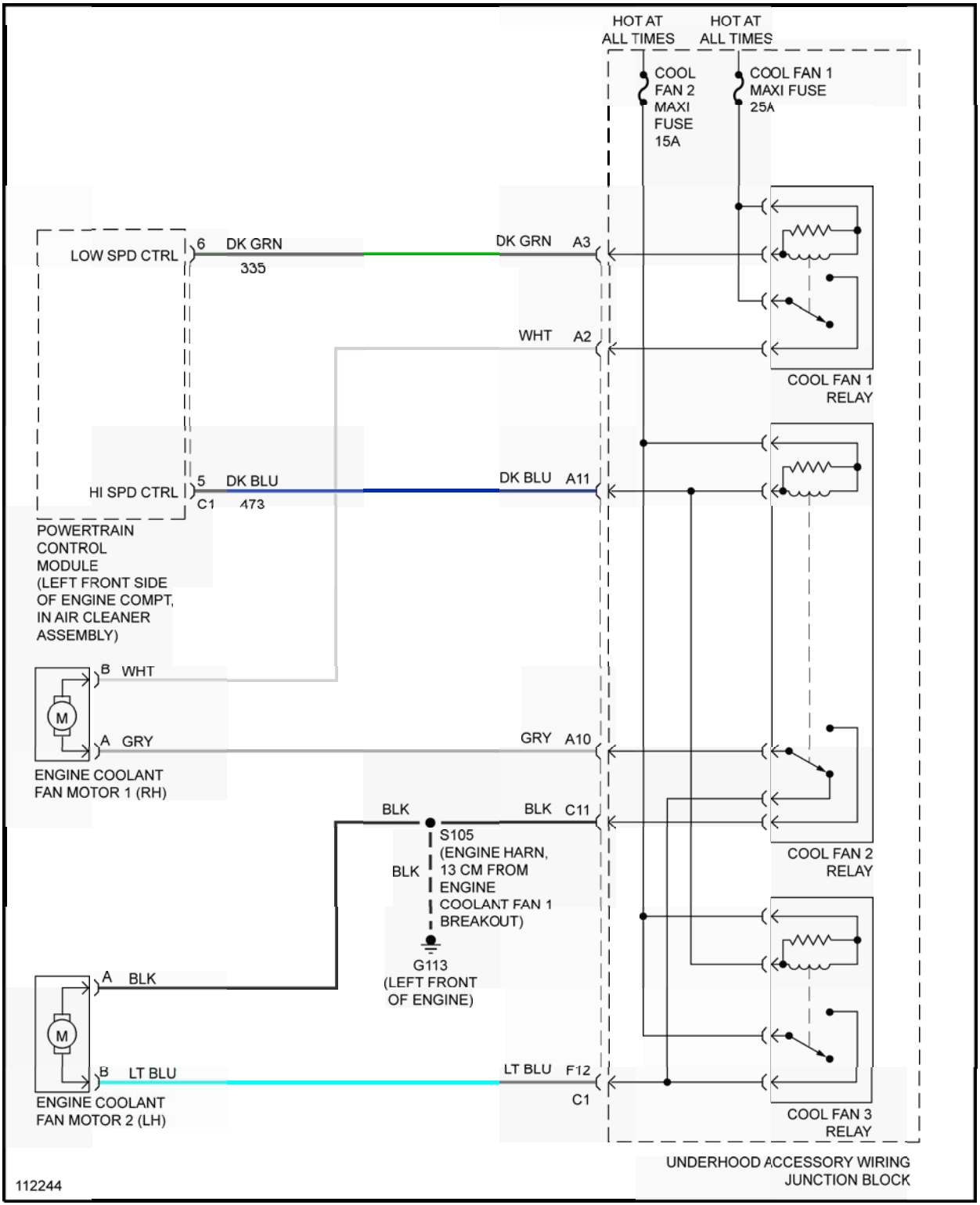


cardiagn.com

**Fig. 38: Cooling Fan System Wiring Diagram (1999 Regal 3.8L VIN 1)**

cardiagn.com

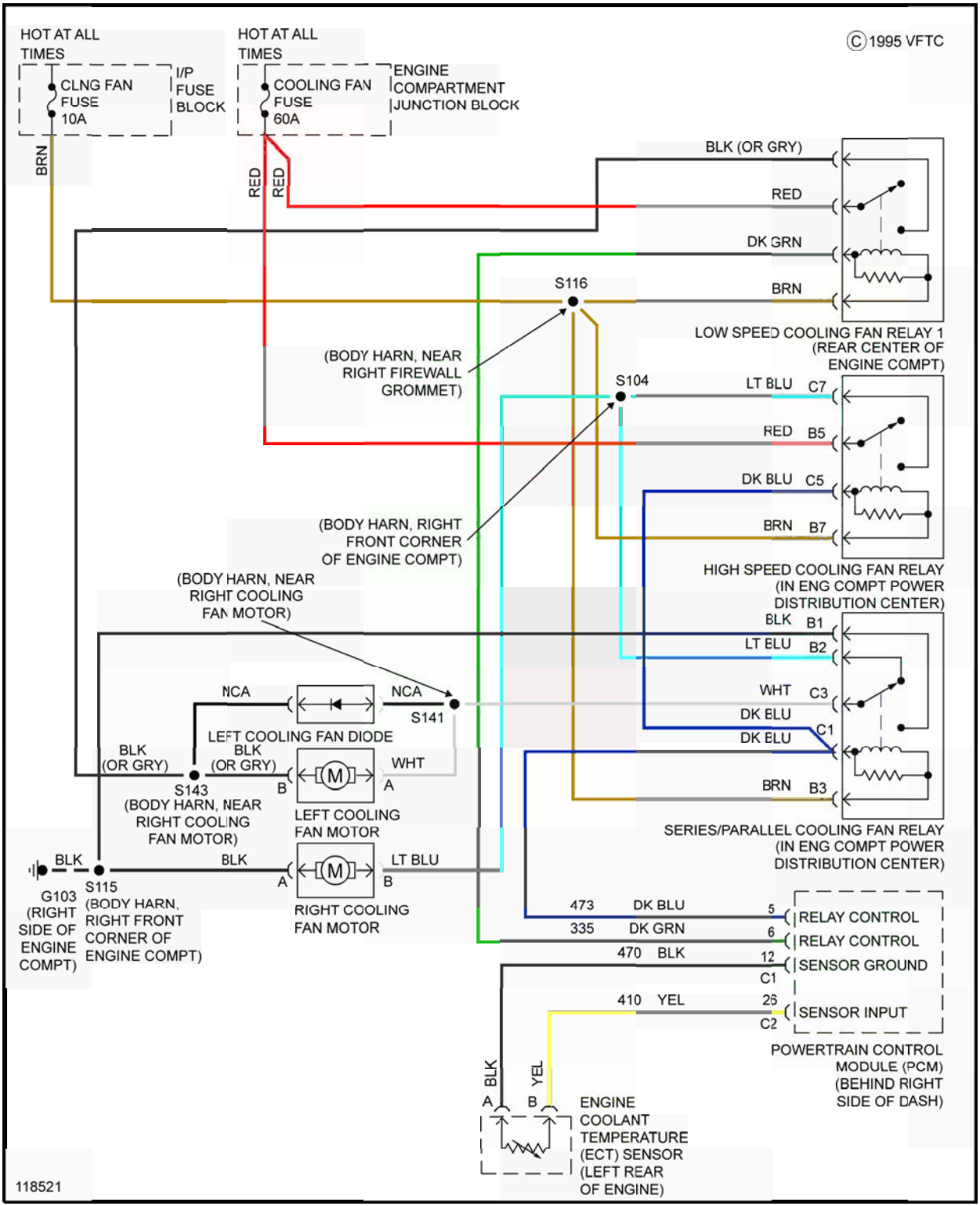


cardiagn.com

**Fig. 39: Cooling Fan System Wiring Diagram (1999 Riviera)**

cardiagn.com

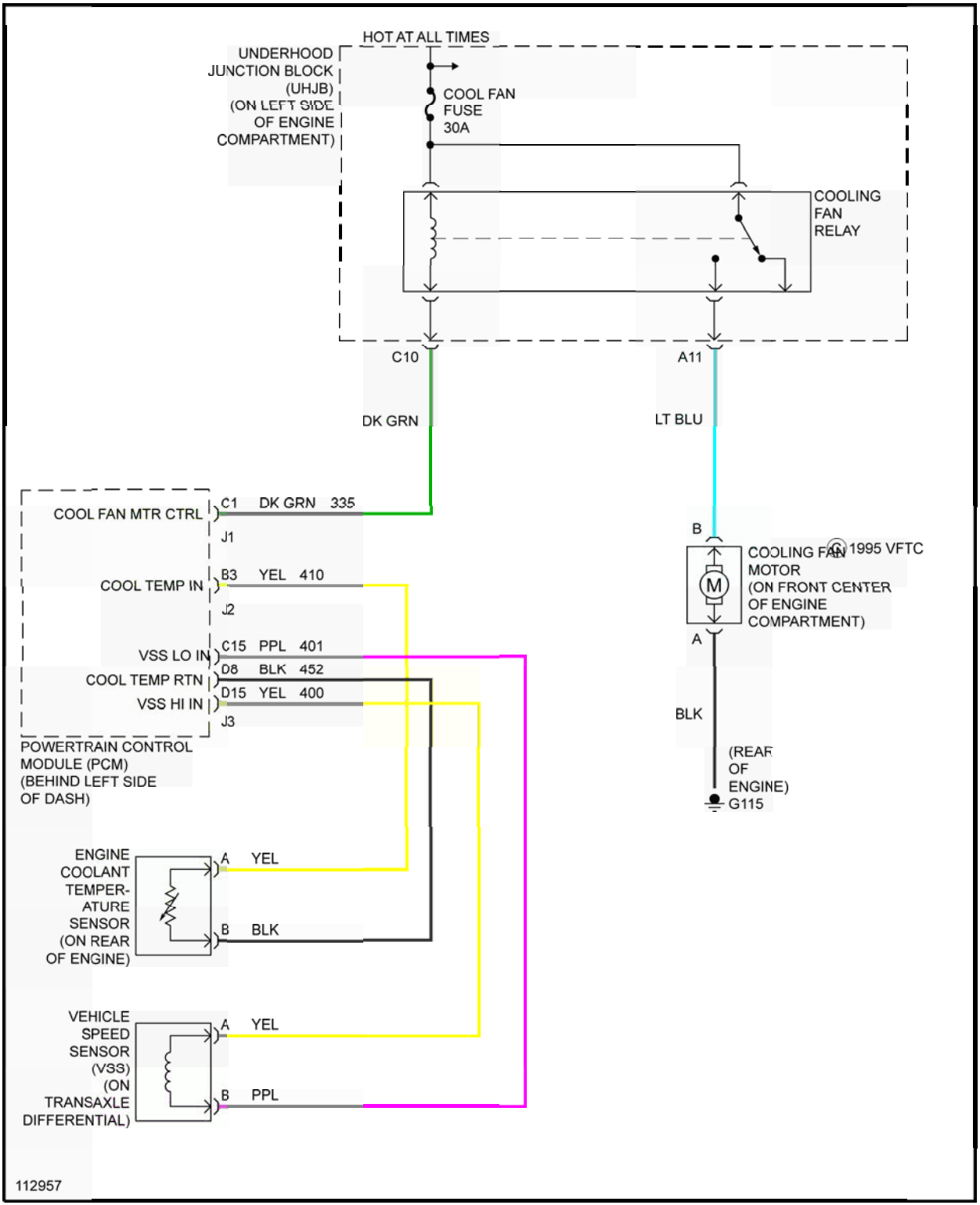


cardiagn.com

**Fig. 40: Cooling Fan System Wiring Diagram (1999 Saturn)**

cardiagn.com

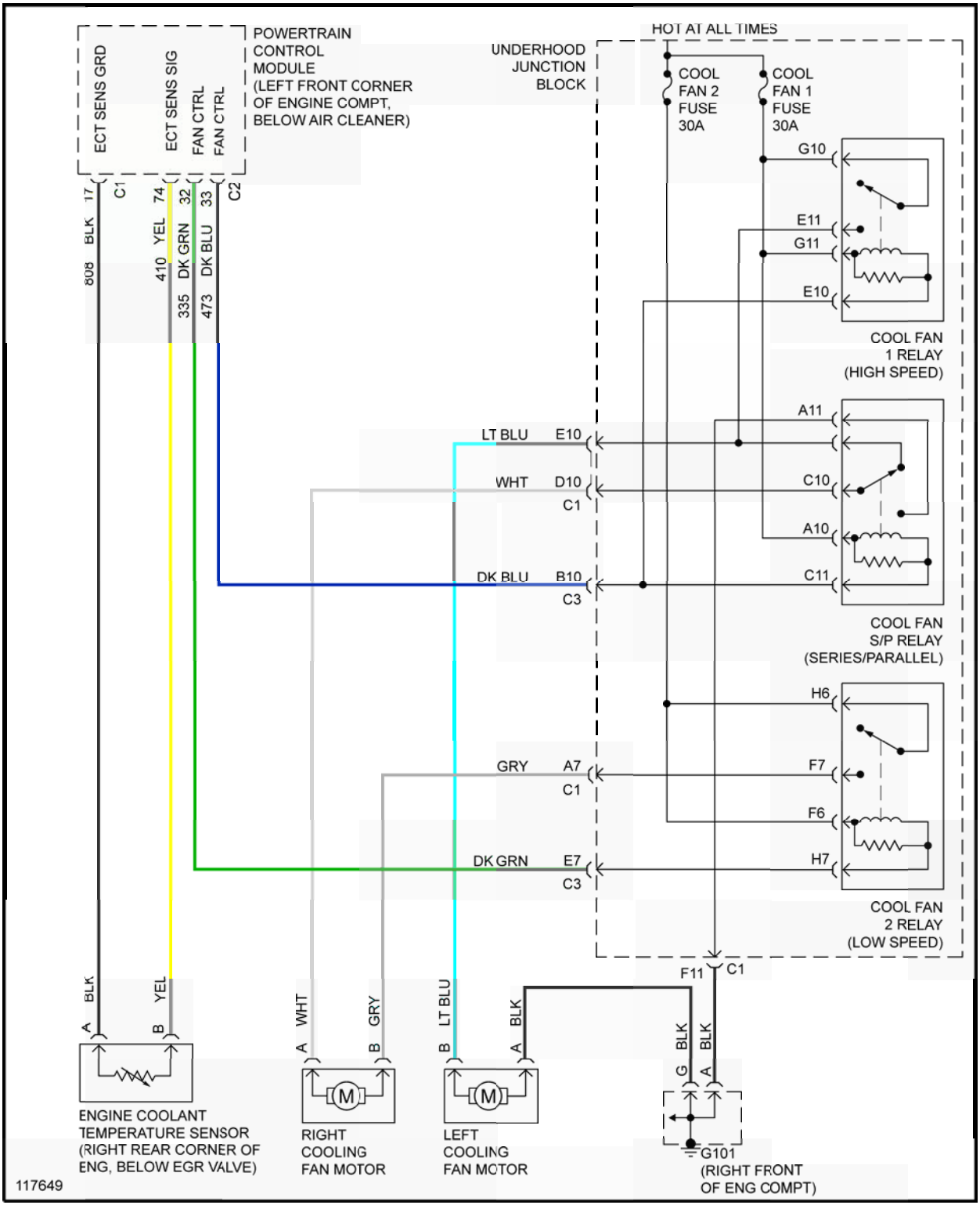


cardiagn.com

**Fig. 41: Cooling Fan System Wiring Diagram (1999 Seville)**

cardiagn.com