SPECIFICATIONS

FASTENER TIGHTENING SPECIFICATIONS

Fastener Tightening Specifications

Application	Specification	
	Metric	English
Automatic Transmission Oil Cooler Line Fitting	25 N.m	18 lb ft
Coolant Air Bleed Bolt/Stud	12 N.m	106 lb in
Cooling Fan Motor Bolt	6 N.m	53 lb in
Engine Coolant Heater	40 N.m	30 lb ft
Engine Coolant Heater Cord Clip Bolt	32 N.m	24 lb ft
Fan Blade Nut	6 N.m	53 lb in
Radiator Baffle Bolt	10 N.m	89 lb in
Radiator Support Bolt	8 N.m	71 lb in
Radiator Surge Tank Nut	10 N.m	89 lb in
Stabilizer Shaft Bracket Bolt	58 N.m	43 lb ft
Water Pump Bolt (First Pass)	15 N.m	11 lb ft
Water Pump Bolt (Final Pass)	30 N.m	22 lb ft
Water Pump Inlet	15 N.m	11 lb ft

SCHEMATIC AND ROUTING DIAGRAMS

ENGINE COOLING SCHEMATICS

cardiagn.com

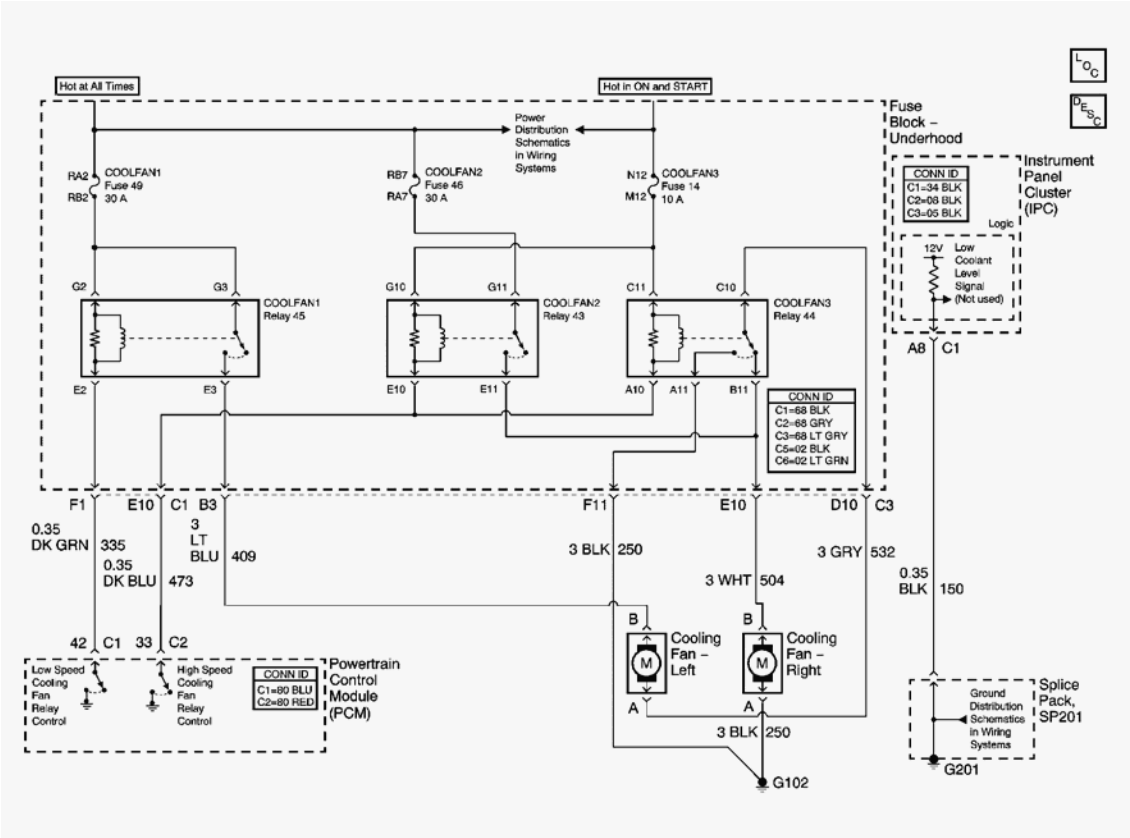

Fig. 1: Engine Cooling Fan & Low Coolant Level Schematics
Courtesy of GENERAL MOTORS CORP.

COMPONENT LOCATOR

COOLING SYSTEM COMPONENT VIEWS

cardiagn.com

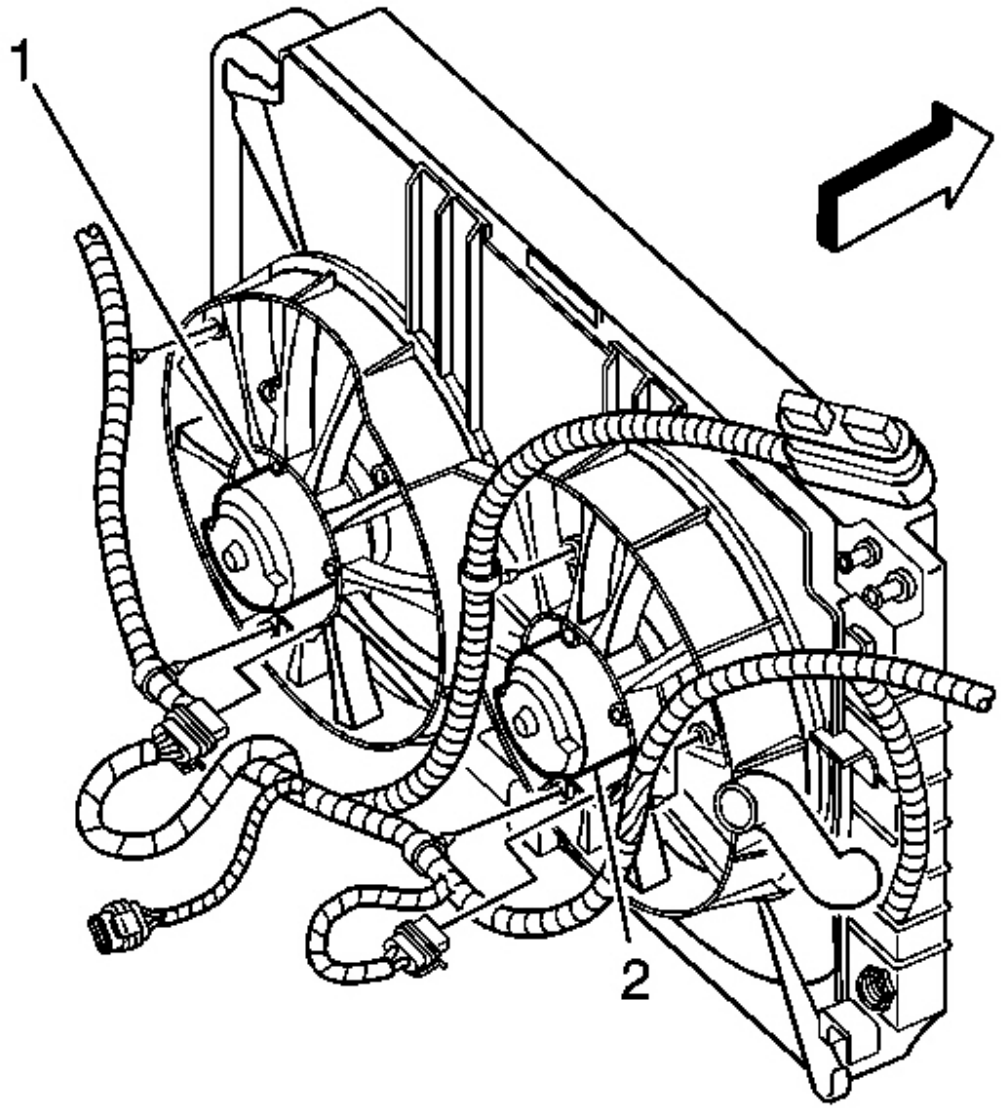

Fig. 2: Cooling Fans Component View
Courtesy of GENERAL MOTORS CORP.

Callouts For Fig. 2

Callout	Component Name
1	Cooling Fan-Left
2	Cooling Fan-Right

cardiagn.com

COOLING SYSTEM CONNECTOR END VIEWS

Cooling Fan Terminal Identification - Left

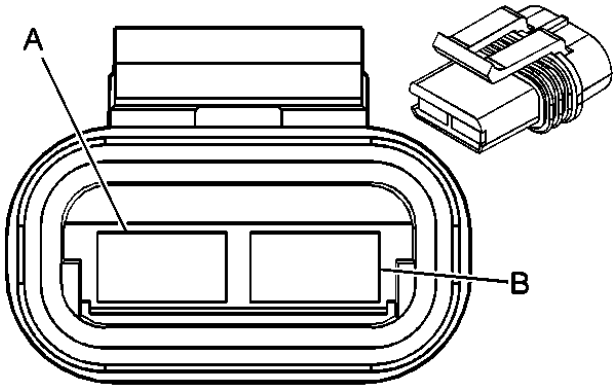

Connector Part Information		• 12020341 • 2-Way F Metri-Pack 630 Series (BLK)	
Pin	**Wire Color**	**Circuit No.**	**Function**
A	GRY	532	Cooling Fan Motor Low Reference
B	LT BLU	409	Cooling Fan Motor Supply Voltage

Cooling Fan Terminal Identification - Right

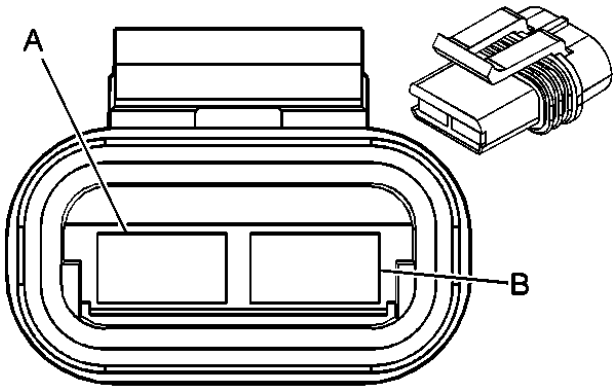

Connector Part Information		• 12020341 • 2-Way F Metri-Pack 630 Series (BLK)	
Pin	**Wire Color**	**Circuit No.**	**Function**
A	BLK	250	Ground

cardiagn.com

B	WHT	504	Cooling Fan Motor Supply Voltage

DIAGNOSTIC INFORMATION AND PROCEDURES

DIAGNOSTIC STARTING POINT - ENGINE COOLING

Begin the system diagnosis with the **Diagnostic System Check - Engine Cooling** . The Diagnostic System Check will provide the following information:

- The identification of the control modules which command the system
- The ability of the control modules to communicate through the serial data circuit
- The identification of any stored diagnostic trouble codes (DTCs) and their status

The use of the Diagnostic System Check will identify the correct procedure for diagnosing the system and where the procedure is located.

DIAGNOSTIC SYSTEM CHECK - ENGINE COOLING

Test Description

The numbers below refer to the step numbers on the diagnostic table.

2: Lack of communication may be due to a partial malfunction of the class 2 serial data circuit or due to a total malfunction of the class 2 serial data circuit. The specified procedure will determine the particular condition.

3: Determine if the Instrument Cluster or Powertrain Control Modules have set DTC's which may affect Engine Cooling operation are present.

4: The presence of DTCs which begin with "U" indicate some other module is not communicating. The specified procedure will compile all the available information before tests are performed.

Diagnostic System Check - Engine Cooling

Step	Action	Yes	No
1	Install a scan tool. Does the scan tool power up?	Go to **Step 2**	Go to **Scan Tool Does Not Power Up** in Data Link Communications
2	1. Turn ON the ignition, with the engine OFF. 2. Attempt to establish communication with the following control modules: • Instrument Cluster • Powertrain Control Module		Go to **Scan Tool Does Not**

cardiagn.com

	Does the scan tool communicate with the control modules?	Go to **Step 3**	**Communicate with Class 2 Device** in Data Link Communications
3	Select the powertrain control module display DTCs function on the scan tool. Does the scan tool display any DTCs?	Go to **Step 4**	Go to **Symptoms - Engine Cooling**
4	Does the scan tool display any DTCs which begin with a "U"?	Go to **Scan Tool Does Not Communicate with Class 2 Device** in Data Link Communications	Go to **Diagnostic Trouble Code (DTC) List**

SCAN TOOL OUTPUT CONTROLS

PCM - 5.7 Liter LS1

Scan Tool Output Control	Additional Menu Selection (s)	Description
Fan Relay 1	Fan Relays	The scan tool displays a Commanded State of None, Off or On. This allows you to communicate with the PCM and activate or deactivate the cooling fan 1 relay, manually turning the low speed fans On and Off.
Fan Relay 2 and 3	Fan Relays	The scan tool displays a Commanded State of None, Off or On. This allows you to communicate with the PCM to activate or deactivate the cooling fan 2 and 3 relays, manually turning the Right High speed fan On.
Fan Relay 1, 2 & 3	Fan Relays	The scan tool displays a Commanded State of None, Off or On. This allows you to communicate with the PCM to activate or deactivate the cooling fan 1, 2 & 3 relays, manually turning both High speed fans On.

SCAN TOOL DATA LIST

Instrument Panel Cluster (IPC)

Scan Tool Parameter	Data List	Units Displayed	Typical Data Value
Ignition ON/Engine OFF			
Engine Coolant Temperature	Data	Degrees Celsius (° C)/Degrees Fahrenheit (° F)	Varies
Coolant Level Input	Inputs	OK/Low	OK

Powertrain Control Module (PCM) 5.7 Liter LS1

Scan Tool Parameter	Data List	Units Displayed	Typical Data Value
Key ON, Engine OFF			

cardiagn.com

ECT Sensor	Engine Data 1, Engine Data 2, Engine Data 3	Degrees Celsius (° C)/Degrees Fahrenheit (° F)	Varies
FC Relay 1 Command	Engine Data 2, Engine Data 3	Off/On	Off
FC Relay 2 & 3 Command	Engine Data 2, Engine Data 3	Off/On	Off

SCAN TOOL DATA DEFINITIONS

Coolant Temperature

The scan tool displays -40° C to +151° C (-40° F to +304° F). This data is the coolant temperature the Instrument Cluster is attempting to display on the coolant temperature gage.

ECT

The scan tool displays -40° C to +151° C (-40° F to +304° F). The Engine Coolant Temperature (ECT) sensor is mounted in the coolant stream. The PCM applies 5 volts to the ECT sensor circuit. The sensor is a thermistor which changes internal resistance as temperature changes. When the sensor is cold (internal resistance high), the PCM monitors a high signal voltage and interprets it as a cold engine. As the sensor warms (internal resistance decreases), the voltage signal decreases and the PCM interprets the lower voltage as a warm engine.

FC Relay 1 Command

The scan tool displays On or Off. This parameter indicates the state of the driver circuit for this device.

FC Relay 2 and 3 Command

The scan tool displays On or Off. This parameter indicates the state of the driver circuit for this device.

Coolant Level Input

The scan tool displays OK or Low. If the ground circuit opens, the scan tool will display Low.

DIAGNOSTIC TROUBLE CODE (DTC) LIST

Diagnostic Trouble Code (DTC) List

DTC	Diagnostic Procedure	Module(s)
P0480	**DTC P0480**	PCM
P0481	**DTC P0481**	PCM
P1258	**DTC P1258**	PCM

DTC P0480

cardiagn.com

Circuit Description

Battery positive voltage is supplied to the coolfan 1 relay from the coolfan 1 fuse. The powertrain control module (PCM) controls the coolfan 1 relay by grounding the low speed coolfan relay control circuit through an internal solid state device called a driver. The primary function of the driver is to supply the ground for the component being controlled. Each driver has a fault line which is monitored by the PCM. When the PCM is commanding a component on, the voltage potential of the control circuit should be low, near 0 volts. When the PCM is commanding the control circuit to a component off, the voltage potential of the circuit should be high, near battery voltage. If the fault detection circuit senses a voltage other than what is expected, the DTC will set.

The PCM will monitor the control circuit for the following:

- A short to ground
- A short to voltage
- An open circuit
- An open relay coil
- An internally shorted or excessively low resistance relay coil.

When the PCM detects any of the above conditions, the DTC will set and the affected driver will be disabled.

Conditions for Running the DTC

- The ignition voltage is between 6 and 18 volts.
- The engine speed is more than 400 RPM.

Conditions for Setting the DTC

- An improper voltage level has been detected on the low speed coolfan relay control circuit.
- The above conditions are present for at least 5 seconds.

Action Taken When the DTC Sets

- The PCM will illuminate the malfunction indicator lamp (MIL) during the second consecutive trip in which the diagnostic test has been run and failed.
- The PCM will store conditions which were present when the DTC set as Freeze Frame and Failure Records data.

Conditions for Clearing the MIL/DTC

- The PCM will turn OFF the MIL during the third consecutive trip in which the diagnostic has been run and passed.
- The History DTC will clear after 40 consecutive warm-up cycles have occurred without a malfunction.
- The DTC can be cleared by using the scan tool.

Diagnostic Aids

cardiagn.com

Check for the following conditions:

- A faulty connection at the PCM, inspect the harness connectors for the following conditions.
  - Backed out terminals
  - Improper mating
  - Broken locks
  - Improperly formed or damaged terminals
  - Faulty terminal to wire connections
- Inspect the wiring harness for damage.
- If the harness appears to be OK, disconnect the PCM, turn the ignition ON and observe a digital multimeter (DMM) connected between the low speed coolfan relay control circuit of the coolfan 1 relay and ground at the PCM harness connector. While moving connectors and the wiring harness related to the coolfan 1 relay, a change in voltage will indicate the location of the fault.

Review the Freeze/Failure Records vehicle mileage since the diagnostic test last failed. This may help determine how often the condition that caused the DTC to be set occurs.

Test Description

The numbers below refer to the step numbers on the diagnostic table.

2: Listen for an audible click when the coolfan 1 relay operates. Command both the ON and OFF states. Repeat the commands as necessary.

3: Tests for voltage at the coil side of the coolfan 1 relay. The coolfan 1 fuse supplies battery positive voltage to the coil side of the coolfan 1 relay.

4: Verifies that the PCM is providing ground to the coolfan 1 relay.

5: Tests if ground is constantly being applied to the coolfan 1 relay.

DTC P0480

Step	Action	Yes	No
Schematic Reference:Engine Cooling Schematics **Connector End View Reference: Cooling System Connector End Views**			
1	Did you perform the Engine Cooling Diagnostic System Check?	Go to **Step 2**	Go to **Diagnostic System Check - Engine Cooling**
2	1. Install a scan tool. 2. Turn ON the ignition, with the engine OFF. 3. With a scan tool, command the Fan Relay 1 ON and OFF. Does the coolfan 1 relay turn ON and OFF with each command?	Go to Diagnostic Aids	Go to **Step 3**

cardiagn.com

3	1. Turn OFF the ignition. 2. Disconnect the coolfan 1 relay 3. Turn ON the ignition, with the engine OFF. 4. Probe the battery voltage circuit of the coolfan 1 relay with a test lamp that is connected to a good ground. Does the test lamp illuminate?	Go to **Step 4**	Go to **Step 10**
4	1. Connect a test lamp between the control circuit of the coolfan 1 relay and the battery positive voltage circuit of the coolfan 1 relay. 2. With a scan tool, command the Fan Relay 1 ON and OFF. Does the test lamp turn ON and OFF with each command?	Go to **Step 8**	Go to **Step 5**
5	Does the test lamp remain illuminated with each command?	Go to **Step 7**	Go to **Step 6**
6	Test the control circuit of the coolfan 1 relay for a short to voltage or an open. Refer to **Circuit Testing** and **Wiring Repairs** in Wiring Systems. Did you find and correct the condition?	Go to **Step 14**	Go to **Step 9**
7	Test the control circuit of the coolfan 1 relay for a short to ground. Refer to **Circuit Testing** and **Wiring Repairs** in Wiring Systems. Did you find and correct the condition?	Go to **Step 14**	Go to **Step 9**
8	Inspect for poor connections at the coolfan 1 relay. Refer to the following procedures in Wiring Systems. • **Circuit Testing** • **Wiring Repairs** Did you find and correct the condition?	Go to **Step 14**	Go to **Step 12**
9	Inspect for poor connections at the harness connector of the PCM. Refer to the following procedures in Wiring Systems. • **Circuit Testing** • **Wiring Repairs** Did you find and correct the condition?	Go to **Step 14**	Go to **Step 13**
	Test the battery positive voltage circuit for an open or a		

cardiagn.com

10	short to ground. Refer to the following procedures in Wiring Systems: • **Circuit Testing** • **Wiring Repairs** Did you find and correct the condition?	Go to **Step 14**	Go to **Step 11**
11	Repair the coolfan motor supply voltage circuit for a short to ground. Refer to **Wiring Repairs** in Wiring Systems. Did you complete the repair?	Go to **Step 14**	-
12	Replace the coolfan 1 relay. Did you complete the replacement?	Go to **Step 14**	-
13	**IMPORTANT:** **Perform the set up procedure for the PCM.** Replace the PCM. Refer to **Powertrain Control Module (PCM) Replacement** in Engine Controls.Did you complete the replacement?	Go to **Step 14**	-
14	1. Use the scan tool in order to clear the DTCs. 2. Operate the vehicle within the Conditions for Running the DTC as specified in the supporting text. Does the DTC reset?	Go to **Step 2**	System OK

DTC P0481

Circuit Description

Ignition 1 Voltage is supplied to the coil of the coolfan 2 and coolfan s/p relays from the coolfan 3 fuse. Battery positive voltage is supplied to the switch side of the coolfan 2 relay from the coolfan 2 fuse. The powertrain control module (PCM) controls the relays by grounding the high speed coolfan relay control circuit through an internal solid state device called a driver. The primary function of the driver is to supply the ground for the component being controlled. Each driver has a fault line which is monitored by the PCM. When the PCM is commanding a component on, the voltage potential of the control circuit should be low, near 0 volts. When the PCM is commanding the control circuit to a component off, the voltage potential of the circuit should be high, near battery voltage. If the fault detection circuit senses a voltage other than what is expected, the DTC will set.

The PCM will monitor the control circuit for the following:

- A short to ground
- A short to voltage
- An open circuit

cardiagn.com

When the PCM detects any of the above conditions, the DTC will set and the affected driver will be disabled.

Conditions for Running the DTC

- The ignition voltage is between 6 and 18 volts.
- The engine speed is more than 400 RPM.

Conditions for Setting the DTC

- An improper voltage level has been detected on the high speed coolfan relay control circuit.
- The above conditions are present for at least 5 seconds.

Action Taken When the DTC Sets

- The PCM will illuminate the malfunction indicator lamp (MIL) during the second consecutive trip in which the diagnostic test has been run and failed.
- The PCM will store conditions which were present when the DTC set as Freeze Frame and Failure Records data.

Conditions for Clearing the MIL/DTC

- The PCM will turn OFF the MIL during the third consecutive trip in which the diagnostic has been run and passed.
- The History DTC will clear after 40 consecutive warm-up cycles have occurred without a malfunction.
- The DTC can be cleared by using the scan tool.

Diagnostic Aids

Check for the following conditions:

- A faulty connection at the PCM, inspect the harness connectors for the following conditions.
  - Backed out terminals
  - Improper mating
  - Broken locks
  - Improperly formed or damaged terminals
  - Faulty terminal to wire connections
- Inspect the wiring harness for damage.
- If the harness appears to be OK, disconnect the PCM, turn the ignition ON and observe a digital multimeter (DMM) connected between the high speed coolfan relay control circuit and ground at the PCM harness connector. While moving connectors and the wiring harness related to the coolfan 3 and the coolfan 2 relays, a change in voltage will indicate the location of the fault.

Review the Freeze/Failure Records vehicle mileage since the diagnostic test last failed. This may help determine how often the condition that caused the DTC to be set occurs.

cardiagn.com

Test Description

The numbers below refer to the step numbers on the diagnostic table.

2: Listen for an audible click when the coolfan 2 relay operates. Command both the ON and OFF states. Repeat the commands as necessary.

3: Tests for voltage at the coil side of the coolfan 2 relay. The coolfan 3 fuse supplies ignition 1 voltage to the coil side of the coolfan 2 relay.

4: Verifies that the PCM is providing ground to the coolfan 2 relay.

5: Tests if ground is constantly being applied to the coolfan 2 relay.

DTC P0481

Step	Action	Yes	No
Schematic Reference:Engine Cooling Schematics **Connector End View Reference: Cooling System Connector End Views**			
1	Did you perform the Engine Cooling Diagnostic System Check?	Go to **Step 2**	Go to **Diagnostic System Check - Engine Cooling**
2	1. Install a scan tool. 2. Turn ON the ignition, with the engine OFF. 3. With a scan tool, command the Fan Relays 1, 2 & 3 ON and OFF. Does the coolfan 3 and the coolfan 2 relays turn ON and OFF with each command?	Go to Diagnostic Aids	Go to **Step 3**
3	1. Turn OFF the ignition. 2. Disconnect the coolfan 2 relay 3. Turn ON the ignition, with the engine OFF. 4. Probe the Ignition 1 Voltage circuit of the coolfan 2 relay with a test lamp that is connected to a good ground. Does the test lamp illuminate?	Go to **Step 4**	Go to **Step 8**
4	1. Connect a test lamp between the control circuit of the coolfan 2 relay and the battery positive voltage circuit of the coolfan 2 relay. 2. With a scan tool, command the Fan Relays 1, 2 & 3 ON and OFF. Does the test lamp turn ON and OFF with each command?	Go to **Step 9**	Go to **Step 5**
5	Does the test lamp remain illuminated with each command?	Go to **Step 7**	Go to **Step 6**
	Test the control circuit of the coolfan 3 relay and the coolfan		

cardiagn.com

6	2 relay for a short to voltage or an open. Refer to **Circuit Testing** and **Wiring Repairs** in Wiring Systems. Did you find and correct the condition?	Go to **Step 12**	Go to **Step 9**
7	Test the control circuit of the coolfan 3 relay and the coolfan 2 relay for a short to ground. Refer to **Circuit Testing** and **Wiring Repairs** in Wiring Systems. Did you find and correct the condition?	Go to **Step 12**	Go to **Step 9**
8	Test the Ignition 1 Voltage circuit of the coolfan 3 relay and the coolfan 2 relay for an open or a short to ground. Refer to **Circuit Testing** and **Wiring Repairs** in Wiring Systems. Did you find and correct the condition?	Go to **Step 12**	Go to **Step 10**
9	Inspect for poor connections at the harness connector of the PCM. Refer to **Testing for Intermittent Conditions and Poor Connections** and **Connector Repairs** in Wiring Systems. Did you find and correct the condition?	Go to **Step 12**	Go to **Step 11**
10	Repair the coolfan motor supply voltage circuit for a short to ground. Refer to **Wiring Repairs** in Wiring Systems. Did you complete the repair?	Go to **Step 12**	-
11	**IMPORTANT:** **Perform the set up procedure for the PCM.** Replace the PCM. Refer to **Powertrain Control Module (PCM) Replacement** in Engine Controls.Did you complete the replacement?	Go to **Step 12**	-
12	1. Use the scan tool in order to clear the DTCs. 2. Operate the vehicle within the Conditions for Running the DTC as specified in the supporting text. Does the DTC reset?	Go to **Step 2**	System OK

DTC P1258

Circuit Description

The powertrain control module (PCM) uses the engine coolant temperature (ECT) sensor to monitor the engine for an over temperature condition. This condition occurs when the coolant temperature is above 131° C (268° F). When an over temperature condition is present, DTC P1258 will set. The PCM will disable two groups of four cylinders by turning OFF the fuel injectors. By switching between the two groups of cylinders, the PCM is able to reduce the temperature of the coolant.

Conditions for Running the DTC

The engine is running.

cardiagn.com

Conditions for Setting the DTC

The PCM detects an engine over temperature condition.

Action Taken When the DTC Sets

- The PCM will illuminate the malfunction indicator lamp (MIL) during the first trip in which the diagnostic test has been run and failed.
- The PCM will signal the instrument panel cluster (IPC) to turn ON the Service Engine Soon indicator.
- The PCM will alternately disable two groups of four cylinders by turning OFF the fuel injectors.
- The PCM will store conditions which were present when the DTC set as Freeze Frame and File Records data.

Conditions for Clearing the MIL/DTC

- The PCM will turn the MIL OFF after three consecutive trips that the diagnostic has been run and passed.
- The history DTC will clear after 40 consecutive warm-up cycles have occurred without a malfunction.
- The DTC can be cleared by using the scan tool Clear DTC Information function.

DTC P1258

Step	Action	Yes	No
Connector End View Reference: Cooling System Connector End Views			
1	Was the Diagnostic System Check for Engine Cooling performed?	Go to **Step 2**	Go to **Diagnostic System Check - Engine Cooling**
2	Check the engine coolfans for proper operation. Are the engine coolfans operative?	Go to **Engine Overheating**	Go to **Symptoms - Engine Cooling**

SYMPTOMS - ENGINE COOLING

IMPORTANT: The following steps must be completed before using the symptom tables.

1. Perform the **Diagnostic System Check - Engine Cooling** before using the Symptom Tables in order to verify that all of the following are true:
2. There are no DTCs set.
3. The control modules can communicate through the serial data link.

Visual/Physical Inspection

- Inspect for aftermarket devices which could affect cooling system operation. Refer to **Checking Aftermarket Accessories** in Wiring Systems.
- Inspect the easily accessible or visible system components for obvious damage or conditions which could cause the symptom.

cardiagn.com

Intermittent

Faulty electrical connections or wiring may be the cause of intermittent conditions. Refer to **Testing for Intermittent Conditions and Poor Connections** in Wiring Systems.

Symptom List

Refer to a symptom diagnostic procedure from the following list in order to diagnose the symptom:

- **Low Engine Coolant Indicator Always On**
- **Cooling Fan Inoperative**
- **Coolant Heater Inoperative**
- **Loss of Coolant**
- **Thermostat Diagnosis**
- **Engine Fails To Reach Normal Operating Temperature**

LOW ENGINE COOLANT INDICATOR ALWAYS ON

Low Engine Coolant Indicator Always On

Step	Action	Yes	No
Schematic Reference:Instrument Cluster Schematics			
1	Did you perform the Engine Cooling Diagnostic System Check?	Go to **Step 2**	Go to **Diagnostic System Check - Engine Cooling**
2	Is the Low Coolant Indicator Always On?	Go to **Step 3**	Go to **Testing for Electrical Intermittents** in Wiring Systems
3	With the key in the RUN position. 1. Install a scan tool 2. With a scan tool, view the Engine Coolant Level input data in the Instrument Panel Cluster data list. Does the scan tool display Low?	Go to **Step 4**	Go to **Step 5**
4	Repair the open or high resistance in the ground circuit of the Low Coolant Level Input of the Instrument Cluster. Refer to **Wiring Repairs** in Wiring Systems. Did you find and correct the condition?	Go to **Step 6**	-
5	Replace the Instrument Panel Cluster. Refer to **Instrument Panel Cluster (IPC) Replacement** in Instrument Panel, Gauges and Console. Did you complete the replacement?	Go to **Step 6**	-
6	Operate the system in order to verify the repair. Did you correct the condition?	System OK	Go to **Step 3**

cardiagn.com

COOLING FAN ALWAYS ON

Cooling Fan Always On

Step	Action	Yes	No
Schematic Reference:Engine Cooling Schematics **Connector End View Reference: Cooling System Connector End Views** DEFINITION: One or both engine coolfan motors run continuously in high or low speed.			
1	Did you perform the Engine Cooling Diagnostic System Check?	Go to **Step 2**	Go To **Diagnostic System Check - Engine Cooling**
2	Turn ON the ignition, with the engine OFF. Are one or both coolfans ON?	Go to **Step 3**	Go to **Testing for Intermittent Conditions and Poor Connections** in Wiring Systems
3	Are both coolfans running continuously?	Go to **Step 5**	Go to **Step 4**
4	Remove the coolfan 3 relay. Did the right coolfan turn OFF?	Go to **Step 6**	Go to **Step 7**
5	Repair the short to voltage in the left coolfan motor supply voltage circuit. Refer to **Wiring Repairs** in Wiring Systems. Did you complete the repair?	Go to **Step 8**	-
6	Repair the short to voltage in the left coolfan low reference circuit. Refer to **Wiring Repairs** in Wiring Systems. Did you complete the repair?	Go to **Step 8**	-
7	Repair the short to voltage in the right coolfan motor supply voltage circuit. Refer to **Wiring Repairs** in Wiring Systems. Did you complete the repair?	Go to **Step 8**	-
8	Operate the system in order to verify the repair. Did you correct the condition?	System OK	Go to **Step 2**

COOLING FAN INOPERATIVE

Cooling Fan Inoperative

Step	Action	Yes	No
Schematic Reference:Engine Cooling Schematics **Connector End View Reference: Cooling System Connector End Views** DEFINITION: One or both engine coolfan motors do not operate properly in high or low speed modes.			
1	Did you perform the Engine Cooling Diagnostic System Check?	Go to **Step 2**	Go to **Diagnostic System Check - Engine Cooling**
	1. Install a scan tool. 2. Turn ON the ignition, with the engine OFF. 3. With a scan tool, command the Fan Relay 1		

cardiagn.com

2	ON and OFF. Do the low speed engine coolfans turn ON and OFF with each command?	Go to **Step 3**	Go to **Step 4**
3	With a scan tool, command the Fan Relays 1, 2 & 3 ON and OFF. Do the high speed engine coolfans turn ON and OFF with each command?	Go to **Testing for Intermittent Conditions and Poor Connections** in Wiring Systems	Go to **Step 11**
4	**IMPORTANT:** **Do NOT remove the 20-A fused jumper wire connected during this step. Use a second 20-A fused jumper wire while performing the following steps.** 1. Disconnect the coolfan 1 relay. 2. Connect the first 20-A fused jumper between the battery positive voltage circuit of the coolfan 1 relay and the coolfan motor supply voltage circuit of the coolfan 1 relay. Do both coolfans operate in low speed?	Go to **Step 13**	Go to **Step 5**
5	1. Disconnect the coolfan 3 relay. 2. Connect the second 20-A fused jumper between the left coolfan circuit of the coolfan 3 relay and the right coolfan motor supply voltage circuit of the coolfan 3 relay. Do both coolfans operate in low speed?	Go to **Step 14**	Go to **Step 6**
6	Connect the second 20-A fused jumper from the battery positive voltage to the coolfan motor supply voltage circuit of the coolfan 3 relay. Does the right coolfan operate in high speed?	Go to **Step 9**	Go to **Step 7**
7	1. Install the coolfan 3 relay. 2. Disconnect the right coolfan electrical connector. 3. Connect the second 20-Amp fused jumper wire from the coolfan motor supply voltage circuit of the right electrical connector to the coolfan ground circuit of the right electrical connector. Does the left coolfan operate in high speed?	Go to **Step 16**	Go to **Step 8**
8	Connect the second 20-Amp fused jumper wire from the coolfan supply voltage circuit of the right coolfan		

cardiagn.com

	electrical connector to a good ground. Does the left coolfan motor operate in high speed?	Go to **Step 20**	Go to **Step 21**
9	1. Install the coolfan 3 relay. 2. Disconnect the left coolfan electrical connector. 3. Connect the second 20-Amp fused jumper from the coolfan motor supply voltage circuit of the left coolfan electrical connector to the low reference circuit of the left coolfan electrical connector. Does the right coolfan motor operate in high speed?	Go to **Step 17**	Go to **Step 10**
10	Connect the second 20-Amp fused jumper wire from battery positive voltage to the left coolfan low reference circuit of the left coolfan electrical connector. Does the right coolfan operate in high speed?	Go to **Step 18**	Go to **Step 22**
11	Does the right coolfan operate in high speed?	Go to **Step 12**	Go to **Step 15**
12	1. Disconnect the coolfan 3 relay. 2. Connect a 20-A fused jumper between the left coolfan low reference circuit of the coolfan 3 relay and the ground circuit of the coolfan 3 relay. Does the left coolfan operate properly in high speed?	Go to **Step 14**	Go to **Step 19**
13	Inspect for poor connections at the coolfan 1 relay. Refer to **Testing for Intermittent Conditions and Poor Connections** and **Connector Repairs** in Wiring Systems. Did you find and correct the condition?	Go to **Step 28**	Go to **Step 23**
14	Inspect for poor connections at the coolfan 3 relay. Refer to **Testing for Intermittent Conditions and Poor Connections** and **Connector Repairs** in Wiring Systems. Did you find and correct the condition?	Go to **Step 28**	Go to **Step 24**
15	Inspect for poor connections at the coolfan 2 relay. Refer to **Testing for Intermittent Conditions and Poor Connections** and **Connector Repairs** in Wiring Systems. Did you find and correct the condition?	Go to **Step 28**	Go to **Step 25**
16	Inspect for poor connections at the harness connector of the right coolfan. Refer to **Testing for Intermittent Conditions and Poor Connections** and **Connector Repairs** in Wiring Systems.		

cardiagn.com

	Did you find and correct the condition?	Go to **Step 28**	Go to **Step 26**
17	Inspect for poor connections at the harness connector of the left coolfan. Refer to **Testing for Intermittent Conditions and Poor Connections** and **Connector Repairs** in Wiring Systems. Did you find and correct the condition?	Go to **Step 28**	Go to **Step 27**
18	Repair the left coolfan motor supply voltage circuit. Refer to **Wiring Repairs** in Wiring Systems. Did you complete the repair?	Go to **Step 28**	-
19	Repair the left coolfan ground circuit. Refer to **Wiring Repairs** in Wiring Systems. Did you complete the repair?	Go to **Step 28**	-
20	Repair the right coolfan ground circuit. Refer to **Wiring Repairs** in Wiring Systems. Did you complete the repair?	Go to **Step 28**	-
21	Repair the right coolfan motor supply voltage circuit. Refer to **Wiring Repairs** in Wiring Systems. Did you complete the repair?	Go to **Step 28**	-
22	Repair the left coolfan low reference circuit. Refer to **Wiring Repairs** in Wiring Systems. Did you complete the repair?	Go to **Step 28**	-
23	Replace the coolfan 1 relay. Is the repair complete?	Go to **Step 28**	-
24	Replace the coolfan 3 relay. Is the repair complete?	Go to **Step 28**	-
25	Replace the coolfan 2 relay. Is the repair complete?	Go to **Step 28**	-
26	Replace the right coolfan. Refer to **Cooling Fan Motor Replacement - Electric** . Is the repair complete?	Go to **Step 28**	-
27	Replace the left coolfan. Refer to **Cooling Fan Motor Replacement - Electric** . Is the repair complete?	Go to **Step 28**	-
28	Operate the system in order to verify the repair. Did you correct the condition?	System OK	Go to **Step 3**

ENGINE OVERHEATING

Engine Overheating

Step	Action	Yes	No
1	Inspect for a missing or damaged radiator upper or lower baffle and/or radiator air deflector. Is the baffle and/or deflector missing or damaged?	Go to **Step 8**	Go to **Step 2**
2	Inspect for a loss of coolant.	Go to	Go to

cardiagn.com

	Is there a loss of coolant?	**Step 3**	**Step 4**
3	Fill the system to the specified level. Refer to **Loss of Coolant** . Does the engine overheat?	Go to **Step 4**	System OK
4	Inspect for low coolant protection. Is the coolant to the correct concentration?	Go to **Step 5**	Go to **Step 8**
5	Inspect for a loss of cooling system pressure. Is there a loss of system pressure?	Go to **Step 8**	Go to **Step 6**
6	Inspect for a faulty engine coolant temperature (ECT) sensor. Refer to **DTC P0117** , **DTC P0118** , or **DTC P0125** in Engine Controls - 5.7L. Is the sensor operating properly?	Go to **Step 7**	Go to **Step 8**
7	Inspect for a cracked coolant surge tank or a leaking hose. Is the coolant surge tank cracked or is the hose leaking?	Go to **Step 8**	Go to **Step 3**
8	Repair or install new parts as necessary, then retest. Does the engine overheat?	Go to **Step 9**	System OK
9	Inspect for incorrect drive belt tension. Is the belt tension correct?	Go to **Step 10**	Go to **Step 8**
10	1. Remove the water pump. Refer to **Water Pump Replacement** . 2. Inspect for a damaged water pump driveshaft. Is the water pump driveshaft damaged or is the seal leaking?	Go to **Step 8**	Go to **Step 11**
11	Inspect for obstructed radiator air flow or bent radiator fins. Is the radiator air flow obstructed?	Go to **Step 8**	Go to **Step 12**
12	Inspect for blocked cooling system passages. Are the cooling system passages blocked?	Go to **Step 8**	Go to **Step 13**
13	Inspect for inoperative cooling fans. Refer to **Cooling Fan Inoperative** . Are the cooling fans and the motors operating correctly?	Go to **Step 14**	Go to **Step 8**
14	Inspect the thermostat. Refer to **Thermostat Diagnosis** . Is the thermostat stuck in the closed position?	Go to **Step 15**	Go to **Step 16**
15	Replace the thermostat. Refer to **Thermostat Replacement** . Does the engine overheat?	Go to **Step 16**	System OK
16	Inspect the radiator cooling capacity. Is the proper sized radiator being used on the vehicle?	Go to **Step 3**	Go to **Step 17**
17	Consult the current parts catalog and replace the radiator. Refer to **Radiator Replacement** . Is the repair complete?	System OK	-

LOSS OF COOLANT

Loss of Coolant

Step	Action	Yes	No
DEFINITION: The cooling system is loosing coolant either internally or externally.			
1	Were you sent here from Symptoms or another diagnostic table?	Go to	Go to **Symptoms - Engine Cooling** in

cardiagn.com

		Step 2	Engine Cooling
2	Repair any present DTCs. Refer to **Diagnostic System Check - Engine Cooling** . Is the action complete?	Go to **Step 3**	-
3	Inspect the coolant level. Is the coolant at the proper level?	Go to **Step 6**	Go to **Step 4**
4	Fill the cooling system to the proper level. Refer to **Draining and Filling Cooling System** . Is the action complete?	Go to **Step 5**	-
5	If the engine is suspected to have a coolant leak into a cylinder, the coolant can hydraulically lock the engine. Does the engine crankshaft rotate?	Go to **Step 6**	Go to **Step 26**
6	Engine overheating can cause a loss of coolant. Is the engine overheating?	Go to **Step 27**	Go to **Step 7**
7	Extended operation with a low coolant level can cause engine internal component failure. Is the engine knocking?	Go to **Step 29**	Go to **Step 8**
8	1. Idle the engine at normal operating temperature. 2. Inspect for heavy white smoke coming out of the exhaust pipe. Is a heavy white smoke present from the exhaust pipe?	Go to **Step 9**	Go to **Step 10**
9	Coolant in the exhaust system creates a distinctive, burning coolant odor in the exhaust. Condensation in the exhaust system can cause an odorless white smoke during engine warm up. Does the white smoke have a burning coolant type odor?	Go to **Step 28**	Go to **Step 10**
10	With the engine idling, inspect the coolant surge tank. Does the coolant surge tank discharge coolant while the engine is idling?	Go to **Step 15**	Go to **Step 11**
11	Visually inspect the hoses, pipes and hose clamps at the following locations: • Coolant Surge Tank • Heater core • Radiator Are any of the hoses, clamps or pipes leaking?	Go to **Step 20**	Go to **Step 12**
	Visually inspect the following components: • Block heater • Coolant pressure cap		

cardiagn.com

12	• Core plugs • Cylinder head gaskets • Engine block • Intake manifold • Radiator • Thermostat housing • Throttle Body • Water pump Are any of the listed components leaking?	Go to **Step 20**	Go to **Step 13**
13	1. Pressure test the cooling system. Refer to **Cooling System Leak Testing** . 2. With the cooling system pressurized, visually inspect the components listed in steps 11 and 12. Are any leaks present?	Go to **Step 20**	Go to **Step 14**
14	Pressure test the coolant pressure cap. Refer to **Pressure Cap Testing** . Does the coolant pressure cap hold pressure?	Go to **Step 16**	Go to **Step 21**
15	Pressure test the coolant pressure cap. Refer to **Pressure Cap Testing** . Does the coolant pressure cap hold pressure?	Go to **Step 30**	Go to **Step 21**
16	Inspect for the following conditions: • A coolant smell inside of the vehicle. • Coolant in the HVAC module drain tube. • Coolant on the vehicle floor covering near the HVAC module. Is coolant present?	Go to **Step 22**	Go to **Step 17**
17	Inspect the underside of the engine oil fill cap for a gray/white milky substance. Is there a milky substance under the oil fill cap?	Go to **Step 18**	Go to **Step 19**
18	Inspect the engine oil fluid level indicator for a gray/white milky substance. Is there a milky substance on the engine oil fluid level indicator?	Go to **Step 28**	Go to **Step 19**
19	Inspect the automatic transmission oil fluid level indicator, if equipped, for a gray/white milky substance. Is there a milky substance on the automatic transmission fluid	Go to	

cardiagn.com

	level indicator?	**Step 23**	Go to **Step 31**
20	Repair or replace the leaking component. Refer to the appropriate repair. Is the repair complete?	Go to **Step 31**	-
21	Replace the coolant pressure cap. Is the repair complete?	Go to **Step 31**	-
22	Replace the heater core. Refer to **Heater Core Replacement** in Heating, Ventilation and Air Conditioning. Is the repair complete?	Go to **Step 31**	-
23	1. Remove the transmission oil cooler lines from the radiator. 2. Pressure test the cooling system. Refer to **Cooling System Leak Testing** . 3. Inspect the transmission oil cooler for coolant. Is coolant present?	Go to **Step 24**	Go to **Step 25**
24	1. Replace the radiator. Refer to **Radiator Replacement** . 2. Service the automatic transmission. Refer to **Engine Coolant/Water in Transmission** in Automatic Transmissions. Is the repair complete?	Go to **Step 31**	-
25	Install the cooler lines to the radiator. Is the action complete?	Go to **Step 31**	-
26	Repair the engine no crank condition. Refer to **Engine Will Not Crank - Crankshaft Will Not Rotate** in Engine Mechanical. Is the repair complete?	Go to **Step 31**	-
27	Repair the engine overheating condition. Refer to **Engine Overheating** . Is the repair complete?	Go to **Step 31**	-
28	Repair the engine internal coolant leak. Refer to **Coolant in Combustion Chamber** or **Coolant in Engine Oil** in Engine Mechanical - 5.7L. Is the repair complete?	Go to **Step 31**	-
29	Repair the engine knock. Refer to **Lower Engine Noise, Regardless of Engine Speed** in Engine Mechanical - 5.7L. Is the repair complete?	Go to **Step 31**	-
30	Repair the combustion pressure in the cooling system problem. Refer to **Cylinder Leakage Test** in Engine Mechanical - 5.7L. Is the repair complete?	Go to **Step 31**	-
31	Operate the system in order to verify the repair. Did you find and correct the condition?	System OK	Go to **Step 2**

cardiagn.com

THERMOSTAT DIAGNOSIS

Use one of the following procedures in testing for a malfunctioning thermostat.

Tools Required

J 24731 Tempilstick. See **Special Tools and Equipment** .

Thermostat Test Procedure Using Tempilsticks

The coolant thermostat can be tested using a temperature (tempil) stick. The temperature stick is a pencil like device. It has a wax material containing certain chemicals which melt at a given temperature. Temperature sticks can be used to determine a thermostat's operating range, by rubbing 87° C (188° F) and 97° C (206° F) sticks on the thermostat housing.

1. Use a tempilstick in order to find the opening and the closing temperatures of the coolant thermostat.
    - J 24731-188 tempilstick melts at 87° C (188° F). The thermostat should begin to open.
    - J 24731-206 tempilstick melts at 97° C (206° F). The thermostat should be fully open.
2. Replace the coolant thermostat if it does not operate properly between this temperature range.

Thermostat Test Procedure Using Glycol

Inspect the operation of the thermostat by hanging the thermostat on a hook in a 33 percent glycol solution.

In order to inspect if the thermostat valve is opening properly, perform the following test:

cardiagn.com

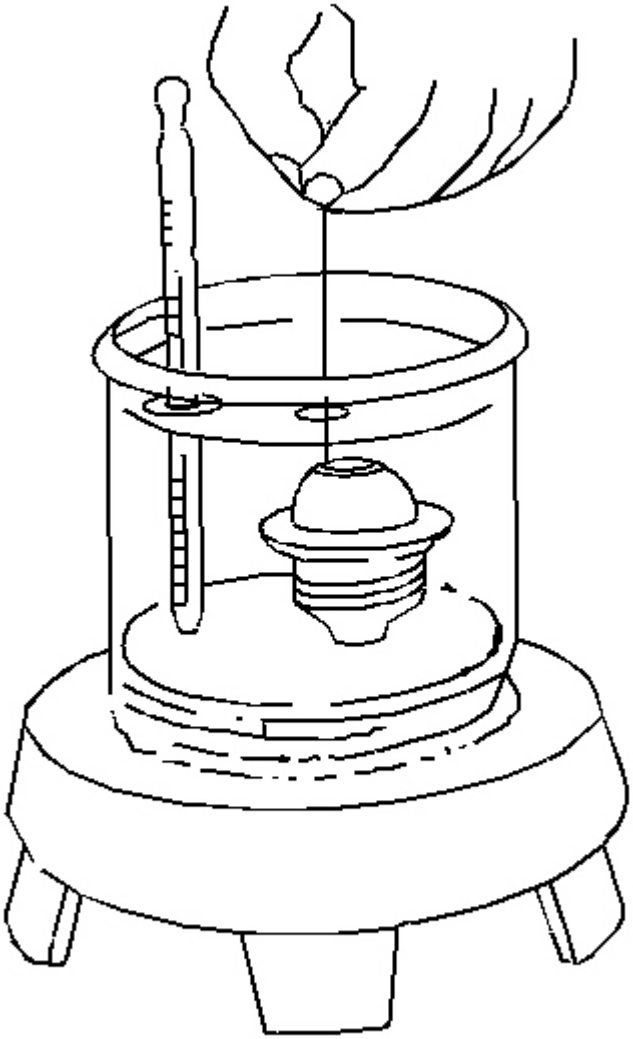

Fig. 3: Thermostat Test Procedure Using Glycol
Courtesy of GENERAL MOTORS CORP.

1. Completely submerge the thermostat in a glycol solution. The solution should be 11° C (22° F) above the temperature indicated on the thermostat valve.
2. Thoroughly agitate the solution. Under these conditions, the thermostat valve should open.

In order to inspect if the thermostat valve is closing properly, perform the following test:

cardiagn.com

1. Completely submerge the thermostat in a glycol solution. The solution should be 6° C (10° F) below the temperature indicated on the thermostat valve.
2. Thoroughly agitate the solution. Under these conditions, the thermostat valve should close completely.

COOLANT HEATER INOPERATIVE

Coolant Heater Inoperative

Step	Action	Yes	No
Connector End View Reference: Cooling System Connector End Views			
1	Did you perform the necessary inspections?	Go to **Step 2**	Go to **Symptoms - Engine Cooling**
2	Test the engine coolant heater power supply cord for an open or short to ground. Refer to **Circuit Testing** in Wiring Systems. Did you find a condition?	Go to **Step 3**	Go to **Step 4**
3	Replace the engine coolant heater power supply cord. Refer to **Coolant Heater Cord Replacement** . Did you complete the repair?	Go to **Step 6**	-
4	Inspect for poor connections at the harness connector of the engine coolant heater. Refer to **Testing for Intermittent Conditions and Poor Connections** and **Connector Repairs** in Wiring Systems. Did you find and correct the condition?	Go to **Step 6**	Go to **Step 5**
5	Replace the engine coolant heater. Refer to **Coolant Heater Replacement** . Did you complete the repair?	Go to **Step 6**	-
6	Operate the system in order to verify the repair. Did you correct the condition?	System OK	Go to **Step 2**

ENGINE FAILS TO REACH NORMAL OPERATING TEMPERATURE

Engine Fails To Reach Normal Operating Temperature

Step	Action	Yes	No
1	Inspect the coolant level. Is the coolant level below the add mark?	Go to **Step 2**	Go to **Step 3**
2	1. Add coolant as necessary. Refer to **Draining and Filling Cooling System** . 2. Perform a cooling system pressure test. Is the repair complete?	System OK	-
3	Inspect for a stuck open, missing, or wrong type of thermostat. Refer to **Thermostat Diagnosis** . Is the thermostat operating properly?	System OK	Go to **Step 4**
4	Install the correct replacement thermostat. Refer to **Thermostat Replacement** . Is the repair complete?	System OK	-

cardiagn.com

PRESSURE CAP TESTING

Tools required

- **J 24460-01** Cooling System Pressure Tester. See **Special Tools and Equipment** .
- **J 24460-92** Radiator Cap / Surge Tank Test Adapter. See **Special Tools and Equipment** .

Pressure Cap Testing

CAUTION: To avoid being burned, do not remove the radiator cap or surge tank cap while the engine is hot. The cooling system will release scalding fluid and steam under pressure if radiator cap or surge tank cap is removed while the engine and radiator are still hot.

1. Remove the pressure cap.
2. Wash the pressure cap sealing surface with water.

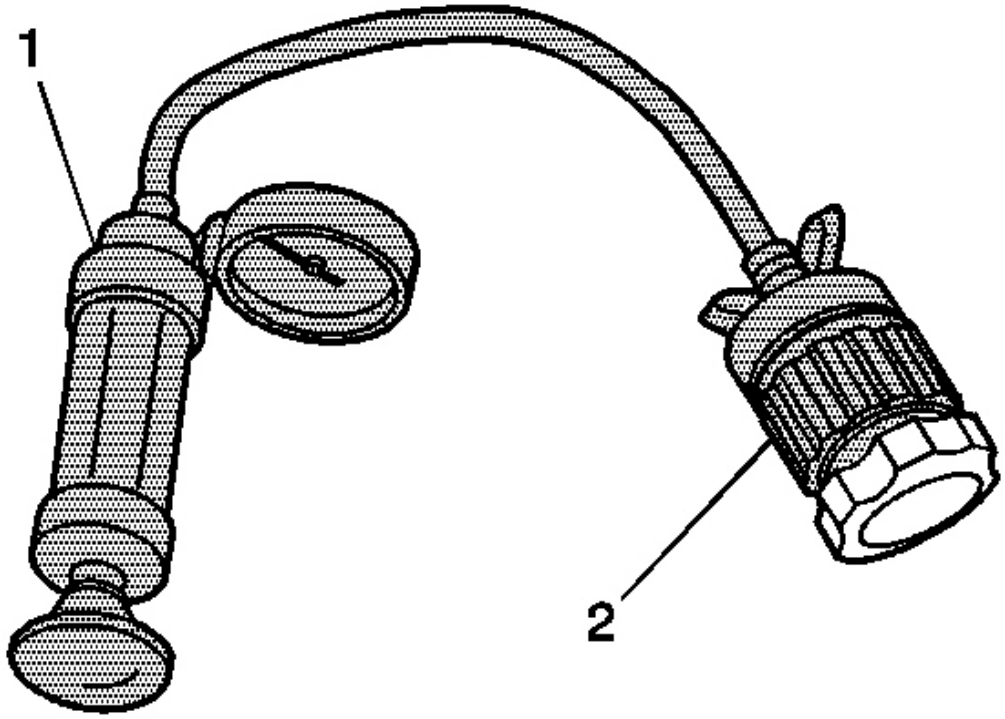

Fig. 4: J 24460-01 & J 42401
Courtesy of GENERAL MOTORS CORP.

cardiagn.com

3. Use the **J 24460-01** (1) with **J 24460-92** (2) in order to test the pressure cap. See **Special Tools and Equipment** .
4. Test the pressure cap for the following conditions:
   - Pressure release when the **J 24460-01** exceeds the pressure rating of the pressure cap. See **Special Tools and Equipment** .
   - Maintain the rated pressure for at least 10 seconds.

     Note the rate of pressure loss.
5. Replace the pressure cap under the following conditions:
   - The pressure cap does not release pressure which exceeds the rated pressure of the cap.
   - The pressure cap does not hold the rated pressure.

COOLING SYSTEM LEAK TESTING

Tools Required

- **J 24460-01** Cooling System Pressure Tester. See **Special Tools and Equipment** .
- **J 24460-92** Radiator Cap / Surge Tank Test Adapter. See **Special Tools and Equipment** .

Cooling System Leak Testing

CAUTION: Under pressure, the temperature of the solution in the radiator can be considerably higher, without boiling. Removing the radiator cap while the engine is hot (pressure is high), will cause the solution to boil instantaneously, with explosive force. The solution will spew out over the engine, fenders, and the person removing the cap. Serious bodily injury may result. Flammable antifreeze, such as alcohol, is not recommended for use at any time. Flammable antifreeze could cause a serious fire.

CAUTION: In order to help avoid being burned, do not remove the radiator cap while the engine and the radiator are hot. Scalding fluid and steam can be blown out under pressure if the cap is removed too soon.

1. Remove the pressure cap.
2. Test the operation of the pressure cap. Refer to **Pressure Cap Testing** .
3. Wash the pressure cap mating surface with water.

cardiagn.com

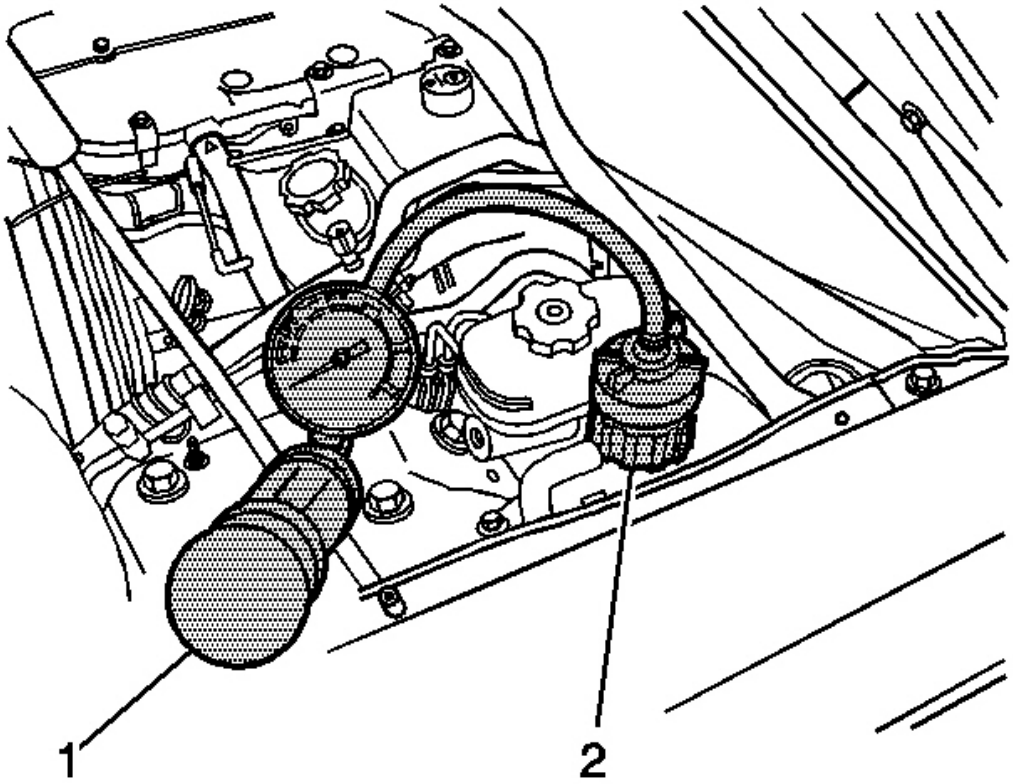

Fig. 5: Applying Pressure To Cooling System
Courtesy of GENERAL MOTORS CORP.

4. Use the **J 24460-01** (1) with **J 24460-92** (2) in order to apply pressure to the cooling system. See **Special Tools and Equipment** .

   Do not exceed the pressure cap rating.

5. The cooling system should hold the rated pressure for at least 2 minutes.

   Observe the gage for any pressure loss.

6. Repair any leaks as required.

REPAIR INSTRUCTIONS

DRAINING AND FILLING COOLING SYSTEM

cardiagn.com

Tools Required

J 26568 Coolant and Battery Tester. See **Special Tools and Equipment** .

Draining Procedure

CAUTION: To avoid being burned, do not remove the radiator cap or surge tank cap while the engine is hot. The cooling system will release scalding fluid and steam under pressure if radiator cap or surge tank cap is removed while the engine and radiator are still hot.

IMPORTANT: Draining the cooling system with the pressure cap installed will syphon the coolant from the overflow tank.

1. Raise and support the vehicle. Refer to **Lifting and Jacking the Vehicle** in General Information.
2. Place a drain pan under the drain cock.

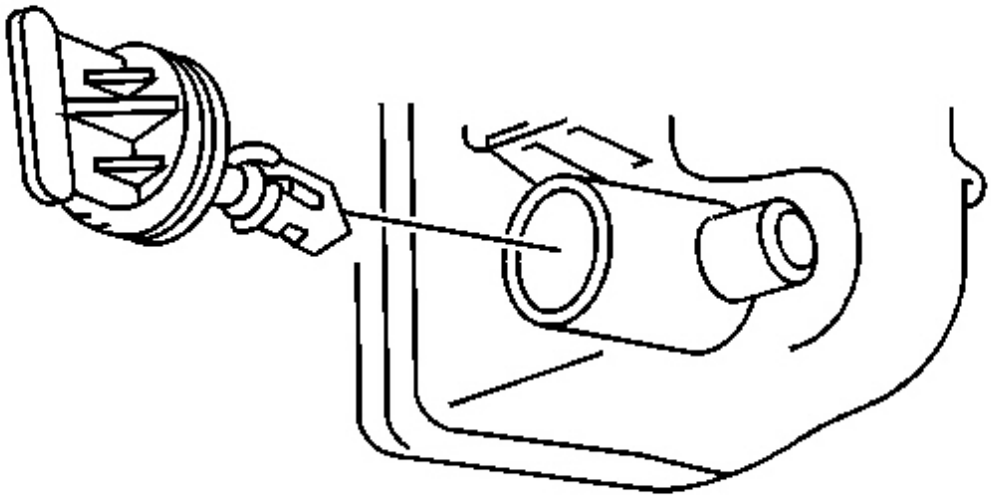

Fig. 6: Radiator Drain Cock
Courtesy of GENERAL MOTORS CORP.

3. Open the radiator drain cock.
4. Drain the cooling system.
5. Lower the vehicle.

cardiagn.com

6. Remove the coolant pressure cap.
7. Inspect the coolant.
8. Follow the appropriate procedure based on the condition of the coolant.
    - Normal in appearance - follow the filling procedure.
    - Discolored - follow the flush procedure. Refer to **Flushing** .

Filling Procedure

NOTE: **The procedure below must be followed. Improper coolant level could result in a low or high coolant level condition, causing engine damage.**

1. Raise and support the vehicle.

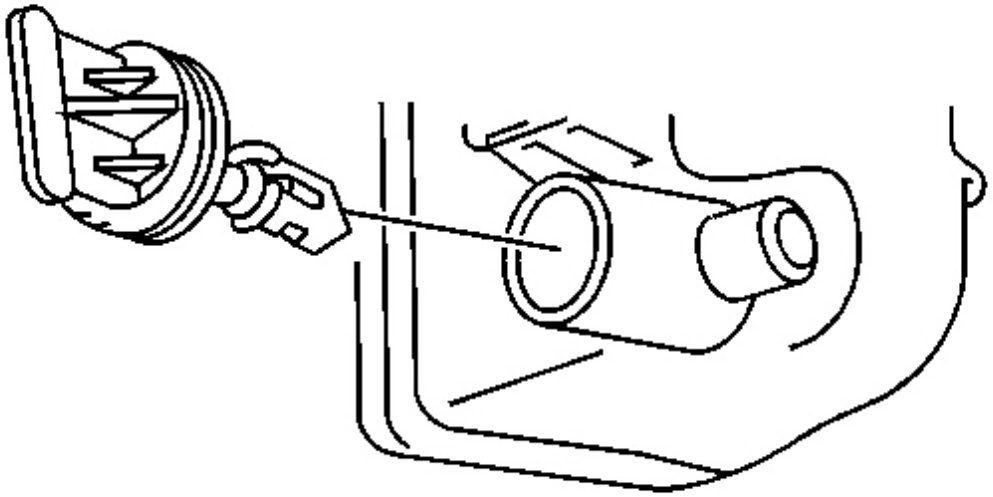

Fig. 7: Radiator Drain Cock
Courtesy of GENERAL MOTORS CORP.

NOTE: **Refer to Fastener Notice in Cautions and Notices.**

2. Close the radiator drain cock.

   Tighten: Tighten the radiator drain cock to 2 N.m (18 lb in).

3. Lower the vehicle.

cardiagn.com

IMPORTANT: Use a 50/50 mixture of DEX-COOL antifreeze and deionized water.

4. Slowly fill the cooling system with a 50/50 coolant mixture. Refer to **Capacities - Approximate Fluid** in General Information.
5. Install the coolant pressure cap.
6. Start the engine.
7. Run the engine at 2,000-2,500 RPM until the engine reaches normal operating temperature.
8. Allow the engine to idle for 3 minutes.
9. Shut the engine off.
10. Allow the engine to cool.
11. Top off the coolant as necessary.
12. Inspect the concentration of the engine coolant using the **J 26568** . See **Special Tools and Equipment** .
13. Rinse away any excess coolant from the engine and the engine compartment.
14. Inspect the cooling system for leaks.

FLUSHING

IMPORTANT: Do not use a chemical flush.

Store used coolant in the proper manner, such as in a used engine coolant holding tank. Do not pour used coolant down a drain. Ethylene glycol antifreeze is a very toxic chemical. Do not dispose of coolant into the sewer system or ground water. This is illegal and ecologically unsound.

Various methods and equipment can be used to flush the cooling system. If special equipment is used, such as a back flusher, follow the manufacturer's instruction. Always remove the thermostat before flushing the cooling system.

When the cooling system becomes contaminated, the cooling system should be flushed thoroughly to remove the contaminants before the engine is seriously damaged.

1. Drain the cooling system. Refer to **Draining and Filling Cooling System** .
2. Remove the surge tank. Refer to **Surge Tank Replacement** .
3. Clean and flush the surge tank with clean, drinkable water.
4. Install the surge tank. Refer to **Surge Tank Replacement** .
5. Follow the drain and fill procedure using only clean, drinkable water. Refer to **Draining and Filling Cooling System** .
6. Run the engine for 20 minutes.
7. Stop the engine.
8. Drain the cooling system. Refer to **Draining and Filling Cooling System** .
9. Repeat the procedure if necessary, until the fluid is nearly colorless.
10. Fill the cooling system. Refer to **Draining and Filling Cooling System** .

cardiagn.com

SURGE TANK REPLACEMENT

Removal Procedure

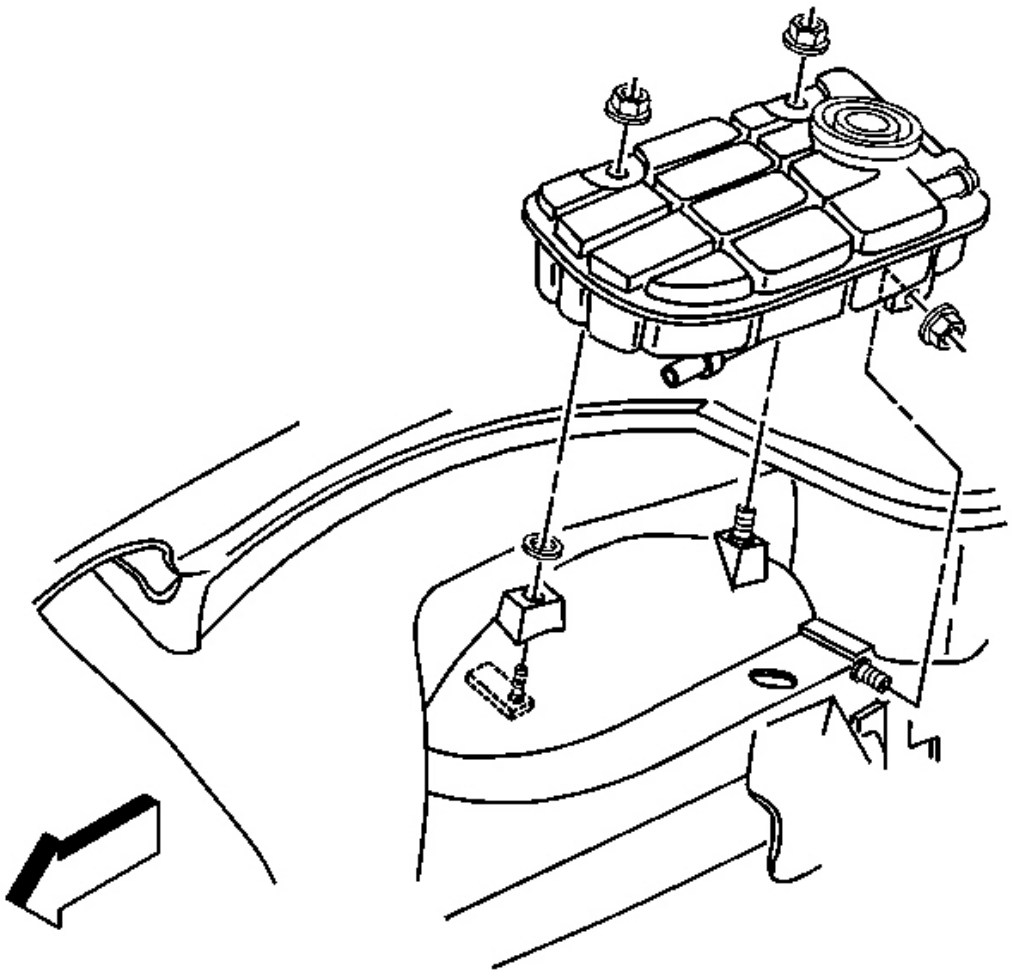

Fig. 8: Side & Upper Surge Tank Nuts
Courtesy of GENERAL MOTORS CORP.

1. Drain the cooling system. Refer to **Draining and Filling Cooling System** .
2. Remove the upper surge tank nuts.
3. Loosen the surge tank side nut.

cardiagn.com

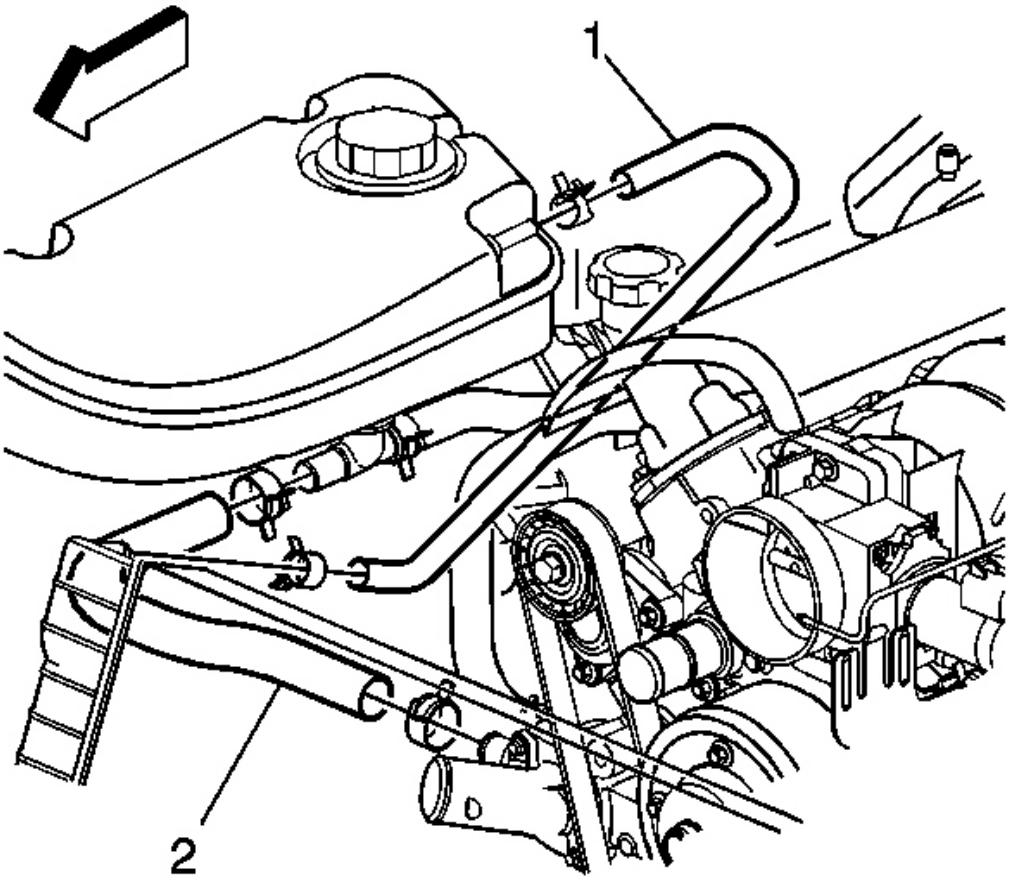

Fig. 9: Surge Tank Outlet & Inlet Hose
Courtesy of GENERAL MOTORS CORP.

4. Reposition the surge tank inlet hose (1) clamp.
5. Remove the surge tank inlet (1) hose from the surge tank.
6. Reposition the surge tank outlet hose (2) clamp.
7. Remove the surge tank outlet hose (2).

cardiagn.com

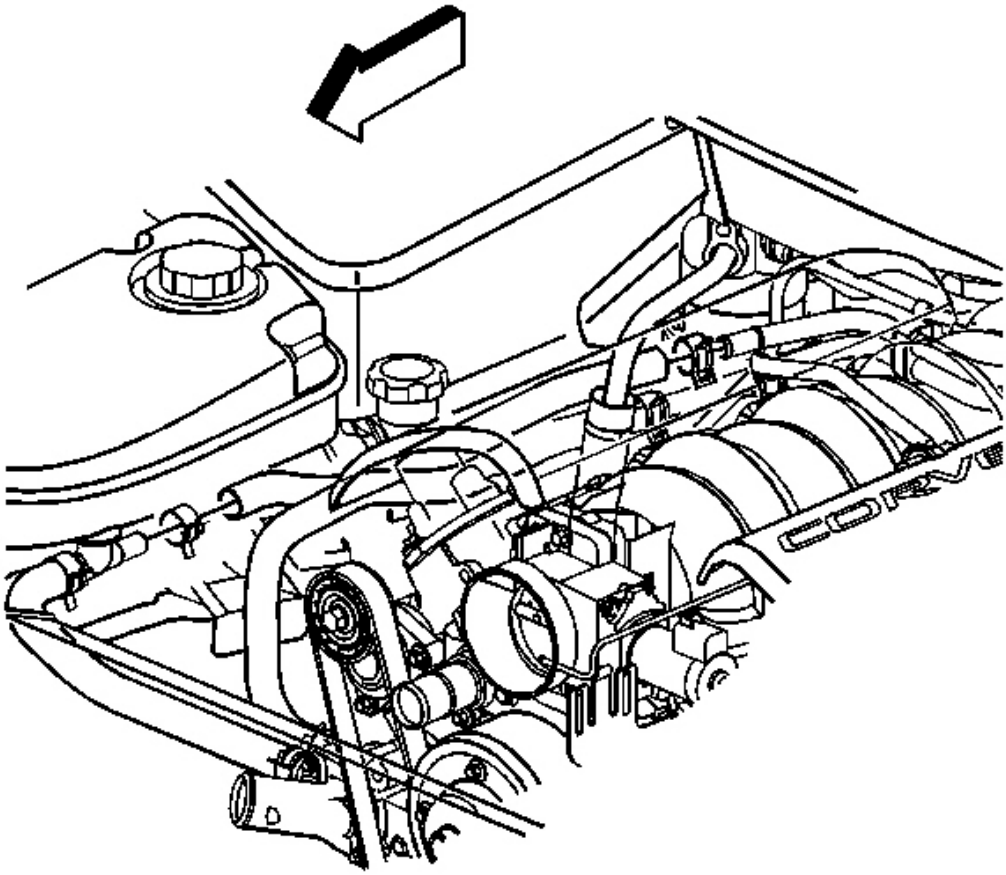

Fig. 10: Heater Outlet Hose & Clamp
Courtesy of GENERAL MOTORS CORP.

8. Reposition the heater outlet hose clamp from the surge tank.
9. Remove the heater outlet hose from the surge tank.
10. Remove the surge tank.

Installation Procedure

IMPORTANT: Lubricate the inside diameters of the hoses with clean coolant prior to installation.

1. Install the surge tank.

cardiagn.com

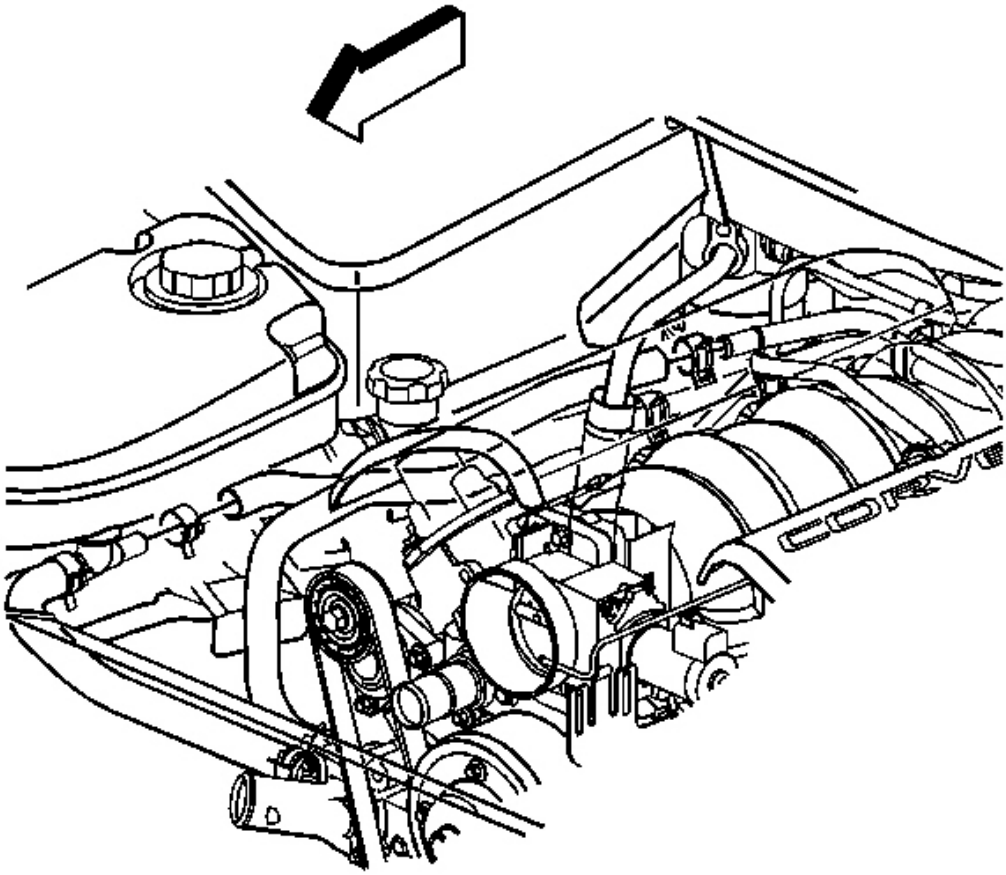

Fig. 11: Heater Outlet Hose & Clamp
Courtesy of GENERAL MOTORS CORP.

2. Install the heater outlet hose to the surge tank.
3. Reposition the heater outlet hose clamp to the surge tank.

cardiagn.com

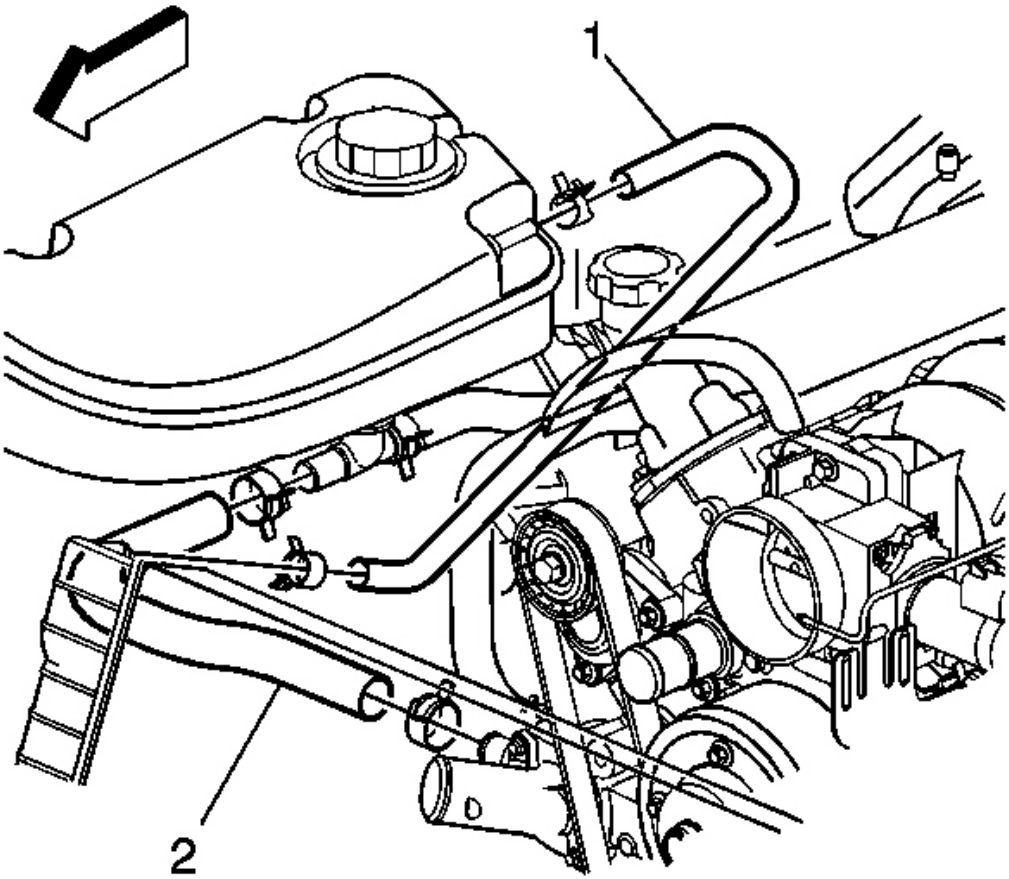

Fig. 12: Surge Tank Outlet & Inlet Hose
Courtesy of GENERAL MOTORS CORP.

4. Install the surge tank inlet (1) hose to the surge tank.
5. Reposition the surge tank inlet hose clamp.
6. Install the surge tank outlet hose to the surge tank.
7. Reposition the surge tank outlet hose clamp (2) to the surge tank.

cardiagn.com

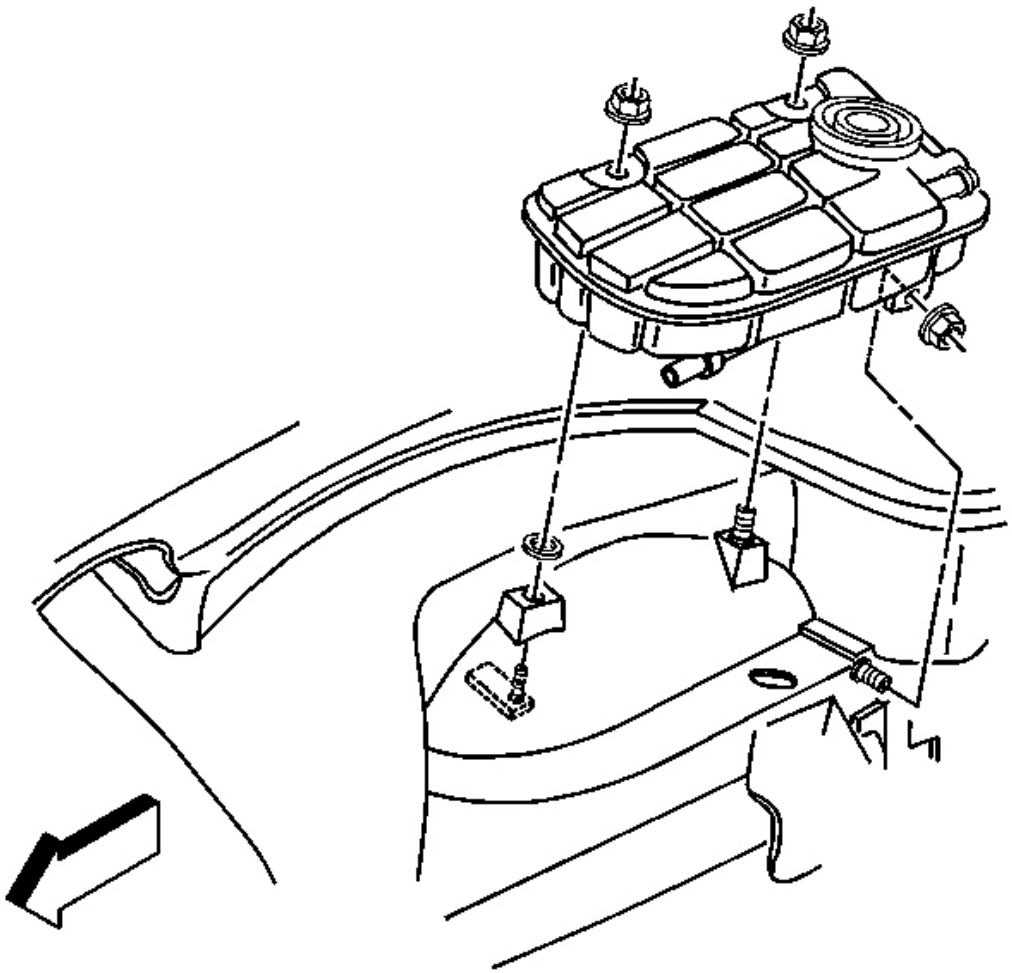

Fig. 13: Side & Upper Surge Tank Nuts
Courtesy of GENERAL MOTORS CORP.

IMPORTANT: When installing the surge tank ensure that the front stud is fully seated in the slot.

8. Install the surge tank onto the studs.

NOTE: Refer to Fastener Notice in Cautions and Notices.

9. Install the surge tank nuts.
10. Tighten the nuts.

cardiagn.com

1. Bottom
2. Top rear
3. Top front

Tighten: Tighten the radiator surge tank nuts to 10 N.m (89 lb in).

11. Fill the cooling system. Refer to **Draining and Filling Cooling System** .

RADIATOR HOSE REPLACEMENT - INLET

Tools Required

J 38185 Hose Clamp Pliers. See **Special Tools and Equipment** .

Removal Procedure

cardiagn.com

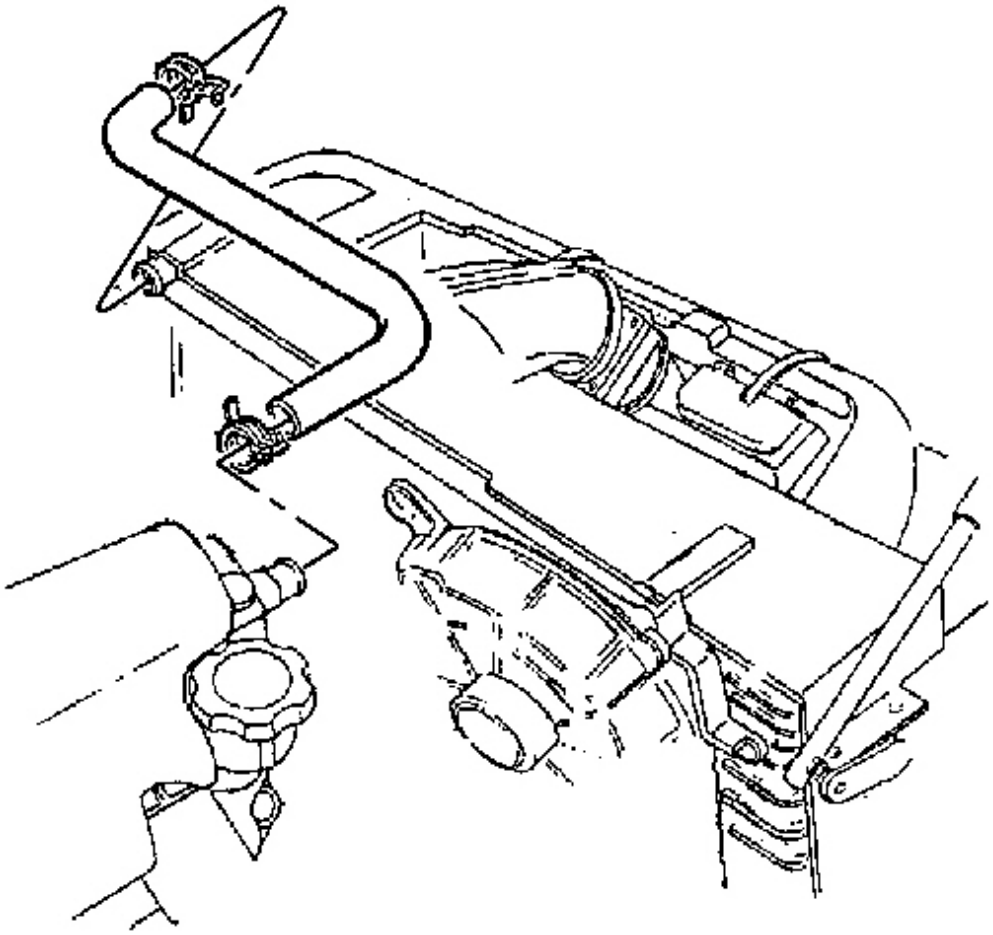

Fig. 14: Radiator Inlet Hose
Courtesy of GENERAL MOTORS CORP.

1. Drain the cooling system. Refer to **Draining and Filling Cooling System** .
2. Remove the radiator upper support. Refer to **Radiator Support Replacement** .
3. Reposition the radiator inlet hose clamp from the radiator using **J 38185** . See **Special Tools and Equipment** .
4. Reposition the radiator inlet hose clamp from the thermostat housing using**J 38185** . See **Special Tools and Equipment** .
5. Remove the radiator inlet hose from the radiator.
6. Remove the radiator inlet from the thermostat housing.

cardiagn.com

Installation Procedure

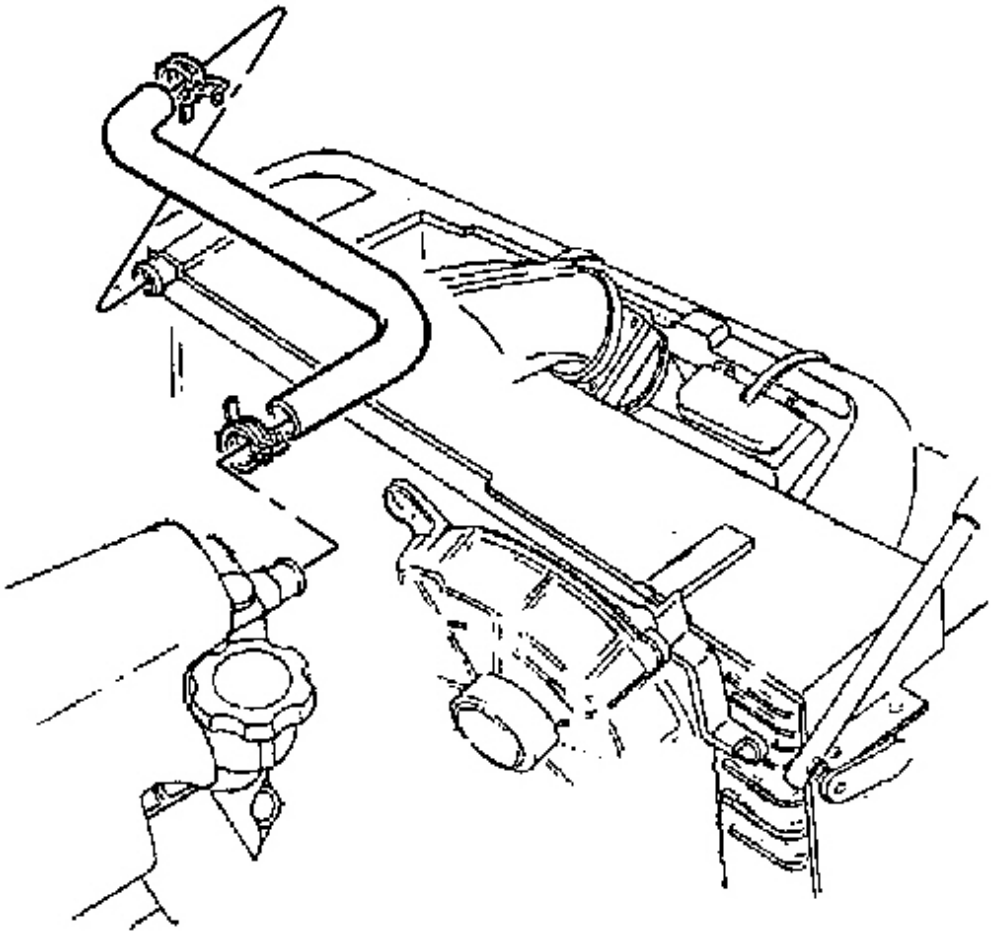

Fig. 15: Radiator Inlet Hose
Courtesy of GENERAL MOTORS CORP.

1. Install the radiator inlet hose to the radiator.
2. Reposition the radiator inlet hose clamp to the radiator using **J 38185** . See **Special Tools and Equipment** .
3. Install the radiator inlet hose to the thermostat housing.
4. Reposition the radiator inlet hose clamp to the thermostat housing using **J 38185** . See **Special Tools and Equipment** .
5. Install the radiator upper support. Refer to **Radiator Support Replacement** .

cardiagn.com

6. Fill the cooling system. Refer to **Draining and Filling Cooling System** .

RADIATOR HOSE REPLACEMENT - OUTLET

Removal Procedure

Tools Required

J 38185 Hose Clamp Pliers. See **Special Tools and Equipment** .

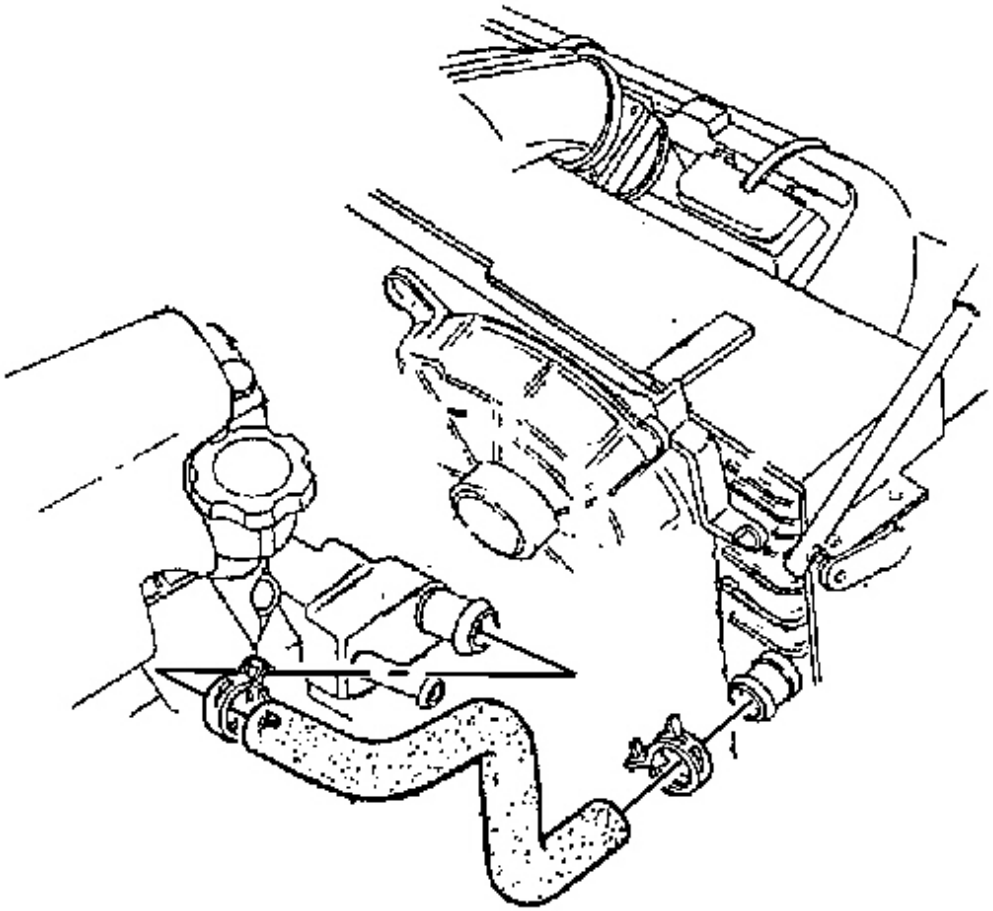

Fig. 16: Radiator Outlet Hose & Clamp
Courtesy of GENERAL MOTORS CORP.

cardiagn.com

1. Drain the cooling system. Refer to **Draining and Filling Cooling System** .
2. Reposition the radiator outlet hose clamp from the water pump using **J 38185** . See **Special Tools and Equipment** .
3. Remove the radiator outlet hose from the water pump.
4. Raise and suitably support the vehicle. Refer to **Lifting and Jacking the Vehicle** in General Information.
5. Reposition the radiator outlet hose clamp from the radiator using **J 38185** . See **Special Tools and Equipment** .
6. Remove the radiator outlet hose from the radiator.

Installation Procedure

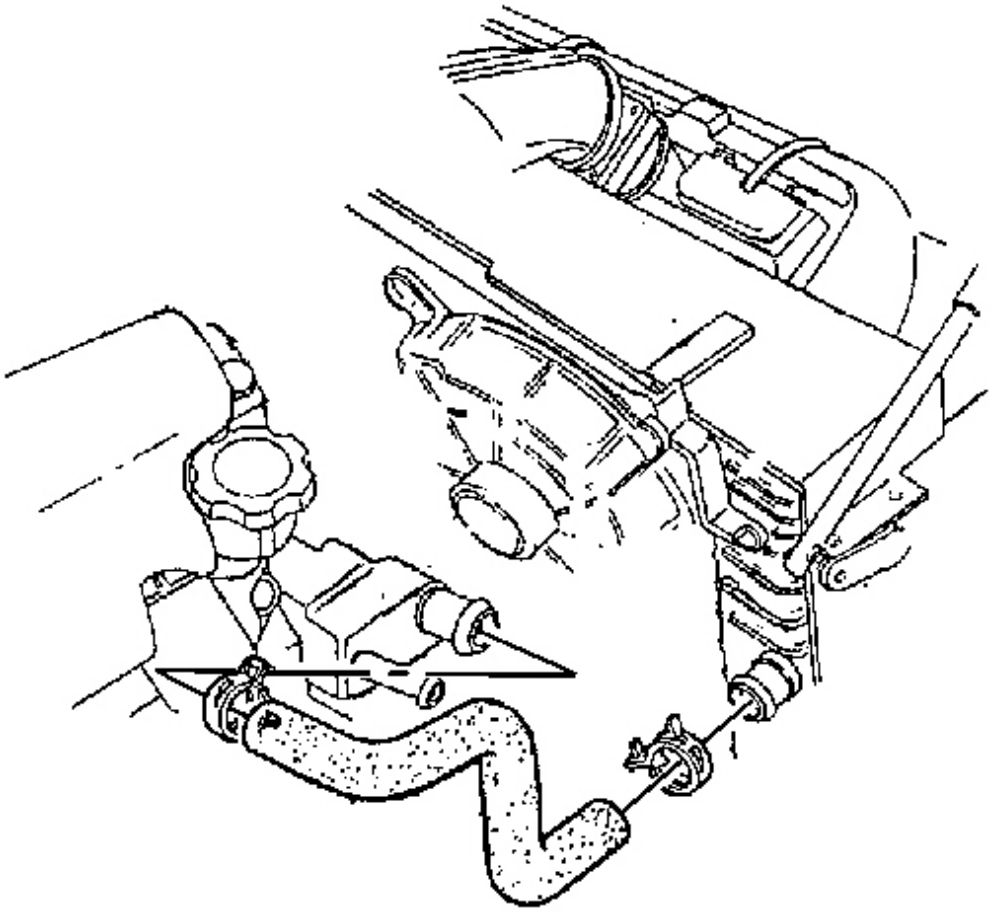

Fig. 17: Radiator Outlet Hose & Clamp

cardiagn.com

Courtesy of GENERAL MOTORS CORP.

1. Install the radiator outlet hose to the radiator.
2. Reposition the radiator outlet hose clamp to the radiator using **J 38185** . See **Special Tools and Equipment** .
3. Lower the vehicle.
4. Install the radiator outlet hose to the water pump.
5. Reposition the radiator outlet hose clamp to the water pump using **J 38185** . See **Special Tools and Equipment** .
6. Fill the cooling system. Refer to **Draining and Filling Cooling System** .

THROTTLE BODY HEATER HOSE REPLACEMENT - OUTLET

Removal Procedure

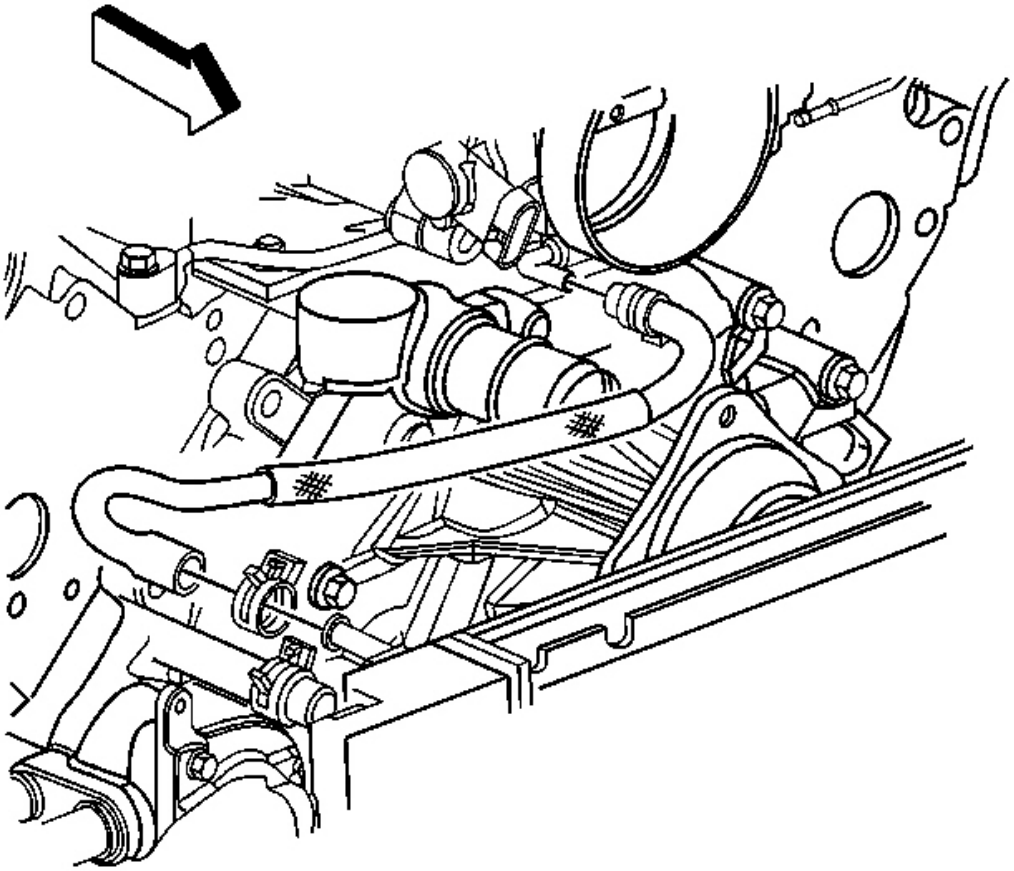

cardiagn.com

Fig. 18: Throttle Body Heater Outlet Hose
Courtesy of GENERAL MOTORS CORP.

1. Drain the cooling system. Refer to **Draining and Filling Cooling System** .
2. Remove the radiator support. Refer to **Radiator Support Replacement** .
3. Reposition the throttle body heater outlet hose clamps at the radiator and throttle body.
4. Remove the throttle body heater outlet hose from the radiator and throttle body.

Installation Procedure

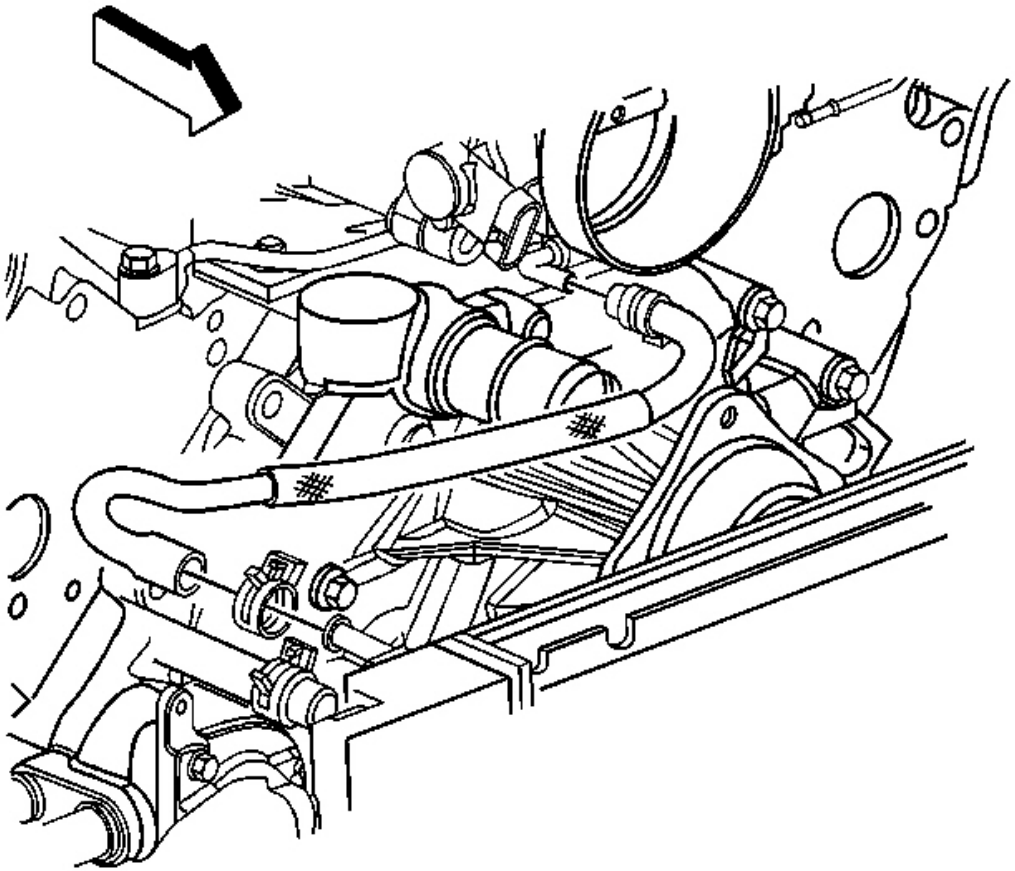

Fig. 19: Throttle Body Heater Outlet Hose
Courtesy of GENERAL MOTORS CORP.

1. Install the throttle body heater outlet hose to the radiator and throttle body.
2. Position the throttle body heater outlet hose clamps at the radiator and throttle body.

cardiagn.com

3. Install the radiator support. Refer to **Radiator Support Replacement** .
4. Fill the cooling system. Refer to **Draining and Filling Cooling System** .

COOLING FAN REPLACEMENT - ELECTRIC

Removal Procedure

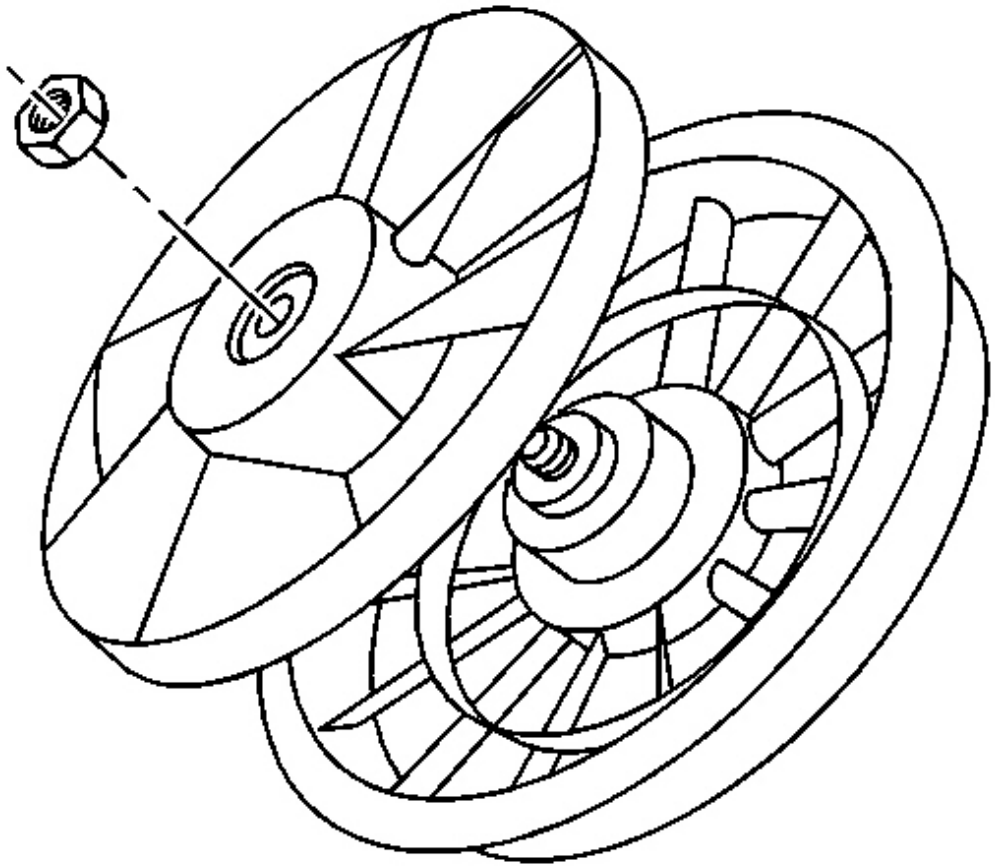

Fig. 20: Cooling Fan Blade & Nut
Courtesy of GENERAL MOTORS CORP.

1. Remove the fan shroud. Refer to **Fan Shroud Replacement** .
2. Remove the cooling fan blade nut.
3. Remove the cooling fan blade.

cardiagn.com

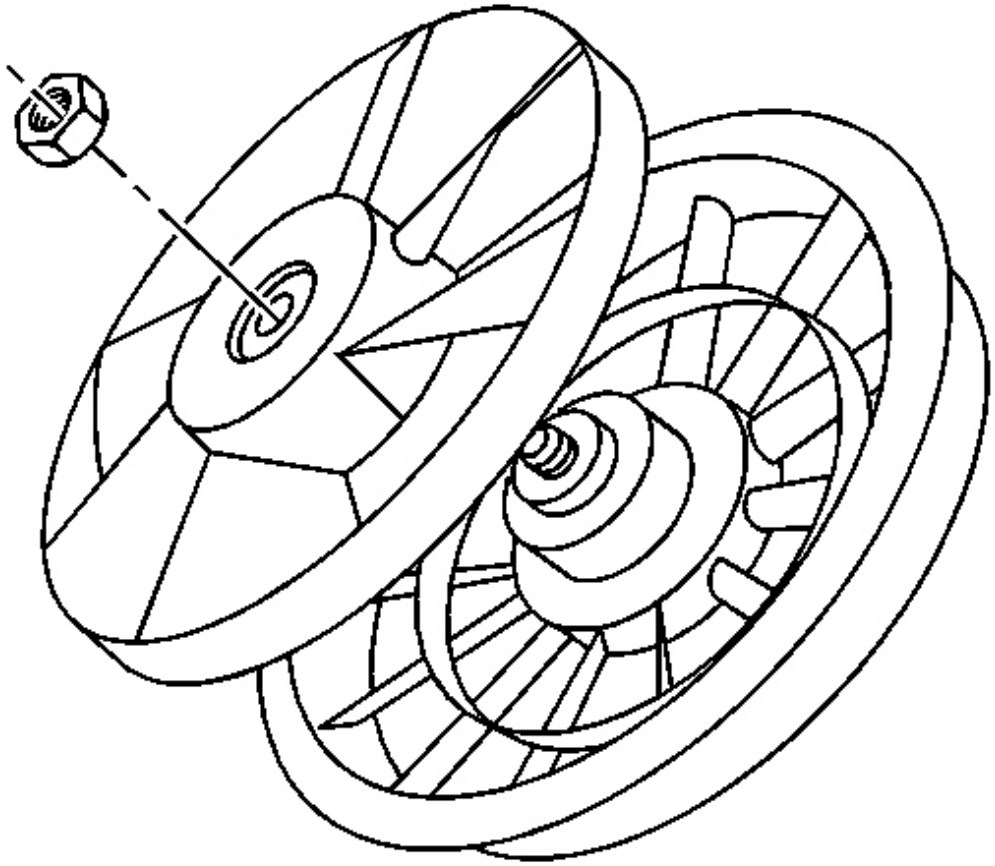

Fig. 21: Cooling Fan Blade & Nut
Courtesy of GENERAL MOTORS CORP.

1. Install the cooling fan blade.

   NOTE: **Refer to Fastener Notice in Cautions and Notices.**

2. Install the cooling fan blade nut.

   Tighten: Tighten the fan blade nut to 6 N.m (53 lb in).

3. Install the fan shroud. Refer to **Fan Shroud Replacement** .

cardiagn.com

COOLING FAN MOTOR REPLACEMENT - ELECTRIC

Removal Procedure

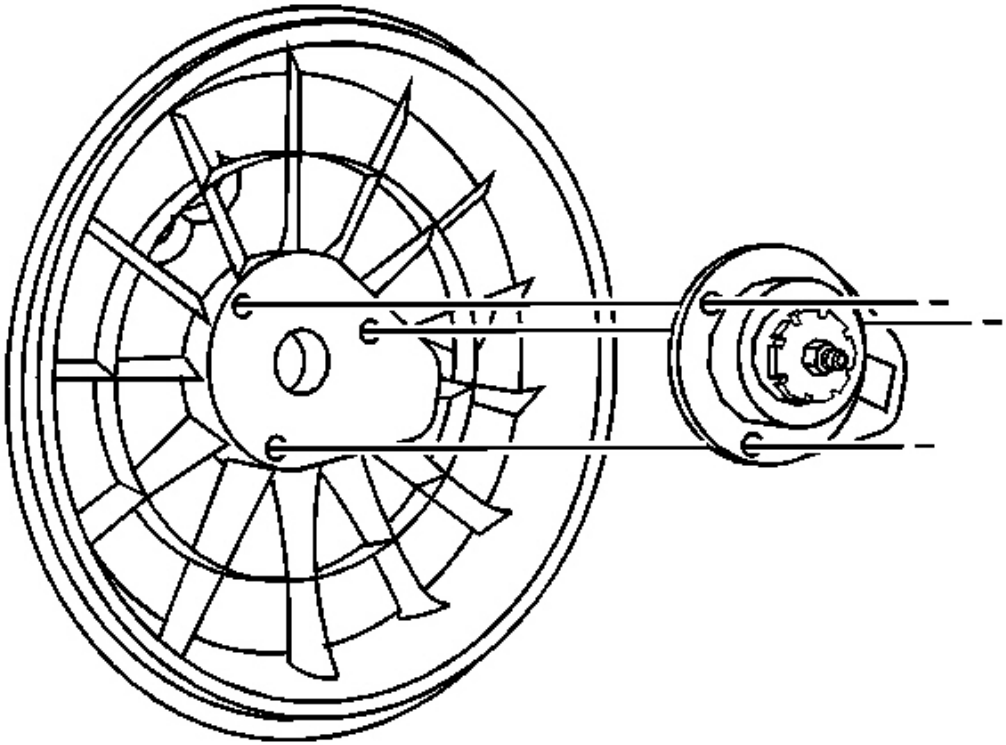

Fig. 22: Fan Motor & Bolts
Courtesy of GENERAL MOTORS CORP.

1. Remove the cooling fan. Refer to **Cooling Fan Replacement - Electric** .
2. Remove the fan motor bolts.
3. Remove the fan motor from the shroud.

Installation Procedure

cardiagn.com

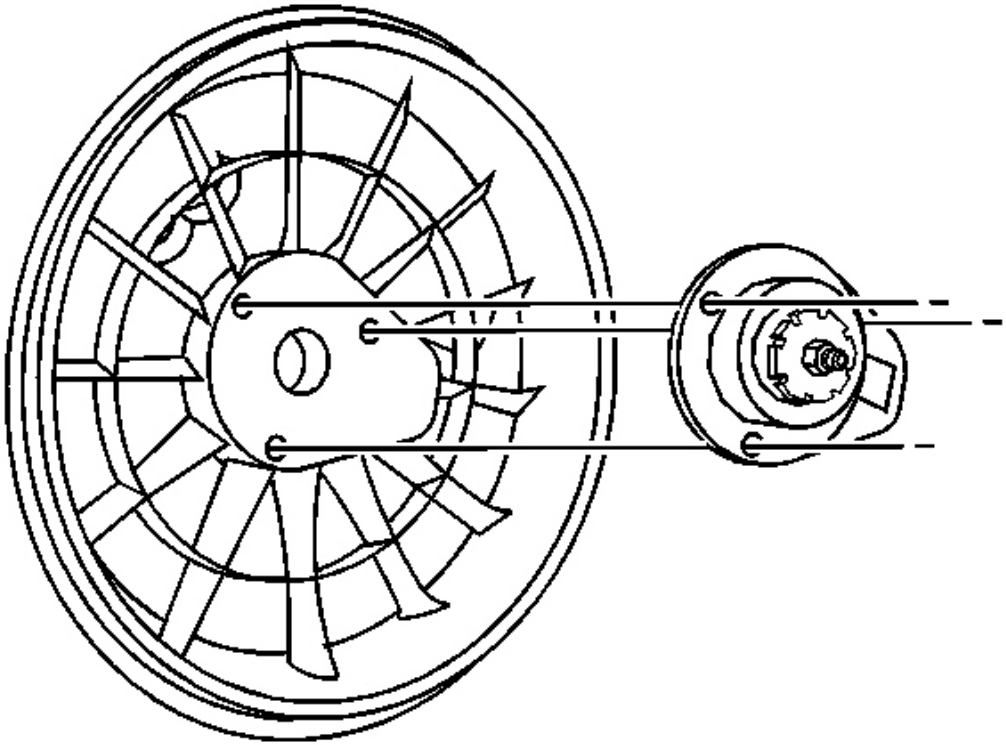

Fig. 23: Fan Motor & Bolts
Courtesy of GENERAL MOTORS CORP.

NOTE: Refer to Fastener Notice in Cautions and Notices.

1. Install the fan motor to the shroud.
2. Install the fan motor bolts.

   Tighten: Tighten the bolts to 6 N.m (53 lb in).

3. Install the cooling fan. Refer to **Cooling Fan Replacement - Electric** .

COOLING FAN RELAY REPLACEMENT

Tools Required

J 43244 Relay Puller Pliers

cardiagn.com

Removal Procedure

1. Remove the electrical center cover.
2. Locate the cooling fan relay. Refer to **Electrical Center Identification Views** to locate the electrical center where the cooling fan relay exists.

IMPORTANT:

- **Always note the orientation of the relay.**
- **Make sure the electrical center is secure, as not to put added stress on the wires or terminals.**

cardiagn.com

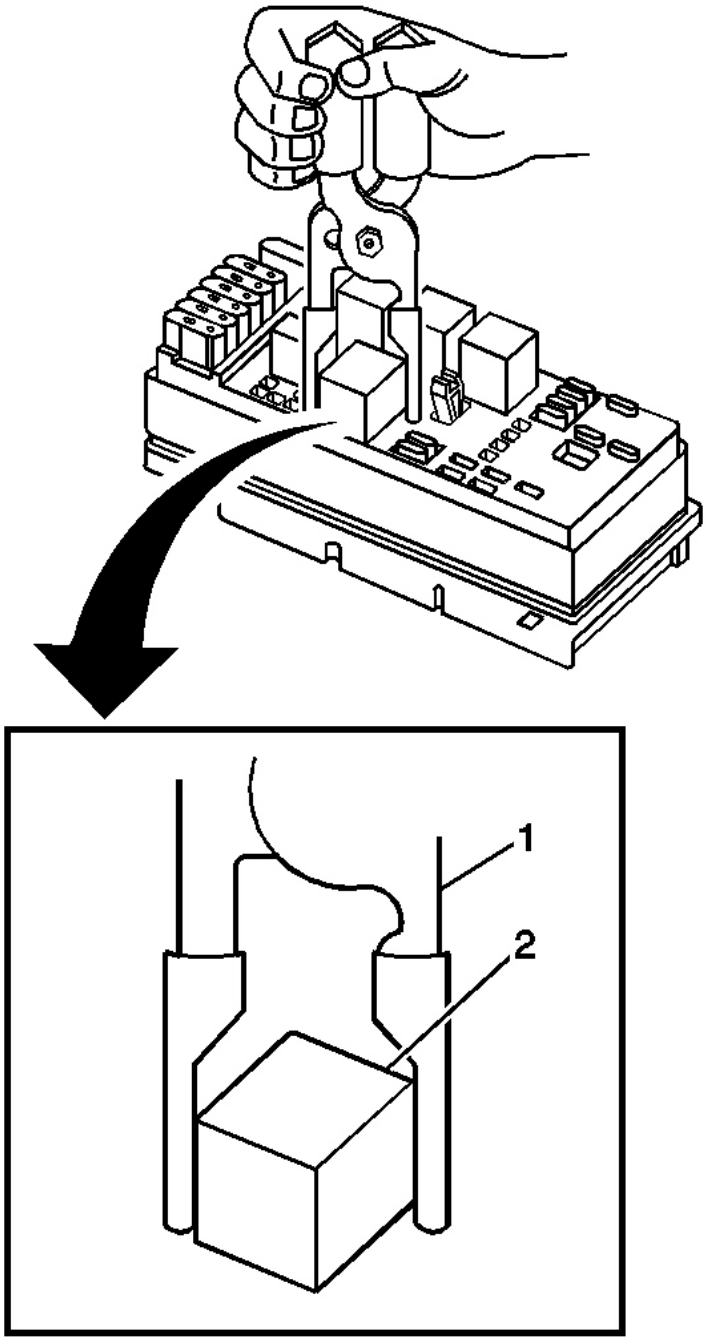

Fig. 24: Removing/Installing Cooling Fan Relay Using J 43244
Courtesy of GENERAL MOTORS CORP.

3. Using the **J 43244** (1) position the tool on opposing corners of the cooling fan relay (2).

cardiagn.com

NOTE: **Use J43244 to pull the relay straight out from the electrical center terminals. The use of pliers or a flat bladed tool could damage the electrical center.**

4. Remove the cooling fan relay (2) from the electrical center.

Installation Procedure

cardiagn.com

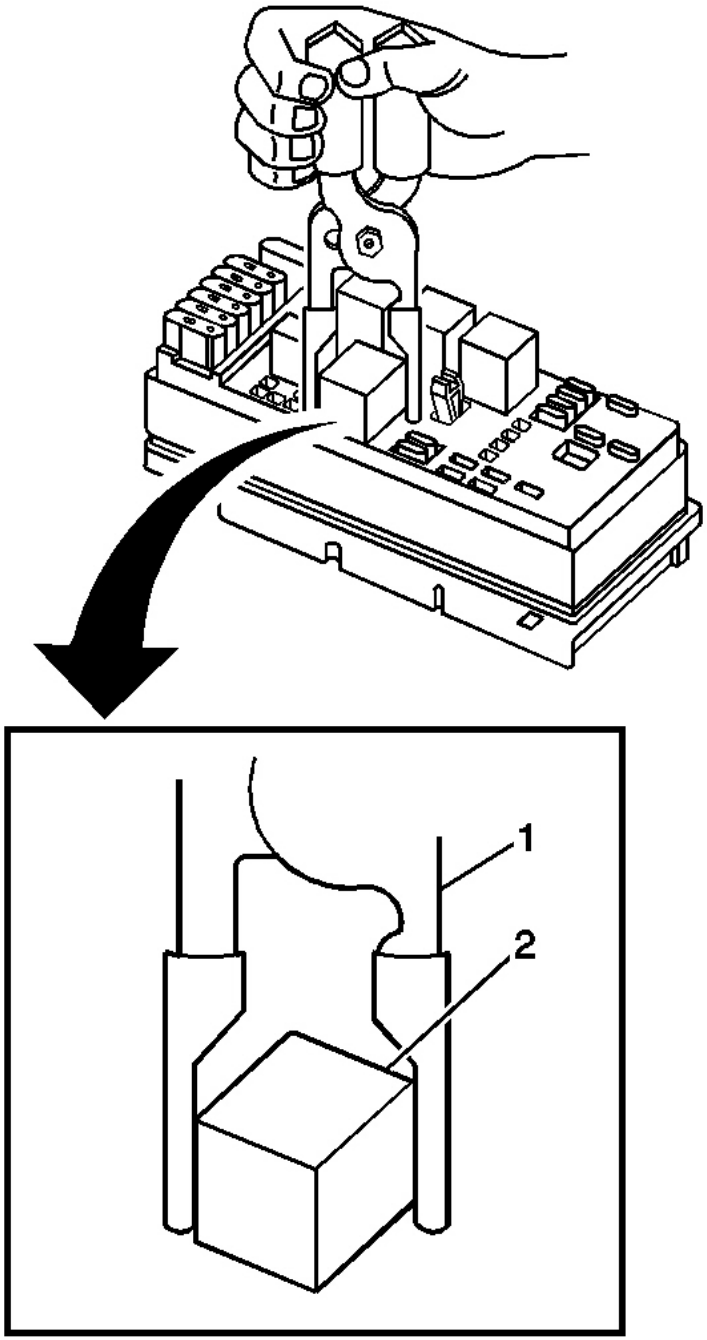

Fig. 25: Removing/Installing Cooling Fan Relay Using J 43244
Courtesy of GENERAL MOTORS CORP.

1. Install the cooling fan relay (2) in the same position as removed.

cardiagn.com

2. Install the electrical center cover.

THERMOSTAT REPLACEMENT

Removal Procedure

IMPORTANT: The water pump inlet and thermostat MUST be replaced as an assembly. The thermostat is not serviceable separately.

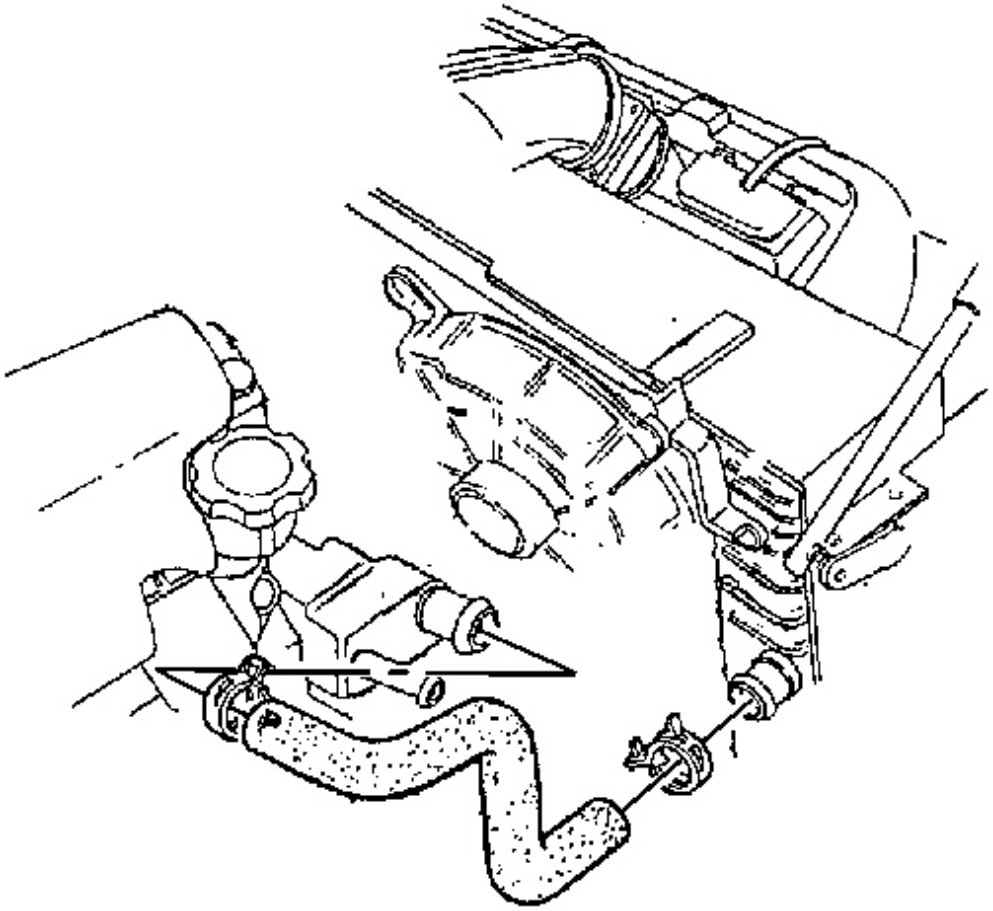

Fig. 26: Radiator Outlet Hose & Clamp
Courtesy of GENERAL MOTORS CORP.

1. Drain the cooling system. Refer to **Draining and Filling Cooling System** .

cardiagn.com

2. Reposition the outlet hose clamp at the water pump inlet.
3. Remove the outlet hose from the water pump inlet.

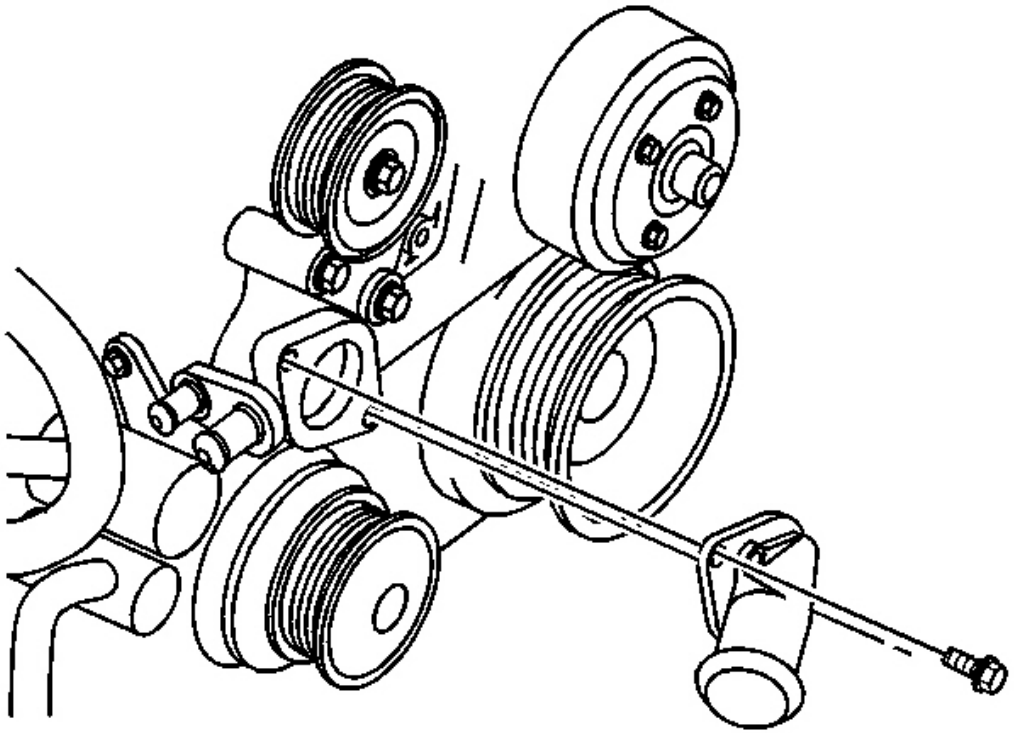

Fig. 27: View Of Water Pump Inlet
Courtesy of GENERAL MOTORS CORP.

4. Remove the water pump inlet bolts.
5. Remove the water pump inlet.

cardiagn.com

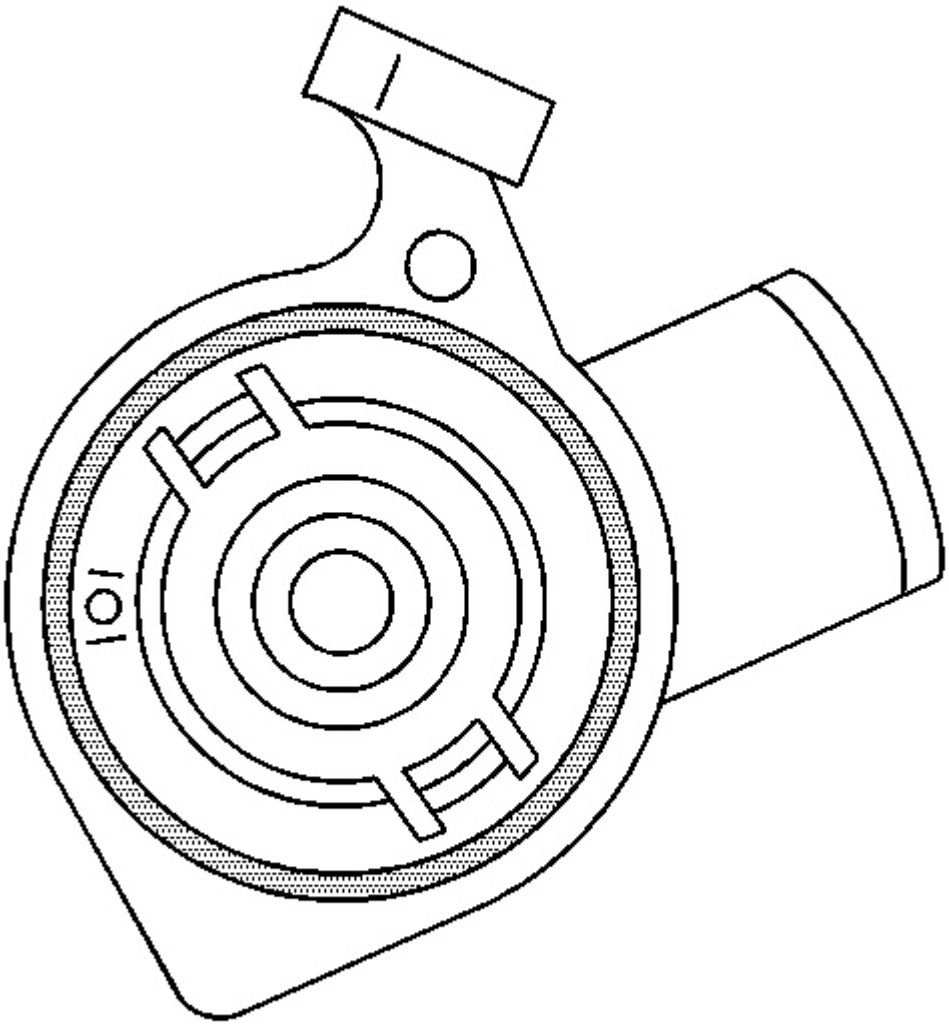

Fig. 28: Thermostat Housing O-Ring Seal
Courtesy of GENERAL MOTORS CORP.

6. The O-ring seal is integral to the thermostat housing.
7. Remove the thermostat housing.

Installation Procedure

cardiagn.com

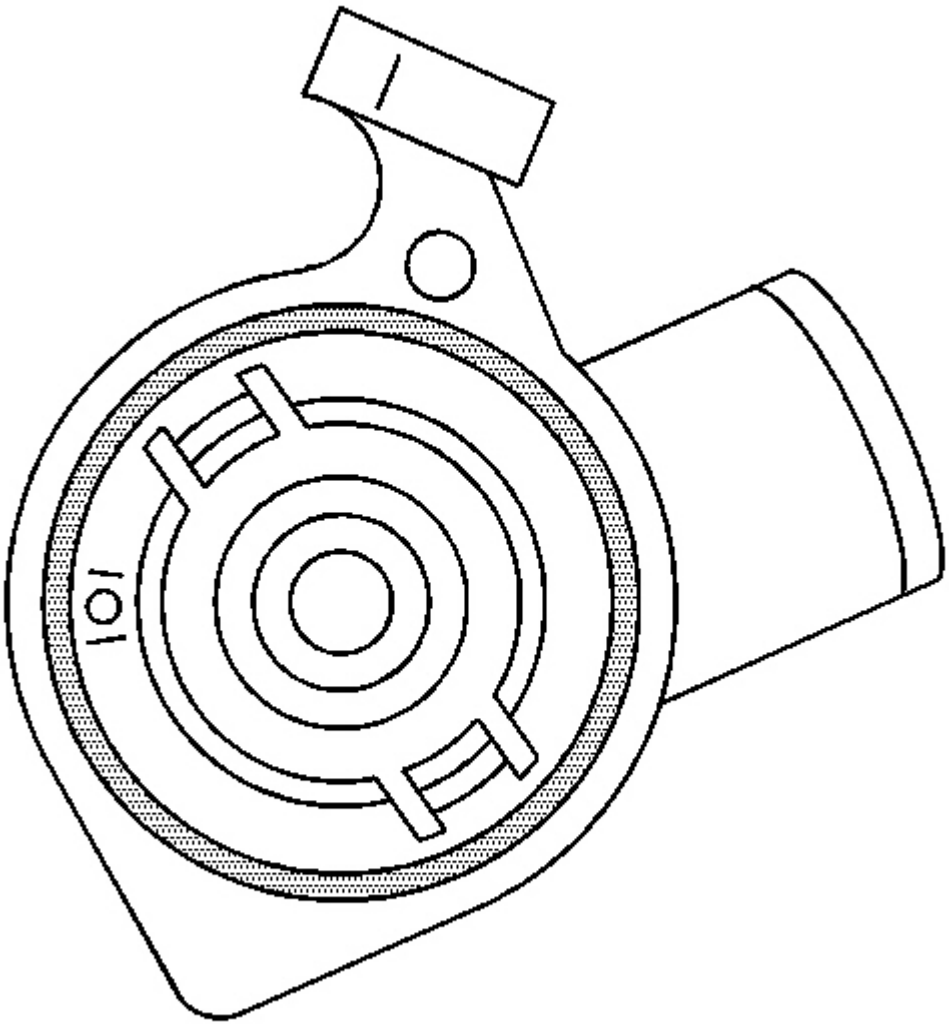

Fig. 29: Thermostat Housing O-Ring Seal
Courtesy of GENERAL MOTORS CORP.

1. Install a new thermostat housing.
2. Ensure that the new thermostat housing has an O-ring seal and is in the groove correctly.

cardiagn.com

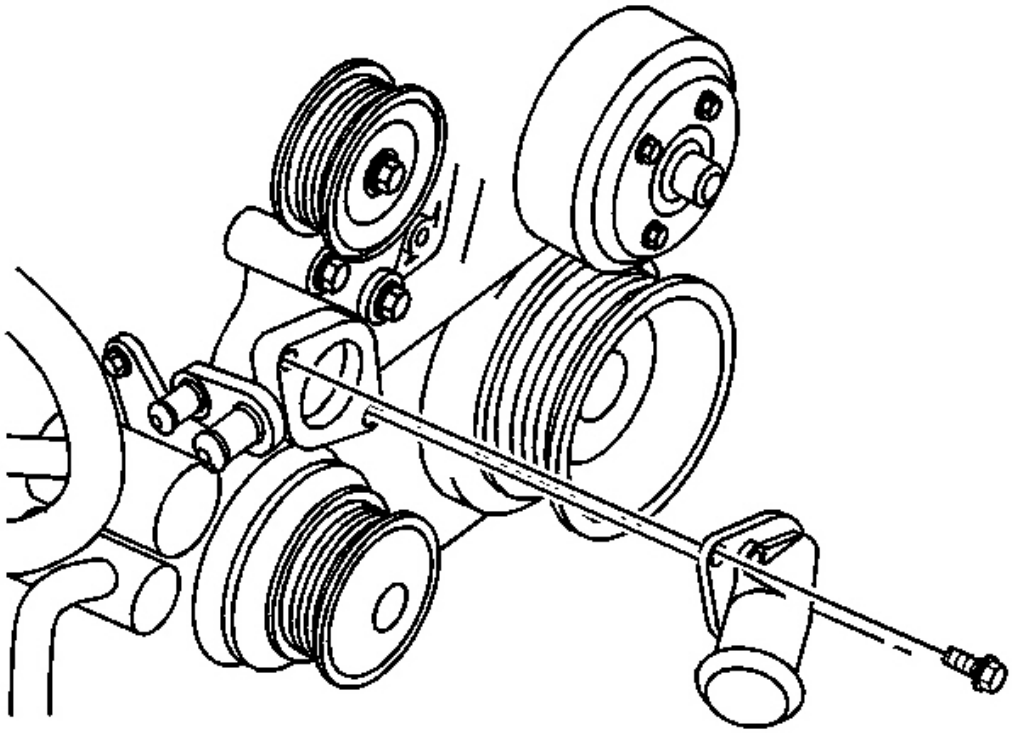

Fig. 30: View Of Water Pump Inlet
Courtesy of GENERAL MOTORS CORP.

NOTE: **Refer to Fastener Notice in Cautions and Notices.**

3. Install the water pump inlet (with thermostat).
4. Install the water pump inlet bolts.

Tighten: Tighten the water pump inlet bolts to 15 N.m (11 lb ft).

cardiagn.com

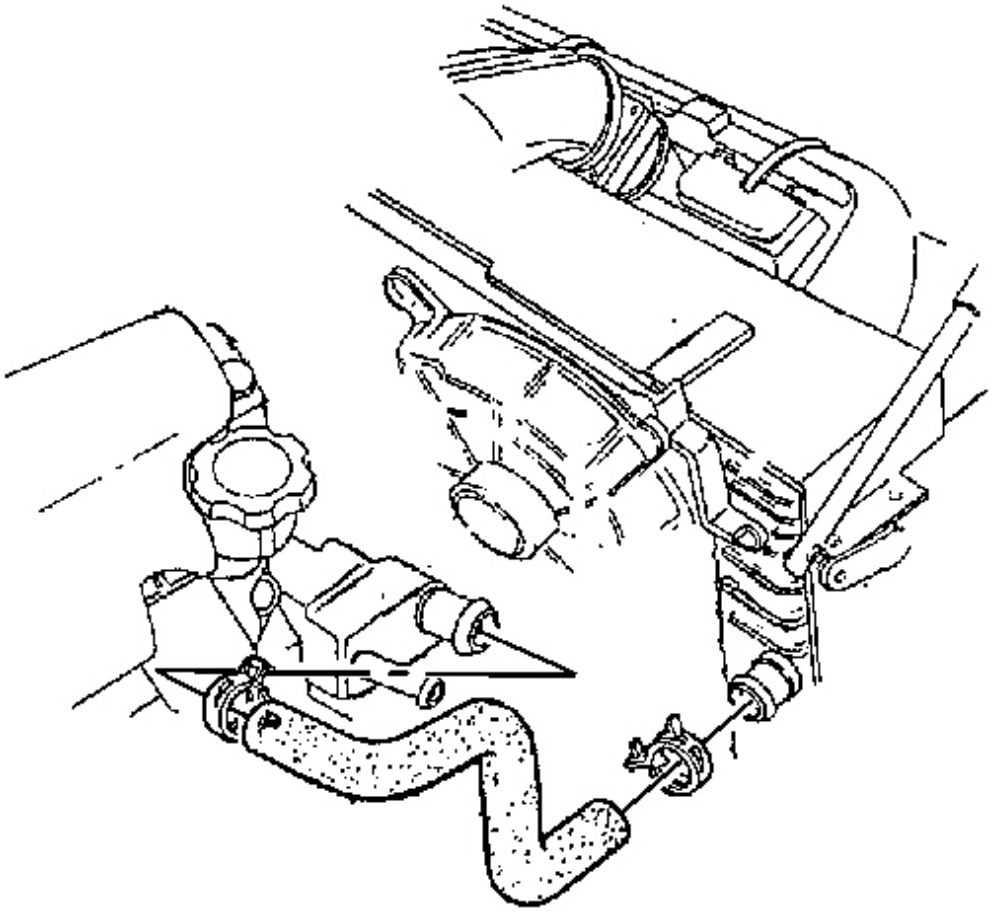

Fig. 31: Radiator Outlet Hose & Clamp
Courtesy of GENERAL MOTORS CORP.

5. Install the outlet hose to the water pump inlet.
6. Position the outlet hose clamp at the water outlet.
7. Fill the cooling system. Refer to **Draining and Filling Cooling System** .

COOLANT AIR BLEED PIPE ASSEMBLY REPLACEMENT

Removal Procedure

IMPORTANT: Removal of the intake manifold is NOT required to service the coolant air bleed pipe, but is required to service the coolant air bleed pipe covers and/or

cardiagn.com

gaskets.

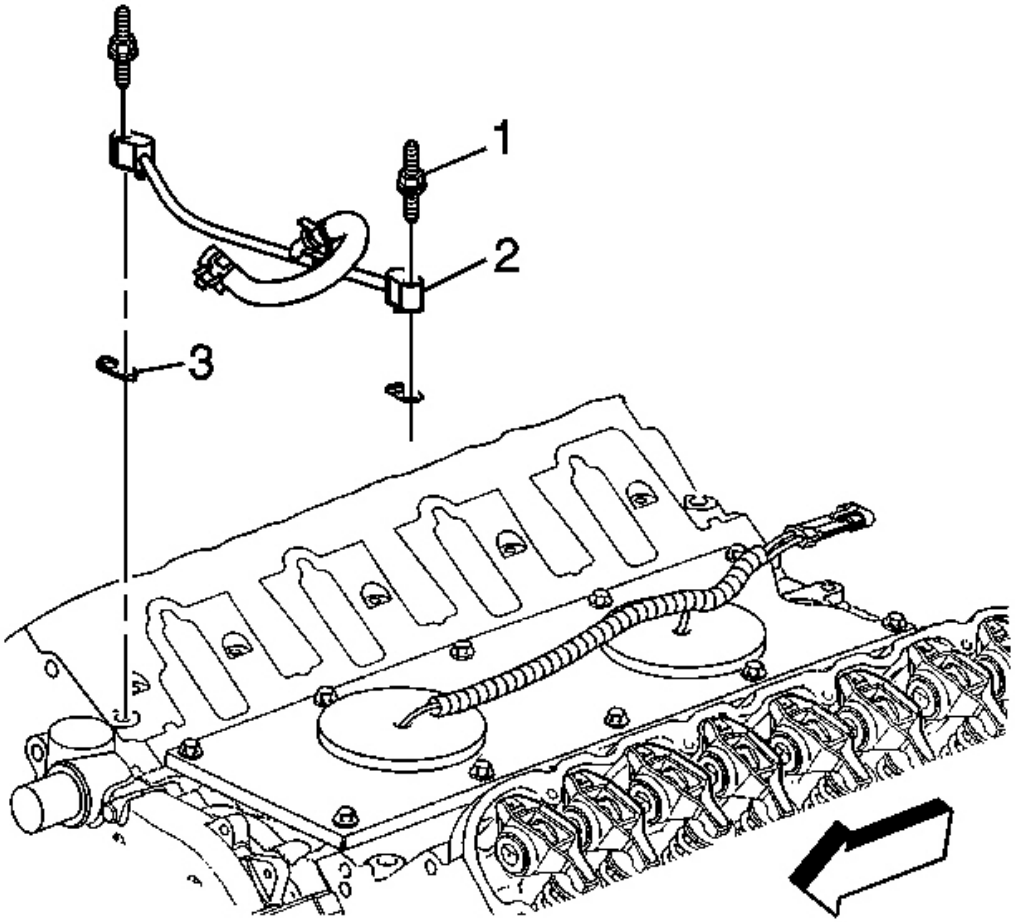

Fig. 32: Coolant Air Bleed Pipe, Studs & Gaskets
Courtesy of GENERAL MOTORS CORP.

1. Remove the intake manifold, if required. Refer to **Intake Manifold Replacement** in Engine Mechanical - 5.7 L.
2. Remove the coolant air bleed hose from the throttle body, if required.
3. Remove the coolant air bleed pipe studs (1).
4. Remove the coolant air bleed pipe (2) with gaskets (3).

cardiagn.com

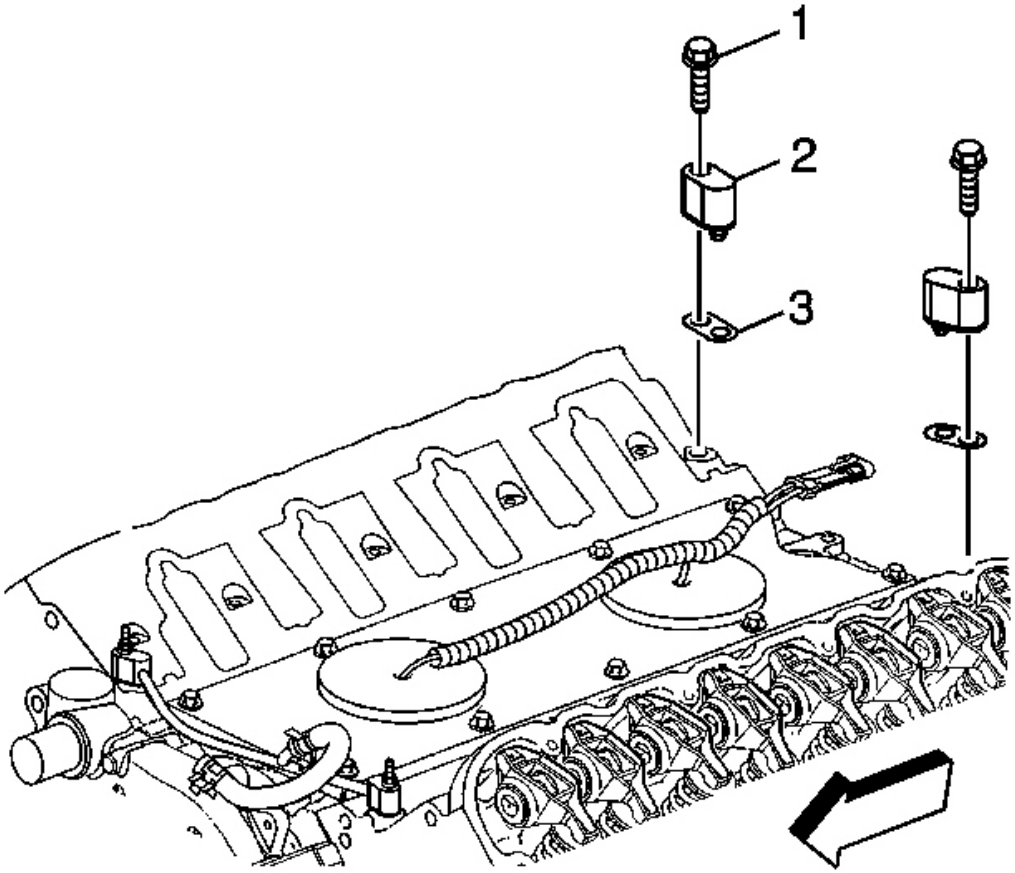

Fig. 33: Coolant Air Bleed Pipe Covers, Bolts & Gaskets
Courtesy of GENERAL MOTORS CORP.

5. Remove the coolant air bleed pipe cover bolts (1), if required.
6. Remove the coolant air bleed pipe covers (2) with gaskets (3), if required.

cardiagn.com

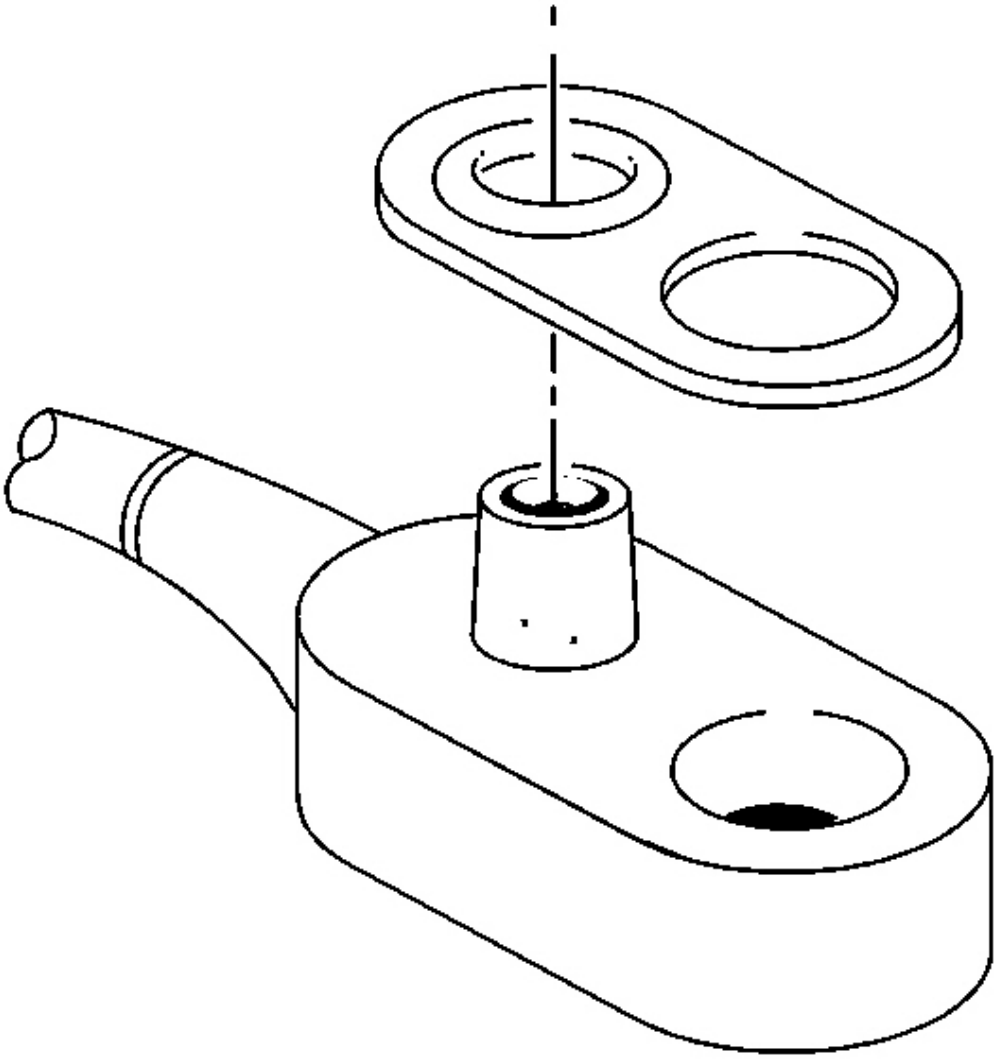

Fig. 34: Coolant Air Bleed Pipe Gasket
Courtesy of GENERAL MOTORS CORP.

7. Remove the gaskets from the coolant air bleed pipe and covers. Discard the gaskets.

cardiagn.com

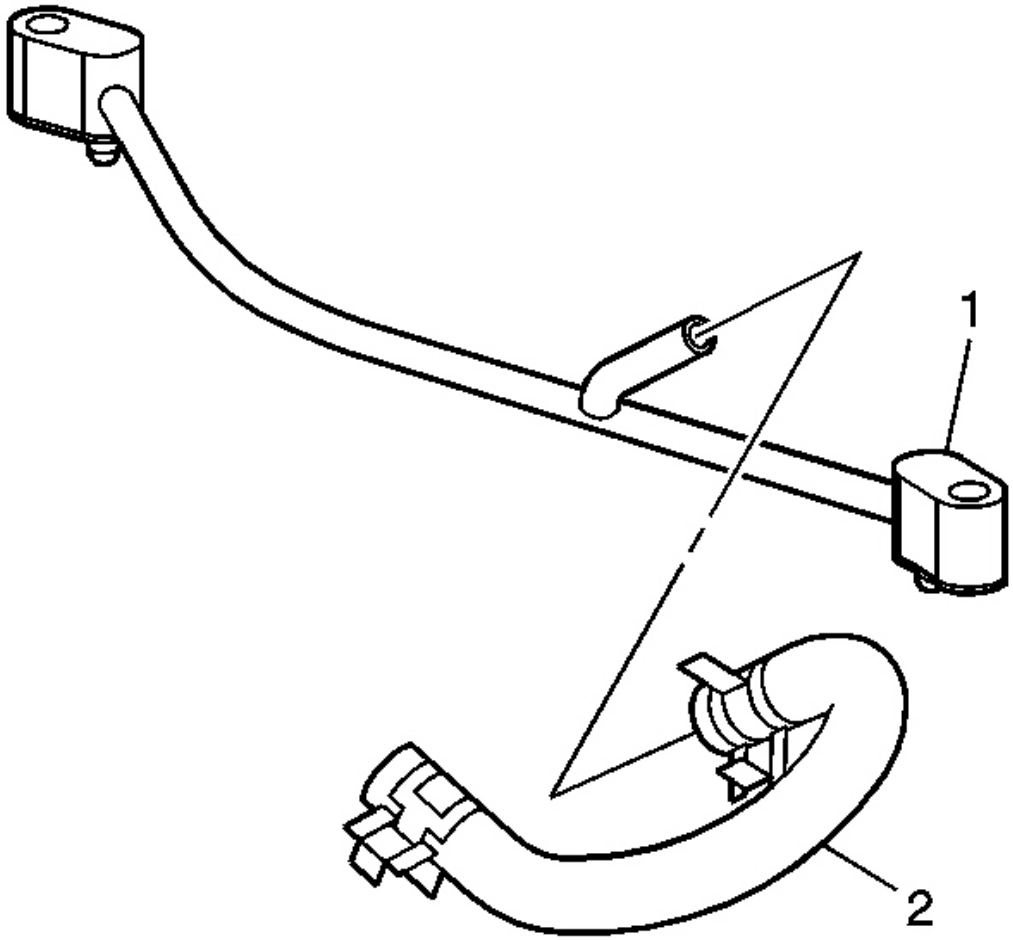

Fig. 35: Coolant Air Bleed Hose & Pipe
Courtesy of GENERAL MOTORS CORP.

8. Remove the coolant air bleed hose (2) from the pipe (1).
9. Clean and inspect the coolant air bleed pipe. Refer to **Coolant Air Bleed Pipe Cleaning and Inspection** in Engine Mechanical - 5.7 L.

Installation Procedure

cardiagn.com

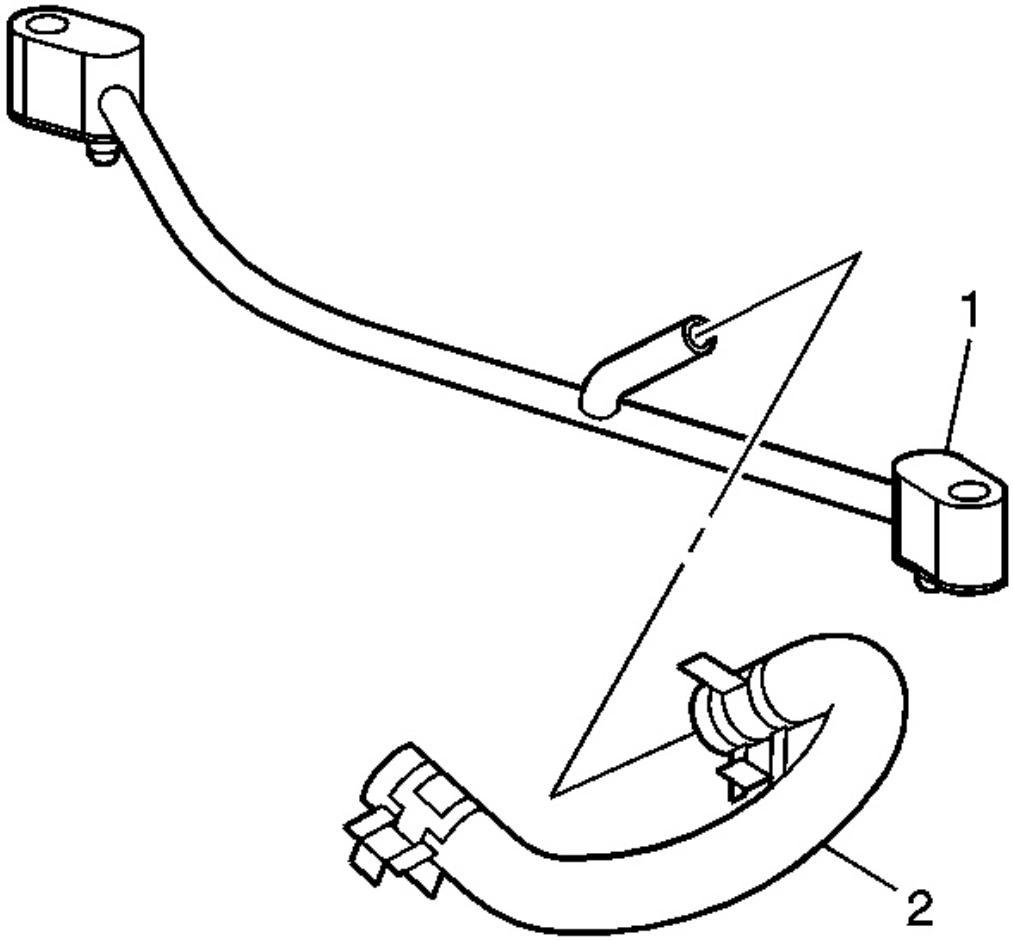

Fig. 36: Coolant Air Bleed Hose & Pipe
Courtesy of GENERAL MOTORS CORP.

1. Install the coolant air bleed hose (2) onto the pipe (1).

cardiagn.com

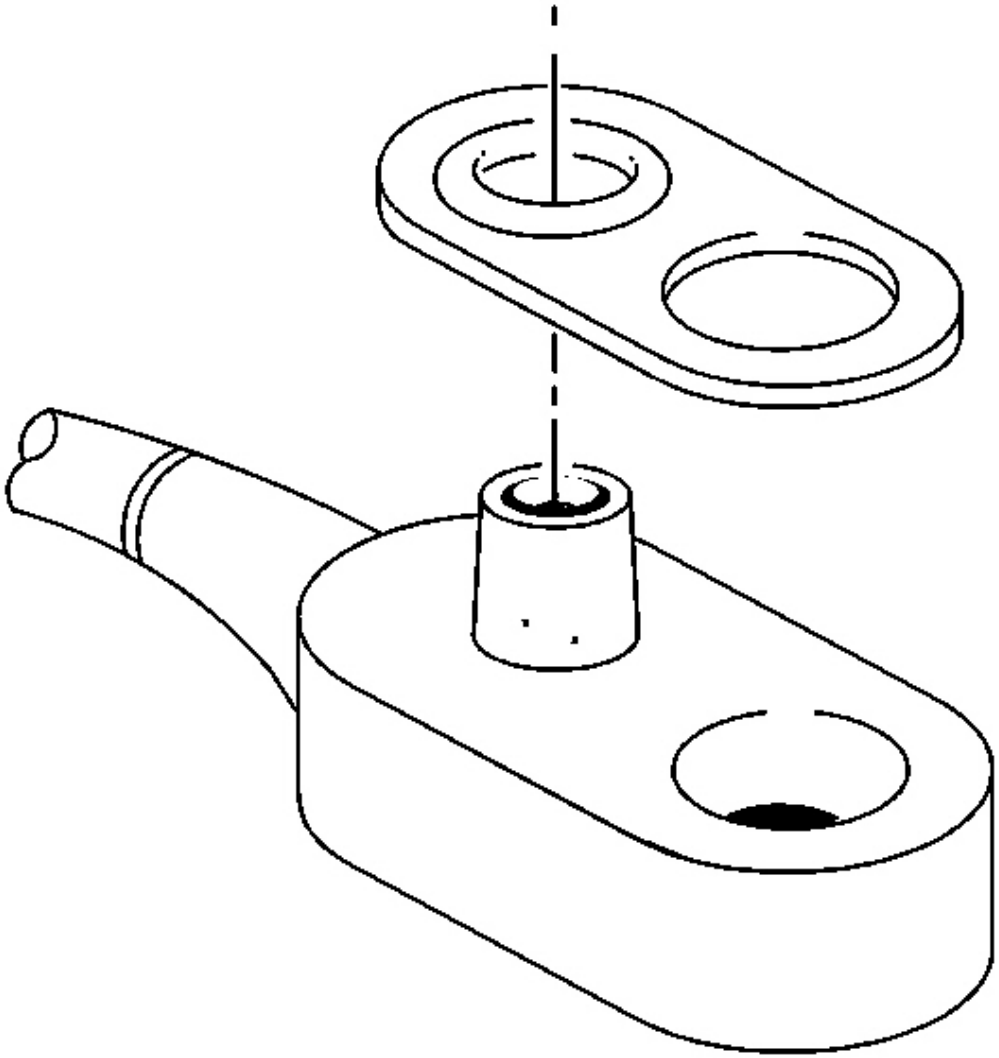

Fig. 37: Coolant Air Bleed Pipe Gasket
Courtesy of GENERAL MOTORS CORP.

IMPORTANT: Install the gaskets properly onto the pipe and covers. Position the O-ring seal onto the nipple portion of the pipe.

2. Install the gaskets onto the coolant air bleed pipe and covers, if required.

cardiagn.com

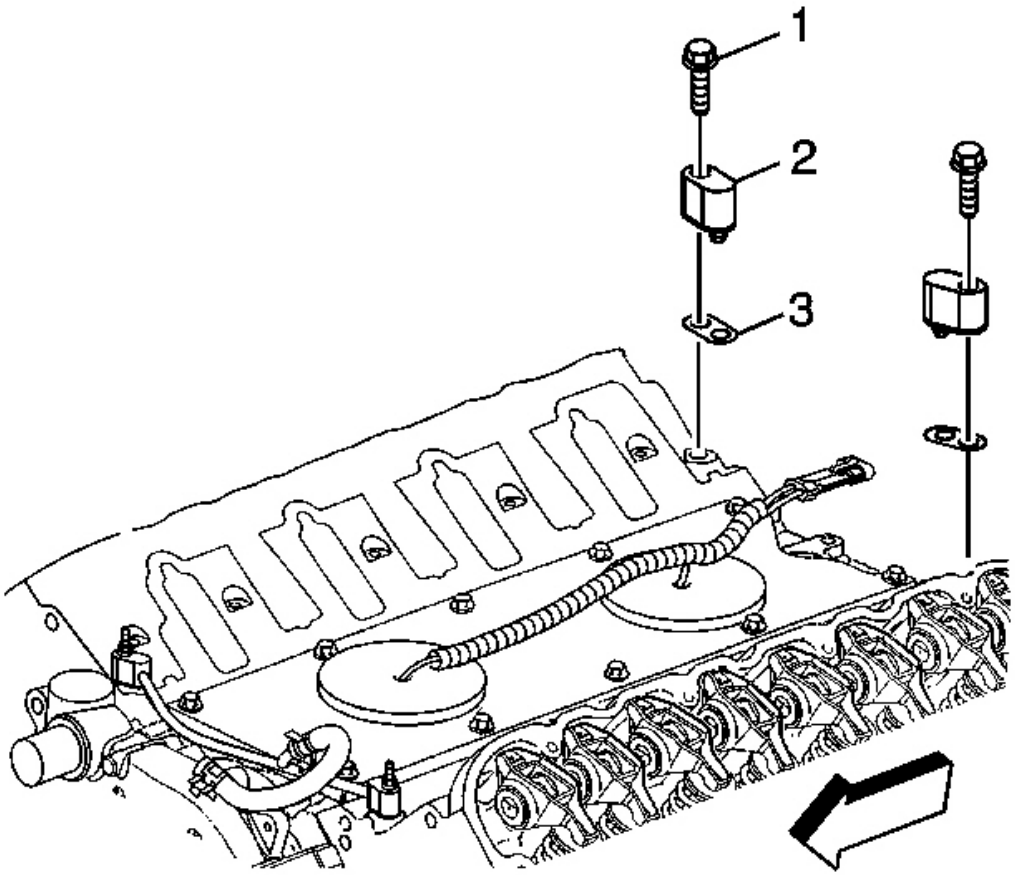

Fig. 38: Coolant Air Bleed Pipe Covers, Bolts & Gaskets
Courtesy of GENERAL MOTORS CORP.

NOTE: Refer to Fastener Notice in Cautions and Notices.

3. Install the coolant air bleed pipe covers (2) with gaskets (3), if required.
4. Install the coolant air bleed pipe cover bolts (1).

Tighten: Tighten the coolant air bleed pipe cover bolts to 12 N.m (106 lb in).

cardiagn.com

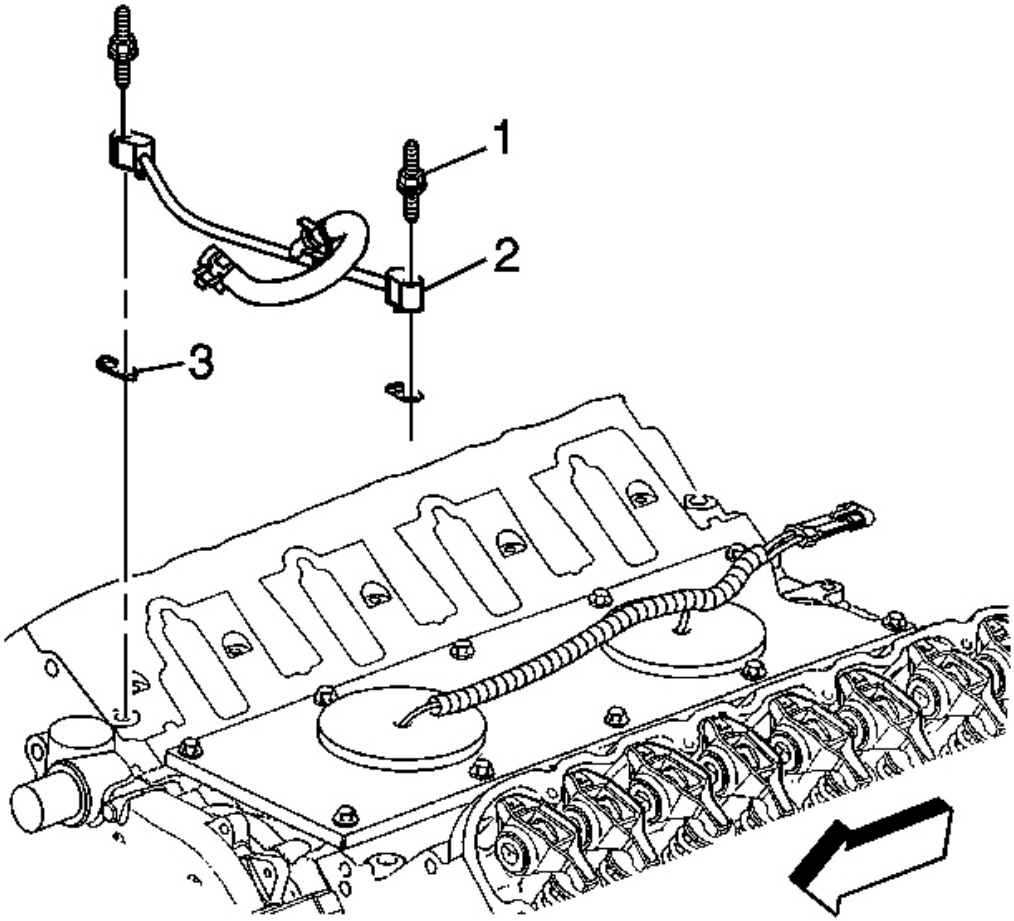

Fig. 39: Coolant Air Bleed Pipe, Studs & Gaskets
Courtesy of GENERAL MOTORS CORP.

5. Install the coolant air bleed pipe (2) with gaskets (3).
6. Install the coolant air bleed pipe studs (1).

   Tighten: Tighten the coolant air bleed studs to 12 N.m (106 lb in).

7. Install the coolant air bleed hose to the throttle body, if required.
8. Install the intake manifold, if required. Refer to **Intake Manifold Replacement** in Engine Mechanical - 5.7 L.

COOLANT AIR BLEED HOSE REPLACEMENT

cardiagn.com

Removal Procedure

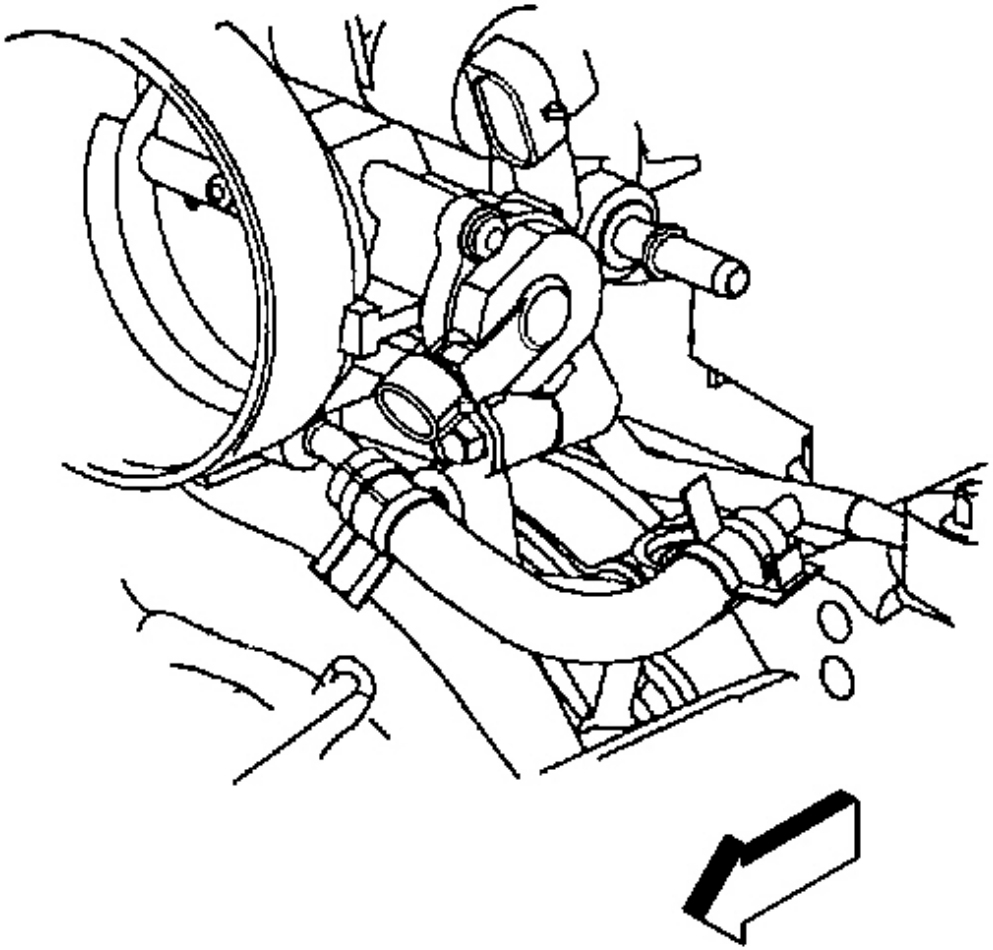

Fig. 40: Coolant Air Bleed Hose & Clamp At Throttle Body
Courtesy of GENERAL MOTORS CORP.

1. Reposition the coolant air bleed hose clamp at the throttle body.
2. Remove the coolant air bleed hose from the throttle body.

cardiagn.com

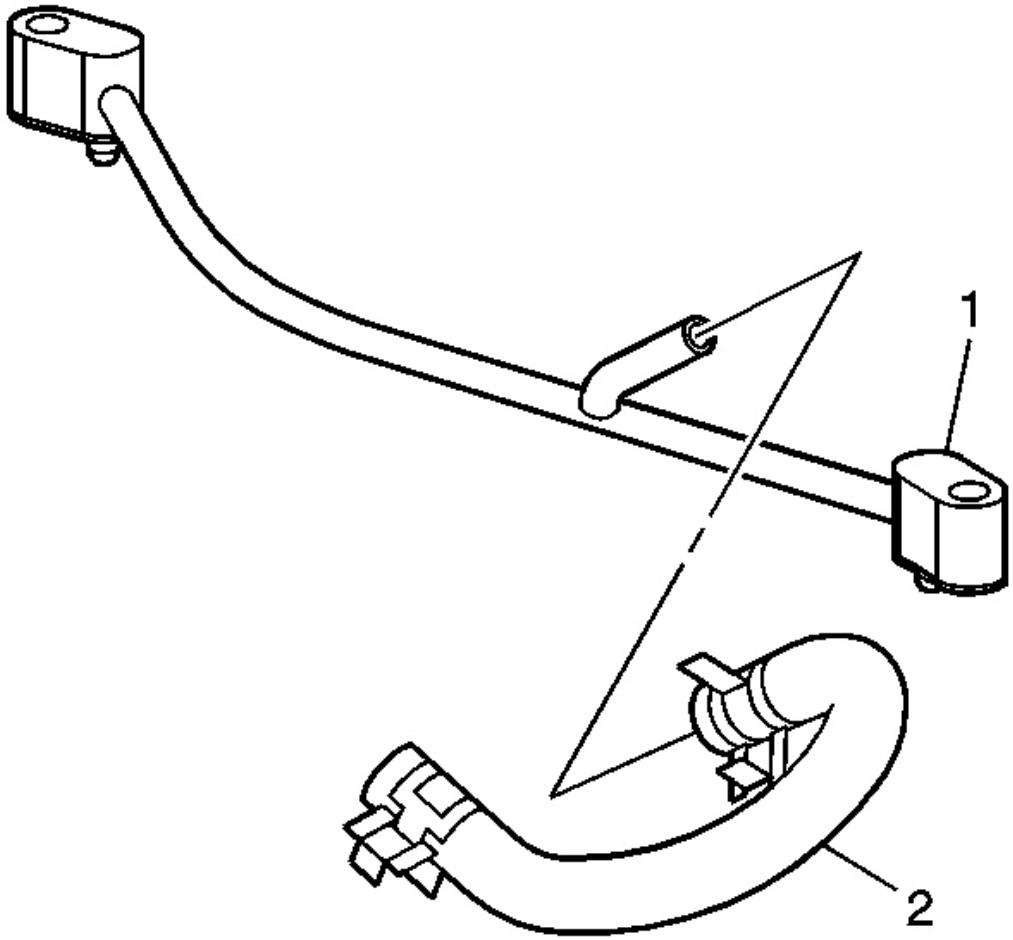

Fig. 41: Coolant Air Bleed Hose & Pipe
Courtesy of GENERAL MOTORS CORP.

3. Reposition the coolant air bleed hose clamp at the pipe.
4. Remove the coolant air bleed hose (2) from the pipe (1).

Installation Procedure

cardiagn.com

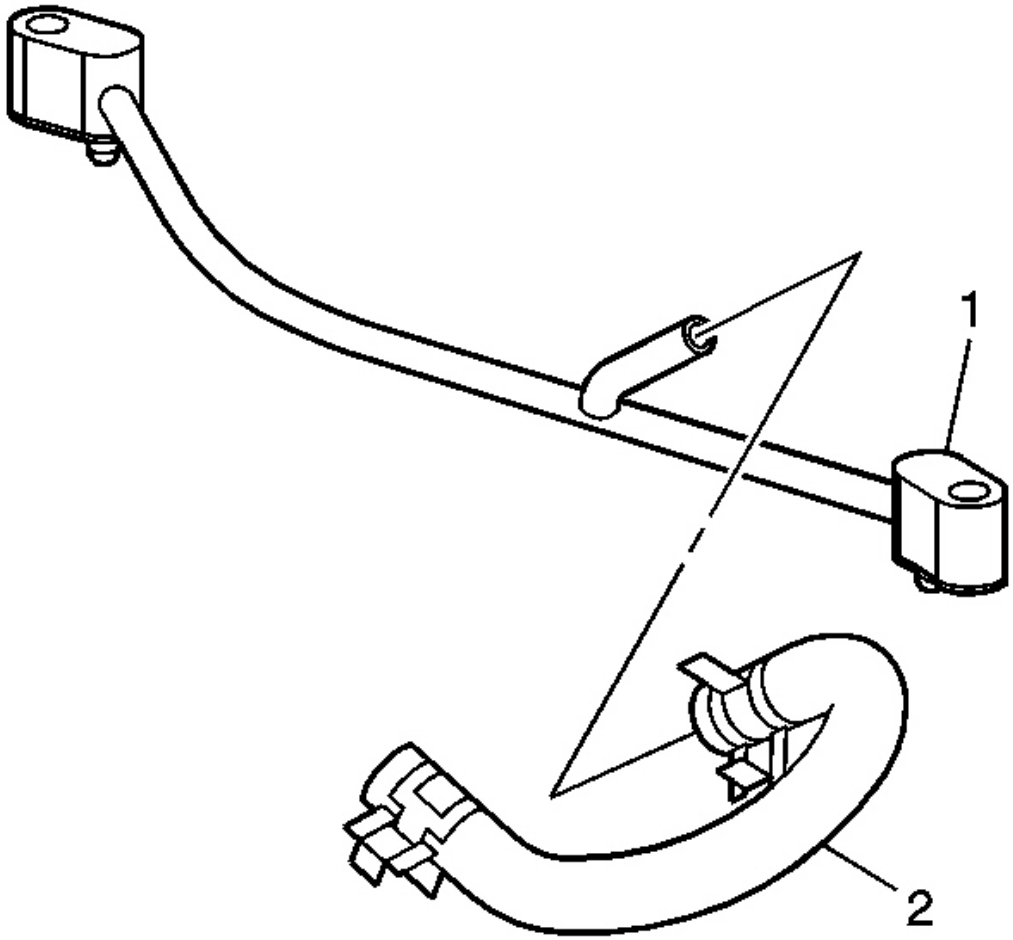

Fig. 42: Coolant Air Bleed Hose & Pipe
Courtesy of GENERAL MOTORS CORP.

1. Install the coolant air bleed hose (2) to the pipe (1).
2. Position the coolant air bleed hose clamp at the pipe.

cardiagn.com

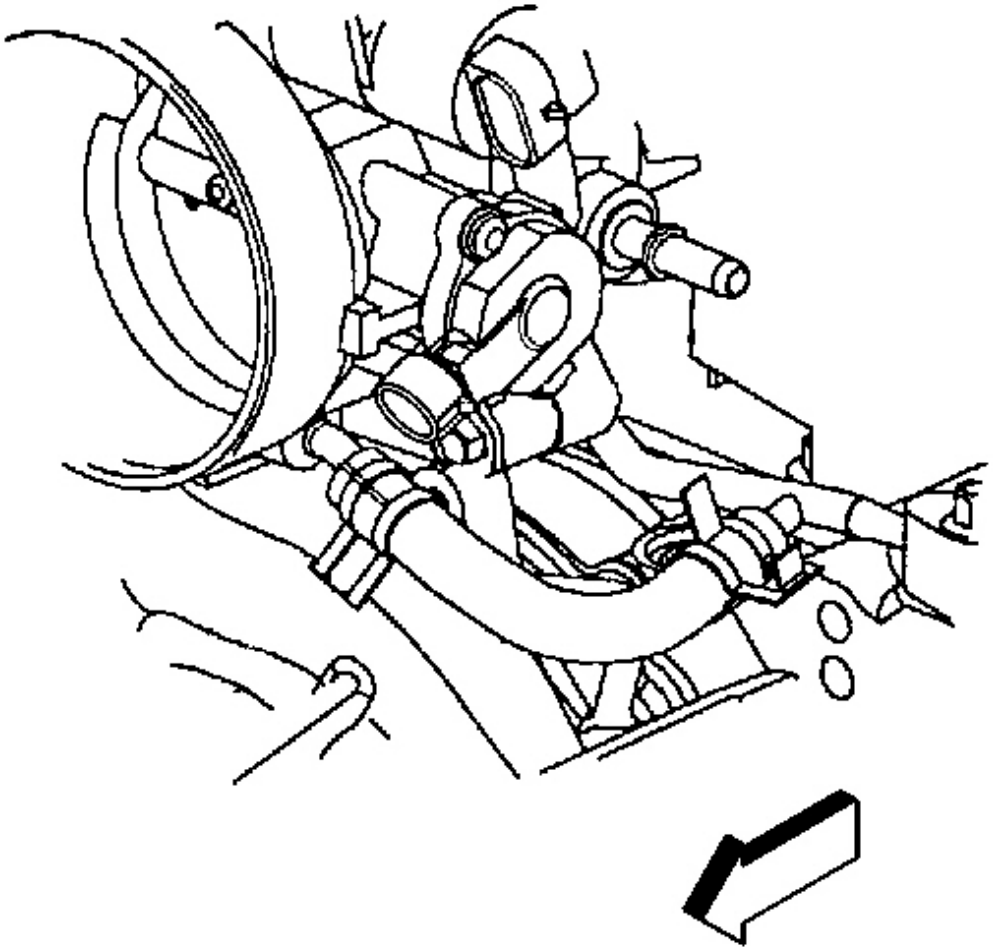

Fig. 43: Coolant Air Bleed Hose & Clamp At Throttle Body
Courtesy of GENERAL MOTORS CORP.

3. Install the coolant air bleed hose to the throttle body.
4. Position the coolant air bleed hose clamp at the throttle body.
5. Add engine coolant, if necessary.

WATER PUMP REPLACEMENT

Removal Procedure

cardiagn.com

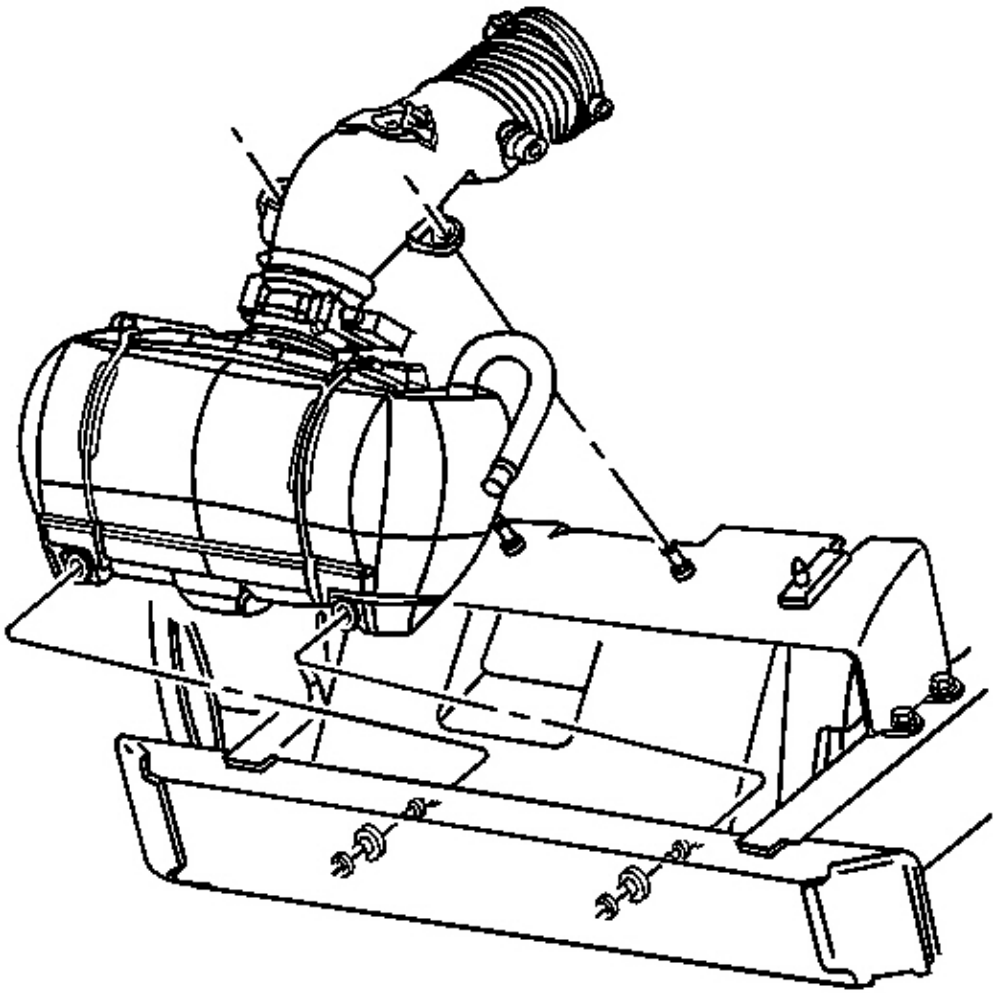

Fig. 44: Air Cleaner Intake Duct
Courtesy of GENERAL MOTORS CORP.

1. Remove the air cleaner intake duct.
2. Remove the accessory drive belt. Refer to **Drive Belt Replacement - Accessory** in Engine Mechanical - 5.7L.
3. Drain the cooling system. Refer to **Draining and Filling Cooling System** .

cardiagn.com

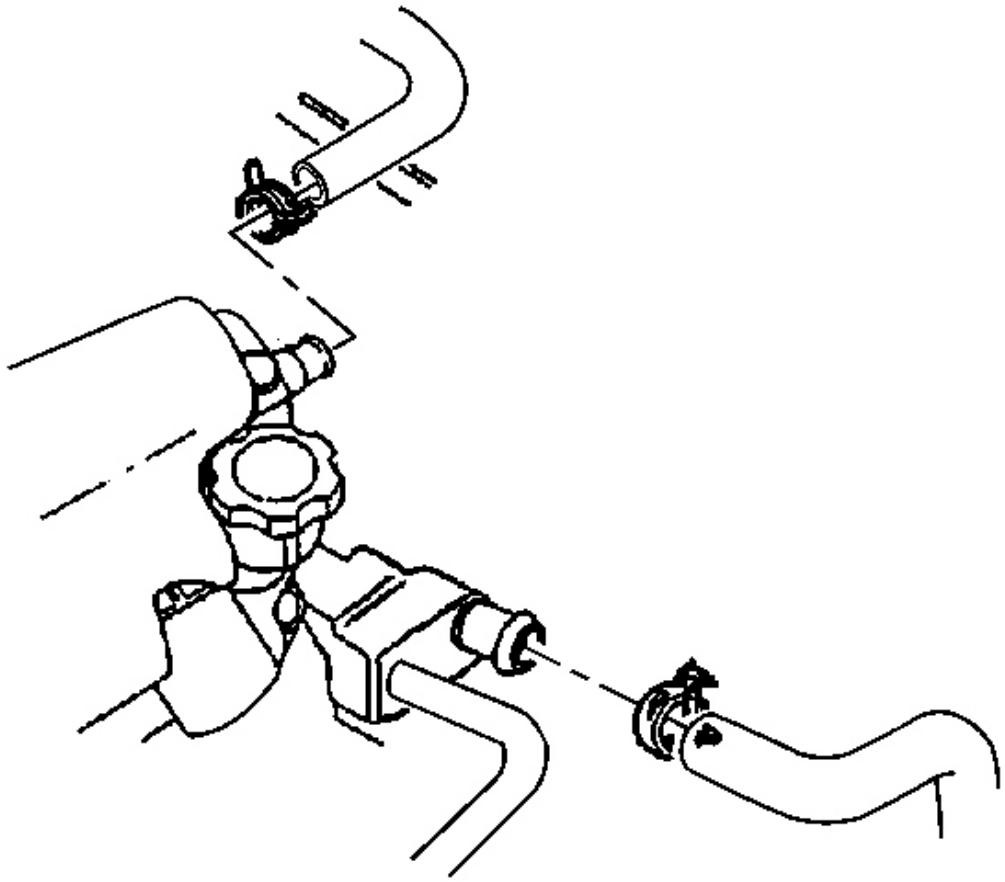

Fig. 45: Water Pump Inlet & Outlet Hoses
Courtesy of GENERAL MOTORS CORP.

4. Reposition the inlet and outlet hose clamps at the water pump.
5. Remove the inlet and outlet hoses from the water pump.

cardiagn.com

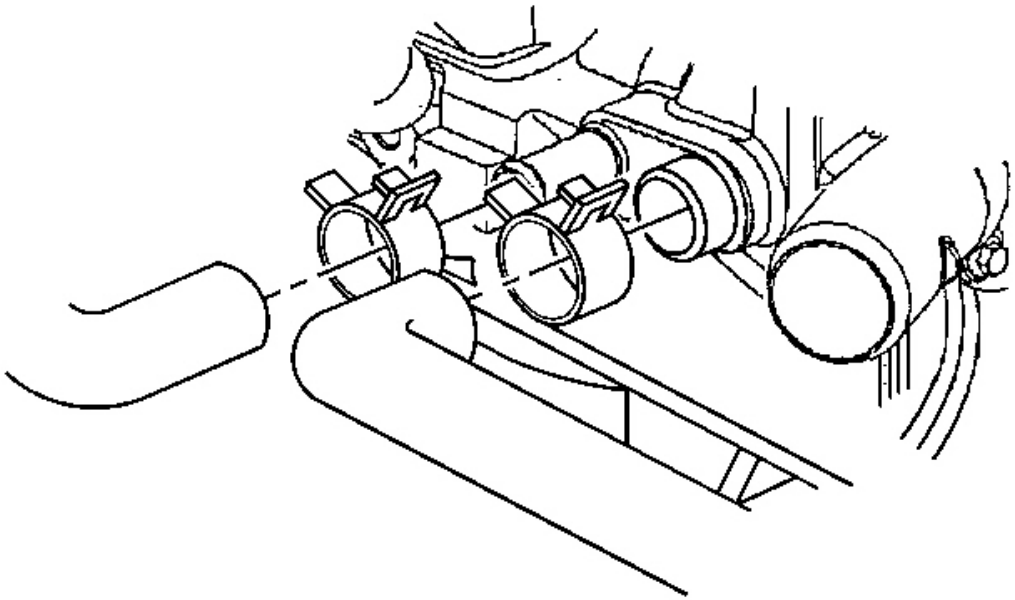

Fig. 46: Heater Inlet & Surge Tank Outlet Hoses
Courtesy of GENERAL MOTORS CORP.

6. Reposition the heater inlet and surge tank outlet hose clamps at the water pump.
7. Remove the heater inlet and surge tank outlet hoses from the water pump.

cardiagn.com

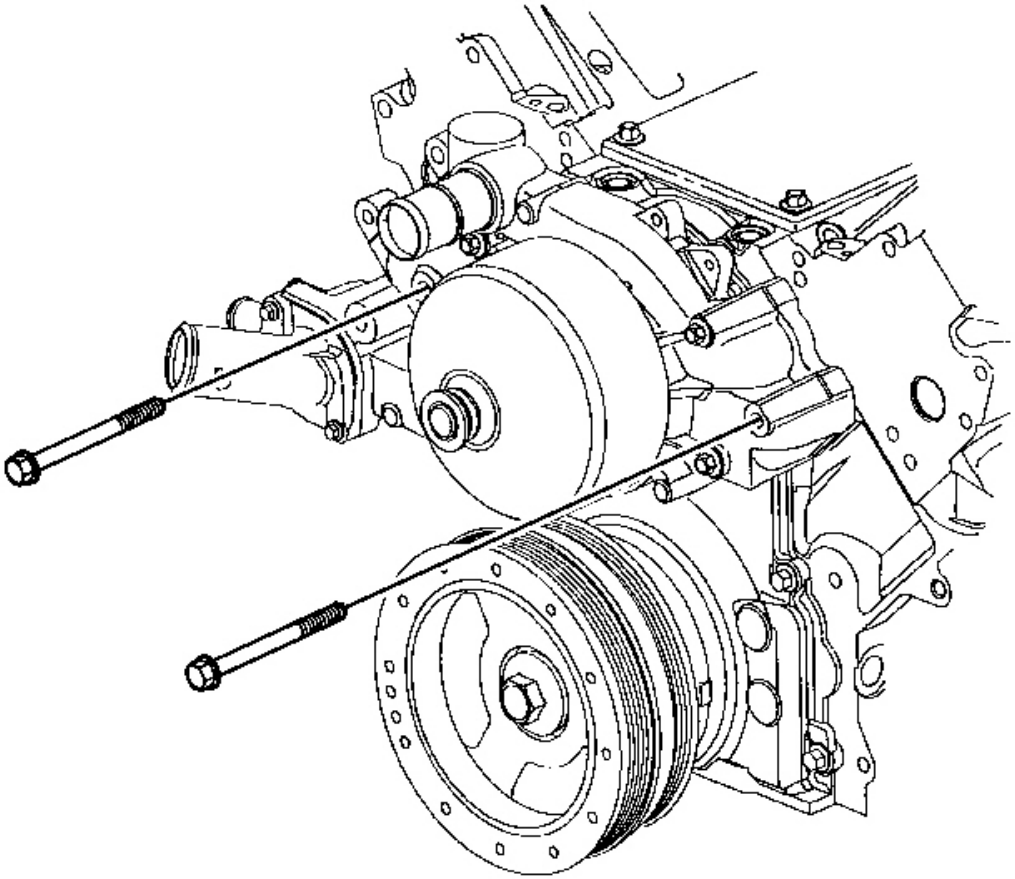

Fig. 47: Water Pump Bolts
Courtesy of GENERAL MOTORS CORP.

8. Remove the water pump bolts.

cardiagn.com

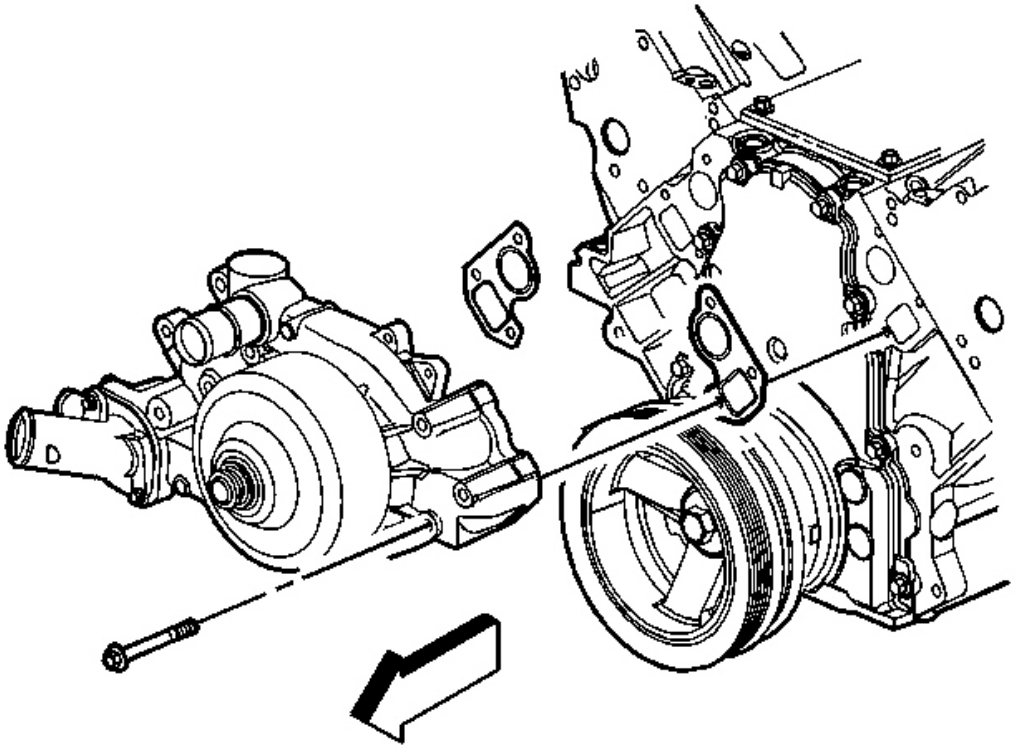

Fig. 48: Water Pump Gaskets
Courtesy of GENERAL MOTORS CORP.

9. Remove the water pump.
10. Remove the water pump gaskets.
11. Clean and inspect the water pump. Refer to **Water Pump Cleaning and Inspection** in Engine Mechanical - 5.7L.

Installation Procedure

cardiagn.com

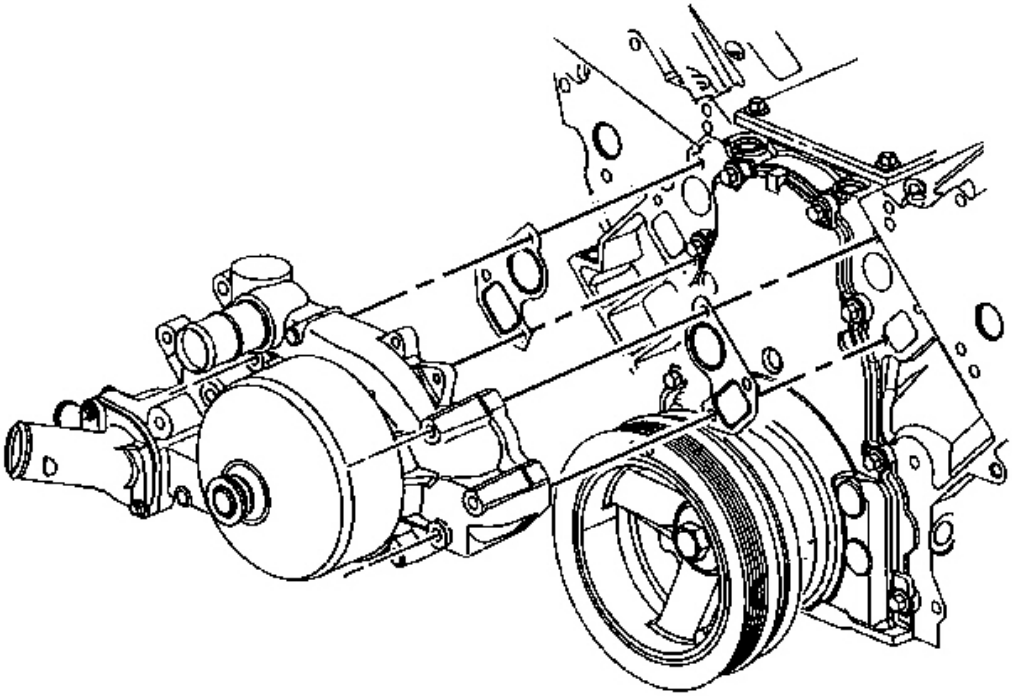

Fig. 49: Engine Block Water Pump & Gaskets
Courtesy of GENERAL MOTORS CORP.

1. Install the water pump and gaskets to the engine block.

cardiagn.com

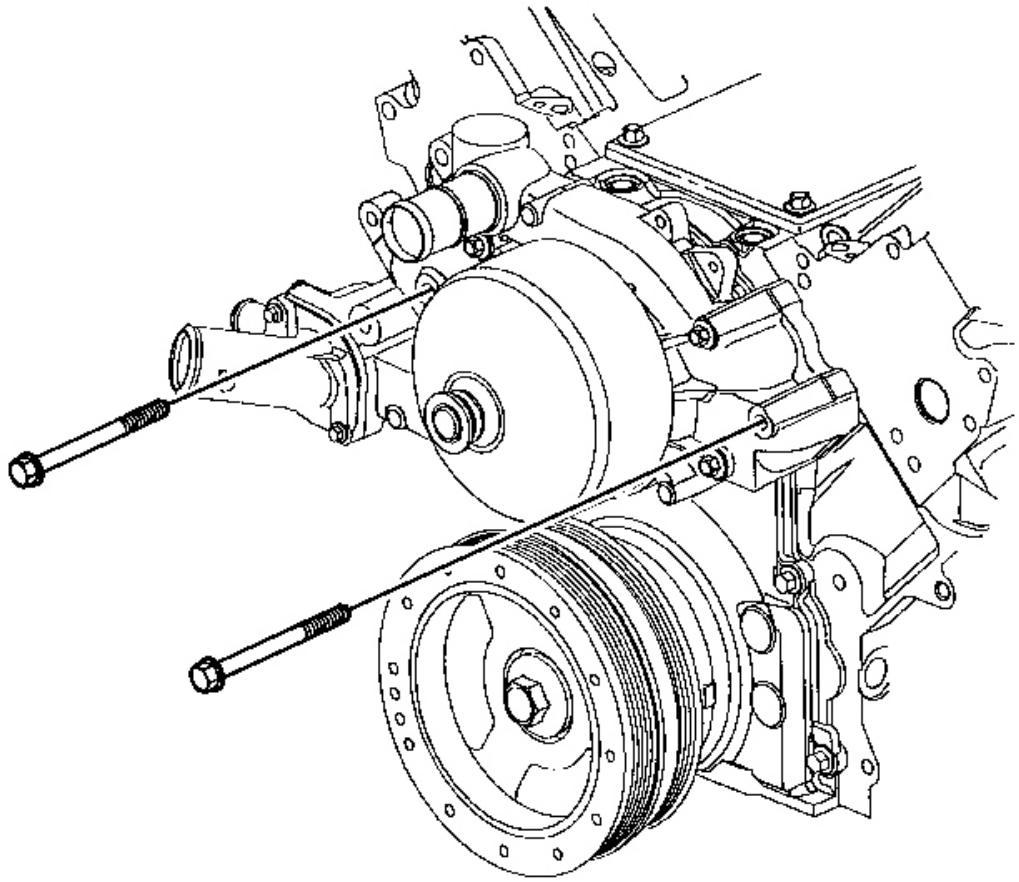

Fig. 50: Water Pump Bolts
Courtesy of GENERAL MOTORS CORP.

NOTE: Refer to Fastener Notice in Cautions and Notices.

2. Install the water pump bolts.

Tighten:

1. Tighten the water pump bolts a first pass to 15 N.m (11 lb ft).
2. Tighten the water pump bolts a final pass to 30 N.m (22 lb ft).

cardiagn.com

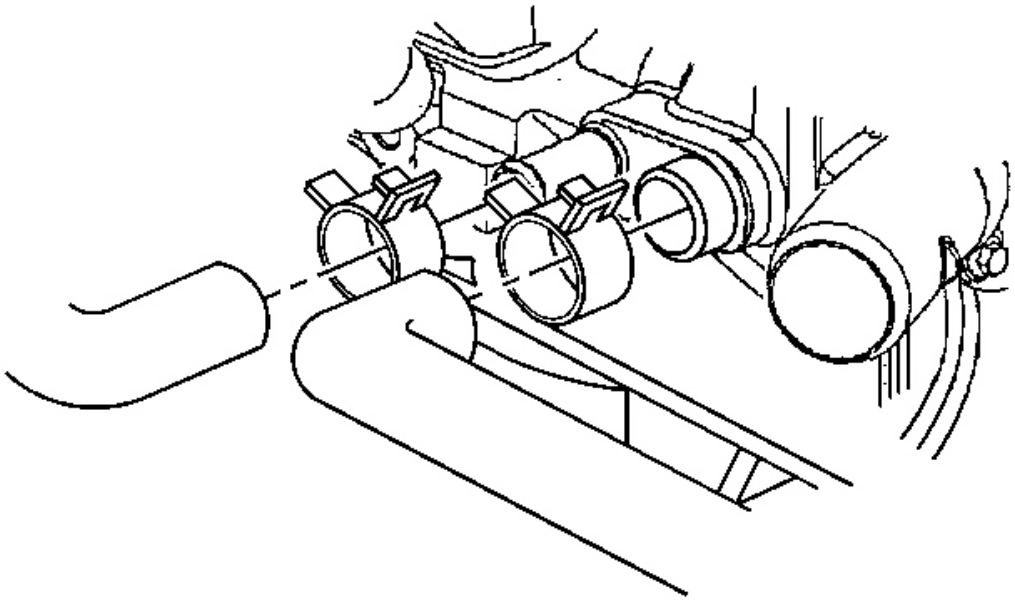

Fig. 51: Heater Inlet & Surge Tank Outlet Hoses
Courtesy of GENERAL MOTORS CORP.

3. Install the heater inlet and surge tank outlet hoses to the water pump.
4. Position the heater inlet and surge tank outlet hose clamps at the water pump.

cardiagn.com

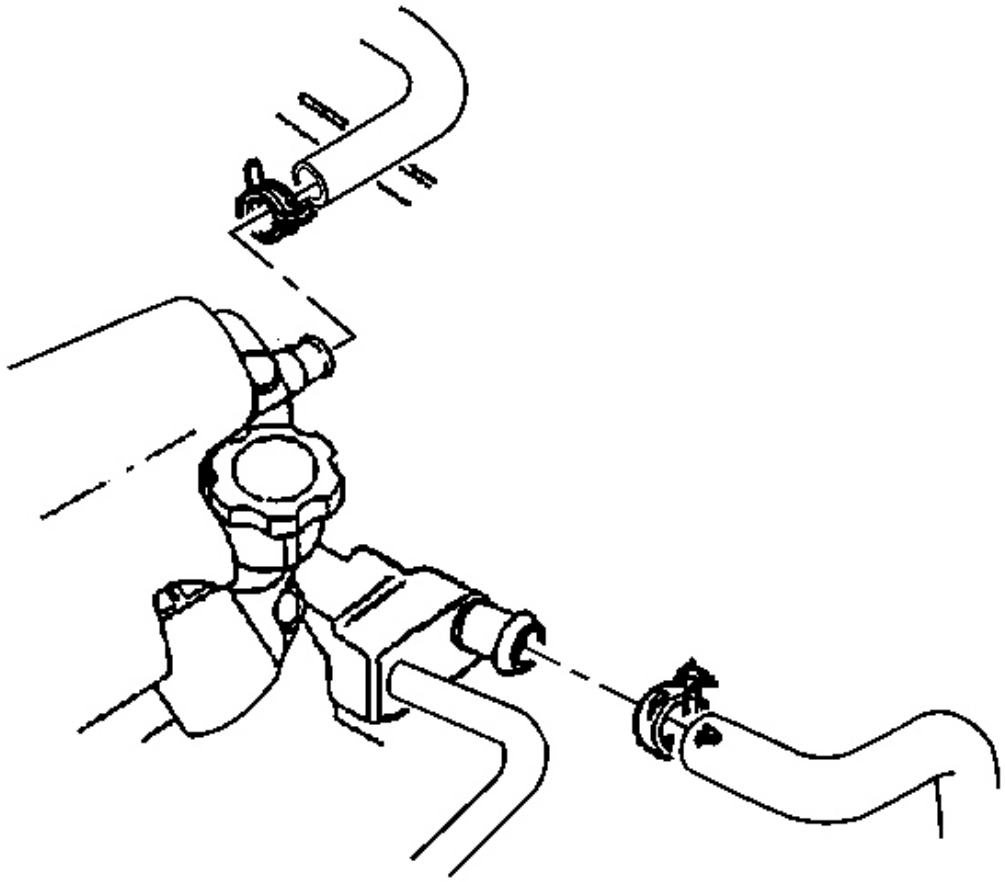

Fig. 52: Water Pump Inlet & Outlet Hoses
Courtesy of GENERAL MOTORS CORP.

5. Install the inlet and outlet hoses to the water pump.
6. Position the inlet and outlet hose clamps at the water pump.
7. Install the accessory drive belt. Refer to **Drive Belt Replacement - Accessory** in Engine Mechanical - 5.7L.
8. Fill the cooling system. Refer to **Draining and Filling Cooling System** .

cardiagn.com

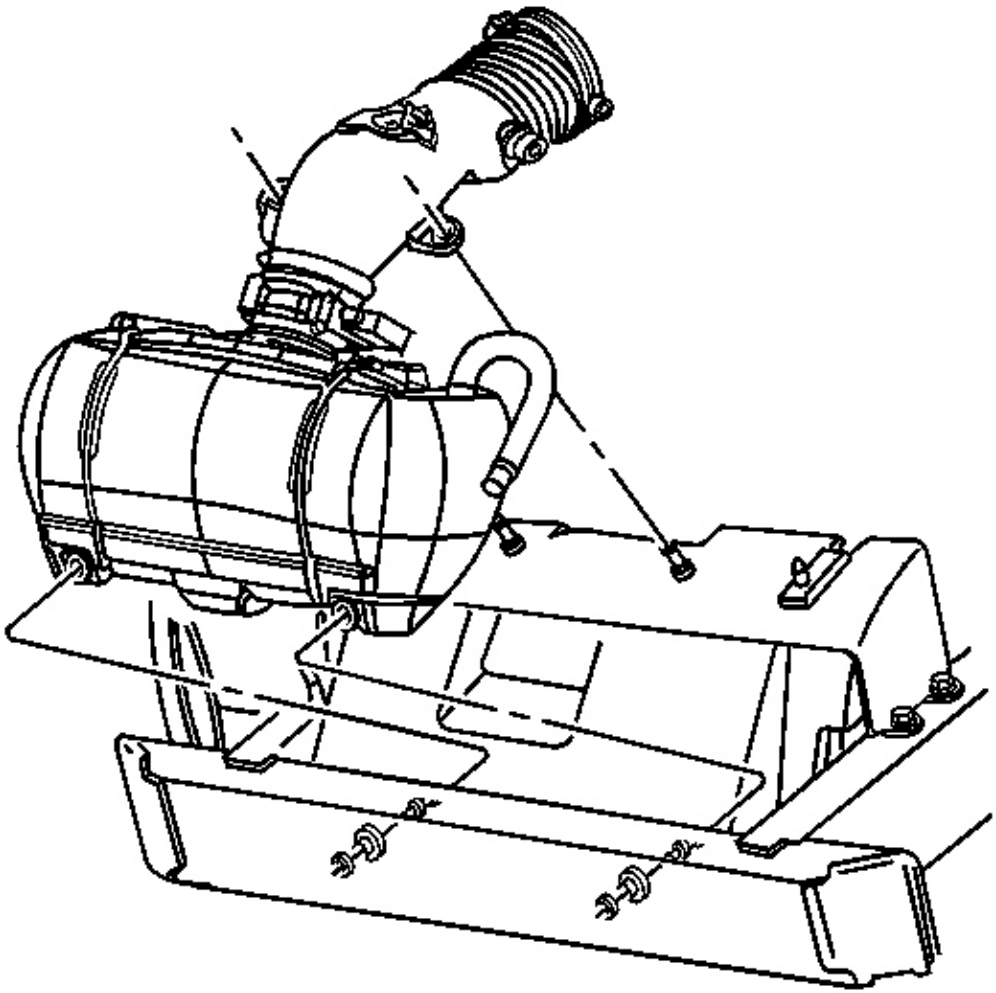

Fig. 53: Air Cleaner Intake Duct
Courtesy of GENERAL MOTORS CORP.

9. Install the air cleaner intake duct.

DRAIN COCK REPLACEMENT

Removal Procedure

cardiagn.com

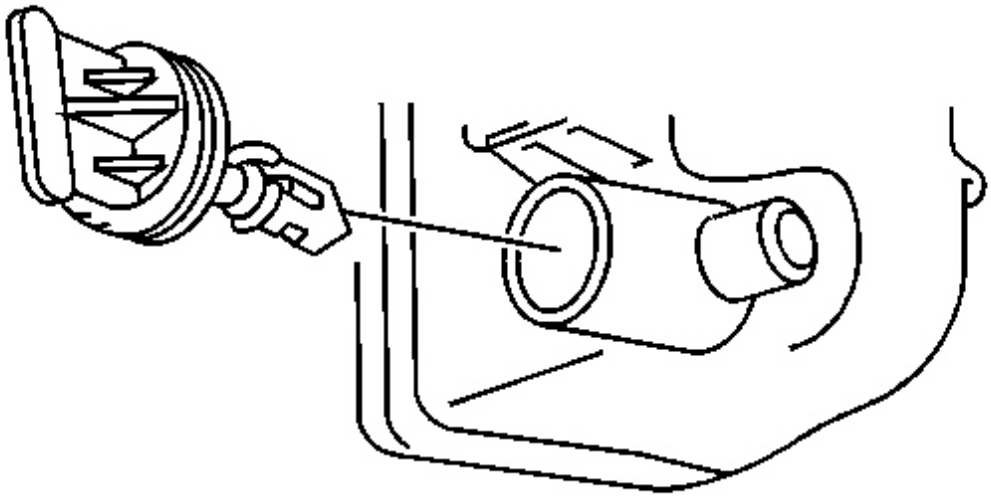

Fig. 54: Radiator Drain Cock
Courtesy of GENERAL MOTORS CORP.

1. Drain the cooling system. Refer to **Draining and Filling Cooling System** .
2. Align the radiator drain cock guide pin, with the upward slot on the radiator. Pull straight up.

Installation Procedure

cardiagn.com

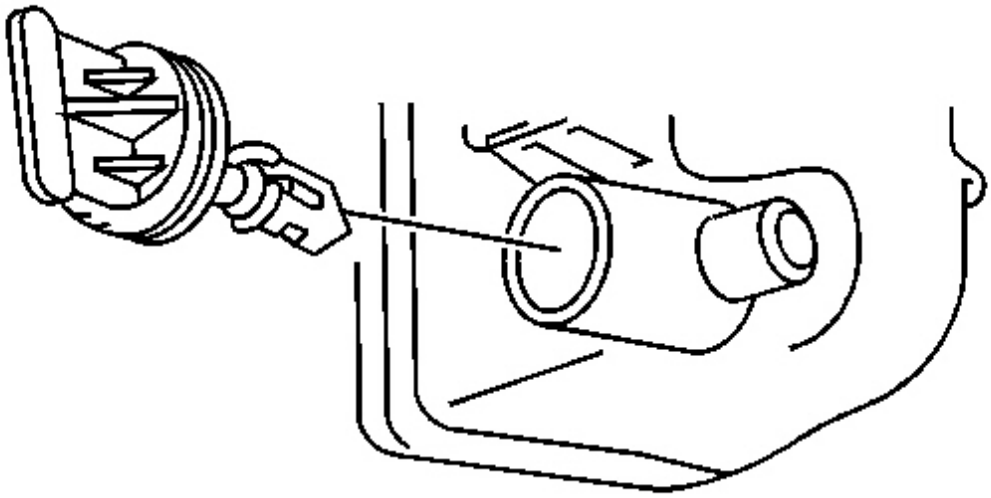

Fig. 55: Radiator Drain Cock
Courtesy of GENERAL MOTORS CORP.

1. Install the radiator drain cock.
2. Refill the cooling system. Refer to **Draining and Filling Cooling System** .

FAN SHROUD REPLACEMENT

Tools Required

J 38185 Hose Clamp Pliers. See **Special Tools and Equipment** .

Removal Procedure

1. Drain the cooling system. Refer to **Draining and Filling Cooling System** .

cardiagn.com

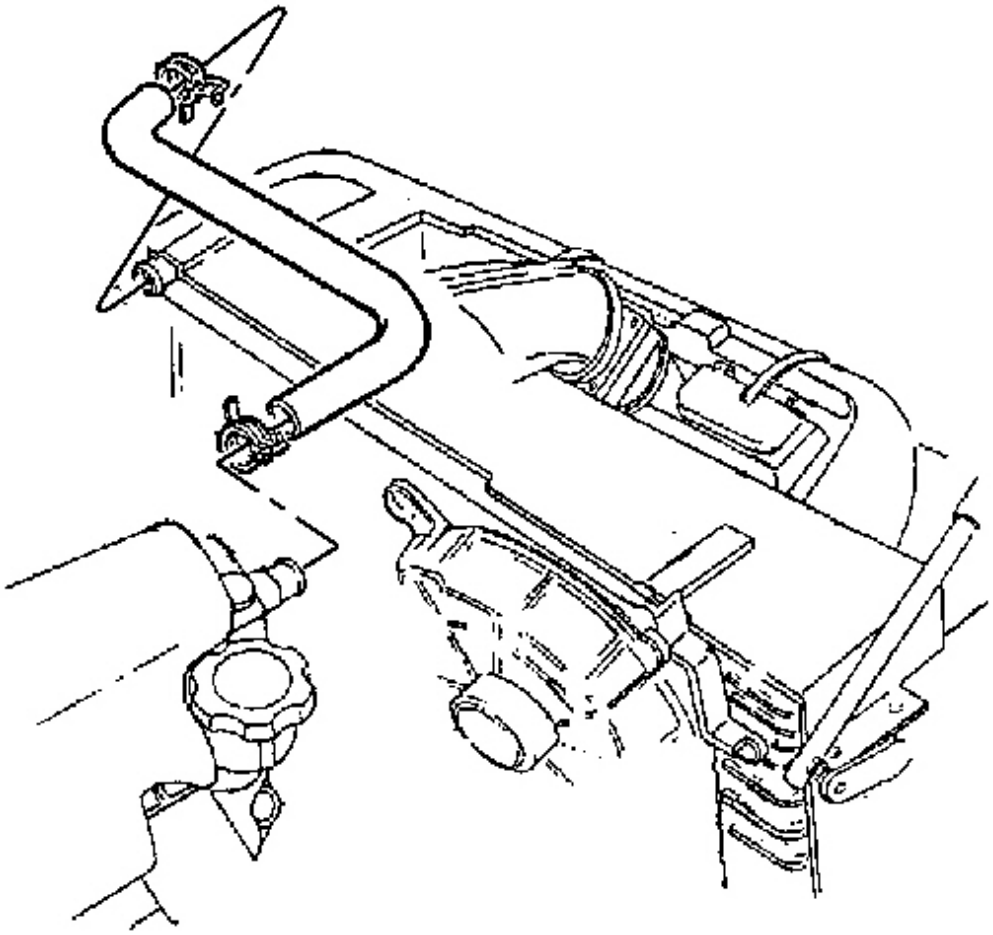

Fig. 56: Radiator Inlet Hose
Courtesy of GENERAL MOTORS CORP.

2. Remove the radiator support. Refer to **Radiator Support Replacement** .
3. Reposition the radiator inlet hose clamp from the radiator using **J 38185** . See **Special Tools and Equipment** .
4. Remove the radiator inlet hose from the radiator.
5. Raise and suitably support the vehicle. Refer to **Lifting and Jacking the Vehicle** in General Information.

cardiagn.com

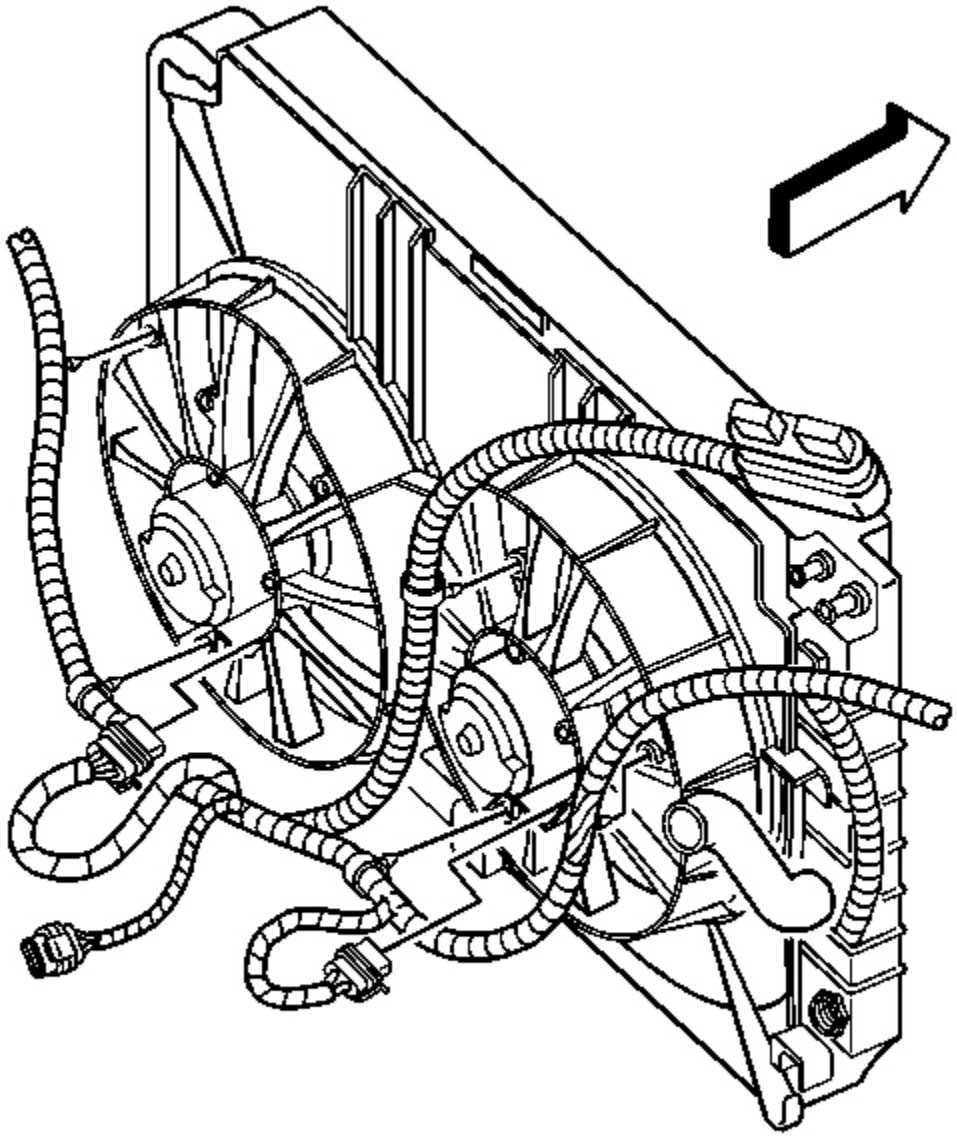

Fig. 57: Cooling Fan Electrical Connectors
Courtesy of GENERAL MOTORS CORP.

6. Disconnect the cooling fan electrical connectors.
7. Remove the forward lamp harness from the retaining clips on the shroud.

cardiagn.com

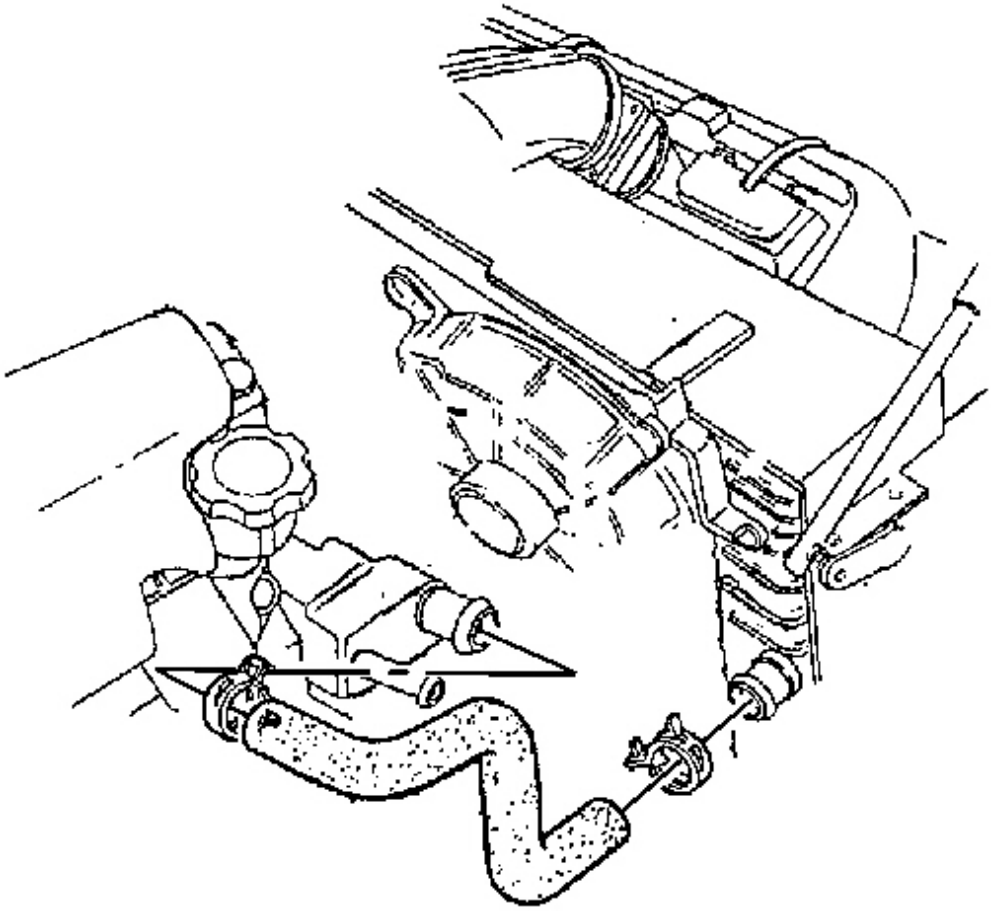

Fig. 58: Radiator Outlet Hose & Clamp
Courtesy of GENERAL MOTORS CORP.

8. Reposition the radiator outlet hose clamp from the radiator using **J 38185** . See **Special Tools and Equipment** .
9. Remove the radiator outlet hose from the radiator.
10. Lower the vehicle.
11. Remove fan shroud.

Installation Procedure

cardiagn.com

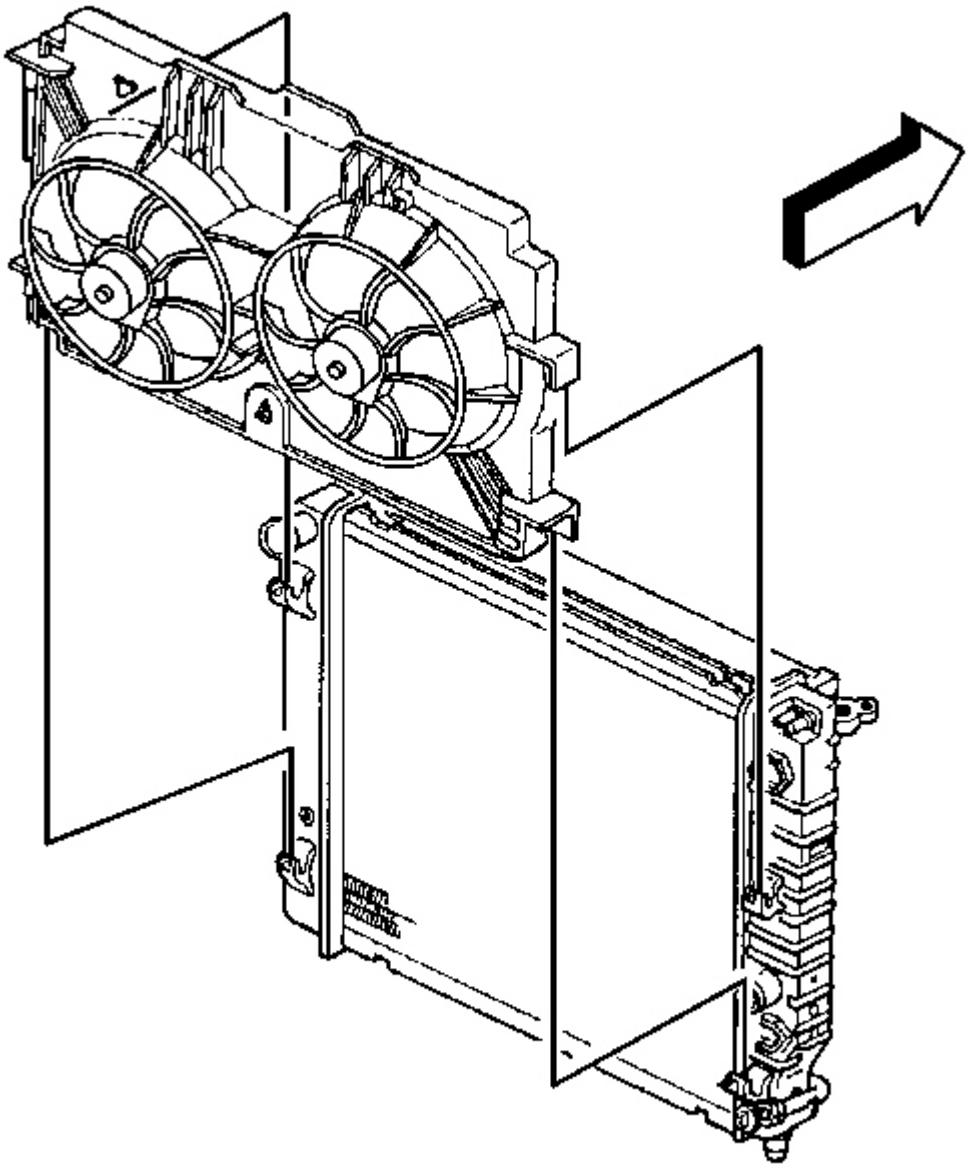

Fig. 59: Fan Shroud
Courtesy of GENERAL MOTORS CORP.

1. Install the fan shroud.
2. Raise the vehicle.

cardiagn.com

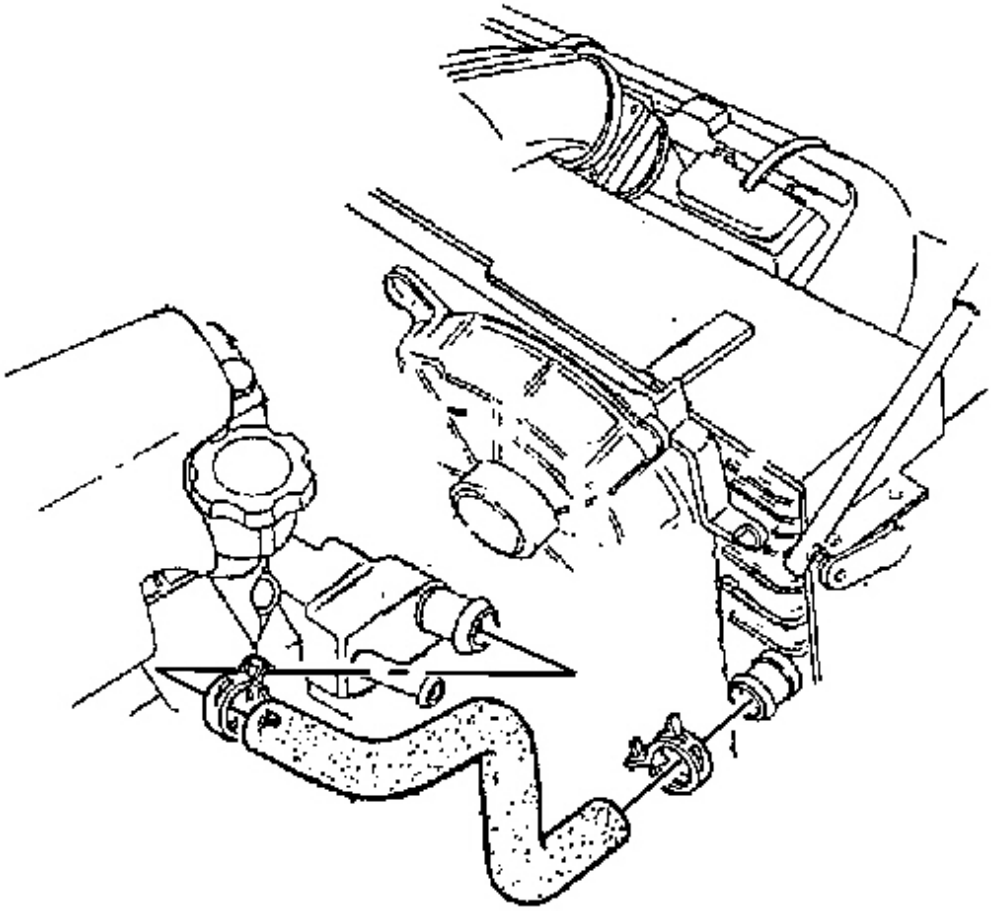

Fig. 60: Radiator Outlet Hose & Clamp
Courtesy of GENERAL MOTORS CORP.

3. Install the radiator outlet hose to the radiator.
4. Reposition the radiator outlet hose clamp to the radiator using **J 38185** . See **Special Tools and Equipment** .

cardiagn.com

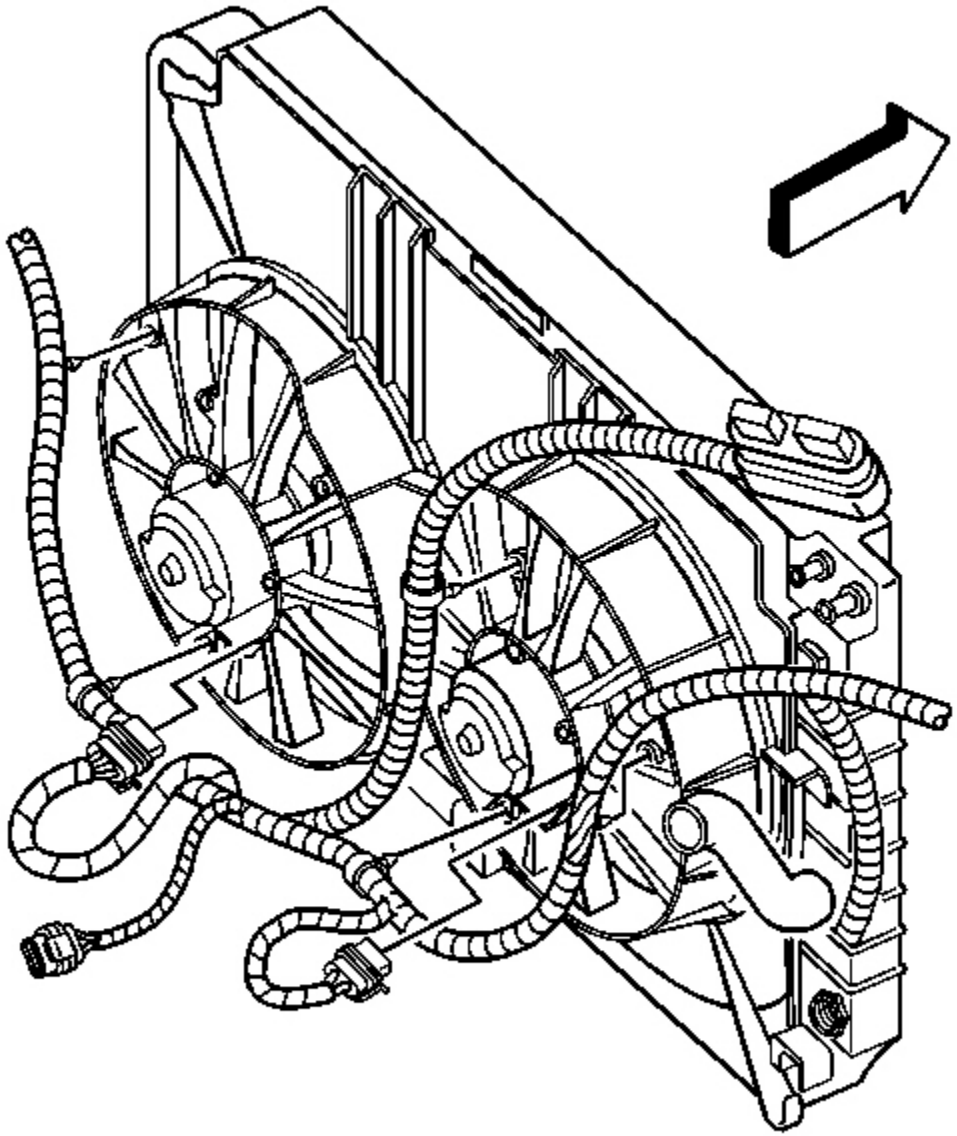

Fig. 61: Cooling Fan Electrical Connectors
Courtesy of GENERAL MOTORS CORP.

5. Install the forward lamp harness to the retaining clips on the fan shroud.
6. Connect the cooling fan electrical connectors.

cardiagn.com

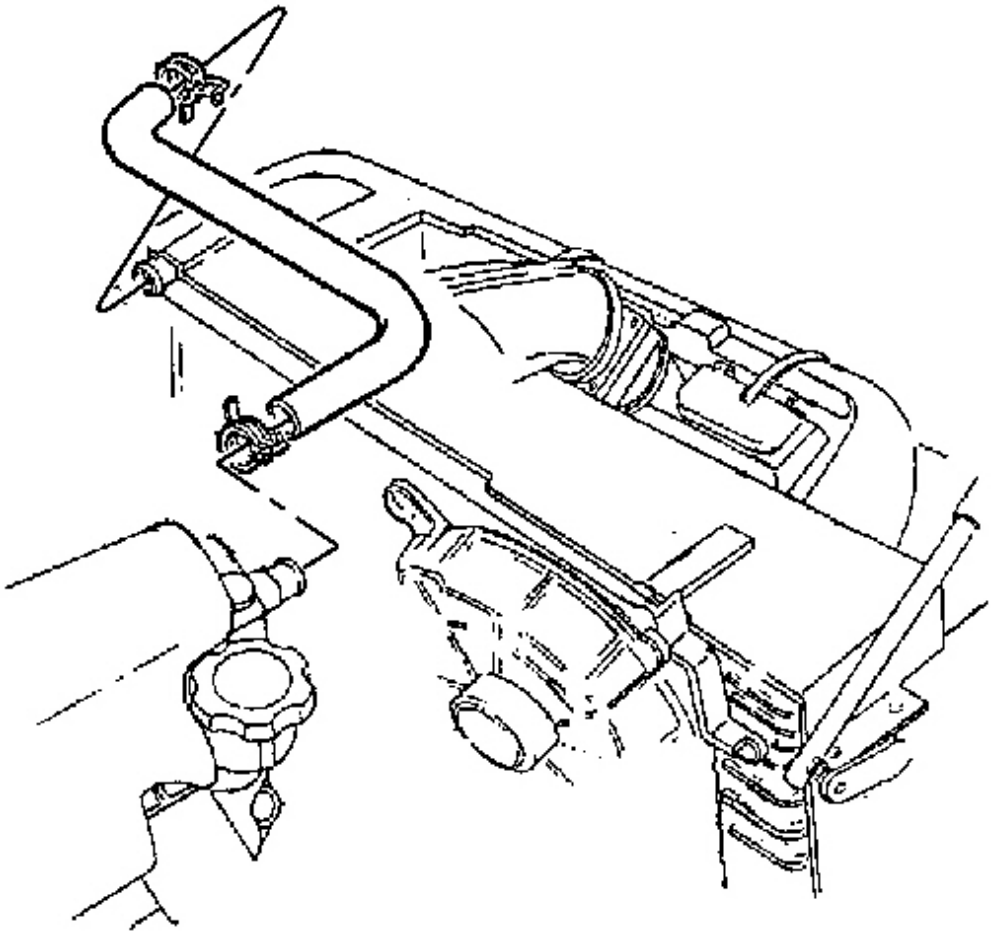

Fig. 62: Radiator Inlet Hose
Courtesy of GENERAL MOTORS CORP.

7. Lower the vehicle.
8. Install the radiator inlet hose to the radiator.
9. Reposition the radiator inlet hose clamp to the radiator using **J 38185** . See **Special Tools and Equipment** .
10. Install the radiator support. Refer to **Radiator Support Replacement** .
11. Fill the cooling system. Refer to **Draining and Filling Cooling System** .

RADIATOR REPLACEMENT

cardiagn.com

Tools Required

J 38185 Hose Clamp Pliers. See **Special Tools and Equipment** .

Removal Procedure

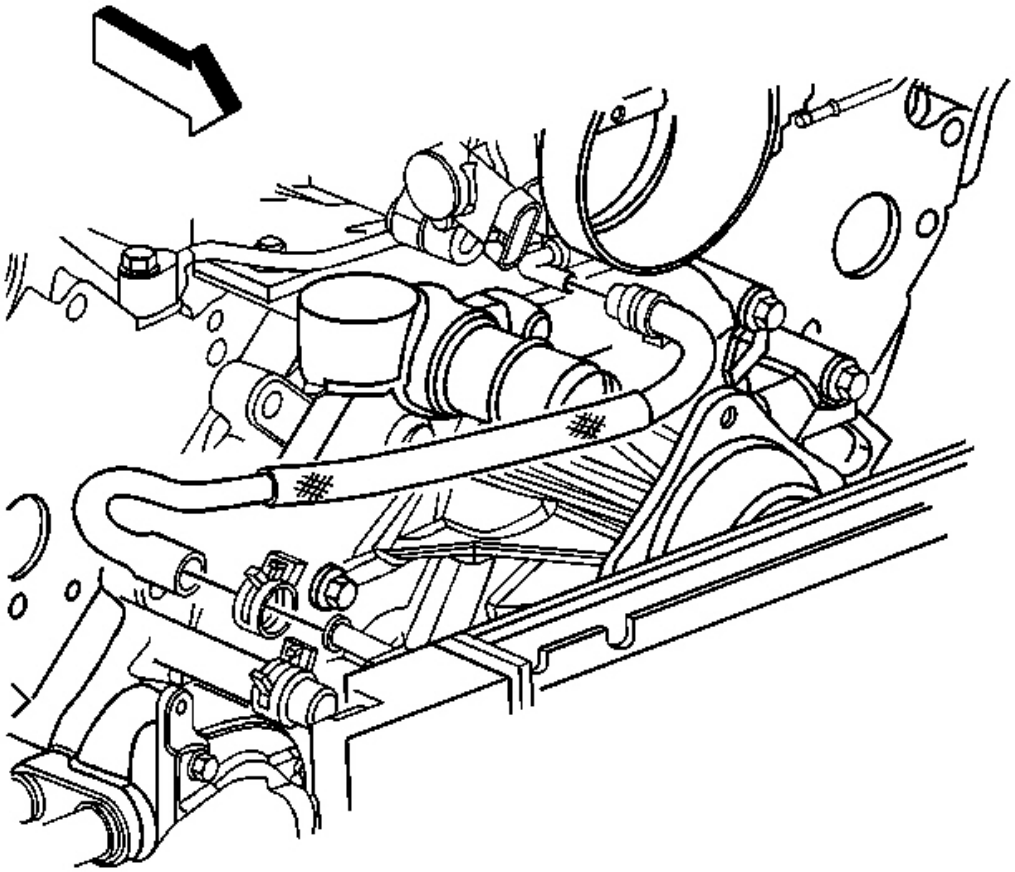

Fig. 63: Radiator Throttle Body Heater Outlet Hose
Courtesy of GENERAL MOTORS CORP.

1. Remove the fan shroud. Refer to **Fan Shroud Replacement** .
2. Reposition the throttle body heater outlet hose clamp from the radiator using **J 38185** . See **Special Tools and Equipment** .
3. Remove the throttle body heater outlet hose from the radiator.

cardiagn.com

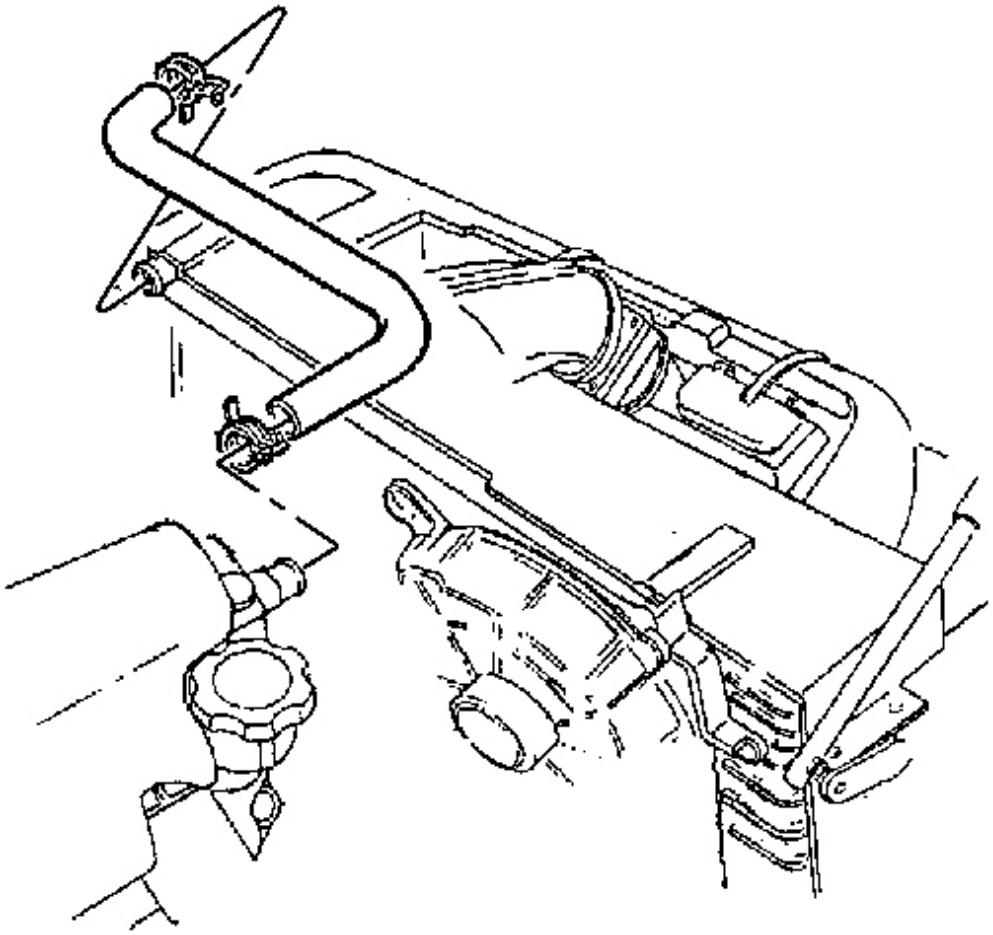

Fig. 64: Radiator Inlet Hose
Courtesy of GENERAL MOTORS CORP.

4. Reposition the radiator inlet hose clamp from the water pump using **J 38185** . See **Special Tools and Equipment** .
5. Remove the radiator inlet hose from the water pump.

cardiagn.com

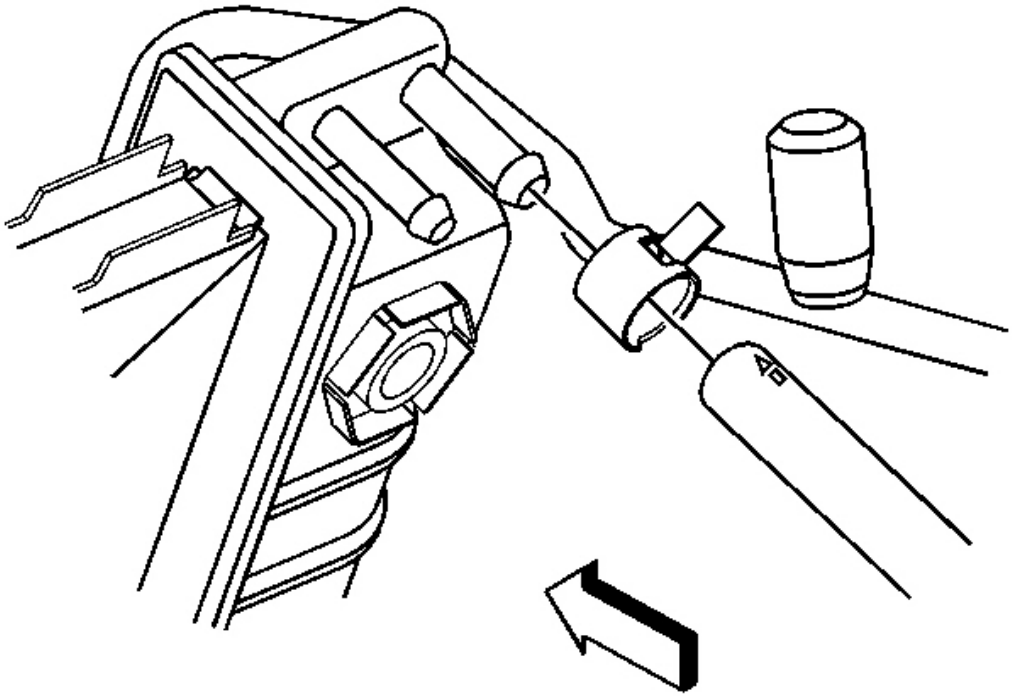

Fig. 65: Radiator Surge Tank Inlet Hose
Courtesy of GENERAL MOTORS CORP.

6. Reposition the surge tank inlet hose clamp from the radiator using **J 38185** . See **Special Tools and Equipment** .
7. Remove the surge tank inlet hose from the radiator.

cardiagn.com

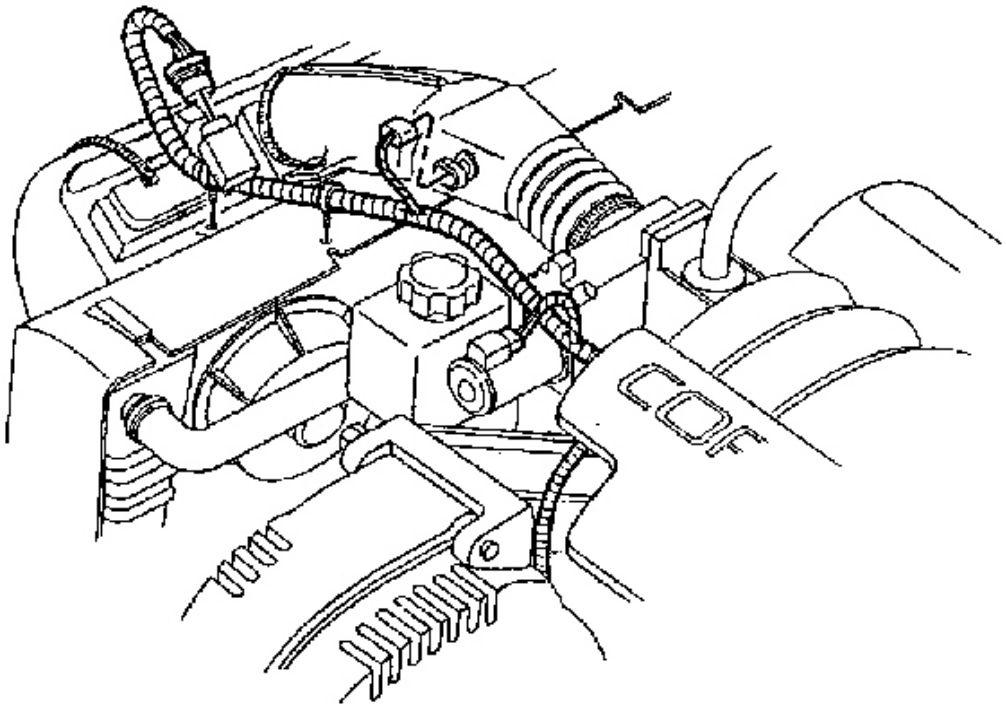

Fig. 66: Mass Air Flow Sensor Electrical Connector
Courtesy of GENERAL MOTORS CORP.

8. Remove the connector position assurance lock.
9. Disconnect the mass air flow sensor electrical connector.

cardiagn.com

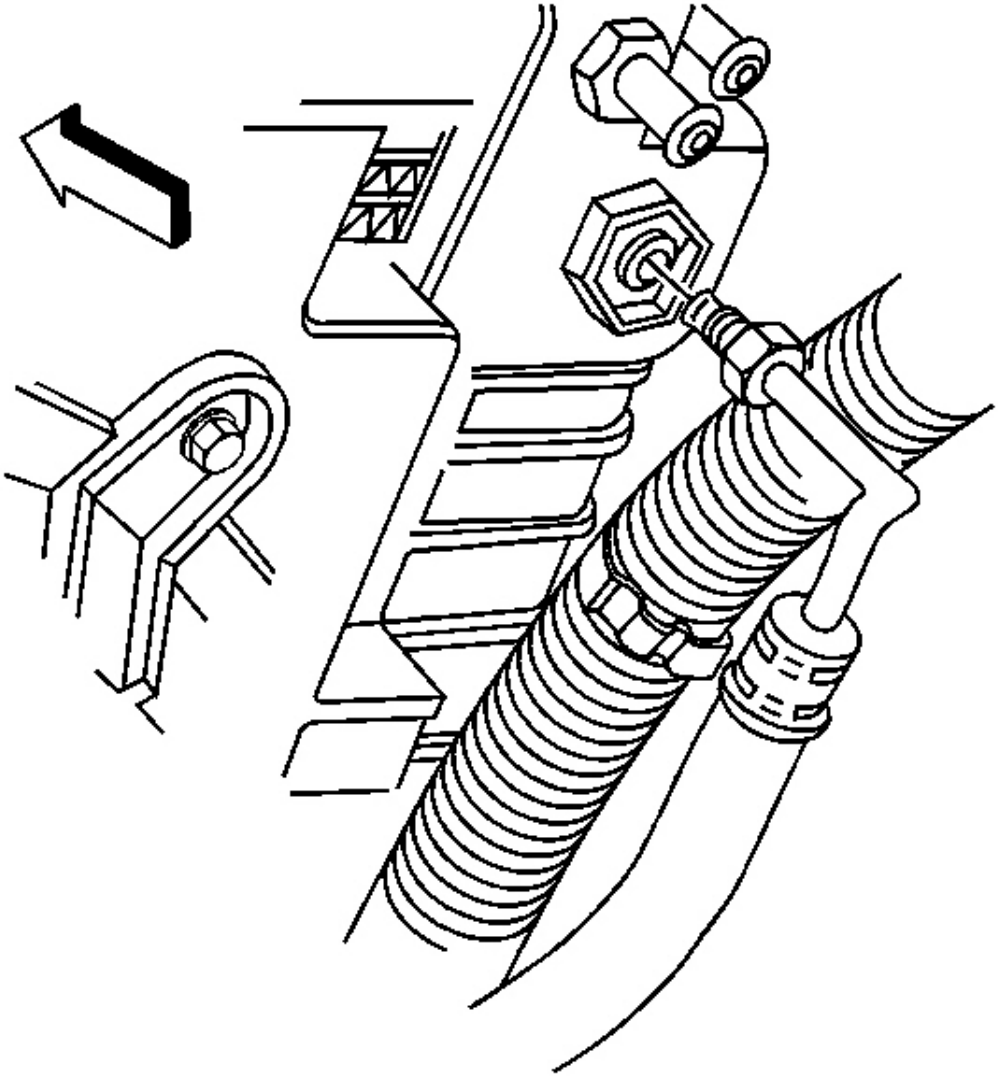

Fig. 67: Automatic Transmission Oil Cooler Lines At Radiator
Courtesy of GENERAL MOTORS CORP.

10. If equipped, remove the automatic transmission oil cooler lines from the radiator.

cardiagn.com

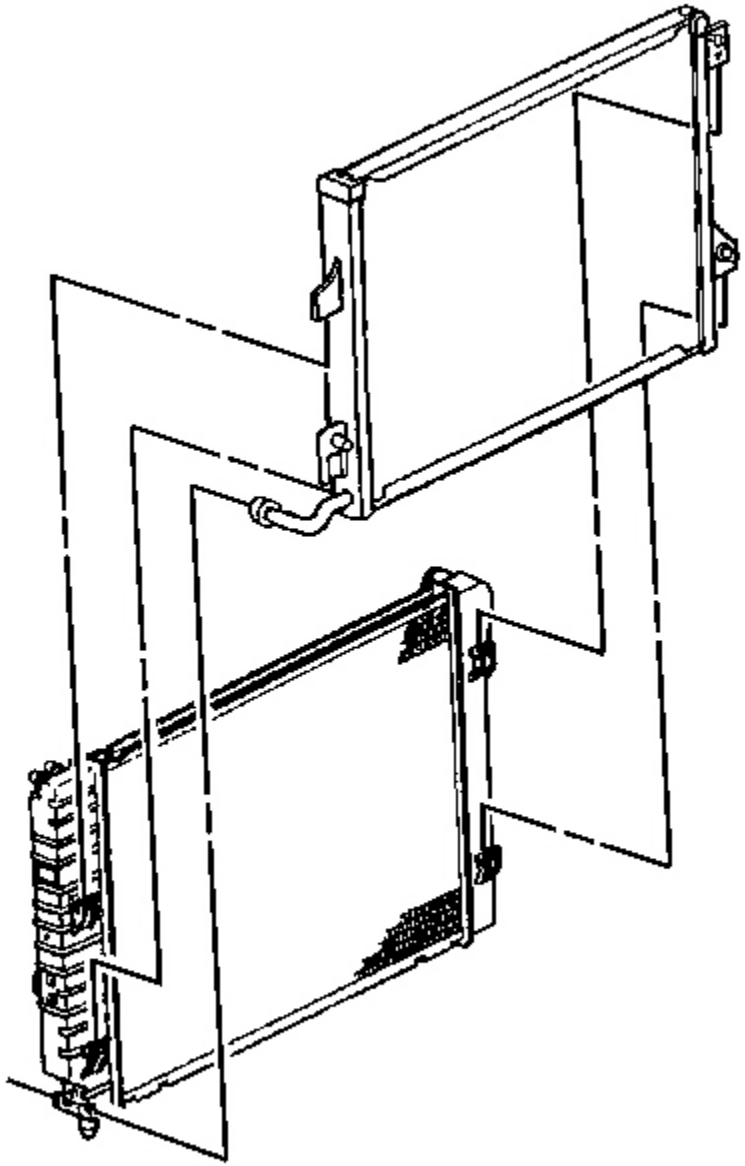

Fig. 68: Radiator Condenser
Courtesy of GENERAL MOTORS CORP.

IMPORTANT: It is not necessary to disconnect the air conditioning lines from the condenser.

cardiagn.com

11. Remove the condenser from the radiator and position it forward.
12. Remove the radiator from the vehicle.

Installation Procedure

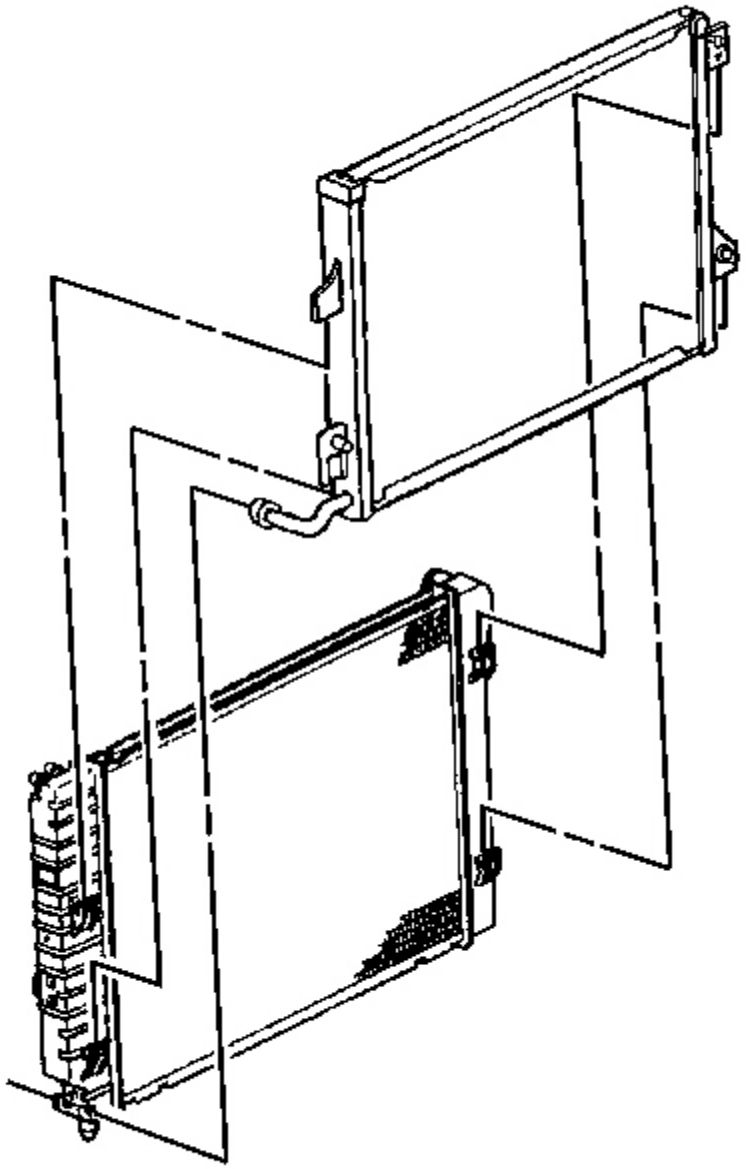

Fig. 69: Radiator Condenser

cardiagn.com

Courtesy of GENERAL MOTORS CORP.

1. Install the radiator.
2. Install the condenser into the four retaining tabs on the radiator.

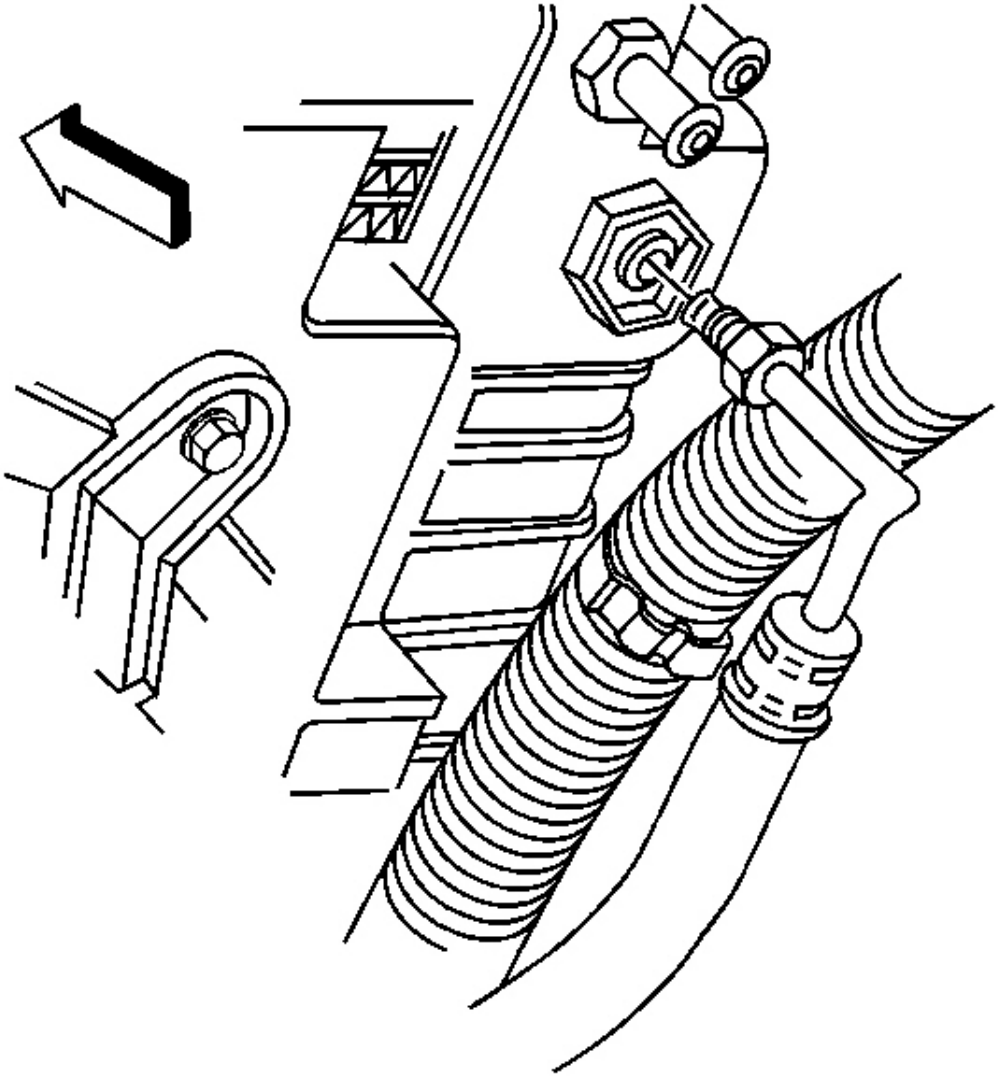

Fig. 70: Automatic Transmission Oil Cooler Lines At Radiator
Courtesy of GENERAL MOTORS CORP.

NOTE: Refer to Fastener Notice in Cautions and Notices.

cardiagn.com

3. If equipped, install the automatic transmission oil cooler lines to the radiator.

   Tighten: Tighten the cooler lines to 25 N.m (18 lb ft).

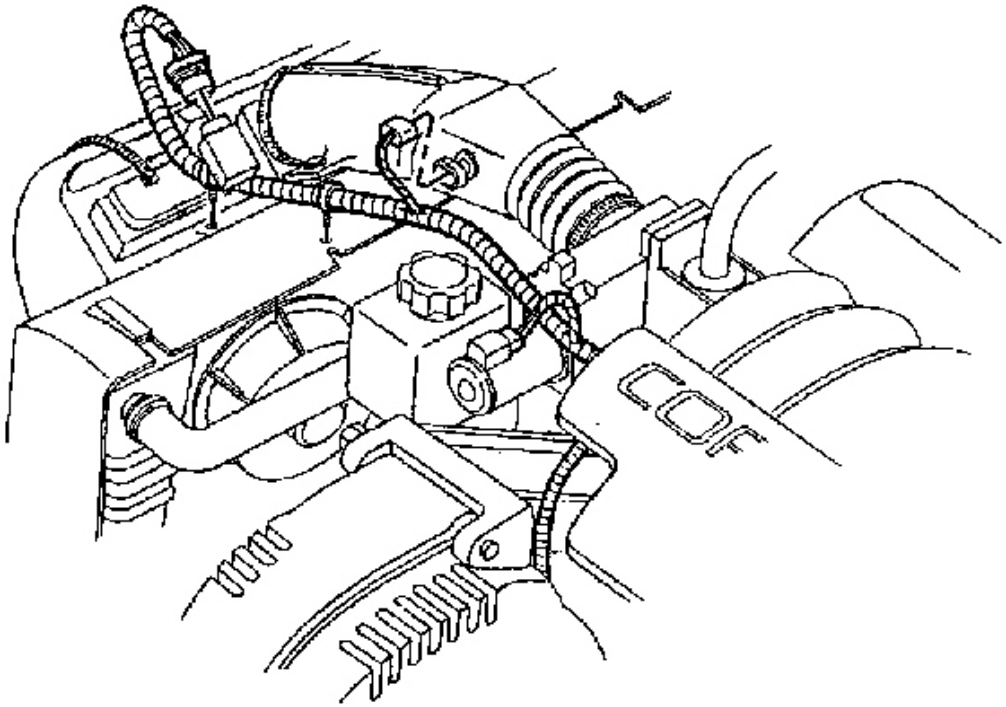

Fig. 71: Mass Air Flow Sensor Electrical Connector
Courtesy of GENERAL MOTORS CORP.

4. Connect the mass air flow sensor electrical connector.
5. Install the connector position assurance lock.

cardiagn.com

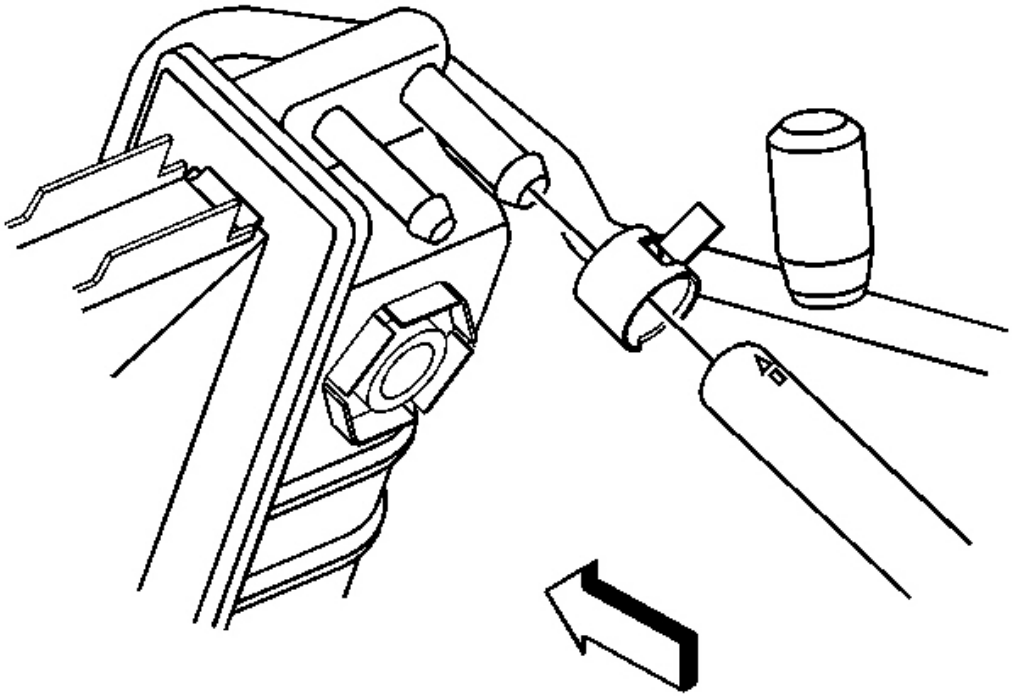

Fig. 72: Radiator Surge Tank Inlet Hose
Courtesy of GENERAL MOTORS CORP.

6. Install the surge tank inlet hose to the radiator.
7. Reposition the surge tank inlet hose clamp to the radiator using **J 38185** . See **Special Tools and Equipment** .

cardiagn.com

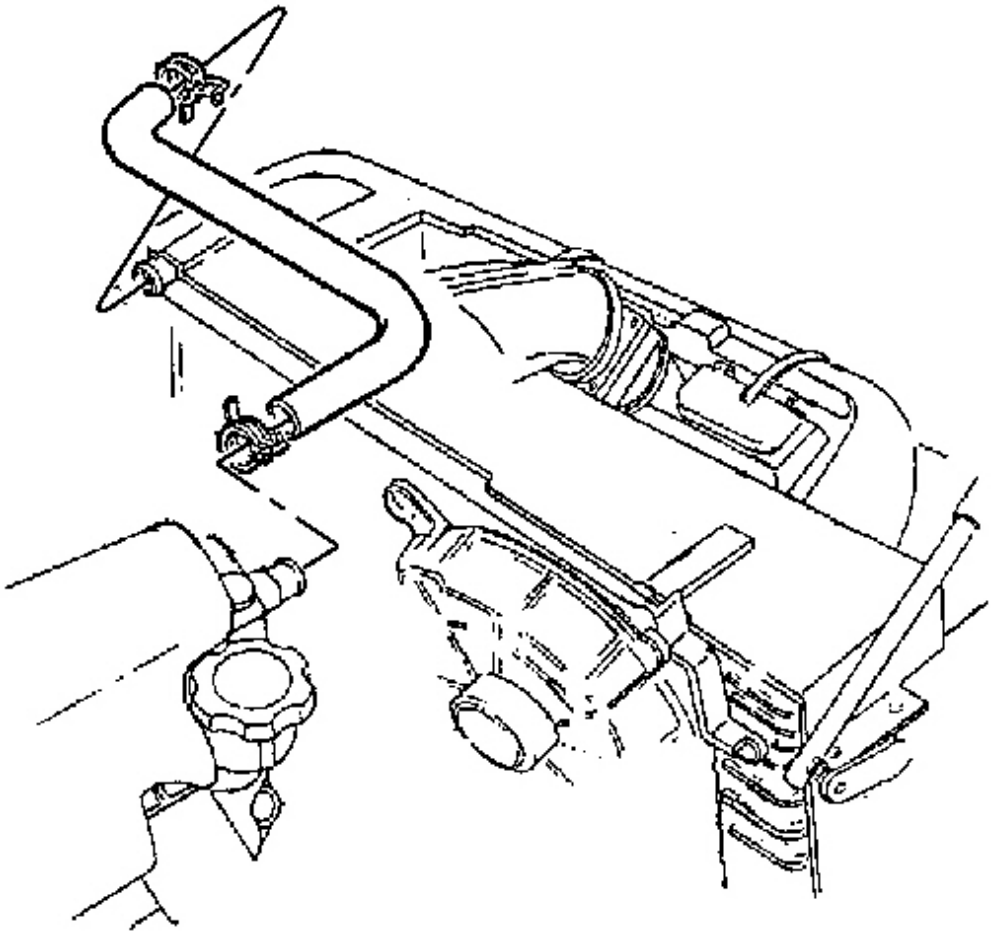

Fig. 73: Radiator Inlet Hose
Courtesy of GENERAL MOTORS CORP.

8. Install the radiator inlet hose to the water pump.
9. Reposition the radiator inlet hose clamp to the water pump using **J 38185** . See **Special Tools and Equipment** .

cardiagn.com

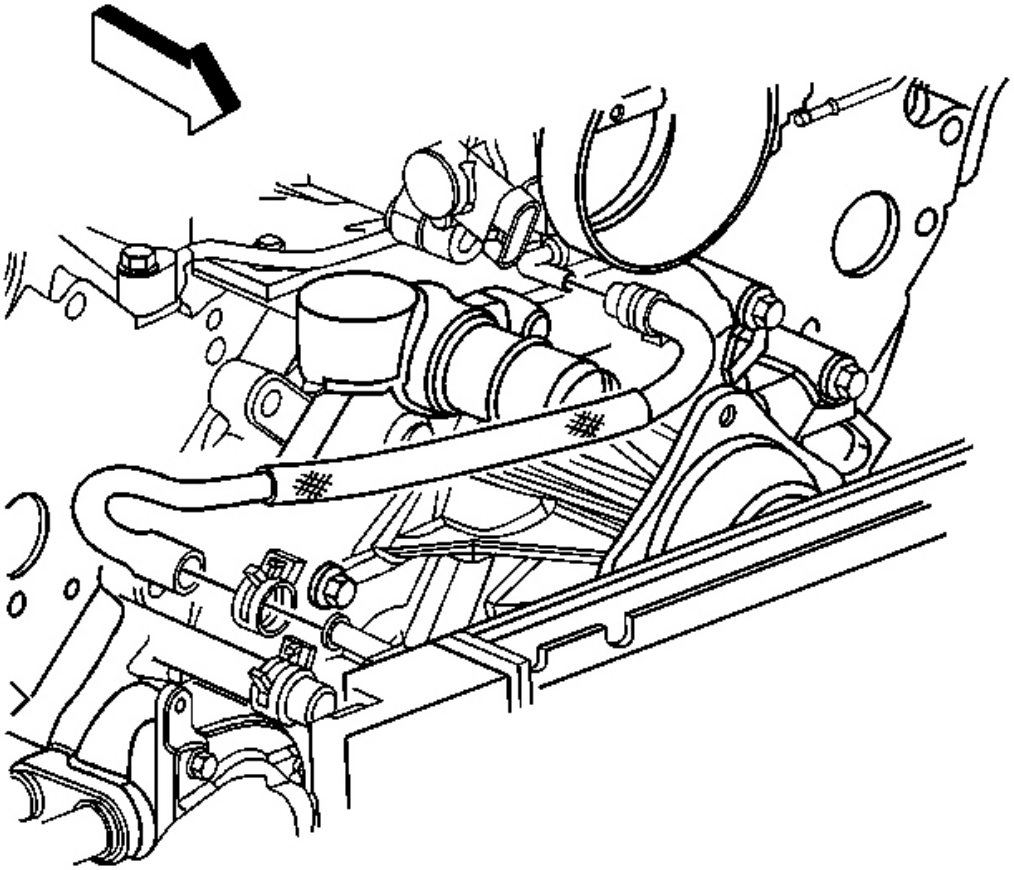

Fig. 74: Radiator Throttle Body Heater Outlet Hose
Courtesy of GENERAL MOTORS CORP.

10. Install the throttle body heater outlet hose to the radiator.
11. Reposition the throttle body heater outlet hose clamp to the radiator using **J 38185** . See **Special Tools and Equipment** .
12. Install the fan shroud. Refer to **Fan Shroud Replacement** .

RADIATOR SUPPORT REPLACEMENT

Removal Procedure

cardiagn.com

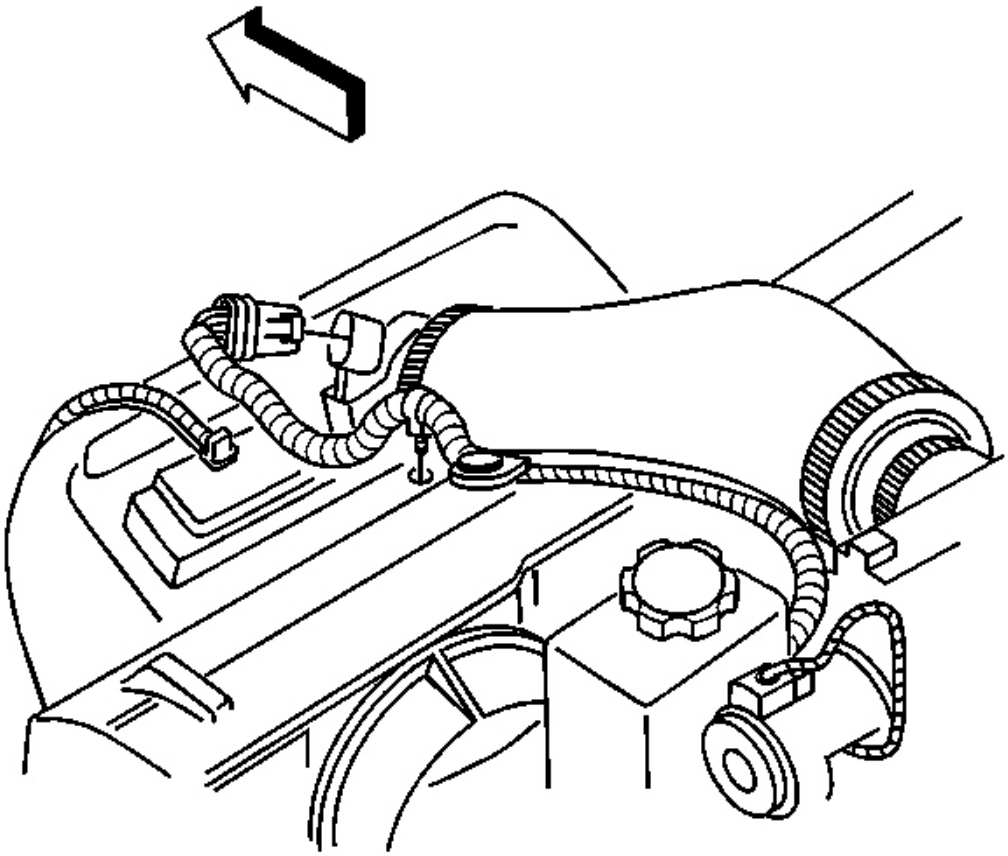

Fig. 75: Radiator Support Engine Wiring Harness
Courtesy of GENERAL MOTORS CORP.

1. Disconnect the mass air flow sensor electrical connector.
2. Remove the engine wiring harness from the clip on the radiator support.

cardiagn.com

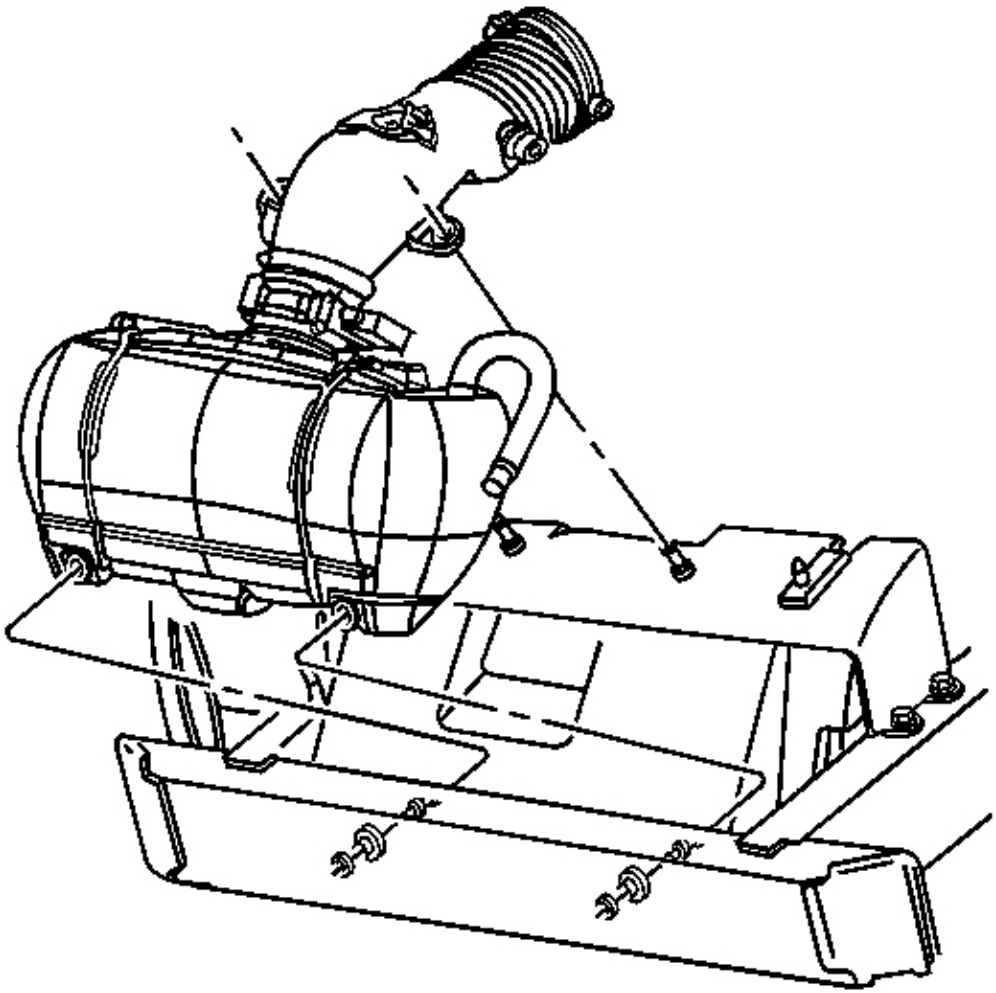

Fig. 76: Air Cleaner Intake Duct
Courtesy of GENERAL MOTORS CORP.

3. Remove the air cleaner intake duct.

cardiagn.com

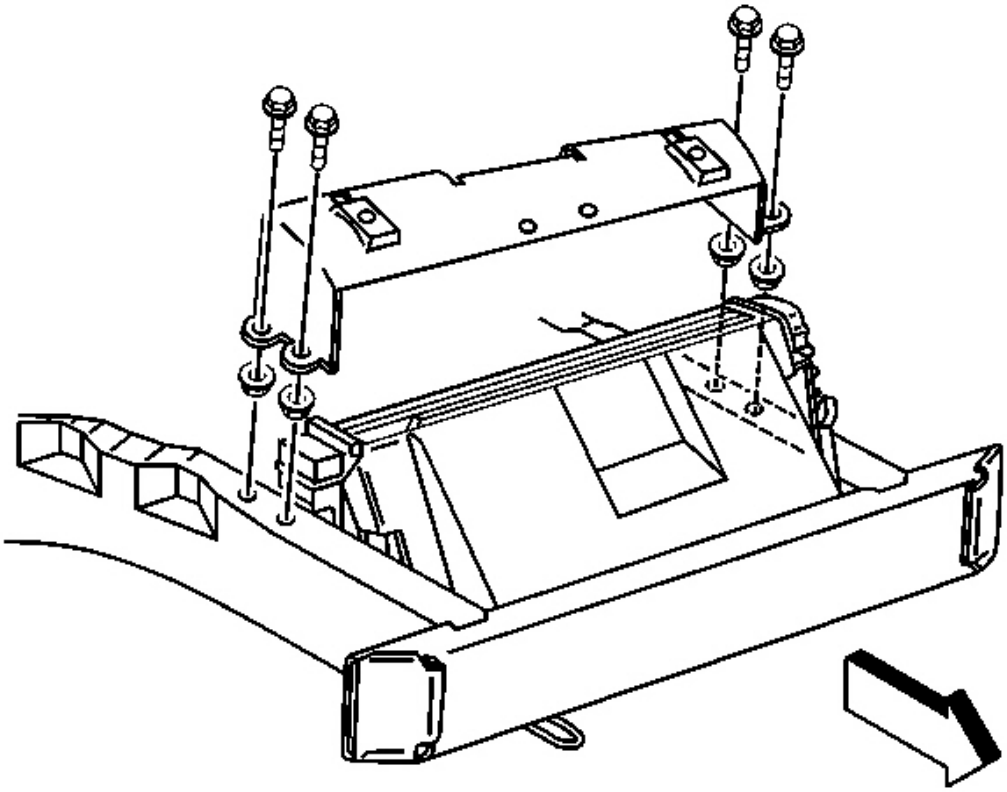

Fig. 77: Radiator Upper Support & Bolts
Courtesy of GENERAL MOTORS CORP.

IMPORTANT: Note the position of the radiator upper support in relationship to the fan shroud. This must be reassembled correctly in order to retain the fan shroud.

4. Remove the radiator support bolts.
5. Remove the radiator support.

Installation Procedure

cardiagn.com

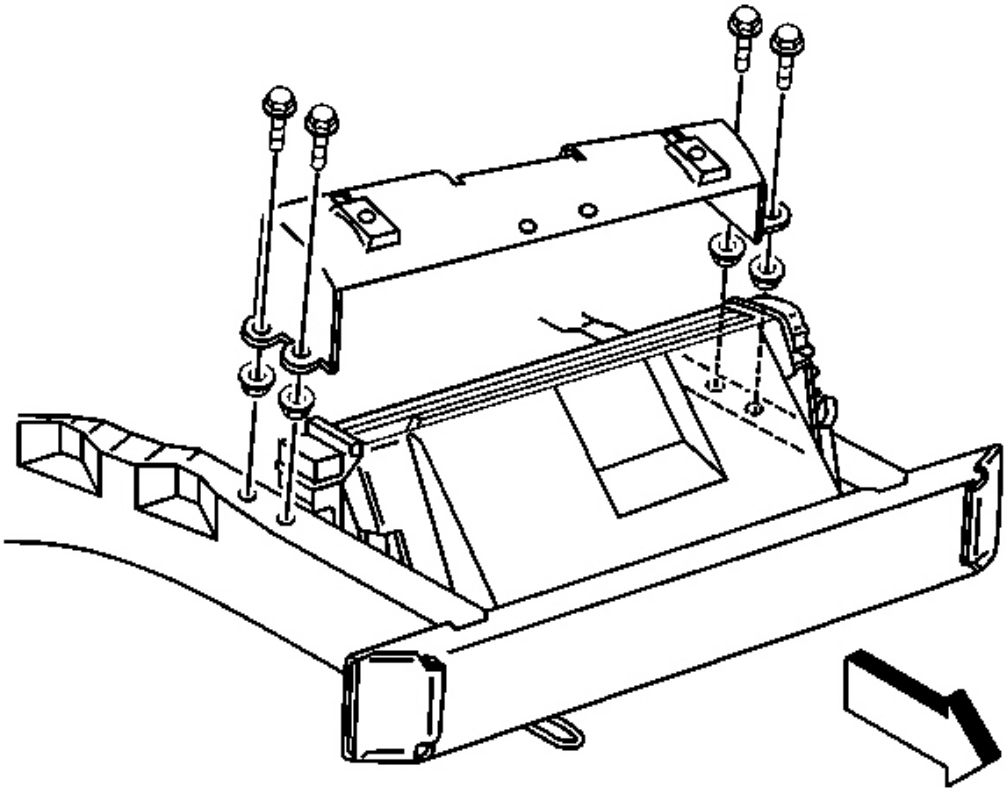

Fig. 78: Radiator Upper Support & Bolts
Courtesy of GENERAL MOTORS CORP.

1. Install the radiator support.

cardiagn.com

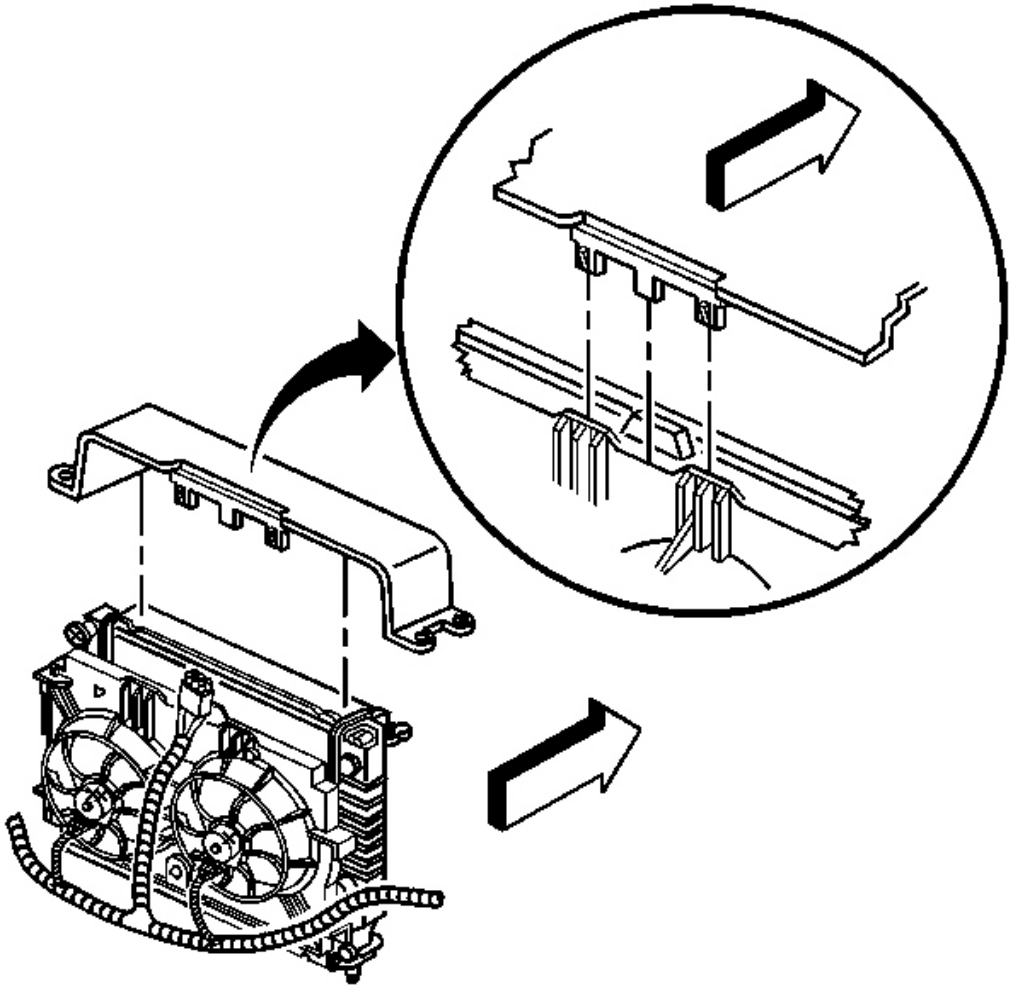

Fig. 79: Installing Radiator Support
Courtesy of GENERAL MOTORS CORP.

NOTE: Refer to Fastener Notice in Cautions and Notices.

2. Install the radiator support bolts.

   Tighten: Tighten the bolts to 8 N.m (71 lb in).

cardiagn.com

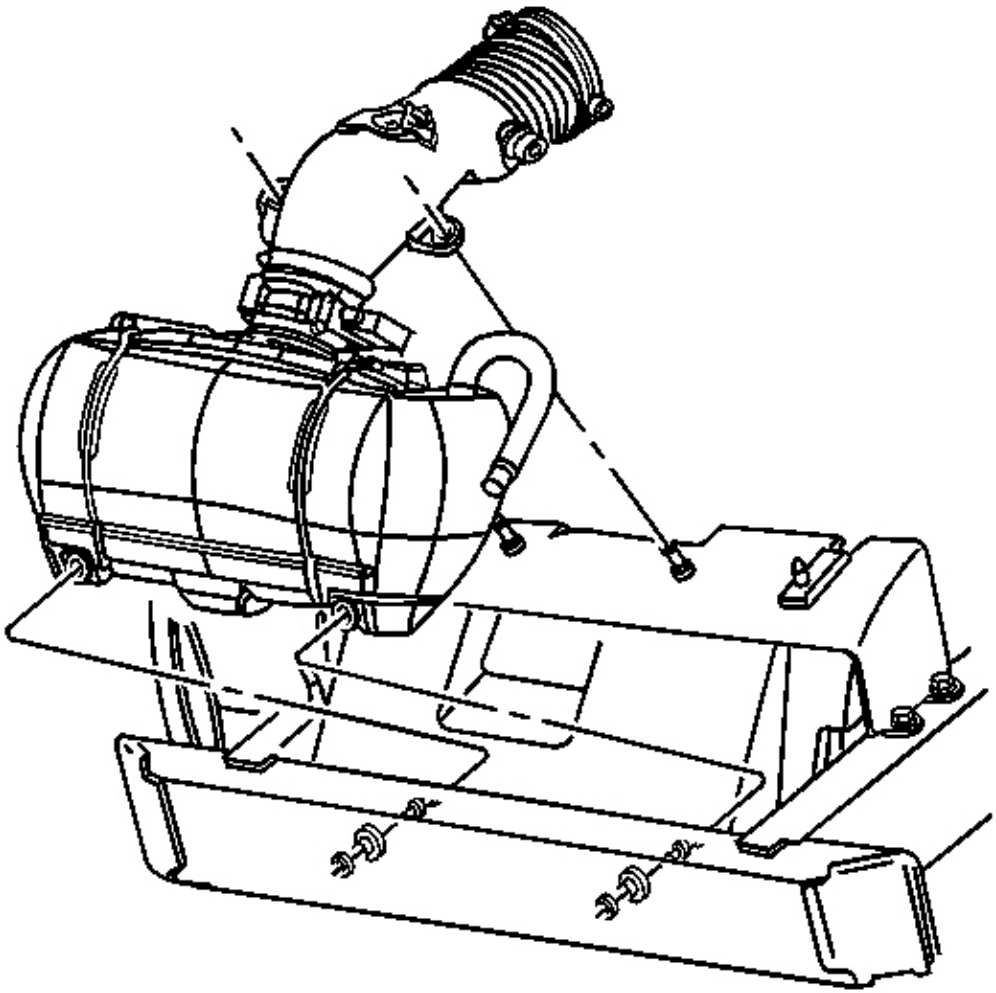

Fig. 80: Air Cleaner Intake Duct
Courtesy of GENERAL MOTORS CORP.

IMPORTANT: Seat the air cleaner retaining grommets fully. If necessary moisten the grommets with water prior to installation.

3. Install the air cleaner intake duct.

cardiagn.com

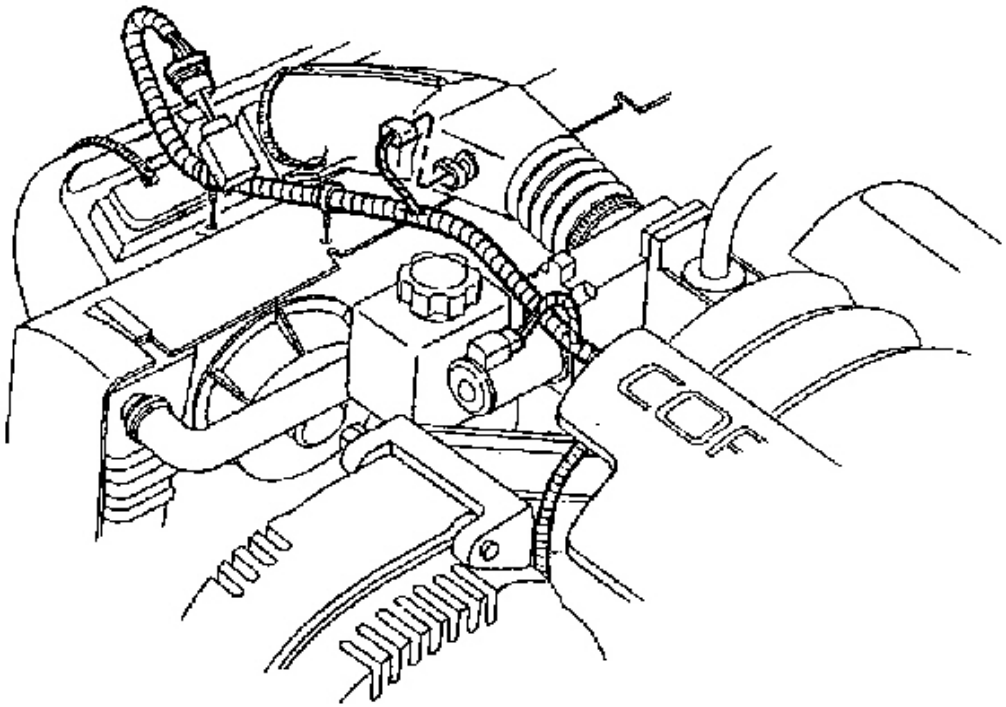

Fig. 81: Mass Air Flow Sensor Electrical Connector
Courtesy of GENERAL MOTORS CORP.

4. Install the engine wiring harness to the clip on the radiator support.
5. Connect the mass air flow sensor electrical connector.

RADIATOR AIR BAFFLE ASSEMBLIES AND DEFLECTORS

Removal Procedure

cardiagn.com

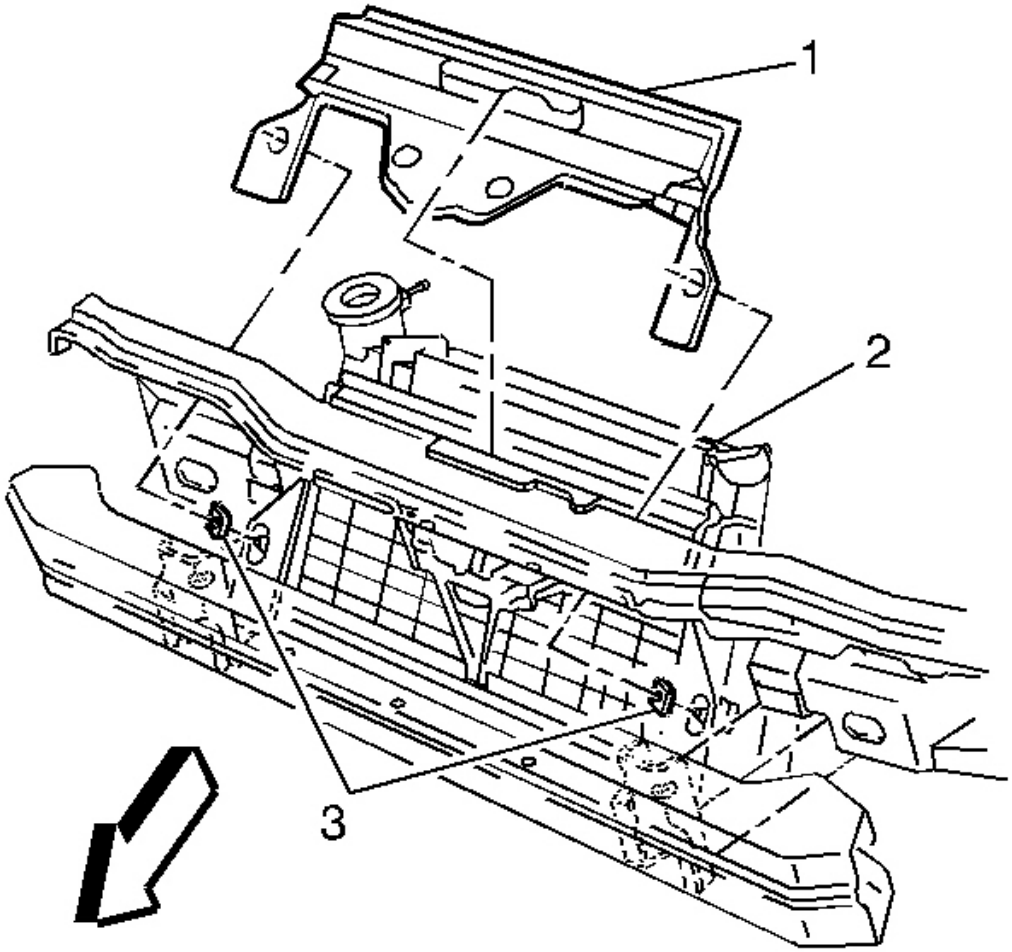

Fig. 82: Radiator Air Baffle & Connectors
Courtesy of GENERAL MOTORS CORP.

1. Remove the air cleaner assembly. Refer to **Air Cleaner Assembly Replacement** in Engine Controls - 5.7L.
2. Raise and suitably support the vehicle. Refer to **Lifting and Jacking the Vehicle** in General Information.
3. Remove the radiator air baffle lower bolts.
4. Lower the vehicle.
5. Disconnect the hood light and air temperature sensor electrical connectors.
6. Disconnect the radiator air baffle connectors (3).
7. Remove the radiator air baffle (1).

cardiagn.com

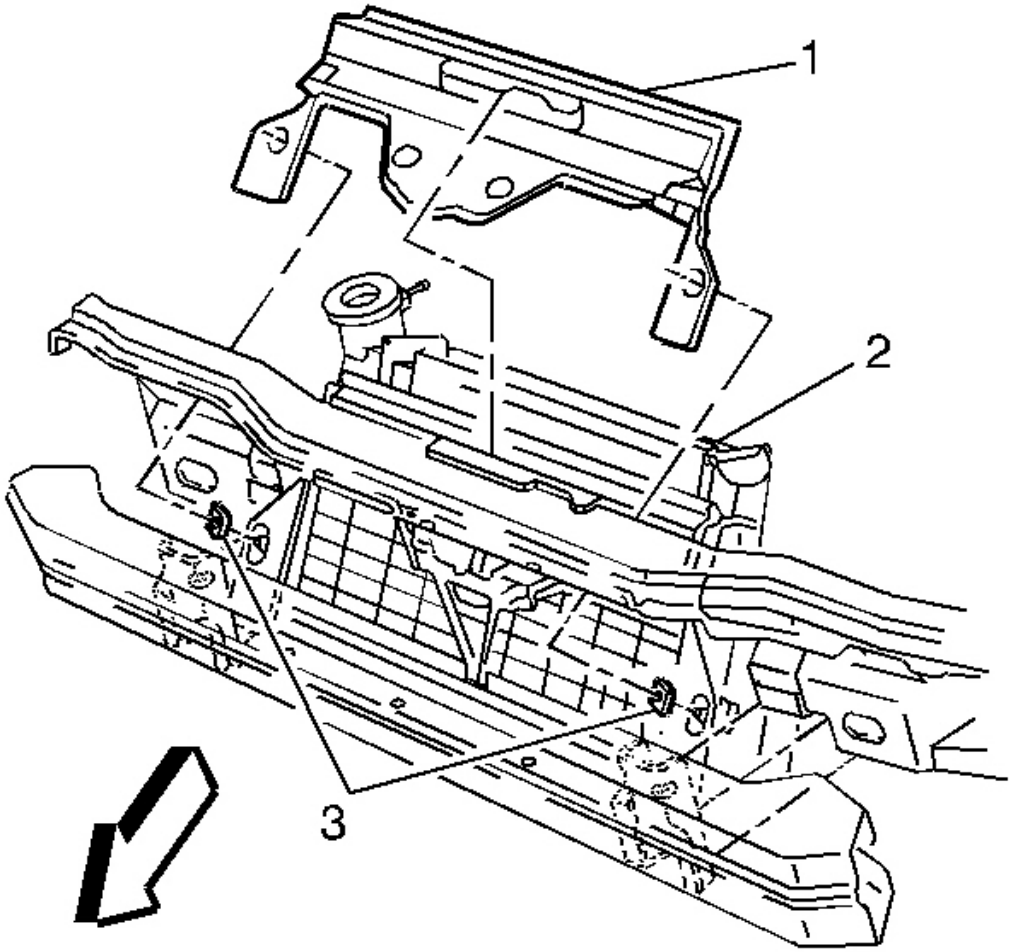

Fig. 83: Radiator Air Baffle & Connectors
Courtesy of GENERAL MOTORS CORP.

1. Install the radiator air baffle (1).
2. Connect the radiator air baffle connectors (3).
3. Connect the hood light and air temperature sensor electrical connectors.
4. Raise the vehicle.

NOTE: Refer to Fastener Notice in Cautions and Notices.

cardiagn.com

5. Install the radiator air baffle lower bolts.

   Tighten: Tighten the bolts to 10 N.m (89 lb in).

6. Lower the vehicle.
7. Install the air cleaner assembly. Refer to **Air Cleaner Assembly Replacement** in Engine Controls - 5.7L.

COOLANT HEATER REPLACEMENT

Removal Procedure

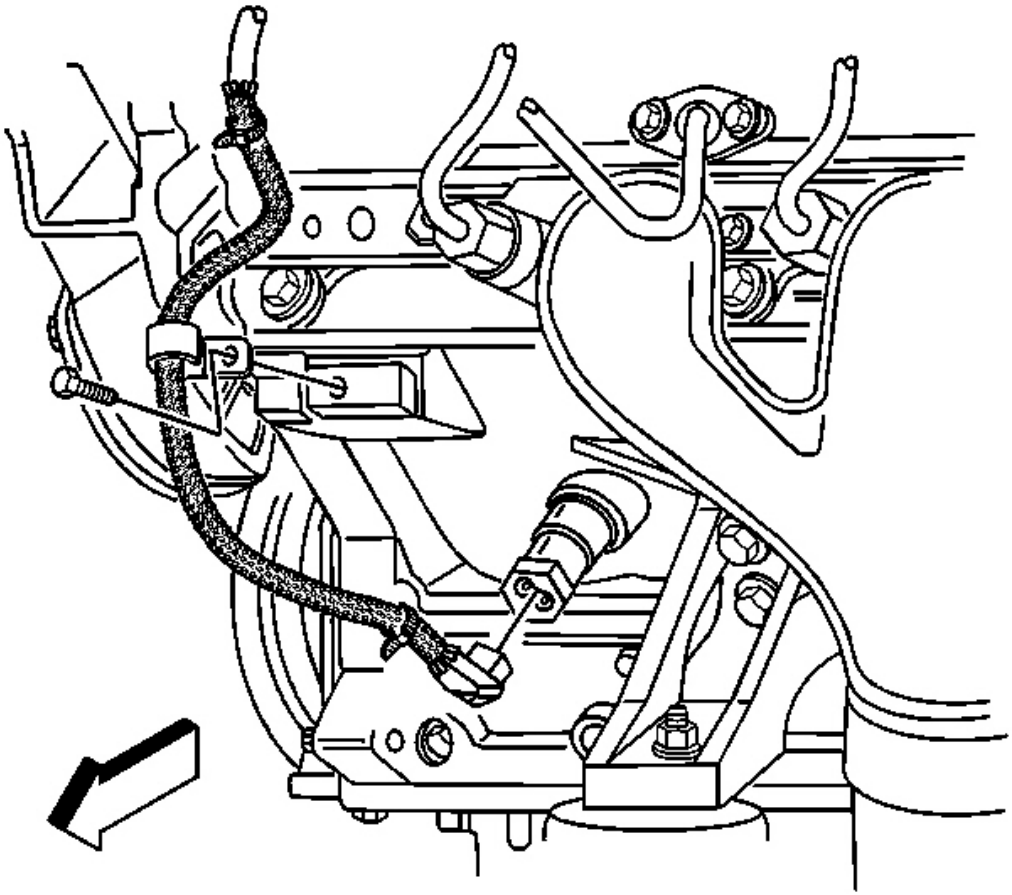

Fig. 84: Engine Coolant Heater Cord
Courtesy of GENERAL MOTORS CORP.

cardiagn.com

1. Drain the cooling system. Refer to **Draining and Filling Cooling System** .
2. Remove the tire and wheel, if necessary. Refer to **Tire and Wheel Removal and Installation** in Tires and Wheels.
3. Disconnect the engine coolant heater cord from the engine coolant heater.

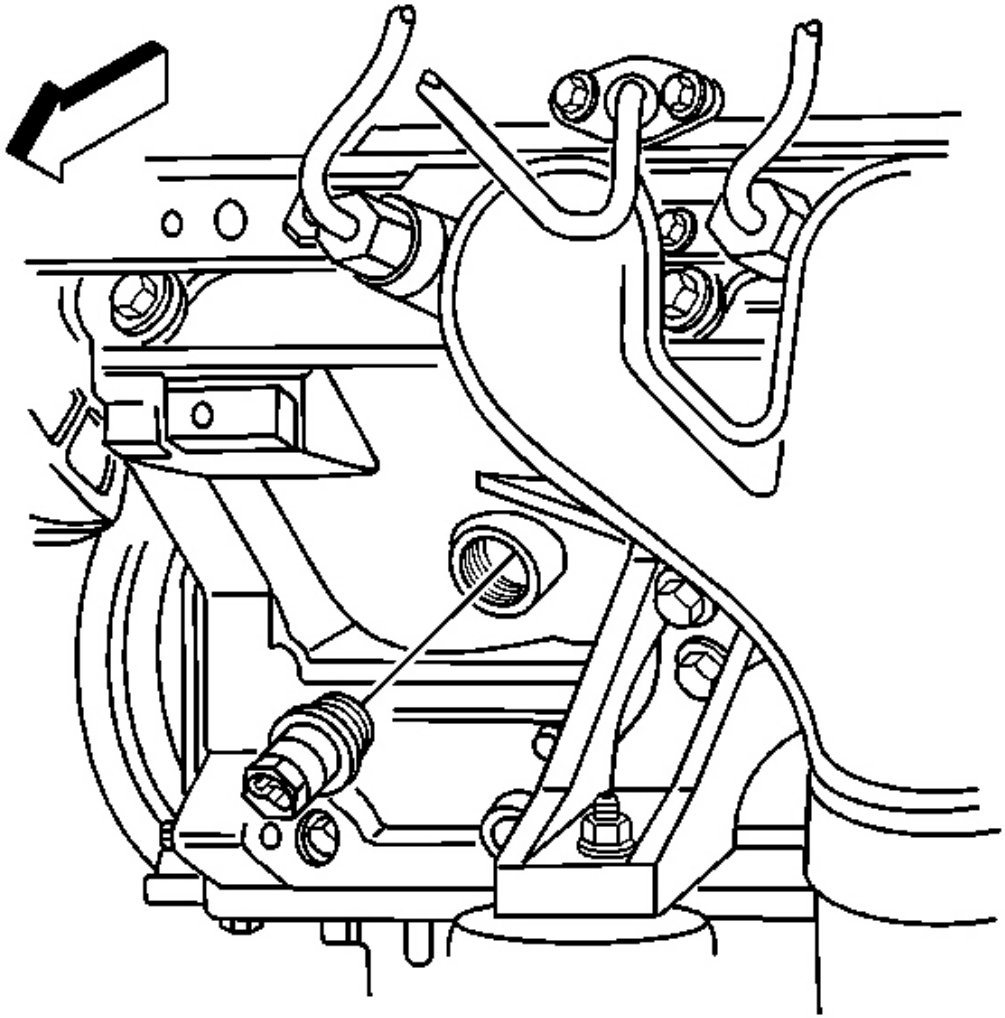

Fig. 85: Engine Coolant Heater Sealing Washer
Courtesy of GENERAL MOTORS CORP.

IMPORTANT: Take care not to damage the surface of the opening in the engine block.

cardiagn.com

4. Remove the engine coolant heater.
5. Clean the opening in the engine block, remove any burrs, sealing compound, or paint.

Installation Procedure

IMPORTANT: The engine coolant heater sealing washer may be reused if not bent, scored or otherwise damaged.

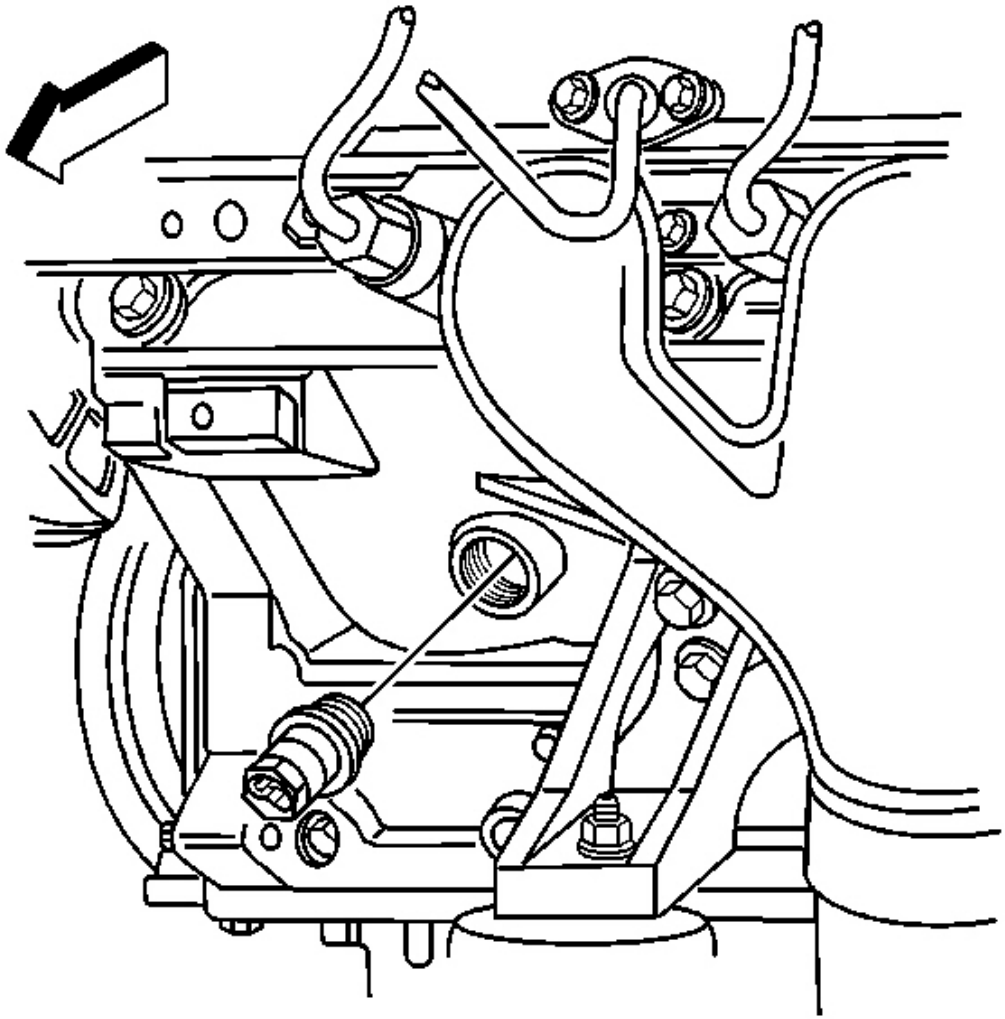

Fig. 86: Engine Coolant Heater Sealing Washer
Courtesy of GENERAL MOTORS CORP.

cardiagn.com

1. Apply a 3.175 mm (0.125 in) bead of sealant GM P/N 12346004 (Canadian P/N 10953480) or equivalent to the engine coolant heater sealing washer.
2. Insert the engine coolant heater.

NOTE: Refer to Fastener Notice in Cautions and Notices.

3. Tighten the engine coolant heater.

   Tighten: Tighten the engine coolant heater to 40 N.m (30 lb ft).

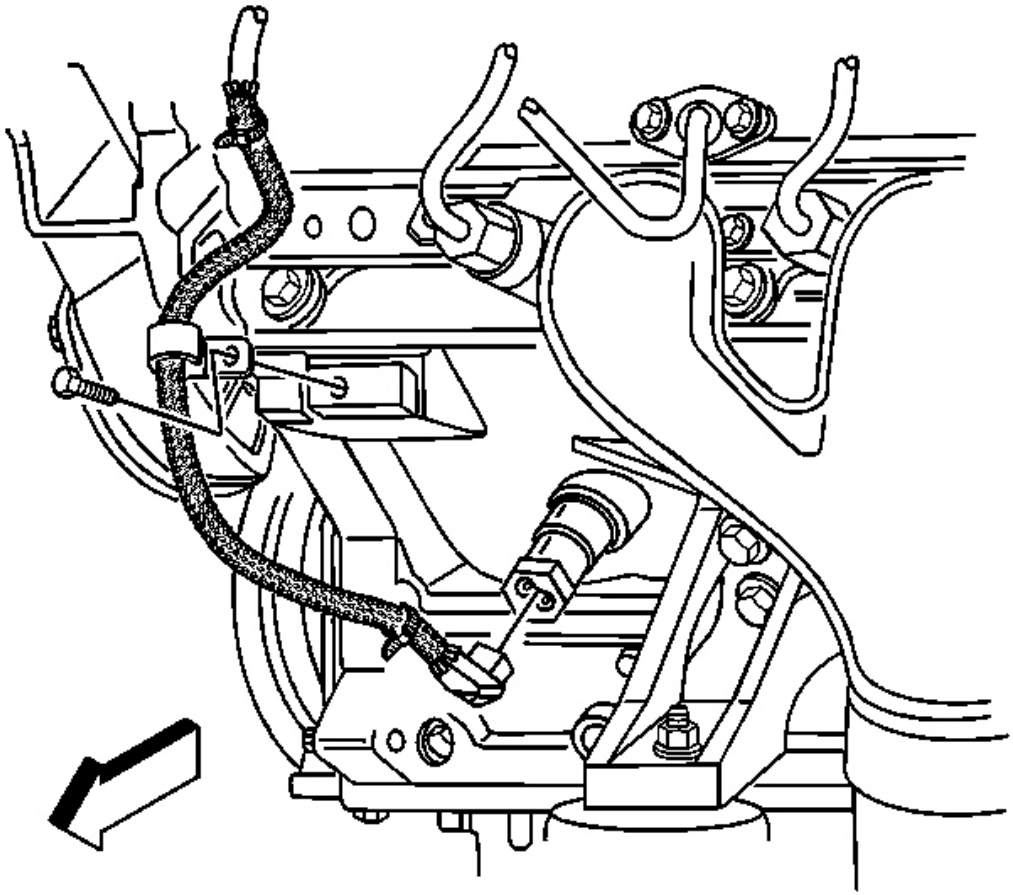

Fig. 87: Engine Coolant Heater Cord
Courtesy of GENERAL MOTORS CORP.

4. Install the engine coolant heater cord to the engine coolant heater.

cardiagn.com

5. Install the tire and wheel, if necessary. Refer to **Tire and Wheel Removal and Installation** in Tires and Wheels.
6. Fill the cooling system. Refer to **Draining and Filling Cooling System** .

COOLANT HEATER CORD REPLACEMENT

Removal Procedure

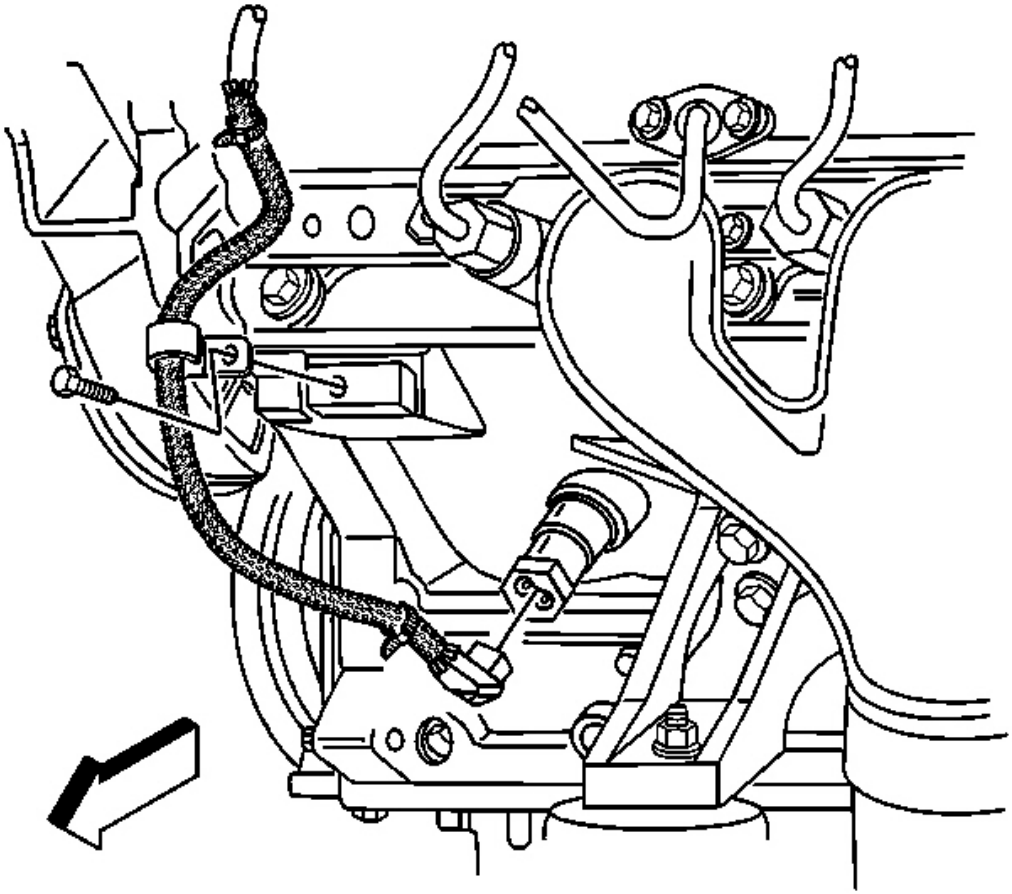

Fig. 88: Engine Coolant Heater Cord
Courtesy of GENERAL MOTORS CORP.

1. Disconnect the engine coolant heater cord from the engine coolant heater.
2. Remove the engine coolant heater cord clip bolt.
3. Remove the engine coolant heater cord strap at the secondary air injection pump hose.

cardiagn.com

4. Remove the engine coolant heater cord.

Installation Procedure

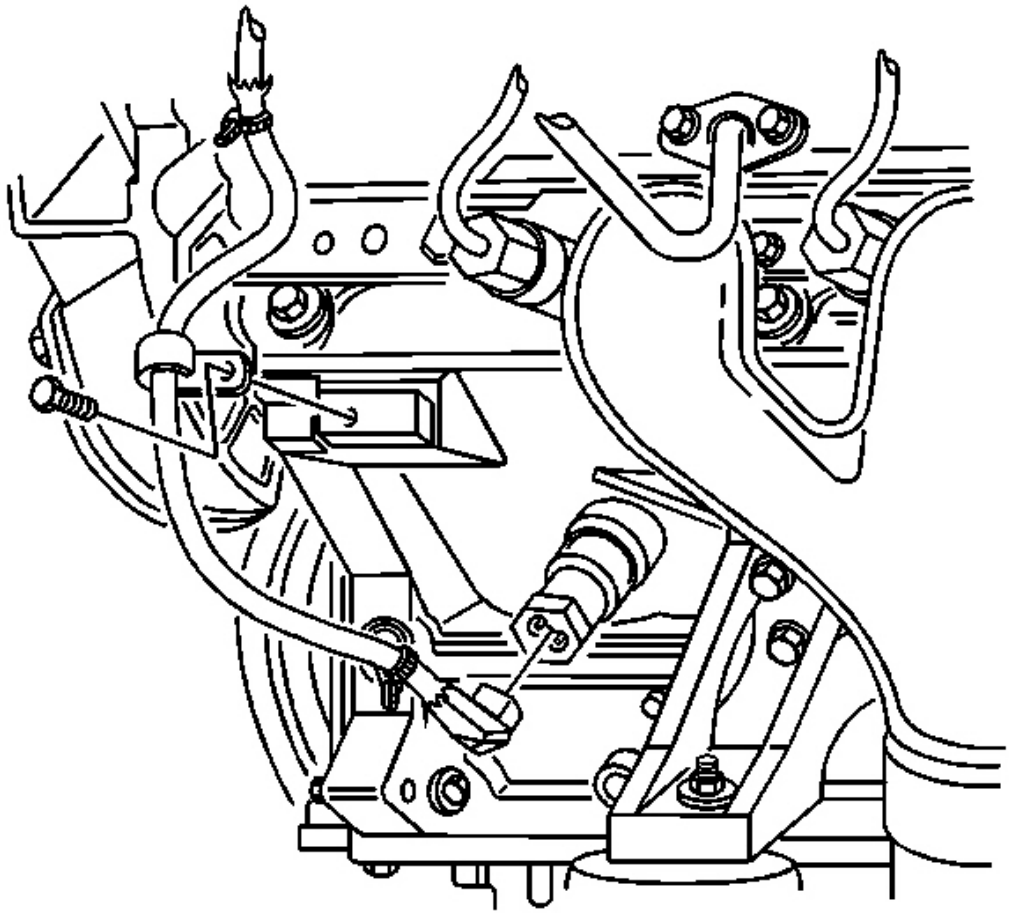

Fig. 89: Engine Coolant Heater Cord To Engine Coolant Heater
Courtesy of GENERAL MOTORS CORP.

NOTE: Refer to Fastener Notice in Cautions and Notices.

1. Install the engine coolant heater cord to the engine coolant heater.
2. Position the engine coolant heater cord clip and install the bolt.

Tighten: Tighten the engine coolant heater cord clip bolt to 32 N.m (24 lb ft).

cardiagn.com

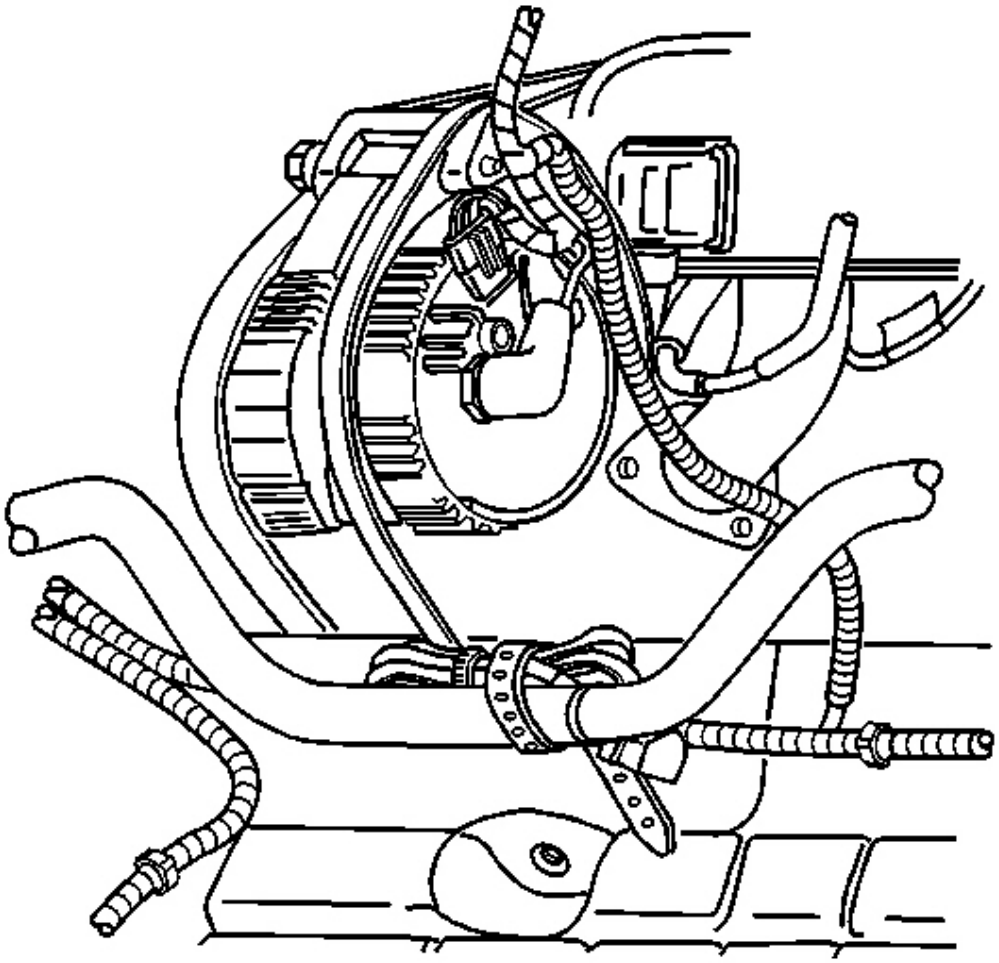

Fig. 90: Engine Coolant Heater Cord & Secondary Air Injection Hose Pump With Strap
Courtesy of GENERAL MOTORS CORP.

IMPORTANT: The engine coolant heater cord must not contact the engine, pipes, manifold or any moving parts. Always keep the electrical cord neatly rolled up with the plug end of the cord tucked into the center of the coil and secured in place with the supplied tie straps.

3. Route the engine coolant heater cord over the generator.
4. Coil the engine coolant heater cord into a bundle and secure the bundle to the secondary air injection hose pump with the strap.

cardiagn.com

DESCRIPTION AND OPERATION

COOLING SYSTEM DESCRIPTION AND OPERATION

Cooling Fan Control

The engine cooling fan system consists of two electrical cooling fans and three fan relays. The relays are arranged in a series/parallel configuration that allows the powertrain control module (PCM) to operate both fans together at low or high speeds. The cooling fans and fan relays receive battery positive voltage and ignition 1 voltage from the underhood electrical center. The ground path is provided at G102.

During low speed operation, the PCM supplies the ground path for the low speed fan relay through the low speed cooling fan relay control circuit. This energizes the cooling fan 1 relay coil, closes the relay contacts, and supplies battery positive voltage through the cooling fan motor supply voltage circuit to the left cooling fan. The ground path for the left cooling fan is through the cooling fan 3 relay and the right cooling fan. The result is a series circuit with both fans running at low speed.

During high speed operation the PCM supplies the ground path for the cooling fan 1 relay through the low speed cooling fan relay control circuit. After a 3-second delay, the PCM supplies a ground path for the cooling fan 2 relay and the cooling fan 3 relay through the high speed cooling fan relay control circuit. This energizes the cooling fan 3 relay coil, closes the relay contacts, and provides a ground path for the left cooling fan. At the same time the cooling fan 2 relay coil is energized closing the relay contacts and provides battery positive voltage on the cooling fan motor supply voltage circuit to the right cooling fan. During high speed fan operation, both engine cooling fans have there own ground path. The result is a parallel circuit with both fans running at high speed.

The low speed cooling fan is commanded on when the coolant temperature reaches 108° C (226° F). It is turned off if the coolant temperature lowers to 104° C (219° F). The high speed cooling fan is commanded on when the coolant temperature reaches 113° C (235° F). It is turned off if the coolant temperature lowers to 108° C (226° F). When the A/C is on and the coolant temperature reaches 85° C (185° F), the low speed cooling fan will be turned on at vehicle speeds less than 56 kPh (35 mph).

Engine Coolant Indicator(s)

Coolant Over Temp

The IPC illuminates the COOLANT OVER TEMP indicator in the message center when the following occurs:

- The PCM detects that the engine coolant temperature exceeds 124° C (256° F). The IPC receives a class 2 message from the PCM indicating the high coolant temperature.
- The IPC will also illuminate the CHECK GAGES indicator and a chime sounds when this condition exists.

Cooling System

The cooling system's function is to maintain an efficient engine operating temperature during all engine speeds and operating conditions. The cooling system is designed to remove approximately one-third of the heat

cardiagn.com

produced by the burning of the air-fuel mixture. When the engine is cold, the system cools slowly or not at all. This allows the engine to warm quickly.

Cooling Cycle

Coolant is drawn from the radiator outlet and into the water pump inlet by the water pump. Some coolant will then be pumped from the water pump, to the heater core, then back to the water pump. This provides the passenger compartment with heat and defrost.

Coolant is also pumped through the water pump outlet and into the engine block. In the engine block, the coolant circulates through the water jackets surrounding the cylinders where it absorbs heat.

The coolant is then forced through the cylinder head gasket openings and into the cylinder heads. In the cylinder heads, the coolant flows through the water jackets surrounding the combustion chambers and valve seats, where it absorbs additional heat.

Coolant is also directed to the throttle body. There it circulates through passages in the casting. During initial start up, the coolant assists in warming the throttle body. During normal operating temperatures, the coolant assists in keeping the throttle body cool.

From the cylinder heads, the coolant is then forced to the thermostat. The flow of coolant will either be stopped at the thermostat until the engine is warmed, or it will flow through the thermostat and into the radiator where it is cooled and the coolant cycle is completed.

Operation of the cooling system requires proper functioning of all cooling system components. The cooling system consists of the following components:

Coolant

The engine coolant is a solution made up of a 50-50 mixture of DEX-COOL and clean drinkable water. The coolant solution carries excess heat away from the engine to the radiator, where the heat is dissipated to the atmosphere.

Radiator

The radiator is a heat exchanger. It consists of a core and two tanks. The aluminum core is a crossflow tube and fin design. This is a series of tubes that extend side to side from the inlet tank to the outlet tank. Fins are placed around the outside of the tubes to improve heat transfer from the coolant to the atmosphere. The inlet and outlet tanks are molded with a high temperature, nylon reinforced plastic. A high temperature rubber gasket seals the tank flange edge. The tanks are clamped to the core with clinch tabs. The tabs are part of the aluminum header at each end of the core. The radiator also has a drain cock which is located in the bottom of the left hand tank. The drain cock includes the drain cock and drain cock seal.

The radiator removes heat from the coolant passing through it. The fins on the core absorb heat from the coolant passing through the tubes. As air passes between the fins, it absorbs heat and cools the coolant.

During vehicle use, the coolant heats and expands. The coolant that is displaced by this expansion flows into the

cardiagn.com

surge tank. As the coolant circulates, air is allowed to exit. This is an advantage to the cooling system. Coolant without bubbles absorbs heat much better than coolant with bubbles.

Pressure Cap

The pressure cap is a cap that seals and pressurizes the cooling system. It contains a blow off or pressure valve and a vacuum or atmospheric valve. The pressure valve is held against its seat by a spring of predetermined strength, which protects the radiator by relieving pressure if it exceeds 15 psi. The vacuum valve is held against its seat by a spring, which permits opening of the valve to relieve vacuum created in the cooling system as it cools off. The vacuum, if not relieved, might cause the radiator to collapse.

The pressure cap allows pressure in the cooling system to build up. As the pressure builds, the boiling point of the coolant goes up as well. Therefore, the coolant can be safely run at a temperature much higher than the boiling point of the coolant at atmospheric pressure. The hotter the coolant is, the faster the heat moves from the radiator to the cooler, passing air. The pressure in the cooling system can get too high, however. When the pressure exceeds the strength of the spring, it raises the pressure valve so that the excess pressure can escape. As the engine cools down, the temperature of the coolant drops and a vacuum is created in the cooling system. This vacuum causes the vacuum valve to open, allowing outside air into the cooling system. This equalizes the pressure in the cooling system with atmospheric pressure, preventing the radiator from collapsing.

Surge Tank

The surge tank is a plastic tank with a pressure cap mounted to it. The tank is mounted at a point higher than all other coolant passages. The surge tank provides an air space in the cooling system. The air space allows the coolant to expand and contract. The surge tank also provides a coolant fill point and a central air bleed location.

During vehicle use, the coolant heats and expands. The coolant that is displaced by this expansion flows into the surge tank. As the coolant circulates, air is allowed to exit. This is an advantage to the cooling system. Coolant without bubbles absorbs heat much better than coolant with bubbles.

Air Baffles and Seals

The cooling system uses deflectors, air baffles and air seals to increase system cooling. Deflectors are installed under the vehicle to redirect airflow beneath the vehicle to flow through the radiator and increase cooling. Air baffles are also used to direct airflow into the radiator and increase cooling. Air seals prevent air from bypassing the radiator and A/C condenser. Air seals also prevent recirculation of the air for better hot weather cooling and A/C condenser performance.

Water Pump

The water pump is a centrifugal vane impeller type pump. The pump consists of a housing with coolant inlet and outlet passages and an impeller. The impeller is a flat plate mounted on the pump shaft with a series of flat or curved blades or vanes. When the impeller rotates, the coolant between the vanes is thrown outward by centrifugal force. The impeller shaft is supported by one or more sealed bearings. These sealed bearings never need to be lubricated. With a sealed bearing, grease cannot leak out, and dirt and water cannot get in.

The purpose of the water pump is to circulate coolant throughout the cooling system. The water pump is driven by the crankshaft via the drive belt.

cardiagn.com

Thermostat

The thermostat is a coolant flow control component. It's purpose is to regulate the operating temperature of the engine. It utilizes a temperature sensitive wax-pellet element. The element connects to a valve through a piston. When the element is heated, it expands and exerts pressure against a rubber diaphragm. This pressure forces the valve to open. As the element is cooled, it contracts. This contraction allows a spring to push the valve closed.

When the coolant temperature is below 91° C (195° F), the thermostat valve remains closed. This prevents circulation of the coolant to the radiator and allows the engine to warm up quickly. After the coolant temperature reaches 91° C (195° F), the thermostat valve will open. The coolant is then allowed to circulate through the thermostat to the radiator where the engine heat is dissipated to the atmosphere. The thermostat also provides a restriction in the cooling system, even after it has opened. This restriction creates a pressure difference which prevents cavitation at the water pump and forces coolant to circulate through the engine block.

Transmission Oil Cooler

The transmission oil cooler is a heat exchanger. It is located inside the right side end tank of the radiator. The transmission fluid temperature is regulated by the temperature of the engine coolant that surrounds the oil cooler as the transmission fluid passes down through the cooler.

The transmission oil pump, pumps the fluid through the transmission oil cooler feed line to the oil cooler. The fluid then flows down through the cooler while the engine coolant absorbs heat from the fluid. The fluid is then pumped through the transmission oil cooler return line, to the transmission.

Coolant Heater

The optional engine coolant heater (RPO K05) is rated at 400 watts and supplies 1365 btu/hr. The engine coolant heater operates using 110-volt AC external power and is designed to warm the coolant in the engine block area for improved starting in very cold weather -29° C (-20° F). The coolant heater helps reduce fuel consumption when a cold engine is warming up. The unit is equipped with a detachable AC power cord. A weather shield on the cord is provided to protect the plug when not in use.

SPECIAL TOOLS AND EQUIPMENT

SPECIAL TOOLS

Special Tools

Illustration	Tool Number/ Description
	J 24460-01 Cooling System Pressure Tester

cardiagn.com

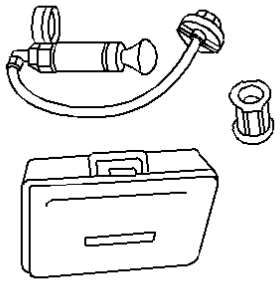	
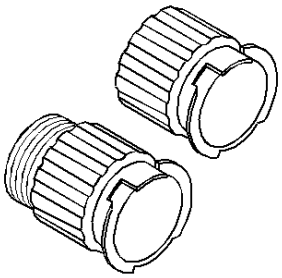	J 24460-92 Surge Tank Test Adapter
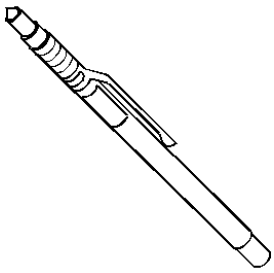	J 24731 Tempilstick
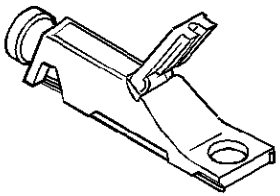	J 26568 Coolant and Battery Fluid Tester

cardiagn.com

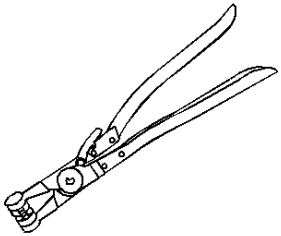	J 38185 Hose Clamp Pliers
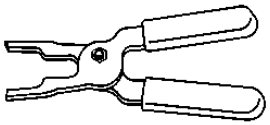	J 43244 Relay Puller Pliers

cardiagn.com