# Engine (G6EA - GSL 2.7)

GENERAL

ENGINE BLOCK

COOLING SYSTEM

LUBRICATION SYSTEM

INTAKE AND EXHAUST SYSTEM

CYLINDER HEAD ASSEMBLY

TIMING SYSTEM

ENGINE AND TRANSAXLE ASSEMBLY

# GENERAL

## SPECIFICATIONS EAFA9CDF

| Description | | | Specifications | Limit |
|---|---|---|---|---|
| **General** | | | | |
| Type | | | V-type, DOHC | |
| Number of cylinder | | | 6 | |
| Bore | | | 86.7mm(3.4134in.) | |
| Stroke | | | 75mm(2.9528in.) | |
| Total displacement | | | 2,656cc | |
| Compression ratio | | | 10.4 | |
| Firing order | | | 2-3-4-5-6-1 | |
| **Valve timing** | | | | |
| Intake valve | Opens (ATDC) | | 4° ~ -56° | |
| | Closes (ABDC) | | 60° ~ 0° | |
| Exhaust valve | Opens (BBDC) | | 46° | |
| | Closes (ATDC) | | 10° | |
| **Cylinder head** | | | | |
| Flatness of gasket surface | | | 0.03mm(0.0012in.) or less | 0.05mm(0.0020in.) |
| Flatness of manifold mounting | Intake | | 0.15mm(0.0059in.) or less | |
| | Exhaust | | 0.15mm(0.0059in.) or less | |
| **Camshaft** | | | | |
| Cam height | LH Camshaft | Intake | 44.5mm(1.7520in.) | |
| | | Exhaust | 44.5mm(1.7520in.) | |
| | RH Camshaft | Intake | 44.5mm(1.7520in.) | |
| | | Exhaust | 44.5mm(1.7520in.) | |
| Journal outer diameter | LH Camshaft | Intake | 27.964 ~ 27.980mm(1.1009 ~ 1.1016in.) | |
| | | Exhaust | 27.964 ~ 27.980mm(1.1009 ~ 1.1016in.) | |
| | RH Camshaft | Intake | 27.964 ~ 27.980mm(1.1009 ~ 1.1016in.) | |
| | | Exhaust | 27.964 ~ 27.980mm(1.1009 ~ 1.1016in.) | |
| Bearing oil clearance | Intake | | 0.020 ~ 0.057mm(0.0008 ~ 0.0022in.) | |
| | Exhaust | | 0.020 ~ 0.057mm(0.0008 ~ 0.0022in.) | |
| End play | | | 0.05 ~ 0.15mm(0.0020 ~ 0.0059in.) | |
| **Valve** | | | | |
| Valve length | Intake | | 110.1mm(4.3346in.) | |
| | Exhaust | | 111.1mm(4.3740in.) | |
| Stem outer diameter | Intake | | 5.965 ~ 5.980mm(0.2348 ~ 0.2354in.) | |
| | Exhaust | | 5.950 ~ 5.965mm(0.2343 ~ 0.2348in.) | |
| Face angle | | | 45° ~ 45.5° | |

| Description | | Specifications | Limit |
|---|---|---|---|
| Thickness of valvehead(margin) | Intake | 1.0mm(0.0394in.) | |
| | Exhaust | 1.3mm(0.0512in.) | |
| Valve stem to valve guide clearance | Intake | 0.020 ~ 0.050mm(0.0008 ~ 0.0020in.) | 0.10mm(0.0039in.) or less |
| | Exhaust | 0.035 ~ 0.065mm(0.0014 ~ 0.0026in.) | 0.13mm(0.0051in.) or less |
| **Valve guide** | | | |
| Inner diameter | Intake | 6.000 ~ 6.015mm(2.2362 ~ 2.2368in.) | |
| | Exhaust | 6.000 ~ 6.015mm(2.2362 ~ 2.2368in.) | |
| Length | Intake | 45.8 ~ 46.2mm(1.8031 ~ 1.8189in.) | |
| | Exhaust | 46.8 ~ 47.2mm(1.8425 ~ 1.8583in.) | |
| **Valve spring** | | | |
| Free length | | 46.8mm(1.8425in.) | |
| Load | Height: 35mm | 180.5 ~ 199.5N(18.4 ~ 20.3Kgf, 40.6 ~ 44.8lb) | |
| | Height: 26.5mm | 342 ~ 378N(34.9 ~ 38.6Kgf, 76.9 ~ 85.1lb) | |
| Out of squareness | | 1.5° or less | |
| **MLA(Mechanical Lash Adjuster)** | | | |
| MLA outer diameter | Intake | 29.964 ~ 29.980mm(1.1797 ~ 1.1803in.) | |
| | Exhaust | 29.964 ~ 29.980mm(1.1797 ~ 1.1803in.) | |
| Cylinder head tappet bore inner diameter | Intake | 30.000 ~ 30.025mm(1.1811 ~ 1.1821in.) | |
| | Exhaust | 30.000 ~ 30.025mm(1.1811 ~ 1.1821in.) | |
| MLA to tappet bore clearance | Intake | 0.020 ~ 0.061mm(0.0008 ~ 0.0024in.) | 0.07mm(0.0027in.) or less |
| | Exhaust | 0.020 ~ 0.061mm(0.0008 ~ 0.0024in.) | 0.07mm(0.0027in.) or less |
| **Valve clearance** | | | |
| Intake | | 0.17 ~ 0.23mm (0.0067 ~ 0.0090in.) | 0.10 ~ 0.30mm (0.0039 ~ 0.0118in.) |
| Exhaust | | 0.27 ~ 0.33mm (0.0106 ~ 0.0129in.) | 0.20 ~ 0.40mm (0.0078 ~ 0.0157in.) |
| **Cylinder block** | | | |
| Cylinder bore | | 96.00 ~ 96.03mm (3.7795 ~ 3.7807in.) | |
| Flatness of gasket surface | | Less than 0.05mm (0.0019in.)<br>[Less than 0.02mm (0.0008in.) / 150x150] | |
| **Piston** | | | |
| Piston outer diameter | | 95.96 ~ 95.99mm(3.7779 ~ 3.7791in.) | |
| Piston to cylinder clearance | | 0.03 ~ 0.05mm(0.0012 ~ 0.0020in.) | |

| Description | | Specifications | Limit |
|---|---|---|---|
| Ring groove width | No. 1 ring groove | 1.22 ~ 1.24mm (0.0480 ~ 0.0488in.) | |
| | No. 2 ring groove | 1.22 ~ 1.24mm (0.0480 ~ 0.0488in.) | |
| | Oil ring groove | 2.01 ~ 2.03mm (0.0791 ~ 0.0799in.) | |
| Piston O.S. | | 0.25mm(0.0098in.) | |
| **Piston ring** | | | |
| Side clearance | No. 1 ring | 0.04 ~ 0.08mm(0.0016 ~ 0.0031in.) | 0.1mm(0.0039in.) |
| | No. 2 ring | 0.03 ~ 0.07mm(0.0012 ~ 0.0027in.) | 0.1mm(0.0039in.) |
| | Oil ring | 0.06 ~ 0.15mm(0.0024 ~ 0.0059in.) | 0.2mm(0.0079in.) |
| End gap | No. 1 ring | 0.15 ~ 0.30mm(0.0059 ~ 0.0118in.) | 0.6mm(0.0236in.) |
| | No. 2 ring | 0.30 ~ 0.45mm(0.0118 ~ 0.0177in.) | 0.7mm(0.0275in.) |
| | Oil ring | 0.20 ~ 0.70mm(0.0078 ~ 0.0275in.) | 0.8mm(0.0315in.) |
| Piston ring O.S. | | 0.25mm(0.0098in.) | |
| **Piston pin** | | | |
| Piston pin outer diameter | | 21.001 ~ 21.007mm(0.8268 ~ 0.8270in.) | |
| Piston pin hole inner diameter | | 21.014 ~ 21.023mm(0.8273 ~ 0.8277in.) | |
| Piston pin hole clearance | | 0.007 ~ 0.022mm(0.0003 ~ 0.0009in.) | |
| Connecting rod small end inner diameter | | 20.974 ~ 20.985mm(0.8257 ~ 0.8262in.) | |
| Connecting rod small end hole clearance | | 0.016 ~ 0.033mm(0.0006 ~ 0.0013in.) | |
| **Connecting rod** | | | |
| Connecting rod big end inner diameter | | 51.000 ~ 51.018mm(2.0079 ~ 2.0086in.) | |
| Connecting rod bearing oil clearance | | 0.018 ~ 0.036mm(0.0007 ~ 0.0014in.) | |
| Side clearance | | 0.1 ~ 0.25mm (0.0039 ~ 0.0098in.) | 0.4mm(0.0157in.) |
| **Crankshaft** | | | |
| Main journal outer diameter | | 61.982 ~ 62.000mm(2.4402 ~ 2.4409in.) | |
| Pin journal outer diameter | | 47.982 ~ 48.000mm(1.8891 ~ 1.8898in.) | |
| Main bearing oil clearance | | 0.004 ~ 0.022mm(0.0002 ~ 0.0009in.) | |
| End play | | 0.07 ~ 0.25mm(0.0028 ~ 0.0098in.) | 0.30mm(0.0118in.) |
| **Oil pump** | | | |
| Relief valve opening pressure | | 490.33 ~ 588.40kPa(5.0 ~ 6.0kgf/cm², 71.12 ~ 85.34 psi) | |
| **Engine oil** | | | |
| Oil quantity (Total) | | 4.5L(4.76U.S.qts,3.96Imp.qts) | |
| Oil quantity (Oil pan) | | 4.2L(4.44U.S.qts,3.70Imp.qts) | |
| Oil quantity (Oil filter) | | 0.3L(0.32U.S.qts,0.26Imp.qts) | |
| Oil quality | | Above SJ or SL | |
| Oil pressure | | 130kPa(1.32kgf/cm²,18.77psi) [at 1000rpm,110°C(230°F)] | |
| **Cooling system** | | | |
| Cooling method | | Forced circulation with electrical fan | |

| Description | | Specifications | Limit |
|---|---|---|---|
| Coolant quantity | | 8.2~8.3L(8.66~8.77U.S.qts,7.22~7.30lmp.qts) | |
| Thermostat | Type | Wax pellet type | |
| | Opening temperature | 82±2°C (179.6±35.6°F) | |
| | Fully opened temperature | 95°C (203°F) | |
| | Full lift | 10mm (0.3937in.) or more | |
| Radiator cap | Main valve opening pressure | 93.16 ~ 122.58kpa(0.95 ~ 1.25 kg/cm², 13.51 ~ 17.78psi) | |
| | Vacuum valve opening pressure | 0.98 ~ 4.90 kpa(0.01 ~ 0.05 kg/cm², 0.14 ~ 0.71 psi) | |
| **Engine coolant temperature sensor** | | | |
| Type | | Thermister type | |
| Resistance | 20°C (68°F) | 2.31 ~ 2.59 kΩ | |
| | 80°C(176°F) | 0.3222 kΩ | |

**TIGHTENING TORQUE**

| Item | Quan-tity | Nm | kgf.m | lb-ft |
|---|---|---|---|---|
| Oil seal case bolt | 3 | 9.8 ~ 11.8 | 1.0 ~ 1.2 | 7.2 ~ 8.7 |
| Main bearing cap bolt(M10) | 8 | 29.4 + 90˚ | 3.0 + 90˚ | 21.7 + 90˚ |
| Main bearing cap bolt(M8) | 8 | 15.7 + 90˚ | 1.6 + 90˚ | 11.6 ~ + 90˚ |
| Rear plate bolt | 1 | 9.8 ~ 11.8 | 1.0 ~ 1.2 | 7.2 ~ 8.7 |
| Oil pump case bolt(8×25) | 1 | 18.6 ~ 23.5 | 1.9 ~ 2.4 | 13.7 ~ 17.4 |
| Oil pump case bolt(8×35) | 1 | 18.6 ~ 23.5 | 1.9 ~ 2.4 | 13.7 ~ 17.4 |
| TimingOil pump case bolt(8×65) | 1 | 18.6 ~ 23.5 | 1.9 ~ 2.4 | 13.7 ~ 17.4 |
| TimiOil relief plug | 1 | 39.2 ~ 49.0 | 4.0 ~ 5.0 | 28.9 ~ 36.2 |
| Oil filter bracket bolt(8×35) | 4 | 18.6 ~ 23.5 | 1.9 ~ 2.4 | 13.7 ~ 17.4 |
| Oil filter bracket bolt(8×65) | 2 | 18.6 ~ 23.5 | 1.9 ~ 2.4 | 13.7 ~ 17.4 |
| Oil filter insert | 1 | 44.1 ~ 53.9 | 4.5 ~ 5.5 | 32.5 ~ 39.8 |
| Timing chain cover bolt | 21 | 9.8 ~ 11.8 | 1.0 ~ 1.2 | 7.2 ~ 8.7 |
| Upper oil pan bolt(8×22) | 15 | 18.6 ~ 23.5 | 1.9 ~ 2.4 | 13.7 ~ 17.4 |
| Upper oil pan bolt(163.5mm) | 1 | 4.9 ~ 6.9 | 0.5 ~ 0.7 | 3.6 ~ 5.1 |
| Upper oil pan bolt(154.5mm) | 1 | 4.9 ~ 6.9 | 0.5 ~ 0.7 | 3.6 ~ 5.1 |
| Lower oil pan bolt | 11 | 9.8 ~ 11.8 | 1.0 ~ 1.2 | 7.2 ~ 8.7 |
| Oil drain plug | 1 | 34.3 ~ 44.1 | 3.5 ~ 4.5 | 25.3 ~ 32.5 |
| Engine support bracket bolt(10×94) | 2 | 58.8 ~ 68.6 | 6.0 ~ 7.0 | 43.4 ~ 50.6 |
| Engine support bracket bolt(10×102.5) | 1 | 58.8 ~ 68.6 | 6.0 ~ 7.0 | 43.4 ~ 50.6 |
| Camshaft bearing cap bolt(6×38) | 24 | 10.8 ~ 12.7 | 1.1 ~ 1.3 | 8.0 ~ 9.4 |
| Camshaft bearing cap bolt(8×38) | 12 | 20.6 ~ 25.5 | 2.1 ~ 2.6 | 15.2 ~ 18.8 |
| Cylinder head bolt | 16 | 24.5 + 60˚ + 45˚ | 2.5 + 60˚ + 45˚ | 18.1 + 60˚ + 45˚ |
| Cylinder head cover bolt | 22 | 7.8 ~ 9.8 | 0.8 ~ 1.0 | 5.8 ~ 7.2 |
| Crankshaft pulley bolt | 1 | 166.7 ~ 176.5 | 17.0 ~ 18.0 | 123.0 ~ 130.2 |
| Drive plate bolt | 8 | 71.6 ~ 75.5 | 7.3 ~ 7.7 | 52.8 ~ 55.7 |
| Connecting rod bearing cap bolt | 12 | 19.6 ~ 90˚ | 2.0 ~ 90˚ | 14.5 ~ 90˚ |
| OCV(Oil Control Valve) bolt | 2 | 7.8 ~ 9.8 | 0.8 ~ 1.0 | 5.8 ~ 7.2 |
| CVVT & exhaust cam sprocket bolt | 4 | 66.7 ~ 78.5 | 6.8 ~ 8.0 | 49.2 ~ 57.9 |
| Timing chain auto tensioner bolt | 4 | 10.8 ~ 12.7 | 1.1 ~ 1.3 | 8.0 ~ 9.4 |
| Camshaft sprocket bolt | 2 | 88.3 ~ 107.9 | 9.0 ~ 11.0 | 65.1 ~ 79.6 |
| Timing belt idler bolt | 1 | 49.0 ~ 58.8 | 5.0 ~ 6.0 | 36.2 ~ 43.4 |
| Timing belt tensioner bolt | 2 | 19.6 ~ 26.5 | 2.0 ~ 2.7 | 14.5 ~ 19.5 |
| Timing belt tensioner arm bolt | 1 | 34.3 ~ 53.9 | 3.5 ~ 5.5 | 25.3 ~ 39.8 |
| Water pump bolt(8×20) | 3 | 14.7 ~ 21.6 | 1.5 ~ 2.2 | 10.8 ~ 15.9 |
| Water pump bolt(8×25) | 4 | 14.7 ~ 21.6 | 1.5 ~ 2.2 | 10.8 ~ 15.9 |
| Drive belt idler bolt | 1 | 34.3 ~ 53.9 | 3.5 ~ 5.5 | 25.3 ~ 39.8 |

| Item | Quan-tity | Nm | kgf.m | lb-ft |
|---|---|---|---|---|
| Drive belt tensioner bolt | 1 | 34.3 ~ 53.9 | 3.5 ~ 5.5 | 25.3 ~ 39.8 |
| Water pipe bolt | 1 | 16.7 ~ 19.6 | 1.7 ~ 2.0 | 12.3 ~ 14.5 |
| Water temp. control assembly nut | 4 | 29.4 ~ 41.2 | 3.0 ~ 4.2 | 21.7 ~ 30.4 |
| Oil level gauge bolt | 1 | 18.6 ~ 23.5 | 1.9 ~ 2.4 | 13.7 ~ 17.4 |
| Oil screen bolt | 2 | 14.7 ~ 21.6 | 1.5 ~ 2.2 | 10.8 ~ 15.9 |
| Water outlet pipe bolt | 3 | 16.7 ~ 19.6 | 1.7 ~ 2.0 | 12.3 ~ 14.5 |
| Water inlet pipe bolt | 2 | 16.7 ~ 19.6 | 1.7 ~ 2.0 | 12.3 ~ 14.5 |
| Water inlet pipe nut | 1 | 16.7 ~ 19.6 | 1.7 ~ 2.0 | 12.3 ~ 14.5 |
| Surge tank bolt(8×28) | 3 | 18.6 ~ 23.5 | 1.9 ~ 2.4 | 13.7 ~ 17.4 |
| Surge tank bolt(8×80) | 2 | 18.6 ~ 23.5 | 1.9 ~ 2.4 | 13.7 ~ 17.4 |
| Surge tank nut | 2 | 18.6 ~ 23.5 | 1.9 ~ 2.4 | 13.7 ~ 17.4 |
| Intake manifold bolt | 4 | 18.6 ~ 23.5 | 1.9 ~ 2.4 | 13.7 ~ 17.4 |
| Intake manifold nut | 4 | 18.6 ~ 23.5 | 1.9 ~ 2.4 | 13.7 ~ 17.4 |
| Surge tank bracket bolt | 2 | 18.6 ~ 23.5 | 1.9 ~ 2.4 | 13.7 ~ 17.4 |
| Exhaust manifold bolt | 14 | 29.4 ~ 34.3 | 3.0 ~ 3.5 | 21.7 ~ 25.3 |
| Heat protect bolt | 6 | 16.7 ~ 21.6 | 1.7 ~ 2.2 | 12.3 ~ 15.9 |
| Front muffler bolt | 2 | 39.2 ~ 58.8 | 4.0 ~ 6.0 | 28.9 ~ 43.4 |

## COMPRESSION PRESSURE INSPECTION EBCD8F14

**NOTE**

*If the there is lack of power, excessive oil consumption or poor fuel economy, measure the compression pressure.*

1. Warm up the engine until the normal operating temperature becoming 80~95°C(176~203°F).
2. Remove the surge tank.
3. Remove the ignition coil connectors(A) and ignition coils(B).

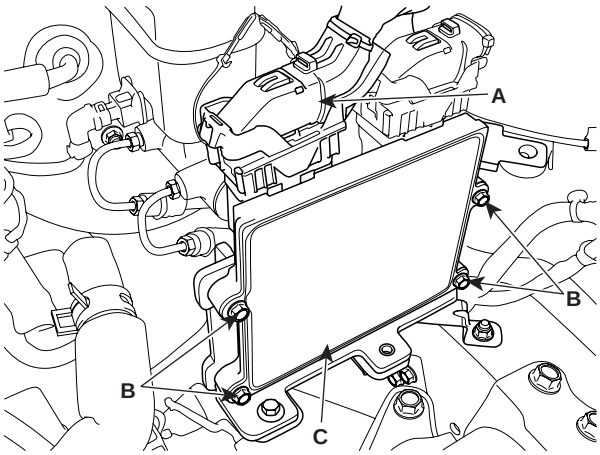


SCMEM6001L

4. Using a 16mm plug wrench, remove the 6 spark plugs.
5. Check cylinder compression pressure.
   1) Insert a compression gauge into the spark plug hole.
   2) Open the throttle fully.
   3) With the fully-open throttle in cranking, measure the compression pressure.

**NOTE**

*Always use a fully charged battery to get the engine speed of 250 rpm or more.*

Repeat steps 1) through 3) for each cylinder.

**NOTE**

*This measurement must be done in as short a time as possible.*

| |
|---|
| Compression pressure: 1,176.79kPa (12.0kgf/cm², 170.68psi) - 200 ~ 250rpm<br>Minimum pressure: 1,029.69kPa (10.5kgf/cm², 149.34psi)<br>Difference between cylinders: 98.07kPa (1.0kgf/cm², 14.22psi) |

   4) If the compression pressure in 1 or more cylinders is lower than the specification above, pour a small amount of engine oil into the cylinder through the spark plug hole, repeat the steps (1) through (3) for the cylinder and measure the pressure again.
      - If adding oil increases the pressure up, the piston rings or cylinder bores might be worn or damaged.
      - If the pressure doesn't increase, a valve may be sticking or seating may be improper, or there may be leakage from the gasket.
6. Reinstall the spark plugs.
7. Install the ignition coils and connect ignition coil connectors.
8. Install the surge tank.

## VALVE CLEARANCE INSPECTION AND ADJUSTMENT

***NOTE***

*Inspect and adjust the valve clearance when the engine is cold (Engine coolant temperature : 20°C±5°C(59~77°F)) and cylinder head is installed on the cylinder block.*

1. Remove the engine cover.
2. Remove air cleaner assembly.
3. Remove the surge tank.
4. Remove the cylinder head cover.
   1) Disconnect the ignition coil connector and remove the ignition coil.
   2) Remove the cylinder head cover.

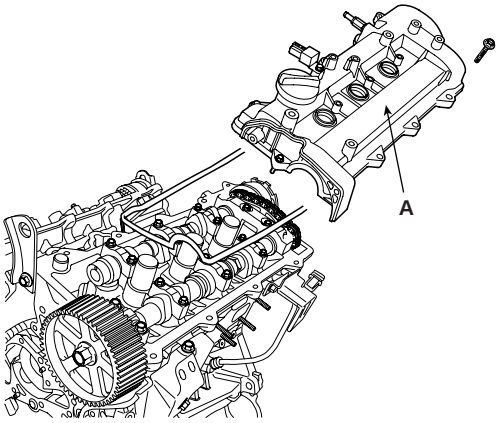


KCBF177A

5. Set the piston of the No.1 cylinder to TDC(Top Dead Center) position.
   1) Turn the crankshaft pulley clockwise and align its groove with the timing mark "T" of the timing chain cover.
   2) Check that the timing marks of the camshaft sprocket are in straight line on that of the cylinder head cover surface as shwn in the illustration. It makes the piston of the No.1 cylinder position at TDC.

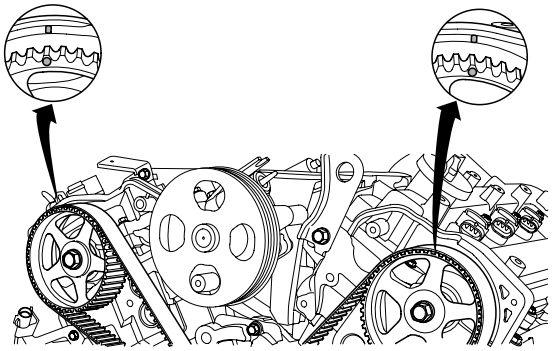

KCBF119B

***NOTE***

*If not, turn the crankshaft one revolution clockwise.*

6. Inspect the intake and the exhaust valve clearance.
   1) With the piston of the No.1 cylinder positioning at TDC, the valves which can be measured its clearance are as shown below.

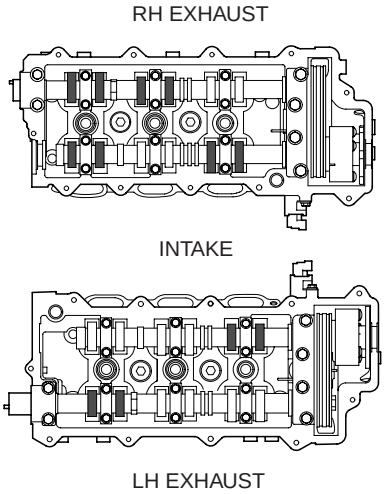


LDLG030A

Measurement method.
- Using a thickness gauge, measure the clearance between the tappet and the base circle of camshaft.
- Record the out-of-specification valve clearance measurements. They will be used later to determine the required adjusting tappet for replacement.

**Specification**
Limit (Engine coolant temperature : 20°C [68°F])
Intake : 0.10 ~ 0.30mm (0.0039 ~ 0.0118in.)
Exhaust : 0.20 ~ 0.40mm (0.0079 ~ 0.0157in.)

2) Turn the crankshaft pulley one revolution (360°) clockwise and align the groove with the timing mark "T" of the timing chain cover.

3) With the piston of the No.4 cylinder positioning at TDC, the valves which can be measured its clearance are as shown below.

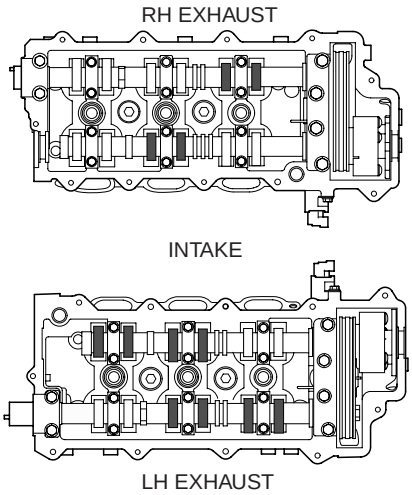


LDLG031A

7. Adjust the intake and the exhaust valve clearances.

1) Set the piston of the No.1 cylinder to the TDC/position.

2) Remove the timing belt.

3) Remove the camshaft bearing caps(A, B).

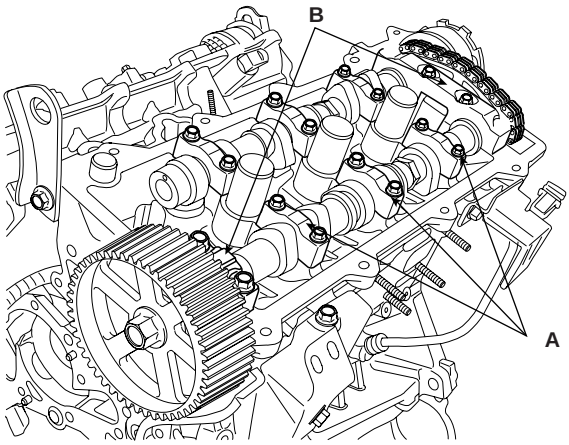


KCBF169A

4) Remove the camshaft assembly.

5) Remove MLA(Mechanical Lash Adjuster)s.

6) Measure the thickness of the removed tappet using a micrometer.

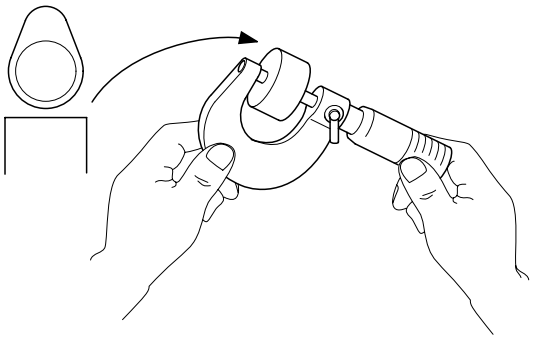

EDKE889D

7) Calculate the thickness of a new tappet so that the valve clearance comes within the specified value.

T : Thickness of removed tappet
A : Measured valve clearance
N : Thickness of new tappet
Intake : N = T + [A - 0.20mm(0.0079in.)]
Exhaust : N = T + [A - 0.30mm (0.0118in.)]

8) Select a new tappet with a thickness as close as possible to the calculated value.

***NOTE***

*Tappets are available with 41different size increments of 0.015mm (0.0006in.) from 3.00mm (0.118in.) to 3.600mm (0.1417in.)*

9) Place a new tappet on the cylinder head.

***NOTE***

*Apply engine oil on the periphery surface of the selected tappet.*

10) Install the intake and exhaust camshafts.

11) Install the bearing caps.

12) Install the timing belt.

13) Turn the crankshaft two revolutions in the operating direction(clockwise) and realign crankshaft sprocket and camshaft sprocket timing marks(A).

14) Recheck the valve clearance.

Specification (Engine coolant temperature: 20°C[68°F])
Intake : 0.17 ~ 0.23mm (0.0067 ~ 0.0090in.)
Exhaust : 0.27 ~ 0.33mm (0.0106 ~ 0.0129in.)

## TROUBLESHOOTING EAB59BFE

| Symptom | Suspect area | Remedy |
|---|---|---|
| Engine misfire with abnormal internal lower engine noises. | Worn crankshaft bearings.<br>Loose or impropes engine drive plate. | Replace the crankshaft and bearings as required.<br>Repair or replace the drive plate as required. |
| | Worn piston rings.<br>(Oil consumption may or may not cause the engine to misfire.) | Inspect the cylinder for a loss of compression.<br>Repair or replace as required. |
| | Worn crankshaft thrust bearings | Replace the crankshaft and bearings as required. |
| Engine misfire with abnormal valve train noise. | Stuck valves.<br>(Carbon buildup on the valve stem) | Repair or replace as required. |
| | Excessive worn or mis-aligned timing chain. | Replace the timing chain and sprocket as required. |
| | Worn camshaft lobes. | Replace the camshaft and valve lifters. |
| Engine misfire with coolant consumption. | • Faulty cylinder head gasket and/or cranking or other damage to the cylinder head and engine block cooling system.<br>• Coolant consumption may or may not cause the engine to overheat. | • Inspect the cylinder head and engine block for damage to the coolant passages and/or a faulty head gasket.<br>• Repair or replace as required. |
| Engine misfire with excessive oil consumption. | Worn valves, guides and/or valve stem oil seals. | Repair or replace as required. |
| | Worn piston rings.<br>(Oil consumption may or may not cause the engine to misfire) | • Inspect the cylinder for a loss of compression.<br>• Repair or replace as required. |
| Engine noise on start-up, but only lasting a few seconds. | Incorrect oil viscosity. | • Drain the oil.<br>• Install the correct viscosity oil. |
| | Worn crankshaft thrust bearing. | • Inspect the thrust bearing and crankshaft.<br>• Repair or replace as required. |

| Symptom | Suspect area | Remedy |
|---|---|---|
| Upper engine noise,regardless of engine speed. | Low oil pressure. | Repair or replace as required. |
| | Broken valve spring. | Replace the valve spring. |
| | Worn or dirty valve lifters. | Replace the valve lifters. |
| | Stretched or broken timing chain and/or damaged sprocket teeth. | Replace the timing chain and sprockets. |
| | Worn timing chain tensioner, if applicable. | Replace the timing chain tensioner as required. |
| | Worn camshaft lobes. | • Inspect the camshaft lobes.<br>• Replace the timing camshaft and valve lifters as required. |
| | Worn valve guides or valve stems. | Inspect the valves and valve guides,then repair as required. |
| | Stuck valves. Carbon on the valve stem or valve seat may cause the valve to stay open. | Inspect the valves and valve guides, then repair as required. |
| | Worn drive belt, idler, tensioner and bearing. | Replace as required. |
| Lower engine noise,regardless of engine speed. | Low oil pressure. | Repair as required. |
| | Loose or damaged drive plate. | Repair or replace the drive plate. |
| | Damaged oil pan, contacting the oil pump screen. | • Inspect the oil pan.<br>• Inspect the oil pump screen.<br>• Repair or replace as required. |
| | Oil pump screen loose, damaged or restricted. | • Inspect the oil pump screen.<br>• Repair or replace as required. |
| | Excessive piston-to-cylinder bore clearance. | • Inspect the piston, piston pin and cylinder bore.<br>• Repair as required. |
| | Excessive piston pin-to-piston clearance. | • Inspect the piston, piston pin and the connecting rod.<br>• Repair or replace as required. |
| | Excessive connecting rod bearing clearance | Inspect the following components and repair as required.<br>• The connecting rod bearings.<br>• The connecting rods.<br>• The crankshaft pin journals. |
| | Excessive crankshaft bearing clearance. | Inspect the following components, and repair as required.<br>• The crankshaft bearings.<br>• The crankshaft main journals.<br>• The cylinder block. |
| | Incorrect piston, piston pin and connecting rod installation | • Verify the piston pins and connecting rods are installed correctly.<br>• Repair as required. |

| Symptom | Suspect area | Remedy |
|---|---|---|
| Engine noise under load. | Low oil pressure | Repair or replace as required. |
| | Excessive connecting rod bearing clearance . | Inspect the following components and repair as required :<br>• The connecting rod bearings.<br>• The connecting rods.<br>• The crankshaft. |
| | Excessive crankshaft bearing clearance. | Inspect the following components, and repair as required.<br>• The crankshaft bearings.<br>• The crankshaft main journals.<br>• The cylinder block. |
| Engine will not crank-crankshaft will not rotate. | Hydraulically locked cylinder.<br>• Coolant/antifreeze in cylinder.<br>• Oil in cylinder.<br>• Fuel in cylinder. | 1. Remove spark plugs and check for fluid.<br>2. Inspect for broken head gasket.<br>3. Inspect for cracked engine block or cylinder head.<br>4. Inspect for a sticking fuel injector and/or leaking fuel regulator. |
| | Broken timing chain and/or timing chain and/or timing chain gears. | 1. Inspect timing chain and gears.<br>2. Repair as required. |
| | Material in cylinder.<br>• Broken valve<br>• Piston material<br>• Foreign material | 1. Inspect cylinder for damaged components and/or foreign materials.<br>2. Repair or replace as required. |
| | Seized crankshaft or connecting rod bearings. | 1. Inspect crankshaft and connecting rod bearing.<br>2. Repair as required. |
| | Bent or broken connecting rod. | 1. Inspect connecting rods.<br>2. Repair as required. |
| | Broken crankshaft. | 1. Inspect crankshaft.<br>2. Repair as required. |

## SPECIAL TOOLS EB132BF6

| Tool (Number and name) | Illustration | Use |
|---|---|---|
| Crankshaft front oil seal installer (09214-33000) | 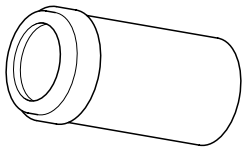 EDKA010A | Installation of the front oil seal |
| Torque angle adapter (09221-4A000) | 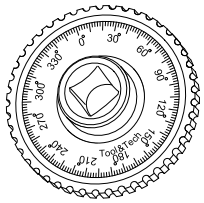 LCAC030A | Installation of bolts & nuts needing an angular method |
| Valve stem seal remover (09222-29000) | 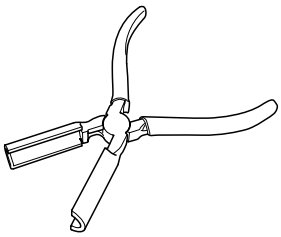 KDRF232A | Removal of the valve stem seal |
| Valve stem seal installer (09222-22001) | 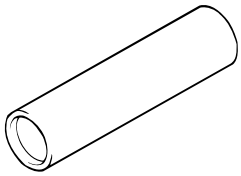 LCAC030D | Installation of the valve stem seal |
| Camshaft oil seal installer (09214-21000) | 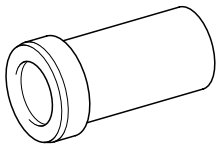 EDDA005B | Installation of the camshaft oil seal |

| Tool (Number and name) | Illustration | Use |
|---|---|---|
| Valve spring compressor & holder<br>(09222-3K000)<br>(09222-3C300) | 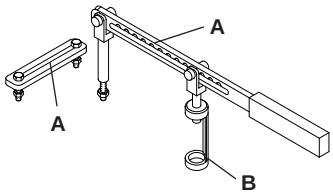 <br>ECRF003A | Removal and installation of the intake or exhaust valves.<br>A : 09222-3K000<br>B : 09222-3C300 (holder) |
| Crankshaft rear oil seal installer<br>(09231-33000) | 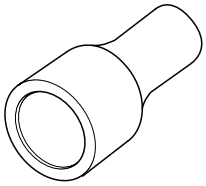 <br>LDLG032A | Installation of the crankshaft rear oil seal |
| Oil pan remover<br>(09215-3C000) | 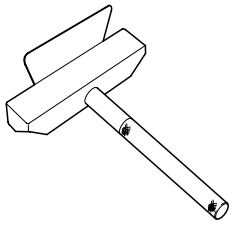 <br>KDRF219A | Removal of oil pan |
| Valve guide installer<br>(09221-3F100 A/B) | 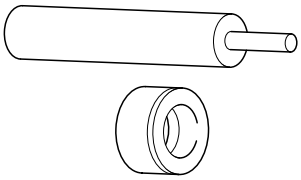 <br>ECKA010B | Removal and installation of the valve guide |

# ENGINE BLOCK

## COMPONENTS E98DF5AD

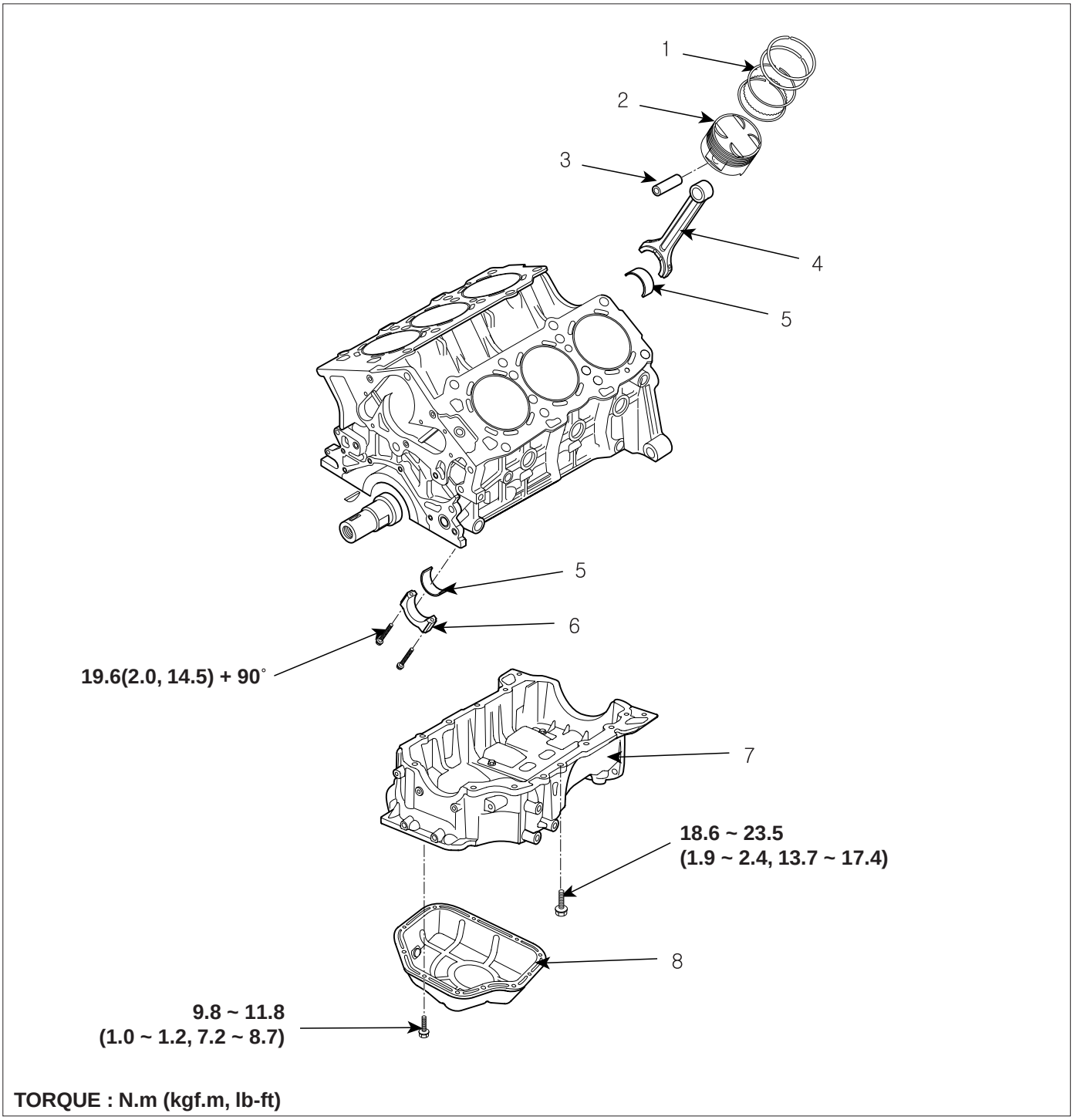


1. Piston ring
2. Piston
3. Piston pin
4. Connecting rod
5. Connecting rod bearing
6. Connecting rod cap
7. Upper oil pan
8. Lower oil pan

LDLG042A

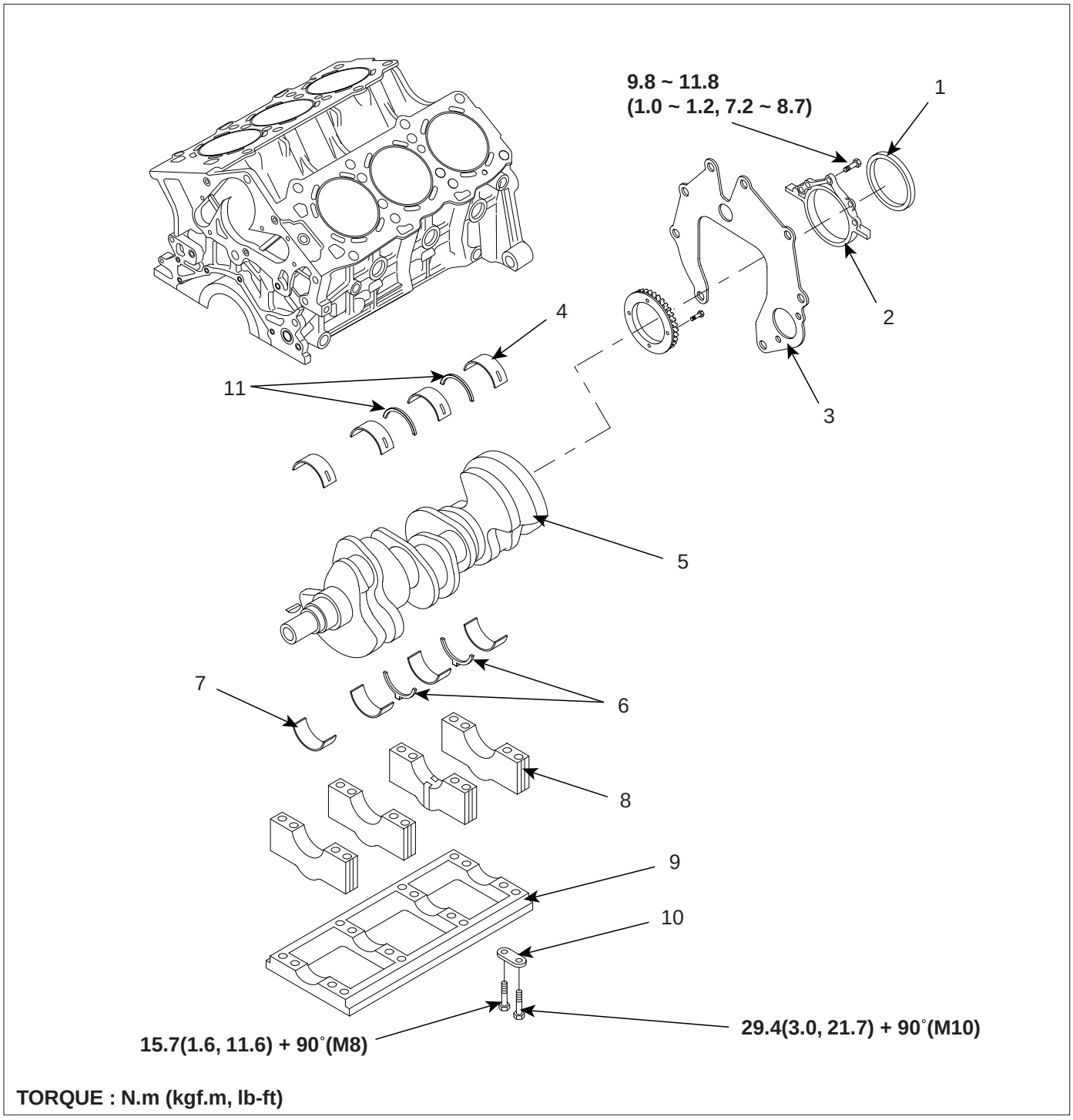


1. Rear oil seal
2. Rear oil seal case
3. Rear plate
4. Crankshaft upper bearing
5. Crankshaft
6. Lower thrust bearing
7. Crankshaft lower bearing
8. Main bearing cap
9. Bearing cap bridge
10. Bearing cap bolt washer
11. Upper thrust bearing

LDLG043A

## REMOVAL E2BF11E6

1. Remove the drive plate(A).

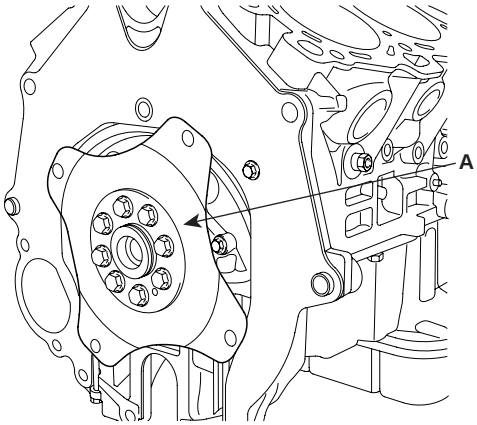


KCBF120A

2. Remove the rear plate(A).

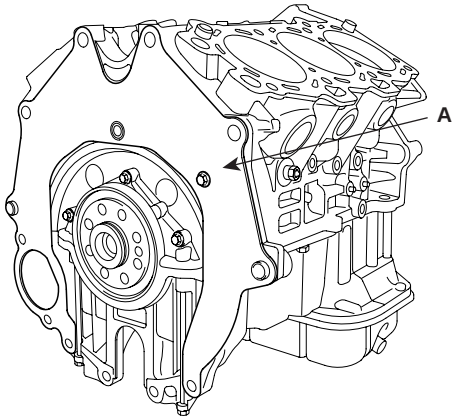


KCBF121A

3. Remove timing belt.
4. Remove intake manifold.
5. Remove exhaust manifold.
6. Remove generator from engine.(Refer to 'ST' group).
7. Remove power steering pump from engine.(Refer to 'HA' group).
8. Remove cylinder head.
9. Remove A/C compressor from engine.(Refer to 'EE' group).
10. Remove water pump assembly.

## DISASSEMBLY EB2506EF

1. Remove the power steering pump bracket(A) and the knock sensor(B).

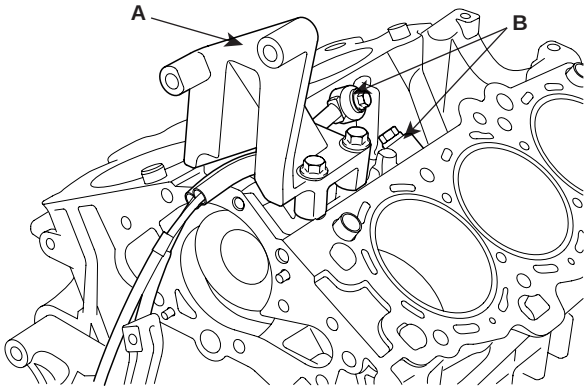


KCBF122A

2. Remove the air conditioning compressor bracket(A).

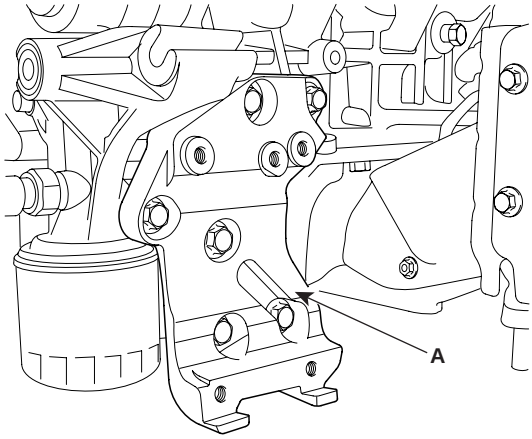


KCBF138A

3. Remove the lower oil pan(A).

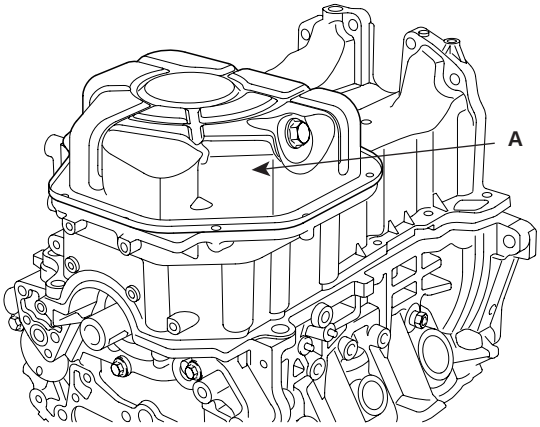


KCBF123A

4. Remove the oil screen(A).

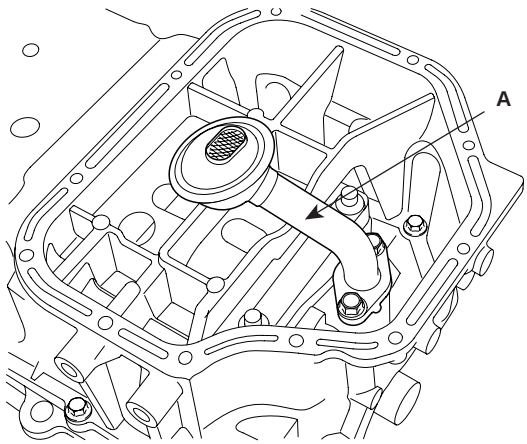


KCBF124A

5. Remove the upper oil pan(A).

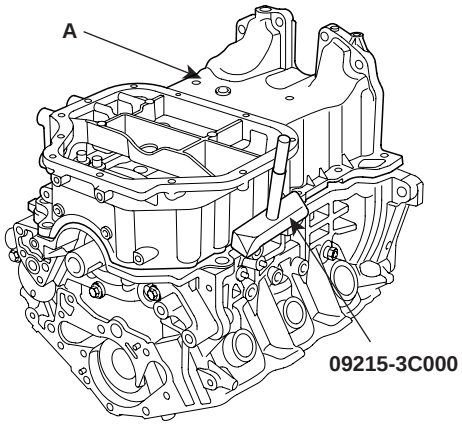


KCBF125B

***CAUTION***

***When removing the oil pan, use the SST(09215-3C000) not to damage the contacting surface of the oil pan.***

6. Check the connecting rod side clearance.

7. Check the connecting rod bearing oil clearance.

8. Remove the piston and connecting rod assemblies.

***NOTE***

- *Keep the bearings the connecting rods and the caps together.*
- *Arrange the piston and connecting rod assemblies in the correct order.*

9. Remove the oil pump case.

10. Remove the oil seal case(A).

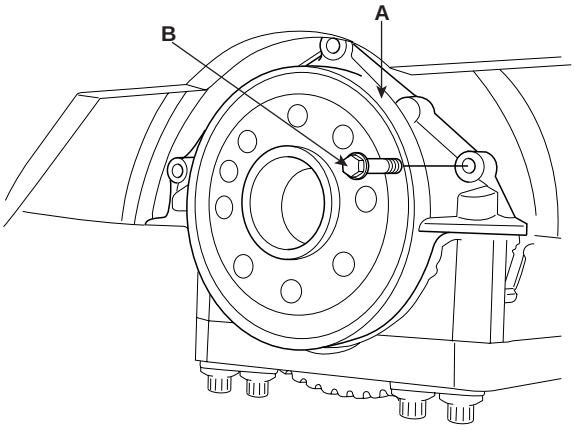


EDQF174B

11. Check the crankshaft end play.

12. Remove the crankshaft bearing cap and check oil clearance.

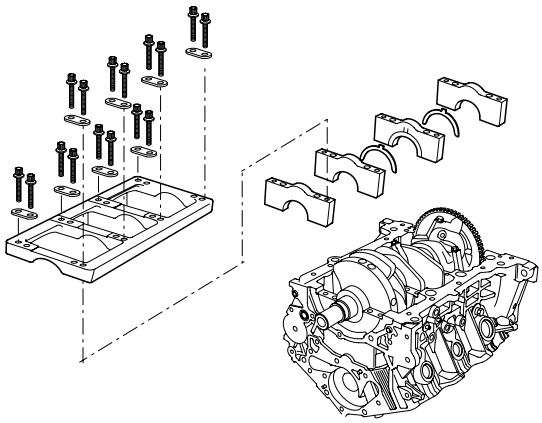

KCBF126A

***NOTE***

*Arrange the bearings and the bearing caps in order.*

13. Lift the crankshaft(A) out of the block, being careful not to damage journals.

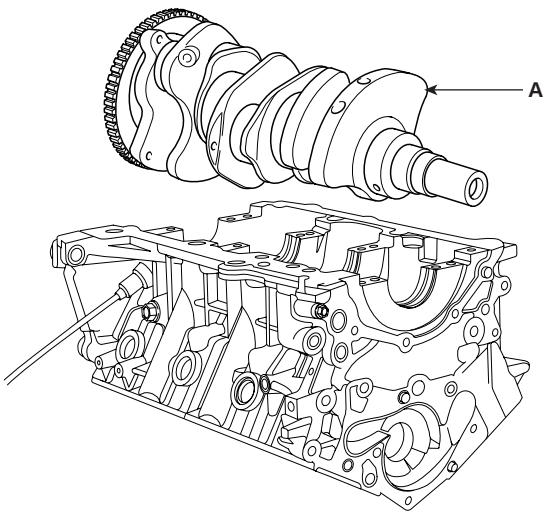


EDQF074A

14. Remove and arrange the main bearings and thrust bearings in the correct order.

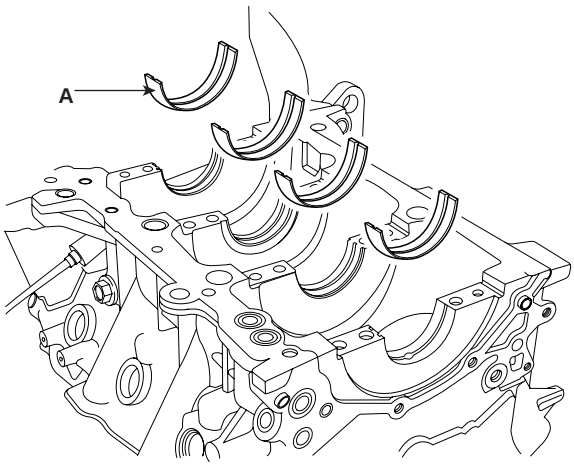


EDQF076A

15. Remove the CKP sensor(A).

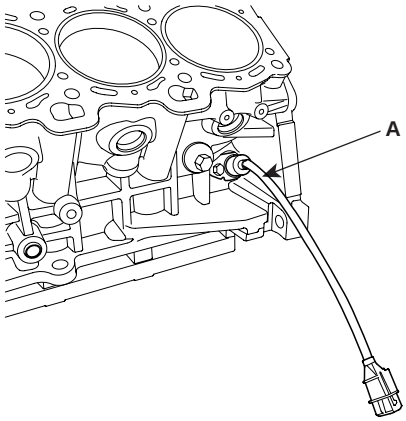


KCBF128A

16. Check the free play between a piston and a piston pin. Try to move the piston back and forth on the piston pin. If any movement is felt, replace the piston and the piston pin as a set.

17. Remove the piston rings.

    1) Using a piston ring expander, remove the 2 compression rings.

    2) Remove the 2 side rails and the oil ring by hand.

    ***NOTE***

    *Arrange the piston rings in the correct order only.*

18. Disconnect the connecting rod from the piston. Using a press, remove the piston pin from the piston. (Press-in load : 2451.7 ~ 12258.3N(250 ~ 1250kg, 551.2 ~ 2755.81lb)

## INSPECTION E3F92BD3

### CONNECTING ROD AND CRANKSHAFT

1. Check the connecting rod side clearance.
   Using a feeler gauge, measure the side clearance while moving the connecting rod back and forth.

**Specification**
Standard : 0.1~ 0.25mm(0.0039 ~ 0.0098in.)
Limit : 0.4mm(0.0157in.)

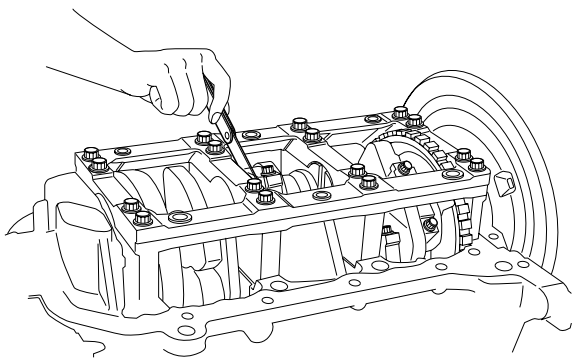

EDQF159A

- If out-of-tolerance, install a new connecting rod.
- If still out-of-tolerance, replace the crankshaft.

2. Check the connecting rod bearing oil clearance.

   1) Check the matchmarks on the connecting rod and cap are aligned to ensure correct reassembly.

   2) Remove the 2 connecting rod cap bolts.

   3) Remove the connecting rod cap and the lower bearing.

   4) Clean the crankshaft pin journal and the bearing.

   5) Place a plastigage across the crankshaft pin.

   6) Reinstall the lower bearing and the connecting rod cap and torque the bolts.

**Tightening torque**
19.6Nm (2.0kgf.m, 14.46lb-ft) + 90°

***NOTE***

*Do not turn the crankshaft.*

   7) Remove the connecting rod cap again.

   8) Measure the plastigage at its widest point.

**Standard oil clearance**
0.018 ~ 0.036mm(0.0007 ~ 0.0014in.)

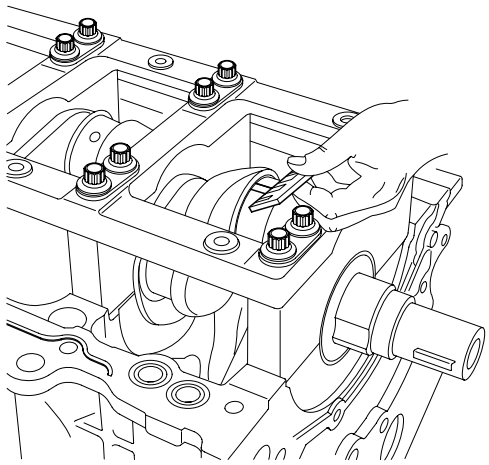

EDQF175A

   9) If the plastigage measures too wide or too narrow, remove the upper half of the bearing, install a new, complete bearing with the same color mark (select the color as shown in the next column), and recheck the clearance.

***CAUTION***

***Do not file, shim, or scrape the bearings or the caps to adjust clearance.***

   10) If the plastigage shows the clearance is still incorrect, try the next larger or smaller bearing (the color listed above or below that one), and check clearance again.

***NOTE***

*If the proper clearance cannot be obtained by using the appropriate larger or smaller bearings, replace the crankshaft and start over.*

***CAUTION***

***If the marks are indecipherable because of an accumulation of dirt and dust, do not scrub them***

***with a wire brush or scraper. Clean them only with solvent or detergent.***

**CONNECTING ROD MARK LOCATION**

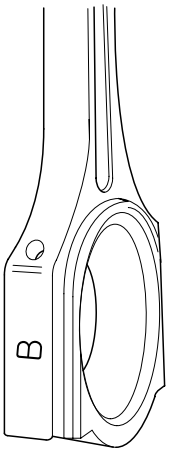


EDQF196A

**DISCRIMINATION OF CONNECTING ROD**

| CLASS | MARK | INSIDE DIAMETER |
|---|---|---|
| 0 | a | 51.000 ~ 51.006mm (2.0079 ~ 2.0081in.) |
| 1 | b | 51.006 ~ 51.012mm (2.0081 ~ 2.0083in.) |
| 2 | c | 51.012 ~ 51.018mm (2.0083 ~ 2.0086in.) |

**CRANKSHAFT PIN MARK LOCATION**

**DISCRIMINATION OF CRANKSHAFT**

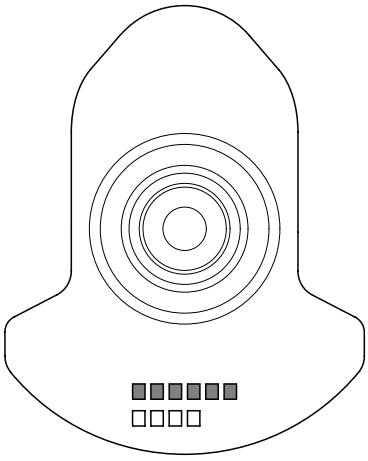

EDQF176B

**DISCRIMINATION OF CRANKSHAFT**

| CLASS | MARK | OUTSIDE DIAMETER OF PIN |
|---|---|---|
| I | 1 or A | 47.994 ~ 48.000mm (1.8895 ~ 1.8898in.) |
| II | 2 or B | 47.988 ~ 47.994mm (1.8893 ~ 1.8895in.) |
| III | 3 or C | 47.982 ~ 47.988mm (1.8891 ~ 1.8893in.) |

**PLACE OF IDENTIFICATION MARK (CONNECTING ROD BEARING)**

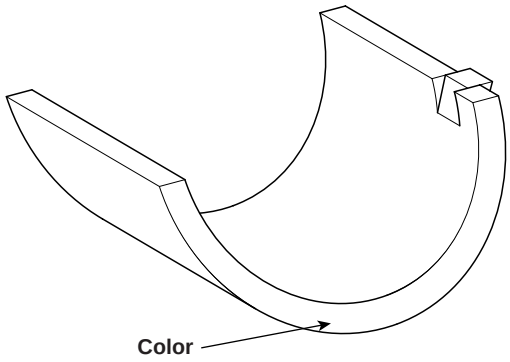


ECRF021A

**DISCRIMINATION OF CONNECTING ROD BEARING**

| CLASS | MARK | THICKNESS OF BEARING |
|---|---|---|
| A | BLUE | 1.5000 ~ 1.503mm (0.0591 ~ 0.0592in.) |
| B | BLACK | 1.497 ~ 1.500mm (0.0589 ~ 0.0591in.) |
| C | - | 1.494 ~ 1.497mm (0.0588 ~ 0.0589in.) |
| D | GREEN | 1.491 ~ 1.494mm (0.0587 ~ 0.0588in.) |
| E | YELLOW | 1.488 ~ 1.491mm (0.0586 ~ 0.0587in) |

11) Select the proper connecting rod bearing from the table below.

| | | CONNECTING ROD IDENTIFICATION MARK | | |
|---|---|---|---|---|
| | | 0(A) | 1(B) | 2(C) |
| CRANK-SHAFT INDEN-TIFICA-TION MARK | I(A) | E (YEL-LOW) | D (GREEN) | C (-) |
| | II(B) | D (GREEN) | C (-) | B (BLACK) |
| | III(C) | C (-) | B (BLACK) | A (BLUE) |

3. Check the connecting rod.

1) When reinstalling, check the cylinder numbers on the connecting rods and the caps. When installing a new connecting rod, the notches for bearing fixing on the connecting rods and caps should face the same direction.

2) If one or both edge of the connecting rod thrust surface is damaged, replace the rod. If the inner surface of the rod is damaged or rough, also replace it.

3) Using a connecting rod aligner, measure the bent or torsion of the rod. If the measurement is near the specification, adjust the rod with a press. If the rod is bent or twisted excessily, replace it.

Bending : 0.05mm/100mm(0.0020in./3.9370in.)
Torsion : 0.1mm/100mm(0.0039in./3.9370in.)

***NOTE***

*When assembling the rod without a bearing, there should be no difference.*

4. Check the crankshaft bearing oil clearance.

1) To check main bearing-to-journal oil clearance, remove the main bearing caps and bearing halves.

2) Clean each main journal and bearing half with a clean shop tower.

3) Place one strip of plastigage across each main journal.

4) Reinstall the bearings and caps, then torque the bolts.

**Tightening torque**
M8 : 15.7Nm(1.6 kgf.m, 11.6lb-ft) + 90°
M10 : 29.4 Nm(3.0 kgf.m, 21.7lb-ft)+ 90°

***NOTE***

*Tighten the bolts in order.*

5) Remove the cap and bearing again, and measure the widest part of the plastigage.

Standard oil clearance
0.004~ 0.022mm (0.0002 ~ 0.0009in.)

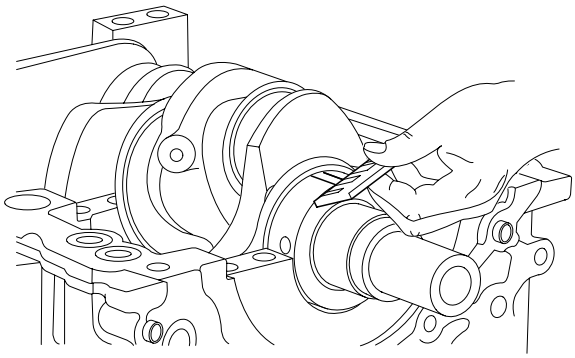

EDQF075A

6) If the plastigage measures too wide or too narrow, remove the upper half of the bearing, install a new, complete bearing with the same color mark (select the color as shown in the next column), and recheck the clearance.

***CAUTION***

***Do not file, shim, or scrape the bearings or the caps to adjust clearance.***

7) If the plastigage shows the clearance is still incorrect, try the next larger or smaller bearing (the color listed above or below that one), and check clearance again.

***NOTE***

*If the proper clearance cannot be obtained by using the appropriate larger or smaller bearings, replace the crankshaft and start over.*

***CAUTION***

***If the marks are indecipherable because of an accumulation of dirt and dust, do not scrub them with a wire brush or scraper. Clean them only with solvent or detergent.***

**Crankshaft bore mark location**

Letters have been stamped on the block as a mark for the each size of the 4 main journal bores. No.1 journal stamping mark starts from the front of the engine.

Use the size marks which are stamped on the block and the crankshaft for the journal bore inner diameter and the journal outer diameter to choose the correct bearings.

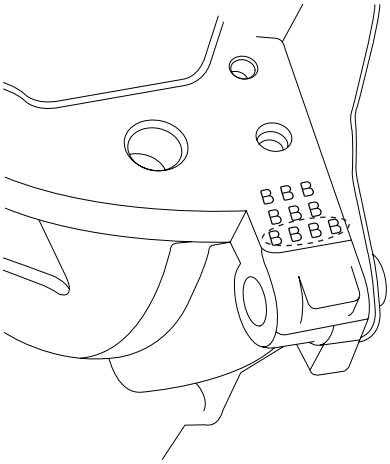


EDQF078A

**DISCRIMINATION OF CYLINDER BLOCK**

| CLASS | MARK | INSIDE DIAMETER |
|---|---|---|
| a | A | 66.000 ~ 66.006mm (2.5984 ~ 2.5987in.) |
| b | B | 66.006 ~ 66.012mm (2.5987 ~ 2.5989in.) |
| c | C | 66.012 ~ 66.018mm (2.5989 ~ 2.5991in.) |

**CRANKSHAFT JOURNAL MARK LOCATION**

**DISCRIMINATION OF CRANKSHAFT**

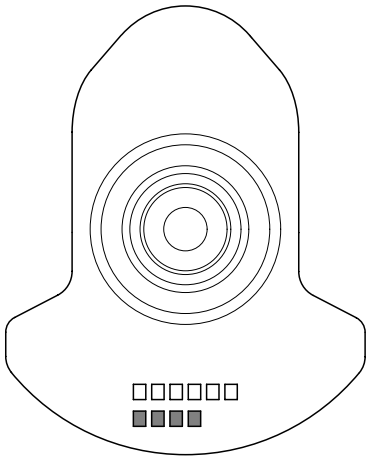

EDQF176A

**DISCRIMINATION OF CRANKSHAFT**

| CLASS | MARK | OUTSIDE DIAMETER OF JOURNAL |
|---|---|---|
| I | A | 61.994 ~ 62.000mm (2.4407 ~ 2.4409in.) |
| II | B | 61.988 ~ 61.994mm (2.4405 ~ 2.4407in.) |
| III | C | 61.982 ~ 61.988mm (2.4402 ~ 2.4405in.) |

**PLACE OF IDENTIFICATION MARK (CRANKSHAFT BEARING)**

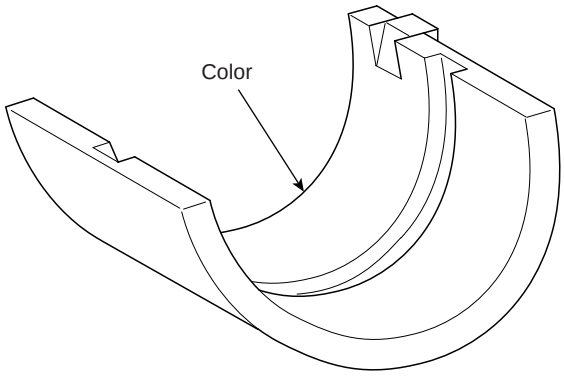


ECRF022A

**DISCRIMINATION OF CRANKSHAFT BEARING**

| CLASS | MARK | THICKNESS OF BEARING |
|---|---|---|
| A | BLUE | 2.007 ~ 2.010mm (0.0790 ~ 0.0791in.) |
| B | BLACK | 2.004 ~ 2.007mm (0.0789 ~ 0.0790in.) |
| C | - | 2.001 ~ 2.004mm (0.0788 ~ 0.0789in.) |
| D | GREEN | 1.998 ~ 2.001mm (0.0787 ~ 0.0788in.) |
| E | YELLOW | 1.995 ~ 1.998mm (0.0785 ~ 0.0787in.) |

**SELECTION TABLE**

| | | CRANKSHAFT BORE IDENTIFICATION MARK | | |
|---|---|---|---|---|
| | | a(A) | b(B) | c(C) |
| CRANK-SHAFT IDEN-TIFICA-TION MARK | I(A) | E (YEL-LOW) | D (GREEN) | C (-) |
| | II(B) | D (GREEN) | C (-) | B (BLACK) |
| | III(C) | C (-) | B (BLACK) | A (BLUE) |

5. Check crankshaft end play.
   Using a dial indicator, measure the thrust clearance while prying the crankshaft back and forth with a screwdriver.

Standard end play
0.07 ~ 0.25mm (0.0028 ~ 0.0098in.)
[Limit]
0.3mm(0.0118in.)

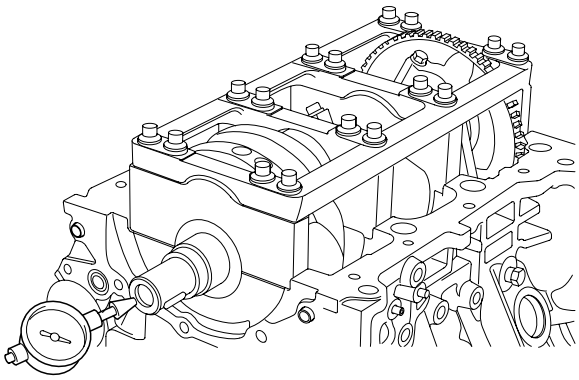

KCBF127A

If the end play is greater than the maximum, replace the center bearing.

Thrust bearing thickness
1.925 ~ 1.965mm(0.0758 ~ 0.0774in.)

6. Inspect the main journals and the pin journals of the crankshaft.

7. Using a micrometer, measure the outer diameter of each main journal and pin journal.

Main journal diameter : 61.982~ 62.000mm
(2.4402 ~ 2.4409in.)
Crank pin diameter : 47.982 ~ 48.000mm
(1.8891 ~ 1.8898in.)

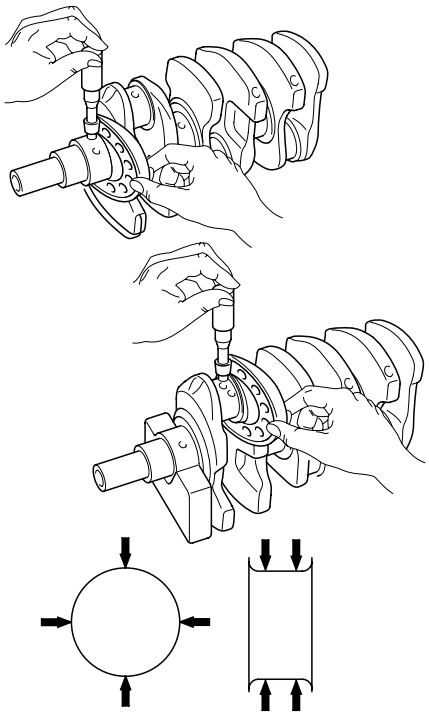

KCRF212A

**CYLINDER BLOCK**

1. Remove gasket materials.
   Using a gasket scraper, remove all the gasket material from the top surface of the cylinder block.

2. Clean cylinder block
   Using a soft brush and solvent, thoroughly clean the cylinder block.

3. Inspect the top surface of cylinder block for flatness.
   Using a precision straight edge and feeler gauge, measure the surface contacting the cylinder head gasket for warpage.

| |
|---|
| Flatness of cylinder block gasket surface<br>Standard : 0.03mm(0.0012in.) or less |

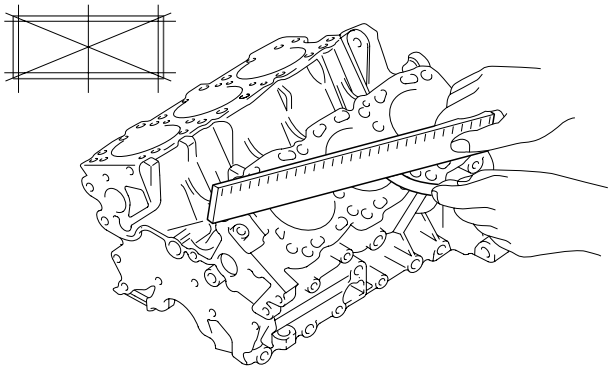

LDLG044A

4. Inspect cylinder bore diameter
   Visually check the cylinder for vertical scratchs.
   If deep scratches are present, replace the cylinder block or process the piston to be oversized.

5. Inspect the cylinder bore diameter
   Using a cylinder bore gauge, measure the cylinder bore diameter at position in the thrust and axial directions.

| |
|---|
| Standard diameter<br>86.70 ~ 86.73mm (3.4134 ~ 3.4146in.) |

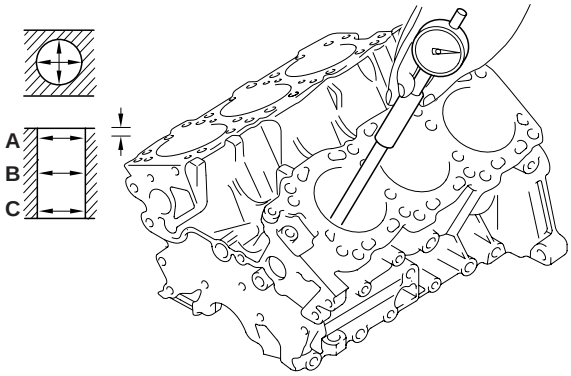


EDQF153A

6. Check the cylinder bore size code(A) on the cylinder block.

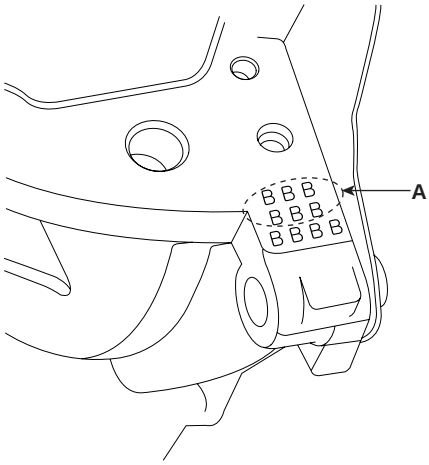


EDQF078B

| Class | Size code | Cylinder bore inner diameter |
|---|---|---|
| A | A | 86.70 ~ 86.71mm<br>(3.4134 ~ 3.4138in.) |
| B | B | 86.71 ~ 86.72mm<br>(3.4138 ~ 3.4142in.) |
| C | C | 86.72 ~ 86.73mm<br>(3.4142 ~ 3.4146in.) |

7. Check the piston size code(A) on the piston top face.

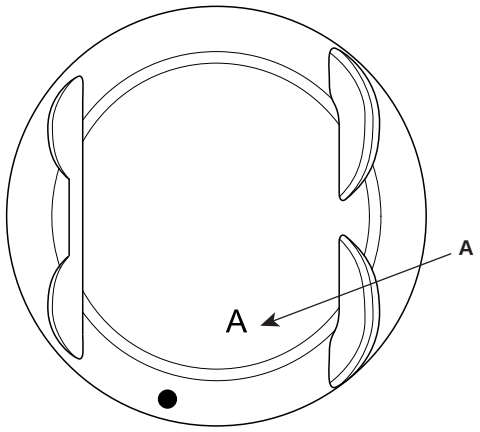


KCBF176D

| Class | Size code | Piston outer diameter |
|---|---|---|
| A | A | 86.67 ~ 86.68mm (3.4122 ~ 3.4126in.) |
| B | - | 86.68 ~ 86.69mm (3.4126 ~ 3.4130in.) |
| C | C | 86.69 ~ 86.70mm (3.4130 ~ 3.4134in.) |

8. Select the proper piston related to the cylinder bore class.

Clearance : 0.02 ~ 0.04mm(0.0008 ~ 0.0016in.)

**CYLINDER BORING**

1. The over size piston is chosen on the maximum inner diameter of the cylinder.

***NOTE***

*The piston size mark is on the top surface of the piston.*

2. Measure the outer diameter of the piston which is installed before.

3. Calculate the new bore size with the measurement in the step 2.

New bore size = measured outer diameter of piston
+ 0.02 ~ 0.04mm(0.0008~0.0016in.)[clearance]
- 0.01mm(0.0004in.)[for horning]

4. Bore the cylinder to the calculated size.

***CAUTION***

***Bore the cylinders in firing order to prevent the cylinders from be twisted by high temperature.***

5. Stop boring and start horning for the proper clearance.

6. Measure the clearance between a piston and a cylinder.

Specification
0.02 ~ 0.04mm(0.0008 ~ 0.0016in.)

***NOTE***

*Bore all the cylinders with the same over size.*

**PISTON AND RINGS**

1. Clean pistons.

   1) Using a gasket scraper, remove the carbon from the piston top.

   2) Using a groove cleaning tool or a broken ring, clean the piston ring grooves.

   3) Using solvent and a brush, thoroughly clean the piston.

   ***NOTE***

   *Do not use a wire brush.*

2. The standard measurement of the piston outside diameter is taken 14 mm (0.5512 in.) from the bottom of the piston.

| **Standard diameter** |
|---|
| 86.67 ~ 87.00(3.4122 ~ 3.4252in.) |

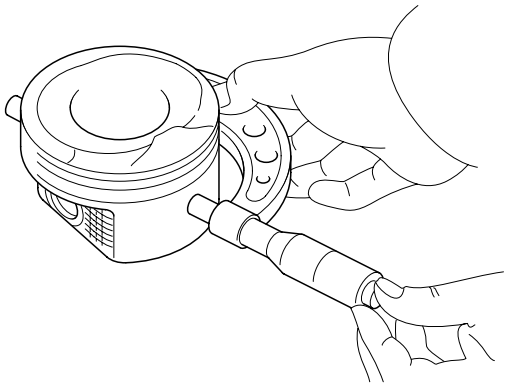

ECKD001D

3. Calculate the difference between the cylinder bore inner diameter and the piston outer diameter.

| **Piston-to-cylinder clearance** |
|---|
| 0.02 ~ 0.04mm(0.0008 ~ 0.0016in.) |

4. Inspect the piston ring side clearance.
   Using a feeler gauge, measure the clearance between a new piston ring and the ring groove.

| **Piston ring side clearance** |
|---|
| Standard |
| No.1 : 0.04 ~ 0.08mm (0.0016 ~ 0.0031in.) |
| No.2 : 0.03 ~ 0.07mm (0.0012 ~ 0.0027in.) |
| Oil ring : 0.06 ~ 0.15mm (0.0024 ~ 0.0059in.) |
| Limit |
| No.1 : 0.1mm (0.004in.) |
| No.2 : 0.1mm (0.004in.) |
| Oil ring : 0.2mm (0.008in.) |

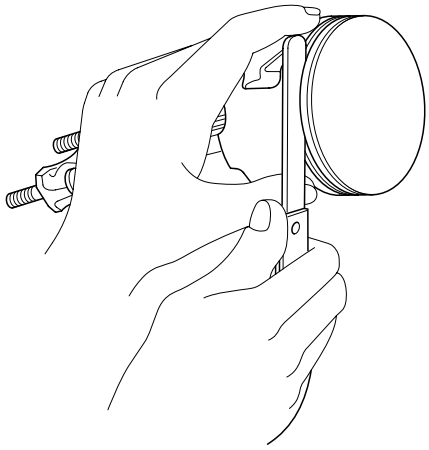

LDLG045A

If the clearance is greater than the maximum, replace the piston.

5. Inspect piston ring end gap.
   To measure the piston ring end gap, insert a piston ring into the cylinder bore. Position the ring at right angles to the cylinder wall by gently pressing it down with a piston. Measure the gap with a feeler gauge. If the gap exceeds the service limit, replace the piston ring. If the gap is too large, recheck the cylinder bore diameter. If the bore is over the service limit, the cylinder block must be replaced or bored

**Piston ring end gap**
Standard
No.1 : 0.15 ~ 0.30mm (0.0059 ~ 0.0118in.)
No.2 : 0.30 ~ 0.45m (0.0118 ~ 0.0177in.)
Oil ring : 0.20 ~ 0.70mm (0.0079 ~ 0.0275in.)
Limit
No.1 : 0.6mm (0.0236in.)
No.2 : 0.7mm (0.0275in.)
Oil ring : 0.8mm (0.0315in.)

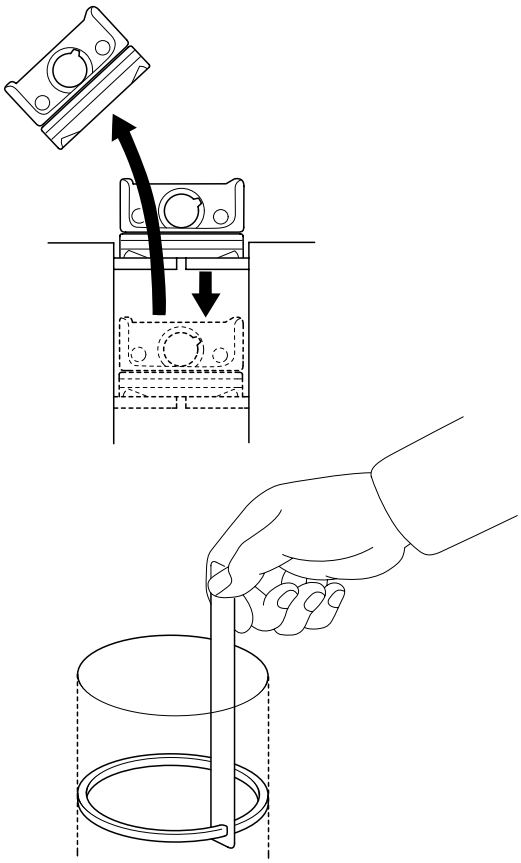

ECKD001K

**PISTON PINS**

1. Measure the outer diameter of the piston pin.

**Piston pin outerdiameter**
21.001 ~ 21.007mm (0.8268 ~ 0.8270in.)

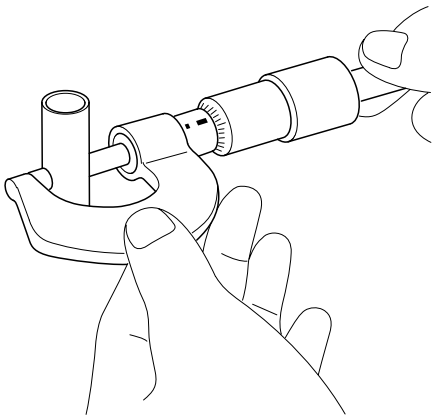

ECKD001Z

2. Measure the piston pin-to-piston clearance.

**Piston pin-to-piston clearance**
0.007 ~ 0.022mm (0.0003 ~ 0.0009in.)

3. Check the difference between the piston pin outer diameter and the connecting rod small end inner diameter.

**Piston pin-to-connecting rod interference**
-0.033 ~ -0.016mm (-0.0013 ~ -0.0006in.)

## REASSEMBLY EBDEDDF4

***NOTE***

- *Thoroughly clean all parts before reassembling.*
- *Before installing the parts, apply fresh engine oil to all sliding and rotating surfaces.*
- *Replace all gaskets, O-rings and oil seals with new parts.*

1. Assemble the piston and the connecting rod.

   1) Use a hydraulic press for installation.

   2) The piston front mark(A) and the connecting rod front mark must face the timing belt side of the engine.

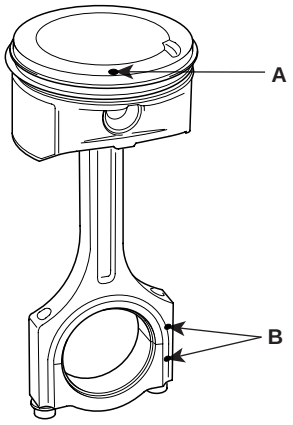


KCBF176E

2. Install piston rings.

   1) Install the oil ring spacer and 2 side rails by hand.

   2) Using a piston ring expander, install the 2 compression rings with the code mark facing upward.

   3) Position the piston rings so that the ring ends are as shown.

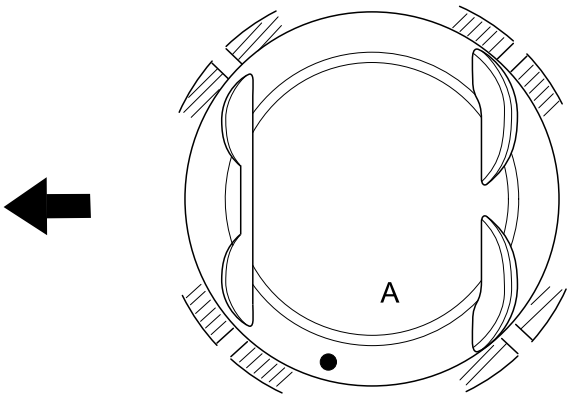


KCBF176F

3. Install the connecting rod bearings.

   1) Align the bearing(A) claw with the groove of the connecting rod or connecting rod cap(B).

   2) Install the bearings(A) in the connecting rod and connecting rod cap(B).

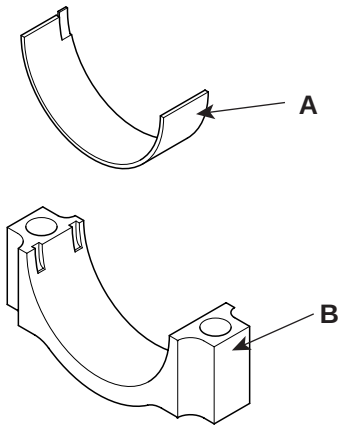


KCRF118B

***CAUTION***

***When reassembling the connecting rods and the caps, ensure the front marks on them.***

4. Install the CKP sensor(A).

| |
|---|
| Tightening torque<br>6.9 ~ 9.8Nm(0.7 ~ 1.0kgf.m, 5.1 ~ 7.2lb-ft) |

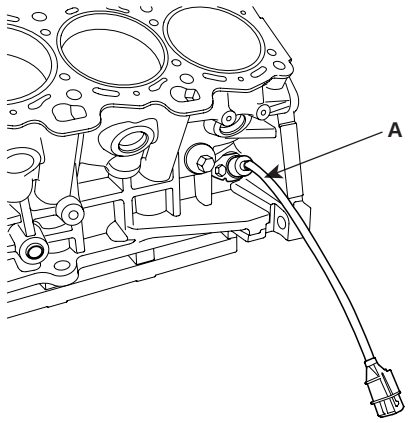


KCBF128A

5. Install main bearings.

***NOTE***

*Upper bearings have the oil grooves of the oil holes; Lower bearings do not.*

1) Aligning the bearing claw with the claw groove of the cylinder block, push in the 4 upper bearings(A).

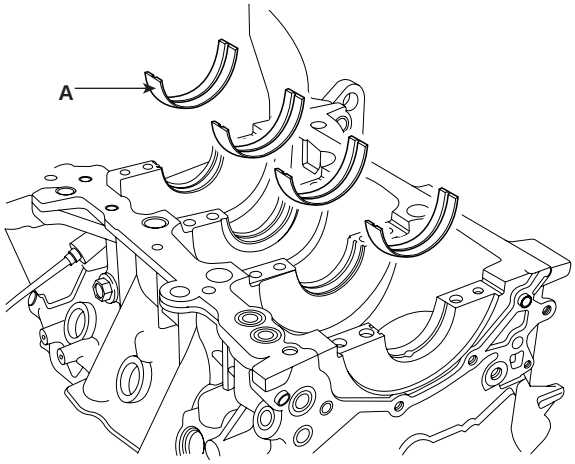


EDQF076A

2) Aligning the bearing claw with the claw groove of the main bearing cap, push in the 4 lower bearings(B) on the bearing caps(A).

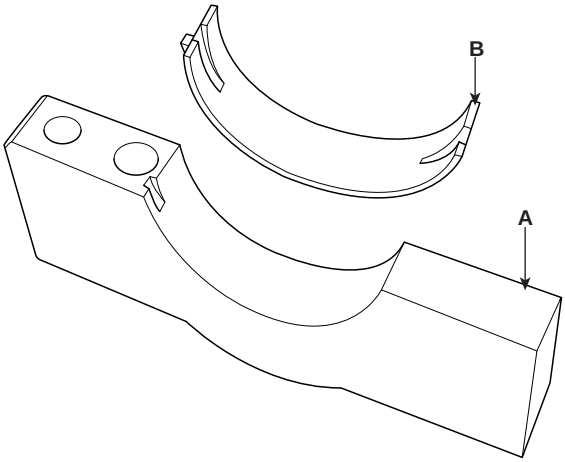


EDQF079A

6. Install thrust bearings.
Install the 2 thrust bearings(A) under the No.3 journal position of the cylinder block with the oil grooves facing outward.

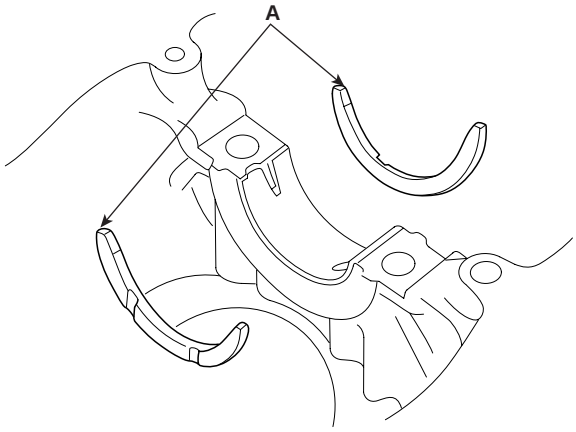


ECKD324A

7. Place crankshaft(A) on the cylinder block.

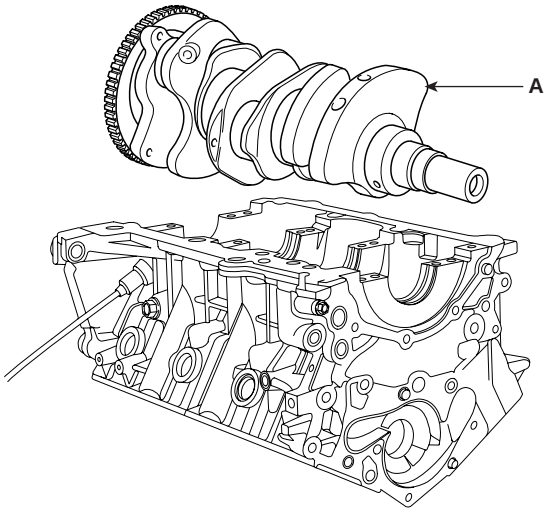


EDQF074A

8. Place main bearing caps on cylinder block.

9. Install main bearing cap bolts.

   1) Install and uniformly tighten the bearing cap bolts, in two steps, in the sequence shown.

**Tightening torque**
M8 : 15.7Nm(1.6 kgf.m, 11.6lb-ft) + 90°
M10 : 29.4Nm(3.0 kgf.m, 21.7lb-ft)+ 90°

***NOTE***

- *Use new main bearing cap bolt with engine oil applied.*
- *If any of the bearing cap bolts are broken or deformed, replace it.*
- *Washers have their direction(Up/Down)*
- *Assemble the bearing cap bridge on which its arrow mark faces the engine front.*
- *Before tightening, make the bearing caps be seated on the block firmly.*

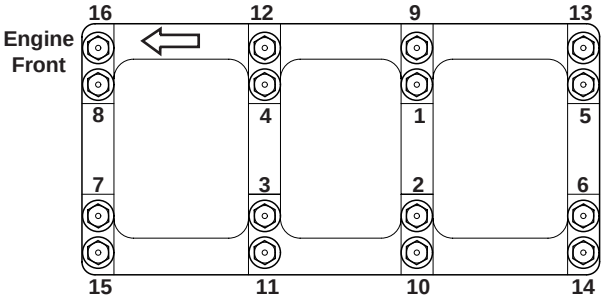


LDLG046A

***NOTE***

*Use SST( 09221-4A000 ), install main bearing cap bolts.*

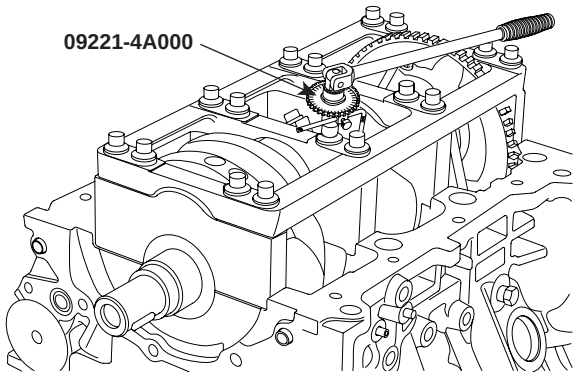


KCBF127B

   2) Check that the crankshaft turns smoothly.

10. Check crankshaft end play.

11. Install the piston and connecting rod assemblies.

***NOTE***

- *Before installing the pistons, apply a coat of engine oil to the ring grooves and cylinder bores.*
- *When installing the piston, ensure that the coat on the cylinder wall is not damaged or scratched.*

   1) Install the ring compressor, check that the bearing is securely in place, then position the piston in the cylinder, and tap it in using the wooden handle of a hammer.

   2) Stop inserting the piston when the ring inserted in the cylinder and check the alignment of the journal and the connecting rod.

   3) Apply engine oil to the bolt threads. Install the rod caps with bearings, and torque the bolts.

**Tightening torque**
19.6Nm (2.0kgf.m, 14.46lb-ft) + 90°

***NOTE***

- *Always use new connecting rod bolts.*
- *Maintain downward force on the ring compressor to prevent the rings from expanding before entering the cylinder bore.*

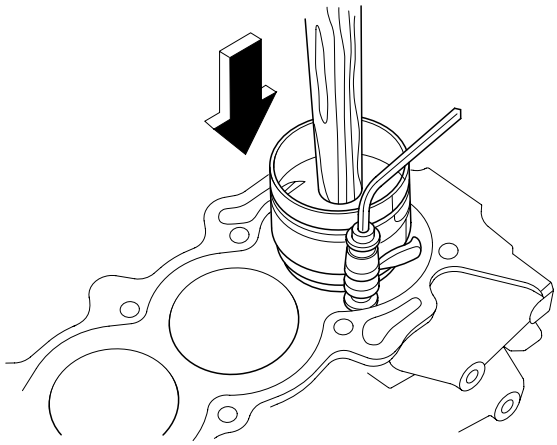

ECKD001F

- *Use SST(09221-4A000), install connecting rod bearing cap bolts.*

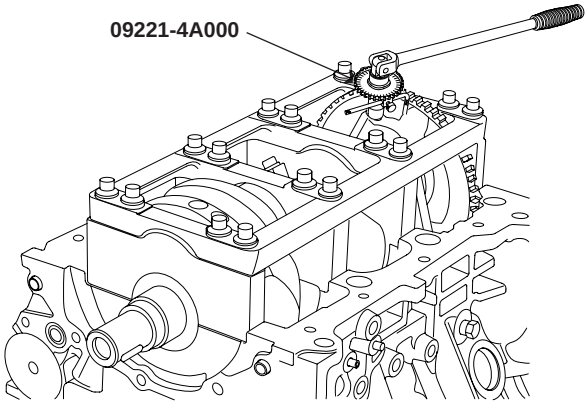


KCBF127C

12. Install the rear oil seal case.

**Tightening torque**
9.80 ~ 11.76Nm (1.0 ~ 1.2kgf.m, 7.23 ~ 8.67lb-ft)

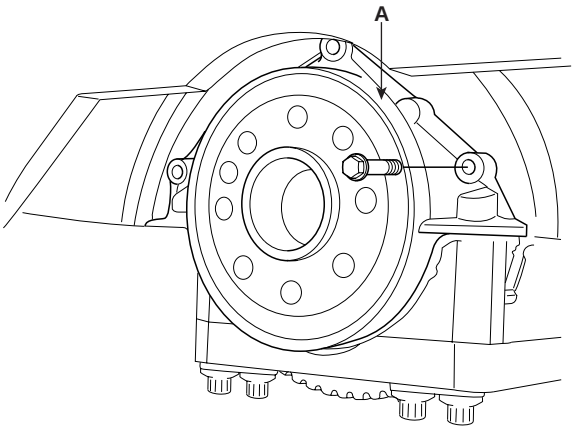


EDQF174A

1) Make clean the sealing face before assembling two parts.

***NOTE***

- *Remove harmful foreign materials on the sealing face before applying sealant*
- *Apply sealant to the inner threads of the bolt holes.*

2) Assembling rear oil seal case, the liquid sealant TB1217H should be applied to the rear oil seal case.
The part must be assembled within 5 minutes after sealant was applied.

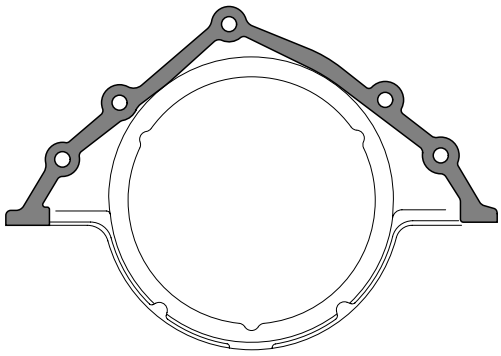

KCBF129A

13. Using SST(09231-33000), install rear oil seal after applying engine oil on the rip of the oil seal.

14. Install the oil pump case.

15. Install upper oil pan.

1) Using a gasket scraper, remove all the old packing material from the gasket surfaces.

2) Before assembling the oil pan, the liquid sealant TB1217H should be applied on upper oil pan.
The part must be assembled within 5 minutes after the sealant was applied.

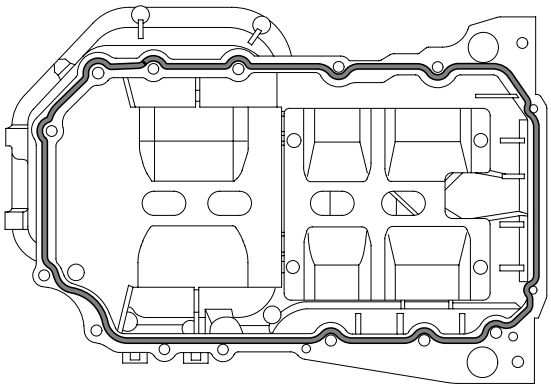

KCBF130A

***NOTE***

- *Clean the sealing face before assembling two parts.*
- *Remove harmful foreign materials on the sealing face before applying sealant.*
- *When applying sealant gasket, sealant must not protrude into the inside of oil pan.*
- *To prevent leakage of oil, apply sealant gasket to the inner threads of the bolt holes.*

3) Install upper oil pan.
Uniformly tighten the bolts in several passes.

**Tightening torque**
Bolts 1~15 : 18.6 ~ 23.5Nm(1.9 ~ 2.4kgf.m, 13.7 ~ 17.4lb-ft)
Bolts 16,17 : 4.9 ~ 6.9Nm(0.5 ~ 0.7kgf.m, 3.6 ~ 5.1lb-ft)

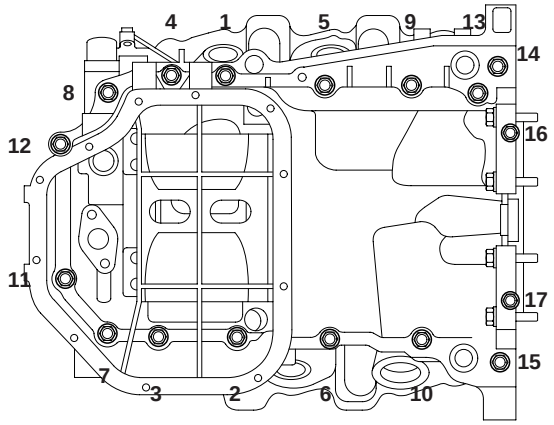


KCBF131A

16. Install the oil screen(A).

**Tightening torque**
14.7 ~ 21.6Nm (1.5 ~ 2.2kgf.m, 10.8 ~ 15.9lb-ft)

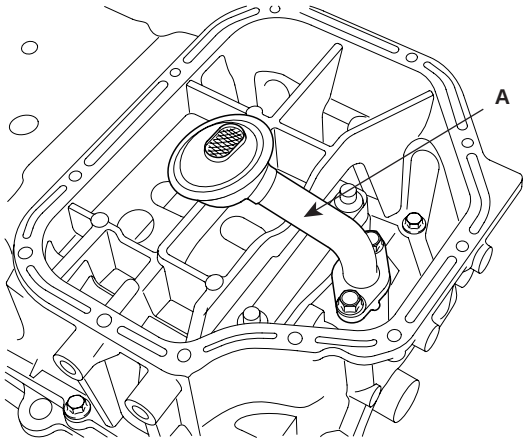


KCBF124A

17. Install the lower oil pan.

1) Using a gasket scraper, remove all the old packing material from the gasket surfaces.

2) Before assembling the oil pan, the liquid sealant TB1217H should be applied on lower oil pan.
The part must be assembled within 5 minutes after the sealant was applied.

***NOTE***

- *Clean the sealing face before assembling two parts.*
- *Remove harmful foreign materials on the sealing face before applying sealant.*
- *When applying sealant gasket, sealant must not protrude into the inside of oil pan.*
- *To prevent leakage of oil, apply sealant gasket to the inner threads of the bolt holes.*

3) Install lower oil pan.
Uniformly tighten the bolts in several passes.

**Tightening torque**
9.8 ~ 11.8Nm (1.0 ~ 1.2kgf.m, 7.2 ~ 8.7lb-ft)

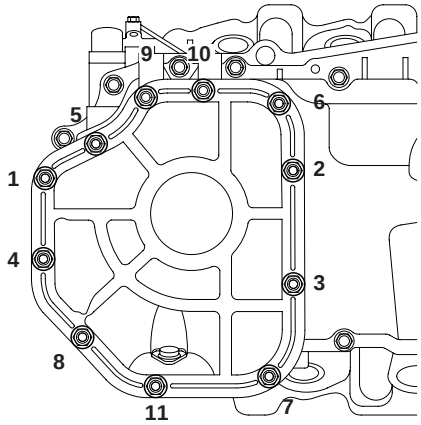


KCBF133A

18. Install the air conditioning compressor bracket(A). (Refer to 'HA' group)

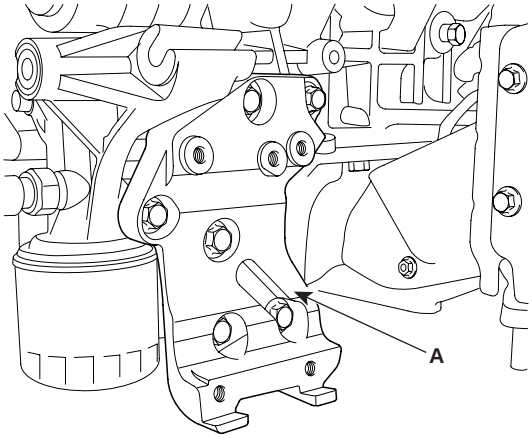


KCBF138A

19. Install the power steering pump bracket(A) and the knock sensor(B).

**Tightening torque**
18.6 ~ 23.5Nm (1.9 ~ 2.4kgf.m, 13.7 ~ 17.4lb-ft)

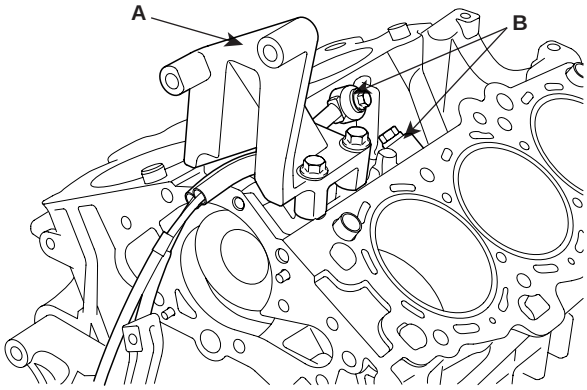


KCBF122A

***CAUTION***

- ***On Bank 1, the black knock sensor connector should be installed and on Bank 2, the gray one should.***

## INSTALLATION EF30F311

1. Install the water pump.
2. Install the air conditioning compressor.(Refer to 'HA' group).
3. Install the cylinder head.
4. Install the power steering pump.(Refer to 'ST' group).
5. Install the generator.
6. Install the intake manifold.
7. Install the exhaust manifold.
8. Install the timing belt.
9. Install the rear plate(A).

**Tightening torque**
9.8 ~ 11.8Nm(1.0 ~ 1.2kgf.m, 7.2 ~ 8.7lb-ft)

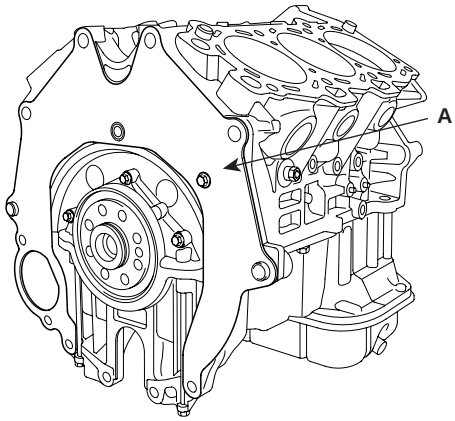


KCBF121A

10. Install the drive plate(A).

**Tightening torque**
71.6 ~ 75.5Nm(7.3 ~ 7.7kgf.m, 52.8 ~ 55.7lb-ft)

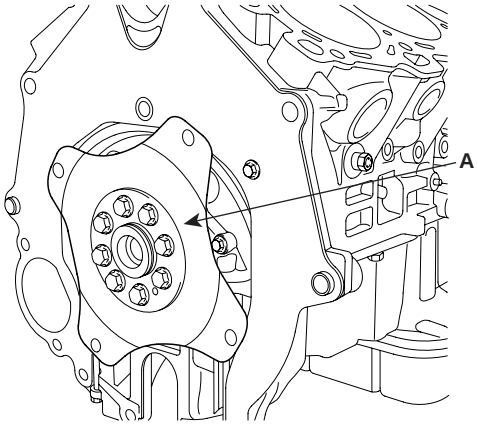


KCBF120A

# COOLING SYSTEM

## COMPONENTS E3589507

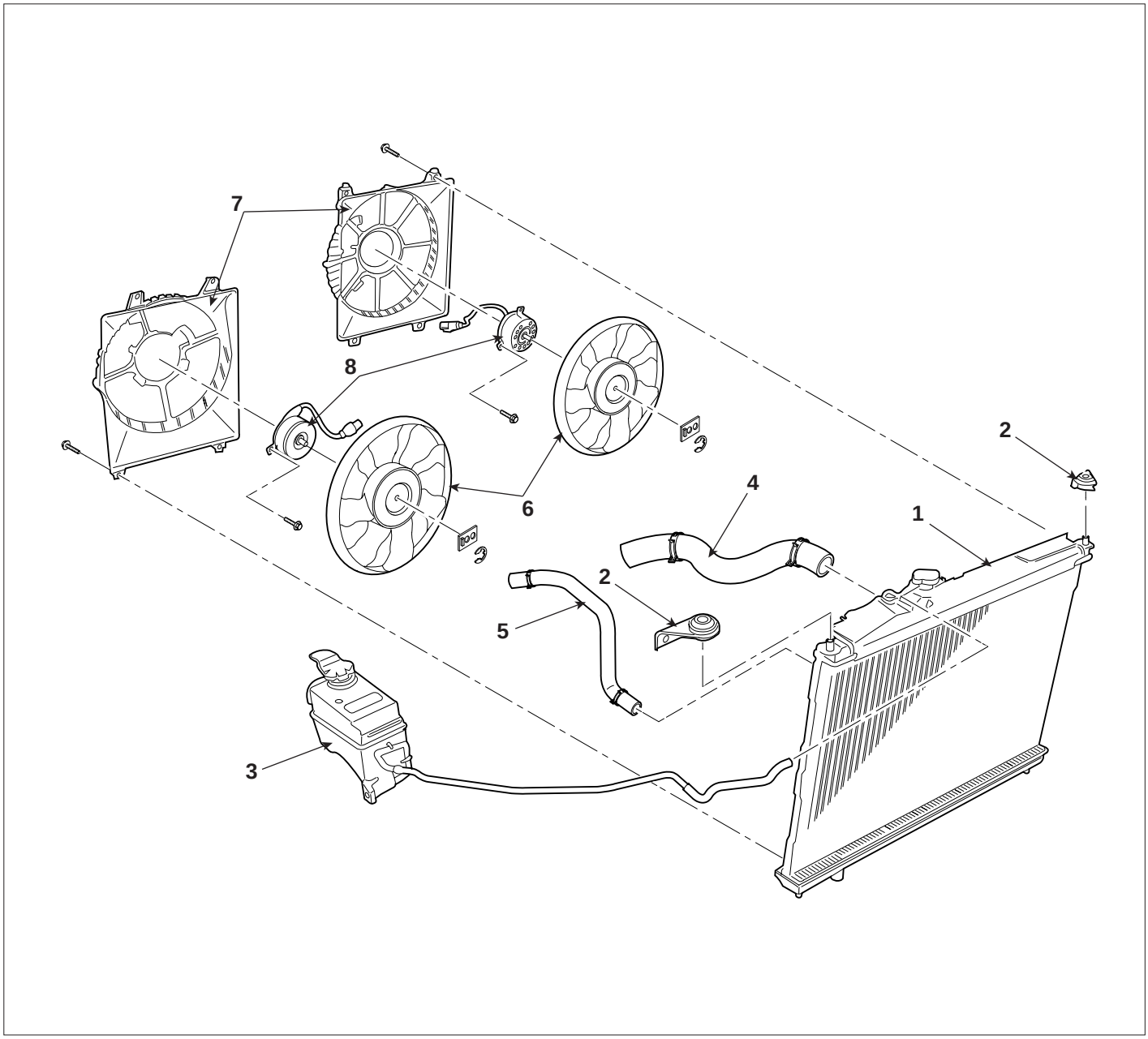


1. Radiator
2. Radiator bracket
3. Coolant reservoir tank
4. Radiator upper hose
5. Radiator lower hose
6. Radiator fan
7. Shroud
8. Motor assembly

SCMEM6010L

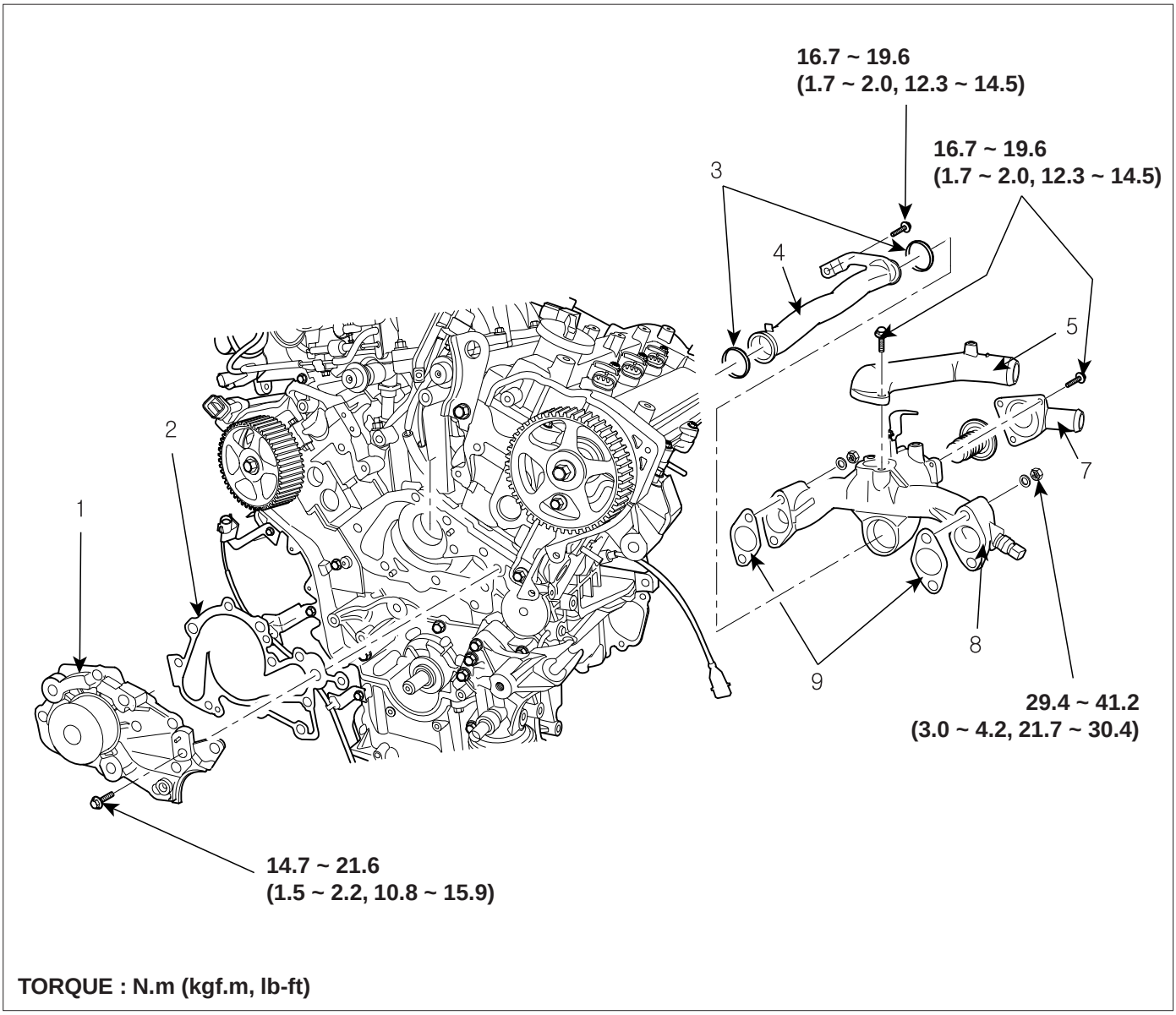


1. Water pump
2. Water pump gasket
3. Water pipe O-ring
4. Water inlet pipe
5. Water outlet pitting
6. Thermostat
7. Water inlet pitting
8. Water temp. control assembly
9. Water temp. control assembly gasket

LDLG048A

## ENGINE COOLANT REFILLING AND BLEEDING EDA90EDC

**WARNING**

**Never remove the radiator cap when the engine is hot. Serious scalding could be caused by hot fluid under high pressure escaping from the radiator.**

***CAUTION***

***When pouring engine coolant, be sure to shut the relay box lid and not to let coolant spill on the electrical parts or the paint. If any coolant spills, rinse it off immediately.***

1. Make sure the engine and radiator are cool to the touch.
2. Open the radiator cap.
3. Loosen the drain plug, and drain the coolant.
4. Tighten the radiator drain plug securely.
5. Remove, drain and clean the reservoir tank.
6. Fill water slowly through the radiator cap. Push the upper/lower hoses of the radiator so as to bleed air easily.
7. Warm the engine until the cooling fan operates 2~3 times.
   Accelerate the engine 2~3 times without load.
8. Wait until the engine is cold.
9. Repeat the steps 1~8 until the water drained is clean.
10. Fill fluid mixture with coolant and water(4 : 6) slowly through the radiator cap. Push the upper/lower hoses of the radiator so as to bleed air easily.
11. Start the engine and run so coolant circulates.
    When the cooling fan operates and coolant circulates, refill coolant through the radiator cap.
12. Repeat 11 until the cooling fan cycles 3 ~ 5 times and bleed air sufficiently out of the cooling system.
13. Install the radiator cap and fill the reservoir tank to the "MAX"(or "F") line with coolant.
14. Run the vehicle under idle until the cooling fan operates 2 ~ 3 times.
15. Stop the engine and wait until coolant gets cool.
16. Repeat 10 to 15 until the coolant level doesn't fall any more, bleeding air out of the cooling system.

***NOTE***

*Check the coolant level again in the reservoir tank for 2 ~ 3 days after replacing coolant.*

### CAP TESTING

1. Remove the radiator cap, wet its seal with engine coolant, and install it to a pressure tester.

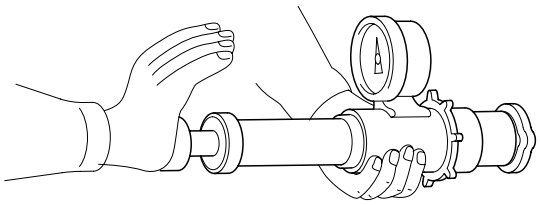

ECKD501X

2. Apply a pressure of 93 ~ 123kPa (0.95 ~ 1.25kgf/cm², 14 ~ 19psi).
3. Check for a drop in pressure.
4. If the pressure drops, replace the cap.

## REMOVAL EEAF37FE

### WATER PUMP

1. Drain the engine coolant.

**WARNING**

**System is under high pressure when the engine is hot. To avoid danger of releasing scalding engine coolant, remove the cap only when the engine is cool.**

2. Remove drive belt(A).

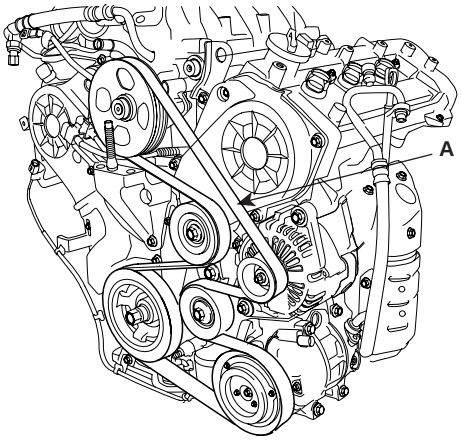


KCBF105A

3. Remove the timing belt.
4. Remove the water pump(A) and gasket(B).

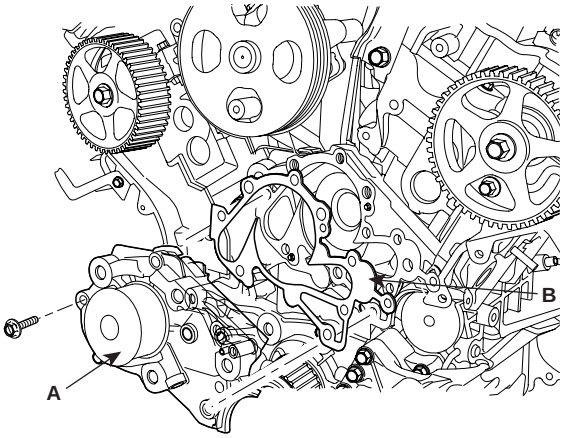


KCBF136A

### WATER TEMPERATURE CONTROL ASSEMBLY

1. Drain the engine coolant.
2. Remove the air cleaner assembly.
3. Disconnect the radiator upper and lower hose(A, B).

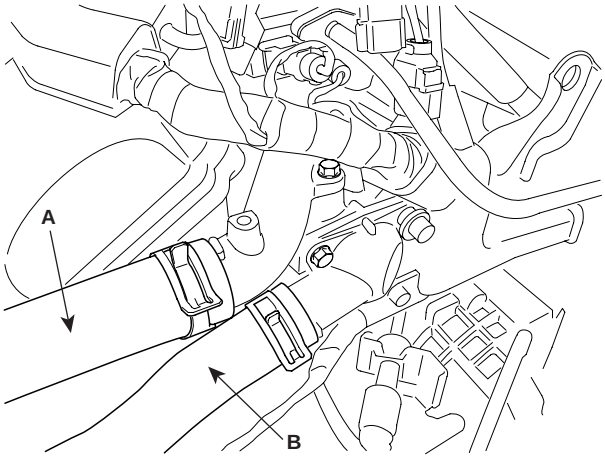


LDLG008A

4. Disconnect the ECT(Engine Coolant Temperature) sensor connector.
5. Remove the coolant hose related to the heater hoses and the ECT(Engine Coolant Temperature) system.
6. Remove wiring protector.
7. Remove water temperature control assembly(A) and the gaskets(B).

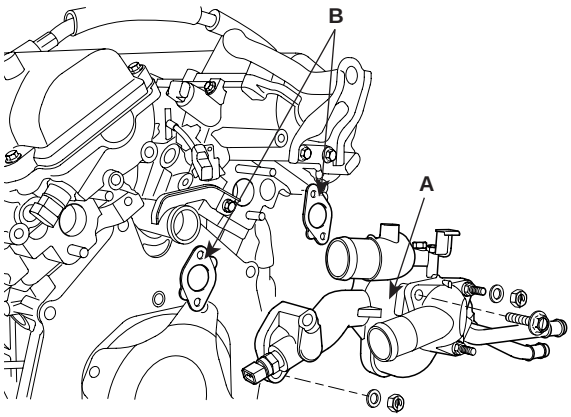


KCBF139A

8. Remove the water pipe(A).

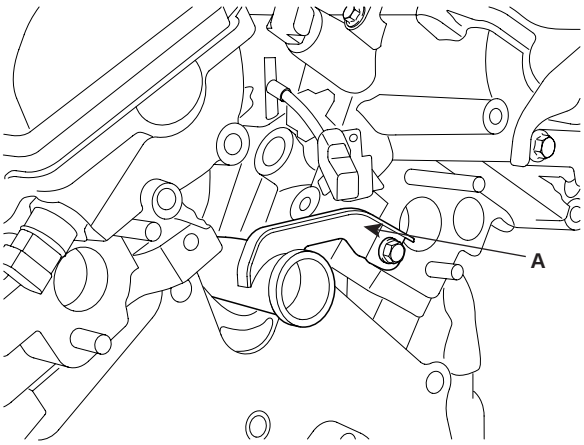


KCBF140A

**THERMOSTAT**

***NOTE***

*Removal of the thermostat would have an adverse effect, causing a lowering of cooling efficiency. Do not remove the thermostat, even if the engine tends to overheat.*

1. Drain engine coolant so its level is below thermostat.
2. Remove the coolant inlet pitting(A) and the thermostat(B).

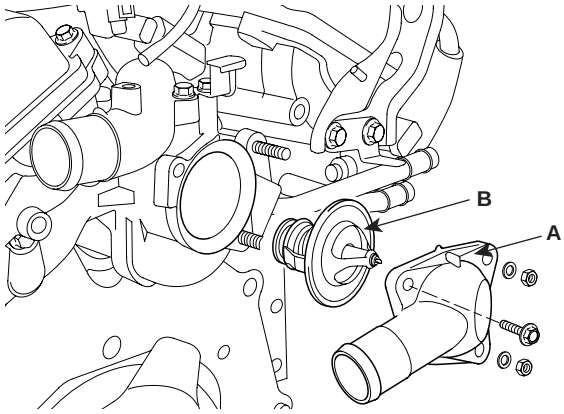


KCBF141A

**RADIATOR**

1. Drain the engine coolant. Remove the radiator cap to speed coolant draining.
2. Remove the air duct.
3. Remove the upper radiator hose(A) and lower radiator hose.

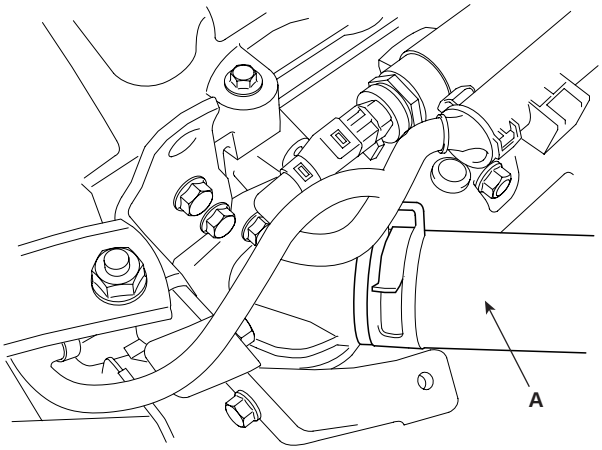


SCMEM6017D

4. Disconnect the radiator fan connector.(A, B)

**LH**

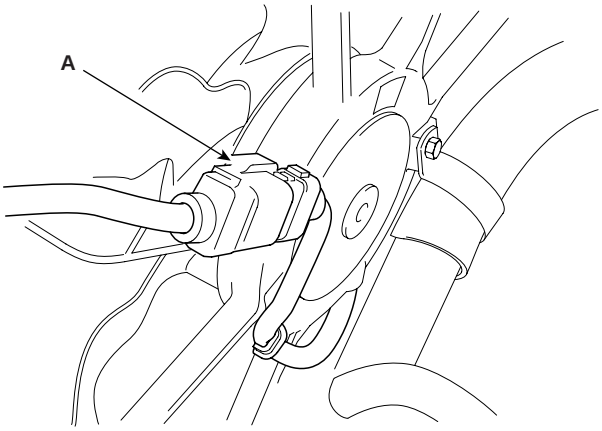


SCMEM6036D

**RH**

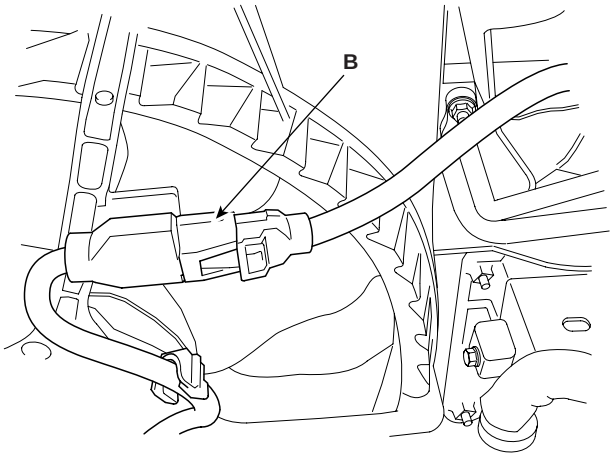


SCMEM6037D

5. Remove the radiator grill upper cover.(A)

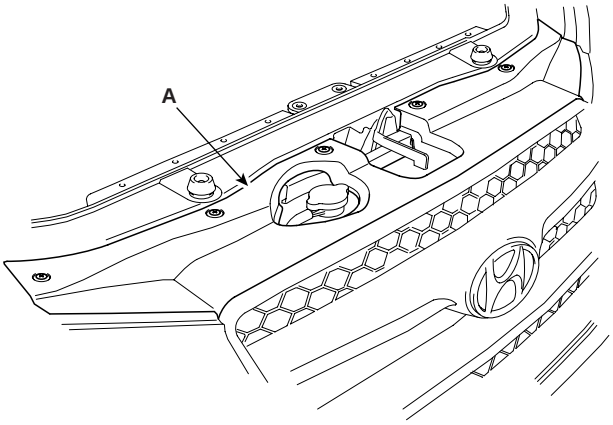


SCMEM6039D

6. Remove the head lamp washer nozzle cover and front bumper.(Refer to BD group)

7. Remove the radiator cap hose.(A)

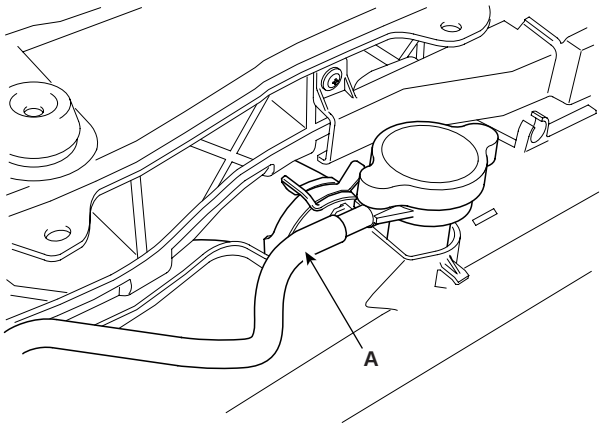


SCMEM6040D

8. First, remove the cooling fan.(First, separate LH side)

***NOTE***

*Remove the bracket bolt of radiator lower hose.*

9. Remove the radiator bracket bolt of the radiator upper side(A).

**LH**

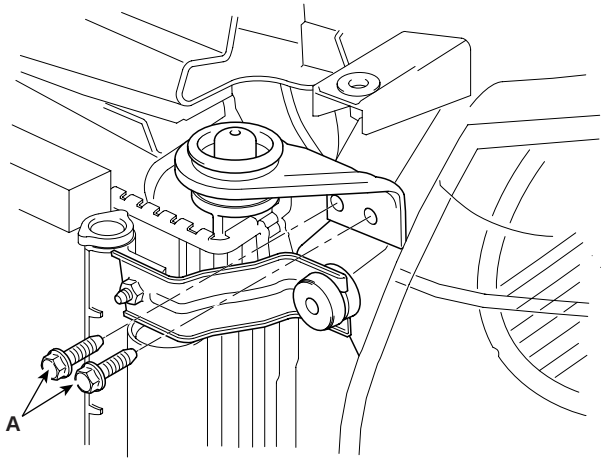


SCMEM6041D

**RH**

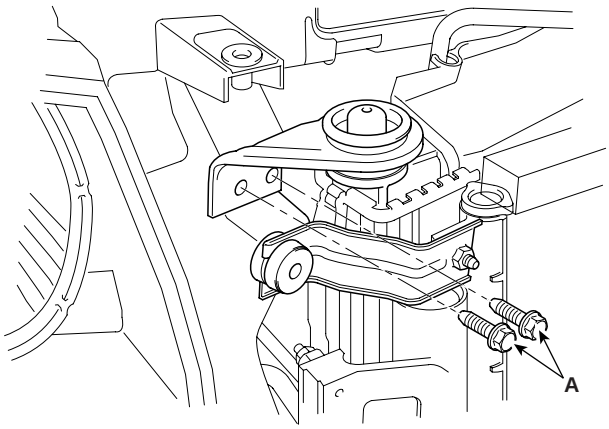


SCMEM6042D

10. Remove the radiator assembly from the engine.

## INSPECTION ECD22755

### WATER PUMP

1. Check each part for cracks, damage or wear, and replace the coolant pump assembly if necessary.
2. Check the bearing for damage, abnormal noise and sluggish rotation, and replace the coolant pump assembly if necessary.
3. Check for coolant leakage. If coolant leaks from hole, the seal is defective. Replace the coolant pump assembly.

***NOTE***

*A small amount of "weeping" from the bleed hole is normal.*

### THERMOSTAT

1. Immerse the thermostat in water and gradually heat water.

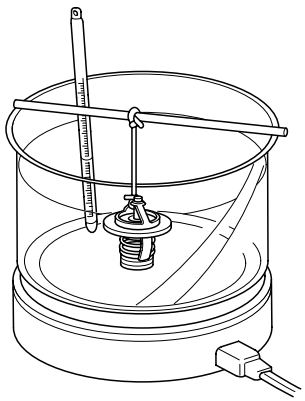

ECKD503B

2. Check the valve opening temperature.
   Valve opening temperature : 82°C (177°F)
   Full opening temperature : 95°C (205°F)
   If the valve opening temperature is not as specified, replace the thermostat.
3. Check the valve lift.
   Valve lift : Min. 10mm (0.4in.) at 95°C (205°F)
   If the valve lift is not as specified, replace the thermostat.

## INSTALLATION E8886E63

### WATER PUMP

1. Install the water pump(A) and a new gasket(B) with the bolts.

**Tightening torque**
14.7 ~ 21.6Nm (1.5 ~ 2.2kgf.m, 10.8 ~ 15.9lb-ft)

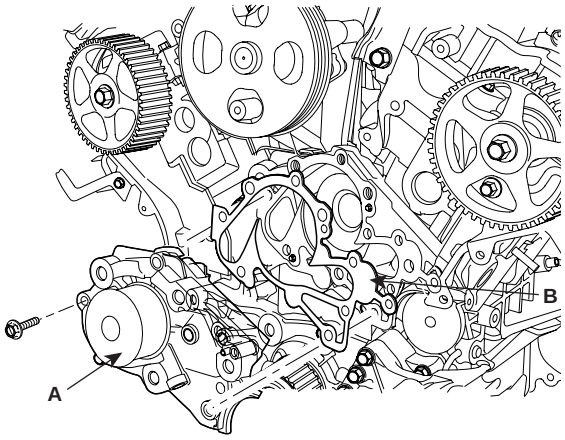


KCBF136A

***NOTE***

*Clean the contacting face before assembling.*

2. Install the timing belt.
3. Install drive belt(A).

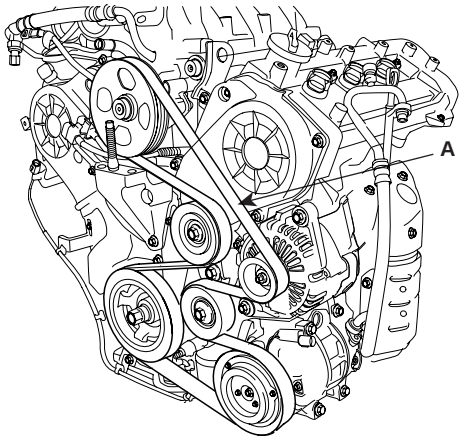


KCBF105A

4. Fill with engine coolant.
5. Start engine and check for leaks.
6. Recheck engine coolant level.

**WATER TEMPERATURE CONTROL ASSEMBLY**

1. Install the water pipe(A).

| |
|---|
| **Tightening torque**<br>16.7 ~ 19.6Nm (1.7 ~ 2.0kgf.m, 12.3 ~ 14.5lb-ft) |

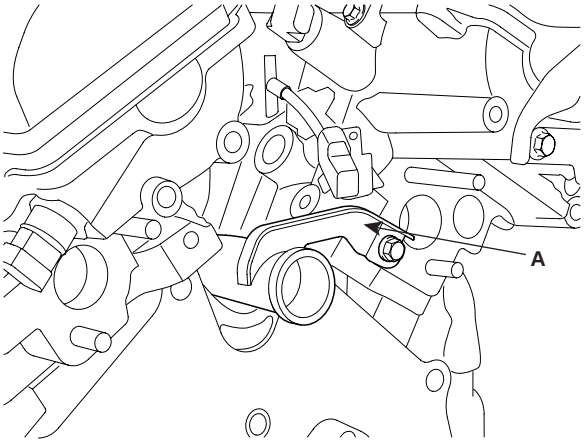


KCBF140A

2. Install the water temperature control assembly(A) with a new gasket(B).

| |
|---|
| Tightening torque<br>29.4 ~ 41.2Nm(3.0 ~ 4.2kgf.m, 21.7 ~ 30.4lb-ft |

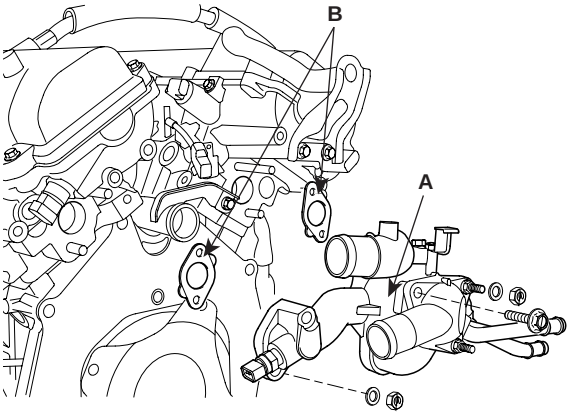


KCBF139A

***NOTE***

*Use new O-rings and wet them with water or coolant when reassembling.*

3. Install the wiring protector.
4. Connect the heater hose and ECT hose.
5. Connect the ECT sensor connector.
6. Connect the radiator upper and the lower hose(A).

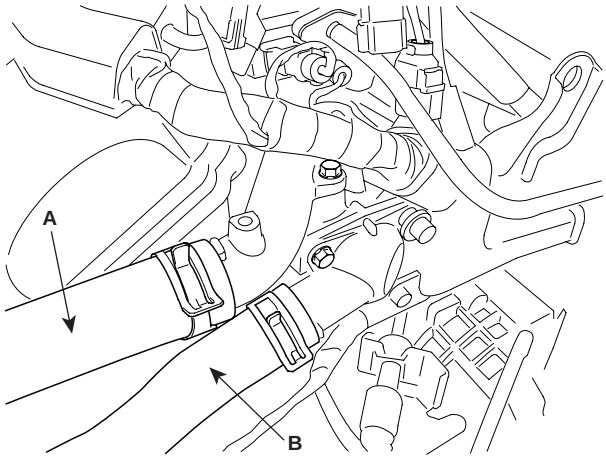


LDLG008A

7. Install the air cleaner assembly.
8. Fill with engine coolant.
9. Start engine and check for leaks.
10. Recheck engine coolant level.

## THERMOSTAT

1. Place thermostat(B) in coolant inlet pitting(A). Install the thermostat with the jiggle valve upward.

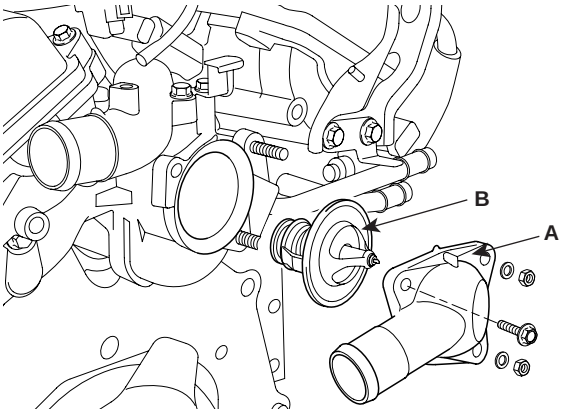


KCBF141A

2. Install the coolant inlet pitting(A).

| |
|---|
| **Tightening torque**<br>16.66 ~ 19.60Nm (1.7 ~ 2.0kgf.m, 12.30 ~ 14.47lb-ft) |

3. Fill with engine coolant.
4. Start engine and check for leaks.

## RADIATOR

1. Install the engine from radiator assembly.
2. Install the radiator bracket bolt.(A)

**LH**

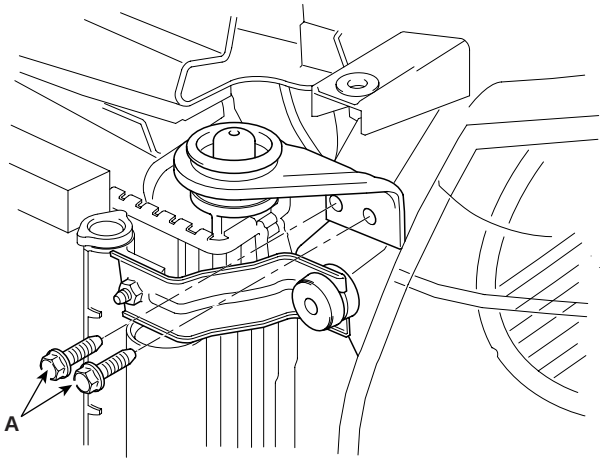


SCMEM6041D

**RH**

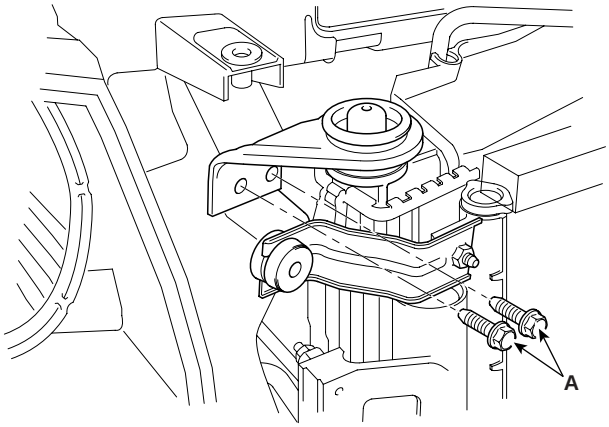


SCMEM6042D

3. Install the cooling fan.

4. Install the radiator cap hose.(A)

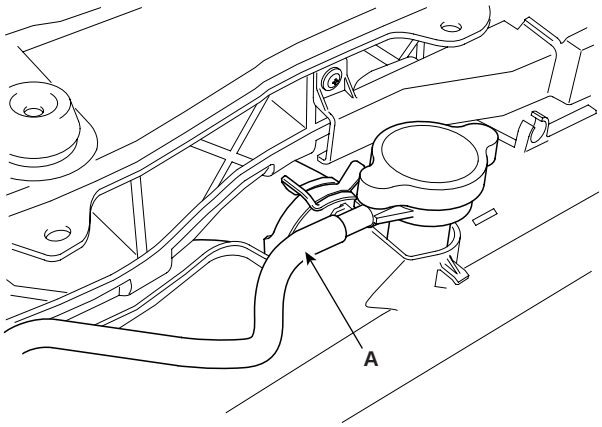


SCMEM6040D

5. Install the front bumper and head lamp washer nozzle cover.(Refer to BD group)

6. Install the radiator grill upper cover.(A)

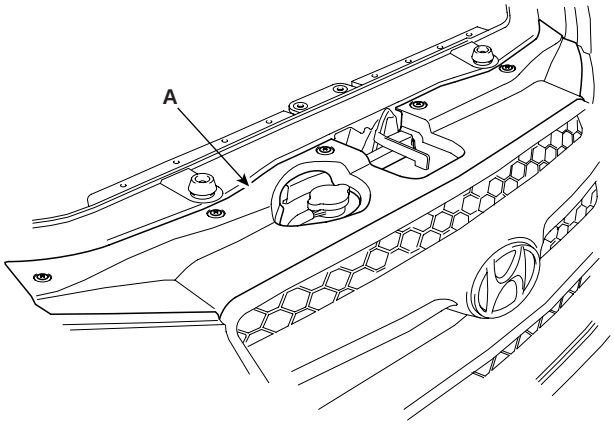


SCMEM6039D

7. Connect the radiator fan connector.(A, B)

**LH**

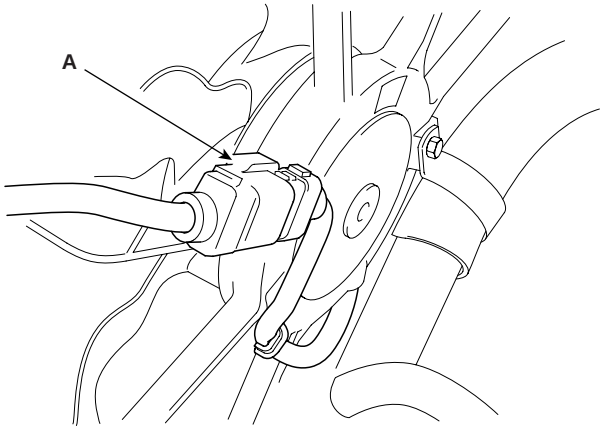


SCMEM6036D

**RH**

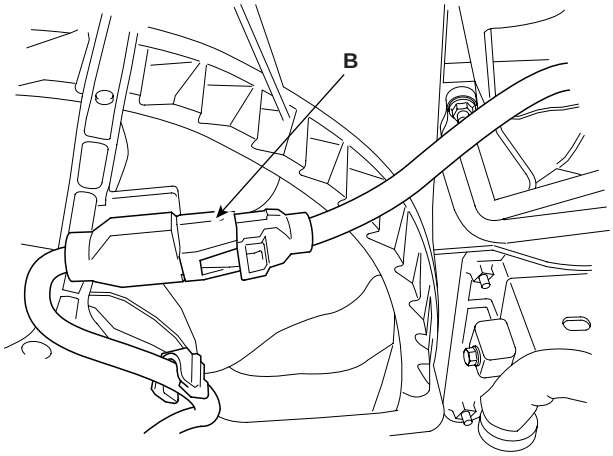


SCMEM6037D

8. Install the upper radiator hose.(A)

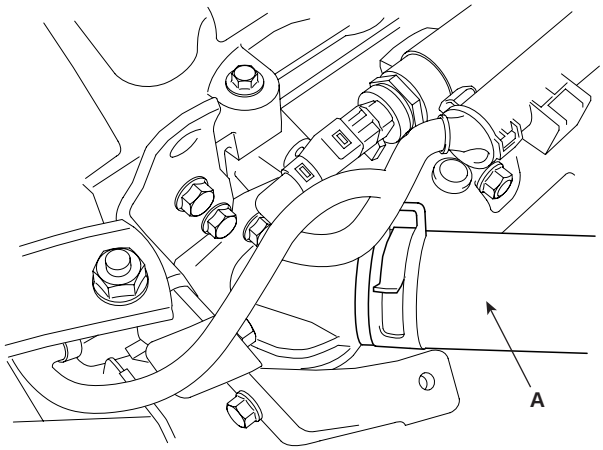


SCMEM6017D

9. Install the air duct.

10. Refill with engine coolant.

# LUBRICATION SYSTEM

## COMPONENTS ED860823

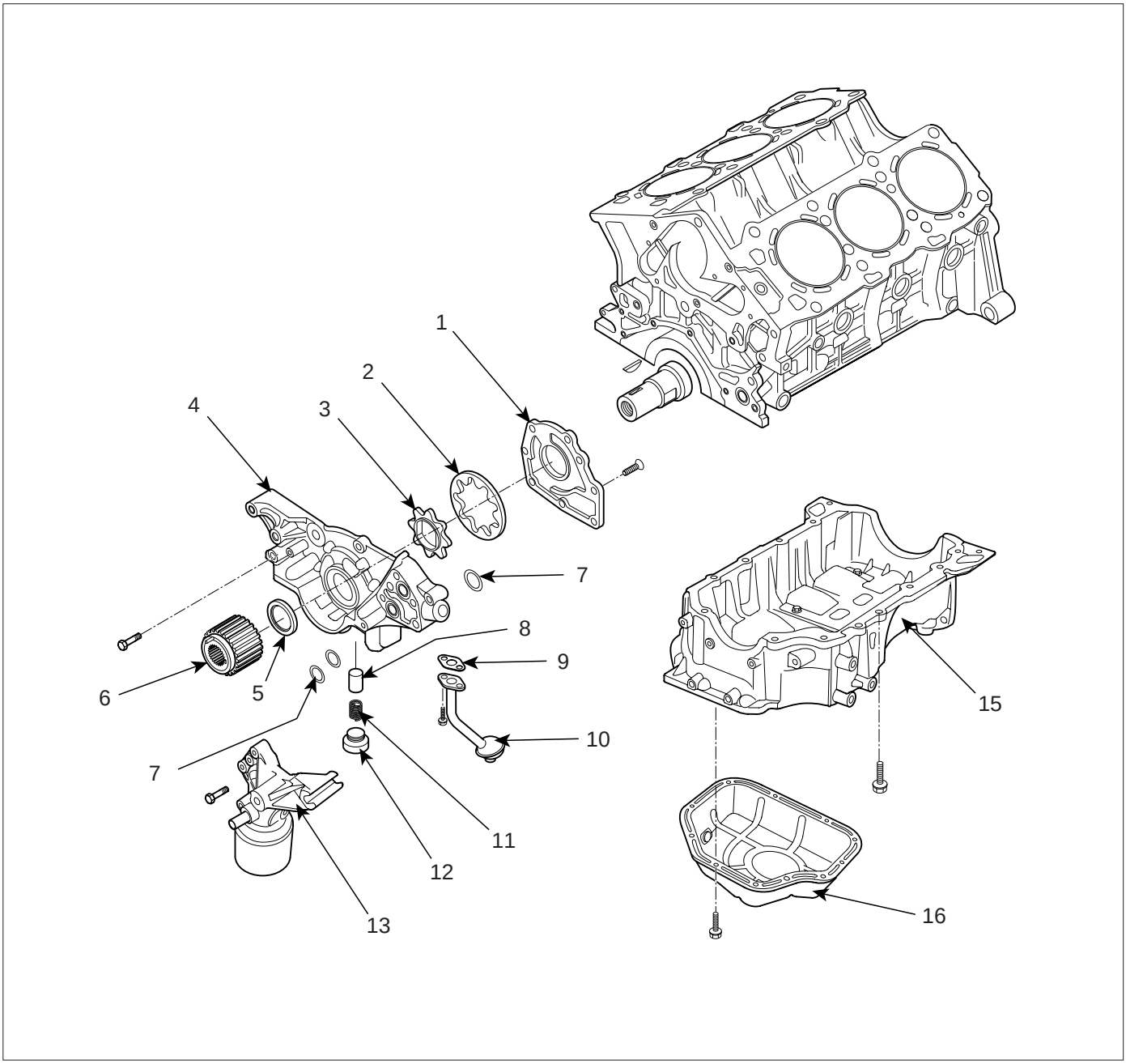


1. Oil pump cover
2. Oil pump outer rotor
3. Oil pump inner rotor
4. Oil pump case rotor
5. Oil seal
6. Crankshaft sprocket
7. O-ring
8. Relief plunger
9. Oil screen gasket
10. Oil screen
11. Relief spring
12. Plug
13. Oil filter bracket
15. Upper oil pan
16. Lower oil pan

LDLG051A

## INSPECTION E56035AA

1. Check engine oil quality.
   Check the oil for deterioration, entry of water, discoloring or thinning.
   If the quality is visibly poor, replace oil.

2. Check the engine oil level.
   After warning up the engine, make the engine stand still for five minutes or more. The oil level should be between the 'L' and 'F' marks on the dipstick, then.
   If low, check for leakage and add oil up to the "F" mark.

***NOTE***

*Do not fill with engine oil above the "F" mark.*

**SELECTION OF ENGINE OIL**

Recommended API classification : Above SJ or SL
Recommended SAE viscosity grades : 5W-20

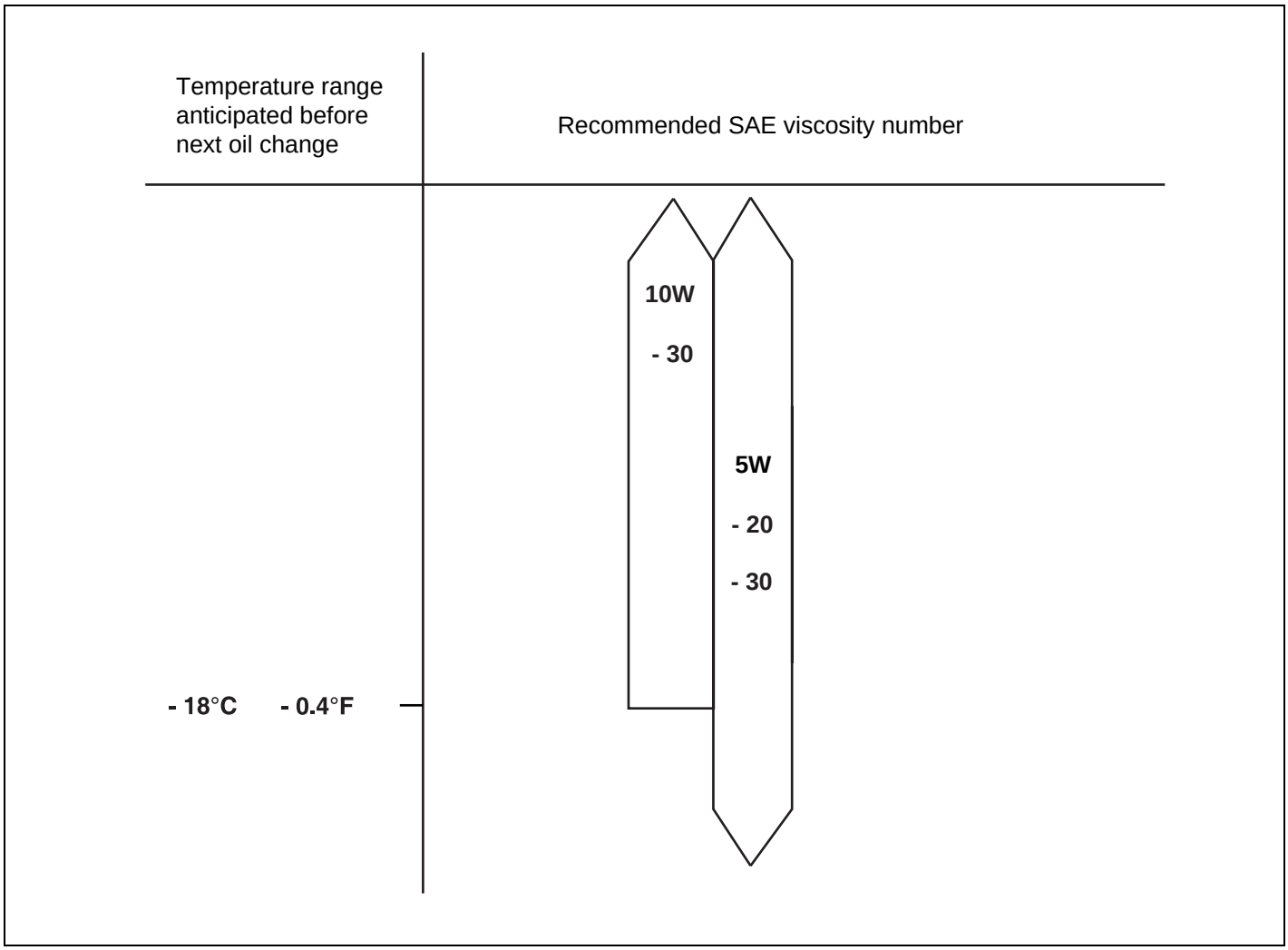


EDRF020A

***NOTE***

*For best performance and maximum protection of all types of operation, select only those lubricants which :*

- *Satisfy the requirement of the API classification.*
- *Have proper SAE grade number for expected ambient temperature range.*

*Lubricants that do not have both an SAE grade number and API service classification on the container should not be used.*

## REMOVAL E21D8F6A

### OIL PUMP CASE

1. Drain engine oil.
2. Remove the front right wheel and tire.
3. Remove the front right side cover.
4. Remove the front muffler.
5. Remove the generator.
6. Remove the timing belt.
7. Remove the oil filter bracket(A).

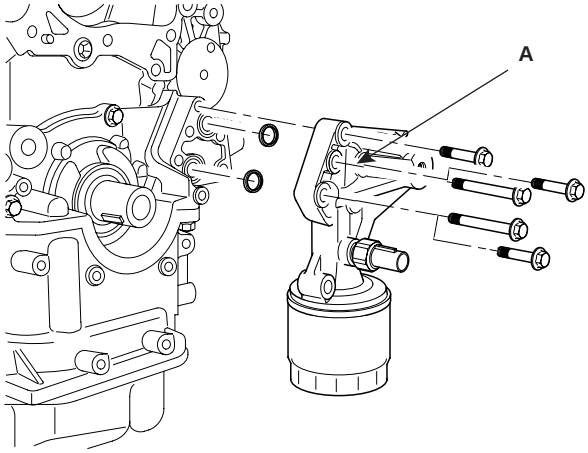


KCBF147A

8. Using SST(09215-3C000), remove the lower oil pan(A).

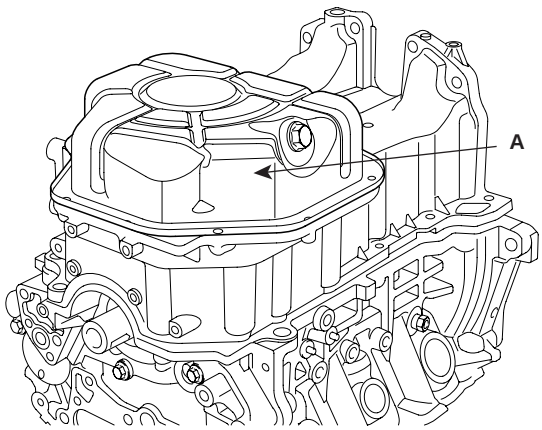


KCBF123A

**CAUTION**

***Be careful not to damage the contact surfaces of upper oil pan and lower oil pan.***

9. Remove the oil screen(A).

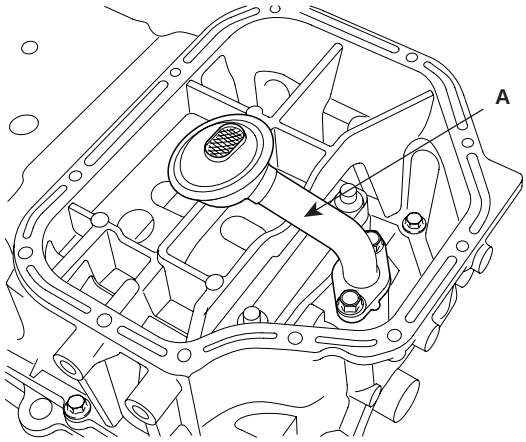


KCBF124A

10. Remove the upper oil pan, using the SST(09215-3C000)(A).

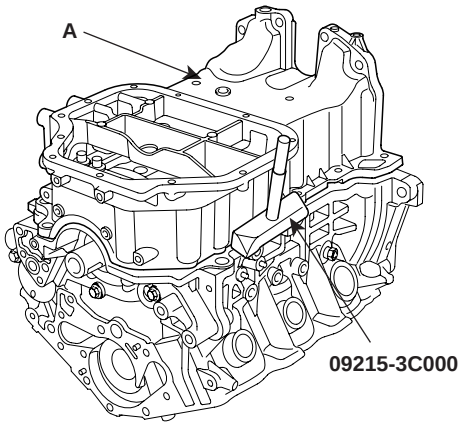


KCBF125B

**CAUTION**

***Be careful not to damage the contact surfaces of upper oil pan and lower oil pan.***

11. Remove the oil pump case(A).

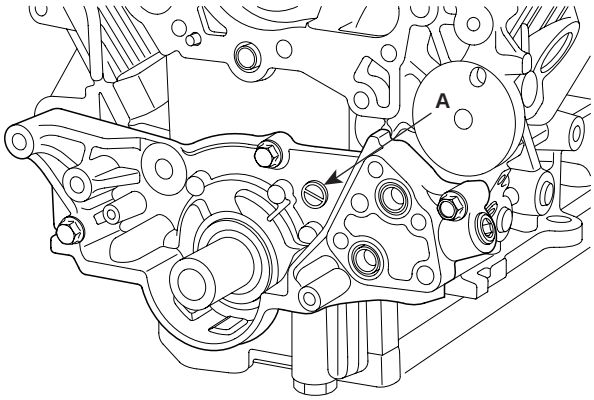


KCBF163A

12. After removing the plug(A), remove the relief spring(B) and the velief plunger(C).

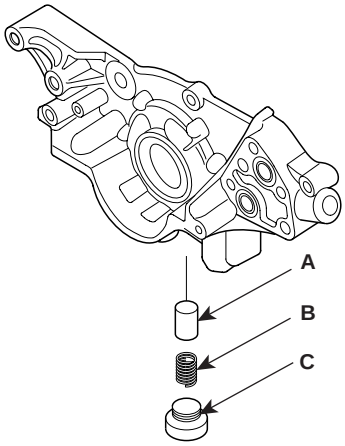


KCBF163C

## INSPECTION EA202EEB

### RELIEF SPRING

1. Check the relief plunger.
   Apply engine oil on the plunger and check that it moves smoothly in the hole. If it does not, replace the plunger or the front case only in necessary cases.

2. Check the relief valve spring.
   Check deformation or damage of the relief valve spring.

**Specification**
Free length : 43.8mm(1.7244in.)
Load : 36.3N(3.7kg, 8.21b)±3.9N(0.4kg, 0.9lb) / 40.1mm(1.5787in.)

### OIL PRESSURE SWITCH

1. Check the continuity between the terminal and the body with an ohmmeter.
   If there is no continuity, replace the oil pressure switch.

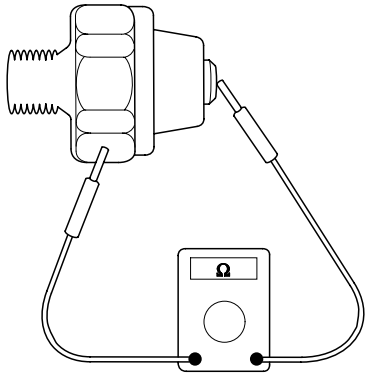


ECKD001W

2. Check the continuity between the terminal and the body when its hole is pushed by a fine rod(A). If there is continuity with pressed, replace the switch.

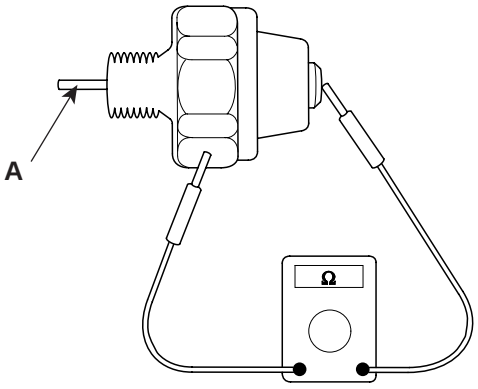


LDLG052A

3. If there is no continuity when the pressure 49.3kpa (0.5kg/cm², 7.11psi) is applied through the oil hole, the switch is operating properly.
   Check for air leakage. If air leaks, the diaphragm is broken. Replace the switch.

## REPLACEMENT E4078D2D

### OIL AND FILTER

***CAUTION***

- ***Prolonged and repeated contact with mineral oil will result in the removal of natural fats from the skin, leading to dryness, irritation and dermatitis. In addition, used engine oil contains potentially harmful contaminants which may cause skin cancer.***
- ***Wear protective clothing and gloves in order to minimize the length and frequency of contact of your skin to used oil. Wash your skin thoroughly with soap and water, or use water-less hand cleaner, to remove any used engine oil. Do not use gasoline, thinners, or solvents.***
- ***In order to preserve environment, used oil or used oil filter must be disposed only at designated disposal sites.***

1. Park the car on a level ground.
   Start the engine and let it warm up.
2. Turn the engine off.
3. Drain engine oil.
   1) Remove the oil filler cap.
   2) After lifting the car, remove the oil drain plug(A) and drain oil into a container.
4. Replace the oil filter.
   1) Remove the oil filter(B).

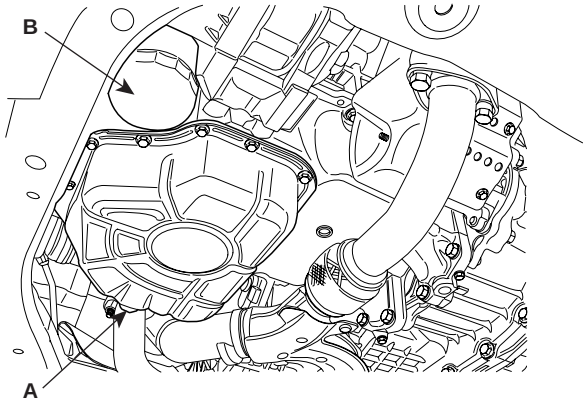


SCMEM6003L

2) Check the part number of a new oil filter is as the same as that of the old one.

3) Replace the oil filter.

4) Tighten it slightly until the o-ring of the filter cap contacting on its position.

5) Tighten it with the specified torque.

| |
|---|
| **Tightening torque**<br>16.7 ~ 24.5Nm(1.7 ~ 2.5kgf.m, 12.3 ~ 18.1lb-ft) |

5. Refill with engine oil.

   1) Install the oil drain plug with a new gasket.

| |
|---|
| Tightening torque<br>34.3 ~ 44.1Nm (3.5 ~ 4.5kgf.m, 25.3 ~ 32.5lb-ft) |

   2) Fill with fresh engine oil, after removing the engine oil level gauge.

| |
|---|
| Capacity<br>Total : 4.5L(4.76U.S.qts,3.96lmp.qts)<br>Oil pan : 4.2L(4.44U.S.qts,3.70lmp.qts)<br>Oil filter : 0.3L(0.32U.S.qts,0.26lmp.qts) |

   3) Install the oil filler cap and the oil level gauge.

6. Start the engine and ensure that no oil is leaking from the drain plug or the oil filter.

7. Recheck engine oil level.

## INSTALLATION E811FEC1

### OIL PUMP CASE

1. Assembly the relief spring(B) and the relief plunger(C) and tighten the plug(A).

| |
|---|
| **Tightening torque**<br>39.2 ~ 49.0Nm (4.0 ~ 5.0kgf.m, 28.9 ~ 36.2lb-ft) |

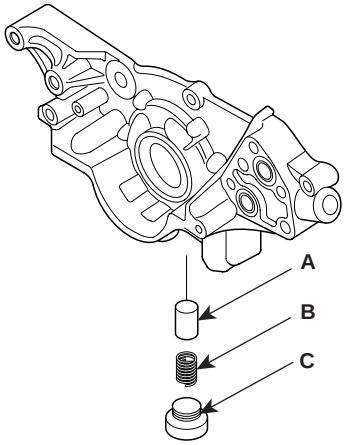


KCBF163C

2. Install oil pump case.

   1) Using a gasket scraper, remove all the old packing material from the gasket surfaces.

   2) Before assembling the oil pan, the liquid sealant TB1217H should be applied on the oil pan.
   The part must be assembled within 5 minutes after the sealant was applied.

| |
|---|
| Bead width : 2.5mm(0.0984in.) |

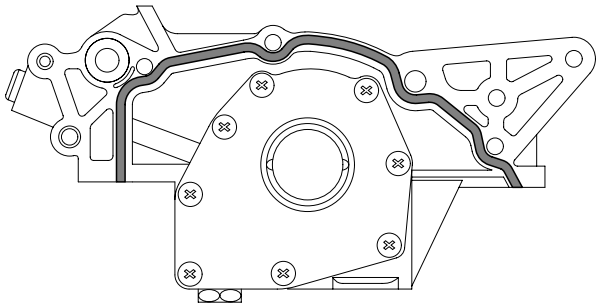

KCBF134A

***CAUTION***

- ***Make clean the sealing face before assembling two parts.***
- ***Remove harmful foreign materials on the sealing face before applying sealant.***
- ***When applying sealant gasket, sealant must not be protrude into the inside of oil pan.***
- ***To prevent leakage of oil, apply sealant gasket to the inner threads of the bolt holes.***
- ***After assembly, wait at least 30 minutes before filling the engine with oil.***

3) Install the oil pump case(A).

**Tightening torque**
18.6 ~ 23.5(1.9 ~ 2.4kgf.m, 13.7 ~ 17.4lb-ft)

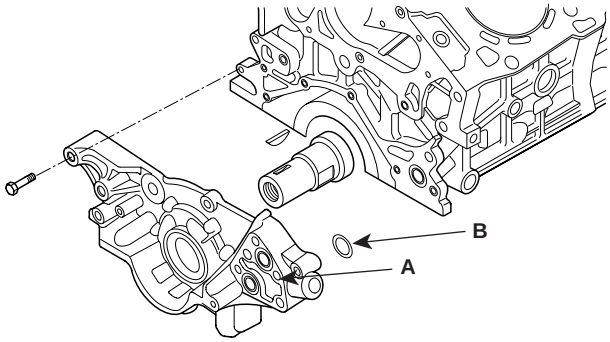


LDLG070A

***CAUTION***

***In the installation of the oil pump, always use a new o-ring(B).***

3. Using the SST(09214~33000), install the oil pump case oil seal.

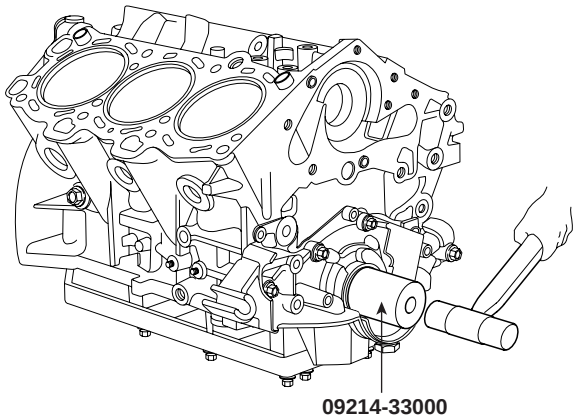


EDQF189A

4. Install the upper oil pan.

   1) Using a gasket scraper, remove all the old packing material from the gasket surfaces.

   2) Before assembling the oil pan, the liquid sealant TB1217H should be applied on the oil pan.
   The part must be assembled within 5 minutes after the sealant was applied.

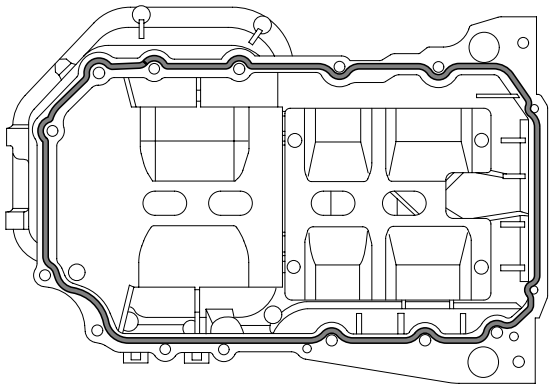

KCBF130A

***CAUTION***

- ***Make clean the sealing face before assembling two parts.***
- ***Remove harmful foreign materials on the sealing face before applying sealant.***
- ***When applying sealant gasket, sealant must not be protrude into the inside of oil pan.***
- ***To prevent leakage of oil, apply sealant gasket to the inner threads of the bolt holes.***
- ***After assembly, wait at least 30 minutes before filling the engine with oil.***

3) Fix the oil pan and tighten the bolts in several steps uniformly.

**Tightening torque**
Bolts 1~15 : 18.6 ~ 23.5Nm(1.9 ~ 2.4kgf.m, 13.7 ~ 17.4lb-ft)
Bolts 16,17 : 4.9 ~ 6.9Nm(0.5 ~ 0.7kgf.m, 3.6 ~ 5.1lb-ft)

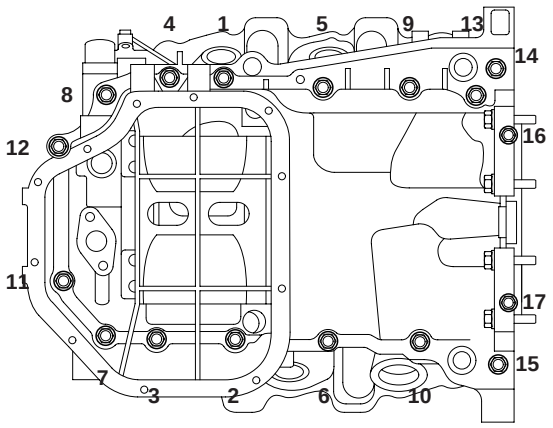


KCBF131A

5. Install the oil screen.

**Tightening torque**
14.7 ~ 21.6Nm(1.5 ~ 2.2kgf.m, 10.8 ~ 15.9lb-ft)

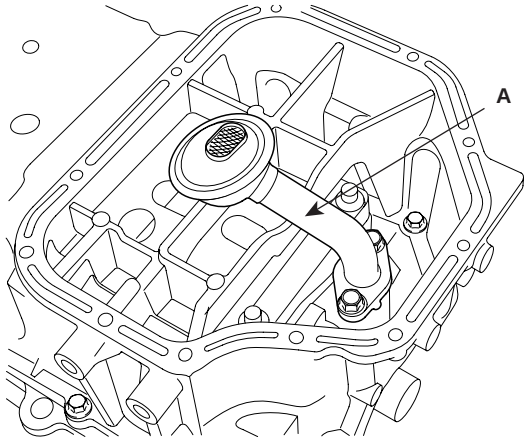


KCBF124A

***NOTE***

*Always use a new gasket.*

6. Install the lower oil pan.

1) Using a gasket scraper, remove all the old packing material from the gasket surfaces.

2) Before assembling the oil pan, the liquid sealant TB1217H should be applied on the oil pan.
The part must be assembled within 5 minutes after the sealant was applied.

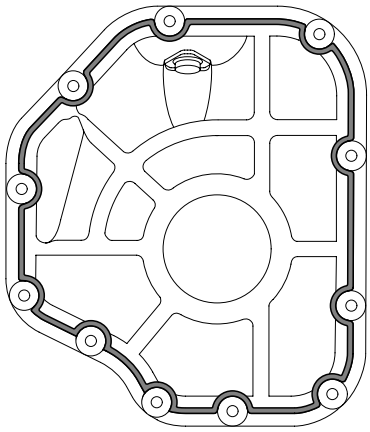

KCBF132A

***CAUTION***

- ***Make clean the sealing face before assembling two parts.***
- ***Remove harmful foreign materials on the sealing face before applying sealant.***
- ***When applying sealant gasket, sealant must not be protrude into the inside of oil pan.***
- ***To prevent leakage of oil, apply sealant gasket to the inner threads of the bolt holes.***
- ***After assembly, wait at least 30 minutes before filling the engine with oil.***

3) Fix the oil pan and tighten the bolts in several steps uniformly.

**Tightening torque**
9.8 ~ 11.8Nm(1.0 ~ 1.2kgf.m, 7.2 ~ 8.7lb-ft)

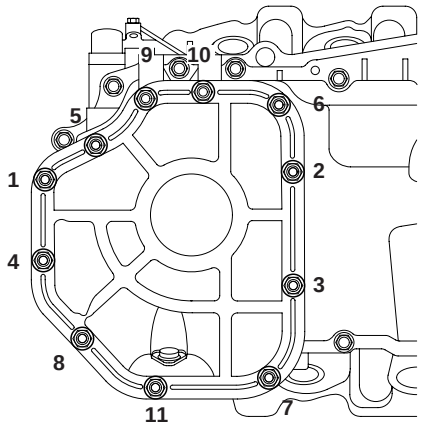


KCBF133A

7. Install the oil filter bracket(A).

**Tightening torque**
18.6 ~ 23.5Nm(1.9 ~ 2.4kgf.m, 13.7~ 17.4lb-ft)

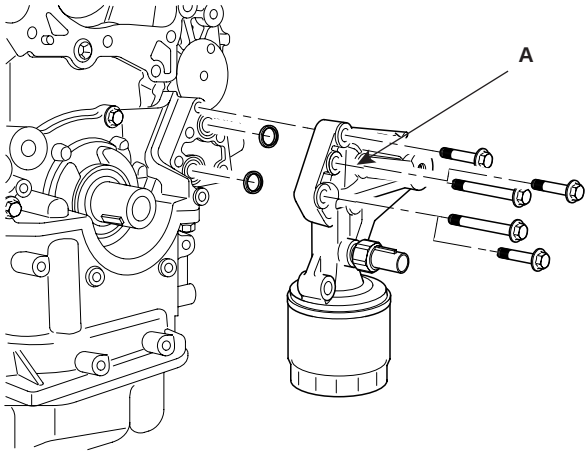


KCBF147A

***CAUTION***

***Always use a new O-ring.***

8. Install the timing belt, the generator and the front muffler.
9. Install the front right side cover and the wheel and tire.
10. Fill with engine coolant.
11. Start engine and check for leaks.
12. Recheck engine coolant level.

# INTAKE AND EXHAUST SYSTEM

## COMPONENTS E37D8ABE

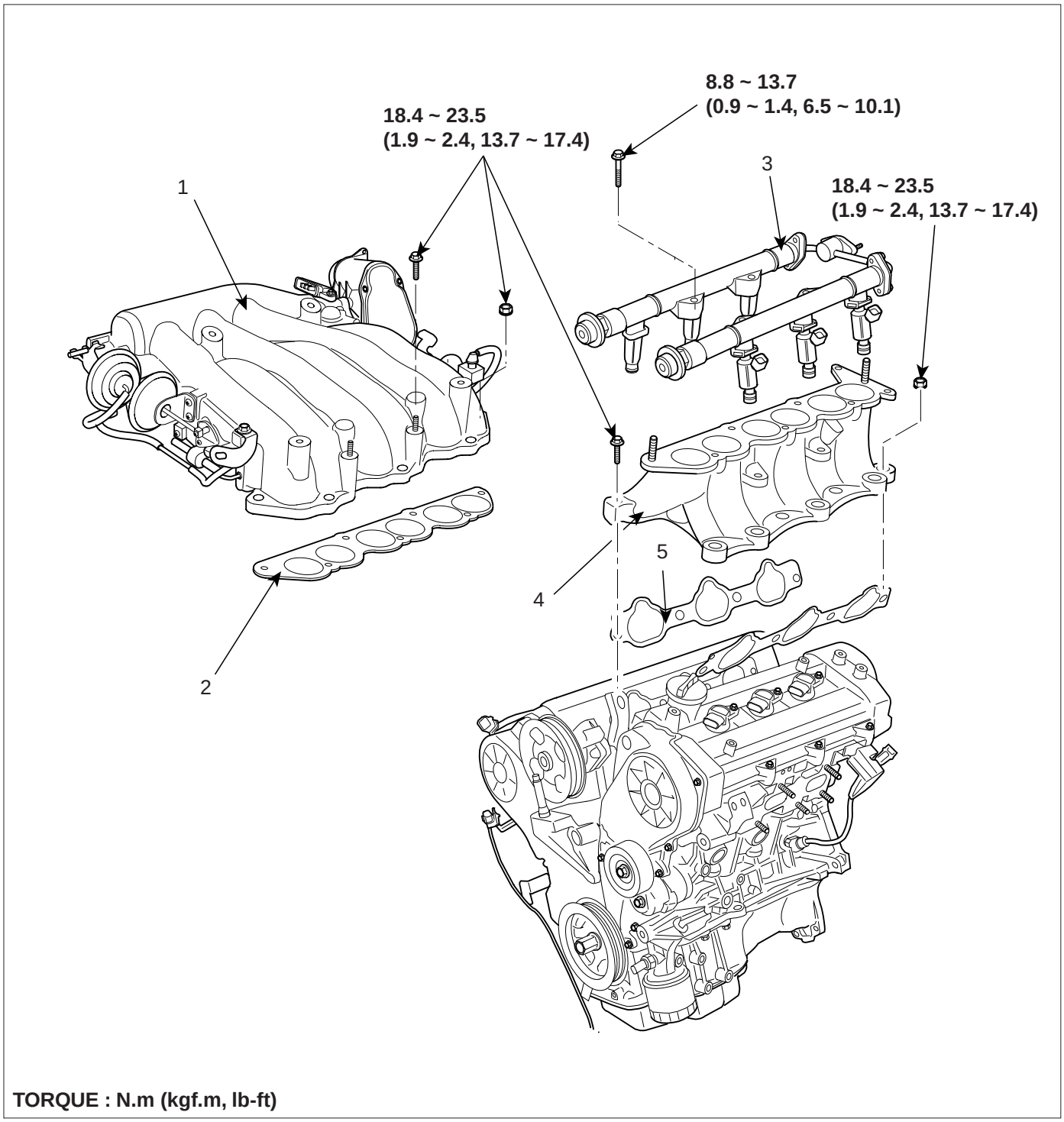


1. Surge tank
2. Surge tank gasket
3. Delivery pipe
4. Intake manifold
5. Intake manifold gasket

LDLG053A

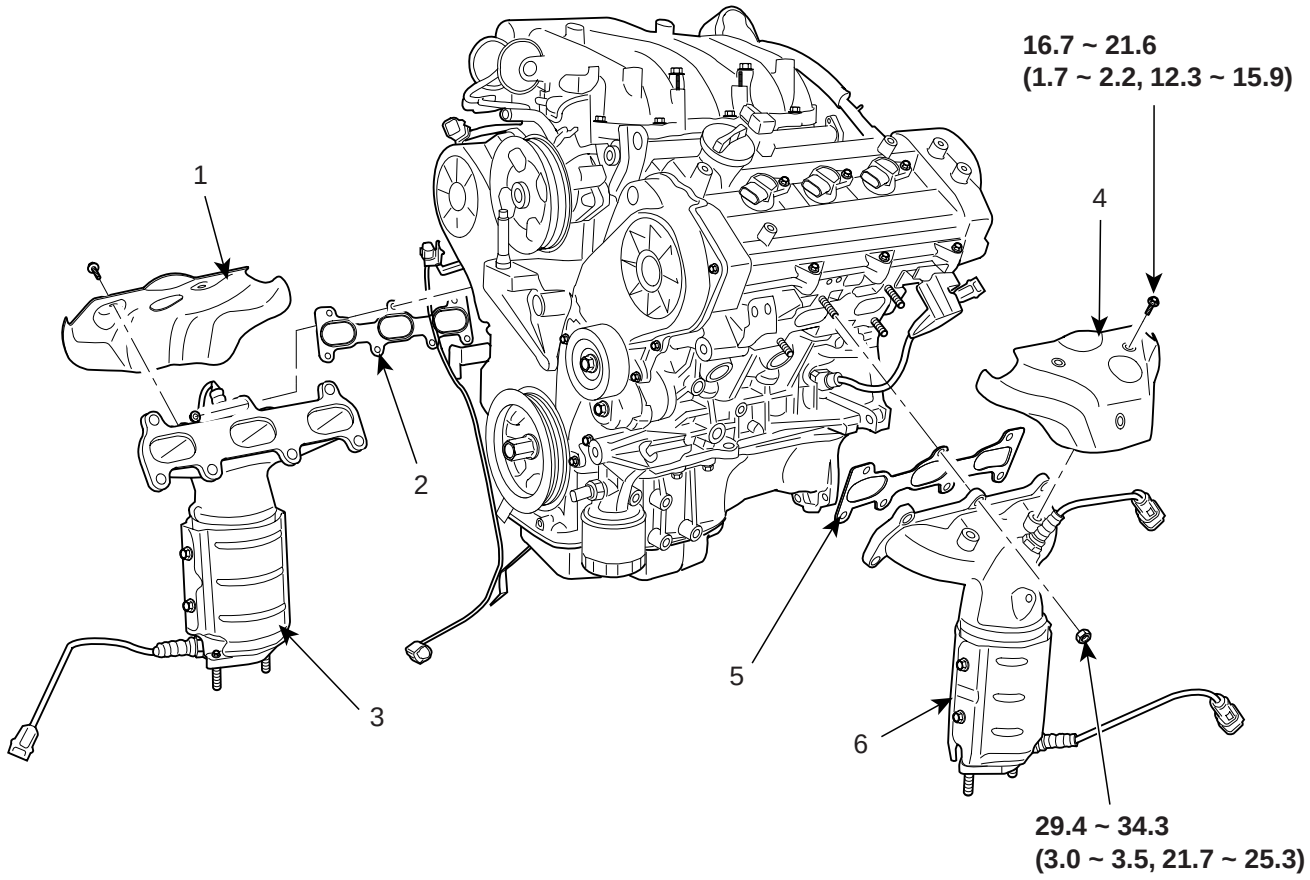


**TORQUE : N.m (kgf.m, lb-ft)**

1. Bank 1 heat protector
2. Bank 1 exhaust manifold
3. Bank 1 exhaust gasket
4. Bank 2 protector
5. Bank 2 exhaust manifold gasket
6. Bank 2 exhaust manifold

LDLG054A

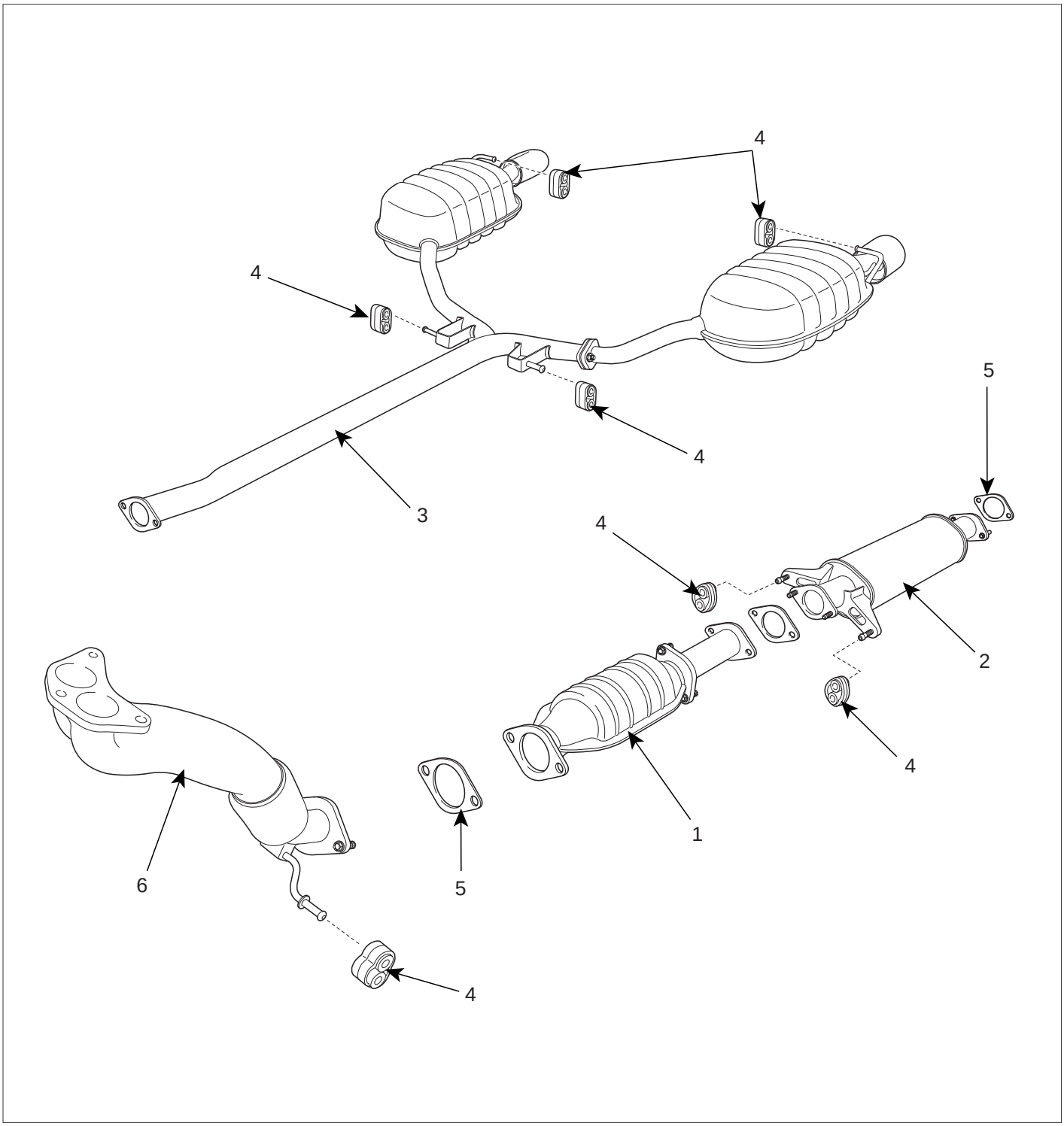


1. Catalytic convert
2. Center muffler
3. Main muffler
4. Lever hanger
5. Gasket
6. Front muffler

LDLG055A

## REMOVAL E375DF19

### INTAKE MANIFOLD ASSEMBLY

1. Remove the engine cover.
2. Remove the intake air hose and air cleaner assembly.
   1) Disconnect the MAF connector(A).
   2) Disconnect the breather hose(B) from air cleaner hose.
   3) Remove the intake air hose and air cleaner assembly(C).
   4) Disconnect the PCM connectors(D).

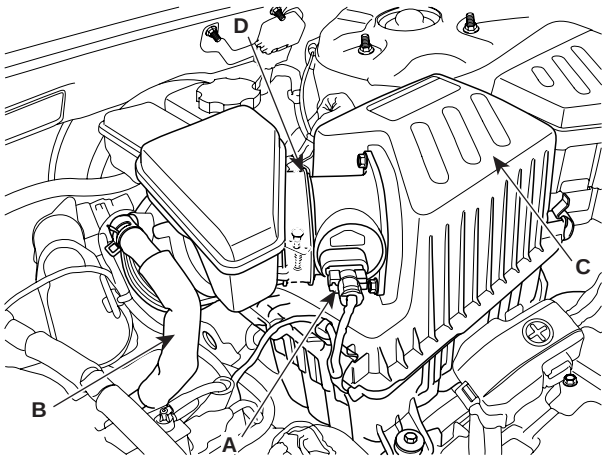


SCMEM6004L

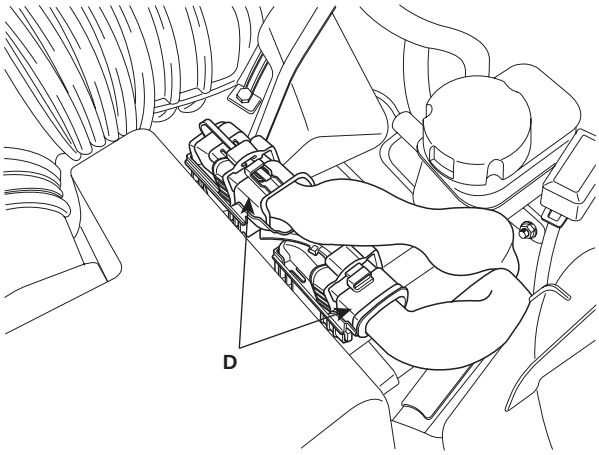


LDLG061A

3. Disconnect the engine wiring harness connectors.
   1) Disconnect the No.1/No.2 knock sensor connectors(A,B), the oil pressure switch connector(C), the ignition coil harness(D) and the No.1 VIS(Variable Induction System) connector(E).

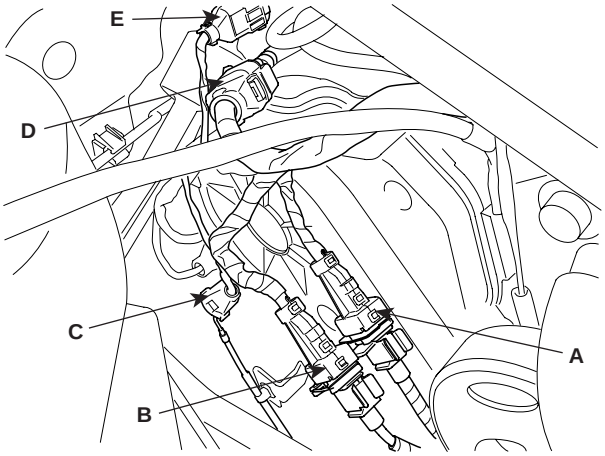


LDLG005A

   2) Disconnect the bank 1 front/rear O2 sensor connectors(A).

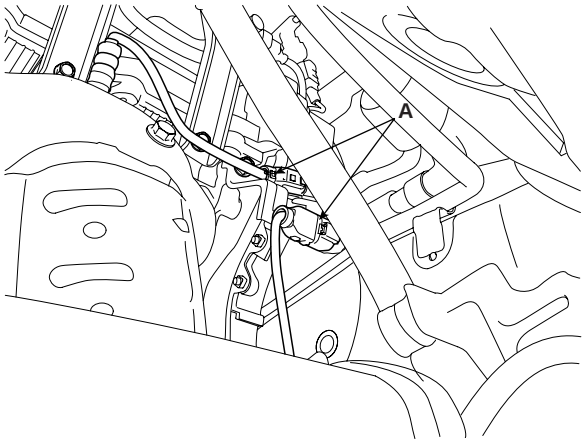


KCBF160A

3) Disconnect the injection connectors(A,B,C), the ground lines(D), the condensor connector(E) and the Ignition coil connectors(F).

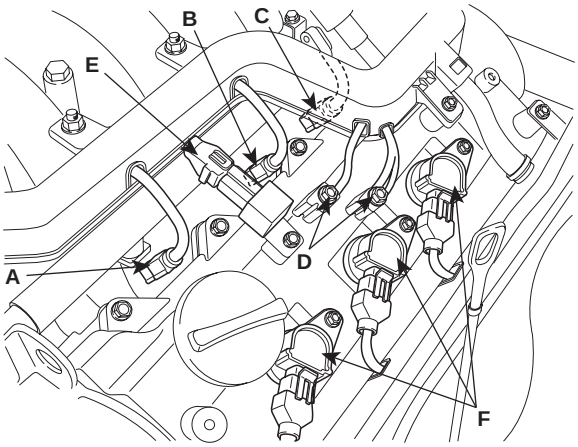


LDLG060A

4) Disconnect the injection harness connector(A), the No.2 VIS(Variable Induction System) connector(B), the No.1/No.2 OCV(Oil Control Valve) connectors(C,D) and the OTS(Oil Temperature Sensor) connector(E).

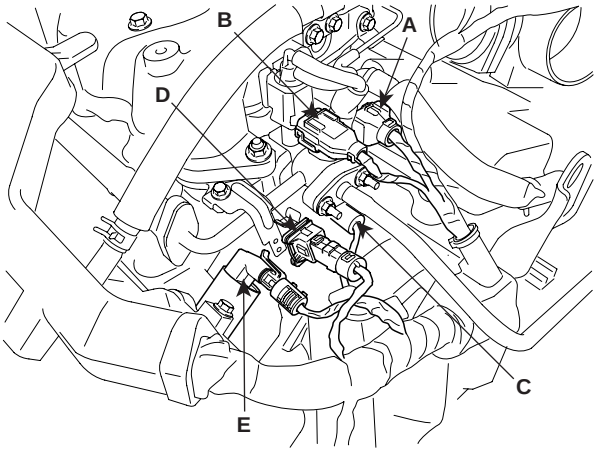


LDLG006A

5) Disconnect the MAPS(Manifold Absolute Pressure Sensor) connector(A), the ETC(Electronic Throttle Control) connector(B) and the PCSV(Purge Control Solenoid Valve) connector(C).

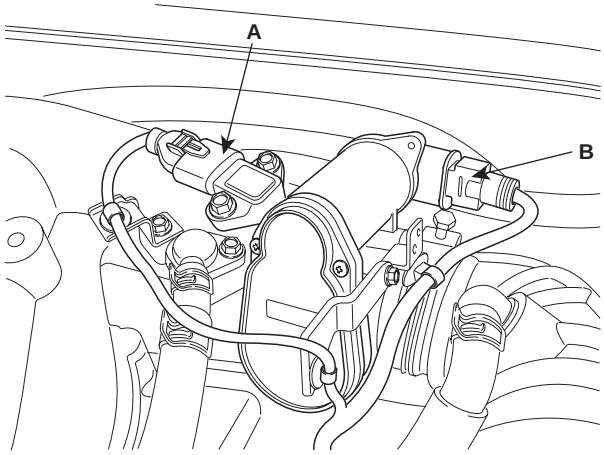


LDLG034A

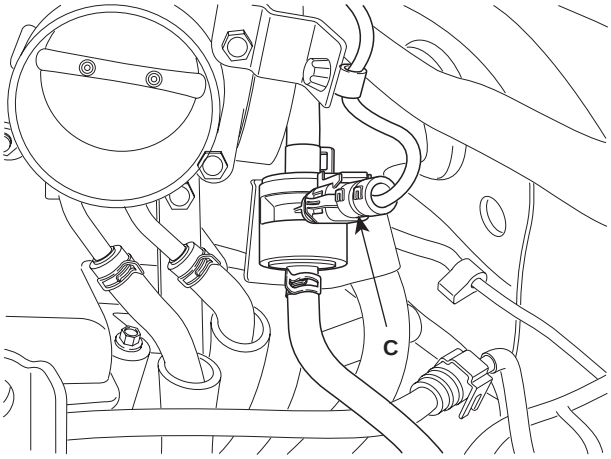


LDLG035A

6) Disconnect the generator connector(A) and the air conditioning compressor connector(B).

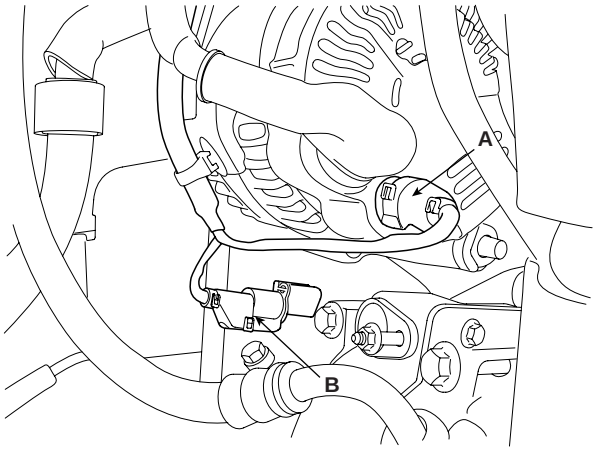


KCBF151A

7) Disconnect the bank 2 CMP sensor connector(A) and the ECT(Engine Coolant Temperature) sensor connector(B).

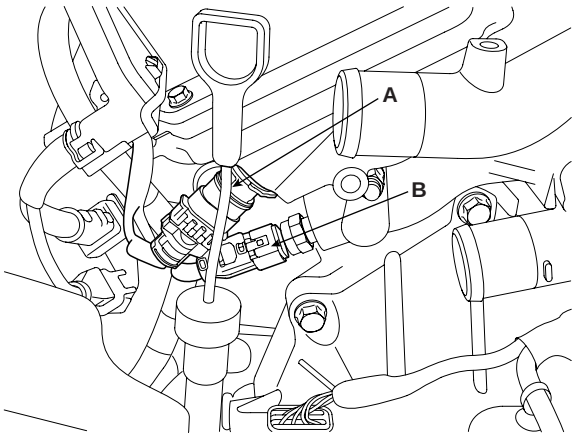


KCBF155A

8) Disconnect the bank 2 front/rear O2 sensor connectors(A,B) and the CKP sensor connector(C).

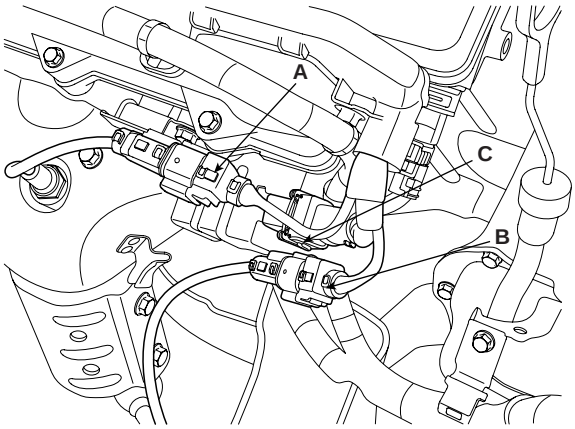


KCBF154A

9) Disconnect the bank 1 CMP sensor connector(A).

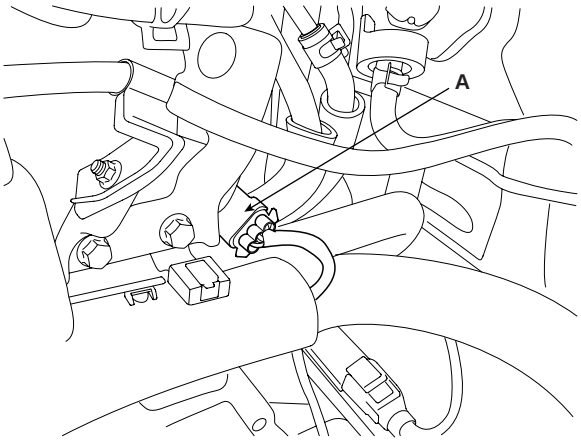


KCBF152A

4. Remove the PCV(Pulge Control Valve) hose(A).

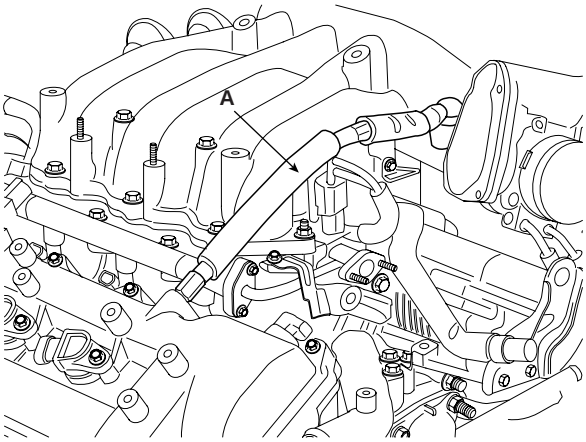


KCBF180A

5. Remove the ETC(Electric Throttle Control) bracket(A) and the cooling hoses(B).

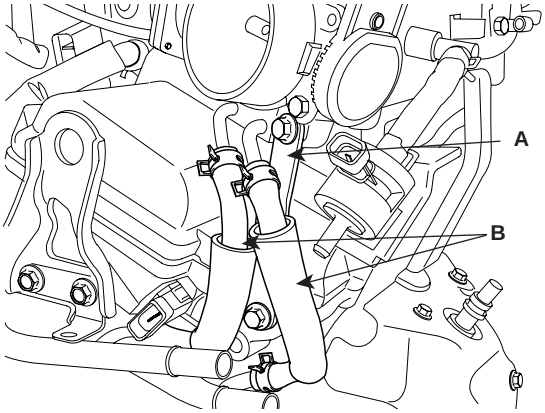


KCBF179A

6. Disconnect the brake vaccume hose(A).

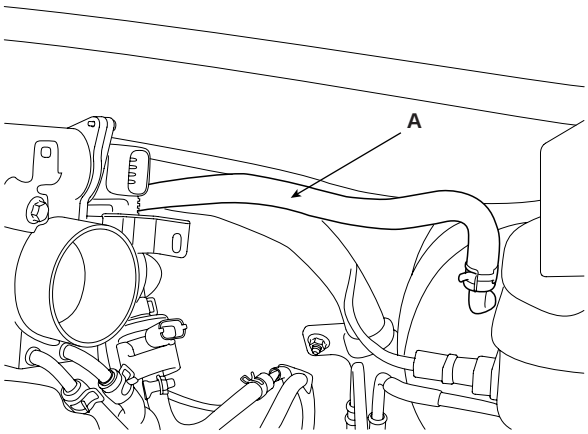


LDLG036A

7. Remove the surge tank mounting bracket(A).

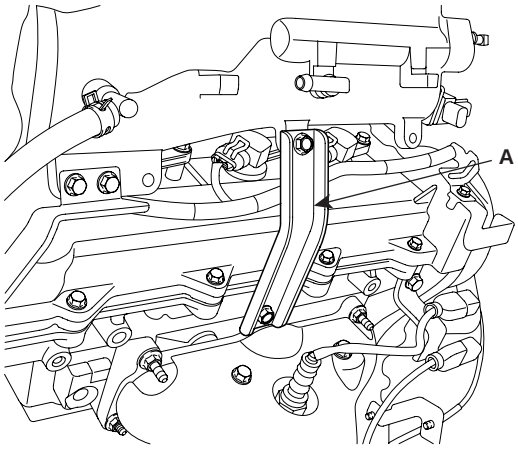


KCBF178A

8. Remove the surge tank(A).

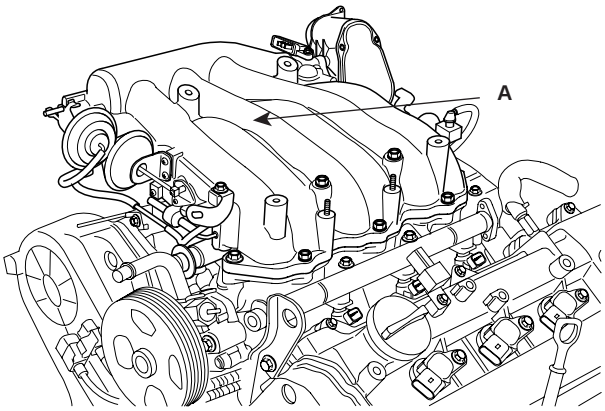


KCBF181A

9. Remove the delivery pipe assembly(A).

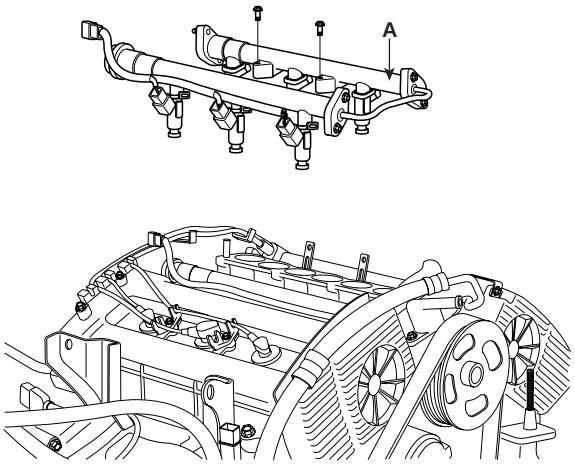


EDQF007A

10. Remove the intake manifold assembly(A).

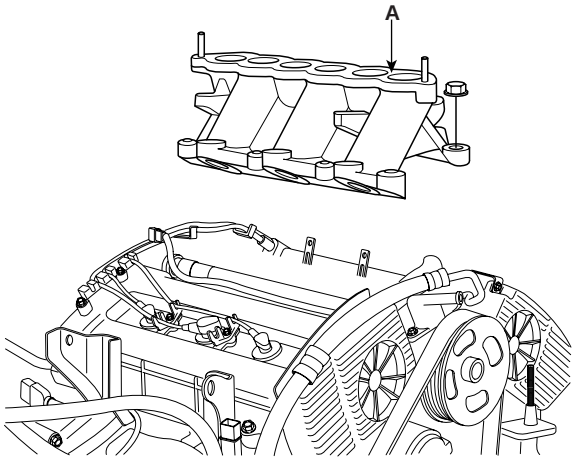


EDQF063A

**EXHAUST MANIFOLD ASSEMBLY**

1. Remove the under cover.
2. Remove the front muffler(A).

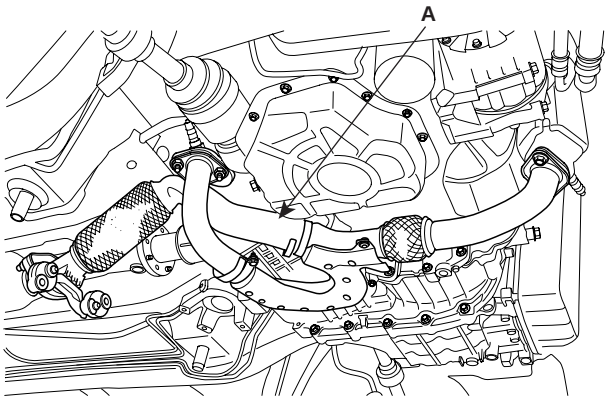


SCMEM6005L

3. Disconnect the oxygen sensor connectors(A).

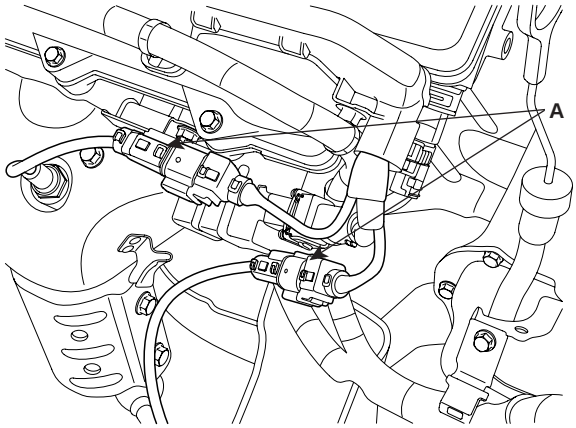


KCBF154B

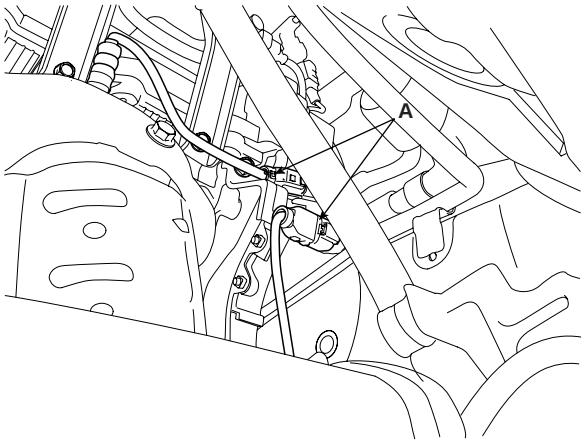


KCBF160A

4. Remove the oil level gauge.
5. Remove the heat protector(A).

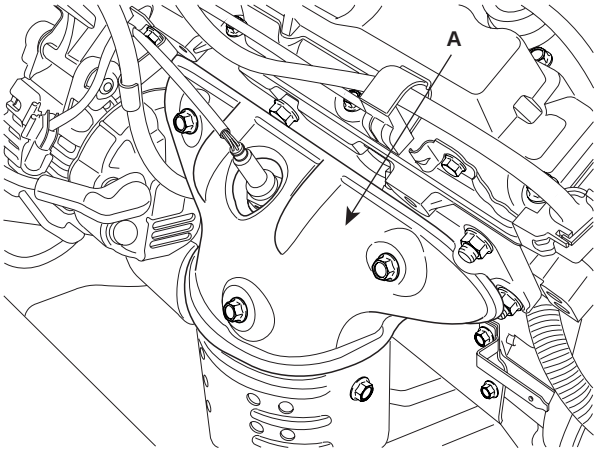


KDRF184A

6. Remove the exhaust manifold assembly(A).

## INSTALLATION E8A999C8

### INTAKE MANIFOLD ASSEMBLY

1. Install the intake manifold assembly with a new gasket to a cylinder head assembly. Tighten the bolts in two steps.

**Tightening torque**
Step 1(a~h): 3.9~5.9Nm(0.4~0.6kgf.m, 2.9~4.3lb-ft)
Step 2(1~8): 18.6~23.5Nm(1.9~2.4kgf.m, 13.7~17.4lb-ft)

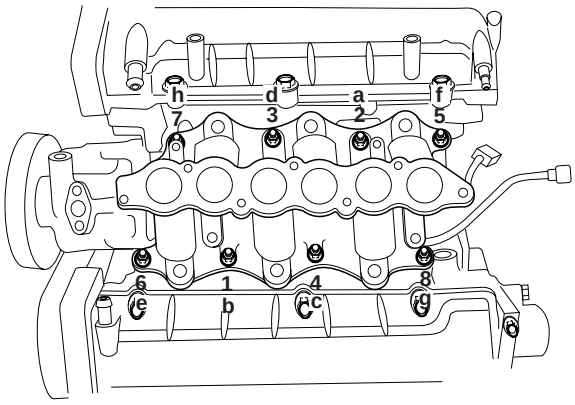


KCBF201A

***CAUTION***

***When installing the gasket on the cylinder head, check the indentification marks(LH/RH) not to be installed wrong.***

2. Install the delivery pipe.
3. Connect the LH injector connector.
4. Install the surge tank.

**Tightening torque**
18.6~23.5Nm(1.9~2.4kgf.m, 13.7~17.4lb-ft)

5. Install the surge tank mounting bracket.

**Tightening torque**
18.6~23.5Nm(1.9~2.4kgf.m, 13.7~17.4lb-ft)

6. Install the ETC(Electronic Throttle Control) system fixing bracket.
7. Connect the hoses and connectors.
8. Install the air cleaner assembly.
9. Install the engine cover.

### EXHAUST MANIFOLD ASSEMBLY

1. Install the exhaust manifold assembly with a new gasket.

**Tightening torque**
29.4~34.3Nm(3.0~3.5kgf.m, 21.7~25.3lb-ft)

2. Install the heat protector.

**Tightening torque**
16.7~21.6Nm(1.7~2.2kgf.m, 12.3~15.9lb-ft)

3. Install the front muffler assembly.

**Tightening torque**
39.2~58.8Nm(4.0~6.0kgf.m, 28.9~43.4lb-ft)

4. Connect the oxygen sensor connector.
5. Install the under cover.

# CYLINDER HEAD ASSEMBLY

## COMPONENTS EBE1AEDF

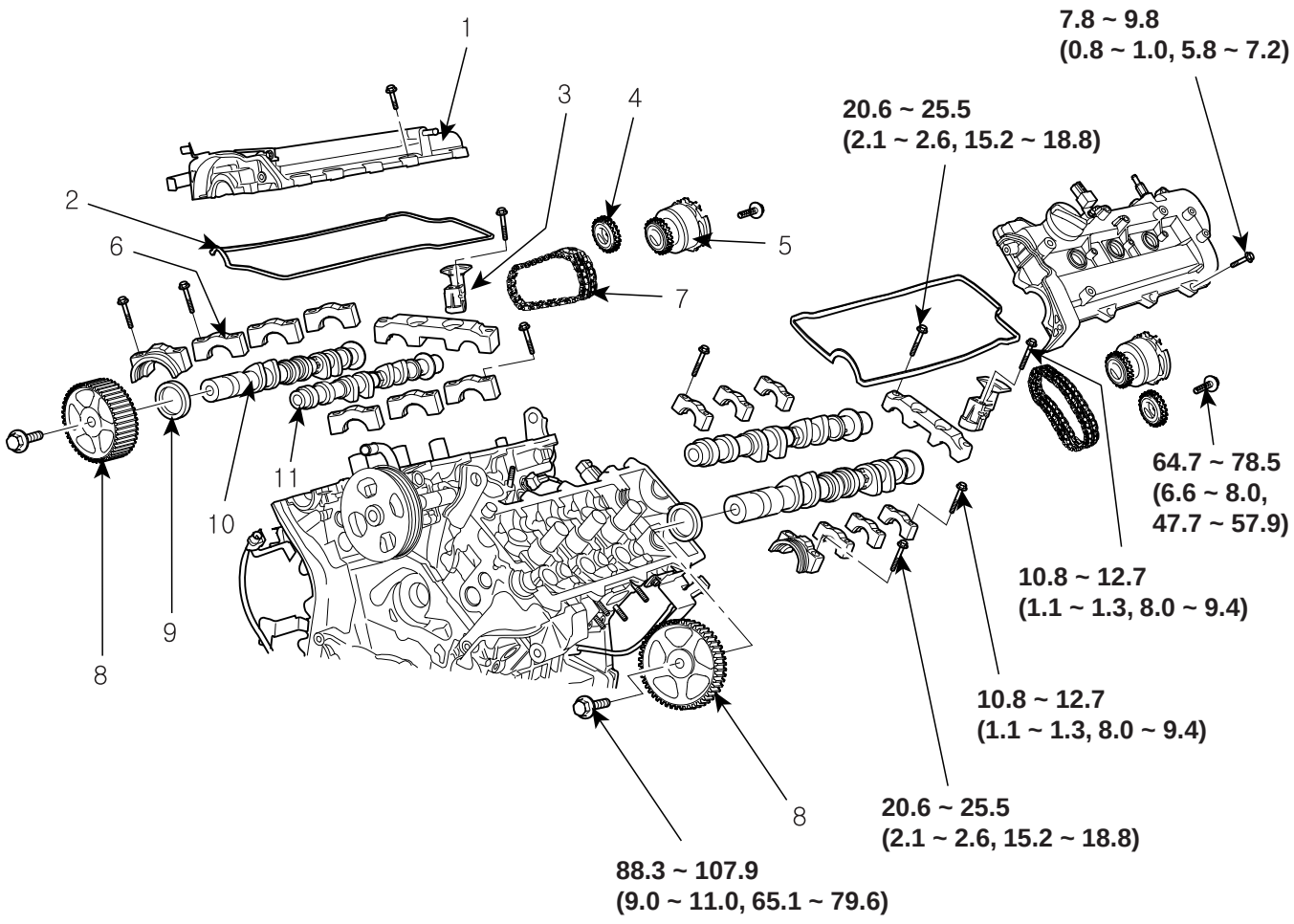


**TORQUE : N.m (kgf.m, lb-ft)**

1. Cylinder head cover
2. Cylinder head cover gasket
3. Timing chain auto tensioner
4. Exhaust camshaft chain sprocket
5. CVVT assembly
6. Camshaft bearing cap
7. Timing chain
8. Exhaust camshaft sprocket
9. Camshaft oil seal
10. Exhaust camshaft
11. Intake camshaft

LDLG040A

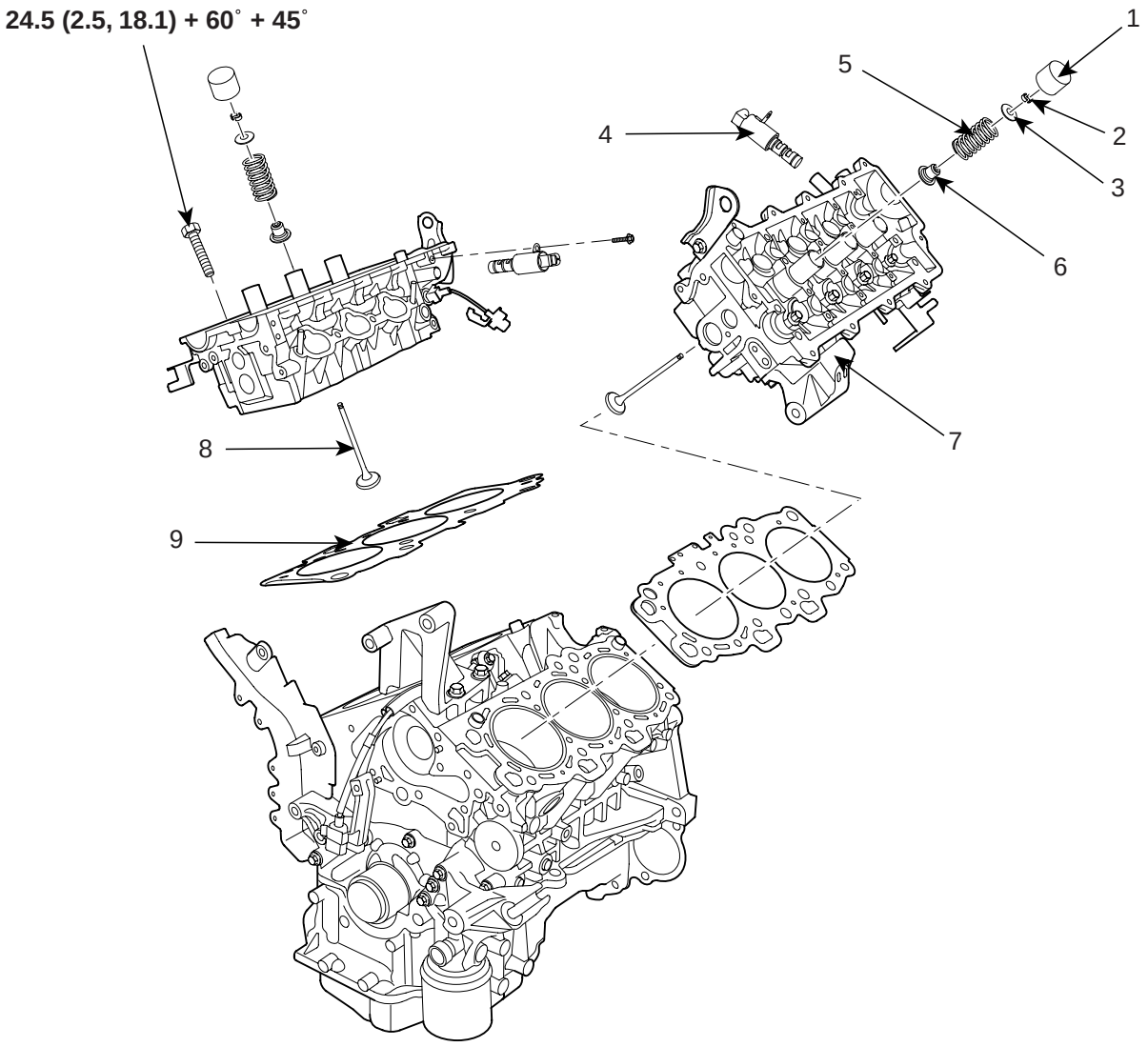


**TORQUE : N.m (kgf.m, lb-ft)**

1. MLA(Mechanical Lash Adjuster)
2. Retainer lock
3. Retainer
4. OCV(Oil Control Valve)
5. Valve spring
6. Valve stem seal
7. Cylinder head
8. Valve
9. Cylinder head gasket

LDLG041A

## REMOVAL E84FDA9C

***CAUTION***

- ***Use fender covers to avoid damaging painted surfaces.***
- ***To avoid damaging the cylinder head, wait until the engine coolant temperature drops below normal temperature before removing it.***
- ***When handling a metal gasket, take care not to fold the gasket or damage the contact surface of the gasket.***
- ***To avoid damage, unplug the wiring connectors carefully while holding the connector portion.***

***NOTE***

- *Mark all wiring and hoses to avoid misconnection.*
- *Turn the crankshaft pulley so that the No. 1 piston is at top dead center.*

1. Remove the air duct and the battery(A) after disconnecting the terminals(B) from the battery.

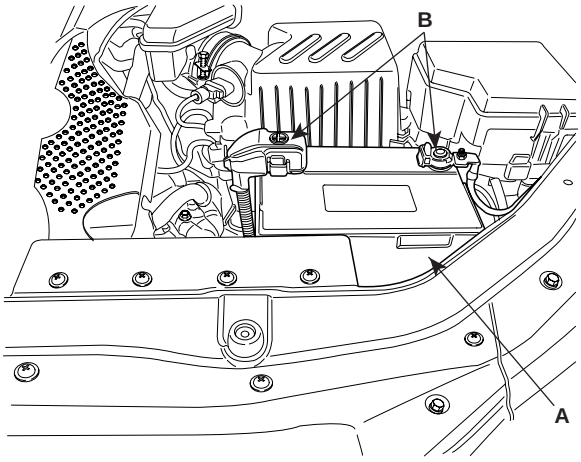


SCMEM6006L

2. Remove the engine cover.

3. Remove the intake air hose and air cleaner assembly.

   1) Disconnect the MAF connector(A).

   2) Disconnect the breather hose(B) from air cleaner hose.

   3) Remove the intake air hose and air cleaner assembly(C).

   4) Disconnect the PCM connectors(D).

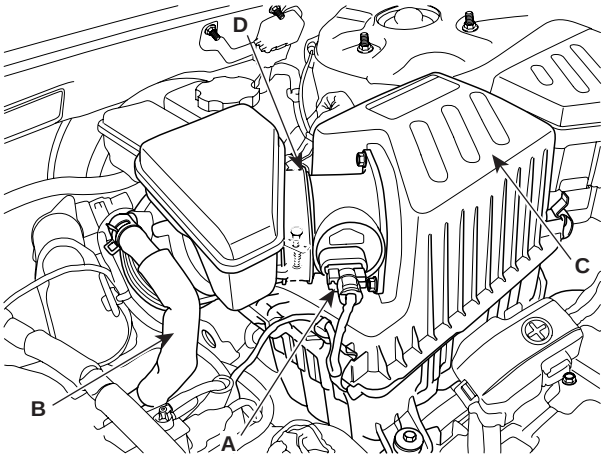


SCMEM6004L

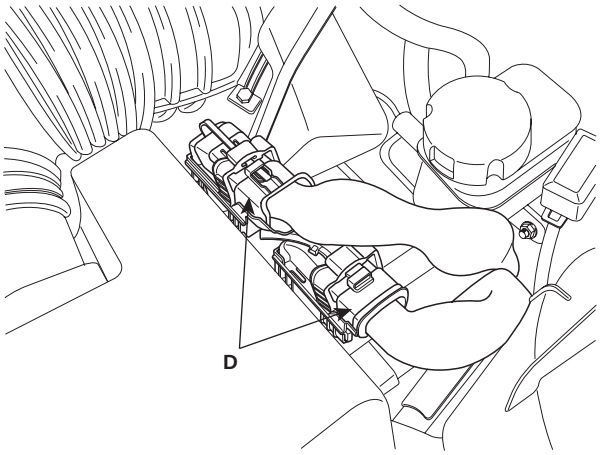


LDLG061A

4. Remove the upper radiator hose(A) and lower radiator hose(B).

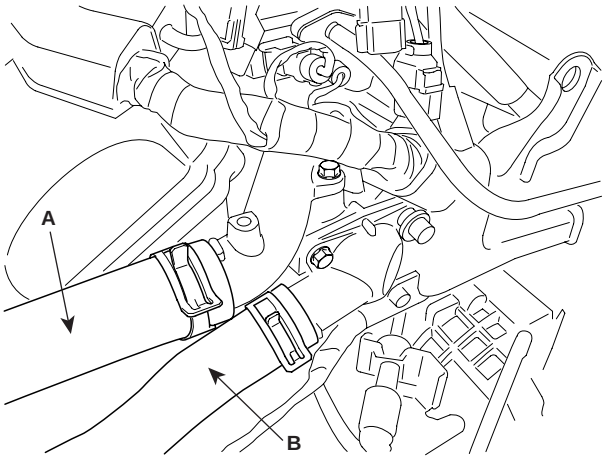


LDLG008A

5. Remove the fuel inlet hose(A) from the delivery pipe.

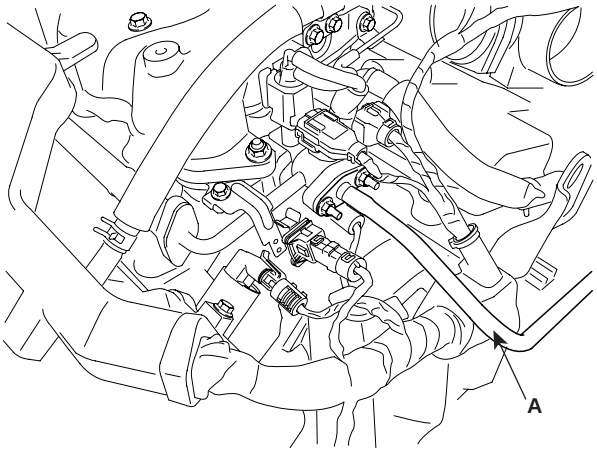


LDLG062A

6. Disconnect the engine wiring harness connectors.

   1) Disconnect the No.1/No.2 knock sensor connectors(A,B), the oil pressure switch connector(C), the ignition coil harness(D) and the No.1 VIS(Variable Induction System) connector(E).

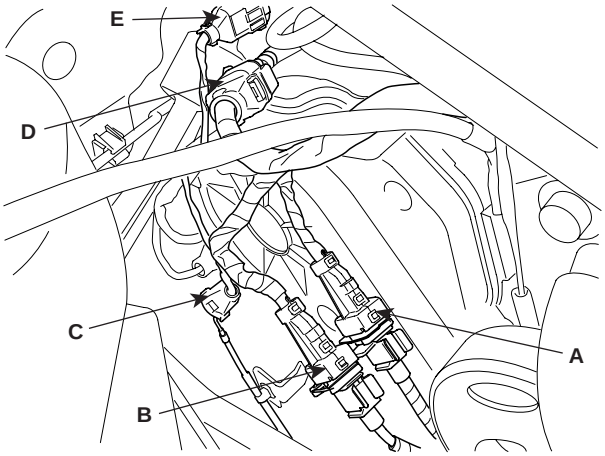


LDLG005A

   2) Disconnect the bank 1 front/rear O2 sensor connectors(A).

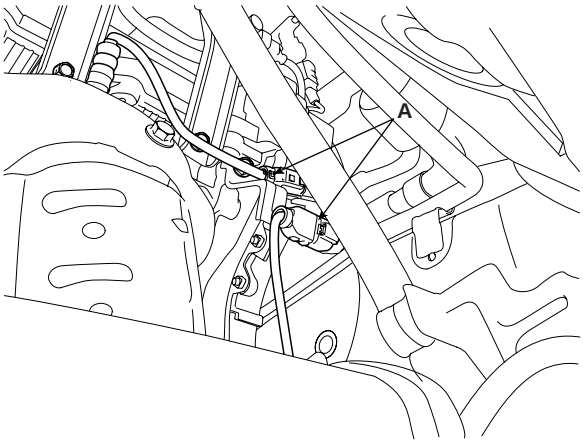


KCBF160A

   3) Disconnect the injection connectors(A,B,C), the ground lines(D), the condensor connector(E) and the Ignition coil connectors(F).

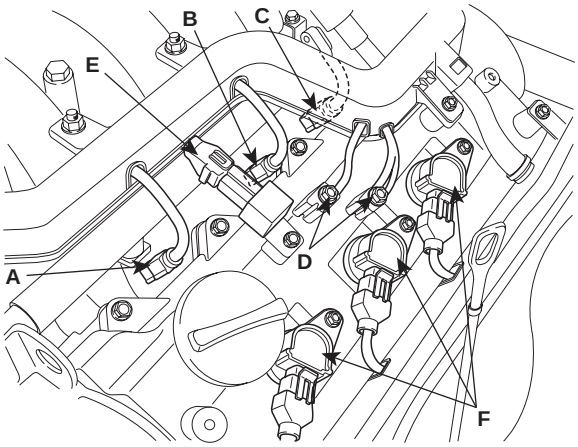


LDLG060A

   4) Disconnect the injection harness connector(A), the No.2 VIS(Variable Induction System) connector(B), the No.1/No.2 OCV(Oil Control Valve) connectors(C,D) and the OTS(Oil Temperature Sensor) connector(E).

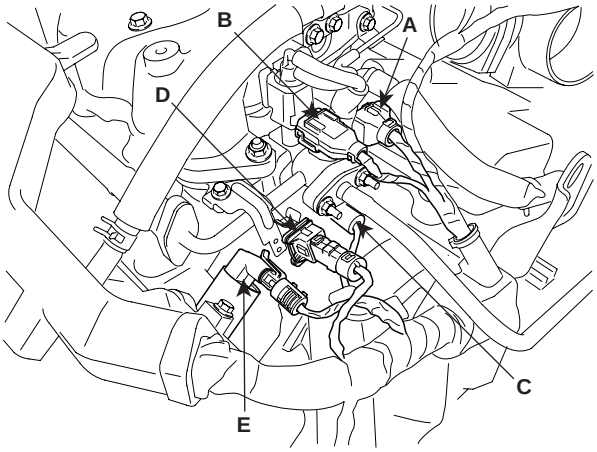


LDLG006A

5) Disconnect the MAPS(Manifold Absolute Pressure Sensor) connector(A), the ETC(Electronic Throttle Control) connector(B) and the PCSV(Purge Control Solenoid Valve) connector(C).

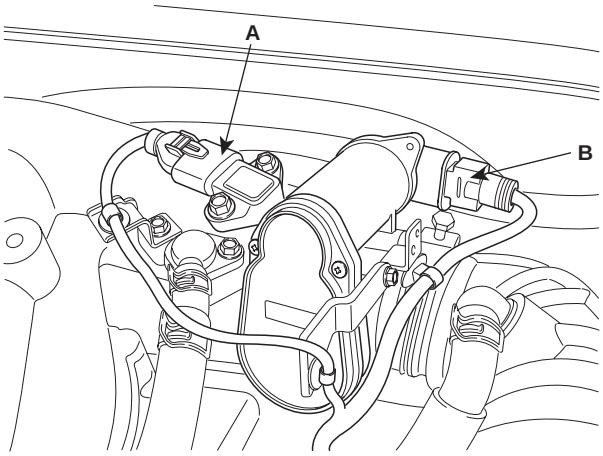


LDLG034A

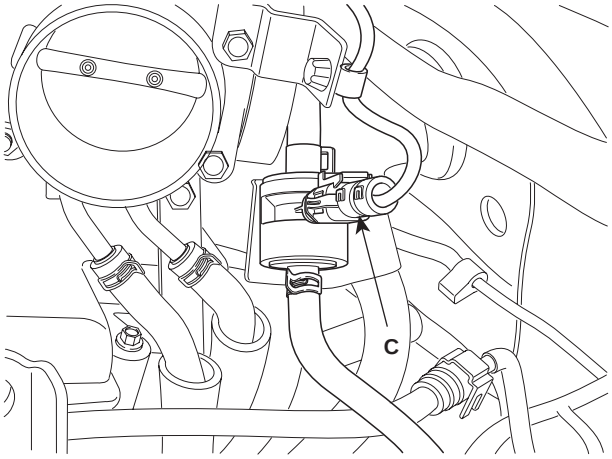


LDLG035A

6) Disconnect the generator connector(A) and the air conditioning compressor connector(B).

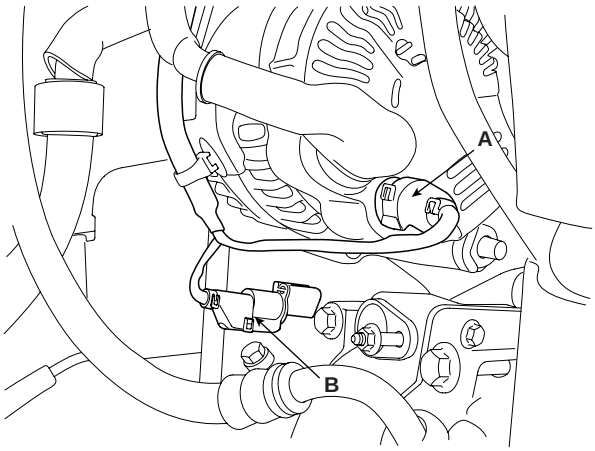


KCBF151A

7) Disconnect the bank 2 CMP sensor connector(A) and the ECT(Engine Coolant Temperature) sensor connector(B).

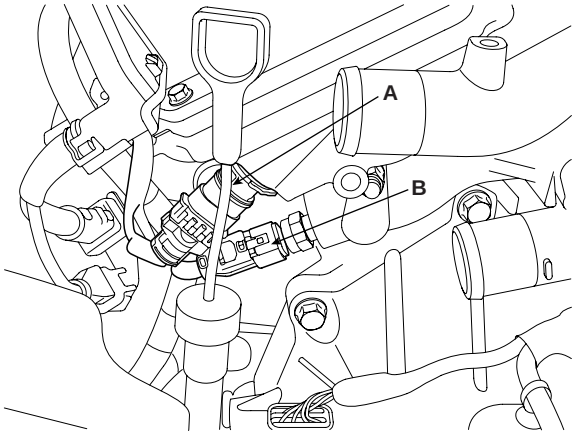


KCBF155A

8) Disconnect the bank 2 front/rear O2 sensor connectors(A,B) and the CKP sensor connector(C).

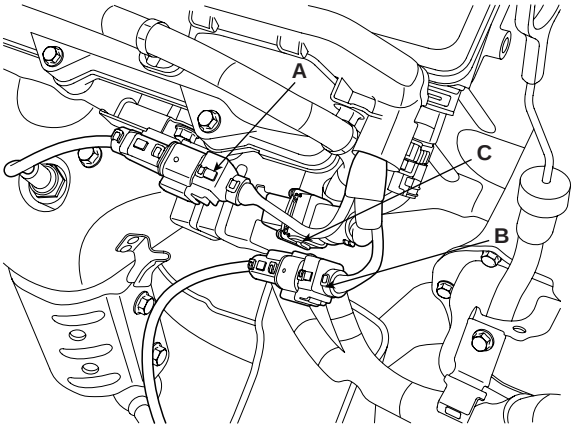


KCBF154A

9) Disconnect the bank 1 CMP sensor connector(A).

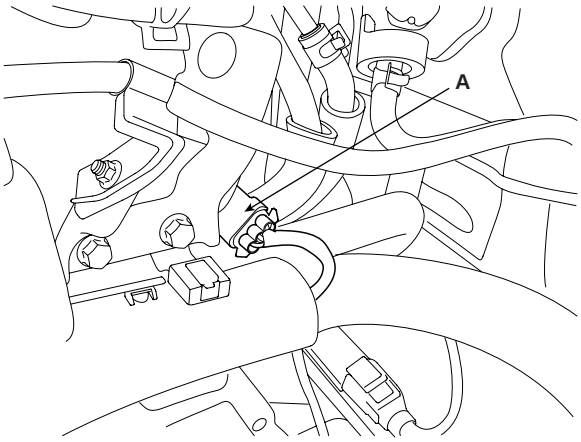


KCBF152A

7. Remove the PCV(Pulge Control Valve) hose(A).

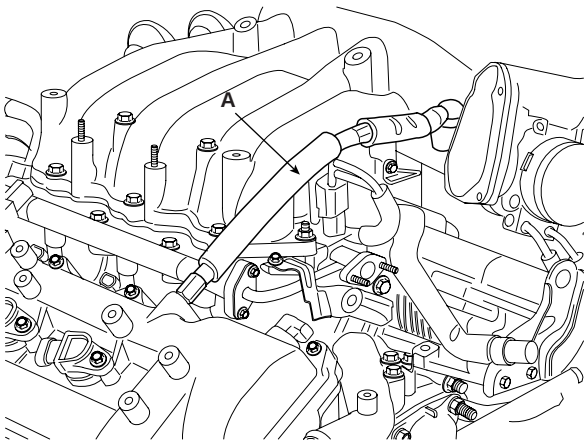


KCBF180A

8. Disconnect the brake vaccume hose(A).

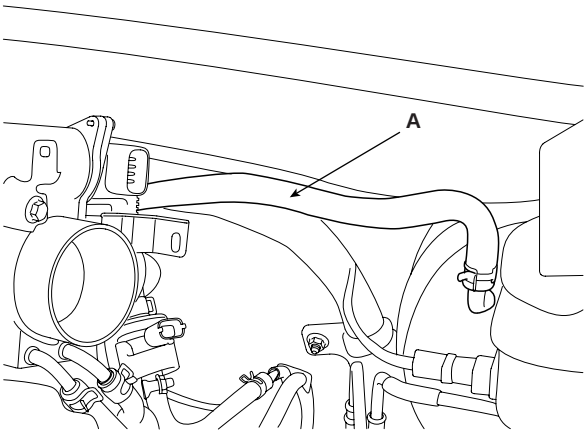


LDLG036A

9. Remove the heater hoses.

10. Remove the drive belt(A).

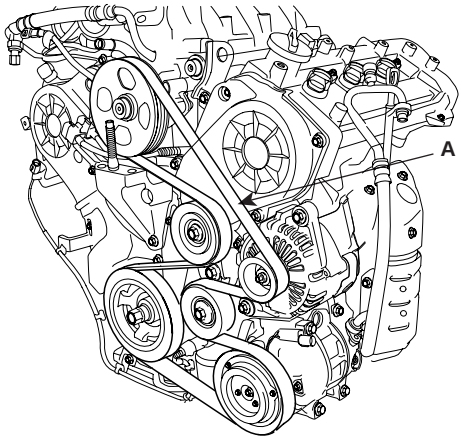


KCBF105A

11. Remove the power steering pump.(Refer to 'ST' group).

12. Remove the exhaust manifold assembly.(Refer to 'Intake and exhause system').

13. Remove the intake manifold assembly.(Refer to 'Intake and exhause system').

14. Remove the timing belt.(Refer to 'Timing system').

15. Remove the ignition coils.

16. Remove the water temp. control assembly.

17. Remove the cylinder head cover(A).

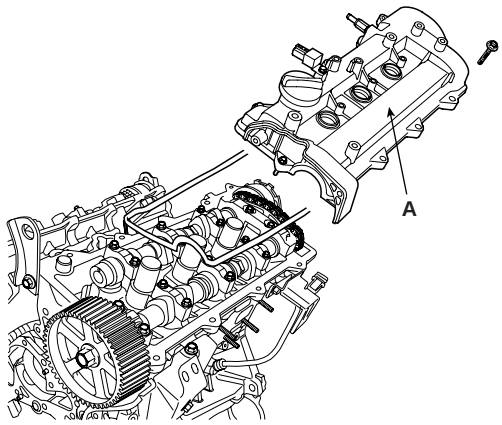


KCBF177A

18. Remove the camshaft bearing cap(A).

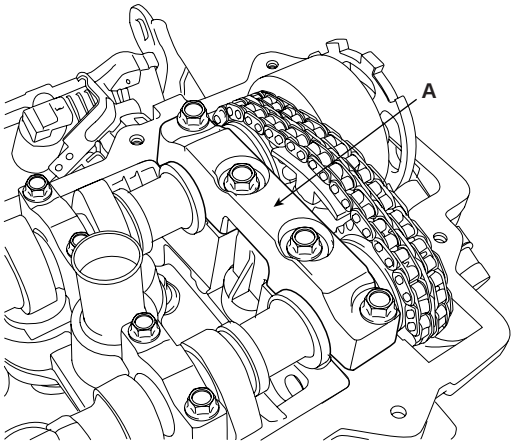


KCBF167A

19. Remove the timing chain tensioner(A).

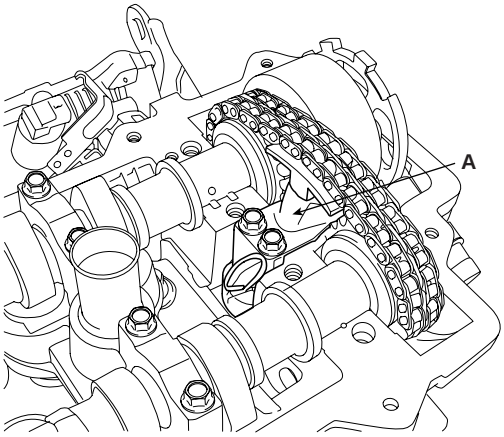


KCBF168A

20. Remove the camshaft.

21. Remove the bank 1 timing belt rear cover(A).

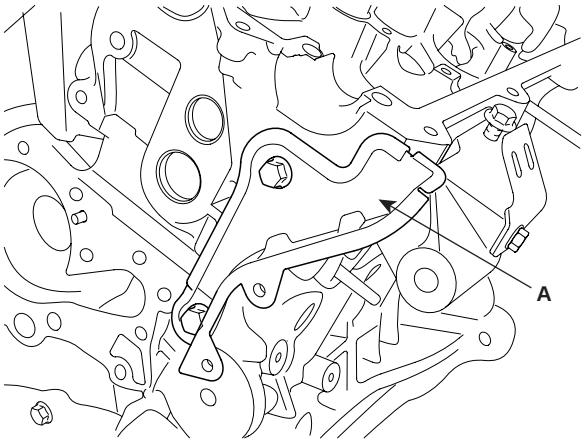


KCBF170A

22. Remove the bank 2 timing belt rear cover(A).

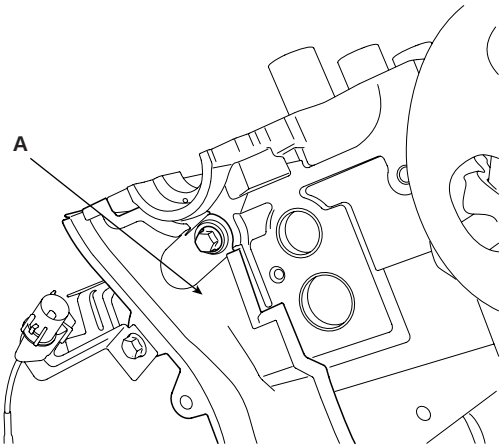


KCBF171A

23. Remove the CKP sensor connector bracket(A).

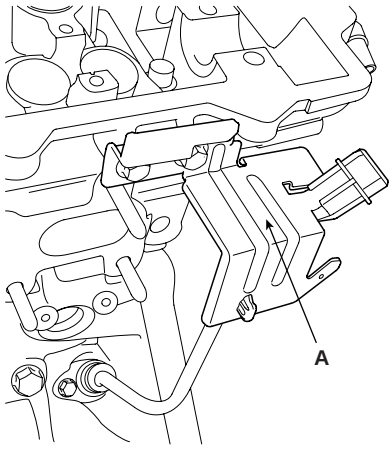


KCBF172A

24. Remove the cylinder head assembly.

1) Remove the bolts in 2~3 steps as following orders.

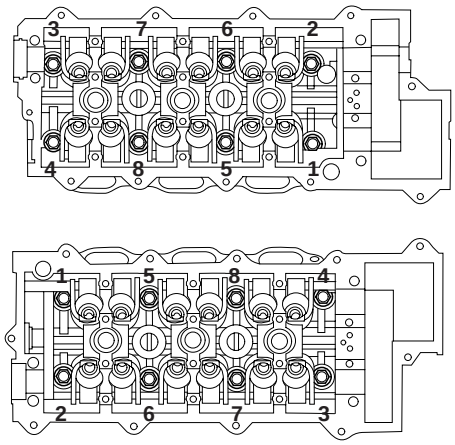


KCBF176A

**CAUTION**

***If the bolts are not removed as the order, the deformation of the head assembly can be occurred.***

2) Put the cylinder head assembly on a wooden block after removal from the cylinder block.

**CAUTION**

***Ensure that the surface between the cylinder head and the block is not damaged.***

## DISASSEMBLY E63D4DE3

***NOTE***

*Identify MLA(Mechanical Lash Adjuster), valves and valve springs as they are removed so that each item can be reinstalled in its original position.*

1. Remove MLA(Mechanical Lash Adjuster)s(A).

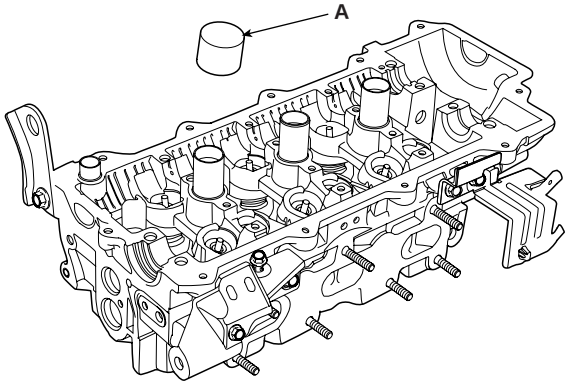


KCBF173D

2. Remove valves.

   1) Using SST(09222-3K000, 09222-3C300), compress the valve spring and remove retainer lock.

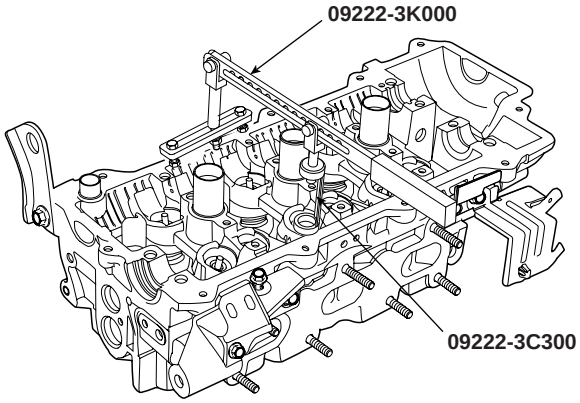


KCBF173C

   2) Remove the spring retainer.

   3) Remove the valve spring.

   4) Remove the valve.

   5) Using SST(09222-29000), remove the valve stem seal.

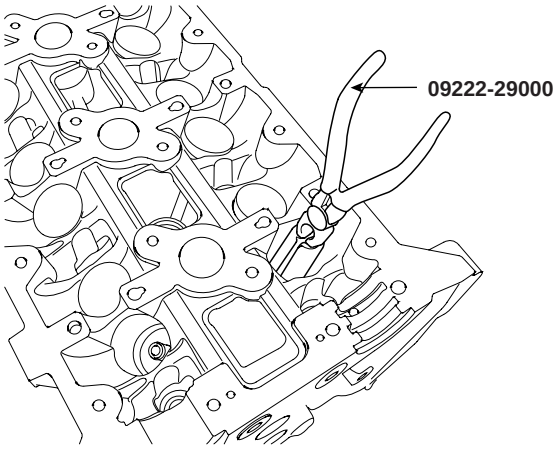


KDRF234A

***NOTE***

*Do not reuse the removed valve stem seals.*

3. Remove OCV(Oil Control Valve)(A).

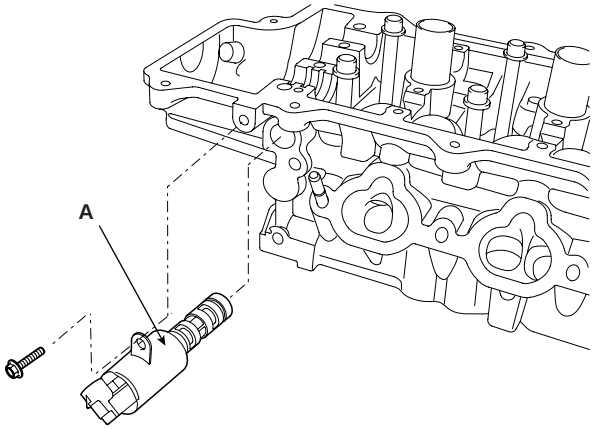


KCBF166A

## INSPECTION EEB401B1

### CYLINDER HEAD

1. Inspect for flatness.
   Using a precision straight edge and feeler gauge, measure the surface contacting cylinder block and the manifolds for warpage.

**Flatness of cylinder head gasket surface**
Standard : 0.03mm(0.0012in.) or less
**Flatness of manifold gasket surface**
Standard : 0.15mm(0.0059in.) or less

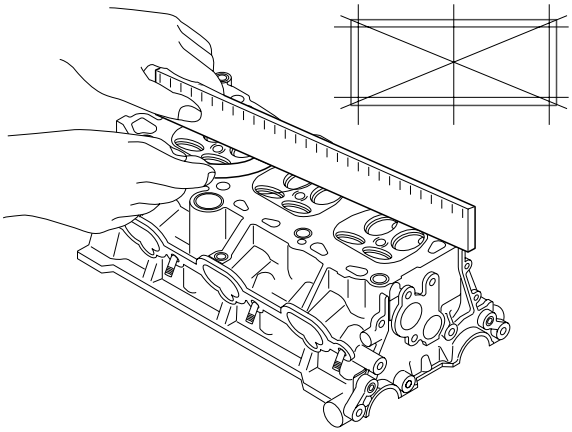

EDQF160A

2. Inspect for cracks.
   Check the combustion chamber, intake ports, exhaust ports and cylinder block surface for cracks. If cracked, replace the cylinder head.

### VALVE AND VALVE SPRING

1. Inspect valve stems and valve guides.
   1) Using a caliper gauge, measure the inside diameter of the valve guide.

**Valve guide inside diameter**
Intake / Exhaust : 6.000 ~ 6.015mm (2.2362 ~ 2.2368in.)

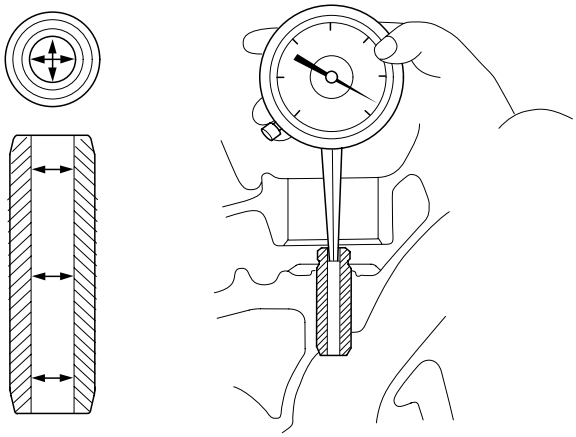

ECBF034A

   2) Using a micrometer, measure the outer diameter of the valve stem.

**Valve stem outer diameter**
Intake : 5.585 ~ 5.980mm (0.2348 ~ 0.2354in.)
Exhaust : 5.950 ~ 5.595mm (0.2343 ~ 0.2348in.)

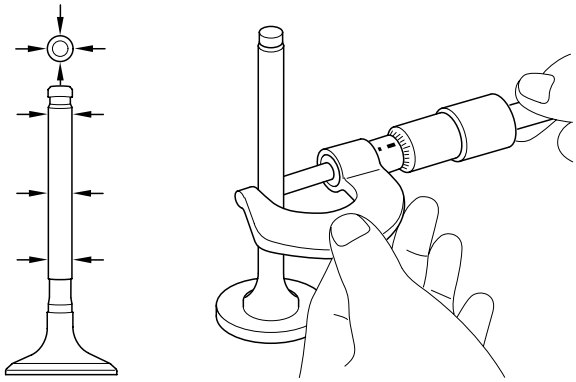

KCRF227A

3) Calculate the clearance between the valve guides and the stems by difference between the valve stem measured diameter and the valve guide measured inside diameter.

**Valve stem-to-guide clearance**
[Standard]
Intake : 0.020 ~ 0.050mm (0.0008 ~ 0.0020in.)
Exhaust : 0.035 ~ 0.065mm (0.0014 ~ 0.0026in.)
[Limit]
Intake : 0.10mm (0.0039in.) or less
Exhaust : 0.13mm (0.0051in.) or less

2. Inspect valves.

1) Check the valve face angle.

2) Check that the surface of the valve for wear.
If the valve face is worn, replace the valve.

3) Check the valve head margin thickness.
If the margin thickness is less than the specification, replace the valve.

**Specification**
Intake : 1.0mm(0.0394in.)
Exhaust : 1.3mm(0.0512.)

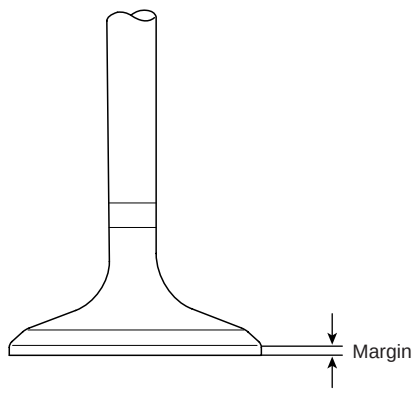


ECKD221A

4) Check the valve length.

**Length**
Intake : 110.1mm(4.3346in)
Exhaust : 111.1mm(4.3740in)

5) Check the surface of the valve stem tip for wear.
If the valve stem tip is worn, replace the valve.

3. Inspect valve seats

1) Check the valve seat for evidence of overheating or improper contact with the valve face.
If the valve seat is worn, replace cylinder head.

2) Before reconditioning the seat, check the valve guide for wear. If the valve guide is worn, replace the valve guide first.

3) Recondition the valve seat with a valve seat grinder or cutter. The valve seat contact width should be within specifications and centered on the valve face.

4. Inspect valve springs.

1) Using a steel square, measure the out-of-square of the valve spring.

2) Using vernier calipers, measure the free length of the valve spring.

**Valve spring**
[Standard]
Free height : 46.8mm (1.8425in.)
Out-of-square : 1.5° or less

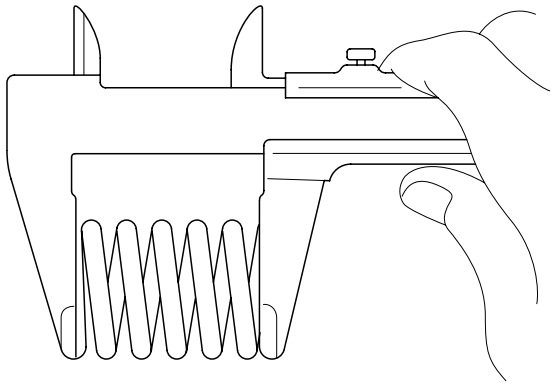

KCRF205A

### MLA(MECHANICAL LASH ADJUSTER)

1. Inspect MLA.
   Using a micrometer, measure the MLA outside diameter.

**MLA O.D.**
Intake/Exhaust : 29.964 ~ 29.980mm(1.1797 ~ 1.1803in.)

2. Using a caliper gauge, measure MLA tappet bore inner diameter of cylinder head.

**Tappet bore I.D.**
Intake/Exhaust : 30.000 ~ 30.025mm(1.1811 ~ 1.1821in.)

3. Calculate the clearance by subtracting MLA outside diameter measurement from tappet bore inside diameter measurement.

**MLA to tappet bore clearance**
[Standard]
Intake/Exhaust : 0.020 ~ 0.061mm(0.0008 ~ 0.0024in.)
[Limit]
Intake/Exhaust : 0.07mm(0.0027in.) or less

### CAMSHAFT

1. Inspect cam lobes.
   Using a micrometer, measure the cam lobe height.

**Cam height**
[Standard value]
Intake : 44.5mm (1.7520in.)
Exhaust : 44.5mm (1.7520in.)

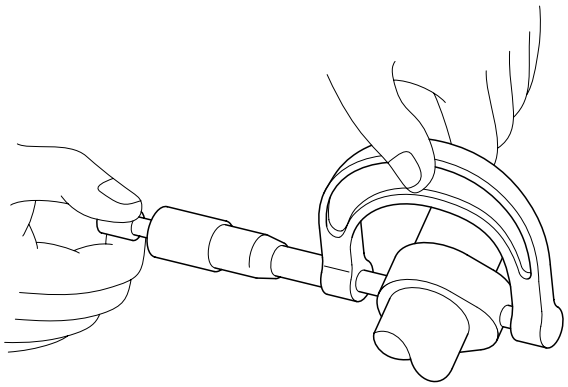

KCRF206A

If the cam lobe height is less than standard, replace the camshaft.

2. Check the cam lobe surface for wear or damage. If necessary, replace it.

3. Inspect camshaft journal clearance.

   1) Clean the bearing caps and camshaft journals.

   2) Place the camshafts on the cylinder head.

   3) Lay a strip of plastigage across each of the camshaft journals.

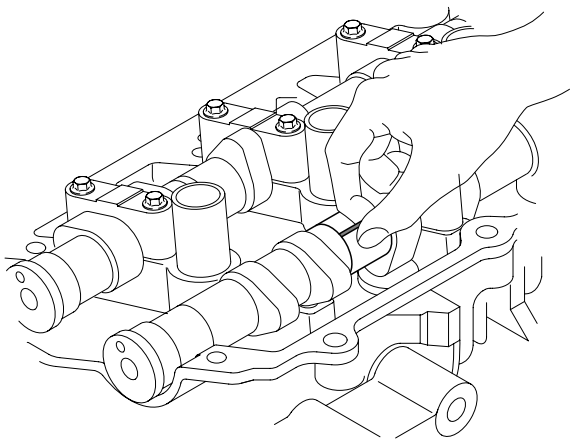

KCRF207A

4) Install the bearing caps with the tightening torque.

***CAUTION***

***Do not turn the camshaft.***

5) Remove the bearing caps.

6) Measure the plastigage at its widest point.

**Bearing oil clearance**
[Standard value]
Intake : 0.020 ~ 0.057mm (0.0008 ~ 0.0022in.)
Exhaust : 0.020 ~ 0.057mm (0.0008 ~ 0.0022in.)

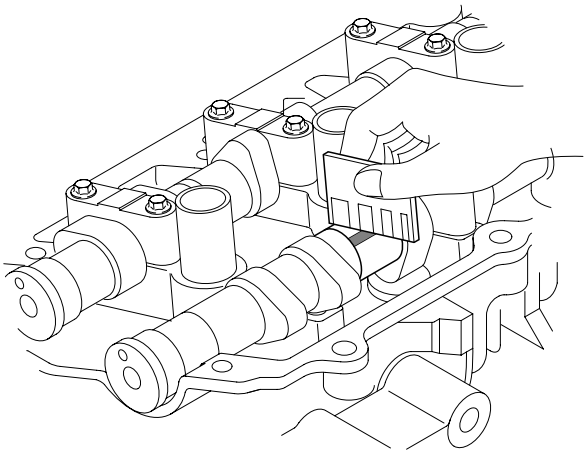

KCRF208A

If the oil clearance is greater than the maximum, replace the camshaft. If necessary, replace the cylinder head.

7) Completely remove the plastigage.

8) Remove the camshafts.

4. Inspect camshaft end play.

1) Install the camshafts.

2) Using a dial indicator, measure the end play while moving the camshaft back and forth.

**Camshaft end play**
[Standard value] : 0.05 ~ 0.15mm(0.0020 ~ 0.0059in.)

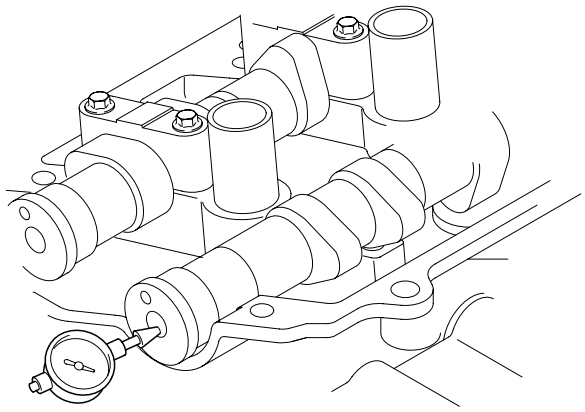

KCBF173E

If the end play is greater than the maximum, replace the camshaft. If necessary, replace the cylinder head.

3) Remove the camshafts.

**CVVT ASSEMBLY**

1. Inspect CVVT assembly.

   1) Fix the CVVT assembly with a vice. Ensure that the cam lobe and journal is not damaged.

   2) Check that the CVVT assembly will not turn. It should not be turned.

   3) Apply vinyl tape to the retard hole except the one(A) indicated by the arrow in the illustration.

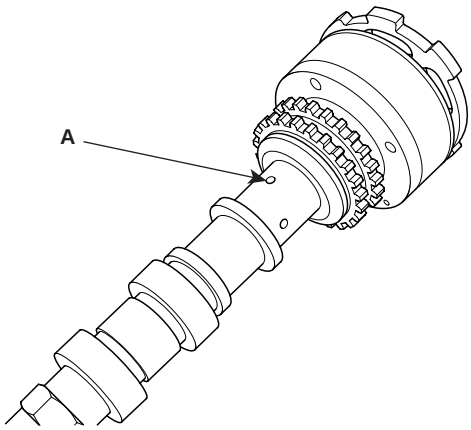


KCBF188A

   4) Wind tape around the tip of the air gun and apply air of approx. 150kpa(1.5kgf/cm², 21psi) to the port of the camshaft.
   (Perform this in order to release the lock pin for the maximum delay angle locking.)

***NOTE***

*When the oil splashes, wipe it off with a shop rag.*

   5) After the lock pin released, the CVVT assembly can turned in advanced direction.
   If the air applied is leaked much, the lock pin can not be released.

   6) Except the position where the lock pin meets at the maximum delay angle, let the CVVT assembly turn back and forth and check the movable range and that there is no resistance to movement.

| |
|---|
| Standard: Movable smoothly in the range about 60° |

   7) Turn the CVVT assembly with your hand in retard direction and lock it at the maximum delay angle position.

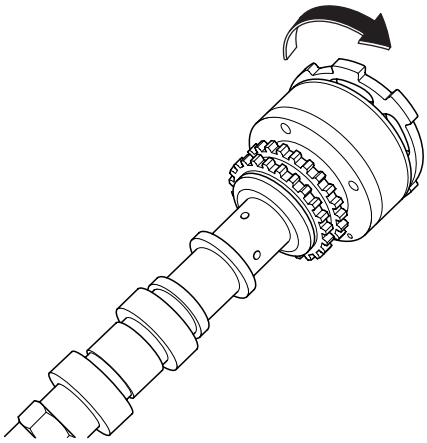

KCBF188B

## REPLACEMENT E3AC3B4D

### VALVE GUIDE

1. Using the SST(09221-3F100A), remove the valve guide from the downside of the cylinder head assembly.

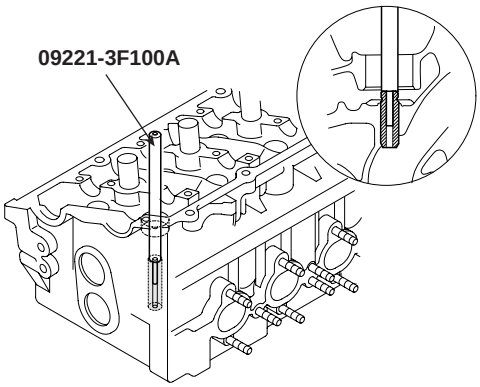


EDKD900A

2. Reprocess the valve guide hole for the oversized valve guide newly installed.

3. Using the SST(09221-3F100A/B), insert the valve guide in the upside of the cylinder head assembly. Be aware of the difference in length between the intake and the exhaust valve guides.

| **Specification** |
|---|
| Intake valve guide: 45.8 ~ 46.2mm(1.8031 ~ 1.8189in.) |
| Exhaust valve guide: 46.8 ~ 47.2mm(1.8425 ~ 1.8583in.) |

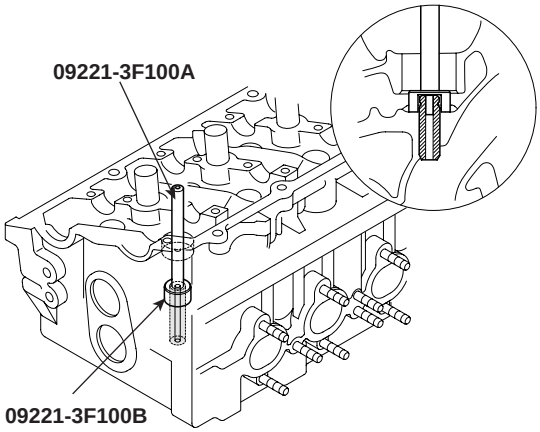


EDKD900B

4. After installing the valve guides, insert new valves and check the clearance between the valve stems and the valve guides.

5. After replacing the valve guides, check if they are properly installed with the valve seats. Reprocess valve seats if necessary.

## REASSEMBLY ECABCEB6

***NOTE***

- *Thoroughly clean all parts to be assembled.*
- *Before installing the parts, apply fresh engine oil to all sliding and rotating surfaces.*
- *Replace oil seals with new ones.*

1. Install valves.

   1) Using SST(09222-22001), push in a new valve stem seal with applying engine oil.

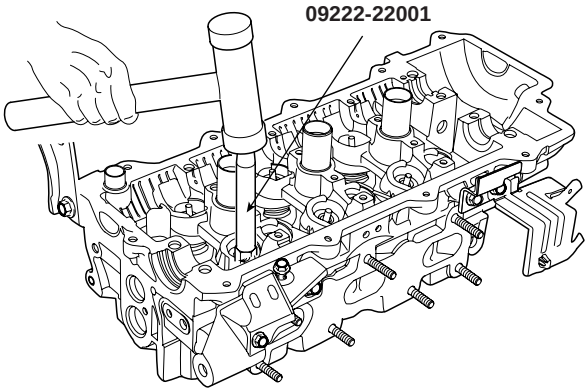


KCBF173B

***NOTE***

- *Do not reuse old valve stem seals.*
  *Incorrect installation of the seal could result in oil leakage past the valve guides.*
- *Reassemble the valve stem seals*

   2) After applying engine oil on the outer surface of each valve stem, insert the valve in the valve guide.
   Install the valve, valve spring and spring retainer.

***NOTE***

*When installing valve springs, the side coated with enamel should face toward the valve spring retainer*

   3) Using the SST(09222 - 3K000, 09222-3C300), compress the springs and install the retainer locks. After installing the valves, ensure that the retainer locks are correctly in place before releasing the valve spring compressor.

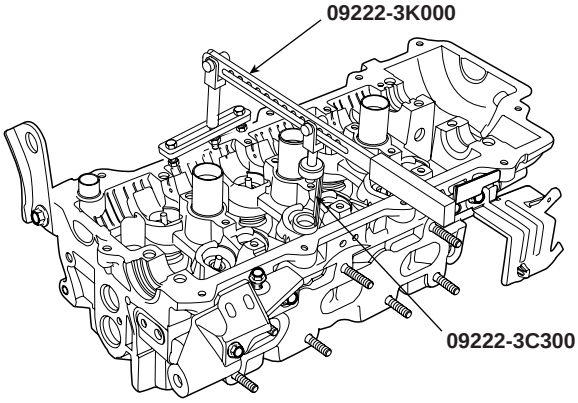


KCBF173C

   4) Lightly tap the end of each valve stem two or three times with the wooden handle of a hammer to ensure proper seating of the valve and retainer lock.

2. Install MLAs with engine oil applied on its surface. Check that the MLA rotates smoothly by hand.

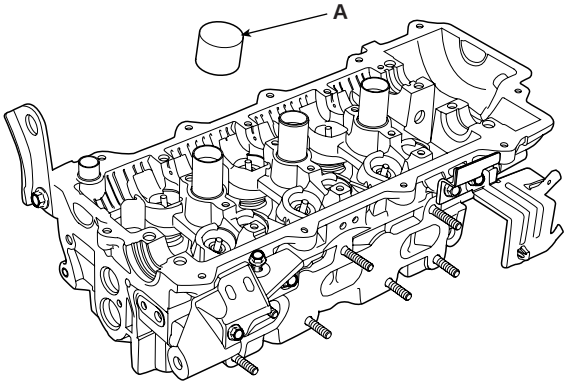


KCBF173D

***NOTE***

*MLA should be reinstalled in its original position.*

3. Install OCV(Oil Control Valve)(A).

**Tightening torque**
7.8 ~ 9.8Nm(0.8 ~ 1.0kgf.m, 5.8 ~ 7.2lb-ft)

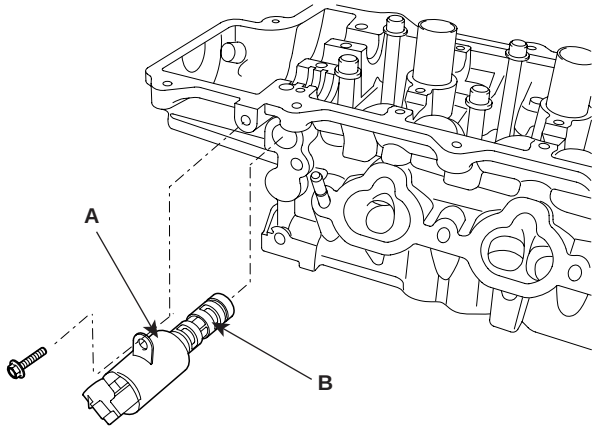


KCBF166B

***NOTE***

- *To install OCV with gray colored connector into RH bank.*
- *To install OCV with black colored connector into LH bank.*

***CAUTION***

- ***Do not reuse the OCV when dropped.***
- ***Keep clean the OCV.***
- ***Do not hold the OCV sleeve during servicing.***
- ***When the OCV is installed on the engine, do not move the engine while holding the OCV yoke.***
- ***If there is dust on the filter(B) of the OCV, clean it all.***

## INSTALLATION E77C23D4

***NOTE***

- *Thoroughly clean all parts to be assembled.*
- *Always use a new head and manifold gasket.*
- *The cylinder head gasket is a metal gasket. Take care not to bend it.*
- *Rotate the crankshaft to set the No.1 cylinder piston at TDC.*

1. After putting the cylinder head gasket on the cylinder block, install the cylinder head.

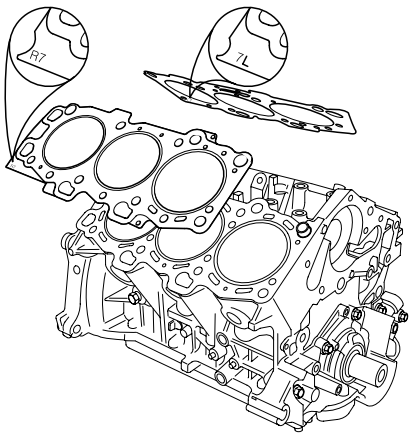


KCBF191A

***CAUTION***

***Ensure the LH/RH classification of the cylinder head gasket when installing.***

2. Tighten the cylinder head bolts with the plain washers in several steps as following order.

***NOTE***

- *In assembling washers, the marked surface should face upward.*
- *In installing the cylinder head bolts, apply engine oil on the thread of the bolts and the surface of the washers.*

**Tightening torque**
24.5Nm(2.5kgf.m, 18.1lb-ft) + 60˚ + 45˚

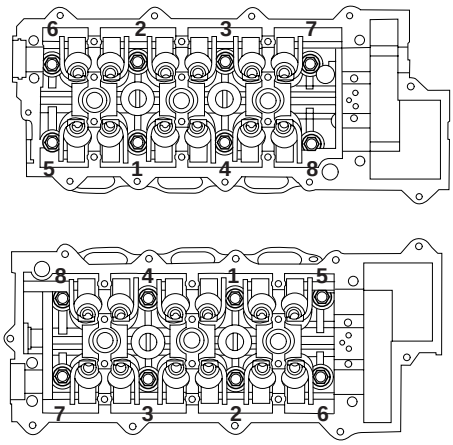


KCBF176B

***NOTE***

*Using the SST(09221-4A000), tighten the bolts which need to be tightened with the angular tightening method.*

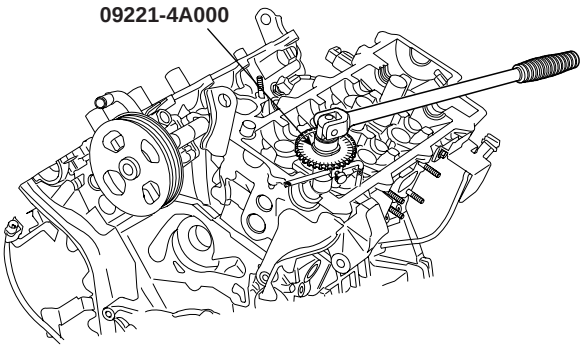


LDLG063A

3. Install the CVVT assembly and camshaft chain sprocket with the dowel pin in the CVVT installed to the intake camshaft. Ensure that the pin will not be installed in the hole for oil feeding.

| |
|---|
| **Tightening torque**<br>66.7~78.5Nm(6.8~8.0kgf.m, 49.2~57.9lb-ft) |

***NOTE***

*After tightening the CVVT bolts, rotate the CVVT assembly housing counterclockwise by hand to seat the lock pin in the CVVT assembly in good position.*

***CAUTION***

***Fix the hexagonal part of the camshaft in a vice when tightening the CVVT bolts. Do not fix the CVVT housing or sprocket in a vice.***

4. Install the camshaft in the cylinder head assembly.

   1) Align the timing mark of the camshaft timinig chain.

**LH CAMSHAFT CHAIN TIMING MARK**

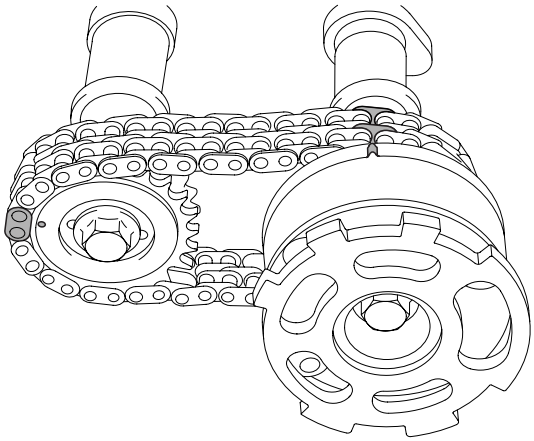

KCBF164A

**RH CAMSHAFT CHAIN TIMING MARK**

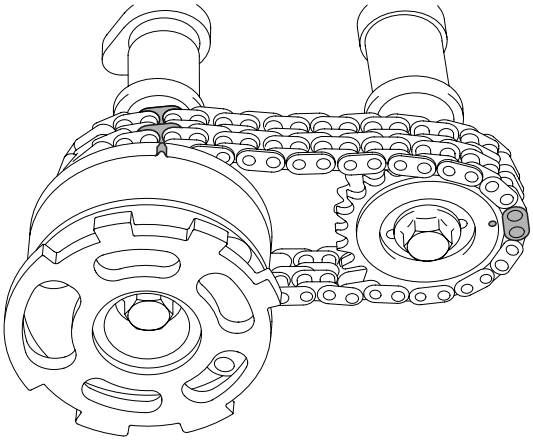

KCBF165A

***CAUTION***

***Both timing marks should face upward in re-assemby.***

5. Install the timing chain tensioner.

   1) Insert the set pin by pressing the timing chain tensioner.

   2) Install the chain tensioner(A) in the cylinder head assembly.

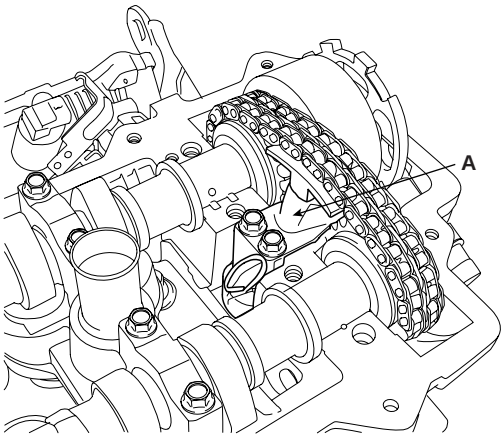


KCBF168A

6. Install the camshaft bearing caps.

| |
|---|
| **Tightening torque** |
| Bearing cap bolt(A: 6×38) - 10.8~12.7Nm(1.1~1.3kgf.m, 8.0~9.4lb-ft) |
| Bearing cap bolt(B: 8×38) - 20.6~22.5Nm(2.1~2.6kgf.m, 15.2~18.8lb-ft) |

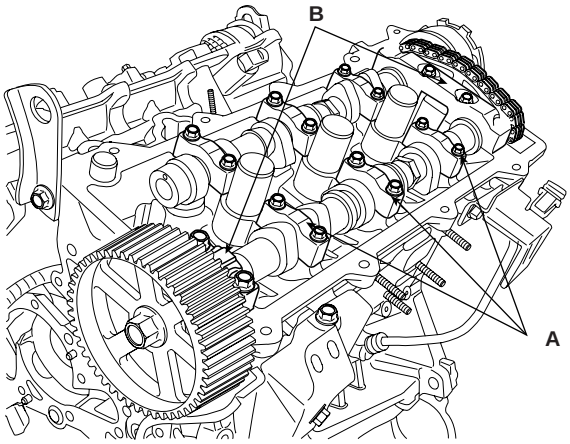


KCBF169A

***NOTE***

*When installing the bearing caps, check the marks on them as shown below and install them in its proper position.*

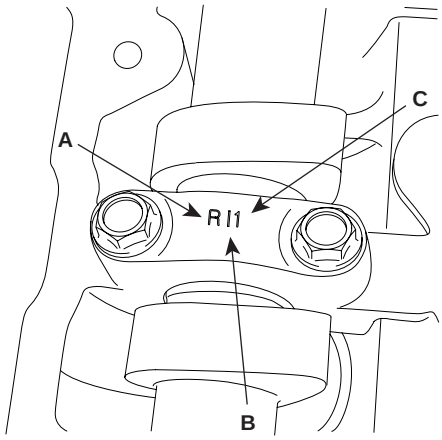


KDRF228A

| |
|---|
| A(LH/RH HEAD): L(LH), R(RH) |
| B(Intake/Exhaust): I(Intake), E(Exhaust) |
| C(Cap no.): 1,2,3 |

***CAUTION***

***When installing the bearing caps, turn the crankshaft to place a piston in the middle of the block because linterference between valves and pistons can occur.***

7. Using the SST(09214-21000), install the camshaft oil seal.

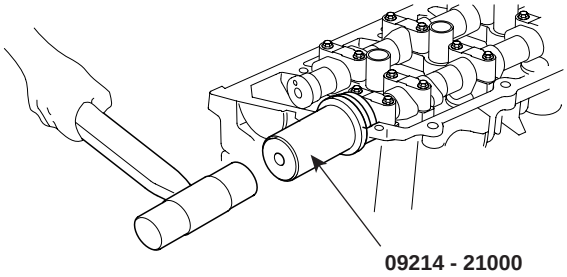


KCBF190A

***NOTE***

- *Befor installing, apply engine oil.*
- *The camshaft cap surface should adhere to the cylinder head assembly.*
- *Do not press an eccentric load.*

8. Install the CKP sensor connector bracket(A).

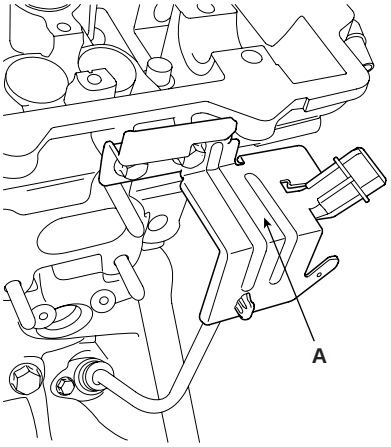


KCBF172A

9. Install the bank 2 timing belt rear cover(A).

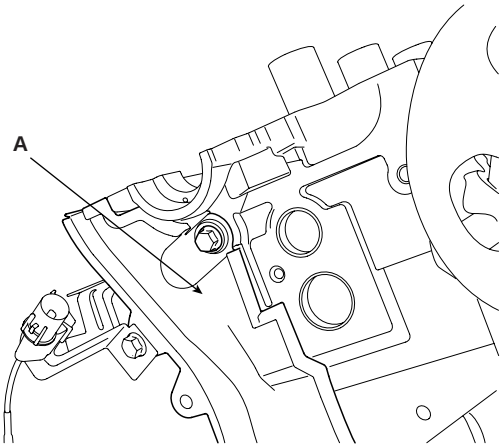


KCBF171A

10. Install the bank 1 timing belt rear cover(A).

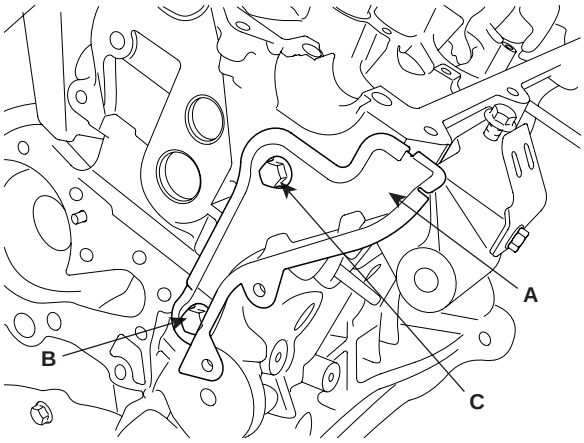


KCBF170B

**NOTE**

*The length of the bolt B is longer than that of the bolt C.*

11. Install the timing belt.(Refer to 'Timing system').

12. Check and adjust the valve clearance.

13. Install the cylinder head cover.

    1) Remove oil, dust or sealant on the upper surface of the cylinder before assembling cylinder head cover.

    2) Assemble the cylinder head cover in five minites after applying liquid gasket(LOCTITE 5900) on the camshaft cap and packing part.

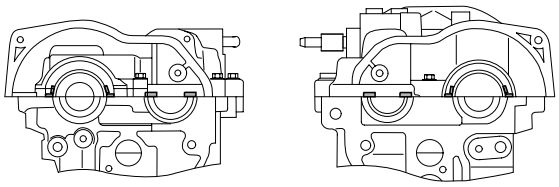

KCBF174A

    3) Tighten the cylinder head cover bolts as following order(A).

**Tightening torque**
7.8~9.8Nm(0.8~1.0kgf.m, 5.8~7.2lb-ft)

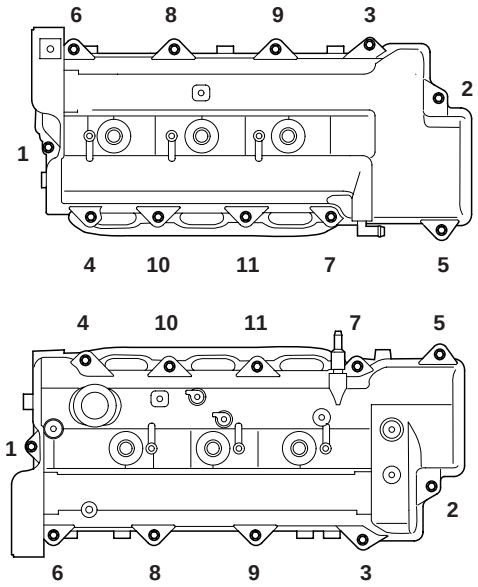


KCBF175A

***NOTE***

- *Do not start engine for thirty minites after assembling the cylinder head cover.*
- *Do not reuse the cylinder head cover gasket.*

14. Install the water temp. control assembly.
15. Install the intake manifold assembly.
16. Install the exhaust mainfold assembly.
17. Install the power steering pump.(Refer to 'ST' group).
18. Install the drive belt(A).

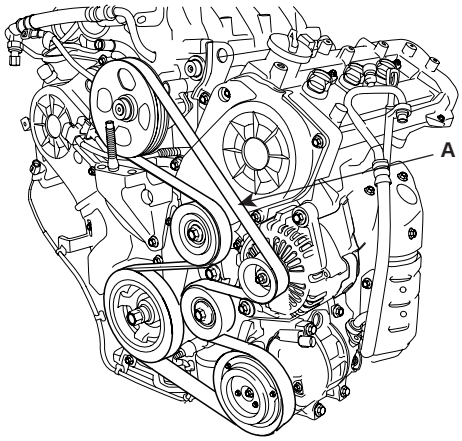


KCBF105A

19. Install the heater hose.
20. Connect the brake vaccume hose(A).

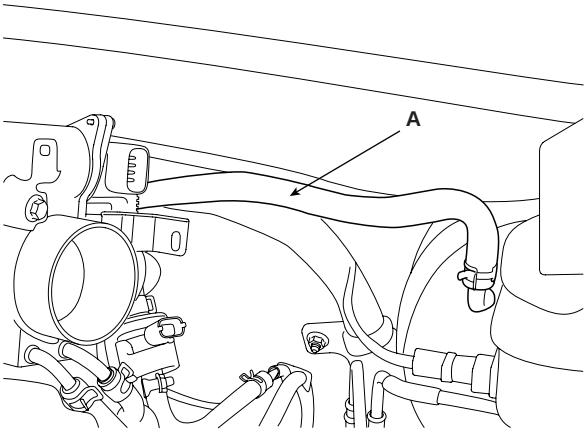


LDLG036A

21. Install the PCV(Pulge Control Valve) hose(A).

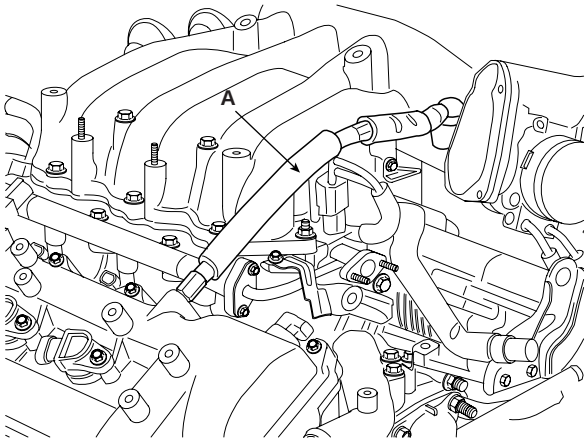


KCBF180A

22. Connect the engine wiring harness connectors.
    1) Connect the bank 1 CMP sensor connector(A).

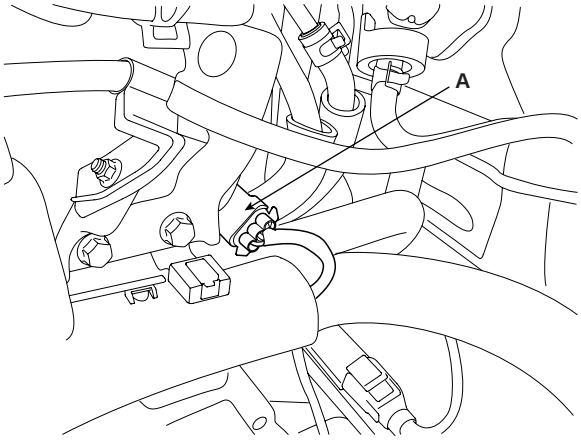


KCBF152A

    2) Connect the bank 2 front/rear O2 sensor connectors(A,B) and the CKP sensor connector(C).

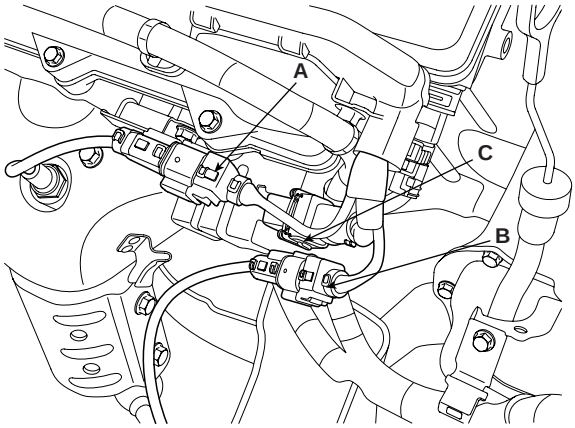


KCBF154A

3) Connect the bank 2 CMP sensor connector(A) and the WTS(Water Temperature Sensor) connector(B).

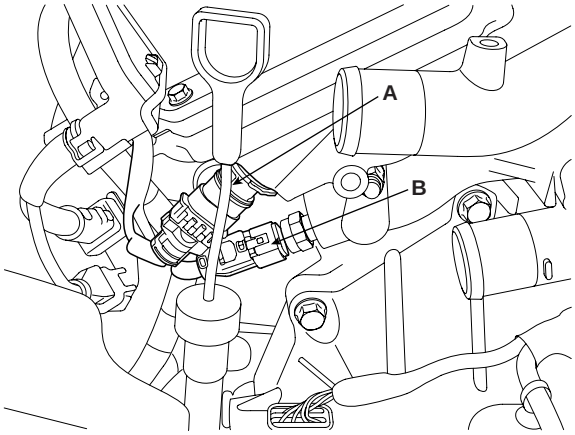


KCBF155A

4) Connect the generator connector(A) and the air conditioning compressor connector(B).

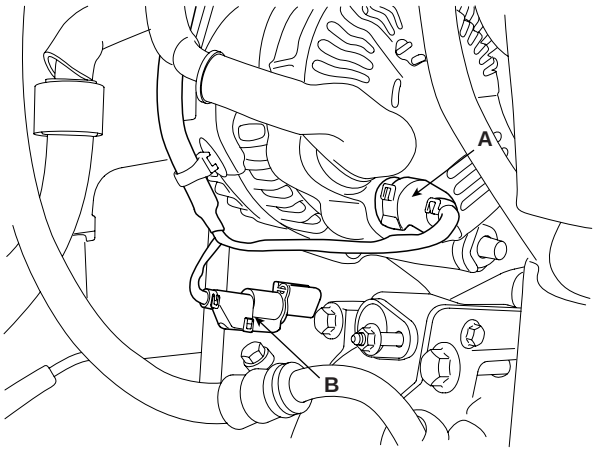


KCBF151A

5) Connect the MAPS(Manifold Absolute Pressure Sensor) connector(A), the ETC(Electronic Throttle Control) connector(B) and the PCSV(Purge Control Solenoid Valve) connector(C).

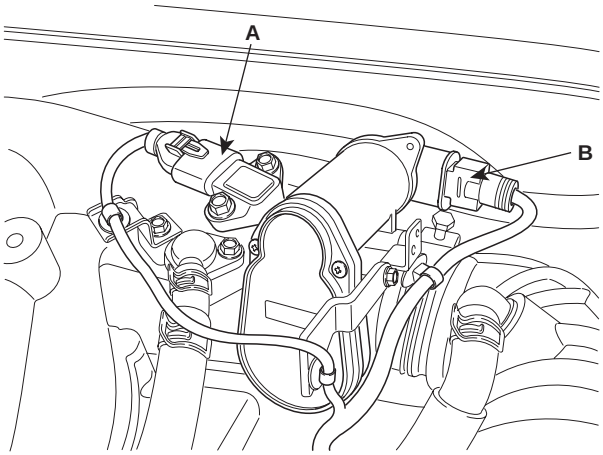


LDLG034A

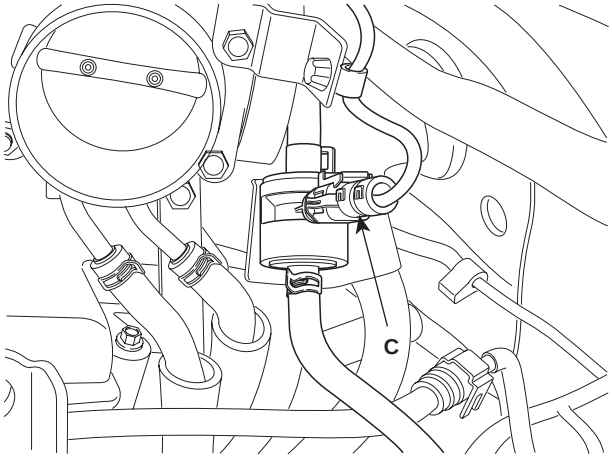


LDLG035A

6) Connect the injection harness connector(A), the No.2 VIS(Variable Induction System) connector(B), the No.1/No.2 OCV(Oil Control Valve) connectors(C,D) and the OTS(Oil Temperature Sensor) connector(E).

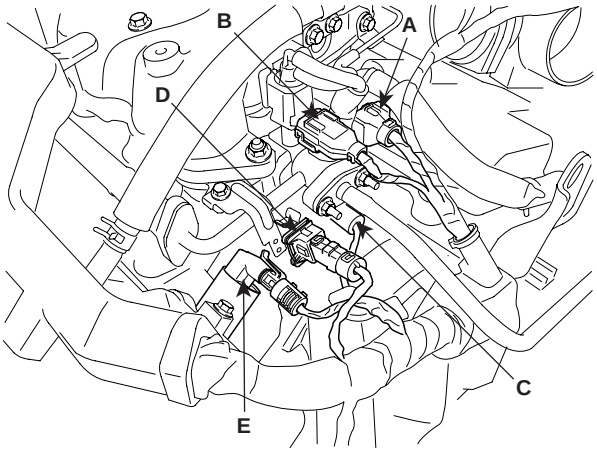


LDLG006A

7) Connect the injection connectors(A,B,C), the ground lines(D), the condensor connector(E) and the Ignition coil connectors(F).

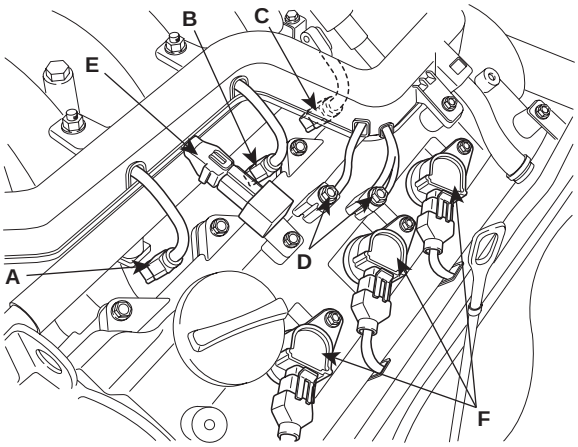


LDLG060A

8) Connect the bank 1 front/rear O2 sensor connectors(A).

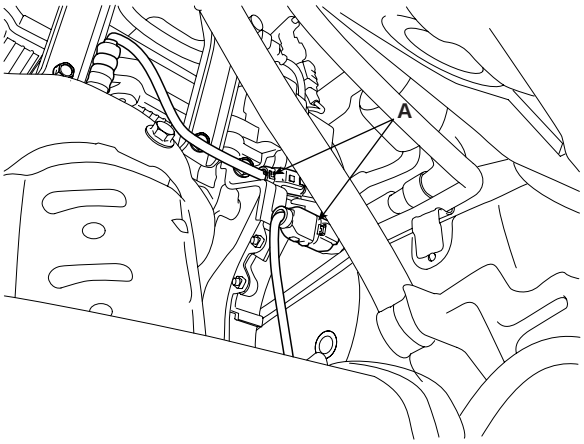


KCBF160A

9) Connect the No.1/No.2 knock sensor connectors(A,B), the oil pressure switch connector(C), the ignition coil harness(D) and the No.1 VIS(Variable Induction System) connector(E).

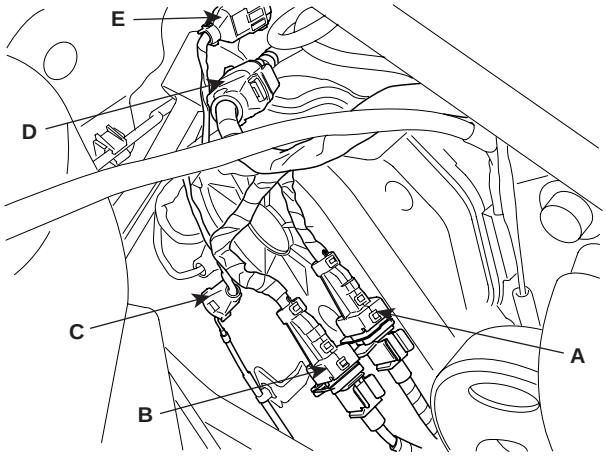


LDLG005A

23. Install the fuel inlet hose(A) from the delivery pipe.

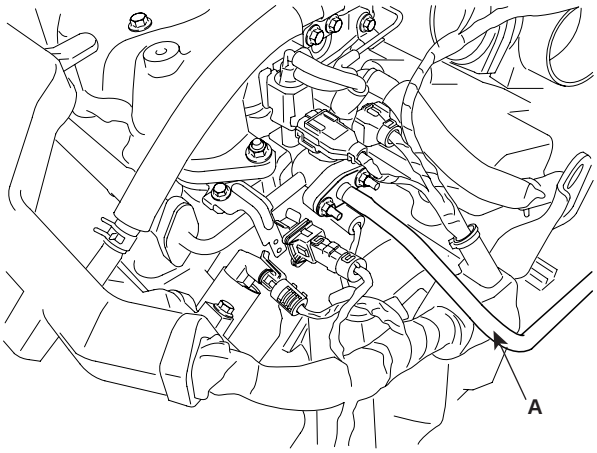


LDLG062A

24. Install the upper radiator hose(A) and lower radiator hose(B).

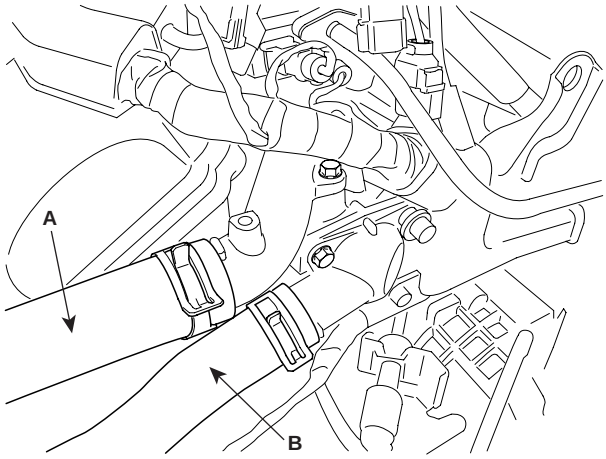


LDLG008A

25. Install the intake air hose and air cleaner assembly.

    1) Connect the PCM connectors(D).

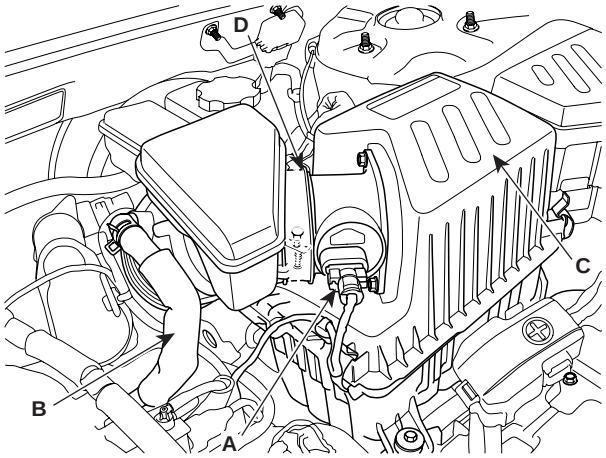


SCMEM6004L

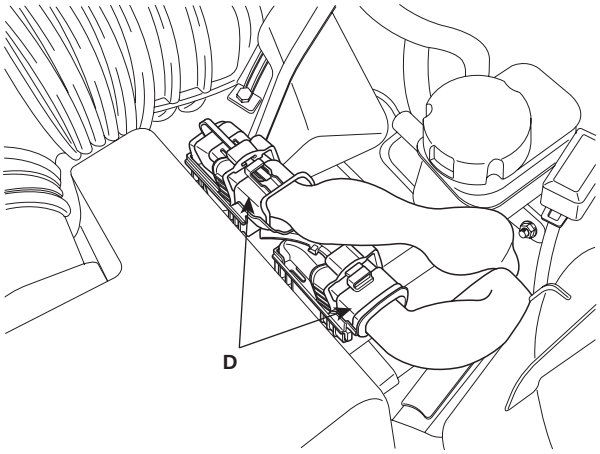


LDLG061A

    2) Install the intake air hose and air cleaner assembly(C).

    3) Connect the breather hose(B) from air cleaner hose.

    4) Connect the MAF connector(A).

26. Install the engine cover.

27. Refill engine coolant.

# TIMING SYSTEM

## COMPONENTS E19F8373

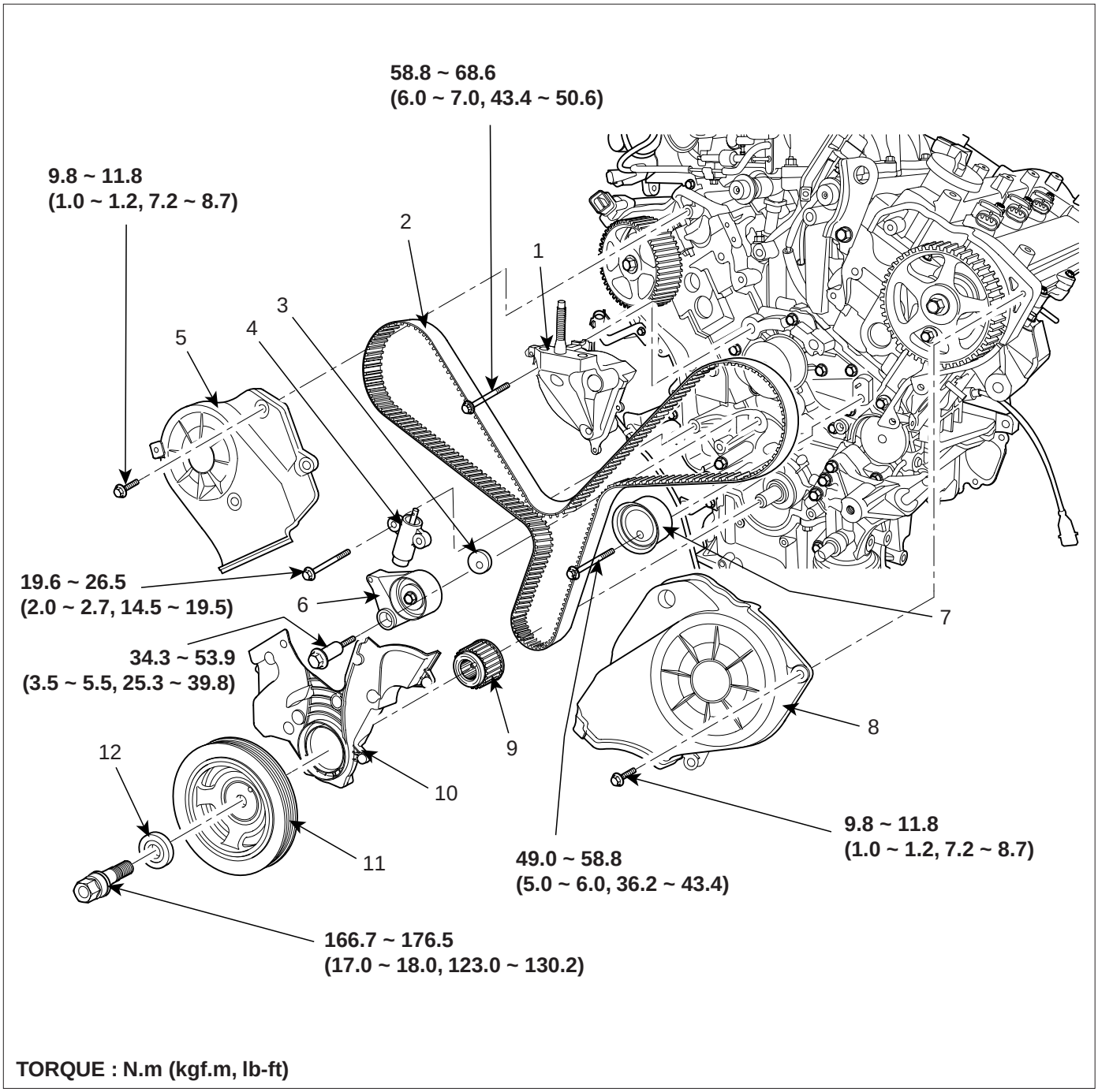


1. Engine support bracket
2. Timing belt
3. Tensioner arm assembly washer
4. Timing belt auto tensioner
5. Bank 1 timing belt upper cover
6. Timing belt tensioner arm assembly
7. Idler pulley
8. Bank 2 timing belt upper cover
9. Crankshaft sprocket
10. Timing belt lower cover
11. Damper pulley
12. Special washer

LDLG039A

## REMOVAL EDEF75A6

1. Remove the engine cover.
2. Remove the front right wheel and tire.
3. Remove the right side cover.
4. Remove the drive belt(A), the idler(B) and the tensioner(C).

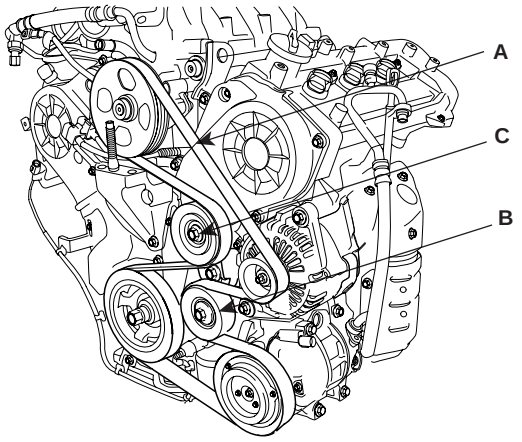


KCBF105B

***NOTE***

*In removing the drive belt, fix a tool in the auto tensioner pulley bolt and turn the bolt counter clockwise.*

5. Remove the timing belt upper cover(A).

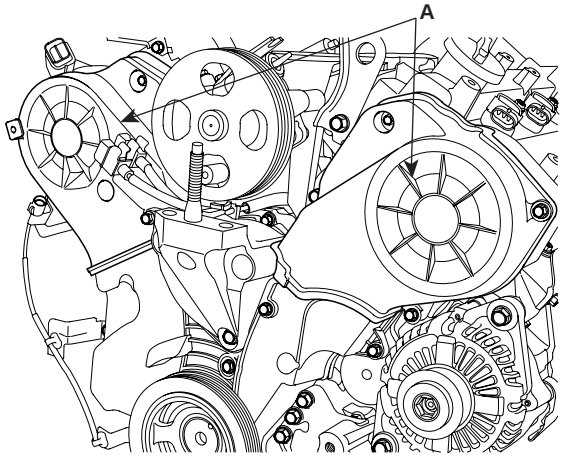


KCBF106A

6. Align the groove of the pulley with the timing mark of the timing belt cover by turning the crankshaft pulley clockwise. Check if the timing mark of the camshaft sprocket is aligned with that of the cylinder head cover at the moment.
(No.1 cylinder piston at TDC)

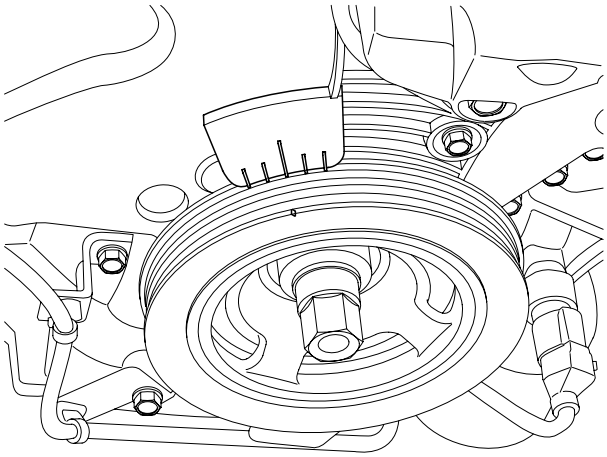

KCBF107A

7. Remove the engine mounting bracket.
   1) Sustain the engine oil pan with a jack.

***CAUTION***

***Put a wooden or rubben block between the jack and the engine oil pan.***

   2) Remove the engine mounting bracket(A).

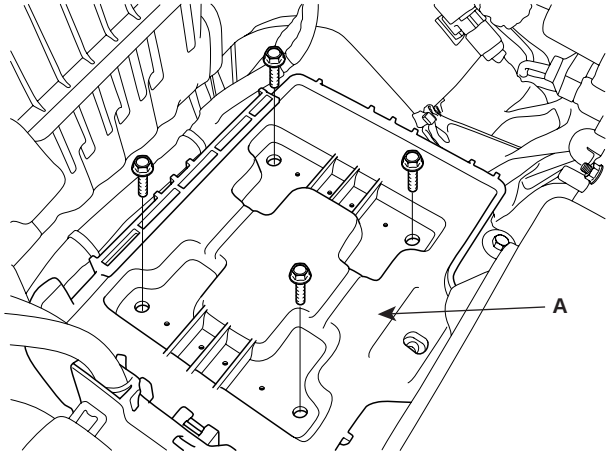


SCMEM6007L

8. Remove the crankshaft damper pulley(A).

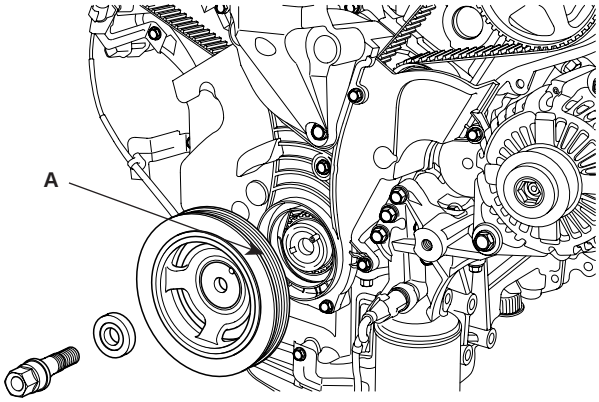


KCBF109A

9. Remove the timing belt lower cover(A).

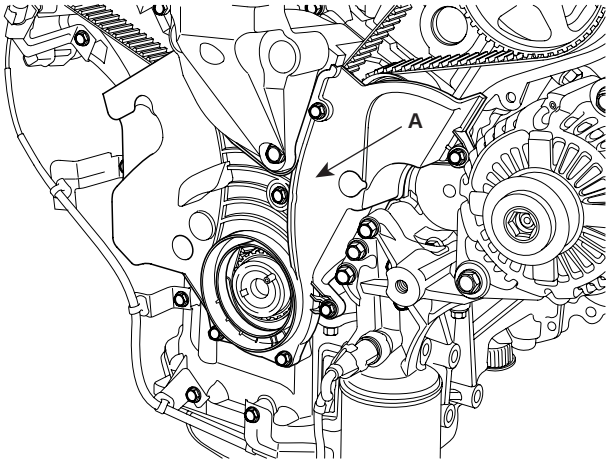


KCBF110A

10. Remove the engine support bracket(A).

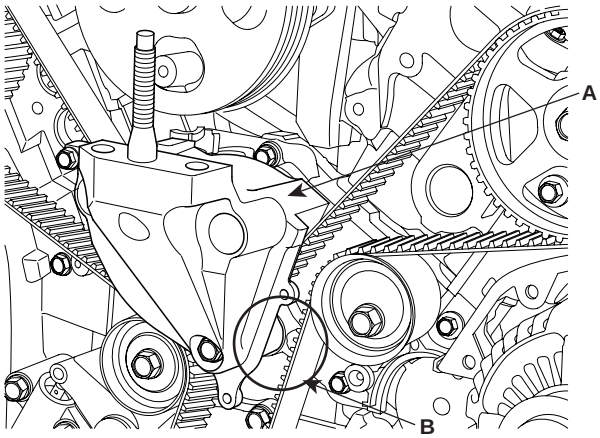


LDLG065A

**NOTE**

*After the removal, engine coolant can be drained a little from that point(B) which is a matter of no importance.*

11. Remove the timing belt auto tensioner(A).

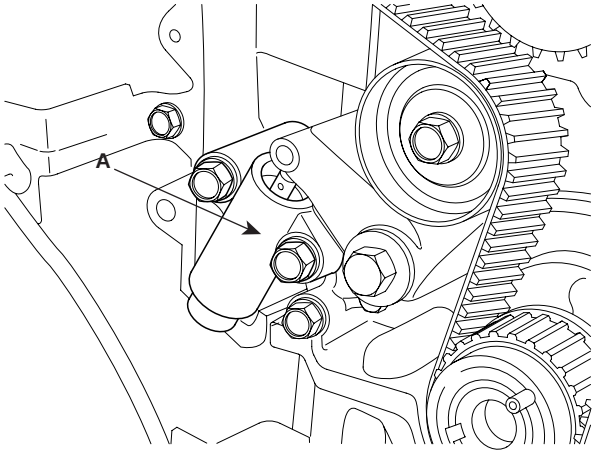


KCBF112A

12. Remove the timing belt(A).

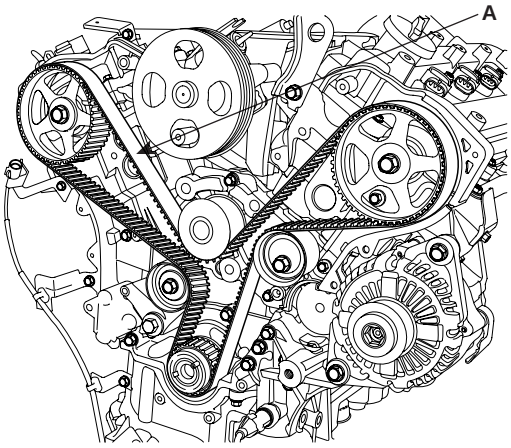


KCBF113A

**NOTE**

*Make a direction mark of revolution on the timing belt for reusal.*

13. Remove the tensioner arm assembly(A) and the idler(B).

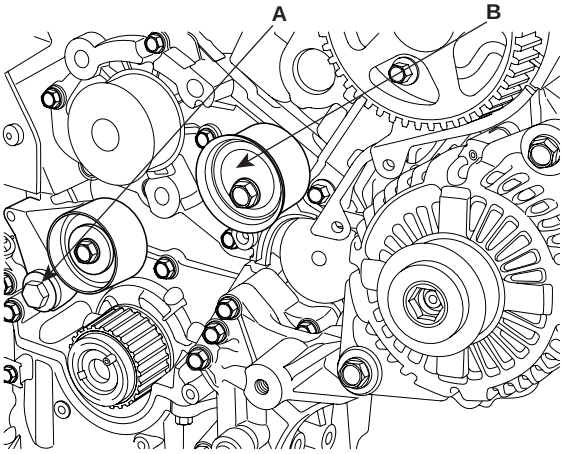


KCBF114A

14. Remove the crankshaft sprocket.

## INSPECTION EFF268C6

### SPROCKETS, TENSIONER, IDLER

1. Check the camshaft sprocket and crankshaft sprocket, tensioner pulley and idler pulley for abnormal wear, cracks, or damage. Replace as necessary.

2. Inspect the tensioner and the idler for easy and smooth rotation and check for play or noise. Replace as necessary.

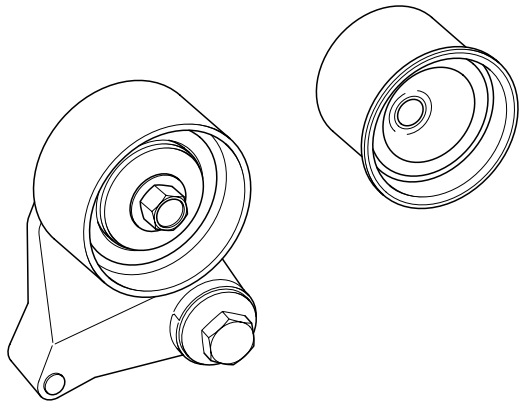

KCBF115A

3. Replace the tensioner and the idler if grease is leaked from bearings.

### TIMING BELT

1. Check the belt for oil or dust deposits.
   Replace, if necessary.
   Small deposits should be wiped away with a dry cloth or paper. Do not clean with solvent.

2. When the engine is overhauled or belt tension adjusted, check the belt carefully. If any of the following flaws are evident, replace the belt.

   ***NOTE***

   - *Do not bend, twist or turn the timing belt inside out.*
   - *Do not allow the timing belt to come into contact with oil, water and steam.*

3. Inspect the idler for easy and smooth rotation and check for play or noise.

## INSTALLATION E8CBF683

1. Install the crankshaft sprocket.

2. Install the tensioner arm assembly(A) and the idler(B).

**Tightening torque**
Tensioner arm bolt : 34.3 ~ 53.9Nm(3.5 ~ 5.5kgf.m, 25.3~ 39.8lb-ft)
Idler pulley bolt : 49.0 ~ 58.8Nm(5.0 ~ 6.0kgf.m, 36.2~ 43.4lb-ft)

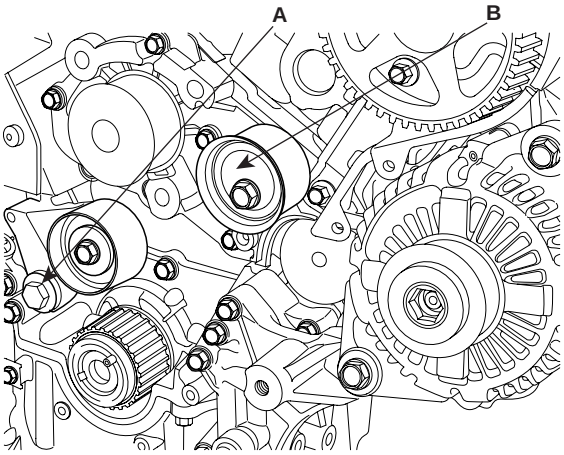


KCBF114A

3. Install the timing belt auto tensioner.

   1) Fixing the tensioner with a vice and compressing the rod, insert a set-pin.

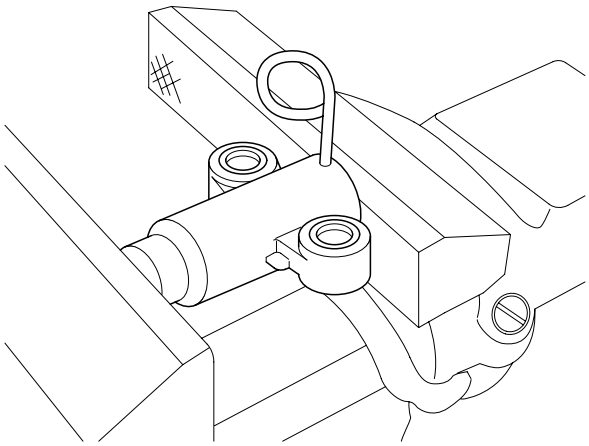

KCBF116A

***NOTE***

- *Do not lay down the auto tensioner.*
- *Do not compress the rod suddenly.*
- *When reinstalling the auto tensioner, ensure its direction.*

   2) Install the auto tensioner(A) to the front case with the set-pin inserted.

**Tightening torque**
19.6 ~ 26.5Nm(2.0 ~ 2.7kgf.m, 14.5 ~ 19.5lb-ft)

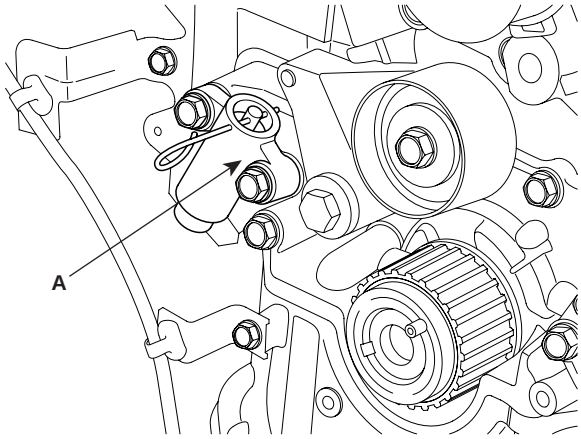


KCBF117A

4. Ensure the timing marks on the camshaft and the crankshaft sprockets.

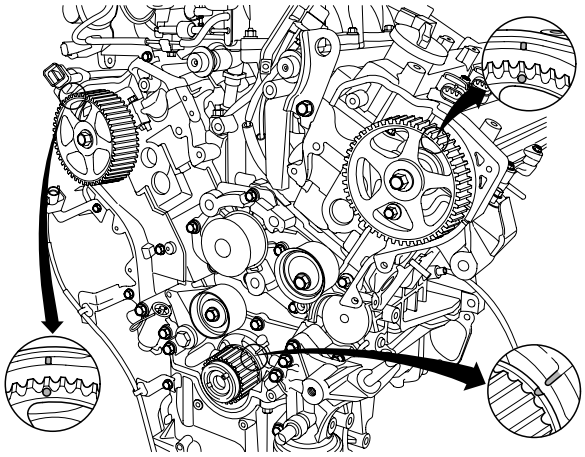

LDLG066A

5. Install the timing belt.
   Crankshaft sprocket(A) → Idler(B) → Bank 2 exhaust camsprocket(C) → Water pump pulley(D) → Bank 1 exhaust camsprocket(E) → Tensioner pulley(F).

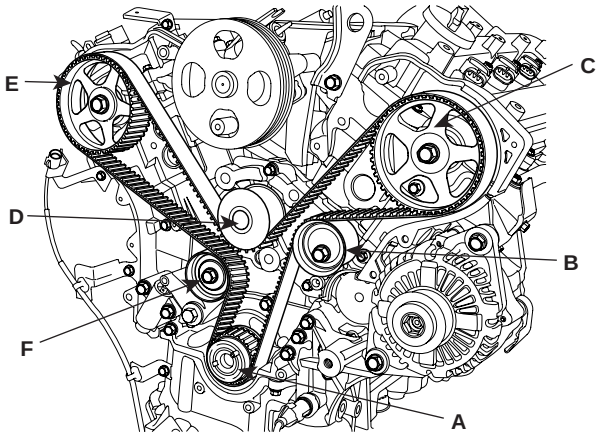


LDLG067A

6. Remove the auto tensioner set-pin.

7. Check the tension of the timing belt.

   1) Turn the crankshaft 2 rev. clockwise which makes the No.1 cylinder piston position at TDC.
      After 5minutes, measure the length of the projected rod.

**Specification**
5 ~ 7mm(0.1969 ~ 0.2756in.)

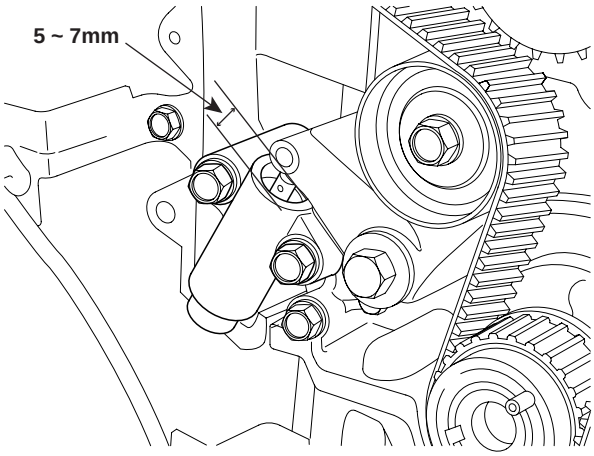


KCBF112B

   2) Ensure the locations of the timing marks for each sprocket.

8. Install the engine support bracket(A).

**Tightening torque**
58.8 ~ 68.6Nm(6.0 ~ 7.0kgf.m, 43.4 ~ 50.6lb-ft)

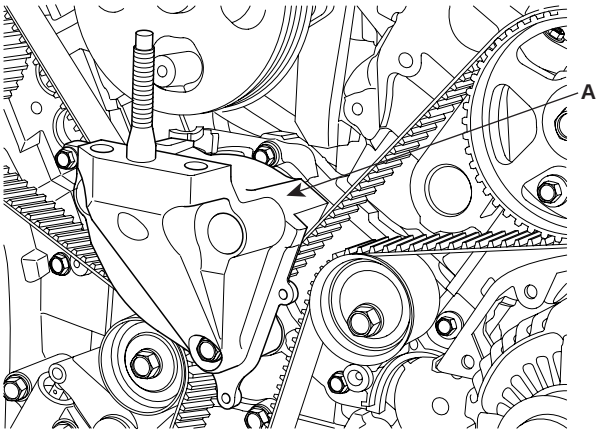


LDLG068A

9. Install the timing belt lower cover.

**Tightening torque**
9.8 ~ 11.8Nm(1.0 ~ 1.2kgf.m, 7.8 ~ 8.7lb-ft)

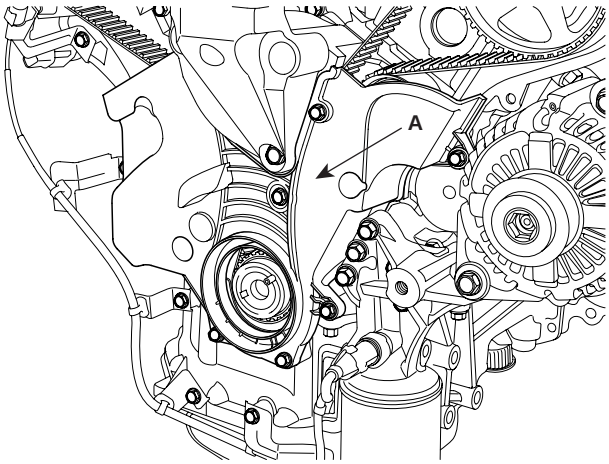


KCBF110A

10. Install the crankshaft damper pulley(A).

**Tightening torque**
166.7 ~ 176.5Nm(17.0 ~ 18.0kgf.m, 123.0 ~ 130.2lb-ft)

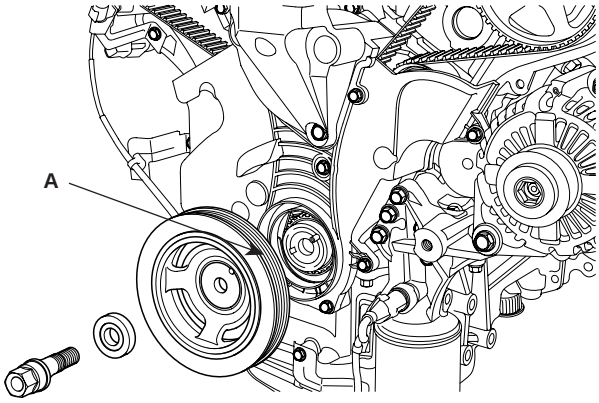


KCBF109A

11. Install the engine mounting bracket(A).

**Tightening torque**
63.7 ~ 83.4Nm(6.5 ~ 8.5kgf.m, 47.0 ~ 61.5lb-ft)

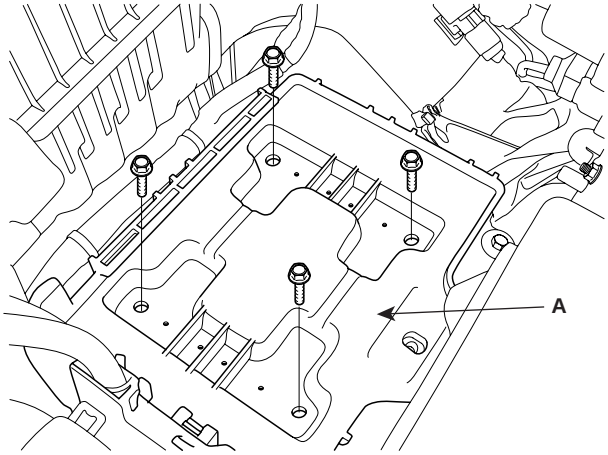


SCMEM6007L

12. Install the timing belt upper cover(A).

**Tightening torque**
9.8 ~ 11.8Nm(1.0 ~ 1.2kgf.m, 7.2 ~ 8.7lb-ft)

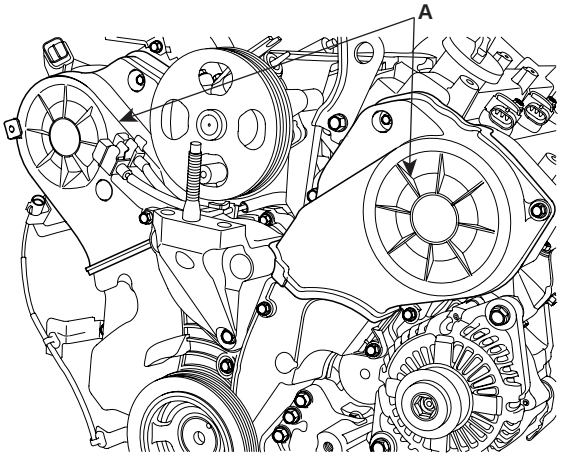


KCBF106A

13. Install the drive belt tensioner(C).

**Tightening torque**
34.3 ~ 53.9Nm(3.5 ~ 5.5kgf.m, 25.3 ~ 39.8lb-ft)

14. Install the drive belt idler and the drive belt(A).

**Tightening torque**
34.3 ~ 53.9Nm(3.5 ~ 5.5kgf.m, 25.3 ~ 39.8lb-ft)

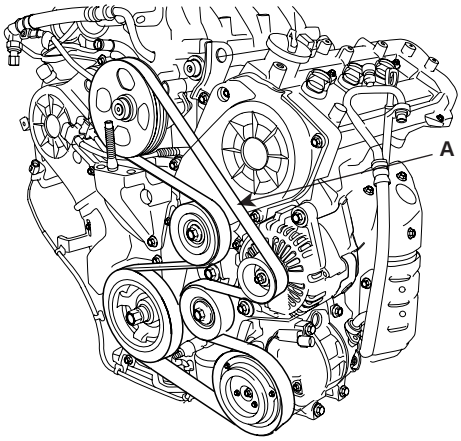


KCBF105A

15. Install the right side cover.

16. Install the front right wheel and tire.

17. Install the engine cover.

# ENGINE AND TRANSAXLE ASSEMBLY

## REMOVAL E73C468F

***CAUTION***

- ***Use fender covers to avoid damaging painted surfaces.***
- ***To avoid damage, unplug the wiring connectors carefully while holding the connector portion.***

***NOTE***

- *Mark all wiring and hoses to avoid misconnection.*

1. Remove the air duct and the battery(A) after disconnecting the terminals(B) from the battery.

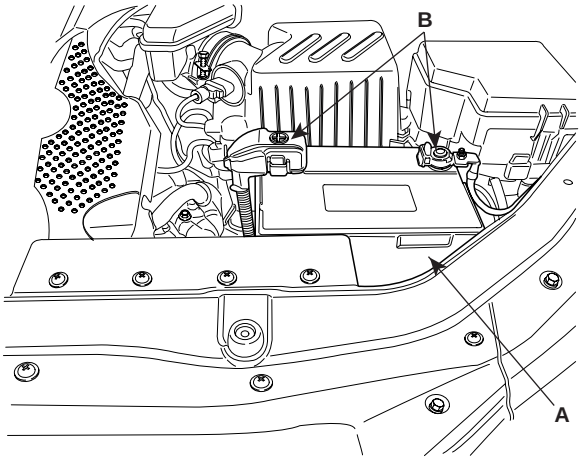


SCMEM6006L

2. Remove the engine cover.
3. Remove the intake air hose and air cleaner assembly.
   1) Disconnect the MAF connector(A).
   2) Disconnect the breather hose(B) from air cleaner hose.
   3) Remove the intake air hose and air cleaner assembly(C).
   4) Disconnect the PCM connectors(D).

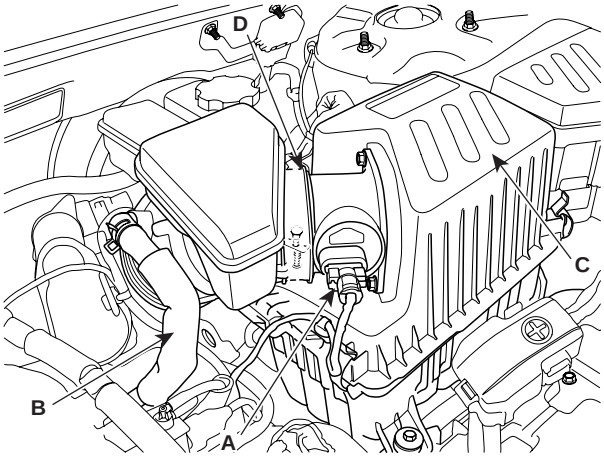


SCMEM6004L

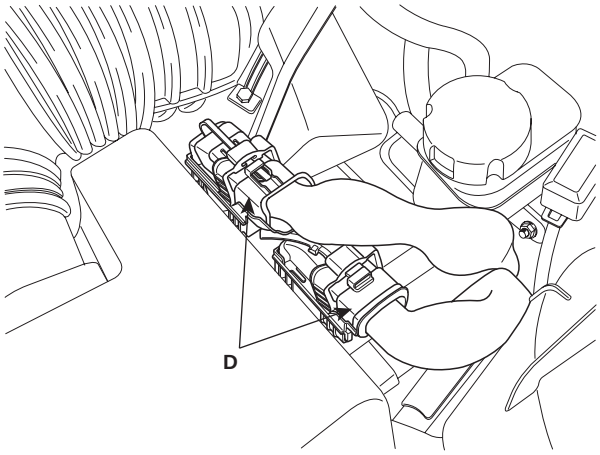


LDLG061A

4. Remove the battery tray(A) while recovering refrigerant.

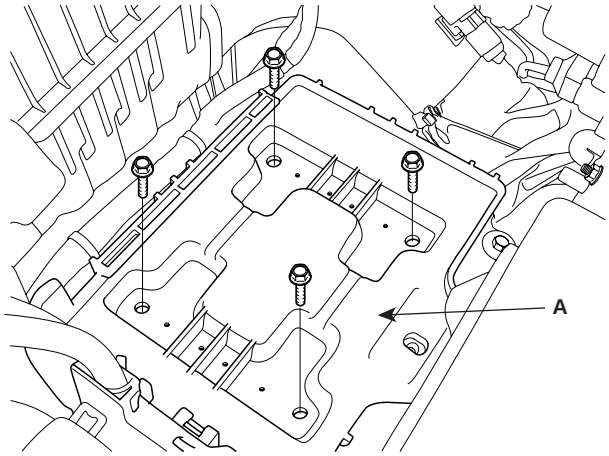


SCMEM6007L

5. Remove the upper radiator hose(A) and lower radiator hose(B).

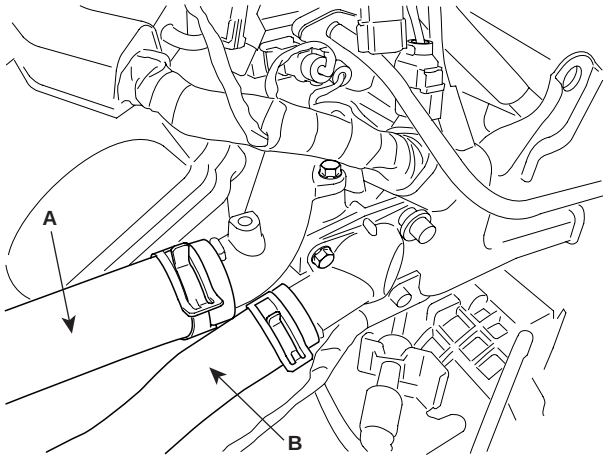


LDLG008A

6. Remove the transaxle oil cooler hoses(A/T vehicles only).

7. Remove the fuel inlet hose(A) from the delivery pipe.

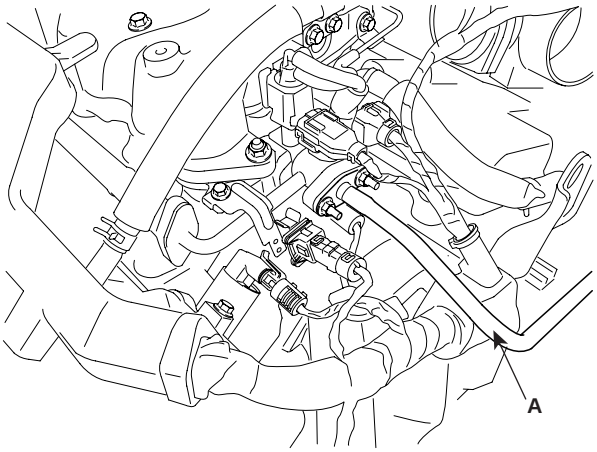


LDLG062A

8. Disconnect the engine wiring harness connectors.

   1) Disconnect the No.1/No.2 knock sensor connectors(A,B), the oil pressure switch connector(C), the ignition coil harness(D) and the No.1 VIS(Variable Induction System) connector(E).

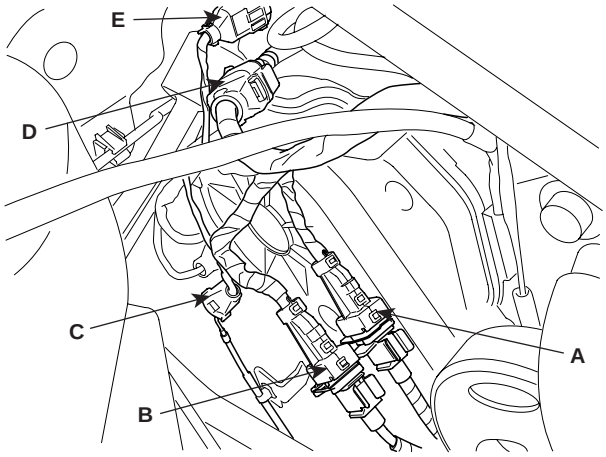


LDLG005A

   2) Disconnect the bank 1 front/rear O2 sensor connectors(A).

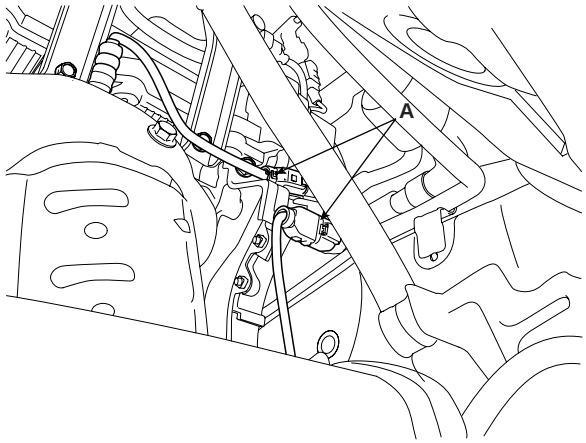


KCBF160A

   3) Disconnect the injection connectors(A,B,C), the ground lines(D), the condensor connector(E) and the Ignition coil connectors(F).

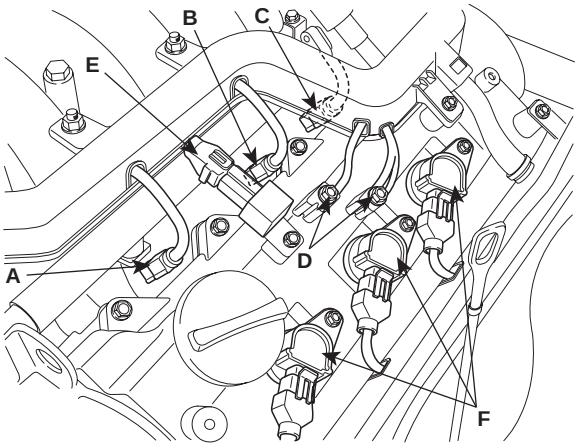


LDLG060A

4) Disconnect the injection harness connector(A), the No.2 VIS(Variable Induction System) connector(B), the No.1/No.2 OCV(Oil Control Valve) connectors(C,D) and the OTS(Oil Temperature Sensor) connector(E).

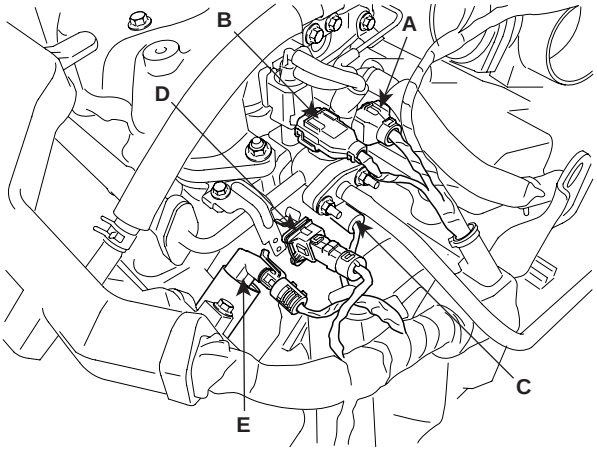


LDLG006A

5) Disconnect the MAPS(Manifold Absolute Pressure Sensor) connector(A), the ETC(Electronic Throttle Control) connector(B) and the PCSV(Purge Control Solenoid Valve) connector(C).

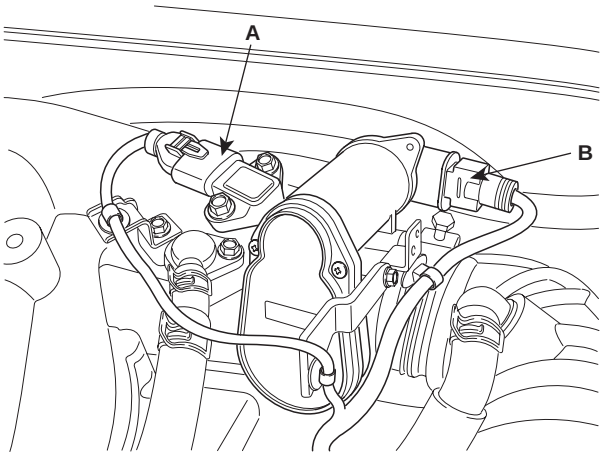


LDLG034A

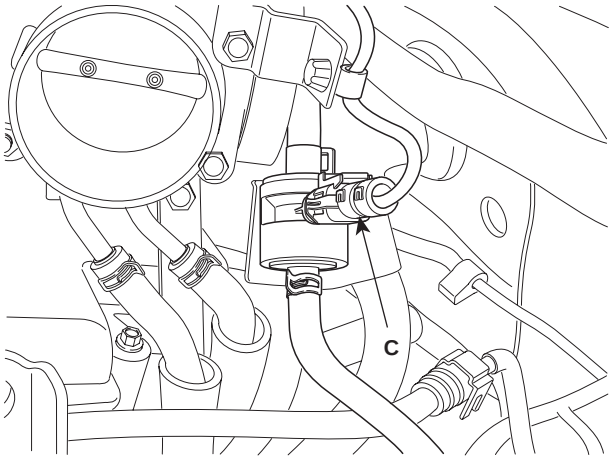


LDLG035A

6) Disconnect the generator connector(A) and the air conditioning compressor connector(B).

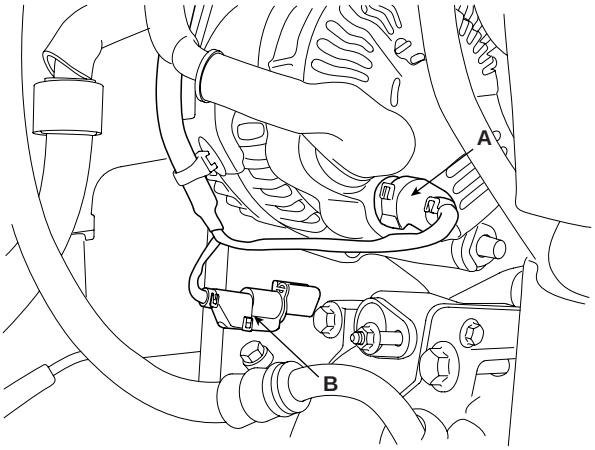


KCBF151A

7) Disconnect the bank 2 CMP sensor connector(A) and the WTS(Water Temperature Sensor) connector(B).

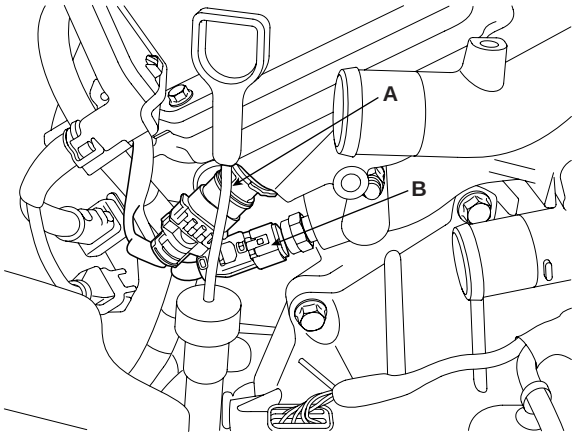


KCBF155A

8) Disconnect the bank 2 front/rear O2 sensor connectors(A,B) and the CKP sensor connector(C).

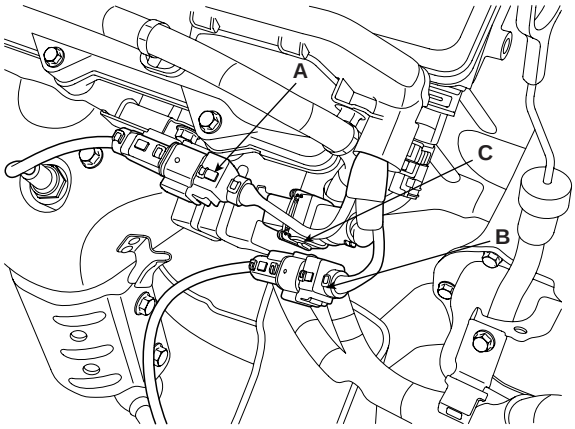


KCBF154A

9) Disconnect the bank 1 CMP sensor connector(A).

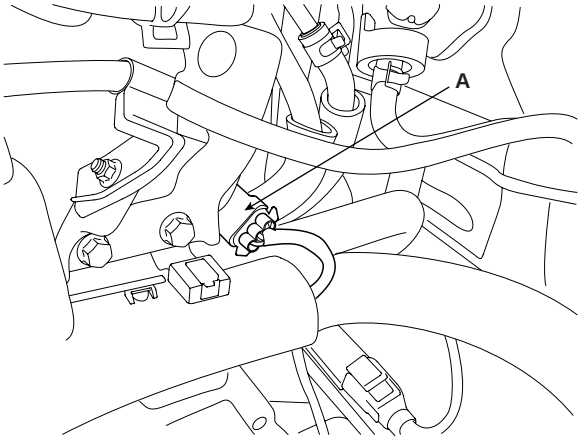


KCBF152A

9. Disconnect ground lines(A) from the engine and the transaxle assembly.

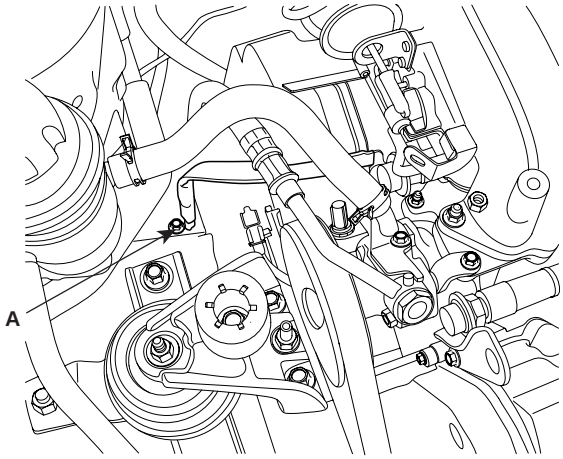


SCMEM6008L

10. Disconnect the battery wirings(A,B) from the engine room fuse & relay box(C).

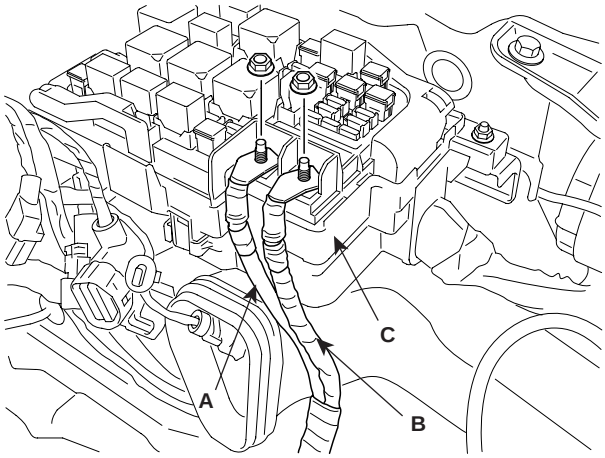


LDLG011A

11. Remove the heater hoses.

12. Disconnect the brake vaccume hose(A).

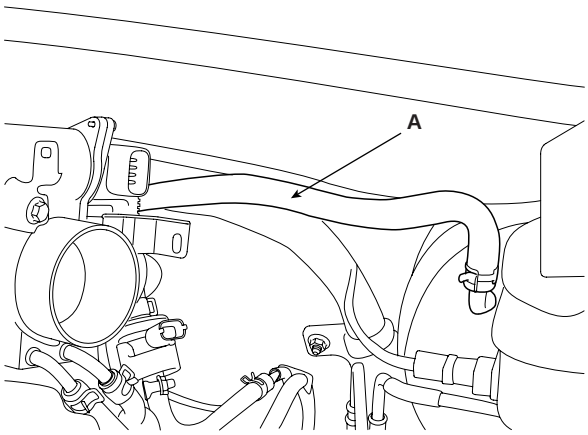


LDLG036A

13. Disconnect the transaxle wiring harness connectors.(Refer to AT group).

14. After draining or gathering power steering fluid, disconnect the power steering hose(A).

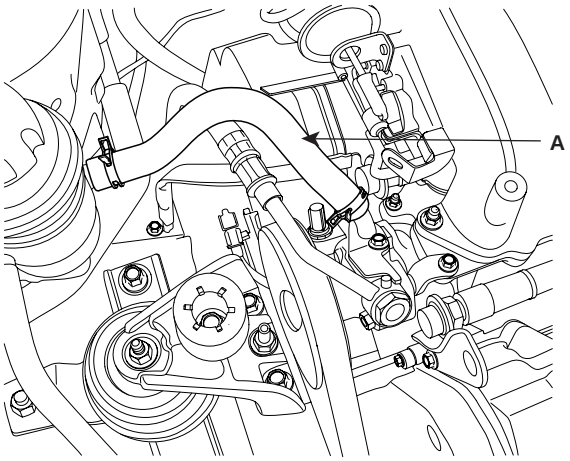


SCMEM6009L

15. Remove the steering column shaft joint bolt.(Refer to ST group).

16. Disconnect the air conditioning compressor hoses.(Refer to HA group).

17. Remove the front wheels and tires.(Refer to DS group).

18. Lifting the vehicle, remove the under cover.

19. Drain the engine coolant, engine oil and transaxle fluid. Remove the radiator cap to speed coolant draining.

20. Remove the brake caliper.(Refer to DS group).

21. Disconnect the ABS connectors.(Refer to BR group).

22. Disconnect the stabilizer bar link from the struts.(Refer to SS group).

23. Remove the knockles from the struts.(Refer to DS group).

24. Remove the front muffler(A).

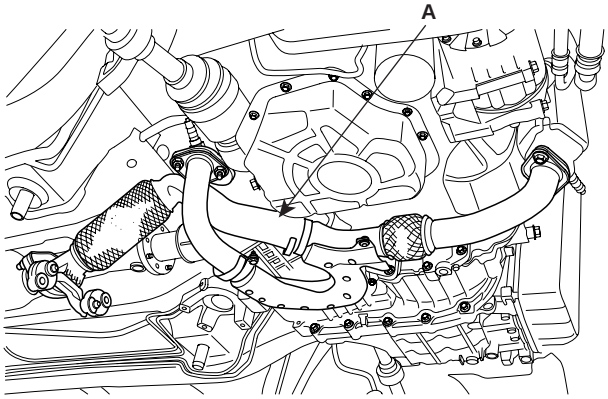


SCMEM6005L

25. Disconnect the power steering return hose.

26. Remove the engine mounting bracket(A).

**[MT]**

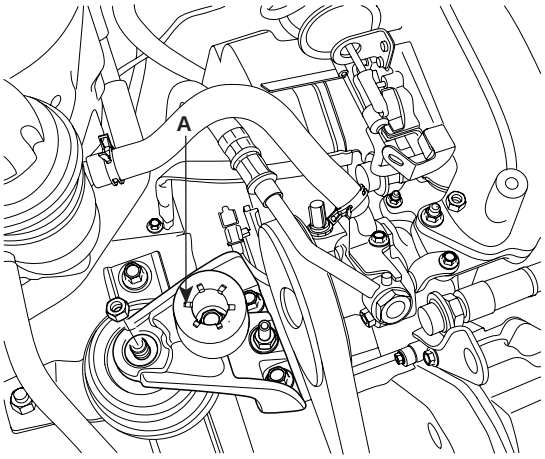


SCMEM6011L

***NOTE***

*Remove the ECM(Electronic Controlled Mounting) nuts and the solenoid valve connector for A/T vehicles.*

27. Remove the transaxle mounting bracket(A).

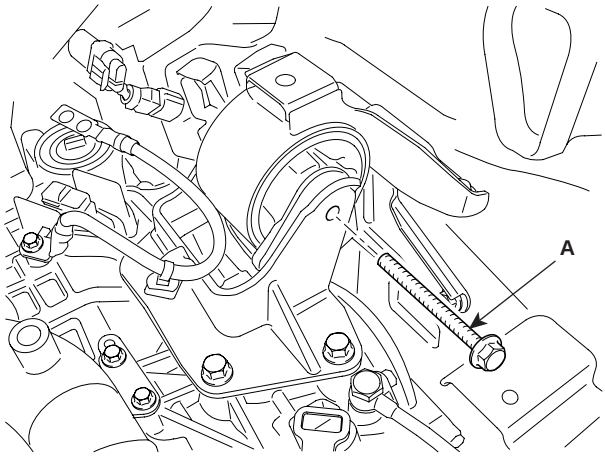


LDLG013A

28. Supporting the engine and transaxle assembly with a jack, remove the assembly from the vehicle by loosening the subframe mouting bolts and lifting up the vehicle slowly.

***NOTE***

*When removing the engine and transaxle assembly, be careful not to damage any surrounding parts or body components.*

## INSTALLATION E4AC8DA7

Installation is in the reverse order of removal.
Perform the following :

- Adjust the shift cable.
- Refill the engine with engine oil.
- Refill the transaxle with fluid.
- Refill the radiator with engine coolant.
- Bleed air from the cooling system with the heater valve open.
- Clean the battery posts and cable terminals with sandpaper assemble them, then apply grease to prevent corrosion.
- Inspect for fuel leakage.
  After assembling the fuel line, turn on the ignition switch (do not operate the starter) so that the fuel pump runs for approximately two seconds and fuel line pressurizes.
  Repeat this operation two or three times, then check for fuel leakage at any point in the fuel lines.