Transmission Control Module Replacement (2.4L LE5)

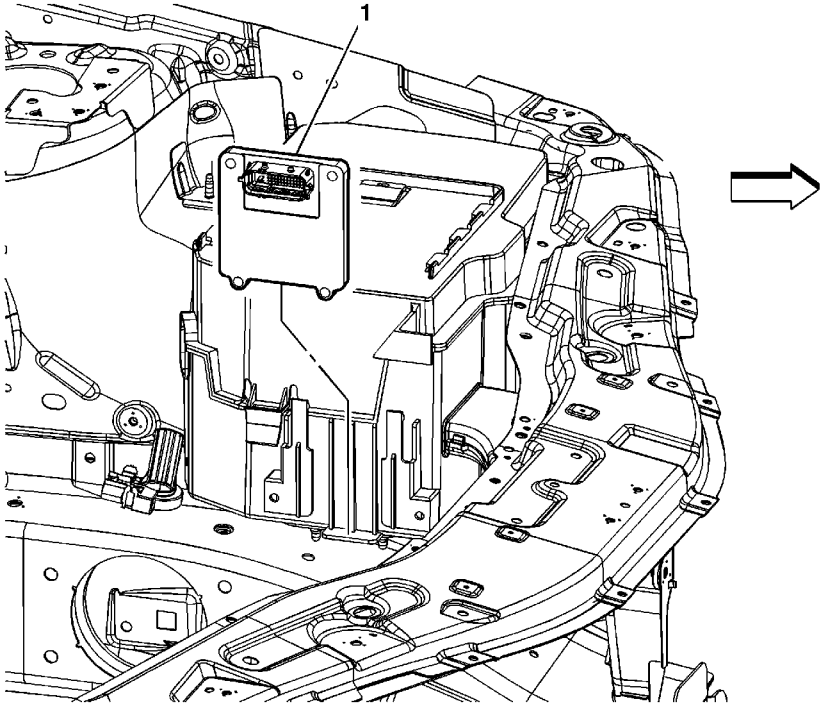

Callout	Component Name
Caution: Control module damage may result when the metal case contacts battery voltage. DO NOT contact the control module metal case with battery voltage when servicing a control module, using battery booster cables or when charging the vehicles battery. **Preliminary Procedures** Disconnect the transmission control module (TCM) electrical connector.	
1	TCM **Procedure** Reprogram the TCM. Refer to Control Module References for programming and setup information.

cardiagn.com

Transmission Control Module Replacement (2.4L LAT)

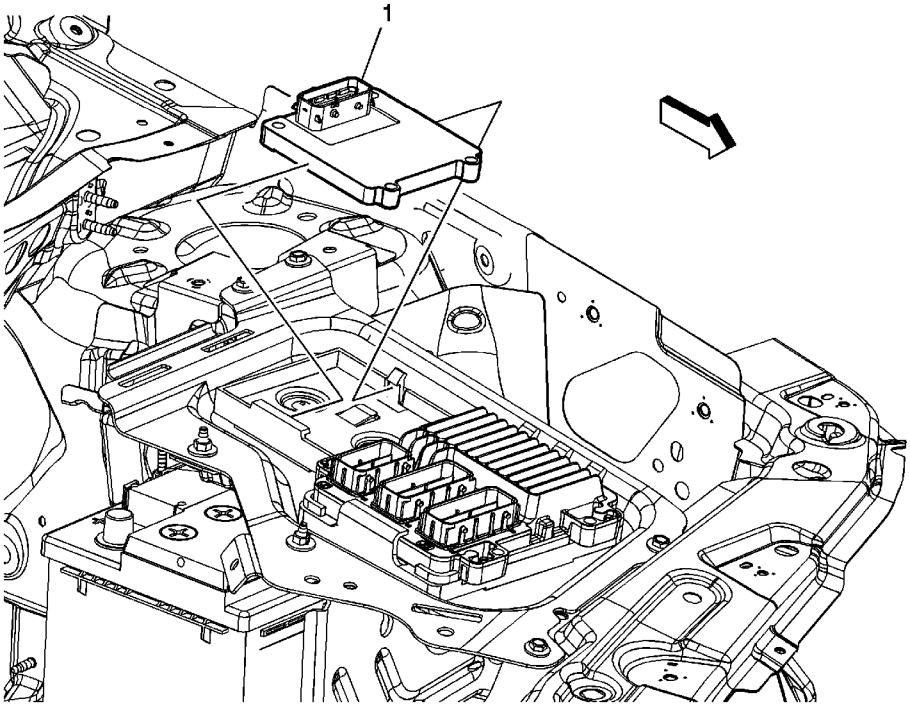

Callout	Component Name
Caution: Control module damage may result when the metal case contacts battery voltage. DO NOT contact the control module metal case with battery voltage when servicing a control module, using battery booster cables or when charging the vehicles battery. **Preliminary Procedures** 1. Remove the battery control module cover. 2. Disconnect the transmission control module (TCM) electrical connector.	
1	TCM **Procedure** Reprogram the TCM. Refer to Control Module References for programming and setup information.

cardiagn.com

Auxiliary Fluid Pump Control Module Replacement

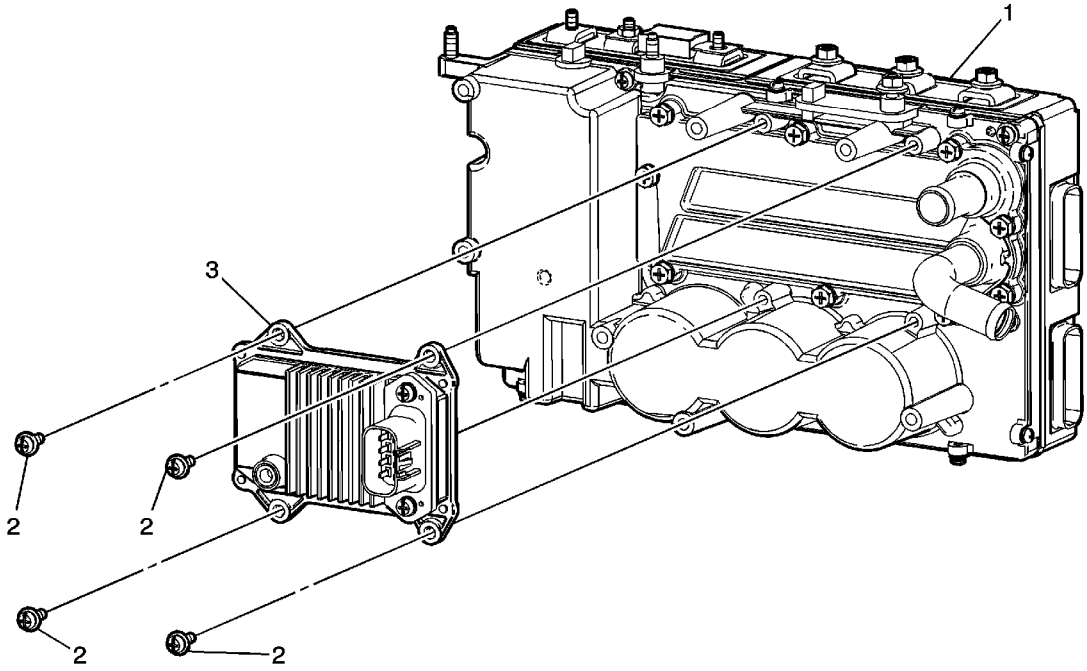

Callout	Component Name
1	Generator Control Module Refer to Generator Control Module Replacement. **Tip** Generator control module bracket must be removed in order to access the transaxle auxiliary fluid pump control module.
2	Transaxle Auxiliary Fluid Pump Control Module Bolt (Qty: 4) **Caution:** Refer to Fastener Caution in the Preface section. **Tighten** 5.8 N·m (51 lb in)
3	Transaxle Auxiliary Fluid Pump Control Module **Tip** For programming setup information, refer to Control Module References.

cardiagn.com

Transmission Control Replacement

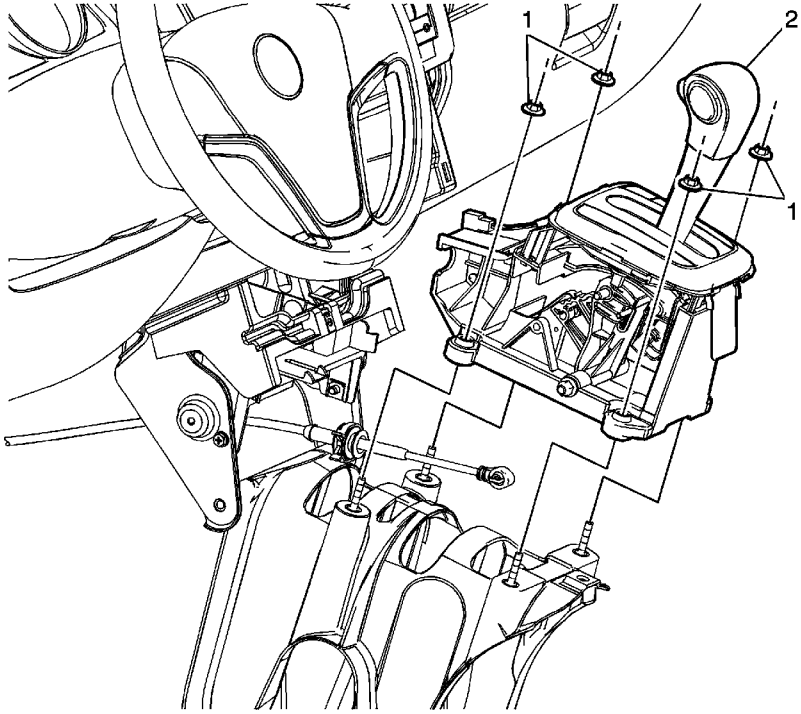

Callout	Component Name
Preliminary Procedures 1. Remove the front floor console extension panel. Refer to Front Floor Console Extension Panel Replacement. 2. Disconnect the range select cable from range select lever. 3. Disconnect the range select lever electrical connector.	
1	Automatic Transmission Range Select Lever Nut (Qty: 4) **Caution:** Refer to Fastener Caution in the Preface section. **Tighten** 8 N·m (71 lb in)
2	Automatic Transmission Range Select Lever

cardiagn.com

Transmission Control Bracket Replacement

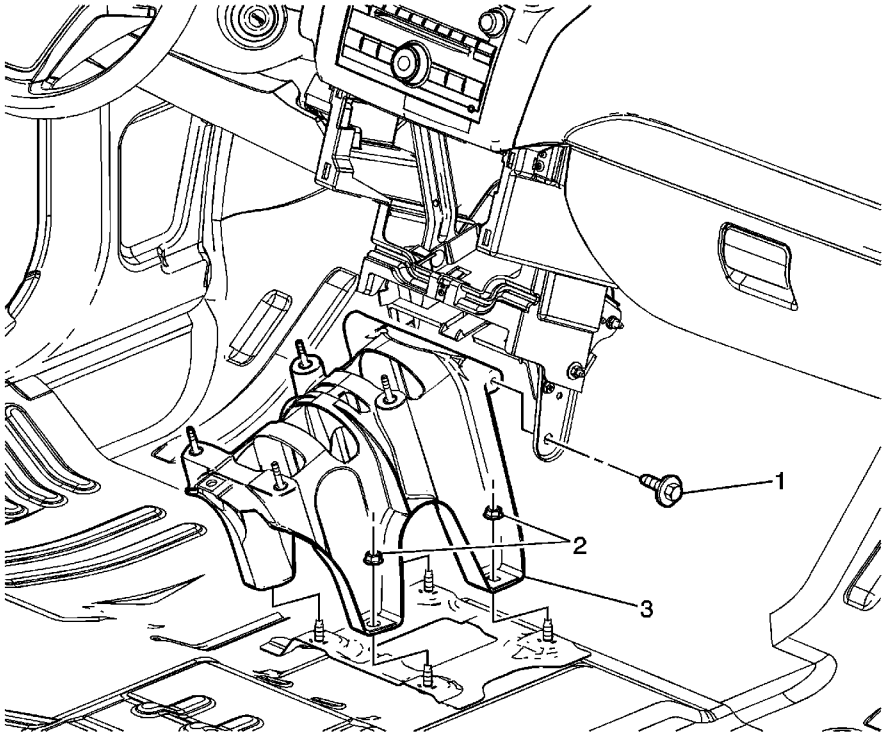

Callout	Component Name
Preliminary Procedures Remove the automatic transmission control. Refer to Transmission Control Replacement.	
1	Transmission Control Bracket Bolt (Qty: 2) **Caution:** Refer to Fastener Caution in the Preface section. **Tighten** 25 N·m (18 lb ft)
2	Transmission Control Bracket Nut (Qty: 4) **Tighten** 25 N·m (18 lb ft)
3	Transmission Control Bracket

cardiagn.com

Floor Shift Control Cable Replacement

Removal Procedure

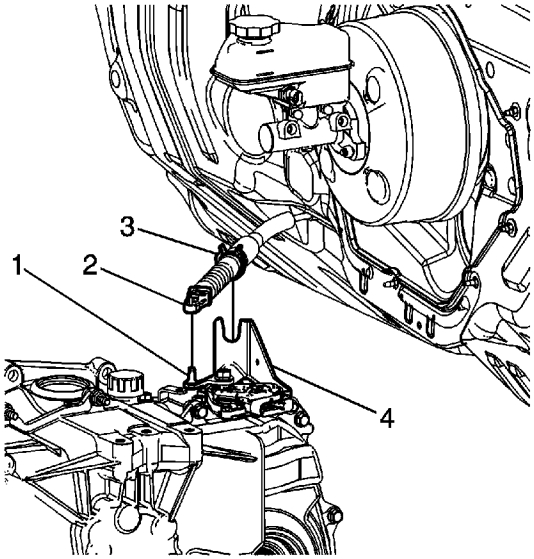

1. Disconnect the range select cable (2) from the range select lever (1).
2. Release the range select cable retaining clip (3) and remove the cable from the range select cable bracket (4).
3. Remove the front floor console extension panel. Refer to Front Floor Console Extension Panel Replacement .

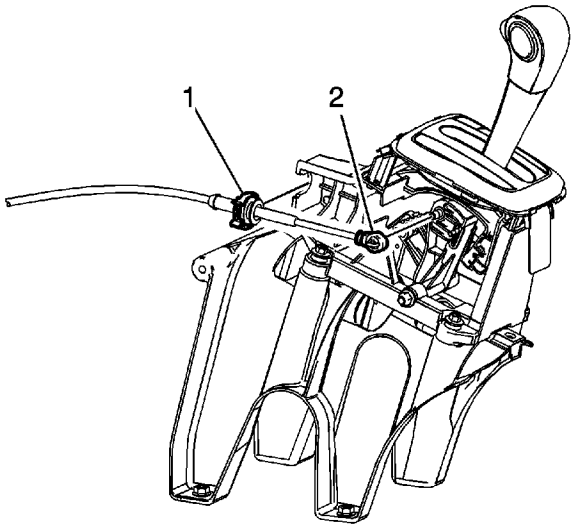

cardiagn.com

housing.

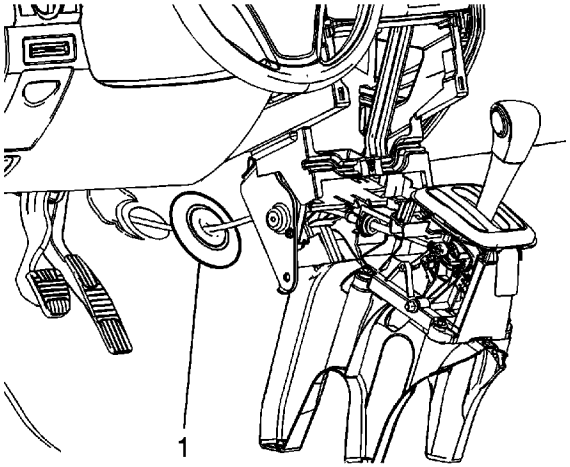

6. Remove the range select cable grommet (1) from the cowl.
7. Remove the range select cable from the vehicle.

Installation Procedure

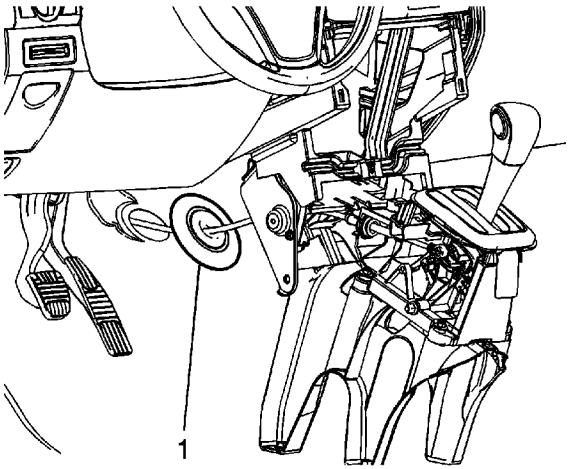

1. Install the range select cable to the vehicle through the cowl and the carpet.
2. Install the range select cable grommet (1) in the cowl.

cardiagn.com

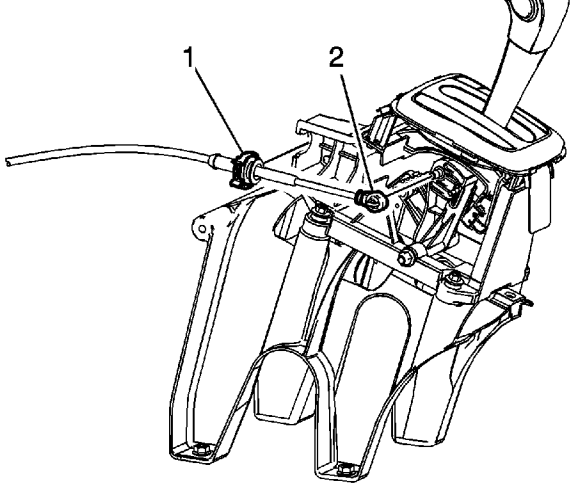

3. Install the range select cable (1) to the automatic transmission range select lever housing.
4. Install the range select cable (2) to the automatic transmission range select lever pin.
5. Install the front floor console extension panel. Refer to Front Floor Console Extension Panel Replacement .

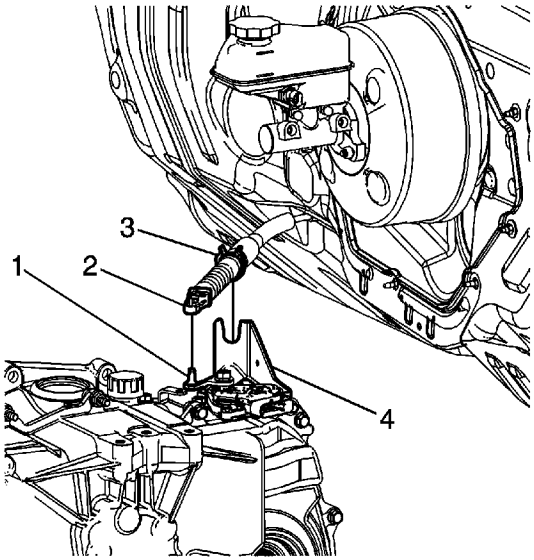

6. Install the range select cable to the range select cable bracket (4). Ensure the range select cable retaining clip (3) is secured in the bracket.
7. Connect the range select cable (2) to the range select lever (1).
8. Adjust the cable. Refer to Shift Control Cable Adjustment .

cardiagn.com

Transmission Control Lever Knob Replacement

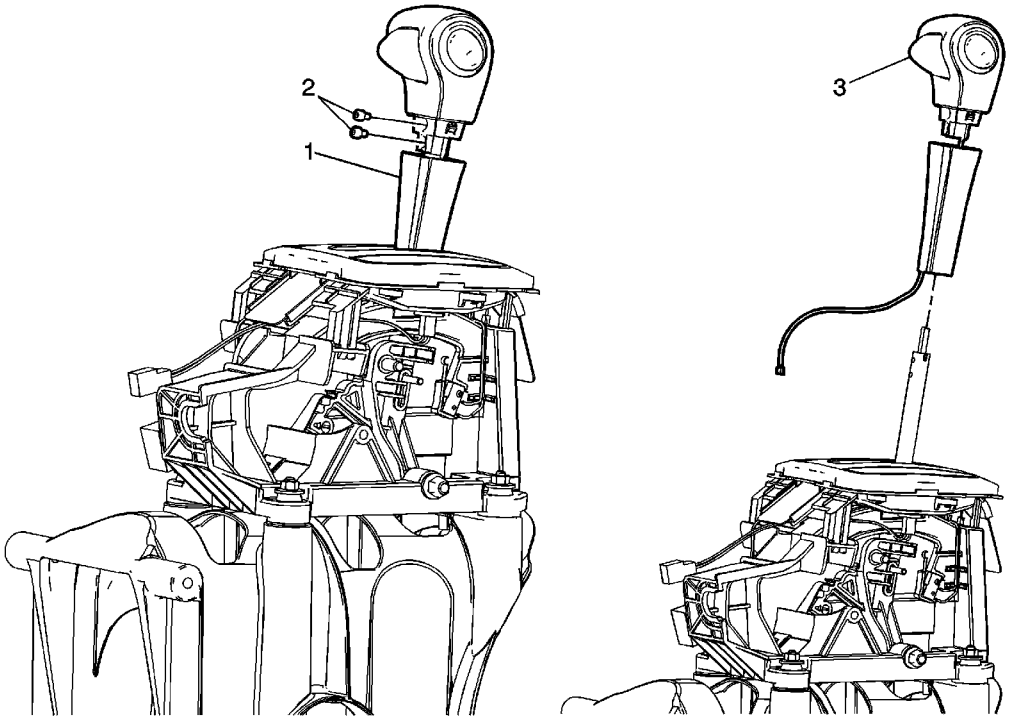

Callout	Component Name
Preliminary Procedures 1. Apply the parking brake. 2. Remove the front floor console extension panel. Refer to Front Floor Console Extension Panel Replacement. 3. Disconnect the transmission tap up/tap down switch electrical connector.	
1	Automatic Transmission Control Lever Knob Bezel **Tip** • Removal: carefully insert a small flat-bladed tool on the right and left sides of the bezel (1) between the bezel and the shift knob. Apply careful downward pressure to the bezel to separate the bezel from the shift knob. The bezel will drop down approximately 13.0 mm (0.5 in) exposing the shift knob screws (2). • Installation: Lift the bezel (1) up to the shift knob until a click sound is heard indicating the bezel is secured to the shift knob.
	Automatic Transmission Control Lever Knob Screw (Qty: 2) **Caution:** Refer to Fastener Caution in the Preface section.

cardiagn.com

2	fully remove the screws from the shift control knob. **Tighten** Tighten the screw to 1.5 N·m (13 lb in).
3	Automatic Transmission Control Lever Knob

cardiagn.com

Automatic Transmission Control Indicator Replacement

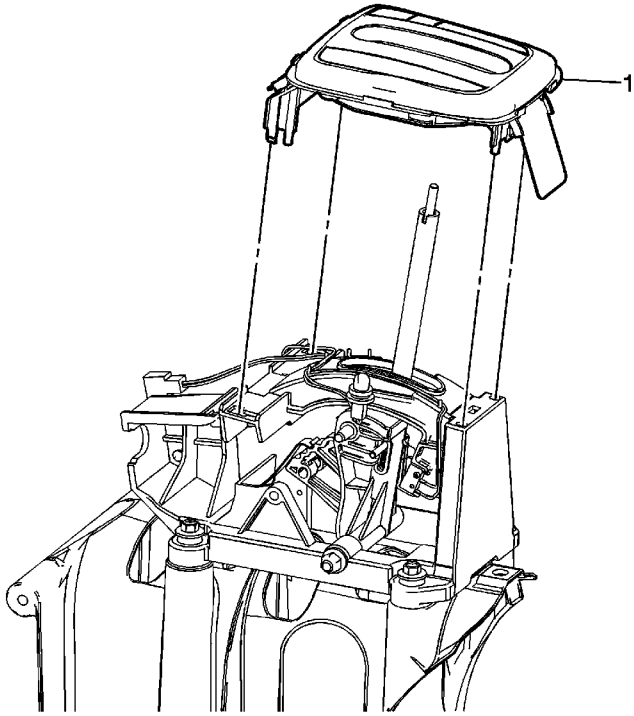

Callout	Component Name
Preliminary Procedures 1. Remove the automatic transmission control lever knob. Refer to Transmission Control Lever Knob Replacement. 2. Remove the control position indicator bulb from the automatic transmisson control indicator.	
1	Automatic Transmisson Control Indicator

cardiagn.com

Automatic Transmission Range Selector Lever Replacement

Removal Procedure

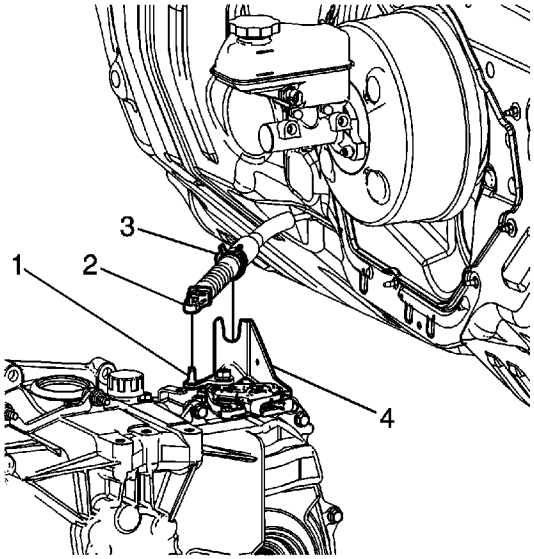

1. Disconnect the range select cable (2) from the range select lever (1).
2. Release the range select cable retaining clip (3) and remove the cable from the range select cable bracket (4).

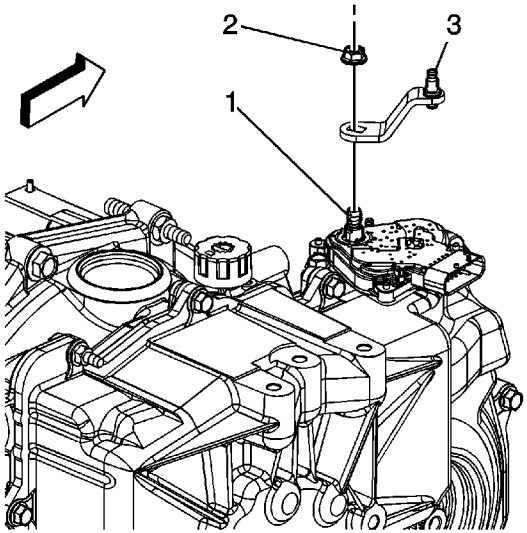

cardiagn.com

Installation Procedure

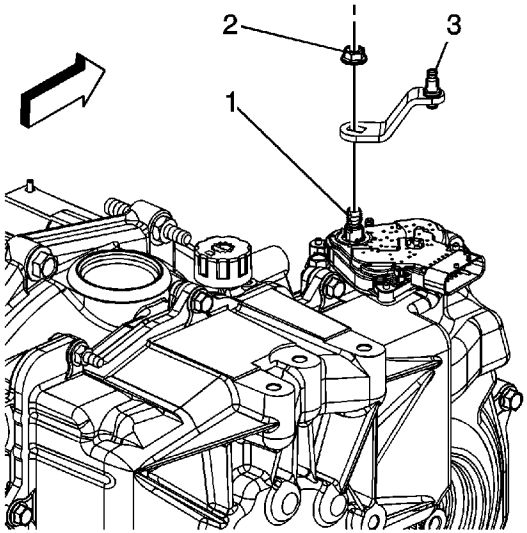

1. Install the transmission range select lever (3) to the transmission manual shaft (1).

   Caution: Refer to Fastener Caution in the Preface section.

2. Install the transmission range select lever nut (2) and tighten to **35 N·m (26 lb ft)**.

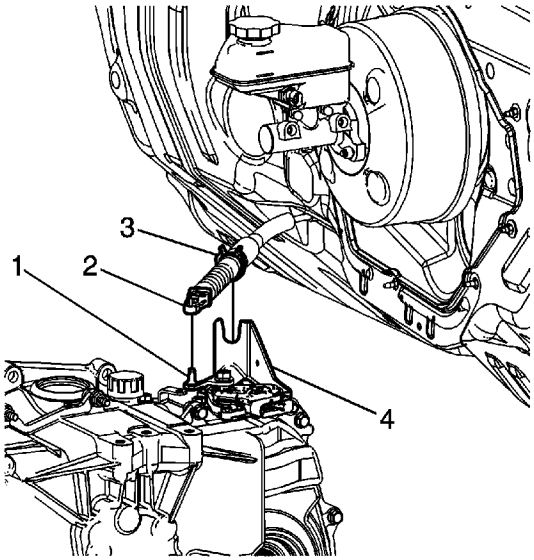

3. Install the range select cable to the range select cable bracket (4). Ensure the cable retaining

cardiagn.com

cardiagn.com

Shift Control Cable Adjustment

1. Position the shift lever in NEUTRAL.

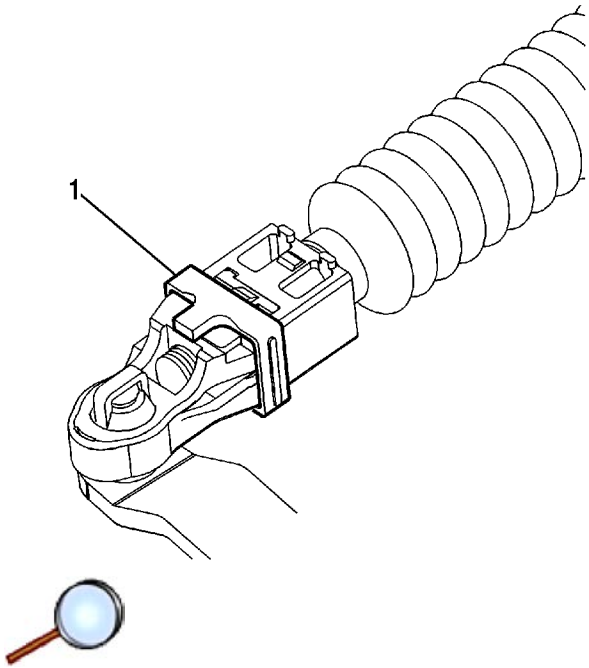

2. Release the shift control cable adjustment lock cover retaining tab (1).

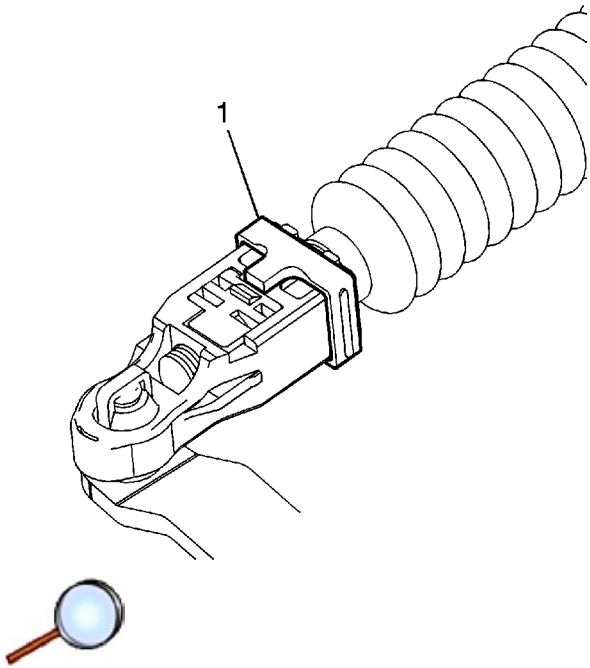

3. Slide the shift control cable adjustment lock cover (1) back exposing the adjustment lock.

cardiagn.com

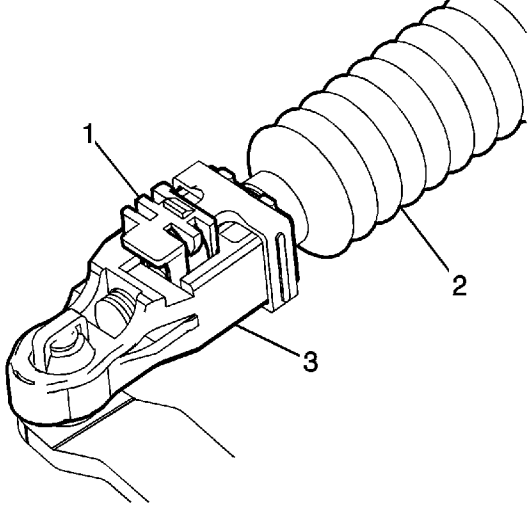

4. Lift the shift control cable adjustment lock (1).
5. The shift control cable (2) and cable end (3) are free to slide to proper adjustment. Ensure the shift lever and transmission are both in the NEUTRAL position.
6. Depress the shift control cable adjustment lock (1) to lock the cable adjustment.

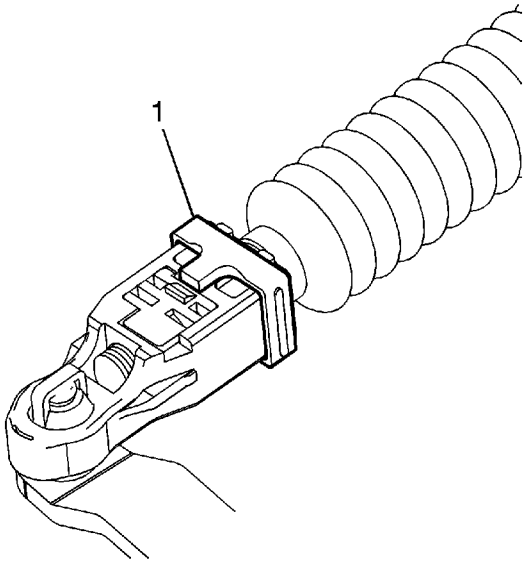

7. Slide the shift control cable adjustment lock cover (1) over the adjustment lock.

cardiagn.com

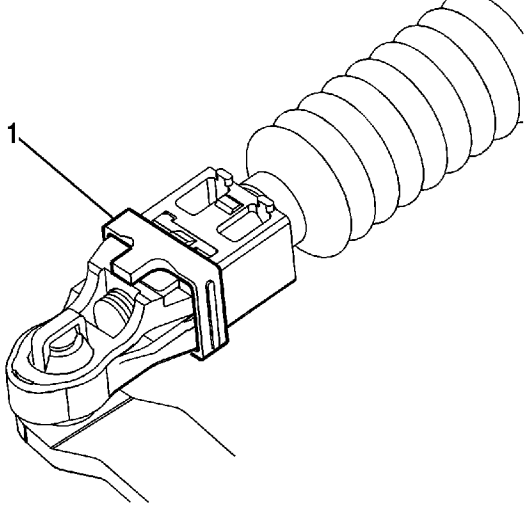

8. Ensure the shift control cable adjustment lock cover (1) is securely latched on the adjustment lock.
9. Inspect the operation of the starting system with the shift lever in each position. The engine should only crank when the lever is in the PARK or NEUTRAL position.

cardiagn.com

Park / Neutral Position Switch Replacement

Special Tools

J 41545 Park Neutral Position Switch Tool

Removal Procedure

1. Remove the automatic transmission range select lever. Refer to Automatic Transmission Range Selector Lever Replacement.

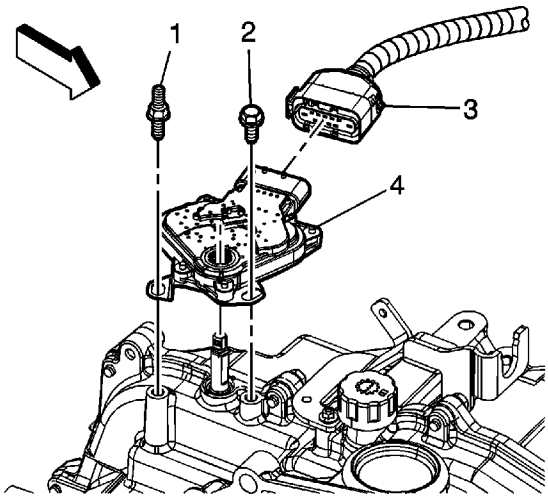

2. Disconnect the PNP switch electrical connector (3) from the PNP switch (4).
3. Remove the PNP switch bolt (2) and stud (1).
4. Remove the PNP switch (4) from the transaxle.

Installation Procedure

cardiagn.com

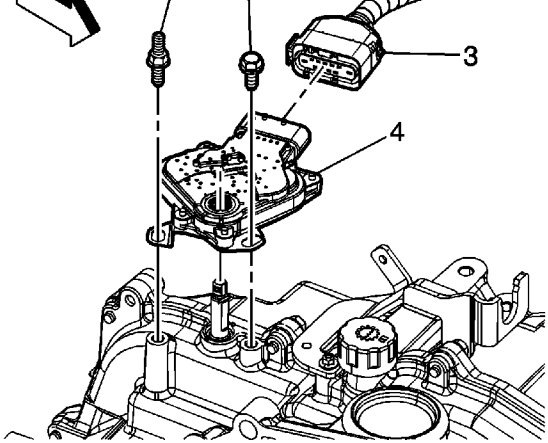

1. Make sure the transaxle manual shaft is in the Neutral position.
2. Align the flats on the park/neutral position (PNP) switch with the transaxle manual shaft and install the PNP switch.
3. Loosely install the PNP switch bolt (2) and stud (1).
4. Connect the PNP switch electrical connector (3).

Note: After adjusting the switch, verify the engine only starts in Park or Neutral. If the engine starts in any other position, adjust the switch.

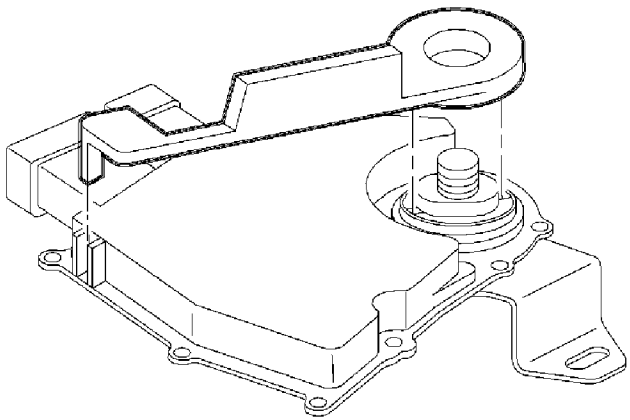

5. Insert the J 41545 as shown and rotate the PNP switch until the tool drops onto position.

Caution: Refer to Fastener Caution in the Preface section.

cardiagn.com

8. Install the automatic transmission range select lever. Refer to Automatic Transmission Range Selector Lever Replacement.

cardiagn.com

Park / Neutral Position Switch Adjustment

Special Tools

J 41545 Park/Neutral Switch Aligner

Adjustment

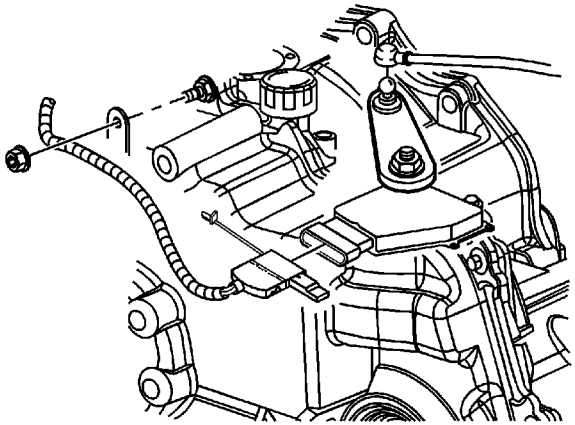

1. Disconnect the transaxle range switch electrical connectors from the switch.
2. Remove the shift control cable from the transaxle range switch lever.

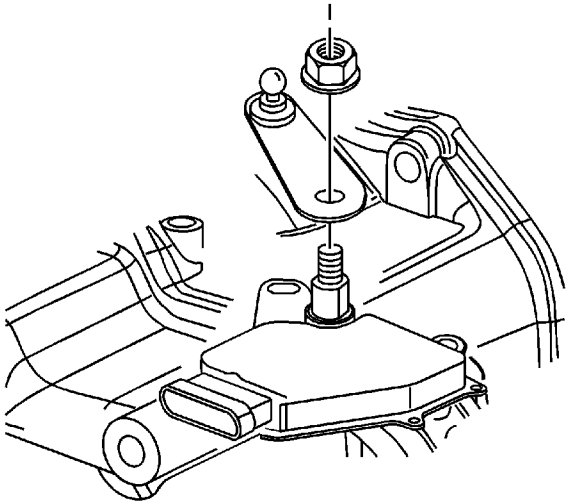

cardiagn.com

3. Remove the transaxle range switch lever and nut

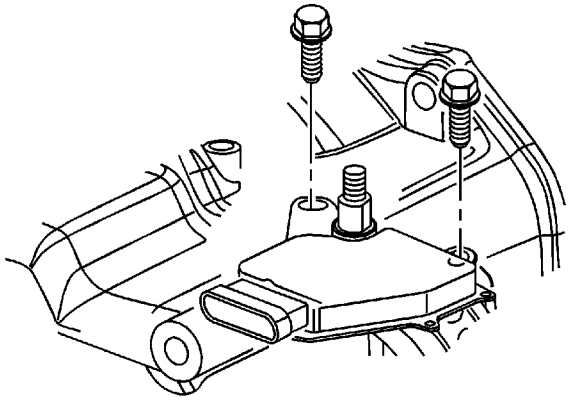

4. Make sure the transaxle manual shaft is in the Neutral position.
5. Loosen, DO NOT REMOVE the transaxle range switch bolts.

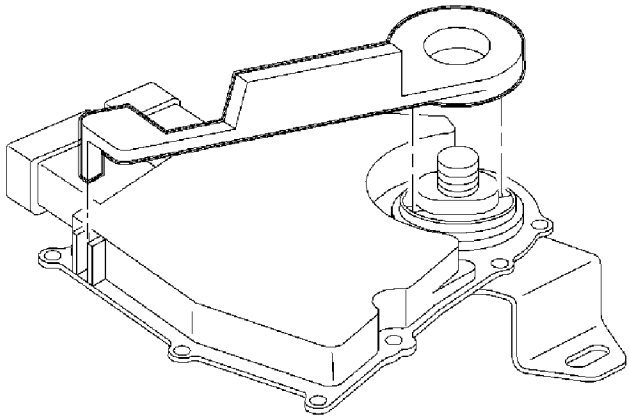

6. Insert the J 41545 as shown and rotate the switch until the tool drops onto position.

Caution: Refer to Fastener Caution in the Preface section.

7. Tighten the transaxle range switch bolts to **20 N·m (15 lb ft)**.
8. Remove the alignment tool.

cardiagn.com

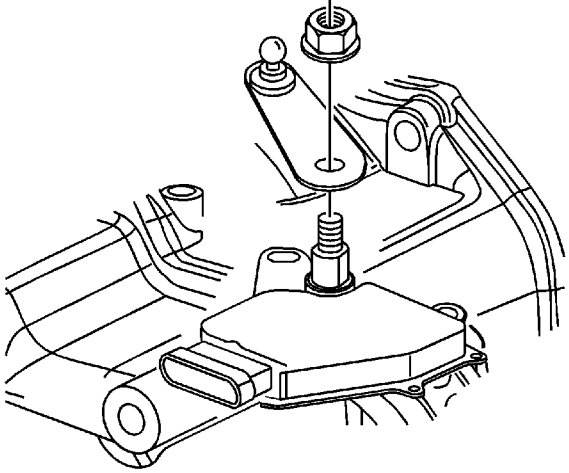

Note: After adjusting the switch, verify the engine only starts in Park or Neutral. If the engine starts in any other position, adjust the switch.

9. Install the transaxle range switch lever and nut and tighten to **35 N·m (26 lb ft)**

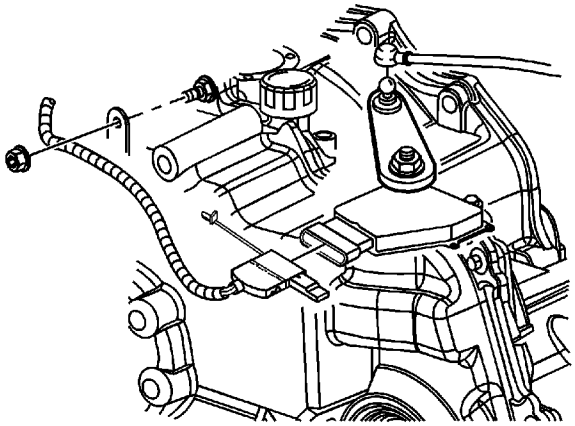

10. Connect the transaxle range switch electrical connectors to the switch.
11. Install the shift control cable to transaxle range switch lever and verify proper operation.

cardiagn.com

Oil Pan Replacement

Removal Procedure

1. Raise and support the vehicle. Refer to Lifting and Jacking the Vehicle.
2. Place the drain pan under the transaxle oil pan.

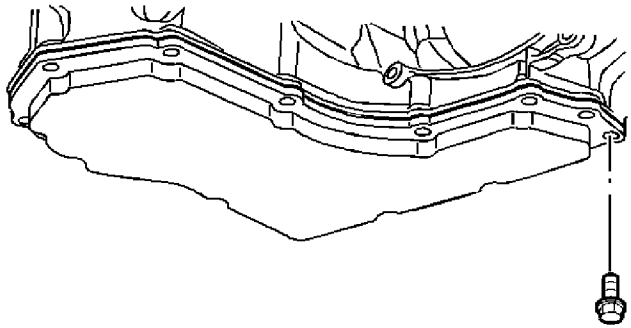

Caution: When removing the oil pan bolts, be careful not to damage the oil pan sealing surfaces. Such damage may result in oil leaks in this area.

3. Remove the oil pan bolts from only the front and the sides.
4. Loosen the rear oil pan bolts about 4 turns.
5. Lightly tap the oil pan with a rubber mallet or pry in order to allow the fluid to drain.
6. Remove the remaining oil pan bolts.

cardiagn.com

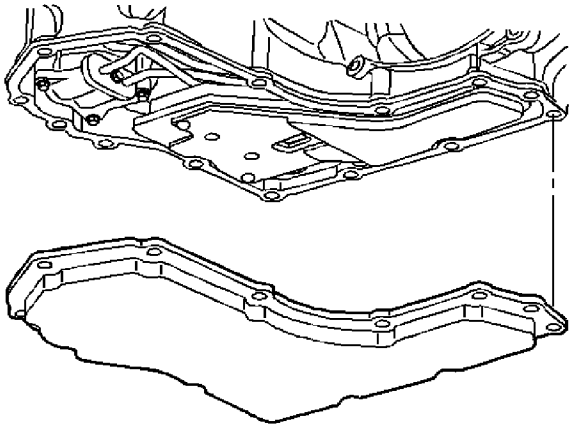

7. Remove the oil pan.

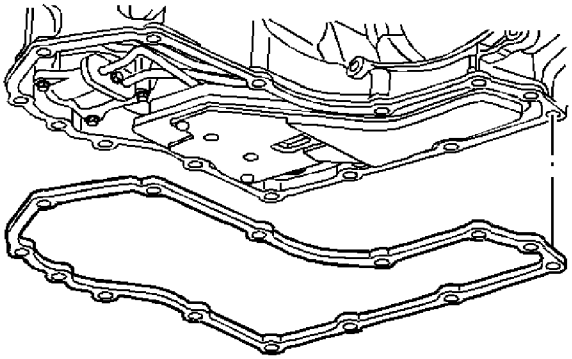

8. Remove the oil pan gasket.

Installation Procedure

1. Clean and inspect the oil pan for dents or damage. Dry the oil pan before installation.

cardiagn.com

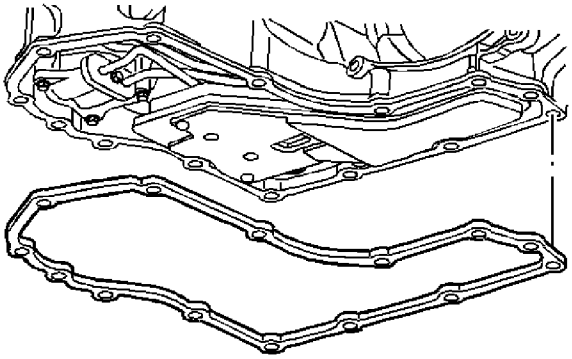

2. Install the oil pan gasket. Use a new gasket if the sealing ribs are damaged.

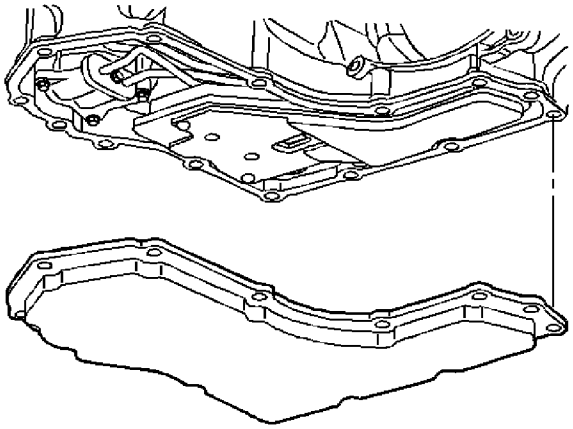

3. Install the oil pan. Replace the bottom pan, if damaged.

Caution: Refer to Fastener Caution in the Preface section.

cardiagn.com

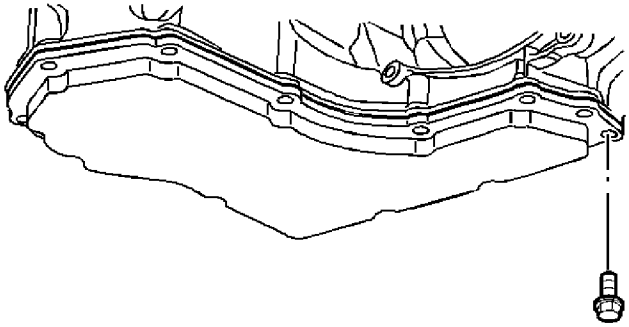

4. Install the oil pan attaching bolts and tighten to **12 N·m (106 lb in)**.
5. Lower the vehicle.
6. Fill the transmission.
7. Inspect the transmission fluid level. Refer to Transmission Fluid Check
8. Inspect the oil pan gasket for leaks.

Caution: Transmission Auxiliary Pump Priming must be performed after any service procedure is performed on the transmission that involves the draining of and refill of transmission fluid. Failure to perform the Transmission Auxiliary Pump Priming will result in damage to the auxiliary pump and possible damage to the transmission.

9. Using a scan tool, prime the Transmission Auxiliary Pump, if equipped with 2.4L (LAT).

cardiagn.com

Automatic Transmission Fluid Filter and Seal Replacement

Tools Required

- J 6125-1B Slide Hammer Adapter
- J 23129 Universal Seal Remover

Removal Procedure

1. Remove transaxle oil pan. Refer to Oil Pan Replacement .

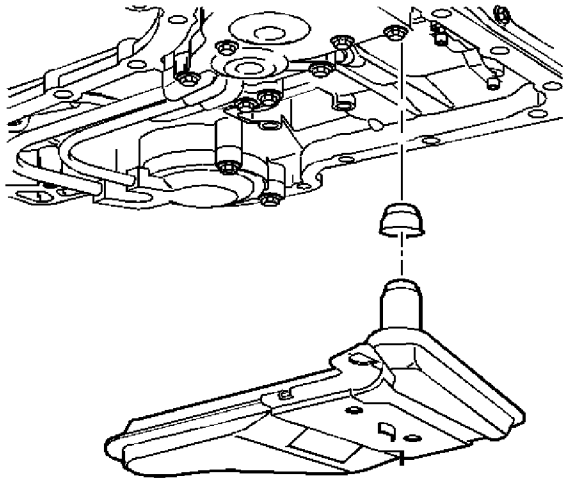

2. Remove the oil filter. Use a long screwdriver in order to pry the oil filter neck out of the seal.
3. Check the oil filter seal for damage or wear.
4. As needed, remove the seal using the J 6125-1B and the J 23129 .

Installation Procedure

cardiagn.com

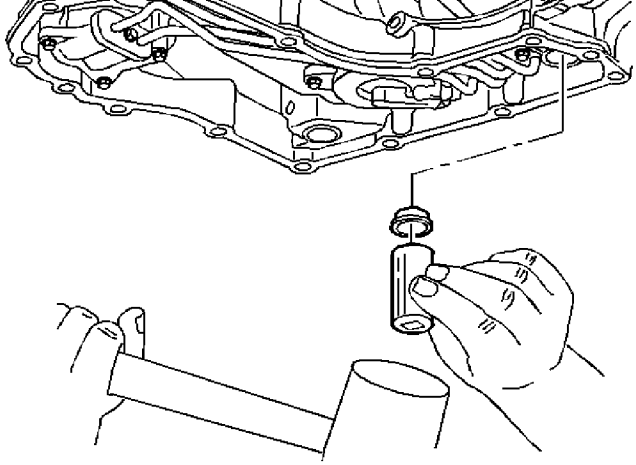

1. Install a new seal, as needed. Before installing, coat the new seal with a small amount of petroleum jelly.
2. Install a new filter into the case.
3. Install transaxle oil pan. Refer to Oil Pan Replacement .

cardiagn.com

Vehicle Speed Sensor Replacement

Removal Procedure

1. Raise and support the vehicle. Refer to Lifting and Jacking the Vehicle.

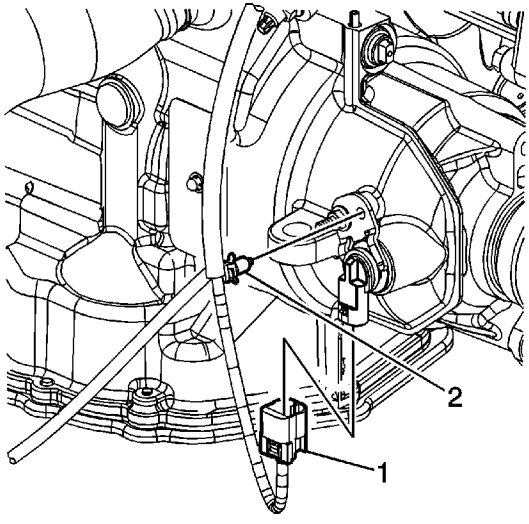

2. Remove the vehicle speed sensor (VSS) electrical connector (1) from the VSS.
3. Remove the VSS electrical harness retainer (2) from the VSS.

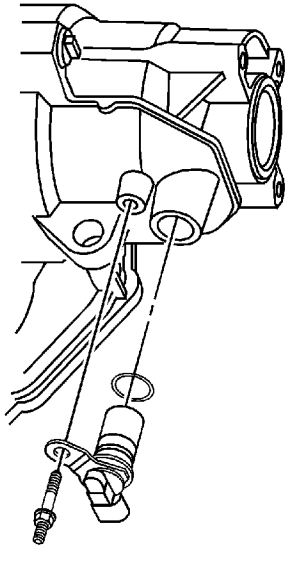

4. Remove the retaining stud and the VSS. Pull straight out in order to avoid damage to the case.

cardiagn.com

1. Clean and dry the VSS.

Caution: Refer to Fastener Caution in the Preface section.

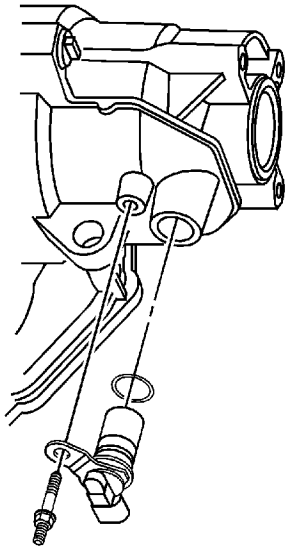

2. Install the VSS and the retaining stud to **12 N·m (97 lb in)**.

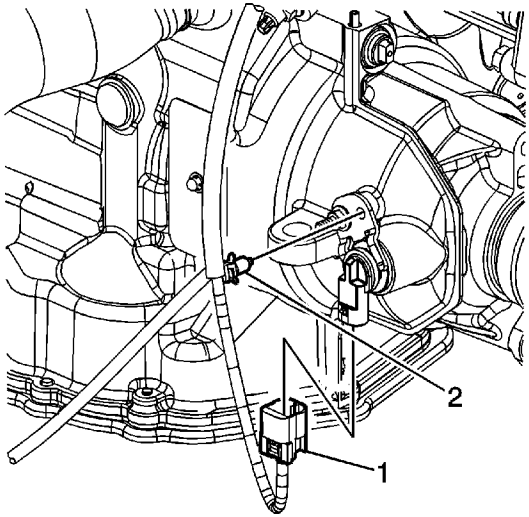

3. Install the VSS electrical harness retainer (2) to the VSS.
4. Install the electrical connector (1) to the VSS.
5. Lower the vehicle.

cardiagn.com

Low / Reverse Servo Assembly Replacement

Removal Procedure

1. Remove the oil feed pipes. Refer to Oil Feed Pipes Replacement.

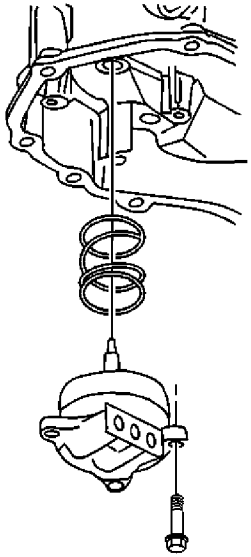

2. Remove the 3 low and reverse band servo cover bolts, the servo, and the spring.

Disassembly Procedure

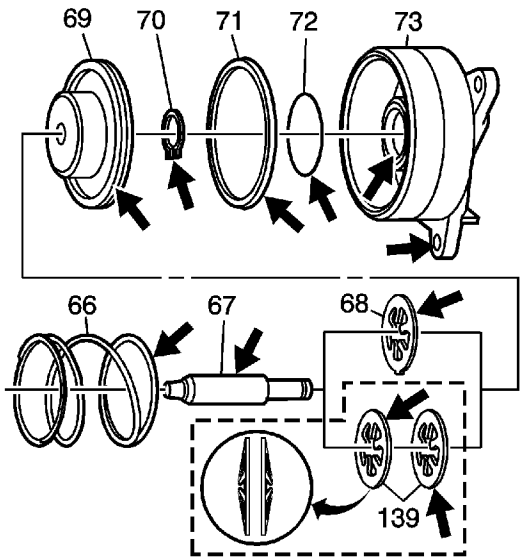

cardiagn.com

1. Remove the piston pin assembly (67-70) from the servo cover (73).
2. Remove the snap ring (70) from the servo pin (67).
3. Remove the piston (69) and the servo cushion spring (68), or springs (139), from the servo pin (67).
4. Remove the servo piston seals (71, 72) from the cover (73).
5. Discard the servo piston seals (71 and 72).
6. Inspect all the components for damage.
7. Inspect the fluid feed holes for the proper opening.
8. Inspect the bolt hole threads for debris or stripping.
9. Inspect the seal grooves for damage.
10. Clean and dry each component.

Assembly Procedure

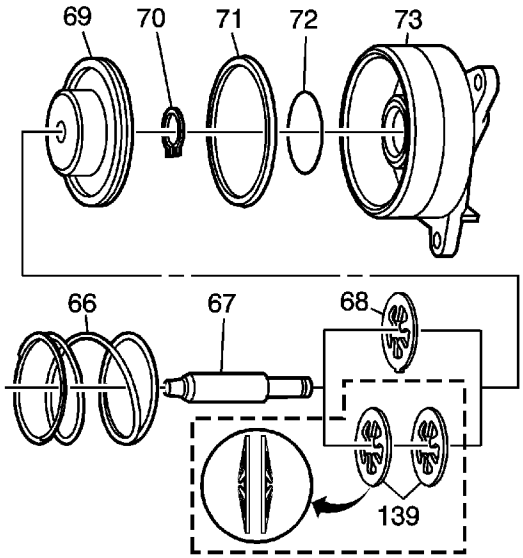

1. Assemble the servo cushion spring (68), or springs (139), and the servo piston (69) onto the servo pin (67).
2. Install the snap ring onto the servo pin (67) in order to retain the servo cushion springs (68) and the servo piston (69).
3. Assemble the new seals (71, 72) onto the servo piston (69) and the servo cover (73).
4. Assemble the servo piston assembly (67-70) into the servo cover (73). Lubricate the piston seals with transmission fluid in order to aid in assembly.

Installation Procedure

Caution: Refer to Fastener Caution in the Preface section.

cardiagn.com

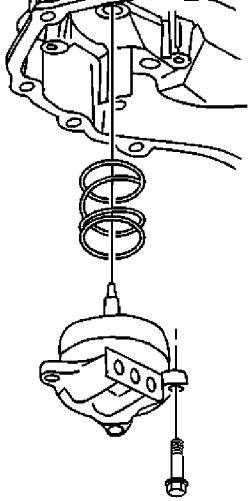

1. Install the low and the reverse band servo cover bolts and tighten to **12 N·m (106 lb in)**.
2. Install the oil feed pipe. Refer to Oil Feed Pipes Replacement.

Note: It is recommended that transmission adaptive pressure (TAP) information be reset.

Resetting the TAP values using a scan tool will erase all learned values in all cells. As a result, the engine control module (ECM), powertrain control module (PCM) or transmission control module (TCM) will need to relearn TAP values. Transmission performance may be affected as new TAP values are learned.

3. Reset the TAP values. Refer to Transmission Adaptive Functions.

cardiagn.com

Intermediate/Fourth Servo Assembly Replacement

Removal Procedure

1. Raise the vehicle. Refer to Lifting and Jacking the Vehicle.
2. Remove the oil pan and filter. Refer to Automatic Transmission Fluid Filter and Seal Replacement.

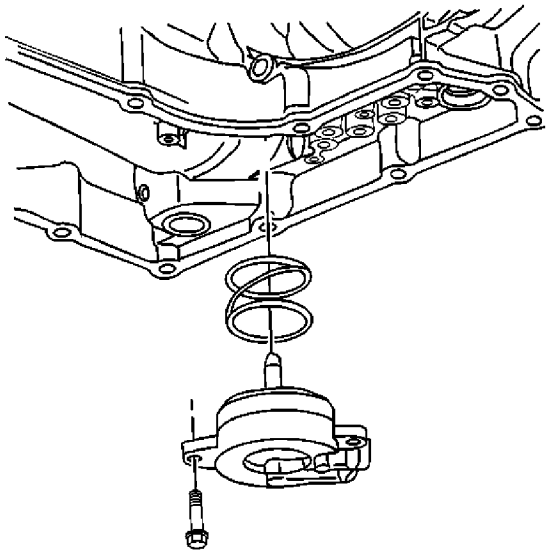

3. Remove the two intermediate/4th servo cover bolts, the servo and the spring.

Disassemble Procedure

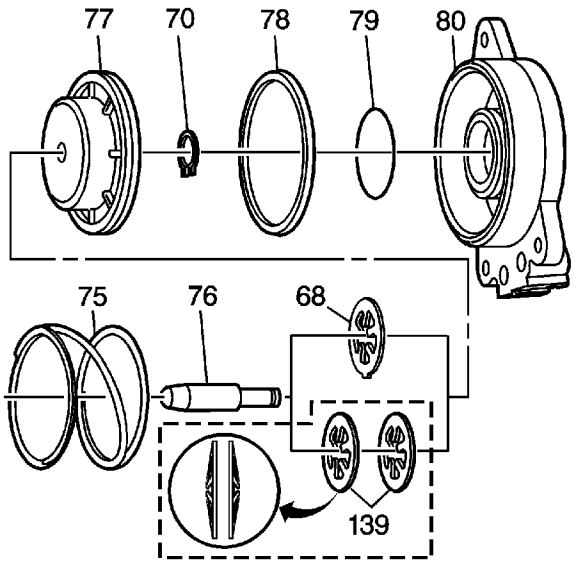

cardiagn.com

1. Remove the piston and pin assembly (76 and 77) from the servo cover (80).
2. Remove the snap ring (70) from the servo pin (76).
3. Remove the piston (77) and the servo cushion springs (68) from the servo pin (76).
4. Remove the servo piston seals (78, 79) from the servo cover (80).
5. Discard the servo piston seals (78 and 79). Do not reuse the servo piston seals.

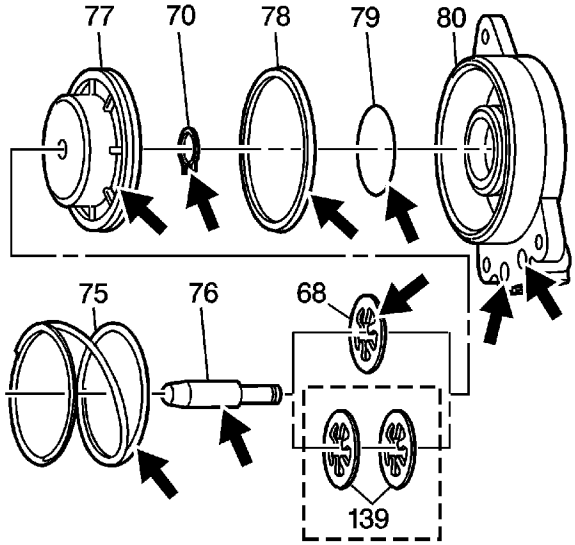

6. Inspect all components (70, 77-80) for damage.
7. Inspect the fluid feed holes for proper opening.
8. Inspect the bolt hole threads for debris and stripping.
9. Inspect the seal grooves for damage.
10. Clean and dry each component.

Assemble Procedure

cardiagn.com

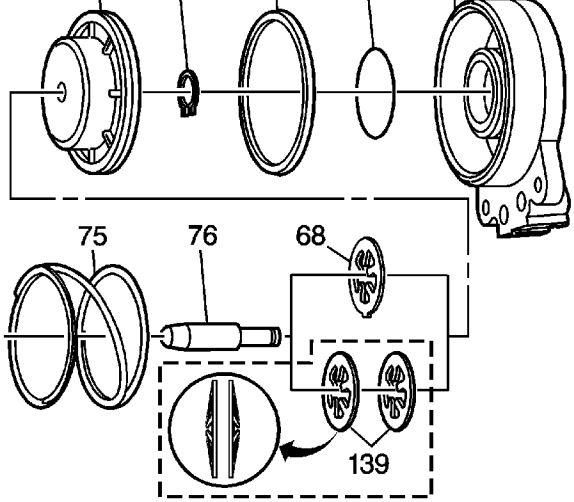

1. Install the servo cushion springs (68) and the servo piston (77) onto the servo pin (76).
2. Install the snap ring (70) onto the servo pin (76) in order to retain the springs (68) and piston (77).
3. Install the new seals (78 and 79) onto the servo piston (77) and the servo cover (80).
4. Install the servo piston assembly into the servo cover (80). Lubricate the piston seals with transmission fluid in order to aid in assembly.

Installation Procedure

Caution: Refer to Fastener Caution in the Preface section.

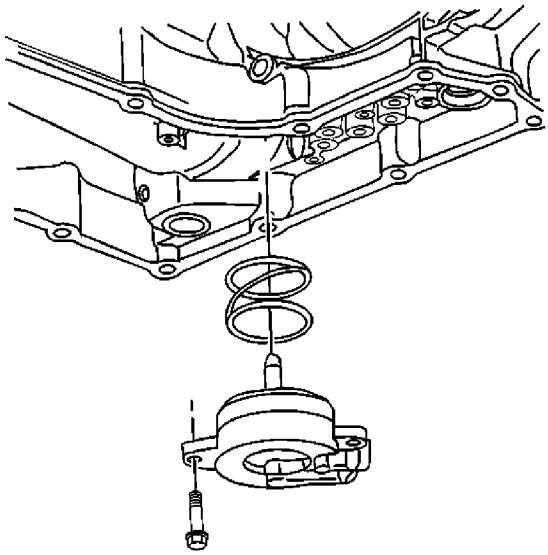

cardiagn.com

2. Install the filter and the pan. Refer to Automatic Transmission Fluid Filter and Seal Replacement.
3. Lower the vehicle.
4. Fill the transmission with DEXRON® VI fluid.
5. Inspect the transmission oil level. Refer to Transmission Fluid Check.

Note: It is recommended that transmission adaptive pressure (TAP) information be reset.

Resetting the TAP values using a scan tool will erase all learned values in all cells. As a result, the engine control module (ECM), powertrain control module (PCM) or transmission control module (TCM) will need to relearn TAP values. Transmission performance may be affected as new TAP values are learned.

6. Reset the TAP values. Refer to Transmission Adaptive Functions.

cardiagn.com

Transmission Fluid Cooler Pipe Connector Replacement - Radiator

Removal Procedure

1. Drain the cooling system. Refer to Cooling System Draining and Filling.
2. Remove the transaxle oil cooler hoses from the oil cooler fittings on the radiator. Refer to Transmission Fluid Cooler Hose Replacement.

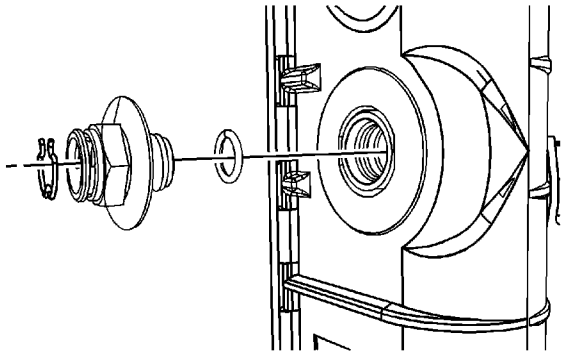

Note: Do not remove the upper and lower transaxle oil cooler fittings from the radiator at the same time other wise the transaxle oil cooler will fall inside the radiator end tank.

3. Remove the oil cooler fitting from the radiator.

Installation Procedure

1. Inspect the new O-ring seals for cracks, cuts or damage. Replace if necessary.

   Caution: Refer to Fastener Caution in the Preface section.

cardiagn.com

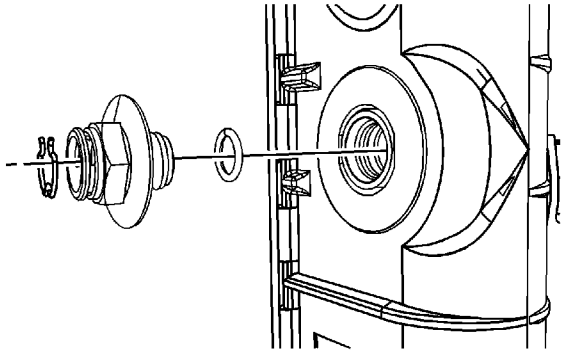

Note: The correct thread engagement is critical. Cross-threaded fittings can achieve proper tightness and still leak.

2. Install the oil cooler fitting to the radiator and tighten to **38 N·m (28 lb ft)**.
3. Install the transaxle oil cooler hoses to the oil cooler fittings on the radiator. Refer to Transmission Fluid Cooler Hose Replacement.
4. Fill the cooling system. Refer to Cooling System Draining and Filling.
5. Adjust the transmission fluid level.
6. Inspect for fluid leaks.

cardiagn.com

Transmission Fluid Cooler Hose / Pipe Quick-Connect Fitting Disconnection and Connection

Removal Procedure

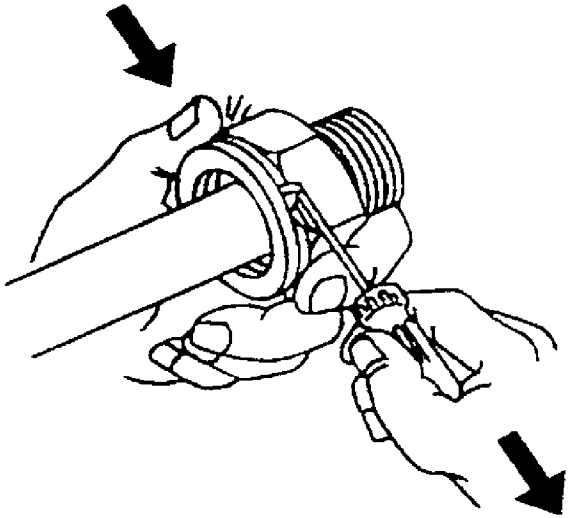

Important: Perform the following procedure when removing the retaining rings and cooler lines from the quick connect fittings located on the radiator and/or the transmission.

1. Pull the plastic cap back from the quick connect fitting and down along the cooler line about 5 cm (2 in).
2. Using a bent-tip screwdriver, pull on one of the open ends of the retaining ring in order to rotate the retaining ring around the quick connect fitting until the retaining ring is out of position and can be completely removed.
3. Remove the retaining ring from the quick connect fitting.
4. Discard the retaining ring.

cardiagn.com

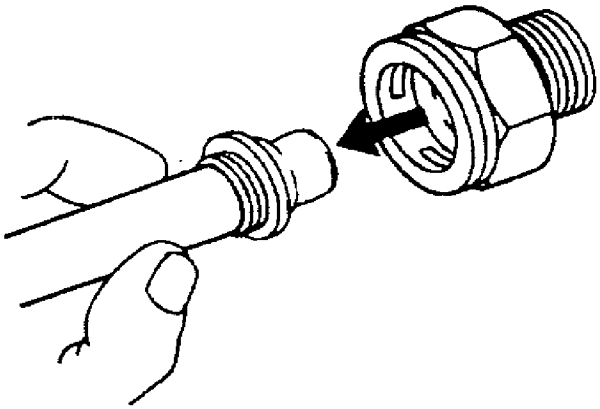

5. Pull the cooler line straight out from the quick connect fitting.

Installation Procedure

Important:

- Do not reuse any of the existing oil lines or oil line fittings if there is excessive corrosion.
- Do not reuse any of the existing retaining rings that were removed from the existing quick connect fittings. Install new retaining rings.
- Ensure the following procedures are performed when installing the new retaining rings onto the fittings.

1. Install a new retaining ring into the quick connect fitting using the following procedure:

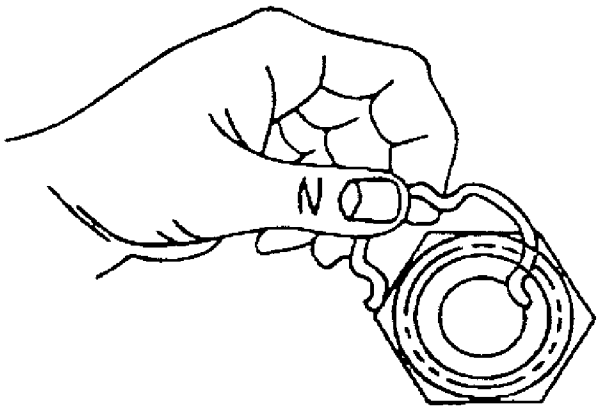

cardiagn.com

2. Hook one of the open ends of the retaining ring in one of the slots in the quick connect fitting.

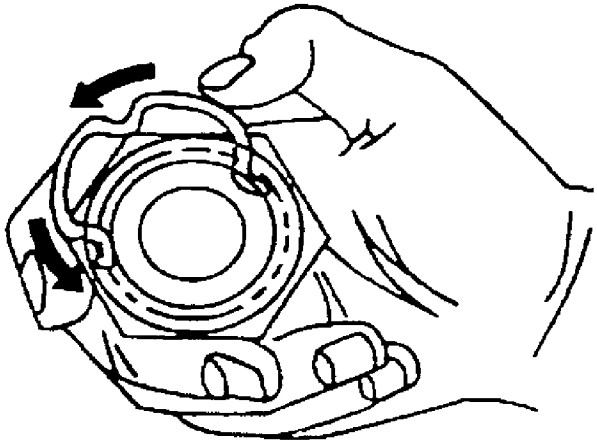

3. Rotate the retaining ring around the fitting until the retaining ring is positioned with all three ears through the three slots on the fitting.

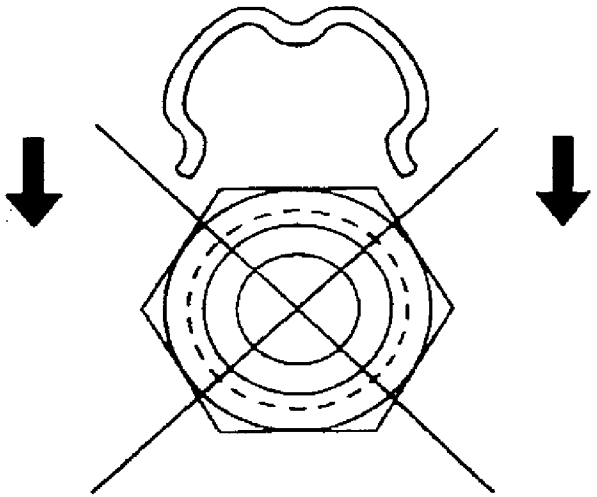

4. Do not install the new retaining ring onto the fitting by pushing the retaining ring.

cardiagn.com

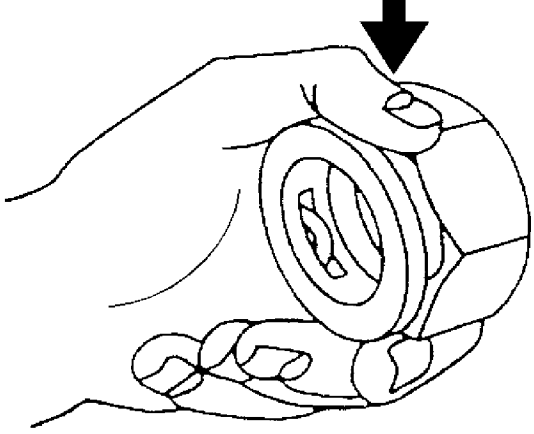

5. Ensure that the three retaining ring ears are seen from inside the fitting and that the retaining ring moves freely in the fitting slots.

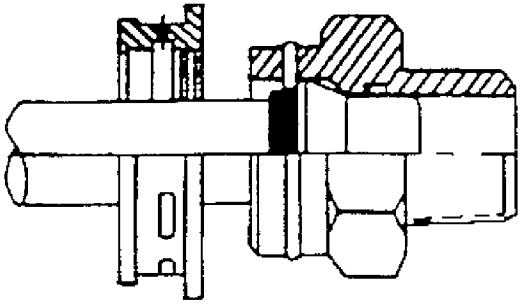

6. Install the cooler line into the quick connect fitting.
7. Insert the cooler line end into the quick connect fitting until a click is either heard or felt.

cardiagn.com

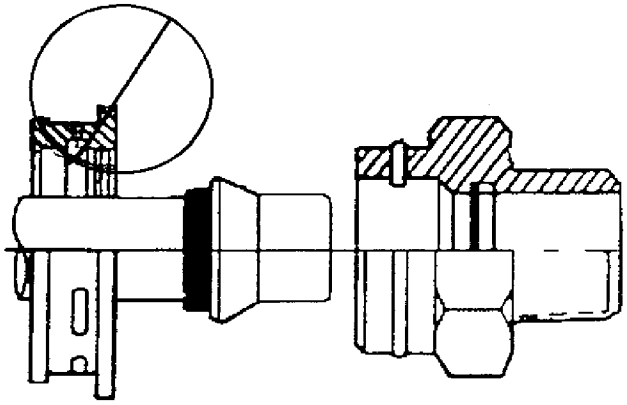

8. Do not use the plastic cap on the cooler line in order to install the cooler line into the fitting.
9. Pull back sharply on the cooler line in order to ensure that the cooler line is fastened into the quick connect fitting.

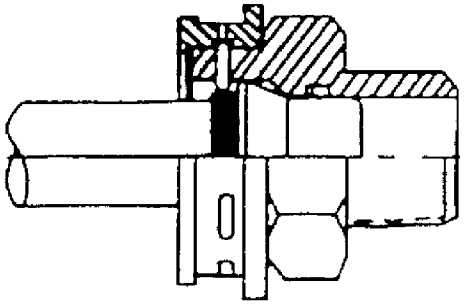

Important: Do not manually depress the retaining clip when installing the plastic cap.

10. Position (snap) the plastic cap onto the fitting. Do not manually depress the retaining ring when installing the plastic cap onto the quick connect fitting.
11. Ensure that the plastic cap is fully seated against the fitting.

cardiagn.com

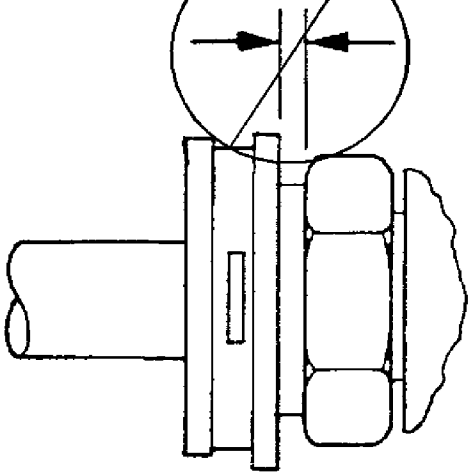

12. Ensure that no gap is present between the cap and the fitting.

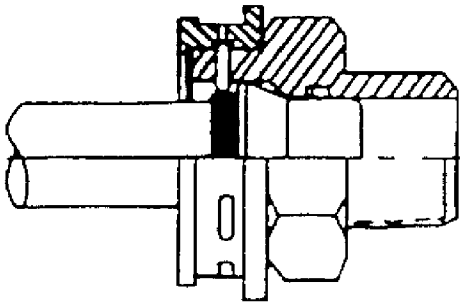

13. Ensure that the yellow identification band on the tube is hidden within the quick connect fitting.

cardiagn.com

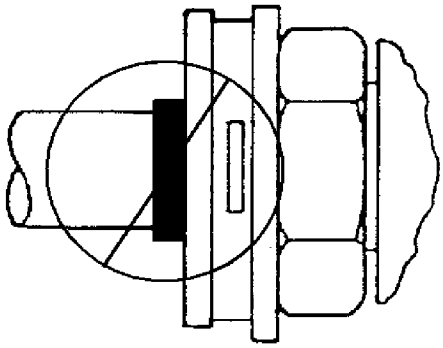

14. A hidden yellow identification band indicates proper joint seating.
15. Fill the transmission to the proper level with DEXRON® VI transmission fluid. Refer to Transmission Fluid Check .

cardiagn.com

Transmission Fluid Cooler Hose Replacement

Use only double-wrapped and use only brazed steel pipe meeting the GM specification 123M or equivalent if replacement of the transaxle oil cooler pipes are required. Ensure the pipe is double-flared.

Removal Procedure

Caution: Allow sufficient clearance around the transaxle oil cooler pipes and around the hoses to prevent damage or wear which may cause fluid loss.

1. Remove the battery box. Refer to Battery Tray Replacement.

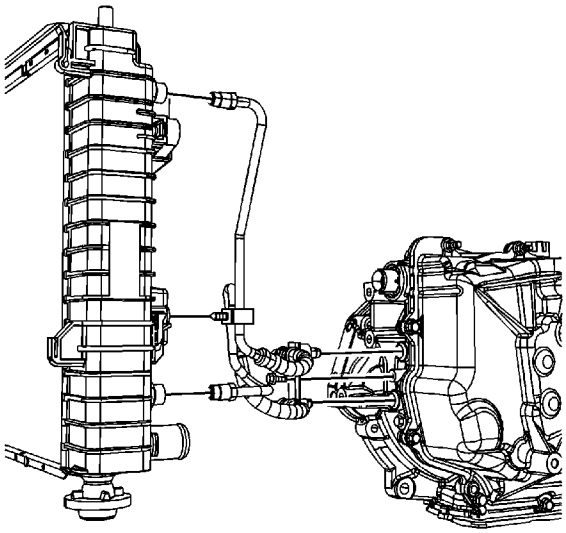

2. Remove the upper transaxle oil cooler pipe fitting at the radiator.
3. Raise and support the vehicle. Refer to Lifting and Jacking the Vehicle.
4. Position a drain pan under the transaxle cooler pipes.
5. Remove the transaxle oil cooler pipe retaining nut from the transaxle.
6. Remove the transaxle oil cooler pipe from the transaxle.
7. Remove the lower transaxle oil cooler pipe fitting at the radiator.
8. Remove the transaxle oil cooler pipe retaining clip from the radiator.
9. Remove the transaxle oil cooler pipes from the vehicle.

Installation Procedure

cardiagn.com

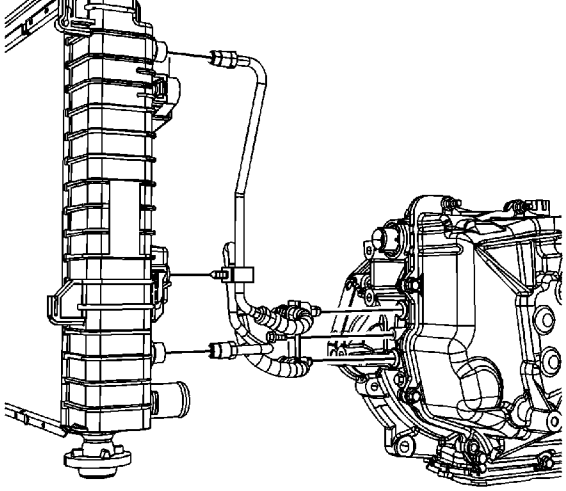

1. Install the transaxle oil cooler pipes to the vehicle.
2. Fasten the transaxle oil cooler pipe retaining clip to the radiator

   Caution: Refer to Fastener Caution in the Preface section.

   Note: The correct thread engagement is critical. Crossthreaded fittings can achieve proper tightness value and still leak.

3. Install the lower transaxle oil cooler pipe fitting to the radiator and tighten the fitting to **16 N·m (12 lb ft)**.
4. Install the transaxle oil cooler pipes to the transaxle.
5. Install the transaxle oil cooler pipe retaining nut and tighten to **4 N·m (27 lb in)**.
6. Lower the vehicle.
7. Install the upper transaxle oil cooler pipe fitting to the radiator and tighten the fitting to **16 N·m (12 lb ft)**.
8. Install the battery box. Refer to Battery Tray Replacement.

   Caution: Do NOT overfill the transaxle. The overfilling of the transaxle causes foaming, loss of fluid, shift complaints, and possible damage to the transaxle.

9. Adjust the transmission fluid level. Refer to Transmission Fluid Check.
10. Inspect for fluid leaks.

cardiagn.com

Auxiliary Fluid Pump Inlet Pipe Replacement

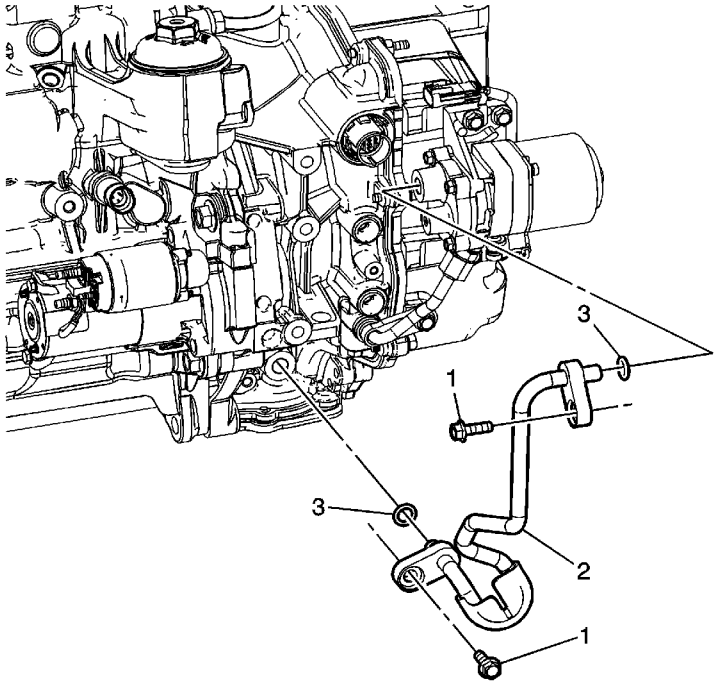

Callout	Component Name
Preliminary Procedures 1. Raise the vehicle. Refer to Lifting and Jacking the Vehicle. 2. Remove the front transaxle mount. Refer to Transmission Front Mount Replacement. 3. Remove the auxiliary fluid pump. Refer to Auxiliary Fluid Pump Replacement.	
1	Transaxle Auxiliary Fluid Pump Inlet Pipe Bolt (Qty: 2) **Caution:** Refer to Fastener Caution in the Preface section. **Tighten** 25 N·m (18 lb ft)
2	Transaxle Auxiliary Fluid Pump Inlet Pipe **Caution:** Transmission Auxiliary Pump Priming must be performed after any service procedure is performed on the transmission that involves the draining of and refill of transmission fluid. Failure to perform the Transmission Auxiliary Pump Priming will result in damage to the auxiliary pump and possible damage to the transmission. **Procedure**

cardiagn.com

3	Transaxle Auxiliary Fluid Pump Inlet Pipe O-ring (Qty: 2)

cardiagn.com

Auxiliary Fluid Pump Outlet Pipe Replacement

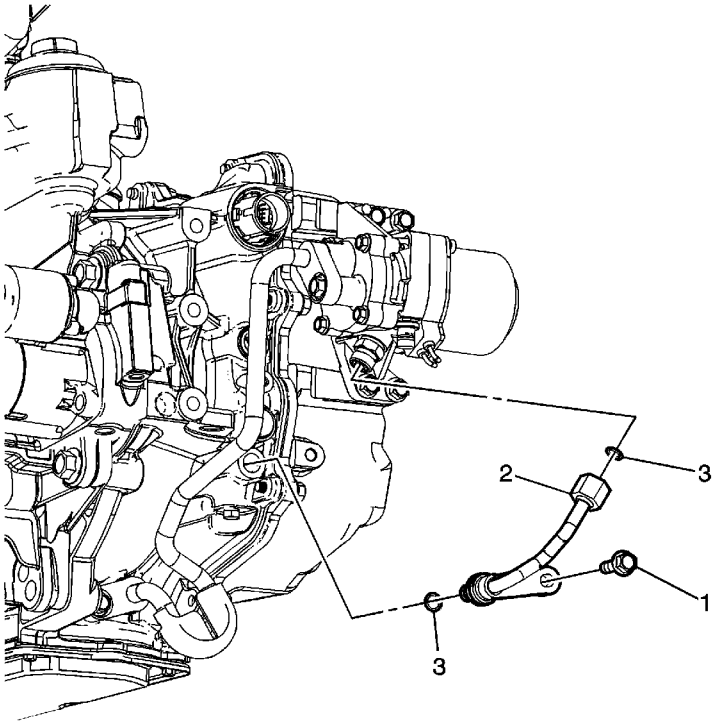

Callout	Component Name
Preliminary Procedures 1. Raise the vehicle. Refer to Lifting and Jacking the Vehicle. 2. Remove the front transaxle mount. Refer to Transmission Front Mount Replacement. 3. Remove the auxiliary fluid pump. Refer to Auxiliary Fluid Pump Replacement.	
1	Transaxle Auxiliary Fluid Pump Outlet Pipe Bolt **Caution:** Refer to Fastener Caution in the Preface section. **Tighten** 25 N·m (18 lb ft)
2	Transaxle Auxiliary Fluid Pump Outlet Pipe **Caution:** Transmission Auxiliary Pump Priming must be performed after any service procedure is performed on the transmission that involves the draining of and refill of transmission fluid. Failure to perform the Transmission Auxiliary Pump Priming will result in damage to the auxiliary pump and possible damage to the transmission. **Procedure**

cardiagn.com

	Tighten 22 N·m (16 lb ft)
3	Transaxle Auxiliary Fluid Pump Outlet Pipe O-ring (Qty: 2)

cardiagn.com

Auxiliary Fluid Pump Replacement

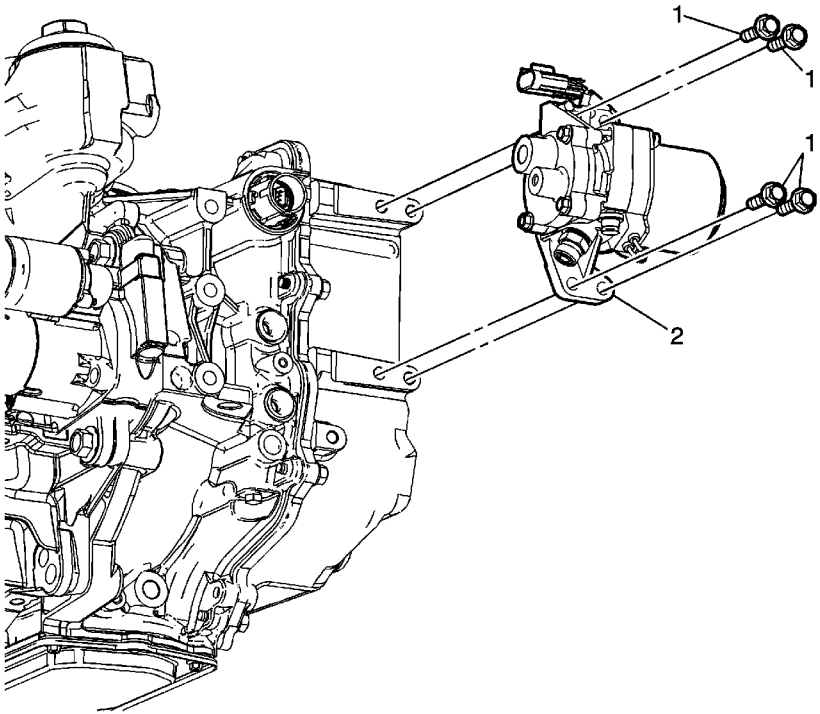

Callout	Component Name
Preliminary Procedures 1. Remove the generator control module and battery tray. Refer to Generator Control Module Replacement. 2. Disconnect the fluid pump inlet pipe from the auxiliary fluid pump. Refer to Auxiliary Fluid Pump Inlet Pipe Replacement. 3. Disconnect the fluid pump outlet pipe from the auxiliary fluid pump. Refer to Auxiliary Fluid Pump Outlet Pipe Replacement. 4. Disconnect the electrical connector from the auxiliary fluid pump.	
1	Transaxle Auxiliary Fluid Pump Bolt (Qty: 4) **Caution:** Refer to Fastener Caution in the Preface section. **Tighten** 25 N·m (18 lb ft)
	Transaxle Auxiliary Fluid Pump **Caution:** Transmission Auxiliary Pump Priming must be performed after any service procedure is performed on the transmission that involves the draining of and refill of transmission fluid. Failure to perform the Transmission Auxiliary Pump Priming will

cardiagn.com

2	**Procedure** Prime the auxiliary fluid pump. Refer to Auxiliary Fluid Pump Priming

cardiagn.com

Auxiliary Fluid Pump Priming

1. The transmission must be in the vehicle and partially filled with fluid (approximately 8 quarts).
2. To prime the auxiliary pump, use the Tech II and follow the listed menus in order:
   - 2.1. Tech II Diagnosis
   - 2.2. 2007
   - 2.3. LD Truck
   - 2.4. Saturn
   - 2.5. Z
   - 2.6. VUE Hybrid
   - 2.7. Powertrain (F0)
   - 2.8. ECM (F1)
   - 2.9. Special Functions (F2)
   - 2.10. Hybrid Outputs (F1)
   - 2.11. Aux Trans Pump
   - 2.12. Aux Trans Fluid Pump Co.
   - 2.13. Aux Trans Fluid Pump Re ON/OFF
3. During the last step, hold the power ON switch for approximately 30-60 seconds. The auxiliary pump will be primed.
4. Remove Tech II tool.
5. The transmission is ready to be topped off with transmission fluid.

cardiagn.com

Oil Feed Pipes Replacement

Removal Procedure

1. Remove the transmission oil filter assembly. Refer to Automatic Transmission Fluid Filter and Seal Replacement.

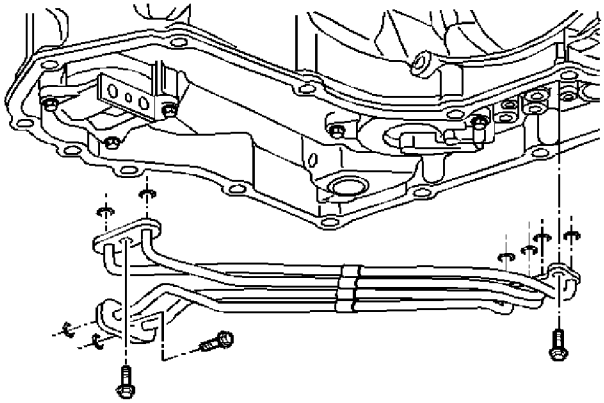

2. Remove the oil feed pipe bolts.
3. Inspect the eight oil feed pipe seal rings.
4. Replace the seal rings only if the seal rings are cut, swollen or damaged.

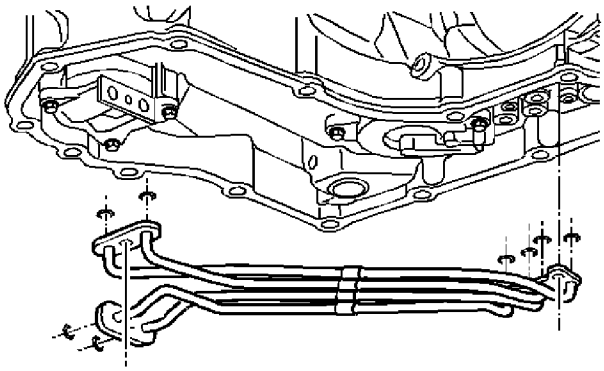

5. Remove the lo and the reverse band oil pipe assembly.

cardiagn.com

8. Inspect the oil feed pipe seal rings. Verify the proper location of the seal rings. Replace the seal rings if these are cut, swelled or damaged.

Installation Procedure

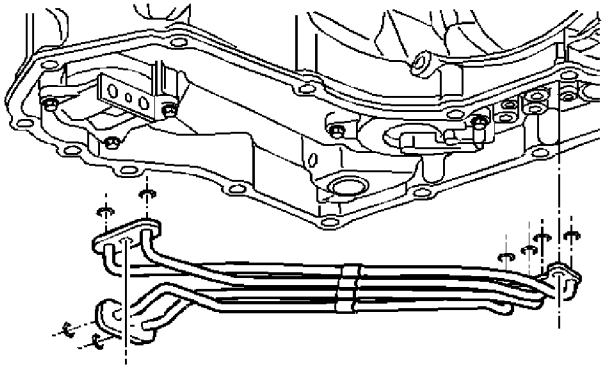

1. Install the eight lo and the reverse band oil pipe assembly seals.
2. Install the lo and the reverse band oil feed pipe assembly onto the transmission.

Caution: Refer to Fastener Caution in the Preface section.

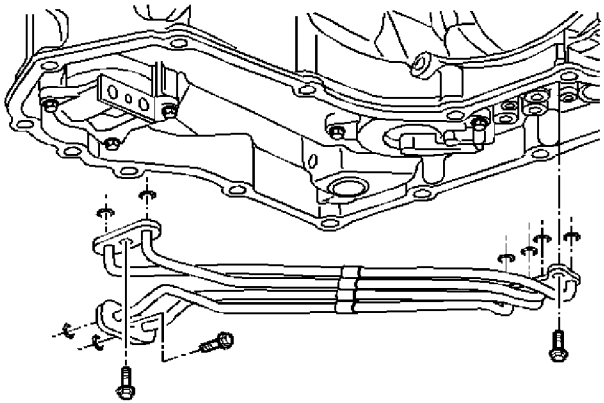

cardiagn.com

3. Hand start the bolts that attach the oil feed pipe assembly to the transmission.

   Tighten the bolts to **12 N·m (106 lb in)**.

4. Install the transmission oil filter assembly. Refer to Automatic Transmission Fluid Filter and Seal Replacement.

   Note: It is recommended that transmission adaptive pressure (TAP) information be reset.

   Resetting the TAP values using a scan tool will erase all learned values in all cells. As a result, the engine control module (ECM), powertrain control module (PCM) or transmission control module (TCM) will need to relearn TAP values. Transmission performance may be affected as new TAP values are learned.

5. Reset the TAP values. Refer to Transmission Adaptive Functions.

cardiagn.com

Control Valve Body Cover Replacement

Special Tools

J 36850 Transjel Lubricant

Removal Procedure

1. Disconnect the air cleaner outlet duct from the intake plenum. Refer to Air Cleaner Outlet Duct Replacement.
2. Remove the frame. Refer to Frame Replacement.
3. Remove the left front splash shield. Refer to Engine Splash Shield Replacement.
4. Remove the left wheel drive shaft from the transmission. Refer to Front Wheel Drive Shaft Replacement.
5. Remove the left transmission mount. Refer to Transmission Mount Replacement - Left Side.
6. Remove the park neutral position (PNP) switch. Refer to Park/Neutral Position Switch Replacement.

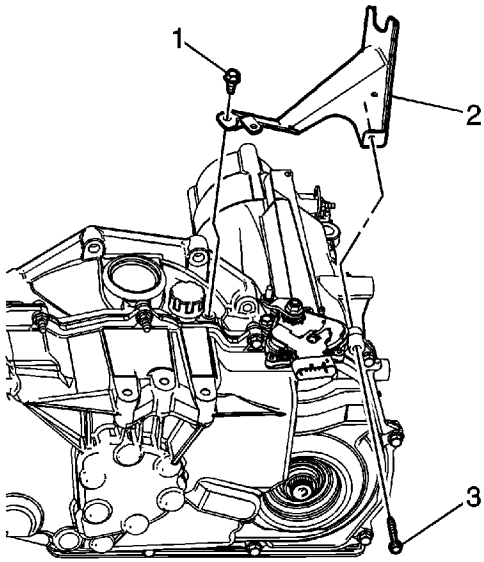

7. Remove the range select cable bracket bolt (3).
8. If equipped with 2.4L (LAT), remove the auxiliary fluid pump. Refer to Auxiliary Fluid Pump Replacement.
9. Using the engine support fixture, lower the engine and transmission until the transmission side cover will clear the inner fender.
10. Raise the vehicle. Refer to Lifting and Jacking the Vehicle.

cardiagn.com

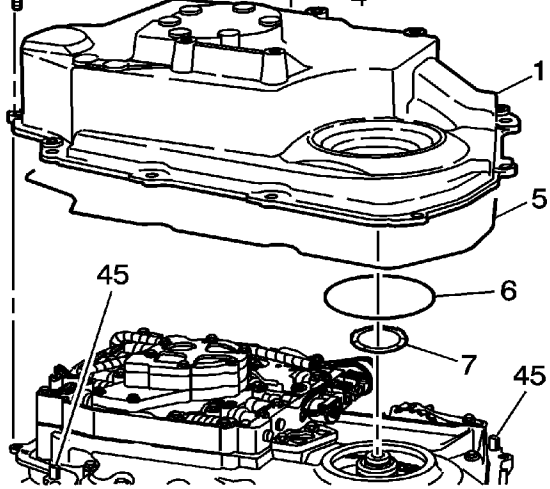

11. Remove the transmission side cover bolts (3) and studs (4).
12. Separate the case side cover (1) from the transmission case at the dowel pin locations (45) to prevent damage to the sealing surfaces.
13. Remove the transmission side cover (1).
14. Remove the two side cover gaskets (5 and 6) if they do not remain with the side cover.
15. Remove the thrust washer (7) if it does not remain with the side cover.

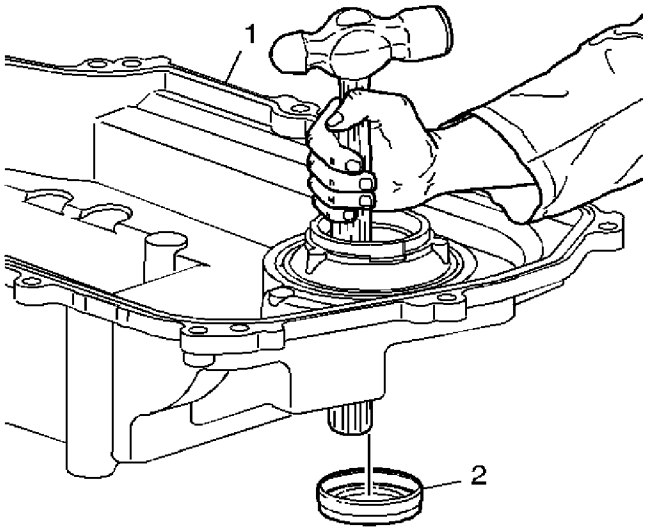

Caution: Do not damage the case bore when removing the axle seal.

16. Remove the side cover axle seal (2). Use the handle end of a hammer.
17. Remove the sleeve from the output axle shaft. Refer to Front Wheel Drive Shaft Seal and Output Shaft Sleeve Replacement - Left Side.

cardiagn.com

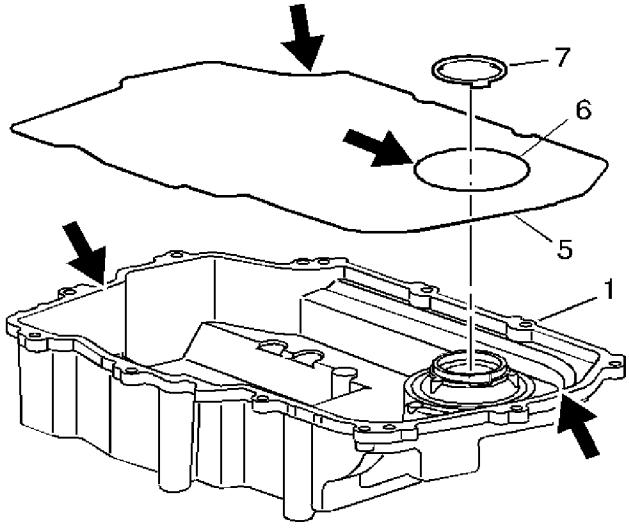

1. Inspect the side cover for cracks or damage to the seal grooves and mounting bosses.
2. Inspect the side cover seals for damage. The side cover seals are reusable if not damaged.
3. Thoroughly clean the side cover and the side cover seals.
4. Clean and dry the seal grooves and the axle seal bore.
5. Install the side cover gaskets (5 and 6) into the grooves on the side cover (1).
6. Retain the seals with J 36850 or equivalent.
7. Install the side cover to drive sprocket thrust washer (7) onto the side cover.
8. Retain the thrust washer with J 36850 or equivalent.

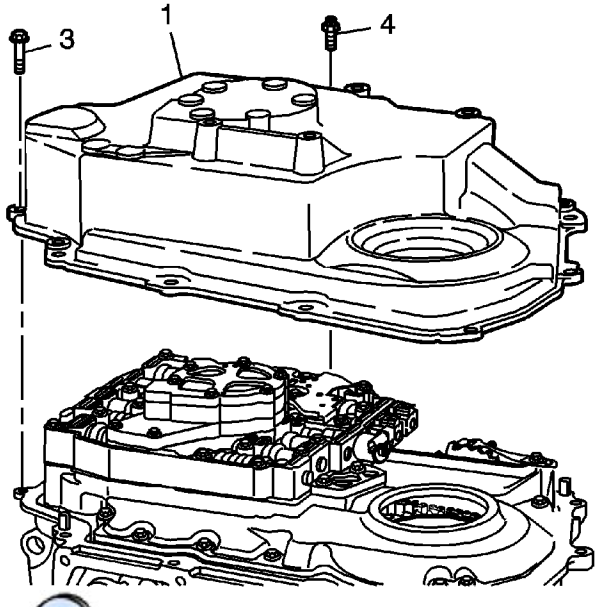

9. Install the transmission side cover (1) to the transmission case.

cardiagn.com

10. Install the transmission side cover bolts (3) and studs (4) and tighten to **28 N·m (22 lb ft)**.
11. Install the output axle seal and sleeve. Refer to Front Wheel Drive Shaft Seal and Output Shaft Sleeve Replacement - Left Side.
12. Lower the vehicle.
13. Using the engine support fixture, raile the engine and transmission.

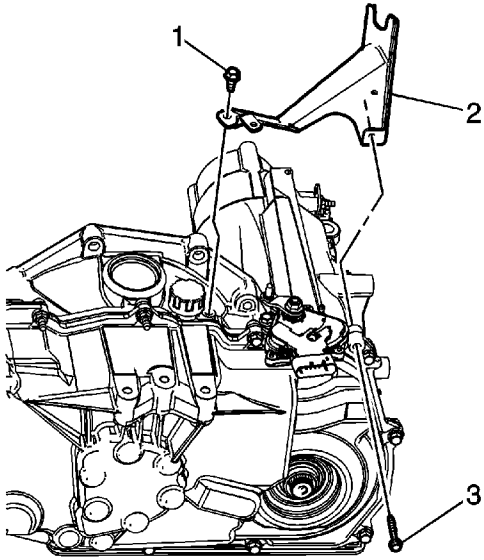

14. Install the shift cable bracket bolt (3) and tighten to **22 N·m (16 lb ft)**.
15. Install the PNP switch. Refer to Park/Neutral Position Switch Replacement.
16. Install the transmission mount. Refer to Transmission Mount Replacement - Left Side.
17. If equipped with 2.4L (LAT), install the auxiliary fluid pump. Refer to Auxiliary Fluid Pump Replacement.
18. Raise the vehicle. Refer to Lifting and Jacking the Vehicle.
19. Install the left wheel drive shaft to the transmission. Refer to Front Wheel Drive Shaft Replacement.
20. Install the left front splash shield. Refer to Engine Splash Shield Replacement.
21. Install the frame. Refer to Frame Replacement.
22. Connect the air cleaner outlet duct to the intake plenum. Refer to Air Cleaner Outlet Duct Replacement.
23. Fill the transmission. Refer to Approximate Fluid Capacities.

Caution: Transmission Auxiliary Pump Priming must be performed after any service procedure is performed on the transmission that involves the draining of and refill of transmission fluid. Failure to perform the Transmission Auxiliary Pump Priming will result in damage to the auxiliary pump and possible damage to the transmission.

24. If equipped with 2.4L (LAT), using a scan tool, prime the transmission auxiliary pump.

cardiagn.com

Control Valve Body Cover Gasket Replacement

Removal Procedure

1. Remove the transmission side cover. Refer to Control Valve Body Cover Replacement .

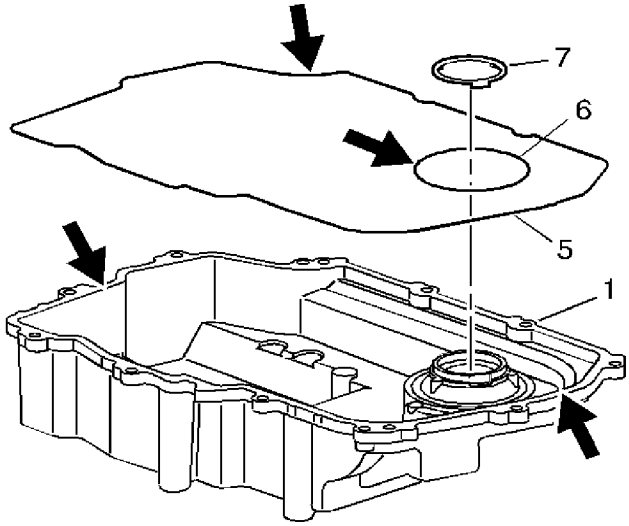

2. Remove the side cover gaskets (5 and 6) and the thrust washer (7) from the side cover (1).
3. Inspect the side cover for cracks or damage to the seal grooves and mounting bosses.
4. Inspect the side cover seals for damage. The side cover seals are reusable if not damaged.
5. Thoroughly clean the side cover and the side cover seals. Clean and dry the seal grooves and the axle seal bore.

Installation Procedure

cardiagn.com

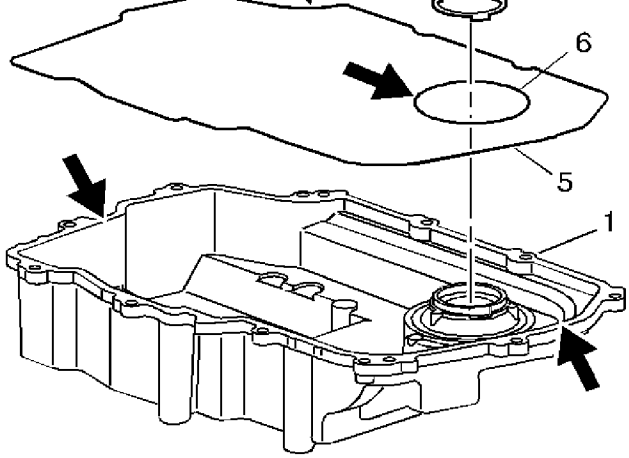

1. Install the side cover gaskets (5 and 6) into the grooves on the side cover (1).
2. Retain the seals with J 36850 or equivalent .
3. Install the side cover to drive sprocket thrust washer (7) onto the side cover.
4. Retain the thrust washer with J 36850 or equivalent.
5. Install the transmission side cover. Refer to Control Valve Body Cover Replacement .

cardiagn.com

Wiring Harness Replacement

Special Tools

J 41101 Transaxle Connector Remover

Removal Procedure

1. Remove the transmission side cover. Refer to Control Valve Body Cover Replacement.
2. Remove the control valve body. Refer to Control Valve Body Replacement.

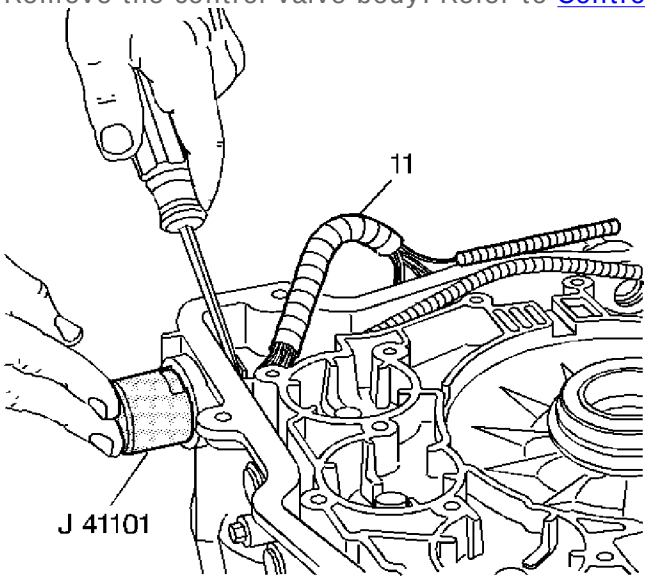

3. Push the J 41101 onto the pass-through connector from the outside of the transmission case in order to compress the pass-through connector's retaining tabs.
4. With the retaining tabs compressed, use a screwdriver in order to remove the pass-through connector through the inside of the transmission case.
5. Remove the wiring harness (11).

Installation Procedure

cardiagn.com

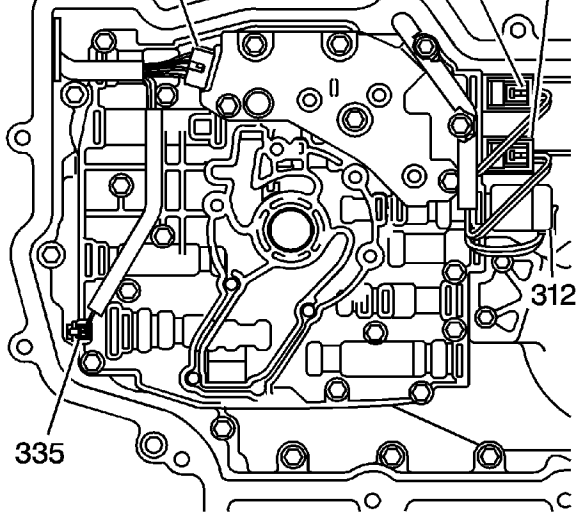

1. Connect the wiring harness assembly to the following components:
   - The TFP switch assembly (13)
   - The pressure control solenoid (312) (red connector)

     Important: The 1-2 shift solenoids wires are red and light green. The 2-3 shift solenoid wires are red and yellow.

   - The 1-2 shift solenoid (305) (white connector)
   - The 2-3 shift solenoids (305) (white connectors)
   - The TCC solenoid (335)
2. Install the control valve body. Refer to Control Valve Body Replacement.
3. Install the transmission side cover. Refer to Control Valve Body Cover Replacement.

   Important: It is recommended that transmission adaptive pressure (TAP) information be reset.

   Resetting the TAP values using a scan tool will erase all learned values in all cells. As a result, the engine control module (ECM), powertrain control module (PCM) or transmission control module (TCM) will need to relearn TAP values. Transmission performance may be affected as new TAP values are learned.

4. Reset the TAP values. Refer to Transmission Adaptive Functions.

cardiagn.com

Torque Converter Clutch Pulse Width Modulation Solenoid Replacement

Replacement Procedure

Important: Retainer clips hold in each of the valve line-ups. Use a small screwdriver in order to remove the retainer clips. Be careful not to score the valve body when removing the retainer clips and valves. Before removing the valve line-ups, inspect each valve line-up for freedom of movement.

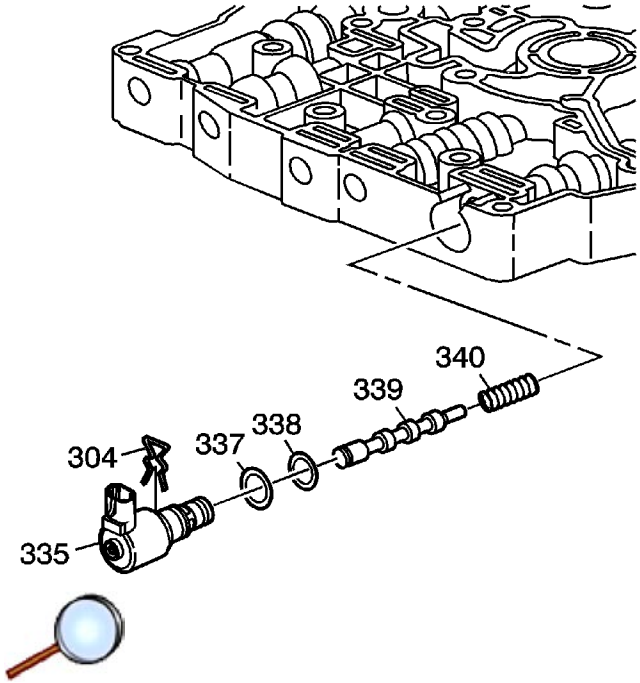

1. Remove the transmission side cover. Refer to Control Valve Body Cover Replacement
2. Remove the TCC solenoid retainer clip (304), the TCC solenoid (335), with two O-rings (337, 338), and screen, the TCC regulated apply valve (339) and the spring (340).

Installation Procedure

cardiagn.com

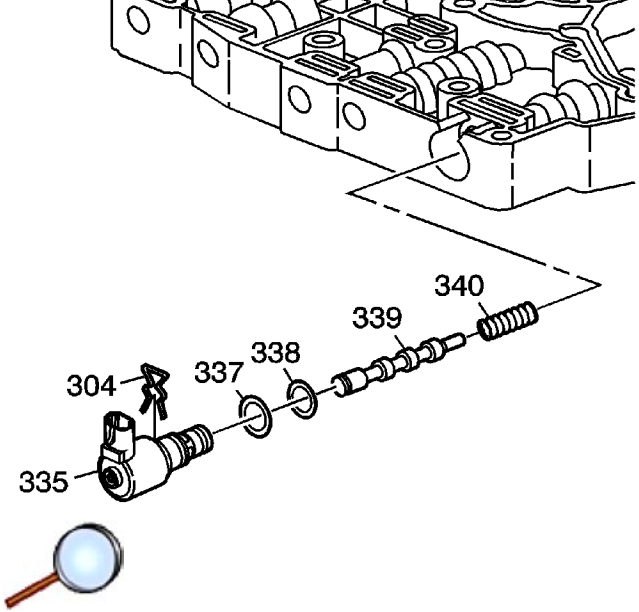

1. Install the spring (340), the TCC regulated apply valve (339), the TCC solenoid (335) with two O-rings (337 and 338) and screen, and the TCC solenoid retainer clip (304).
2. Install the transmission side cover. Refer to Control Valve Body Cover Replacement

   Important: It is recommended that transmission adaptive pressure (TAP) information be reset.

   Resetting the TAP values using a scan tool will erase all learned values in all cells. As a result, The ECM, PCM or TCM will need to relearn TAP values. Transmission performance may be affected as new TAP values are learned.

3. Reset the TAP values. Refer to Transmission Adaptive Functions .

cardiagn.com

1-2 Shift Solenoid Valve Replacement

Removal Procedure

Important: Retainer clips hold in each of the valve line-ups. Use a small screwdriver in order to remove the retainer clips. Be careful not to score the valve body when removing the retainer clips and valves. Before removing the valve line-ups, inspect each valve line-up for freedom of movement.

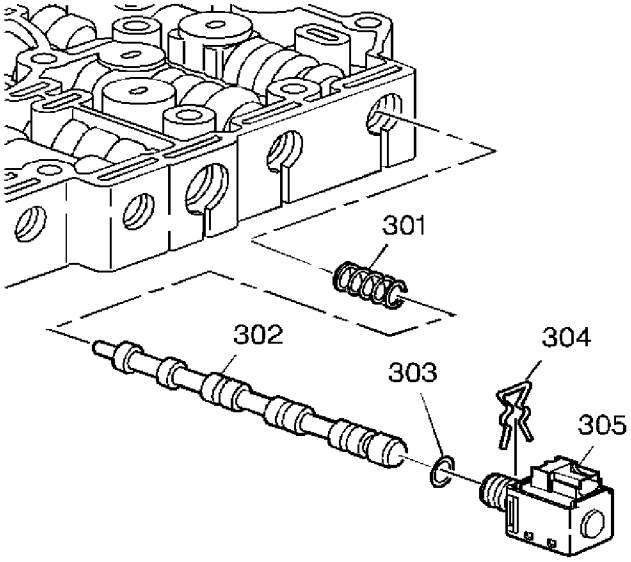

1. Remove the transmission side cover. Refer to Control Valve Body Cover Replacement .
2. Remove the 1-2 shift solenoid retainer clip (304), the 1-2 shift solenoid (305) with O-ring (303), the 1-2 shift valve (302), and the 1-2 shift valve spring (301).

Installation Procedure

cardiagn.com

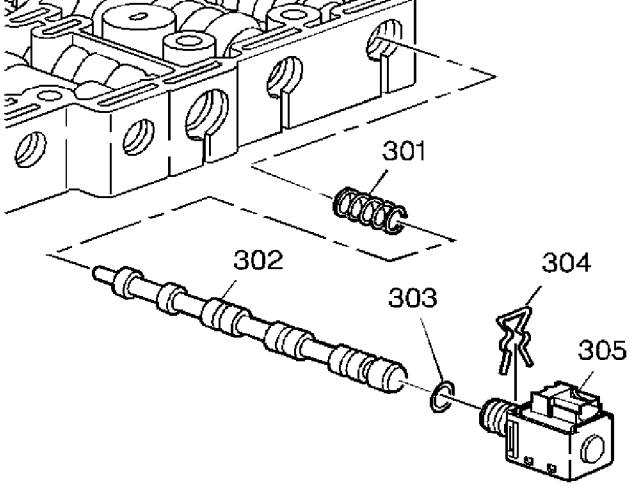

1. Install the 1-2 shift valve spring (301), the 1-2 shift valve (302), the 1-2 shift solenoid (305) with O-ring (303) and the 1-2 shift solenoid retainer clip (304).
2. Install the transmission side cover. Refer to Control Valve Body Cover Replacement .

   Important: It is recommended that transmission adaptive pressure (TAP) information be reset.

   Resetting the TAP values using a scan tool will erase all learned values in all cells. As a result, The ECM, PCM or TCM will need to relearn TAP values. Transmission performance may be affected as new TAP values are learned.

3. Reset the TAP values. Refer to Transmission Adaptive Functions .

cardiagn.com

2-3 Shift Solenoid Valve Replacement

Removal Procedure

Important: Retainer clips hold in each of the valve line-ups. Use a small screwdriver in order to remove the retainer clips. Be careful not to score the valve body when removing the retainer clips and valves. Before removing the valve line-ups, inspect each valve line-up for freedom of movement.

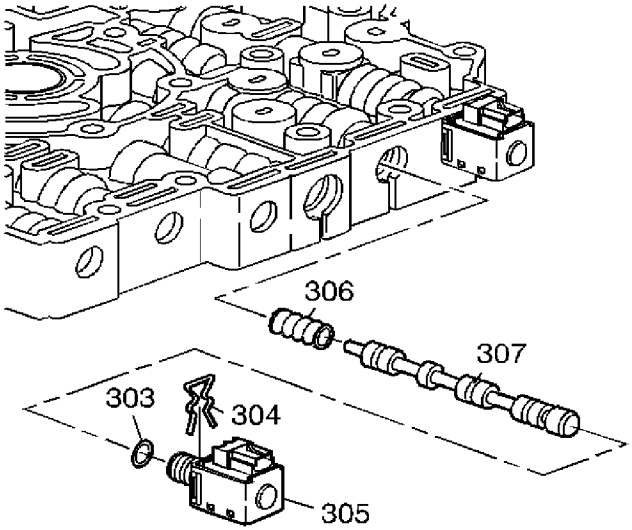

1. Remove the transmission side cover. Refer to Control Valve Body Cover Replacement .
2. Remove the 2-3 shift solenoid retainer clip (304), the 2-3 shift solenoid (305) with O-ring (303), the 2-3 shift valve (307), and the 2-3 shift valve spring (306).

Installation Procedure

cardiagn.com

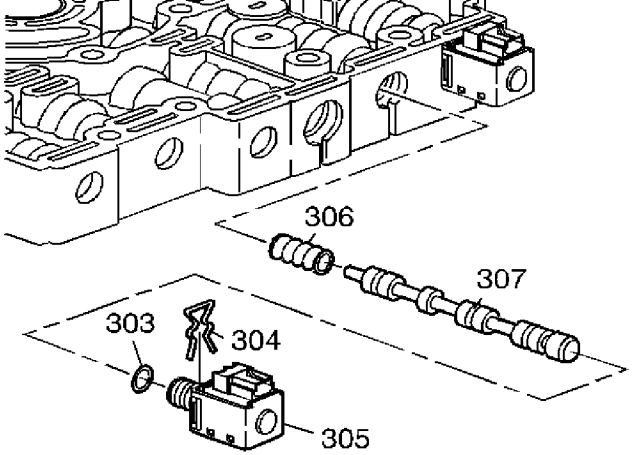

1. Install the 2-3 shift valve spring (306), the 2-3 shift valve (307), the 2-3 shift solenoid (305) with O-ring (303) and the 2-3 shift solenoid retainer clip (304).
2. Install the transmission side cover. Refer to Control Valve Body Cover Replacement .

   Important: It is recommended that transmission adaptive pressure (TAP) information be reset.

   Resetting the TAP values using a scan tool will erase all learned values in all cells. As a result, The ECM, PCM or TCM will need to relearn TAP values. Transmission performance may be affected as new TAP values are learned.

3. Reset the TAP values. Refer to Transmission Adaptive Functions .

cardiagn.com

Pressure Control Solenoid Valve Replacement

Removal Procedure

Important: Retainer clips hold in each of the valve line-ups. Use a small screwdriver in order to remove the retainer clips. Be careful not to score the valve body when removing the retainer clips and valves. Before removing the valve line-ups, inspect each valve line-up for freedom of movement.

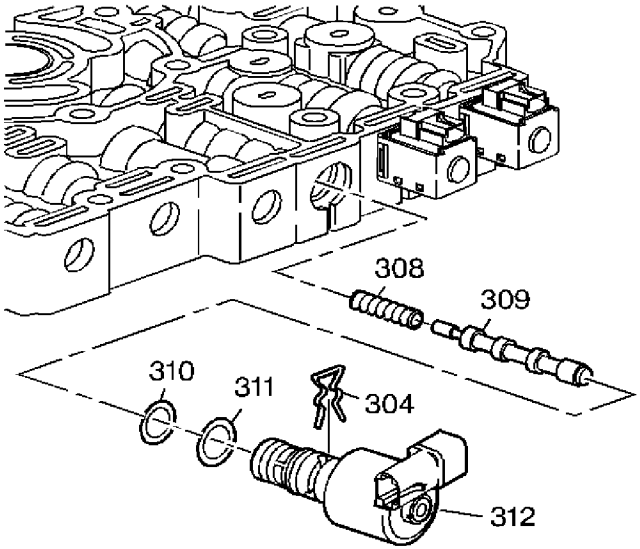

1. Remove the transmission side cover. Refer to Control Valve Body Cover Replacement
2. Remove the Pressure Control Solenoid (PCS) retainer clip (304), the PCS with two O-rings and screen (312, 309, 310), the torque signal regulator valve (309), and the torque signal regulator spring (308).

Installation Procedure

cardiagn.com

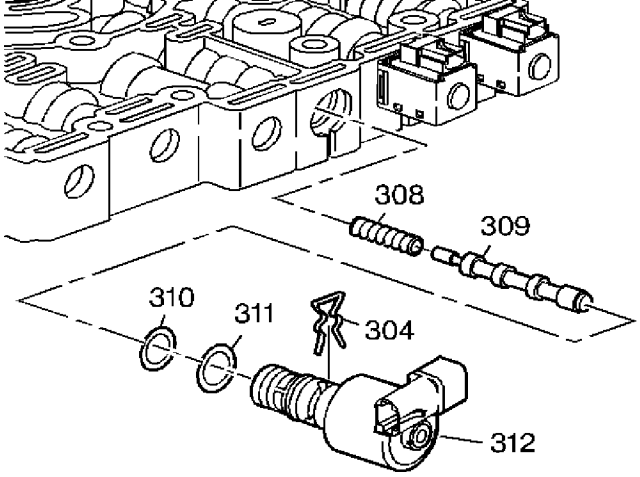

1. Install the torque signal regulator spring (308), the torque signal regulator valve (309), the Pressure Control Solenoid (PCS) with two O-rings and screen (312, 309, 310) and the PCS retainer clip (304).
2. Install the transmission side cover. Refer to Control Valve Body Cover Replacement .

   Important: It is recommended that transmission adaptive pressure (TAP) information be reset.

   Resetting the TAP values using a scan tool will erase all learned values in all cells. As a result, The ECM, PCM or TCM will need to relearn TAP values. Transmission performance may be affected as new TAP values are learned.

3. Reset the TAP values. Refer to Transmission Adaptive Functions .

cardiagn.com

Transmission Fluid Pressure Manual Valve Position Switch Replacement

Removal Procedure

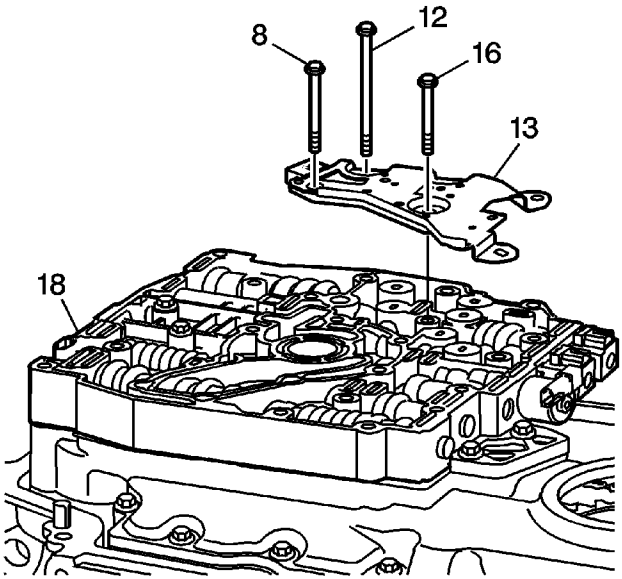

1. Remove the transmission side cover. Refer to Control Valve Body Cover Replacement.
2. Remove the six bolts from the transmission fluid pressure (TFP) switch assembly.
3. Remove the TFP switch assembly from the control valve body assembly (18). The 4 pressure switch O-rings are reusable and should remain with the TFP switch assembly.

Installation Procedure

cardiagn.com

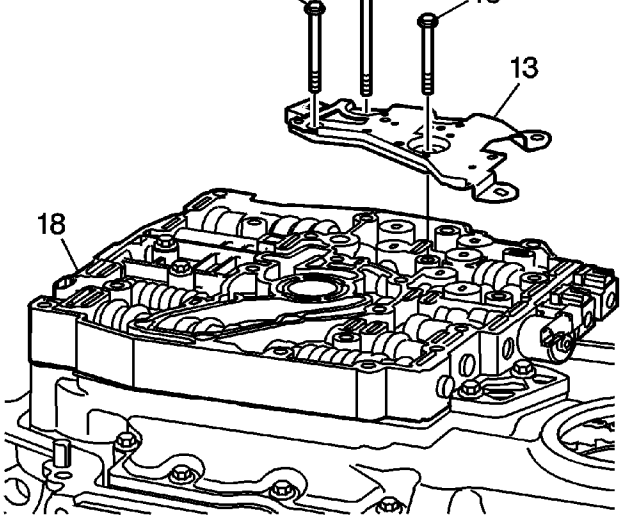

1. Install the TFP switch assembly to the control valve body assembly (18). The 4 pressure switch O-rings are reusable and should remain with the TFP switch assembly.

   Caution: Refer to Fastener Caution in the Preface section.

2. Install the six bolts to the TFP switch assembly and tighten to **12 N·m (9 lb ft)**.
3. Install the transmission side cover. Refer to Control Valve Body Cover Replacement.

   Note: It is recommended that transmission adaptive pressure (TAP) information be reset.

   Resetting the TAP values using a scan tool will erase all learned values in all cells. As a result, The ECM, PCM or TCM will need to relearn TAP values. Transmission performance may be affected as new TAP values are learned.

4. Reset the TAP values. Refer to Transmission Adaptive Functions.

cardiagn.com

Control Valve Body Replacement

Removal Procedure

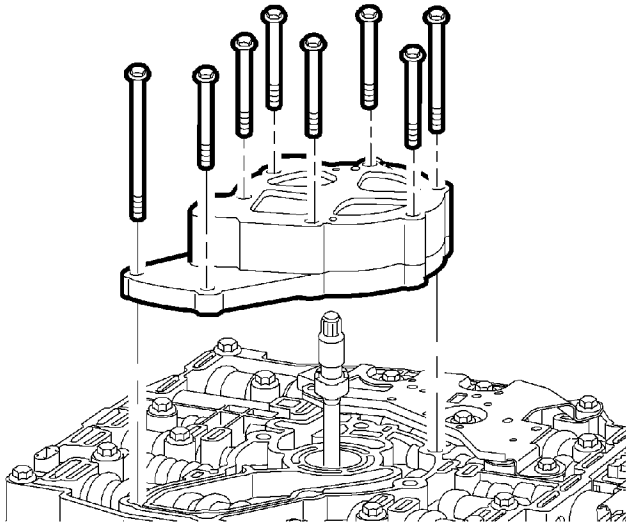

1. Remove the transaxle case side cover. Refer to Control Valve Body Cover Replacement.
2. Remove the oil pump bolts and the oil pump assembly.
3. Remove the oil pump shaft.

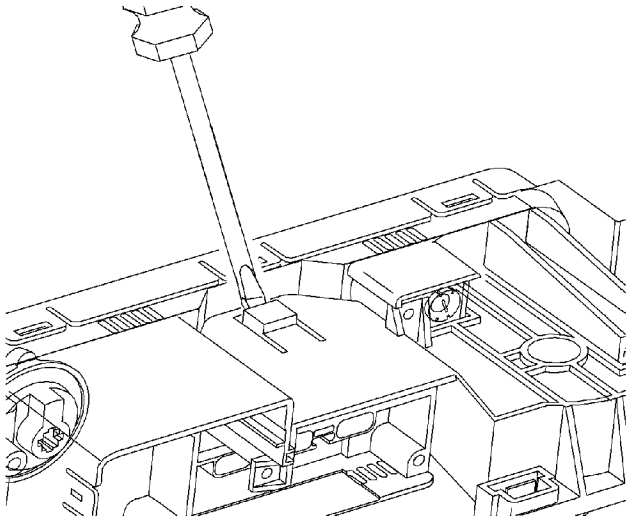

4. Disconnect the wire harness connectors from the following components:

cardiagn.com

- 1-2, 2-3 shift solenoids
- TFP switch assembly
- TCC solenoid

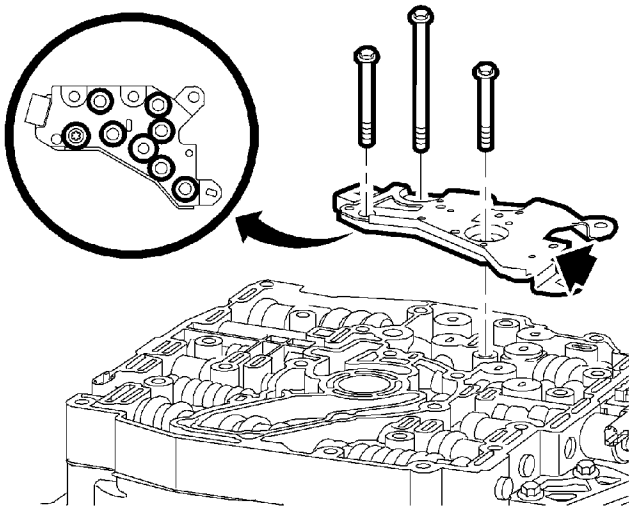

5. Remove the TFP switch assembly bolts and remove the switch assembly from the control valve body. The 7 TFP switch O-rings are reusable if not damaged and should remain with the pressure switch assembly.

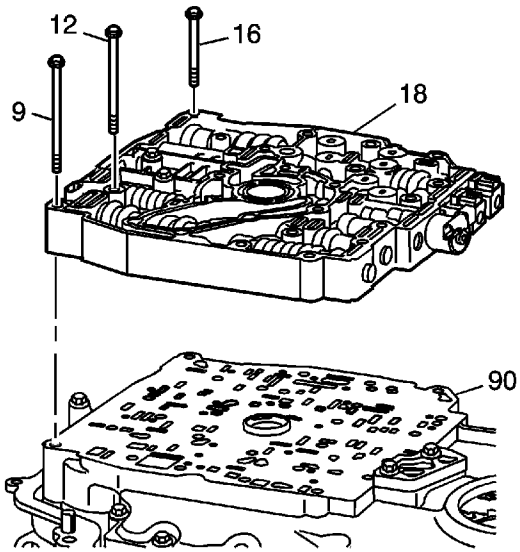

6. Remove the remaining control valve body bolts (9, 12, 16) and remove the control valve body assembly (18).

cardiagn.com

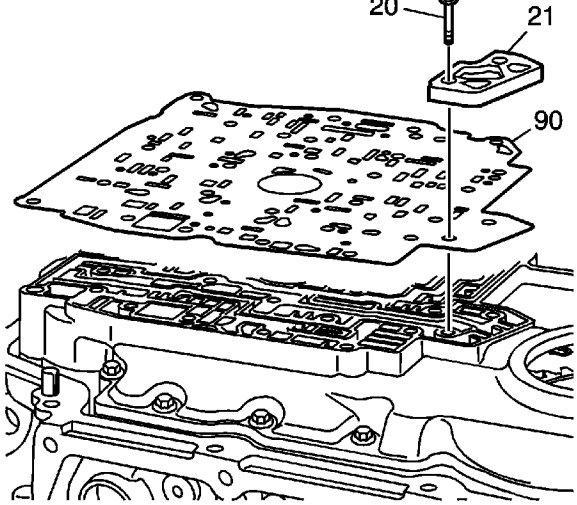

7. Remove the spacer plate support bolts (20) and remove the spacer plate support (21).

   Note: Checkballs may fall out of the channel plate assembly. Retain the checkballs with petroleum jelly.

8. Remove the spacer plate (90) with the spacer plate filter attached.
9. Remove and discard the spacer plate assembly (90).

Disassembly / Assembly Procedure

For step by step instructions on how to disassemble/assemble the control valve body, refer to Control Valve Body Disassemble and Control Valve Body Assemble.

Installation Procedure

cardiagn.com

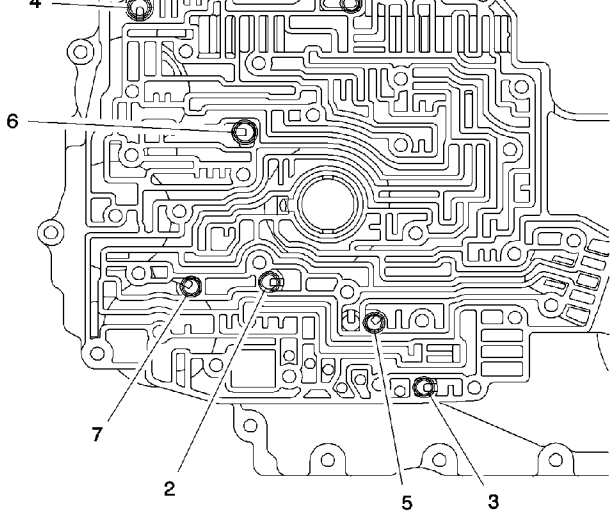

1. Make sure the checkballs (1-7) are in the proper locations on the channel plate. Retain the checkballs with petroleum jelly.

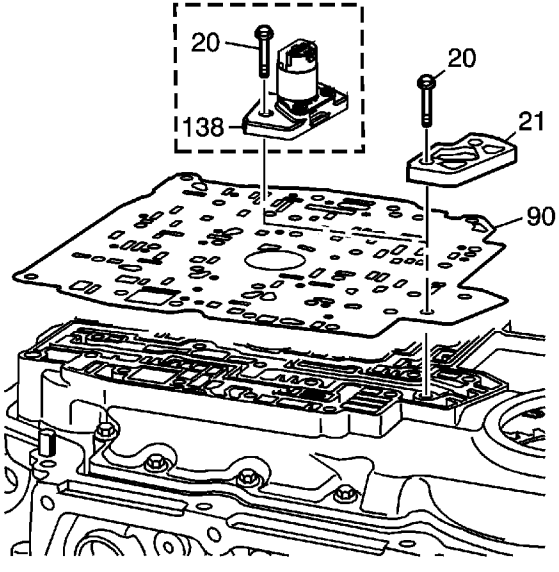

2. Install a new spacer plate assembly (90) onto the channel plate.

   Caution: Refer to Fastener Caution in the Preface section.

3. Hand start the spacer plate support bolts (20) and install the spacer plate support (21).

   Tighten the spacer plate support bolts to **14 N·m (10 lb ft)**.

cardiagn.com

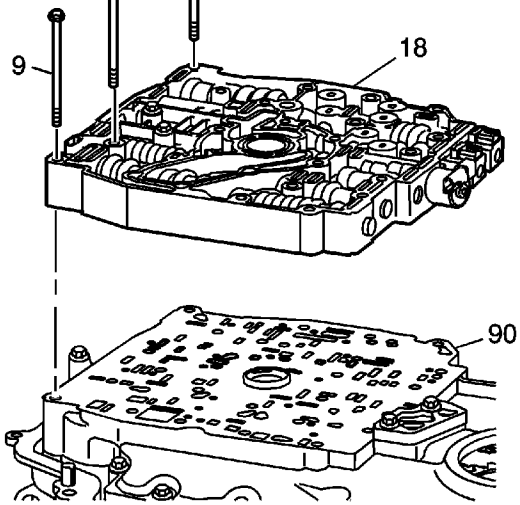

4. Install a new control valve body to the spacer plate assembly (90).
5. Install the control valve body assembly onto the gasket. Hand start the control valve body assembly bolts (9, 12, 16) to hold the valve body in place.

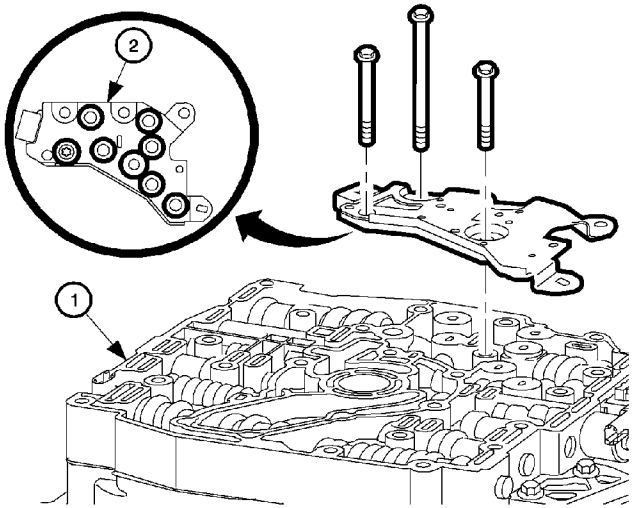

6. Inspect the TFP switch assembly (2) in order to verify the condition and the correct location of the pressure switch O-rings. If necessary, replace the TFP switch assembly O-rings.
7. Install the TFP switch assembly onto the control valve body assembly.

cardiagn.com

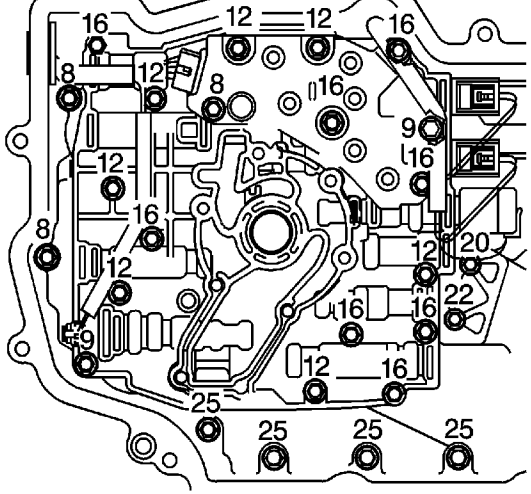

8. Install the remaining control valve body bolts.

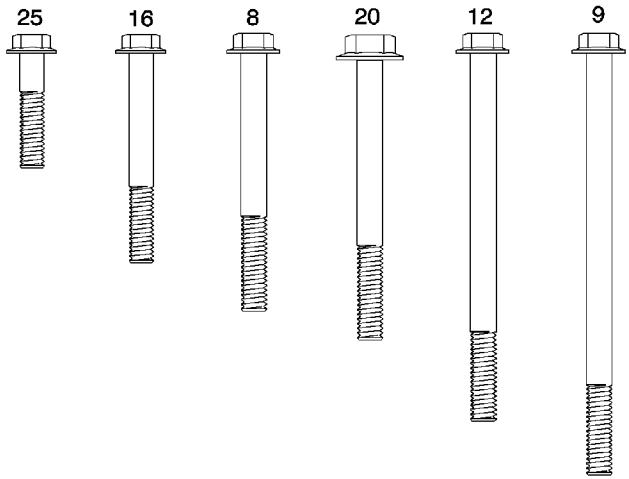

9. Hand start the bolts and tighten to **12 N·m (9 lb ft)**.

cardiagn.com

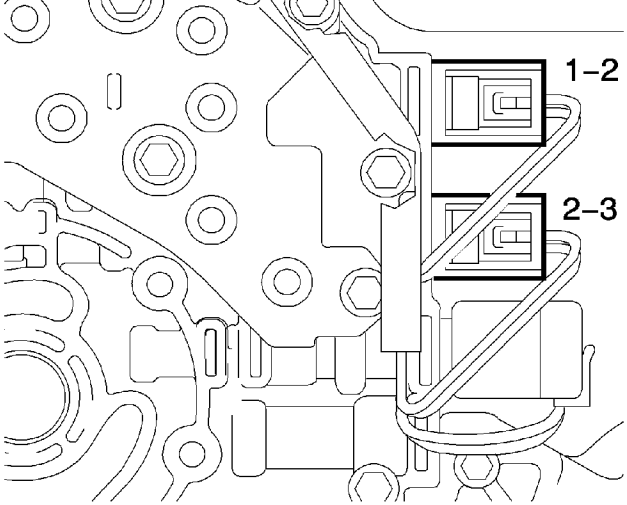

10. Connect the transaxle wiring harness to the following components:
    - TFP switch assembly
    - Pressure control solenoid (red connector)

    Note: The 1-2 shift solenoid wires are red and green. The 2-3 shift solenoid wires are red and yellow.

    - 1-2 shift solenoid
    - 2-3 shift solenoid
    - TCC solenoid

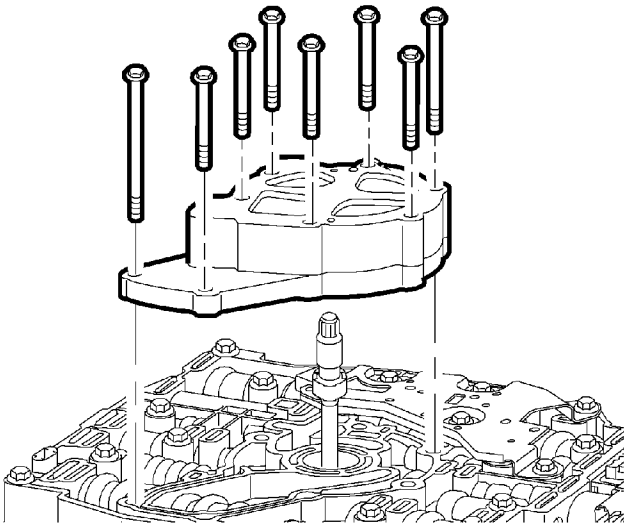

cardiagn.com

Note: If necessary, rotate the oil pump shaft while installing the oil pump assembly in order to engage the shaft splines to the splines on the oil pump rotor.

12. Install the oil pump assembly onto the oil pump shaft and the control valve body..

    Hand start and install the oil pump assembly bolts and tighten to **12 N·m (9 lb ft)**.

13. Install the transaxle case side cover. Refer to Control Valve Body Cover Replacement.
14. Start the engine, warm up the transaxle, and check for leaks.
15. Inspect for proper fluid level. Refer to Transmission Fluid Check.

    Note: It is recommended that transmission adaptive pressure (TAP) information be reset.

    Resetting the TAP values using a scan tool will erase all learned values in all cells. As a result, the ECM, PCM or TCM will need to relearn TAP values. Transmission performance may be affected as new TAP values are learned.

16. Reset the TAP values. Refer to Transmission Adaptive Functions.

cardiagn.com

Front Wheel Drive Shaft Seal and Output Shaft Sleeve Replacement - Right Side

Tools Required

- J 38868 Shaft Removal Tool
- J 6125-1B Slide Hammer
- J 23129 Universal Seal Remover
- J 8092 Driver Handle
- J 41102-1A Axle Seal Installer
- J 41227 Output Shaft Sleeve Remover
- J 41228 Output Shaft Sleeve Installer

Removal Procedure

Important:

- The stub axle shaft sleeve and seal must be replaced together. DO NOT replace the sleeve or seal separately.
- Do not damage the seal bore or the sleeve assembly. Fluid leaks may result.

1. Raise and support the vehicle. Refer to Lifting and Jacking the Vehicle .
2. Remove the right drive axle assembly. Refer to Front Wheel Drive Shaft Replacement .

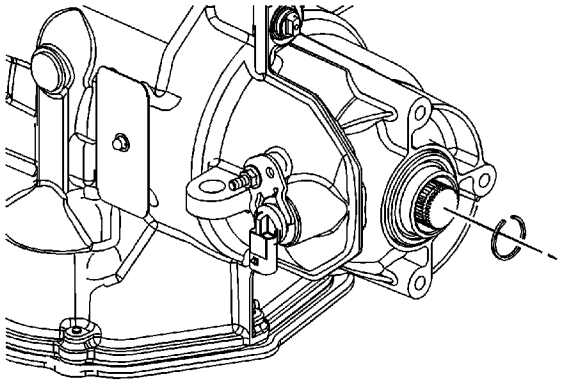

3. Remove the snap ring from the stub axle shaft. Discard the snap ring. Do not reuse.

cardiagn.com

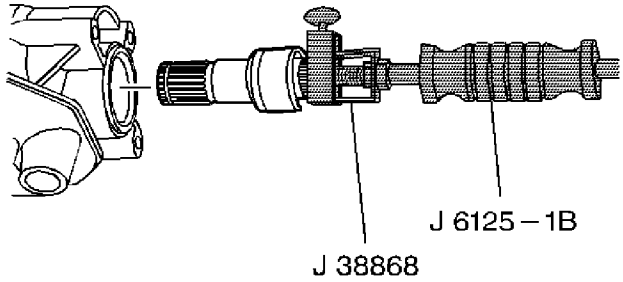

4. Install the J 38868 and J 6125-1B into the stub shaft snap ring groove.
5. Pull lightly on the shaft while rotating the shaft until the stub shaft snap ring at the differential seats in the taper on the differential side gear.
6. Remove the stub shaft from the transmission.

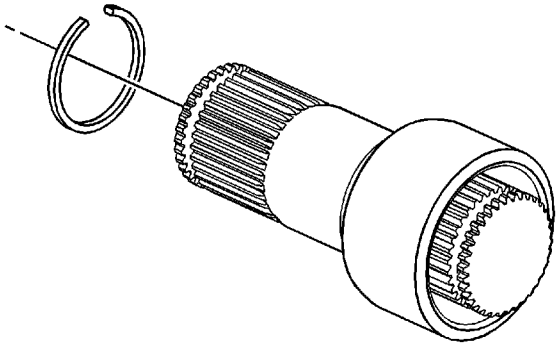

7. Remove the inner snap ring.

cardiagn.com

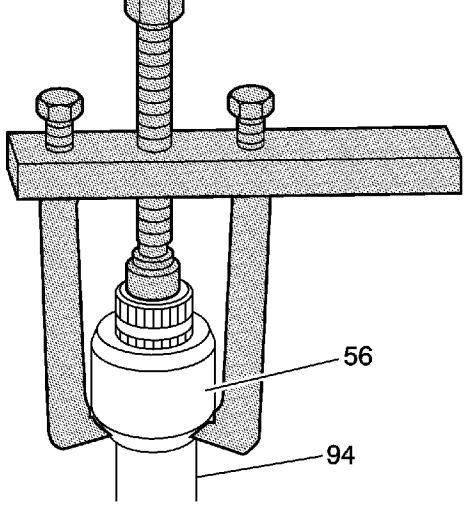

8. Using J 41227 , remove the sleeve from the stub shaft.

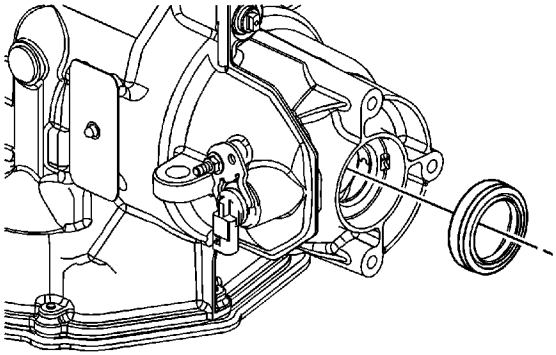

9. Remove the right hand axle seal from the transmission. Use the J 23129 and the J 6125-1B .

Installation Procedure

cardiagn.com

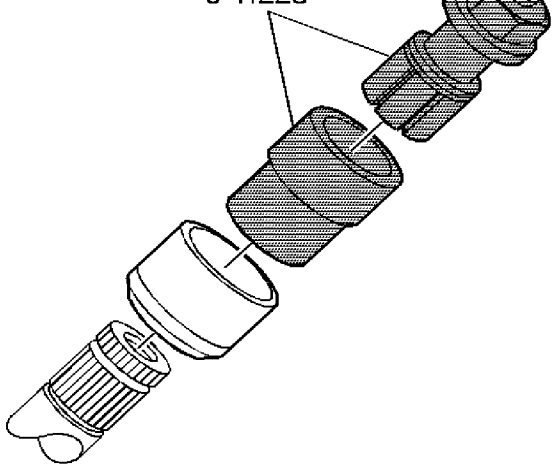

Important: J 41228 must be used in order to install the sleeve to the correct depth.

1. Use J 41228 to install a NEW sleeve on the output axle shaft.
2. Install the collet into the output shaft snap ring groove with the collet attached to the threaded collet shaft.
3. Place the NEW sleeve over the collet.
4. Install the bearing and nut onto the threaded collet shaft.
5. Hold the collet shaft while tightening the nut in order to press the sleeve onto the output shaft.
6. Remove the J 41228 .

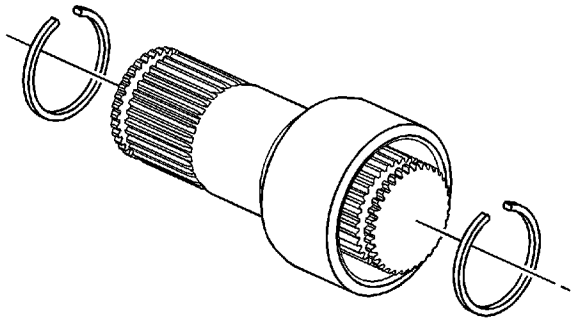

7. Install two NEW snap rings on the stub shaft.
8. Apply grease to the output shaft splines.

cardiagn.com

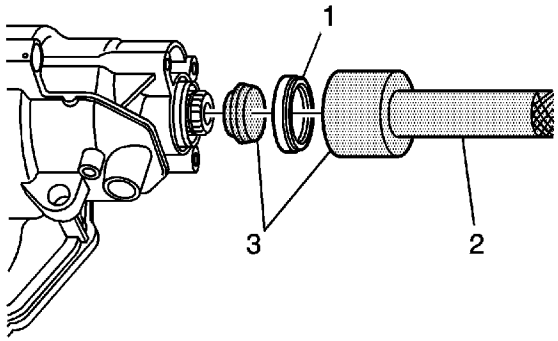

Important: J 41102-1A must be used in order to install the axle seal to the correct depth.

9. Install a NEW seal (1). Use the J 41102-1A (3) with J 8092 (2) . Lubricate the seal lip with transmission fluid.

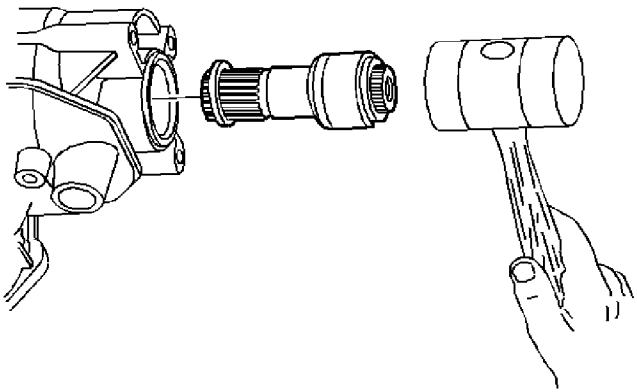

Important: Carefully guide the axle shaft past the lip seal. Do not allow the shaft splines to contact any portion of the seal lip surface, otherwise damage to the seal will occur.

10. Install the stub shaft into the transmission. Use a mallet to fully seat the shaft.
11. Install the right drive axle assembly. Refer to Front Wheel Drive Shaft Replacement .
12. Lower the vehicle.
13. Inspect the oil level. Refer to Transmission Fluid Check .

cardiagn.com

cardiagn.com

Front Wheel Drive Shaft Seal and Output Shaft Sleeve Replacement - Left Side

Tools Required

- J 8092 Driver Handle
- J 41102-1A Axle Seal Installer
- J 41227 Output Shaft Sleeve Remover
- J 41228 Output Shaft Sleeve Installer

Removal Procedure

1. Raise the vehicle. Support the vehicle. Refer to Lifting and Jacking the Vehicle .
2. Remove the left drive axle assembly. Refer to Front Wheel Drive Shaft Replacement .

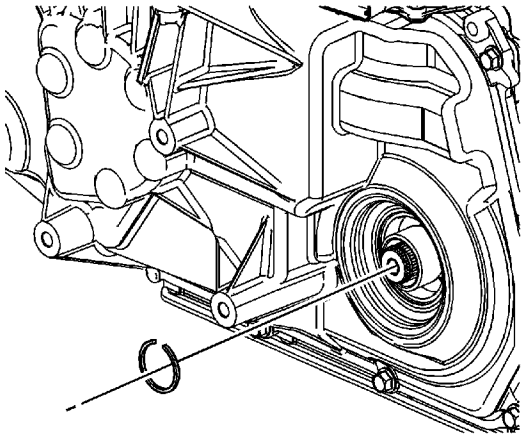

3. Remove the snap ring from axle. Discard the snap ring. Do not reuse.

cardiagn.com

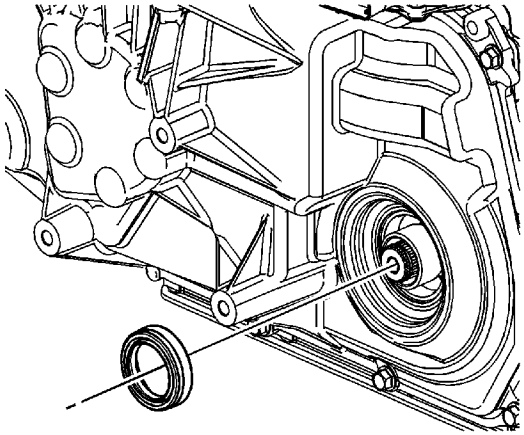

4. Remove the output axle seal.

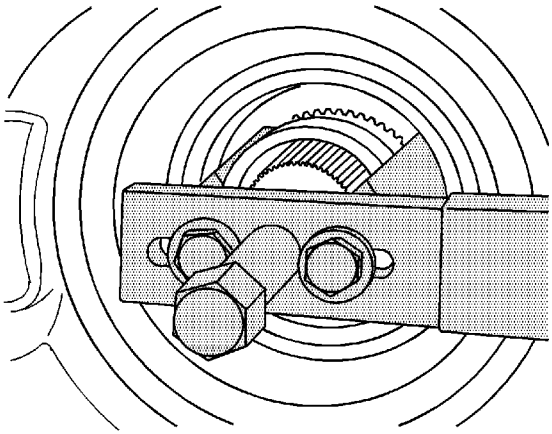

5. Use the J 41227 to remove the sleeve from the output axle.

Installation Procedure

Important:

- The stub axle shaft sleeve and seal must be replaced together. DO NOT replace the sleeve or seal separately.
- Do not damage the seal bore or the sleeve assembly. Fluid leaks may result.

cardiagn.com

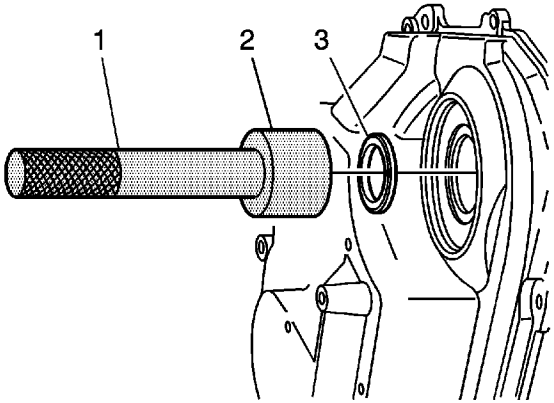

Important: J 41102-1A must be used in order to install the axle seal to the correct depth.

1. Install a new output axle seal (3). Use J 41102-1A (2) with J 8092 (1). Lubricate the seal lip with transmission fluid.
2. Apply grease to the output shaft splines.

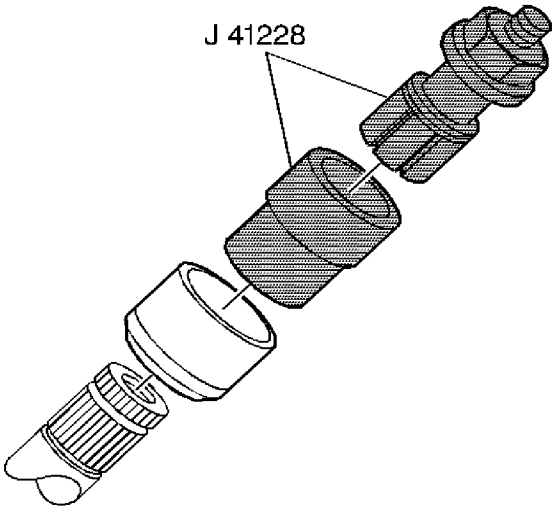

Important: J 41228 must be used in order to install the sleeve to the correct depth.

3. Use J 41228 to install a NEW sleeve on the output axle shaft.
4. Install the collet into the output shaft snap ring groove with the collet attached to the threaded collet shaft.
5. Place the NEW sleeve over the collet.

cardiagn.com

shaft.

8. Remove the J 41228 .

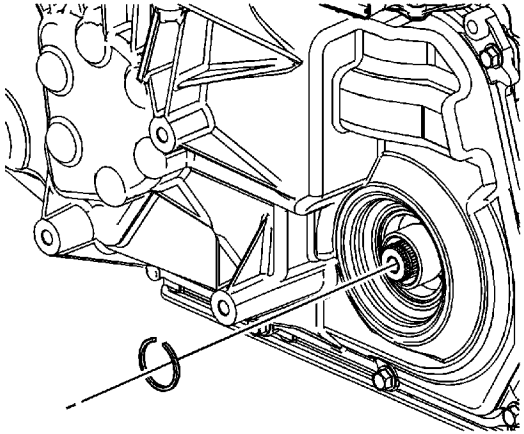

9. Install a NEW snap ring on the output shaft.
10. Install the left drive axle assembly. Refer to Front Wheel Drive Shaft Replacement .
11. Lower the vehicle.
12. Inspect the output axle shaft sleeve for leaks.
13. Inspect the oil level. Refer to Transmission Fluid Check .

cardiagn.com

Transmission Mount Inspection

Inspection Procedure

Caution: In order to avoid oil pan damage and possible engine failure, insert a block of wood that spans the width of the oil pan bottom between the oil pan and the jack support.

Note: Before replacing any transmission mount due to a suspected fluid loss, verify that the source of the fluid is the mount.

1. Raise the transmission/transaxle in order to relieve tension in the mount.
2. Observe the mount while raising the transmission/transaxle. Raising the transmission/transaxle removes the weight from the mount.
3. Replace the mount if it exhibits any of the following conditions:
   - The hard rubber surface is covered with heat check cracks.
   - The rubber is separated from the outer metal sleeve of the mount.
   - The rubber is split through the center of the transmission mount.
   - The mount is leaking fluid.
4. When replacing the transmission mounts or brackets, refer to the following procedures:
   - Transmission Front Mount Replacement
   - Transmission Rear Mount Replacement
   - Transmission Mount Replacement - Left Side

cardiagn.com

Transmission Front Mount Replacement

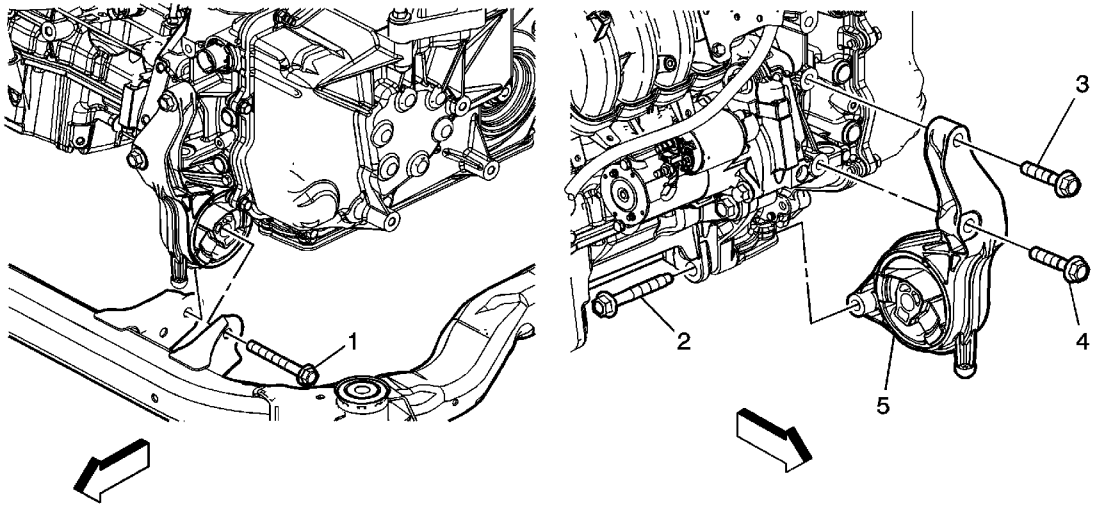

Callout	Component Name
Preliminary Procedures 1. Raise the vehicle. Refer to Lifting and Jacking the Vehicle. 2. Remove the front bumper fascia air deflector. Refer to Front Bumper Fascia Air Deflector Replacement. 3. Support the transmission with a transmission jack stand.	
1	Front Transmission Mount Thru Bolt **Caution:** Refer to Fastener Caution in the Preface section. **Tighten** 110 N·m (81 lb ft)
2	Front Transmission Mount Bolt **Tighten** 90 N·m (66 lb ft)
3	Front Transmission Mount Bolt **Tighten**

cardiagn.com

4	Front Transmission Mount Bolt **Tighten** 90 N·m (66 lb ft)
5	Front Transmission Mount

cardiagn.com

Transmission Rear Mount Replacement

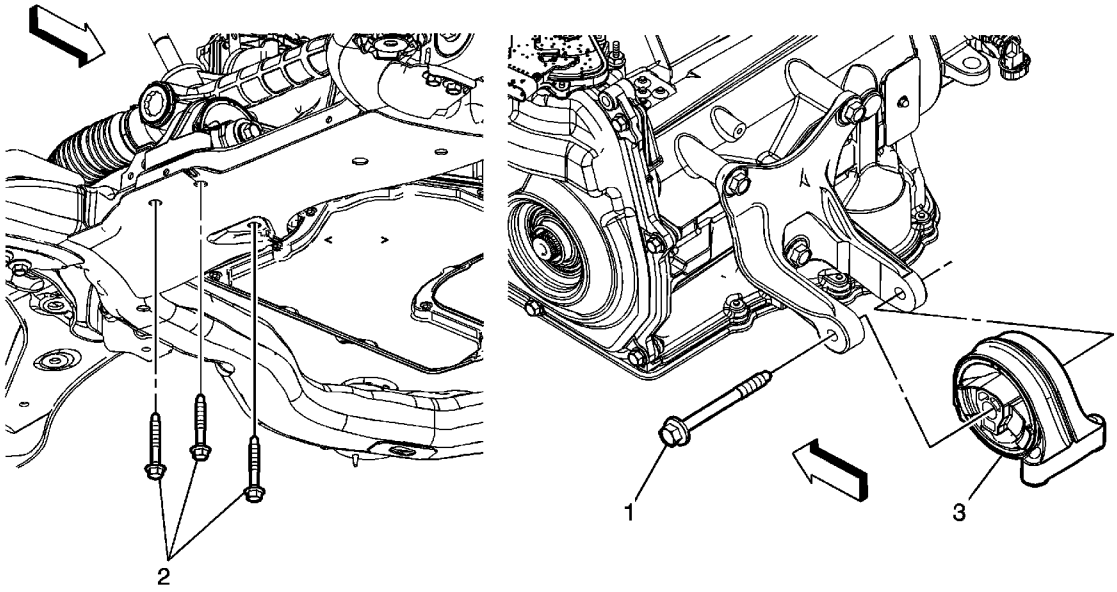

Callout	Component Name
Preliminary Procedures 1. Raise the vehicle. Refer to Lifting and Jacking the Vehicle. 2. Support the transmission with a transmission jack stand. 3. Disconnect the steering shaft coupler from the steering gear. Refer to Steering Gear Replacement. 4. Remove the steering gear to frame bolts. Refer to Steering Gear Replacement. 5. Position the steering gear up out of the way to gain clearance for removal of the rear transmission mount.	
1	Rear Transmission Mount Thru Bolt **Caution:** Refer to Fastener Caution in the Preface section. **Tighten** 110 N·m (81 lb ft)
2	Rear Transmission Mount Bolt (Qty: 3) **Tighten** 50 N·m (37 lb ft)

cardiagn.com

cardiagn.com

Transmission Mount Replacement - Left Side

Removal Procedure

1. Remove the battery tray support bracket if equipped with 2.4L (LAT). Refer to Battery Tray Support Bracket Replacement.
2. Remove the battery box if equipped with 2.4L (LE5). Refer to Battery Box Replacement.
3. Install the engine support fixture. Refer to Engine Support Fixture.
4. Raise and support the vehicle. Refer to Lifting and Jacking the Vehicle.

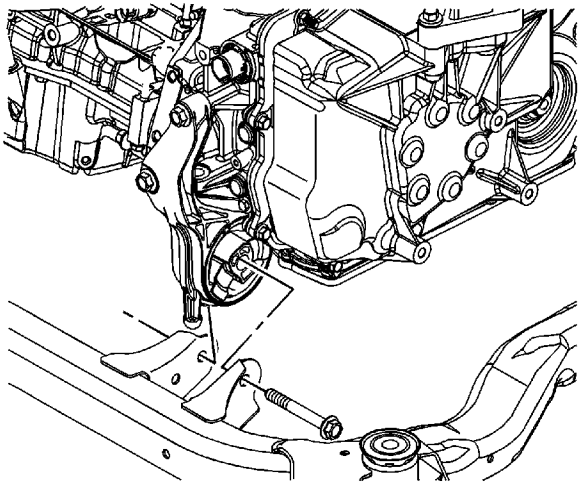

5. Remove the front transmission mount thru bolt.

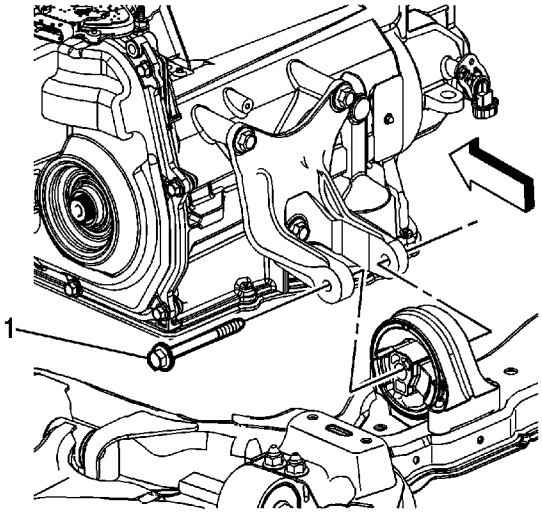

cardiagn.com

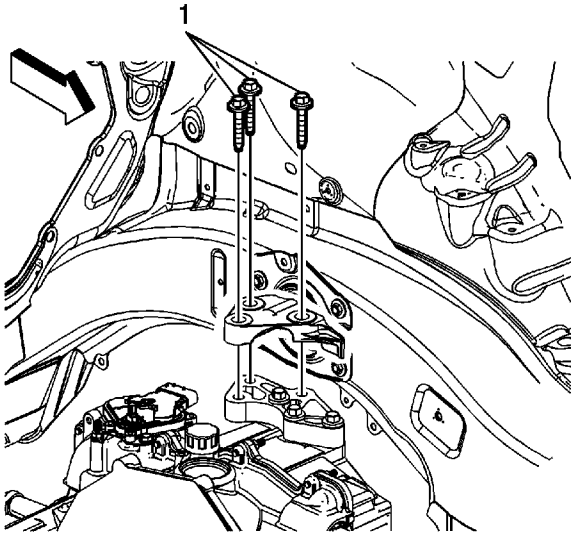

8. Remove the transmission mount to transmission mount spacer bolts (1).
9. Using the engine support, lower the transmission in order to remove the transmission mount spacer bolts.

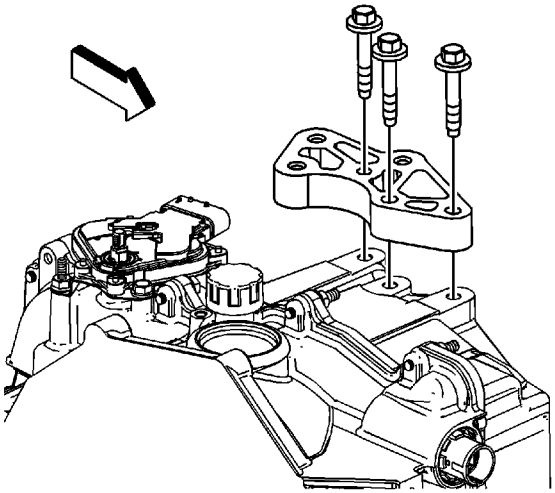

10. Remove the transmission mount spacer bolts and spacer.

cardiagn.com

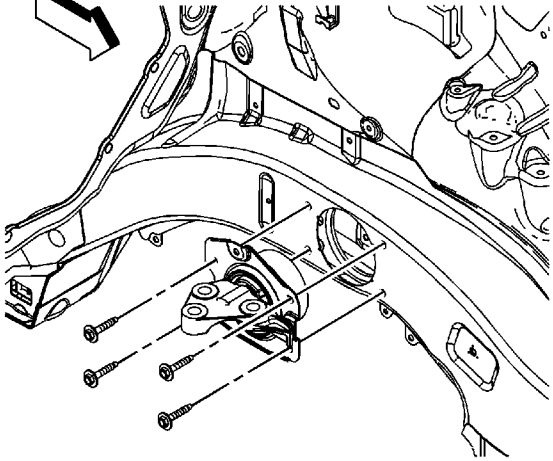

11. Remove the transmission mount to frame rail bolts.
12. Remove the left transmission mount.

Installation Procedure

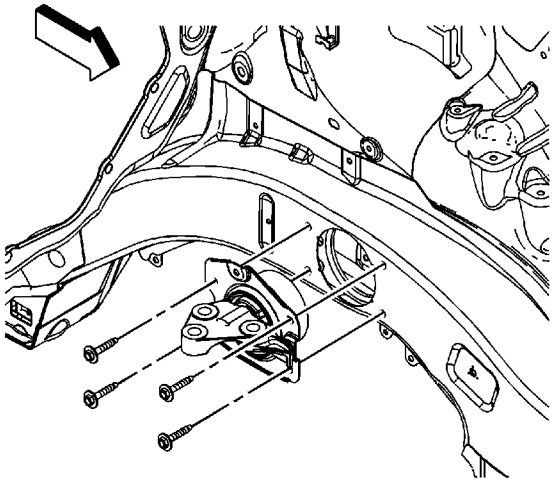

1. Install the left transmission mount.

   Caution: Refer to Fastener Caution in the Preface section.

2. Install the transmission mount to frame rail bolts and tighten to **27 N·m (20 lb ft)**.

cardiagn.com

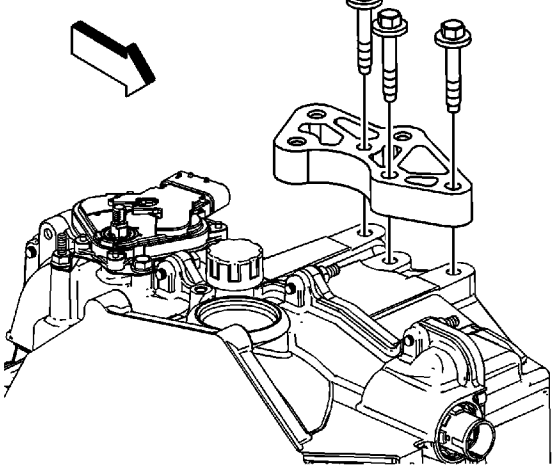

3. Install the transmission mount spacer and bolts and tighten the bolts to **50 N·m (37 lb ft)**.
4. Using the engine support, raise the transmission until the transmission mount spacer contacts the left transmission mount.

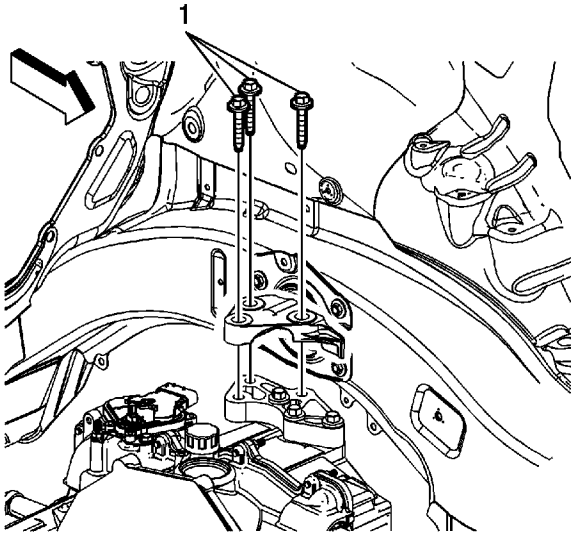

5. Install the transmission mount to transmission mount spacer bolts (1) and tighten to **50 N·m (37 lb ft)**.
6. Raise the vehicle.

cardiagn.com

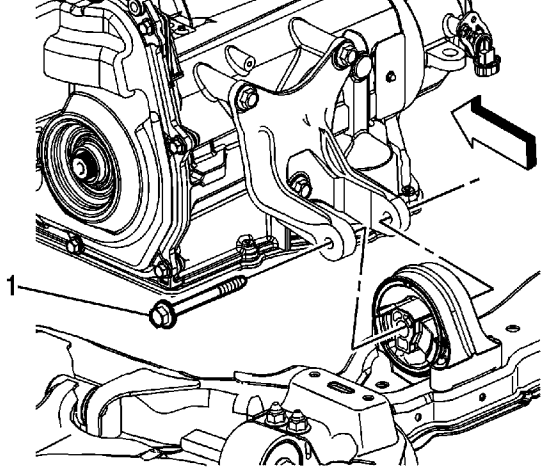

7. Install the rear transmission mount thru bolt (1) and tighten to **100 N·m (74 lb ft)**.

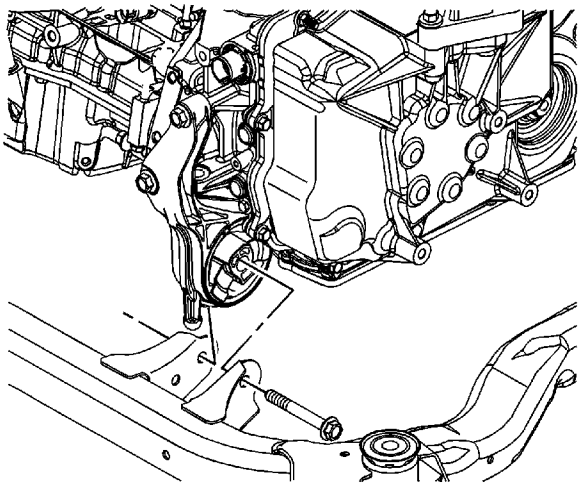

8. Install the front transmission mount thru bolt and tighten to **110 N·m (81 lb ft)**.
9. Lower the vehicle.
10. Remove the engine support fixture. Refer to Engine Support Fixture.
11. Install the battery box if equipped with 2.4L (LE5). Refer to Battery Box Replacement.
12. Install the battery tray support bracket if equipped with 2.4L (LAT). Refer to Battery Tray Support Bracket Replacement.

cardiagn.com

Transmission Mount Bracket Replacement - Rear

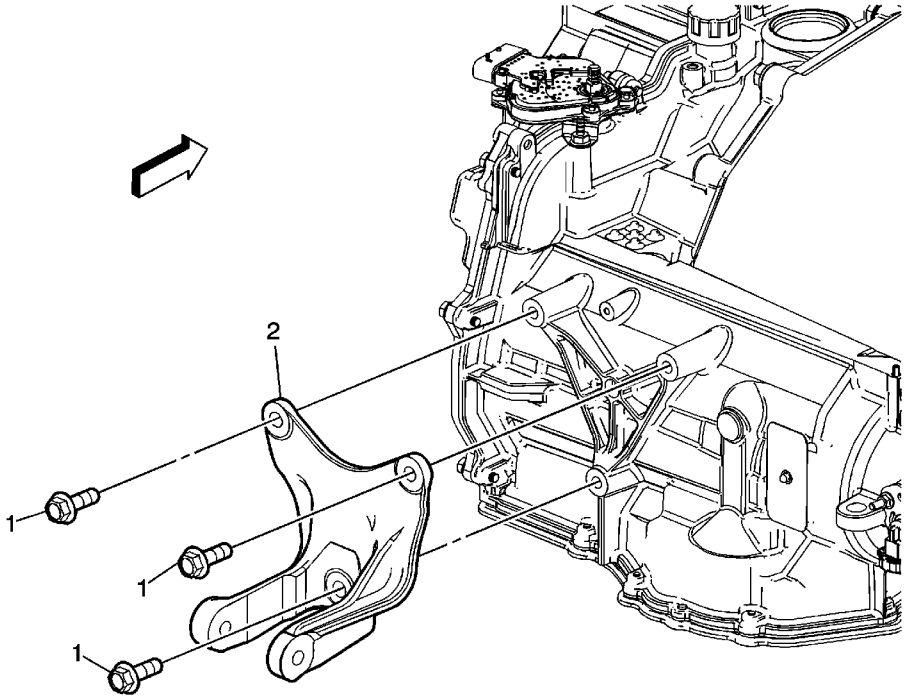

Callout	Component Name
Preliminary Procedures Remove the rear transmission mount. Refer to Transmission Rear Mount Replacement.	
1	Rear Transmission Mount Bracket Bolt (Qty: 3) **Caution:** Refer to Fastener Caution in the Preface section. **Tighten** 50 N·m (37 lb ft)
2	Rear Transmission Mount Bracket

cardiagn.com

Transmission Brace Replacement

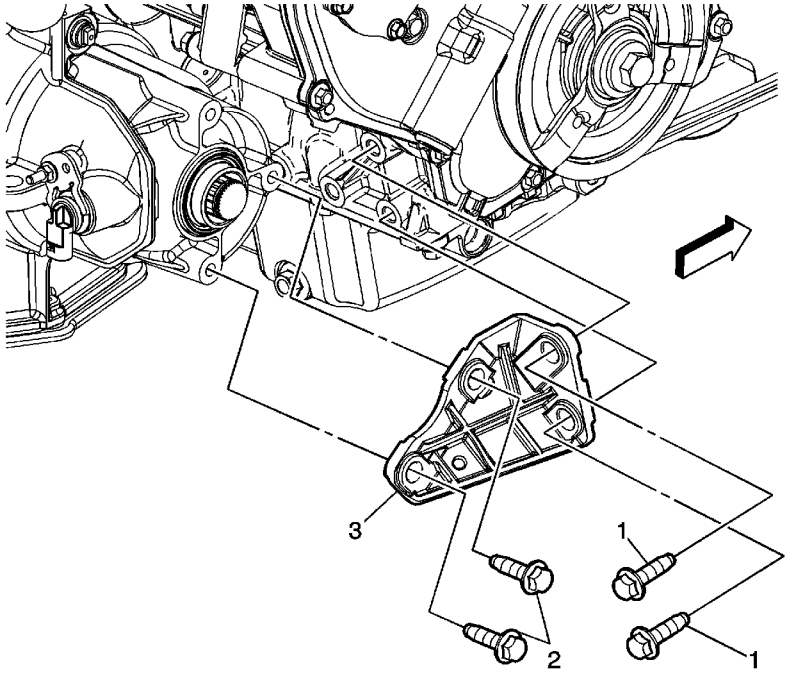

Callout	Component Name
Preliminary Procedures 1. Raise the vehicle. Refer to Lifting and Jacking the Vehicle. 2. Remove the right engine splash shield. Refer to Engine Splash Shield Replacement.	
1	Transmission Brace Bolt (Qty: 2) **Caution:** Refer to Fastener Caution in the Preface section. **Tighten** 53 N·m (39 lb ft)
2	Transmission Brace Bolt (Qty: 2) **Tighten** 53 N·m (39 lb ft)
3	Transmission Brace

cardiagn.com

Transmission Replacement

Special Tools

- J 43653 Flywheel Holding Tool
- J 35944-A Transmission Oil Cooler Flusher

Removal Procedure

1. Remove the battery tray support bracket. Refer to Battery Tray Support Bracket Replacement.
2. Remove the generator control module, if equipped with 2.4L (LAT). Refer to Generator Control Module Replacement.
3. Remove the auxiliary fluid pump and pipes, if equipped with 2.4L (LAT). Refer to one of the following:
   - Auxiliary Fluid Pump Replacement
   - Auxiliary Fluid Pump Inlet Pipe Replacement
   - Auxiliary Fluid Pump Outlet Pipe Replacement
4. Remove the air cleaner outlet duct. Refer to Air Cleaner Outlet Duct Replacement.
5. Disconnect the transmission electrical wiring harness connector from the park neutral position (PNP) switch.
6. Disconnect the transmission main wiring harness from the transmission.
7. Remove the wiring harness from the retainer on the transmission.
8. Remove the battery ground cable from the transmission, if equipped.

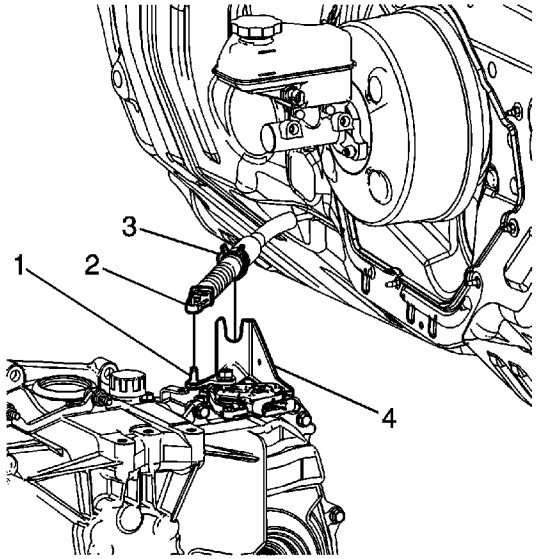

9. Disconnect the transmission shift control cable terminal (2) from the transmission manual shift lever pin (1).
10. Press the locking tabs (3) inward in order to release the transmission shift control cable from the cable bracket (4).

cardiagn.com

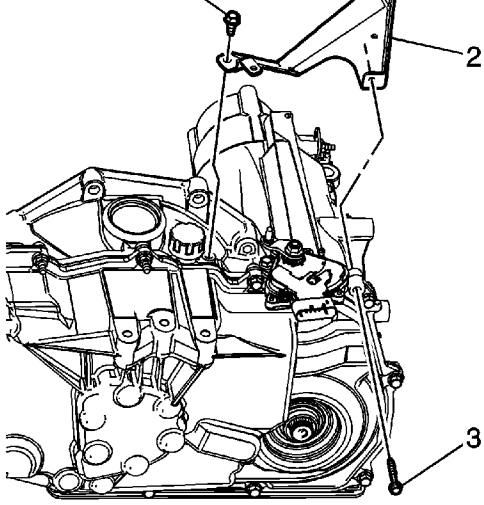

11. Remove the shift cable bracket bolts (1, 3).
12. Remove the shift cable bracket (2).

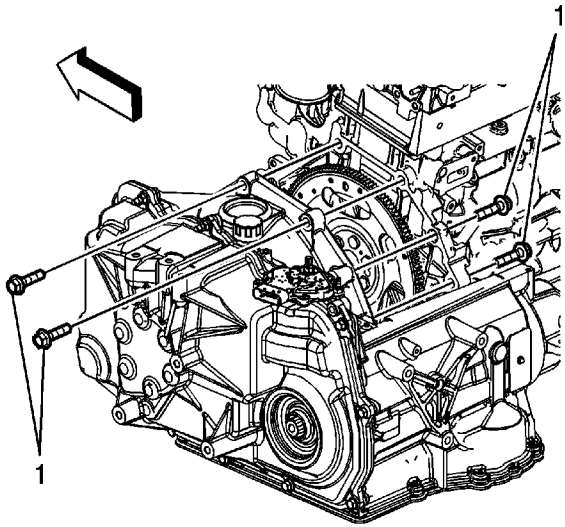

13. Remove the upper transmission to engine bolts (1).
14. Remove the vehicle frame. Refer to Frame Replacement.

cardiagn.com

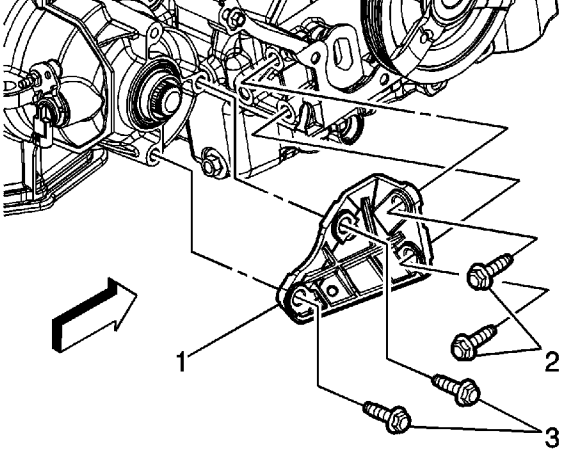

15. Remove the bolts (2, 3) from the transmission brace.
16. Remove the transmission brace (1).
17. Remove the starter. Refer to Starter Motor Replacement.
18. Mark the relationship of the flywheel to the torque converter for reassembly.
19. Use the J 43653 to prevent the crankshaft from rotating.

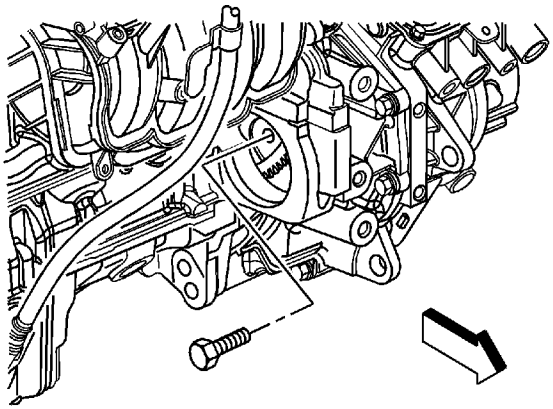

20. Remove the torque converter to flywheel bolts.
21. Remove the nut holding the transmission cooler line retainer to the transmission.
22. Disconnect the transmission cooler lines from the transmission.

cardiagn.com

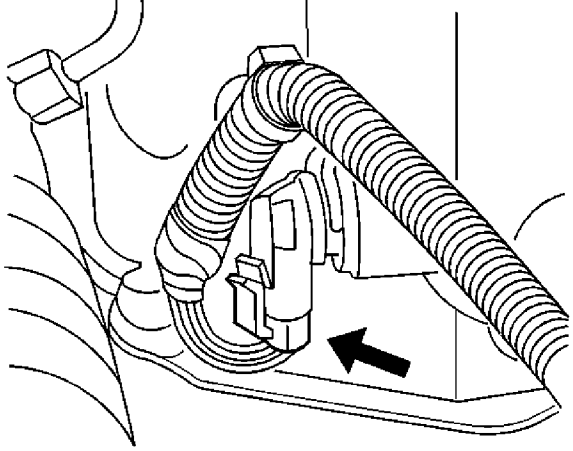

23. Disconnect the vehicle speed sensor (VSS) wiring harness connector and retainer from the sensor.
24. Lower the vehicle.
25. Remove the left transmission mount and spacer. Refer to Transmission Mount Replacement - Left Side.
26. Raise the vehicle. Refer to Lifting and Jacking the Vehicle.
27. Disconnect the wheel drive shafts from the transmission. Refer to Front Wheel Drive Shaft Replacement.
28. Support the transmission with a suitable jack.

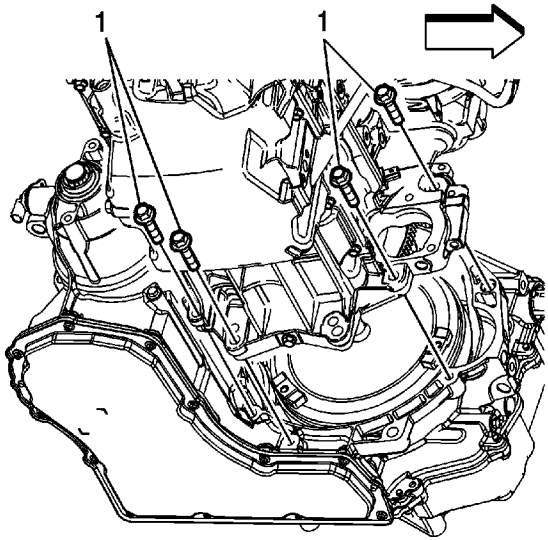

29. Remove the lower transmission to engine bolts (1).
30. Separate the engine from the transmission.
31. Remove the transmission from the vehicle.
32. If the transmission is being replaced, remove the PNP switch from the transmission. Refer to Park/Neutral Position Switch Replacement.

cardiagn.com

Installation Procedure

1. If previously removed, install the PNP switch. Refer to Park/Neutral Position Switch Replacement.
2. Position the transmission to the engine.

   Caution: Refer to Fastener Caution in the Preface section.

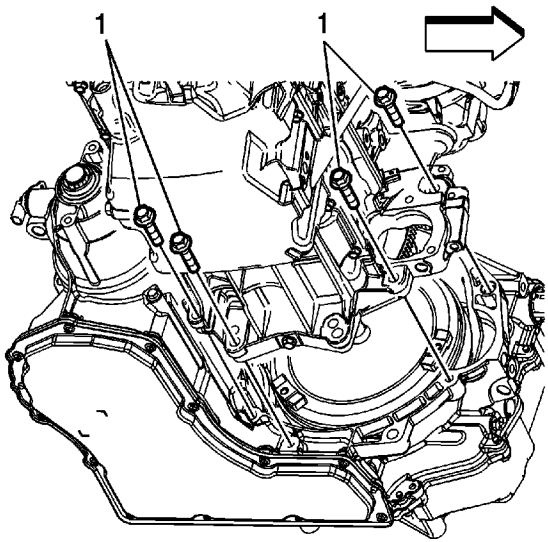

3. Install the lower transmission to engine bolts (1) and tighten to **75 N·m (55 lb ft)**.
4. Install the wheel drive shafts to the transmission. Refer to Front Wheel Drive Shaft Replacement.
5. Lower the vehicle.
6. Install the left transmission mount and spacer. Refer to Transmission Mount Replacement - Left Side.
7. Raise the vehicle. Refer to Lifting and Jacking the Vehicle.
8. Lubricate the transmission cooler pipes before inserting into the seals.
9. Connect the transmission cooler pipes to the transmission.
10. Install the transmission cooler pipes retainer nut and tighten to **7 N·m (62 lb in)**.

cardiagn.com

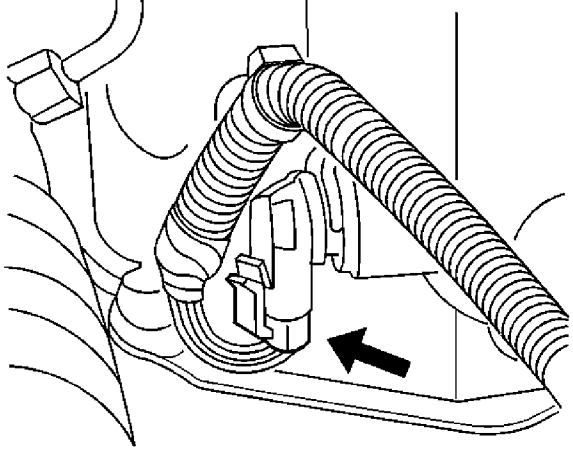

11. Connect the wiring harness connector and retainer to the VSS.
12. Use the J 43653 to prevent the crankshaft from rotating.

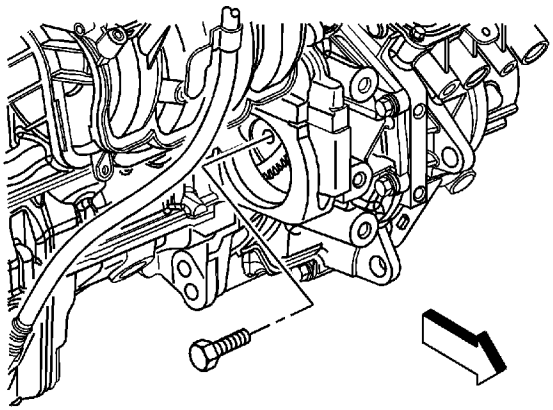

13. Install the torque converter to flywheel bolts and tighten to **60 N·m (44 lb ft)**.
14. Install the starter. Refer to Starter Motor Replacement.

cardiagn.com

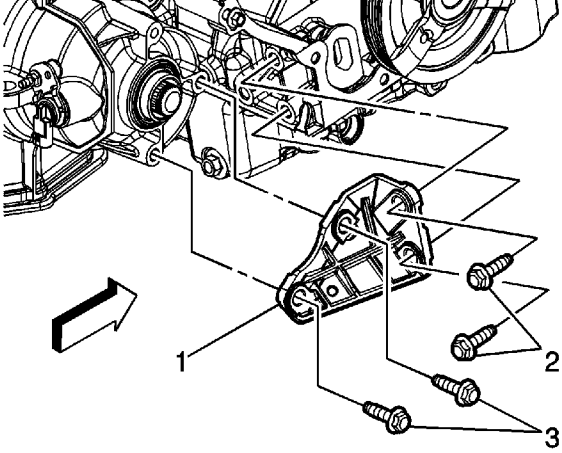

15. Install the transmission brace (1).
16. Install the transmission brace bolts (2, 3) and tighten to **53 N·m (39 lb ft)**.
17. Install the frame. Refer to Frame Replacement.
18. Lower the vehicle.

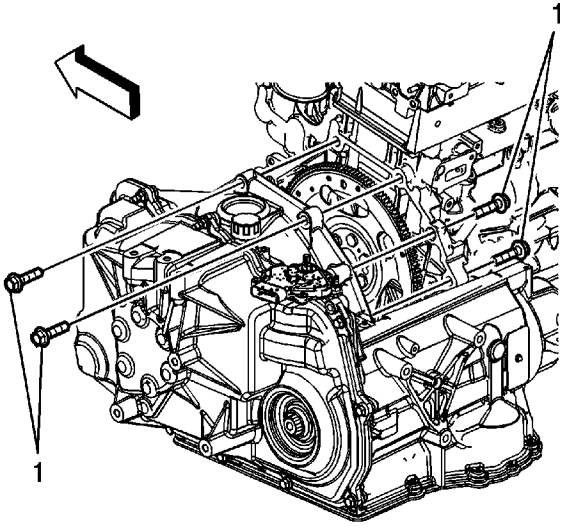

19. Install the upper transmission to engine bolts (1) and tighten to **75 N·m (55 lb ft)**.

cardiagn.com

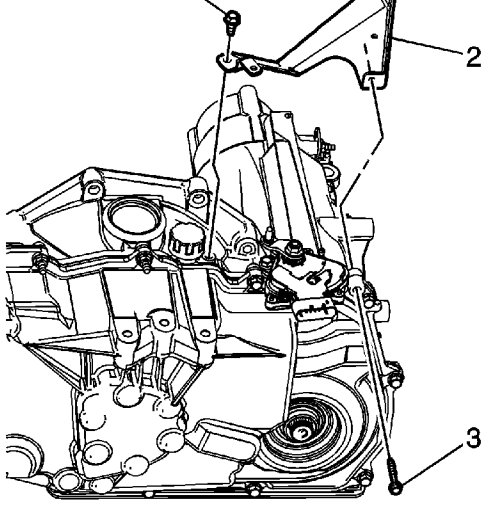

20. Install the shift cable bracket (2).
21. Install the shift cable bracket bolts (1, 3) and tighten to **20 N·m (15 lb ft)**.

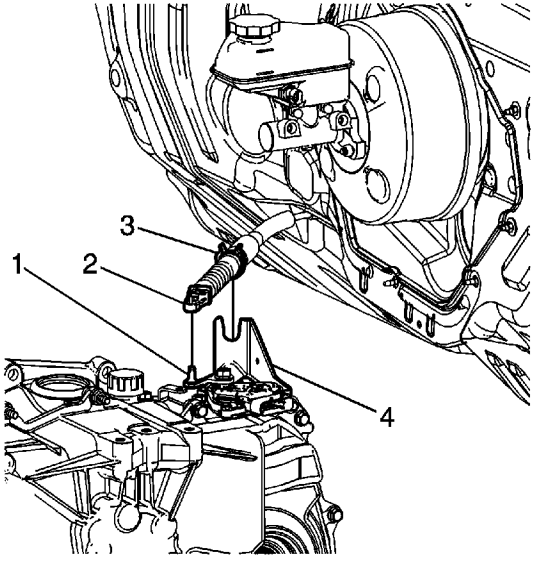

22. Install the transmission shift control cable (3) to the cable bracket (4).
23. Connect the transmission shift control cable terminal (2) to the transmission manual shift lever pin (1).
24. Connect the transmission main electrical wiring harness connector to the transmission.
25. Connect the transmission electrical wiring harness connector to the park neutral position (PNP) switch.
26. Attach the wiring harness to the retainer on the transmission.
27. Install the battery ground cable to the transmission, if equipped.
28. Install the air cleaner outlet duct. Refer to Air Cleaner Outlet Duct Replacement.
29. Install the auxiliary fluid pump and pipes, if equipped with 2.4L (LAT). Refer to one of the following:

cardiagn.com

- Auxiliary Fluid Pump Inlet Pipe Replacement
- Auxiliary Fluid Pump Outlet Pipe Replacement

30. Install the generator control module, if equipped with 2.4L (LAT). Refer to Generator Control Module Replacement.
31. Install the battery tray support bracket. Refer to Battery Tray Support Bracket Replacement.
32. Add automatic transmission fluid (ATF) and verify the proper fluid level of the transmission.

    Note: It is recommended that transmission adaptive pressure (TAP) information be reset.

    Resetting the TAP values using a scan tool will erase all learned values in all cells. As a result, the ECM, PCM or TCM will need to relearn TAP values. Transmission performance may be affected as new TAP values are learned.

33. Reset the TAP values. Refer to Transmission Adaptive Functions.
34. Road test the vehicle.
35. Raise the vehicle. Refer to Lifting and Jacking the Vehicle.

cardiagn.com