Dimensions - Body

Description:

Point-to-Point Measurements are for reference only. All measurements are given in millimeters. Use these measurements for diagnosis and estimating. Point-to-Point measurements are duplicated with tram bar pointers set at equal lengths. All die marks, holes, slots and fasteners are measured to the center. All dimensions are symmetrical unless otherwise specified.

Under Hood Opening Dimensions

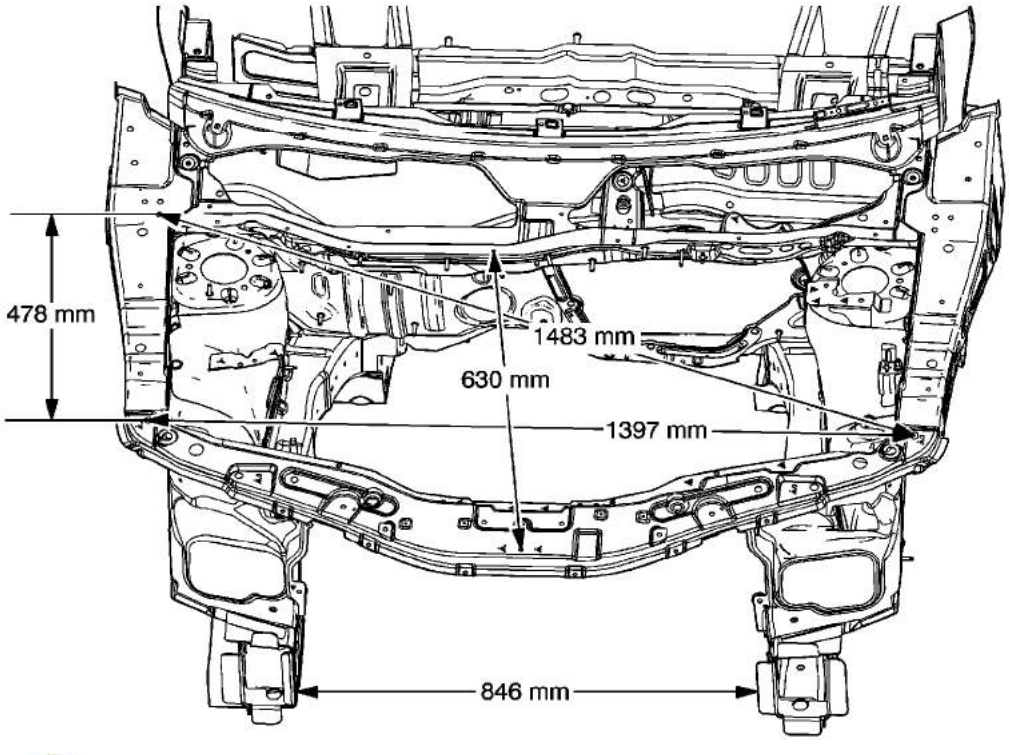

Body Side Opening Dimensions

cardiagn.com

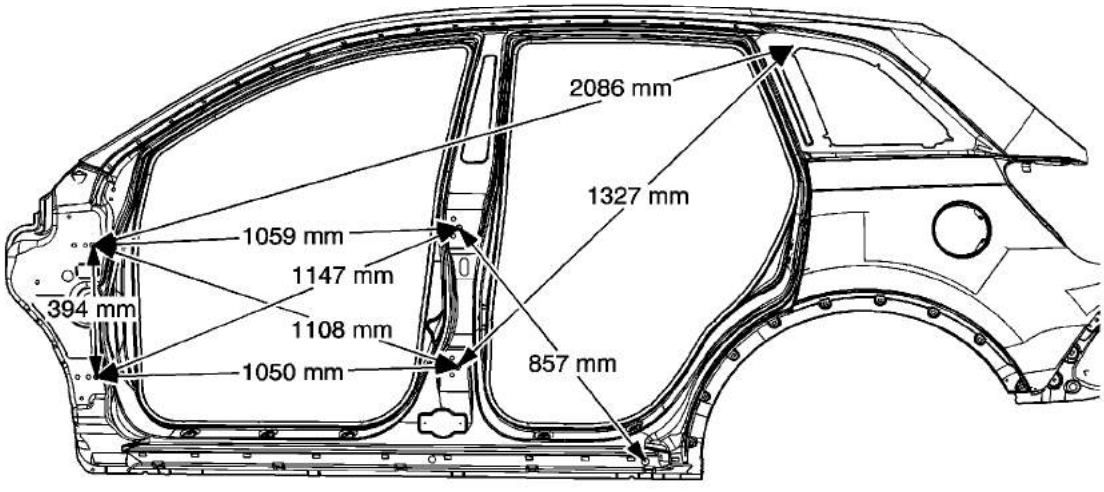

Rear Body Dimensions

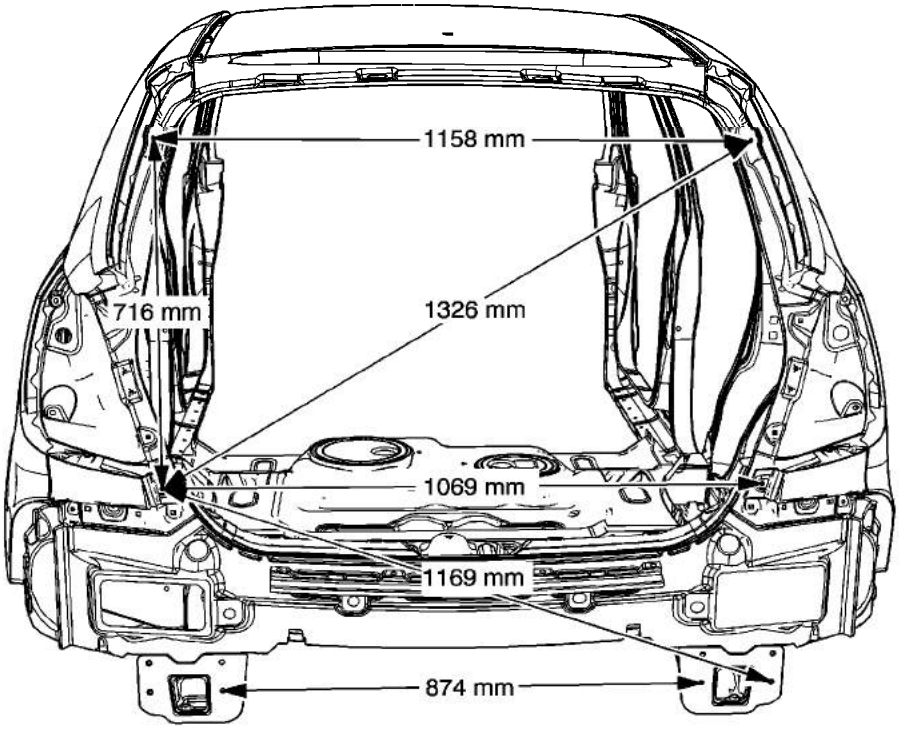

cardiagn.com

cardiagn.com

Structure Identification

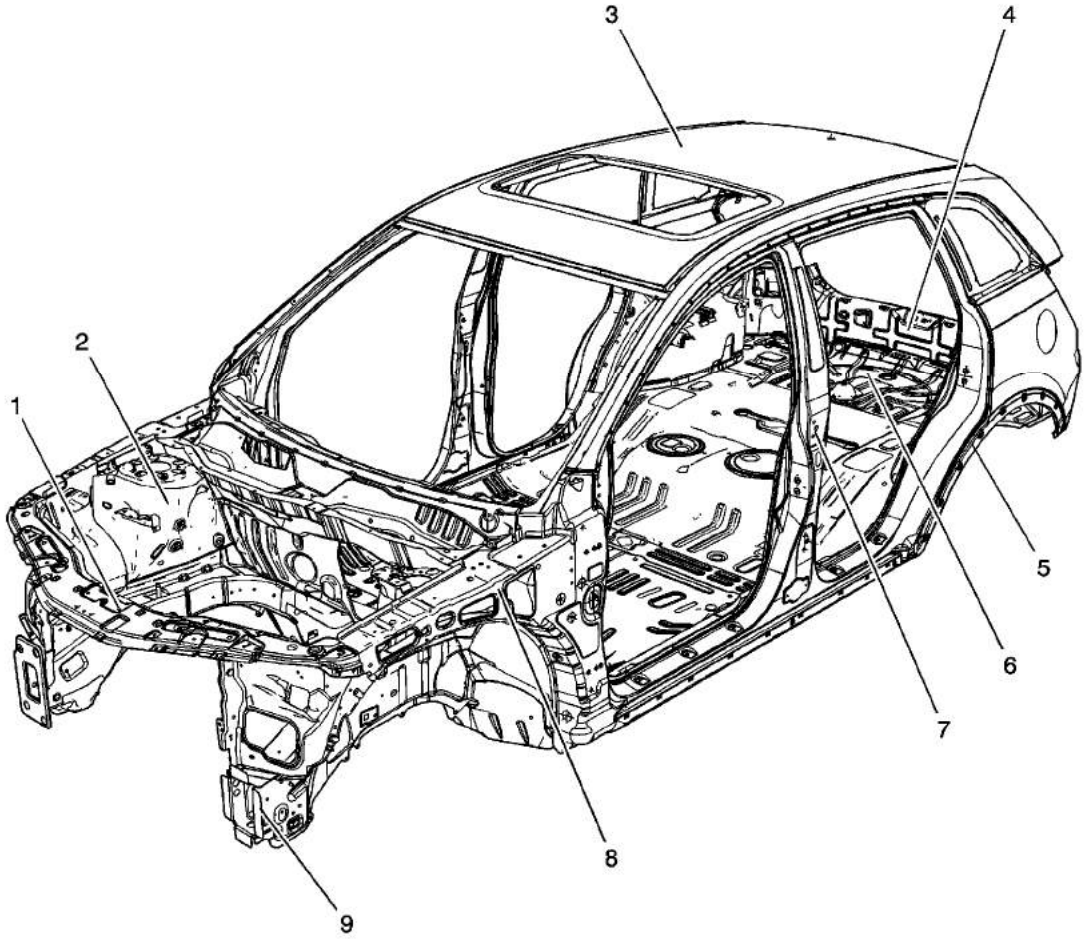

Number	Description	Material	Procedure
1	Radiator Support Assembly	Mild Steel	Front End Upper Tie Bar Replacement
2	Front Wheelhouse Assembly	Mild Steel	• Front Wheelhouse Replacement • Front Wheelhouse Extension Replacement
3	Roof Panel	Mild Steel	Roof Outer Panel Replacement
4	Rear End Panel	Mild Steel	Body Rear End Panel Replacement
5	Rear Rail	High Strength Low Alloy Steel	• Rear Rail End Replacement • Rail Replacement - Rear Section
6	Rear Floor Panel	Mild Steel	Rear Floor Panel Replacement

cardiagn.com

7	Body Side Outer	Mild Steel	• Center Pillar Sectioning • Quarter Panel Sectioning
8	Upper Rail	Mild Steel	Front Compartment Upper Side Rail Replacement
9	Front Rail	High Strength Low Alloy Steel	• Front Compartment Front Rail Replacement • Front Compartment Front Side Lower Inner Rail Replacement • Underbody Outer Front Side Rail Replacement

cardiagn.com

Front End Upper Tie Bar Replacement

Removal Procedure

Warning: Refer to Approved Equipment for Collision Repair Warning in the Preface section.

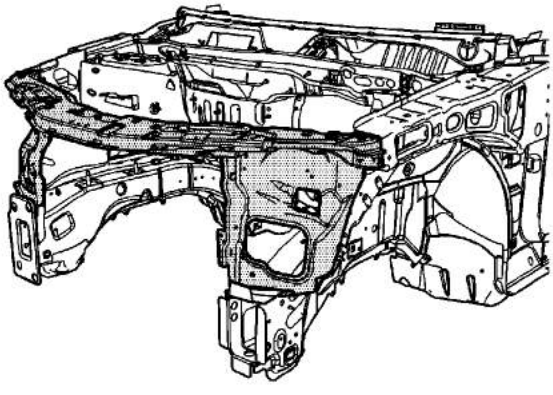

1. Disable the supplemental inflatable restraint (SIR) system. Refer to SIR Disabling and Enabling.
2. Disconnect the negative battery cable. Refer to Battery Negative Cable Disconnection and Connection.
3. Remove all related panels and components.
4. Repair as much of the damage as possible to factory specifications. Refer to Dimensions - Body.
5. Note the location and remove the sealers and anti-corrosion materials from the repair area, as necessary. Refer to Anti-Corrosion Treatment and Repair.

cardiagn.com

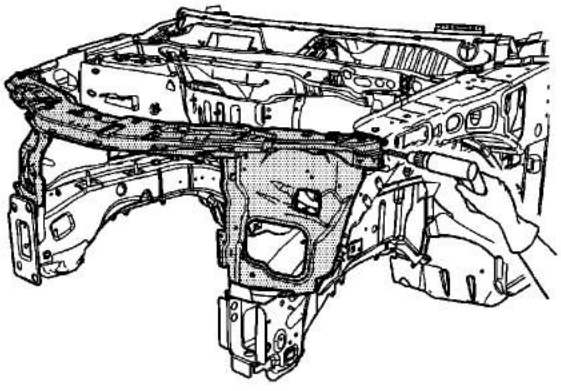

Note: Do not damage any inner panels or reinforcements.

6. Locate and drill out all factory welds. Note the number and location of the welds for installation of the tie bar assembly.

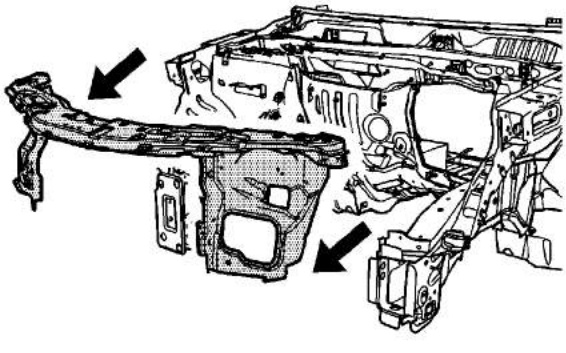

7. Remove the damaged tie bar assembly.

Installation Procedure

cardiagn.com

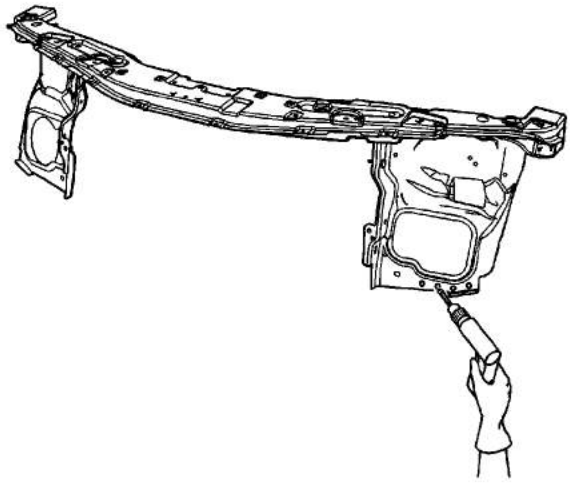

Note: If the location of the original plug weld holes can not be determined, space the plug weld holes every 40 mm (1 1/2 in) apart.

Some panels may have structural weld-thru adhesive. It is necessary to replace the weld-thru adhesive with an additional spot weld between each factory spot weld.

1. Drill 8 mm (5/16 in) plug weld holes in the service part as necessary in the locations noted from the original panel.
2. Prepare all mating surfaces as necessary.
3. Apply GM-approved Weld-Thru Coating or equivalent to all mating surfaces. Refer to Anti-Corrosion Treatment and Repair.

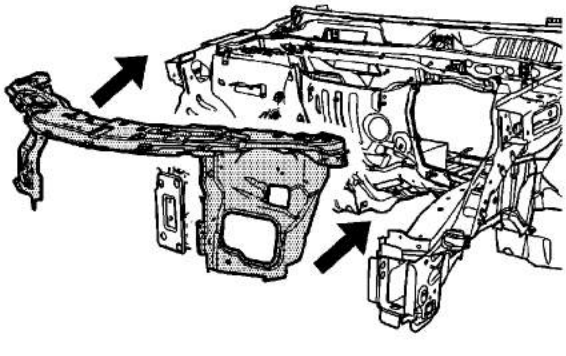

4. Position the tie bar assembly to the vehicle using 3-dimensional measuring equipment.

cardiagn.com

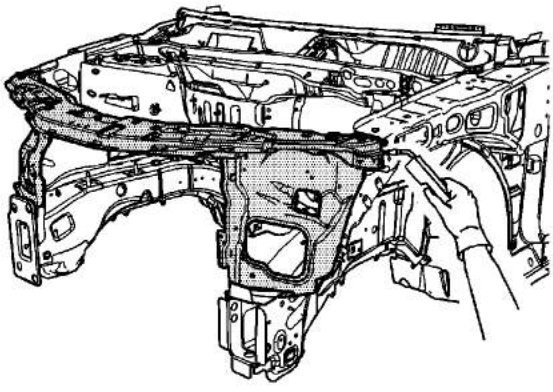

5. Plug weld accordingly.
6. Clean and prepare all welded surfaces.
7. Apply the sealers and anti-corrosion materials to the repair area, as necessary. Refer to Anti-Corrosion Treatment and Repair.
8. Paint the repair area. Refer to Basecoat/Clearcoat Paint Systems.
9. Install all related panels and components.
10. Connect the negative battery cable. Refer to Battery Negative Cable Disconnection and Connection.
11. Enable the SIR system. Refer to SIR Disabling and Enabling.

cardiagn.com

Front Wheelhouse Replacement

Removal Procedure

Warning: Refer to Approved Equipment for Collision Repair Warning in the Preface section.

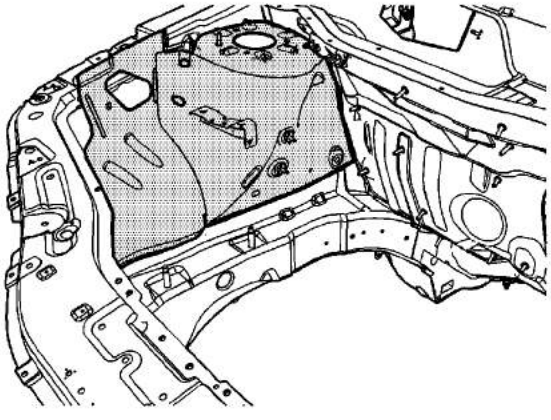

1. Disable the supplemental inflatable restraint (SIR) system. Refer to SIR Disabling and Enabling.
2. Disconnect the negative battery cable. Refer to Battery Negative Cable Disconnection and Connection.
3. Remove all related panels and components.
4. Repair as much of the damage as possible to factory specifications. Refer to Dimensions - Body.
5. Note the location and remove the sealers and anti-corrosion materials from the repair area, as necessary. Refer to Anti-Corrosion Treatment and Repair.
6. Remove the front tie bar. Refer to Front End Upper Tie Bar Replacement.

cardiagn.com

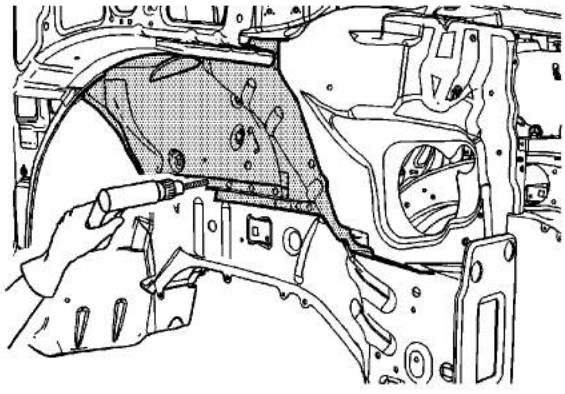

Note: Do not damage any inner panels or reinforcements.

7. Locate and drill out all factory welds. Note the number and location of the welds for installation of the front wheelhouse.

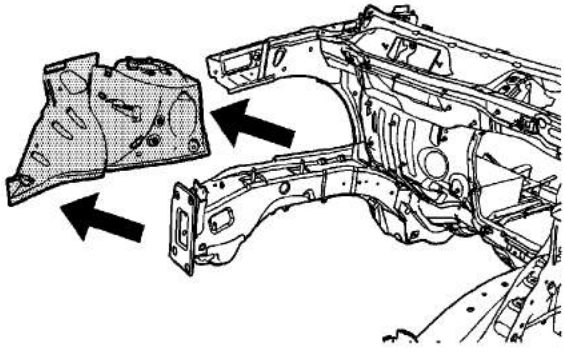

8. Remove the damaged front wheelhouse.

Installation Procedure

cardiagn.com

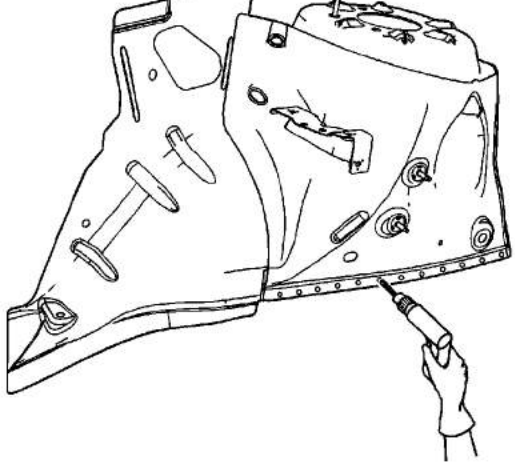

Note: If the location of the original plug weld holes can not be determined, space the plug weld holes every 40 mm (1 1/2 in) apart.

Some panels may have structural weld-thru adhesive. It is necessary to replace the weld-thru adhesive with an additional spot weld between each factory spot weld.

1. Drill 8 mm (5/16 in) plug weld holes in the service part as necessary in the locations noted from the original panel.
2. Prepare all mating surfaces as necessary.
3. Apply GM-approved Weld-Thru Coating or equivalent to all mating surfaces. Refer to Anti-Corrosion Treatment and Repair.

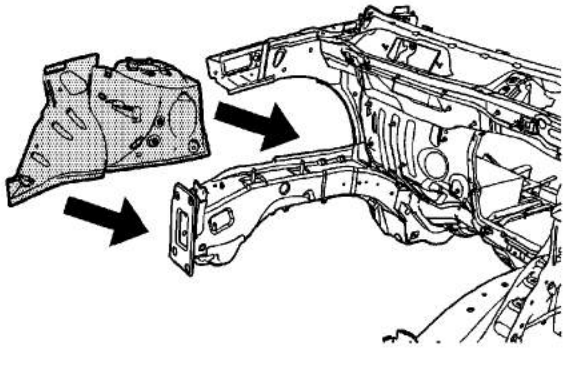

4. Position the front wheelhouse to the vehicle using 3-dimensional measuring equipment.

cardiagn.com

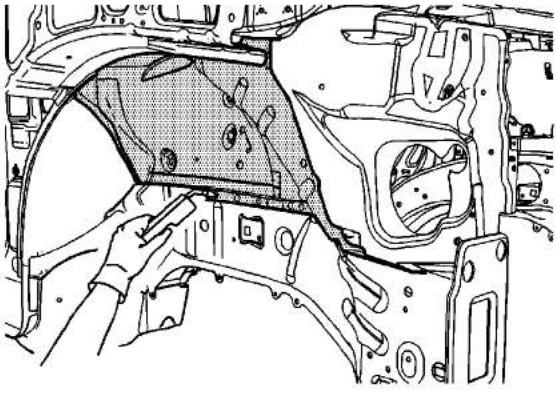

5. Plug weld accordingly.
6. Replace the tie bar. Refer to Front End Upper Tie Bar Replacement.
7. Clean and prepare all welded surfaces.
8. Apply the sealers and anti-corrosion materials to the repair area, as necessary. Refer to Anti-Corrosion Treatment and Repair.
9. Paint the repair area. Refer to Basecoat/Clearcoat Paint Systems.
10. Install all related panels and components.
11. Connect the negative battery cable. Refer to Battery Negative Cable Disconnection and Connection.
12. Enable the SIR system. Refer to SIR Disabling and Enabling.

cardiagn.com

Front Wheelhouse Extension Replacement

Removal Procedure

Warning: Refer to Approved Equipment for Collision Repair Warning in the Preface section.

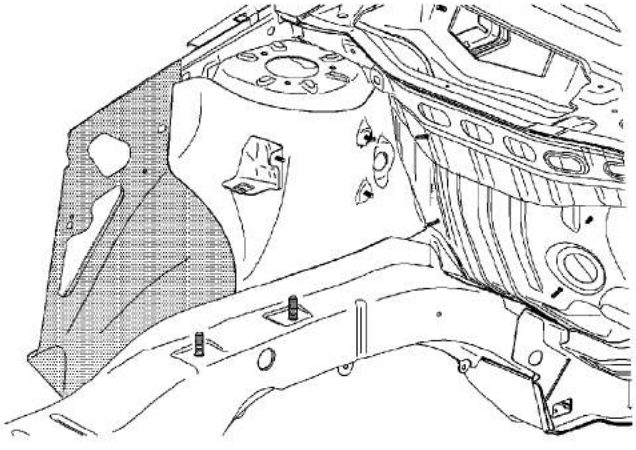

1. Disable the supplemental inflatable restraint (SIR) system. Refer to SIR Disabling and Enabling.
2. Disconnect the negative battery cable. Refer to Battery Negative Cable Disconnection and Connection.
3. Remove all related panels and components.
4. Repair as much of the damage as possible to factory specifications. Refer to Dimensions - Body.
5. Note the location and remove the sealers and anti-corrosion materials from the repair area, as necessary. Refer to Anti-Corrosion Treatment and Repair.

cardiagn.com

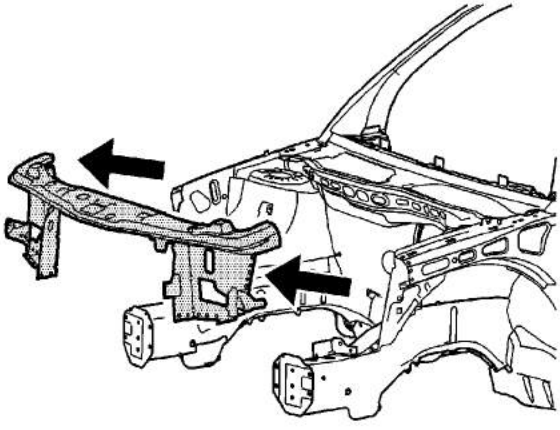

6. Remove the front tie bar. Refer to Front End Upper Tie Bar Replacement.

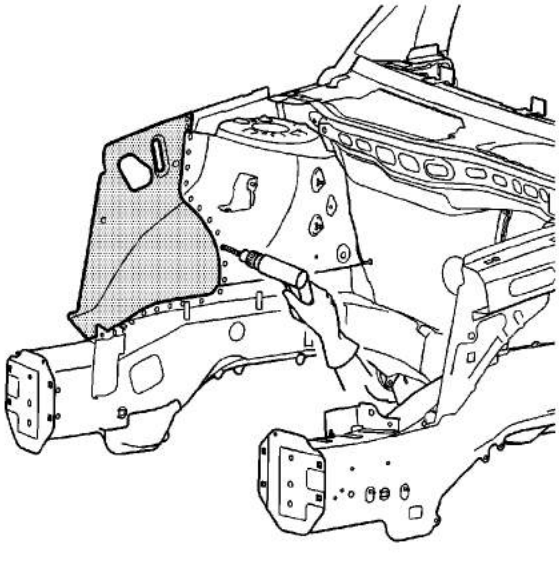

Note: Do not damage any inner panels or reinforcements.

7. Locate and drill out all factory welds. Note the number and location of the welds for installation of the front wheelhouse extension.

cardiagn.com

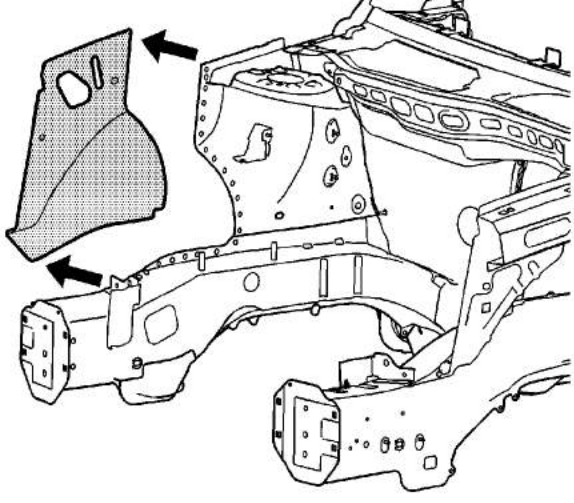

8. Remove the damaged front wheelhouse extension.

Installation Procedure

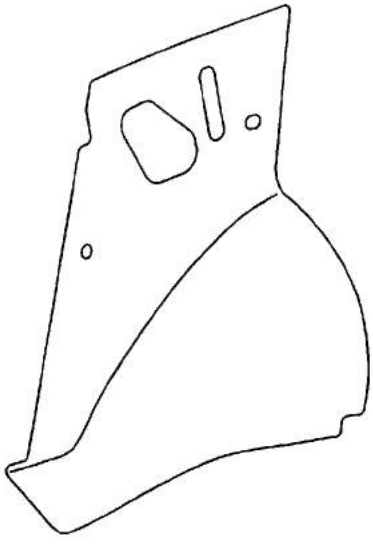

Note: If the location of the original plug weld holes can not be determined, space the plug weld holes every 40 mm (1 1/2 in) apart.

Some panels may have structural weld-thru adhesive. It is necessary to replace the weld-thru adhesive with an additional spot weld between each factory spot weld.

cardiagn.com

2. Prepare all mating surfaces as necessary.
3. Apply GM-approved Weld-Thru Coating or equivalent to all mating surfaces. Refer to Anti-Corrosion Treatment and Repair.

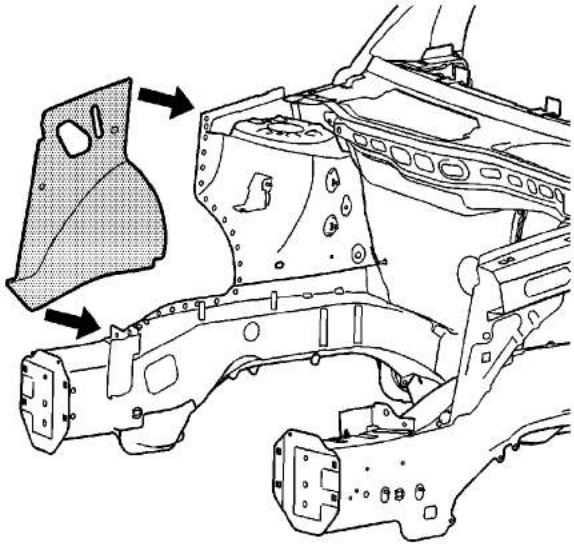

4. Position the front wheelhouse extension to the vehicle using 3-dimensional measuring equipment. Clamp the front wheelhouse extension into place.

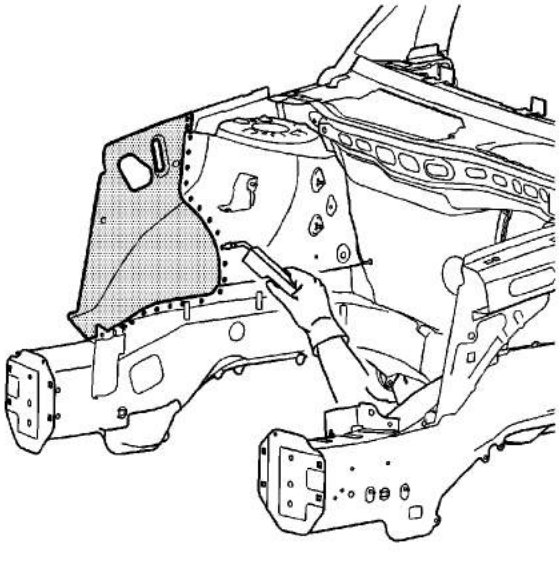

5. Plug weld accordingly.

cardiagn.com

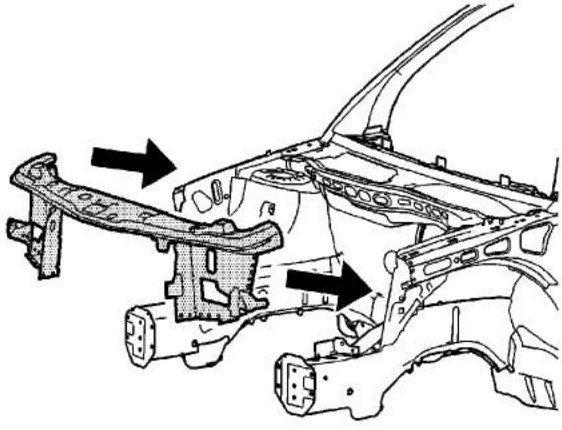

6. Replace the front tie bar. Refer to Front End Upper Tie Bar Replacement.

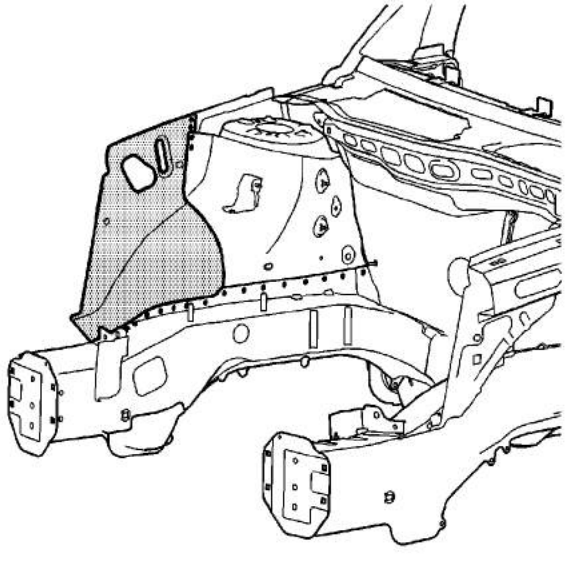

7. Clean and prepare all welded surfaces.
8. Apply the sealers and anti-corrosion materials to the repair area, as necessary. Refer to Anti-Corrosion Treatment and Repair.
9. Paint the repair area. Refer to Basecoat/Clearcoat Paint Systems.
10. Install all related panels and components.
11. Connect the negative battery cable. Refer to Battery Negative Cable Disconnection and Connection.
12. Enable the SIR system. Refer to SIR Disabling and Enabling.

cardiagn.com

Front Compartment Upper Side Rail Replacement

Removal Procedure

Warning: Refer to Approved Equipment for Collision Repair Warning in the Preface section.

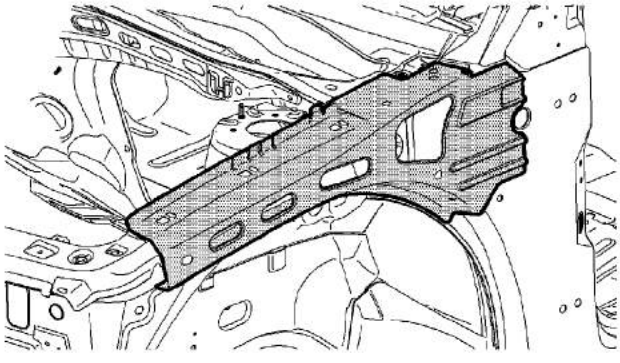

1. Disable the supplemental inflatable restraint (SIR) system. Refer to SIR Disabling and Enabling.
2. Disconnect the negative battery cable. Refer to Battery Negative Cable Disconnection and Connection.
3. Remove all related panels and components.
4. Repair as much of the damage as possible to factory specifications. Refer to Dimensions - Body.
5. Note the location and remove the sealers and anti-corrosion materials from the repair area, as necessary. Refer to Anti-Corrosion Treatment and Repair.

cardiagn.com

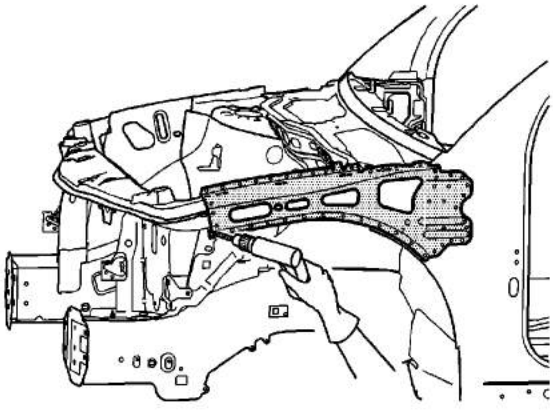

Note: Do not damage any inner panels or reinforcements.

6. Locate and drill out all factory welds. Note the number and location of the welds for installation of the front upper outer rail.

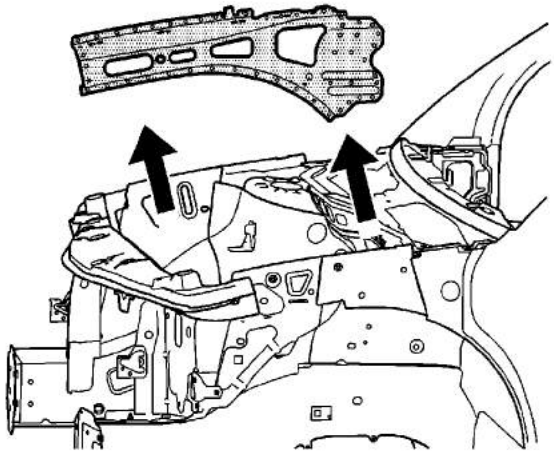

7. Remove the damaged front upper outer rail.

Installation Procedure

cardiagn.com

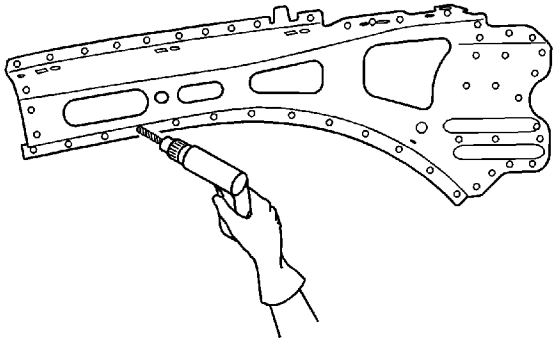

Note: If the location of the original plug weld holes can not be determined, space the plug weld holes every 40 mm (1 1/2 in) apart.

Some panels may have structural weld-thru adhesive. It is necessary to replace the weld-thru adhesive with an additional spot weld between each factory spot weld.

1. Drill 8 mm (5/16 in) plug weld holes in the service part as necessary in the locations noted from the original panel.
2. Prepare all mating surfaces as necessary.
3. Apply GM-approved Weld-Thru Coating or equivalent to all mating surfaces. Refer to Anti-Corrosion Treatment and Repair.

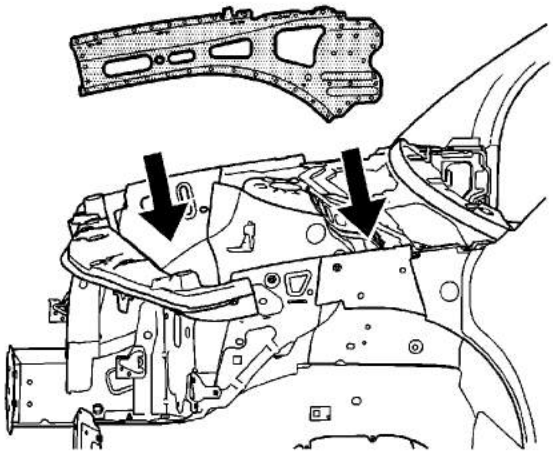

4. Position the front upper outer rail to the vehicle using 3-dimensional measuring equipment.

cardiagn.com

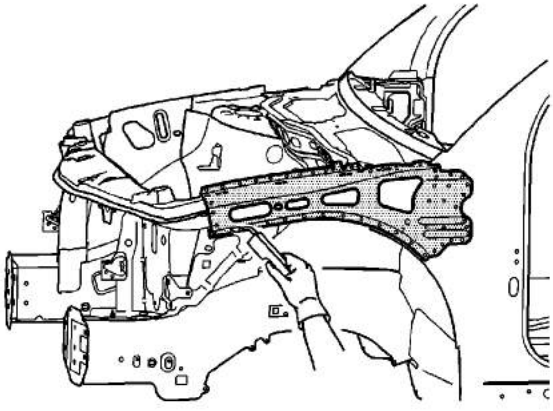

5. Plug weld accordingly.
6. Clean and prepare all welded surfaces.
7. Apply the sealers and anti-corrosion materials to the repair area, as necessary. Refer to Anti-Corrosion Treatment and Repair.
8. Paint the repair area. Refer to Basecoat/Clearcoat Paint Systems.
9. Install all related panels and components.
10. Connect the negative battery cable. Refer to Battery Negative Cable Disconnection and Connection.
11. Enable the SIR system. Refer to SIR Disabling and Enabling.

cardiagn.com

Front Compartment Front Rail Replacement

Removal Procedure

Warning: Refer to Approved Equipment for Collision Repair Warning in the Preface section.

1. Disable the supplemental inflatable restraint (SIR) system. Refer to SIR Disabling and Enabling.
2. Disconnect the negative battery cable. Refer to Battery Negative Cable Disconnection and Connection
3. Remove all related panels and components.
4. Repair as much of the damage as possible to factory specifications. Refer to Dimensions - Body.
5. Note the location and remove the sealers and anti-corrosion materials from the repair area, as necessary. Refer to Anti-Corrosion Treatment and Repair.

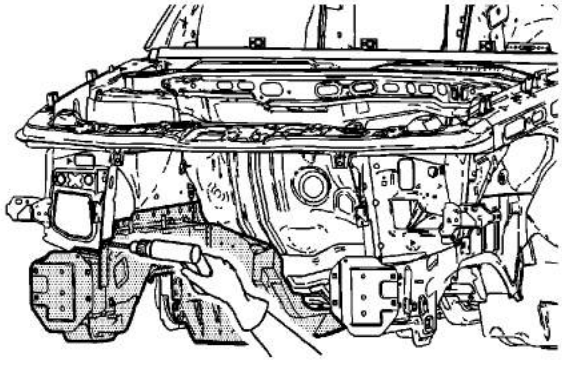

Note: Do not damage any inner panels or reinforcements.

6. Locate and drill out all factory welds. Note the number and location of the welds for installation of the front lower rail.

cardiagn.com

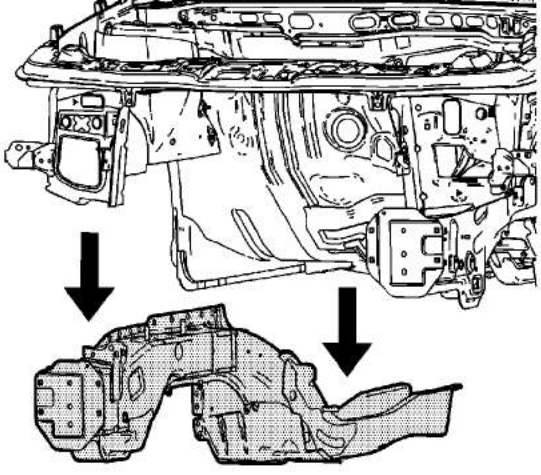

7. Remove the damaged front lower rail.

Installation Procedure

Note: If the location of the original plug weld holes can not be determined, space the plug weld holes every 40 mm (1 1/2 in) apart.

Some panels may have structural weld-thru adhesive. It is necessary to replace the weld-thru adhesive with an additional spot weld between each factory spot weld.

1. Drill 8 mm (5/16 in) plug weld holes in the service part as necessary in the locations noted from the original panel.
2. Prepare all mating surfaces as necessary.
3. Apply GM-approved Weld-Thru Coating or equivalent to all mating surfaces. Refer to Anti-Corrosion Treatment and Repair.

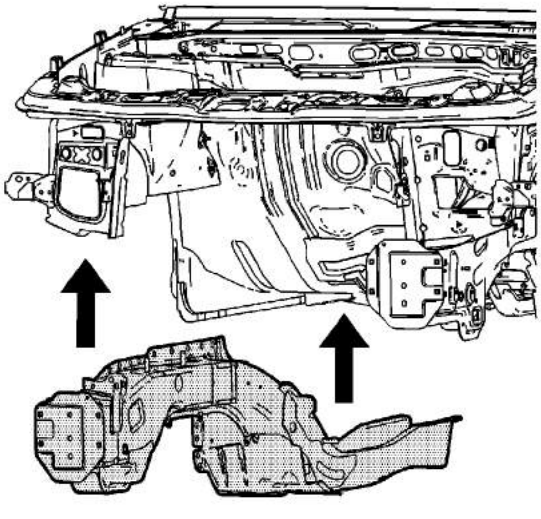

cardiagn.com

4. Position the front lower rail to the vehicle using 3-dimensional measuring equipment. Clamp the front lower rail into place.

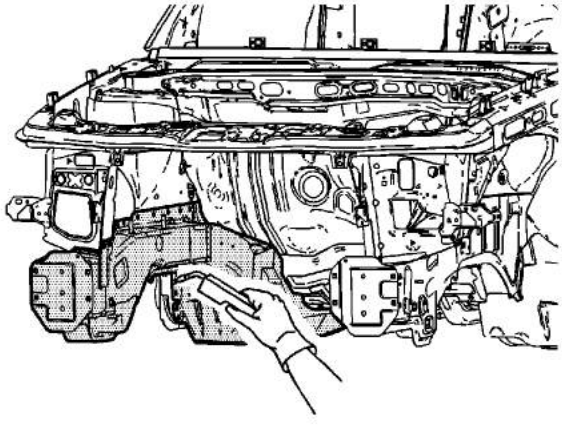

5. Plug weld accordingly.
6. Clean and prepare all welded surfaces.
7. Apply the sealers and anti-corrosion materials to the repair area, as necessary. Refer to Anti-Corrosion Treatment and Repair.
8. Paint the repair area. Refer to Basecoat/Clearcoat Paint Systems.
9. Install all related panels and components.
10. Connect the negative battery cable. Refer to Battery Negative Cable Disconnection and Connection.
11. Enable the SIR system. Refer to SIR Disabling and Enabling.

cardiagn.com

Front Compartment Front Side Lower Inner Rail Replacement

Removal Procedure

Warning: Refer to Approved Equipment for Collision Repair Warning in the Preface section.

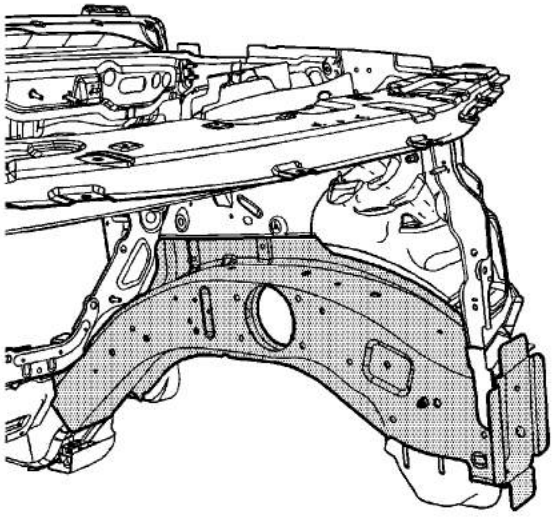

1. Disable the supplemental inflatable restraint (SIR) system. Refer to SIR Disabling and Enabling.
2. Disconnect the negative battery cable. Refer to Battery Negative Cable Disconnection and Connection.
3. Remove all related panels and components
4. Repair as much of the damage as possible to factory specifications. Refer to Battery Negative Cable Disconnection and Connection.
5. Note the location and remove the sealers and anti-corrosion materials from the repair area, as necessary. Refer to Anti-Corrosion Treatment and Repair.

cardiagn.com

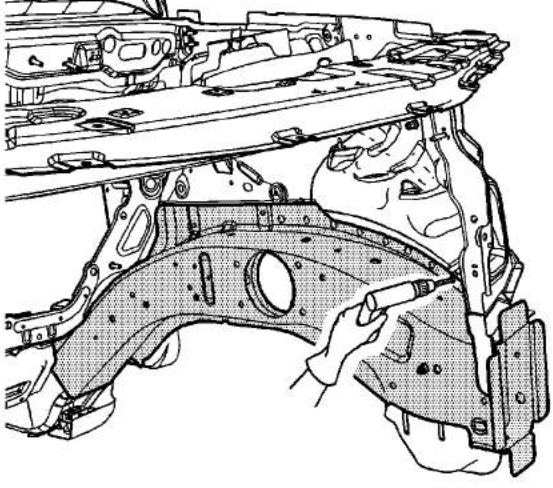

Note: Do not damage any inner panels or reinforcements.

6. Locate and drill out all factory welds. Note the number and location of the welds for installation of the front inner rail - front half.

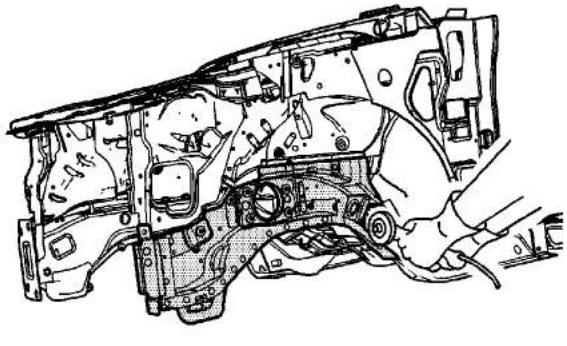

7. Cut rail behind reinforcement to gain access to hidden welds.

cardiagn.com

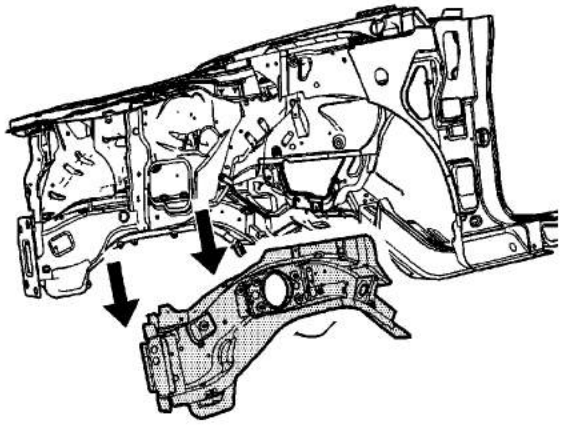

8. Remove the damaged rail from the vehicle.

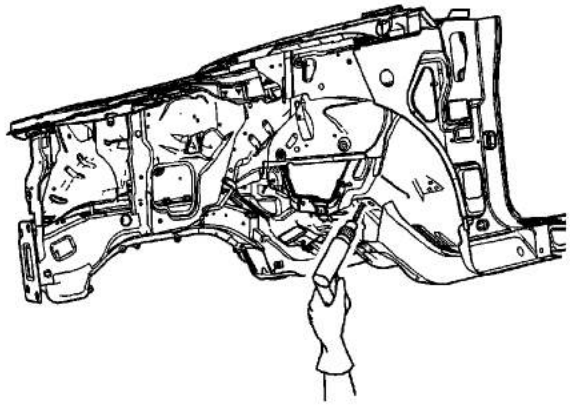

9. Drill out the welds and remove the remaining portion of the rail.

Installation Procedure

cardiagn.com

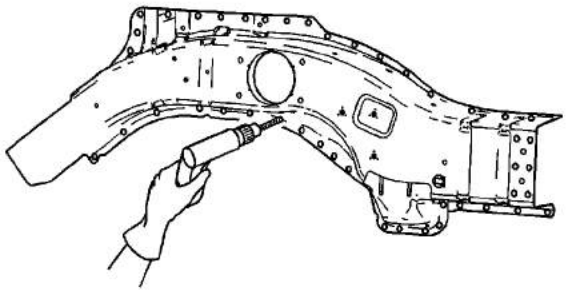

Note: If the location of the original plug weld holes can not be determined, space the plug weld holes every 40 mm (1 ½ in) apart.

Some panels may have structural weld-thru adhesive. It is necessary to replace the weld-thru adhesive with an additional spot weld between each factory spot weld.

1. Drill 8 mm (5/16 in) plug weld holes in the service part as necessary in the locations noted from the original panel.
2. Prepare all mating surfaces as necessary.
3. Apply GM-approved Weld-Thru Coating or equivalent to all mating surfaces. Refer to Anti-Corrosion Treatment and Repair.

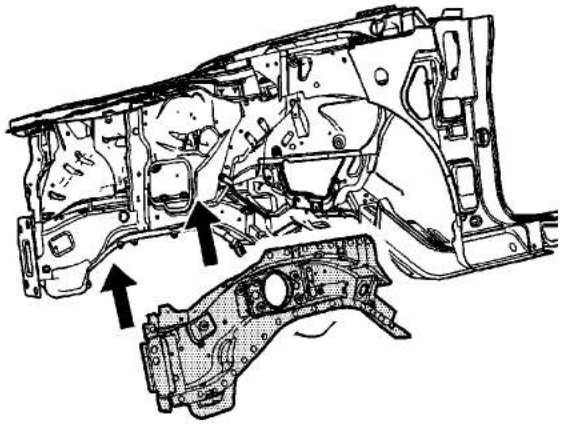

4. Position the front inner rail - front half to the vehicle using 3-dimensional measuring

cardiagn.com

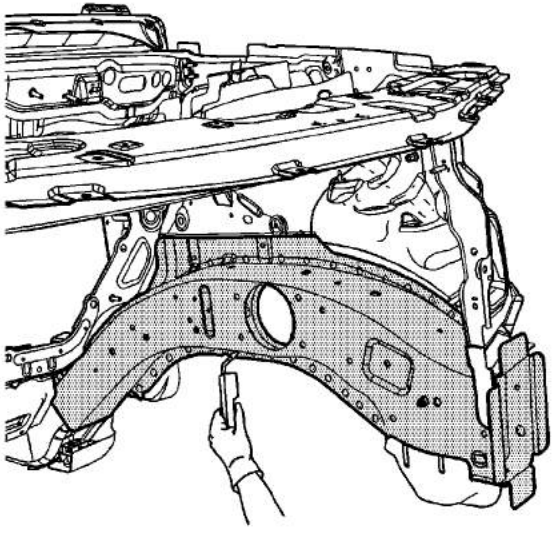

5. Plug weld accordingly.
6. Clean and prepare all welded surfaces.
7. Apply the sealers and anti-corrosion materials to the repair area, as necessary. Refer to Anti-Corrosion Treatment and Repair.
8. Paint the repair area. Refer to Basecoat/Clearcoat Paint Systems.
9. Install all related panels and components.
10. Connect the negative battery cable. Refer to Battery Negative Cable Disconnection and Connection.
11. Enable the SIR system. Refer to SIR Disabling and Enabling.

cardiagn.com

Underbody Outer Front Side Rail Replacement

Removal Procedure

Warning: Refer to Approved Equipment for Collision Repair Warning in the Preface section.

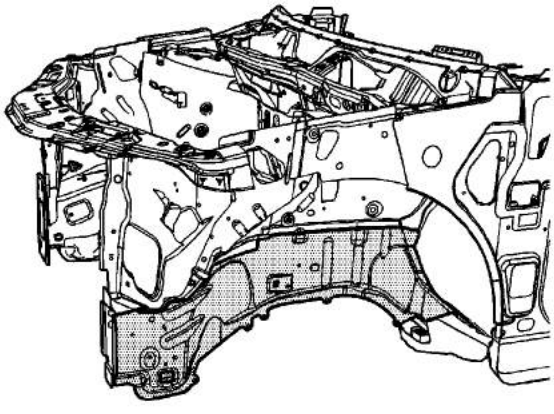

1. Disable the supplemental inflatable restraint (SIR) system. Refer to SIR Disabling and Enabling.
2. Disconnect the negative battery cable. Refer to Battery Negative Cable Disconnection and Connection.
3. Remove all related panels and components.
4. Repair as much of the damage as possible to factory specifications. Refer to Dimensions - Body.
5. Note the location and remove the sealers and anti-corrosion materials from the repair area, as necessary. Refer to Anti-Corrosion Treatment and Repair.

cardiagn.com

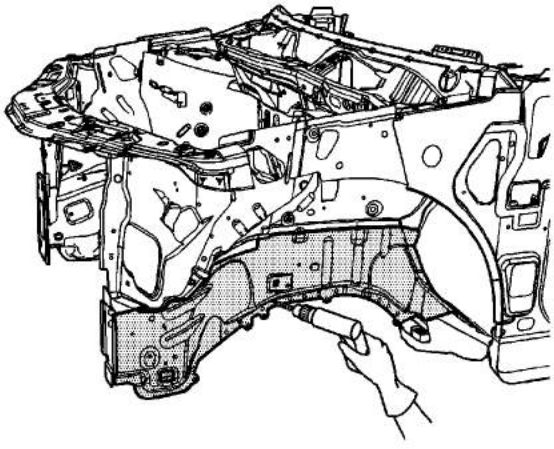

Note: Do not damage any inner panels or reinforcements.

6. Locate and drill out all factory welds. Note the number and location of the welds for installation of the front lower outer rail.
7. Remove the rear engine cradle mount.

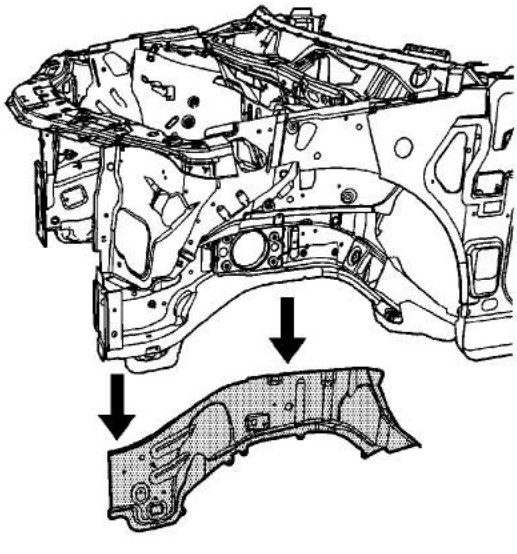

8. Remove the damaged front lower outer rail.

Installation Procedure

cardiagn.com

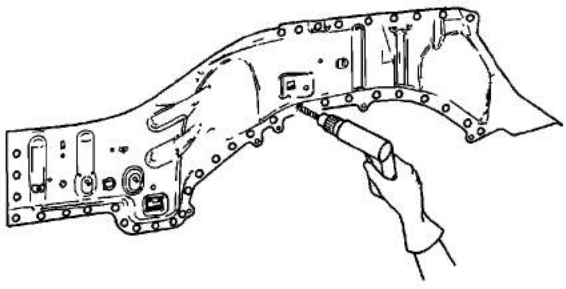

Note: If the location of the original plug weld holes can not be determined, space the plug weld holes every 40 mm (1 1/2 in) apart.

Some panels may have structural weld-thru adhesive. It is necessary to replace the weld-thru adhesive with an additional spot weld between each factory spot weld.

1. Drill 8 mm (5/16 in) plug weld holes in the service part as necessary in the locations noted from the original panel.
2. Prepare all mating surfaces as necessary.
3. Apply GM-approved Weld-Thru Coating or equivalent to all mating surfaces. Refer to Anti-Corrosion Treatment and Repair.

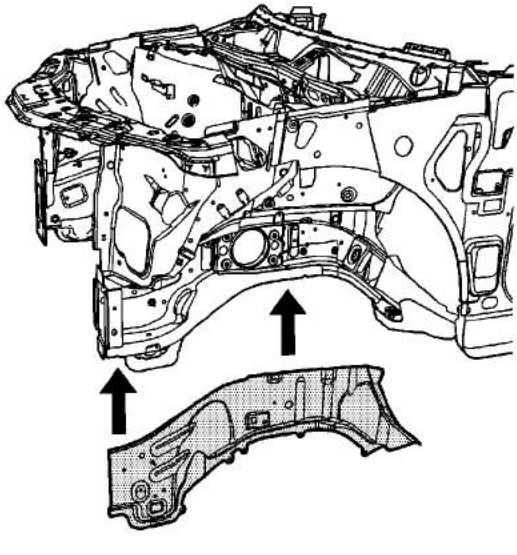

4. Position the front lower outer rail to the vehicle using 3-dimensional measuring equipment.

cardiagn.com

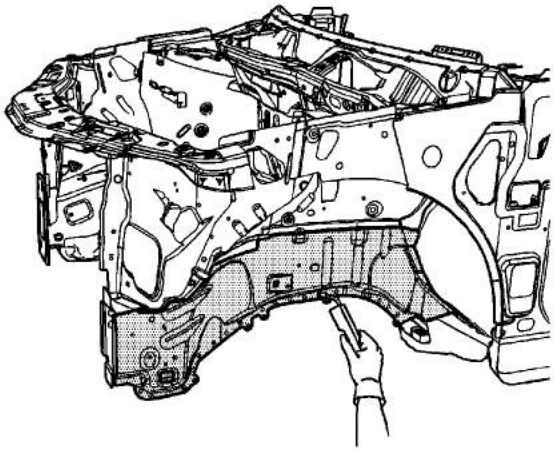

5. Plug weld accordingly.
6. Install the rear engine cradle mount.
7. Clean and prepare all welded surfaces.
8. Apply the sealers and anti-corrosion materials to the repair area, as necessary. Refer to Anti-Corrosion Treatment and Repair.
9. Paint the repair area. Refer to Basecoat/Clearcoat Paint Systems.
10. Install all related panels and components.
11. Connect the negative battery cable. Refer to Battery Negative Cable Disconnection and Connection.
12. Enable the SIR system. Refer to SIR Disabling and Enabling.

cardiagn.com

Front Hinge Pillar Body Sectioning

Removal Procedure

Note: Section in specified areas only. Sectioning outside of these areas may compromise the structural integrity of the vehicle. The door frame can be replaced at factory seams, but requires the removal of the windshield and the roof. The sectioning procedures have been developed as a more cost-effective alternative to complete replacement. The specific area to be sectioned is determined by the extent of the damage to the vehicle.

Note: When replacing panels that involve servicing of stationary glass, refer to Adhesive Installation of Encapsulated Stationary Windows before performing any priming or refinishing.

1. Disable the supplemental inflatable restraint (SIR) system. Refer to SIR Disabling and Enabling.
2. Disconnect the negative battery cable. Refer to Battery Negative Cable Disconnection and Connection.

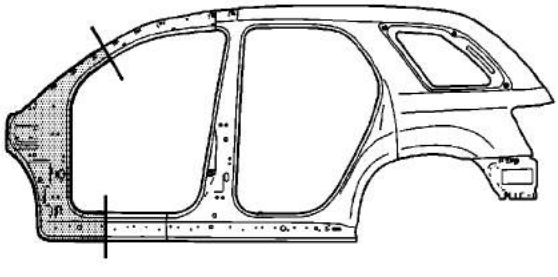

3. Remove all related panels and components.
4. Repair as much of the damage as possible to factory specifications. Refer to Dimensions - Body.

Warning: Foam sound deadeners must be removed from areas within 152.4 mm (6 in) of where flame is to be used for body repairs. When reinstalling foam sound deadeners, avoid inhaling fumes as bodily injury may result.

5. Note the location and remove the sealers and anti-corrosion materials from the repair area, as necessary. Refer to Anti-Corrosion Treatment and Repair.

cardiagn.com

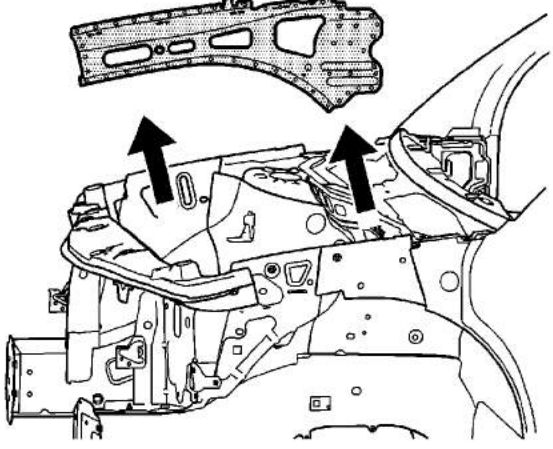

6. Drill spot welds and remove the front upper outer rail.

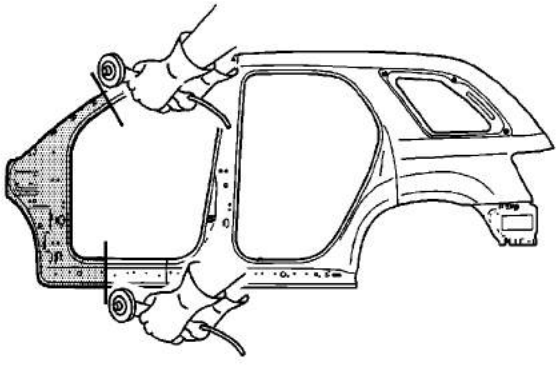

Note: Do NOT damage any inner panels or reinforcements.

7. Cut the panel where sectioning is to be performed.
8. Perform additional sectioning procedures. Refer to Structure Identification.

cardiagn.com

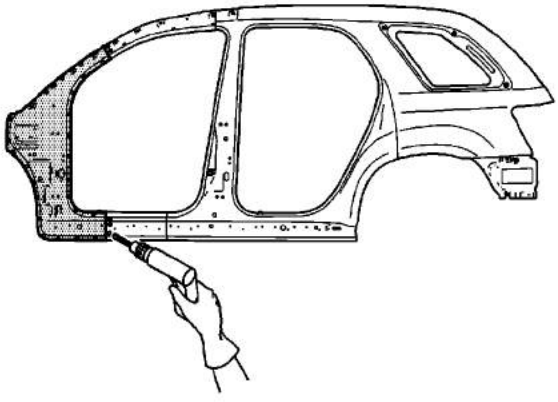

9. Locate and drill out all factory welds. Note the number and location of the welds for installations of the service part.
10. Remove the damaged windshield pillar section.

Installation Procedure

1. Cut the replacement windshield pillar section in corresponding locations to fit the original panel. The sectioning joint should be trimmed to allow 1½ times the metal thickness at the sectioning joint.

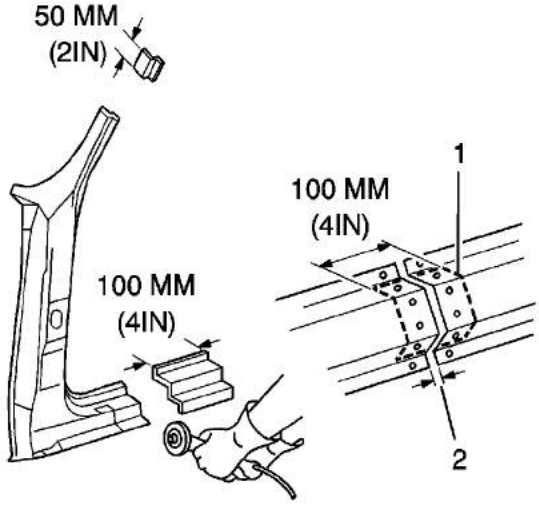

2. Create a 50 mm (2 in) backing plate (1) from the unused portion of the service part. Trim the backing plate as necessary to fit behind the sectioning joint where there is no reinforcement.
3. Drill 8 mm (5/16 in) plug weld holes along the sectioning cut on the remaining original part.

cardiagn.com

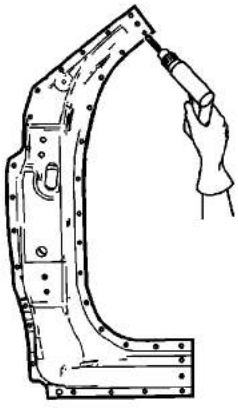

Note: If the location of the original plug weld holes can not be determined, space the plug weld holes every 40 mm (1 1/2 in) apart.

4. Drill 8 mm (5/16 in) plug weld holes in the service part as necessary in the locations noted from the original panel and along the sectioning cut.
5. Prepare all mating surfaces, as necessary.
6. Apply GM-approved Weld-Thru Coating or equivalent to all mating surfaces. Refer to Anti-Corrosion Treatment and Repair.

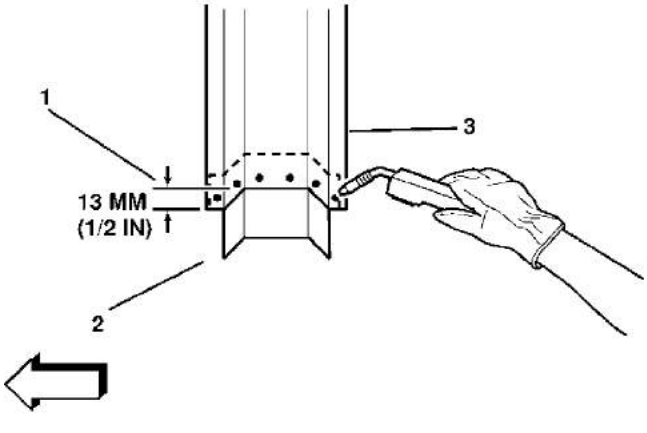

7. Fit the backing plate (2) halfway into the sectioning joint, clamp and plug weld to the vehicle.
8. Position the service part.

cardiagn.com

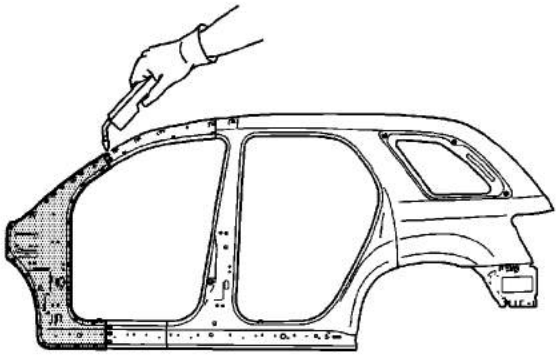

9. Plug weld accordingly.

   Note: To create a solid weld with minimum heat distortion make 25 mm (1 in) stitch welds along the seam with 25 mm (1 in) gaps between. Then go back and complete the stitch weld.

10. Stitch weld the sectioning joint.
11. Clean and prepare all welded surfaces.

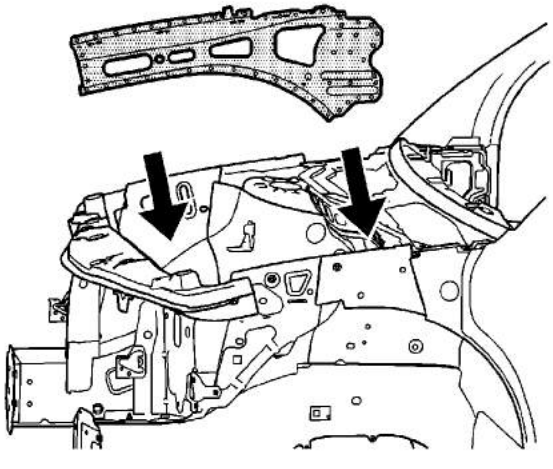

12. Install the front upper outer rail.
13. Apply the sealers and anti-corrosion materials to the repair area, as necessary. Refer to Anti-Corrosion Treatment and Repair.
14. Paint and repair the area. Refer to Basecoat/Clearcoat Paint Systems.
15. Install all related panels and components.
16. Connect the negative battery cable. Refer to Battery Negative Cable Disconnection and

cardiagn.com

cardiagn.com

Roof Outer Panel Replacement

Removal Procedure

This repair procedure includes an installation procedure for either metal-inert gas welding or adhesive bonding.

Warning: Refer to Approved Equipment for Collision Repair Warning in the Preface section.

Note: When replacing panels that involve servicing of stationary windows, refer to Adhesive Installation of Encapsulated Stationary Windows before performing any priming or refinishing.

1. Disable the supplemental inflatable restraint (SIR) system. Refer to SIR Disabling and Enabling.
2. Disconnect the negative battery cable. Refer to Battery Negative Cable Disconnection and Connection.

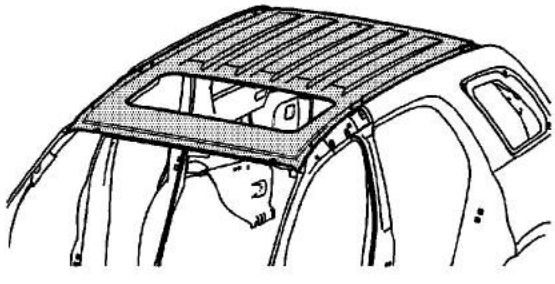

3. Remove all related panels and components.
4. Repair as much of the damage as possible to factory specifications. Refer to Dimensions - Body.
5. Note the location and remove the sealers and anti-corrosion materials from the repair area, as necessary. Refer to Anti-Corrosion Treatment and Repair.
6. Remove the windshield. Refer to Windshield Replacement.
7. Remove the liftgate. Refer to Liftgate Replacement.

cardiagn.com

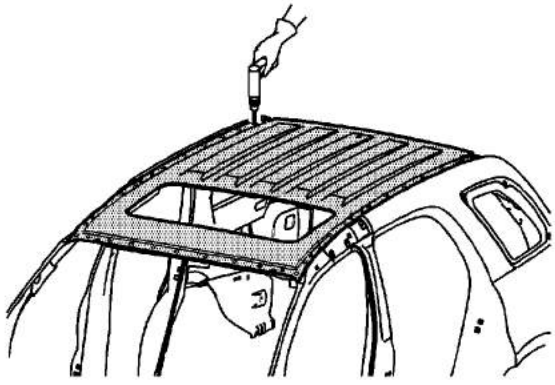

8. Locate and drill out all factory welds. Note the number and location of welds for installation of the roof panel.

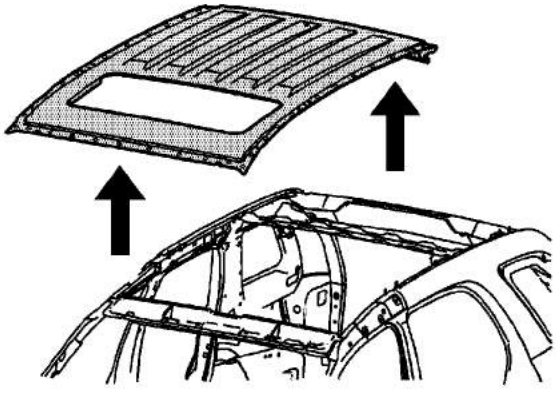

9. With the aid of an assistant, remove the roof panel.

Installation Procedure

cardiagn.com

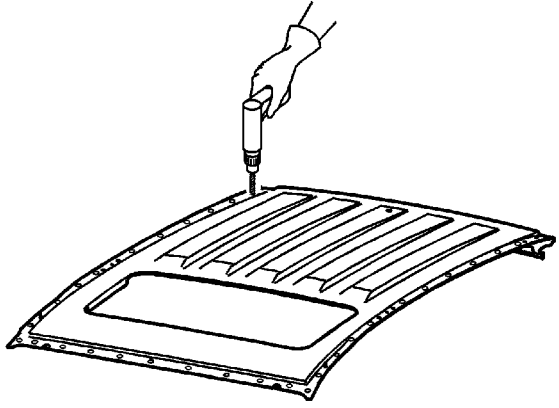

1. Drill 8 mm (5/16 in) plug weld holes as necessary in locations noted from the original panel.

   Important: If the location of the original plug weld holes can not be determined, or if structural weld-thru adhesive is present, space the plug weld holes every 40 mm (1½ in) apart.

2. Prepare all mating surfaces as necessary.
3. Apply GM-approved Weld-Thru Coating or equivalent to all mating surfaces. Refer to Anti-Corrosion Treatment and Repair.

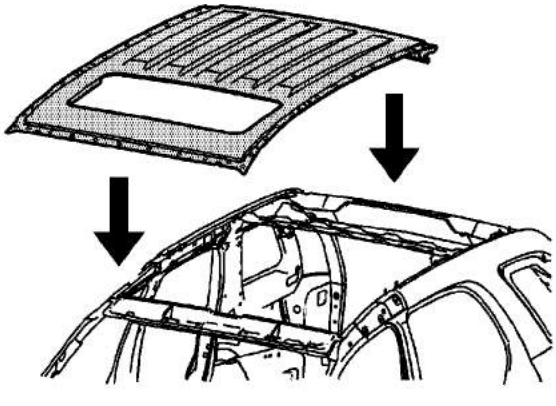

4. With the aid of an assistant, position the roof panel to the body.

cardiagn.com

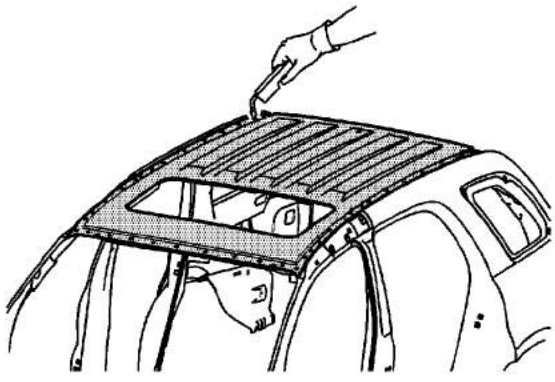

5. Plug weld accordingly.
6. Clean and prepare all welded surfaces.

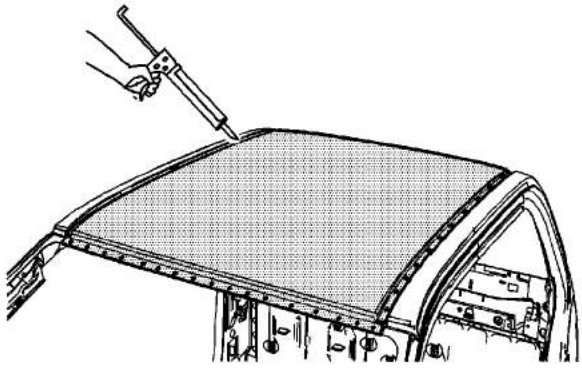

7. Apply the sealers and anti-corrosion materials to the repair area, as necessary. Refer to Anti-Corrosion Treatment and Repair.
8. Paint the repair area. Refer to Basecoat/Clearcoat Paint Systems.
9. Install the windshield. Refer to Windshield Replacement.
10. Install the liftgate. Refer to Liftgate Replacement.
11. Install all related panels and components.
12. Connect the negative battery cable. Refer to Battery Negative Cable Disconnection and Connection.
13. Enable the SIR system. Refer to SIR Disabling and Enabling.

cardiagn.com

Front Side Door Outer Panel Replacement

Removal Procedure

Warning: Refer to Approved Equipment for Collision Repair Warning in the Preface section.

Note: Before beginning the repair, refer to Metal Panel Bonding for proper adhesive applicator preparations and general information.

1. Disconnect the negative battery cable. Refer to Battery Negative Cable Disconnection and Connection.
2. Disable the SIR system. Refer to SIR Disabling and Enabling.
3. Remove all related panels and components.
4. Repair as much of the damage as possible to factory specifications. Refer to Dimensions - Body.
5. Remove the door assembly. Refer to Front Side Door Replacement.

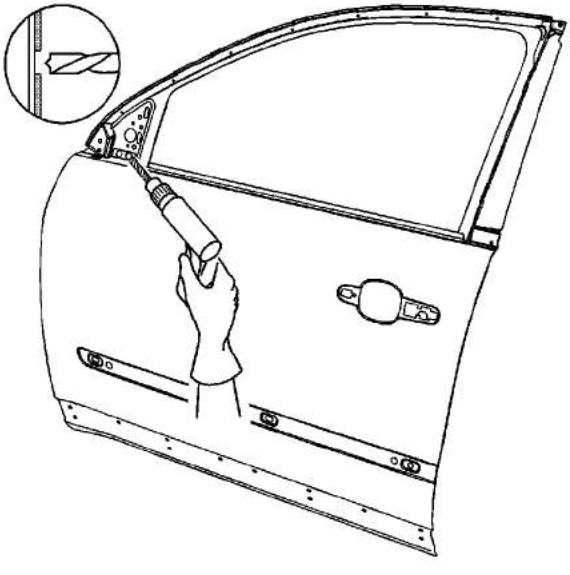

6. Locate and drill out all factory welds.

cardiagn.com

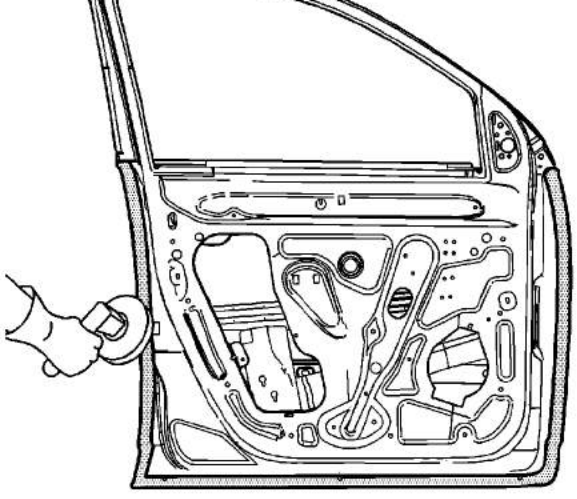

7. Grind the edges of the door outer panel to separate the outer door panel from the door shell.

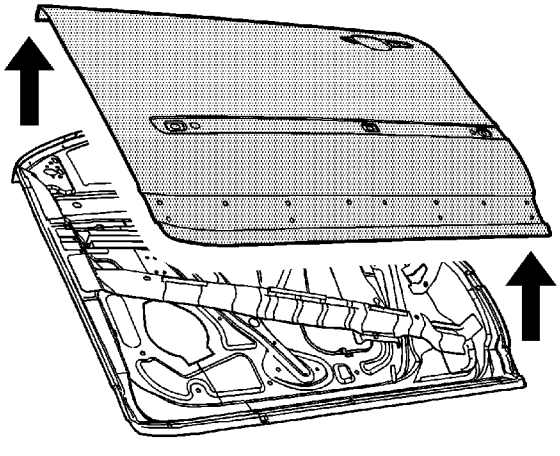

Warning: Inspection of the door guard beam for damage must be performed before replacement of the door outer panel. If damage to the door guard beam is found the door must be replaced. Failure to do so may compromise the structural integrity of the vehicle and may cause personal injury if the vehicle is involved in a collision.

8. Remove the outer door panel.
9. Remove the sealers and anti-corrosion materials from the repair area, as necessary. Refer to Anti-Corrosion Treatment and Repair.
10. Straighten the edges of the door shell.

cardiagn.com

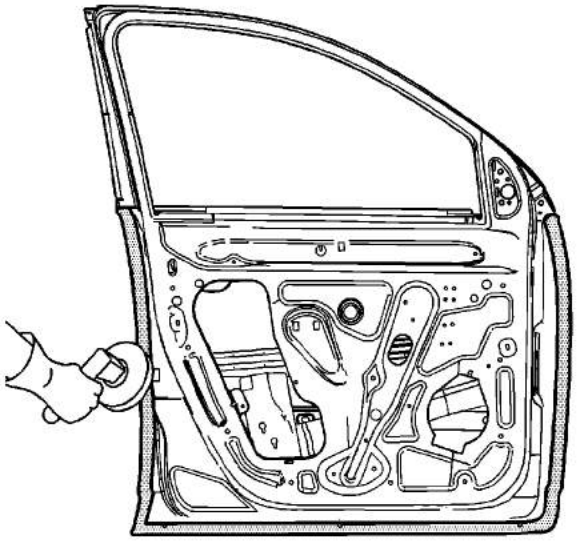

1. Use a grinding disk to grind the surface of the door shell mating flanges to bare steel.

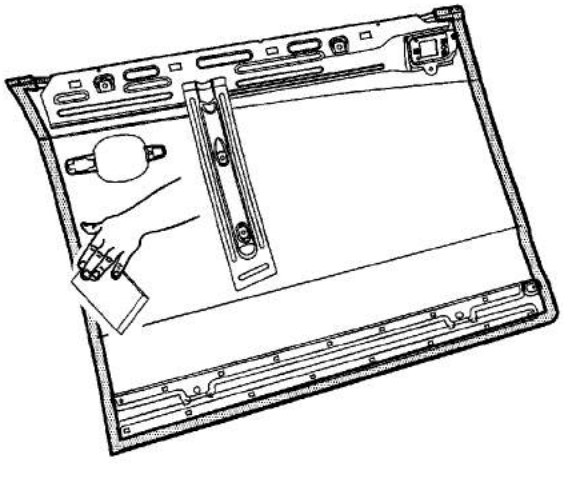

2. Scuff the opposing mating surfaces of the door outer panel to remove the gloss of the E-Coat.

cardiagn.com

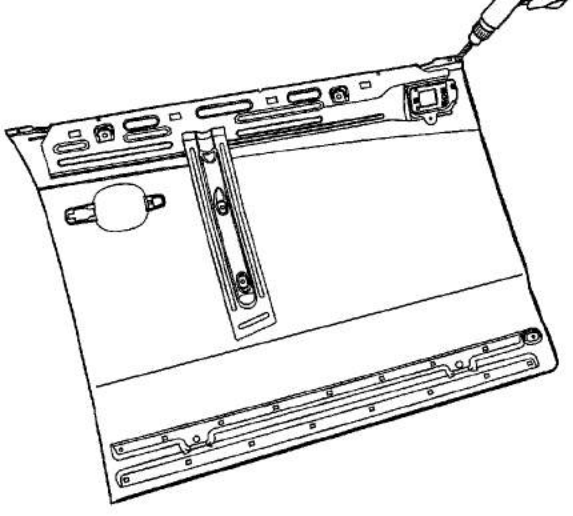

3. Drill 8 mm (5/16 in) plug weld holes, as necessary, in the locations noted from the original panel.

   Note: If the original location of the plug weld holes can not be determined, space plug weld holes every 40 mm (1 in) apart.

4. Clean the mating surfaces.

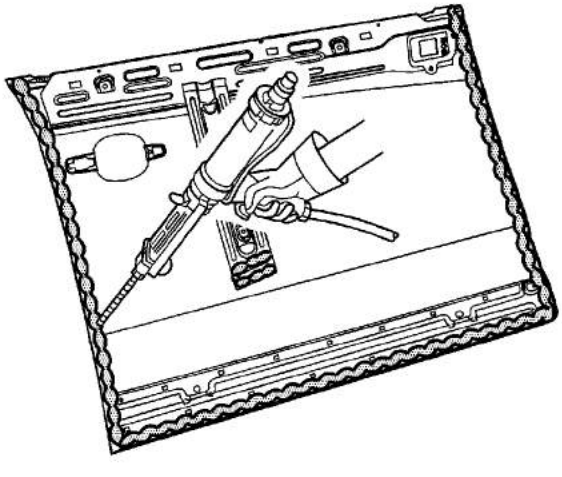

   Note: Do not allow the adhesive to totally cure off the vehicle, as proper alignment of the door outer panel to the door shell will be difficult.

5. Apply a 3-6 mm (1/8-1/4 in) bead of metal panel bonding adhesive to both of the mating surfaces.

cardiagn.com

7. Apply a 9-13 mm (3/8-½ in) bead of metal bonding adhesive to the mating surfaces of the service panel.

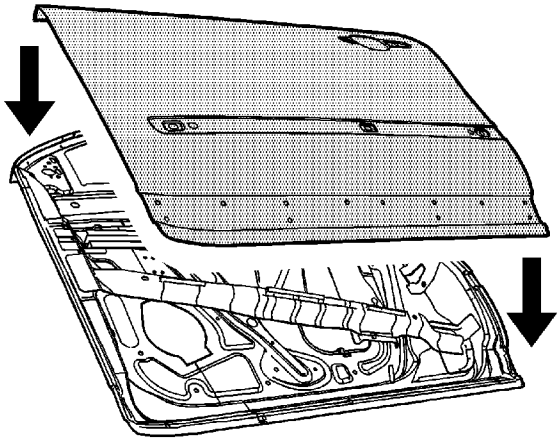

Note: Do NOT pull the panels apart after being joined together. Slide the panels against each other to realign the panels.

8. Install the door outer panel to the door shell.
9. Clamp the door outer panel into position, as required.

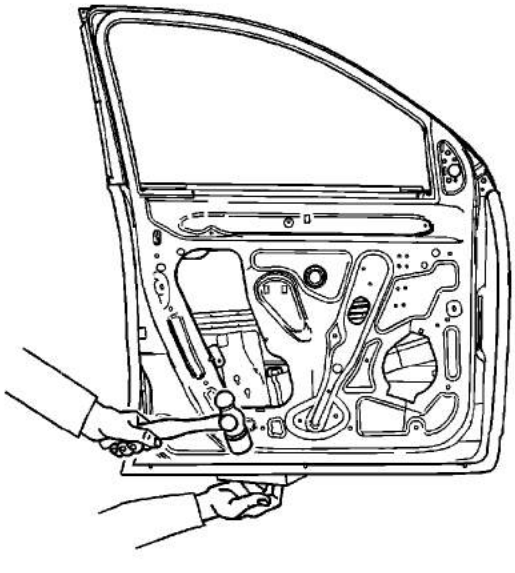

10. Using a hammer re-hem the hem flanges around the door shell.

    Continue to hammer in stages along the hem flanges.

cardiagn.com

the alignment, as required.

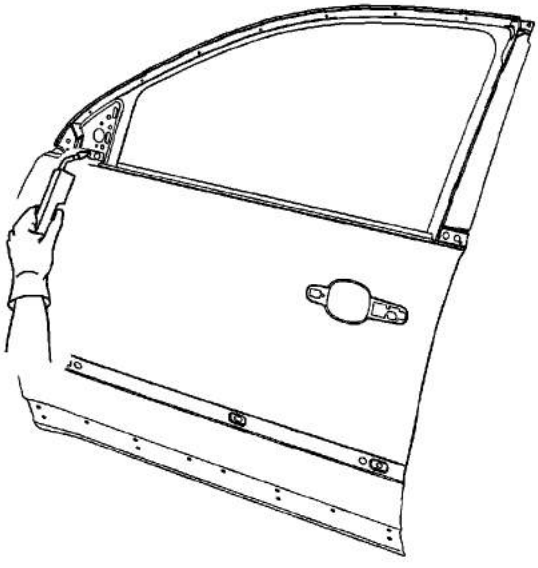

13. Using metal-inert gas (MIG), weld the door outer panel to the door frame in the locations noted at the upper door frame.
14. Clean and prepare all welded surfaces.

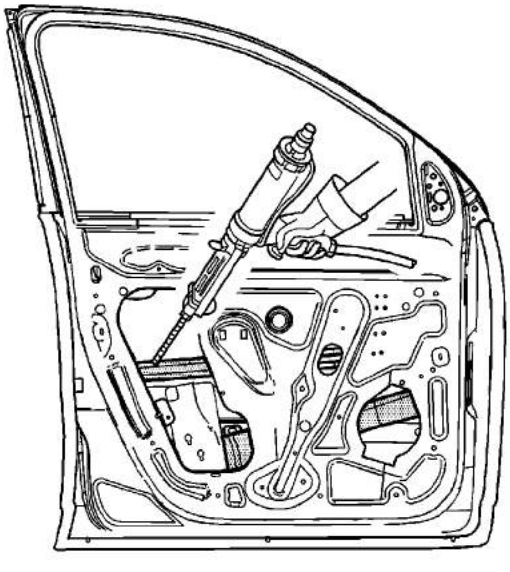

15. Apply Fusor super flexible anti-flutter foam-fast set, Fusor P/N 121/124, or equivalent, in 4-5 evenly spaced locations as noted from the original panel.
16. Apply sealers and anti-corrosion materials to the repair area, as necessary. Refer to Anti-Corrosion Treatment and Repair.
17. Paint the repaired area. Refer to Basecoat/Clearcoat Paint Systems.
18. Install the door assembly. Refer to Front Side Door Replacement.
19. Install all related panels and components.
20. Enable the SIR system. Refer to SIR Disabling and Enabling.

cardiagn.com

cardiagn.com

Rear Side Door Outer Panel Replacement

Removal Procedure

Warning: Refer to Approved Equipment for Collision Repair Warning in the Preface section.

Note: Before beginning the repair, refer to Metal Panel Bonding for proper adhesive applicator preparations and general information.

1. Disconnect the negative battery cable. Refer to Battery Negative Cable Disconnection and Connection.
2. Disable the SIR system. Refer to SIR Disabling and Enabling.
3. Remove all related panels and components.
4. Repair as much of the damage as possible to factory specifications. Refer to Dimensions - Body.
5. Remove the door assembly. Refer to Rear Side Door Replacement.

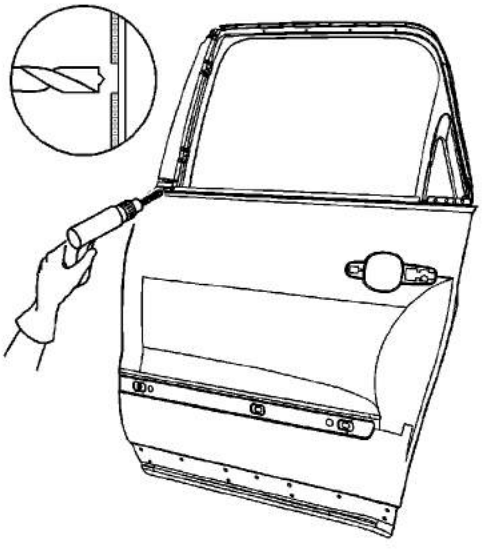

6. Locate and drill out all factory welds. Note the number and locations of the welds for installation of the service panel.

cardiagn.com

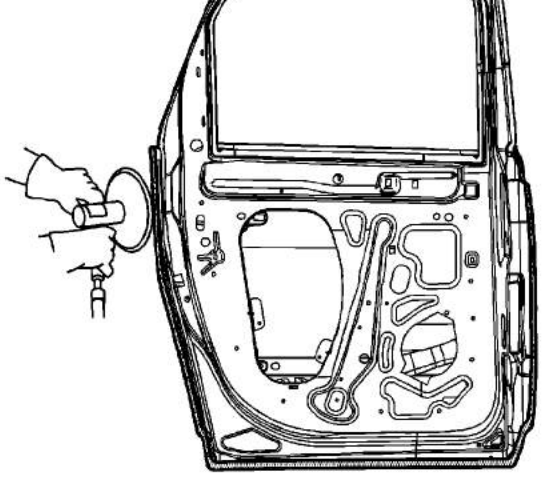

7. Grind the edges of the door outer panel to separate the outer door panel from the door shell.

   Warning: Inspection of the door guard beam for damage must be performed before replacement of the door outer panel. If damage to the door guard beam is found the door must be replaced. Failure to do so may compromise the structural integrity of the vehicle and may cause personal injury if the vehicle is involved in a collision.

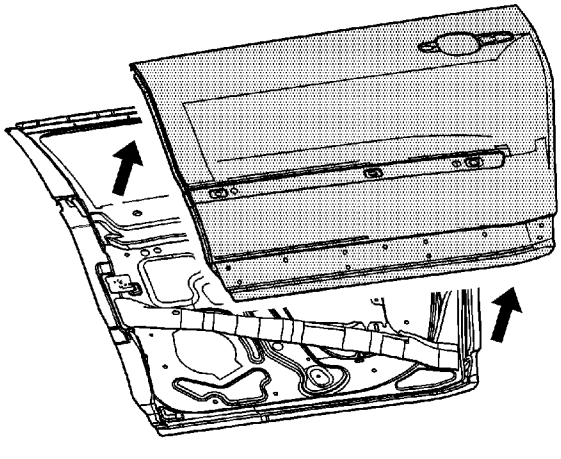

8. Remove the outer door panel.
9. Remove the sealers and anti-corrosion materials from the repair area, as necessary. Refer to Anti-Corrosion Treatment and Repair.
10. Straighten the edges of the door shell.

cardiagn.com

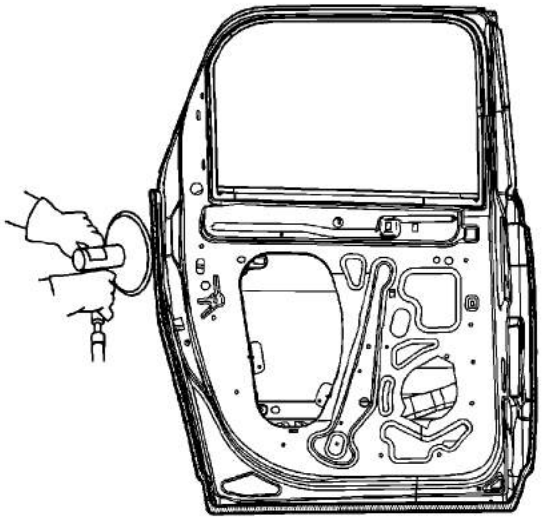

1. Use a grinding disk to grind the surface of the door shell mating flanges to bare steel.

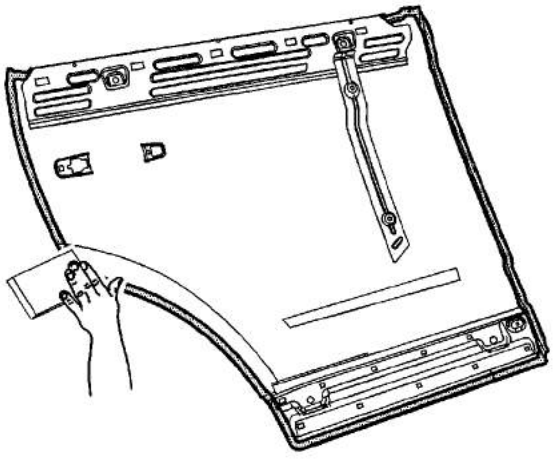

2. Scuff the opposing mating surfaces of the door outer panel to remove the gloss of the E-Coat.

cardiagn.com

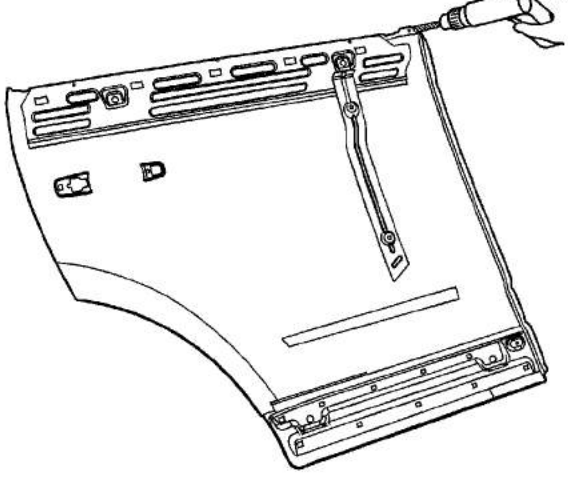

3. Drill 8 mm (5/16 in) plug weld holes, as necessary, in the locations noted from the original panel.

   Note: If the original location of the plug weld holes can not be determined, space plug weld holes every 40 mm (1 in) apart.

4. Clean the mating surfaces.

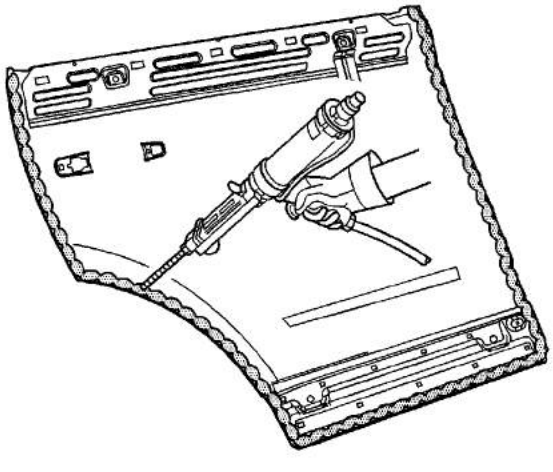

   Note: Do not allow the adhesive to totally cure off the vehicle, as proper alignment of the door outer panel to the door shell will be difficult.

5. Apply a 3-6 mm (1/8-1/4 in) bead of metal panel bonding adhesive to both of the mating surfaces.

cardiagn.com

7. Apply a 9-13 mm (3/8-½ in) bead of metal bonding adhesive to the mating surfaces of the service panel.

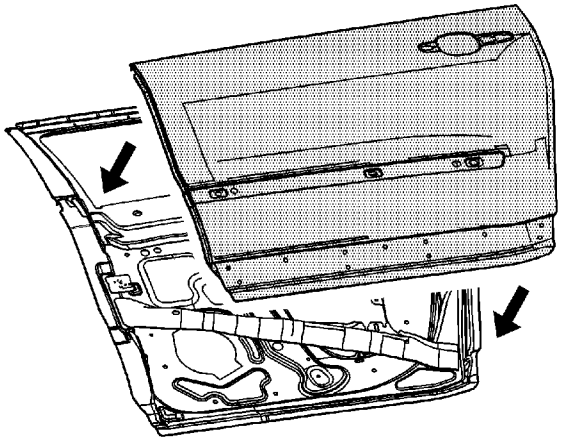

Note: Do NOT pull the panels apart after being joined together. Slide the panels against each other to realign the panels.

8. Install the door outer panel to the door shell.
9. Clamp the door outer panel into position, as required.

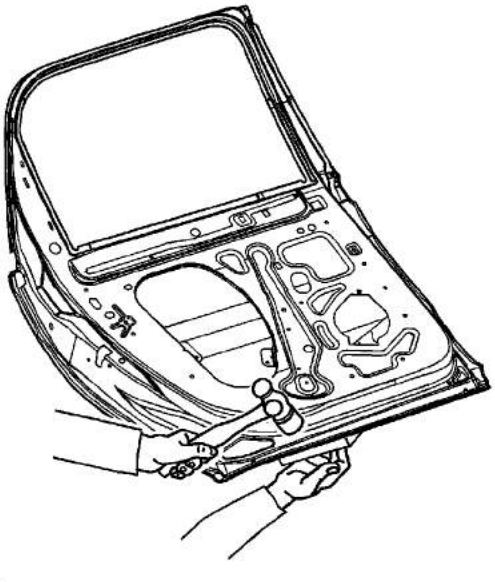

10. Using a hammer re-hem the hem flanges around the door shell.

    Continue to hammer in stages along the hem flanges.

cardiagn.com

the alignment, as required. Refer to Rear Side Door Replacement.

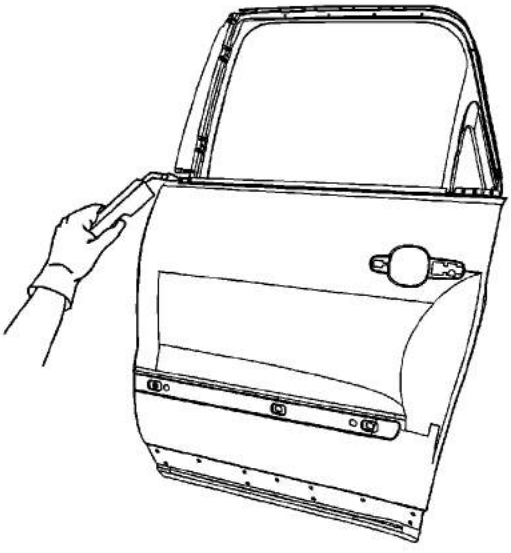

13. Using metal-inert gas (MIG), weld the door outer panel to the door frame in the locations noted from the original panel.

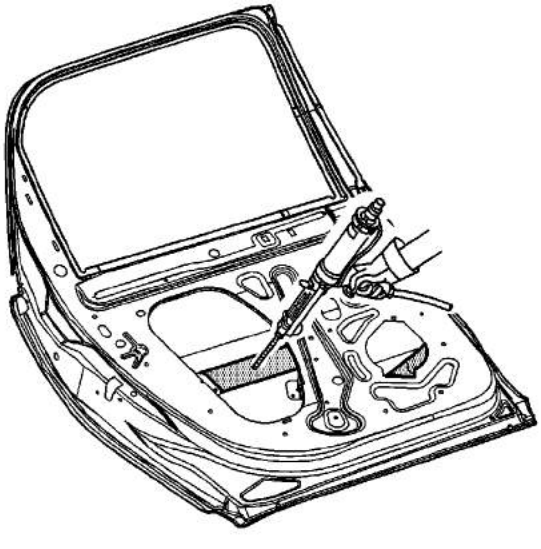

14. Apply Fusor super flexible anti-flutter foam-fast set, Fusor P/N 121/124, or equivalent, in 4-5 evenly spaced locations between the door outer panel and the inner safety beam.
15. Apply sealers and anti-corrosion materials to the repair area, as necessary. Refer to Anti-Corrosion Treatment and Repair.
16. Paint the repaired area. Refer to Basecoat/Clearcoat Paint Systems.
17. Install all related panels and components.
18. Enable the SIR system. Refer to SIR Disabling and Enabling.
19. Connect the negative battery cable. Refer to Battery Negative Cable Disconnection and Connection.

cardiagn.com

cardiagn.com

Rear Floor Panel Replacement

Removal Procedure

Note: The rear floor panel's front edge is layered between 2 sheet metal panels. To avoid unnecessary repairs, a portion of the original floor panel will be left welded in the vehicle. Please review complete repair procedure for further information

Warning: Refer to Approved Equipment for Collision Repair Warning in the Preface section.

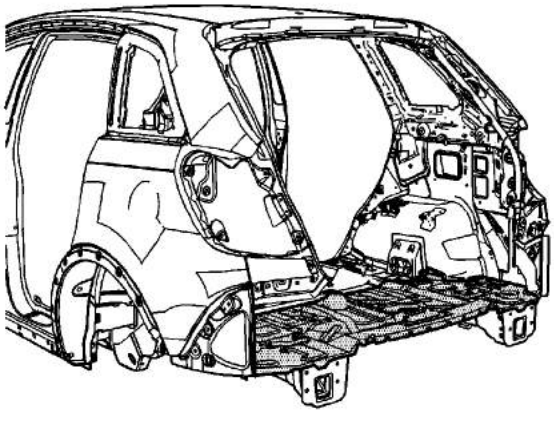

1. Disable the supplemental inflatable restraint (SIR) system. Refer to SIR Disabling and Enabling.
2. Disconnect the negative battery cable. Refer to Battery Negative Cable Disconnection and Connection.
3. Remove all related panels and components.
4. Repair as much of the damage as possible to factory specifications. Refer to Dimensions - Body.
5. Note the location and remove the sealers and anti-corrosion materials from the repair area, as necessary. Refer to Anti-Corrosion Treatment and Repair.

cardiagn.com

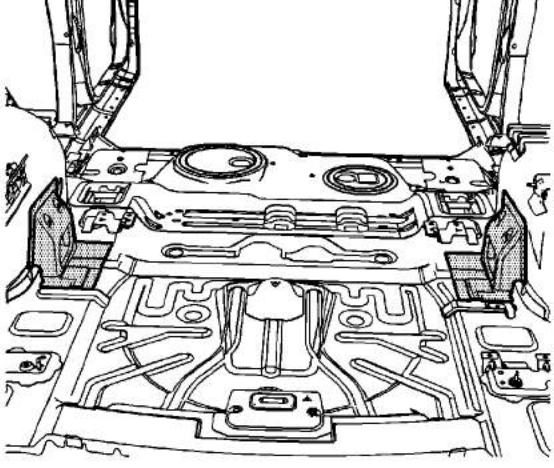

Note: Do not damage any inner panels or reinforcements.

6. Drill out the spot welds and remove the wheelhouse reinforcements.

   Note: Do not drill out welds along the front edge of the panel seam.

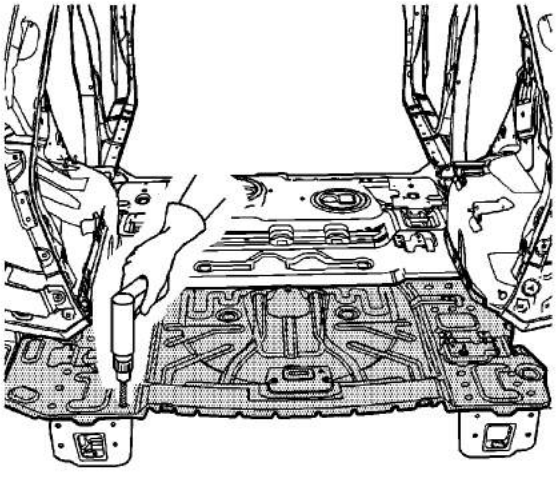

7. Locate and drill out all factory welds. Note the number and location of the welds for installation of the rear floor panel.

cardiagn.com

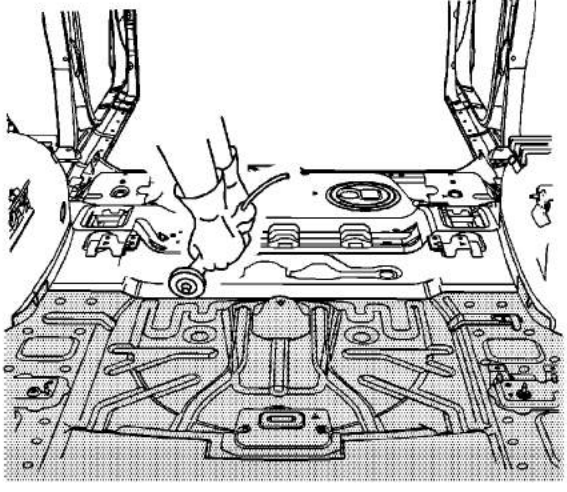

8. Cut floor panel along front edge of the panel seam.

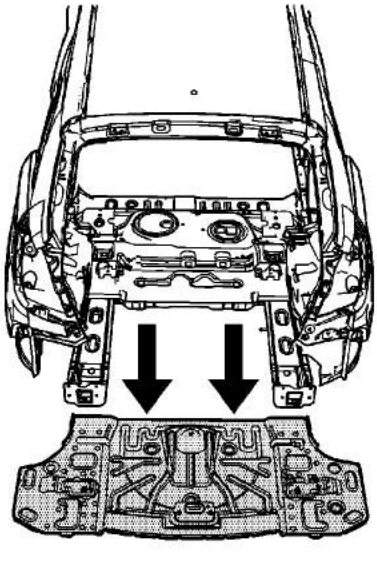

9. Remove the damaged rear floor panel.

Installation Procedure

cardiagn.com

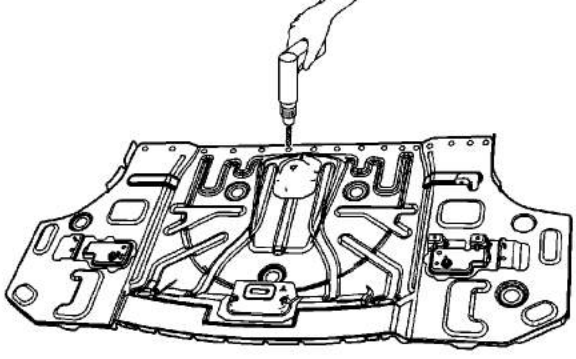

Note: If the location of the original plug weld holes can not be determined, space the plug weld holes every 40 mm (1 ½ in) apart.

Some panels may have structural weld-thru adhesive. It is necessary to replace the weld-thru adhesive with an additional spot weld between each factory spot weld.

1. Drill 8 mm (5/16 in) plug weld holes in the service part as necessary in the locations noted from the original panel.
2. Prepare all mating surfaces as necessary.
3. Apply GM approved weld-thru coating or equivalent to all mating surfaces. Refer to Anti-Corrosion Treatment and Repair.

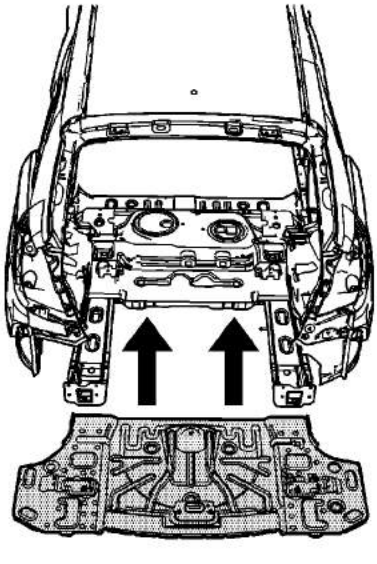

4. Position the rear floor panel to the vehicle.

cardiagn.com

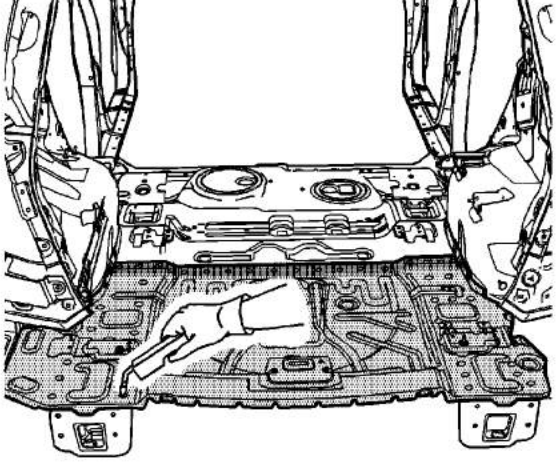

5. Overlap the front edge of the service floor panel on top of the existing front floor by approximately 30 mm until panel fits into place. Clamp the floor panel in place.
6. Plug weld accordingly.

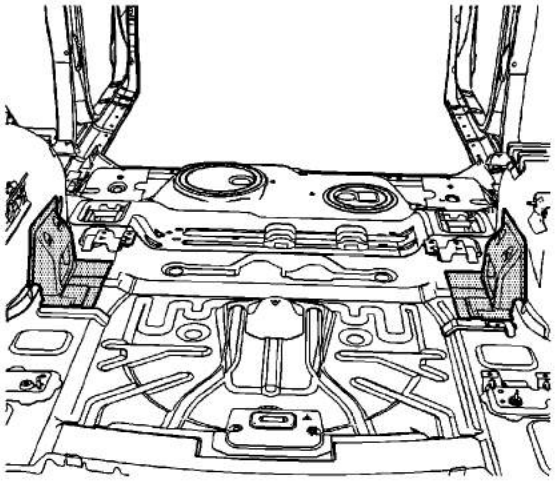

7. Position and weld wheelhouse reinforcement in place.
8. Clean and prepare all welded surfaces.
9. Apply the sealers and anti-corrosion materials to the repair area, as necessary. Refer to Anti-Corrosion Treatment and Repair.
10. Paint the repair area. Refer to Basecoat/Clearcoat Paint Systems.
11. Install all related panels and components.
12. Connect the negative battery cable. Refer to Battery Negative Cable Disconnection and Connection.
13. Enable the SIR system. Refer to SIR Disabling and Enabling.

cardiagn.com

Body Rear End Panel Replacement

Removal Procedure

Warning: Refer to Approved Equipment for Collision Repair Warning in the Preface section.

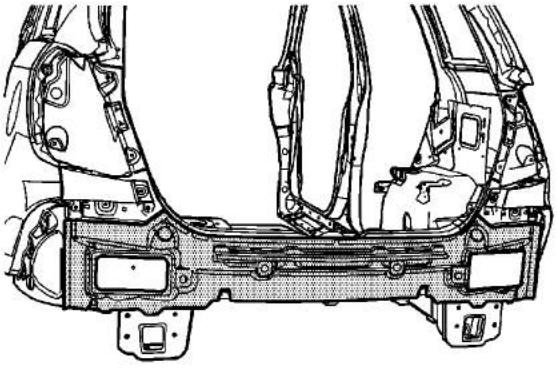

1. Disable the supplemental inflatable restraint (SIR) system. Refer to SIR Disabling and Enabling.
2. Disconnect the negative battery cable. Refer to Battery Negative Cable Disconnection and Connection.
3. Remove all related panels and components.
4. Repair as much of the damage as possible to factory specifications. Refer to Dimensions - Body.
5. Note the location and remove the sealers and anti-corrosion materials from the repair area, as necessary. Refer to Anti-Corrosion Treatment and Repair.

cardiagn.com

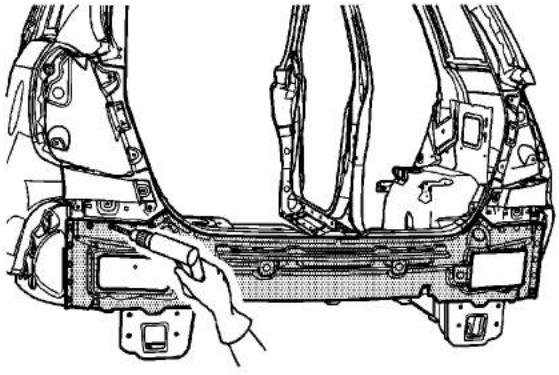

Note: Do not damage any inner panels or reinforcements.

6. Locate and drill out all factory welds. Note the number and location of the welds for installation of the rear end panel.

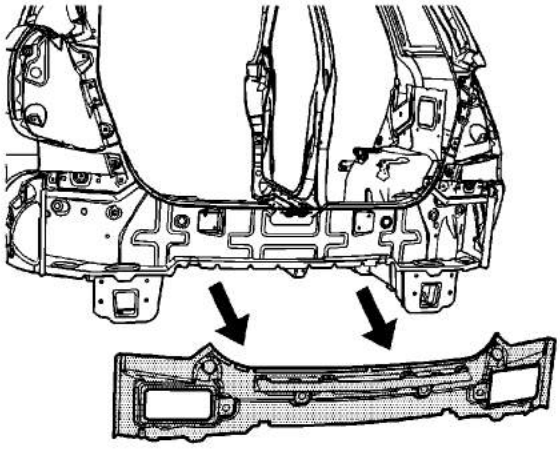

7. Remove the damaged rear end panel.

Installation Procedure

cardiagn.com

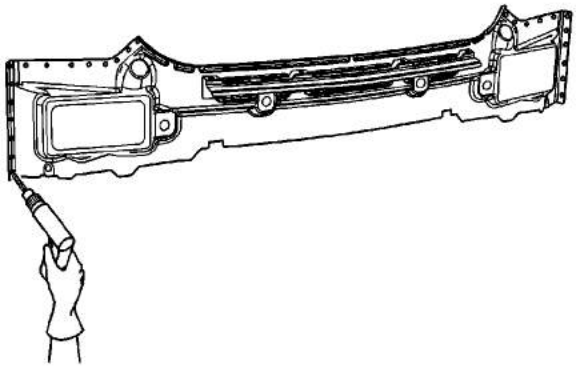

Note: If the location of the original plug weld holes can not be determined, space the plug weld holes every 40 mm (1 1/2 in) apart.

Some panels may have structural weld-thru adhesive. It is necessary to replace the weld-thru adhesive with an additional spot weld between each factory spot weld.

1. Drill 8 mm (5/16 in) plug weld holes in the service part as necessary in the locations noted from the original panel.
2. Prepare all mating surfaces as necessary.
3. Apply GM-approved Weld-Thru Coating or equivalent to all mating surfaces. Refer to Anti-Corrosion Treatment and Repair.

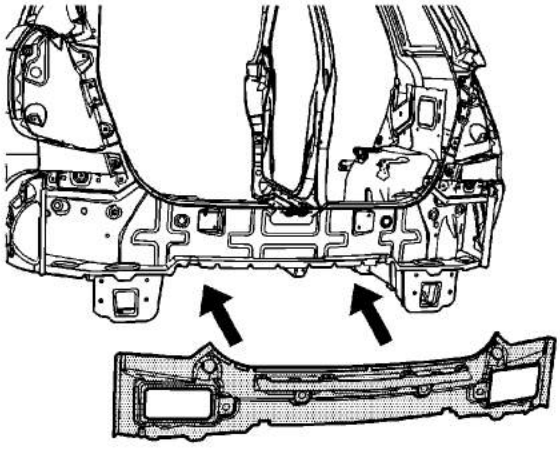

4. Position the rear end panel to the vehicle using 3-dimensional measuring equipment. Clamp

cardiagn.com

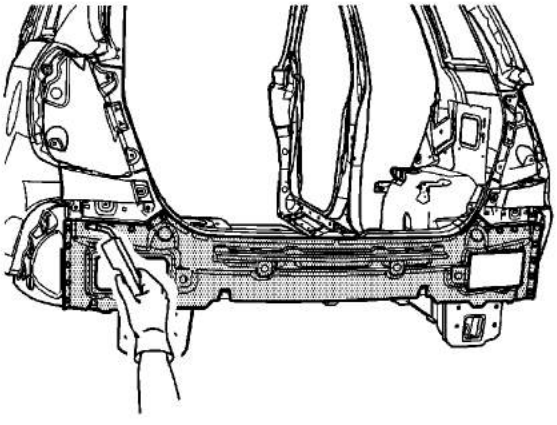

5. Plug weld accordingly.
6. Clean and prepare all welded surfaces.
7. Apply the sealers and anti-corrosion materials to the repair area, as necessary. Refer to Anti-Corrosion Treatment and Repair.
8. Paint the repair area. Refer to Basecoat/Clearcoat Paint Systems.
9. Install all related panels and components.
10. Connect the negative battery cable. Refer to Battery Negative Cable Disconnection and Connection.
11. Enable the SIR system. Refer to SIR Disabling and Enabling.

cardiagn.com

Rear Rail End Replacement

Removal Procedure

Warning: Refer to Approved Equipment for Collision Repair Warning in the Preface section.

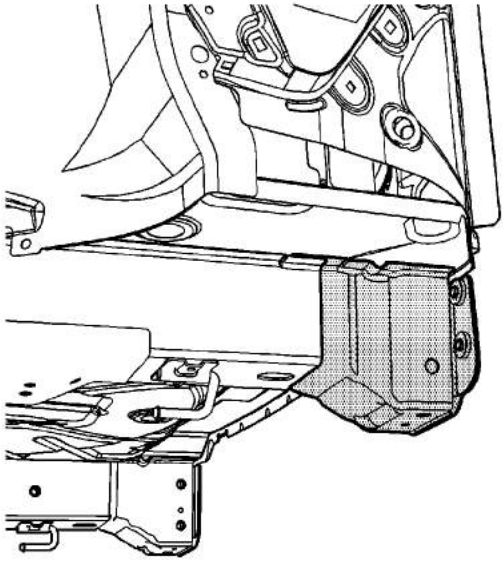

1. Disable the supplemental inflatable restraint (SIR) System. Refer to SIR Disabling and Enabling.
2. Disconnect the negative battery cable. Refer to Battery Negative Cable Disconnection and Connection.
3. Remove all related panels and components.
4. Repair as much of the damage as possible to factory specifications. Refer to Dimensions - Body.
5. Note the location and remove the sealers and anti-corrosion materials from the repair area, as necessary. Refer to Anti-Corrosion Treatment and Repair.

   Note: Do not damage any inner panels or reinforcements.

cardiagn.com

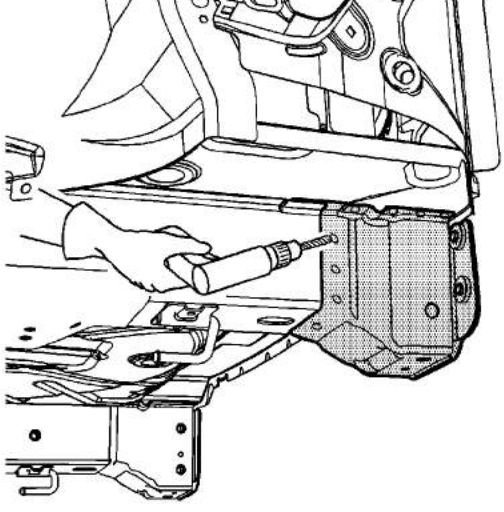

6. Locate and drill out all factory welds. Note the number and location of the welds for installation of the rear rail.

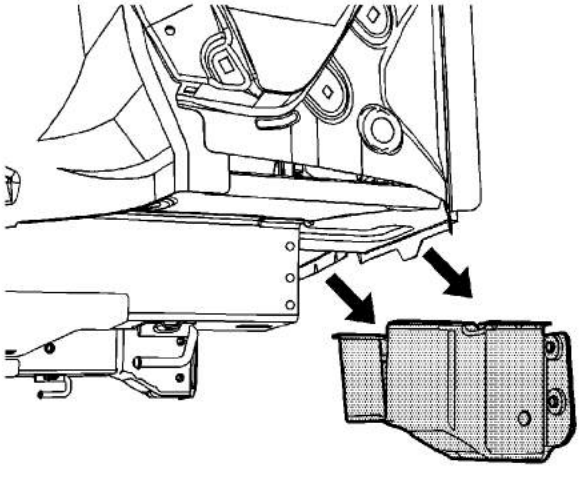

7. Remove the damaged rear rail.

Installation Procedure

Note:

- If the location of the original plug weld holes cannot be determined, space the plug weld holes every 40 mm (1½ in) apart.
- Some panels may have structural weld-thru adhesive. It is necessary to replace the weld-thru adhesive with an additional spot weld between each factory spot weld.

cardiagn.com

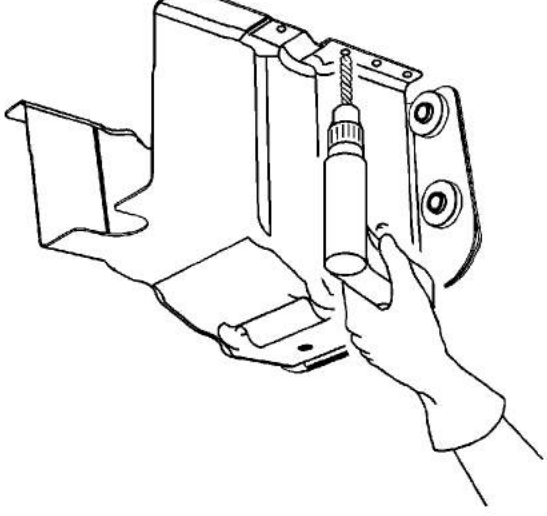

1. Drill 8 mm (5/16 in) plug weld holes in the service part as necessary in the locations noted from the original panel.
2. Prepare all mating surfaces as necessary.
3. Apply GM-approved Weld-Thru Coating or equivalent to all mating surfaces. Refer to Anti-Corrosion Treatment and Repair.

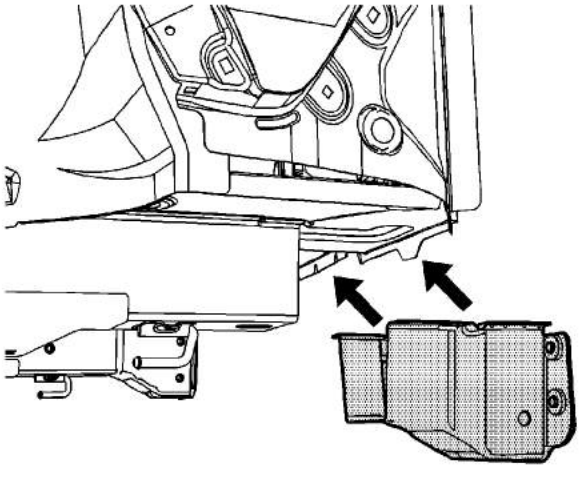

4. Position the rear rail lower to the vehicle using 3-dimensional measuring equipment. Clamp the rear rail lower into place.

cardiagn.com

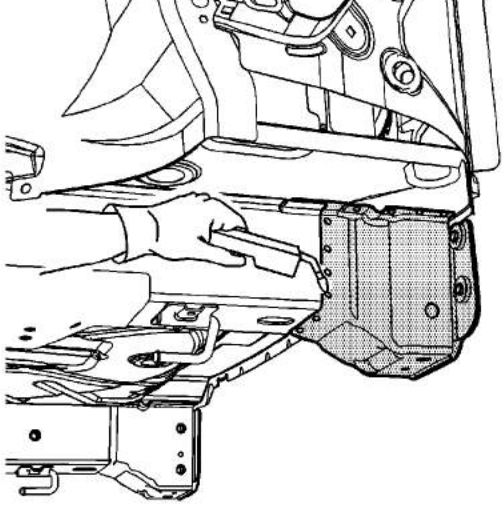

5. Plug weld accordingly.
6. Clean and prepare all welded surfaces.
7. Apply the sealers and anti-corrosion materials to the repair area, as necessary. Refer to Anti-Corrosion Treatment and Repair.
8. Paint the repair area. Refer to Basecoat/Clearcoat Paint Systems.
9. Install all related panels and components.
10. Connect the negative battery cable. Refer to Battery Negative Cable Disconnection and Connection.
11. Enable the SIR system. Refer to SIR Disabling and Enabling.

cardiagn.com

Center Pillar Sectioning

Removal Procedure

Note: Section in specified areas only. Sectioning outside of these areas may compromise the structural integrity of the vehicle. The door frame can be replaced at factory seams, but requires the removal of the windshield and the roof. The sectioning procedures have been developed as a more cost-effective alternative to complete replacement. The specific area to be sectioned is determined by the extent of the damage to the vehicle.

1. Disable the supplemental inflatable restraint (SIR) system. Refer to SIR Disabling and Enabling.
2. Disconnect the negative battery cable. Refer to Battery Negative Cable Disconnection and Connection.

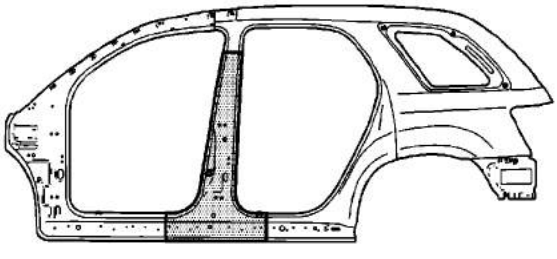

3. Remove all related panels and components.
4. Repair as much of the damage as possible to factory specifications. Refer to Dimensions - Body.

Warning: Foam sound deadeners must be removed from areas within 152.4 mm (6 in) of where flame is to be used for body repairs. When reinstalling foam sound deadeners, avoid inhaling fumes as bodily injury may result.

5. Note the location and remove the sealers and anti-corrosion materials from the repair area, as necessary. Refer to Anti-Corrosion Treatment and Repair.

cardiagn.com

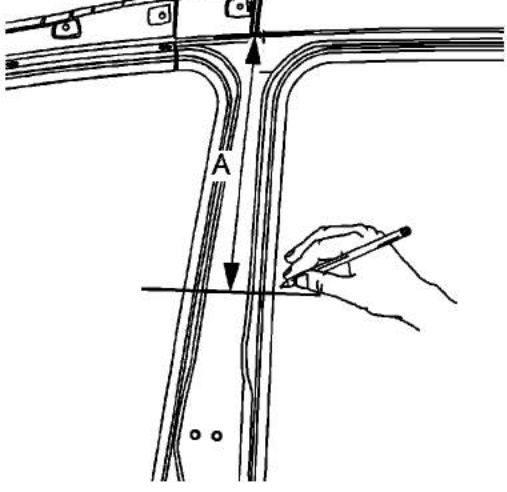

6. On the original outer door frame, measure down from the lower edge of the door opening 135 mm (5.3 in) (A) and mark a horizontal line.

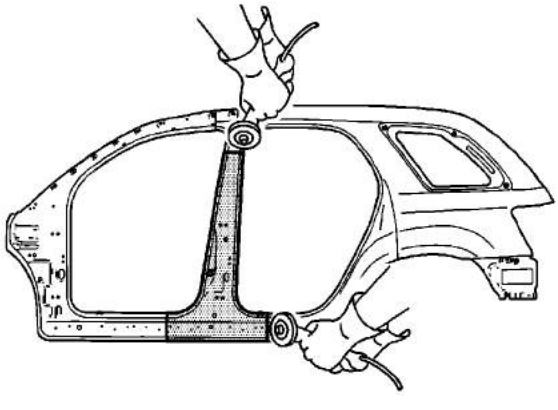

Note: Do NOT damage any inner panels or reinforcements.

7. Cut the panel where sectioning is to be performed.
8. Perform additional sectioning procedures. Refer to Structure Identification.

cardiagn.com

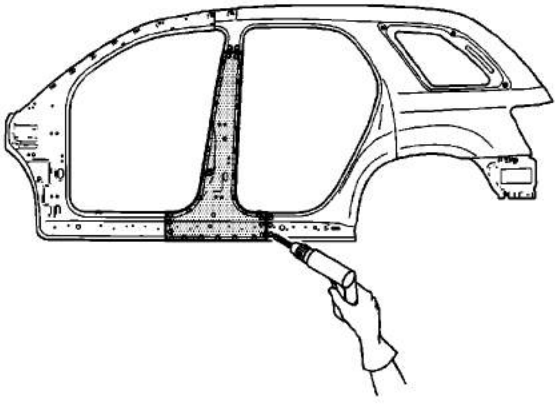

9. Locate and drill out all factory welds. Note the number and location of the welds for installations of the service part.
10. Remove the damaged center pillar section.

Installation Procedure

1. Cut the replacement center pillar section in corresponding locations to fit the original panel. The sectioning joint should be trimmed to allow 1½ times the metal thickness at the sectioning joint.

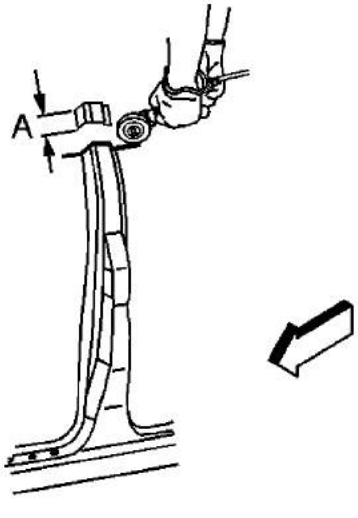

2. Create a 50 mm (2 in) backing plate (A) from the unused portion of the service part. Trim the backing plate as necessary to fit behind the sectioning joint where there is no reinforcement.
3. Drill 8 mm (5/16 in) plug weld holes along the sectioning cut on the remaining original part.

cardiagn.com

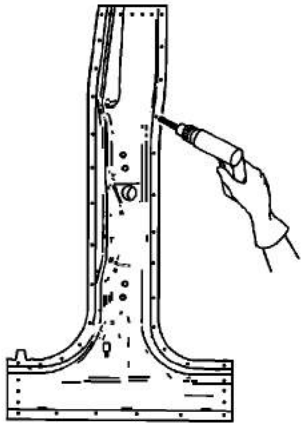

Note: If the location of the original plug weld holes can not be determined, space the plug weld holes every 40 mm (1 1/2 in) apart.

4. Drill 8 mm (5/16 in) plug weld holes in the service part as necessary in the locations noted from the original panel and along the sectioning cut.
5. Prepare all mating surfaces as necessary.
6. Apply GM-approved Weld-Thru Coating or equivalent to all mating surfaces. Refer to Anti-Corrosion Treatment and Repair.

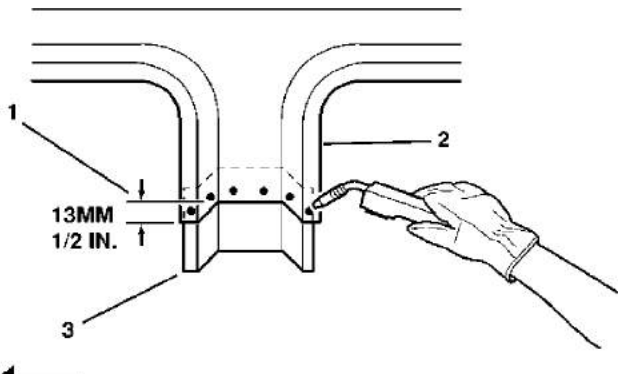

7. Fit the backing plate halfway into the sectioning joint, clamp and plug weld to the vehicle.
8. Position the center pillar.

cardiagn.com

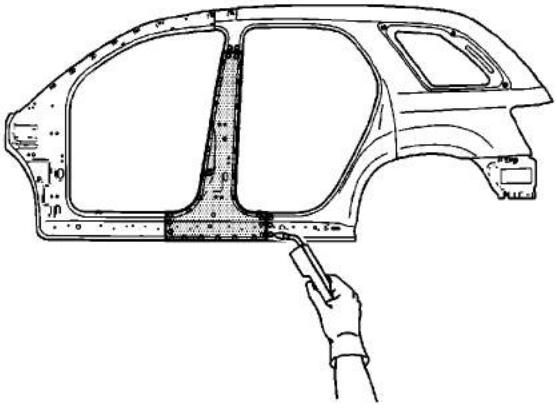

9. Plug weld accordingly.

   Note: To create a solid weld with minimum heat distortion make 25 mm (1 in) stitch welds along the seam with 25 mm (1 in) gaps between. Then go back and complete the stitch weld.

10. Stitch the weld sectioning joint.
11. Clean and prepare all welded surfaces.
12. Apply the sealers and anti-corrosion materials to the repair area, as necessary. Refer to Anti-Corrosion Treatment and Repair.
13. Paint and repair the area. Refer to Basecoat/Clearcoat Paint Systems.
14. Install all related panels and components.
15. Connect the negative battery cable. Refer to Battery Negative Cable Disconnection and Connection.
16. Enable the SIR system. Refer to SIR Disabling and Enabling.

cardiagn.com

Quarter Panel Sectioning

Removal Procedure

Note: Section in specified areas only. Sectioning outside of these areas may compromise the structural integrity of the vehicle. The door frame can be replaced at factory seams, but requires the removal of the windshield and the roof. The sectioning procedures have been developed as a more cost-effective alternative to complete replacement. The specific area to be sectioned is determined by the extent of the damage to the vehicle.

Note: When replacing panels that involve servicing of stationary glass, refer to Quarter Window Replacement before performing any priming or refinishing.

1. Disable the supplemental inflatable restraint (SIR) system. Refer to SIR Disabling and Enabling.
2. Disconnect the negative battery cable. Refer to Battery Negative Cable Disconnection and Connection.

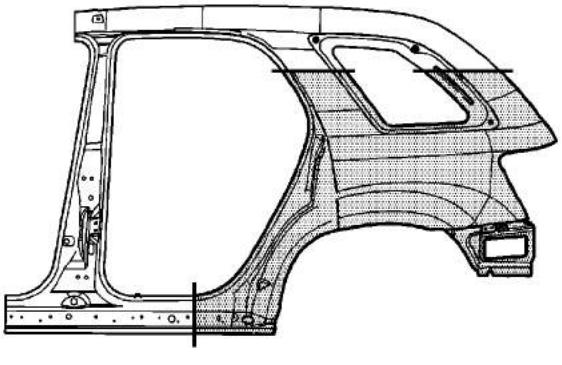

3. Remove all related panels and components.
4. Repair as much of the damage as possible to factory specifications. Refer to Dimensions - Body.

Warning: Foam sound deadeners must be removed from areas within 152.4 mm (6 in) of where flame is to be used for body repairs. When reinstalling foam sound deadeners, avoid inhaling fumes as bodily injury may result.

5. Note the location and remove the sealers and anti-corrosion materials from the repair area, as necessary. Refer to Anti-Corrosion Treatment and Repair.

cardiagn.com

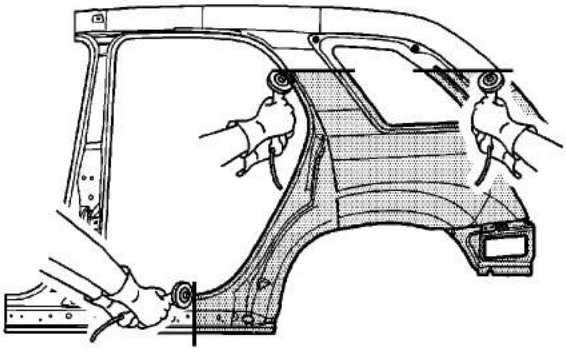

Note: Do NOT damage any inner panels or reinforcements.

6. Cut the panel where sectioning is to be performed.
7. Perform additional sectioning procedures. Refer to Structure Identification.

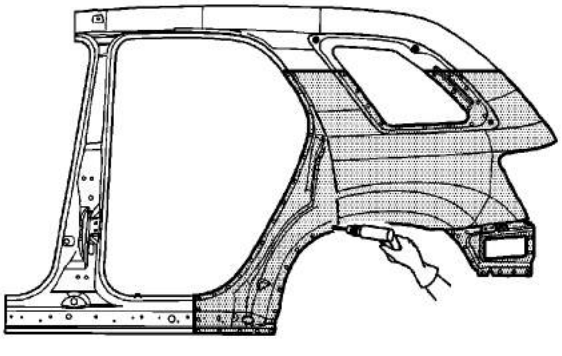

8. Locate and drill out all factory welds. Note the number and location of the welds for installations of the service part.
9. Remove the damaged quarter panel.

Installation Procedure

1. Cut the replacement quarter panel in corresponding locations to fit the original panel. The

cardiagn.com

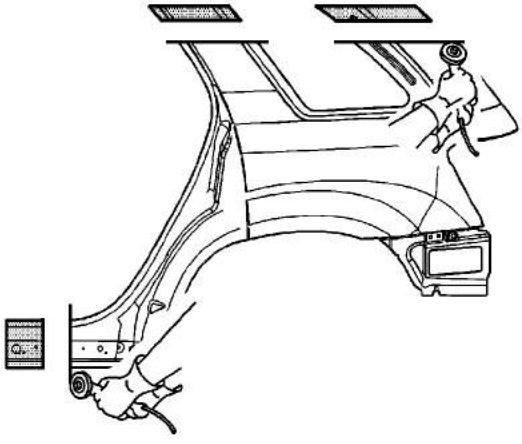

2. Create two 50 mm (2 in) backing plates and one 100 mm (4 in) backing plate from the unused portion of the service part. Trim the backing plates as necessary to fit behind the sectioning joints where no reinforcements exist.
3. Drill 8 mm (5/16 in) plug weld holes along the sectioning cut on the remaining original part. Locate these holes 13 mm (1/2 in) from the edge and spaced 40 mm (1½ in) apart.

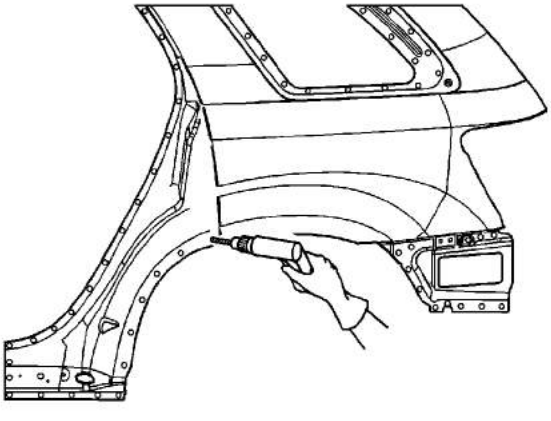

Note: If the location of the original plug weld holes can not be determined, space the plug weld holes every 40 mm (1 1/2 in) apart.

4. Drill 8 mm (5/16 in) plug weld holes in the service part as necessary in the locations noted from the original panel and along the sectioning cut.

cardiagn.com

Corrosion Treatment and Repair.

7. Fit the backing plates halfway into the sectioning joints, clamp and plug weld to the vehicle.
8. Position the quarter panel.

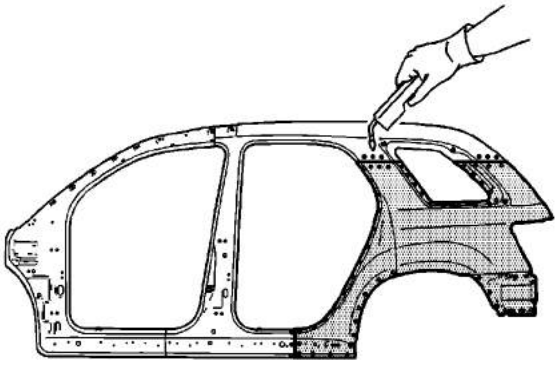

9. Plug weld accordingly.

Note: To create a solid weld with minimum heat distortion make 25 mm (1 in) stitch welds along the seam with 25 mm (1 in) gaps between. Then go back and complete the stitch weld.

10. Stitch the weld sectioning joint.
11. Clean and prepare all welded surfaces.
12. Apply the sealers and anti-corrosion materials to the repair area, as necessary. Refer to Anti-Corrosion Treatment and Repair.
13. Paint and repair the area. Refer to Basecoat/Clearcoat Paint Systems.
14. Install all related panels and components.
15. Connect the negative battery cable. Refer to Battery Negative Cable Disconnection and Connection.
16. Enable the SIR system. Refer to SIR Disabling and Enabling.

cardiagn.com

Rail Replacement - Rear Section

Removal Procedure

Warning: Refer to Approved Equipment for Collision Repair Warning in the Preface section.

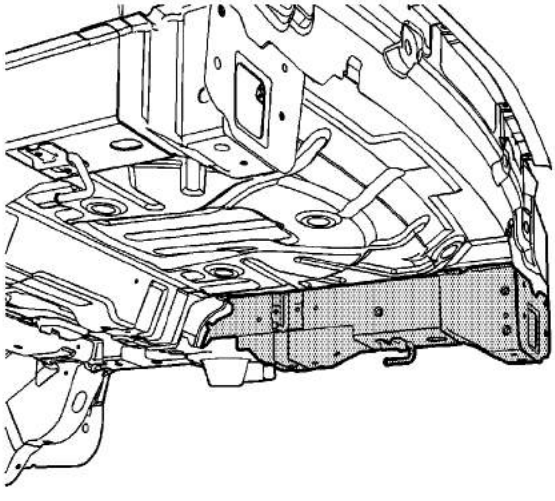

1. Disable the supplemental inflatable restraint (SIR) system. Refer to SIR Disabling and Enabling.
2. Disconnect the negative battery cable. Refer to Battery Negative Cable Disconnection and Connection.
3. Remove all related panels and components.
4. Repair as much of the damage as possible to factory specifications. Refer to Dimensions - Body.
5. Note the location and remove the sealers and anti-corrosion materials from the repair area, as necessary. Refer to Anti-Corrosion Treatment and Repair.

cardiagn.com

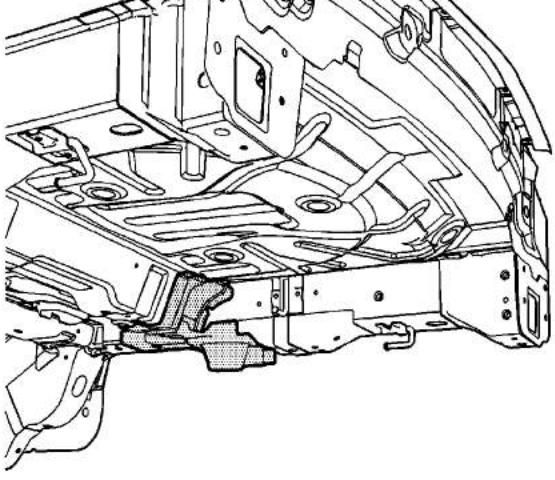

Note: Do not damage any inner panels or reinforcements.

6. Locate and drill out all factory welds in the rear spring seat and number 5 bar extension. Note the number and location of the welds for installation of the parts.
7. Remove the rear spring seat and number 5 bar extension.

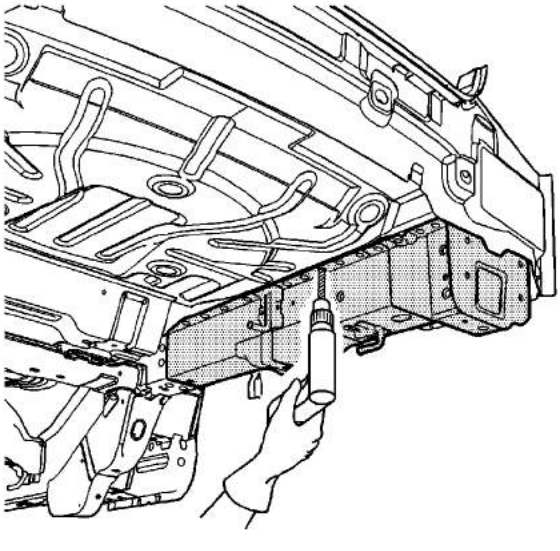

8. Locate and drill out all factory welds in the rear rail section. Note the number and location of the welds for installation of the rear rail section.

cardiagn.com

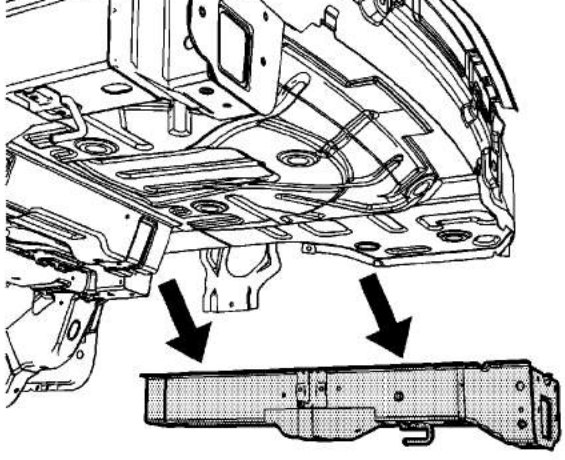

9. Remove the damaged rear rail section.

Installation Procedure

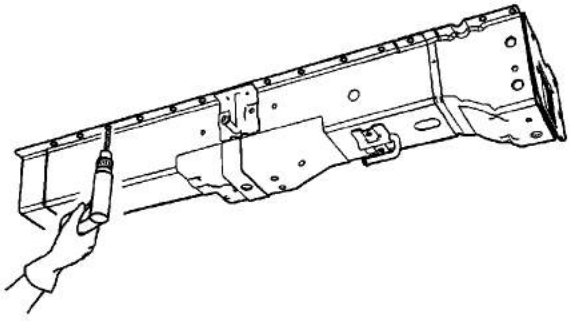

Note: If the location of the original plug weld holes can not be determined, space the plug weld holes every 40 mm (1 1/2 in) apart.

Some panels may have structural weld-thru adhesive. It is necessary to replace the weld-thru adhesive with an additional spot weld between each factory spot weld.

cardiagn.com

2. Prepare all mating surfaces as necessary.
3. Apply GM-approved Weld-Thru Coating or equivalent to all mating surfaces. Refer to Anti-Corrosion Treatment and Repair.

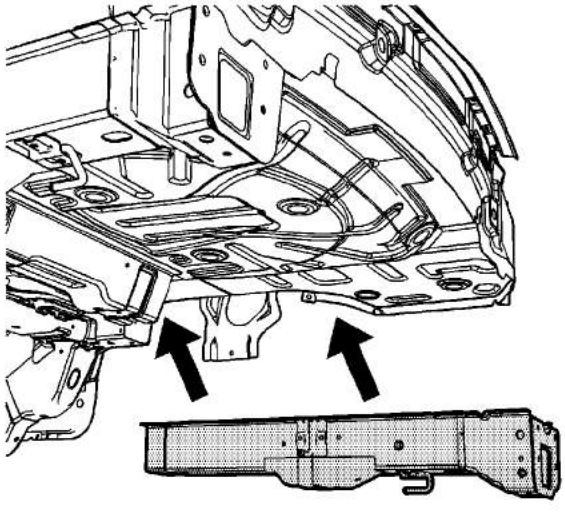

4. Position the rear rail section to the vehicle using 3-dimensional measuring equipment. Clamp the parts into place.

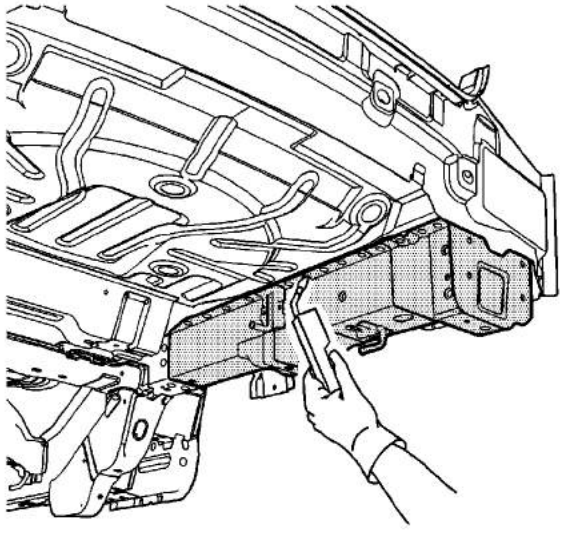

5. Plug the weld accordingly.

cardiagn.com

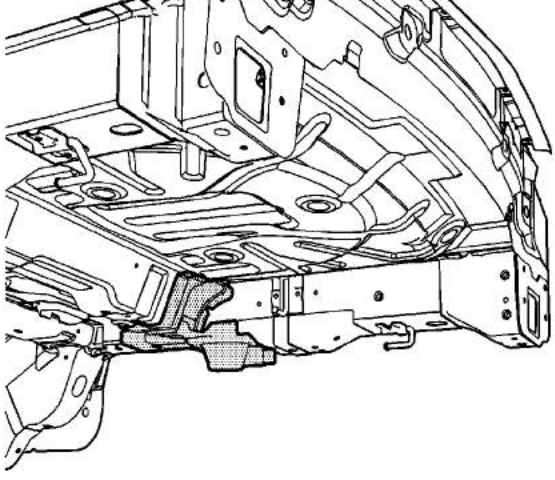

6. Position the rear spring seat and number 5 bar extension to the vehicle using 3-dimensional measuring equipment. Clamp the parts into place.
7. Plug weld accordingly.
8. Clean and prepare all welded surfaces.
9. Apply the sealers and anti-corrosion materials to the repair area, as necessary. Refer to Anti-Corrosion Treatment and Repair.
10. Paint the repair area. Refer to Basecoat/Clearcoat Paint Systems.
11. Install all related panels and components.
12. Connect the negative battery cable. Refer to Battery Negative Cable Disconnection and Connection.
13. Enable the SIR system. Refer to SIR Disabling and Enabling

cardiagn.com

Resistance Spot Welded Full Panel Replacement

Note: Use this procedure for all panels that are replaced at the factory seams, unless a specific procedure exists in the Collision Repair section of this vehicle's service information.

Removal Procedure

Warning: Refer to Approved Equipment for Collision Repair Warning in the Preface section.

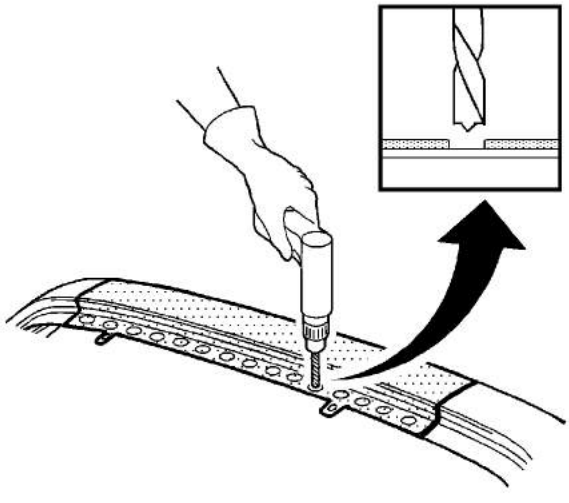

1. Disable the SIR system. Refer to SIR Disabling and Enabling.
2. Disconnect the negative battery cable. Refer to Battery Negative Cable Disconnection and Connection.
3. Remove all related panels and components.
4. Repair as much of the damage as possible to factory specifications.

   Warning: Refer to Foam Sound Deadeners Warning in the Preface section.

5. Note the location and remove the sealers and anti-corrosion materials from the repair area, as necessary. Refer to Anti-Corrosion Treatment and Repair.

   Note: Do not damage any inner panels or reinforcements.

6. Locate and drill out all factory welds. Note the number and location of the welds for installation of the service part.

cardiagn.com

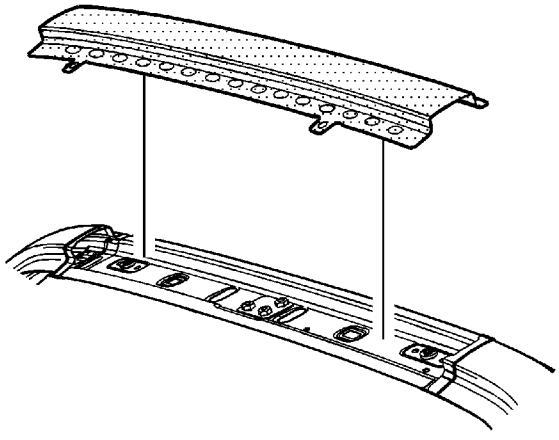

7. Remove the damaged part.

Installation Procedure

Note: If the location of the original plug weld holes cannot be determined, space the plug weld holes every 40 mm (1½ in) apart. Where structural adhesive was present, space the plug weld holes every 20 mm (3/4 in) apart.

1. Prepare all mating surfaces as necessary.
2. Apply GM-approved Weld-Thru Coating or equivalent to all mating surfaces. Refer to Anti-Corrosion Treatment and Repair.
3. Position the service part. Clamp in place.

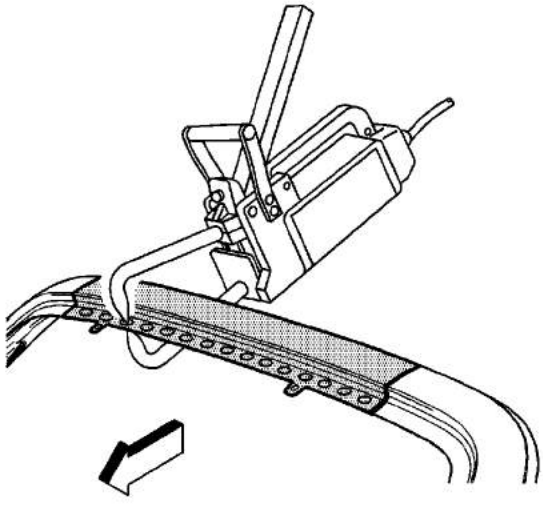

4. Apply welds accordingly.

cardiagn.com

Corrosion Treatment and Repair.
7. Paint the repair area. Refer to Basecoat/Clearcoat Paint Systems.
8. Install all related panels and components.
9. Connect the negative battery cable. Refer to Battery Negative Cable Disconnection and Connection.
10. Enable the SIR system. Refer to SIR Disabling and Enabling.

cardiagn.com

MIG Welded Full Panel Replacement

Note: Use this procedure for all panels that are replaced at the factory seams, unless a specific procedure exists in the Collision Repair section of this vehicle's service information.

Removal Procedure

Warning: Refer to Approved Equipment for Collision Repair Warning in the Preface section.

1. Disable the SIR system. Refer to SIR Disabling and Enabling.
2. Disconnect the negative battery cable. Refer to Battery Negative Cable Disconnection and Connection.
3. Remove all related panels and components.
4. Repair as much of the damage as possible to factory specifications.

   Warning: Refer to Foam Sound Deadeners Warning in the Preface section.

5. Note the location and remove the sealers and anti-corrosion materials from the repair area, as necessary. Refer to Anti-Corrosion Treatment and Repair.

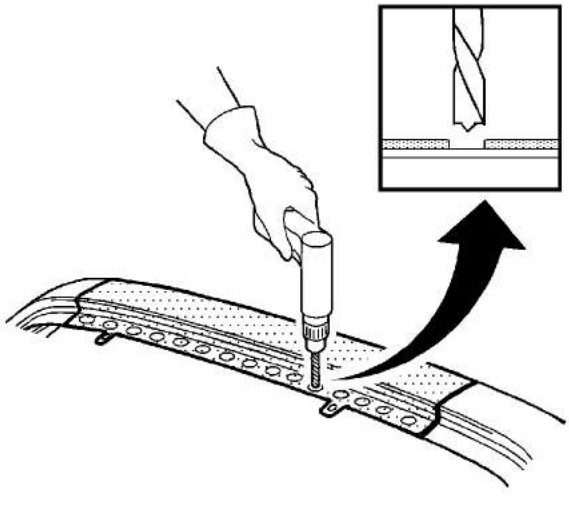

Note: Do not damage any inner panels or reinforcements.

6. Locate and drill out all factory welds. Note the number and location of the welds for installation of the service part.

cardiagn.com

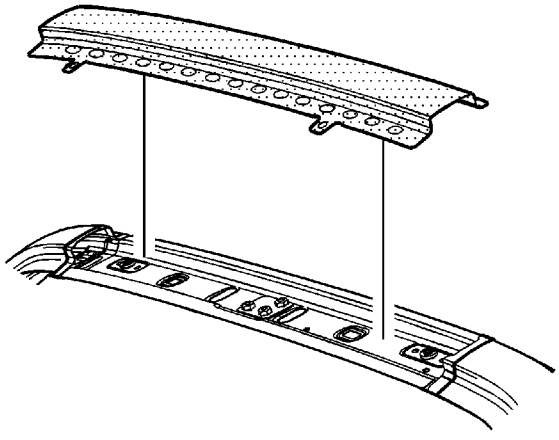

7. Remove the damaged part.

Installation Procedure

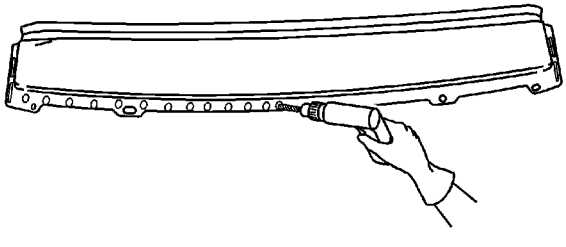

Note: If the location of the original plug weld holes can not be determined, space the plug weld holes every 40 mm (1 1/2 in) apart. Where structural adhesive was present, space the plug weld holes every 20 mm (3/4 in) apart.

1. Drill 8 mm (5/16 in) plug weld holes in the service part as necessary in the locations noted from the original panel.

cardiagn.com

4. Apply GM-approved Weld-Thru Coating or equivalent to all mating surfaces. Refer to Anti-Corrosion Treatment and Repair.
5. Position the service part. Clamp in place.

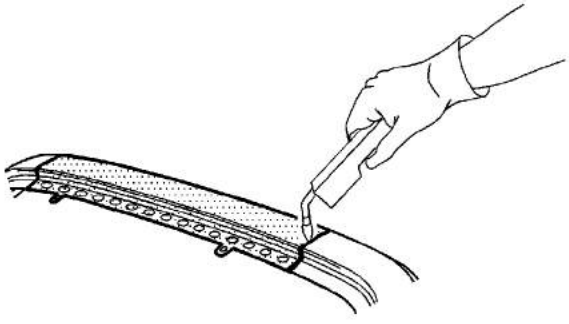

6. Plug weld accordingly.
7. Clean and prepare all welded surfaces.
8. Apply the sealers and anti-corrosion materials to the repair area, as necessary. Refer to Anti-Corrosion Treatment and Repair.
9. Paint the repair area. Refer to Basecoat/Clearcoat Paint Systems.
10. Install all related panels and components.
11. Connect the negative battery cable. Refer to Battery Negative Cable Disconnection and Connection.
12. Enable the SIR system. Refer to SIR Disabling and Enabling.

cardiagn.com