Workshop Manual

Audi A4 2008 ➤
Audi A5 Cabriolet 2009 ➤
Audi A5 Coupé 2008 ➤

4-cylinder direct injection engine (1.8, 2.0 ltr. 4-valve TFSI - generation II)									
Engine ID	CAB B	CAB A	CAB D	CAE A	CAE B	CDH B	CDN B	CDN C	CDH A
	CDZ A	CAD A	CCU A	CFK A	CPM A	CAE D	CPM B		

Edition 04.2017

Protected by copyright. Copying for private or commercial purposes, in part or in whole, is not permitted unless authorised by AUDI AG. AUDI AG does not guarantee or accept any liability with respect to the correctness of information in this document. Copyright by AUDI AG.

List of Workshop Manual Repair Groups

Repair Group

00 - Technical data
10 - Removing and installing engine
13 - Crankshaft group
15 - Cylinder head, valve gear
17 - Lubrication
19 - Cooling
21 - Turbocharging/supercharging
24 - Mixture preparation - injection
26 - Exhaust system
28 - Ignition system

Protected by copyright. Copying for private or commercial purposes, in part or in whole, is not permitted unless authorised by AUDI AG. AUDI AG does not guarantee or accept any liability with respect to the correctness of information in this document. Copyright by AUDI AG.

Technical information should always be available to the foremen and mechanics, because their careful and constant adherence to the instructions is essential to ensure vehicle road-worthiness and safety. In addition, the normal basic safety precautions for working on motor vehicles must, as a matter of course, be observed.

All rights reserved.
No reproduction without prior agreement from publisher.

Copyright © 2017 Audi AG, Ingolstadt

Contents

00 - Technical data 1
1 Identification 1
2 Safety precautions 2
3 Repair instructions 3

10 - Removing and installing engine 4
1 Removing and installing engine 4
1.1 Removing engine 4
1.2 Securing engine to engine and gearbox support 19
1.3 Installing engine 19
2 Assembly mountings 23
2.1 Exploded view - assembly mountings 23
2.2 Removing and installing engine mountings 24
2.3 Supporting engine in installation position 25
3 Engine cover panel 27

13 - Crankshaft group 28
1 Cylinder block (pulley end) 28
1.1 Exploded view - cylinder block (pulley end) 28
1.2 Removing and installing poly V-belt 28
1.3 Removing and installing tensioner for poly V-belt 28
1.4 Removing and installing vibration damper 28
1.5 Removing and installing bracket for ancillaries 29
2 Cylinder block (gearbox end) 33
3 Crankshaft 34
4 Balance shaft 35
5 Pistons and conrods 36

15 - Cylinder head, valve gear 37
1 Timing chain cover 37
1.1 Exploded view - timing chain cover 37
1.2 Removing and installing timing chain cover 37
1.3 Renewing oil seal for vibration damper 37
2 Chain drive 38
2.1 Exploded view - camshaft timing chains 38
2.2 Exploded view - drive chain for balance shaft 38
2.3 Removing and installing bearing saddle 38
2.4 Removing camshaft timing chain from camshafts 38
2.5 Removing and installing camshaft timing chain 39
2.6 Removing and installing drive chain for balance shaft 39
2.7 Checking valve timing 39
3 Cylinder head 40
3.1 Exploded view - cylinder head 40
3.2 Removing and installing cylinder head 40
3.3 Checking compression 41
4 Valve gear 42
4.1 Exploded view - valve gear 42
4.2 Removing and installing camshaft 42
4.3 Installing ball for slider 42
4.4 Removing and installing actuators for camshaft adjustment 42
4.5 Removing and installing camshaft control valve 1 N205 42

Protected by copyright. Copying for private or commercial purposes, in part or in whole, is not permitted unless authorised by AUDI AG. AUDI AG does not guarantee or accept any liability with respect to the correctness of information in this document. Copyright by AUDI AG.

4.6 Removing and installing valve stem oil seals 43
5 Inlet and exhaust valves 44

17 - Lubrication 45

1 Sump/oil pump 45
1.1 Exploded view - sump/oil pump 45
1.2 Engine oil 45
1.3 Removing and installing sump (bottom section) 45
1.4 Removing and installing oil pump 46
1.5 Removing and installing sump (top section) 46
1.6 Removing and installing oil level and oil temperature sender G266 46
2 Engine oil cooler 47
3 Crankcase breather 48
3.1 Exploded view - crankcase breather system 48
3.2 Removing and installing oil separator 48
4 Oil filter/oil pressure switches 50

19 - Cooling 51

1 Cooling system/coolant 51
1.1 Connection diagram - coolant hoses 51
1.2 Checking cooling system for leaks 56
1.3 Draining and filling cooling system 56
2 Coolant pump/thermostat assembly 62
2.1 Exploded view - coolant pump/thermostat 62
2.2 Exploded view - electric coolant pump 62
2.3 Exploded view - coolant valves 65
2.4 Removing and installing electric coolant pump 65
2.5 Removing and installing coolant pump 68
2.6 Removing and installing toothed belt for coolant pump 69
2.7 Removing and installing thermostat 69
2.8 Checking thermostat 69
2.9 Removing and installing coolant temperature sender G62 69
2.10 Removing and installing coolant valves 70
3 Coolant pipes 72
3.1 Exploded view - coolant pipes 72
3.2 Removing and installing coolant pipes 73
4 Radiator/radiator fans 76
4.1 Exploded view - radiator/radiator fans 76
4.2 Removing and installing radiator 77
4.3 Removing and installing radiator fan V7 84

21 - Turbocharging/supercharging 86

1 Turbocharger 86
1.1 Exploded view - turbocharger 86
1.2 Removing and installing turbocharger 86
1.3 Checking vacuum unit for turbocharger 89
1.4 Renewing vacuum unit for turbocharger 89
1.5 Adjusting vacuum unit for turbocharger 89
2 Charge air system 90
2.1 Exploded view - charge air system 90
2.2 Exploded view - hose connections for charge air system 91
2.3 Removing and installing charge air cooler 91
2.4 Removing and installing charge pressure sender G31 93
2.5 Checking charge air system for leaks 93

This document is copyright. Copying for private or commercial purposes, in part or in whole, is not permitted unless authorised by AUDI AG. AUDI AG does not guarantee or accept any liability with respect to the correctness of information in this document. Copyright by AUDI AG.

24 - Mixture preparation - injection 94

1 Injection system 94
1.1 Overview of fitting locations - injection system 94
1.2 Checking fuel system for leaks 105

2 Vacuum system 106
2.1 Checking vacuum system 106
2.2 Checking dual non-return valve 106
2.3 Removing and installing activated charcoal filter solenoid valve 1 N80 106

3 Air cleaner 108
3.1 Exploded view - air cleaner housing 108
3.2 Removing and installing air cleaner housing 109

4 Intake manifold 111
4.1 Exploded view - intake manifold 111
4.2 Removing and installing intake manifold 111
4.3 Removing and installing throttle valve module J338 119
4.4 Cleaning throttle valve module 119
4.5 Checking intake manifold change-over function 120

5 Injectors 121

6 Senders and sensors 122
6.1 Removing and installing intake air temperature sender G42 122
6.2 Removing and installing air mass meter G70 122
6.3 Removing and installing fuel pressure sender G247 122
6.4 Checking fuel pressure sender G247 122

7 High-pressure pump 123

8 Lambda probe 124
8.1 Exploded view - Lambda probe 124
8.2 Removing and installing Lambda probe 124

9 Engine control unit 127
9.1 Removing and installing engine control unit J623 127
9.2 Wiring and component check 130

26 - Exhaust system 131

1 Exhaust pipes/silencers 131
1.1 Exploded view - silencers 131
1.2 Removing and installing front exhaust pipe 137
1.3 Separating exhaust pipes/silencers 138
1.4 Stress-free alignment of exhaust system 141
1.5 Renewing tailpipes 144
1.6 Checking exhaust system for leaks 145

2 Emission control system 146
2.1 Exploded view - emission control system 146
2.2 Removing and installing catalytic converter 146

28 - Ignition system 150

1 Ignition system 150

Protected by copyright. Copying for private or commercial purposes, in part or in whole, is not permitted unless authorised by AUDI AG. AUDI AG does not guarantee or accept any liability with respect to the correctness of information in this document. Copyright by AUDI AG.

Protected by copyright. Copying for private or commercial purposes, in part or in whole, is not permitted unless authorised by AUDI AG. AUDI AG does not guarantee or accept any liability with respect to the correctness of information in this document. Copyright by AUDI AG.

00 – Technical data

1 Identification

(ARL005171; Edition 04.2017)

All information can be found in ⇒ Servicing 4-cylinder engine, 2.0 ltr. 4-valve TFSI; Rep. gr. 00 ; Identification .

Protected by copyright. Copying for private or commercial purposes, in part or in whole, is not permitted unless authorised by AUDI AG. AUDI AG does not guarantee or accept any liability with respect to the correctness of information in this document. Copyright by AUDI AG.

2 Safety precautions

All information can be found in ⇒ Servicing 4-cylinder engine, 2.0 ltr. 4-valve TFSI; Rep. gr. 00 ; Safety precautions .

Protected by copyright. Copying for private or commercial purposes, in part or in whole, is not permitted unless authorised by AUDI AG. AUDI AG does not guarantee or accept any liability with respect to the correctness of information in this document. Copyright by AUDI AG.

3 Repair instructions

All information can be found in ⇒ Servicing 4-cylinder engine, 2.0 ltr. 4-valve TFSI; Rep. gr. 00 ; Repair instructions .

Protected by copyright. Copying for private or commercial purposes, in part or in whole, is not permitted unless authorised by AUDI AG. AUDI AG does not guarantee or accept any liability with respect to the correctness of information in this document. Copyright by AUDI AG.

10 – Removing and installing engine

1 Removing and installing engine

⇒ “1.1 Removing engine”, page 4

⇒ “1.2 Securing engine to engine and gearbox support”, page 19

⇒ “1.3 Installing engine”, page 19

1.1 Removing engine

Special tools and workshop equipment required

- Lifting tackle - 2024 A-

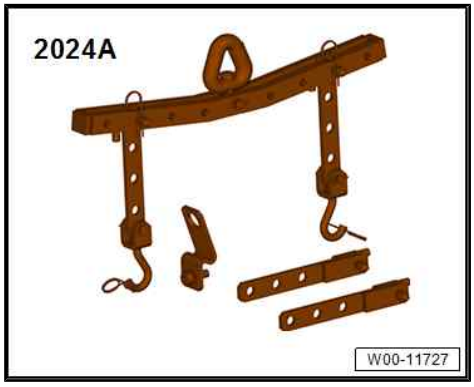

Protected by copyright. Copying for private or commercial purposes, in part or in whole, is not permitted unless authorised by AUDI AG. AUDI AG does not guarantee or accept any liability with respect to the correctness of information in this document. Copyright by AUDI AG.

- Support bracket - 10-222A-

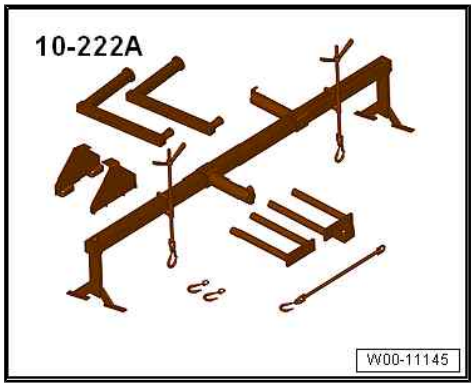

- Shackle - 10-222A/12-

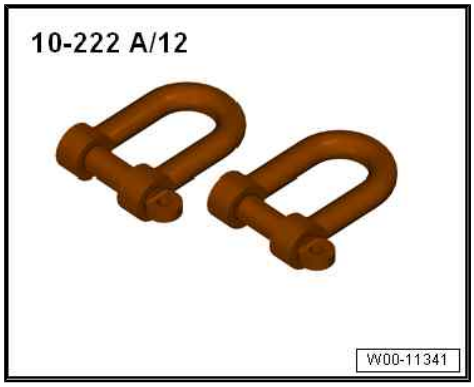

Protected by copyright. Copying for private or commercial purposes, in part or in whole, is not permitted unless authorised by AUDI AG. AUDI AG does not guarantee or accept any liability with respect to the correctness of information in this document. Copyright by AUDI AG.

- Removal lever - 80 - 200-

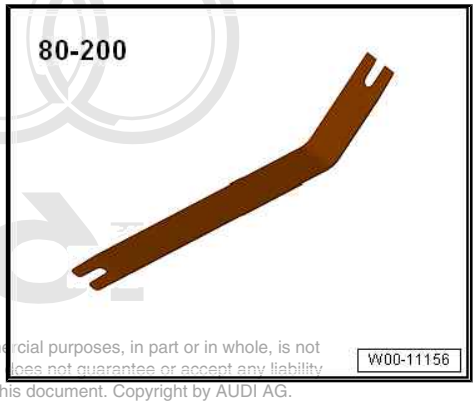

- Workshop hoist - VAS 6100-

- Engine bung set - VAS 6122-

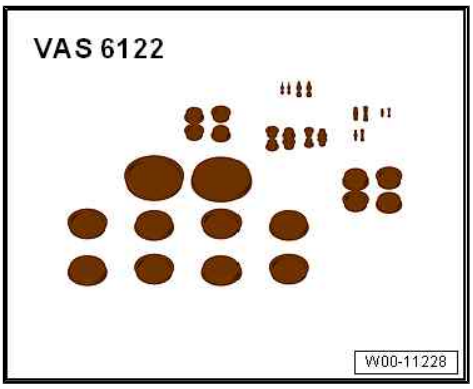

- Drip tray for workshop hoist - VAS 6208-

- Hose clip pliers - VAS 6362-

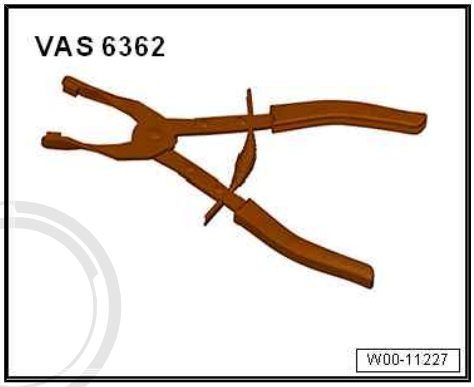

- Engine and gearbox jack - VAS 6931-

Protected by copyright. Copying for private or commercial purposes, in part or in whole, is not permitted unless authorised by AUDI AG. AUDI AG does not guarantee or accept any liability with respect to the correctness of information in this document. Copyright by AUDI AG

- Locking pin - T10060 A- for vehicles with electromechanical power steering

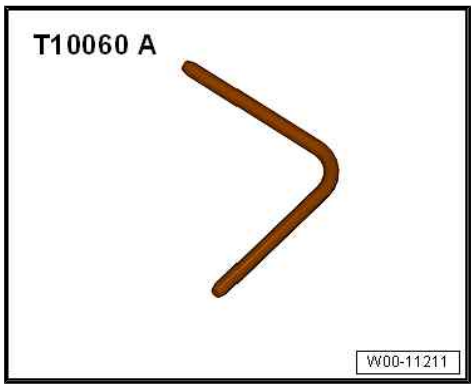

- Gearbox support - T10337-

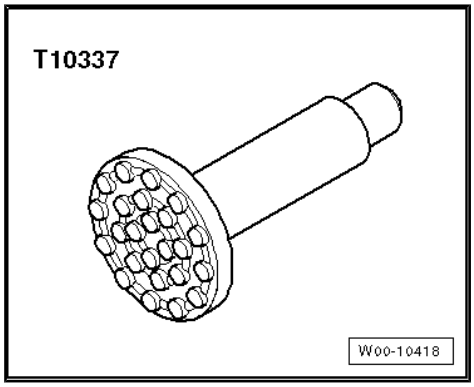

- Locking tool - T40098- for vehicles with hydraulic power steering

- Release tool - T40138-

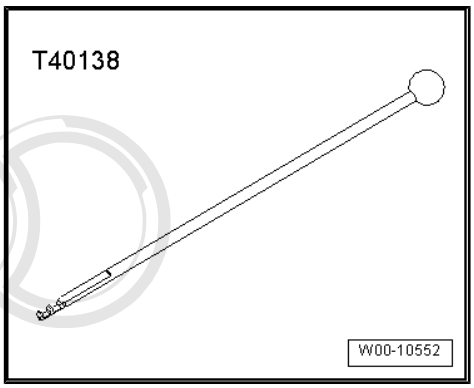

Procedure

WARNING

Make sure the vehicle cannot tip over when the engine is removed.

- ***Secure the vehicle, to do so, the luggage compartment must be empty.***

Protected by copyright. Copying for private or commercial purposes, in part or in whole, is not permitted unless authorised by AUDI AG. AUDI AG does not guarantee or accept any liability with respect to the correctness of information in this document. Copyright by AUDI AG.

Note

- *Lift out engine without gearbox.*
- *Fit all cable ties in the original positions when installing.*
- *On four-wheel drive vehicles the electromechanical parking brake must be released before disconnecting the battery, so that the propshaft can be turned during removal.*
- *All open inlet and exhaust ports must be sealed with suitable plugs (e.g. from engine bung set - VAS 6122-).*

– Disconnect battery ⇒ Electrical system; Rep. gr. 27 ; Battery; Disconnecting and connecting battery .

– Remove both front wheels ⇒ Running gear, axles, steering; Rep. gr. 44 ; Wheels, tyres .

– Remove wheel spoilers (front) on both sides ⇒ General body repairs, exterior; Rep. gr. 66 ; Wheel housing liners; Exploded view - wheel housing liner (front) .

– Remove noise insulation ⇒ General body repairs, exterior; Rep. gr. 66 ; Noise insulation; Removing and installing noise insulation .

– Set service position ⇒ General body repairs, exterior; Rep. gr. 50 ; Lock carrier; Setting service position and returning to normal position .
– Remove front exhaust pipe/front silencer ⇒ page 137 .
– Unplug connector -1- from air mass meter - G70- .
– Disconnect air intake hose -2-.
– Pull air cleaner housing upwards -arrows-.
– Remove engine cover panel ⇒ Servicing 4-cylinder engine, 1.8 ltr., 2.0 ltr. 4-valve TFSI; Rep. gr. 10 ; Engine cover panel; Removing and installing engine cover panel .
– Remove plenum chamber cover ⇒ General body repairs, exterior; Rep. gr. 50 ; Bulkhead; Removing and installing plenum chamber cover .

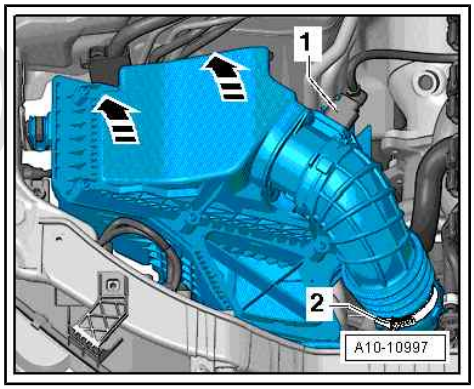

Protected by copyright. Copying for private or commercial purposes, in part or in whole, is not permitted unless authorized by AUDI AG. AUDI AG does not guarantee or accept any liability with respect to the correctness of information in this document. Copyright by AUDI AG.

– Lift off foam plastic block -1- on both sides of vehicle -arrows-.

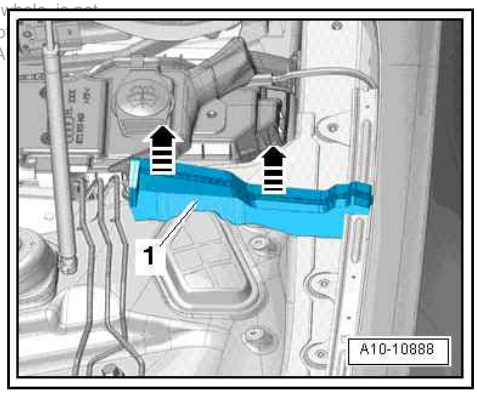

– Release retainer -arrow A- and open cover -arrow B-.

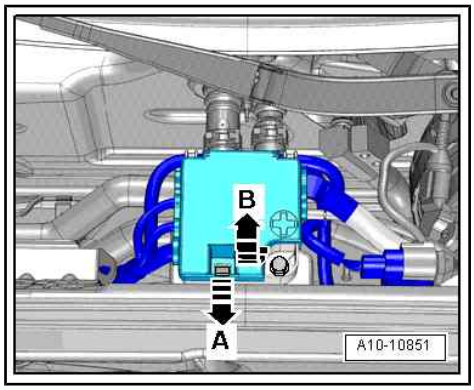

– Remove nuts -1 ... 3- for electrical wiring.
– Detach electrical connector -4- from bracket and unplug.
– Remove bolt -5- and detach wiring junction from body brace -arrow-.

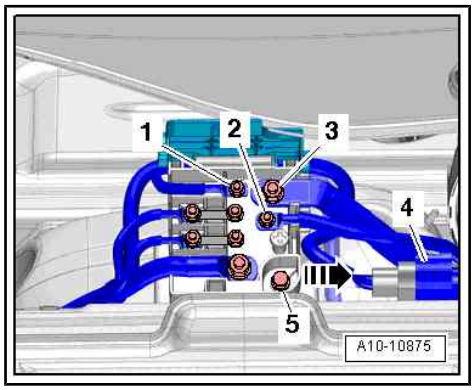

– Working from wheel housing, release catches using a 5.5 mm ring spanner -item 1- and remove wiring protector -2- from above.

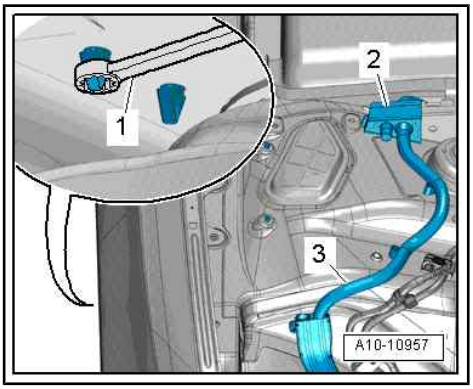

– Wiring duct (version 1): release catch -arrow B- and move wiring harness clear by pulling it towards front -arrow A-.

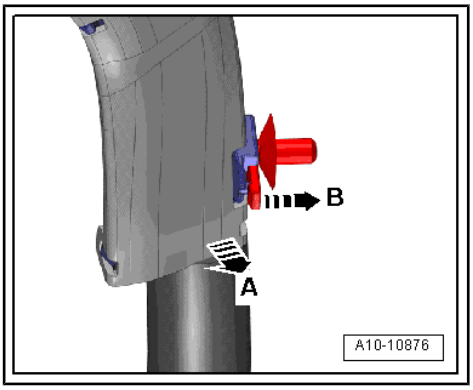

– Wiring duct (version 2): release catch -arrow- to open wiring duct -1- and move wiring harness clear.

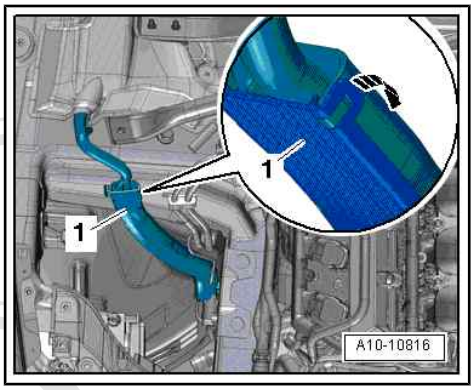

– Remove nut -1- and swivel filler neck for washer fluid reservoir slightly upwards -arrow A-.
– Pull filler neck -2- with filler pipe out of washer fluid reservoir and through opening in body -arrow B-.
– Remove body brace ⇒ Running gear, axles, steering; Rep. gr. 40 ; Suspension strut, upper links; Removing and installing body brace .

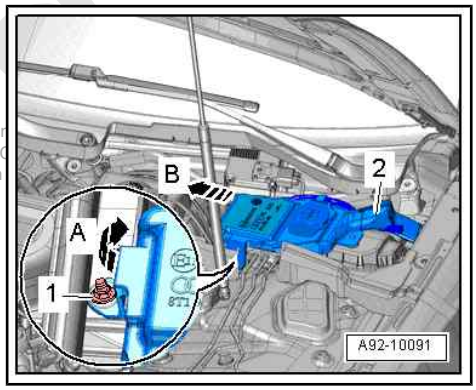

Protected by copyright. Copying for private or comm
permitted unless authorised by AUDI AG. AUDI AG
with respect to the correctness of information in

– Remove bolts -arrows- and detach cover for electronics box in engine compartment.
– Remove nut -1- and move electrical wiring clear.

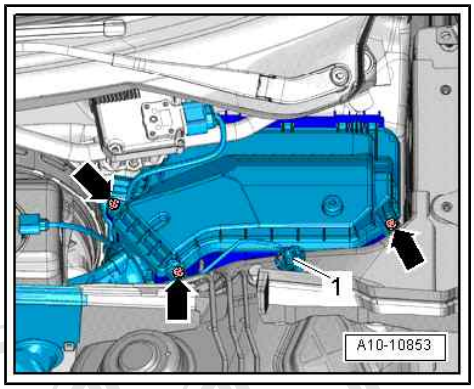

– Release catches -arrows A- and take out engine control unit -arrow B-.

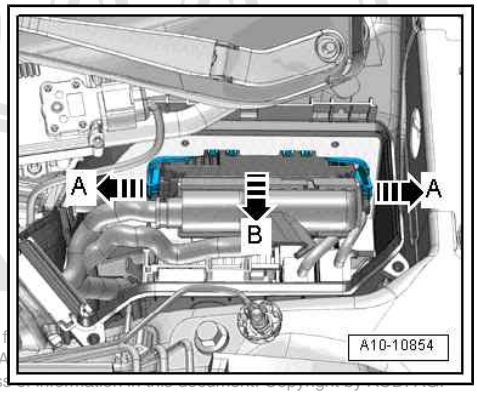

Protected by copyright. Copying f
permitted unless authorised by A
with respect to the correctness

– Unplug electrical connectors -4- and unscrew nut -3- for wiring.
– If fitted, unplug electrical connector -2-.
– Release catches -arrow- and detach relay carrier with fuse holder -1-.

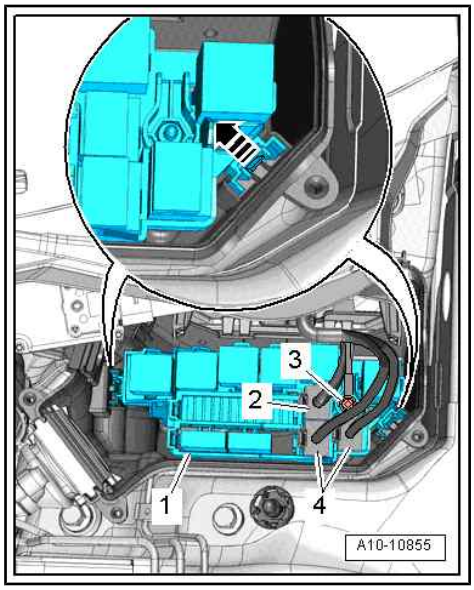

– Release catches -arrows A- and lift off wiring protector -1- -arrow B-.

– Disengage engine wiring harness at electronics box in engine compartment and move clear.

– Place wiring harness on engine and secure engine control unit to prevent it from dropping.

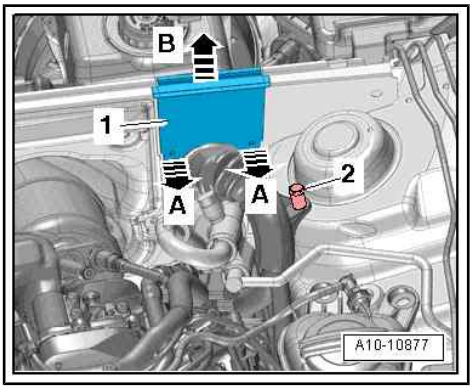

WARNING

The cooling system is under pressure when the engine is hot. Hot steam/hot coolant can escape - risk of scalding.

Danger of scalding skin and other parts of the body.

- *Put on protective gloves.*
- *Put on safety goggles.*
- *Cover filler cap on expansion tank with a cloth and open carefully to release pressure.*

– Open filler cap on coolant expansion tank.

– Place drip tray for workshop hoist - VAS 6208- beneath engine.

– Unscrew radiator drain tap -1- at connection and drain off coolant, then detach connection -2- from radiator.

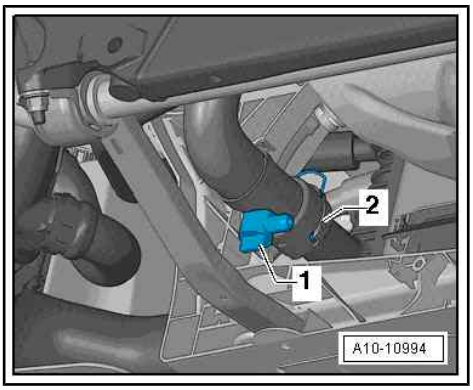

– Remove nuts -3- and longitudinal struts -2- on both sides.

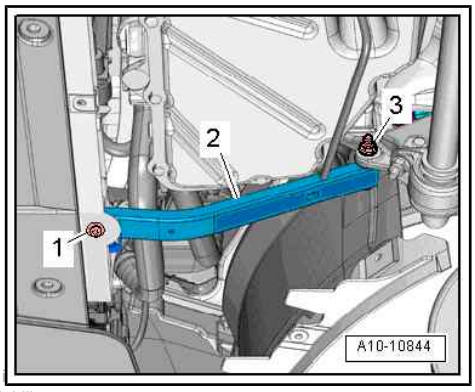

Protected by copyright. Copying for private or commercial purposes, in part or in whole, is not permitted unless authorised by AUDI AG. AUDI AG does not guarantee or accept any liability with respect to the correctness of information in this document. Copyright by AUDI AG.

– Open hose clip -arrow-, detach air hose and swivel to side.

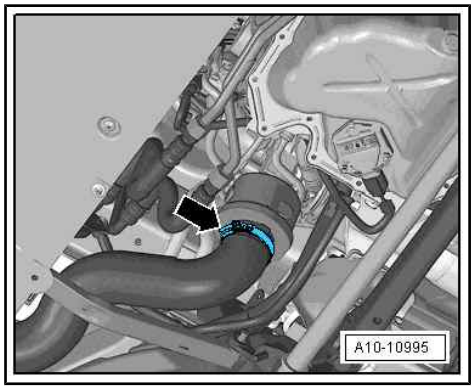

– Unscrew nut -1- on longitudinal member (right-side) and move earth cables clear.
– Remove nut -2- for bracket with wiring on right-hand side of vehicle.

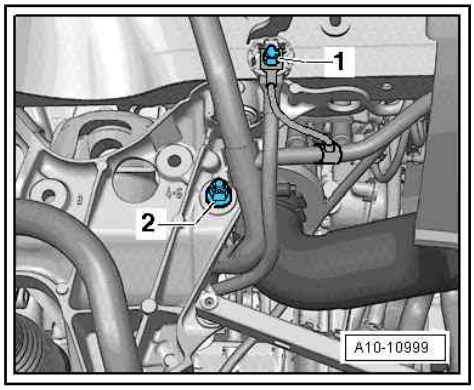

– Unplug electrical connector -1- for radiator fan (push retainer to the rear -arrow- and press down release catch).
– Place wiring harness on engine and secure to prevent it from dropping.

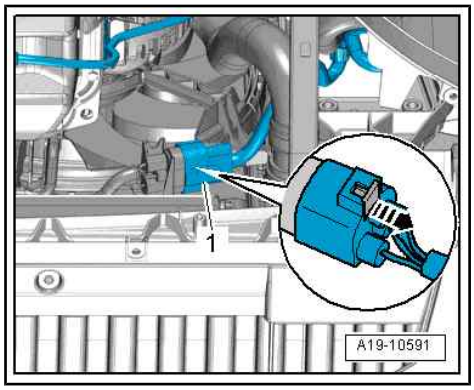

– Disconnect vacuum hose -3- on rear of plenum chamber partition panel -arrow- and detach vacuum connection -2- from plenum chamber partition panel.

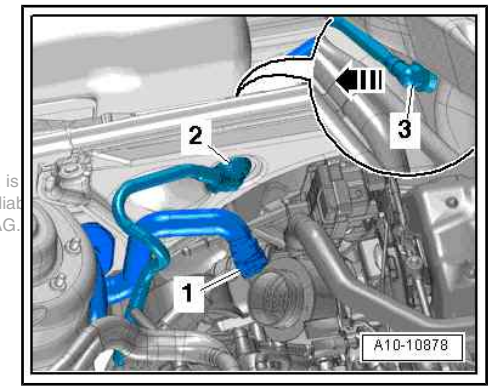

Protected by copyright. Copying for private or commercial purposes, in part or in whole, is
permitted unless authorised by AUDI AG. AUDI AG does not guarantee or accept any liat
with respect to the correctness of information in this document. Copyright by AUDI AG.

– Remove nut -5-.

– Detach coolant hoses -1- to -4- and remove plenum chamber partition panel.

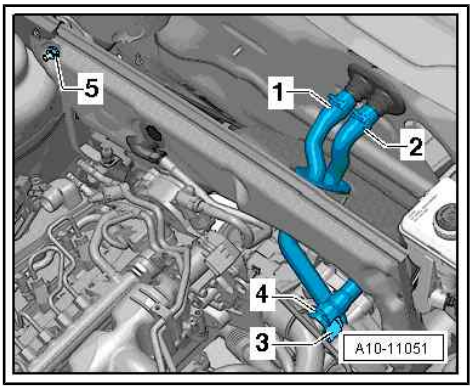

– Remove bolts -2 ... 6-.

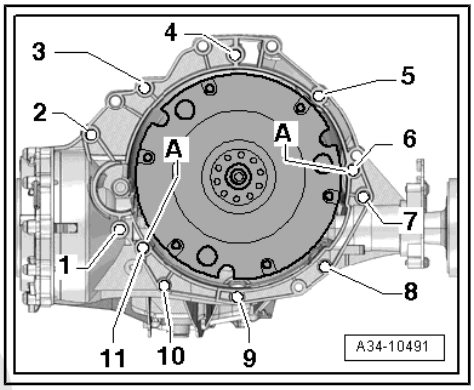

Note

- *Bolt -2- secures the starter to the gearbox and is provided with a spacer sleeve -arrow-.*
- *Pay attention to the spacer sleeve -arrow- when removing and installing the engine. The spacer sleeve must be fitted between starter and gearbox.*

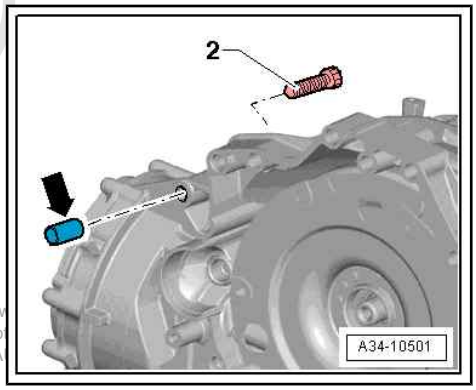

Protected by copyright. Copying for private or commercial purposes, in part or in w
permitted unless authorised by AUDI AG. AUDI AG does not guarantee or accept
with respect to the correctness of information in this document. Copyright by A

– Detach coolant hose -2- and permanent breather -1-.

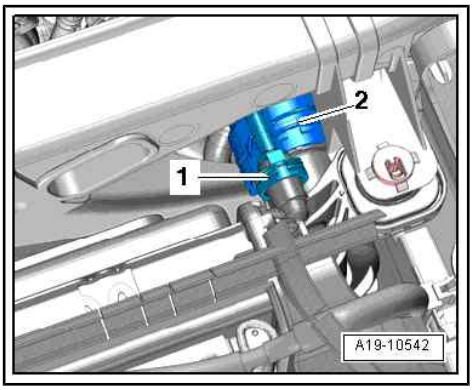

– Detach permanent breather -1- and coolant hose -2- from coolant expansion tank.

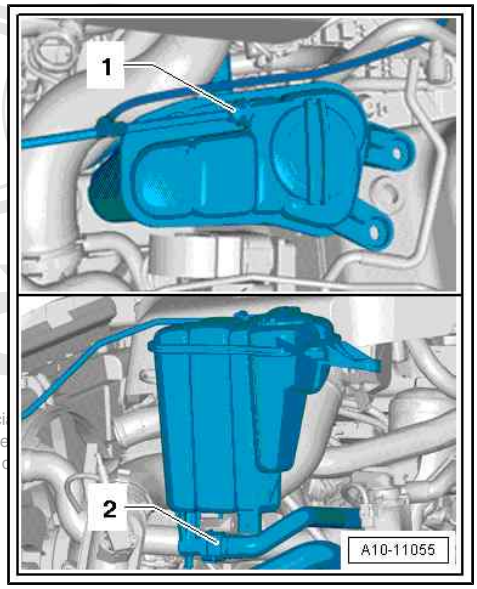

Protected by copyright. Copying for private or commerci
permitted unless authorised by AUDI AG. AUDI AG doe
with respect to the correctness of information in this d

– Release hose clips -arrows- and detach air hose.
– Unplug electrical connector for charge pressure sender - G31- -1- and move clear.
– Remove catalytic converter ⇒ page 146 .

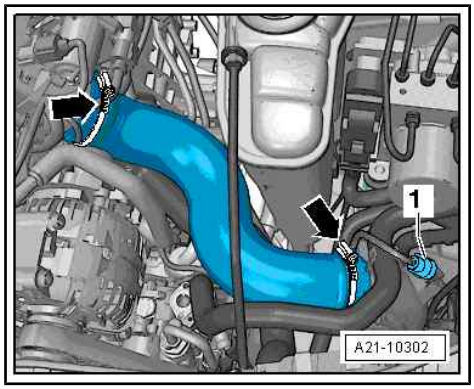

Vehicles with hydraulic power steering:

Caution

Wrong direction of rotation for a used poly V-belt can lead to irreparable damage.

- ***Before removing the poly V-belt mark the direction of rotation with chalk or a felt-tip pen for re-installation.***

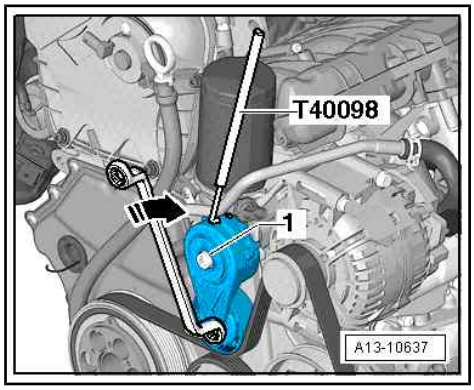

– To slacken poly V-belt turn tensioner in direction of -arrow-.
– Lock tensioner with locking tool - T40098- .
– Take off poly V-belt.

Vehicles with electromechanical power steering:

Caution

Wrong direction of rotation for a used poly V-belt can lead to irreparable damage.

- *Before removing the poly V-belt mark the direction of rotation with chalk or a felt-tip pen for re-installation.*

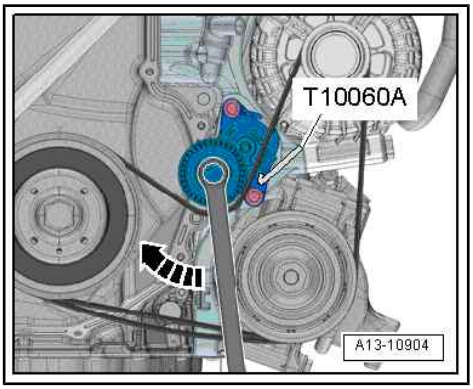

– To slacken poly V-belt turn tensioner in direction of -arrow-.
– Lock tensioner with locking pin - T10060 A- .
– Take off poly V-belt.

Continued for all vehicles:

Caution

Danger of damage to refrigerant lines and hoses.

- *Do NOT stretch, kink or bend refrigerant lines and hoses.*

– Remove air conditioner compressor from bracket for ancillaries with refrigerant hoses still attached and tie up to left side ⇒ Heating, air conditioning; Rep. gr. 87 ; Air conditioner compressor; Detaching and attaching air conditioner compressor at bracket .

Vehicles with hydraulic power steering:

– Remove power steering pump and place it on longitudinal member with hydraulic lines attached ⇒ Running gear, axles, steering; Rep. gr. 48 ; Hydraulic power steering; Removing and installing power steering pump .

Continued for all vehicles:

– Disconnect fuel supply hose -1- and fuel return hose -2- ⇒ Fuel supply system; Rep. gr. 20 ; Plug-in connectors; Disconnecting plug-in connectors .

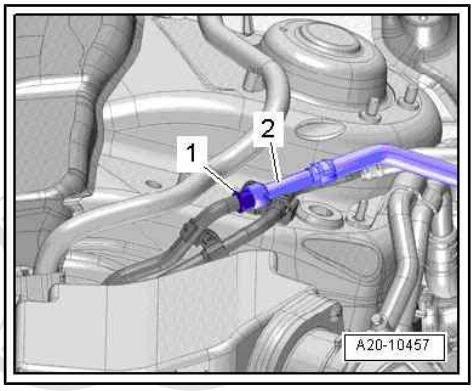

– Support gearbox using engine and gearbox jack with gearbox support - T10337- attached.

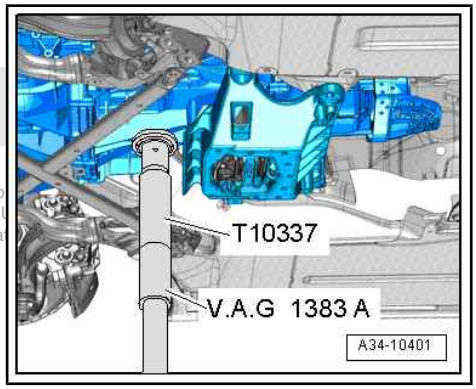

Protected by copyright. Copying for private o
permitted unless authorised by AUDI AG. AU
with respect to the correctness of informa

– Remove bolts -arrows- for tunnel cross member.

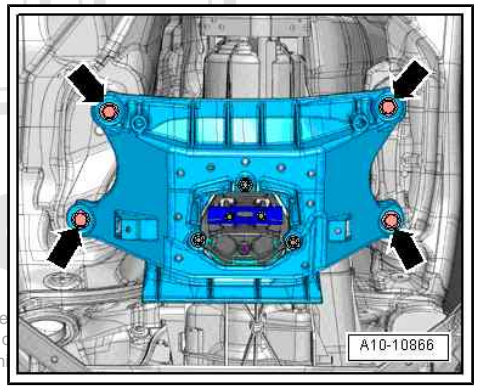

Protected by copyright. Copying for private or comme
permitted unless authorised by AUDI AG. AUDI AG
with respect to the correctness of information in th

Vehicles with manual gearbox:

– Lower gearbox using engine and gearbox jack as far as distance -a-.

• Dimension -a- = 80 mm (maximum).

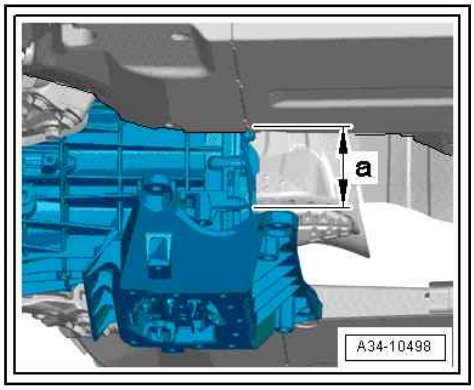

– Use release tool -T40138- to unplug electrical connector -1- at reversing light switch - F4- and move clear.

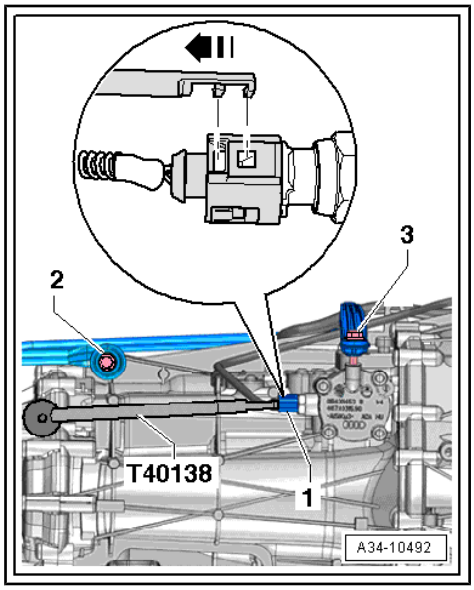

Vehicles with dual clutch gearbox/multitronic gearbox:

– Remove bolts -arrows- for ATF lines.

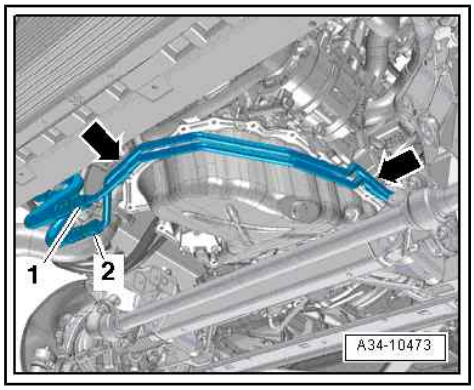

Continued for all vehicles:

– Unclip electrical wiring -A- from gearbox and unplug electrical connector -C-.

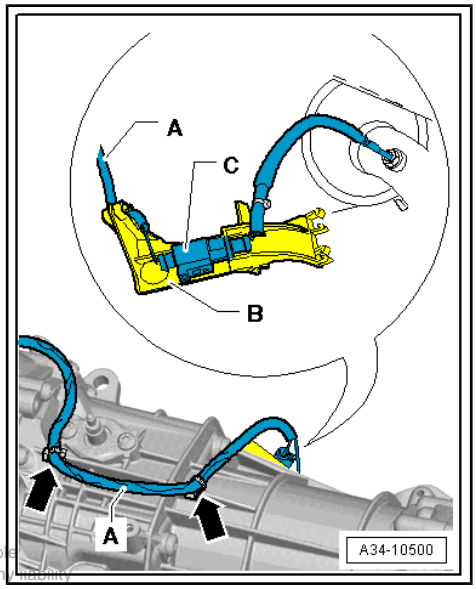

Protected by copyright. Copying for private or commercial purposes, in part or in whole, is not permitted unless authorised by AUDI AG. AUDI AG does not guarantee or accept any liability with respect to the correctness of information in this document. Copyright by AUDI AG.

– Raise gearbox using engine and gearbox jack and fit bolts -arrows- for tunnel cross member.

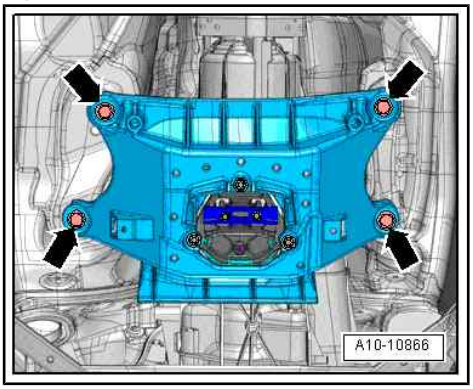

– Detach bottom cover -1- from gearbox -arrow-.

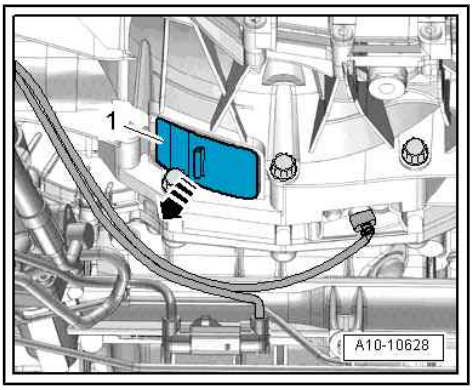

– Remove 3 bolts -arrow- for flywheel. Turn crankshaft each time by 120° in direction of engine rotation.

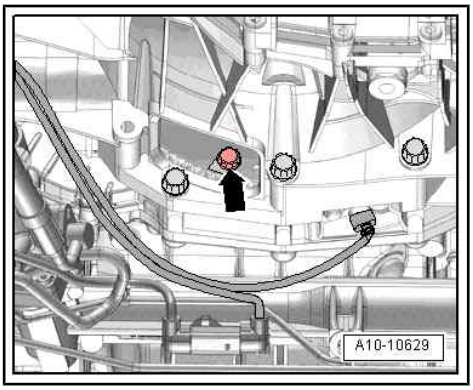

– Remove bolt -1- securing starter (work from side facing engine).
– Separate starter from gearbox and leave in position.
– Remove remaining bolts securing engine to gearbox.
– Support gearbox:

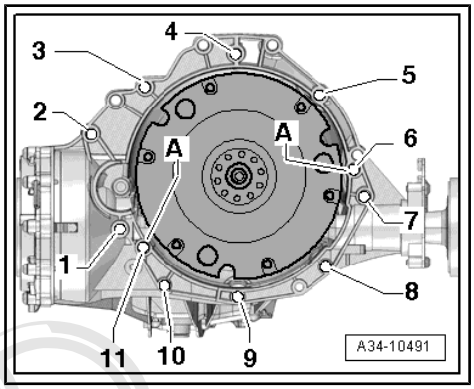

Version 1

– Set up support bracket - 10-222A- with adapter - 10-222A/8- on wing mounting flanges (left and right), as illustrated.
– Use shackle - 10-222A/12- to hook spindle onto gearbox.

Note

Shown in illustration with engine removed.

– Pre-tension spindle of support bracket - 10-222A- slightly.

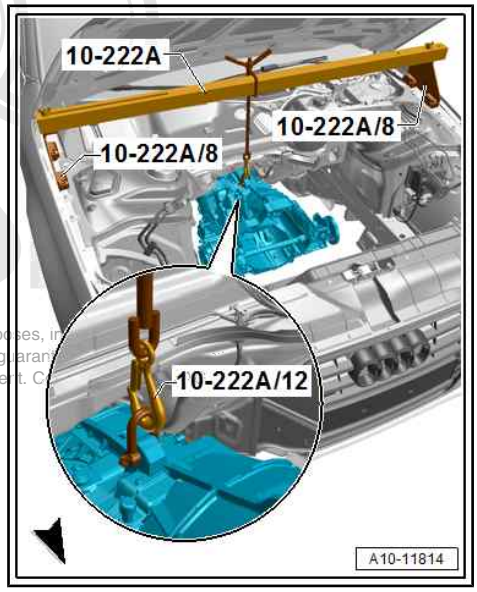

Protected by copyright. Copying for private or commercial purposes, in
permitted unless authorised by AUDI AG. AUDI AG does not g
with respect to the correctness of information in this document. C

Version 2

– Set up support bracket - 10-222A- with adapter - 10-222A/8- on wing mounting flanges (left and right), as illustrated.
– Use puller - T40132- , multi-purpose tool - VW 771/40- and eye-head bolt - 3368- to hook spindle onto gearbox, as shown in illustration.

Note

Shown in illustration with engine removed.

– Pre-tension spindle of support bracket - 10-222A- slightly.

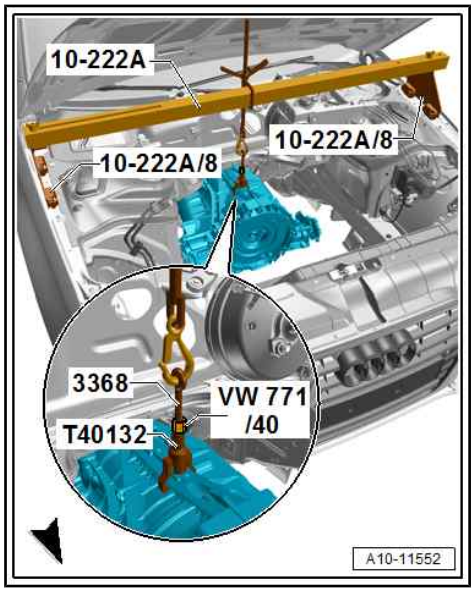

All vehicles:

– Attach lifting tackle - 2024 A- to engine and workshop hoist - VAS 6100- as shown in illustration.

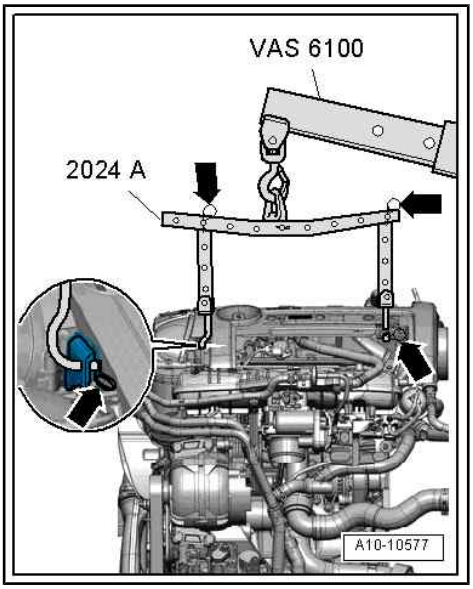

WARNING

The hook attachments and locating pins on the lifting tackle must be secured with locking pins.

– Tighten bolts -1- for left and right engine mountings.

– Raise engine until engine mountings are clear.

– Tighten spindle of support bracket - 10-222A- further.

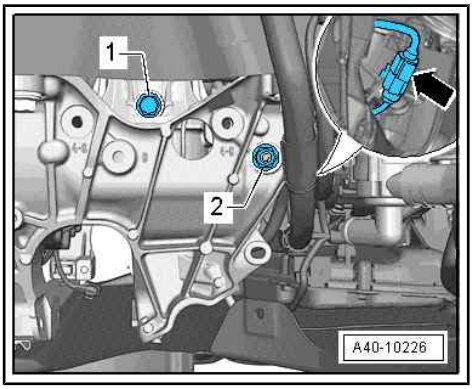

Caution

Danger of damage to hoses, pipes and wiring connections and to engine compartment.

- *Check that all hoses and wiring connections between engine, gearbox, subframe and body have been detached.*
- *Carefully guide engine out of engine compartment when lifting out.*

– Separate engine from gearbox and lift engine out of engine compartment.

1.2 Securing engine to engine and gearbox support

All procedures are described in ⇒ Servicing 4-cylinder engine, 1.8 ltr., 2.0 ltr. 4-valve TFSI; Rep. gr. 10 ; Removing and installing engine; Securing engine to engine and gearbox support .

1.3 Installing engine

Protected by copyright. Copying for private or commercial purposes, in part or in whole, is not permitted unless authorised by AUDI AG. AUDI AG does not guarantee or accept any liability with respect to the correctness of information in this document. Copyright by AUDI AG.

Special tools and workshop equipment required

- All special tools specified in removal procedure

Procedure

Note

- *Renew the bolts tightened with specified tightening angle.*
- *Renew self-locking nuts and bolts as well as seals, gaskets and O-rings.*
- *On vehicles with manual gearbox, a needle bearing is fitted in the drive plate. Before installing, check that the needle bearing is fitted. Removing and installing needle bearing in drive plate (pressing in and out) ⇒ Servicing 4-cylinder engine, 1.8 ltr., 2.0 ltr. 4-valve TFSI; Rep. gr. 13 ; Cylinder block (gearbox end); Renewing needle bearing in drive plate .*
- *Secure all hose connections with the correct type of hose clips (same as original equipment) ⇒ Electronic parts catalogue .*
- *Fit all cable ties in the original positions when installing.*

– Bring engine into position on gearbox, guiding starter, and secure by tightening bolts (accessible from above) ⇒ Gearbox; Rep. gr. 34 ; Removing and installing gearbox; Installing gearbox , or ⇒ Gearbox; Rep. gr. 37 ; Removing and installing gearbox; Installing gearbox .

Protected by copyright. Copying for private or commercial purposes, in part or in whole, is not permitted unless authorised by AUDI AG. AUDI AG does not guarantee or accept any liability with respect to the correctness of information in this document. Copyright by AUDI AG.

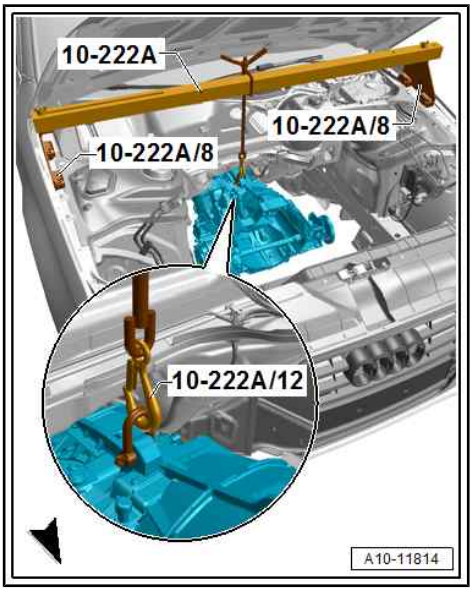

– Release spindle of support bracket - 10-222A- .

– Lower workshop hoist and place engine/gearbox assembly onto engine mounting.

– Install engine mountings ⇒ page 24 .

– Detach workshop hoist - VAS 6100- and lifting tackle - 2024 A- .

– Screw in and tighten bolts securing engine to gearbox ⇒ Gearbox; Rep. gr. 34 ; Removing and installing gearbox; Tightening torques for gearbox , or ⇒ Gearbox; Rep. gr. 37 ; Removing and installing gearbox; Tightening torques for gearbox .

– Install ATF lines (if previously removed) ⇒ Gearbox; Rep. gr. 34 ; ATF circuit; Removing and installing ATF lines , or ⇒ Gearbox; Rep. gr. 37 ; ATF circuit; Removing and installing ATF lines .

– Install catalytic converter ⇒ page 146 .

– Install front exhaust pipe/front silencer ⇒ page 137 .

– Align the exhaust system so it is free of stress ⇒ page 141 .

– If removed previously, install power steering pump ⇒ Running gear, axles, steering; Rep. gr. 48 ; Hydraulic power steering; Removing and installing power steering pump .

– Install air conditioner compressor ⇒ Heating, air conditioning; Rep. gr. 87 ; Air conditioner compressor; Detaching and attaching air conditioner compressor at bracket .

– Install poly V-belt ⇒ Servicing 4-cylinder engine, 1.8 ltr., 2.0 ltr. 4-valve TFSI; Rep. gr. 13 ; Cylinder block (pulley end); Removing and installing poly V-belt .

Protected by copyright. Copying for private or commercial purposes, in part or in whole, is not permitted unless authorised by AUDI AG. AUDI AG does not guarantee or accept any liability with respect to the correctness of information in this document. Copyright by AUDI AG.

– Electrical connections and routing ⇒ Current flow diagrams, Electrical fault finding and Fitting locations.

– Install engine control unit ⇒ page 127 .

– Install electrical wiring, terminal 30 wiring junction 2 - TV22- and cover for electronics box in engine compartment ⇒ Electrical system; Rep. gr. 97 ; Relay carriers, fuse carriers, electronics boxes .

– Install body brace ⇒ Running gear, axles, steering; Rep. gr. 40 ; Suspension strut, upper links; Removing and installing body brace .

– Install filler neck for washer fluid reservoir ⇒ Electrical system; Rep. gr. 92 ; Windscreen washer system; Removing and installing washer fluid reservoir .

– Observe steps required after re-connecting battery ⇒ Electrical system; Rep. gr. 27 ; Battery; Disconnecting and connecting battery .

> ⚠ **Caution**
>
> ***Risk of irreparable damage to control units because of excessive voltage.***
>
> ♦ ***Never use battery charging equipment for boost starting.***

– Install air cleaner housing ⇒ page 109 .

– Reset service position ⇒ General body repairs, exterior; Rep. gr. 50 ; Lock carrier; Setting service position and returning to normal position .

– Check oil level: A4 ⇒ Maintenance ; Booklet 812 , A5 Coupé ⇒ Maintenance ; Booklet 811 , A5 Cabriolet ⇒ Maintenance ; Booklet 818 .

Note

Do not reuse coolant.

– Fill up with coolant ⇒ page 56 .
– Vehicles with ATF circuit: Check ATF level ⇒ Gearbox; Rep. gr. 34 ; ATF; Checking ATF level , or ⇒ Gearbox; Rep. gr. 37 ; ATF; Checking ATF level .
– Install engine cover panel ⇒ Servicing 4-cylinder engine, 1.8 ltr., 2.0 ltr. 4-valve TFSI; Rep. gr. 10 ; Engine cover panel; Removing and installing engine cover panel .
– Install noise insulation ⇒ General body repairs, exterior; Rep. gr. 66 ; Noise insulation; Exploded view - noise insulation .
– Install front wheel housing liners ⇒ General body repairs, exterior; Rep. gr. 66 ; Wheel housing liners; Exploded view - wheel housing liner (front) .
– After renewing engine, misfire adaptions must be reset. To do so, select `01 - Reset adaptions misfires` in `Guided Functions` mode of ⇒ Vehicle diagnostic tester.

Tightening torques

Note

- *Tightening torques apply only to lightly greased, oiled, phosphated or black-finished nuts and bolts.*
- *Additional lubricants such as engine or gear oil may be used, but do not use lubricants containing graphite.*
- *Do not use degreased parts.*
- *Tolerance for tightening torques: ± 15 %.*

Component		Nm
Bolts/nuts	M6	9
	M8	20
	M10	40
	M12	65

- ⇒ “2.1 Exploded view - assembly mountings”, page 23
- Engine to manual gearbox/dual clutch gearbox ⇒ Gearbox; Rep. gr. 34 ; Removing and installing gearbox; Tightening torques for gearbox
- Engine to multitronic gearbox ⇒ Gearbox; Rep. gr. 37 ; Removing and installing gearbox; Tightening torques for gearbox

The reproduction or distribution of this document or any part thereof for private or commercial purposes, in part or in whole, is not permitted unless authorised by AUDI AG. AUDI AG does not guarantee or accept any liability with respect to the correctness of information in this document. Copyright by AUDI AG.

2 Assembly mountings

⇒ "2.1 Exploded view - assembly mountings", page 23

⇒ "2.2 Removing and installing engine mountings", page 24

⇒ "2.3 Supporting engine in installation position", page 25

2.1 Exploded view - assembly mountings

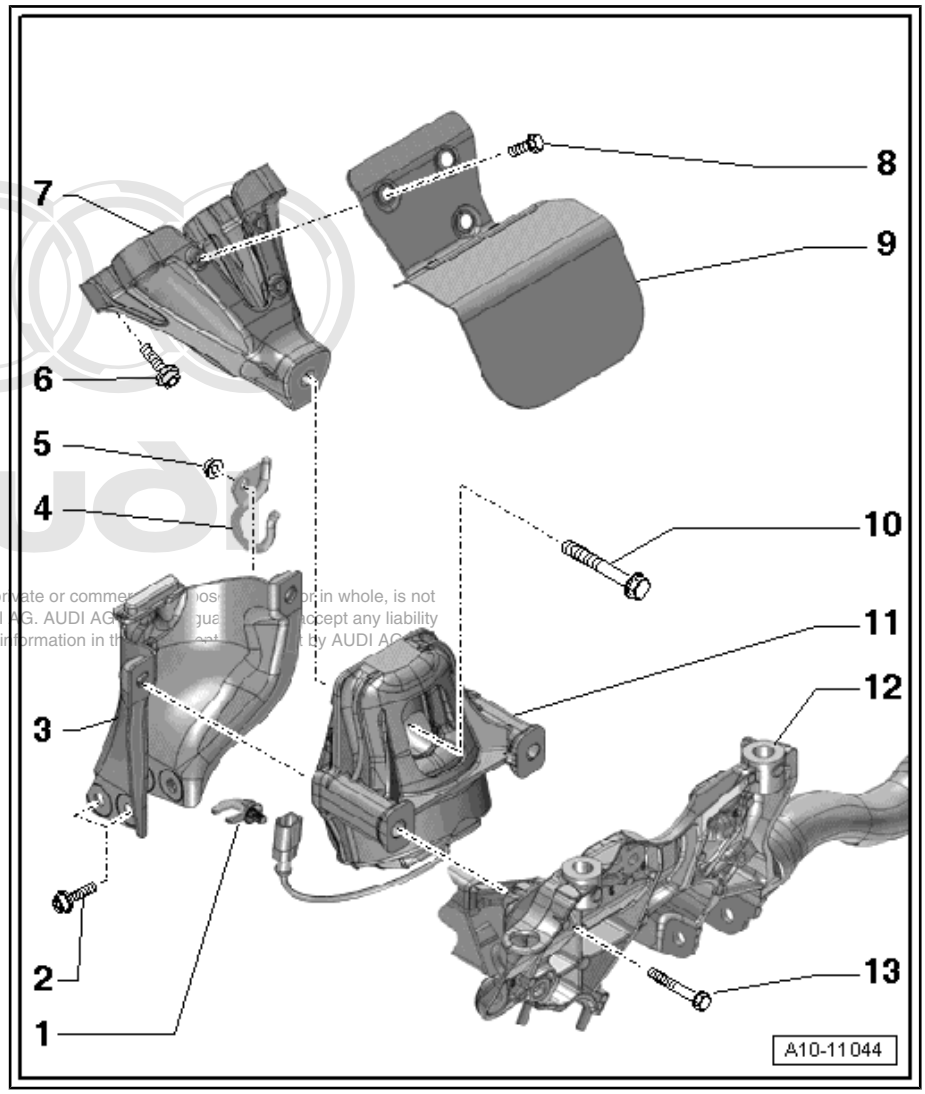

1 - Not fitted

2 - Bolt

- ❑ 20 Nm

3 - Retaining plate

- ❑ For engine mounting
- ❑ Renew bracket if engine mounting is defective
- ❑ Check bracket on opposite side; renew if necessary

4 - Retainer

- ❑ For hydraulic line
- ❑ Only on vehicles with hydraulic power steering

5 - Nut

- ❑ 9 Nm

6 - Bolt

- ❑ 40 Nm

7 - Engine support

8 - Bolt

- ❑ 10 Nm

9 - Heat shield

10 - Bolt

- ❑ Renew
- ❑ 90 Nm + turn 90° further

11 - Engine mounting

- ❑ Depending on equipment and version, only with left electrohydraulic engine mounting solenoid valve - N144- on left side
- ❑ Depending on equipment and version, additionally with right electrohydraulic engine mounting solenoid valve - N145- on right side
- ❑ Removing and installing ⇒ page 24
- ❑ Depending on version, may need to be removed in pairs ⇒ Electronic parts catalogue

12 - Subframe

13 - Bolt

- ❑ 55 Nm

Protected by copyright. Copying for private or commercial purposes, in part or in whole, is not permitted unless authorised by AUDI AG. AUDI AG does not guarantee or accept any liability with respect to the correctness of information in this document. Copyright by AUDI AG.

2.2 Removing and installing engine mountings

Note

- *To avoid repeat repairs, proceed as follows if an engine mounting is defective:*
- *Renew engine mounting and corresponding bracket.*
- *On some vehicle versions, the engine mounting on the other side of the vehicle has to be renewed as well; for allocation refer to ⇒ Electronic parts catalogue .*
- *The following chapter describes the procedure for the engine mounting (left-side).*

Special tools and workshop equipment required

- Support bracket - 10-222A-

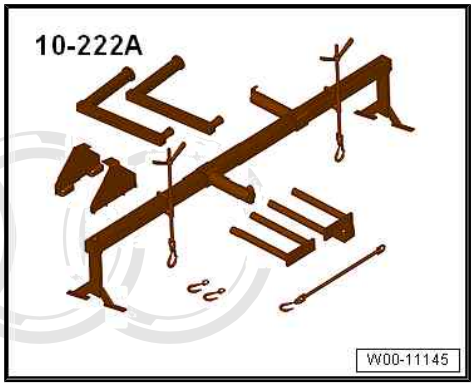

Removing

– Remove engine cover panel ⇒ Servicing 4-cylinder engine, 1.8 ltr., 2.0 ltr. 4-valve TFSI; Rep. gr. 10 ; Engine cover panel; Removing and installing engine cover panel .

– Remove body brace ⇒ Running gear, axles, steering; Rep. gr. 40 ; Suspension strut, upper links; Removing and installing body brace .

– Set up support bracket - 10-222A- on wing mounting flanges (left and right) as illustrated.

– Attach spindle - 10-222A/11- to rear engine lifting eye.

– Partly take up weight of engine with spindle.

– Remove front wheel (left-side) ⇒ Running gear, axles, steering; Rep. gr. 44 ; Wheels, tyres .

– Remove noise insulation (front) ⇒ General body repairs, exterior; Rep. gr. 66 ; Noise insulation; Removing and installing noise insulation .

– Remove wheel housing liner (front left) ⇒ General body repairs, exterior; Rep. gr. 66 ; Wheel housing liners; Exploded view - wheel housing liner (front) .

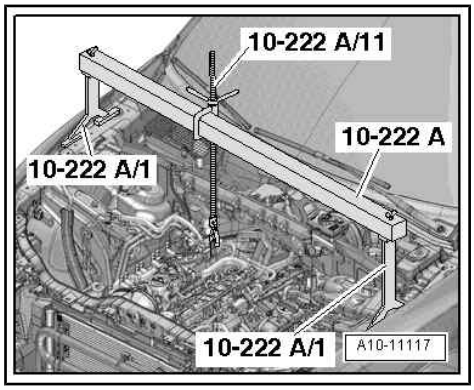

Protected by copyright. Copying for private or commercial purposes, in part or in whole, is not permitted unless authorized by AUDI AG. AUDI AG does not guarantee or accept any liability with respect to the correctness of information in this document. Copyright by AUDI AG.

– Vehicles with hydraulic power steering: Remove nut -2- and move bracket -1- clear.

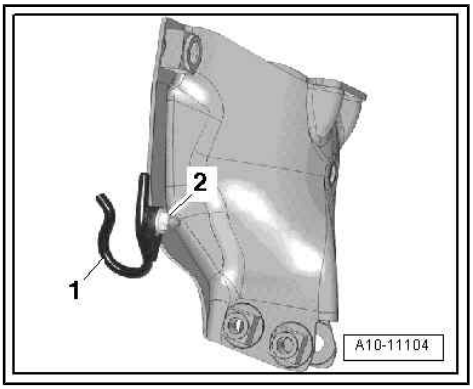

– If fitted: Move clear and unplug electrical connector -3- for electrohydraulic engine mounting solenoid valve.
– Remove bolts -1, 4, 5- for engine mounting.
– Move retaining plate -2- for engine mounting clear to the side.
– Detach engine mounting.

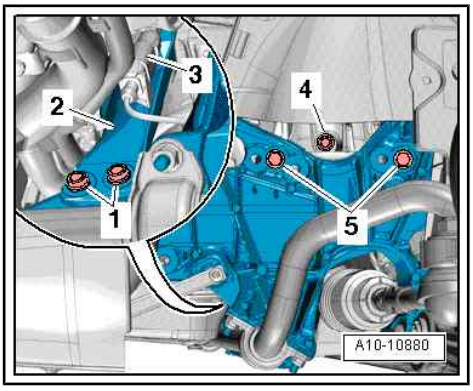

Installing

Installation is carried out in the reverse order; note the following:

Note

Renew the bolts tightened with specified tightening angle.

– Install body brace ⇒ Running gear, axles, steering; Rep. gr. 40 ; Suspension strut, upper links; Removing and installing body brace .
– Install engine cover panel ⇒ Servicing 4-cylinder engine, 1.8 ltr., 2.0 ltr. 4-valve TFSI; Rep. gr. 10 ; Engine cover panel; Removing and installing engine cover panel .

Tightening torques

- ⇒ “2.1 Exploded view - assembly mountings”, page 23
- ⇒ General body repairs, exterior; Rep. gr. 66 ; Noise insulation; Exploded view - noise insulation
- ⇒ General body repairs, exterior; Rep. gr. 66 ; Wheel housing liners; Exploded view - wheel housing liner (front)
- ⇒ Running gear, axles, steering; Rep. gr. 44 ; Wheels, tyres

2.3 Supporting engine in installation position

Special tools and workshop equipment required

Protected by copyright. Copying for private or commercial purposes, in part or in whole, is not permitted unless authorised by AUDI AG. AUDI AG does not guarantee or accept any liability with respect to the correctness of information in this document. Copyright by AUDI AG.

- Support bracket - 10-222A-

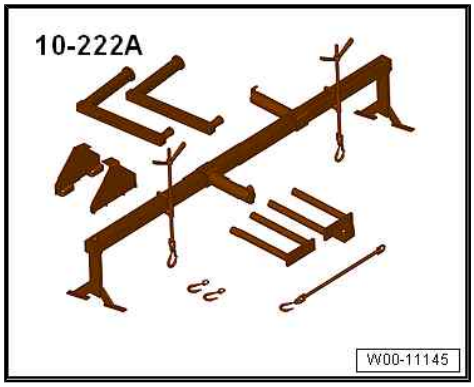

Supporting

– Remove engine cover panel ⇒ Servicing 4-cylinder engine, 1.8 ltr., 2.0 ltr. 4-valve TFSI; Rep. gr. 10 ; Engine cover panel; Removing and installing engine cover panel .

– Set up support bracket - 10-222A- with adapters -10-222A/3- on wing mounting flanges (left and right), as shown in illustration.

– Attach spindles -10-222A/11- to engine lifting eyes.

– Partly take up weight of engine with spindles.

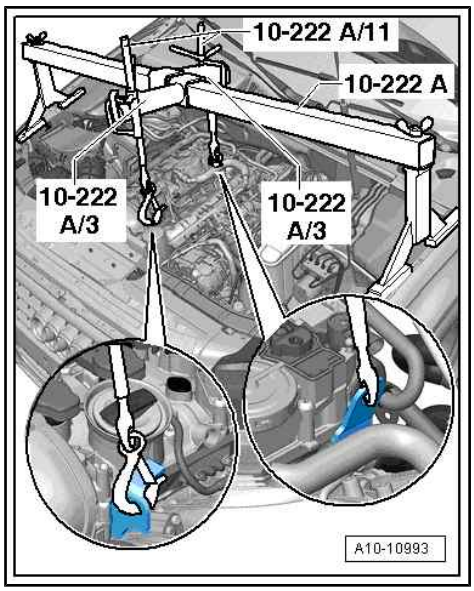

Protected by copyright. Copying for private or commercial purposes, in part or in whole, is not permitted unless authorised by AUDI AG. AUDI AG does not guarantee or accept any liability with respect to the correctness of information in this document. Copyright by AUDI AG.

3 Engine cover panel

All procedures can be found in ⇒ Servicing 4-cylinder engine, 1.8 ltr., 2.0 ltr. 4-valve TFSI; Rep. gr. 10 ; Engine cover panel .

Protected by copyright. Copying for private or commercial purposes, in part or in whole, is not permitted unless authorised by AUDI AG. AUDI AG does not guarantee or accept any liability with respect to the correctness of information in this document. Copyright by AUDI AG.

13 – Crankshaft group

1 Cylinder block (pulley end)

⇒ “1.1 Exploded view - cylinder block (pulley end)”, page 28

⇒ “1.2 Removing and installing poly V-belt”, page 28

⇒ “1.3 Removing and installing tensioner for poly V-belt”, page 28

⇒ “1.4 Removing and installing vibration damper”, page 28

⇒ “1.5 Removing and installing bracket for ancillaries”, page 29

1.1 Exploded view - cylinder block (pulley end)

All components are described in ⇒ Servicing 4-cylinder engine, 1.8 ltr., 2.0 ltr. 4-valve TFSI; Rep. gr. 13 ; Cylinder block (pulley end); Exploded view - cylinder block (pulley end) .

1.2 Removing and installing poly V-belt

All procedures are described in ⇒ Servicing 4-cylinder engine, 1.8 ltr., 2.0 ltr. 4-valve TFSI; Rep. gr. 13 ; Cylinder block (pulley end); Removing and installing poly V-belt .

1.3 Removing and installing tensioner for poly V-belt

All procedures are described in ⇒ Servicing 4-cylinder engine, 1.8 ltr., 2.0 ltr. 4-valve TFSI; Rep. gr. 13 ; Cylinder block (pulley end); Removing and installing poly V-belt tensioner .

1.4 Removing and installing vibration damper

Removing

– Remove radiator fan control unit - J293- ⇒ page 84 .

All further procedures are described in ⇒ Servicing 4-cylinder engine, 1.8 ltr., 2.0 ltr. 4-valve TFSI; Rep. gr. 13 ; Cylinder block (pulley end); Removing and installing vibration damper .

Protected by copyright. Copying for private or commercial purposes, in part or in whole, is not permitted unless authorised by AUDI AG. AUDI AG does not guarantee or accept any liability with respect to the correctness of information in this document. Copyright by AUDI AG.

Installing

Additional work:

– Install radiator fan control unit - J293- ⇒ page 84 .

1.5 Removing and installing bracket for ancillaries

⇒ "1.5.1 Removing and installing bracket for ancillaries - vehicles with hydraulic power steering", page 29

⇒ "1.5.2 Removing and installing bracket for ancillaries - vehicles with electromechanical power steering", page 30

1.5.1 Removing and installing bracket for ancillaries - vehicles with hydraulic power steering

Removing

– Drain coolant ⇒ page 56 .

– Remove poly V-belt tensioner ⇒ Servicing 4-cylinder engine, 1.8 ltr., 2.0 ltr. 4-valve TFSI; Rep. gr. 13 ; Cylinder block (pulley end); Removing and installing tensioner for poly V-belt .

– Unplug electrical connectors -1 and 4- from oil pressure switch - F22- and oil pressure switch for reduced oil pressure - F378- .

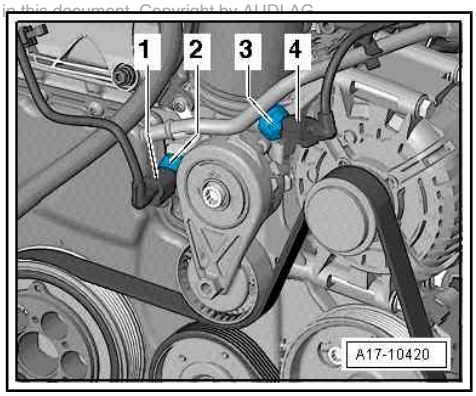

– Unscrew bolts -1- and -2- and swivel coolant pipe (front) upwards.

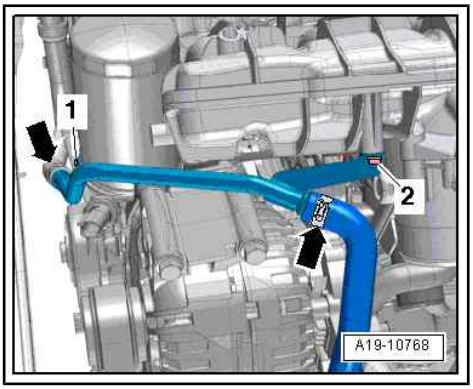

Protected by copyright. Copying for private or commercial purposes, in part or in whole, is not permitted unless authorised by AUDI AG. AUDI AG does not guarantee or accept any liability with respect to the correctness of information in this document. Copyright by AUDI AG.

– Release hose clips -arrows- and detach air hose.

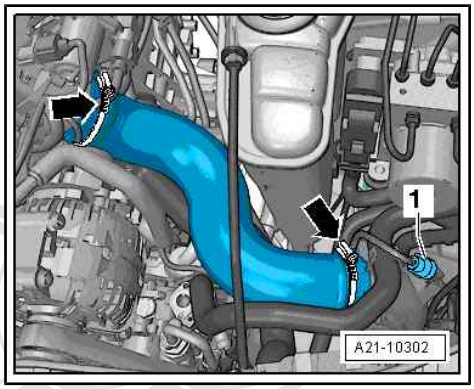

– Remove alternator ⇒ Electrical system; Rep. gr. 27 ; Alternator; Removing and installing alternator .

– Remove air conditioner compressor from bracket for ancillaries with refrigerant hoses still attached and tie up to left side ⇒ Heating, air conditioning; Rep. gr. 87 ; Air conditioner compressor; Detaching and attaching air conditioner compressor at bracket .

– Remove power steering pump and place it on longitudinal member with hydraulic lines attached ⇒ Running gear, axles, steering; Rep. gr. 48 ; Hydraulic power steering; Removing and installing power steering pump .

All further procedures are described in ⇒ Servicing 4-cylinder engine, 1.8 ltr., 2.0 ltr. 4-valve TFSI; Rep. gr. 13 ; Cylinder block (pulley end); Removing and installing bracket for ancillaries .

Installing

Additional work:

– Install power steering pump ⇒ Running gear, axles, steering; Rep. gr. 48 ; Hydraulic power steering; Removing and installing power steering pump .

– Install air conditioner compressor ⇒ Heating, air conditioning; Rep. gr. 87 ; Air conditioner compressor; Detaching and attaching air conditioner compressor at bracket .

– Install alternator ⇒ Electrical system; Rep. gr. 27 ; Alternator; Removing and installing alternator .

– Install poly V-belt tensioner ⇒ Servicing 4-cylinder engine, 1.8 ltr., 2.0 ltr. 4-valve TFSI; Rep. gr. 13 ; Cylinder block (pulley end); Removing and installing tensioner for poly V-belt .

Protected by copyright. Copying for private or commercial purposes, in part or in whole, is not permitted unless authorised by AUDI AG. AUDI AG does not guarantee or accept any liability with respect to the correctness of information in this document. Copyright by AUDI AG.

Note

Do not reuse coolant.

– Fill up with coolant ⇒ page 56 .

Tightening torques

- ⇒ “3.1 Exploded view - coolant pipes”, page 72
- ⇒ Servicing 4-cylinder engine, 1.8 ltr., 2.0 ltr. 4-valve TFSI; Rep. gr. 21 ; Charge air system; Exploded view - hose connections for charge air system

1.5.2 Removing and installing bracket for ancillaries - vehicles with electromechanical power steering

Removing

– Drain coolant ⇒ page 56 .

– Unplug electrical connectors -2 and 3- from oil pressure switch - F22- and oil pressure switch for reduced oil pressure - F378- .

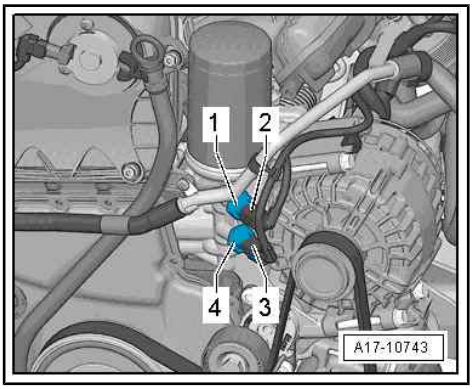

– Open hose clips -arrows- and detach air hose.

– Unplug electrical connector for charge pressure sender - G31- -item 1- and move electrical wiring clear.

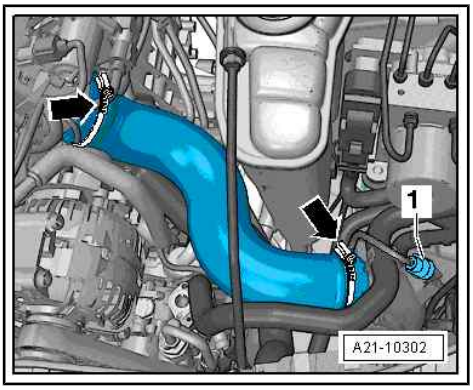

Protected by copyright. Copying for private or commercial purposes, in part or in whole, is not permitted unless authorised by AUDI AG. AUDI AG does not guarantee or accept any liability with respect to the correctness of information in this document. Copyright by AUDI AG.

– Unscrew bolts -1- and -2- and swivel coolant pipe (front) upwards.

– Remove poly V-belt ⇒ Servicing 4-cylinder engine, 1.8 ltr., 2.0 ltr. 4-valve TFSI; Rep. gr. 13 ; Cylinder block (pulley end); Removing and installing poly V-belt .

– Remove alternator ⇒ Electrical system; Rep. gr. 27 ; Alternator; Removing and installing alternator .

– Remove air conditioner compressor from bracket with refrigerant lines still attached and tie up to longitudinal member ⇒ Heating, air conditioning; Rep. gr. 87 ; Air conditioner compressor; Detaching and attaching air conditioner compressor at bracket .

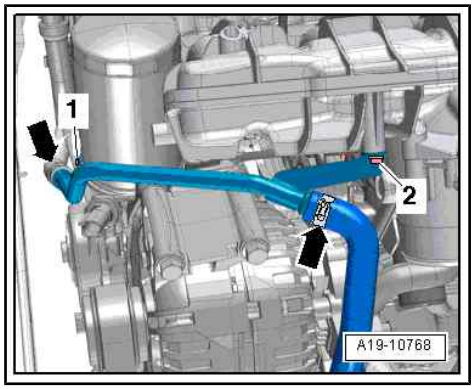

Protected by Copyright. Copying for private or commercial purposes, in part or in whole, is not permitted unless authorised by AUDI AG. AUDI AG does not guarantee or accept any liability with respect to the correctness of information in this document. Copyright by AUDI AG.

All further procedures are described in ⇒ Servicing 4-cylinder engine, 1.8 ltr., 2.0 ltr. 4-valve TFSI; Rep. gr. 13 ; Cylinder block (pulley end); Removing and installing bracket for ancillaries .

Installing

Additional work:

– Install air conditioner compressor ⇒ Heating, air conditioning; Rep. gr. 87 ; Air conditioner compressor; Detaching and attaching air conditioner compressor at bracket .

– Install alternator ⇒ Electrical system; Rep. gr. 27 ; Alternator; Removing and installing alternator .

– Install poly V-belt ⇒ Servicing 4-cylinder engine, 1.8 ltr., 2.0 ltr. 4-valve TFSI; Rep. gr. 13 ; Cylinder block (pulley end); Removing and installing poly V-belt .

Note

Do not reuse coolant.

– Fill up with coolant ⇒ page 56 .

Tightening torques

- ⇒ “3.1 Exploded view - coolant pipes”, page 72
- ⇒ Servicing 4-cylinder engine, 1.8 ltr., 2.0 ltr. 4-valve TFSI; Rep. gr. 21 ; Charge air system; Exploded view - hose connections for charge air system

2 Cylinder block (gearbox end)

All procedures and components can be found in ⇒ Servicing 4-cylinder engine, 1.8 ltr., 2.0 ltr. 4-valve TFSI; Rep. gr. 13 ; Cylinder block (gearbox end) .

Protected by copyright. Copying for private or commercial purposes, in part or in whole, is not permitted unless authorised by AUDI AG. AUDI AG does not guarantee or accept any liability with respect to the correctness of information in this document. Copyright by AUDI AG.

3 Crankshaft

All procedures and components can be found in ⇒ Servicing 4-cylinder engine, 1.8 ltr., 2.0 ltr. 4-valve TFSI; Rep. gr. 13 ; Crankshaft .

Protected by copyright. Copying for private or commercial purposes, in part or in whole, is not permitted unless authorised by AUDI AG. AUDI AG does not guarantee or accept any liability with respect to the correctness of information in this document. Copyright by AUDI AG.

4 Balance shaft

All procedures and components can be found in ⇒ Servicing 4-cylinder engine, 1.8 ltr., 2.0 ltr. 4-valve TFSI; Rep. gr. 13 ; Balance shaft .

Protected by copyright. Copying for private or commercial purposes, in part or in whole, is not permitted unless authorised by AUDI AG. AUDI AG does not guarantee or accept any liability with respect to the correctness of information in this document. Copyright by AUDI AG.

5 Pistons and conrods

All procedures and components can be found in ⇒ Servicing 4-cylinder engine, 1.8 ltr., 2.0 ltr. 4-valve TFSI; Rep. gr. 13 ; Pistons and conrods .

Protected by copyright. Copying for private or commercial purposes, in part or in whole, is not permitted unless authorised by AUDI AG. AUDI AG does not guarantee or accept any liability with respect to the correctness of information in this document. Copyright by AUDI AG.

15 – Cylinder head, valve gear

1 Timing chain cover

⇒ "1.1 Exploded view - timing chain cover", page 37

⇒ "1.2 Removing and installing timing chain cover", page 37

⇒ "1.3 Renewing oil seal for vibration damper", page 37

Protected by copyright. Copying for private or commercial purposes, in part or in whole, is not permitted unless authorised by AUDI AG. AUDI AG does not guarantee or accept any liability with respect to the correctness of information in this document. Copyright by AUDI AG.

1.1 Exploded view - timing chain cover

All components are described in ⇒ Servicing 4-cylinder engine, 1.8 ltr., 2.0 ltr. 4-valve TFSI; Rep. gr. 15 ; Timing chain cover; Exploded view - timing chain cover .

1.2 Removing and installing timing chain cover

⇒ "1.2.1 Removing and installing timing chain cover (top)", page 37

⇒ "1.2.2 Renewing timing chain cover (bottom)", page 37

1.2.1 Removing and installing timing chain cover (top)

All procedures are described in ⇒ Servicing 4-cylinder engine, 1.8 ltr., 2.0 ltr. 4-valve TFSI; Rep. gr. 15 ; Timing chain cover; Removing and installing timing chain cover .

1.2.2 Renewing timing chain cover (bottom)

Removing

– Remove noise insulation (front) ⇒ General body repairs, exterior; Rep. gr. 66 ; Noise insulation; Removing and installing noise insulation .

– Set service position ⇒ General body repairs, exterior; Rep. gr. 50 ; Lock carrier; Setting service position and returning to normal position .

All further procedures are described in ⇒ Servicing 4-cylinder engine, 1.8 ltr., 2.0 ltr. 4-valve TFSI; Rep. gr. 15 ; Timing chain cover; Removing and installing timing chain cover .

Installing

Additional work:

– Reset service position ⇒ General body repairs, exterior; Rep. gr. 50 ; Lock carrier; Setting service position and returning to normal position .

Tightening torques

♦ ⇒ General body repairs, exterior; Rep. gr. 66 ; Noise insulation; Exploded view - noise insulation

1.3 Renewing oil seal for vibration damper

All procedures are described in ⇒ Servicing 4-cylinder engine, 1.8 ltr., 2.0 ltr. 4-valve TFSI; Rep. gr. 15 ; Timing chain cover ; Renewing oil seal for vibration damper.

2 Chain drive

⇒ “2.1 Exploded view - camshaft timing chains”, page 38

⇒ “2.2 Exploded view - drive chain for balance shaft”, page 38

⇒ “2.3 Removing and installing bearing saddle”, page 38

⇒ “2.4 Removing camshaft timing chain from camshafts”, page 38

⇒ “2.5 Removing and installing camshaft timing chain”, page 39

⇒ “2.6 Removing and installing drive chain for balance shaft”, page 39

⇒ “2.7 Checking valve timing”, page 39

2.1 Exploded view - camshaft timing chains

All components are described in ⇒ Servicing 4-cylinder engine, 1.8 ltr., 2.0 ltr. 4-valve TFSI; Rep. gr. 15 ; Chain drive; Exploded view - camshaft timing chains .

2.2 Exploded view - drive chain for balance shaft

All components are described in ⇒ Servicing 4-cylinder engine, 1.8 ltr., 2.0 ltr. 4-valve TFSI; Rep. gr. 15 ; Chain drive; Exploded view - drive chain for balance shaft .

2.3 Removing and installing bearing saddle

Removing

– Set service position ⇒ General body repairs, exterior; Rep. gr. 50 ; Lock carrier; Setting service position and returning to normal position .

All further procedures are described in ⇒ Servicing 4-cylinder engine, 1.8 ltr., 2.0 ltr. 4-valve TFSI; Rep. gr. 15 ; Chain drive; Removing and installing bearing saddle .

Installing

Additional work:

– Reset service position ⇒ General body repairs, exterior; Rep. gr. 50 ; Lock carrier; Setting service position and returning to normal position .

2.4 Removing camshaft timing chain from camshafts

Removing

– Set service position ⇒ General body repairs, exterior; Rep. gr. 50 ; Lock carrier; Setting service position and returning to normal position .

All further procedures are described in ⇒ Servicing 4-cylinder engine, 1.8 ltr., 2.0 ltr. 4-valve TFSI; Rep. gr. 15 ; Chain drive; Removing camshaft timing chain from camshafts .

Installing

Protected by copyright. Copying for private or commercial purposes, in part or in whole, is not permitted unless authorised by AUDI AG. AUDI AG does not guarantee or accept any liability with respect to the correctness of information in this document. Copyright by AUDI AG.

Additional work:

– Reset service position ⇒ General body repairs, exterior; Rep. gr. 50 ; Lock carrier; Setting service position and returning to normal position .

2.5 Removing and installing camshaft timing chain

Removing

– Set service position ⇒ General body repairs, exterior; Rep. gr. 50 ; Lock carrier; Setting service position and returning to normal position .

All further procedures are described in ⇒ Servicing 4-cylinder engine, 1.8 ltr., 2.0 ltr. 4-valve TFSI; Rep. gr. 15 ; Chain drive; Removing and installing camshaft timing chain .

Installing

Additional work:

– Reset service position ⇒ General body repairs, exterior; Rep. gr. 50 ; Lock carrier; Setting service position and returning to normal position .

Protected by copyright. Copying for private or commercial purposes, in part or in whole, is not permitted unless authorised by AUDI AG. AUDI AG does not guarantee or accept any liability with respect to the correctness of information in this document. Copyright by AUDI AG.

2.6 Removing and installing drive chain for balance shaft

All procedures can be found in ⇒ Servicing 4-cylinder engine, 1.8 ltr., 2.0 ltr. 4-valve TFSI; Rep. gr. 15 ; Chain drive; Removing and installing drive chain for balance shaft .

2.7 Checking valve timing

All procedures are described in ⇒ Servicing 4-cylinder engine, 1.8 ltr., 2.0 ltr. 4-valve TFSI; Rep. gr. 15 ; Chain drive; Checking valve timing .

3 Cylinder head

⇒ "3.1 Exploded view - cylinder head", page 40

⇒ "3.2 Removing and installing cylinder head", page 40

⇒ "3.3 Checking compression", page 41

3.1 Exploded view - cylinder head

All components are described in ⇒ Servicing 4-cylinder engine, 1.8 ltr., 2.0 ltr. 4-valve TFSI; Rep. gr. 15 ; Cylinder head; Exploded view - cylinder head .

3.2 Removing and installing cylinder head

Removing

– Remove camshafts ⇒ page 42 .

> **Caution**
>
> *Risk of damage to valves and piston crowns.*
>
> ♦ *Do not turn the crankshaft after the camshafts have been removed.*

– Drain coolant ⇒ page 56 .

– Remove front exhaust pipe/front silencer ⇒ page 137 .

– Remove plenum chamber cover ⇒ General body repairs, exterior; Rep. gr. 50 ; Bulkhead; Removing and installing plenum chamber cover .

– Disconnect vacuum hose -3- on rear of plenum chamber partition panel -arrow- and detach vacuum connection -2- from plenum chamber partition panel.

Protected by copyright. Copying or distribution of this document, or any part of it, is not permitted unless authorized by AUDI AG. AUDI AG does not guarantee or accept any liability with respect to the correctness of information in this document. Copyright by AUDI AG.

– Disconnect coolant hoses on rear of cylinder head.

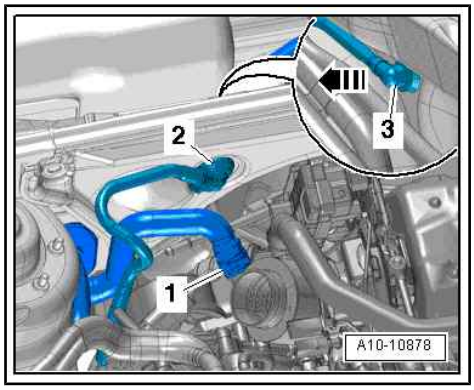

– Release hose clips -arrows- and detach air hose.

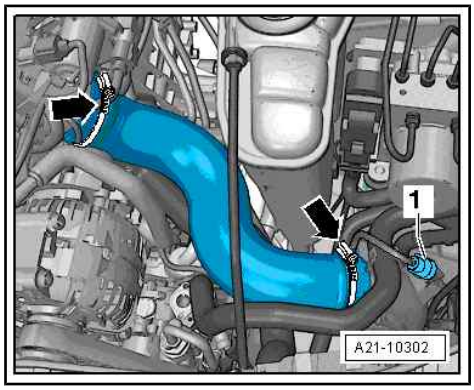

– Unplug the following electrical connectors:

2 - From knock sensor 1 - G61- (unplug and move clear).

3 - From intake manifold flap valve - N316- , fuel pressure sender - G247- and Hall sender - G40-

4 - From injectors

5 - From throttle valve module - J338-

6 - From intake air temperature sender - G42-

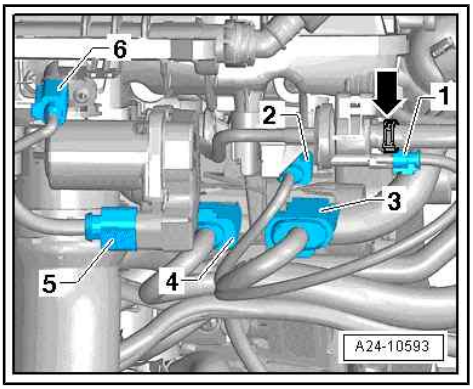

– Unplug electrical connector -2- and move wiring clear.

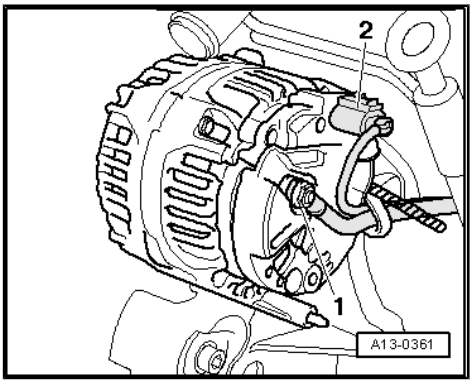

Protected by copyright. Copying for private or commercial purposes, in part or in whole, is not permitted unless authorised by AUDI AG. AUDI AG does not guarantee or accept any liability with respect to the correctness of information in this document. Copyright by AUDI AG.

– Unscrew nuts -arrows- and push catalytic converter to rear.

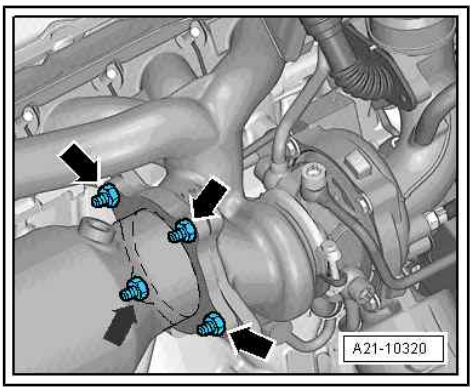

All further procedures are described in ⇒ Servicing 4-cylinder engine, 1.8 ltr., 2.0 ltr. 4-valve TFSI; Rep. gr. 15 ; Cylinder head; Removing and installing cylinder head .

Installing

Additional work:

– Install catalytic converter ⇒ page 146 .

– Install front exhaust pipe/front silencer ⇒ page 137 .

– Install plenum chamber cover ⇒ General body repairs, exterior; Rep. gr. 50 ; Bulkhead; Removing and installing plenum chamber cover .

Tightening torques

♦ ⇒ Servicing 4-cylinder engine, 1.8 ltr., 2.0 ltr. 4-valve TFSI; Rep. gr. 21 ; Charge air system; Exploded view - hose connections for charge air system

3.3 Checking compression

All procedures can be found in ⇒ Servicing 4-cylinder engine, 1.8 ltr., 2.0 ltr. 4-valve TFSI; Rep. gr. 15 ; Cylinder head; Checking compression .

4 Valve gear

⇒ “4.1 Exploded view - valve gear”, page 42

⇒ “4.2 Removing and installing camshaft”, page 42

⇒ “4.3 Installing ball for slider”, page 42

⇒ “4.4 Removing and installing actuators for camshaft adjustment”, page 42

⇒ “4.5 Removing and installing camshaft control valve 1 N205 ”, page 42

⇒ “4.6 Removing and installing valve stem oil seals”, page 43

Protected by copyright. Copying for private or commercial purposes, in part or in whole, is not permitted unless authorised by AUDI AG. AUDI AG does not guarantee or accept any liability with respect to the correctness of information in this document. Copyright by AUDI AG.

4.1 Exploded view - valve gear

All procedures are described in ⇒ Servicing 4-cylinder engine, 1.8 ltr., 2.0 ltr. 4-valve TFSI; Rep. gr. 15 ; Valve gear; Exploded view - valve gear .

4.2 Removing and installing camshaft

Removing

– Remove engine cover panel ⇒ Servicing 4-cylinder engine, 1.8 ltr., 2.0 ltr. 4-valve TFSI; Rep. gr. 10 ; Engine cover panel; Removing and installing engine cover panel .

– Remove air cleaner housing ⇒ page 109 .

All further procedures are described in ⇒ Servicing 4-cylinder engine, 1.8 ltr., 2.0 ltr. 4-valve TFSI; Rep. gr. 15 ; Valve gear; Removing and installing camshaft .

Installing

Additional work:

– Install air cleaner housing ⇒ page 109 .

– Install engine cover panel ⇒ Servicing 4-cylinder engine, 1.8 ltr., 2.0 ltr. 4-valve TFSI; Rep. gr. 10 ; Engine cover panel; Removing and installing engine cover panel .

4.3 Installing ball for slider

All procedures are described in ⇒ Servicing 4-cylinder engine, 1.8 ltr., 2.0 ltr. 4-valve TFSI; Rep. gr. 15 ; Valve gear; Installing ball for slider .

4.4 Removing and installing actuators for camshaft adjustment

All procedures are described in ⇒ Servicing 4-cylinder engine, 1.8 ltr., 2.0 ltr. 4-valve TFSI; Rep. gr. 15 ; Valve gear; Removing and installing actuators for camshaft adjustment .

4.5 Removing and installing camshaft control valve 1 - N205-

All procedures are described in ⇒ Servicing 4-cylinder engine, 1.8 ltr., 2.0 ltr. 4-valve TFSI; Rep. gr. 15 ; Valve gear; Removing and installing camshaft control valve 1 - N205- .

4.6 Removing and installing valve stem oil seals

All procedures are described in ⇒ Servicing 4-cylinder engine, 1.8 ltr., 2.0 ltr. 4-valve TFSI; Rep. gr. 15 ; Valve gear; Removing and installing valve stem oil seals .

Protected by copyright. Copying for private or commercial purposes, in part or in whole, is not permitted unless authorised by AUDI AG. AUDI AG does not guarantee or accept any liability with respect to the correctness of information in this document. Copyright by AUDI AG.

5 Inlet and exhaust valves

All procedures are described in ⇒ Servicing 4-cylinder engine, 1.8 ltr., 2.0 ltr. 4-valve TFSI; Rep. gr. 15 ; Inlet and exhaust valves .

Protected by copyright. Copying for private or commercial purposes, in part or in whole, is not permitted unless authorised by AUDI AG. AUDI AG does not guarantee or accept any liability with respect to the correctness of information in this document. Copyright by AUDI AG.

17 – Lubrication

1 Sump/oil pump

⇒ "1.1 Exploded view - sump/oil pump", page 45

⇒ "1.2 Engine oil", page 45

⇒ "1.3 Removing and installing sump (bottom section)", page 45

⇒ "1.4 Removing and installing oil pump", page 46

⇒ "1.5 Removing and installing sump (top section)", page 46

⇒ "1.6 Removing and installing oil level and oil temperature sender G266 ", page 46

1.1 Exploded view - sump/oil pump

All components are described in ⇒ Servicing 4-cylinder engine, 1.8 ltr., 2.0 ltr. 4-valve TFSI; Rep. gr. 17 ; Sump/oil pump; Exploded view - sump/oil pump .

1.2 Engine oil

- For instructions on draining and filling up engine oil, checking oil level, removing and installing oil filter, refer to ⇒ Maintenance ; Booklet 812 (A4), ⇒ Maintenance ; Booklet 811 (A5 Coupé), ⇒ Maintenance ; Booklet 818 (A5 Cabriolet).
- Refer to ⇒ Maintenance tables for engine oil capacity, oil specifications and viscosity grades.

1.3 Removing and installing sump (bottom section)

Removing

– Remove subframe cross brace -4- ⇒ Running gear, axles, steering; Rep. gr. 40 ; Subframe; Removing and installing subframe cross brace .

Protected by copyright. Copying for private or commercial purposes, in part or in whole, is n
mitted unless authorized by AUDI AG. AUDI AG does not guarantee or accept any liabi
with respect to the correctness of information in this document. Copyright by AUDI AG.

Vehicles with hydraulic power steering:

> ⚠ **Caution**
>
> *Danger of damage to oil lines and hoses.*
>
> ♦ *Do NOT stretch, kink or bend oil lines or hoses.*

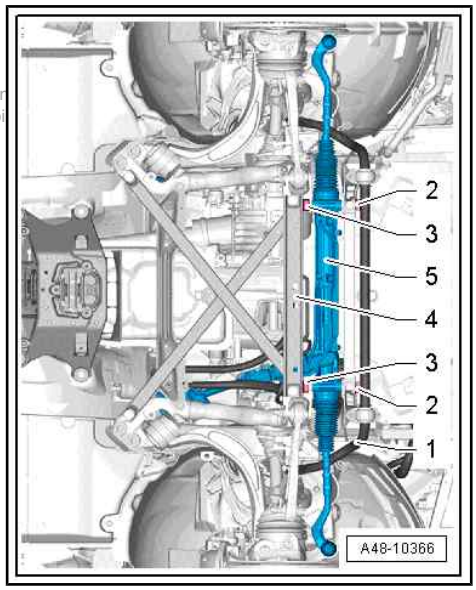

Continued for all vehicles:

– Remove anti-roll bar -1- ⇒ Running gear, axles, steering; Rep. gr. 40 ; Subframe; Removing and installing anti-roll bar .

– Unscrew bolts -2- and remove nuts -3-.

– Guide steering rack -5- slightly to the right, lower by approx. 10 cm and tie up.

– Remove bolt -arrow-.

– Detach steering column -1- from steering rack -2-.

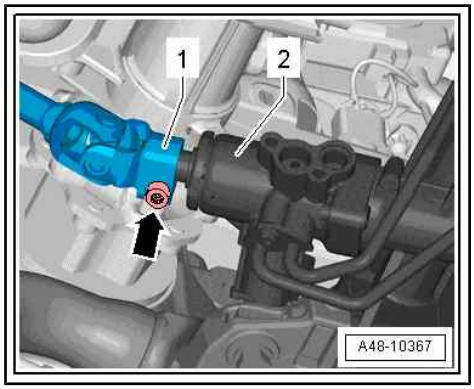

All further procedures are described in ⇒ Servicing 4-cylinder engine, 1.8 ltr., 2.0 ltr. 4-valve TFSI; Rep. gr. 17 ; Sump/oil pump; Removing and installing sump (bottom section) .

Installing

Additional work:

– Install steering rack ⇒ Running gear, axles, steering; Rep. gr. 48 ; Steering rack; Removing and installing steering rack .

– Install anti-roll bar ⇒ Running gear, axles, steering; Rep. gr. 40 ; Subframe; Removing and installing anti-roll bar .

– Install subframe cross brace ⇒ Running gear, axles, steering; Rep. gr. 40 ; Subframe; Removing and installing subframe cross brace .

1.4 Removing and installing oil pump

All procedures are described in ⇒ Servicing 4-cylinder engine, 1.8 ltr., 2.0 ltr. 4-valve TFSI; Rep. gr. 17 ; Sump/oil pump; Removing and installing oil pump .

1.5 Removing and installing sump (top section)

All procedures are described in ⇒ Servicing 4-cylinder engine, 1.8 ltr., 2.0 ltr. 4-valve TFSI; Rep. gr. 17 ; Sump/oil pump; Removing and installing sump (top section) .

1.6 Removing and installing oil level and oil temperature sender - G266-

All procedures are described in ⇒ Servicing 4-cylinder engine, 1.8 ltr., 2.0 ltr. 4-valve TFSI; Rep. gr. 17 ; Sump/oil pump; Removing and installing oil level and oil temperature sender - G266- .

Protected by copyright. Copying for private or commercial purposes, in part or in whole, is not permitted unless authorised by AUDI AG. AUDI AG does not guarantee or accept any liability with respect to the correctness of information in this document. Copyright by AUDI AG.

2 Engine oil cooler

All procedures and components can be found in ⇒ Servicing 4-cylinder engine, 1.8 ltr., 2.0 ltr. 4-valve TFSI; Rep. gr. 17 ; Engine oil cooler .

Protected by copyright. Copying for private or commercial purposes, in part or in whole, is not permitted unless authorised by AUDI AG. AUDI AG does not guarantee or accept any liability with respect to the correctness of information in this document. Copyright by AUDI AG.

3 Crankcase breather

⇒ “3.1 Exploded view - crankcase breather system”, page 48

⇒ “3.2 Removing and installing oil separator”, page 48

3.1 Exploded view - crankcase breather system

All components are described in ⇒ Servicing 4-cylinder engine, 1.8 ltr., 2.0 ltr. 4-valve TFSI; Rep. gr. 17 ; Crankcase breather; Exploded view - crankcase breather system .

3.2 Removing and installing oil separator

⇒ “3.2.1 Removing and installing oil separator on cylinder block”, page 48

⇒ “3.2.2 Removing and installing oil separator on cylinder head cover”, page 49

3.2.1 Removing and installing oil separator on cylinder block

Removing

– Remove engine mounting (left-side) ⇒ page 24 .

– Release hose clips -arrows- and detach air hose.

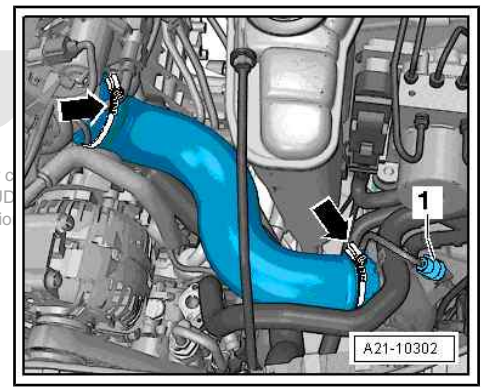

Protected by copyright. Copying for private or c
permitted unless authorised by AUDI AG. AUD
with respect to the correctness of informatio

– Remove bolts -arrows- and detach engine support (left-side) -1-.

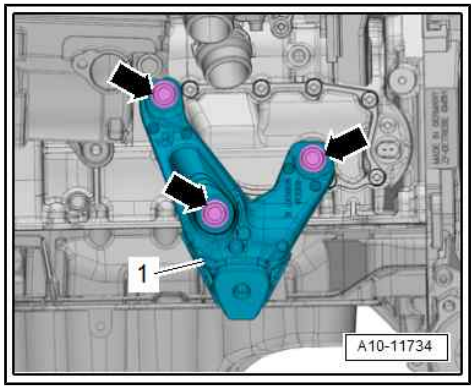

All further procedures are described in ⇒ Servicing 4-cylinder engine, 1.8 ltr., 2.0 ltr. 4-valve TFSI; Rep. gr. 17 ; Crankcase breather; Removing and installing oil separator .

Installing

Additional work:

Note

Secure all hose connections with the correct type of hose clips (same as original equipment) ⇒ Electronic parts catalogue .

– Install engine mounting (left-side) ⇒ page 24 .

Tightening torques

- ⇒ “2.1 Exploded view - assembly mountings”, page 23
- ⇒ Servicing 4-cylinder engine, 1.8 ltr., 2.0 ltr. 4-valve TFSI; Rep. gr. 21 ; Charge air system; Exploded view - hose connections for charge air system

3.2.2 Removing and installing oil separator on cylinder head cover

All procedures are described in ⇒ Servicing 4-cylinder engine, 1.8 ltr., 2.0 ltr. 4-valve TFSI; Rep. gr. 17 ; Crankcase breather; Removing and installing oil separator .

Protected by copyright. Copying for private or commercial purposes, in part or in whole, is not permitted unless authorised by AUDI AG. AUDI AG does not guarantee or accept any liability with respect to the correctness of information in this document. Copyright by AUDI AG.

4 Oil filter/oil pressure switches

All procedures and components can be found in ⇒ Servicing 4-cylinder engine, 1.8 ltr., 2.0 ltr. 4-valve TFSI; Rep. gr. 17 ; Oil filter/oil pressure switches .

Protected by copyright. Copying for private or commercial purposes, in part or in whole, is not permitted unless authorised by AUDI AG. AUDI AG does not guarantee or accept any liability with respect to the correctness of information in this document. Copyright by AUDI AG.

19 – Cooling

1 Cooling system/coolant

⇒ “1.1 Connection diagram - coolant hoses”, page 51

⇒ “1.2 Checking cooling system for leaks”, page 56

⇒ “1.3 Draining and filling cooling system”, page 56

1.1 Connection diagram - coolant hoses

⇒ “1.1.1 Connection diagram - coolant hoses, vehicles without gear oil heating and without auxiliary heater”, page 51

⇒ “1.1.2 Connection diagram - coolant hoses, vehicles without gear oil heating and with auxiliary heater”, page 53

⇒ “1.1.3 Connection diagram - coolant hoses, vehicles with gear oil heating and without auxiliary heater”, page 54

⇒ “1.1.4 Connection diagram - coolant hoses, vehicles with gear oil heating and with auxiliary heater”, page 55

1.1.1 Connection diagram - coolant hoses, vehicles without gear oil heating and without auxiliary heater

Note

- *Blue = Large coolant circuit.*
- *Red = Small coolant circuit.*
- *Brown = Heating circuit.*

Protected by copyright. Copying for private or commercial purposes, in part or in whole, is not permitted unless authorised by AUDI AG. AUDI AG does not guarantee or accept any liability with respect to the correctness of information in this document. Copyright by AUDI AG.

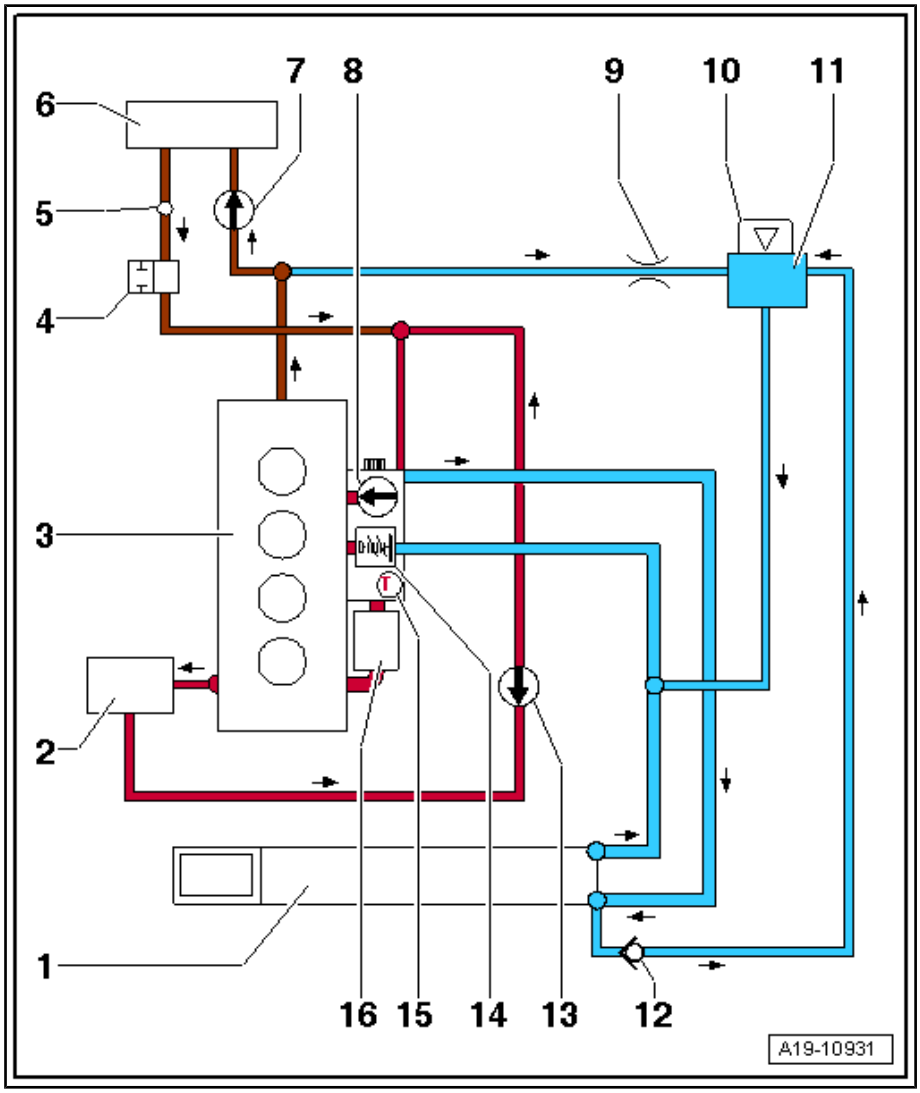

1 - Radiator

2 - Turbocharger

3 - Cylinder head/cylinder block

4 - Coolant shut-off valve

- ❑ Activated by Climatronic coolant shut-off valve - N422- (negative pressure)

5 - Bleeder hole

6 - Heat exchanger for heater

7 - Coolant circulation pump - V50-

- ❑ Only installed on vehicles with start/stop system

8 - Coolant pump

9 - Restrictor

10 - Filler cap for expansion tank

- ❑ Checking pressure relief valve ⇒ Servicing 4-cylinder engine, 1.8 ltr., 2.0 ltr. 4-valve TFSI; Rep. gr. 19 ; Cooling system/coolant; Checking cooling system for leaks

11 - Coolant expansion tank

12 - Non-return valve

13 - Continued coolant circulation pump - V51-

- ❑ Only fitted on vehicles equipped for hot climates

14 - Thermostat

15 - Coolant temperature sender - G62-

16 - Engine oil cooler

Protected by copyright. Copying for private or commercial purposes, in part or in whole, is not permitted unless authorised by AUDI AG. AUDI AG does not guarantee or accept any liability with respect to the correctness of information in this document. Copyright by AUDI AG.

1.1.2 Connection diagram - coolant hoses, vehicles without gear oil heating and with auxiliary heater

Note

- *Blue = Large coolant circuit.*
- *Red = Small coolant circuit.*
- *Brown = Heating circuit.*

Protected by copyright. Copying for private or commercial purposes, in part or in whole, is not permitted unless authorized by AUDI AG. AUDI AG does not guarantee or accept any liability with respect to the correctness of information in this document. Copyright by AUDI AG.

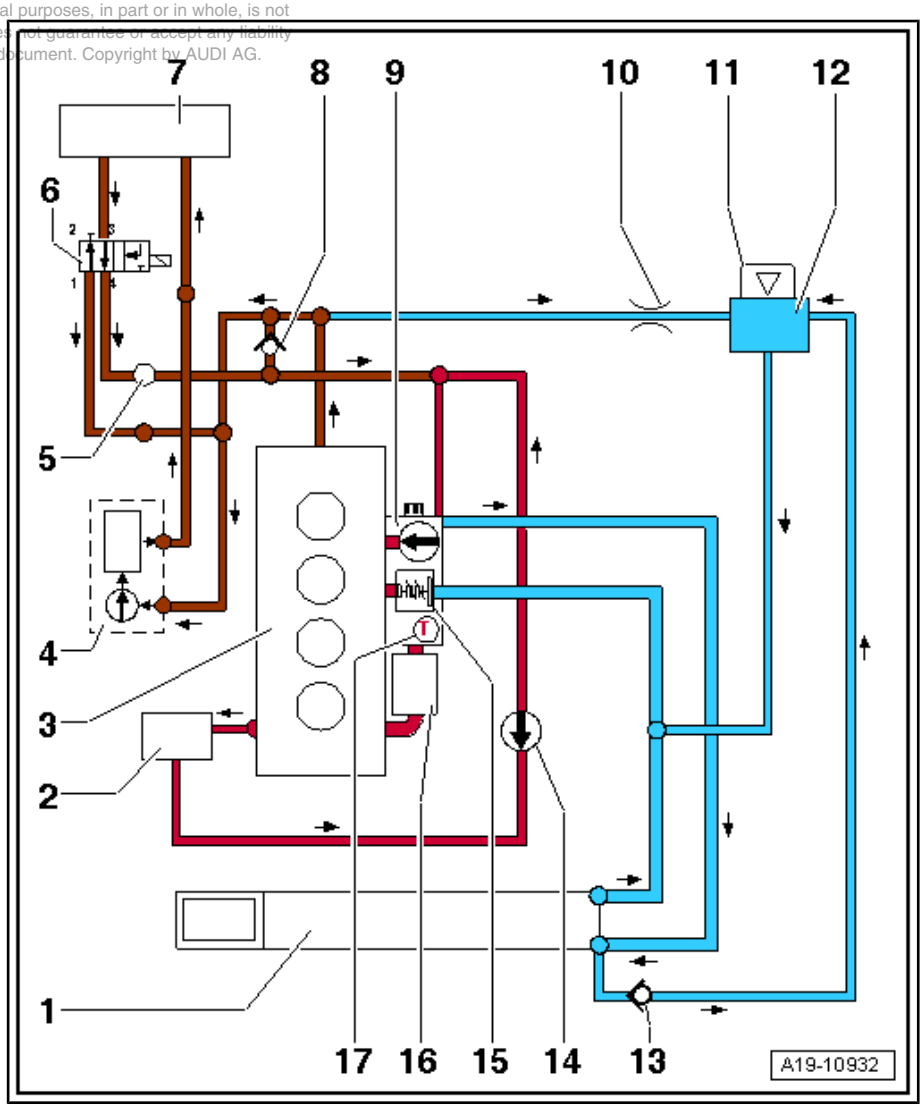

1 - Radiator

2 - Turbocharger

3 - Cylinder head/cylinder block

4 - Auxiliary heater

5 - Bleeder hole

6 - Heater coolant shut-off valve - N279-

7 - Heat exchanger for heater

8 - Non-return valve

- ❑ Arrow indicates direction of flow

9 - Coolant pump

10 - Restrictor

11 - Filler cap for expansion tank

- ❑ Checking pressure relief valve ⇒ Servicing 4-cylinder engine, 1.8 ltr., 2.0 ltr. 4-valve TFSI; Rep. gr. 19 ; Cooling system/coolant; Checking cooling system for leaks

12 - Coolant expansion tank

13 - Non-return valve

14 - Continued coolant circulation pump - V51-

- ❑ Only fitted on vehicles equipped for hot climates

15 - Thermostat

16 - Engine oil cooler

17 - Coolant temperature sender - G62-

1.1.3 Connection diagram - coolant hoses, vehicles with gear oil heating and without auxiliary heater

Note

- *Blue = Large coolant circuit.*
- *Red = Small coolant circuit.*
- *Brown = Heating circuit.*
- *Green = Gearbox heating circuit.*

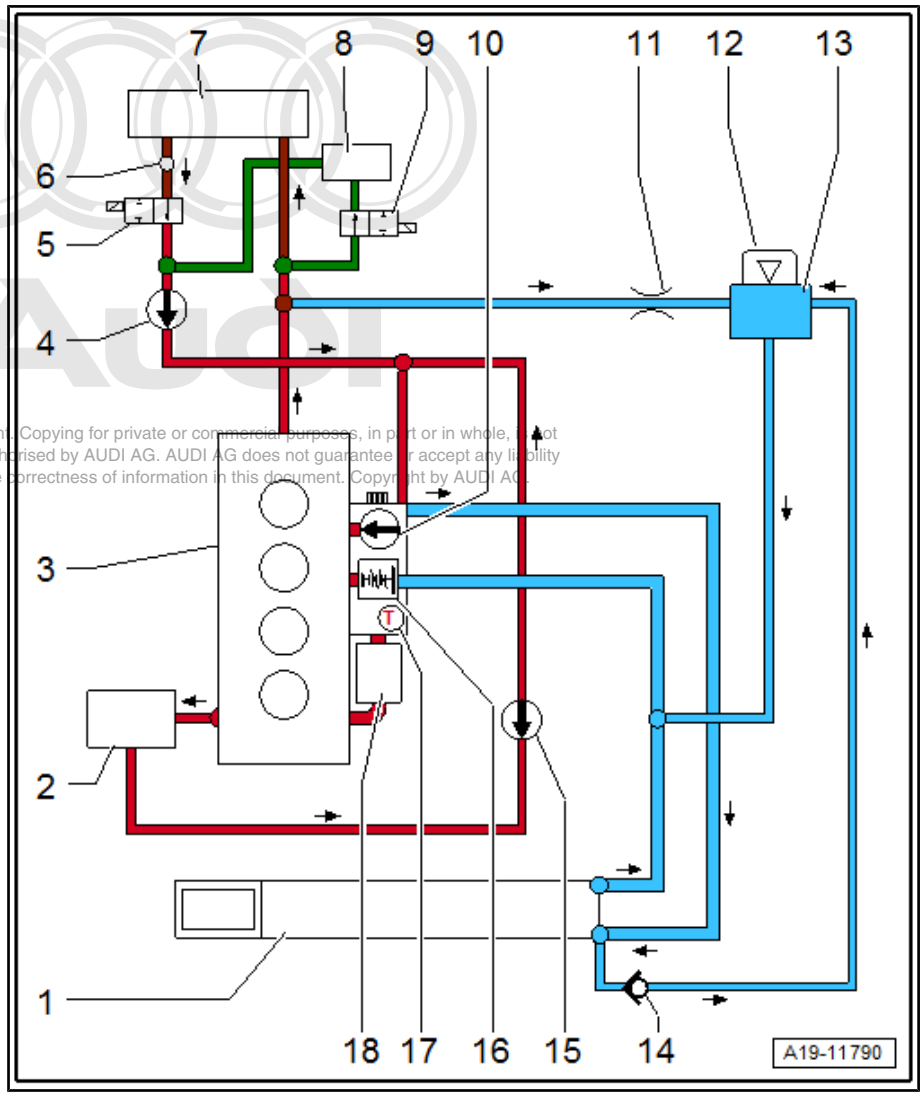

Protected by copyright. Copying for private or commercial purposes, in part or in whole, is not permitted unless authorised by AUDI AG. AUDI AG does not guarantee or accept any liability with respect to the correctness of information in this document. Copyright by AUDI AG.

1 - Radiator

2 - Turbocharger

3 - Cylinder head/cylinder block

4 - Coolant circulation pump - V50-

- ❑ Only installed on vehicles with start/stop system

5 - Coolant shut-off valve

- ❑ Activated by Climatronic coolant shut-off valve - N422- (negative pressure)

6 - Bleeder hole

7 - Heat exchanger for heater

8 - Heat exchanger for gearbox

- ❑ In gearbox housing

9 - Coolant valve for gearbox - N488-

10 - Coolant pump

11 - Restrictor

12 - Filler cap for expansion tank

- ❑ Checking pressure relief valve ⇒ Servicing 4-cylinder engine, 1.8 ltr., 2.0 ltr. 4-valve TFSI; Rep. gr. 19 ; Cooling system/coolant; Checking cooling system for leaks

13 - Coolant expansion tank

14 - Non-return valve

15 - Continued coolant circulation pump - V51-

- ❑ Only fitted on vehicles equipped for hot climates

16 - Thermostat

17 - Coolant temperature sender - G62-

18 - Engine oil cooler

1.1.4 Connection diagram - coolant hoses, vehicles with gear oil heating and with auxiliary heater

Note

- *Blue = Large coolant circuit.*
- *Red = Small coolant circuit.*
- *Brown = Heating circuit.*
- *Green = Gearbox heating circuit.*

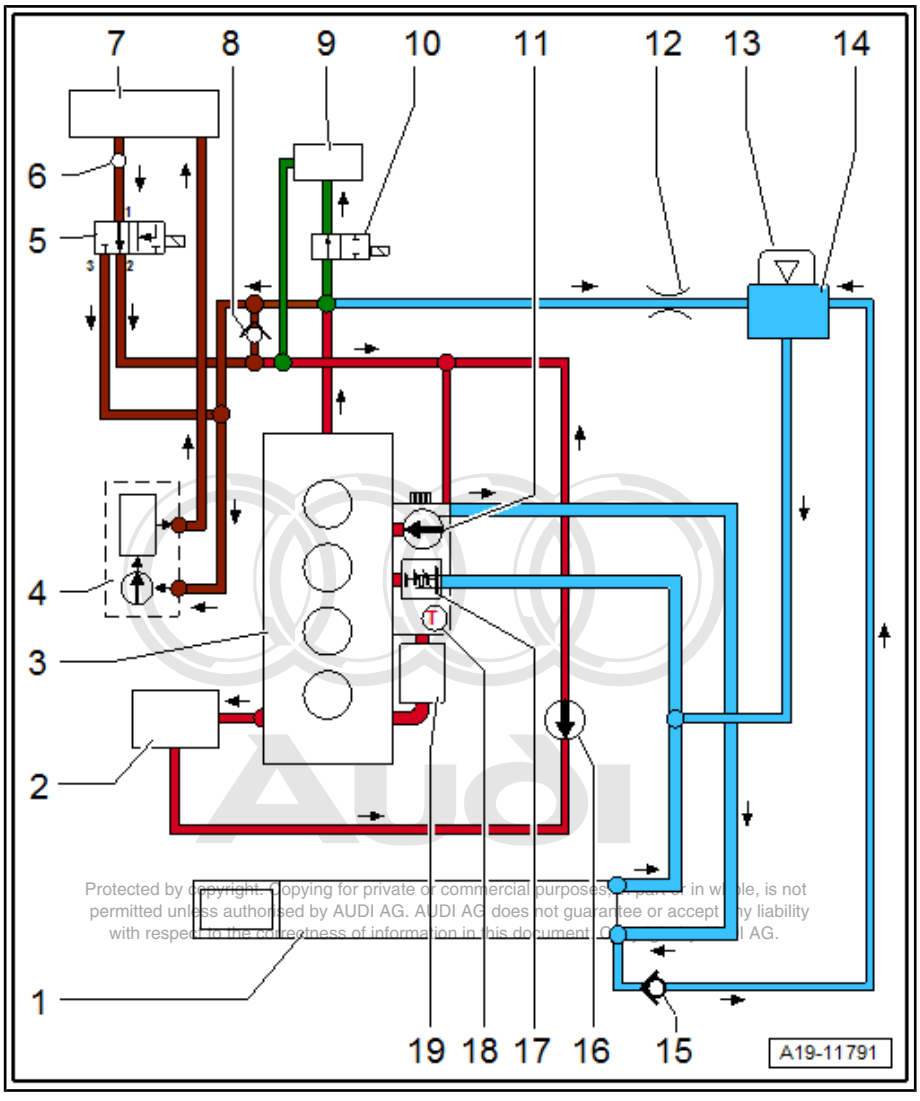

Protected by copyright. Copying for private or commercial purposes, in part or in whole, is not permitted unless authorised by AUDI AG. AUDI AG does not guarantee or accept any liability with respect to the correctness of information in this document. Copyright by AUDI AG.

1 - Radiator

2 - Turbocharger

3 - Cylinder head/cylinder block

4 - Auxiliary heater

5 - Coolant shut-off valve - N82-

6 - Bleeder hole

7 - Heat exchanger for heater

8 - Non-return valve

9 - Heat exchanger for gearbox

- ❑ In gearbox housing

10 - Coolant valve for gearbox - N488-

11 - Coolant pump

12 - Restrictor

13 - Filler cap for expansion tank

- ❑ Checking pressure relief valve ⇒ Servicing 4-cylinder engine, 1.8 ltr., 2.0 ltr. 4-valve TFSI; Rep. gr. 19 ; Cooling system/coolant; Checking cooling system for leaks

14 - Coolant expansion tank

15 - Non-return valve

16 - Continued coolant circulation pump - V51-

- ❑ Only fitted on vehicles equipped for hot climates

17 - Thermostat

18 - Coolant temperature sender - G62-

19 - Engine oil cooler

1.2 Checking cooling system for leaks

All procedures are described in ⇒ Servicing 4-cylinder engine, 1.8 ltr., 2.0 ltr. 4-valve TFSI; Rep. gr. 19 ; Cooling system/coolant; Checking cooling system for leaks .

1.3 Draining and filling cooling system

Special tools and workshop equipment required

- Adapter for cooling system tester - V.A.G 1274/8-

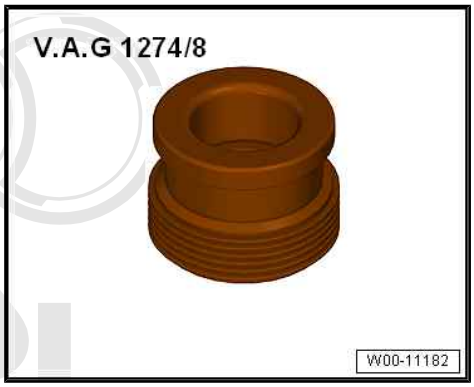

- Pipe for cooling system tester - V.A.G 1274/10-

Protected by copyright. Copying for private or commercial purposes, in part or in whole, is not permitted unless authorised by AUDI AG. AUDI AG does not guarantee or accept any liability with respect to the correctness of information in this document. Copyright by AUDI AG.

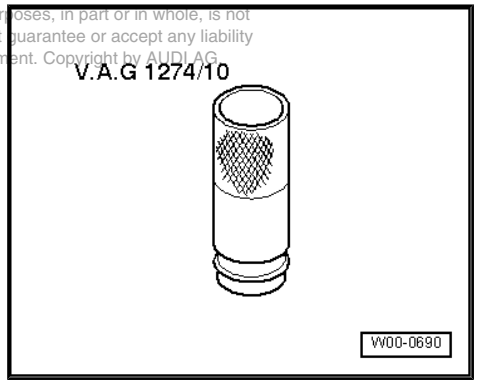

- Cooling system charge unit - VAS 6096-

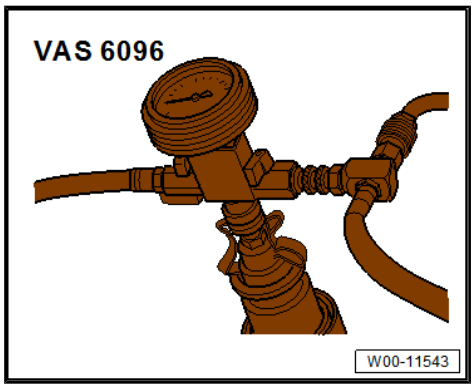

- Drip tray for workshop hoist - VAS 6208-

- Hose clip pliers - VAS 6362-

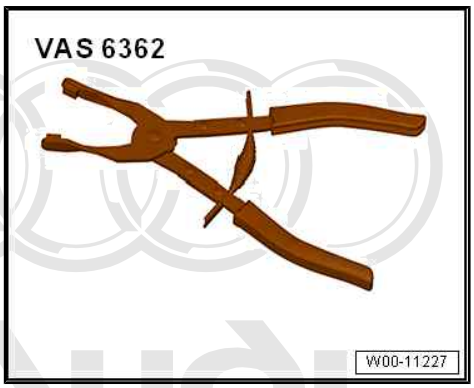

- Refractometer - T10007 A-

Protected by copyright. Copy ... commercial purposes, in part or in whole, is not permitted unless authorised by AUDI AG. AUDI AG does not guarantee ... liability with respect to the correctness of information in this document ... AUDI AG.

- Protective gloves
- Safety goggles

Draining

WARNING

The cooling system is under pressure when the engine is hot. Hot steam/hot coolant can escape - risk of scalding.

Danger of scalding skin and other parts of the body.

- *Put on protective gloves.*
- *Put on safety goggles.*
- *Cover filler cap on expansion tank with a cloth and open carefully to release pressure.*

– Open filler cap on coolant expansion tank.
– Remove noise insulation (front) ⇒ General body repairs, exterior; Rep. gr. 66 ; Noise insulation; Removing and installing noise insulation .

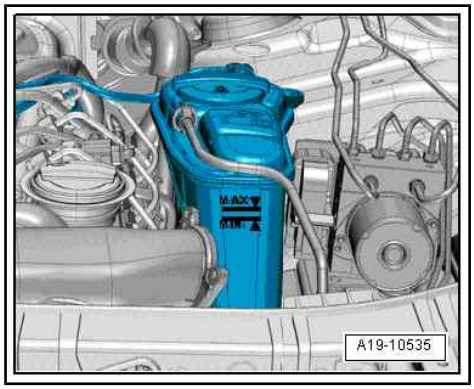

– Place drip tray for workshop hoist - VAS 6208- beneath engine.
– Remove drain plug -1- and drain off coolant.

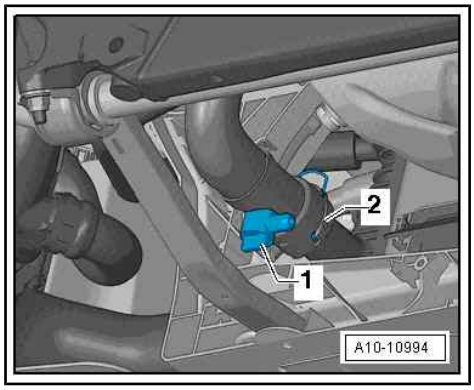

Vehicles with gear oil heating:

– Release hose clips -1 and 2-, disconnect coolant hoses and drain off coolant.

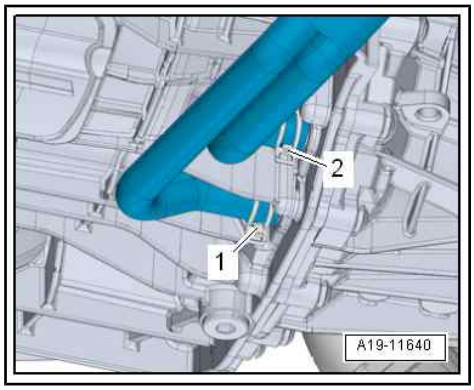

All vehicles:

Note

Secure all hose connections with the correct type of hose clips (same as original equipment) ⇒ Electronic parts catalogue .

– Close drain plug.
– Re-connect coolant hoses.

Coolant specifications

Copyright by AUDI AG. Duplication for private or commercial purposes, in part or in whole, is not permitted unless authorised by AUDI AG. AUDI AG does not guarantee or accept any liability with respect to the correctness of information in this document.

All information can be found in ⇒ Servicing 4-cylinder engine, 1.8 ltr., 2.0 ltr. 4-valve TFSI; Rep. gr. 19 ; Cooling system/coolant; Draining and filling cooling system .

Recommended mixture ratio for coolant

- Coolant (40 %) and distilled water (60 %) for frost protection to -25 °C
- Coolant (50 %) and distilled water (50 %) for frost protection to -36 °C
- Coolant ⇒ Electronic parts catalogue (ETKA)

Caution

To ensure optimal corrosion protection, only distilled water may be mixed with coolant additives.

Filling cooling system

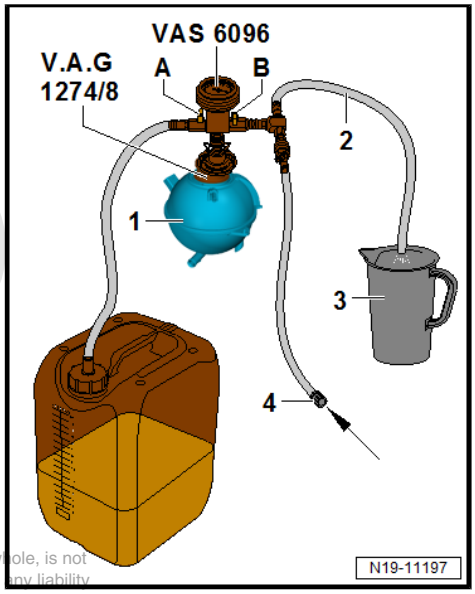

Note

Do not reuse coolant.

- Fill reservoir of cooling system charge unit - VAS 6096- with 10 litres of premixed coolant (according to recommended ratio). For recommended ratio, refer to ⇒ page 58 .
- Fit adapter for cooling system tester - V.A.G 1274/8- onto coolant expansion tank.
- Attach cooling system charge unit - VAS 6096- to adapter for cooling system tester - V.A.G 1274/8- .
- Run vent hose -1- into a small container -2-.

Note

Protected by copyright. Copying for private or commercial purposes, in part or in whole, is not permitted unless authorised by AUDI AG. AUDI AG does not guarantee or accept any liability with respect to the correctness of information in this document. Copyright by AUDI AG.

The vented air draws along a small amount of coolant, which should be collected.

- Close both valves -A- and -B- (turn lever at right angles to direction of flow).
- Connect hose -3- to compressed air supply.

• Pressure: 7 ... 10 bar.

– Open valve -B- by setting lever in direction of flow.

• The suction jet pump generates a partial vacuum in the cooling system; the needle on the gauge should move into the green zone.

– Also briefly open valve -A- (turn lever in direction of flow) so that hose on reservoir of cooling system charge unit - VAS 6096- can fill with coolant.

– Close valve -A- again.

– Leave valve -B- open for another 2 minutes.

• The suction jet pump continues to generate a partial vacuum in the cooling system; the needle on the gauge should remain in the green zone.

– Close valve -B-.

• The needle on the gauge should stop in the green zone. The vacuum level in the cooling system is then sufficient for subsequent filling.

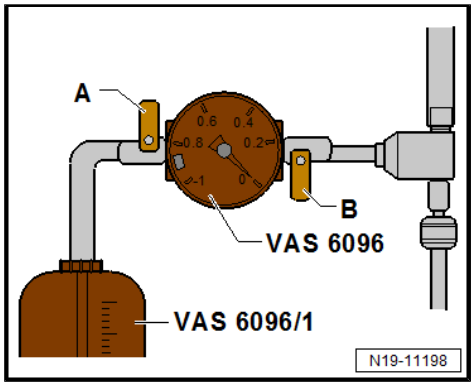

Note

♦ *If the needle does not reach the green zone, repeat the process.*

♦ *Check cooling system for leaks if the vacuum is not maintained.*

– Detach compressed air hose.

– Open valve -A-.

• The vacuum in the cooling system causes the coolant to be drawn out of the reservoir of the cooling system charge unit - VAS 6096- ; the cooling system is then filled.

– Detach cooling system charge unit - VAS 6096- from adapter for cooling system tester - V.A.G 1274/8- on coolant expansion tank.

Protected by copyright. Copying for private or commercial purposes, in part or in whole, is not permitted unless authorised by AUDI AG. AUDI AG does not guarantee or accept any liability with respect to the correctness of information in this document. Copyright by AUDI AG.

– Fit pipe for cooling system tester - V.A.G 1274/10- onto adapter for cooling system tester - V.A.G 1274/8- .

– Fill up pipe for cooling system tester - V.A.G 1274/10- with coolant. If required, add further coolant when performing bleeding procedure.

– Remove plenum chamber cover ⇒ General body repairs, exterior; Rep. gr. 50 ; Bulkhead; Removing and installing plenum chamber cover .

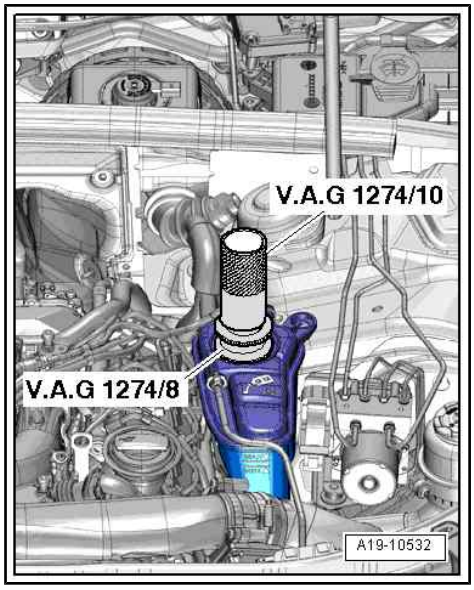

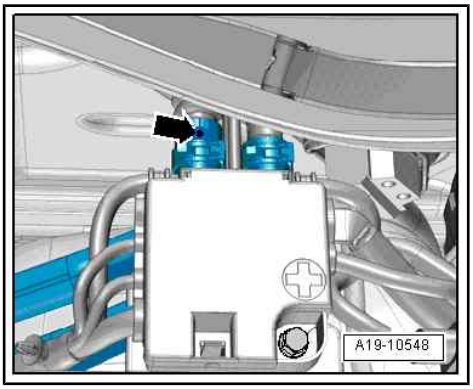

– Release coolant hose going to heat exchanger for heater and pull back hose until bleeder hole -arrow- in hose is no longer blocked by connection.
– Fill up with coolant until it flows out at bleeder hole in coolant hose.
– Push coolant hose back onto connection and secure with spring-type hose clip.
– Close filler cap on expansion tank.
– Start engine.
– Set temperature to “HI” in all zones.
– Set fresh air blower to lowest setting.
– Switch off air conditioner compressor (press AC button).
• LED in button should not light up.
– Run engine for 3 minutes at 2000 rpm.
– Allow engine to run at idling speed until both large coolant hoses at radiator become warm.
– Run engine for 2 minutes at 2000 rpm.
– Switch off ignition and allow engine to cool down.
– On vehicles with auxiliary heater, switch heater on for approx. 30 seconds and allow engine to run at idling speed.
– Install noise insulation (front) ⇒ General body repairs, exterior; Rep. gr. 66 ; Noise insulation; Exploded view - noise insulation .

Checking coolant level

WARNING

The cooling system is under pressure when the engine is hot. Hot steam/hot coolant can escape - risk of scalding.

Danger of scalding skin and other parts of the body.

- *Put on protective gloves.*
- *Put on safety goggles.*
- *Cover filler cap on expansion tank with a cloth and open carefully to release pressure.*

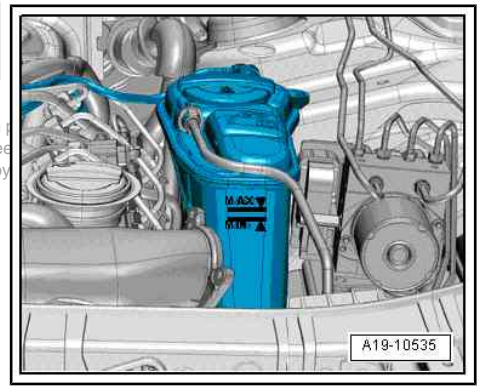

• The coolant level must be at the “MAX” marking when the engine is cold.
• The coolant level can be above the “MAX” marking when the engine is warm.

Protected by copyright. Copying for private or commercial purposes, in p
permitted unless authorised by AUDI AG. AUDI AG does not guarantee
with respect to the correctness of information in this document. Copy

2 Coolant pump/thermostat assembly

⇒ “2.1 Exploded view - coolant pump/thermostat”, page 62

⇒ “2.2 Exploded view - electric coolant pump”, page 62

⇒ “2.3 Exploded view - coolant valves”, page 65

⇒ “2.4 Removing and installing electric coolant pump”, page 65

⇒ “2.5 Removing and installing coolant pump”, page 68

⇒ “2.6 Removing and installing toothed belt for coolant pump”, page 69

⇒ “2.7 Removing and installing thermostat”, page 69

⇒ “2.8 Checking thermostat”, page 69

⇒ “2.9 Removing and installing coolant temperature sender G62”, page 69

2.1 Exploded view - coolant pump/thermostat

All components are described in ⇒ Servicing 4-cylinder engine, 1.8 ltr., 2.0 ltr. 4-valve TFSI; Rep. gr. 19 ; Coolant pump/thermostat assembly; Exploded view - coolant pump/thermostat .

Protected by copyright. Copying for private or commercial purposes, in part or in whole, is not permitted unless authorised by AUDI AG. AUDI AG does not guarantee or accept any liability with respect to the correctness of information in this document. Copyright by AUDI AG.

2.2 Exploded view - electric coolant pump

⇒ “2.2.1 Exploded view - electric coolant pump, coolant circulation pump V51 (version 1)”, page 62

⇒ “2.2.2 Exploded view - electric coolant pump, coolant circulation pump V51 (version 2)”, page 64

2.2.1 Exploded view - electric coolant pump, coolant circulation pump - V51- (version 1)

1 - Bolt
- ❑ 2.7 Nm

2 - Spacer sleeve

3 - Grommet

4 - Bracket

5 - Nut
- ❑ 9 Nm

6 - Coolant hoses

7 - Continued coolant circulation pump - V51-
- ❑ Removing and installing ⇒ “2.4.1 Removing and installing continued coolant circulation pump V51 (version 1)”, page 65

8 - Centre hex stud
- ❑ 9 Nm

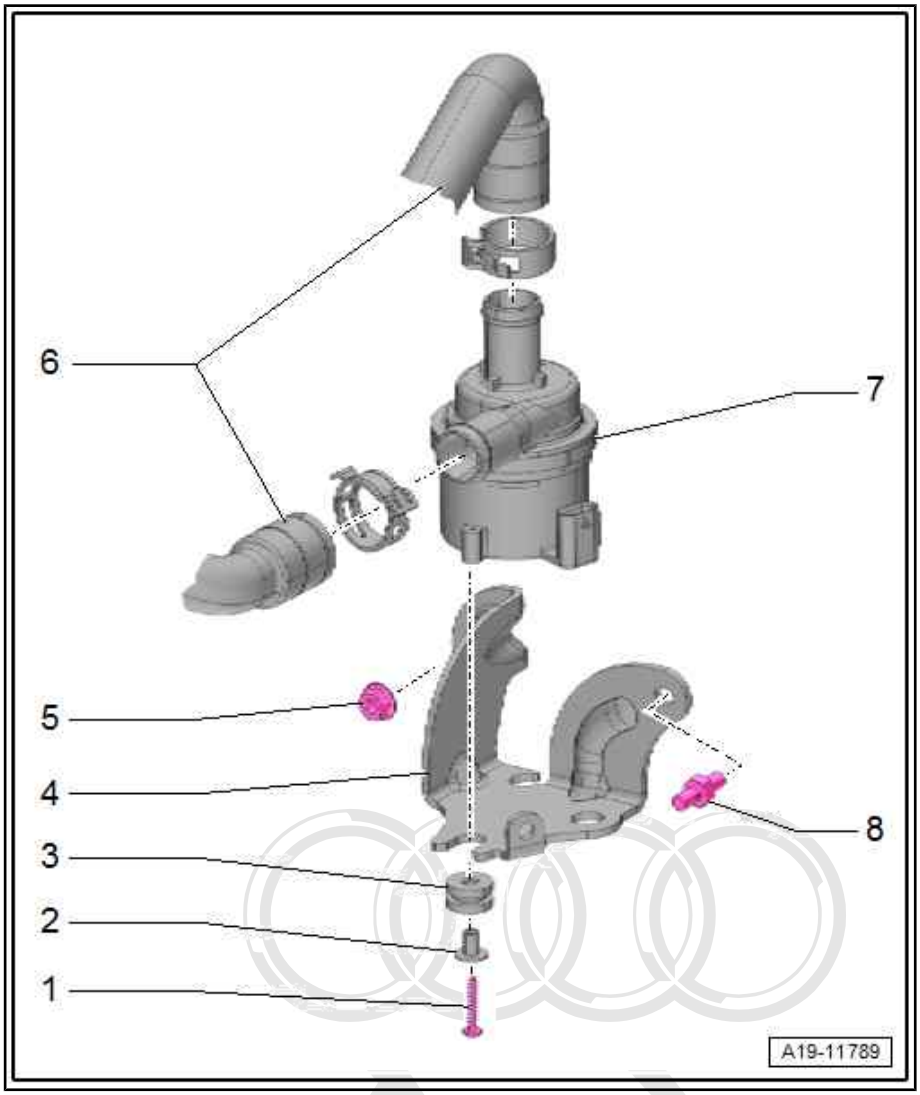

Protected by copyright. Copying for private or commercial purposes, in part or in whole, is not permitted unless authorised by AUDI AG. AUDI AG does not guarantee or accept any liability with respect to the correctness of information in this document. Copyright by AUDI AG.

2.2.2 Exploded view - electric coolant pump, coolant circulation pump - V51- (version 2)

1 - Coolant hoses

2 - Continued coolant circulation pump - V51-

- ❑ Removing and installing ⇒ “2.4.2 Removing and installing continued coolant circulation pump V51 (version 2)”, page 67

Protected by copyright. Copying for private or commercial purposes, in part or in whole, is not permitted unless authorised by AUDI AG. AUDI AG does not guarantee or accept any liability with respect to the correctness of information in this document. Copyright by AUDI AG.

3 - Bracket

4 - Bolt

- ❑ 9 Nm

5 - Bracket

6 - Bolt

- ❑ 4 Nm

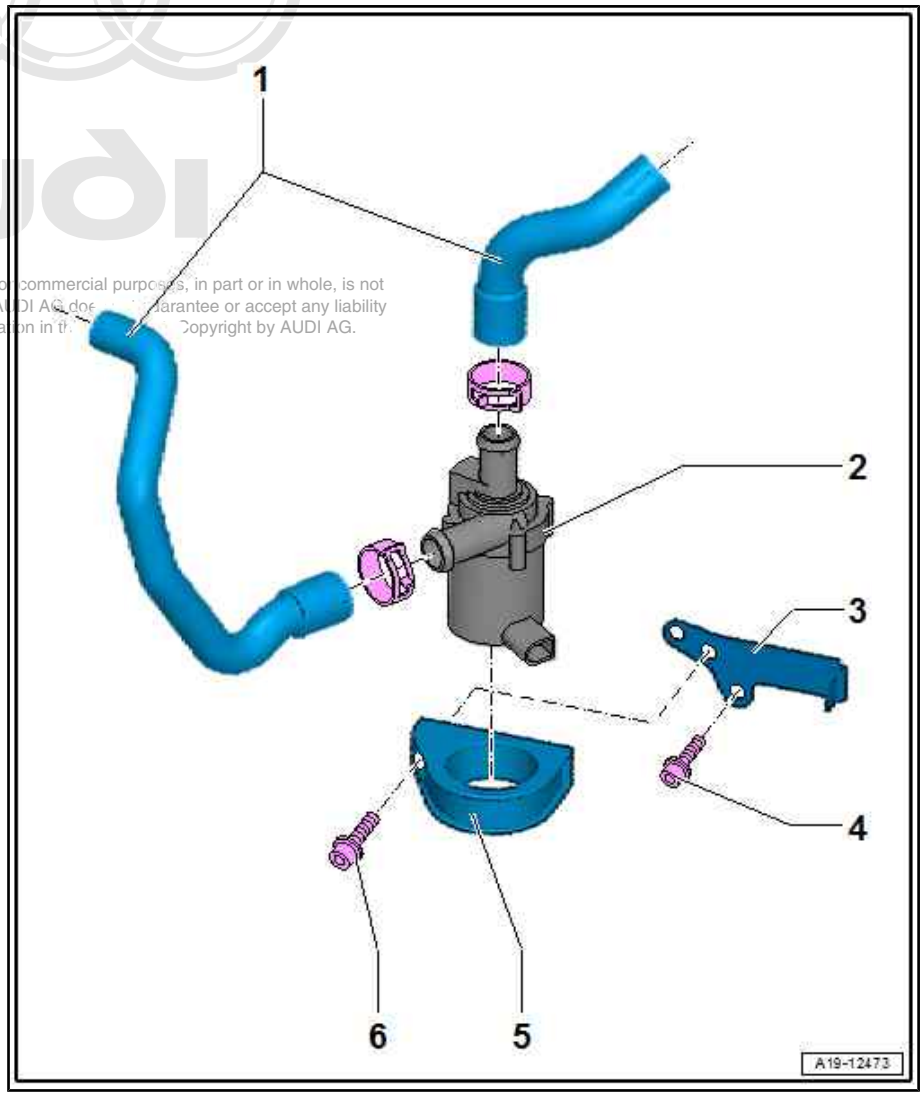

2.3 Exploded view - coolant valves

1 - Coolant valve for gearbox - N488-

- ❑ Removing and installing ⇒ page 70

2 - Coolant hose

3 - Bolt

- ❑ 23 Nm

4 - Bracket

- ❑ For coolant valve for gearbox - N488-

5 - Nut

- ❑ 9 Nm

6 - Coolant hose

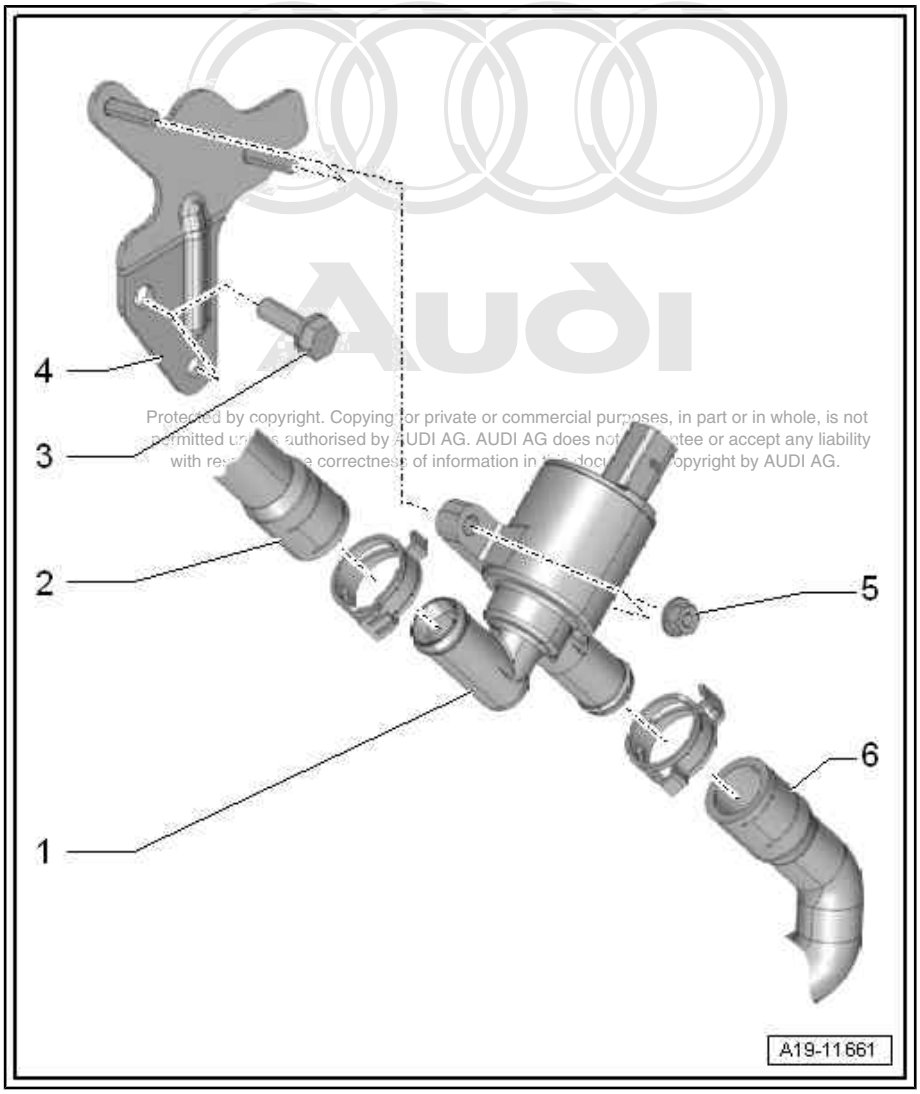

Protected by copyright. Copying for private or commercial purposes, in part or in whole, is not permitted unless authorised by AUDI AG. AUDI AG does not guarantee or accept any liability with respect to the correctness of information in this document. Copyright by AUDI AG.

2.4 Removing and installing electric coolant pump

⇒ "2.4.1 Removing and installing continued coolant circulation pump V51 (version 1)", page 65

⇒ "2.4.2 Removing and installing continued coolant circulation pump V51 (version 2)", page 67

2.4.1 Removing and installing continued coolant circulation pump - V51- (version 1)

Special tools and workshop equipment required

- Hose clamps, up to 25 mm - 3094-

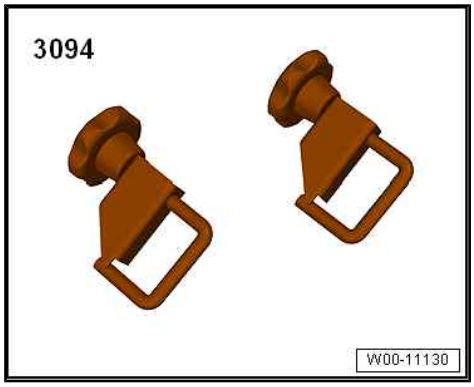

- Hose clip pliers - VAS 6362-

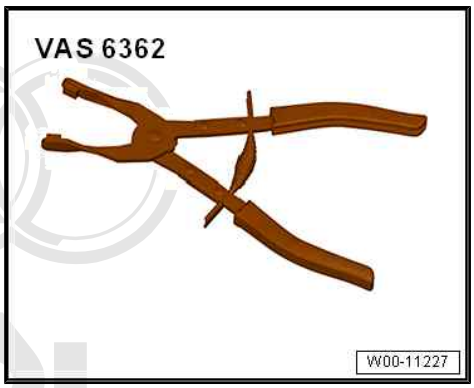

Protected by copyright. Copying for private or commercial p
permitted unless authorised by AUDI AG. AUDI AG does n
for the correct and complete reproduction of this docu

Removing

– Remove engine cover panel ⇒ Servicing 4-cylinder engine, 1.8 ltr., 2.0 ltr. 4-valve TFSI; Rep. gr. 10 ; Engine cover panel; Removing and installing engine cover panel .

– Release hose clips -arrows- and detach air hose.

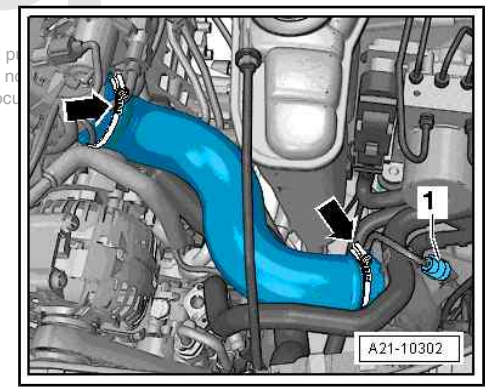

– Unplug electrical connector -5-.
– Remove nut -4-, move earth wire clear and remove centre hex stud.
– Unscrew nut -2-.
– Clamp off coolant hoses using hose clamps up to 25 mm - 3094- , release hose clips -3- and disconnect hoses.
– Remove bolts -1- and detach continued coolant circulation pump - V51- .

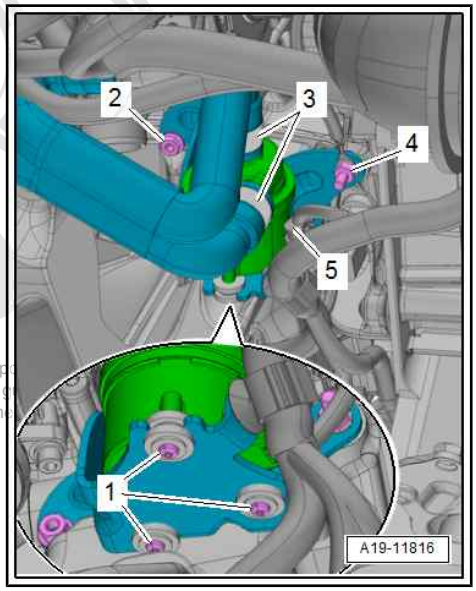

Installing

Installation is carried out in the reverse order; note the following:

Copyright by AUDI AG. Commercial purp
permitted unless authorised by AUDI AG. AUDI AG does not g
with respect to the correctness of information in this docum

Note

Secure all hose connections with the correct type of hose clips (same as original equipment) ⇒ Electronic parts catalogue .

– Install engine cover panel ⇒ Servicing 4-cylinder engine, 1.8 ltr., 2.0 ltr. 4-valve TFSI; Rep. gr. 10 ; Engine cover panel; Removing and installing engine cover panel .
– Check coolant level ⇒ page 61 .

Tightening torques

- ⇒ “2.2.1 Exploded view - electric coolant pump, coolant circulation pump V51 (version 1)”, page 62
- ⇒ Servicing 4-cylinder engine, 1.8 ltr., 2.0 ltr. 4-valve TFSI; Rep. gr. 21 ; Charge air system; Exploded view - hose connections for charge air system

2.4.2 Removing and installing continued coolant circulation pump - V51- (version 2)

Special tools and workshop equipment required

- Hose clamps, up to 25 mm - 3094-

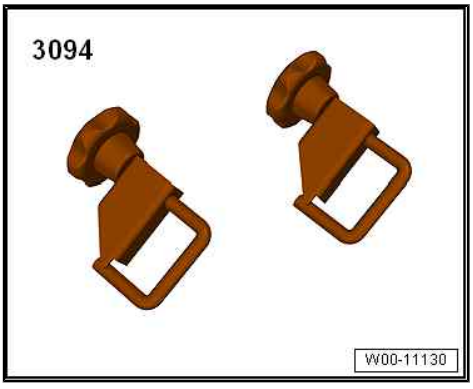

- Hose clip pliers - VAS 6362-

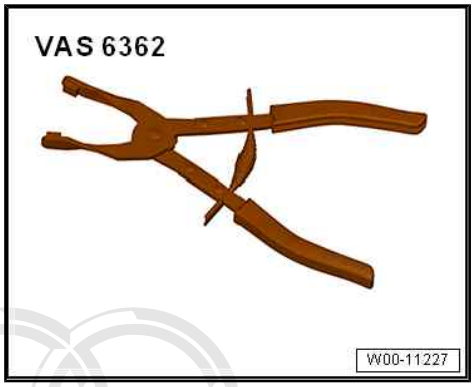

Removing

– Release hose clips -arrows- and detach air hose.

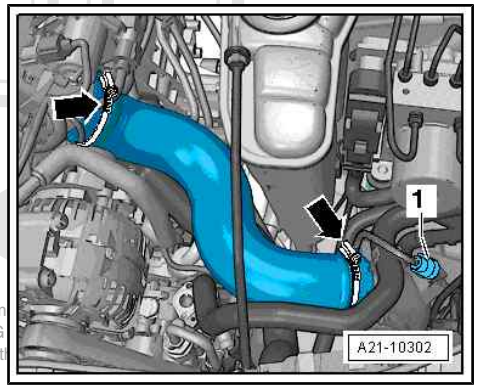

Protected by copyright. Copying for private or comm
permitted unless authorised by AUDI AG. AUDI AG
with respect to the correctness of information in t

Note

Place a cloth under coolant pipe to catch escaping coolant.

– Clamp off coolant hoses -arrows- with hose clamps up to 25 mm - 3094- and detach.

– Unplug electrical connector -2-.

– Remove bolt -1- and detach continued coolant circulation pump - V51- .

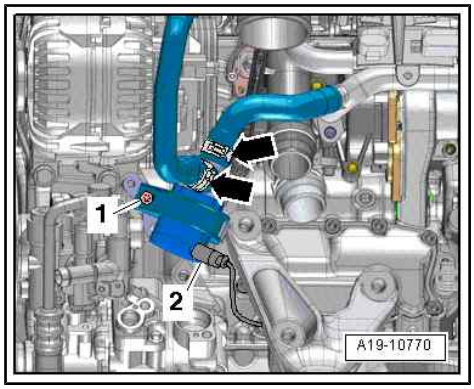

Installing

Installation is carried out in the reverse order; note the following:

Note

Secure all hose connections with the correct type of hose clips (same as original equipment) ⇒ Electronic parts catalogue .

– Check coolant level ⇒ page 61 .

Tightening torques

- ⇒ “2.2.2 Exploded view - electric coolant pump, coolant circulation pump V51 (version 2)”, page 64
- ⇒ Servicing 4-cylinder engine, 1.8 ltr., 2.0 ltr. 4-valve TFSI; Rep. gr. 21 ; Charge air system; Exploded view - hose connections for charge air system

2.5 Removing and installing coolant pump

Removing

– Remove small coolant pipe ⇒ page 74 .

– Remove throttle valve module - J338- ⇒ page 119 .

All further procedures are described in ⇒ Servicing 4-cylinder engine, 1.8 ltr., 2.0 ltr. 4-valve TFSI; Rep. gr. 19 ; Coolant pump/thermostat assembly; Removing and installing coolant pump .

Installing

Additional work:

– Install throttle valve module - J338- ⇒ Servicing 4-cylinder engine, 1.8 ltr., 2.0 ltr. 4-valve TFSI; Rep. gr. 24 ; Intake manifold; Removing and installing throttle valve module - J338- .

– Install small coolant pipe ⇒ page 74 .

2.6 Removing and installing toothed belt for coolant pump

Removing

– Remove small coolant pipe ⇒ page 74 .

– Disconnect coolant hoses -1 and 2- and move clear to one side.

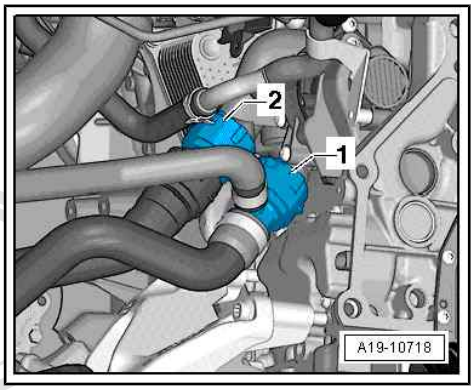

All further procedures are described in ⇒ Servicing 4-cylinder engine, 1.8 ltr., 2.0 ltr. 4-valve TFSI; Rep. gr. 19 ; Coolant pump/thermostat assembly; Removing and installing toothed belt for coolant pump .

Installing

Additional work:

– Install small coolant pipe ⇒ page 74 .

2.7 Removing and installing thermostat

All procedures are described in ⇒ Servicing 4-cylinder engine, 1.8 ltr., 2.0 ltr. 4-valve TFSI; Rep. gr. 19 ; Coolant pump/thermostat assembly; Removing and installing thermostat .

2.8 Checking thermostat

Protected by copyright. Copying for private or commercial purposes, in part or in whole, is not permitted unless authorised by AUDI AG. AUDI AG does not guarantee or accept any liability with respect to the correctness of information in this document. Copyright by AUDI AG.

All procedures are described in ⇒ Servicing 4-cylinder engine, 1.8 ltr., 2.0 ltr. 4-valve TFSI; Rep. gr. 19 ; Coolant pump/thermostat assembly; Checking thermostat .

2.9 Removing and installing coolant temperature sender - G62-

Removing

– Release hose clips -arrows- and detach air hose.

– Remove throttle valve module - J338- ⇒ page 119 .

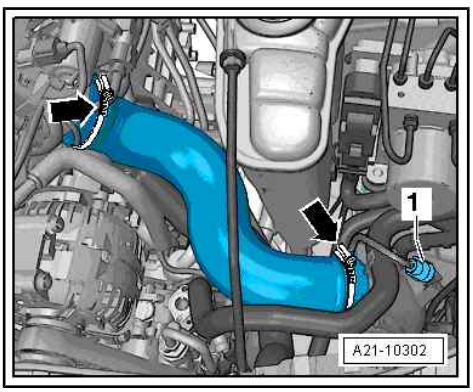

– Remove support for intake manifold (remove nut -2- and bolt -1-).

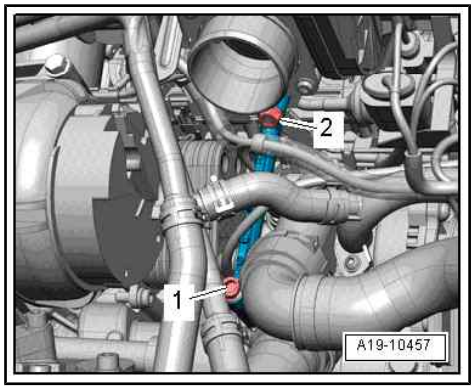

All further procedures are described in ⇒ Servicing 4-cylinder engine, 1.8 ltr., 2.0 ltr. 4-valve TFSI; Rep. gr. 19 ; Coolant pump/ thermostat assembly; Removing and installing coolant temperature sender - G62- .

Installing

Additional work:

Note

Secure all hose connections with the correct type of hose clips (same as original equipment) ⇒ Electronic parts catalogue .

– Install throttle valve module - J338- ⇒ Servicing 4-cylinder engine, 1.8 ltr., 2.0 ltr. 4-valve TFSI; Rep. gr. 24 ; Intake manifold; Removing and installing throttle valve module - J338- .

Tightening torques

- ⇒ Servicing 4-cylinder engine, 1.8 ltr., 2.0 ltr. 4-valve TFSI; Rep. gr. 21 ; Charge air system; Exploded view - hose connections for charge air system
- ⇒ Servicing 4-cylinder engine, 1.8 ltr., 2.0 ltr. 4-valve TFSI; Rep. gr. 24 ; Intake manifold; Exploded view - intake manifold

2.10 Removing and installing coolant valves

Special tools and workshop equipment required

- Hose clamps, up to 25 mm - 3094-

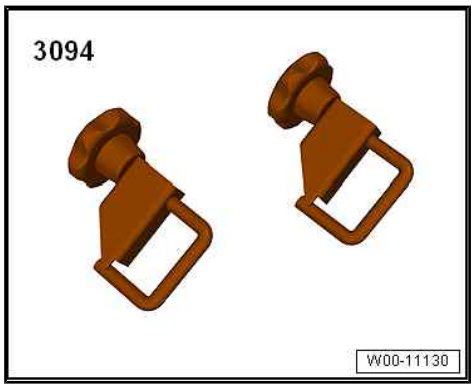

- Hose clip pliers - VAS 6362-

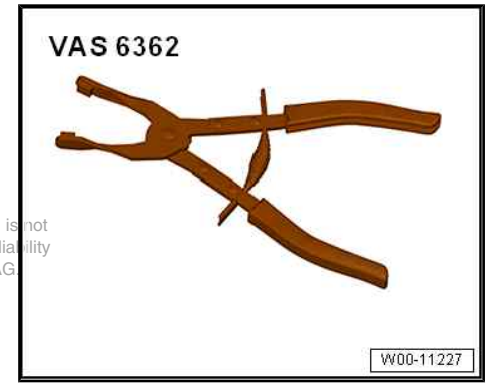

Protected by copyright. Copying for private or commercial purposes, in part or in whole, is not permitted unless authorised by AUDI AG. AUDI AG does not guarantee or accept any liability with respect to the correctness of information in this document. Copyright by AUDI AG.

Removing

– Remove noise insulation (rear) ⇒ General body repairs, exterior; Rep. gr. 66 ; Noise insulation; Removing and installing noise insulation .

– Unplug electrical connector -2-.

– Clamp off coolant hoses using hose clamps up to 25 mm - 3094- , release hose clips -1- and disconnect hoses.

– Remove nuts -arrows- and detach coolant valve for gearbox - N488- .

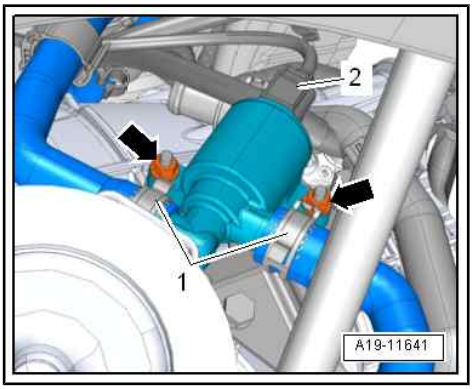

Installing

Installation is carried out in the reverse order; note the following:

Note

Secure all hose connections with the correct type of hose clips (same as original equipment) ⇒ Electronic parts catalogue .

Tightening torques

- ⇒ “2.3 Exploded view - coolant valves”, page 65
- ⇒ General body repairs, exterior; Rep. gr. 66 ; Noise insulation; Exploded view - noise insulation

Protected by copyright. Copying for private or commercial purposes, in part or in whole, is not permitted unless authorised by AUDI AG. AUDI AG does not guarantee or accept any liability with respect to the correctness of information in this document. Copyright by AUDI AG.

3 Coolant pipes

⇒ “3.1 Exploded view - coolant pipes”, page 72

⇒ “3.2 Removing and installing coolant pipes”, page 73

3.1 Exploded view - coolant pipes

Note

The arrow markings on coolant pipes and on ends of hoses must align.

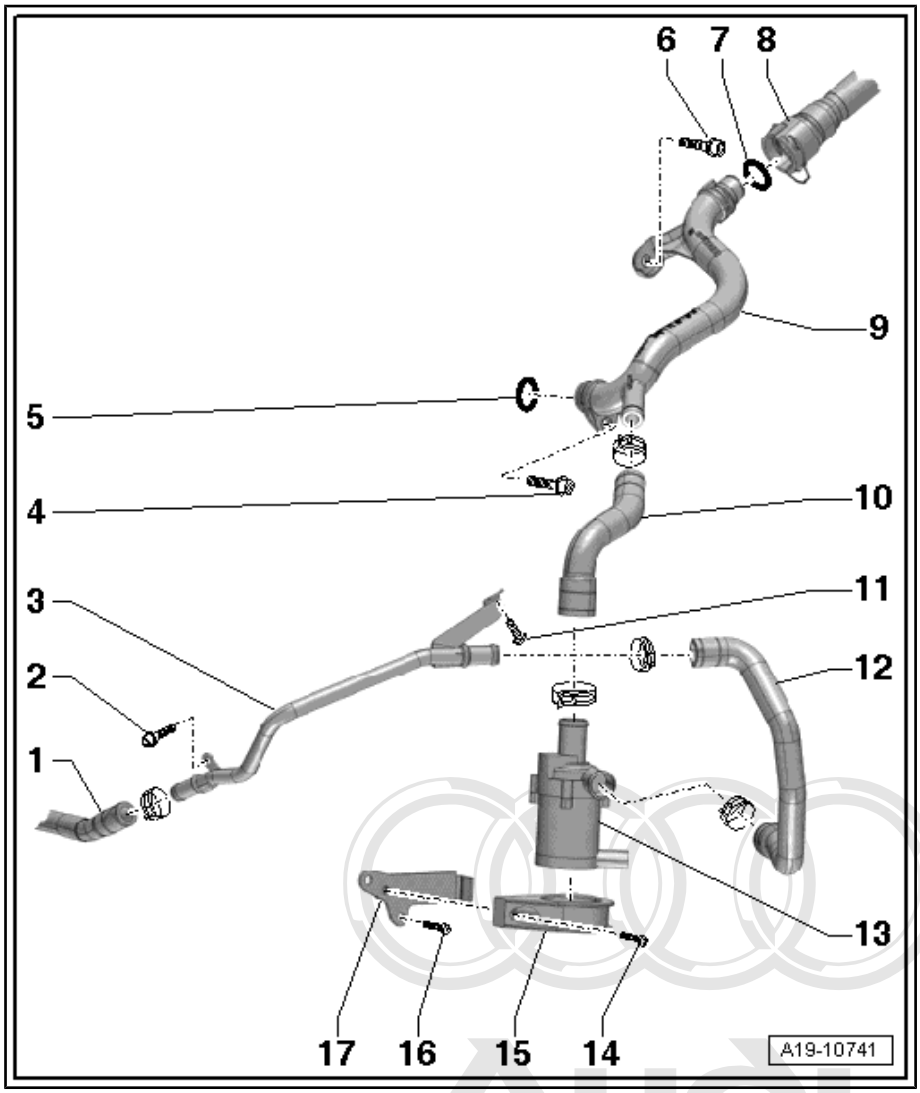

1 - Coolant hose

2 - Bolt
- ❑ 6 Nm

3 - Small coolant pipe
- ❑ Removing and installing ⇒ page 74

4 - Bolt
- ❑ 9 Nm

5 - O-ring
- ❑ Renew

6 - Bolt
- ❑ 9 Nm

7 - O-ring
- ❑ Renew

8 - Coolant hose
- ❑ Lift retaining clip to detach
- ❑ Connecting to radiator ⇒ page 77

9 - Coolant pipe (front)
- ❑ Removing and installing ⇒ page 73

10 - Coolant hose

11 - Bolt
- ❑ 6 Nm

12 - Coolant hose

13 - Continued coolant circulation pump - V51-
- ❑ ⇒ Item 2 (page 64)

14 - Bolt
- ❑ ⇒ Item 6 (page 64)

15 - Bracket
- ❑ ⇒ Item 5 (page 64)

16 - Bolt
- ❑ ⇒ Item 4 (page 64)

Protected by copyright. Copying for private or commercial purposes, in part or in whole, is not permitted unless authorised by AUDI AG. AUDI AG does not guarantee or accept any liability with respect to the correctness of information in this document. Copyright by AUDI AG.

17 - Bracket

- ❑ ⇒ Item 3 (page 64)

3.2 Removing and installing coolant pipes

⇒ "3.2.1 Removing and installing coolant pipe (front)", page 73

⇒ "3.2.2 Removing and installing small coolant pipe", page 74

3.2.1 Removing and installing coolant pipe (front)

Special tools and workshop equipment required

- ♦ Hose clamps, up to 25 mm - 3094-

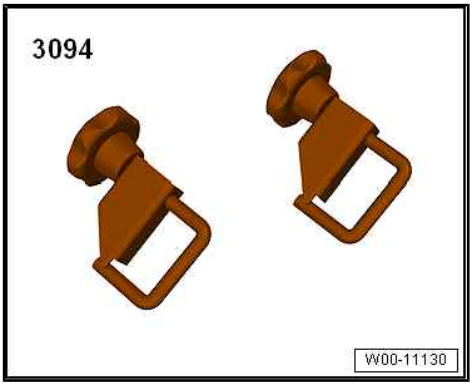

- ♦ Hose clip pliers - VAS 6362-

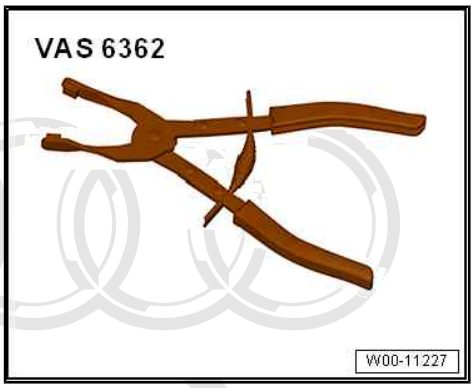

Protected by copyright. Copying for private or commercial purposes, in part or in whole, is not permitted unless authorised by AUDI AG. AUDI AG does not guarantee or accept any liability with respect to the correctness of information in this document. Copyright by AUDI AG.

Removing

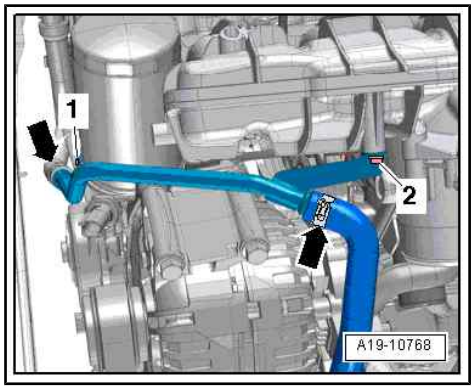

Note

Place a cloth under coolant pipe to catch escaping coolant.

– Unscrew bolts -1- and -2- and swivel coolant pipe (front) upwards.

– Clamp off coolant hoses -arrows- with hose clamps up to 25 mm - 3094- and detach.

Installing

Installation is carried out in the reverse order; note the following:

Note

Secure all hose connections with the correct type of hose clips (same as original equipment) ⇒ Electronic parts catalogue .

– Check coolant level ⇒ page 61 .

Tightening torques

◆ ⇒ “3.1 Exploded view - coolant pipes”, page 72

3.2.2 Removing and installing small coolant pipe

Special tools and workshop equipment required

◆ Hose clip pliers - VAS 6340-

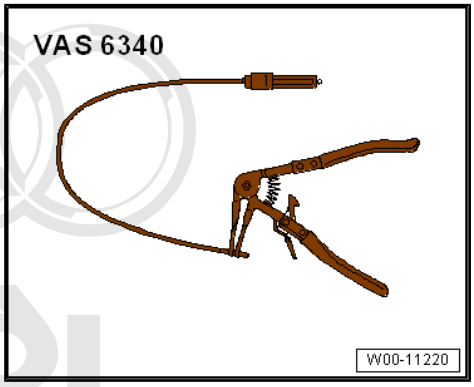

Protected by copyright. Copying for private or commercial purposes permitted unless authorised by AUDI AG. AUDI AG does not with respect to the correctness of information in this do

Removing

– Drain coolant ⇒ page 56 .

– Release hose clips -arrows- and detach air hose.

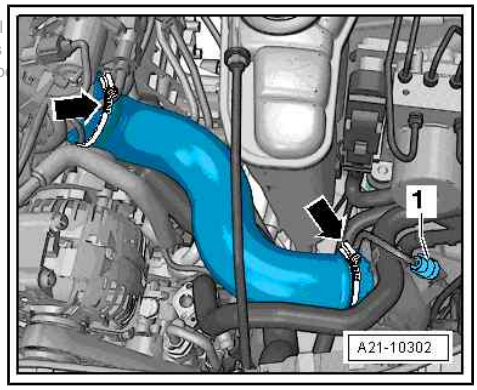

Vehicles with hydraulic power steering:

– Remove bolts -arrows- and detach electrical connectors -1 ... 3- from bracket.

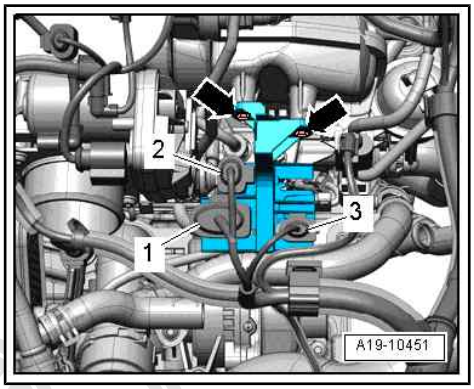

Vehicles with electromechanical power steering:

– Remove bolts -arrows- and detach electrical connectors -1 ... 3- from bracket.

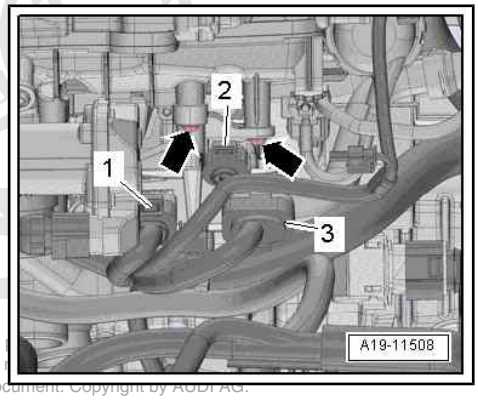

Protected by copyright. Copying for private or commercial
permitted unless authorised by AUDI AG. AUDI AG does
with respect to the correctness of information in this document. Copyright by AUDI AG.

Continued for all vehicles:

– Release hose clip -1-, lift retaining clip -2- and detach coolant hoses.

– Unscrew bolts -arrows- and detach small coolant pipe.

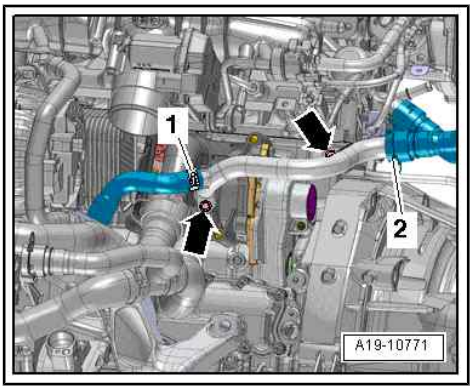

Installing

Installation is carried out in the reverse order; note the following:

Note

- *Fit new O-rings.*
- *Secure all hose connections with the correct type of hose clips (same as original equipment) ⇒ Electronic parts catalogue .*

– Connect coolant hose with plug-in connector ⇒ page 77 .

Note

Do not reuse coolant.

– Fill up with coolant ⇒ page 56 .

Tightening torques

- ⇒ “3.1 Exploded view - coolant pipes”, page 72
- ⇒ Servicing 4-cylinder engine, 1.8 ltr., 2.0 ltr. 4-valve TFSI; Rep. gr. 21 ; Charge air system; Exploded view - hose connections for charge air system

4 Radiator/radiator fans

⇒ “4.1 Exploded view - radiator/radiator fans”, page 76
⇒ “4.2 Removing and installing radiator”, page 77
⇒ “4.3 Removing and installing radiator fan V7 ”, page 84

4.1 Exploded view - radiator/radiator fans

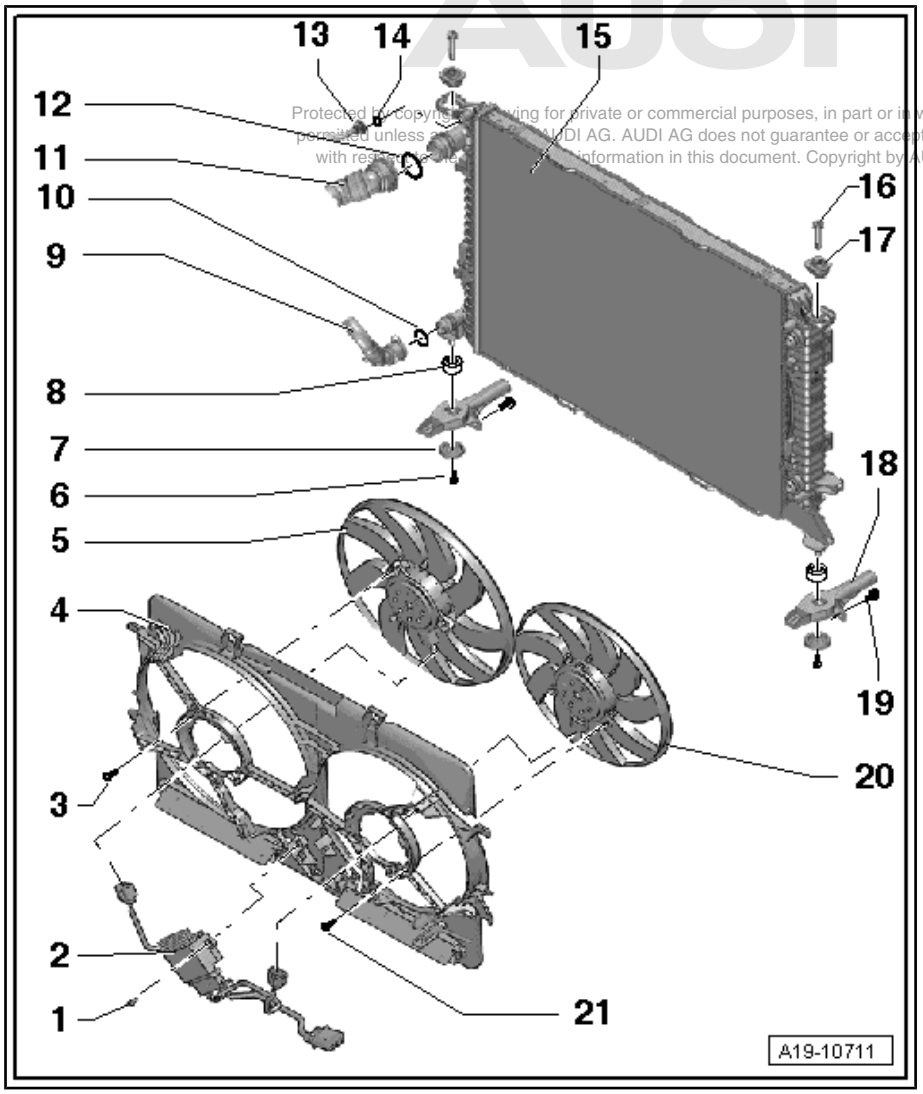

1 - Bolt
- ❑ 2.5 Nm

2 - Radiator fan control unit - J293-
- ❑ Removing and installing ⇒ page 84

3 - Bolt
- ❑ 5 Nm

4 - Radiator cowl
- ❑ Removing and installing ⇒ page 77

5 - Radiator fan - V7-
- ❑ Removing and installing ⇒ page 84

6 - Bolt
- ❑ 3.5 Nm

7 - Washer

8 - Rubber bush
- ❑ For radiator

9 - Coolant hose
- ❑ Lift retaining clip to detach

10 - O-ring
- ❑ Renew

11 - Coolant hose
- ❑ Lift retaining clip to detach

12 - O-ring
- ❑ Renew

13 - Coolant hose
- ❑ To coolant expansion tank

14 - O-ring
- ❑ Renew

15 - Radiator
- ❑ Remove and install together with radiator cowl ⇒ page 77
- ❑ If renewed, change coolant in entire system

16 - Retaining pin
- ❑ Use screwdriver to release and pull off

Protected by copyright. Copying for private or commercial purposes, in part or in whole, is not permitted unless authorised by AUDI AG. AUDI AG does not guarantee or accept any liability with respect to the information in this document. Copyright by AUDI AG.

17 - Rubber buffer

18 - Radiator bracket

19 - Bolt

- ❑ 5.5 Nm

20 - Radiator fan 2 - V177-

- ❑ Not fitted if fan runs with 400 W
- ❑ Removing and installing ⇒ page 84

21 - Bolt

- ❑ 5 Nm

Connecting coolant hose with plug-in connector

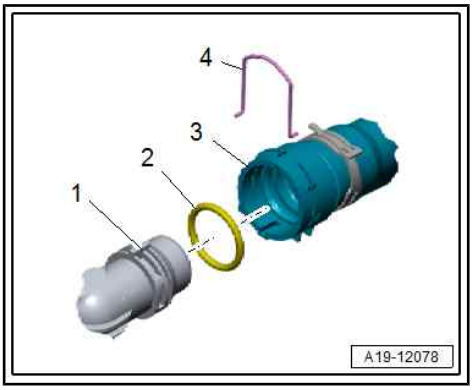

Note

If damaged, renew retaining clip -4-.

– Remove old O-ring -2- from coolant hose -3-.

– Lubricate new O-ring with coolant additive and fit O-ring in coolant hose.

– Press coolant hose onto coolant pipe -1- until it engages with a click.

– Press coolant hose in again and then pull to check that plug-in connector is correctly engaged.

4.2 Removing and installing radiator

Note

- *Radiator and radiator cowl can only be removed and installed together as one unit.*
- *On more recent versions it is no longer possible to remove the condenser from the radiator with the refrigerant lines attached. This is described below under "version 2".*

Special tools and workshop equipment required

- Engine bung set - VAS 6122- for vehicles with dual clutch gearbox

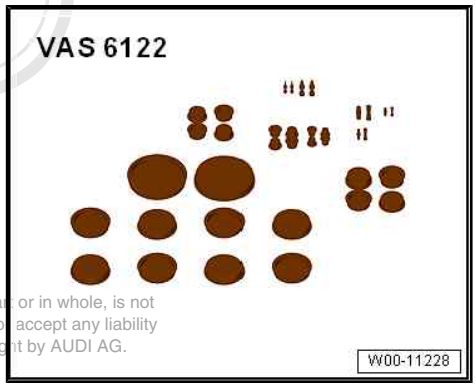

Protected by copyright. Copying for private or commercial purposes, in part or in whole, is not permitted unless authorised by AUDI AG. AUDI AG does not guarantee or accept any liability with respect to the correctness of information in this document. Copyright by AUDI AG.

- Drip tray for workshop hoist - VAS 6208-

Protected by copyright. Copying for private or commercial purposes, in part or in whole, is not permitted unless authorised by AUDI AG. AUDI AG does not guarantee or accept any liability with respect to the correctness of information in this document. Copyright by AUDI AG.

- Used oil collection and extraction unit - VAS 6622A- for vehicles with dual clutch gearbox/multitronic gearbox

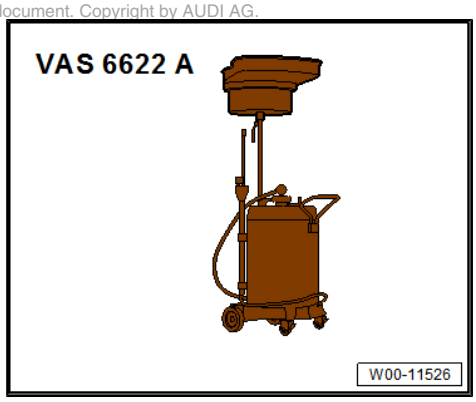

Removing

– Remove noise insulation (front) ⇒ General body repairs, exterior; Rep. gr. 66 ; Noise insulation; Removing and installing noise insulation .

– Remove impact bar ⇒ General body repairs, exterior; Rep. gr. 63 ; Bumper (front); Removing and installing impact bar .

– Remove charge air cooler ⇒ page 91 .

Vehicles with refrigerant lines (version 2):

– Remove condenser ⇒ Heating, air conditioning; Rep. gr. 87 ; Refrigerant circuit; Removing and installing condenser .

A4 vehicles

– Remove headlight (right-side) ⇒ Electrical system; Rep. gr. 94 ; Headlights; Removing and installing headlights .

– If fitted, remove headlight washer jet (right-side) ⇒ Electrical system; Rep. gr. 92 ; Headlight washer system; Removing and installing washer jets .

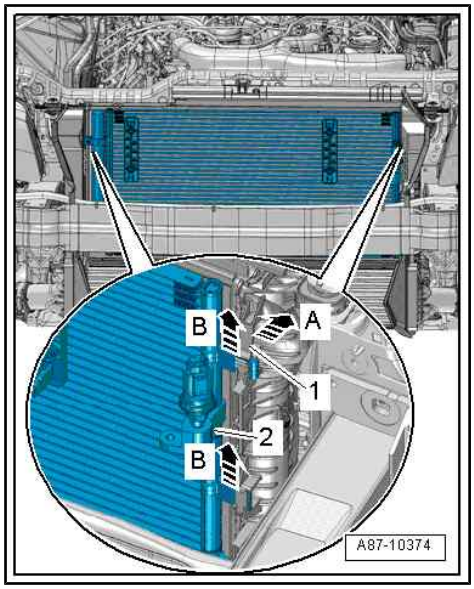

– Unplug electrical connector -1- at front airbag crash sensor for front passenger side - G284- ⇒ General body repairs, interior; Rep. gr. 69 ; Crash sensors for airbags; Overview of fitting locations - crash sensors for airbags .

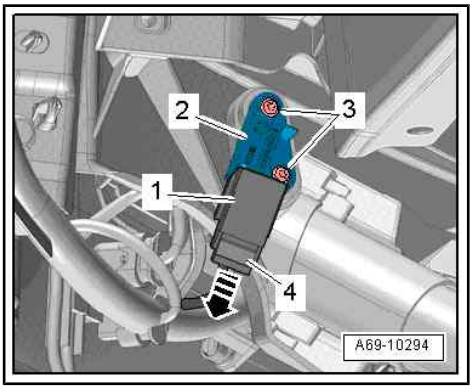

– Remove bolts -1- and -2-.
– Unclip mounting for headlight (right-side) -arrows- and remove.

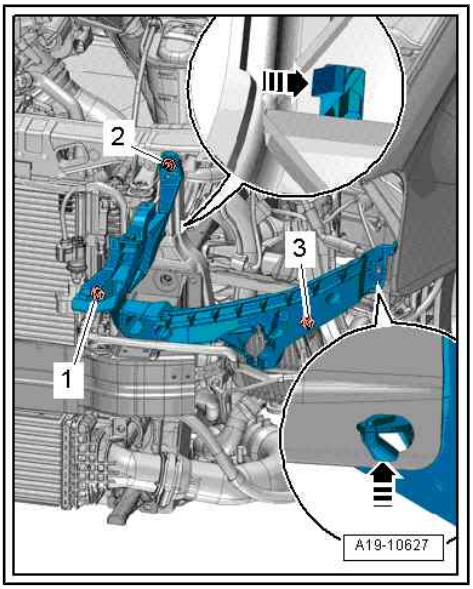

All vehicles

– Place drip tray for workshop hoist - VAS 6208- beneath engine.
– Remove drain plug -1- and drain off coolant.
– Then disconnect coolant hose -2- from radiator (pull out retaining clip).

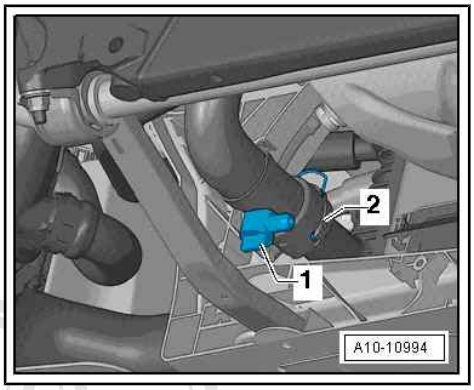

WARNING

Risk of injury as the radiator fan(s) may start up automatically.

- ***Unplug electrical connectors before starting to work in the area of radiator cowl.***

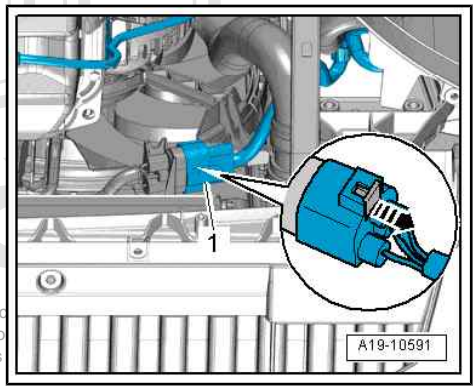

– Take electrical connector -1- for radiator fan out of bracket and unplug connector (push retainer to the rear -arrow- and press down release catch).
– Remove lock carrier cover ⇒ General body repairs, exterior; Rep. gr. 50 ; Lock carrier .

Protected by copyright. Copying for private or commercial purposes, in part or in whole, is not permitted unless authorised by AUDI AG. AUDI AG does not guarantee or accept any liability with respect to the correctness of information in this document.

– Remove bolts -arrows-.

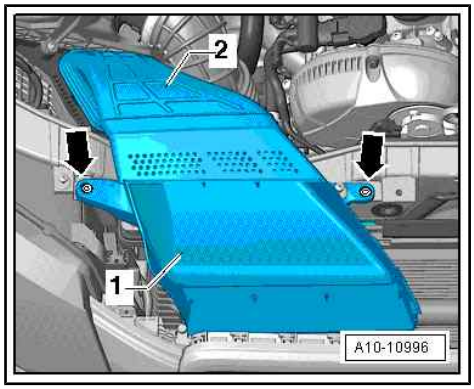

– Detach connections -1- and -2- from radiator (lift retaining clip).
– Remove air duct -1- and intermediate flange -2-.

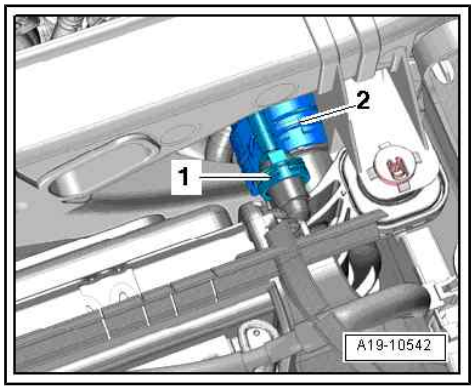

Vehicles with dual clutch gearbox/multitronic gearbox:

– Position used oil collection and extraction unit - VAS 6622A- below connection point.

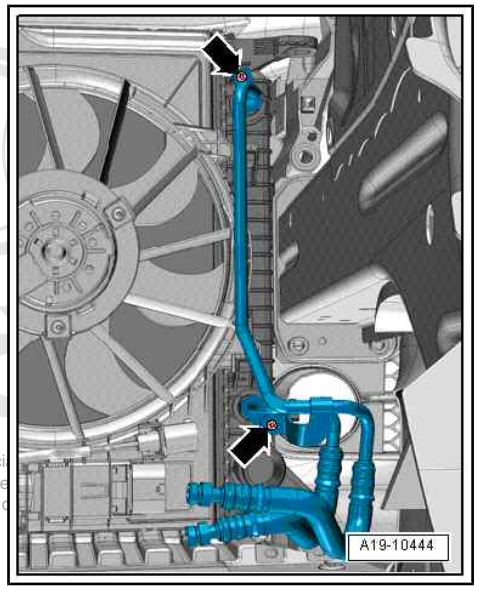

Note

Observe rules for cleanliness when working on gearbox ⇒ Gearbox; Rep. gr. 00 ; Repair instructions; Rules for cleanliness .

– Unscrew bolts -arrows- and detach ATF lines from radiator.

Note

- *Tie ATF lines up onto longitudinal member to prevent fluid escaping.*
- *To prevent dirt from entering, seal off open pipes/lines and connections with a clean plug from engine bung set - VAS 6122- .*

Protected by copyright. Copying for private or commerci
permitted unless authorised by AUDI AG. AUDI AG doe
with respect to the correctness of information in this d

All vehicles

– Release catches -arrows A- and detach air duct -1- on left and right -arrow B-.

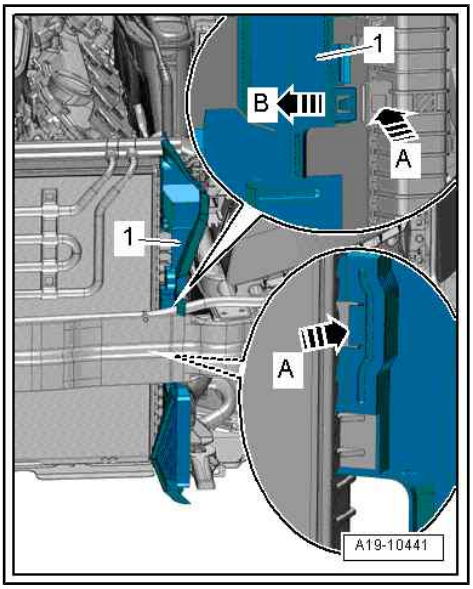

– Release retaining pins for radiator on both sides and pull out upwards -arrows-.

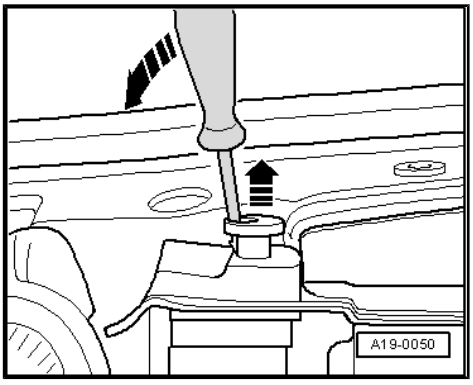

– Remove bolts -1- on both sides and detach radiator bracket with radiator from lock carrier -arrow-.

– Slightly lower radiator.

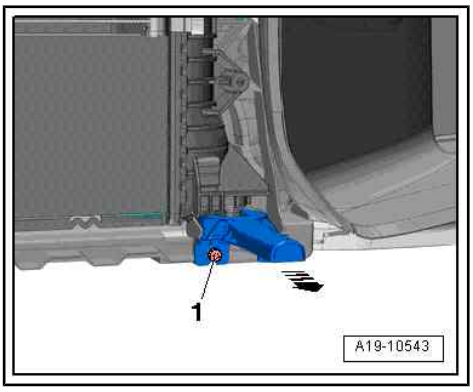

Protected by copyright. Copying for private or commercial purposes, in part or in whole, is not permitted unless authorised by AUDI AG. AUDI AG does not guarantee or accept any liability with respect to the correctness of information in this document. Copyright by AUDI AG.

Vehicles with refrigerant lines (version 1):

Caution

Risk of damage to condenser, refrigerant lines and refrigerant hoses.

- *Do NOT stretch, kink or bend refrigerant lines and hoses.*

– Have a second mechanic release retaining clips -1- in direction of -arrow A- and lift condenser -2- out of mountings on radiator -arrows B-.

– Pivot condenser forwards with pipes/hoses attached.

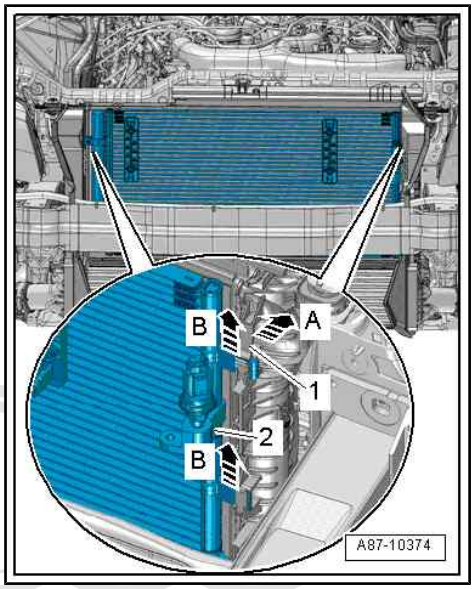

Protected by copyright. Copying for private or commercial purposes, in part or in whole, is not permitted unless authorised by AUDI AG. AUDI AG does not guarantee or accept any liability with respect to the correctness of information in this document. Copyright by AUDI AG.

Continued for all vehicles:

– Detach radiator.

– Press locking tabs on left and right sides of radiator cowl together -arrow- and lift radiator cowl off radiator.

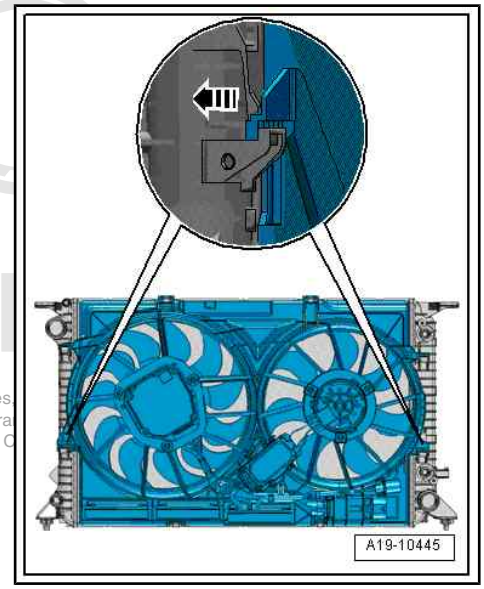

Installing

Installation is carried out in the reverse order; note the following:

Note

If there are slight impressions on the fins, refer to ⇒ Servicing 4-cylinder engine, 1.8 ltr., 2.0 ltr. 4-valve TFSI; Rep. gr. 00 ; Repair notes; Installing radiators and condensers .

Online Edition for private or commercial purposes, ... provided and licensed by AUDI AG. AUDI AG does not guara... with respect to the correctness of information in this document. C...

– If removed previously, secure ATF lines ⇒ 7-speed dual clutch gearbox 0B5 (S tronic); Rep. gr. 34 ; ATF circuit; Exploded view - ATF circuit , or ⇒ Gearbox; Rep. gr. 37 ; ATF circuit; Exploded view - ATF circuit .

– Install lock carrier cover ⇒ General body repairs, exterior; Rep. gr. 50 ; Lock carrier .

– Install charge air cooler ⇒ page 91 .

– Install impact bar ⇒ General body repairs, exterior; Rep. gr. 63 ; Bumper (front); Removing and installing impact bar .

– Connect coolant hose with plug-in connector to coolant pipe ⇒ page 77 .

Note

Do not reuse coolant.

– Fill up with coolant ⇒ page 56 .

– Vehicles with ATF circuit: Check ATF level ⇒ Gearbox; Rep. gr. 34 ; ATF; Checking ATF level , or ⇒ Gearbox; Rep. gr. 37 ; ATF; Checking ATF level .

Tightening torques

- ⇒ “4.1 Exploded view - radiator/radiator fans”, page 76
- Air duct
  ⇒ “3.1 Exploded view - air cleaner housing”, page 108
- ⇒ General body repairs, exterior; Rep. gr. 66 ; Noise insulation; Exploded view - noise insulation

4.3 Removing and installing radiator fan - V7-

⇒ “4.3.1 Removing and installing radiator fan V7 ”, page 84

⇒ “4.3.2 Removing and installing radiator fan control unit J293 ”, page 84

4.3.1 Removing and installing radiator fan - V7-

Removing

Note

Fit all cable ties in the original positions when installing.

– Remove radiator cowl
⇒ “4.2 Removing and installing radiator”, page 77 .

Radiator fan - V7-

– Unplug electrical connector -1-.

– Unscrew bolts -arrows- and remove radiator fan - V7- .

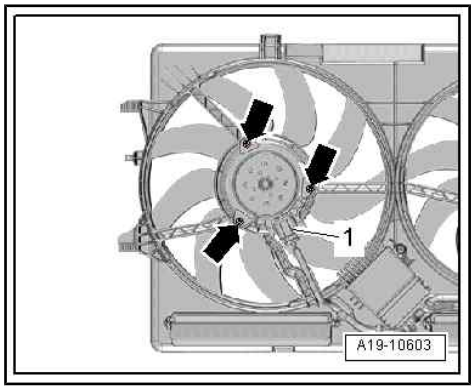

Radiator fan 2 - V177-

Note

Radiator fan 2 - V177- not fitted if fan runs with 400 W.

– Unplug electrical connector -1-.

– Unscrew bolts -arrows- and remove radiator fan 2 - V177- .

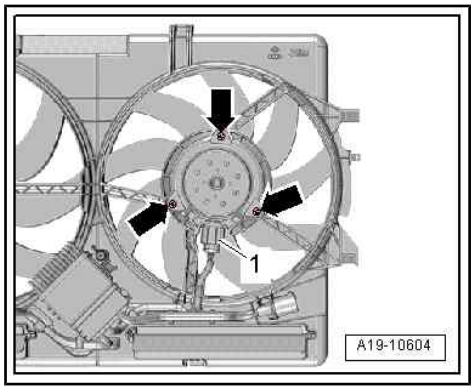

Installing

Installation is carried out in the reverse order; note the following:

– Install radiator cowl
⇒ “4.2 Removing and installing radiator”, page 77 .

Tightening torques

◆ ⇒ “4.1 Exploded view - radiator/radiator fans”, page 76

Protected by copyright. Copying for private or commercial purposes, in part or in whole, is not permitted unless authorised by AUDI AG. AUDI AG does not guarantee or accept any liability with respect to the correctness of information in this document. Copyright by AUDI AG.

4.3.2 Removing and installing radiator fan control unit - J293-

Removing

Note

Fit all cable ties in the original positions when installing.

– Remove noise insulation (front) ⇒ General body repairs, exterior; Rep. gr. 66 ; Noise insulation; Removing and installing noise insulation .
– Take electrical connector -1- for radiator fan out of bracket and unplug connector (push retainer to the rear -arrow- and press down release catch).
– Move clear electrical wiring harness going to radiator fan control unit.

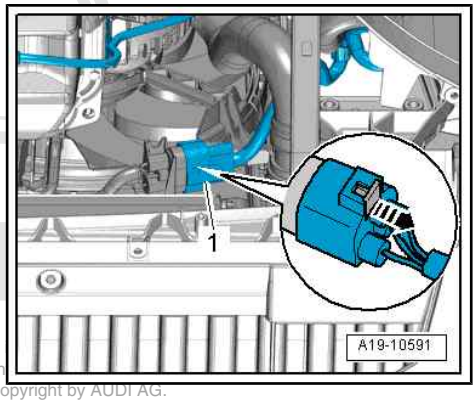

Protected by copyright. Copying for private or commercial purposes, permitted unless authorised by AUDI AG. AUDI AG does not guaran with respect to the correctness of information in this document. Copyright by AUDI AG.

– Unplug electrical connectors -2- and -3-.
– Unscrew bolt -arrow- and remove radiator fan control unit -1-.

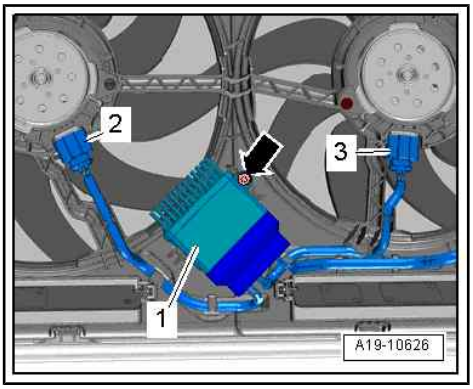

Installing

Installation is carried out in reverse sequence.

Tightening torques

- ⇒ “4.1 Exploded view - radiator/radiator fans”, page 76
- ⇒ General body repairs, exterior; Rep. gr. 66 ; Noise insulation; Exploded view - noise insulation

21 – Turbocharging/supercharging

1 Turbocharger

⇒ "1.1 Exploded view - turbocharger", page 86

⇒ "1.2 Removing and installing turbocharger", page 86

⇒ "1.3 Checking vacuum unit for turbocharger", page 89

⇒ "1.4 Renewing vacuum unit for turbocharger", page 89

⇒ "1.5 Adjusting vacuum unit for turbocharger", page 89

1.1 Exploded view - turbocharger

All components are described in ⇒ Servicing 4-cylinder engine, 1.8 ltr., 2.0 ltr. 4-valve TFSI; Rep. gr. 21 ; Turbocharger; Exploded view - turbocharger .

1.2 Removing and installing turbocharger

Removing

– Observe rules for cleanliness ⇒ Servicing 4-cylinder engine, 1.8 ltr., 2.0 ltr. 4-valve TFSI; Rep. gr. 00 ; Repair notes; Rules for cleanliness .

– Remove engine cover panel ⇒ Servicing 4-cylinder engine, 1.8 ltr., 2.0 ltr. 4-valve TFSI; Rep. gr. 10 ; Engine cover panel; Removing and installing engine cover panel .

– Remove air cleaner housing ⇒ page 109 .

– Drain coolant ⇒ page 56 .

– Disconnect coolant hose -arrow-.

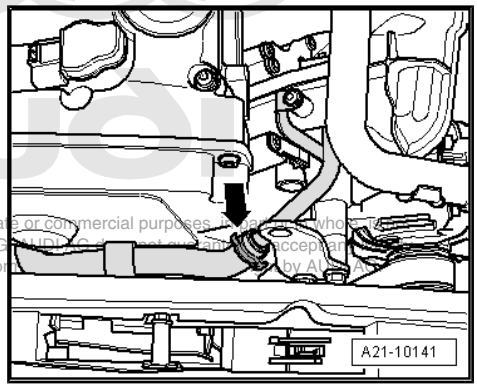

Note

The installation position is shown in the following illustrations with the engine removed.

Protected by copyright. Copying for private or commercial purposes, in part or in whole, is not permitted unless authorised by AUDI AG. AUDI AG does not guarantee or accept any liability with respect to the correctness of information by AUDI AG.

Turbocharger version 1:

– Remove bolts -arrows- and detach crankcase breather system from turbocharger.

– Disconnect hose -1- from turbocharger.

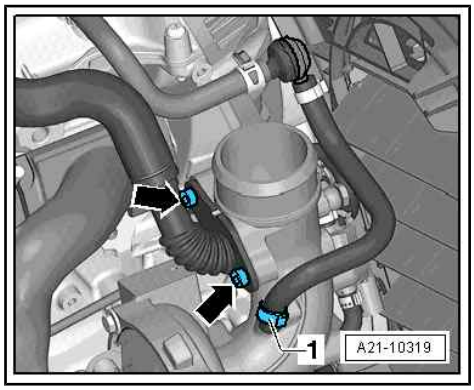

– Unscrew bolts -1 and 2- and move oil supply line clear to one side.
– Unscrew bolt -3- and move coolant pipe clear to one side.

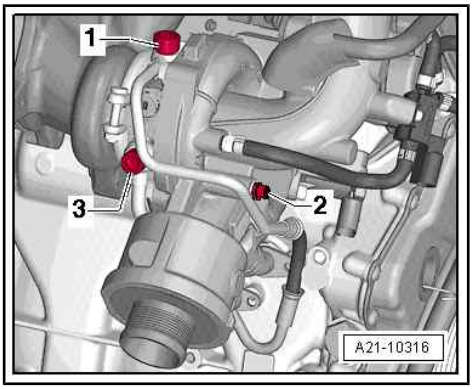

Turbocharger version 2:

– Remove bolts -arrows- and detach crankcase breather system from turbocharger.
– Press release tabs and disconnect hose -2-.
– Release hose clip -1-. Detach air pipe.

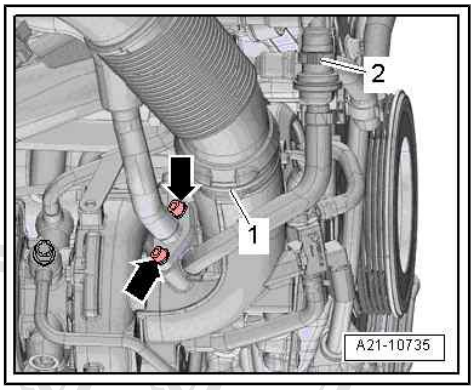

– Remove banjo bolts -1, 2- and bolts -3- and move pipes to one side.

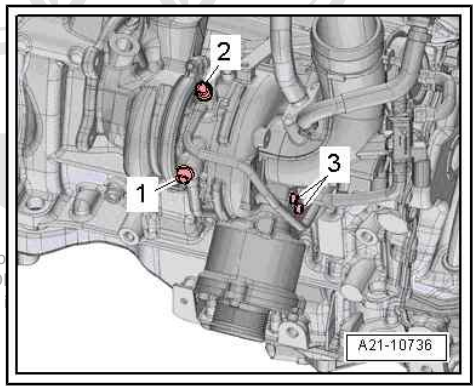

Protected by copyright. Copying for p
permitted unless authorised by AUDI
with respect to the correctness of

Bracket for electrical connectors, version 2:

– Unplug electrical connector -arrow- for Lambda probe - G39- and Lambda probe heater - Z19- and move wiring clear.

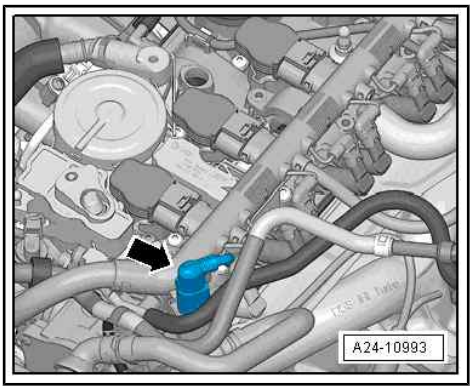

Bracket for electrical connectors, version 3:

– Unplug electrical connector -arrow- for Lambda probe after catalytic converter - G130- and move wiring clear.

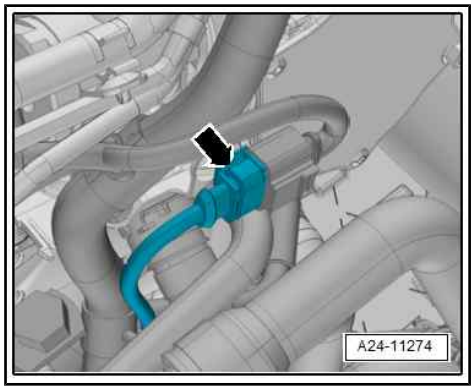

Continued for all vehicles:

– Remove heat shield -arrows-.

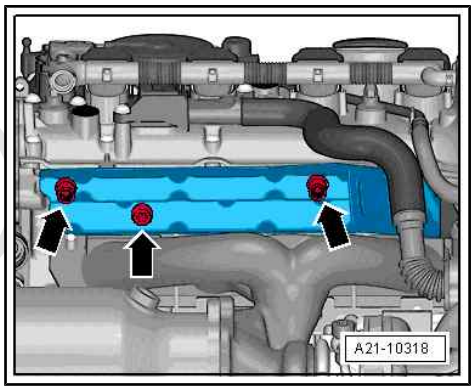

Caution

Risk of damage to flexible joints in front silencer.

- *Do NOT bend the flexible joints in the front silencer more than 10°.*

Protected by copyright. Copying for private or commercial purposes, in part or in
with respect to the correctness of information in this document. Copyright by

– Loosen bolted connections -arrows- and push clamp towards rear.

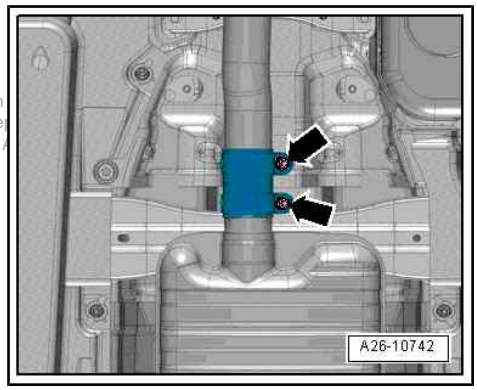

– Lower front silencer slightly and tie up to cross piece -arrow-.

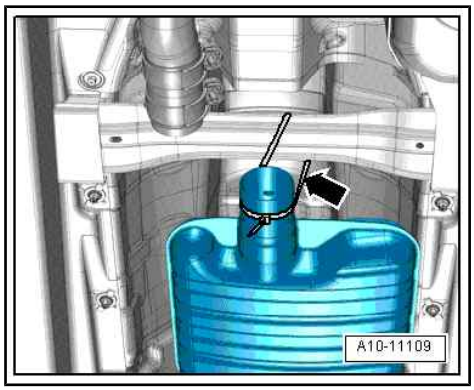

– Unfasten connection -1-, remove bolt -2- and take out mounting for catalytic converter.

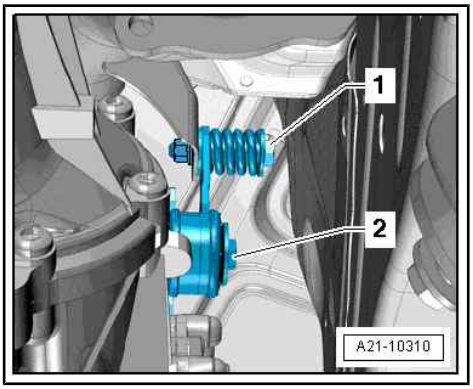

– Unscrew nuts -arrows- and press catalytic converter towards rear.

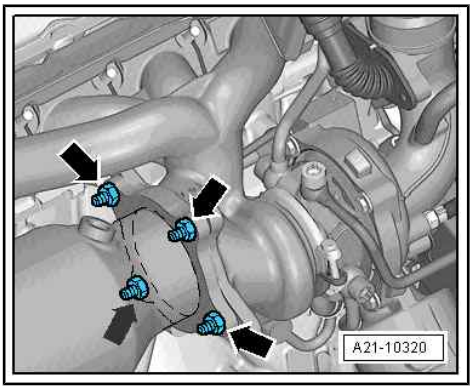

All further procedures are described in ⇒ Servicing 4-cylinder engine, 1.8 ltr., 2.0 ltr. 4-valve TFSI; Rep. gr. 21 ; Turbocharger; Removing and installing turbocharger .

Installing

Additional work:

– Install catalytic converter ⇒ page 146 .
– Align the exhaust system so it is free of stress ⇒ page 141 .
– Install air cleaner housing ⇒ page 109 .
– Install engine cover panel ⇒ Servicing 4-cylinder engine, 1.8 ltr., 2.0 ltr. 4-valve TFSI; Rep. gr. 10 ; Engine cover panel; Removing and installing engine cover panel .

1.3 Checking vacuum unit for turbocharger

All procedures are described in ⇒ Servicing 4-cylinder engine, 1.8 ltr., 2.0 ltr. 4-valve TFSI; Rep. gr. 21 ; Turbocharger; Checking vacuum unit for turbocharger .

1.4 Renewing vacuum unit for turbocharger

Note

This procedure only applies to the 1.8 ltr. engine.

All procedures are described in ⇒ Servicing 4-cylinder engine, 1.8 ltr., 2.0 ltr. 4-valve TFSI; Rep. gr. 21 ; Turbocharger; Renewing vacuum unit for turbocharger .

1.5 Adjusting vacuum unit for turbocharger

Protected by copyright. Copying for private or commercial purposes, in part or in whole, is not permitted unless authorised by AUDI AG. AUDI AG does not guarantee or accept any liability with respect to the correctness of information in this document. Copyright by AUDI AG.

Note

This procedure only applies to the 1.8 ltr. engine.

All procedures are described in ⇒ Servicing 4-cylinder engine, 1.8 ltr., 2.0 ltr. 4-valve TFSI; Rep. gr. 21 ; Turbocharger; Adjusting vacuum unit for turbocharger .

2 Charge air system

⇒ “2.1 Exploded view - charge air system”, page 90

⇒ “2.2 Exploded view - hose connections for charge air system”, page 91

⇒ “2.3 Removing and installing charge air cooler”, page 91

⇒ “2.4 Removing and installing charge pressure sender G31 ”, page 93

⇒ “2.5 Checking charge air system for leaks”, page 93

2.1 Exploded view - charge air system

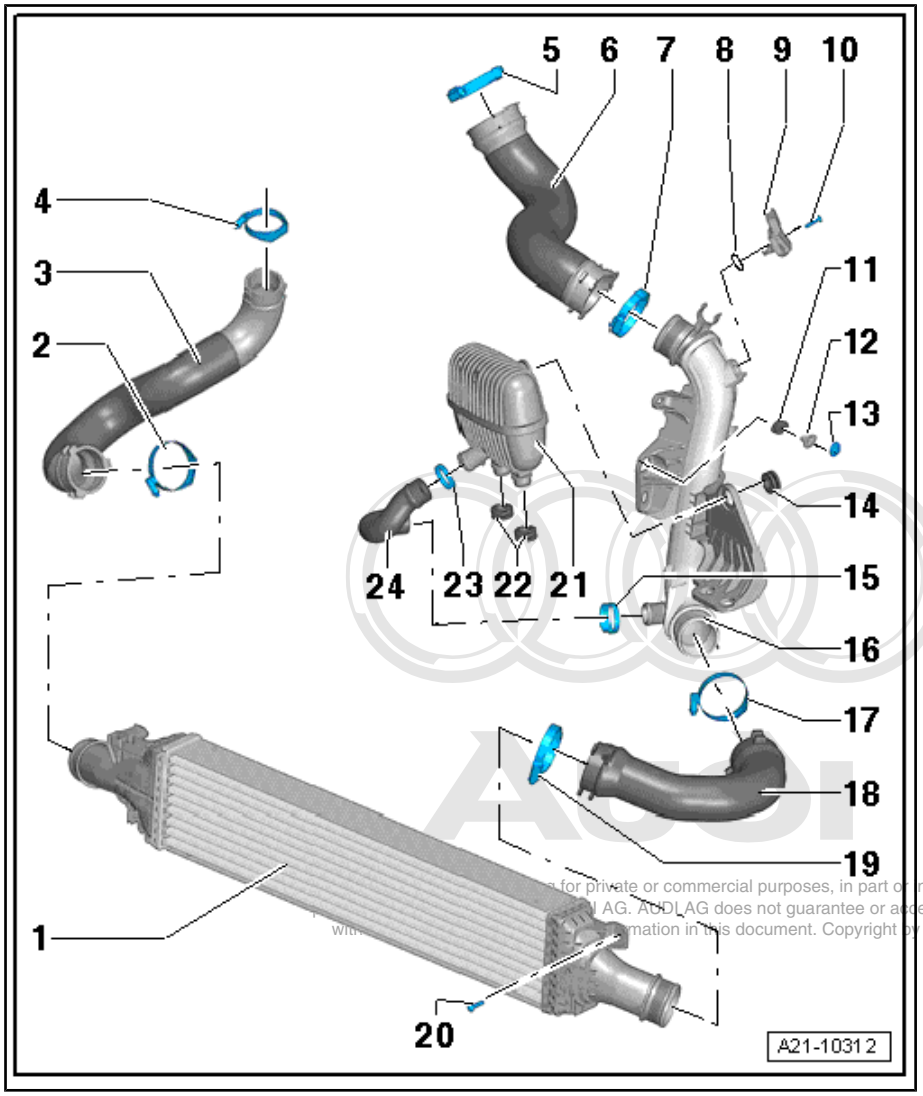

1 - Charge air cooler
- ❑ Removing and installing ⇒ page 91

2 - Hose clip

3 - Air hose
- ❑ To turbocharger
- ❑ Must be free of oil or grease when installing

4 - Hose clip

5 - Hose clip

6 - Air hose
- ❑ To intake manifold
- ❑ Must be free of oil or grease when installing

7 - Hose clip

8 - O-ring
- ❑ Renew

9 - Charge pressure sender - G31-
- ❑ Removing and installing ⇒ page 93

10 - Bolt
- ❑ 5 Nm

11 - Rubber grommet

12 - Bush

13 - Nut
- ❑ 9 Nm

14 - Rubber grommet

15 - Hose clip

16 - Air pipe

17 - Hose clip

18 - Air hose
- ❑ From charge air cooler
- ❑ Must be free of oil or grease when installing

for private or commercial purposes, in part or in whole, is not AG. AUDI AG does not guarantee or accept any liability with mation in this document. Copyright by AUDI AG.

19 - Hose clip

20 - Bolt

- ❑ 7 Nm

21 - Resonator

22 - Rubber grommet

23 - Hose clip

24 - Air hose

- ❑ To resonator
- ❑ Must be free of oil or grease when installing

2.2 Exploded view - hose connections for charge air system

All components are described in ⇒ Servicing 4-cylinder engine, 1.8 ltr., 2.0 ltr. 4-valve TFSI; Rep. gr. 21 ; Charge air system; Exploded view - hose connections for charge air system .

2.3 Removing and installing charge air cooler

Special tools and workshop equipment required

- ♦ Engine bung set - VAS 6122-

Protected by copyright. Copying for private or commercial purposes, in part or in whole, is not permitted unless authorised by AUDI AG. AUDI AG does not guarantee or accept any liability with respect to the correctness of information in this document. Copyright by AUDI AG.

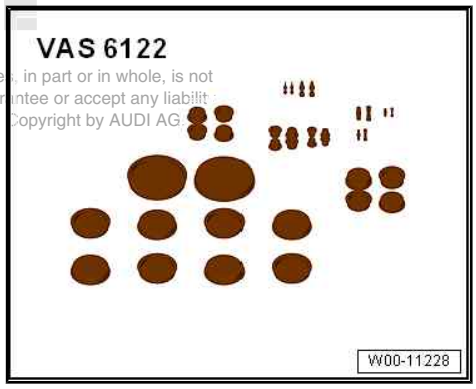

Removing

– Observe rules for cleanliness ⇒ Servicing 4-cylinder engine, 1.8 ltr., 2.0 ltr. 4-valve TFSI; Rep. gr. 00 ; Repair notes; Rules for cleanliness .

– Remove lock carrier cover ⇒ General body repairs, exterior; Rep. gr. 50 ; Lock carrier .

– Remove air cleaner housing ⇒ page 109 .

– Loosen bolts -1- and -2- and detach noise insulation at front bumper cover towards rear.

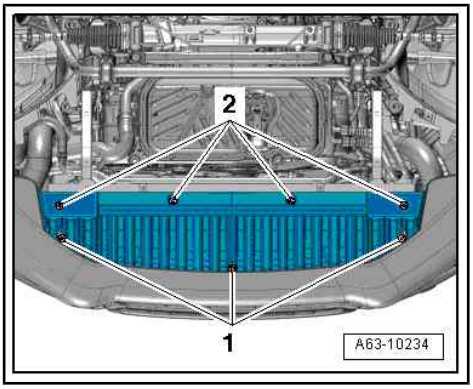

– Release retaining clips -arrows A- and detach air intake grille -1- on left and right from bottom section of bumper cover -arrow B-.

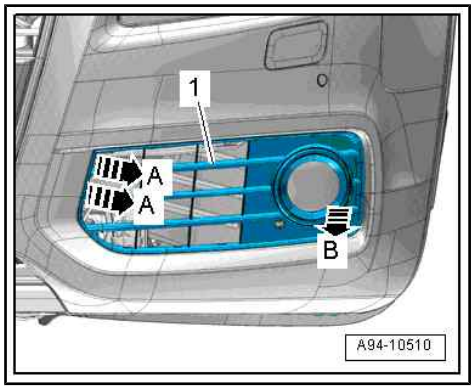

Note

For illustration purposes, the installation position is shown in the following illustrations with the bumper removed.

– Release catches -arrows A- and swivel air duct -1- on left and right to centre of vehicle -arrow B-.

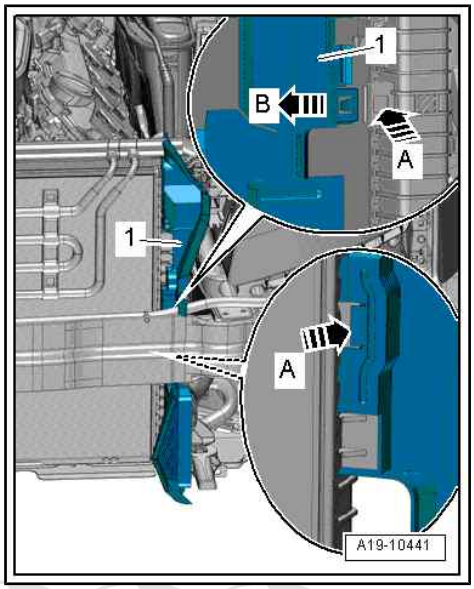

– Release hose clip -arrow- and detach air hose from charge air cooler.
– Remove bolt -1-.

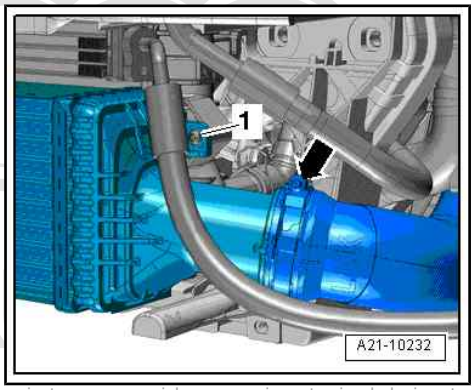

Protected by copyright. Copying for private or commercial purposes, in part or in whole, is not permitted unless authorised by AU
with respect to the correctness

– Release hose clip -1- and detach air hose from charge air cooler.
– Push catch down -arrow A- and move top of charge air cooler slightly in direction of -arrow B-.

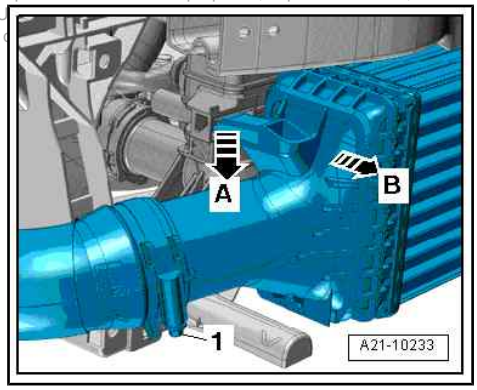

– Lift charge air cooler off radiator -arrows A- and press in direction of -arrow B-.
– Pull left side of charge air cooler downwards -arrow C- and detach charge air cooler.

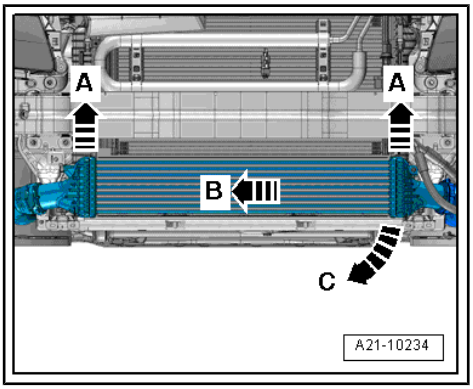

Installing

Installation is carried out in the reverse order; note the following:

Note

- *If there are slight impressions on the fins, refer to ⇒ Servicing 4-cylinder engine, 1.8 ltr., 2.0 ltr. 4-valve TFSI; Rep. gr. 00 ; Repair notes; Installing radiators and condensers .*
- *Secure all hose connections with the correct type of hose clips (same as original equipment) ⇒ Electronic parts catalogue .*

– Install air cleaner housing ⇒ page 109 .
– Install lock carrier cover ⇒ General body repairs, exterior; Rep. gr. 50 ; Lock carrier .

Tightening torques

- ⇒ “2.1 Exploded view - charge air system”, page 90
- ⇒ Servicing 4-cylinder engine, 1.8 ltr., 2.0 ltr. 4-valve TFSI; Rep. gr. 21 ; Charge air system; Exploded view - hose connections for charge air system

2.4 Removing and installing charge pressure sender - G31-

Removing

– Unplug electrical connector -1- from charge pressure sender - G31- .
– Remove bolts -arrows- and pull charge pressure sender - G31- out of air pipe.

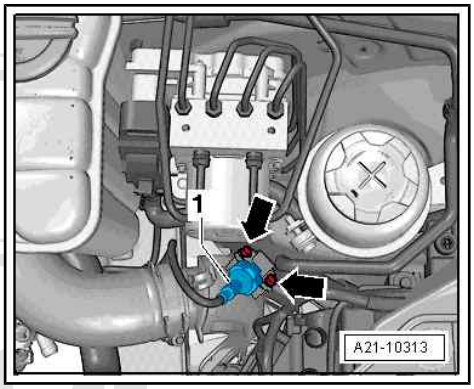

Installing

Installation is carried out in the reverse order; note the following:

Note

Fit new O-ring.

Tightening torques

- ⇒ “2.1 Exploded view - charge air system”, page 90

Protected by Copyright. Copying for private or commercial purposes, in part or in whole, is not permitted unless authorised by AUDI AG. AUDI AG does not guarantee or accept any liability with respect to the correctness of information in this document. Copyright by AUDI AG.

2.5 Checking charge air system for leaks

All procedures are described in ⇒ Servicing 4-cylinder engine, 1.8 ltr., 2.0 ltr. 4-valve TFSI; Rep. gr. 21 ; Charge air system; Checking charge air system for leaks .

24 – Mixture preparation - injection

1 Injection system

⇒ “1.1 Overview of fitting locations - injection system”, page 94

⇒ “1.2 Checking fuel system for leaks”, page 105

1.1 Overview of fitting locations - injection system

Overview of fitting locations - engine compartment, vehicles with petrol engine

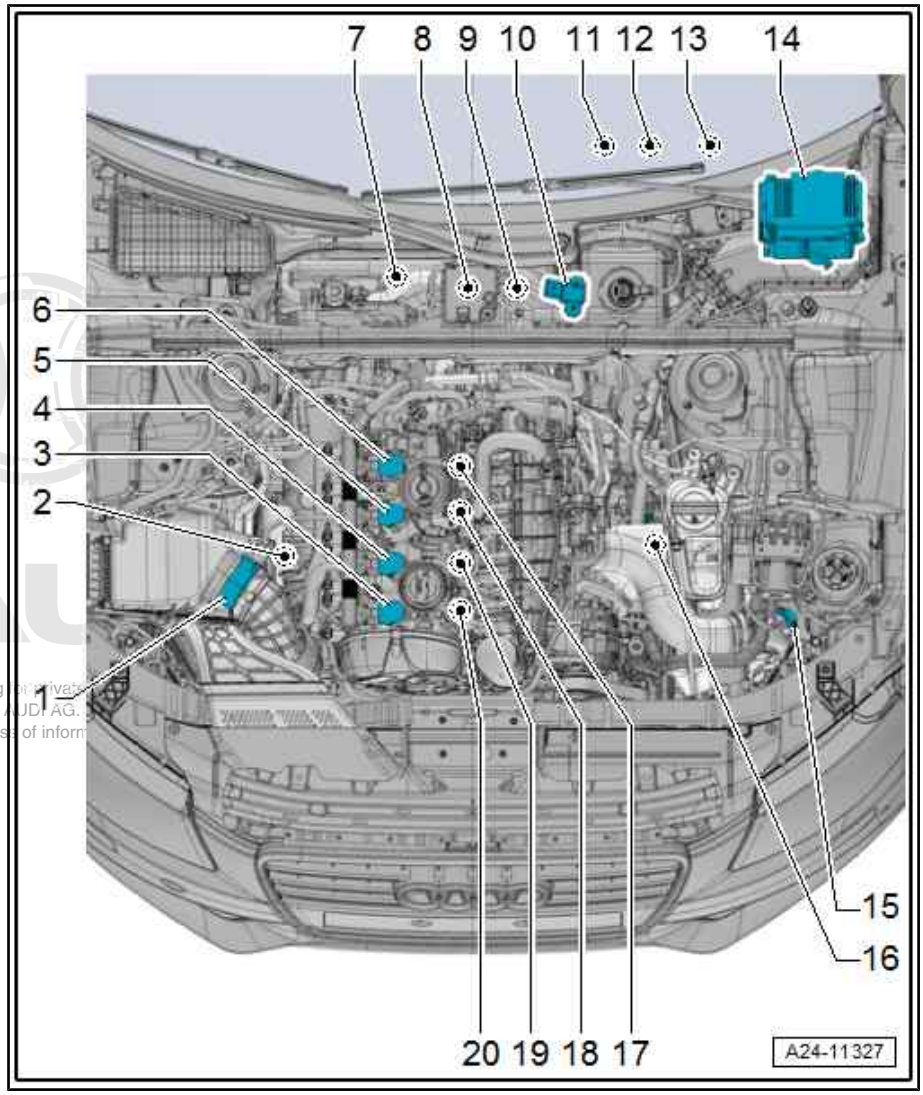

1 - Air mass meter - G70-

- Exploded view ⇒ “3.1 Exploded view - air cleaner housing”, page 108

2 - Right electrohydraulic engine mounting solenoid valve - N145-

- Not fitted on all versions
- Fitting location ⇒ page 98

3 - Ignition coil 1 with output stage - N70-

- Exploded view ⇒ Servicing 4-cylinder engine, 1.8 ltr., 2.0 ltr. 4-valve TFSI; Rep. gr. 28 ; Ignition system; Exploded view - ignition system

4 - Ignition coil 2 with output stage - N127-

- Exploded view ⇒ Servicing 4-cylinder engine, 1.8 ltr., 2.0 ltr. 4-valve TFSI; Rep. gr. 28 ; Ignition system; Exploded view - ignition system

5 - Ignition coil 3 with output stage - N291-

- Exploded view ⇒ Servicing 4-cylinder engine, 1.8 ltr., 2.0 ltr. 4-valve TFSI; Rep. gr. 28 ; Ignition system; Exploded view - ignition system

6 - Ignition coil 4 with output stage - N292-

- Exploded view ⇒ Servicing 4-cylinder engine, 1.8 ltr., 2.0 ltr. 4-valve TFSI; Rep. gr. 28 ; Ignition system; Exploded view - ignition system

7 - Gearbox neutral position sender - G701-

- For vehicles with manual gearbox (depending on equipment and version)
- Fitting location ⇒ page 98

8 - Coolant valve for gearbox - N488-

- For vehicles with manual gearbox with gearbox heating

- ❑ Fitting location ⇒ page 99

9 - Gear detector switch - F208- or gear detection sensor - G604-

- ❑ For vehicles with manual gearbox (depending on equipment and version)
- ❑ Fitting location ⇒ page 98

10 - Brake servo pressure sensor - G294-

- ❑ Depending on equipment

11 - Accelerator position sender - G79- and accelerator position sender 2 - G185-

- ❑ Fitting location ⇒ page 97

12 - Brake light switch - F-

- ❑ Fitting location ⇒ page 98
- ❑ Removing and installing ⇒ Brake system; Rep. gr. 45 ; Sensors; Removing and installing brake light sensor

Protected by copyright. Copying for private or commercial purposes, in part or in whole, is not permitted unless authorised by AUDI AG. AUDI AG does not guarantee or accept any liability with respect to the correctness of information in this document. Copyright by AUDI AG.

13 - Clutch position sender - G476-

- ❑ With clutch pedal switch - F36- / clutch pedal switch for engine start - F194-
- ❑ For vehicles with manual gearbox
- ❑ Fitting location ⇒ page 98

14 - Engine control unit - J623-

- ❑ Removing and installing ⇒ page 127

15 - Charge pressure sender - G31-

- ❑ Exploded view ⇒ “2.1 Exploded view - charge air system”, page 90

16 - Left electrohydraulic engine mounting solenoid valve - N144-

- ❑ Not fitted on all versions
- ❑ Fitting location ⇒ page 98

17 - Injector, cylinder 4 - N33-

- ❑ Exploded view ⇒ Servicing 4-cylinder engine, 1.8 ltr., 2.0 ltr. 4-valve TFSI; Rep. gr. 24 ; Injectors; Exploded view - fuel rail with injectors

18 - Injector, cylinder 3 - N32-

- ❑ Exploded view ⇒ Servicing 4-cylinder engine, 1.8 ltr., 2.0 ltr. 4-valve TFSI; Rep. gr. 24 ; Injectors; Exploded view - fuel rail with injectors

19 - Injector, cylinder 2 - N31-

- ❑ Exploded view ⇒ Servicing 4-cylinder engine, 1.8 ltr., 2.0 ltr. 4-valve TFSI; Rep. gr. 24 ; Injectors; Exploded view - fuel rail with injectors

20 - Injector, cylinder 1 - N30-

- ❑ Exploded view ⇒ Servicing 4-cylinder engine, 1.8 ltr., 2.0 ltr. 4-valve TFSI; Rep. gr. 24 ; Injectors; Exploded view - fuel rail with injectors

Overview of fitting locations - engine compartment, vehicles with Flex Fuel engine

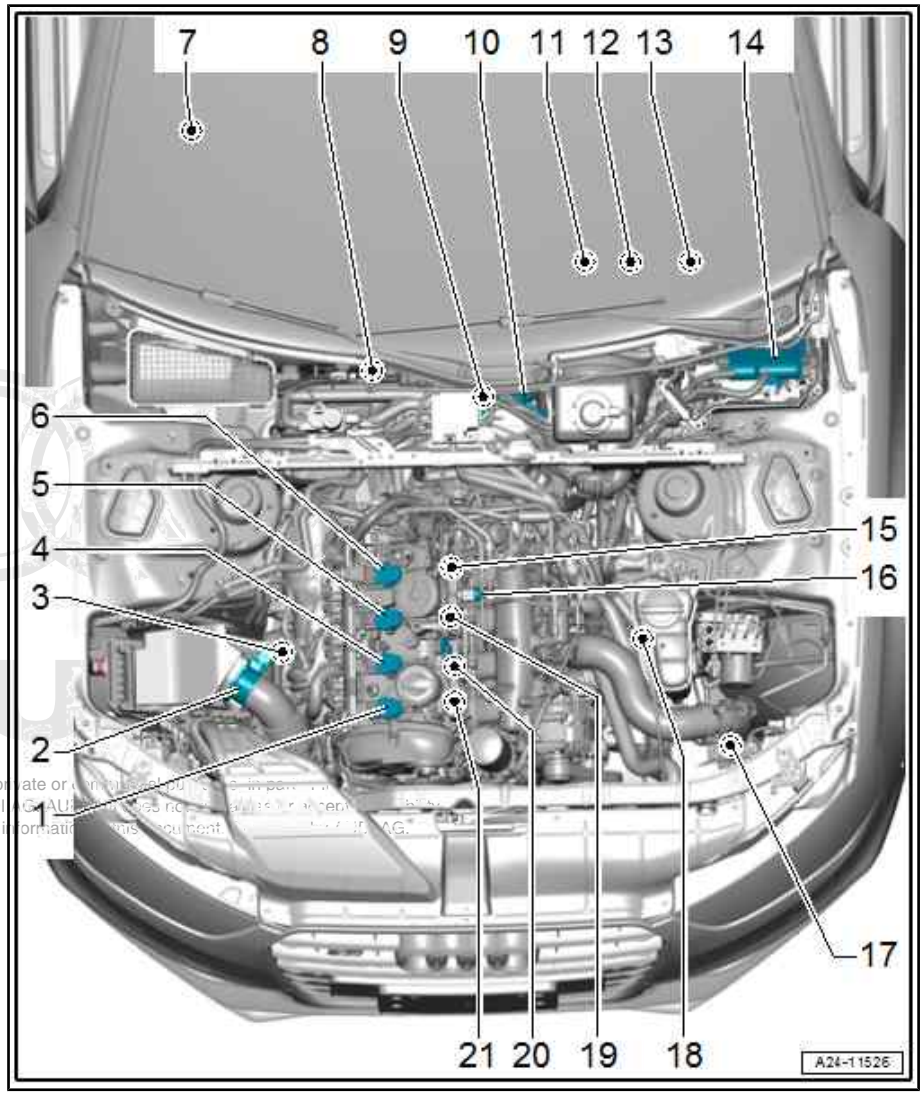

1 - Ignition coil 1 with output stage - N70-

- ❑ Exploded view ⇒ Servicing 4-cylinder engine, 1.8 ltr., 2.0 ltr. 4-valve TFSI; Rep. gr. 28 ; Ignition system; Exploded view - ignition system

2 - Air mass meter - G70-

- ❑ Exploded view ⇒ "3.1 Exploded view - air cleaner housing", page 108

3 - Right electrohydraulic engine mounting solenoid valve - N145-

- ❑ Fitting location ⇒ page 98

4 - Ignition coil 2 with output stage - N127-

- ❑ Exploded view ⇒ Servicing 4-cylinder engine, 1.8 ltr., 2.0 ltr. 4-valve TFSI; Rep. gr. 28 ; Ignition system; Exploded view - ignition system

permitted unless authorised by AUDI AG. AUDI AG does not guarantee or accept any
of information in this document.

5 - Ignition coil 3 with output stage - N291-

- ❑ Exploded view ⇒ Servicing 4-cylinder engine, 1.8 ltr., 2.0 ltr. 4-valve TFSI; Rep. gr. 28 ; Ignition system; Exploded view - ignition system

6 - Ignition coil 4 with output stage - N292-

- ❑ Exploded view ⇒ Servicing 4-cylinder engine, 1.8 ltr., 2.0 ltr. 4-valve TFSI; Rep. gr. 28 ; Ignition system; Exploded view - ignition system

7 - Fuel quality sender - G446-

- ❑ Fitting location ⇒ page 100

8 - Gear detection sensor - G604-

- ❑ For vehicles with manual gearbox
- ❑ Fitting location ⇒ page 98

9 - Coolant valve for gearbox - N488-

- ❑ For vehicles with manual gearbox with gearbox heating
- ❑ Fitting location ⇒ page 99
- ❑ Exploded view ⇒ "2.3 Exploded view - coolant valves", page 65

10 - Brake servo pressure sensor - G294-

11 - Accelerator position sender - G79- and accelerator position sender 2 - G185-

- ❑ Fitting location ⇒ page 97

12 - Brake light switch - F-

- ❑ Fitting location ⇒ page 98
- ❑ Removing and installing ⇒ Brake system; Rep. gr. 45 ; Sensors; Removing and installing brake light sensor

13 - Clutch position sender - G476-

- ❑ With clutch pedal switch - F36- / clutch pedal switch for engine start - F194-
- ❑ For vehicles with manual gearbox
- ❑ Fitting location ⇒ page 98

14 - Engine control unit - J623-

- ❑ Removing and installing ⇒ page 127

15 - Injector, cylinder 4 - N33-

- ❑ Exploded view ⇒ Servicing 4-cylinder engine, 1.8 ltr., 2.0 ltr. 4-valve TFSI; Rep. gr. 24 ; Injectors; Exploded view - fuel rail with injectors

16 - Fuel pressure sender for low pressure - G410-

- ❑ Exploded view ⇒ Servicing 4-cylinder engine, 1.8 ltr., 2.0 ltr. 4-valve TFSI; Rep. gr. 24 ; Intake manifold; Exploded view - intake manifold

17 - Charge pressure sender - G31-

- ❑ Fitting location ⇒ page 99
- ❑ Exploded view ⇒ “2.1 Exploded view - charge air system”, page 90

18 - Left electrohydraulic engine mounting solenoid valve - N144-

- ❑ Fitting location ⇒ page 98

19 - Injector, cylinder 3 - N32-

- ❑ Exploded view ⇒ Servicing 4-cylinder engine, 1.8 ltr., 2.0 ltr. 4-valve TFSI; Rep. gr. 24 ; Injectors; Exploded view - fuel rail with injectors

20 - Injector, cylinder 2 - N31-

- ❑ Exploded view ⇒ Servicing 4-cylinder engine, 1.8 ltr., 2.0 ltr. 4-valve TFSI; Rep. gr. 24 ; Injectors; Exploded view - fuel rail with injectors

21 - Injector, cylinder 1 - N30-

- ❑ Exploded view ⇒ Servicing 4-cylinder engine, 1.8 ltr., 2.0 ltr. 4-valve TFSI; Rep. gr. 24 ; Injectors; Exploded view - fuel rail with injectors

Fitting location of accelerator position sender - G79- / accelerator position sender 2 - G185-

♦ Integrated in accelerator pedal module

2 - Electrical connector

Exploded view ⇒ Fuel supply system; Rep. gr. 20 ; Accelerator mechanism; Exploded view - accelerator pedal module

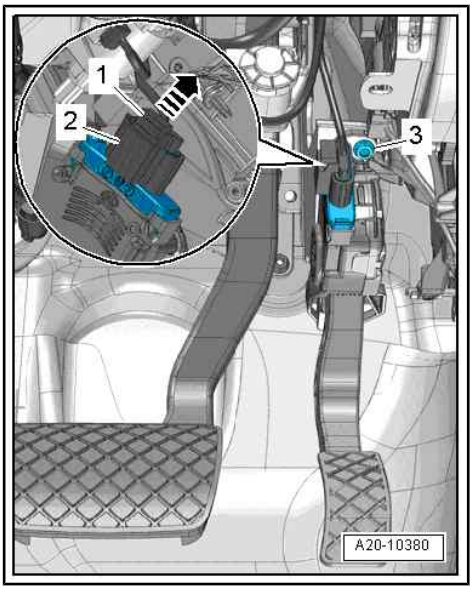

Protected by copyright. Copying for private or commercial purposes, in part or in whole, is not permitted unless authorised by AUDI AG. AUDI AG does not guarantee or accept any liability with respect to the correctness of information in this document. Copyright by AUDI AG.

Fitting location of brake light switch - F- / clutch position sender - G476-

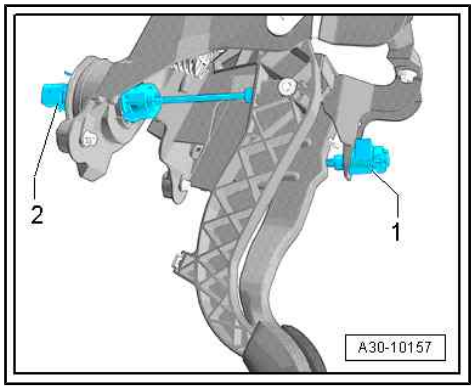

♦ On mounting bracket for pedal cluster

1 - Brake light switch - F-

2 - Clutch position sender - G476- with clutch pedal switch - F36- / clutch pedal switch for engine start - F194- for vehicles with manual gearbox

Fitting location of electrohydraulic engine mounting solenoid valve -N144- / -N145-

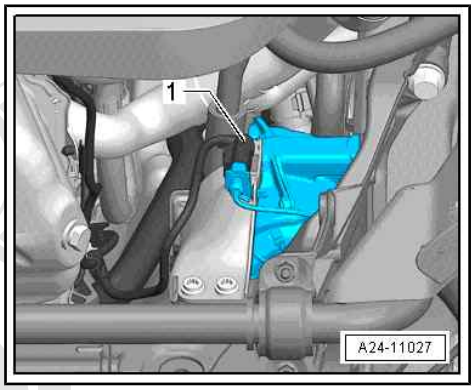

♦ On engine mounting (both sides)

1 - Electrical connector for left electrohydraulic engine mounting solenoid valve - N144-

Fitting location of gearbox neutral position sender - G701-

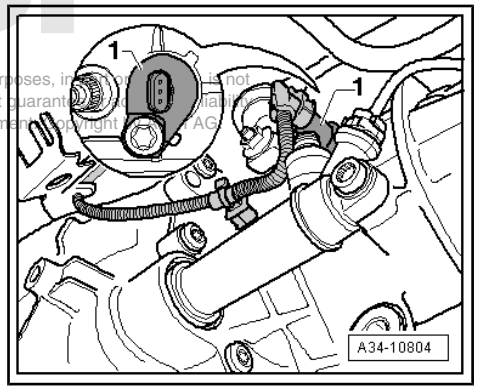

Protected by copyright. Copying for private or commercial purposes, in part or in whole, is not permitted unless authorised by AUDI AG. AUDI AG does not guarantee or accept any liability with respect to the correctness of information in this document. Copyright by AUDI AG.

Fitting location of gear detector switch - F208- or gear detector switch - G604-

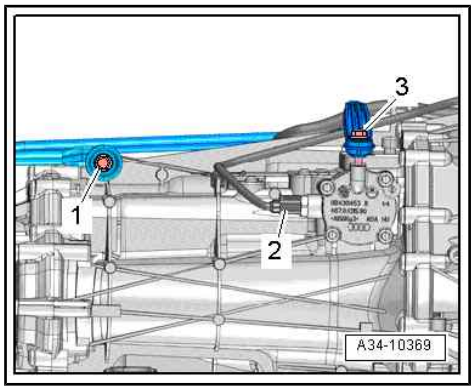

♦ On top of manual gearbox

2 - Electrical connector

Fitting location of charge pressure sender - G31-

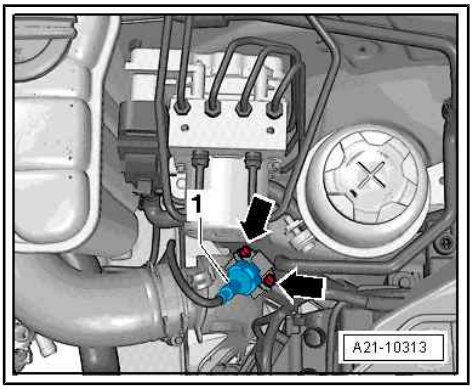

- In air pipe (left-side)

1 - Connect electrical connector for charge pressure sender - G31-

Fitting location of coolant valve for gearbox - N488-

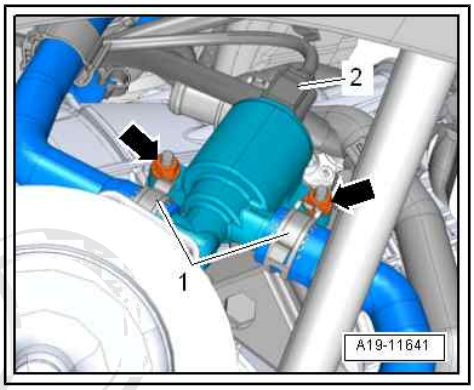

- On manual gearbox (left-side)

2 - Electrical connector for coolant valve for gearbox - N488-

Fitting location of fuel pressure sender for low-pressure - G410- -1-

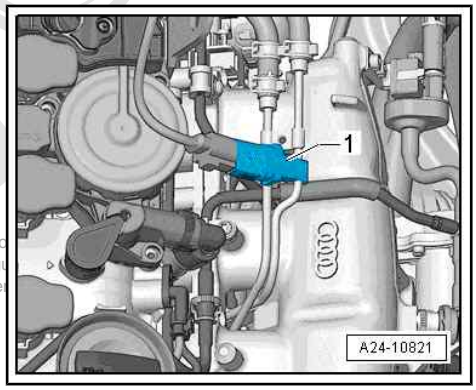

Protected by copyright. Copying for private or commercial purpo
permitted unless authorised by AUDI AG. AUDI AG does not gu
with respect to the correctness of information in this docume

Fitting location of cold-start valve - N17- -item 1-

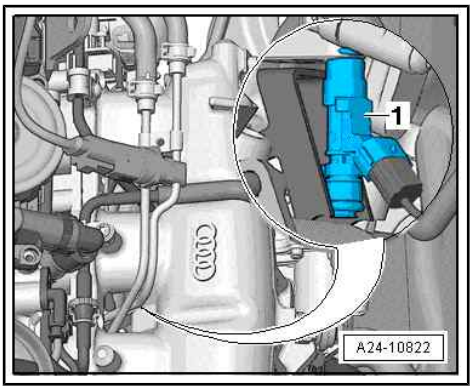

Fitting location of fuel quality sender - G446-

- On right side of underbody (-arrow- points in direction of travel).

1 - Fuel quality sender - G446-

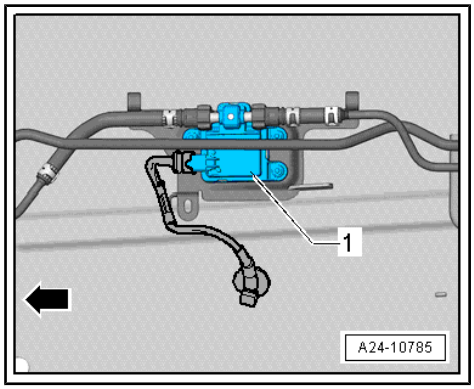

Overview of fitting locations - engine (view from left side), vehicles with petrol engine

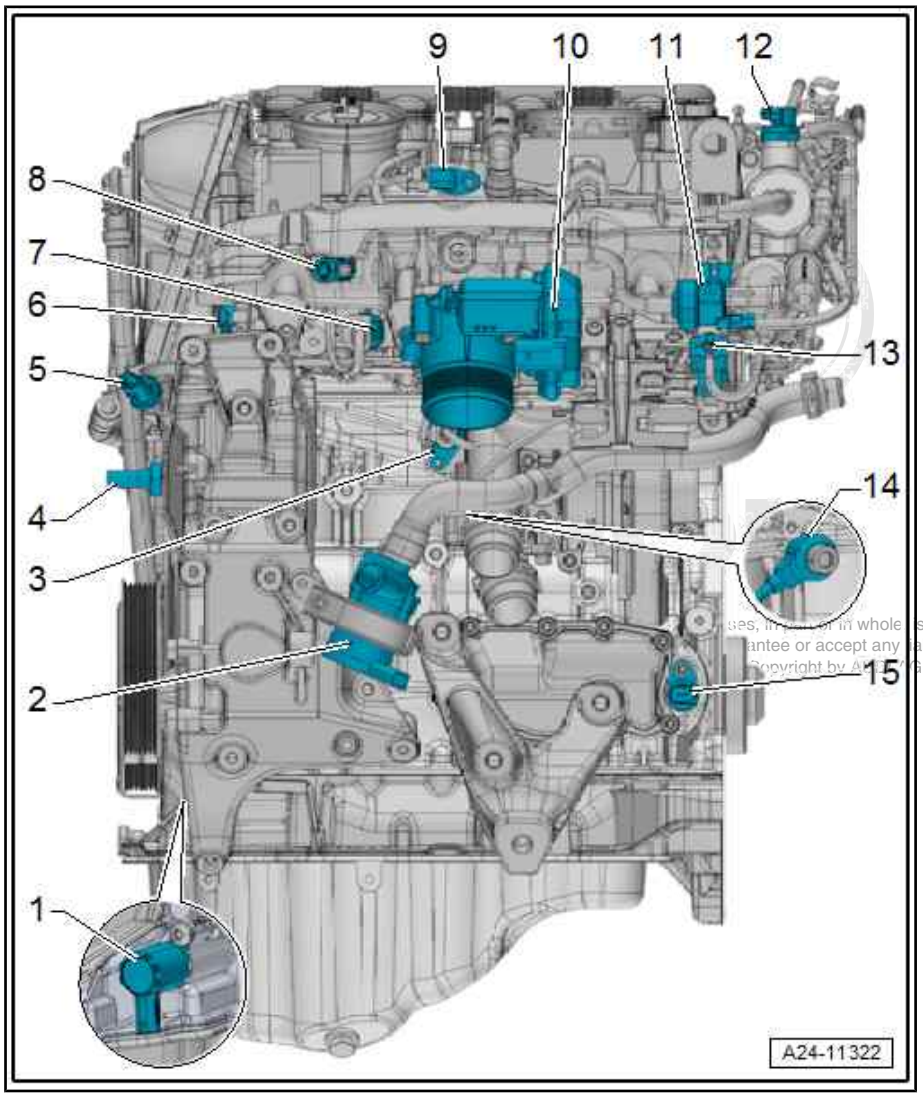

1 - Valve for oil pressure control - N428-

- Exploded view ⇒ Servicing 4-cylinder engine, 1.8 ltr., 2.0 ltr. 4-valve TFSI; Rep. gr. 17 ; Oil filter/oil pressure switches; Exploded view - oil pressure switches/oil pressure control

2 - Continued coolant circulation pump - V51-

- Not fitted on all versions
- Exploded view ⇒ “2.2 Exploded view - electric coolant pump”, page 62

3 - Coolant temperature sender - G62-

- Exploded view ⇒ Servicing 4-cylinder engine, 1.8 ltr., 2.0 ltr. 4-valve TFSI; Rep. gr. 19 ; Coolant pump/thermostat assembly; Exploded view - coolant pump/ thermostat

4 - Oil pressure switch - F22-

- Installation position varies depending on engine version
- Exploded view ⇒ Servicing 4-cylinder engine, 1.8 ltr., 2.0 ltr. 4-valve TFSI; Rep. gr. 17 ; Oil filter/oil pressure switches; Exploded view - oil pressure switches/oil pressure control

5 - Oil pressure switch for reduced oil pressure - F378-

- Installation position varies depending on engine version
- Exploded view ⇒ Servicing 4-cylinder engine, 1.8 ltr., 2.0 ltr. 4-valve TFSI; Rep. gr. 17 ; Oil filter/oil pressure switches; Exploded view - oil pressure switches/oil pressure control

...ses, in part or in whole, is not ...antee or accept any ...ability ...Copyright by AUDI AG.

6 - Intake manifold flap potentiometer - G336-

- Exploded view ⇒ Servicing 4-cylinder engine, 1.8 ltr., 2.0 ltr. 4-valve TFSI; Rep. gr. 24 ; Intake manifold; Exploded view - intake manifold

7 - Fuel pressure sender - G247-

- Exploded view ⇒ Servicing 4-cylinder engine, 1.8 ltr., 2.0 ltr. 4-valve TFSI; Rep. gr. 24 ; Injectors; Exploded view - fuel rail with injectors

8 - Intake air temperature sender - G42-

- Exploded view ⇒ Servicing 4-cylinder engine, 1.8 ltr., 2.0 ltr. 4-valve TFSI; Rep. gr. 24 ; Intake manifold; Exploded view - intake manifold

9 - Hall sender - G40-

- Exploded view ⇒ Servicing 4-cylinder engine, 1.8 ltr., 2.0 ltr. 4-valve TFSI; Rep. gr. 28 ; Ignition system; Exploded view - ignition system

10 - Throttle valve module - J338-

- Including throttle valve drive for electric throttle - G186- , throttle valve drive angle sender 1 for electric throttle - G187- and throttle valve drive angle sender 2 for electric throttle - G188-
- Exploded view ⇒ Servicing 4-cylinder engine, 1.8 ltr., 2.0 ltr. 4-valve TFSI; Rep. gr. 24 ; Intake manifold; Exploded view - intake manifold

11 - Activated charcoal filter solenoid valve 1 - N80-

12 - Fuel metering valve - N290- or fuel pressure regulating valve - N276-

- Fuel metering valve - N290- or fuel pressure regulating valve - N276- may be fitted, depending on version
- Integrated in high-pressure pump

13 - Intake manifold flap valve - N316-

- Exploded view ⇒ Servicing 4-cylinder engine, 1.8 ltr., 2.0 ltr. 4-valve TFSI; Rep. gr. 24 ; Intake manifold; Exploded view - intake manifold

14 - Knock sensor 1 - G61-

- Exploded view ⇒ Servicing 4-cylinder engine, 1.8 ltr., 2.0 ltr. 4-valve TFSI; Rep. gr. 28 ; Ignition system; Exploded view - ignition system

15 - Engine speed sender - G28-

- Exploded view ⇒ Servicing 4-cylinder engine, 1.8 ltr., 2.0 ltr. 4-valve TFSI; Rep. gr. 28 ; Ignition system; Exploded view - ignition system

Overview of fitting locations - engine (view from left side), vehicles with Flex Fuel engine

Protected by copyright. Copying for private or commercial purposes, in part or in whole, is not permitted unless authorised by AUDI AG. AUDI AG does not guarantee or accept any liability with respect to the correctness of information in this document. Copyright by AUDI AG.

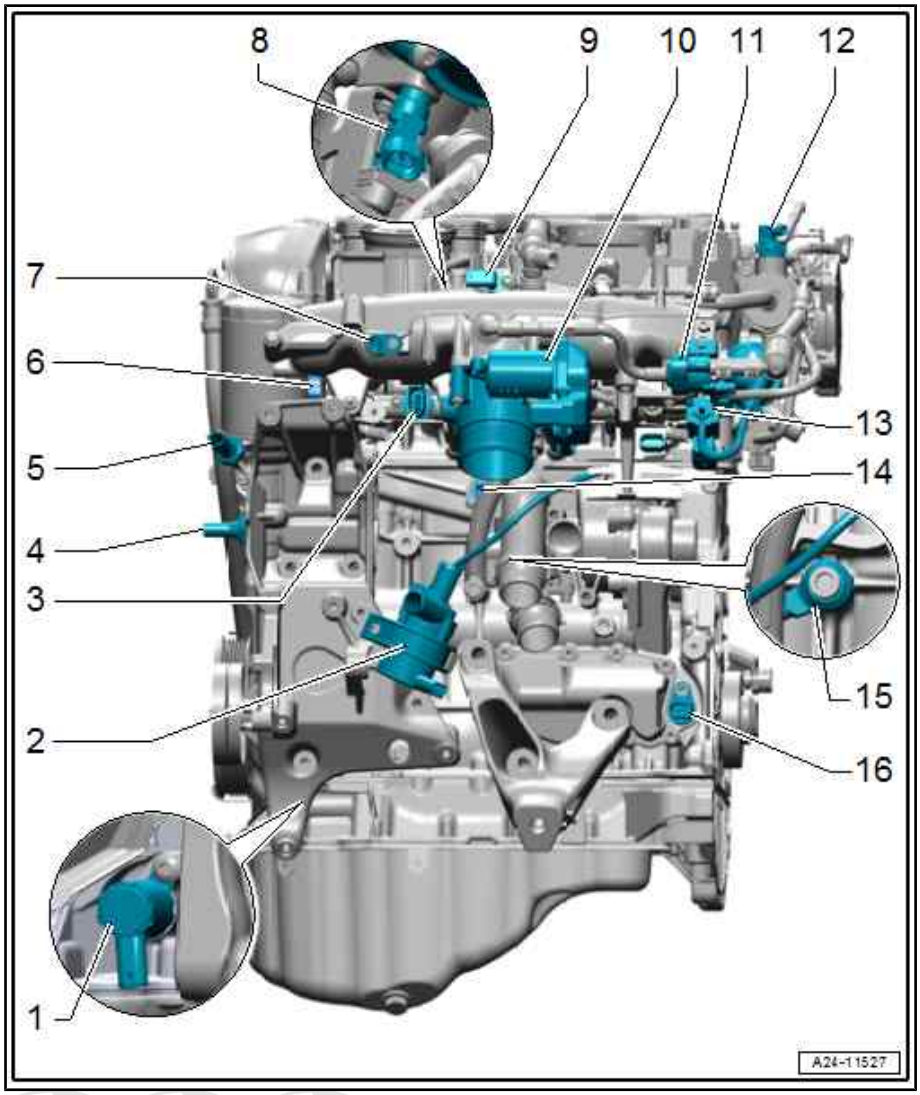

1 - Valve for oil pressure control - N428-

- Exploded view ⇒ Servicing 4-cylinder engine, 1.8 ltr., 2.0 ltr. 4-valve TFSI; Rep. gr. 17 ; Oil filter/oil pressure switches; Exploded view - oil pressure switches/oil pressure control

2 - Continued coolant circulation pump - V51-

- Not fitted on all versions
- Exploded view ⇒ "2.2 Exploded view - electric coolant pump", page 62

3 - Fuel pressure sender - G247-

- Exploded view ⇒ Servicing 4-cylinder engine, 1.8 ltr., 2.0 ltr. 4-valve TFSI; Rep. gr. 24 ; Injectors; Exploded view - fuel rail with injectors

4 - Oil pressure switch - F22-

- Installation position varies depending on engine version
- Exploded view ⇒ Servicing 4-cylinder engine, 1.8 ltr., 2.0 ltr. 4-valve TFSI; Rep. gr. 17 ; Oil filter/oil pressure switches; Exploded view - oil pressure switches/oil pressure control

5 - Oil pressure switch for reduced oil pressure - F378-

- Installation position varies depending on engine version
- Exploded view ⇒ Servicing 4-cylinder engine, 1.8 ltr., 2.0 ltr. 4-valve TFSI; Rep. gr. 17 ; Oil filter/oil pressure switches; Exploded view - oil pressure switches/oil pressure control

6 - Intake manifold flap potentiometer - G336-

- Exploded view ⇒ Servicing 4-cylinder engine, 1.8 ltr., 2.0 ltr. 4-valve TFSI; Rep. gr. 24 ; Intake manifold; Exploded view - intake manifold

7 - Intake air temperature sender - G42-

- Exploded view ⇒ Servicing 4-cylinder engine, 1.8 ltr., 2.0 ltr. 4-valve TFSI; Rep. gr. 24 ; Intake manifold; Exploded view - intake manifold

Protected by copyright. Copying for private or commercial purposes, in part or in whole, is not permitted unless authorised by AUDI AG. AUDI AG does not guarantee or accept any liability with respect to the correctness of information in this document. Copyright by AUDI AG.

8 - Cold-start valve - N17-

- Exploded view ⇒ Servicing 4-cylinder engine, 1.8 ltr., 2.0 ltr. 4-valve TFSI; Rep. gr. 24 ; Intake manifold; Exploded view - intake manifold

9 - Hall sender - G40-

- Exploded view ⇒ Servicing 4-cylinder engine, 1.8 ltr., 2.0 ltr. 4-valve TFSI; Rep. gr. 28 ; Ignition system; Exploded view - ignition system

10 - Throttle valve module - J338-

- Including throttle valve drive for electric throttle - G186- , throttle valve drive angle sender 1 for electric throttle - G187- and throttle valve drive angle sender 2 for electric throttle - G188-

- ❑ Exploded view ⇒ Servicing 4-cylinder engine, 1.8 ltr., 2.0 ltr. 4-valve TFSI; Rep. gr. 24 ; Intake manifold; Exploded view - intake manifold

11 - Activated charcoal filter solenoid valve 1 - N80-

12 - Fuel metering valve - N290- or fuel pressure regulating valve - N276-

- ❑ Fuel metering valve - N290- or fuel pressure regulating valve - N276- may be fitted, depending on version
- ❑ Integrated in high-pressure pump

13 - Intake manifold flap valve - N316-

- ❑ Exploded view ⇒ Servicing 4-cylinder engine, 1.8 ltr., 2.0 ltr. 4-valve TFSI; Rep. gr. 24 ; Intake manifold; Exploded view - intake manifold

14 - Coolant temperature sender - G62-

- ❑ Exploded view ⇒ Servicing 4-cylinder engine, 1.8 ltr., 2.0 ltr. 4-valve TFSI; Rep. gr. 19 ; Coolant pump/thermostat assembly; Exploded view - coolant pump/thermostat

15 - Knock sensor 1 - G61-

- ❑ Exploded view ⇒ Servicing 4-cylinder engine, 1.8 ltr., 2.0 ltr. 4-valve TFSI; Rep. gr. 28 ; Ignition system; Exploded view - ignition system

Protected by copyright. Copying for private or commercial purposes, in part or in whole, is not permitted unless authorised by AUDI AG. AUDI AG does not guarantee or accept any liability with respect to the correctness of information in this document. Copyright by AUDI AG.

16 - Engine speed sender - G28-

- ❑ Exploded view ⇒ Servicing 4-cylinder engine, 1.8 ltr., 2.0 ltr. 4-valve TFSI; Rep. gr. 28 ; Ignition system; Exploded view - ignition system

Overview of fitting locations - engine (view from right side)

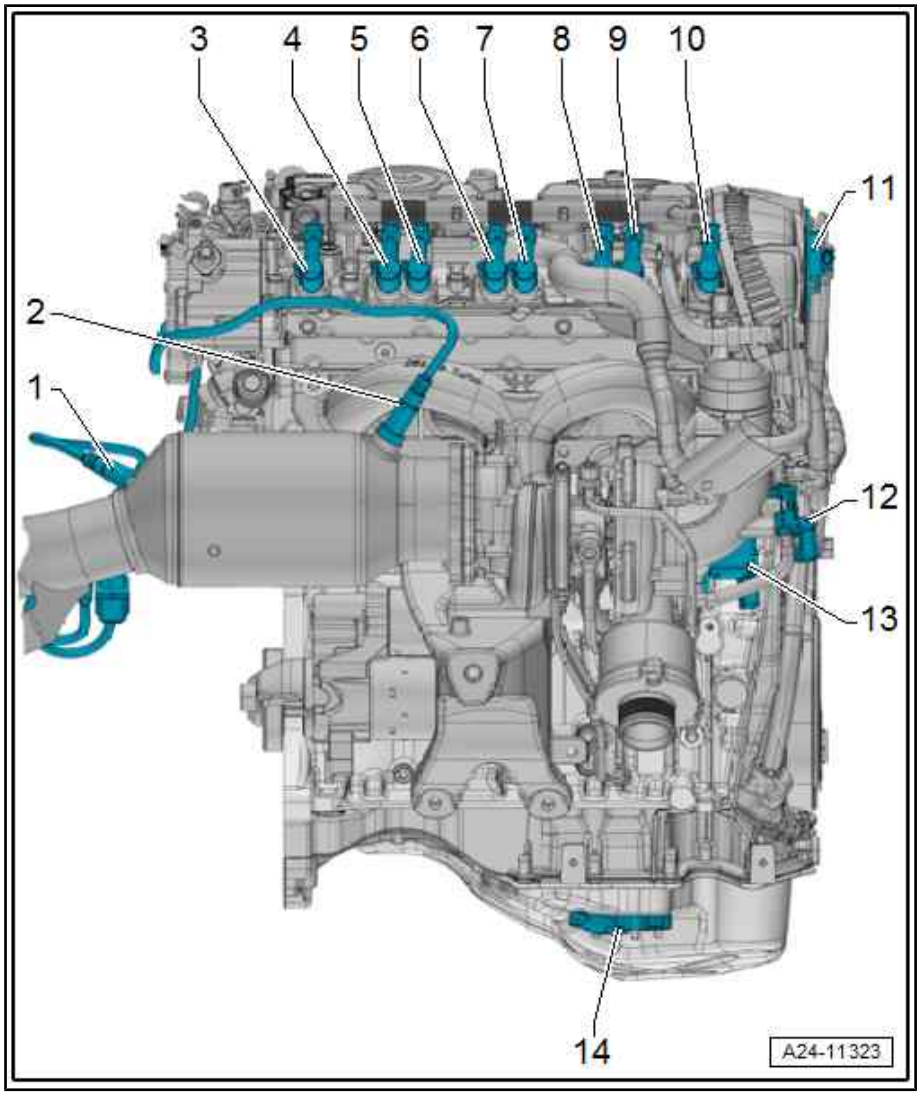

1 - Lambda probe after catalytic converter - G130- and Lambda probe heater 1 after catalytic converter - Z29-

- ❑ Exploded view ⇒ Servicing 4-cylinder engine, 1.8 ltr., 2.0 ltr. 4-valve TFSI; Rep. gr. 24 ; Lambda probe; Exploded view - Lambda probe

2 - Lambda probe - G39- and Lambda probe heater - Z19-

- ❑ Exploded view ⇒ Servicing 4-cylinder engine, 1.8 ltr., 2.0 ltr. 4-valve TFSI; Rep. gr. 24 ; Lambda probe; Exploded view - Lambda probe

3 - Actuator 8 for camshaft adjustment - F373- (for cylinder No. 4)

- ❑ 2.0 ltr. engine only
- ❑ Exploded view ⇒ Servicing 4-cylinder engine, 1.8 ltr., 2.0 ltr. 4-valve TFSI; Rep. gr. 15 ; Valve gear; Exploded view - valve gear

4 - Actuator 7 for camshaft adjustment - F372- (for cylinder No. 4)

- ❑ 2.0 ltr. engine only
- ❑ Exploded view ⇒ Servicing 4-cylinder engine, 1.8 ltr., 2.0 ltr. 4-valve TFSI; Rep. gr. 15 ; Valve gear; Exploded view - valve gear

5 - Actuator 6 for camshaft adjustment - F371- (for cylinder No. 3)

- ❑ 2.0 ltr. engine only
- ❑ Exploded view ⇒ Servicing 4-cylinder engine, 1.8 ltr., 2.0 ltr. 4-valve TFSI; Rep. gr. 15 ; Valve gear; Exploded view - valve gear

6 - Actuator 5 for camshaft adjustment - F370- (for cylinder No. 3)

- ❑ 2.0 ltr. engine only
- ❑ Exploded view ⇒ Servicing 4-cylinder engine, 1.8 ltr., 2.0 ltr. 4-valve TFSI; Rep. gr. 15 ; Valve gear; Exploded view - valve gear

7 - Actuator 4 for camshaft adjustment - F369- (for cylinder No. 2)

- ❑ 2.0 ltr. engine only
- ❑ Exploded view ⇒ Servicing 4-cylinder engine, 1.8 ltr., 2.0 ltr. 4-valve TFSI; Rep. gr. 15 ; Valve gear; Exploded view - valve gear

8 - Actuator 3 for camshaft adjustment - F368- (for cylinder No. 2)

- ❑ 2.0 ltr. engine only
- ❑ Exploded view ⇒ Servicing 4-cylinder engine, 1.8 ltr., 2.0 ltr. 4-valve TFSI; Rep. gr. 15 ; Valve gear; Exploded view - valve gear

Protected by copyright. Copying for private or commercial purposes, in part or in whole, is not permitted unless authorised by AUDI AG. AUDI AG does not guarantee or accept any liability with respect to the correctness of information in this document. Copyright by AUDI AG.

9 - Actuator 2 for camshaft adjustment - F367- (for cylinder No. 1)

- ❑ 2.0 ltr. engine only

- ❑ Exploded view ⇒ Servicing 4-cylinder engine, 1.8 ltr., 2.0 ltr. 4-valve TFSI; Rep. gr. 15 ; Valve gear; Exploded view - valve gear

10 - Actuator 1 for camshaft adjustment - F366- (for cylinder No. 1)

- ❑ 2.0 ltr. engine only
- ❑ Exploded view ⇒ Servicing 4-cylinder engine, 1.8 ltr., 2.0 ltr. 4-valve TFSI; Rep. gr. 15 ; Valve gear; Exploded view - valve gear

11 - Camshaft control valve 1 - N205-

- ❑ Exploded view ⇒ Servicing 4-cylinder engine, 1.8 ltr., 2.0 ltr. 4-valve TFSI; Rep. gr. 15 ; Timing chain cover; Exploded view - timing chain cover

12 - Charge pressure control solenoid valve - N75-

- ❑ Exploded view ⇒ Servicing 4-cylinder engine, 1.8 ltr., 2.0 ltr. 4-valve TFSI; Rep. gr. 21 ; Turbocharger; Exploded view - turbocharger

13 - Turbocharger air recirculation valve - N249-

- ❑ Exploded view ⇒ Servicing 4-cylinder engine, 1.8 ltr., 2.0 ltr. 4-valve TFSI; Rep. gr. 21 ; Turbocharger; Exploded view - turbocharger

14 - Oil level and oil temperature sender - G266-

- ❑ Exploded view ⇒ Servicing 4-cylinder engine, 1.8 ltr., 2.0 ltr. 4-valve TFSI; Rep. gr. 17 ; Sump/oil pump; Exploded view - sump/oil pump

Protected by copyright. Copying for private or commercial purposes, in part or in whole, is not permitted unless authorised by AUDI AG. AUDI AG does not guarantee or accept any liability with respect to the correctness of information in this document. Copyright by AUDI AG.

1.2 Checking fuel system for leaks

All procedures are described in ⇒ Servicing 4-cylinder engine, 1.8 ltr., 2.0 ltr. 4-valve TFSI; Rep. gr. 24 ; Injection system ; Checking fuel system for leaks.

2 Vacuum system

⇒ “2.1 Checking vacuum system”, page 106

⇒ “2.2 Checking dual non-return valve”, page 106

⇒ “2.3 Removing and installing activated charcoal filter solenoid valve 1 N80 ”, page 106

2.1 Checking vacuum system

All procedures are described in ⇒ Servicing 4-cylinder engine, 1.8 ltr., 2.0 ltr. 4-valve TFSI; Rep. gr. 24 ; Vacuum system ; Checking vacuum system.

Protected by copyright. Copying for private or commercial purposes, in part or in whole, is not permitted unless authorised by AUDI AG. AUDI AG does not guarantee or accept any liability with respect to the correctness of information in this document. Copyright by AUDI AG.

2.2 Checking dual non-return valve

All procedures are described in ⇒ Servicing 4-cylinder engine, 1.8 ltr., 2.0 ltr. 4-valve TFSI; Rep. gr. 24 ; Vacuum system ; Checking dual non-return valve.

2.3 Removing and installing activated charcoal filter solenoid valve 1 - N80-

⇒ “2.3.1 Removing and installing activated charcoal filter solenoid valve 1 N80 - vehicles with petrol engine”, page 106

⇒ “2.3.2 Removing and installing activated charcoal filter solenoid valve 1 N80 - vehicles with Flex Fuel engine”, page 107

2.3.1 Removing and installing activated charcoal filter solenoid valve 1 - N80- - vehicles with petrol engine

Special tools and workshop equipment required

- Hose clip pliers - V.A.G 1921-

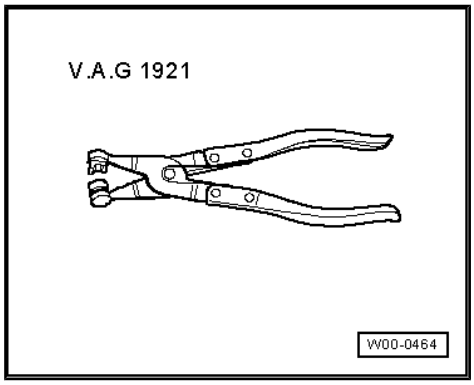

Removing

– Remove throttle valve module - J338- ⇒ page 119 .

– Remove bolts -1, 2- and push bracket with electrical connectors to one side.

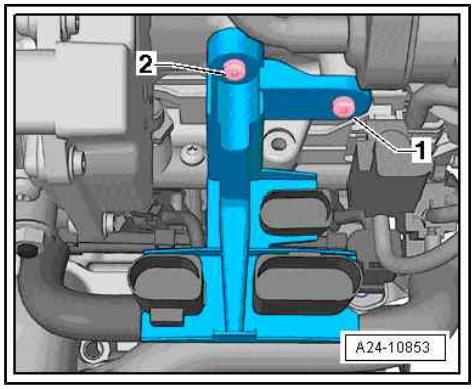

– Unscrew bolt -2- and nut -1- for support for intake manifold.
– Move electrical wiring harness clear and detach support for intake manifold.

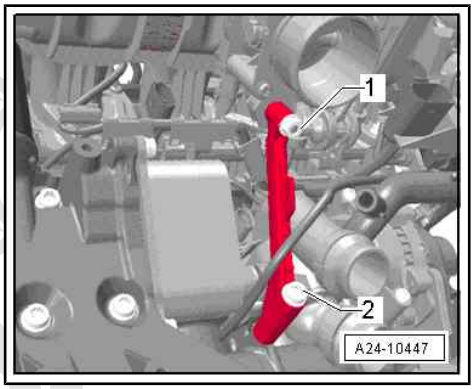

– Unplug electrical connector -4-.
– Release hose clip -5- and detach vacuum line.
– Unscrew bolt -3- and detach retaining clip.
– Press release tabs on both sides and disconnect vacuum line -1- at intake manifold and at connection point -2-.
– Detach activated charcoal filter solenoid valve 1 - N80- from bracket and guide out vacuum line.

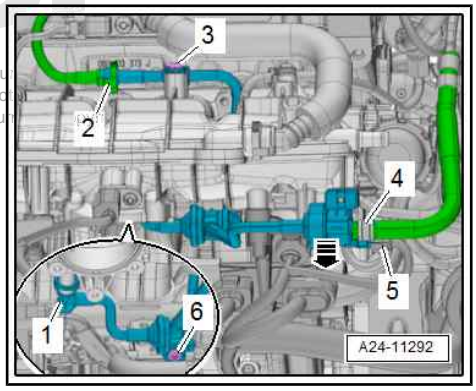

Protected by copyright. Copying for private or commercial pu
permitted unless authorised by AUDI AG. AUDI AG does no
with respect to the correctness of information in this docu

Installing

Installation is carried out in the reverse order; note the following:

– Install throttle valve module - J338- ⇒ Servicing 4-cylinder engine, 1.8 ltr., 2.0 ltr. 4-valve TFSI; Rep. gr. 24 ; Intake manifold; Removing and installing throttle valve module - J338- .

2.3.2 Removing and installing activated charcoal filter solenoid valve 1 - N80- - vehicles with Flex Fuel engine

Removing

– Remove engine cover panel ⇒ Servicing 4-cylinder engine, 1.8 ltr., 2.0 ltr. 4-valve TFSI; Rep. gr. 10 ; Engine cover panel; Removing and installing engine cover panel .
– Unplug electrical connector from activated charcoal filter solenoid valve 1 - N80- -5-.
– Detach activated charcoal filter solenoid valve 1 - N80- -5- from bracket.
– Release hose clip -3-.
– Detach line for active charcoal filter at intake manifold (top section) and at connection -arrows-.
– Guide line coming from activated charcoal filter out underneath fuel lines.

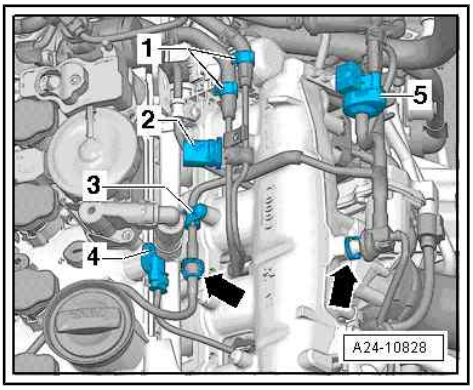

Installing

Installation is carried out in the reverse order; note the following:

– Install engine cover panel ⇒ Servicing 4-cylinder engine, 1.8 ltr., 2.0 ltr. 4-valve TFSI; Rep. gr. 10 ; Engine cover panel; Removing and installing engine cover panel .

3 Air cleaner

⇒ “3.1 Exploded view - air cleaner housing”, page 108

⇒ “3.2 Removing and installing air cleaner housing”, page 109

3.1 Exploded view - air cleaner housing

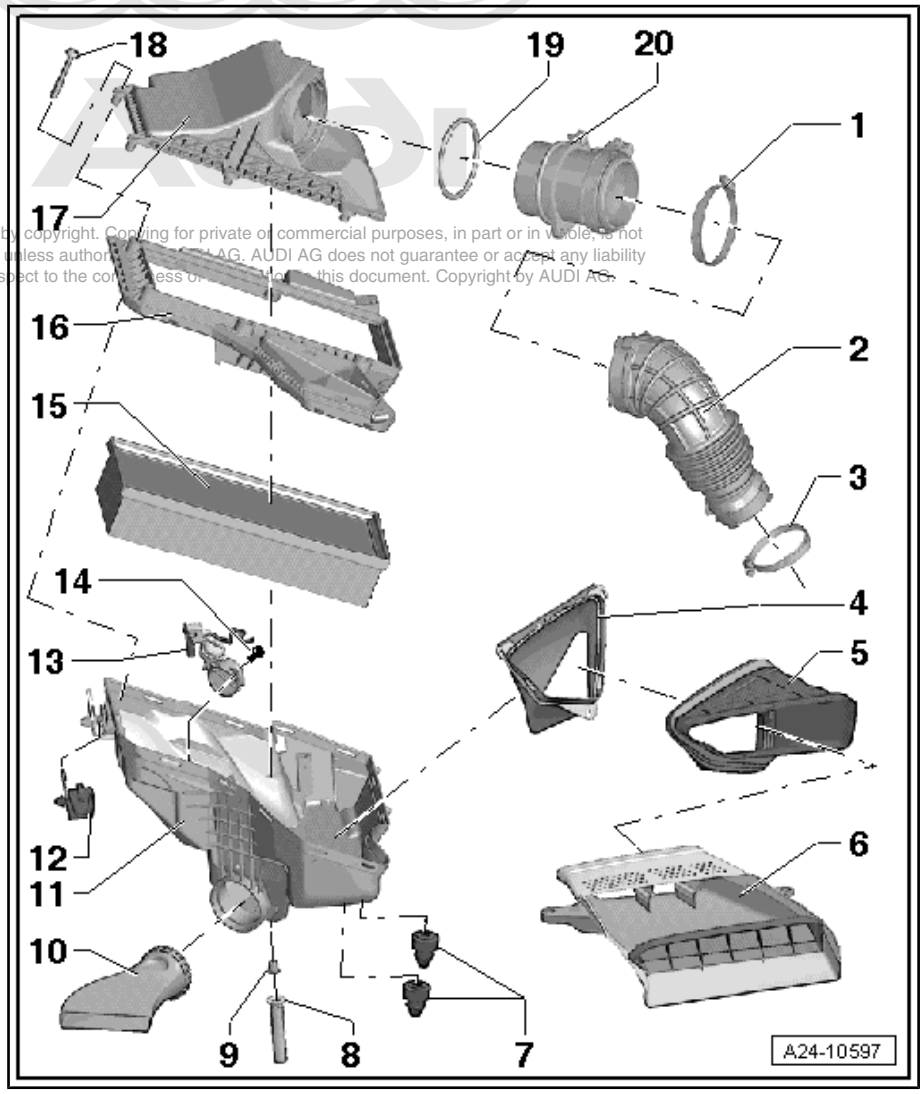

Protected by copyright. Copying for private or commercial purposes, in part or in whole, is not permitted unless authorized by AUDI AG. AUDI AG does not guarantee or accept any liability with respect to the correctness of information in this document. Copyright by AUDI AG.

1 - Hose clip

2 - Air hose

3 - Hose clip

4 - Air duct

- ❑ Clipped into air cleaner housing
- ❑ Clean out dirt and leaves, etc.

5 - Air duct

- ❑ Clean out dirt and leaves, etc.

6 - Air duct

- ❑ Clean out dirt and leaves, etc.
- ❑ Secure to lock carrier (2 Nm)

7 - Rubber grommet

8 - Water drain hose

- ❑ Clean out dirt and leaves, etc.

9 - Guide for water drain hose

10 - Hot air intake

- ❑ For cold climates
- ❑ Insert as far as stop and turn clockwise until you feel it engage

11 - Air cleaner housing

- ❑ Clean out salt deposits, dirt and leaves, etc.
- ❑ Important: Check for dirt in water drain and clean as required
- ❑ Removing and installing ⇒ page 109

12 - Bracket

- ❑ For air cleaner housing
- ❑ Must engage positively
- ❑ Do not use any lubricants

13 - Variable intake manifold change-over valve - N335-

- ❑ Country-specific version

14 - Bolt

15 - Air filter element

- ❑ Change intervals ⇒ Maintenance tables
- ❑ Removing and installing: A4 ⇒ Maintenance ; Booklet 812 , A5 Coupé ⇒ Maintenance ; Booklet 811 , A5 Cabriolet ⇒ Maintenance ; Booklet 818

- ❑ Always use genuine part for air filter element
- ❑ Also clean snow screen (if fitted)

16 - Frame insert

- ❑ For air cleaner housing

17 - Air cleaner (top section)

- ❑ Clean out salt deposits, dirt and leaves, etc.

18 - Bolt

19 - O-ring

- ❑ Renew if damaged

20 - Air mass meter - G70-

- ❑ Removing and installing ⇒ page 122

Protected by copyright. Copying for private or commercial purposes, in part or in whole, is not permitted unless authorised by AUDI AG. AUDI AG does not guarantee or accept any liability with respect to the correctness of information in this document. Copyright by AUDI AG.

3.2 Removing and installing air cleaner housing

Removing

– Unplug electrical connector -1- at air mass meter - G70- .

– Open hose clip -2- on air hose leading to turbocharger and disconnect hose at air mass meter - G70- .

– Remove air duct -3-.

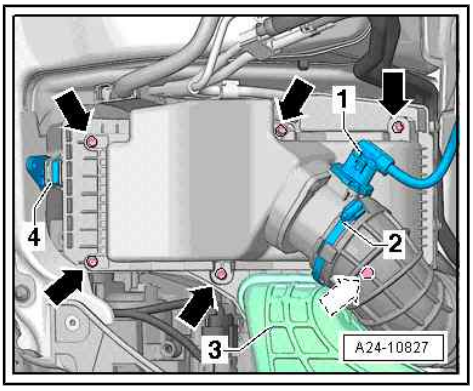

– Detach vacuum hose -arrow- (if fitted).

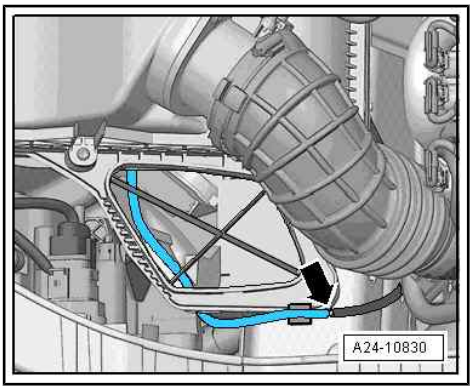

– Release retainer -4- for bottom section of air cleaner (press in rubber on left and right side and pull upwards).

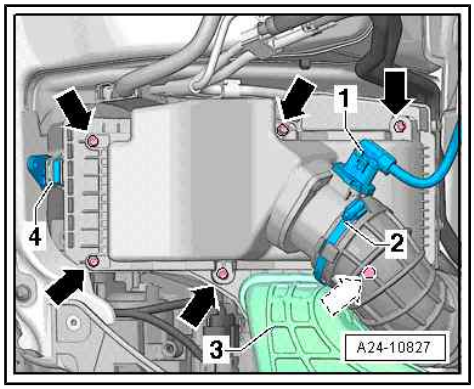

Note

- *These components (bypass flap with variable intake manifold change-over valve - N335- -1-) are not installed on certain equipment versions or on vehicles for certain export markets.*
- *Do not use lubricants when installing retainer.*

– Lift off air cleaner housing.

– Disconnect electrical connector at variable intake manifold change-over valve - N335- (if fitted).

Installing

To ensure the proper function of the air mass meter - G70- it is important to observe the following instructions.

Note

- *Use a silicone-free lubricant when installing the intake hose.*
- *Secure all hose connections with the correct type of hose clips (same as original equipment) ⇒ Electronic parts catalogue .*

– If hot air intake is fitted (for countries with cold climates only), make sure that air intake connection has engaged properly -arrows- (pay attention to marking).

– Check intake duct as far as air filter element for dirt.

– Check air mass meter and air hose (engine intake side) for salt residue, dirt and leaves.

– Re-attach electrical connector at variable intake manifold change-over valve - N335- (if fitted).

– Check water drain hose -1- in air cleaner (bottom section) for dirt and other obstructions (clean if necessary).

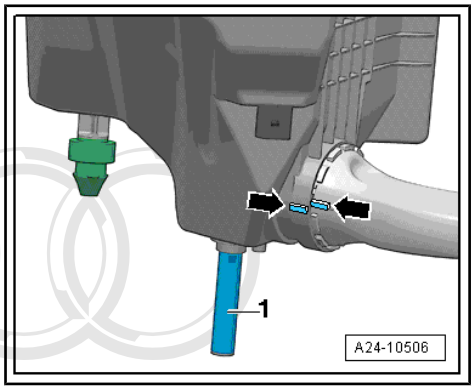

Note

The water drain hose must be routed straight downwards; make sure it is not kinked or twisted.

Protected by copyright. Copying for private or commercial purposes, in part or in whole, is not
permitted unless authorised by AUDI AG. AUDI A
with respect to the correctness of information i

– Re-attach vacuum hose -arrow- (if fitted previously).

– Make sure that air hose is correctly seated at air mass meter - G70- .

– The remaining installation steps are carried out in the reverse sequence.

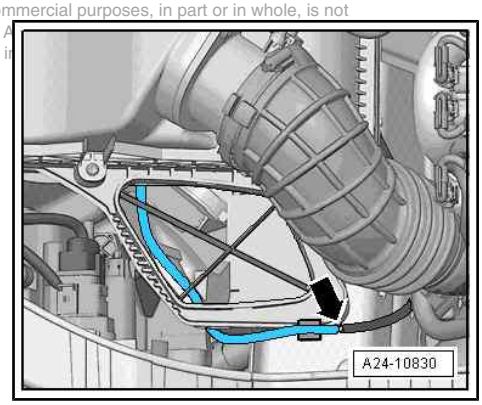

4 Intake manifold

⇒ “4.1 Exploded view - intake manifold”, page 111

⇒ “4.2 Removing and installing intake manifold”, page 111

⇒ “4.3 Removing and installing throttle valve module J338 ”, page 119

⇒ “4.4 Cleaning throttle valve module”, page 119

⇒ “4.5 Checking intake manifold change-over function”, page 120

4.1 Exploded view - intake manifold

All components are described in ⇒ Servicing 4-cylinder engine, 1.8 ltr., 2.0 ltr. 4-valve TFSI; Rep. gr. 24 ; Intake manifold; Exploded view - intake manifold .

4.2 Removing and installing intake manifold

⇒ “4.2.1 Removing and installing intake manifold - vehicles with petrol engine”, page 111

⇒ “4.2.2 Removing and installing intake manifold (top section) - vehicles with Flex Fuel engine”, page 114

⇒ “4.2.3 Removing and installing intake manifold (bottom section) - vehicles with Flex Fuel engine”, page 118

4.2.1 Removing and installing intake manifold - vehicles with petrol engine

Special tools and workshop equipment required

- Hose clip pliers - VAS 6362-

- Assembly tool - T10118-

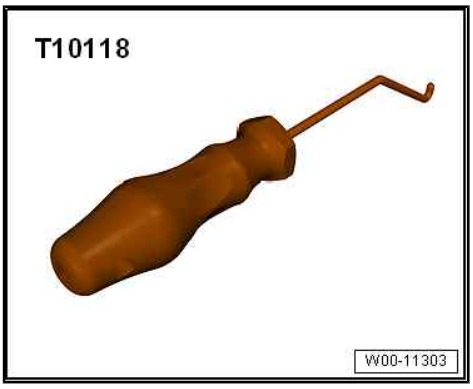

Protected by copyright. Copying for private or commercial purposes, in part or in whole, is not permitted unless authorised by AUDI AG. AUDI AG does not guarantee or accept any liability with respect to the correctness of information in this document. Copyright by AUDI AG.

♦ Socket - T10347-

Removing

– Remove engine cover panel ⇒ Servicing 4-cylinder engine, 1.8 ltr., 2.0 ltr. 4-valve TFSI; Rep. gr. 10 ; Engine cover panel; Removing and installing engine cover panel .

– Remove oil filter: A4 ⇒ Maintenance ; Booklet 812 , A5 Coupé ⇒ Maintenance ; Booklet 811 , A5 Cabriolet ⇒ Maintenance ; Booklet 818 .

Protected by copyright. Copying for private or commercial purposes, in part or in whole, is not permitted unless authorized by AUDI AG. AUDI AG does not guarantee or accept any liability with respect to the correctness of information in this document. Copyright by AUDI AG.

– Press release tabs -2, 3- on both sides and remove crankcase breather hose.

– Release hose clip -4-.

– Press release tabs -arrow- on both sides and disconnect line from activated charcoal filter.

– Unplug electrical connectors:

1 - For Hall sender - G40-

5 - For throttle valve module - J338-

6 - For intake air temperature sender - G42-

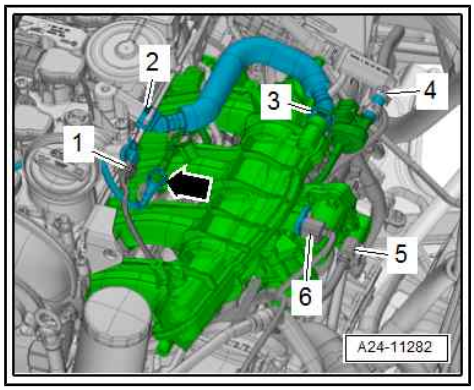

– Remove bolts -1, 2- and push coolant pipe to side with coolant hoses -arrows- connected.

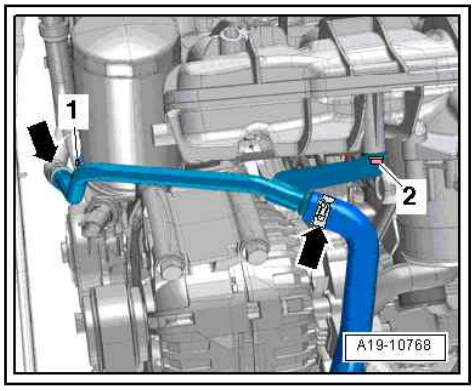

– Open hose clip -arrow- securing air hose and disconnect hose downwards from throttle valve module - J338- .

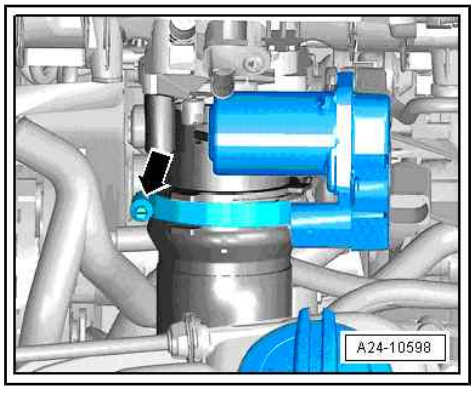

– Disconnect vacuum hose -3- and move clear.
– Unplug electrical connectors:

2 - For fuel pressure sender - G247-

5 - For activated charcoal filter solenoid valve 1 - N80-

6 - For intake manifold flap valve - N316-

– Remove bolts -4-.
– Release fasteners -arrows A- and move clear electrical wiring harness.
– Unplug electrical wiring harness from fuel rail -arrows- and unclip at -item 1-.

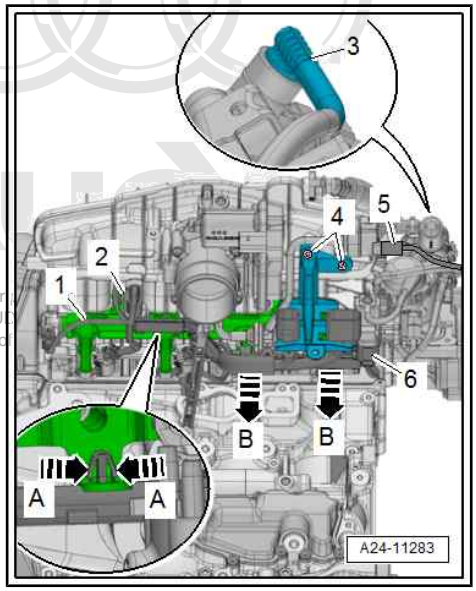

WARNING

The fuel system is pressurised.

Risk of injury as fuel may spray out.

- *Put on safety goggles.*
- *Put on protective gloves.*
- *Release pressure (wrap a clean cloth around connection and open connection carefully).*

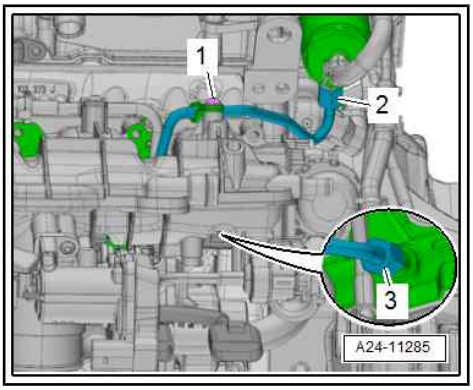

– Remove union nuts -2, 3- and bolt -1- and detach high-pressure pipe.

Note

- *Use a clean cloth to catch escaping fuel.*
- *Seal off open connections with clean caps. It is essential to ensure that no dirt enters the fuel system.*

– Move electrical wiring clear.
– Remove bolt -2-.

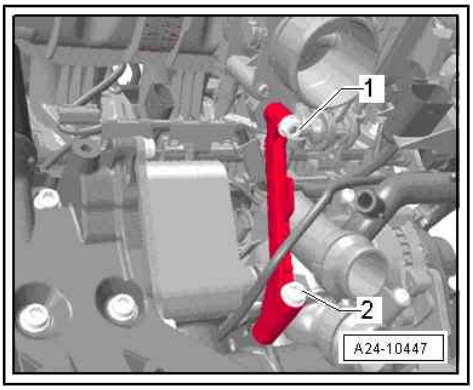

– Remove bolts -arrows- and nuts -2, 3-.

– Detach intake manifold and unplug electrical connector -1- from intake manifold flap potentiometer - G336- .

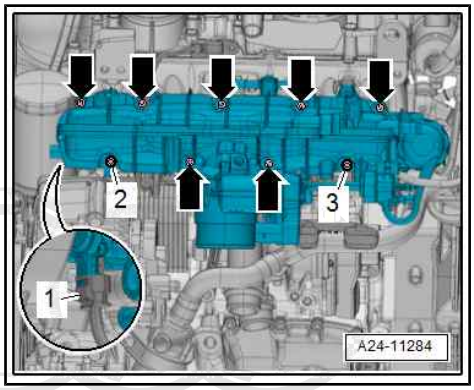

Note

- *The injectors can remain in the fuel rail. Unplug electrical connector from corresponding injector.*
- *Block off intake ports with clean cloths.*

– Disconnect intake manifold from fuel rail ⇒ Servicing 4-cylinder engine, 1.8 ltr., 2.0 ltr. 4-valve TFSI; Rep. gr. 24 ; Injectors; Removing and installing fuel rail .

Installing

– Fit intake manifold onto studs (left and right) on cylinder head.

– Tighten intake manifold bolts to torque, working from inside to outside.

– The remaining installation steps are carried out in the reverse sequence.

– Install oil filter: A4 ⇒ Maintenance ; Booklet 812 , A5 Coupé ⇒ Maintenance ; Booklet 811 , A5 Cabriolet ⇒ Maintenance ; Booklet 818 .

– Electrical wiring and routing ⇒ Current flow diagrams, Electrical fault finding and Fitting locations.

– After installing intake manifold, perform “Adaption” using ⇒ Vehicle diagnostic tester, Guided Functions.

Tightening torques

- ⇒ Servicing 4-cylinder engine, 1.8 ltr., 2.0 ltr. 4-valve TFSI; Rep. gr. 24 ; Intake manifold; Exploded view - intake manifold
- ⇒ Servicing 4-cylinder engine, 1.8 ltr., 2.0 ltr. 4-valve TFSI; Rep. gr. 24 ; Injectors; Exploded view - fuel rail with injectors

4.2.2 Removing and installing intake manifold (top section) - vehicles with Flex Fuel engine

Special tools and workshop equipment required

- Hose clip pliers - VAS 6362-

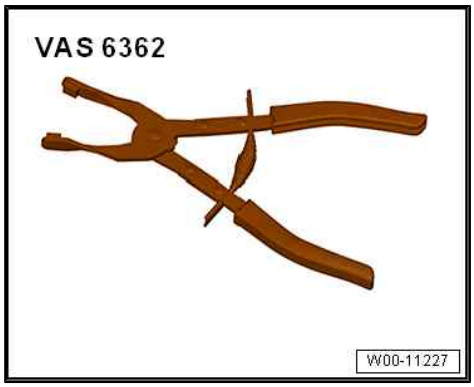

Protected by copyright. Copying for private or commercial purposes, in part or in whole, is not permitted unless authorised by AUDI AG. AUDI AG does not guarantee or accept any liability with respect to the correctness of information in this document. Copyright by AUDI AG.

♦ Assembly tool - T10118-

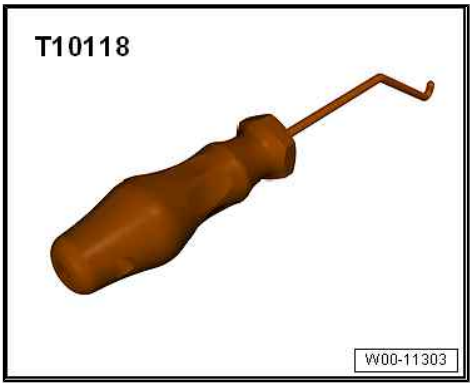

♦ Socket - T10347-

Removing

– Remove engine cover panel ⇒ Servicing 4-cylinder engine, 1.8 ltr., 2.0 ltr. 4-valve TFSI; Rep. gr. 10 ; Engine cover panel; Removing and installing engine cover panel .

– Remove oil filter: A4 ⇒ Maintenance ; Booklet 812 , A5 Coupé ⇒ Maintenance ; Booklet 811 , A5 Cabriolet ⇒ Maintenance ; Booklet 818 .

– Unplug electrical connectors:

1 - For intake air temperature sender - G42-

3 - For activated charcoal filter solenoid valve 1 - N80-

6 - For throttle valve module - J338-

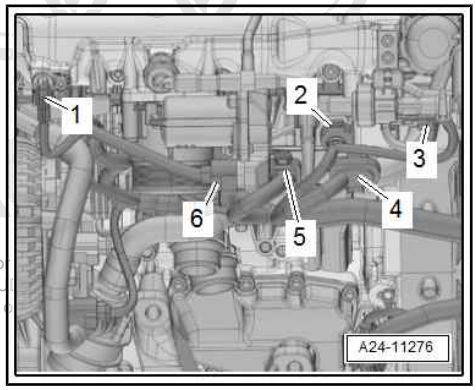

Protected by copyright. Copying fo
permitted unless authorised by AU
with respect to the correctness

– Unscrew bolts -1 and 2- and detach bracket for electrical connectors.

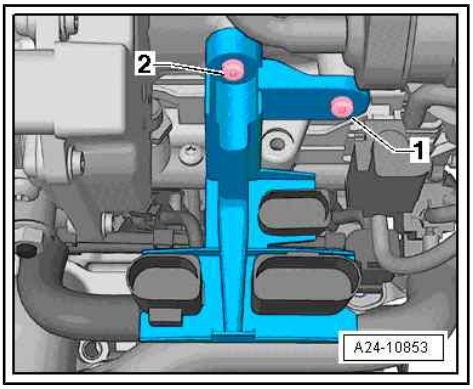

– Disconnect fuel supply hose -1- ⇒ Fuel supply system; Rep. gr. 20 ; Plug-in connectors; Disconnecting plug-in connectors .
– Move fuel hose clear.

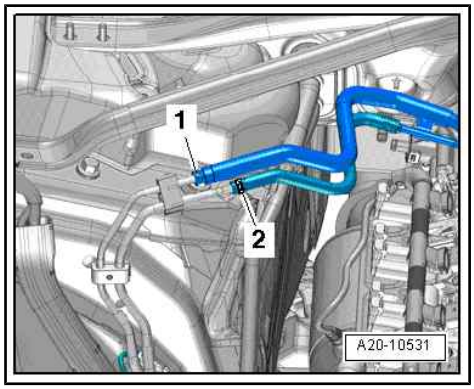

– Release hose clip -5- and detach fuel hose.
– Unplug electrical connector -4- at fuel pressure sender for low pressure - G410- .
– Unplug electrical connector -1- at Hall sender - G40- .
– Move wiring -3- for actuating intake manifold flaps clear.
– Press release tabs and disconnect line -7- coming from activated charcoal filter at intake manifold (top section) and at connection point -2-.
– Unscrew bolt -arrow- and remove retaining clip.
– Detach activated charcoal filter solenoid valve 1 - N80- -item 6- from bracket.
– Guide line coming from activated charcoal filter out underneath fuel lines and put to one side.

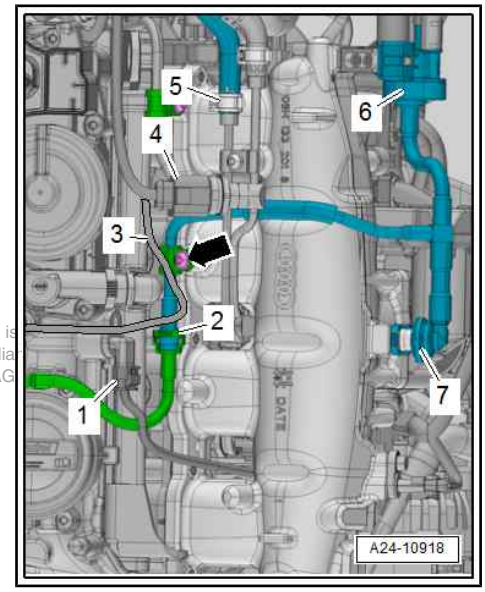

Protected by copyright. Copying for private or commercial purposes, in part or in whole, is not permitted unless authorised by AUDI AG. AUDI AG does not guarantee or accept any liability with respect to the correctness of information in this document. Copyright by AUDI AG.

– Open hose clip -arrow- securing air hose and disconnect hose downwards from throttle valve module - J338- .

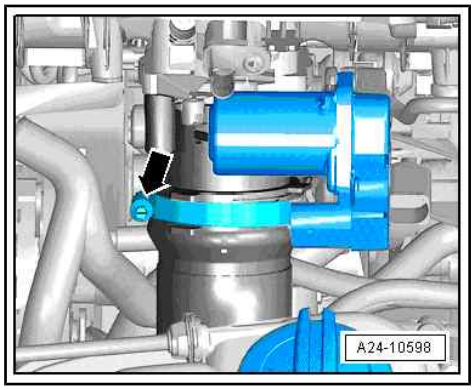

WARNING

The fuel system is pressurised.

Risk of injury as fuel may spray out.

- *Put on safety goggles.*
- *Put on protective gloves.*
- *Release pressure (wrap a clean cloth around connection and open connection carefully).*

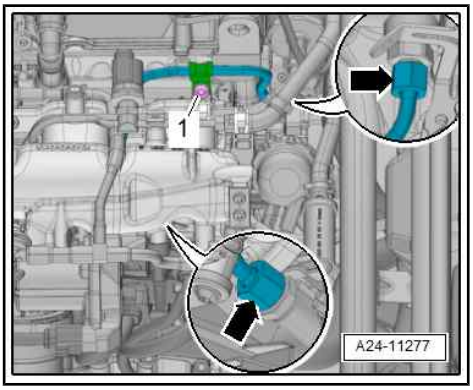

– Remove bolt -1- and union nuts -arrows- and detach high-pressure pipe.

– Remove bolt -2- for support for intake manifold.

– Move electrical wiring harness clear.

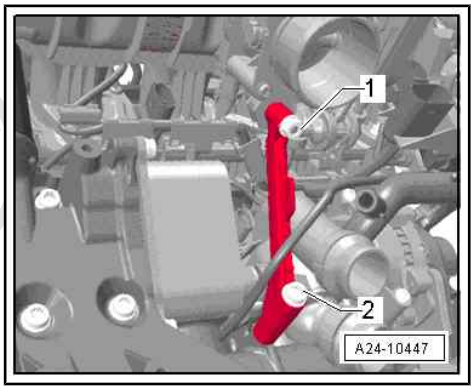

– Remove bolt -2- for coolant pipe (front).

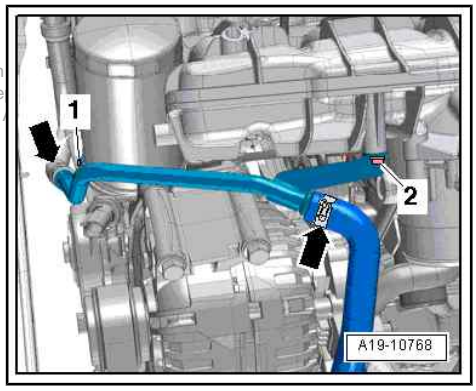

Protected by copyright. Copying for private or commercial purposes, in part or in
permitted unless authorised by AUDI AG. AUDI AG does not guarantee or acce
with respect to the correctness of information in this document. Copyright by

– Remove bolts -arrows- and nuts -2, 3-.

– Detach intake manifold (top section) and unplug electrical connector -1- from cold-start valve - N17- .

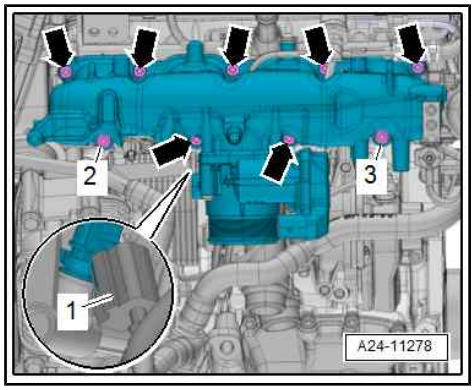

Installing

– Renew connecting pieces for high-pressure fuel line at high-pressure fuel pump and at fuel rail.

– Fit intake manifold onto studs (left and right) on cylinder head.

– Tighten union nuts on high-pressure fuel line hand-tight.

– Install oil filter: A4 ⇒ Maintenance ; Booklet 812 , A5 Coupé ⇒ Maintenance ; Booklet 811 , A5 Cabriolet ⇒ Maintenance ; Booklet 818 .

– Tighten intake manifold bolts to torque, working from inside to outside.

– Secure high-pressure fuel line (specified torque).

– The remaining installation steps are carried out in the reverse sequence.

– Install engine cover panel ⇒ Servicing 4-cylinder engine, 1.8 ltr., 2.0 ltr. 4-valve TFSI; Rep. gr. 10 ; Engine cover panel; Removing and installing engine cover panel .

– After installing intake manifold (top section), perform “Adaption” using ⇒ Vehicle diagnostic tester, Guided Functions.

Tightening torques

- ⇒ “3.1 Exploded view - coolant pipes”, page 72
- ⇒ Servicing 4-cylinder engine, 1.8 ltr., 2.0 ltr. 4-valve TFSI; Rep. gr. 24 ; Intake manifold; Exploded view - intake manifold
- ⇒ Servicing 4-cylinder engine, 1.8 ltr., 2.0 ltr. 4-valve TFSI; Rep. gr. 24 ; Injectors; Exploded view - fuel rail with injectors

4.2.3 Removing and installing intake manifold (bottom section) - vehicles with Flex Fuel engine

Removing

– Remove intake manifold (top section) ⇒ page 114 .

– Remove ignition coils with output stages for cylinders 2 and 3 ⇒ Servicing 4-cylinder engine, 1.8 ltr., 2.0 ltr. 4-valve TFSI; Rep. gr. 28 ; Ignition system; Removing and installing ignition coils with output stages .

– Remove bolts -arrows-.

– Detach oil separator and move to one side; to do so, press release tabs on crankcase breather pipe -1-.

– Cover open valve gear with a clean cloth.

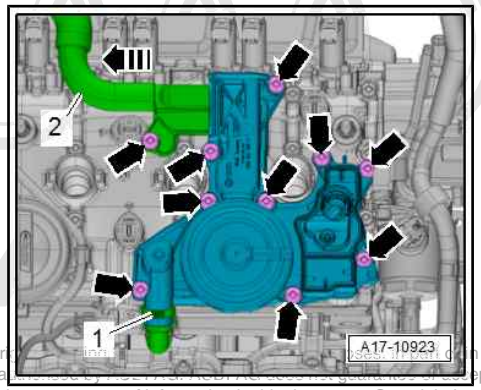

Protected by copyright. Copying for private or commercial purposes, in part or in whole, is not permitted unless authorised by AUDI AG. AUDI AG does not guarantee or accept any liability with respect to the correctness of information in this document. Copyright by AUDI AG.

– Detach vacuum hose -3- and move clear.

– Move electrical wiring harness -5- clear and unplug electrical connector -4-.

– Unscrew connection -6-.

– Detach intake manifold (bottom section) -2- and unplug electrical connector -1- from intake manifold flap potentiometer - G336- .

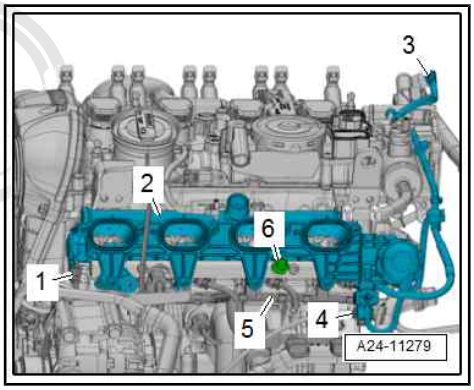

Installing

– Installation is carried out in reverse sequence.

Note

Protected by copyright. Copying for private or commercial purposes, in part or in whole, is not permitted unless authorised by AUDI AG. AUDI AG does not guarantee or accept any liability with respect to the correctness of information in this document. Copyright by AUDI AG.

- *Renew seals and gaskets.*
- *Renew both connecting pieces for fuel supply line.*

– Install intake manifold (top section) ⇒ page 114 .

– Install oil separator ⇒ Servicing 4-cylinder engine, 1.8 ltr., 2.0 ltr. 4-valve TFSI; Rep. gr. 17 ; Crankcase breather; Removing and installing oil separator .

Tightening torques

- ⇒ Servicing 4-cylinder engine, 1.8 ltr., 2.0 ltr. 4-valve TFSI; Rep. gr. 24 ; Intake manifold; Exploded view - intake manifold
- ⇒ Servicing 4-cylinder engine, 1.8 ltr., 2.0 ltr. 4-valve TFSI; Rep. gr. 24 ; Injectors; Exploded view - fuel rail with injectors

4.3 Removing and installing throttle valve module - J338-

Removing

– Remove engine cover panel ⇒ Servicing 4-cylinder engine, 1.8 ltr., 2.0 ltr. 4-valve TFSI; Rep. gr. 10 ; Engine cover panel; Removing and installing engine cover panel .

– Open hose clip -arrow- securing air hose and disconnect hose downwards from throttle valve module - J338- .

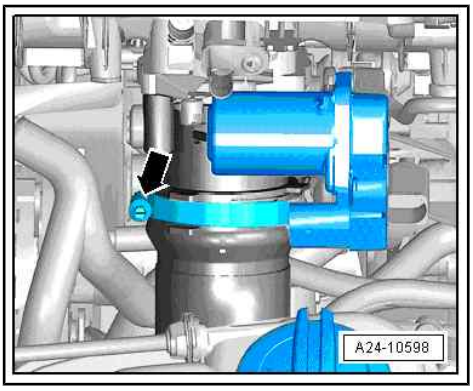

All further procedures are described in ⇒ Servicing 4-cylinder engine, 1.8 ltr., 2.0 ltr. 4-valve TFSI; Rep. gr. 24 ; Intake manifold; Removing and installing throttle valve module - J338- .

4.4 Cleaning throttle valve module

All procedures are described in ⇒ Servicing 4-cylinder engine, 1.8 ltr., 2.0 ltr. 4-valve TFSI; Rep. gr. 24 ; Intake manifold; Cleaning throttle valve module .

4.5 Checking intake manifold change-over function

All procedures are described in ⇒ Servicing 4-cylinder engine, 1.8 ltr., 2.0 ltr. 4-valve TFSI; Rep. gr. 24 ; Intake manifold; Checking intake manifold change-over function .

Protected by copyright. Copying for private or commercial purposes, in part or in whole, is not permitted unless authorised by AUDI AG. AUDI AG does not guarantee or accept any liability with respect to the correctness of information in this document. Copyright by AUDI AG.

5 Injectors

All procedures and components are described in ⇒ Servicing 4-cylinder engine, 1.8 ltr., 2.0 ltr. 4-valve TFSI; Rep. gr. 24 ; Injectors .

Protected by copyright. Copying for private or commercial purposes, in part or in whole, is not permitted unless authorised by AUDI AG. AUDI AG does not guarantee or accept any liability with respect to the correctness of information in this document. Copyright by AUDI AG.

6 Senders and sensors

⇒ "6.1 Removing and installing intake air temperature sender G42 ", page 122

⇒ "6.2 Removing and installing air mass meter G70 ", page 122

⇒ "6.3 Removing and installing fuel pressure sender G247 ", page 122

⇒ "6.4 Checking fuel pressure sender G247 ", page 122

6.1 Removing and installing intake air temperature sender - G42-

All procedures are described in ⇒ Servicing 4-cylinder engine, 1.8 ltr., 2.0 ltr. 4-valve TFSI; Rep. gr. 24 ; Senders and sensors ; Removing and installing intake air temperature sender - G42- .

6.2 Removing and installing air mass meter - G70-

Removing

– Unplug electrical connector -1-.

– Release hose clip -2- and detach air hose.

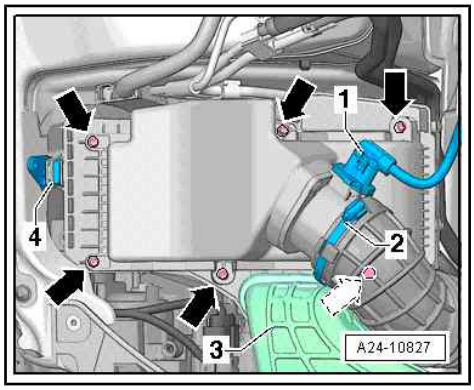

All further procedures are described in ⇒ Servicing 4-cylinder engine, 1.8 ltr., 2.0 ltr. 4-valve TFSI; Rep. gr. 24 ; Senders and sensors; Removing and installing air mass meter - G70- .

Tightening torques

◆ ⇒ Servicing 4-cylinder engine, 1.8 ltr., 2.0 ltr. 4-valve TFSI; Rep. gr. 21 ; Charge air system; Exploded view - hose connections for charge air system

Protected by copyright. Copying for private or commercial purposes, in part or in whole, is not permitted unless authorised by AUDI AG. AUDI AG does not guarantee or accept any liability with respect to the correctness of information in this document. Copyright by AUDI AG.

6.3 Removing and installing fuel pressure sender - G247-

All procedures are described in ⇒ Servicing 4-cylinder engine, 1.8 ltr., 2.0 ltr. 4-valve TFSI; Rep. gr. 24 ; Senders and sensors; Removing and installing fuel pressure sender - G247- .

6.4 Checking fuel pressure sender - G247-

All procedures are described in ⇒ Servicing 4-cylinder engine, 1.8 ltr., 2.0 ltr. 4-valve TFSI; Rep. gr. 24 ; Senders and sensors; Checking fuel pressure sender - G247- .

7 High-pressure pump

All procedures and components are described in ⇒ Servicing 4-cylinder engine, 1.8 ltr., 2.0 ltr. 4-valve TFSI; Rep. gr. 24 ; High-pressure pump .

Protected by copyright. Copying for private or commercial purposes, in part or in whole, is not permitted unless authorised by AUDI AG. AUDI AG does not guarantee or accept any liability with respect to the correctness of information in this document. Copyright by AUDI AG.

8 Lambda probe

⇒ “8.1 Exploded view - Lambda probe”, page 124

⇒ “8.2 Removing and installing Lambda probe”, page 124

8.1 Exploded view - Lambda probe

All components are described in ⇒ Servicing 4-cylinder engine, 1.8 ltr., 2.0 ltr. 4-valve TFSI; Rep. gr. 24 ; Lambda probe; Exploded view - Lambda probe .

8.2 Removing and installing Lambda probe

⇒ “8.2.1 Removing and installing Lambda probe G39 ”, page 124

⇒ “8.2.2 Removing and installing Lambda probe after catalytic converter G130 ”, page 125

8.2.1 Removing and installing Lambda probe - G39-

Special tools and workshop equipment required

- Lambda probe open ring spanner set - 3337-

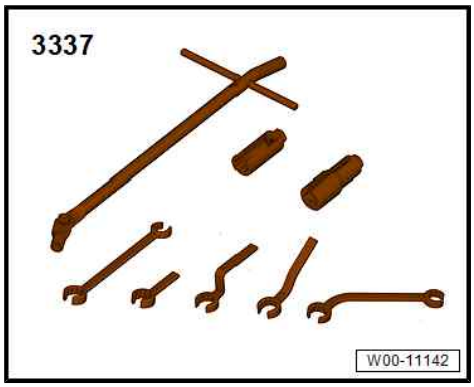

Removing

Bracket for electrical connectors, version 1:

– Unplug electrical connector -3- for Lambda probe - G39- and Lambda probe heater - Z19- .

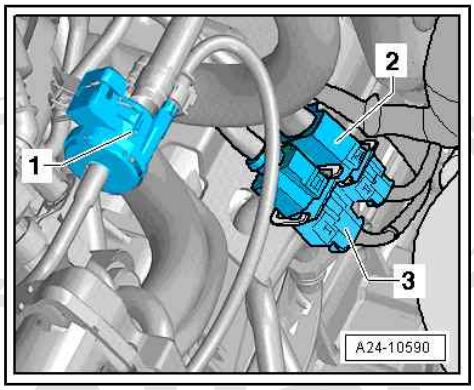

Protected by copyright. Copying for private or commercial purposes, in part or in whole, is not permitted unless authorised by AUDI AG. AUDI AG does not guarantee or accept any liability with respect to the correctness of information in this document. Copyright by AUDI AG.

Bracket for electrical connectors, version 2:

– Unplug electrical connector -arrow- for Lambda probe - G39- and Lambda probe heater - Z19- .

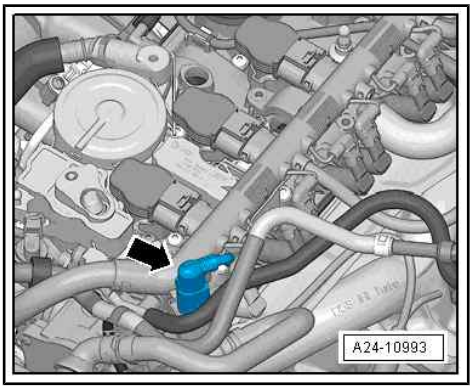

Continued for all vehicles:

– Unscrew Lambda probe - G39- -2- using tool from Lambda probe open ring spanner set - 3337- .

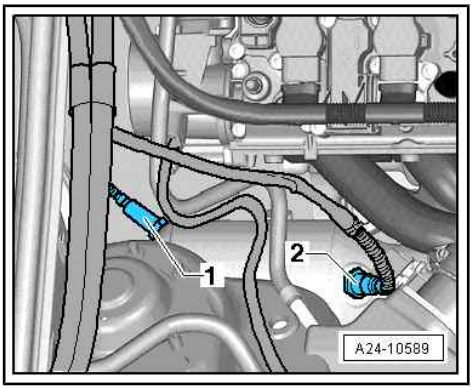

Installing

When installing, note the following:

Note

- *Threads of new Lambda probes are already coated with assembly paste; the paste must not get into the slots on the probe body.*
- *In the case of a used Lambda probe grease only the thread with high-temperature paste. The paste must not get into the slots on the Lambda probe body. For high-temperature paste refer to ⇒ Parts catalogue .*
- *When installing, the Lambda probe wire must always be reattached at the same locations to prevent it from coming into contact with the exhaust pipe.*

Tightening torques

- ⇒ Servicing 4-cylinder engine, 1.8 ltr., 2.0 ltr. 4-valve TFSI; Rep. gr. 24 ; Lambda probe; Exploded view - Lambda probe

Protected by copyright. Copying for private or commercial purposes, in part or in whole, is not permitted unless authorized by AUDI AG. AUDI AG does not guarantee or accept any liability with respect to the correctness of information in this document. Copyright by AUDI AG.

8.2.2 Removing and installing Lambda probe after catalytic converter - G130-

Special tools and workshop equipment required

- Lambda probe open ring spanner set - 3337-

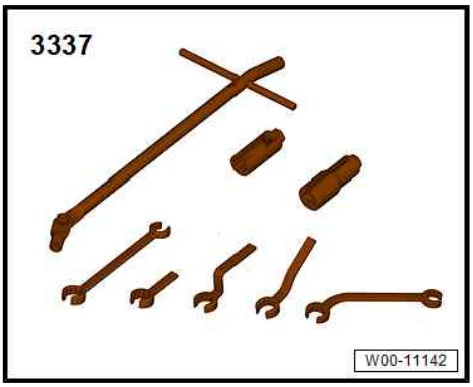

Removing

Bracket for electrical connectors, version 1:

– Unplug electrical connector -2- for Lambda probe after catalytic converter - G130- and Lambda probe 1 heater after catalytic converter - Z29- .

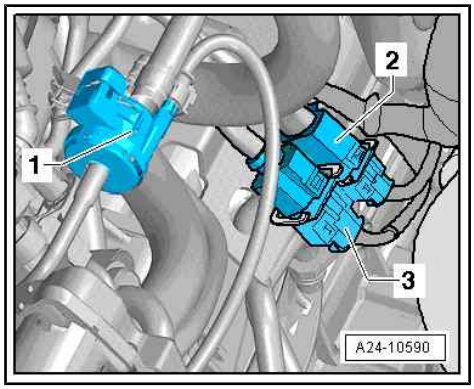

Bracket for electrical connectors, version 2:

– Unplug electrical connector -arrow- for Lambda probe after catalytic converter - G130- and Lambda probe 1 heater after catalytic converter - Z29- .

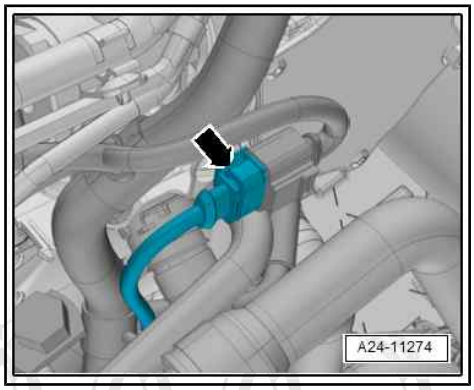

Continued for all vehicles:

– Unscrew Lambda probe after catalytic converter - G130- -1- using tool from Lambda probe open ring spanner set - 3337- .

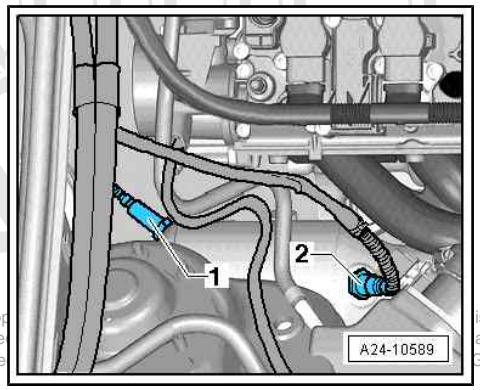

Installing

When installing, note the following:

Note

- *Threads of new Lambda probes are already coated with assembly paste; the paste must not get into the slots on the probe body.*
- *In the case of a used Lambda probe grease only the thread with high-temperature paste. The paste must not get into the slots on the Lambda probe body. For high-temperature paste refer to ⇒ Parts catalogue .*
- *When installing, the Lambda probe wire must always be reattached at the same locations to prevent it from coming into contact with the exhaust pipe.*

Protected by copyright. Cop is not
Permitted unless authorise ability
Audi AG does not guarantee the corre G.

Tightening torques

- ⇒ Servicing 4-cylinder engine, 1.8 ltr., 2.0 ltr. 4-valve TFSI; Rep. gr. 24 ; Lambda probe; Exploded view - Lambda probe

9 Engine control unit

⇒ "9.1 Removing and installing engine control unit J623 ", page 127

⇒ "9.2 Wiring and component check", page 130

9.1 Removing and installing engine control unit - J623-

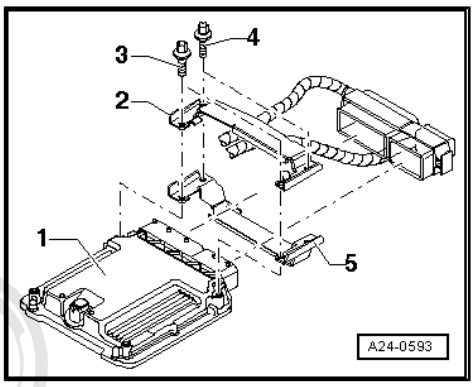

Note

- *Not every engine control unit is bolted to a protective housing. Whether a protective housing is fitted depends on the engine/ gearbox combination.*
- *The engine control unit -1- is bolted to a protective casing -2 and 5-. To make it more difficult to unscrew the shear bolts -4- for locking plate -2-, their threads have been coated with locking fluid.*
- *The protective housing has to be removed before the connectors can be unplugged from the engine control unit (e.g. to connect the test box or renew the engine control unit).*

The following special tools are required if a protective housing is fitted:

Special tools and workshop equipment required

- Hot air blower - VAS 1978/14A- -item 1- with nozzle attachment -2- from wiring harness repair set - VAS 1978 B-
- Small, commercially available mole grips -3-

Protected by copyright. Copying for private or commercial purposes, in part or in whole, is not permitted unless authorised by AUDI AG. AUDI AG does not guarantee or accept any liability with respect to the correctness of information in this document. Copyright by AUDI AG.

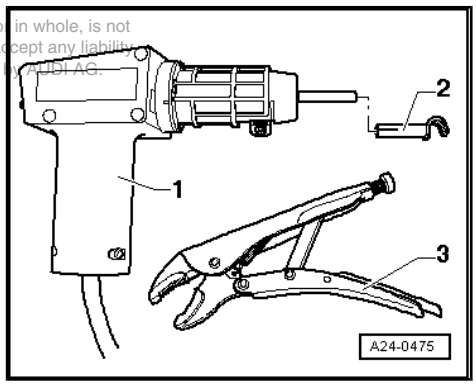

Removing

– When renewing engine control unit, select diagnosis object "Replace engine control unit" in "Guided Functions" mode of ⇒ Vehicle diagnostic tester.

– Switch off ignition and remove ignition key.

– Slightly pull off rubber seal in front of nut -1- on plenum chamber cover.
– Unhook wiring harness -2- from retainers -A-.
– Unscrew nut -1-.
– Pull filler neck -3- with filler pipe out of washer fluid reservoir and through opening in body.

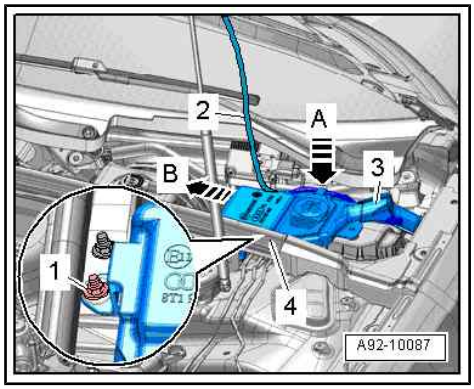

– Unscrew bolts -arrows- and take off lid for electronics box.

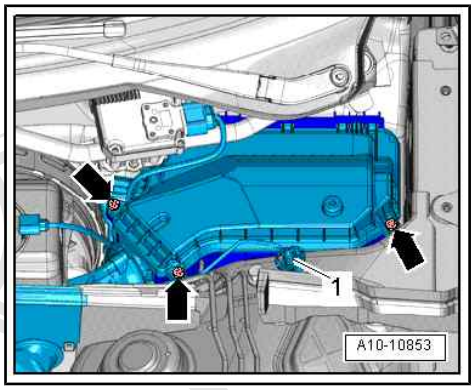

– Release retainers -arrows A- and pull out engine control unit - J623- -arrow B-.

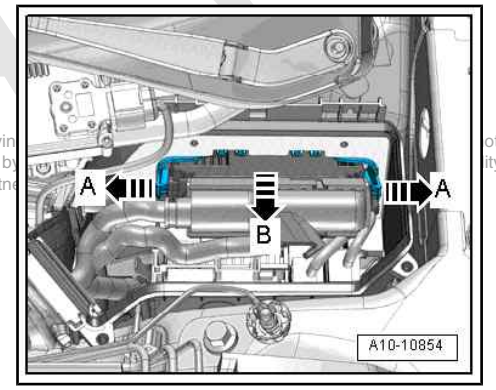

Protected by copyright. Copyin ot
permitted unless authorised by ity
with respect to the correctne

Perform the following work steps if a protective housing is fitted:

To help prevent unauthorised access to the connectors on the engine control unit, the engine control unit -1- is bolted to a protective housing -5- by means of shear bolts -3 and 4- and a locking plate -2-.

The threads of the two shear bolts -4- which are not screwed into the engine control unit are secured with locking fluid. To unscrew these two bolts, the threads must therefore be heated with the hot air blower.

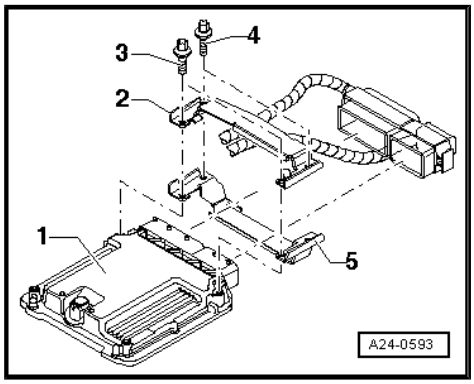

The threads of the two shear bolts -3- which are screwed into the engine control unit are not secured with locking fluid. Do not apply heat to the threads in the control unit housing; this is not necessary and would cause overheating of the control unit.

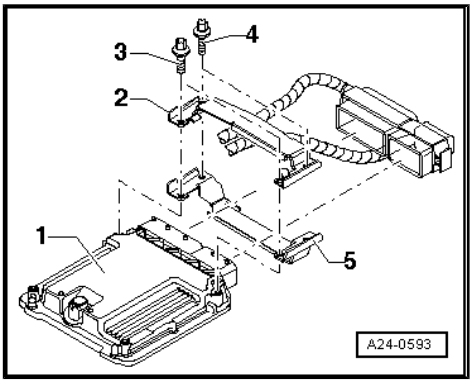

– Select settings on hot air blower as shown in illustration, i.e. set temperature potentiometer -2- to maximum heat output and two-stage air flow switch -3- to position 3.

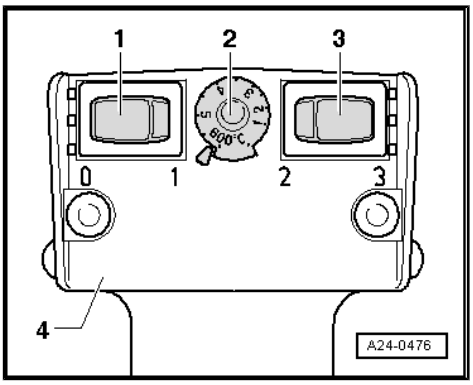

WARNING

The shear bolts and protective housing also become very hot when heating the threads of the locking mechanism. Take care to avoid burns. It is also important to ensure that only the thread is heated and none of the surrounding components if at all possible. These should be covered if necessary.

Apply heat to the threads of the shear bolts on the connector side as shown in the illustration.

Switch on the hot air blower and heat the bolt for approximately 20 ... 30 seconds.

– Unscrew shear bolts using mole grips (see arrow in illustration).

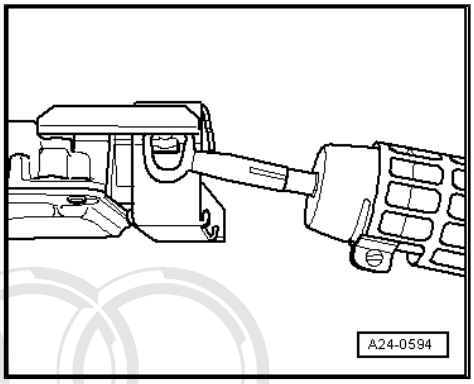

Protected by copyright. Copying for private or commercial purposes, in part or in whole, is not permitted unless authorised by AUDI AG. AUDI AG does not guarantee or accept any liability with respect to the correctness of information in this document. Copyright by AUDI AG.

– The two shear bolts screwed into the engine control unit do not need to be heated. They should be removed without being heated.
– Detach protective housing from control unit connectors.
– Release connectors on engine control unit and unplug connectors.
– Detach engine control unit - J623- .

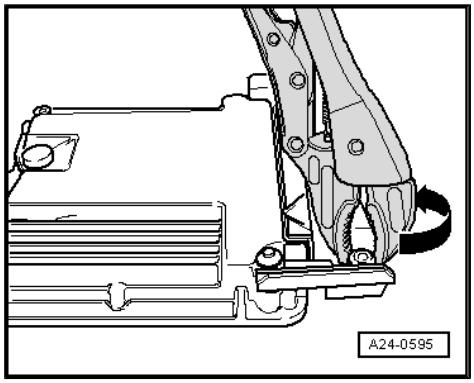

Installing

Installation is performed in the reverse sequence.

– It is important that the protective housing is re-fitted on the engine control unit - J623- (if fitted previously).
– Clean threaded holes for shear bolts to remove any residue from locking fluid. This can be done using a thread tap.
– Always use new shear bolts.

After installing a new engine control unit, the following operation must be performed:

– Activate engine control unit using ⇒ Vehicle diagnostic tester in “Guided Functions” mode, “Replace engine control unit”.

Tightening torques

♦ ⇒ Electrical system; Rep. gr. 97 ; Relay carriers, fuse carriers, electronics boxes; Overview of fitting locations - relay carriers, fuse carriers, electronics boxes

9.2 Wiring and component check

All procedures can be found in ⇒ Servicing 4-cylinder engine, 1.8 ltr., 2.0 ltr. 4-valve TFSI; Rep. gr. 24 ; Engine control unit ; Wiring and component check.

Protected by copyright. Copying for private or commercial purposes, in part or in whole, is not permitted unless authorised by AUDI AG. AUDI AG does not guarantee or accept any liability with respect to the correctness of information in this document. Copyright by AUDI AG.

26 – Exhaust system

1 Exhaust pipes/silencers

⇒ “1.1 Exploded view - silencers”, page 131

⇒ “1.2 Removing and installing front exhaust pipe”, page 137

⇒ “1.3 Separating exhaust pipes/silencers”, page 138

⇒ “1.4 Stress-free alignment of exhaust system”, page 141

⇒ “1.5 Renewing tailpipes”, page 144

⇒ “1.6 Checking exhaust system for leaks”, page 145

Protected by copyright. Copying for private or commercial purposes, in part or in whole, is not permitted unless authorised by AUDI AG. AUDI AG does not guarantee or accept any liability with respect to the correctness of information in this document. Copyright by AUDI AG.

1.1 Exploded view - silencers

⇒ “1.1.1 Exploded view - silencers, vehicles with one rear silencer”, page 131

⇒ “1.1.2 Exploded view - silencers, vehicles with two rear silencers”, page 134

1.1.1 Exploded view - silencers, vehicles with one rear silencer

Note

The exhaust manifold and the turbocharger are combined as one unit; removing and installing ⇒ page 86 .

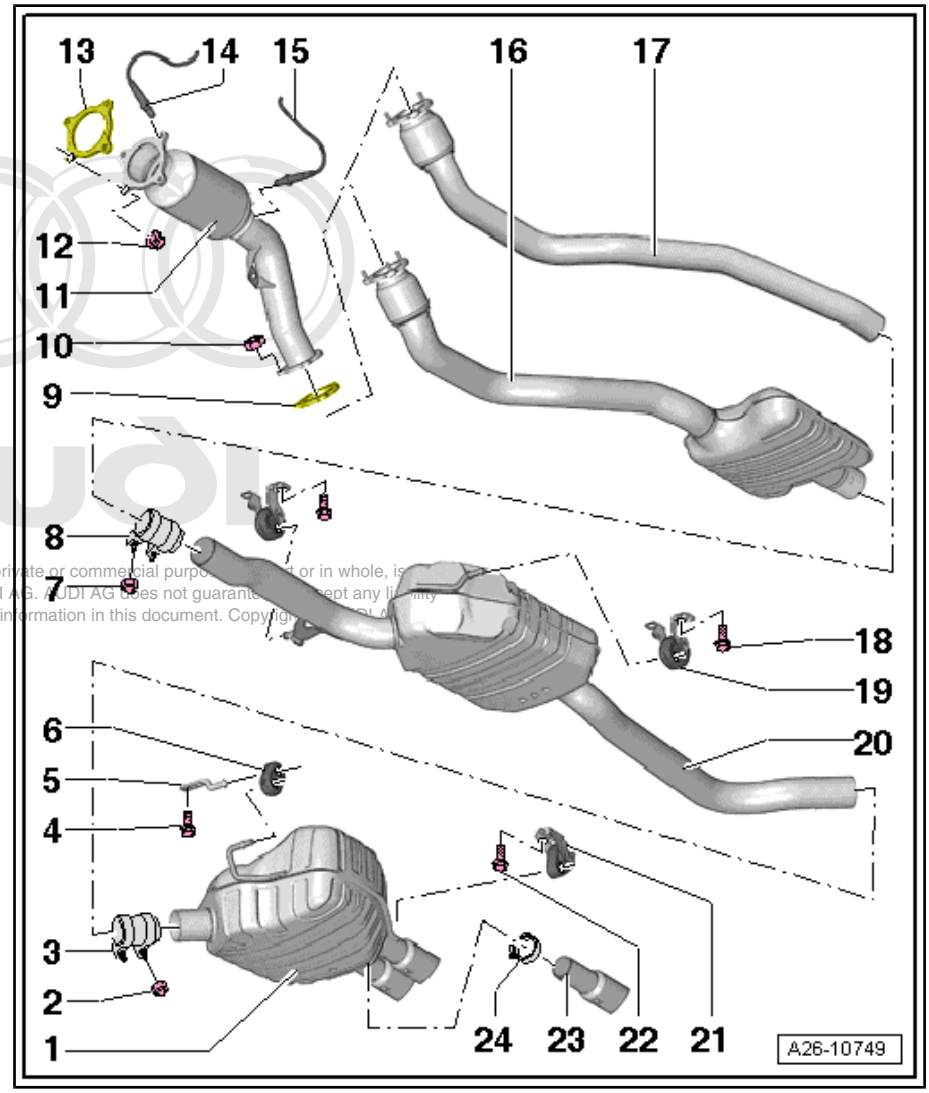

1 - Rear silencer

- ❑ Combined in one unit with centre silencer as original equipment. Can be renewed individually for repair purposes
- ❑ Cutting point ⇒ page 138
- ❑ Align exhaust system so it is free of stress ⇒ page 141

2 - Nut

- ❑ 25 Nm

3 - Clamp (rear)

- ❑ Before tightening, align exhaust system so it is free of stress ⇒ page 141
- ❑ Installation position ⇒ page 134
- ❑ Tighten bolt connections evenly.

4 - Bolt

- ❑ 23 Nm

5 - Bracket

6 - Rubber mounting

- ❑ Renew if damaged

7 - Nut

- ❑ 25 Nm

8 - Clamp (front)

- ❑ Before tightening, align exhaust system so it is free of stress ⇒ page 141
- ❑ Installation position ⇒ page 134
- ❑ Tighten bolt connections evenly.

9 - Gasket

- ❑ Renew

10 - Nut

- ❑ 25 Nm

11 - Catalytic converter

- ❑ Protect catalytic converter from damage by knocks and impact
- ❑ Removing and installing ⇒ page 146
- ❑ Align exhaust system so it is free of stress ⇒ page 141

12 - Nut

- ❑ 40 Nm
- ❑ Renew
- ❑ Coat studs of turbocharger with high-temperature paste
- ❑ High-temperature paste ⇒ Electronic parts catalogue

13 - Gasket

- ❑ Renew

Protected by copyright. Copying for private or commercial purposes, in part or in whole, is not permitted unless authorised by AUDI AG. AUDI AG does not guarantee or accept any liability with respect to the correctness of information in this document. Copyright by AUDI AG.

14 - Lambda probe - G39- and Lambda probe heater - Z19-

- ❑ Removing and installing ⇒ page 124

15 - Lambda probe after catalytic converter - G130- and Lambda probe heater 1 after catalytic converter - Z29-

- ❑ Removing and installing ⇒ page 125

16 - Front silencer

- ❑ With flexible joint
- ❑ Do not bend flexible joint more than 10° - otherwise it can be damaged
- ❑ Install flexible joint so that it is not under tension.
- ❑ Take care not to damage wire mesh on flexible joint
- ❑ Depending on version, front exhaust pipe ⇒ Item 17 (page 133) might be installed instead of front silencer
- ❑ Removing and installing ⇒ page 137
- ❑ Align exhaust system so it is free of stress ⇒ page 141

17 - Front exhaust pipe

- ❑ With flexible joint
- ❑ Do not bend flexible joint more than 10° - otherwise it can be damaged
- ❑ Install flexible joint so that it is not under tension.
- ❑ Take care not to damage wire mesh on flexible joint
- ❑ Depending on version, front silencer ⇒ Item 16 (page 133) might be installed instead of front exhaust pipe
- ❑ Removing and installing ⇒ page 137
- ❑ Align exhaust system so it is free of stress ⇒ page 141

18 - Bolt

- ❑ 23 Nm

19 - Mounting

- ❑ Renew if damaged
- ❑ Check preload ⇒ page 141

20 - Centre silencer

- ❑ Combined in one unit with rear silencer as original equipment. Can be renewed individually for repair purposes
- ❑ Cutting point ⇒ page 138
- ❑ Align exhaust system so it is free of stress ⇒ page 141

21 - Mounting

- ❑ Renew if damaged
- ❑ Check preload ⇒ page 141

22 - Bolt

- ❑ 23 Nm

Protected by copyright. Copying for private or commercial purposes, in part or in whole, is not permitted unless authorised by AUDI AG. AUDI AG does not guarantee or accept any liability with respect to the correctness of information in this document. Copyright by AUDI AG.

23 - Tailpipe

- ❑ Can be renewed separately for repair purposes ⇒ page 144
- ❑ Cutting point between rear silencer and tailpipe ⇒ page 144

24 - Clamp

- ❑ 60 Nm

Installation position of front clamp

– Fit the clamp at the angle shown.

- Bolted connections face to right.
- Nuts face upwards.
- α = approx. 20°

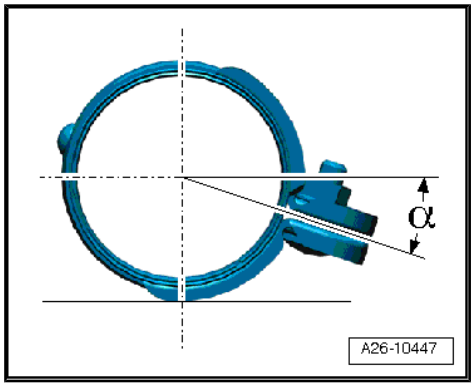

Installation position of rear clamp

– Install clamp so that ends of bolts do not protrude beyond bottom of clamp.

- Bolted connections face downwards.

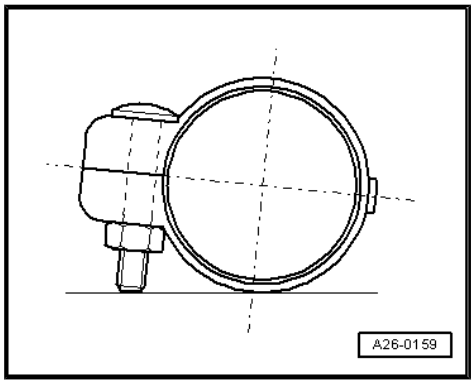

1.1.2 Exploded view - silencers, vehicles with two rear silencers

Note

The exhaust manifold and the turbocharger are combined as one unit; removing and installing ⇒ page 86 .

Protected by copyright. Copying for private or commercial purposes, in part or in whole, is not permitted unless authorised by AUDI AG. AUDI AG does not guarantee or accept any liability with respect to the correctness of information in this document. Copyright by AUDI AG.

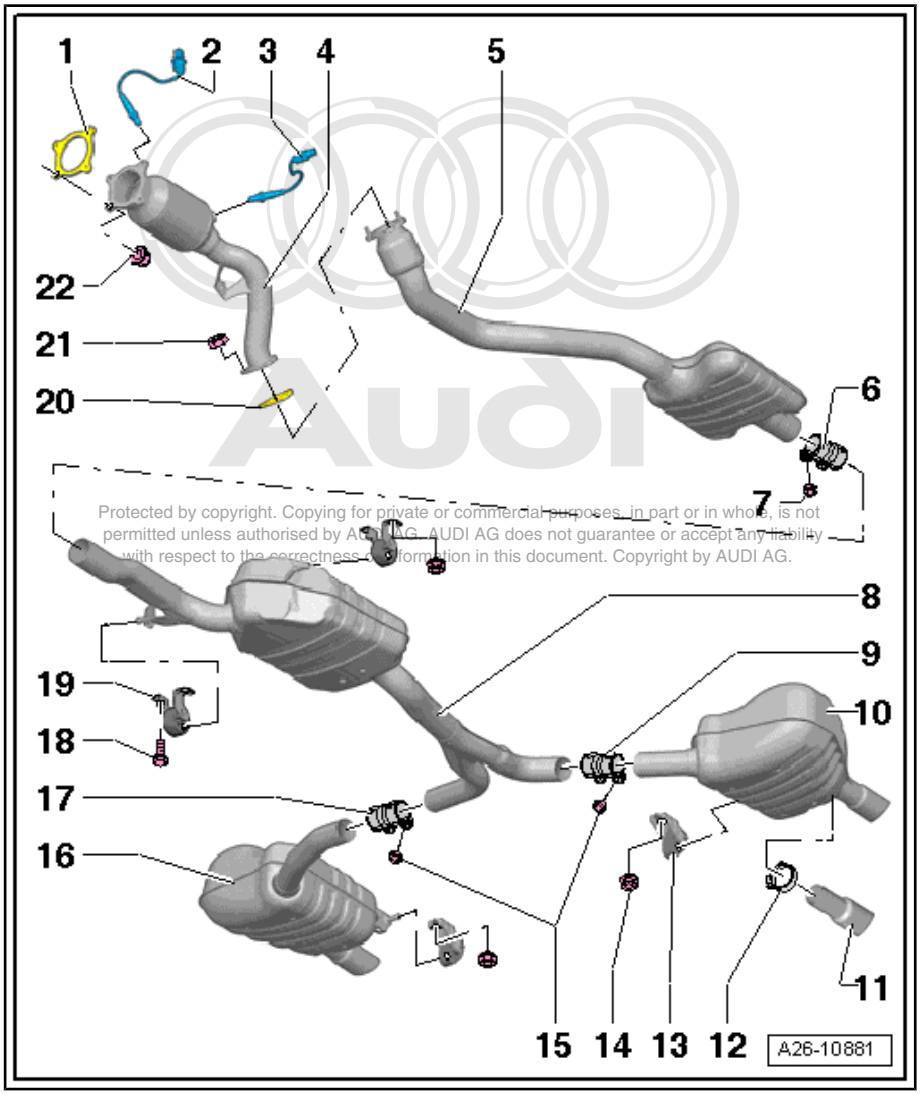

Protected by copyright. Copying for private or commercial purposes, in part or in whole, is not permitted unless authorised by AUDI AG. AUDI AG does not guarantee or accept any liability with respect to the correctness of information in this document. Copyright by AUDI AG.

1 - Gasket

- ❑ Renew

2 - Lambda probe - G39- and Lambda probe heater - Z19-

- ❑ Removing and installing ⇒ page 124

3 - Lambda probe after catalytic converter - G130- and Lambda probe heater 1 after catalytic converter - Z29-

- ❑ Removing and installing ⇒ page 125

4 - Catalytic converter

- ❑ Protect catalytic converter from damage by knocks and impact
- ❑ Removing and installing ⇒ page 146
- ❑ Align exhaust system so it is free of stress ⇒ page 142

5 - Front silencer

- ❑ With flexible joint
- ❑ Do not bend flexible joint more than 10° - otherwise it can be damaged
- ❑ Install flexible joint so that it is not under tension.
- ❑ Take care not to damage wire mesh on flexible joint
- ❑ Removing and installing ⇒ page 137
- ❑ Align exhaust system so it is free of stress ⇒ page 142

6 - Clamp (front)

- ❑ Before tightening, align exhaust system so it is free of stress ⇒ page 142
- ❑ Installation position ⇒ page 137
- ❑ Tighten bolt connections evenly.

7 - Nut

- ❑ 23 Nm

8 - Centre silencer

- ❑ Combined in one unit with rear silencers as original equipment. Can be renewed individually for repair purposes
- ❑ Remove diagonal struts prior to removal ⇒ page 137
- ❑ Cutting point ⇒ page 140
- ❑ Align exhaust system so it is free of stress ⇒ page 142

9 - Clamp (rear left)

- ❑ For separate replacement of centre and rear silencers
- ❑ Installation position ⇒ page 137
- ❑ Before tightening, align exhaust system so it is free of stress ⇒ page 142
- ❑ Tighten bolted connections evenly

10 - Rear silencer (left-side)

- ❑ Combined as one unit with centre silencer and tailpipe as original equipment
- ❑ Remove diagonal struts prior to removal ⇒ page 137
- ❑ Centre silencer, rear silencer and tailpipe can be renewed separately as required
- ❑ Cutting point: centre silencer / rear silencer ⇒ page 140
- ❑ Cutting point between rear silencer and tailpipe ⇒ page 144
- ❑ Align exhaust system so it is free of stress ⇒ page 142

11 - Tailpipe

- ❑ Combined in one unit with rear silencer as original equipment. Can be renewed individually for repair purposes
- ❑ Cutting point ⇒ page 144
- ❑ Aligning ⇒ page 142

12 - Clamp

- ❑ 23 Nm

13 - Mounting

- ❑ Renew if damaged
- ❑ Check preload ⇒ page 142

14 - Nut

- ❑ Renew
- ❑ 20 Nm

15 - Nut

- ❑ 23 Nm

16 - Rear silencer (right-side)

- ❑ Combined as one unit with centre silencer and tailpipe as original equipment
- ❑ Remove diagonal struts prior to removal ⇒ page 137
- ❑ Centre silencer, rear silencer and tailpipe can be renewed separately as required
- ❑ Cutting point: centre silencer / rear silencer ⇒ page 140
- ❑ Cutting point between rear silencer and tailpipe ⇒ page 144
- ❑ Align exhaust system so it is free of stress ⇒ page 142

17 - Clamp (rear right)

- ❑ For separate replacement of centre and rear silencers
- ❑ Installation position ⇒ page 137
- ❑ Before tightening, align exhaust system so it is free of stress ⇒ page 142
- ❑ Tighten bolted connections evenly

18 - Bolt

- ❑ Renew
- ❑ 20 Nm

19 - Mounting

- ❑ Renew if damaged
- ❑ Check preload ⇒ page 142

20 - Gasket

- ❑ Renew

21 - Nut

- ❑ 25 Nm

22 - Nut

- ❑ 40 Nm
- ❑ Renew

Protected by copyright. Copying for private or commercial purposes, in part or in whole, is not permitted unless authorised by AUDI AG. AUDI AG does not guarantee or accept any liability with respect to the correctness of information in this document. Copyright by AUDI AG.

- ❑ Coat studs of turbocharger with high-temperature paste
- ❑ High-temperature paste ⇒ Electronic parts catalogue

Installation position of front clamp

– Fit the clamp at the angle shown.

- Bolted connections face to right.
- Nuts face upwards.
- α = approx. 20°

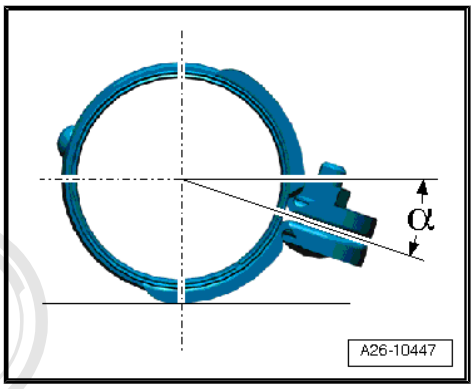

Installation position of rear clamp

– Install clamps so that the bolt ends do not protrude beyond bottom of clamp.

- Installation position: bolted connections face forwards.

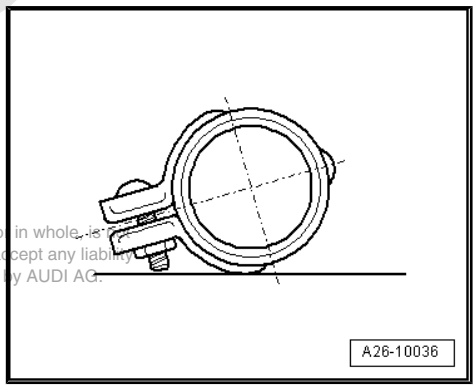

Protected by copyright. Copying for private or commercial purposes, in part or in whole, is not permitted unless authorised by AUDI AG. AUDI AG does not guarantee or accept any liability with respect to the correctness of information in this document. Copyright by AUDI AG.

Diagonal struts

– Remove diagonal struts -1- and -2- when removing centre silencer and rear silencer unit.

– Install diagonal struts ⇒ Running gear, axles, steering; Rep. gr. 42 ; Subframe; Exploded view - subframe .

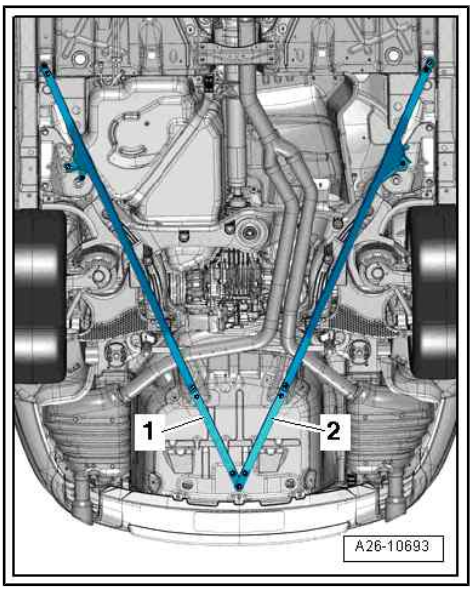

1.2 Removing and installing front exhaust pipe

Note

Depending on version, either front exhaust pipe or front silencer may be fitted.

Removing

– Remove noise insulation ⇒ General body repairs, exterior; Rep. gr. 66 ; Noise insulation; Removing and installing noise insulation .

– Remove nuts -arrows-.

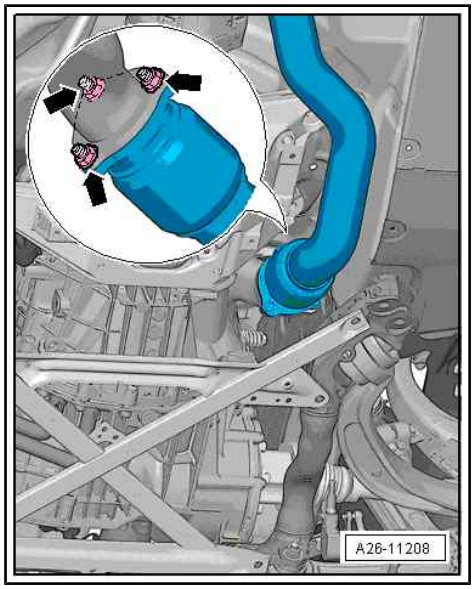

Caution

Risk of damage to flexible joint.

- *Do not bend flexible joint more than 10°.*
- *Install flexible joint so that it is not under tension.*
- *Take care not to damage wire mesh on flexible joint.*

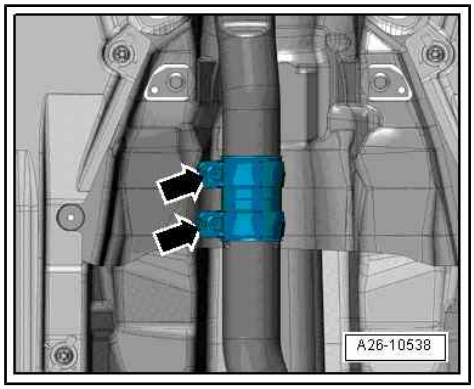

Protected by copyright. Copying for private or commercial purposes, in part or in whole, is not permitted unless authorised by AUDI AG. AUDI AG does not guarantee or accept any liability with respect to the correctness of information in this document. Copyright by AUDI AG.

– Loosen bolts -arrows-, push back clamp and detach front exhaust pipe/front silencer.

Installing

Installation is carried out in the reverse order; note the following:

Note

Renew seals, gaskets and self-locking nuts.

– Align the exhaust system so it is free of stress ⇒ page 141 .

Tightening torques

- ⇒ “1.1 Exploded view - silencers”, page 131
- ⇒ General body repairs, exterior; Rep. gr. 66 ; Noise insulation; Exploded view - noise insulation

1.3 Separating exhaust pipes/silencers

⇒ “1.3.1 Separating exhaust pipes/silencers - vehicles with one rear silencer”, page 138

⇒ “1.3.2 Separating exhaust pipes/silencers - vehicles with two rear silencers”, page 140

1.3.1 Separating exhaust pipes/silencers - vehicles with one rear silencer

- The connecting pipe can be cut through at the cutting location in order to renew the centre and rear silencers separately.

♦ The cutting point is marked by an indentation on the circumference of the exhaust pipe.

Special tools and workshop equipment required

♦ Chain pipe cutter - VAS 6254-

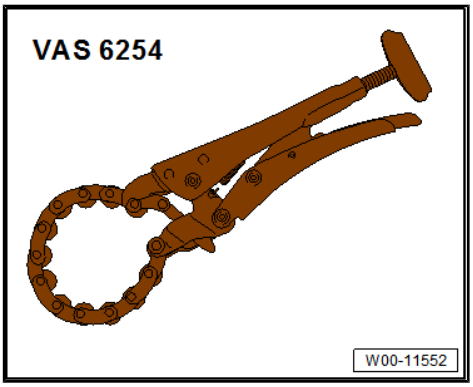

Procedure

– Cut through exhaust pipe at right angles at the position marked -arrow- using chain pipe cutter - VAS 6254-

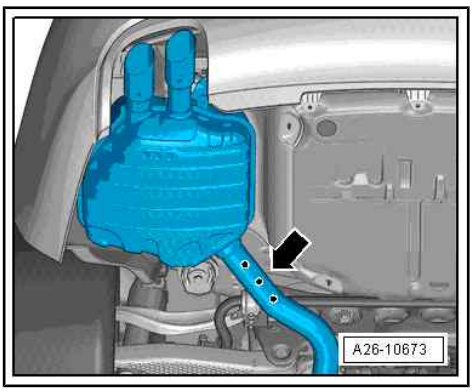

– Position centre of clamp -arrow- over cutting location.

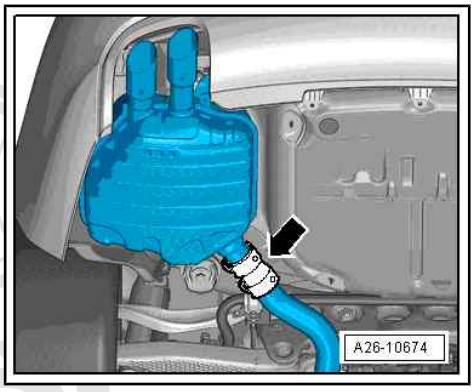

– Install clamp so that ends of bolts do not protrude beyond bottom of clamp.

• Bolted connection faces to left.

– Align the exhaust system so it is free of stress ⇒ page 141.

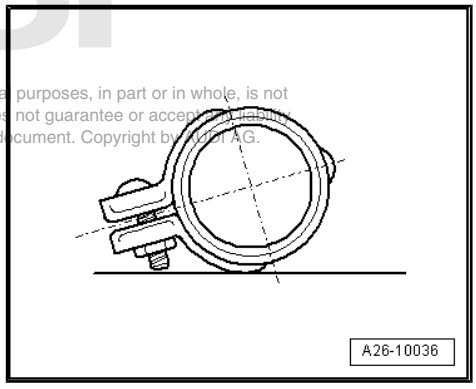

Protected by copyright. Copying for private or commercial purposes, in part or in whole, is not permitted unless authorised by AUDI AG. AUDI AG does not guarantee or accept any liability with respect to the correctness of information in this document. Copyright by AUDI AG.

1.3.2 Separating exhaust pipes/silencers - vehicles with two rear silencers

- The connecting pipe can be cut through at the cutting point in order to renew the centre or rear silencer separately.
- The cutting point is marked by an indentation on the circumference of the exhaust pipe.

Special tools and workshop equipment required

- Chain pipe cutter - VAS 6254-

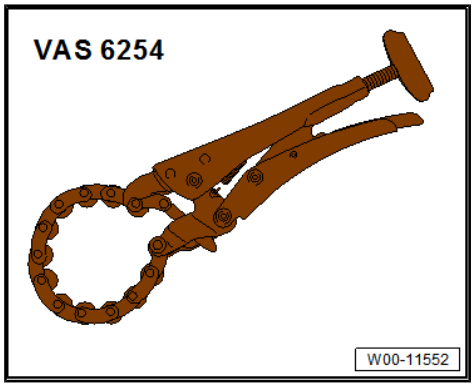

Procedure

– Cut through exhaust pipes at right angles at the positions marked -arrows- using chain pipe cutter - VAS 6254- .

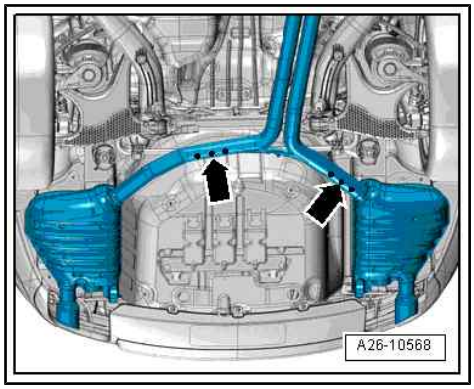

Protected by copyright. Copying for private or commercial purposes, in part or in whole, is not permitted unless authorised by AUDI AG. AUDI AG does not guarantee or accept any liability with respect to the correctness of information in this document. Copyright by AUDI AG.

– Position centre of clamps -arrows- over cutting location.

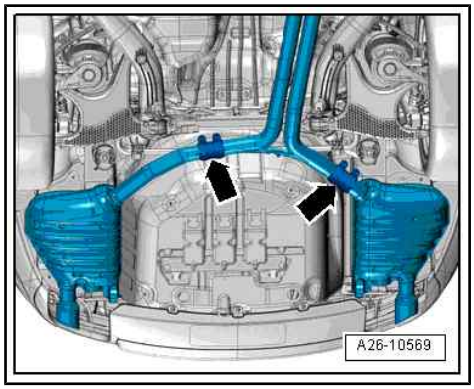

– Install clamps so that the bolt ends do not protrude beyond bottom of clamp.

• Installation position: bolted connections face forwards.

– Align the exhaust system so it is free of stress ⇒ page 142 .

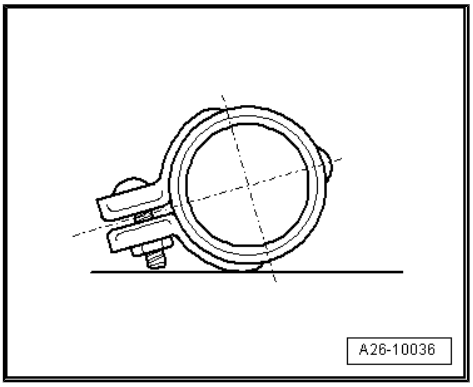

1.4 Stress-free alignment of exhaust system

⇒ "1.4.1 Stress-free alignment of exhaust system - vehicles with one rear silencer", page 141

⇒ "1.4.2 Stress-free alignment of exhaust system - vehicles with two rear silencers", page 142

Protected by copyright. Copying for private or commercial purposes, in part or in whole, is not permitted unless authorised by AUDI AG. AUDI AG does not guarantee or accept any liability with respect to the correctness of information in this document. Copyright by AUDI AG.

1.4.1 Stress-free alignment of exhaust system - vehicles with one rear silencer

Procedure

• The exhaust system must be aligned when it is cool.

Vehicles without clamps between centre silencer and rear silencer

– Loosen bolted connections on front clamp.

– Push exhaust system towards front of vehicle -arrow- so that rear mountings for rear silencer are preloaded by -a- = 6 ... 10 mm.

– Align rear silencer so it is horizontal.

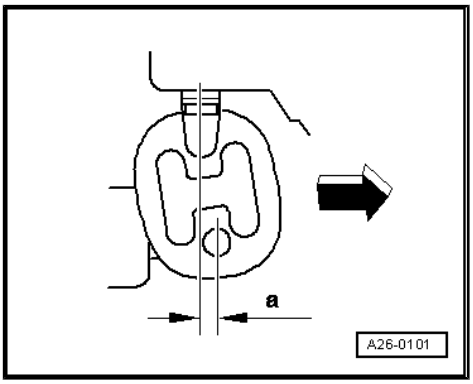

– Check clearance between tailpipes and bumper:

• Dimension -x- (left-side) = dimension -x- (right-side)

– Tighten bolt connections on clamp evenly.

Vehicles with clamps between centre silencer and rear silencer

– Loosen bolted connections on front and rear clamps.

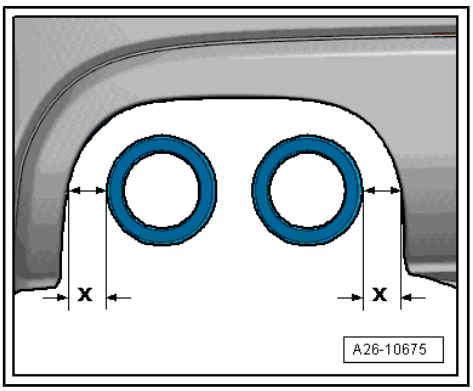

– Push centre silencer towards front of vehicle -arrow- until mounting for centre silencer is preloaded by -a- = 6 ... 10 mm.
– Tighten bolt connections on front clamp evenly.

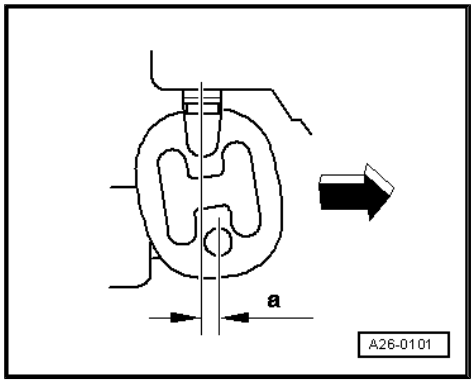

– Push rear silencer towards front of vehicle -arrow- so that rear mounting for rear silencer is preloaded by -a- = 11 ... 15 mm.
– Align rear silencer so it is horizontal.

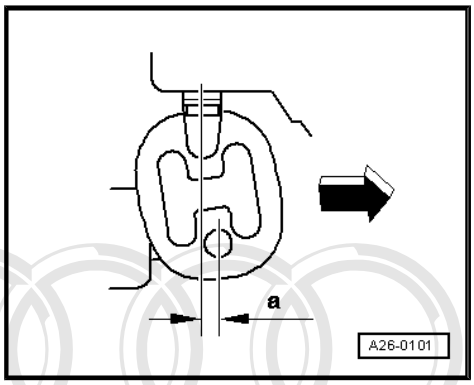

– Check clearance between tailpipes and bumper:
• Dimension -x- (left-side) = dimension -x- (right-side)
– Tighten bolted connections on rear clamps evenly.

Tightening torques

◆ ⇒ “1.1.1 Exploded view - silencers, vehicles with one rear silencer”, page 131

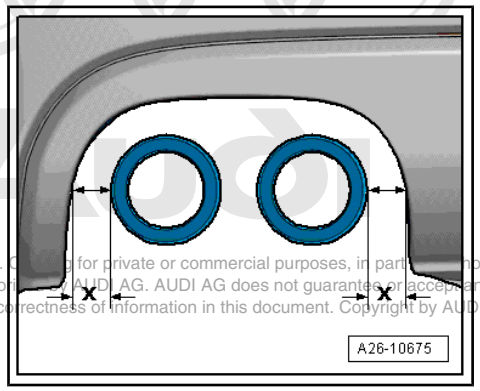

Protected by copyright. Copying for private or commercial purposes, in part or in whole, is not permitted unless authorised by AUDI AG. AUDI AG does not guarantee or accept any liability with respect to the correctness of information in this document. Copyright by AUDI AG.

1.4.2 Stress-free alignment of exhaust system - vehicles with two rear silencers

Procedure

• The exhaust system must be aligned when it is cool.

Vehicles without clamps between centre silencer and rear silencer

– Loosen bolted connections on front clamp.
– Push exhaust system towards front of vehicle -arrow- so that rear mountings for rear silencer are preloaded by -a- = 6 ... 10 mm.
– Align rear silencer so it is horizontal.

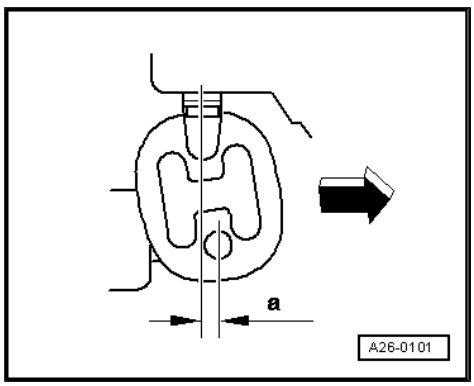

– Check clearance between tailpipes and bumper:

• Dimension -x- (left-side) = dimension -x- (right-side)

– Tighten bolt connections on clamp evenly.

Vehicles with clamps between centre silencer and rear silencer

– Loosen bolted connections on front and rear clamps.

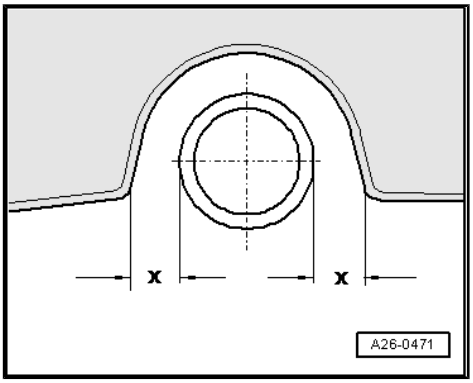

– Push centre silencer towards front of vehicle -arrow- until mounting for centre silencer is preloaded by -a- = 6 ... 10 mm.

– Tighten bolt connections on front clamp evenly.

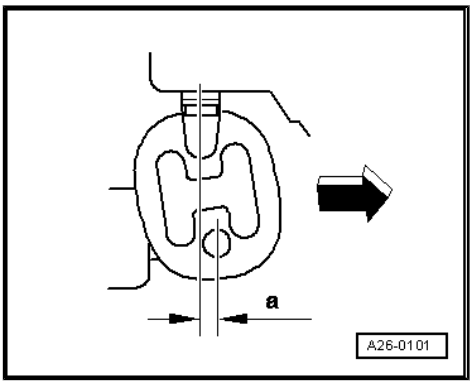

– Push rear silencer towards front of vehicle -arrow- so that rear mounting for rear silencer is preloaded by -a- = 11 ... 15 mm.

– Align rear silencer so it is horizontal.

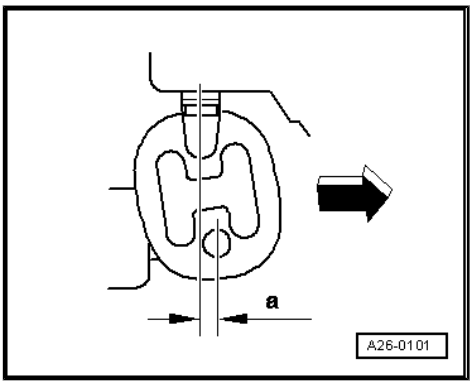

– Check clearance between tailpipes and bumper:

• Dimension -x- (left-side) = dimension -x- (right-side)

– Tighten bolted connections on rear clamps evenly.

Tightening torques

◆ ⇒ “1.1.2 Exploded view - silencers, vehicles with two rear silencers”, page 134

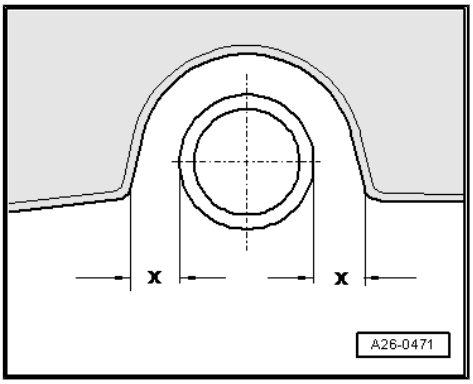

Protected by copyright. Copying for private or commercial purposes, in part or in whole, is not permitted unless authorised by AUDI AG. AUDI AG does not guarantee or accept any liability with respect to the correctness of information in this document. Copyright by AUDI AG.

1.5 Renewing tailpipes

⇒ “1.5.1 Renewing tailpipes - vehicles with one rear silencer”, page 144

⇒ “1.5.2 Renewing tailpipes - vehicles with two rear silencers”, page 144

1.5.1 Renewing tailpipes - vehicles with one rear silencer

- The tailpipes can be cut through at the point marked so that the tailpipes can be renewed separately.
- The cutting point is marked by an indentation on the circumference of the exhaust pipe.

– Cut through exhaust pipe at right angle at the position marked by -arrows- using chain pipe cutter - VAS 6254- .

– Fit tailpipes.

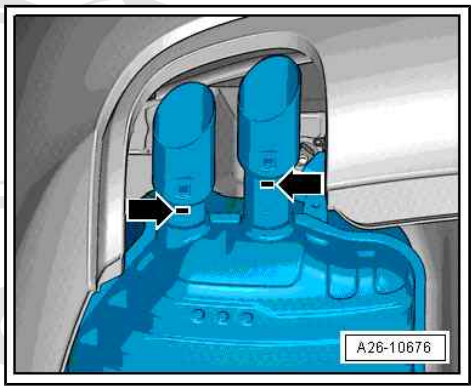

– Check clearance between tailpipes and bumper.

• Dimension -x- (left-side) = dimension -x- (right-side)

– Tighten bolt connections on clamps.

Protected by copyright. Copying for private or commercial purposes, in part or in whole, is not permitted unless authorised by AUDI AG. AUDI AG do... with respect to the correctness of information in this...

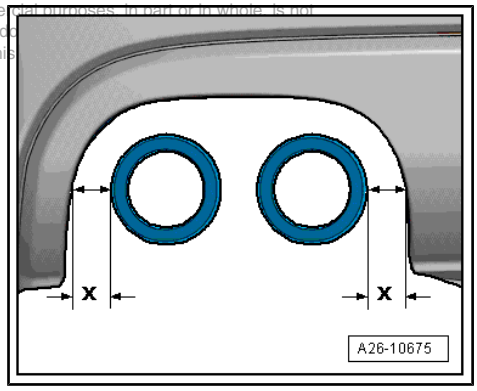

Tightening torques

- ⇒ “1.1.1 Exploded view - silencers, vehicles with one rear silencer”, page 131

1.5.2 Renewing tailpipes - vehicles with two rear silencers

Special tools and workshop equipment required

- Chain pipe cutter - VAS 6254-

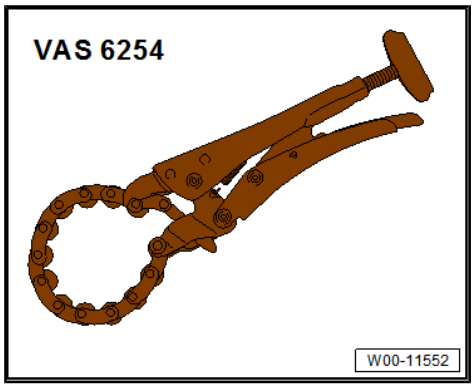

Procedure

– Cut through tailpipe -1- with chain pipe cutter - VAS 6254- at the position marked -C-.

– Push new tailpipe -3- onto tailpipe as far as marking -A-. Slot on tailpipe should align with marking -B-.

– Tighten nut for clamp -2-.

Tightening torques

♦ ⇒ “1.1.2 Exploded view - silencers, vehicles with two rear silencers”, page 134

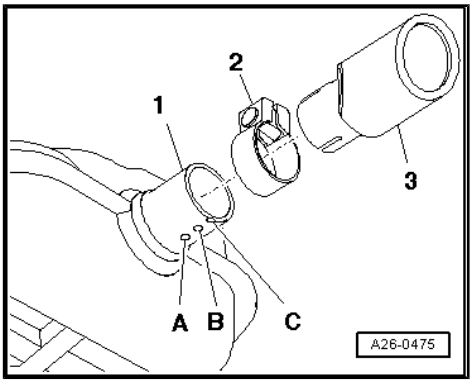

1.6 Checking exhaust system for leaks

All procedures are described in ⇒ Servicing 4-cylinder engine, 1.8 ltr., 2.0 ltr. 4-valve TFSI; Rep. gr. 26 ; Exhaust pipes/silencers; Checking exhaust system for leaks .

Protected by copyright. Copying for private or commercial purposes, in part or in whole, is not permitted unless authorised by AUDI AG. AUDI AG does not guarantee or accept any liability with respect to the correctness of information in this document. Copyright by AUDI AG.

2 Emission control system

⇒ “2.1 Exploded view - emission control system”, page 146

⇒ “2.2 Removing and installing catalytic converter”, page 146

2.1 Exploded view - emission control system

All components are described in ⇒ Servicing 4-cylinder engine, 1.8 ltr., 2.0 ltr. 4-valve TFSI; Rep. gr. 26 ; Emission control system; Exploded view - emission control system .

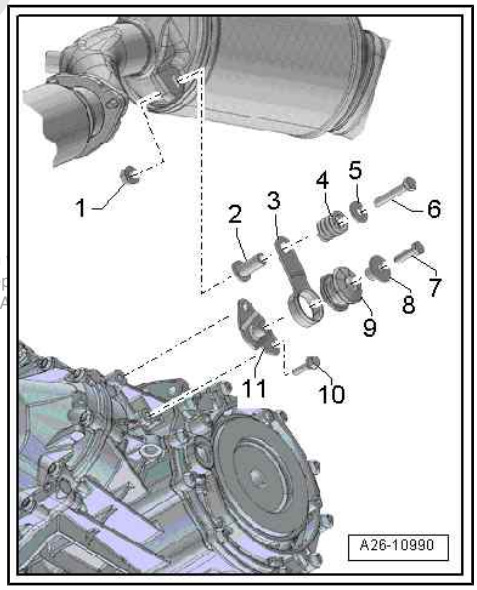

Components of mountings for catalytic converter

1 - Nut
2 - Spacer sleeve
3 - Bracket
4 - Compression spring
5 - Washer
6 - Bolt, 23 Nm
7 - Bolt, 23 Nm
8 - Spacer sleeve
9 - Buffer
10 - Bolt, 23 Nm
11 - Bracket

Protected by copyright. Copying for private or commercial purposes, in part or in
permitted unless authorised by AUDI AG. AUDI AG does not guarantee or accep
with regard to the correctness of information in this document. Copyright by A

Note

Illustration shows vehicle with dual clutch gearbox.

2.2 Removing and installing catalytic converter

Special tools and workshop equipment required

- Hose clamps, up to 25 mm - 3094-

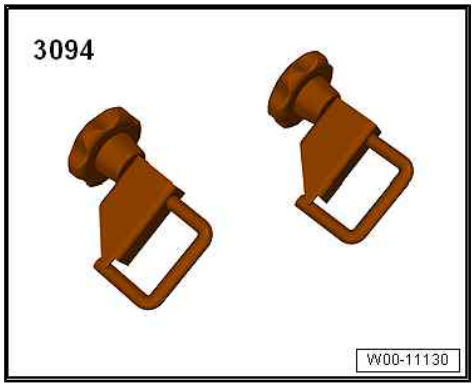

Removing

Note

Fit all cable ties in the original positions when installing.

– Remove engine cover panel ⇒ Servicing 4-cylinder engine, 1.8 ltr., 2.0 ltr. 4-valve TFSI; Rep. gr. 10 ; Engine cover panel; Removing and installing engine cover panel .

Bracket for electrical connectors, version 1:

– Unplug electrical connector -1- for Lambda probe after catalytic converter - G130- and Lambda probe 1 heater after catalytic converter - Z29- and move electrical wiring clear.

– Unplug electrical connector -2- for Lambda probe - G39- and Lambda probe heater - Z19- and move electrical wiring clear.

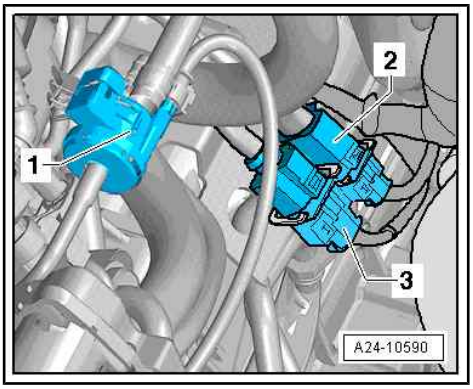

Bracket for electrical connectors, version 2:

– Unplug electrical connector -arrow- for Lambda probe - G39- and move wiring clear.

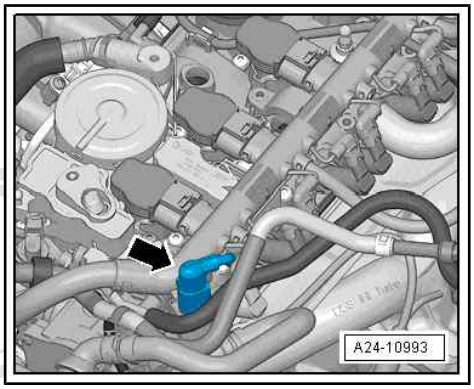

Bracket for electrical connectors, version 3:

– Unplug electrical connector -arrow- for Lambda probe after catalytic converter - G130- and move wiring clear.

Continued for all vehicles:

– Remove air cleaner housing ⇒ page 109.

– Remove noise insulation ⇒ General body repairs, exterior; Rep. gr. 66 ; Noise insulation; Removing and installing noise insulation .

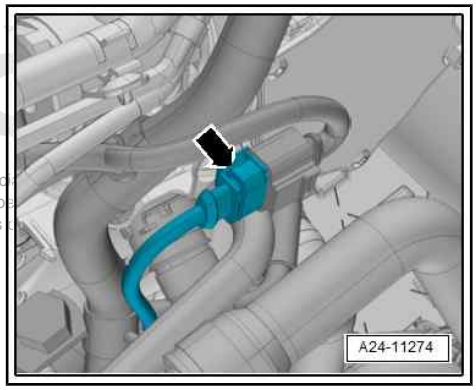

Vehicles with auxiliary heater

– Clamp off coolant lines (top) for auxiliary heater with hose clamps up to 25 mm - 3094- and detach coolant lines.

– Unfasten coolant lines -1- from body.

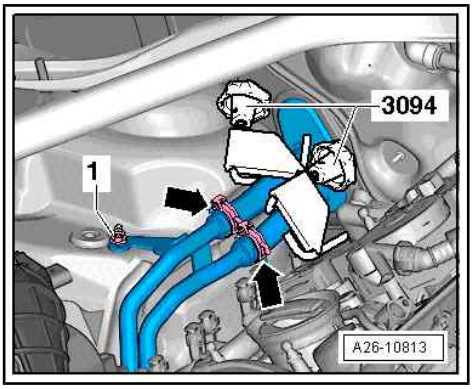

Protected by copyright. Copying for private or commercial purposes, in part or in whole, is not permitted unless authorised by AUDI AG. AUDI AG does not guarantee or accept any liability with respect to the correctness of information in this document.

– Clamp off coolant lines (bottom) for auxiliary heater with hose clamps up to 25 mm - 3094- and detach coolant pipes.
– Unfasten coolant lines -1- from body and detach.

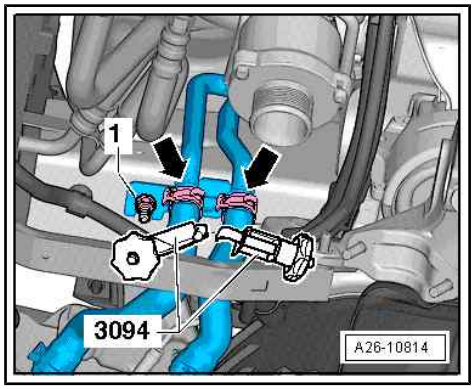

All vehicles:

– Remove front exhaust pipe/front silencer ⇒ page 137 .
– Unfasten connection -1-, remove bolt -2- and take out mounting for catalytic converter.

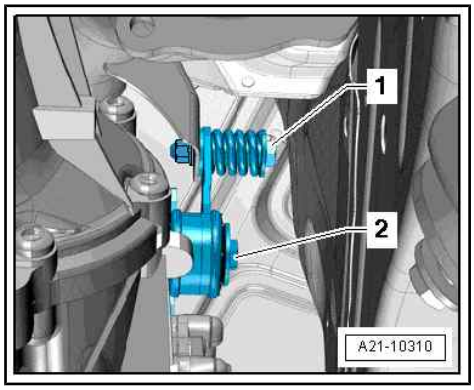

– Remove bolts -arrows- and detach heat shield for drive shaft (right-side).

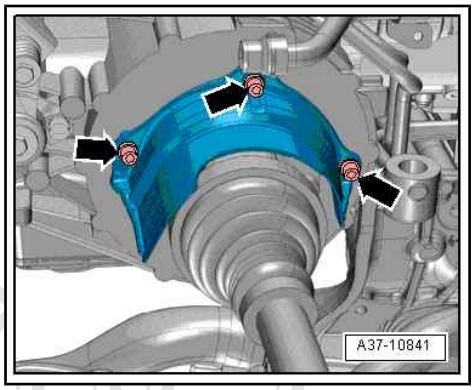

Protected by copyright. Copying for private or commercial purposes, in part or in whole, is not permitted unless authorised by AUDI AG. AUDI AG does not guarantee or accept any liability with respect to the correctness of information in this document. Copyright by AUDI AG.

– Remove nuts -arrows- and lift out catalytic converter.

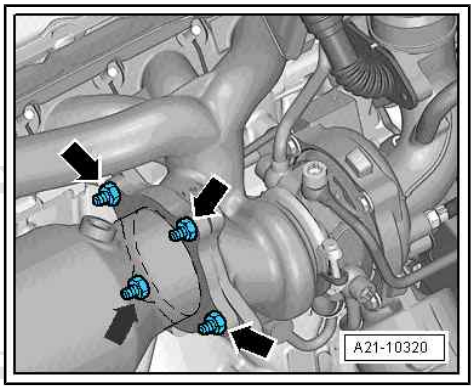

Installing

Installation is carried out in the reverse order; note the following:

Note

Renew seals, gaskets and self-locking nuts.

– Install front exhaust pipe/front silencer ⇒ page 137 .

– Install air cleaner housing ⇒ page 109 .

– Install engine cover panel ⇒ Servicing 4-cylinder engine, 1.8 ltr., 2.0 ltr. 4-valve TFSI; Rep. gr. 10 ; Engine cover panel; Removing and installing engine cover panel .

Vehicles with auxiliary heater

– Bleed auxiliary heater ⇒ Auxiliary heater, supplementary heater; Rep. gr. 82 ; Coolant circuit with auxiliary/supplementary heater .

Audi
Copying for private or commercial purposes, in part or in whole, is not permitted unless authorised by AUDI AG. AUDI AG does not guarantee or accept any liability with respect to the correctness of information in this document. Copyright by AUDI AG.

Tightening torques

- ⇒ Servicing 4-cylinder engine, 1.8 ltr., 2.0 ltr. 4-valve TFSI; Rep. gr. 26 ; Emission control system; Exploded view - emission control system
- ⇒ Fig. ""Components of mountings for catalytic converter"" , page 146
- ⇒ Running gear, axles, steering; Rep. gr. 40 ; Drive shaft; Exploded view - drive shaft
- ⇒ General body repairs, exterior; Rep. gr. 66 ; Noise insulation; Exploded view - noise insulation

28 – Ignition system

1 Ignition system

All procedures and components are described in ⇒ Servicing 4-cylinder engine, 1.8 ltr., 2.0 ltr. 4-valve TFSI; Rep. gr. 28 ; Ignition system .

Protected by copyright. Copying for private or commercial purposes, in part or in whole, is not permitted unless authorised by AUDI AG. AUDI AG does not guarantee or accept any liability with respect to the correctness of information in this document. Copyright by AUDI AG.