chevrolet.com (U.S.)
chevrolet.gm.ca (Canada)

2015

Cruze

2015 Chevrolet Cruze Owner Manual

In Brief 1-1
Instrument Panel 1-2
Initial Drive Information 1-4
Vehicle Features 1-14
Performance and Maintenance 1-19

Keys, Doors, and Windows 2-1
Keys and Locks 2-1
Doors 2-14
Vehicle Security 2-16
Exterior Mirrors 2-18
Interior Mirrors 2-20
Windows 2-20
Roof 2-23

Seats and Restraints 3-1
Head Restraints 3-2
Front Seats 3-3
Rear Seats 3-6
Safety Belts 3-8
Airbag System 3-15
Child Restraints 3-28

Storage 4-1
Storage Compartments 4-1

Instruments and Controls 5-1
Controls 5-2
Warning Lights, Gauges, and Indicators 5-7
Information Displays 5-23
Vehicle Messages 5-27
Vehicle Personalization 5-36

Lighting 6-1
Exterior Lighting 6-1
Interior Lighting 6-5
Lighting Features 6-6

Infotainment System 7-1
Introduction 7-1
Radio 7-7
Audio Players 7-13
Phone 7-17
Trademarks and License Agreements 7-28

Climate Controls 8-1
Climate Control Systems 8-1
Air Vents 8-6
Maintenance 8-7

Driving and Operating 9-1
Driving Information 9-2
Starting and Operating 9-14
Engine Exhaust 9-26
Automatic Transmission 9-33
Manual Transmission 9-37
Brakes 9-38
Ride Control Systems 9-41
Cruise Control 9-43
Driver Assistance Systems ... 9-45
Fuel 9-51
Trailer Towing 9-62
Conversions and Add-Ons ... 9-68

Vehicle Care 10-1
General Information 10-2
Vehicle Checks 10-4
Headlamp Aiming 10-32
Bulb Replacement 10-32
Electrical System 10-37
Wheels and Tires 10-43

2015 Chevrolet Cruze Owner Manual

Jump Starting 10-82
Towing the Vehicle 10-85
Appearance Care 10-88

Service and Maintenance . . . 11-1
General Information 11-1
Maintenance Schedule 11-2
Special Application Services 11-8
Additional Maintenance and Care 11-9
Recommended Fluids 11-12
Maintenance Records 11-15

Technical Data 12-1
Vehicle Identification 12-1
Vehicle Data 12-2

Customer Information 13-1
Customer Information 13-1
Reporting Safety Defects 13-12
Vehicle Data Recording and Privacy 13-14

OnStar 14-1
OnStar Overview 14-1
OnStar Services 14-2
OnStar Additional Information 14-6

Index i-1

The names, logos, emblems, slogans, vehicle model names, and vehicle body designs appearing in this manual including, but not limited to, GM, the GM logo, CHEVROLET, the CHEVROLET Emblem, and CRUZE are trademarks and/or service marks of General Motors LLC, its subsidiaries, affiliates, or licensors.

For vehicles first sold in Canada, substitute the name “General Motors of Canada Limited” for Chevrolet Motor Division where it appears in this manual.

This manual describes features that may or may not be on the vehicle because of optional equipment that was not purchased on the vehicle, model variants, country specifications, features/applications that may not be available in your region, or changes subsequent to the printing of this owner manual.

Refer to the purchase documentation relating to your specific vehicle to confirm the features.

Keep this manual in the vehicle for quick reference.

Canadian Vehicle Owners

Propriétaires Canadiens

A French language manual can be obtained from your dealer, at www.helminc.com, or from:

On peut obtenir un exemplaire de ce guide en français auprès du concessionnaire ou à l'adresse savant:

Helm, Incorporated
Attention: Customer Service
47911 Halyard Drive
Plymouth, MI 48170

Using this Manual

To quickly locate information about the vehicle, use the Index in the back of the manual. It is an alphabetical list of what is in the manual and the page number where it can be found.

Litho in U.S.A.
Part No. 22951277 B Second Printing

©2014 General Motors LLC. All Rights Reserved.

Danger, Warning, and Caution

Warning messages found on vehicle labels and in this manual describe hazards and what to do to avoid or reduce them.

⚠ Danger

Danger indicates a hazard with a high level of risk which will result in serious injury or death.

⚠ Warning

Warning indicates a hazard that could result in injury or death.

⚠ Caution

Caution indicates a hazard that could result in property or vehicle damage.

A circle with a slash through it is a safety symbol which means “Do Not,” “Do not do this,” or “Do not let this happen.”

Symbols

The vehicle has components and labels that use symbols instead of text. Symbols are shown along with the text describing the operation or information relating to a specific component, control, message, gauge, or indicator.

: This symbol is shown when you need to see your owner manual for additional instructions or information.

: This symbol is shown when you need to see a service manual for additional instructions or information.

Vehicle Symbol Chart

Here are some additional symbols that may be found on the vehicle and what they mean. For more information on the symbol, refer to the Index.

: Airbag Readiness Light

: Air Conditioning

: Antilock Brake System (ABS)

: Audio Steering Wheel Controls or OnStar® (if equipped)

: Brake System Warning Light

: Charging System

: Cruise Control

: Engine Coolant Temperature

: Exterior Lamps

: Fog Lamps

: Fuel Gauge

: Fuses

: Headlamp High/Low-Beam Changer

: LATCH System Child Restraints

: Malfunction Indicator Lamp

: Oil Pressure

: Power

: Remote Vehicle Start

: Safety Belt Reminders

: Tire Pressure Monitor

: Traction Control/StabiliTrak®

: Windshield Washer Fluid

✍ NOTES

In Brief

Instrument Panel

Instrument Panel Overview 1-2

Initial Drive Information

Initial Drive Information 1-4
Remote Keyless Entry (RKE) System 1-4
Remote Vehicle Start 1-4
Door Locks 1-5
Windows 1-6
Seat Adjustment 1-6
Heated Seats 1-8
Head Restraint Adjustment 1-8
Safety Belts 1-9
Passenger Sensing System ... 1-9
Mirror Adjustment 1-9
Steering Wheel Adjustment 1-10
Interior Lighting 1-11
Exterior Lighting 1-11
Windshield Wiper/Washer 1-12
Climate Controls 1-12
Transmission 1-14

Vehicle Features

Radio(s) 1-14
Satellite Radio 1-15
Portable Audio Devices 1-15
Bluetooth® 1-16
Steering Wheel Controls 1-16
Cruise Control 1-17
Navigation System 1-17
Driver Information Center (DIC) 1-17
Side Blind Zone Alert (SBZA) 1-18
Rear Vision Camera (RVC) 1-18
Rear Cross Traffic Alert (RCTA) System 1-18
Parking Assist 1-18
Power Outlets 1-18

Performance and Maintenance

Traction Control/Electronic Stability Control 1-19
Tire Pressure Monitor 1-19
Engine Oil Life System 1-19
Driving for Better Fuel Economy 1-20
Diesel Particulate Filter 1-20
Diesel Exhaust Fluid 1-21
Roadside Assistance Program 1-22
OnStar® 1-22

Instrument Panel

Instrument Panel Overview

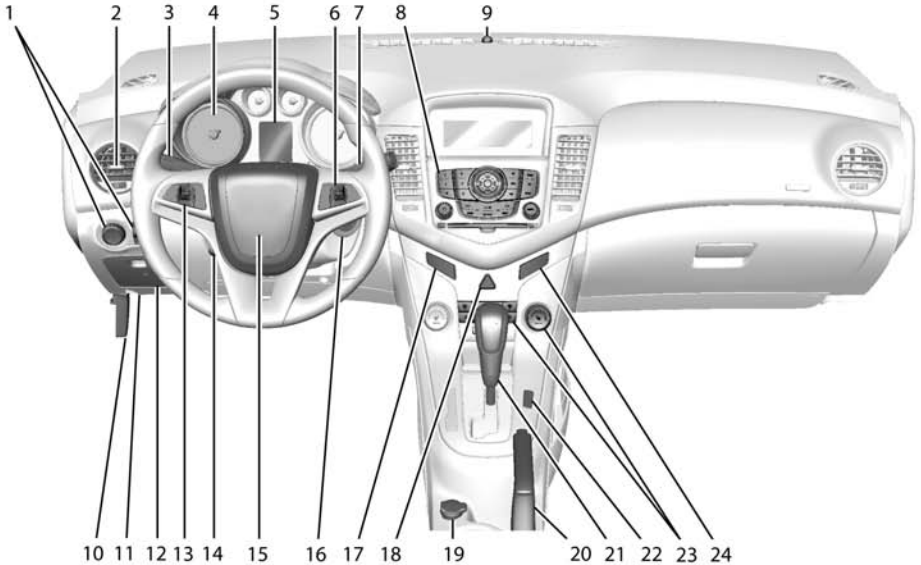

1. *Exterior Lamp Controls on page 6-1*.

   Front Fog Lamps on page 6-4 (If Equipped).

   Instrument Panel Illumination Control on page 6-5.
2. *Air Vents on page 8-6*.
3. *Headlamp High/Low-Beam Changer on page 6-2*.

   Turn Signal Lever. See *Turn and Lane-Change Signals on page 6-4*.

   Driver Information Center (DIC) Buttons. See *Driver Information Center (DIC) on page 5-23*.
4. *Instrument Cluster on page 5-8*.
5. *Driver Information Center (DIC) on page 5-23*.
6. *Steering Wheel Controls on page 5-2*.
7. *Windshield Wiper/Washer on page 5-3*.
8. *Infotainment on page 7-1*.
9. Light Sensor. See *Automatic Headlamp System on page 6-3*.
10. Hood Release. See *Hood on page 10-4*.
11. Data Link Connector (DLC) (Out of View). See *Malfunction Indicator Lamp on page 5-14*.
12. *Instrument Panel Fuse Block on page 10-41*.
13. *Cruise Control on page 9-43*.
14. *Steering Wheel Adjustment on page 5-2*.
15. *Horn on page 5-3*.
16. Ignition Switch or Keyless Ignition Button (If Equipped). See *Ignition Positions (Keyless Access) on page 9-14* or *Ignition Positions (Key Access) on page 9-16*.
17. Trunk Release Button. See *Trunk on page 2-14*.
18. *Hazard Warning Flashers on page 6-3*.
19. *Power Outlets on page 5-6*.
20. *Parking Brake on page 9-39*.
21. Shift Lever. See *Automatic Transmission on page 9-33* or *Manual Transmission on page 9-37*.
22. *Traction Control/Electronic Stability Control on page 9-41*.
23. *Climate Control Systems on page 8-1* (If Equipped).

    Automatic Climate Control System on page 8-3 (If Equipped).

    Heated Front Seats on page 3-5 (If Equipped).
24. *Passenger Airbag Status Indicator on page 5-13*.

Initial Drive Information

This section provides a brief overview about some of the important features that may or may not be on your specific vehicle.

For more detailed information, refer to each of the features which can be found later in this owner manual.

Remote Keyless Entry (RKE) System

The RKE transmitter may work up to 60 m (195 ft) away from the vehicle.

Press the key release button to extend the key blade. The key can be used for the ignition and all locks.

Press to unlock the driver door or all doors.

Press to lock all doors.

Lock and unlock feedback can be personalized. See *Vehicle Personalization on page 5-36*.

Press and hold HOLD to open the trunk.

Press and hold briefly to initiate vehicle locator.

Press and hold for at least three seconds to sound the panic alarm.

Press again to cancel the panic alarm.

See *Keys on page 2-1* and *Remote Keyless Entry (RKE) System Operation on page 2-3*.

Remote Vehicle Start

If equipped with this feature, the engine can be started from outside the vehicle.

Starting the Vehicle

1. Aim the RKE transmitter at the vehicle.
2. Press and release .
3. Immediately after completing Step 2, press and hold for at least four seconds or until the turn signal lamps flash.

When the engine starts, the parking lamps will turn on and remain on as long as the engine is running. The doors will be locked and the climate control system may come on.

The engine will continue to run for 10 minutes. After 30 seconds, repeat the steps if a 10-minute time extension is desired. Remote start can be extended only once.

Canceling a Remote Start

To cancel a remote start, do one of the following:

- Aim the RKE transmitter at the vehicle and press and hold until the parking lamps turn off.
- Turn on the hazard warning flashers.
- Turn the vehicle on and then off.

See *Remote Vehicle Start on page 2-9*.

Door Locks

To lock or unlock the vehicle from outside, use the key in the door or use the Remote Keyless Entry (RKE) transmitter. From inside the vehicle, use the power door lock switch.

See *Door Locks on page 2-11*.

Keyless Access

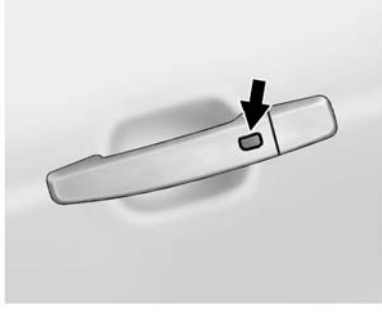

If equipped, use the Keyless Access system to lock and unlock the door. When the doors are locked and the RKE transmitter is within 1 m (3 ft) of the driver door handle, press the lock/unlock button. When unlocking from the driver door, the first press unlocks that door; press again within five seconds to unlock all passenger doors. See *Remote Keyless Entry (RKE) System Operation on page 2-3*.

This feature may be configured. See *Vehicle Personalization on page 5-36*.

Power Door Locks

: Press to unlock the doors.

🔒 : Press to lock the doors.

See *Power Door Locks on page 2-12*.

Windows

⚠ Warning

Children could be seriously injured or killed if caught in the path of a closing window. Never leave keys in a vehicle with children. When there are children in the rear seat, use the window lockout button to prevent operation of the windows. See *Keys on page 2-1*.

Press the switch down to open the window. Pull the front of the switch up to close it. See *Power Windows on page 2-21*.

The switches work when the ignition is in ON/RUN, ACC/ACCESSORY, or in Retained Accessory Power (RAP). See *Retained Accessory Power (RAP) on page 9-23*.

Seat Adjustment

Manual Front Seats

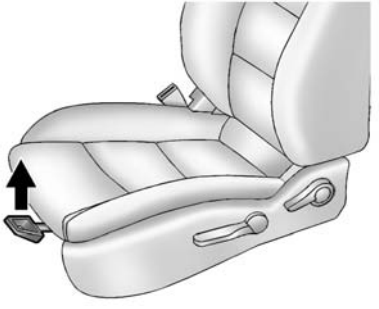

To adjust a manual seat:

1. Pull the handle at the front of the seat.
2. Slide the seat to the desired position and release the handle.
3. Try to move the seat back and forth to be sure it is locked in place.

Seat Height Adjuster

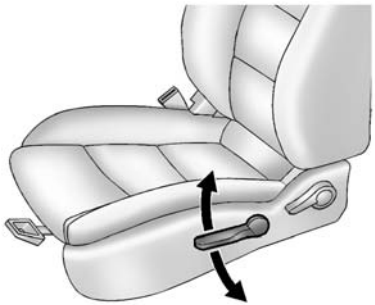

If available, move the lever up or down to manually raise or lower the seat.

See *Seat Adjustment on page 3-3*.

Reclining Seatbacks

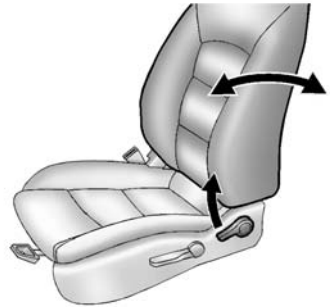

To recline the seatback:

1. Lift the lever.
2. Move the seatback to the desired position, then release the lever to lock the seatback in place.
3. Push and pull on the seatback to make sure it is locked.

To return the seatback to an upright position:

1. Lift the lever fully without applying pressure to the seatback, and the seatback returns to the upright position.
2. Push and pull on the seatback to make sure it is locked.

See *Reclining Seatbacks on page 3-4*.

Power Driver Seat

To adjust a power driver seat, if equipped:

- Move the seat forward or rearward by sliding the control forward or rearward.
- Raise or lower the front part of the seat cushion by moving the front of the control up or down.
- Raise or lower the entire seat by moving the rear of the control up or down.

See *Power Seat Adjustment on page 3-4*.

Rear Seats

The rear seatbacks can be folded.

For detailed instructions, see *Rear Seats on page 3-6*.

Heated Seats

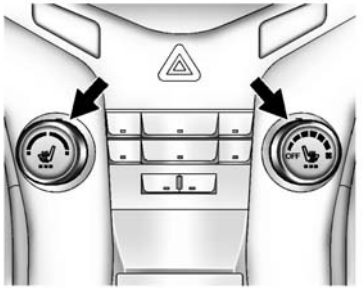

If available, the controls are on the center stack. The engine must be running to operate the heated seats.

Press ⁂ or ⁂ to heat the driver or passenger seat cushion and seatback.

Press the control once for the highest setting. With each press of the control, the heated seat will change to the next lower setting, and then the off setting. Three lights indicate the highest setting and one light the lowest.

See *Heated Front Seats on page 3-5*.

Head Restraint Adjustment

Do not drive until the head restraints for all occupants are installed and adjusted properly.

To achieve a comfortable seating position, change the seatback recline angle as little as necessary while keeping the seat and the head restraint height in the proper position.

See *Head Restraints on page 3-2* and *Power Seat Adjustment on page 3-4*.

Safety Belts

Refer to the following sections for important information on how to use safety belts properly:

- *Safety Belts on page 3-8*.
- *How to Wear Safety Belts Properly on page 3-10*.
- *Lap-Shoulder Belt on page 3-11*.
- *Lower Anchors and Tethers for Children (LATCH System) on page 3-36*.

Passenger Sensing System

United States

Canada

The passenger sensing system turns off the front outboard passenger frontal airbag and knee airbag under certain conditions. No other airbag is affected by the passenger sensing system. See *Passenger Sensing System on page 3-22* for important information.

The passenger airbag status indicator will be visible on the instrument panel when the vehicle is started. See *Passenger Airbag Status Indicator on page 5-13*.

Mirror Adjustment

Exterior

Controls for the outside power mirrors are on the driver door.

1. Turn the selector switch to L (Left) or R (Right) to choose the driver or passenger mirror.

2. Move the control to adjust the mirror.
3. Turn the selector switch to the O position to deselect the mirror.

See *Power Mirrors on page 2-19*.

If the vehicle has heated mirrors, see *Heated Mirrors on page 2-19*.

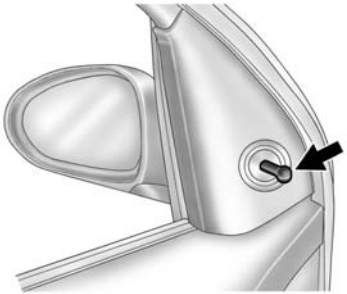

Vehicles with a manual mirror adjustment have controls next to each mirror.

See *Manual Mirrors on page 2-19*.

Interior Mirror

Adjustment

Adjust the rearview mirror to view the area behind the vehicle.

Manual Rearview Mirror

If equipped with a manual rearview mirror, push the tab forward for daytime use and pull it for nighttime use to avoid glare from the headlamps from behind. See *Manual Rearview Mirror on page 2-20*.

Automatic Dimming Rearview Mirror

If equipped with an automatic dimming rearview mirror, the mirror will automatically reduce the glare of headlamps from behind. The dimming feature comes on each time the vehicle is started. See *Automatic Dimming Rearview Mirror on page 2-20*.

Steering Wheel Adjustment

To adjust the steering wheel:

1. Pull the lever down.
2. Move the steering wheel up or down.
3. Pull or push the steering wheel closer or away from you.
4. Push the lever up to lock the steering wheel in place.

Do not adjust the steering wheel while driving.

Interior Lighting

Dome Lamps

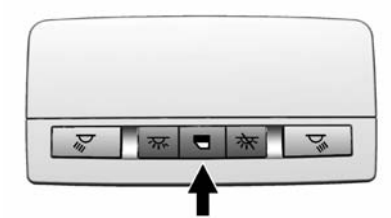

The dome lamp controls are in the headliner.

: Press to turn the lamps off, even when a door is open.

: Press to turn the lamps on automatically when a door is opened.

: Press to turn on the dome lamps.

Reading Lamps

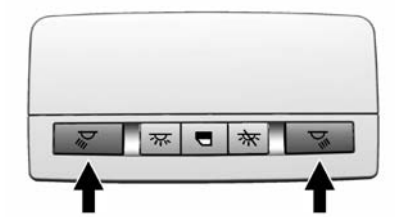

The reading lamps are in the overhead console.

or **:** Press the button near each lamp to turn it on or off.

Instrument Panel Illumination Control

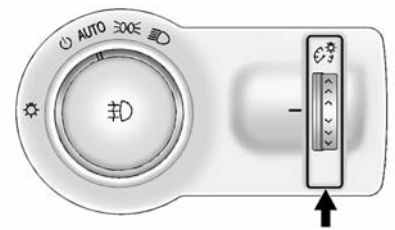

This feature controls the brightness of the instrument panel controls and infotainment display screen. The thumbwheel is located to the left of the steering column on the instrument panel.

: Turn the thumbwheel up or down and hold, to brighten or dim the instrument panel controls and infotainment display screen.

Exterior Lighting

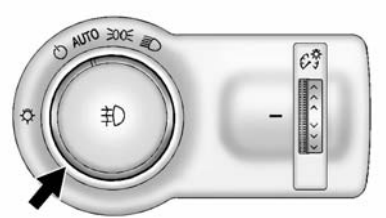

The exterior lamp control is to the left of the steering column on the instrument panel.

⏻ **:** Briefly turn to this position to turn the automatic lamp control off or on again.

AUTO: Turns the headlamps on automatically at normal brightness, together with the parking lamps, taillamps, license plate lamps, instrument panel lights, and sidemarker lamps.

: Turns on the parking lamps including all lamps, except the headlamps.

: Turns on the headlamps together with the parking lamps and instrument panel lights. A warning chime sounds if the driver door is opened when the ignition switch is off and the headlamps are on.

: If equipped with fog lamps, press to turn the lamps on or off.

See:

- *Exterior Lamp Controls on page 6-1*
- *Daytime Running Lamps (DRL) on page 6-2*
- *Front Fog Lamps on page 6-4*

Windshield Wiper/Washer

The windshield wiper/washer lever is on the right side of the steering column.

With the ignition in ACC/ACCESSORY or ON/RUN/START, move the lever to select the wiper speed.

HI: Use for fast wipes.

LO: Use for slow wipes.

INT: Move the lever up to INT for intermittent wipes, then turn the INT band up for more frequent wipes or down for less frequent wipes.

OFF: Use to turn the wipers off.

1X : For a single wipe, briefly move the lever down. For several wipes, hold the lever down.

: Pull the lever toward you to spray windshield washer fluid and activate the wipers.

See *Windshield Wiper/Washer on page 5-3*.

Climate Controls

The heating, cooling, defrosting, and ventilation for the vehicle can be controlled with these systems.

Vehicles without Air Conditioning

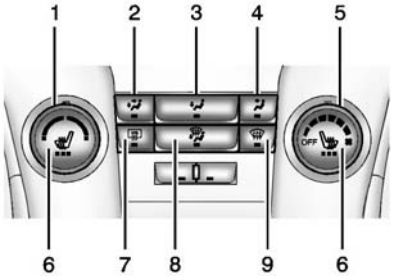

1. Temperature Control
2. Bi-level Air Mode
3. Floor Air Mode
4. Vent Air Mode
5. Fan Control
6. Driver and Passenger Heated Seats (If Equipped)
7. Rear Window Defogger
8. Defog
9. Defrost

Vehicles with Air Conditioning

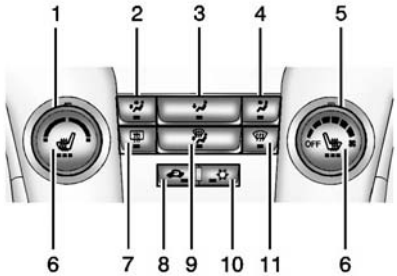

1. Temperature Control
2. Bi-level Air Mode
3. Floor Air Mode
4. Vent Air Mode
5. Fan Control
6. Driver and Passenger Heated Seats (If Equipped)
7. Rear Window Defogger
8. Recirculation
9. Defog
10. Air Conditioning
11. Defrost

Automatic Climate Control System

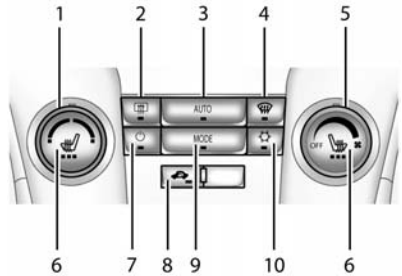

1. Temperature Control
2. Rear Window Defogger
3. AUTO (Automatic Operation)
4. Defrost
5. Fan Control
6. Driver and Passenger Heated Seats (If Equipped)
7. Power

8. Recirculation
9. MODE (Air Delivery Mode)
10. Air Conditioning

See *Climate Control Systems on page 8-1* or *Automatic Climate Control System on page 8-3* (If Equipped).

Transmission

Manual Mode

Driver Shift Control (DSC) allows the automatic transmission to be shifted similar to a manual transmission.

Electronic Range Select (ERS) allows for the selection of a range of gears.

See *Manual Mode on page 9-35*.

Up-Shift Light

If the vehicle has a manual transmission, it will have an up-shift light that indicates when to shift to the next higher gear for the best fuel economy.

See *Manual Transmission on page 9-37*.

Vehicle Features

Radio(s)

⏻ **:** Press to turn the system on and off. Turn to increase or decrease the volume.

BAND: Press to choose between FM, AM, or SiriusXM®, if equipped.

MENU/SEL: Turn to select radio stations. Press to select a menu.

⏮ **:** Press to seek the previous station or track.

⏭ **:** Press to seek the next station or track.

Buttons 1 to 6: Press to save and select favorite stations.

INFO: Press to show available information about the current station or track.

For more information about these and other radio features, see *Operation on page 7-4*.

Storing a Favorite Station

Stations from all bands can be stored in the favorite lists in any order. Up to six stations can be stored in each favorite page and the number of available favorite pages can be set.

To store the station to a position in the list, press the corresponding numeric button 1 to 6 until a beep is heard.

See “Storing a Station as a Favorite” in *AM-FM Radio on page 7-7*.

Setting the Clock

Adjusting the Time or Date

To set the time and date for the radio with navigation:

1. Press CLOCK.
2. Select Set Time or Set Date.
3. Turn the MENU/SEL knob to adjust the highlighted number.
4. Press the MENU/SEL knob to select the next number.
5. To save the settings, press BACK on the radio faceplate.

Setting the 12/24 Hour Format

To set the 12/24 hour format for the radio with navigation:

1. Press CLOCK.
2. Highlight 12/24 Hour Format.
3. Press the MENU/SEL knob to select the 12 hour or 24 hour display format.
4. To save the settings, press BACK on the radio faceplate.

For detailed instructions on setting the clock for the vehicle's specific audio system, see *Clock on page 5-4*.

Satellite Radio

If equipped, vehicles with a SiriusXM® satellite radio tuner and a valid SiriusXM satellite radio subscription can receive SiriusXM programming.

SiriusXM Satellite Radio Service

SiriusXM is a satellite radio service based in the 48 contiguous United States and 10 Canadian provinces. SiriusXM satellite radio has a wide variety of programming and commercial-free music, coast to coast, and in digital-quality sound. A fee is required to receive the SiriusXM service.

Refer to:

- www.siriusxm.com or call 1-866-635-2349 (U.S.).
- www.xmradio.ca or call 1-877-209-0079 (Canada).

See *Satellite Radio on page 7-10*.

Portable Audio Devices

Some vehicles have a 3.5 mm (1/8 in) auxiliary input and a USB port in the center console. External devices such as iPods®, laptop computers, MP3 players, CD

changers, and USB drives may be connected, depending on the audio system.

See *Auxiliary Devices on page 7-15*.

Bluetooth®

The Bluetooth® system allows users with a Bluetooth-enabled mobile phone to make and receive hands-free calls using the vehicle audio system and controls.

The Bluetooth-enabled mobile phone must be paired with the in-vehicle Bluetooth system before it can be used in the vehicle. Not all phones will support all functions.

See *Bluetooth (Infotainment Controls) on page 7-19* or *Bluetooth (Voice Recognition) on page 7-22* or *Bluetooth (Overview) on page 7-17*.

Steering Wheel Controls

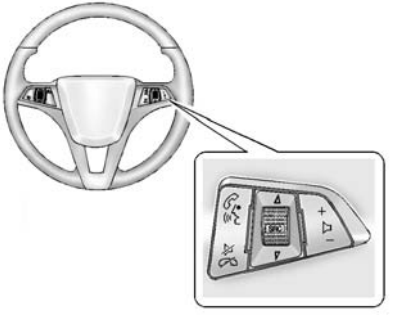

For vehicles with audio steering wheel controls, some audio controls can be adjusted at the steering wheel.

/ : For vehicles with a Bluetooth, OnStar, or navigation system, press to interact with those systems. See *Bluetooth (Infotainment Controls) on page 7-19* or *Bluetooth (Voice Recognition) on page 7-22* or *Bluetooth (Overview) on page 7-17*, *OnStar Overview on page 14-1*, or the infotainment manual.

/ : Press to silence the vehicle speakers only. Press again to turn the sound on. For vehicles with OnStar or Bluetooth systems, press to reject an incoming call, or to end a current call.

SRC : Press to select a source or turn to change favorite stations.

Press or to select AM, FM, CD, or MP3 track.

Turn or to select the next or previous saved favorite radio stations.

+ ⊳ −: Press + to increase the volume. Press − to decrease the volume.

For more information, see *Steering Wheel Controls on page 5-2*.

Cruise Control

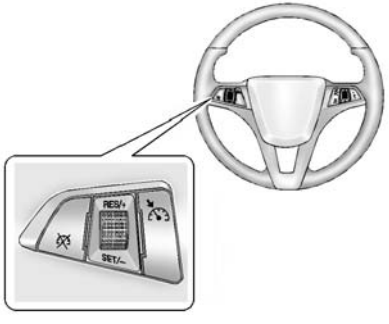

If equipped with cruise control:

⊘: Press to turn the cruise control system on and off. A white indicator comes on in the instrument cluster when cruise is turned on.

RES/+: If there is a set speed in memory, move the thumbwheel up briefly to resume to that speed or hold upward to accelerate. If cruise control is already active, use to increase vehicle speed.

SET/−: Move the thumbwheel down briefly to set the speed and activate cruise control. If cruise control is already active, use to decrease speed.

⊗: Press to disengage cruise control without erasing the set speed from memory.

See *Cruise Control on page 9-43*.

Navigation System

If the vehicle has a navigation system, there is a separate infotainment manual that includes information on the radio, audio players, and navigation system.

The navigation system provides detailed maps of most major freeways and roads. After a destination has been set, the system provides turn-by-turn instructions for reaching the destination. In addition, the system can help locate a variety of points of interest (POIs), such as banks, airports, restaurants, and more.

Driver Information Center (DIC)

The DIC display is in the center of the instrument cluster. It shows the status of many vehicle systems. The controls for the DIC are on the turn signal lever.

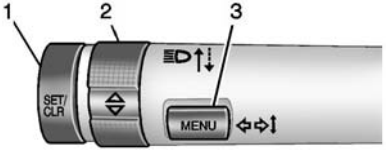

1. **SET/CLR:** Press to set, or press and hold to clear, the menu item displayed.
2. **△ / ▽ :** Use the band to scroll through the items in each menu.

3. **MENU:** Press to display the DIC menus. This button is also used to return to or exit the last screen displayed on the DIC.

See *Driver Information Center (DIC) on page 5-23*.

Side Blind Zone Alert (SBZA)

If equipped, SBZA will detect vehicles in the next lane over in the vehicle's side blind zone area. When this happens, the SBZA display will light up in the corresponding outside side mirror and will flash if the turn signal is on.

See *Side Blind Zone Alert (SBZA) on page 9-47*.

Rear Vision Camera (RVC)

If equipped, RVC displays a view of the area behind the vehicle, on the infotainment system display, when the vehicle is shifted into R (Reverse).

See *Rear Vision Camera (RVC) on page 9-48*.

Rear Cross Traffic Alert (RCTA) System

If equipped, the RCTA system uses a triangle with an arrow displayed on the RVC screen to warn of traffic behind your vehicle that may cross your vehicle's path while in R (Reverse). In addition, beeps will sound.

See “Rear Cross Traffic Alert (RCTA)” under *Rear Vision Camera (RVC) on page 9-48*.

Parking Assist

If equipped, this system uses sensors on the rear bumper to assist with parking and avoiding objects while in R (Reverse). It operates at speeds less than 8 km/h (5 mph). Rear Parking Assist (RPA) uses audible beeps to provide distance and system information.

Keep the sensors on the vehicle's rear bumper clean to ensure proper operation.

See *Parking Assist on page 9-45*.

Power Outlets

The accessory power outlets can be used to plug in electrical equipment, such as a cell phone or MP3 player.

There is one accessory power outlet located on the center floor console and one on the rear of the center floor console. These outlets are powered when the key is in ON/RUN or ACC/ACCESSORY, or until the driver door is opened within 10 minutes of turning off the vehicle. See *Retained Accessory Power (RAP) on page 9-23*.

See *Power Outlets on page 5-6*.

Performance and Maintenance

Traction Control/ Electronic Stability Control

The Traction Control System (TCS) limits wheel spin. The system turns on automatically every time the vehicle is started.

The StabiliTrak system assists with directional control of the vehicle in difficult driving conditions. The system also turns on automatically every time the vehicle is started.

- To turn off traction control, press and release the button on the center console. The traction off light illuminates.
- To turn off both traction control and StabiliTrak, press and hold the button, until the traction off light and the StabiliTrak OFF light illuminate.
- Press and release the button again to turn on both systems.

See *Traction Control/Electronic Stability Control on page 9-41*.

Tire Pressure Monitor

This vehicle may have a Tire Pressure Monitor System (TPMS).

The low tire pressure warning light alerts to a significant loss in pressure of one of the vehicle's tires. If the warning light comes on, stop as soon as possible and inflate the tires to the recommended pressure shown on the Tire and Loading Information label. See *Vehicle Load Limits on page 9-9*. The warning light will remain on until the tire pressure is corrected.

The low tire pressure warning light may come on in cool weather when the vehicle is first started, and then turn off as the vehicle is driven. This may be an early indicator that the tire pressures are getting low and the tires need to be inflated to the proper pressure.

The TPMS does not replace normal monthly tire maintenance. Maintain the correct tire pressures.

See *Tire Pressure Monitor System on page 10-52*.

Engine Oil Life System

The engine oil life system calculates engine oil life based on vehicle use and displays the CHANGE ENGINE OIL SOON DIC message when it is necessary to change the engine oil and filter.

Remember, the Oil Life display must be reset after each oil change. It will not reset itself. Also, be careful not to reset the Oil Life display accidentally at any time other than when the oil has just been changed.

It cannot be reset accurately until the next oil change. To reset the engine oil life system press the SET/CLR button while the Oil Life display is active.

Resetting the Oil Life System

1. Using the DIC MENU button and thumbwheel, scroll until you reach REMAINING OIL LIFE on the DIC (% for Canada).
2. Press the SET/CLR button to reset the oil life at 100%. When prompted, use the thumbwheel to highlight YES or NO. Press the SET/CLR button to confirm.

Be careful not to reset the oil life display accidentally at any time other than after the oil is changed. It cannot be reset accurately.

See *Engine Oil Life System on page 10-15*.

Driving for Better Fuel Economy

Driving habits can affect fuel mileage. Here are some driving tips to get the best fuel economy possible.

- Avoid fast starts and accelerate smoothly.
- Brake gradually and avoid abrupt stops.
- Avoid idling the engine for long periods of time.
- When road and weather conditions are appropriate, use cruise control.
- Always follow posted speed limits or drive more slowly when conditions require.
- Keep vehicle tires properly inflated.
- Combine several trips into a single trip.
- Replace the vehicle's tires with the same TPC Spec number molded into the tire's sidewall near the size.
- Follow recommended scheduled maintenance.

Diesel Particulate Filter

The engine is equipped with a Diesel Particulate Filter (DPF) that, by design, will filter or trap particulates. The DPF is under the vehicle in the exhaust system.

Depending on a number of factors monitored by the engine computer, the DPF will need to be cleaned of accumulated solids. When a cleaning is needed, the engine computer will initiate a cleaning action by warming the exhaust gas temperature. This feature has been designed to operate automatically, with limited operator involvement or awareness.

Cleaning the DPF (Exhaust Filter)

While the DPF cleaning is automatically controlled by the engine computer, the vehicle will need to operate continuously for approximately 25 minutes and at speeds greater than 48 km/h (30 mph) to clean the DPF effectively.

Special DPF Driver Messages

If the vehicle is used for numerous short trips or extended slow-speed operation, the engine computer may not be able to adequately heat up the exhaust system to clean the DPF effectively. The engine computer has been designed to continuously monitor the condition of the DPF. When the engine computer detects that the DPF is nearly full of particulates and that the vehicle is not being operated in a manner that would allow effective automatic DPF cleaning, a Driver Information Center (DIC) message will display.

If the vehicle continues to be driven in a manner that prevents effective DPF cleaning, the DPF will become plugged with particulates. If this occurs, the engine computer will turn on the service engine soon light in the instrument cluster and a DIC message will display. See *Diesel Particulate Filter on page 9-26*, *Engine Power Messages on page 5-29*, and *Diesel Particulate Filter Messages on page 5-30*.

Fuel

Use Ultra-Low Sulfur Diesel Fuel (ULSD)

Use Ultra-Low Sulfur Diesel Fuel (ULSD) only. The emission control hardware used on the vehicle may be damaged by using fuel with high sulfur levels. Use only fuel that is dispensed from pumps bearing the ULSD label.

Do Not Use Low Sulfur Diesel Fuel (LSD)

Do not use fuel that is dispensed from pumps bearing the LSD label.

Do Not Use Non-Highway Fuel

Fuel labeled as off road or non-highway is typically very high in sulfur content and will damage the emission control system. Non-highway fuel is not intended for use in on-highway vehicles.

In addition:

- Use the correct engine oil.
- Do not add gasoline to diesel fuel.
- Do not modify the induction or exhaust systems.

See *Fuel for Diesel Engines on page 9-53* and *Engine Oil on page 10-11*.

Diesel Exhaust Fluid

Diesel Exhaust Fluid (DEF) is used with diesel engines to reduce the amount of regulated emissions produced. The DEF system must be maintained for the vehicle to run

properly. It is normal to hear the DEF system purge fluid back into the tank after the vehicle is shut off.

Locating Diesel Exhaust Fluid

DEF can be purchased at a Chevrolet dealer. It can also be purchased at authorized vehicle dealerships. Additionally, some diesel fueling stations or retailers may have DEF for purchase. For vehicles with an active OnStar® subscription, OnStar can help to locate a DEF retailer. See "Customer Assistance Offices" in the owner manual for phone numbers to assist you in contacting a GM dealer. See *Recommended Fluids and Lubricants on page 11-12*.

As the DEF tank becomes low on fluid, warnings begin with approximately 1 600 km (1,000 miles) of remaining range. These warnings will increase in intensity as the tank becomes empty. Once the tank is empty, the vehicle speed will be limited. If there is an issue with the quality of the fluid or the exhaust fluid system, warnings will be displayed in the Driver Information Center (DIC). See *Diesel Exhaust Fluid on page 9-27*.

Roadside Assistance Program

U.S.: 1-800-243-8872

TTY Users (U.S. Only): 1-888-889-2438

Canada: 1-800-268-6800

As the owner of a new Chevrolet, you are automatically enrolled in the Roadside Assistance program.

See *Roadside Assistance Program on page 13-5*.

OnStar®

This vehicle may be equipped with a comprehensive, in-vehicle system that can connect to a live OnStar Advisor for Emergency, Security, Navigation, Connection, and Diagnostic Services. OnStar services may require a paid subscription. See *OnStar Overview on page 14-1*.

Keys, Doors, and Windows

Keys and Locks
Keys 2-1
Remote Keyless Entry (RKE) System 2-2
Remote Keyless Entry (RKE) System Operation 2-3
Remote Vehicle Start 2-9
Door Locks 2-11
Power Door Locks 2-12
Delayed Locking 2-12
Automatic Door Locks 2-13
Lockout Protection 2-13
Safety Locks 2-13

Doors
Trunk 2-14

Vehicle Security
Vehicle Security 2-16
Vehicle Alarm System 2-16
Immobilizer 2-17
Immobilizer Operation 2-17

Exterior Mirrors
Convex Mirrors 2-18
Manual Mirrors 2-19
Power Mirrors 2-19
Folding Mirrors 2-19
Heated Mirrors 2-19

Interior Mirrors
Interior Rearview Mirrors 2-20
Manual Rearview Mirror 2-20
Automatic Dimming Rearview Mirror 2-20

Windows
Windows 2-20
Power Windows 2-21
Sun Visors 2-23

Roof
Sunroof 2-23

Keys and Locks

Keys

⚠ Warning

Leaving children in a vehicle with an ignition key or Remote Keyless Entry (RKE) transmitter is dangerous and children or others could be seriously injured or killed. They could operate the power window or other controls or make the vehicle move. The windows will function with the key in the ignition or with the RKE transmitter in the vehicle, and children or others could be caught in the path of a closing window. Do not leave children in a vehicle with the ignition key or an RKE transmitter.

The key that is part of the Remote Keyless Entry (RKE) transmitter can be used for the ignition and all locks if the vehicle is a key access vehicle. If the vehicle has the keyless ignition, the key can be used for the locks.

Press the button on the RKE transmitter to extend the key. Press the button and the key blade to retract the key.

If it becomes difficult to turn the key, inspect the key blade for debris. Periodically clean with a brush or pick.

See your dealer if a new key is needed.

If locked out of the vehicle, see *Roadside Assistance Program on page 13-5*.

With an active OnStar subscription, an OnStar Advisor may remotely unlock the vehicle. See *OnStar® on page 1-22*.

Remote Keyless Entry (RKE) System

See *Radio Frequency Statement on page 13-12*.

If there is a decrease in the RKE operating range:

- Check the distance. The transmitter may be too far from the vehicle.
- Check the location. Other vehicles or objects may be blocking the signal.
- Check the transmitter's battery. See “Battery Replacement” later in this section.
- If the transmitter is still not working correctly, see your dealer or a qualified technician for service.

Remote Keyless Entry (RKE) System Operation

The Keyless Access system allows for vehicle entry when the transmitter is within range. See “Keyless Access Operation” later in this section.

The transmitter functions may work up to 60 m (195 ft) away from the vehicle.

Keep in mind that other conditions, such as those previously stated, can impact the performance of the transmitter.

(Lock): Press to lock all doors.

The turn signal indicators may flash and/or the horn may sound on the second press to indicate locking. See *Vehicle Personalization on page 5-36*.

If the driver door is open when is pressed, all doors lock except the driver door, if Unlocked Door Anti Lock Out is enabled through the vehicle personalization.

If the passenger door is open when is pressed, all doors lock.

Pressing may also arm the alarm system. See *Vehicle Alarm System on page 2-16*.

(Unlock): Press to unlock the driver door or all doors. See *Vehicle Personalization on page 5-36*.

The turn signal indicators may flash to indicate unlocking. See *Vehicle Personalization on page 5-36*.

Pressing will disarm the alarm system. See *Vehicle Alarm System on page 2-16*.

HOLD (Remote Trunk Release): Press and hold to release the trunk.

(Vehicle Locator/Panic Alarm): Press and hold briefly to initiate vehicle locator. The exterior lamps flash and the horn chirps three times.

Press and hold for at least three seconds to sound the panic alarm. The horn sounds and the turn signals flash for 30 seconds, or until is pressed again or the vehicle is started.

(Remote Vehicle Start):

If equipped, press and release and then immediately press and hold for at least four seconds to start the engine from outside the vehicle using the RKE transmitter. See *Remote Vehicle Start on page 2-9*.

The RKE transmitter buttons will not operate when the key is in the ignition.

Keyless Access Operation

The Keyless Access system allows for the doors and trunk to be locked and unlocked without pressing the RKE transmitter button. The RKE transmitter must be within 1 m (3 ft) of the door being opened. If the vehicle has this feature, there will be a button on the outside door handles.

Keyless Access can be programmed to unlock all doors on the first lock/unlock press from the driver door. See *Vehicle Personalization on page 5-36*.

Keyless Unlocking/Locking from the Driver Door

When the doors are locked and the RKE transmitter is within range of the door handle, pressing the lock/unlock button on the driver door handle will unlock the driver door. If the lock/unlock button is pressed again within five seconds, all passenger doors will unlock.

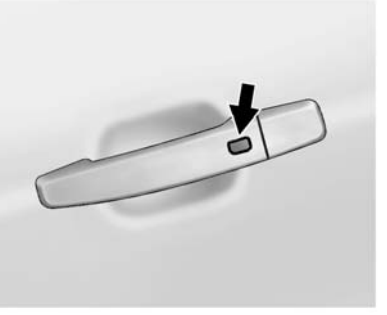

Driver Side Shown, Passenger Similar

Pressing the lock/unlock button will cause all doors to lock if any of the following occur:

- It has been more than five seconds since the first lock/unlock button press.
- Two lock/unlock button presses were used to unlock all doors.
- Any vehicle door has been opened and all doors are now closed.

Keyless Unlocking/Locking from the Passenger Doors

When the doors are locked and the RKE transmitter is within range of the door handle, pressing the lock/unlock button on a passenger door handle will unlock all doors. Pressing the lock/unlock button will cause all doors to lock if any of the following occur:

- The lock/unlock button was used to unlock all doors.
- Any vehicle door has been opened and all doors are now closed.

Passive Locking

If equipped with Keyless Access, the vehicle will lock several seconds after all doors are closed if the vehicle is off and at least one RKE transmitter has been removed or none remain in the vehicle.

If other electronic devices interfere with the RKE transmitter signal, the vehicle may not detect the RKE transmitter inside the vehicle.

If passive locking is enabled, the doors may lock with the RKE transmitter inside the vehicle. Do not leave the RKE transmitter in an unattended vehicle.

Temporary Disable Passive Locking Feature

Temporarily disable the passive locking by pressing and holding 🔓 on the interior door switch with a door open for at least four seconds, or until three chimes are heard. Passive locking will then remain disabled until 🔒 on the interior door is pressed, or until the vehicle is turned on.

To customize the doors to automatically lock when exiting the vehicle, see *Vehicle Personalization on page 5-36*.

Keyless Trunk Opening

Press the touch pad on the rear of the trunk above the license plate to open the trunk when the RKE transmitter is in range.

Keyed Access

To access a vehicle with a dead transmitter battery, see *Door Locks on page 2-11*.

Programming Transmitters to the Vehicle

Only RKE transmitters programmed to the vehicle will work. If a transmitter is lost or stolen, a replacement can be purchased and programmed through your dealer. The vehicle can be reprogrammed so that lost or stolen transmitters no longer work. Any remaining transmitters will need to be reprogrammed. Each vehicle can have up to eight transmitters matched to it.

Programming with a Recognized Transmitter (Key Vehicles Only)

To program a new key:

1. Insert the original, already programmed key in the ignition and turn the key to the ON/RUN position.

2. Turn the key to LOCK/OFF, and remove the key.
3. Insert the new key to be programmed and turn it to the ON/RUN position within five seconds.

   The security light will turn off once the key has been programmed.
4. Repeat Steps 1–3 if additional keys are to be programmed.

If a key is lost or damaged, see your dealer to have a new key made.

Programming without a Recognized Transmitter (Key Vehicles Only)

Program a new key to the vehicle when a recognized key is not available. Canadian regulations require that owners see their dealer.

If there are no currently recognized keys available, follow this procedure to program the first key.

This procedure will take approximately 30 minutes to complete for the first key. The vehicle must be off and all of the keys you wish to program must be with you.

1. Insert the new vehicle key into the ignition.
2. Turn to ON/RUN. The security light will come on.
3. Wait 10 minutes until the security light turns off.
4. Turn the ignition to LOCK/OFF.
5. Repeat Steps 2–4 two more times. After the third time, turn to ON/RUN; the key is learned and all previously known keys will no longer work with the vehicle.

Remaining keys can be learned by following the procedure in “Programming with a Recognized Transmitter (Key Vehicles Only).”

Programming with a Recognized Transmitter (Keyless Access Vehicles Only)

A new transmitter can be programmed to the vehicle when there is one recognized transmitter. To program, the vehicle must be off and all of the transmitters, both currently recognized and new, must be with you.

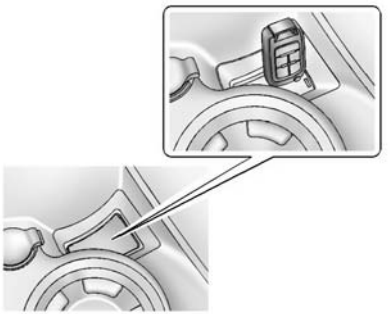

1. Remove the plastic trim piece from the small storage area next to the accessory power outlet toward the front of the console, to access the transmitter slot.

Press the button on the recognized transmitter to extend the key blade. Insert the key blade into the transmitter slot.

2. Insert the vehicle key of the new transmitter into the key lock cylinder on the outside of the driver door and turn the key to the unlock position five times within 10 seconds.

   The Driver Information Center (DIC) displays READY FOR REMOTE #2, 3, 4 or 5.

3. Remove the recognized key and place the new transmitter into the transmitter slot.

4. Press the ENGINE START/STOP button. When the transmitter is learned, the DIC will show that it is ready to program the next transmitter.

5. Remove the transmitter from the transmitter pocket and press 🔓.

   To program additional transmitters, repeat Steps 3–5.

   When all additional transmitters are programmed, press and hold the ENGINE START/STOP button for 12 seconds to exit programming mode. Replace the plastic trim piece from the small storage area.

Programming without a Recognized Transmitter (Keyless Access Vehicles Only)

If there are no currently recognized transmitters available, follow this procedure to program up to five transmitters. This feature is not available in Canada. This procedure will take approximately 30 minutes to complete. The vehicle must be off and all of the transmitters you wish to program must be with you.

1. Insert the vehicle key of the transmitter into the key lock cylinder on the outside of the driver door and turn the key to the unlock position five times within 10 seconds.

   The Driver Information Center (DIC) displays REMOTE LEARN PENDING, PLEASE WAIT.

2. Wait for 10 minutes until the DIC displays PRESS ENGINE START BUTTON TO LEARN and then press the ENGINE START/STOP button.

   The DIC displays will again show REMOTE LEARN PENDING, PLEASE WAIT.

3. Repeat Step 2 two additional times. After the third time all previously known transmitters will no longer work with the vehicle. Remaining transmitters can be relearned during the next steps.

   The DIC display should now show READY FOR REMOTE # 1.

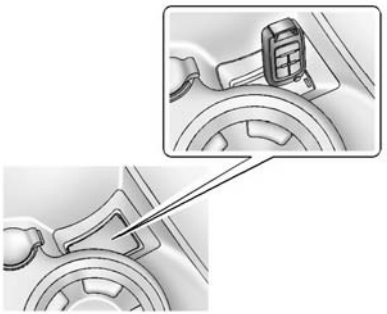

4. Remove the plastic trim piece from the small storage area next to the accessory power outlet toward the front of the console, to access the transmitter slot. Press the button on the recognized transmitter to extend the key blade. Insert the key blade into the transmitter slot.
5. Press the ENGINE START/STOP button. When the transmitter is learned the DIC will show that it is ready to program the next transmitter.
6. Remove the transmitter from the transmitter slot and press 🔓.

   To program additional transmitters, repeat Steps 4–6.

   When all additional transmitters are programmed, press and hold the ENGINE START/STOP button for 12 seconds to exit programming mode. Replace the plastic trim piece from the small storage area.

Starting the Vehicle with a Low Transmitter Battery

If the transmitter battery is weak or if there is interference with the signal, the DIC may display NO REMOTE DETECTED when tying to start the vehicle. The REPLACE BATTERY IN REMOTE KEY message may also be displayed at this time.

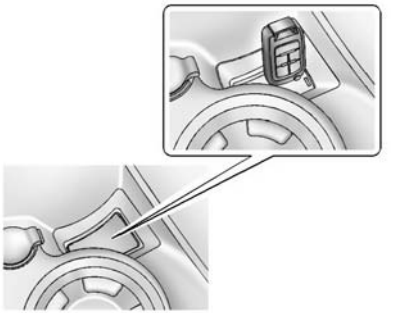

To start the vehicle:

1. Remove the plastic trim piece from the small storage area next to the accessory power outlet toward the front of the console, to access the transmitter slot.
2. Press the button on the recognized transmitter to extend the key blade. Insert the key blade into the transmitter slot.

3. With the vehicle in P (Park) or N (Neutral), press the brake pedal and the ENGINE START/STOP button. See *Starting the Engine on page 9-18* for additional information about the vehicle's keyless ignition with pushbutton start.

   Replace the transmitter battery as soon as possible.

Battery Replacement

Replace the battery if the REPLACE BATTERY IN REMOTE KEY message displays in the DIC. See *Key and Lock Messages on page 5-30*.

> **⚠ Caution**
>
> When replacing the battery, do not touch any of the circuitry on the transmitter. Static from your body could damage the transmitter.

The battery is not rechargeable. To replace the battery:

1. Press the button on the transmitter to extend the key blade.

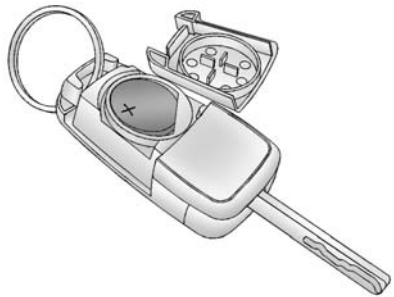

2. Remove the battery cover by prying it with a finger.
3. Remove the battery by pushing on the battery and sliding it toward the key blade.
4. Insert the new battery, positive side facing up. Push the battery down until it is held in place. Replace with a CR2032 or equivalent battery.
5. Snap the battery cover back on to the transmitter.

Remote Vehicle Start

If equipped, this feature allows the engine to be started from outside the vehicle.

(Remote Vehicle Start): This button will be on the RKE transmitter if the vehicle has remote start.

The climate control system will use the previous settings during a remote start. The rear defog may come on during remote start based on cold ambient conditions. The rear fog indicator light does not come on during remote start. If the vehicle has heated seats, they may come on during a remote start. See *Heated Front Seats on page 3-5*.

Laws in some local communities may restrict the use of remote starters. For example, some laws require a person using remote start to have the vehicle in view. Check local regulations for any requirements.

Other conditions can affect the performance of the transmitter. See *Remote Keyless Entry (RKE) System on page 2-2*.

Starting the Vehicle

To start the engine using the remote start feature:

1. Aim the RKE transmitter at the vehicle.
2. Press and release 🔒.
3. Immediately after completing Step 2, press and hold ⟲ for at least four seconds or until the turn signal lamps flash. The turn signal lamps flashing confirms the request to remote start the vehicle has been received.

When the engine starts, the parking lamps will turn on and remain on as long as the engine is running. The doors will be locked and the climate control system may come on.

The engine will continue to run for 10 minutes. After 30 seconds, repeat the steps if a 10-minute extension is desired. Remote start can be extended only once.

Place the ignition to ON/RUN/START.

Extending Engine Run Time

For a 10-minute extension, repeat Steps 1–3 while the engine is still running. An extension can be requested, 30 seconds after starting.

The remote start can be extended once.

When the remote start is extended, the second 10 minutes will start immediately.

For example, if the engine has been running for five minutes, and 10 minutes are added, the engine will run for a total of 15 minutes.

A maximum of two remote starts, or a single start with an extension, is allowed between ignition cycles.

The vehicle's ignition must be turned on and then back off to use remote start again.

Canceling a Remote Start

To cancel a remote start, do one of the following:

- Aim the RKE transmitter at the vehicle and press and hold ⟲ until the parking lamps turn off.
- Turn on the hazard warning flashers.
- Turn the vehicle on and then off.

Conditions in Which Remote Start Will Not Work

The remote vehicle start feature will not operate if:

- The key is in the ignition (Key Access) or if the key is in the vehicle (Keyless Access).
- The hood is not closed.
- The hazard warning flashers are on.
- The malfunction indicator lamp is on.
- The engine coolant temperature is too high.
- The oil pressure is low.
- Two remote vehicle starts, or a single remote start with an extension, have already been used.
- The vehicle is not in P (Park).

Door Locks

⚠ Warning

Unlocked doors can be dangerous.

- Passengers, especially children, can easily open the doors and fall out of a moving vehicle. The chance of being thrown out of the vehicle in a crash is increased if the doors are not locked. So, all passengers should wear safety belts properly and the doors should be locked whenever the vehicle is driven.
- Young children who get into unlocked vehicles may be unable to get out. A child can be overcome by extreme heat and can suffer permanent injuries or even death from heat stroke. Always lock the vehicle whenever leaving it.

(Continued)

Warning (Continued)

- Outsiders can easily enter through an unlocked door when slowing or stopping the vehicle. Lock the doors to help prevent this from happening.

To lock or unlock a door from outside the vehicle, use the Remote Keyless Entry (RKE) transmitter. From inside the vehicle, use the power door lock switch or the manual lock knob.

If equipped with Keyless Access, pushing down the manual lock knob on the driver door will lock all doors.

The doors can also be unlocked from the inside by pulling the door handle. Pulling the door handle again unlatches the door.

Keyless Access

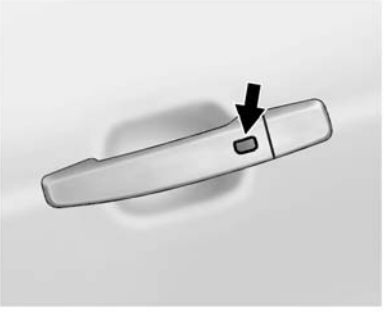

If equipped, use the Keyless Access system to lock and unlock the door. When the doors are locked and the RKE transmitter is within 1 m (3 ft) of the driver door handle, press the lock/unlock button. When unlocking from the driver door, the first press unlocks that door; press again within five seconds to unlock all passenger doors. See *Remote Keyless Entry (RKE) System Operation on page 2-3*.

Power Door Locks

(Lock): Press to lock the doors.

(Unlock): Press to unlock the doors.

Delayed Locking

This feature delays the actual locking of the doors until five seconds after all doors are closed.

Delayed locking can only be turned on when the Open or Unlocked Door Anti Lockout feature has been turned off.

When is pressed on the power door lock switch with the door open, a chime will sound three times indicating that delayed locking is active.

The doors will then lock automatically five seconds after all doors are closed. If a door is reopened before five seconds have elapsed, the five-second timer will reset once all the doors are closed again.

Press on the door lock switch again, or press on the RKE transmitter, to override this feature and lock the doors immediately.

Delayed locking can be programmed through the Driver Information Center (DIC). See *Vehicle Personalization on page 5-36*.

Automatic Door Locks

When the doors are closed, the ignition is on, and the shift lever is moved out of P (Park) for an automatic transmission, or the vehicle speed is above 13 km/h (8 mph) for a manual transmission, the doors will lock.

To unlock the doors:

- Press 🔓.
- For automatic transmissions, shift the vehicle into P (Park).
- For manual transmissions and a keyed ignition system, remove the key from the ignition when parked.
- For manual transmissions and a pushbutton start system, turn the vehicle off when parked.

The automatic door lock feature cannot be disabled.

See *Vehicle Personalization on page 5-36*.

Lockout Protection

Keyed Ignition: When locking is requested with the driver door open and the key in the ignition, all the doors will lock and then the driver door will unlock.

This can be manually overridden by pressing and holding 🔒 on the power door lock switch.

Pushbutton Start: When locking is requested with the driver door open and the vehicle is in ACC/ACCESSORY or ON/RUN/START, all the doors will lock and then the driver door will unlock. If the vehicle is off and locking is requested while a door is open, when all doors are closed the vehicle will check for RKE transmitters inside. If an RKE transmitter is detected and the number of RKE transmitters inside has not reduced, the driver door will unlock.

This can be manually overridden by pressing and holding 🔒 on the power door lock switch.

Open/Unlocked Door Anti Lockout, when ON, will unlock the driver door if locking is requested while the driver door is open. This feature can be turned on or off using the vehicle personalization menus. See *Vehicle Personalization on page 5-36*.

Safety Locks

The rear door safety locks prevent passengers from opening the rear doors from inside the vehicle.

Manual Safety Locks

If equipped, the safety lock is located on the inside edge of the rear doors. To use the safety lock:

1. Insert the key into the safety lock slot and turn it so the slot is in the horizontal position.
2. Close the door.
3. Do the same for the other rear door.

To open a rear door when the safety lock is on:

1. Unlock the door by activating the inside handle, by using the power door lock switch, or by using the Remote Keyless Entry (RKE) transmitter.
2. Open the door from the outside.

To cancel the safety lock:

1. Unlock the door and open it from the outside.
2. Insert the key into the safety lock slot and turn it so the slot is in the vertical position. Do the same for the other door.

Doors

Trunk

⚠ Warning

Exhaust gases can enter the vehicle if it is driven with the liftgate, trunk/hatch open, or with any objects that pass through the seal between the body and the trunk/hatch or liftgate. Engine exhaust contains carbon monoxide (CO) which cannot be seen or smelled. It can cause unconsciousness and even death.

If the vehicle must be driven with the liftgate, or trunk/hatch open:

- Close all of the windows.
- Fully open the air outlets on or under the instrument panel.

(Continued)

Warning (Continued)

- Adjust the climate control system to a setting that brings in only outside air and set the fan speed to the highest setting. See “Climate Control Systems” in the Index.
- If the vehicle has a power liftgate, disable the power liftgate function.

For more information about carbon monoxide, see *Engine Exhaust on page 9-26*.

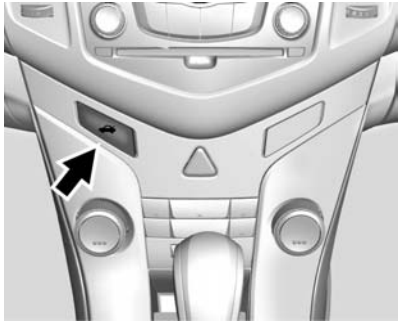

Press the trunk release button to open the trunk. The vehicle must be off, or stopped with the parking brake applied for manual transmissions, or the shift lever in P (Park) for automatic transmissions.

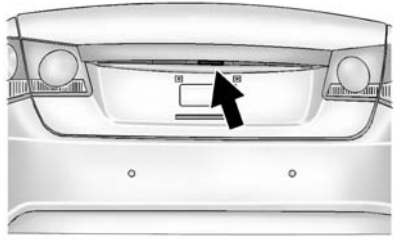

To open the trunk from outside the vehicle, press HOLD on the Remote Keyless Entry (RKE) transmitter, or press the touch pad above the license plate when the doors are unlocked.

If equipped with Keyless Access, the trunk may be opened while the vehicle is locked by pressing the touch pad above the license plate while the RKE transmitter is within 1 m (3 ft) of the rear of the vehicle.

Emergency Trunk Release Handle

⚠ Caution

Do not use the emergency trunk release handle as a tie-down or anchor point when securing items in the trunk as it could damage the handle.

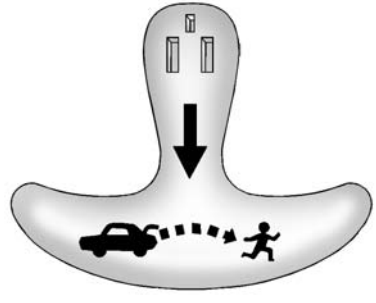

There is a glow-in-the-dark emergency trunk release handle on the trunk lid. The handle will glow following exposure to light. Pull the release handle to open the trunk from the inside.

Return to the stored position after use.

Vehicle Security

This vehicle has theft-deterrent features; however, they do not make the vehicle impossible to steal.

Vehicle Alarm System

This vehicle has an anti-theft alarm system.

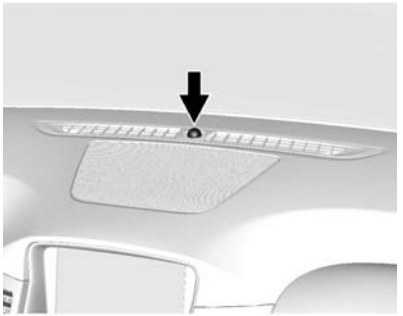

The indicator light, on the instrument panel near the windshield, indicates the status of the system:

Off: Alarm system is disarmed.

On Solid: Vehicle is secured during the delay to arm the system.

Fast Flash: Vehicle is unsecured. A door, the hood, or the trunk is open.

Slow Flash: Alarm system is armed.

Arming the Alarm System

1. Close the trunk and the hood. Turn off the vehicle.
2. Lock the vehicle in one of three ways:
   - Use the RKE transmitter.
   - Use the Keyless Access system, if equipped.
   - With a door open, press the interior 🔒.
3. After 30 seconds the alarm system will arm, and the indicator light will begin to slowly flash indicating the alarm system is operating. Pressing 🔒 on the RKE transmitter a second time

will bypass the 30-second delay and immediately arm the alarm system.

The vehicle alarm system will not arm if the doors are locked with the key.

If the driver door is opened without first unlocking with the RKE transmitter, the horn will chirp and the lights will flash to indicate pre-alarm. If the vehicle is not started, or the door is not unlocked by pressing 🔓 on the RKE transmitter during the 10-second pre-alarm, the alarm will be activated.

If a door, the hood, or the trunk is opened without first disarming the system, the turn signals will flash and the horn will sound for about 30 seconds. The alarm system will then re-arm to monitor for the next unauthorized event.

Disarming the Alarm System

Do one of the following to disarm the alarm system or turn off the alarm if it has been activated:

- Press 🔓 on the RKE transmitter.
- Unlock the vehicle using the Keyless Access system, if equipped.
- Start the vehicle.

To avoid setting off the alarm by accident:

- Lock the vehicle after all occupants have left the vehicle and all doors are closed.
- Always unlock a door with the RKE transmitter or use the Keyless Access system, if equipped.

Unlocking the driver door with the key will not disarm the system or turn off the alarm.

How to Detect a Tamper Condition

If 🔓 is pressed on the RKE transmitter and the horn chirps and the lamps flash three times, an alarm occurred previously while the alarm system was armed.

If the alarm has been activated, a message will appear on the DIC. See *Security Messages on page 5-33*.

Immobilizer

See *Radio Frequency Statement on page 13-12*.

Immobilizer Operation

This vehicle has a passive theft-deterrent system.

The system does not have to be manually armed or disarmed.

The vehicle is automatically immobilized when the key is removed from the ignition.

The system is automatically disarmed when the vehicle is started with the correct key. The key uses a transponder that matches an immobilizer control unit in the vehicle and automatically disarms the system. Only an authorized key starts the vehicle. The vehicle may not start if the key is damaged.

The security light in the instrument cluster comes on if there is a problem with arming or disarming the theft-deterrent system.

When trying to start the vehicle, the security light comes on briefly when the ignition is turned on.

If the engine does not start and the security light stays on, there is a problem with the system. Turn the ignition off and try again.

If the engine still does not start, and the key appears to be undamaged or the light continues to stay on, try another ignition key. If the engine does not start with the other key, the vehicle needs service. If the vehicle does start, the first key may be damaged. See your dealer who can service the theft-deterrent system and have a new key made.

Do not leave the key or device that disarms or deactivates the theft-deterrent system in the vehicle.

Exterior Mirrors

Convex Mirrors

⚠ Warning

A convex mirror can make things, like other vehicles, look farther away than they really are. If you cut too sharply into the right lane, you could hit a vehicle on the right. Check the inside mirror or glance over your shoulder before changing lanes.

The passenger side mirror is convex shaped. A convex mirror's surface is curved so more can be seen from the driver seat.

Manual Mirrors

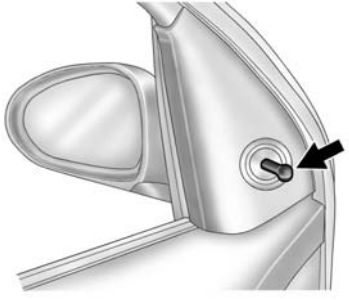

If equipped, there are adjustment controls next to each mirror.

Power Mirrors

To adjust the mirror:

1. Turn the selector switch to L (Left) or R (Right) to choose the driver or passenger mirror.
2. Move the control to adjust the mirror.
3. Turn the selector switch to the O position to deselect the mirror.

Folding Mirrors

Manual Folding Mirrors

The vehicle has manual folding mirrors. These mirrors can be folded inward to prevent damage when going through an automatic car wash. To fold, pull the mirror toward the vehicle. Push the mirror outward to return it to the original position.

Heated Mirrors

The vehicle may have heated mirrors.

(Rear Window Defogger): Press to heat the outside rearview mirrors. See “Rear Window Defogger” under *Automatic Climate Control System on page 8-3*.

Interior Mirrors

Interior Rearview Mirrors

Adjust the rearview mirror for a clear view of the area behind your vehicle.

If equipped with OnStar, the vehicle may have three control buttons at the bottom of the mirror. See your dealer for more information about OnStar and how to subscribe to it. See *OnStar Overview on page 14-1*.

Do not spray glass cleaner directly on the mirror. Use a soft towel dampened with water.

Manual Rearview Mirror

If equipped with a manual rearview mirror, push the tab forward for daytime use and pull it for nighttime use to avoid glare from the headlamps from behind.

Automatic Dimming Rearview Mirror

If equipped, automatic dimming reduces the glare of headlamps from behind. The dimming feature comes on when the vehicle is started.

Windows

⚠ Warning

Never leave a child, a helpless adult, or a pet alone in a vehicle, especially with the windows closed in warm or hot weather. They can be overcome by the extreme heat and suffer permanent injuries or even death from heat stroke.

The vehicle aerodynamics are designed to improve fuel economy performance. This may result in a pulsing sound when either rear window is down and the front windows are up. To reduce the sound, open either a front window or the sunroof, if equipped.

Power Windows

⚠ Warning

Children could be seriously injured or killed if caught in the path of a closing window. Never leave keys in a vehicle with children. When there are children in the rear seat, use the window lockout button to prevent operation of the windows. See *Keys on page 2-1*.

Press the switch down to open the window. Pull the front of the switch up to close it.

The switches work when the ignition is in ON/RUN, ACC/ACCESSORY, or in Retained Accessory Power (RAP). See *Retained Accessory Power (RAP) on page 9-23*.

Express Window Operation

This vehicle may have windows with an express-up or down feature. This feature allows the window to be lowered or raised without holding the switch. Passenger side and rear windows only have express-down. Pull a window switch up or push it down all the way, release it, and the window goes down or up automatically. Stop the window by pushing or pulling the switch.

Obstacle Detection Feature

If equipped with express-up, and an object is in the path of the window when closing, the window will stop at the obstruction and auto-reverse to a preset factory position. Weather conditions such as severe cold and/or ice may also cause the window to auto-reverse. The window will return to normal operation once the obstruction or condition is removed.

If conditions prevent the window from closing and the window continues to auto-reverse, it is possible to close the window with the ignition in ON/RUN by holding the window switch in the partially or fully pulled up position. Release of the switch from the partially pulled up position will cause the window to stop. Release of the switch from the

fully pulled up position will activate the express-up and related obstacle detection features.

Programming the Power Windows

If the battery on the vehicle has been recharged or disconnected, or is not working, the windows will need to be reprogrammed for the express-up feature to work. Before reprogramming, replace or recharge the vehicle's battery.

To program each front window:

1. With the ignition in ACC/ ACCESSORY or ON/RUN, or when RAP is active, close all doors.
2. Press and hold the power window switch until the window is fully open.
3. Pull the power window switch up until the window is fully closed.
4. Continue holding the switch up for approximately two seconds after the window is completely closed.

The window is now reprogrammed. Repeat the process for the other windows.

Window Lockout

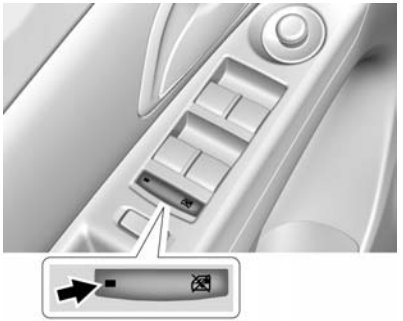

This feature prevents the rear passenger windows from operating, except from the driver position.

Press to activate the rear window lockout. The indicator light comes on when activated.

Press again to deactivate the lockout.

If the indicator light flashes, the feature may not be working properly.

Overload Feature

If the windows are operated repeatedly in short intervals, the window operation is disabled for a short time.

Sun Visors

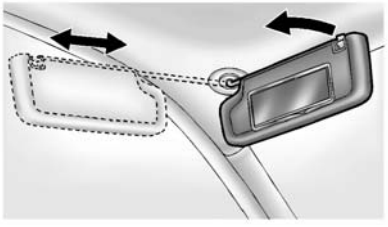

Pull the sun visor down to block glare. Detach the sun visor from the center mount to pivot to the side window or, if equipped, extend along the rod.

Roof

Sunroof

The sunroof only operates when the ignition is in ON/RUN or ACC/ACCESSORY, or when Retained Accessory Power (RAP) is active. See *Retained Accessory Power (RAP) on page 9-23*.

To open or close the sunroof, press the open or close sunroof switch (1) to the first detent position.

To express open or close the sunroof with the safety function enabled, press the open or close sunroof switch (1) to the second detent position and release. To stop the movement, press the switch again.

To automatically tilt or close the sunroof, press the tilt open or close sunroof switch (2).

If an object is in the path of the sunroof while it is closing, the anti-pinch feature will detect the object and stop the sunroof.

The sunroof glass panel cannot be opened or closed if the vehicle has an electrical failure.

Sunshade

The sunshade is manually operated. Close or open the sunshade by sliding. When the sunroof is opened, the sunshade is always open.

Safety Function

If the sunroof has any resistance during automatic closing, it will immediately stop and reverse.

To override the safety function, press and hold the close sunroof switch. The sunroof closes without the safety function. To stop the movement, release the switch.

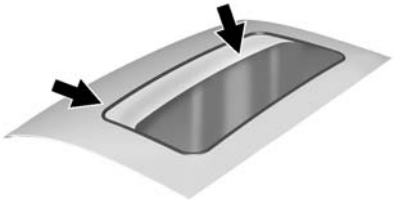

Dirt and debris may collect on the sunroof seal or in the track. This could cause an issue with sunroof operation or noise. It could also plug the water drainage system. Periodically open the sunroof and remove any obstacles or loose debris. Wipe the sunroof seal and roof sealing area using a clean cloth, mild soap, and water. Do not remove grease from the sunroof.

If water is seen dripping into the water drainage system, this is normal.

Seats and Restraints

Head Restraints
Head Restraints 3-2

Front Seats
Seat Adjustment 3-3
Power Seat Adjustment 3-4
Reclining Seatbacks 3-4
Heated Front Seats 3-5

Rear Seats
Rear Seats 3-6

Safety Belts
Safety Belts 3-8
How to Wear Safety Belts Properly 3-10
Lap-Shoulder Belt 3-11
Safety Belt Use During Pregnancy 3-13
Safety Belt Extender 3-14
Safety System Check 3-14
Safety Belt Care 3-14
Replacing Safety Belt System Parts after a Crash 3-14

Airbag System
Airbag System 3-15
Where Are the Airbags? 3-17
When Should an Airbag Inflate? 3-19
What Makes an Airbag Inflate? 3-20
How Does an Airbag Restrain? 3-20
What Will You See after an Airbag Inflates? 3-20
Passenger Sensing System 3-22
Servicing the Airbag-Equipped Vehicle 3-26
Adding Equipment to the Airbag-Equipped Vehicle . . . 3-27
Airbag System Check 3-27
Replacing Airbag System Parts after a Crash 3-28

Child Restraints
Older Children 3-28
Infants and Young Children 3-30
Child Restraint Systems 3-33
Where to Put the Restraint . . . 3-35
Lower Anchors and Tethers for Children (LATCH System) 3-36
Replacing LATCH System Parts After a Crash 3-43
Securing Child Restraints (Rear Seat) 3-43
Securing Child Restraints (Front Passenger Seat) 3-46

Head Restraints

The vehicle's front and rear seats have adjustable head restraints in the outboard seating positions.

⚠ Warning

With head restraints that are not installed and adjusted properly, there is a greater chance that occupants will suffer a neck/spinal injury in a crash. Do not drive until the head restraints for all occupants are installed and adjusted properly.

Adjust the head restraint so that the top of the restraint is at the same height as the top of the occupant's head. This position reduces the chance of a neck injury in a crash.

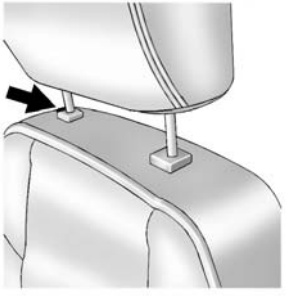

The height of the head restraint can be adjusted. Pull the head restraint up to raise it. Try to move the head restraint to make sure that it is locked in place.

To lower the head restraint, press the button, located on the top of the seatback, and push the head restraint down. Try to move the head restraint after the button is released to make sure that it is locked in place.

The front seat outboard head restraints are not removable.

If you are installing a child restraint in the rear seat, see “Securing a Child Restraint Designed for the LATCH System” under *Lower Anchors and Tethers for Children (LATCH System) on page 3-36*.

Front Seats

Seat Adjustment

⚠ Warning

You can lose control of the vehicle if you try to adjust a driver seat while the vehicle is moving. Adjust the driver seat only when the vehicle is not moving.

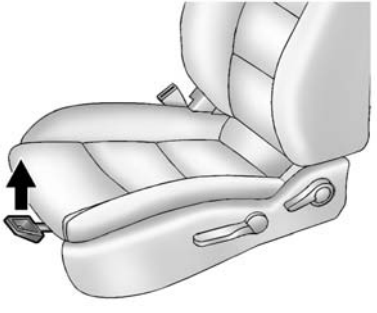

To adjust a manual seat:

1. Pull the handle at the front of the seat.
2. Slide the seat to the desired position and release the handle.
3. Try to move the seat back and forth to be sure it is locked in place.

Seat Height Adjuster

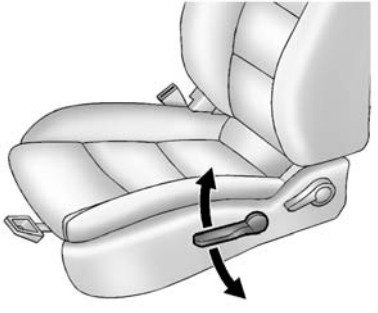

If available, move the lever up or down to manually raise or lower the seat.

Power Seat Adjustment

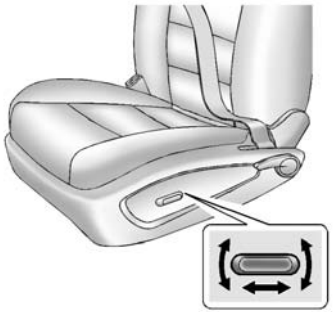

To adjust the power driver seat, if equipped:

- Move the seat forward or rearward by sliding the control forward or rearward.
- Raise or lower the front part of the seat cushion by moving the front of the control up or down.
- Raise or lower the entire seat by moving the rear of the control up or down.

To adjust the seatback, see *Reclining Seatbacks on page 3-4*.

Reclining Seatbacks

⚠ Warning

If either seatback is not locked, it could move forward in a sudden stop or crash. That could cause injury to the person sitting there. Always push and pull on the seatbacks to be sure they are locked.

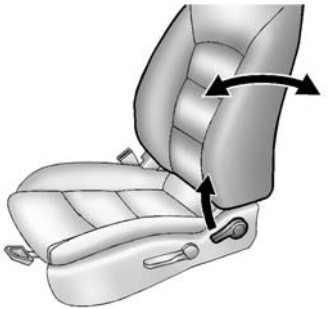

To recline the seatback:

1. Lift the lever.

   If necessary, move the safety belt out of the way to access the lever.
2. Move the seatback to the desired position, then release the lever to lock the seatback in place.
3. Push and pull on the seatback to make sure it is locked.

To return the seatback to an upright position:

1. Lift the lever fully without applying pressure to the seatback, and the seatback returns to the upright position.
2. Push and pull on the seatback to make sure it is locked.

⚠ Warning

Sitting in a reclined position when the vehicle is in motion can be dangerous. Even when buckled up, the safety belts cannot do their job.

The shoulder belt will not be against your body. Instead, it will be in front of you. In a crash, you could go into it, receiving neck or other injuries.

(Continued)

Warning (Continued)

The lap belt could go up over your abdomen. The belt forces would be there, not at your pelvic bones. This could cause serious internal injuries.

For proper protection when the vehicle is in motion, have the seatback upright. Then sit well back in the seat and wear the safety belt properly.

Do not have a seatback reclined if the vehicle is moving.

Heated Front Seats

⚠ Warning

If you cannot feel temperature change or pain to the skin, the seat heater may cause burns. To reduce the risk of burns, people with such a condition should use care when using the seat heater, especially for long periods of time. Do not place anything on the seat that insulates against heat, such as a blanket, cushion, cover, or similar item. This may cause the seat heater to overheat. An overheated seat heater may cause a burn or may damage the seat.

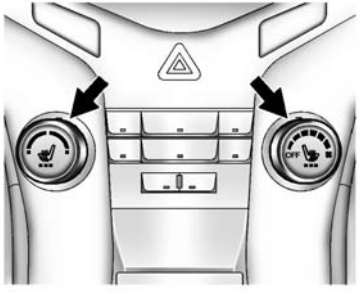

If available, the controls are on the center stack. The engine must be running to operate the heated seats.

Press or to heat the driver or passenger seat cushion and seatback.

Press the control once for the highest setting. With each press of the control, the heated seat will change to the next lower setting, and then the off setting. Three lights indicate the highest setting and one light the lowest.

The passenger seat may take longer to heat up.

Remote Start Heated Seats

When it is cold outside, the heated seats can be turned on automatically during a remote vehicle start. The heated seats will be canceled when the ignition is turned on. Press the control to use the heated seats after the vehicle is started.

The heated seat indicator lights on the control do not turn on during a remote start.

The temperature performance of an unoccupied seat may be reduced. This is normal.

The heated seats will not turn on during a remote start unless the heated seat feature is enabled in the vehicle personalization menu. See *Remote Vehicle Start on page 2-9* and *Vehicle Personalization on page 5-36*.

Rear Seats

Either side of the rear seatback can be folded.

To fold the rear seatbacks:

1. Place the front seatbacks in the upright position. See *Reclining Seatbacks on page 3-4*.

⚠ Caution

Folding a rear seat with the safety belts still fastened may cause damage to the seat or the safety belts. Always unbuckle the safety belts and return them to their normal stowed position before folding a rear seat.

2. Unbuckle the rear safety belts and make sure the safety belt buckles are stowed in the pockets in the seat cushion.

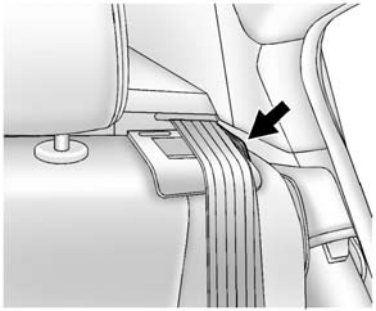

3. Make sure the safety belt is in the guide on top of the seatback.

4. Reach under the safety belt and pull the lever to unlock the seatback.

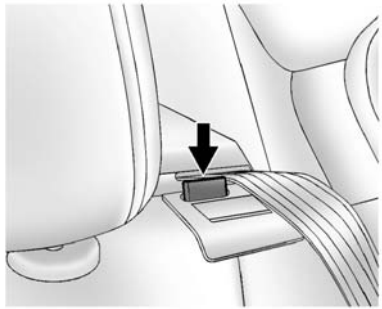

A tab near the seatback lever raises when the seatback is unlocked.

5. Fold the seatback forward.

Repeat Steps 1–4 for the other seatback, if desired.

To raise the seatback:

⚠ Warning

A safety belt that is improperly routed, not properly attached, or twisted will not provide the protection needed in a crash. The person wearing the belt could be seriously injured. After raising the rear seatback, always check to be sure that the safety belts are properly routed and attached, and are not twisted.

1. Make sure the safety belt is in the guide on the top of the seatback.

2. Lift the seatback up and push it rearward until it clicks into place. Keep the safety belts clear of the seatback and untwisted.

   A tab near the seatback lever retracts when the seatback is locked in place.

   The center rear safety belt may lock when you raise the seatback. If this happens, let the belt go back all the way and start again.

⚠ Warning

If the seatback is not locked, it could move forward in a sudden stop or crash. That could cause injury to the person sitting there. Always pull forward on the top of the seatback at the area of the latch to be sure it is locked.

3. Push and pull on the seatback to make sure it is locked into position.
4. Repeat Steps 1–3 for the other seatback, if necessary.

Keep the seat in the upright locked position when not in use.

Safety Belts

This section of the manual describes how to use safety belts properly. It also describes some things not to do with safety belts.

⚠ Warning

Do not let anyone ride where a safety belt cannot be worn properly. In a crash, if you or your passenger(s) are not wearing safety belts, injuries can be much worse than if you are wearing safety belts. You can be seriously injured or killed by hitting things inside the vehicle harder or by being ejected from the vehicle. In addition, anyone who is not buckled up can strike other passengers in the vehicle.

It is extremely dangerous to ride in a cargo area, inside or outside of a vehicle. In a collision, passengers riding in these areas

(Continued)

Warning (Continued)

are more likely to be seriously injured or killed. Do not allow passengers to ride in any area of the vehicle that is not equipped with seats and safety belts.

Always wear a safety belt, and check that all passenger(s) are restrained properly too.

This vehicle has indicators as a reminder to buckle the safety belts. See *Safety Belt Reminders on page 5-11*.

This vehicle may have the Safety Belt Assurance System, which may prevent the vehicle from shifting out of P (Park). See *Safety Belt Messages on page 5-32*.

Why Safety Belts Work

When riding in a vehicle, you travel as fast as the vehicle does. If the vehicle stops suddenly, you keep going until something stops you. It could be the windshield, the instrument panel, or the safety belts!

When you wear a safety belt, you and the vehicle slow down together. There is more time to stop because you stop over a longer distance and, when worn properly, your strongest bones take the forces from the safety belts. That is why wearing safety belts makes such good sense.

Questions and Answers About Safety Belts

Q: Will I be trapped in the vehicle after a crash if I am wearing a safety belt?

A: You *could* be — whether you are wearing a safety belt or not. Your chance of being conscious during and after a crash, so you *can* unbuckle and get out, is *much* greater if you are belted.

Q: If my vehicle has airbags, why should I have to wear safety belts?

A: Airbags are supplemental systems only; so they work *with* safety belts — not instead of them. Whether or not an airbag is provided, all occupants still have to buckle up to get the most protection.

Also, in nearly all states and in all Canadian provinces, the law requires wearing safety belts.

How to Wear Safety Belts Properly

This section is only for people of adult size.

There are special things to know about safety belts and children. And there are different rules for smaller children and infants. If a child will be riding in the vehicle, see *Older Children on page 3-28* or *Infants and Young Children on page 3-30*. Follow those rules for everyone's protection.

It is very important for all occupants to buckle up. Statistics show that unbelted people are hurt more often in crashes than those who are wearing safety belts.

There are important things to know about wearing a safety belt properly.

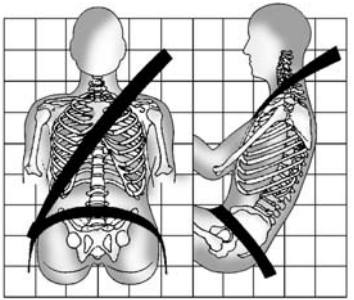

- Sit up straight and always keep your feet on the floor in front of you.
- Always use the correct buckle for your seating position.
- Wear the lap part of the belt low and snug on the hips, just touching the thighs. In a crash, this applies force to the strong pelvic bones and you would be less likely to slide under the lap belt. If you slid under it, the belt would apply force on your abdomen. This could cause serious or even fatal injuries.
- Wear the shoulder belt over the shoulder and across the chest. These parts of the body are best able to take belt restraining forces. The shoulder belt locks if there is a sudden stop or crash.

⚠ Warning

You can be seriously injured, or even killed, by not wearing your safety belt properly.

- Never allow the lap or shoulder belt to become loose or twisted.
- Never wear the shoulder belt under both arms or behind your back.
- Never route the lap or shoulder belt over an armrest.

Lap-Shoulder Belt

All seating positions in the vehicle have a lap-shoulder belt.

The following instructions explain how to wear a lap-shoulder belt properly.

1. Adjust the seat, if the seat is adjustable, so you can sit up straight. To see how, see “Seats” in the Index.

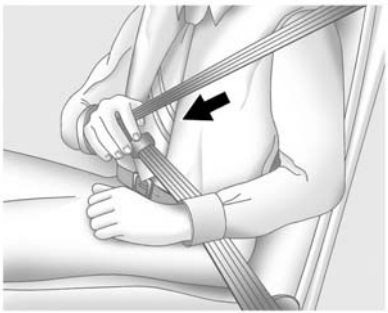

2. Pick up the latch plate and pull the belt across you. Do not let it get twisted.

   The lap-shoulder belt may lock if you pull the belt across you very quickly. If this happens, let the belt go back slightly to unlock it. Then pull the belt across you more slowly.

   If the shoulder portion of a passenger belt is pulled out all the way, the child restraint locking feature may be engaged. If this happens, let the belt go back all the way and start again.

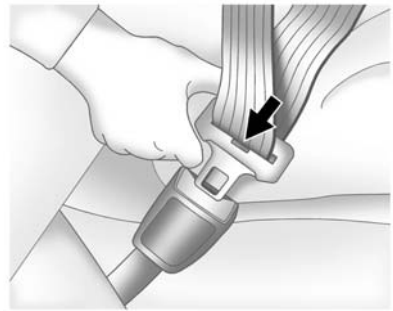

3. Push the latch plate into the buckle until it clicks.

   Pull up on the latch plate to make sure it is secure. If the belt is not long enough, see *Safety Belt Extender on page 3-14*.

   Position the release button on the buckle so that the safety belt could be quickly unbuckled if necessary.

   If equipped with a shoulder belt height adjuster, move it to the height that is right for you. See “Shoulder Belt Height Adjuster”

later in this section for instructions on use and important safety information.

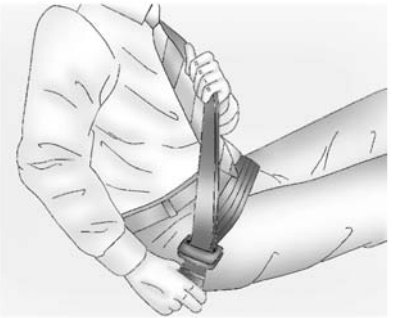

4. To make the lap part tight, pull up on the shoulder belt.

To unlatch the belt, push the button on the buckle. The belt should return to its stowed position.

Before a door is closed, be sure the safety belt is out of the way. If a door is slammed against a safety belt, damage can occur to both the safety belt and the vehicle.

Shoulder Belt Height Adjuster

The vehicle has a shoulder belt height adjuster for the driver and front outboard passenger seating positions.

Adjust the guide so the shoulder portion of the belt is on the shoulder and not falling off of it. The belt should be close to, but not contacting, the neck. Improper shoulder belt height adjustment could reduce the effectiveness of the safety belt in a crash. See *How to Wear Safety Belts Properly on page 3-10*.

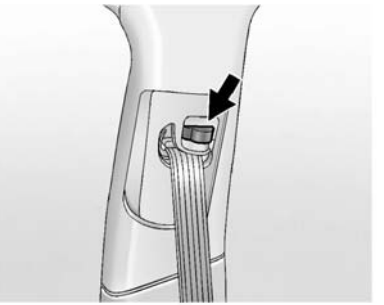

Press the release button and move the height adjuster to the desired position. The adjuster can be moved up by pushing the slide/trim up. After the adjuster is set to the

desired position, try to move it down without pushing the release button to make sure it has locked into position.

Safety Belt Pretensioners

This vehicle has safety belt pretensioners for front outboard occupants. Although the safety belt pretensioners cannot be seen, they are part of the safety belt assembly. They can help tighten the safety belts during the early stages of a moderate to severe frontal, near frontal, or rear crash if the threshold conditions for pretensioner activation are met. Safety belt pretensioners can also help tighten the safety belts in a side crash or a rollover event.

Pretensioners work only once. If the pretensioners activate in a crash, the pretensioners and probably other parts of the vehicle's safety belt system will need to replaced. See *Replacing Safety Belt System Parts after a Crash on page 3-14*.

Rear Safety Belt Comfort Guides

Rear safety belt comfort guides may provide added safety belt comfort for older children who have outgrown booster seats and for some adults. When installed on a shoulder belt, the comfort guide positions the belt away from the neck and head.

Comfort guides are available through your dealer for the rear outboard seating positions. Instructions are included with the guide.

Safety Belt Use During Pregnancy

Safety belts work for everyone, including pregnant women. Like all occupants, they are more likely to be seriously injured if they do not wear safety belts.

A pregnant woman should wear a lap-shoulder belt, and the lap portion should be worn as low as possible, below the rounding, throughout the pregnancy.

The best way to protect the fetus is to protect the mother. When a safety belt is worn properly, it is more likely that the fetus will not be hurt in a crash. For pregnant women, as for anyone, the key to making safety belts effective is wearing them properly.

Safety Belt Extender

If the vehicle's safety belt will fasten around you, you should use it.

But if a safety belt is not long enough, your dealer will order you an extender. When you go in to order it, take the heaviest coat you will wear, so the extender will be long enough for you. To help avoid personal injury, do not let someone else use it, and use it only for the seat it is made to fit. The extender has been designed for adults. Never use it for securing child seats. To wear it, attach it to the regular safety belt. See the instruction sheet that comes with the extender.

Safety System Check

Now and then, check that the safety belt reminder light, safety belts, buckles, latch plates, retractors, and anchorages are all working properly. Look for any other loose or damaged safety belt system parts that might keep a safety belt system from doing its job. See your dealer to have it repaired. Torn or frayed safety belts may not protect you in a crash. They can rip apart under impact forces. If a belt is torn or frayed, get a new one right away.

Make sure the safety belt reminder light is working. See *Safety Belt Reminders on page 5-11*.

Keep safety belts clean and dry. See *Safety Belt Care on page 3-14*.

Safety Belt Care

Keep belts clean and dry.

⚠ Warning

Do not bleach or dye safety belts. It may severely weaken them. In a crash, they might not be able to provide adequate protection. Clean safety belts only with mild soap and lukewarm water.

Replacing Safety Belt System Parts after a Crash

⚠ Warning

A crash can damage the safety belt system in the vehicle. A damaged safety belt system may not properly protect the person using it, resulting in serious injury or even death in a crash. To help make sure the safety belt systems are working properly after a crash, have them inspected and any necessary replacements made as soon as possible.

After a minor crash, replacement of safety belts may not be necessary. But the safety belt assemblies that were used during any crash may have been stressed or damaged.

See your dealer to have the safety belt assemblies inspected or replaced.

New parts and repairs may be necessary even if the safety belt system was not being used at the time of the crash.

Have the safety belt pretensioners checked if the vehicle has been in a crash, or if the airbag readiness light stays on after you start the vehicle or while you are driving. See *Airbag Readiness Light on page 5-12*.

Airbag System

The vehicle has the following airbags:

- A frontal airbag for the driver.
- A frontal airbag for the front outboard passenger.
- A knee airbag for the driver.
- A knee airbag for the front outboard passenger.
- A seat-mounted side impact airbag for the driver.
- A seat-mounted side impact airbag for the front outboard passenger.
- Seat-mounted side impact airbags for the second row outboard passengers.
- A roof-rail airbag for the driver and the passenger seated directly behind the driver.
- A roof-rail airbag for the front outboard passenger and the passenger seated directly behind the front outboard passenger.

All vehicle airbags have the word AIRBAG on the trim or on a label near the deployment opening.

For frontal airbags, the word AIRBAG is on the center of the steering wheel for the driver and on the instrument panel for the front outboard passenger.

For knee airbags, the word AIRBAG is on the lower part of the instrument panel.

For seat-mounted side impact airbags, the word AIRBAG is on the side of the seatback closest to the door.

For roof-rail airbags, the word AIRBAG is on the ceiling or trim.

Airbags are designed to supplement the protection provided by safety belts. Even though today's airbags are also designed to help reduce

the risk of injury from the force of an inflating bag, all airbags must inflate very quickly to do their job.

Here are the most important things to know about the airbag system:

⚠ Warning

You can be severely injured or killed in a crash if you are not wearing your safety belt, even with airbags. Airbags are designed to work with safety belts, not replace them. Also, airbags are not designed to inflate in every crash. In some crashes safety belts are the only restraint. See *When Should an Airbag Inflate? on page 3-19*.

Wearing your safety belt during a crash helps reduce the chance of hitting things inside the vehicle or being ejected from it. Airbags are “supplemental restraints” to the safety belts. Everyone in the

(Continued)

Warning (Continued)

vehicle should wear a safety belt properly, whether or not there is an airbag for that person.

⚠ Warning

Because airbags inflate with great force and faster than the blink of an eye, anyone who is up against, or very close to any airbag when it inflates can be seriously injured or killed. Do not sit unnecessarily close to any airbag, as you would be if sitting on the edge of the seat or leaning forward. Safety belts help keep you in position before and during a crash. Always wear a safety belt, even with airbags. The driver should sit as far back as possible while still maintaining control of the vehicle.

(Continued)

Warning (Continued)

Occupants should not lean on or sleep against the door or side windows in seating positions with seat-mounted side impact airbags and/or roof-rail airbags.

⚠ Warning

Children who are up against, or very close to, any airbag when it inflates can be seriously injured or killed. Always secure children properly in the vehicle. To read how, see *Older Children on page 3-28* or *Infants and Young Children on page 3-30*.

There is an airbag readiness light on the instrument cluster, which shows the airbag symbol. The system checks the airbag electrical system for malfunctions. The light tells you if there is an electrical problem. See *Airbag Readiness Light on page 5-12* for more information.

Where Are the Airbags?

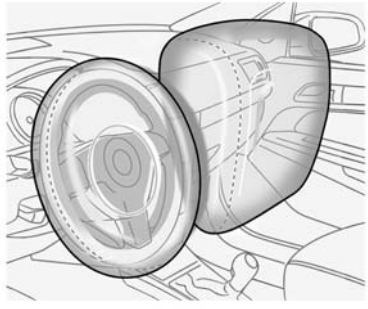

The driver frontal airbag is in the center of the steering wheel.

The front outboard passenger frontal airbag is in the passenger side instrument panel.

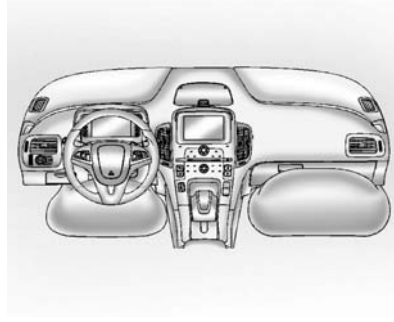

The driver knee airbag is below the steering column. The front outboard passenger knee airbag is below the glove box.

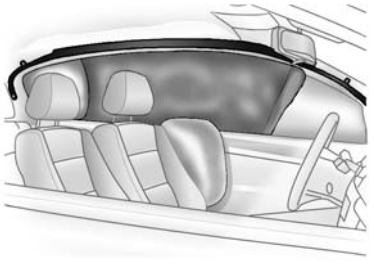

Driver Side Shown, Passenger Side Similar

The seat-mounted side impact airbags for the driver and front outboard passenger are in the side of the seatbacks closest to the door.

The roof-rail airbags for the driver, front outboard passenger, and second row outboard passengers are in the ceiling above the side windows.

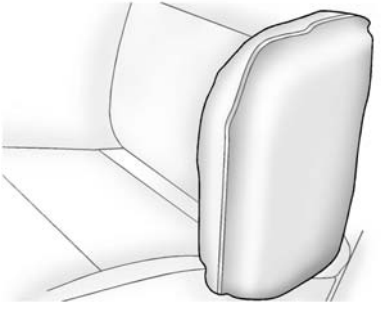

Rear Seat Driver Side Shown, Passenger Side Similar

On vehicles with second row seat-mounted side impact airbags, they are in the sides of the rear seatback closest to the door.

⚠ Warning

If something is between an occupant and an airbag, the airbag might not inflate properly or it might force the object into that person causing severe injury

(Continued)

Warning (Continued)

or even death. The path of an inflating airbag must be kept clear. Do not put anything between an occupant and an airbag, and do not attach or put anything on the steering wheel hub or on or near any other airbag covering.

Do not use seat accessories that block the inflation path of a seat-mounted side impact airbag.

Never secure anything to the roof of a vehicle with roof-rail airbags by routing a rope or tie-down through any door or window opening. If you do, the path of an inflating roof-rail airbag will be blocked.

When Should an Airbag Inflate?

This vehicle is equipped with airbags. See *Airbag System on page 3-15*. Airbags are designed to inflate if the impact exceeds the specific airbag system's deployment threshold. Deployment thresholds are used to predict how severe a crash is likely to be in time for the airbags to inflate and help restrain the occupants. The vehicle has electronic sensors that help the airbag system determine the severity of the impact. Deployment thresholds can vary with specific vehicle design.

Frontal airbags are designed to inflate in moderate to severe frontal or near frontal crashes to help reduce the potential for severe injuries, mainly to the driver's or front outboard passenger's head and chest.

Whether the frontal airbags will or should inflate is not based primarily on how fast the vehicle is traveling. It depends on what is hit, the direction of the impact, and how quickly the vehicle slows down.

Frontal airbags may inflate at different crash speeds depending on whether the vehicle hits an object straight on or at an angle, and whether the object is fixed or moving, rigid or deformable, narrow or wide.

Frontal airbags are not intended to inflate during vehicle rollovers, in rear impacts, or in many side impacts.

In addition, the vehicle has advanced technology frontal airbags. Advanced technology frontal airbags adjust the restraint according to either crash severity or occupant interaction.

Knee airbags are designed to inflate in moderate to severe frontal or near frontal impacts. Knee airbags are not designed to inflate during vehicle rollovers, in rear impacts, or in many side impacts.

Seat-mounted side impact airbags are designed to inflate in moderate to severe side crashes depending on the location of the impact. Seat-mounted side impact airbags are not designed to inflate in frontal impacts, near frontal impacts, rollovers, or rear impacts.
A seat-mounted side impact airbag is designed to inflate on the side of the vehicle that is struck.

Roof-rail airbags are designed to inflate in moderate to severe side crashes depending on the location of the impact. In addition, these roof-rail airbags are designed to inflate during a rollover or in a severe frontal impact. Roof-rail airbags are not designed to inflate in rear impacts. Both roof-rail airbags will inflate when either side of the vehicle is struck, if the sensing system predicts that the vehicle is about to roll over on its side, or in a severe frontal impact.

In any particular crash, no one can say whether an airbag should have inflated simply because of the vehicle damage or repair costs.

What Makes an Airbag Inflate?

In a deployment event, the sensing system sends an electrical signal triggering a release of gas from the inflator. Gas from the inflator fills the airbag causing the bag to break out of the cover. The inflator, the airbag, and related hardware are all part of the airbag module.

For airbag locations, see *Where Are the Airbags? on page 3-17*.

How Does an Airbag Restrain?

In moderate to severe frontal or near frontal collisions, even belted occupants can contact the steering wheel or the instrument panel. In moderate to severe side collisions, even belted occupants can contact the inside of the vehicle.

Airbags supplement the protection provided by safety belts by distributing the force of the impact more evenly over the occupant's body.

Rollover capable roof-rail airbags are designed to help contain the head and chest of occupants in the outboard seating positions in the first and second rows. The rollover capable roof-rail airbags are designed to help reduce the risk of full or partial ejection in rollover events, although no system can prevent all such ejections.

But airbags would not help in many types of collisions, primarily because the occupant's motion is not toward those airbags. See *When Should an Airbag Inflate? on page 3-19*.

Airbags should never be regarded as anything more than a supplement to safety belts.

What Will You See after an Airbag Inflates?

After the frontal airbags and seat-mounted side impact airbags inflate, they quickly deflate, so quickly that some people may not even realize an airbag inflated. Roof-rail airbags may still be at least partially inflated for some time after they inflate. Some components of the airbag module may be hot for several minutes. For location of the airbags, see *Where Are the Airbags? on page 3-17*.

The parts of the airbag that come into contact with you may be warm, but not too hot to touch. There may be some smoke and dust coming from the vents in the deflated airbags. Airbag inflation does not prevent the driver from seeing out of the windshield or being able to steer the vehicle, nor does it prevent people from leaving the vehicle.

⚠ Warning

When an airbag inflates, there may be dust in the air. This dust could cause breathing problems for people with a history of asthma or other breathing trouble. To avoid this, everyone in the vehicle should get out as soon as it is safe to do so. If you have breathing problems but cannot get out of the vehicle after an airbag inflates, then get fresh air by opening a window or a door. If you experience breathing problems following an airbag deployment, you should seek medical attention.

The vehicle has a feature that may automatically unlock the doors, turn on the interior lamps and hazard warning flashers, and shut off the fuel system after the airbags inflate. The feature may also activate, without airbag inflation, after an event that exceeds a predetermined threshold. You can lock the doors, and turn off the interior lamps, and turn off the hazard warning flashers by using the controls for those features.

⚠ Warning

A crash severe enough to inflate the airbags may have also damaged important functions in the vehicle, such as the fuel system, brake and steering systems, etc. Even if the vehicle appears to be drivable after a moderate crash, there may be concealed damage that could make it difficult to safely operate the vehicle.

Use caution if you should attempt to restart the engine after a crash has occurred.

In many crashes severe enough to inflate the airbag, windshields are broken by vehicle deformation. Additional windshield breakage may also occur from the front outboard passenger airbag.

- Airbags are designed to inflate only once. After an airbag inflates, you will need some new parts for the airbag system. If you do not get them, the airbag system will not be there to help protect you in another crash. A new system will include airbag modules and possibly other parts. The service manual for the vehicle covers the need to replace other parts.
- The vehicle has a crash sensing and diagnostic module which records information after a crash. See *Vehicle Data Recording and Privacy on page 13-14* and *Event Data Recorders on page 13-14*.

- Let only qualified technicians work on the airbag systems. Improper service can mean that an airbag system will not work properly. See your dealer for service.

Passenger Sensing System

The vehicle has a passenger sensing system for the front outboard passenger position. The passenger airbag status indicator will light on the instrument panel when the vehicle is started.

United States

Canada

The words ON and OFF, or the symbol for on and off, will be visible during the system check. When the system check is complete, either the word ON or OFF, or the symbol for on or off, will be visible. See *Passenger Airbag Status Indicator on page 5-13*.

The passenger sensing system turns off the front outboard passenger frontal airbag and knee airbag under certain conditions. No other airbag is affected by the passenger sensing system.

The passenger sensing system works with sensors that are part of the front outboard passenger seat. The sensors are designed to detect the presence of a properly seated occupant and determine if the front outboard passenger frontal airbag and knee airbag should be allowed to inflate or not.

According to accident statistics, children are safer when properly secured in a rear seat in the correct child restraint for their weight and size.

Whenever possible, children aged 12 and under should be secured in a rear seating position.

Never put a rear-facing child seat in the front. This is because the risk to the rear-facing child is so great, if the airbag inflates.

⚠ Warning

A child in a rear-facing child restraint can be seriously injured or killed if the front outboard passenger frontal airbag inflates. This is because the back of the rear-facing child restraint would be very close to the inflating airbag. A child in a forward-facing child restraint can be seriously injured or killed if the front outboard passenger frontal airbag inflates and the passenger seat is in a forward position.

Even if the passenger sensing system has turned off the front outboard passenger airbag(s), no system is fail-safe. No one can guarantee that an airbag will not inflate under some unusual circumstance, even though the airbag(s) are off.

(Continued)

Warning (Continued)

Secure rear-facing child restraints in a rear seat, even if the airbag(s) are off. If you secure a forward-facing child restraint in the front outboard passenger seat, always move the seat as far back as it will go. It is better to secure the child restraint in a rear seat.

The passenger sensing system is designed to turn off the front outboard passenger frontal airbag and knee airbag if:

- The front outboard passenger seat is unoccupied.
- The system determines that an infant is present in a child restraint.
- A front outboard passenger takes his/her weight off of the seat for a period of time.
- There is a critical problem with the airbag system or the passenger sensing system.

When the passenger sensing system has turned off the front outboard passenger frontal airbag and knee airbag, the off indicator will light and stay lit as a reminder that the airbag(s) are off. See *Passenger Airbag Status Indicator on page 5-13*.

The passenger sensing system is designed to turn on the front outboard passenger frontal airbag and knee airbag anytime the system senses that a person of adult size is sitting properly in the front outboard passenger seat. When the passenger sensing system has allowed the airbag(s) to be enabled, the on indicator will light and stay lit as a reminder that the airbag(s) are active.

For some children, including children in child restraints, and for very small adults, the passenger sensing system may or may not turn off the front outboard passenger

frontal airbag and knee airbag, depending upon the person's seating posture and body build. Everyone in the vehicle who has outgrown child restraints should wear a safety belt properly — whether or not there is an airbag for that person.

⚠ Warning

If the airbag readiness light ever comes on and stays on, it means that something may be wrong with the airbag system. To help avoid injury to yourself or others, have the vehicle serviced right away. See *Airbag Readiness Light on page 5-12* for more information, including important safety information.

If the On Indicator Is Lit for a Child Restraint

The passenger sensing system is designed to turn off the front outboard passenger frontal airbag and knee airbag if the system determines that an infant is present in a child restraint. If a child restraint has been installed and the on indicator is lit:

1. Turn the vehicle off.
2. Remove the child restraint from the vehicle.
3. Remove any additional items from the seat such as blankets, cushions, seat covers, seat heaters, or seat massagers.
4. Reinstall the child restraint following the directions provided by the child restraint manufacturer and refer to *Securing Child Restraints (Rear Seat) on page 3-43* or *Securing Child Restraints (Front Passenger Seat) on page 3-46*.
5. If, after reinstalling the child restraint and restarting the vehicle, the on indicator is still lit, turn the vehicle off. Then slightly recline the vehicle seatback and adjust the seat cushion, if adjustable, to make sure that the vehicle seatback is not pushing the child restraint into the seat cushion. Also make sure the child restraint is not trapped under the vehicle head restraint. If this happens, adjust the head restraint. See *Head Restraints on page 3-2*.
6. Restart the vehicle.

The passenger sensing system may or may not turn off the airbag(s) for a child in a child restraint depending upon the child's size. It is better to secure the child restraint in a rear seat.

If the Off Indicator Is Lit for an Adult-Sized Occupant

If a person of adult size is sitting in the front outboard passenger seat, but the off indicator is lit, it could be because that person is not sitting properly in the seat. Use the following steps to allow the system to detect that person and enable the front outboard passenger frontal airbag and knee airbag:

1. Turn the vehicle off.
2. Remove any additional material from the seat, such as blankets, cushions, seat covers, seat heaters, seat massagers, a laptop, or other electronic devices.
3. Place the seatback in the fully upright position.
4. Have the person sit upright in the seat, centered on the seat cushion, with legs comfortably extended.
5. Restart the vehicle and have the person remain in this position for one minute after the on indicator is lit.

⚠ Warning

If the front outboard passenger airbag is turned off for an adult-sized occupant, the airbag will not be able to inflate and help protect that person in a crash, resulting in an increased risk of

(Continued)

Warning (Continued)

serious injury or even death. An adult-sized occupant should not ride in the front outboard passenger seat, if the passenger airbag off indicator is lit.

Additional Factors Affecting System Operation

Safety belts help keep the passenger in position on the seat during vehicle maneuvers and braking, which helps the passenger sensing system maintain the passenger airbag status. See “Safety Belts” and “Child Restraints” in the Index for additional information about the importance of proper restraint use.

A thick layer of additional material, such as a blanket or cushion, or aftermarket equipment such as seat covers, seat heaters, and seat massagers can affect how well the passenger sensing system

operates. We recommend that you not use seat covers or other aftermarket equipment except when approved by GM for your specific vehicle. See *Adding Equipment to the Airbag-Equipped Vehicle on page 3-27* for more information about modifications that can affect how the system operates.

A wet seat can affect the performance of the passenger sensing system. Here is how:

- The passenger sensing system may turn off the passenger airbag when liquid is soaked into the seat. If this happens, the off indicator will be lit, and the airbag readiness light on the instrument panel will also be lit.
- Liquid pooled on the seat that has not soaked in may make it more likely that the passenger sensing system will turn on the passenger airbag while a child restraint or child occupant is on the seat. If the passenger airbag is turned on, the on indicator will be lit.

If the passenger seat gets wet, dry the seat immediately. If the airbag readiness light is lit, do not install a child restraint or allow anyone to occupy the seat. See *Airbag Readiness Light on page 5-12* for important safety information.

The on indicator may be lit if an object, such as a briefcase, handbag, grocery bag, laptop, or other electronic device, is put on an unoccupied seat. If this is not desired, remove the object from the seat.

⚠ Warning

Stowing of articles under the passenger seat or between the passenger seat cushion and seatback may interfere with the proper operation of the passenger sensing system.

Servicing the Airbag-Equipped Vehicle

Airbags affect how the vehicle should be serviced. There are parts of the airbag system in several places around the vehicle. Your dealer and the service manual have information about servicing the vehicle and the airbag system. To purchase a service manual, see *Service Publications Ordering Information on page 13-11*.

⚠ Warning

For up to 10 seconds after the vehicle is turned off and the battery is disconnected, an airbag can still inflate during improper service. You can be injured if you are close to an airbag when it inflates. Avoid yellow connectors. They are probably part of the airbag system. Be sure to follow

(Continued)

Warning (Continued)

proper service procedures, and make sure the person performing work for you is qualified to do so.

Adding Equipment to the Airbag-Equipped Vehicle

Adding accessories that change the vehicle's frame, bumper system, height, front end, or side sheet metal, may keep the airbag system from working properly. The operation of the airbag system can also be affected by changing or moving any parts of the front seats, safety belts, the airbag sensing and diagnostic module, steering wheel, instrument panel, any of the airbag modules, ceiling or pillar garnish trim, front sensors, side impact sensors, or airbag wiring.

Your dealer and the service manual have information about the location of the airbag sensors, sensing and diagnostic module, and airbag wiring.

In addition, the vehicle has a passenger sensing system for the front outboard passenger position, which includes sensors that are part of the passenger seat. The passenger sensing system may not operate properly if the original seat trim is replaced with non-GM covers, upholstery, or trim; or with GM covers, upholstery, or trim designed for a different vehicle. Any object, such as an aftermarket seat heater or a comfort-enhancing pad or device, installed under or on top of the seat fabric, could also interfere with the operation of the passenger sensing system. This could either prevent proper deployment of the passenger airbag(s) or prevent the passenger sensing system from properly turning off the passenger airbag(s). See *Passenger Sensing System on page 3-22*.

If the vehicle has rollover roof-rail airbags, see *Different Size Tires and Wheels on page 10-60* for additional important information.

If you have to modify your vehicle because you have a disability and you have questions about whether the modifications will affect the vehicle's airbag system, or if you have questions about whether the airbag system will be affected if the vehicle is modified for any other reason, call Customer Assistance. See *Customer Assistance Offices on page 13-3*.

Airbag System Check

The airbag system does not need regularly scheduled maintenance or replacement. Make sure the airbag readiness light is working. See *Airbag Readiness Light on page 5-12*.

⚠ Caution

If an airbag covering is damaged, opened, or broken, the airbag may not work properly. Do not open or break the airbag coverings. If there are any opened or broken airbag coverings, have the airbag covering and/or airbag module replaced. For the location of the airbags, see *Where Are the Airbags? on page 3-17*. See your dealer for service.

Replacing Airbag System Parts after a Crash

⚠ Warning

A crash can damage the airbag systems in the vehicle.
A damaged airbag system may not work properly and may not

(Continued)

Warning (Continued)

protect you and your passenger(s) in a crash, resulting in serious injury or even death. To help make sure the airbag systems are working properly after a crash, have them inspected and any necessary replacements made as soon as possible.

If an airbag inflates, you will need to replace airbag system parts. See your dealer for service.

If the airbag readiness light stays on after the vehicle is started or comes on when you are driving, the airbag system may not work properly. Have the vehicle serviced right away. See *Airbag Readiness Light on page 5-12*.

Child Restraints

Older Children

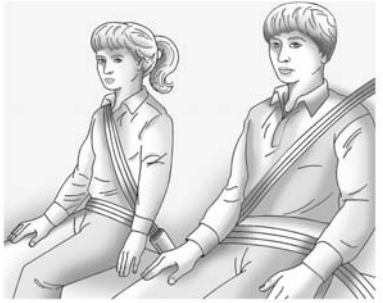

Older children who have outgrown booster seats should wear the vehicle safety belts.

The manufacturer instructions that come with the booster seat state the weight and height limitations for that booster. Use a booster seat with a lap-shoulder belt until the child passes the fit test below:

- Sit all the way back on the seat. Do the knees bend at the seat edge? If yes, continue. If no, return to the booster seat.
- Buckle the lap-shoulder belt. Does the shoulder belt rest on the shoulder? If yes, continue. If no, try using the rear safety belt comfort guide, if available. See “Rear Safety Belt Comfort Guides” under *Lap-Shoulder Belt on page 3-11*. If a comfort guide is not available, or if the shoulder belt still does not rest on the shoulder, then return to the booster seat.
- Does the lap belt fit low and snug on the hips, touching the thighs? If yes, continue. If no, return to the booster seat.
- Can proper safety belt fit be maintained for the length of the trip? If yes, continue. If no, return to the booster seat.

Q: What is the proper way to wear safety belts?

A: An older child should wear a lap-shoulder belt and get the additional restraint a shoulder belt can provide. The shoulder belt should not cross the face or neck. The lap belt should fit snugly below the hips, just touching the top of the thighs. This applies belt force to the child's pelvic bones in a crash. It should never be worn over the abdomen, which could cause severe or even fatal internal injuries in a crash.

Also see “Rear Safety Belt Comfort Guides” under *Lap-Shoulder Belt on page 3-11*.

According to accident statistics, children are safer when properly restrained in a rear seating position.

In a crash, children who are not buckled up can strike other people who are buckled up, or can be thrown out of the vehicle. Older children need to use safety belts properly.

⚠ Warning

Never allow more than one child to wear the same safety belt. The safety belt cannot properly spread the impact forces. In a crash, they can be crushed together and seriously injured. A safety belt must be used by only one person at a time.

⚠ Warning

Never allow a child to wear the safety belt with the shoulder belt behind their back. A child can be seriously injured by not wearing the lap-shoulder belt properly. In a crash, the child would not be restrained by the shoulder belt. The child could move too far forward increasing the chance of head and neck injury. The child might also slide under the lap

(Continued)

Warning (Continued)

belt. The belt force would then be applied right on the abdomen. That could cause serious or fatal injuries. The shoulder belt should go over the shoulder and across the chest.

Infants and Young Children

Everyone in a vehicle needs protection! This includes infants and all other children. Neither the distance traveled nor the age and size of the traveler changes the need, for everyone, to use safety restraints. In fact, the law in every state in the United States and in every Canadian province says children up to some age must be restrained while in a vehicle.

⚠ Warning

Children can be seriously injured or strangled if a shoulder belt is wrapped around their neck. The shoulder belt can tighten but cannot be loosened if it is locked. The shoulder belt locks when it is pulled all the way out of the retractor. It unlocks when the shoulder belt is allowed to go all

(Continued)

Warning (Continued)

the way back into the retractor, but it cannot do this if it is wrapped around a child's neck. If the shoulder belt is locked and tightened around a child's neck, the only way to loosen the belt is to cut it.

Never leave children unattended in a vehicle and never allow children to play with the safety belts.

Every time infants and young children ride in vehicles, they should have the protection provided by appropriate child restraints. Neither the vehicle's safety belt system nor its airbag system is designed for them.

Children who are not restrained properly can strike other people, or can be thrown out of the vehicle.

⚠ Warning

Never hold an infant or a child while riding in a vehicle. Due to crash forces, an infant or a child will become so heavy it is not possible to hold it during a crash. For example, in a crash at only 40 km/h (25 mph), a 5.5 kg (12 lb) infant will suddenly become a 110 kg (240 lb) force on a person's arms. An infant should be secured in an appropriate restraint.

⚠ Warning

Children who are up against, or very close to, any airbag when it inflates can be seriously injured or killed. Never put a rear-facing child restraint in the front outboard seat. Secure a rear-facing child restraint in a rear seat. It is also better to secure a forward-facing child restraint in a rear seat. If you must secure a forward-facing child restraint in

(Continued)

Warning (Continued)

the front outboard seat, always move the front passenger seat as far back as it will go.

Q: What are the different types of add-on child restraints?

A: Add-on child restraints, which are purchased by the vehicle owner, are available in four basic types. Selection of a particular restraint should take into consideration not only the child's weight, height, and age but also whether or not the restraint will be compatible with the motor vehicle in which it will be used.

For most basic types of child restraints, there are many different models available. When purchasing a child restraint, be sure it is designed to be used in a motor vehicle. If it is, the restraint will have a label saying that it meets federal motor vehicle safety standards.

The restraint manufacturer instructions that come with the restraint state the weight and height limitations for a particular child restraint. In addition, there are many kinds of restraints available for children with special needs.

⚠ Warning

To reduce the risk of neck and head injury during a crash, infants need complete support. In a crash, if an infant is in a rear-facing child restraint, the crash forces can be distributed across the strongest part of an infant's body, the back and shoulders. Infants should always be secured in rear-facing child restraints.

⚠ Warning

A young child's hip bones are still so small that the vehicle's regular safety belt may not remain low on the hip bones, as it should. Instead, it may settle up around the child's abdomen. In a crash, the belt would apply force on a body area that is unprotected by

(Continued)

Warning (Continued)

any bony structure. This alone could cause serious or fatal injuries. To reduce the risk of serious or fatal injuries during a crash, young children should always be secured in appropriate child restraints.

Child Restraint Systems

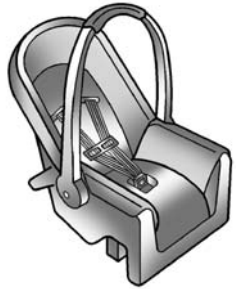

Rear-Facing Infant Seat

A rear-facing infant seat provides restraint with the seating surface against the back of the infant.

The harness system holds the infant in place and, in a crash, acts to keep the infant positioned in the restraint.

Forward-Facing Child Seat

A forward-facing child seat provides restraint for the child's body with the harness.

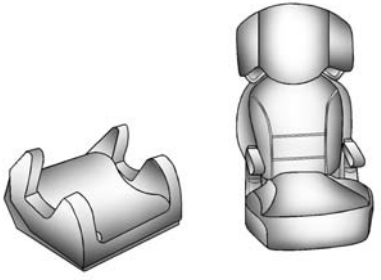

Booster Seats

A booster seat is a child restraint designed to improve the fit of the vehicle's safety belt system.
A booster seat can also help a child to see out the window.

Securing an Add-On Child Restraint in the Vehicle

⚠ Warning

A child can be seriously injured or killed in a crash if the child restraint is not properly secured in the vehicle. Secure the child restraint properly in the vehicle using the vehicle safety belt or LATCH system, following the instructions that came with that child restraint and the instructions in this manual.

To help reduce the chance of injury, the child restraint must be secured in the vehicle. Child restraint systems must be secured in vehicle seats by lap belts or the lap belt portion of a lap-shoulder belt, or by the LATCH system. See *Lower Anchors and Tethers for Children (LATCH System) on page 3-36*.

Children can be endangered in a crash if the child restraint is not properly secured in the vehicle.

When securing an add-on child restraint, refer to the instructions that come with the restraint which may be on the restraint itself or in a booklet, or both, and to this manual. The child restraint instructions are important, so if they are not available, obtain a replacement copy from the manufacturer.

Keep in mind that an unsecured child restraint can move around in a collision or sudden stop and injure people in the vehicle. Be sure to properly secure any child restraint in the vehicle — even when no child is in it.

In some areas of the United States and Canada, Certified Child Passenger Safety Technicians (CPSTs) are available to inspect and demonstrate how to correctly use and install child restraints. In the U.S., refer to the National Highway Traffic Safety

Administration (NHTSA) website to locate the nearest child safety seat inspection station. For CPST availability in Canada, check with Transport Canada or the Provincial Ministry of Transportation office.

Securing the Child Within the Child Restraint

⚠ Warning

A child can be seriously injured or killed in a crash if the child is not properly secured in the child restraint. Secure the child properly following the instructions that came with that child restraint.

Where to Put the Restraint

According to accident statistics, children and infants are safer when properly restrained in a child restraint system or infant restraint system secured in a rear seating position.

Whenever possible, children aged 12 and under should be secured in a rear seating position.

Never put a rear-facing child seat in the front. This is because the risk to the rear-facing child is so great if the airbag deploys.

⚠ Warning

A child in a rear-facing child restraint can be seriously injured or killed if the front passenger airbag inflates. This is because the back of the rear-facing child restraint would be very close to the inflating airbag. A child in a forward-facing child restraint can be seriously injured or killed if the front passenger airbag inflates and the passenger seat is in a forward position.

Even if the passenger sensing system has turned off the front passenger frontal airbag, no

(Continued)

Warning (Continued)

system is fail-safe. No one can guarantee that an airbag will not deploy under some unusual circumstance, even though it is turned off.

Secure rear-facing child restraints in a rear seat, even if the airbag is off. If you secure a forward-facing child restraint in the front seat, always move the front passenger seat as far back as it will go. It is better to secure the child restraint in a rear seat.

See *Passenger Sensing System on page 3-22* for additional information.

When securing a child restraint in a rear seating position, study the instructions that came with the child restraint to make sure it is compatible with this vehicle.

Child restraints and booster seats vary considerably in size, and some may fit in certain seating positions better than others.

Depending on where you place the child restraint and the size of the child restraint, you may not be able to access adjacent safety belt assemblies or LATCH anchors for additional passengers or child restraints. Adjacent seating positions should not be used if the child restraint prevents access to or interferes with the routing of the safety belt.

Wherever a child restraint is installed, be sure to secure the child restraint properly.

Keep in mind that an unsecured child restraint can move around in a collision or sudden stop and injure people in the vehicle. Be sure to properly secure any child restraint in the vehicle — even when no child is in it.

Lower Anchors and Tethers for Children (LATCH System)

The LATCH system secures a child restraint during driving or in a crash. LATCH attachments on the child restraint are used to attach the child restraint to the anchors in the vehicle. The LATCH system is designed to make installation of a child restraint easier.

In order to use the LATCH system in your vehicle, you need a child restraint that has LATCH attachments. LATCH-compatible rear-facing and forward-facing child seats can be properly installed using either the LATCH anchors or the vehicle's safety belts. Do not use both the safety belts and the LATCH anchorage system to secure a rear-facing or forward-facing child seat.

Booster seats use the vehicle's safety belts to secure the child in the booster seat. If the manufacturer recommends that the booster seat be secured with the LATCH system, this can be done as long as the booster seat can be positioned properly and there is no interference with the proper positioning of the lap-shoulder belt on the child.

Make sure to follow the instructions that came with the child restraint, and also the instructions in this manual.

When installing a child restraint with a top tether, you must also use either the lower anchors or the safety belts to properly secure the child restraint. A child restraint must never be installed using only the top tether and anchor.

The LATCH anchorage system can be used until the combined weight of the child plus the child restraint is 29.5 kg (65 lbs). Use the safety belt alone instead of the LATCH anchorage system once the combined weight is more than 29.5 kg (65 lbs).

The following explains how to attach a child restraint with these attachments in the vehicle.

Not all vehicle seating positions or child restraints have lower anchors and attachments or top tether anchors and attachments.

Lower Anchors

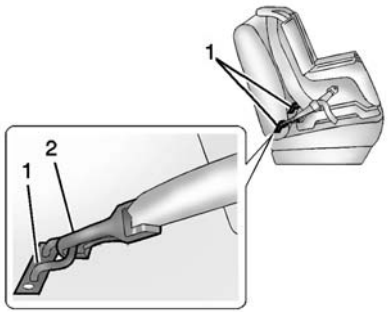

Lower anchors (1) are metal bars built into the vehicle. There are two lower anchors for each LATCH seating position that will accommodate a child restraint with lower attachments (2).

Top Tether Anchor

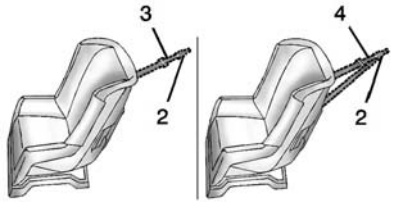

A top tether (3, 4) anchors the top of the child restraint to the vehicle. A top tether anchor is built into the vehicle. The top tether attachment (2) on the child restraint connects to the top tether anchor in the vehicle in order to reduce the forward movement and rotation of the child restraint during driving or in a crash.

The child restraint may have a single tether (3) or a dual tether (4). Either will have a single attachment (2) to secure the top tether to the anchor.

Some child restraints that have a top tether are designed for use with or without the top tether being attached. Others require the top tether always to be attached. In Canada, the law requires that forward-facing child restraints have a top tether, and that the tether be attached. Be sure to read and follow the instructions for the child restraint.

Lower Anchor and Top Tether Anchor Locations

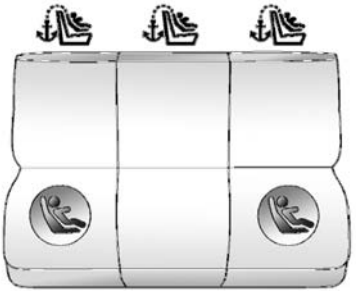

Rear Seat

(Top Tether Anchor): Seating positions with top tether anchors.

(Lower Anchor): Seating positions with two lower anchors.

To assist in locating the lower anchors, each rear anchor position has a label, near the crease between the seatback and the seat cushion.

To assist in locating the top tether anchors, the top tether anchor symbol is on the cover.

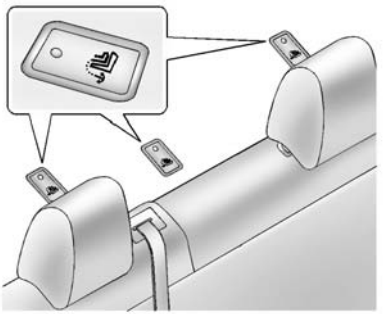

The top tether anchors are under the covers, behind the rear seat, on the filler panel. Be sure to use an anchor on the same side of the vehicle as the seating position where the child restraint will be placed.

Do not secure a child restraint in a position without a top tether anchor if a national or local law requires that the top tether be attached, or if the instructions that come with the child restraint say that the top tether must be attached.

According to accident statistics, children and infants are safer when properly restrained in a child restraint system or infant restraint system secured in a rear seating position. See *Where to Put the Restraint on page 3-35* for additional information.

Securing a Child Restraint Designed for the LATCH System

⚠ Warning

If a LATCH-type child restraint is not attached to anchors or with the safety belt, the child restraint will not be able to protect the child correctly. In a crash, the child could be seriously injured or killed. Install a LATCH-type child restraint properly using the anchors, or use the vehicle safety belts to secure the restraint, following the instructions that came with the child restraint and the instructions in this manual.

⚠ Warning

To reduce the risk of serious or fatal injuries during a crash, do not attach more than one child restraint to a single anchor. Attaching more than one child restraint to a single anchor could cause the anchor or attachment to come loose or even break during a crash. A child or others could be injured.

⚠ Warning

Children can be seriously injured or strangled if a shoulder belt is wrapped around their neck. The shoulder belt can tighten but cannot be loosened if it is locked. The shoulder belt locks when it is pulled all the way out of the retractor. It unlocks when the shoulder belt is allowed to go all

(Continued)

Warning (Continued)

the way back into the retractor, but it cannot do this if it is wrapped around a child's neck. If the shoulder belt is locked and tightened around a child's neck, the only way to loosen the belt is to cut it.

Buckle any unused safety belts behind the child restraint so children cannot reach them. Pull the shoulder belt all the way out of the retractor to set the lock, and tighten the belt behind the child restraint after the child restraint has been installed.

⚠ Caution

Do not let the LATCH attachments rub against the vehicle's safety belts. This may

(Continued)

Caution (Continued)

damage these parts. If necessary, move buckled safety belts to avoid rubbing the LATCH attachments.

Do not fold the empty rear seat with a safety belt buckled. This could damage the safety belt or the seat. Unbuckle and return the safety belt to its stowed position, before folding the seat.

If you need to secure more than one child restraint in the rear seat, see *Where to Put the Restraint on page 3-35* for additional information.

This system is designed to make installation of child restraints easier. When using lower anchors, do not use the vehicle's safety belts. Instead use the vehicle's anchors and child restraint attachments to secure the restraints. Some restraints also use another vehicle anchor to secure a top tether.

1. Attach and tighten the lower attachments to the lower anchors. If the child restraint does not have lower attachments or the desired seating position does not have lower anchors, secure the child restraint with the top tether and the safety belts. Refer to the child restraint manufacturer instructions and the instructions in this manual.

   1.1. Find the lower anchors for the desired rear outboard seating position.

   1.2. Put the child restraint on the seat.

   For outboard rear seating positions, if the head restraint interferes with the proper installation of the child restraint, the head restraint may be removed. See “Head Restraint Removal and Reinstallation” at the end of this section.

   1.3. Attach and tighten the lower attachments on the child restraint to the lower anchors.

2. If the child restraint manufacturer recommends that the top tether be attached, attach and tighten the top tether to the top tether anchor. Refer to the child restraint instructions and the following steps:

   2.1. Find the top tether anchor.

   Open the cover to expose the anchor.

2.2. Route, attach, and tighten the top tether according to the child restraint instructions and the following instructions:

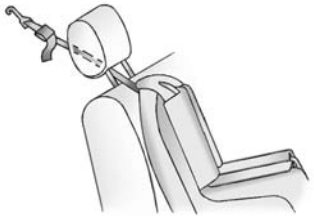

If you are using a single tether in a rear outboard seating position with an adjustable head restraint, raise the head restraint and route the tether under the head restraint and in between the head restraint posts.

If you are using a dual tether in a rear outboard seating position with an adjustable head restraint, raise the head restraint and route the tether under the head restraint and around the head restraint posts.

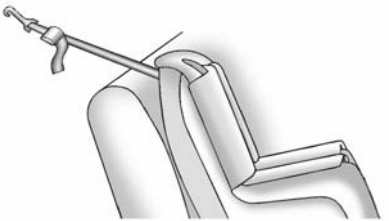

If you are using a single tether in the center seating position, or the rear outboard head restraint has been removed, route the single tether over the seatback.

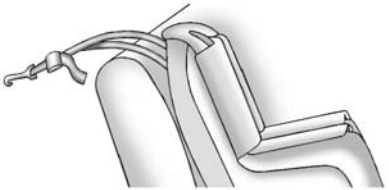

If you are using a dual tether in the center seating position, or the rear outboard head restraint has been removed, route the dual tether over the seatback.

3. Before placing a child in the child restraint, make sure it is securely held in place. To check, grasp the child restraint at the LATCH path and attempt to move it side to side and back and forth. There should be no more than 2.5 cm (1 in) of movement, for proper installation.

Head Restraint Removal and Reinstallation

The rear outboard head restraints can be removed if they interfere with the proper installation of the child restraint.

To remove the head restraint:

1. Partially fold the seatback forward. See *Rear Seats on page 3-6* for additional information.

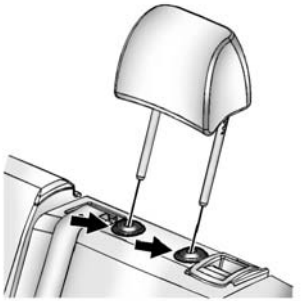

2. Press both buttons on the head restraint posts at the same time, and pull up on the head restraint.
3. Store the head restraint in the trunk of the vehicle.
4. When the child restraint is removed, reinstall the head restraint before the seating position is used.

⚠ Warning

With head restraints that are not installed and adjusted properly, there is a greater chance that occupants will suffer a neck/spinal injury in a crash. Do not drive until the head restraints for all occupants are installed and adjusted properly.

To reinstall the head restraint:

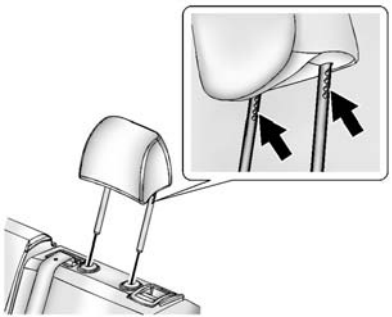

1. Insert the head restraint posts into the holes in the top of the seatback. The notches on the posts must face the driver side of the vehicle.
2. Push the head restraint down.

   If necessary, press the height adjustment release button to further lower the head restraint. See *Head Restraints on page 3-2*.
3. Try to move the head restraint to make sure that it is locked in place.

Replacing LATCH System Parts After a Crash

⚠ Warning

A crash can damage the LATCH system in the vehicle. A damaged LATCH system may not properly secure the child restraint, resulting in serious injury or even

(Continued)

Warning (Continued)

death in a crash. To help make sure the LATCH system is working properly after a crash, see your dealer to have the system inspected and any necessary replacements made as soon as possible.

If the vehicle has the LATCH system and it was being used during a crash, new LATCH system parts may be needed.

New parts and repairs may be necessary even if the LATCH system was not being used at the time of the crash.

Securing Child Restraints (Rear Seat)

When securing a child restraint in a rear seating position, study the instructions that came with the child restraint to make sure it is compatible with this vehicle.

If the child restraint has the LATCH system, see *Lower Anchors and Tethers for Children (LATCH System) on page 3-36* for how and where to install the child restraint using LATCH. If a child restraint is secured in the vehicle using a safety belt and it uses a top tether, see *Lower Anchors and Tethers for Children (LATCH System) on page 3-36* for top tether anchor locations.

Do not secure a child seat in a position without a top tether anchor if a national or local law requires that the top tether be anchored, or if the instructions that come with the child restraint say that the top strap must be anchored.

In Canada, the law requires that forward-facing child restraints have a top tether, and that the tether be attached.

If the child restraint or vehicle seat position does not have the LATCH system, you will be using the safety belt to secure the child restraint in this position. Be sure to follow the instructions that came with the child restraint. Secure the child in the child restraint when and as the instructions say.

If more than one child restraint needs to be installed in the rear seat, be sure to read *Where to Put the Restraint on page 3-35*.

1. Put the child restraint on the seat.

   If the head restraint interferes with the proper installation of the child restraint, the head restraint may be removed. See “Head Restraint Removal and Reinstallation” under *Lower Anchors and Tethers for Children (LATCH System) on page 3-36*.

2. Pick up the latch plate, and run the lap and shoulder portions of the vehicle's safety belt through or around the restraint. The child restraint instructions will show you how.

3. Push the latch plate into the buckle until it clicks. If the latch plate will not go fully into the buckle, check if the correct buckle is being used.

   Position the release button on the buckle so that the safety belt could be quickly unbuckled if necessary.

4. Pull the shoulder belt all the way out of the retractor to set the lock. When the retractor lock is set, the belt can be tightened but not pulled out of the retractor.

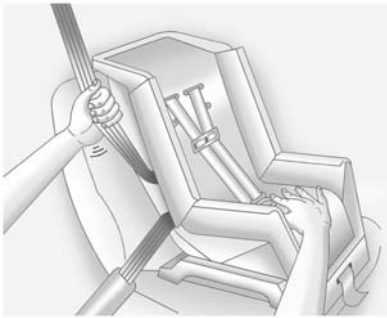

5. To tighten the belt, push down on the child restraint, pull the shoulder portion of the belt to tighten the lap portion of the belt, and feed the shoulder belt back into the retractor. When installing a forward-facing child restraint, it may be helpful to use your knee to push down on the child restraint as you tighten the belt.

   Try to pull the belt out of the retractor to make sure the retractor is locked. If the retractor is not locked, repeat Steps 4 and 5.

6. If the child restraint has a top tether, follow the child restraint manufacturer's instructions regarding the use of the top tether. See *Lower Anchors and Tethers for Children (LATCH System) on page 3-36*.

7. Before placing a child in the child restraint, make sure it is securely held in place. To check, grasp the child restraint at the safety belt path and attempt to move it side to side and back and forth. When the child restraint is properly installed, there should be no more than 2.5 cm (1 in) of movement.

To remove the child restraint, unbuckle the vehicle safety belt and let it return to the stowed position. If the top tether is attached to a top tether anchor, disconnect it. If the head restraint was removed, reinstall it before the seating position is used. See “Head Restraint Removal and

Reinstallation" under *Lower Anchors and Tethers for Children (LATCH System) on page 3-36*.

Securing Child Restraints (Front Passenger Seat)

This vehicle has airbags. A rear seat is a safer place to secure a forward-facing child restraint. See *Where to Put the Restraint on page 3-35*.

In addition, the vehicle has a passenger sensing system which is designed to turn off the front outboard passenger frontal airbag and passenger knee airbag under certain conditions. See *Passenger Sensing System on page 3-22* and *Passenger Airbag Status Indicator on page 5-13* for more information, including important safety information.

Never put a rear-facing child seat in the front. This is because the risk to the rear-facing child is so great, if the airbag deploys.

⚠ Warning

A child in a rear-facing child restraint can be seriously injured or killed if the front outboard passenger frontal airbag inflates. This is because the back of the rear-facing child restraint would be very close to the inflating airbag. A child in a forward-facing child restraint can be seriously injured or killed if the front outboard passenger frontal airbag inflates and the passenger seat is in a forward position.

Even if the passenger sensing system has turned off the front outboard passenger frontal airbag, no system is fail-safe. No one can guarantee that an airbag will not deploy under some unusual circumstance, even though it is turned off.

(Continued)

Warning (Continued)

Secure rear-facing child restraints in a rear seat, even if the airbag is off. If you secure a forward-facing child restraint in the front seat, always move the front passenger seat as far back as it will go. It is better to secure the child restraint in a rear seat.

See *Passenger Sensing System on page 3-22* for additional information.

If the child restraint uses a top tether, see *Lower Anchors and Tethers for Children (LATCH System) on page 3-36* for top tether anchor locations.

Do not secure a child seat in a position without a top tether anchor if a national or local law requires that the top tether be anchored, or if the instructions that come with the child restraint say that the top strap must be anchored.

In Canada, the law requires that forward-facing child restraints have a top tether, and that the tether be attached.

When using the lap-shoulder belt to secure the child restraint in this position, follow the instructions that came with the child restraint and the following instructions:

1. Move the seat as far back as it will go before securing the forward-facing child restraint.

   When the passenger sensing system has turned off the front outboard passenger frontal airbag and passenger knee airbag, the off indicator on the passenger airbag status indicator should light and stay lit when you start the vehicle. See *Passenger Airbag Status Indicator on page 5-13*.

2. Put the child restraint on the seat.

3. Pick up the latch plate, and run the lap and shoulder portions of the vehicle's safety belt through or around the restraint. The child restraint instructions will show you how.

4. Push the latch plate into the buckle until it clicks.

   Position the release button on the buckle, so that the safety belt could be quickly unbuckled if necessary.

5. Pull the shoulder belt all the way out of the retractor to set the lock. When the retractor lock is set, the belt can be tightened but not pulled out of the retractor.

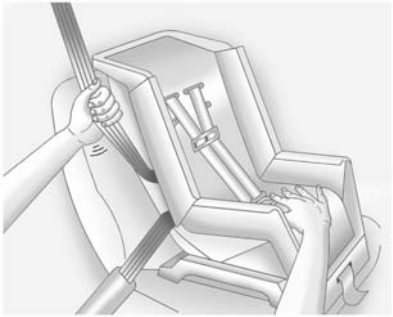

6. To tighten the belt, push down on the child restraint, pull the shoulder portion of the belt to tighten the lap portion of the belt, and feed the shoulder belt back into the retractor. When installing a forward-facing child restraint, it may be helpful to use your knee to push down on the child restraint as you tighten the belt.

   Try to pull the belt out of the retractor to make sure the retractor is locked. If the retractor is not locked, repeat Steps 5 and 6.

7. Before placing a child in the child restraint, make sure it is securely held in place. To check, grasp the child restraint at the safety belt path and attempt to move it side-to-side and back-and-forth. When the child restraint is properly installed, there should be no more than 2.5 cm (1 in) of movement.

If the airbags are off, the off indicator in the passenger airbag status indicator will come on and stay on when the vehicle is started.

If a child restraint has been installed and the on indicator is lit, see “If the On Indicator Is Lit for a Child Restraint” under *Passenger Sensing System on page 3-22* for more information.

To remove the child restraint, unbuckle the vehicle safety belt and let it return to the stowed position.

Storage

Storage Compartments

Storage Compartments 4-1
Glove Box 4-1
Cupholders 4-1
Center Console Storage 4-1

Storage Compartments

⚠ Warning

Do not store heavy or sharp objects in storage compartments. In a crash, these objects may cause the cover to open and could result in injury.

Glove Box

Open the glove box by lifting up on the lever.

Cupholders

Cupholders are in the center console.

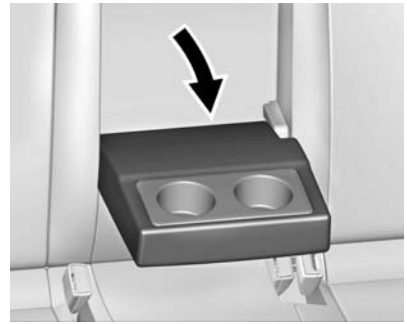

Cupholders may be located in the second row seat armrest. To access, pull the armrest down.

Center Console Storage

The center console storage has a storage area under the armrest. Pull up on the latch on the front of the armrest to access.

Pull up on the latch and slide the center console armrest to adjust the position. Return the armrest to the rear position to access the storage area.

There may be an auxiliary jack outlet and a USB port located in the center console.

See *Auxiliary Devices on page 7-15*.

Instruments and Controls

Controls

Steering Wheel Adjustment . . . 5-2
Steering Wheel Controls 5-2
Horn 5-3
Windshield Wiper/Washer 5-3
Compass 5-4
Clock 5-4
Power Outlets 5-6
Cigarette Lighter 5-6
Ashtrays 5-6

Warning Lights, Gauges, and Indicators

Warning Lights, Gauges, and Indicators 5-7
Instrument Cluster 5-8
Speedometer 5-10
Odometer 5-10
Trip Odometer 5-10
Tachometer 5-10
Fuel Gauge 5-10
Engine Coolant Temperature Gauge 5-11
Safety Belt Reminders 5-11
Airbag Readiness Light 5-12
Passenger Airbag Status Indicator 5-13
Charging System Light 5-13
Malfunction Indicator Lamp 5-14
Brake System Warning Light 5-16
Antilock Brake System (ABS) Warning Light 5-17
Up-Shift Light 5-17
Power Steering Warning Light 5-18
Traction Off Light 5-18
StabiliTrak® OFF Light 5-18
Traction Control System (TCS)/StabiliTrak® Light 5-19
Wait-to-Start Light 5-19
Tire Pressure Light 5-19
Engine Oil Pressure Light 5-20
Low Fuel Warning Light 5-20
Diesel Exhaust Fluid (DEF) Warning Light 5-21
Security Light 5-21
Reduced Engine Power Light 5-21
High-Beam On Light 5-22
Front Fog Lamp Light 5-22
Lamps On Reminder 5-22
Cruise Control Light 5-22
Door Ajar Light 5-22

Information Displays

Driver Information Center (DIC) 5-23

Vehicle Messages

Vehicle Messages 5-27
Battery Voltage and Charging Messages 5-27
Brake System Messages 5-27
Compass Messages 5-27
Cruise Control Messages 5-28
Door Ajar Messages 5-28
Engine Cooling System Messages 5-28
Engine Oil Messages 5-29
Engine Power Messages 5-29
Fuel System Messages 5-29
Diesel Exhaust Fluid Messages 5-29
Diesel Particulate Filter Messages 5-30
Key and Lock Messages 5-30
Lamp Messages 5-31
Object Detection System Messages 5-31

Ride Control System Messages 5-32
Airbag System Messages 5-32
Safety Belt Messages 5-32
Security Messages 5-33
Service Vehicle Messages . . . 5-33
Starting the Vehicle Messages 5-33
Tire Messages 5-33
Transmission Messages 5-34
Vehicle Reminder Messages 5-34
Vehicle Speed Messages 5-34

Vehicle Personalization
Vehicle Personalization 5-36

Controls

Steering Wheel Adjustment

To adjust the steering wheel:

1. Pull the lever down.
2. Move the steering wheel up or down.
3. Pull or push the steering wheel closer or away from you.
4. Push the lever up to lock the steering wheel in place.

Do not adjust the steering wheel while driving.

Steering Wheel Controls

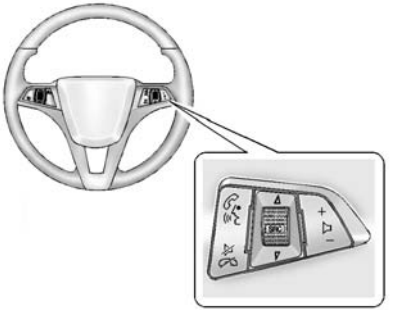

For vehicles with audio steering wheel controls, some audio controls can be adjusted at the steering wheel.

/ (Push to Talk): For vehicles with a Bluetooth, OnStar, or navigation system, press to interact with those systems. See *Bluetooth (Infotainment Controls) on page 7-19* or *Bluetooth (Voice Recognition) on page 7-22* or *Bluetooth (Overview) on page 7-17*, *OnStar Overview on page 14-1*, or the infotainment manual.

/ (Mute/End Call): Press to silence the vehicle speakers only. Press again to turn the sound on. For vehicles with OnStar or Bluetooth systems, press to reject an incoming call, or end a current call.

SRC (Source/Favorite): Press to select a source or turn to change favorite stations.

Press or to select AM, FM, CD, or MP3 track.

Turn or to select the next or previous saved favorite radio stations.

+ − (Volume): Press + to increase the volume. Press − to decrease the volume.

Horn

Press on the steering wheel pad to sound the horn.

Windshield Wiper/Washer

The windshield wiper/washer lever is on the right side of the steering column.

With the ignition in ACC/ACCESSORY or ON/RUN/START, move the windshield wiper lever to select the wiper speed.

HI: Use for fast wipes.

LO: Use for slow wipes.

INT (Intermittent Wipes): Move the lever up to INT for intermittent wipes, then turn the INT band up for more frequent wipes or down for less frequent wipes.

OFF: Use to turn the wipers off.

1X (Mist): For a single wipe, briefly move the wiper lever down. For several wipes, hold the wiper lever down.

Clear snow and ice from the wiper blades and windshield before using them. If frozen to the windshield, carefully loosen or thaw them. Damaged blades should be replaced. See *Wiper Blade Replacement on page 10-31*.

Heavy snow or ice can overload the wiper motor.

Wiper Parking

If the ignition is put in OFF while the wipers are on LO, HI, or INT, they will immediately stop.

If the windshield wiper lever is then moved to OFF before the driver door is opened or within 10 minutes, the wipers will restart and move to the base of the windshield.

If the ignition is put in OFF while the wipers are performing wipes due to windshield washing, the wipers continue to run until they reach the base of the windshield.

↓ **(Windshield Washer):** Pull the windshield wiper lever toward you to spray washer fluid and activate the wipers. The wipers will continue until the lever is released or the maximum wash time is reached. When the lever is released, additional wipes may occur depending on how long the windshield washer had been activated. See *Washer Fluid on page 10-25* for information on filling the windshield washer fluid reservoir.

⚠ Warning

In freezing weather, do not use the washer until the windshield is warmed. Otherwise the washer fluid can form ice on the windshield, blocking your vision.

Compass

The vehicle may have a compass display in the Driver Information Center (DIC). The compass receives its heading and other information from the Global Positioning System (GPS) antenna, StabiliTrak, and vehicle speed information.

Avoid covering the GPS antenna, located on the roof, for long periods of time with objects that may interfere with the antenna's ability to receive a satellite signal. The compass system is designed to operate for a certain number of miles or degrees of turn before needing a signal from the GPS satellites. When the compass display shows CAL, drive the vehicle for a short distance in an open area where it can receive a GPS signal. The compass system will automatically determine when the GPS signal is restored and provide a heading again. See *Compass Messages on page 5-27* for more information on the messages that may be displayed for the compass.

Clock

The infotainment system controls are used to access the time and date settings through the menu system. See *Operation on page 7-4* for information about how to use the menu system. For vehicles with a connective radio or navigation system, see the infotainment manual.

Setting the Time and Date

To set the time and date for the radio with CD:

1. Press CLOCK.
2. Select Set Time or Set Date.
3. Turn the MENU/SEL knob to adjust the highlighted number.
4. Press the MENU/SEL knob to select the next number.
5. To save the settings, press the MENU/SEL knob.

To set the time and date for the radio without navigation:

1. Press CLOCK.
2. Select Set Time or Set Date.
3. Turn the MENU/SEL knob to adjust the highlighted number.
4. Press the MENU/SEL knob to select the next number.
5. To save the settings, press OK screen button.

To set the time and date for the radio with navigation:

1. Press CLOCK.
2. Select Set Time or Set Date.
3. Turn the MENU/SEL knob to adjust the highlighted number.
4. Press the MENU/SEL knob to select the next number.
5. To save the settings, press BACK on the radio faceplate.

If auto timing is set, the time displayed on the clock may not update immediately when driving into a new time zone.

Setting the 12/24 Hour Format

To set the 12/24 hour format for the radio with CD:

1. Press CLOCK.
2. Highlight 12/24 Hour Format.
3. Press the MENU/SEL knob to select the 12 hour or 24 hour display format.
4. To save the settings, press the MENU/SEL knob.

To set the 12/24 hour format for the radio without navigation:

1. Press CLOCK.
2. Highlight 12/24 Hour Format.
3. Press the MENU/SEL knob to select the 12 hour or 24 hour display format.
4. To save the settings, press OK screen button.

To set the 12/24 hour format for the radio with navigation:

1. Press CLOCK.
2. Highlight 12/24 Hour Format.
3. Press the MENU/SEL knob to select the 12 hour or 24 hour display format.
4. To save the settings, press the BACK on the radio faceplate.

Power Outlets

The accessory power outlets can be used to plug in electrical equipment, such as a cell phone or MP3 player.

There is one accessory power outlet located on the center floor console and one on the rear of the center floor console. These outlets are powered when the key is in ON/RUN or ACC/ACCESSORY, or until the driver door is opened within 10 minutes of turning off the vehicle. See *Retained Accessory Power (RAP) on page 9-23*.

Open the cover to access.

⚠ Caution

Leaving electrical equipment plugged in for an extended period of time while the vehicle is off will drain the battery. Always unplug electrical equipment when not in use and do not plug in equipment that exceeds the maximum 20 amp rating.

Certain electrical accessories may not be compatible with the accessory power outlet and could overload vehicle or adapter fuses. If a problem is experienced, see your dealer.

When adding electrical equipment, be sure to follow the installation instructions included with the equipment. See *Add-On Electrical Equipment on page 9-68*.

⚠ Caution

Hanging heavy equipment from the power outlet can cause damage not covered by the vehicle warranty. The power outlets are designed for accessory power plugs only, such as cell phone charge cords.

Cigarette Lighter

If equipped with a cigarette lighter, it is on the center floor console near the shift lever.

To activate the cigarette lighter, push it into the heating element and let go. When the lighter is ready it will pop back out.

⚠ Caution

Holding a cigarette lighter in while it is heating does not let the lighter back away from the heating element when it is hot. Damage from overheating can occur to the lighter or heating element, or a fuse could be blown. Do not hold a cigarette lighter in while it is heating.

Ashtrays

If equipped with a removable ashtray, the ashtray can be placed into the front console cupholders.

To open the ashtray, lift the lid of the ashtray. After using, close the lid.

To empty the ashtray for cleaning, slightly turn the upper part of the ashtray counterclockwise and remove it.

⚠ Caution

Holding a cigarette lighter in while it is heating does not let the lighter back away from the heating element when it is hot. Damage from overheating can occur to the lighter or heating element, or a fuse could be blown. Do not hold a cigarette lighter in while it is heating.

Warning Lights, Gauges, and Indicators

Warning lights and gauges can signal that something is wrong before it becomes serious enough to cause an expensive repair or replacement. Paying attention to the warning lights and gauges could prevent injury.

Warning lights come on when there could be a problem with a vehicle function. Some warning lights come on briefly when the engine is started to indicate they are working.

Gauges can indicate when there could be a problem with a vehicle function. Often gauges and warning lights work together to indicate a problem with the vehicle.

When one of the warning lights comes on and stays on while driving, or when one of the gauges shows there may be a problem, check the section that explains what to do. Waiting to do repairs can be costly and even dangerous.

Instrument Cluster

English Gas Cluster with Automatic Transmission Shown, Metric and Manual Transmission Similar

English Diesel Cluster Shown, Metric Similar

Speedometer

The speedometer shows the vehicle's speed in either kilometers per hour (km/h) or miles per hour (mph).

Odometer

The odometer shows how far the vehicle has been driven, in either kilometers or miles.

Trip Odometer

The trip odometer shows how far the vehicle has been driven since the trip odometer was last reset.

The trip odometer is accessed and reset through the Driver Information Center (DIC). See *Driver Information Center (DIC) on page 5-23*.

Tachometer

The tachometer displays the engine speed in revolutions per minute (rpm).

⚠ Caution

If the engine is operated with the rpm's in the warning area at the high end of the tachometer, the vehicle could be damaged, and the damage would not be covered by the vehicle warranty. Do not operate the engine with the rpm's in the warning area.

Fuel Gauge

Gas Shown

When the ignition is on, the fuel gauge indicates about how much fuel is left in the tank.

An arrow on the fuel gauge indicates the side of the vehicle the fuel door is on.

A FUEL LEVEL LOW message may appear in the Driver Information Center (DIC) and a single chime sounds. See *Fuel System Messages on page 5-29* for more information.

Here are four things that some owners ask about. None of these show a problem with the fuel gauge:

- At the service station, the fuel pump shuts off before the gauge reads full.
- It takes a little more or less fuel to fill up than the gauge indicated. For example, the gauge may have indicated the tank was half full, but it actually took a little more or less than half the tank's capacity to fill the tank.
- The gauge moves a little while turning a corner or speeding up.
- The gauge takes a few seconds to stabilize after the ignition is turned on, and will go back to empty when the ignition is turned off.

Engine Coolant Temperature Gauge

This gauge shows the engine coolant temperature.

If the indicator needle moves to the hot side of the gauge toward the H or shaded area, the engine is too hot.

If the vehicle has been operated under normal driving conditions, pull off the road, stop the vehicle, and turn off the engine as soon as possible.

Safety Belt Reminders

Driver Safety Belt Reminder Light

There is a driver safety belt reminder light on the instrument cluster.

When the vehicle is started, this light flashes and a chime may come on to remind the driver to fasten their safety belt. Then the light stays on solid until the belt is buckled. This cycle may continue several times if the driver remains or becomes unbuckled while the vehicle is moving.

If the driver safety belt is buckled, neither the light nor the chime comes on.

Passenger Safety Belt Reminder Light

There is a passenger safety belt reminder light near the passenger airbag status indicator. See *Passenger Sensing System on page 3-22*.

When the vehicle is started, this light flashes and a chime may come on to remind passengers to fasten their safety belt. Then the light stays on solid until the belt is buckled. This cycle continues several times if the passenger remains or becomes unbuckled while the vehicle is moving.

If the passenger safety belt is buckled, neither the chime nor the light comes on.

The front passenger safety belt reminder light and chime may turn on if an object is put on the seat such as a briefcase, handbag, grocery bag, laptop, or other electronic device. To turn off the reminder light and/or chime, remove the object from the seat or buckle the safety belt.

Airbag Readiness Light

This light shows if there is an electrical problem with the airbag system. The system check includes the airbag sensor(s), passenger sensing system, the pretensioners, the airbag modules, the wiring, and the crash sensing and diagnostic module. For more information on the airbag system, see *Airbag System on page 3-15*.

The airbag readiness light comes on for several seconds when the vehicle is started. If the light does not come on then, have it fixed immediately.

⚠ Warning

If the airbag readiness light stays on after the vehicle is started or comes on while driving, it means the airbag system might not be working properly. The airbags in the vehicle might not inflate in a crash, or they could even inflate without a crash. To help avoid injury, have the vehicle serviced right away.

If there is a problem with the airbag system, a Driver Information Center (DIC) message may also come on. See *Airbag System Messages on page 5-32*.

Passenger Airbag Status Indicator

The vehicle has a passenger sensing system. See *Passenger Sensing System on page 3-22* for important safety information. The instrument panel has a passenger airbag status indicator.

United States

Canada

When the vehicle is started, the passenger airbag status indicator will light ON and OFF, or the symbol for on and off, for several seconds as a system check. Then, after several seconds, the status indicator will light either ON or OFF, or the on or off symbol to let you know the status of the front outboard passenger frontal airbag and knee airbag.

If the word ON or the on symbol is lit on the passenger airbag status indicator, it means that the front outboard passenger frontal airbag and knee airbag are allowed to inflate.

If the word OFF or the off symbol is lit on the passenger airbag status indicator, it means that the passenger sensing system has turned off the front outboard passenger frontal airbag and passenger knee airbag.

If, after several seconds, both status indicator lights remain on, or if there are no lights at all, there may be a problem with the lights or the passenger sensing system. See your dealer for service.

⚠ Warning

If the airbag readiness light ever comes on and stays on, it means that something may be wrong with the airbag system. To help avoid injury to yourself or others, have the vehicle serviced right away. See *Airbag Readiness Light on page 5-12* for more information, including important safety information.

Charging System Light

The charging system light comes on briefly when the ignition is turned on, but the engine is not running, as a check to show the light is working.

The light turns off when the engine is started. If it does not, have the vehicle serviced by your dealer.

If the light stays on, or comes on while driving, there could be a problem with the electrical charging system. Have it checked by your dealer. Driving while this light is on could drain the battery.

If a short distance must be driven with the light on, be sure to turn off all accessories, such as the radio and air conditioner.

Malfunction Indicator Lamp

A computer system called OBD II (On-Board Diagnostics-Second Generation) monitors the operation of the vehicle to ensure emissions are at acceptable levels, helping to maintain a clean environment. The malfunction indicator lamp comes on when the vehicle is placed in ON/RUN for key access or Service Only Mode for Keyless Access, as a check to show it is working. If it does not, have the vehicle serviced by your dealer. See *Ignition Positions (Keyless Access) on page 9-14* or *Ignition Positions (Key Access) on page 9-16*.

If the malfunction indicator lamp comes on while the engine is running, this indicates that the OBD II system has detected a problem and diagnosis and service might be required.

With a diesel engine, this light may also come on when the OBD II system has detected a problem with the Diesel Exhaust Fluid (DEF) management system. See *Diesel Exhaust Fluid on page 9-27*.

Malfunctions often are indicated by the system before any problem is apparent. Being aware of the light can prevent more serious damage to the vehicle. This system also assists the dealer technician in correctly diagnosing any malfunction.

⚠ Caution

If the vehicle is continually driven with this light on, the emission controls might not work as well, the vehicle fuel economy might not be as good, and the engine might not run as smoothly. This could lead to costly repairs that might not be covered by the vehicle warranty.

⚠ Caution

Modifications made to the engine, transmission, exhaust, intake, or fuel system of the vehicle or the replacement of the original tires with other than those of the

(Continued)

Caution (Continued)

same Tire Performance Criteria (TPC) can affect the vehicle's emission controls and can cause this light to come on.
Modifications to these systems could lead to costly repairs not covered by the vehicle warranty. This could also result in a failure to pass a required Emission Inspection/Maintenance test. See *Accessories and Modifications on page 10-3*.

This light can come on during a malfunction in one of two ways:

Light Flashing (Gasoline Engine Only): A misfire condition has been detected and is present. A misfire increases vehicle emissions and could damage the emission control system on the vehicle. Diagnosis and service might be required.

To prevent more serious damage to the vehicle:

- Reduce vehicle speed.
- Avoid hard accelerations.
- Avoid steep uphill grades.

If the light continues to flash, find a safe place to stop and park the vehicle. Turn the vehicle off, wait at least 10 seconds, and restart the engine. If the light is still flashing, follow the previous steps and see your dealer for service as soon as possible.

Light On Steady (All Engines): An emission control system malfunction has been detected on the vehicle. Diagnosis and service might be required.

The following may correct an emission control system malfunction:

- For gasoline engines, check that the gas cap is fully installed. See *Filling the Tank on page 9-60*. The diagnostic system can determine if the gas cap has been left off or improperly installed. A loose or missing gas cap allows gasoline to evaporate into the atmosphere. A few driving trips with the cap properly installed should turn the light off.
- For all engines, check that good quality fuel is used. Poor fuel quality causes the engine not to run as efficiently as designed and may cause stalling after start-up, stalling when the vehicle is changed into gear, misfiring, hesitation on acceleration, or stumbling on acceleration. These conditions might go away once the engine is warmed up.

If one or more of these conditions occurs, change the fuel brand used. It may require at least one full tank of the proper fuel to turn the light off.

See *Fuel (Gasoline) on page 9-51*.

If none of the above have made the light turn off, your dealer can check the vehicle. The dealer has the

proper test equipment and diagnostic tools to fix any mechanical or electrical problems that might have developed.

Emissions Inspection and Maintenance Programs

Depending on where you live, your vehicle may be required to participate in an emission control system inspection and maintenance program. For the inspection, the emission system test equipment will likely connect to the vehicle's Data Link Connector (DLC).

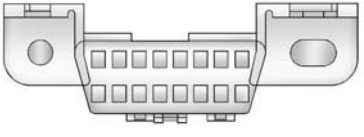

The DLC is under the instrument panel next to the steering wheel. See your dealer if assistance is needed.

The vehicle may not pass inspection if:

- The malfunction indicator lamp is on when the engine is running, or while the vehicle is in ON/RUN or in Service Only Mode and the malfunction indicator lamp does not come on. See your dealer for assistance in verifying proper operation of the malfunction indicator lamp.
- The OBD II (On-Board Diagnostics) system determines that critical emission control systems have not been completely diagnosed by the system. If this were to occur, the vehicle would be considered not ready for inspection. This can happen if the 12-volt battery has recently been replaced or run down.

  The diagnostic system is designed to evaluate critical emission control systems during normal driving. This can take several days of driving. If this has been done and the vehicle still does not pass the inspection for lack of OBD II system readiness, your dealer can prepare the vehicle for inspection.

Brake System Warning Light

The vehicle brake system consists of two hydraulic circuits. If one circuit is not working, the remaining circuit can still work to stop the vehicle. For normal braking performance, both circuits need to be working.

If the warning light comes on, there is a brake problem. Have the brake system inspected right away.

Metric

English

The brake indicator light should come on briefly as the engine is started. If it does not come on have the vehicle serviced by your dealer.

⚠ Warning

The brake system might not be working properly if the brake system warning light is on. Driving with the brake system warning light on can lead to a crash. If the light is still on after the vehicle has been pulled off the road and carefully stopped, have the vehicle towed for service.

If the light comes on while driving, a chime sounds. Pull off the road and stop. The pedal might be harder to push or go closer to the floor.
It might also take longer to stop.
If the light is still on, have the vehicle towed for service. See *Towing the Vehicle on page 10-85*.

Antilock Brake System (ABS) Warning Light

The Antilock Brake System (ABS) light comes on briefly when the engine is started.

If the light does not come on, have it fixed so it will be ready to warn if there is a problem.

If the ABS light comes on and stays on while driving, stop as soon as possible and turn the ignition off. Start the engine again to reset the system. If the light stays on after driving at a speed above 20 km/h (13 mph), see your dealer for service. A chime may also sound when the light comes on steady.

If the regular brake system warning light is not on, the vehicle still has brakes, but not antilock brakes.
If the regular brake system warning light is also on, the vehicle does not have antilock brakes and there is a problem with the regular brakes. See *Brake System Warning Light on page 5-16*.

See *Brake System Messages on page 5-27* for all brake-related DIC messages.

Up-Shift Light

For manual transmission vehicles, there is an up-shift light that comes on in the lower DIC area. It shows when to shift to the next higher gear for best fuel economy.

See *Manual Transmission on page 9-37*.

Power Steering Warning Light

This light comes on briefly when the ignition is turned to ON/RUN as a check to show it is working.

If it does not come on have the vehicle serviced by your dealer.

If this light stays on, or comes on while driving, the system may not be working. If this happens, see your dealer for service.

Traction Off Light

This light comes on briefly while starting the engine. If it does not, have the vehicle serviced by your dealer. If the system is working normally, the indicator light then turns off.

The traction off light comes on when the Traction Control System (TCS) has been turned off by pressing and releasing the TCS/StabiliTrak button.

This light and the StabiliTrak OFF light come on when StabiliTrak is turned off.

If the TCS is off, wheel spin is not limited. Adjust driving accordingly.

See *Traction Control/Electronic Stability Control on page 9-41*.

StabiliTrak® OFF Light

This light comes on briefly while starting the engine. If it does not, have the vehicle serviced by your dealer.

This light comes on when the StabiliTrak system is turned off. If StabiliTrak is off, the Traction Control System (TCS) is also off.

If the StabiliTrak and TCS are off, the system does not assist in controlling the vehicle. Turn on the TCS and the StabiliTrak systems and the warning light turns off.

See *Traction Control/Electronic Stability Control on page 9-41*.

Traction Control System (TCS)/StabiliTrak® Light

This light comes on briefly when the engine is started.

If the light does not come on, have the vehicle serviced by your dealer. If the system is working normally, the indicator light turns off.

If the light is on and not flashing, the TCS and potentially the StabiliTrak system have been disabled. A DIC message may display. Check the DIC messages to determine which feature(s) is no longer functioning and whether the vehicle requires service.

If the light is on and flashing, the TCS and/or the StabiliTrak system is actively working.

See *Traction Control/Electronic Stability Control on page 9-41*.

Wait-to-Start Light

For diesel engines, the wait-to-start light shows that the engine is functioning properly and indicates when the engine can be started.

The fast warm-up glow plug system makes the wait-to-start light stay on for a shorter amount of time than most diesel engines.

For more information, see *Starting the Engine on page 9-18*.

Tire Pressure Light

For vehicles with the Tire Pressure Monitor System (TPMS), this light comes on briefly when the engine is started. It provides information about tire pressures and the TPMS.

When the Light Is On Steady

This indicates that one or more of the tires are significantly underinflated.

A Driver Information Center (DIC) tire pressure message may also display. See *Tire Messages on page 5-33*. Stop as soon as possible, and inflate the tires to the pressure value shown on the Tire and Loading Information label. See *Tire Pressure on page 10-51*.

When the Light Flashes First and Then Is On Steady

If the light flashes for about a minute and then stays on, there may be a problem with the TPMS. If the problem is not corrected, the light will come on at every ignition cycle. See *Tire Pressure Monitor Operation on page 10-53*.

Engine Oil Pressure Light

⚠ Caution

Lack of proper engine oil maintenance can damage the engine. Driving with the engine oil low can also damage the engine. The repairs would not be covered by the vehicle warranty. Check the oil level as soon as possible. Add oil if required, but if the oil level is within the operating range and the oil pressure is still low, have the vehicle serviced. Always follow the maintenance schedule for changing engine oil.

This light should come on briefly as the engine is started. If it does not come on, have the vehicle serviced by your dealer.

If the light comes on and stays on, it means that oil is not flowing through the engine properly. The vehicle could be low on oil and might have some other system problem. See your dealer.

Low Fuel Warning Light

Gas Shown

This light comes on for a few seconds when the ignition is turned on as a check to indicate it is working. If it does not come on, have it fixed.

The low fuel warning light comes on and a chime sounds when the vehicle is low on fuel. The light turns off when fuel is added to the fuel tank.

For vehicles with a Driver Information Center (DIC), see *Driver Information Center (DIC) on page 5-23* for more information.

Diesel Exhaust Fluid (DEF) Warning Light

This light, a Driver Information Center (DIC) Message, and a chime come on when there is an issue with the Diesel Exhaust Fluid.

See *Diesel Exhaust Fluid Messages on page 5-29* for information on the specific message displaying with the light.

If the DEF fluid issue has not been corrected, the light will continue to flash. The vehicle's speed may also be limited.

Also see *Diesel Exhaust Fluid on page 9-27*.

Security Light

The security light should come on briefly as the engine is started. If it does not come on, have the vehicle serviced by your dealer. If the system is working normally, the indicator light turns off.

If the light stays on and the engine does not start, there could be a problem with the theft-deterrent system. See *Immobilizer Operation on page 2-17*.

Reduced Engine Power Light

The reduced engine power light should come on briefly as the engine is started. If it does not come on, have the vehicle serviced by your dealer.

This light, along with the malfunction indicator lamp, displays when a noticeable reduction in the vehicle's performance occurs.

The vehicle can be driven at a reduced speed when the reduced engine power light is on but acceleration and speed might be reduced. If this light stays on, see your dealer as soon as possible for diagnosis and repair.

High-Beam On Light

The high-beam on light comes on when the high-beam headlamps are in use.

See *Headlamp High/Low-Beam Changer on page 6-2* for more information.

Front Fog Lamp Light

For vehicles with front fog lamps, this light comes on when the front fog lamps are in use.

The light goes out when the front fog lamps are turned off. See *Front Fog Lamps on page 6-4* for more information.

Lamps On Reminder

This light comes on when the exterior lamps are in use. See *Exterior Lamp Controls on page 6-1*.

Cruise Control Light

For vehicles with cruise control, the cruise control light is white when the cruise control is on and ready, and turns green when the cruise control is set and active.

The light turns off when the cruise control is turned off. See *Cruise Control on page 9-43*.

Door Ajar Light

If equipped, this light comes on when a door is open or not securely latched. Before driving, check that all doors are properly closed. See *Door Ajar Messages on page 5-28*.

Information Displays

Driver Information Center (DIC)

The DIC displays information about your vehicle. It also displays warning messages if a system problem is detected. See *Vehicle Messages on page 5-27*. All messages appear in the DIC display in the center of the instrument cluster.

DIC Operation and Displays

The DIC has different displays which can be accessed by using the DIC buttons on the turn signal lever. The DIC displays trip, fuel, and warning messages if a system problem is detected.

DIC Buttons

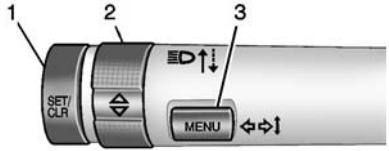

1. **SET/CLR:** Press to set, or press and hold to clear, the menu item displayed.
2. △ ▽ **:** Use the band to scroll through the items in each menu.
3. **MENU:** Press to display the Trip/Fuel Menu and the Vehicle Information Menu. On some vehicles, there is also an ECO Menu. This button is also used to return to or exit the last screen displayed on the DIC.

Trip/Fuel Menu (TRIP) Items

Press MENU on the turn signal lever until the TRIP menu displays. Use △ ▽ to scroll through the menu items. Not all items are available on every vehicle. The following is a list of all possible menu items:

Trip 1 or Trip 2, Average Fuel Economy, Average Vehicle Speed: Displays the current distance traveled, in either kilometers (km) or miles (mi), from the last reset for the trip odometer. The trip odometer can be reset to zero by pressing and holding the SET/CLR button while the trip odometer display is showing.

Also displays the approximate average liters per 100 kilometers (L/100 km) or miles per gallon (mpg). This number is based on the number of L/100 km (mpg) recorded since the last time this menu item was reset. This number reflects only the approximate average fuel economy that the vehicle has right

now, and will change as driving conditions change. This display is shown as ∅ L/100 km (mpg). Reset the average consumption by pressing SET/CLR when it is displayed.

This screen also displays the average vehicle speed of the vehicle in kilometers per hour (km/h) or miles per hour (mph). This average is based on the various vehicle speeds recorded since the last reset. This display is shown as ∅ km/h (mph). Reset the average speed by pressing SET/CLR when it is displayed.

Blank Display: Displays no information.

Digital Speed: Displays how fast the vehicle is moving in either kilometers per hour (km/h) or miles per hour (mph). The speedometer cannot be reset.

Fuel Used: Displays the approximate liters (L) or gallons (gal) of fuel that have been used since last reset. The fuel used can be reset by pressing the SET/CLR button while the Fuel Used display is showing.

Timer: To start the timer, press SET/CLR while Timer is displayed. The display will show the amount of time that has passed since the timer was last reset, not including time the ignition is off. Time will continue to be counted as long as the ignition is on, even if another display is being shown on the DIC. The timer will record up to 99 hours, 59 minutes, and 59 seconds (99:59:59) after which the display will return to zero. To stop the timer, press SET/CLR briefly while Timer is displayed. To reset the timer to zero, press and hold SET/CLR.

Navigation: Used for the OnStar or navigation system Turn-by-Turn guidance. See *OnStar Overview on page 14-1* or the navigation manual, if the vehicle has navigation, for more information.

Speed, Fuel Range, Instantaneous Fuel Economy: Displays how fast the vehicle is moving in either kilometers per hour (km/h) or miles per hour (mph). The speedometer cannot be reset.

The center of the page shows the approximate distance the vehicle can be driven without refueling. The fuel range estimate is based on an average of the vehicle's fuel economy over recent driving history and the amount of fuel remaining in the fuel tank. This display is shown as » km (mi). Fuel range cannot be reset.

Also displays the current fuel economy in liters per 100 kilometers (L/100 km) or miles per gallon (mpg). This number reflects only the fuel economy that the vehicle has right now and changes frequently as driving conditions change. This display is shown as L/100 km (mpg). This display cannot be reset.

Vehicle Information Menu (OPTION) Items

Press MENU on the turn signal lever until the OPTION menu is displayed. Use △ ▽ to scroll through the menu items. Not all items are available on every vehicle. The following is a list of all possible menu items:

Units: Move △ ▽ to change between Metric or US when the Unit display is active. Press SET/CLR to confirm the setting. On some models, you will have to select 1, 2, or 3 for the Unit display. 1 is Imperial units, 2 is US units, and 3 is metric units. This will change the displays on the cluster and DIC to the type of measurements you select.

Tire Pressure: May display a vehicle with the approximate pressures of all four tires. Tire pressure is displayed in either kilopascal (kPa) or in pounds per square inch (psi). On some models, this display only allows for matching of the TPMS sensors. In this case, the display will show TIRE LEARN. See *Tire Pressure Monitor System on page 10-52* and *Tire Pressure Monitor Operation on page 10-53*.

Remaining Oil Life: Displays an estimate of the oil's remaining useful life. If REMAINING OIL LIFE 99% is displayed, that means 99% of the current oil life remains. This display may be shown as %.

When the remaining oil life is low, the CHANGE ENGINE OIL SOON message will appear on the display. See *Engine Oil Messages on page 5-29*. The oil should be changed as soon as possible. See *Engine Oil on page 10-11*. In addition to the engine oil life system monitoring the oil life, additional maintenance is recommended in the Maintenance Schedule in this manual. See *Maintenance Schedule on page 11-2*.

The Oil Life display must be reset after each oil change. Do not reset the Oil Life display accidentally at any time other than when the oil has just been changed. It cannot be reset accurately until the next oil change. To reset the engine oil life system, see *Engine Oil Life System on page 10-15*.

Battery Voltage: Displays the current battery voltage, if equipped. Battery voltage changes are normal while driving. See *Charging System Light on page 5-13*. If there is a problem with the battery charging system, the DIC will display a message. See *Battery Voltage and Charging Messages on page 5-27*.

Diesel Exhaust Fluid Level (Diesel Engine Only): Displays the current Diesel Exhaust Fluid (DEF) level.

Remaining Fuel Filter (Diesel Engine Only): Displays an estimate of the remaining fuel filter life. If REMAINING FUEL FILTER 50% is displayed, that means 50% of the current fuel filter life remains.

ECO Drive Assist Menu (ECO) Items

This menu is only available on some vehicles. Press MENU on the turn signal lever until the ECO menu is displayed. Use △ ▽ to scroll through the menu items. Not all items are available on every vehicle. The following is a list of all possible menu items:

Best Average Fuel Economy: The right hand side displays the best average fuel economy (AFE) that is achieved for a selected distance. The left hand side displays a running average of fuel economy for the most recently traveled selected distance. The center bar graph displays the instantaneous fuel economy. Quickly press the SET/CLR button to display a page for selecting one of the distance options. Move the up/down arrow to choose the selection, and SET/CLR to change the setting.

When viewing best AFE, a several second press and hold of SET/CLR will reset the best value. The best value will show "- - -" until the selected distance has been traveled.

The display provides feedback on how current driving behavior in the bar graph affects the running average in the left display and how well recent driving compares to the best that has been achieved.

ECO Index: The bar graph on the left hand side provides feedback on the efficiency of current driving behavior. The graph shows a percentage value that is based on current fuel consumption compared to what is expected from the vehicle with good and bad driving habits. Each box represents 10%, with all boxes filled being 100%. More economical driving will result in being in the ECO box. Instantaneous Fuel Economy is also shown on right hand side. This display cannot be reset.

Economy Trend: Displays history of the Average Fuel Economy from the last 50 km (30 miles). Each bar represents about 5 km (3 miles) of driving. The fuel economy will range from 0 – 15 L/100 km (0 – 50 mpg). During driving the bars will shift to always reflect the most recent distance on the right side. This display cannot be reset.

Vehicle Messages

Messages displayed on the DIC indicate the status of the vehicle or some action that may be needed to correct a condition. Multiple messages may display one after the other.

The messages that do not require immediate action can be acknowledged and cleared by pressing SET/CLR. The messages that require immediate action cannot be cleared until that action is performed. All messages should be taken seriously and clearing the messages does not correct the problem.

The following are some of the vehicle messages that may be displayed depending on your vehicle content.

Battery Voltage and Charging Messages

BATTERY SAVER ACTIVE

This message displays when the vehicle has detected that the battery voltage is dropping beyond a reasonable point. The battery saver system starts reducing features of the vehicle that may be noticed. At the point that features are disabled, this message displays. Turn off unnecessary accessories to allow the battery to recharge.

LOW BATTERY

This message is displayed when the battery voltage is low. See *Battery on page 10-28*.

SERVICE BATTERY CHARGING SYSTEM

This message is displayed when there is a fault in the battery charging system. Take the vehicle to your dealer for service.

Brake System Messages

BRAKE FLUID LOW

This message is displayed when the brake fluid level is low. See *Brake Fluid on page 10-27*.

RELEASE PARKING BRAKE

This message is displayed as a reminder that the parking brake is on. Release it before you attempt to drive.

Compass Messages

CAL

This message is displayed when the compass needs to be calibrated. See *Compass on page 5-4*.

– –

Two dashes will be displayed if the compass needs service. See your dealer for service.

Cruise Control Messages

APPLY BRAKE BEFORE CRUISE

If this message displays when attempting to activate cruise control, apply the brake pedal and try again.

CRUISE SET TO XXX

This message displays when the cruise control is set and shows the speed it was set to. See *Cruise Control on page 9-43*.

Door Ajar Messages

DOOR(S) OPEN

A vehicle symbol will be displayed on the DIC showing which door is open along with this message. Close the door completely.

HOOD OPEN

This message will display when the hood is open. Close the hood completely.

TRUNK OPEN

This message will display when the trunk is open. Close the trunk completely.

Engine Cooling System Messages

A/C OFF DUE TO HIGH ENGINE TEMP

This message displays when the engine coolant becomes hotter than the normal operating temperature. To avoid added strain on a hot engine, the air conditioning compressor automatically turns off. When the coolant temperature returns to normal, the air conditioning compressor turns back on. You can continue to drive the vehicle.

If this message continues to appear, have the system repaired by your dealer as soon as possible to avoid damage to the engine.

ENGINE OVERHEATED — IDLE ENGINE

This message displays when the engine coolant temperature is too hot. Stop and allow the vehicle to idle until it cools down.

ENGINE OVERHEATED — STOP ENGINE

This message displays and a continuous chime sounds if the engine cooling system reaches unsafe temperatures for operation. Stop and turn off the vehicle as soon as it is safe to do so to avoid severe damage. This message clears when the engine has cooled to a safe operating temperature.

HIGH COOLANT TEMPERATURE

This message displays if the coolant temperature is hot. See *Engine Overheating on page 10-23*.

Engine Oil Messages

CHANGE ENGINE OIL SOON

This message displays when the engine oil needs to be changed. When you change the engine oil, be sure to reset the Oil Life System. See *Engine Oil Life System on page 10-15* and *Driver Information Center (DIC) on page 5-23* for information on how to reset the system. See *Engine Oil on page 10-11* and *Maintenance Schedule on page 11-2* for more information.

OIL PRESSURE LOW — STOP ENGINE

This message displays if low oil pressure levels occur. Stop the vehicle as soon as safely possible and do not operate it until the cause of the low oil pressure has been corrected. Check the oil as soon as possible and have the vehicle serviced by your dealer.

Engine Power Messages

ENGINE POWER IS REDUCED

This message displays when the vehicle's engine power is reduced. Reduced engine power can affect the vehicle's ability to accelerate. If this message is on, but there is no reduction in performance, proceed to your destination. The performance may be reduced the next time the vehicle is driven. The vehicle may be driven at a reduced speed while this message is on, but maximum acceleration and speed may be reduced. Anytime this message stays on, the vehicle should be taken to your dealer for service as soon as possible.

Fuel System Messages

FUEL LEVEL LOW

This message displays when the vehicle is low on fuel. Refuel as soon as possible.

TIGHTEN GAS CAP (Gas Engine Only)

This message displays when the fuel cap is not on tight on vehicles with gasoline engines. Tighten the fuel cap.

WATER IN FUEL CONTACT SERVICE

This message displays when water level in the diesel fuel filter exceeds a specified level. Residual water in the diesel fuel filter must be drained. *Water in Fuel (Diesel) on page 9-60*.

Diesel Exhaust Fluid Messages

For more information on these messages, see “Exhaust Fluid Low” or “Exhaust Fluid Quality Poor” in *Diesel Exhaust Fluid on page 9-27*.

EXHAUST FLUID RANGE: XXXX KM (MI)

When the exhaust fluid is getting low, the range will be displayed in either kilometers or miles. It is normal for the EXHAUST FLUID RANGE to vary based on vehicle and environmental driving conditions. When this message first displays at approximately 1 600 km (1,000 mi) of fluid range remaining, the fluid is approximately 11 L (3 gal) low.

EXHAUST FLUID LOW SPEED LIMITED SOON

When the exhaust fluid range is less than 120 km (75 mi) this message will be displayed.

EXHAUST FLUID EMPTY REFILL NOW

This message will be displayed when the exhaust fluid is empty. This message may be accompanied by other messages that provide more information.

EXHAUST FLUID QUALITY POOR SEE OWNERS MANUAL NOW

This message displays when the exhaust fluid is of poor quality or the wrong fluid was added. This message may be accompanied by other messages that provide more information.

Diesel Particulate Filter Messages

DIESEL PARTIC (Particulate) FILTER IS FULL CONTINUE DRIVING

This message may display when the soot particles in the diesel particulate filter reach a certain amount. Continue driving to prevent the filter from clogging. See *Diesel Particulate Filter on page 9-26* for more information.

DIESEL PARTIC (Particulate) FILTER IS FULL CONTINUED DRIVING MANDATORY

This message may display when the soot particles in the diesel particulate filter reach a certain amount. Continued driving is mandatory to prevent the filter from clogging. See *Diesel Particulate Filter on page 9-26* for more information.

Key and Lock Messages

NO REMOTE DETECTED

This message displays when the transmitter battery is weak on vehicles with Keyless Access. See “Starting the Vehicle with a Low Transmitter Battery” under *Remote Keyless Entry (RKE) System Operation on page 2-3*.

REPLACE BATTERY IN REMOTE KEY

This message displays when the battery in the Remote Keyless Entry (RKE) transmitter needs to be replaced. See “Battery Replacement” under *Remote Keyless Entry (RKE) System Operation on page 2-3*.

USE TRANSMITTER POCKET TO START

This message displays when trying to start the vehicle if an RKE transmitter is not detected. The transmitter battery may be weak. See “Starting the Vehicle with a Low Transmitter Battery” under *Remote Keyless Entry (RKE) System Operation on page 2-3*.

Lamp Messages

AUTOMATIC LIGHT CONTROL ON

This message is displayed when the automatic light control has been turned on. See *Automatic Headlamp System on page 6-3*.

AUTOMATIC LIGHT CONTROL OFF

This message is displayed when the automatic light control has been turned off. See *Automatic Headlamp System on page 6-3*.

XXX TURN INDICATOR FAILURE

When one of the turn signals is out, this message displays to show which bulb needs to be replaced. See *Bulb Replacement on page 10-32* and *Replacement Bulbs on page 10-37* for more information on turn signal bulb replacement.

TURN SIGNAL ON

This message is displayed if the turn signal has been left on. Turn off the turn signal.

Object Detection System Messages

PARK ASSIST OFF

This message displays when the Rear Parking Assist (RPA) system has been turned off or when there is a temporary condition causing the system to be disabled. See *Parking Assist on page 9-45*.

SERVICE PARK ASSIST

This message displays if there is a problem with the Rear Parking Assist (RPA) system. Do not use this system to help you park. See *Parking Assist on page 9-45*.

SERVICE SIDE DETECTION SYSTEM

If this message appears, the system needs service. Take the vehicle to your dealer.

SIDE BLIND ZONE ALERT OFF

This message indicates that the driver has turned the system off.

SIDE DETECTION SYSTEM UNAVAILABLE

This message indicates that the Side Blind Zone Alert (SBZA) system is disabled because the sensor is blocked and cannot detect vehicles in the blind zone. The sensor may be blocked by mud, dirt, snow, ice, or slush. This message may also activate during heavy rain or due to road spray. The vehicle does not need service. For cleaning, see *Exterior Care on page 10-88*.

Ride Control System Messages

SERVICE TRACTION CONTROL

This message displays when there is a problem with the Traction Control System (TCS). See *Traction Control/Electronic Stability Control on page 9-41*.

SERVICE STABILITRAK

This message displays if there is a problem with the StabiliTrak system. See *Traction Control/Electronic Stability Control on page 9-41*.

Airbag System Messages

SERVICE AIRBAG

This message displays if there is a problem with the airbag system. Take the vehicle to your dealer for service.

Safety Belt Messages

SHIFTER LOCKED. BUCKLE SEATBELT

This message displays if the vehicle is equipped with the Safety Belt Assurance System and the driver and front outboard passenger, if present, safety belts are not buckled. The vehicle will not shift out of P (Park). Buckle the safety belt(s) to unlock the shift lever.

This system may not allow the vehicle to shift out of P (Park) if an object - such as a briefcase, handbag, grocery bag, laptop, or other electronic device - is on the front outboard passenger seat. If this happens, remove the object from the seat or buckle the safety belt.

If the driver or front outboard passenger unbuckles their safety belt while driving, the safety belt reminder chime and light(s) will come on. See *Safety Belt Reminders on page 5-11*.

SHIFTER UNLOCKED. BRAKE TO SHIFT

This message displays when the Safety Belt Assurance System times out and allows the vehicle to be shifted out of P (Park) after 30 seconds following brake apply. See “Safety Belts” and “Child Restraints” in the Index for information about the importance of proper restraint use.

This system may not function properly if the airbag readiness light is on. See *Airbag Readiness Light on page 5-12*.

Security Messages

THEFT ATTEMPTED

This message displays if the vehicle detects a tamper condition.

Service Vehicle Messages

CHANGE TIMING BELT

This message displays when scheduled maintenance on the timing belt is required. See your dealer for service.

SERVICE POWER STEERING

This message displays if there is a problem with the power steering system. Take the vehicle to your dealer for service.

SERVICE STEERING COLUMN LOCK

This message displays if there is a problem with the steering column lock. Take the vehicle to your dealer for service.

SERVICE VEHICLE SOON

This message displays if there is a problem with the vehicle. Take the vehicle to your dealer for service.

Starting the Vehicle Messages

TURN STEERING WHEEL START VEHICLE AGAIN

This message displays when you try to start the vehicle, but the column remains locked. Try turning the steering wheel while starting the vehicle to unlock the steering column. If the vehicle still does not start, turn the steering wheel the other way, and try starting the vehicle again.

Tire Messages

SERVICE TIRE MONITOR SYSTEM

This message displays if there is a problem with the Tire Pressure Monitor System (TPMS). See *Tire Pressure Monitor Operation on page 10-53* for more information.

TIRE LEARNING ACTIVE

This message displays when the system is learning new tires. See *Tire Pressure Monitor Operation on page 10-53* for more information.

TIRE PRESSURE LOW ADD AIR TO TIRE

On vehicles with the Tire Pressure Monitor System (TPMS), this message displays when the pressure in one or more of the vehicle's tires is low.

There is also an icon with the warning that will indicate the location of the low tire.

The low tire pressure warning light will also come on. See *Tire Pressure Light on page 5-19*.

If a tire pressure message displays, inflate the tires until the tire pressure is equal to the values shown on the Tire and Loading Information label. See *Tires on page 10-43*, *Vehicle Load Limits on page 9-9*, and *Tire Pressure on page 10-51*.

More than one tire pressure message can be received at a time. To read the other messages that may have been sent at the same time, press the SET/CLR button. The DIC also shows the tire pressure values. See *Driver Information Center (DIC) on page 5-23*.

Transmission Messages

SERVICE TRANSMISSION

This message displays if there is a problem with the transmission. See your dealer.

TRANSMISSION HOT — IDLE ENGINE

This message displays and a chime sounds if the transmission fluid in the vehicle gets hot. Driving with the transmission fluid temperature high can cause damage to the vehicle. Stop the vehicle and let it idle to allow the transmission to cool. This message clears when the fluid temperature reaches a safe level.

Vehicle Reminder Messages

ICE POSSIBLE DRIVE WITH CARE

This message displays when ice conditions are possible.

STEERING COLUMN IS LOCKED

This message displays when the steering column is locked.

Vehicle Speed Messages

For more information on these messages, see *Diesel Exhaust Fluid on page 9-27*.

XXX KM (MI) UNTIL 105 KM/H (65 MPH) MAX SPEED

This message will be displayed along with other messages. These messages include EXHAUST FLUID EMPTY REFILL NOW, EXHAUST FLUID QUALITY POOR, SERVICE EMISSION SYSTEM, or SERVICE EXHAUST FLUID SYSTEM. The

vehicle speed will be limited to 105 km/h (65 mph) when the countdown is over.

XXX KM (MI) UNTIL 88 KM/H (55 MPH) MAX SPEED

This message will be displayed along with other messages. These messages include EXHAUST FLUID EMPTY REFILL NOW, EXHAUST FLUID QUALITY POOR, SERVICE EMISSION SYSTEM, or SERVICE EXHAUST FLUID SYSTEM. The vehicle speed will be limited to 88 km/h (55 mph) when the countdown is over.

XXX KM (MI) UNTIL 7 KM/H (4 MPH) MAX SPEED

This message will be displayed along with other messages. These messages include EXHAUST FLUID EMPTY REFILL NOW, EXHAUST FLUID QUALITY POOR, or SERVICE EXHAUST FLUID SYSTEM. The vehicle speed will be limited to 7 km/h (4 mph) when the countdown is over.

SPEED LIMITED TO 105 KM/H (65 MPH)

This message will be displayed along with other messages. These messages include EXHAUST FLUID EMPTY REFILL NOW, EXHAUST FLUID QUALITY POOR, SERVICE EMISSION SYSTEM, or SERVICE EXHAUST FLUID SYSTEM. When this message is displayed, the vehicle speed is being limited to 105 km/h (65 mph).

SPEED LIMITED TO 88 KM/H (55 MPH)

This message will be displayed along with other messages. These messages include EXHAUST FLUID EMPTY REFILL NOW, EXHAUST FLUID QUALITY POOR, SERVICE EMISSION SYSTEM, or SERVICE EXHAUST FLUID SYSTEM. When this message is displayed, the vehicle speed is being limited to 88 km/h (55 mph).

SPEED LIMITED TO 7 KM/H (4 MPH)

This message will be displayed along with other messages. These messages include EXHAUST FLUID EMPTY REFILL NOW, EXHAUST FLUID QUALITY POOR, or SERVICE EXHAUST FLUID SYSTEM. When this message is displayed, the vehicle speed is being limited to 7 km/h (4 mph).

TRANSITIONING TO XX KM/H (XX MPH) MAX SPEED

This message will be displayed along with other messages. These messages include EXHAUST FLUID EMPTY REFILL NOW, EXHAUST FLUID QUALITY POOR, SERVICE EMISSION SYSTEM, or SERVICE EXHAUST FLUID SYSTEM. When this message is displayed, the end of the countdown has been reached and the vehicle speed is being limited.

Vehicle Personalization

Use the audio system controls to access the personalization menus for customizing vehicle features.

The following are all possible personalization features. Depending on the vehicle, some may not be available.

Infotainment System Audio System Controls

Using the Faceplate

MENU/SELECT Knob

- Press to enter, select, or activate a highlighted menu option.
- Turn to highlight a menu option.
- Press to enable or disable a system setting.

⇦ BACK

- Press to exit a menu.
- Press to return to a previous screen.

Using the Touch Screen

Press a screen feature to:

- View more feature options.
- Enable or disable the feature.

△ : Press to scroll up.

▽ : Press to scroll down.

Back: Press to return to the previous menu.

To access the personalization menu:

1. Press Config on the Home page on the infotainment system display or CONFIG on the faceplate.
2. Select the desired feature to display a list of available options.
3. Select the desired feature setting.

Personalization Menus

The following list of menu items may be available:

- Languages
- Time and Date
- Radio Settings
- Phone Settings
- Navigation Settings
- Display Settings
- Vehicle Settings

Each menu is detailed in the following information.

Languages

Select Languages, then select from the available language(s).

Time and Date

Manually set the time and date. See *Clock on page 5-4*.

Radio Settings

Select and depending on the radio the following may display:

- Auto Volume
- Gracenote Options
- XM Channel Art
- Max Startup Volume

- Maximum Startup Volume
- Number of Favorites Pages
- Radio Favorites
- RDS Options
- XM Categories
- Software Versions Menu

Auto Volume

This feature adjusts the volume to minimize the effects of unwanted background noise that can result from changing road surfaces, driving speeds, or open windows. This feature works best at lower volume settings where background noise is typically louder than the sound system volume.

Select Off, Low, Medium, or High.

Gracenote Options

Select and the following may display:

- Normalization

Normalization

This feature improves voice recognition and media groupings. See “CD Player,” “USB,” “Auxiliary Devices,” and “Bluetooth Audio” in the infotainment manual.

Select to enable or disable.

XM Channel Art

This feature turns the XM Audio page background on the XM Channel display on and off.

Select to enable or disable.

Max Startup Volume or Maximum Startup Volume

This feature sets the maximum startup volume. If the vehicle is started and the volume is greater than this level, the volume is adjusted to this level.

Press + or − to increase or decrease the volume.

Number of Favorites Pages or Radio Favorites

Press to set the number of favorites to display.

Select the desired number.

RDS Options

Select and the following may display:

- RDS
- Text Scroll Freeze
- RDS Text

RDS

Select to turn RDS on or off. See “RDS (Radio Data System)” in *AM-FM Radio on page 7-7*.

Text Scroll Freeze

When on, this allows the RDS Text to scroll across the radio screen.

Select to enable or disable.

RDS Text

When on, this allows the RDS information from the station to be displayed.

Select to enable or disable.

XM Categories

This allows which available XM Categories are used and displayed.

Press to enable or disable available categories.

Software Versions Menu

Press to display information about the system and update software if available.

Phone Settings

Select and depending on the radio the following may display:

- Device List
- Pair Device
- Pair Device (Phone)
- Pair Device (GPS)

Device List

Select to connect to a different phone source, disconnect a phone, or delete a phone.

Pair Device

Select to pair a new device. See “Pairing a Phone/Device” in “Bluetooth” in the infotainment manual.

Pair Device (Phone) or Pair Device (GPS)

Select to pair a new phone. See “Pairing a Phone” in “Bluetooth (Infotainment Controls)” in *Bluetooth (Infotainment Controls) on page 7-19* or *Bluetooth (Voice Recognition) on page 7-22* or *Bluetooth (Overview) on page 7-17* or “Pairing a Phone/Device” “Bluetooth” in the infotainment manual.

Navigation Settings

See “Navigation Settings” under “Configure Menu” in the infotainment manual.

Display Settings

Press and the following may display:

- Home Page Menu
- Rear Camera Options
- Display Off
- Map Settings

Home Page Menu

Select and the following may display:

- Customize
- Sort
- Restore Home Page Defaults

Customize

This feature allows the selection of what icons will be on the first Home Page.

Select and follow the screen prompts.

Sort

This feature allows the icons on the Home Page to be moved.

Select and follow the screen prompts.

Restore Home Page Defaults

This feature will restore the Home Page to the factory settings.

Select and follow the screen prompts.

Rear Camera Options

For more information on Rear Camera Options, see *Rear Vision Camera (RVC) on page 9-48*.

Display Off

Press to turn the display off. The display will return when any radio buttons are pressed or the screen is touched (if equipped).

Map Settings

See “Map Settings” in “Configure Menu” in the infotainment manual.

Vehicle Settings

Select and the following may display:

- Climate and Air Quality
- Comfort and Convenience
- Collision Detection Systems
- Lighting
- Power Door Locks
- Remote Lock/Unlock/Start
- Return to Factory Settings?

Climate and Air Quality

Select and the following may display:

- Auto Fan Speed
- Remote Start Auto Heat Seats
- Auto Defog
- Auto Rear Defog

Auto Fan Speed

This feature sets the climate control fan speed to maintain the interior temperature.

Select High, Medium, or Low.

Remote Start Auto Heat Seats

When on, this feature will turn the heated seats on when using remote start on cold days.

Select On or Off.

Auto Defog

When turned on and high humidity is detected, the climate control system may adjust to outside air supply and turn on the air conditioner or the heater. The fan speed may slightly increase to help prevent fogging. When high humidity is no longer detected, the system will return to its prior operation.

Select On or Off.

Auto Rear Defog

When on, this feature turns on the rear defogger at vehicle start when the interior temperature is cold and fog is likely. The auto rear defog function can be disabled by pressing . When off, the feature can be turned on by pressing .

See “Rear Window Defogger” under *Climate Control Systems on page 8-1* or *Automatic Climate Control System on page 8-3*.

Select On or Off.

Comfort and Convenience

Select and the following may display:

- Chime Volume

Chime Volume

This allows the selection of the chime volume level.

Select Normal or High.

Collision Detection Systems

Select and the following may display:

- Park Assist
- Side Blind Zone Alert
- Rear Cross Traffic Alert

Park Assist

This allows the Parking Assist feature to be turned on or off. See *Parking Assist on page 9-45*.

Select On or Off.

Side Blind Zone Alert

This allows the Side Blind Zone Alert feature to be turned on or off. See *Side Blind Zone Alert (SBZA) on page 9-47*.

Select On or Off.

Rear Cross Traffic Alert

This allows the Rear Cross Traffic Alert feature to be turned on or off.

Select On or Off. See “Rear Cross Traffic Alert” in *Rear Vision Camera (RVC) on page 9-48*.

Lighting

Select and the following may display:

- Vehicle Locator Lights
- Exit Lighting

Vehicle Locator Lights

This allows the vehicle locator lights to be turned on or off.

Select On or Off.

Exit Lighting

This allows the selection of how long the exterior lamps stay on when leaving the vehicle when it is dark outside.

Select Off, 30 Seconds, 1 Minute, or 2 Minutes.

Power Door Locks

Select and depending on the radio the following may display:

- Open Door Anti Lock Out
- Unlocked Door Anti Lock Out
- Auto Door Unlock
- Delayed Door Lock

Open Door Anti Lock Out or Unlocked Door Anti Lock Out

When on, this feature will keep the driver door from locking until the door is closed. If this feature is turned on, the Delayed Door Lock menu will not be available.

Select to enable or disable.

Auto Door Unlock

This allows selection of which doors will automatically unlock when the vehicle is shifted into P (Park) with an automatic transmission or when the key is removed from the ignition with a manual transmission with keyed ignition or when the vehicle is turned off with a manual transmission with pushbutton start.

Select All Doors, Driver Door, or OFF.

Delayed Door Lock

When on, this feature will delay the locking of the doors. See *Delayed Locking on page 2-12*.

Select to enable or disable.

Remote Lock/Unlock/Start

Select and depending on the radio the following may display:

- Remote Unlock Feedback
- Remote Unlock Light Feedback
- Remote Lock Feedback
- Remote Door Unlock
- Passive Door Unlock
- Passive Door Lock

Remote Unlock Feedback or Remote Unlock Light Feedback

When on, the exterior lamps will flash when unlocking the vehicle with the RKE transmitter.

Depending on the radio select Flash Lights or OFF, or select to enable or disable.

Remote Lock Feedback

This allows selection of what feedback is provided when unlocking the vehicle with the RKE transmitter.

Select Lights and Horn, Lights Only, Horn Only, or Off.

Remote Door Unlock

This allows selection of which doors will unlock on the first press of 🔓 on the RKE transmitter.

Select Driver Door or All Doors.

If Driver Door is selected, all doors will unlock on the second press of 🔓 within five seconds of the prior press.

Passive Door Unlock

This allows selection of which doors are unlocked by pressing the button on the outside door handle.

Select All Doors or Driver Door.

Passive Door Lock

This allows passive locking to be turned on or off and selection of the type of feedback.

Select Off, On, or On with Horn Chirp.

Return to Factory Settings?

This returns all of the vehicle personalization settings to the factory settings.

Select Yes or No.

Lighting

Exterior Lighting
Exterior Lamp Controls 6-1
Headlamp High/Low-Beam Changer 6-2
Flash-to-Pass 6-2
Daytime Running Lamps (DRL) 6-2
Automatic Headlamp System 6-3
Hazard Warning Flashers 6-3
Turn and Lane-Change Signals 6-4
Front Fog Lamps 6-4

Interior Lighting
Instrument Panel Illumination Control 6-5
Courtesy Lamps 6-5
Dome Lamps 6-5
Reading Lamps 6-5

Lighting Features
Entry Lighting 6-6
Exit Lighting 6-6
Battery Power Protection 6-6

Exterior Lighting

Exterior Lamp Controls

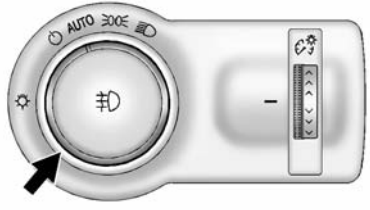

The exterior lamp control is to the left of the steering column on the instrument panel.

There are four positions:

(Off): Briefly turn to this position to turn the automatic lamp control off or on again.

AUTO (Automatic): Turns the headlamps on automatically at normal brightness, together with the parking lamps, taillamps, license plate lamps, instrument panel lights, and sidemarker lamps.

(Parking Lamps): Turns on the parking lamps including all lamps, except the headlamps.

(Headlamps): Turns on the headlamps together with the parking lamps and instrument panel lights. A warning chime sounds if the driver door is opened when the ignition switch is off and the headlamps are on.

(Front Fog Lamps): If equipped, press to turn the lamps on or off.

See *Front Fog Lamps on page 6-4*.

When the lights are on, will be lit. See *Lamps On Reminder on page 5-22*.

Headlamp High/ Low-Beam Changer

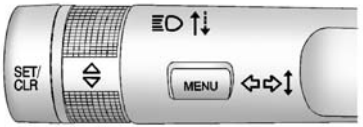

(Headlamp High/Low-Beam Changer): Push the turn signal lever away from you and release to turn the high beams on.

To return to low beams, push the lever again or pull it toward you and release.

This indicator light turns on in the instrument cluster when the high-beam headlamps are on.

Flash-to-Pass

To flash the high beams, pull the turn signal lever all the way toward you. Then release it.

Daytime Running Lamps (DRL)

DRL can make it easier for others to see the front of your vehicle during the day. Fully functional DRL are required on all vehicles first sold in Canada.

A light sensor on top of the instrument panel makes the DRL work, so be sure it is not covered.

The DRL system makes the low-beam headlamps come on at a reduced brightness when the following conditions are met:

- The ignition is in the ON/ RUN mode.
- The exterior lamp control is in AUTO.
- The engine is running.

When the DRL are on, only the low-beam headlamps, at a reduced level of brightness, will be on. The taillamps, sidemarker, instrument panel, and other lamps will not be on.

The headlamps automatically change from DRL to the regular headlamps depending on the darkness of the surroundings. The other lamps that come on with the headlamps will also come on.

When it is bright enough outside, the headlamps go off and the DRL come on.

To turn the DRL off or on again, turn the exterior lamp control to the off position and then release. For vehicles first sold in Canada, the DRL cannot be turned off.

Automatic Headlamp System

When it is dark enough outside and the exterior lamp control is in the automatic position, the headlamps come on automatically. See *Exterior Lamp Controls on page 6-1*.

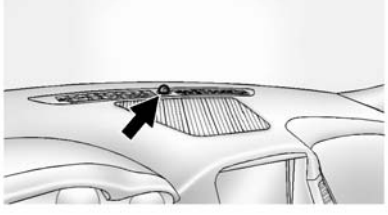

The vehicle has a light sensor on top of the instrument panel. Make sure it is not covered, or the headlamps will be on when they are not needed.

The system may also turn on the headlamps when driving through a parking garage or tunnel. If the vehicle is started in a dark garage, the automatic headlamp system comes on immediately. If it is light outside when the vehicle leaves the garage, there is a slight delay before the automatic headlamp system changes to the DRL. During that delay, the instrument cluster may not be as bright as usual. Make sure the instrument panel illumination control is in the full bright position. See *Instrument Panel Illumination Control on page 6-5*.

Lights On with Wipers

If the windshield wipers are activated in daylight with the engine on, and the exterior lamp control is in AUTO, the headlamps, parking lamps, and other exterior lamps come on. The transition time for the lamps coming on varies based on wiper speed. When the wipers are not operating, these lamps turn off. Move the exterior lamp control to ⏻ or ≡DO≡ to disable this feature.

Hazard Warning Flashers

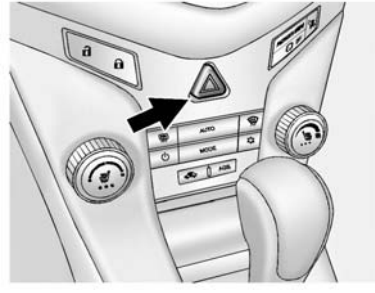

⚠ **(Hazard Warning Flasher):** Press and momentarily hold this button on the center stack, to make the front and rear turn signal lamps flash on and off. This warns others that you are having trouble. Press and momentarily hold again to turn the flashers off.

Turn and Lane-Change Signals

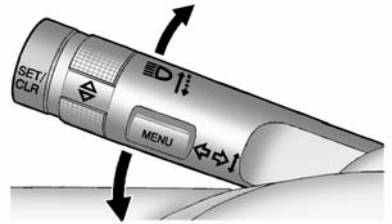

Move the lever all the way up or down to signal a turn.

An arrow on the instrument cluster will flash in the direction of the turn or lane change.

Raise or lower the lever until the arrow starts to flash to signal a lane change. The turn signal flashes three times.

The lever returns to its starting position when it is released.

If after signaling a turn or lane change the arrow flashes rapidly or does not come on, a signal bulb may be burned out. Replace any burned out bulbs. If a bulb is not burned out, check the fuse. See *Fuses and Circuit Breakers on page 10-38*.

Front Fog Lamps

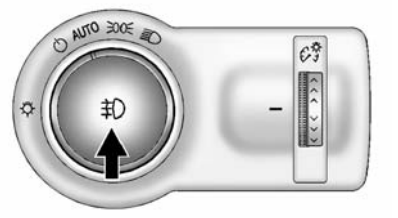

For vehicles with front fog lamps, the button is on the outboard side of the instrument panel.

The ignition must be on to turn on the fog lamps.

(Front Fog Lamps): Press to turn the fog lamps on or off. An indicator light on the instrument cluster comes on when the fog lamps are on.

The fog lamps come on together with the parking lamps.

If the high-beam headlamps are turned on, the fog lamps will turn off. If the high-beam headlamps are turned off, the fog lamps will turn back on again.

Some localities have laws that require the headlamps to be on along with the fog lamps.

Interior Lighting

Instrument Panel Illumination Control

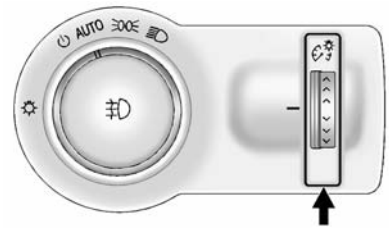

This feature controls the brightness of the instrument panel controls and infotainment display screen. The thumbwheel is to the left of the steering column on the instrument panel.

(Instrument Panel Brightness): Move the thumbwheel up or down and hold, to brighten or dim the instrument panel controls and infotainment display screen.

Courtesy Lamps

The courtesy lamps come on automatically when any door is opened and the dome lamp is in the door position.

Dome Lamps

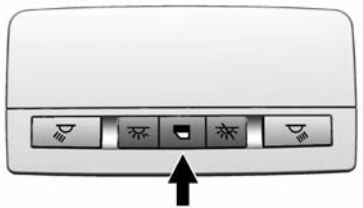

The dome lamp controls are in the headliner.

(Dome Lamp Override): Press to turn the lamps off, even when a door is open.

(Door): Press to turn the lamps on automatically when a door is opened.

(On): Press to turn on the dome lamps.

Reading Lamps

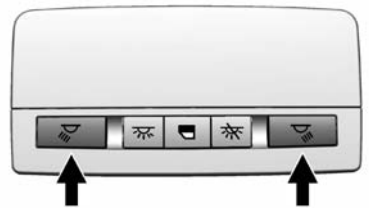

The reading lamps are in the overhead console.

or (Reading Lamps): Press the button near each lamp to turn it on or off.

Lighting Features

Entry Lighting

The headlamps, parking lamps, taillamps, back-up lamps, and most of the interior lamps turn on briefly at night or in areas of limited lighting when 🔓 is pressed on the Remote Keyless Entry (RKE) transmitter. After about 30 seconds the exterior lamps turn off, and then the dome and remaining interior lamps will dim to off. Entry lighting can be disabled manually by changing the ignition out of the OFF position, or by pressing the RKE transmitter 🔒 button.

This feature can be changed. See “Vehicle Locator Lights” under *Vehicle Personalization on page 5-36*.

Exit Lighting

The headlamps, taillamps, back-up lamps, parking lamps, and license plate lamps come on at night, or in areas with limited lighting, when the key is removed from the ignition. The dome lamps also come on when the key is removed from the ignition. The exterior lamps and dome lamps remain on after the door is closed for a set amount of time, then automatically turn off.

If equipped with Keyless Access, the exterior lamps and dome lamps automatically turn on when the driver door is opened after the ignition is turned off. See *Ignition Positions (Keyless Access) on page 9-14* or *Ignition Positions (Key Access) on page 9-16*.

The exterior lamps turn off immediately by turning the exterior lamp control off.

This feature can be changed. See *Vehicle Personalization on page 5-36*.

Battery Power Protection

The battery saver feature is designed to protect the vehicle's battery.

If some interior lamps are left on and the ignition is turned off, the battery rundown protection system automatically turns the lamp off after some time.

Infotainment System

Introduction
Infotainment 7-1
Theft-Deterrent Feature 7-2
Overview 7-3
Operation 7-4

Radio
AM-FM Radio 7-7
Satellite Radio 7-10
Radio Reception 7-11
Satellite Radio Antenna 7-12
Multi-Band Antenna 7-12

Audio Players
CD Player 7-13
Auxiliary Devices 7-15

Phone
Bluetooth (Overview) 7-17
Bluetooth (Infotainment Controls) 7-19
Bluetooth (Voice Recognition) 7-22

Trademarks and License Agreements
Trademarks and License Agreements 7-28

Introduction

Infotainment

Read the following pages to become familiar with the audio system's features.

⚠ Warning

Taking your eyes off the road for extended periods could cause a crash resulting in injury or death to you or others. Do not give extended attention to infotainment tasks while driving.

This system provides access to many audio and non-audio listings.

To minimize taking your eyes off the road while driving, do the following while the vehicle is parked:

- Become familiar with the operation and controls of the audio system.

- Set up the tone, speaker adjustments, and preset radio stations.

For more information, see *Defensive Driving on page 9-3*.

⚠ Caution

Contact your dealer before adding any equipment.

Adding audio or communication equipment could interfere with the operation of the engine, radio, or other systems, and could damage them. Follow federal rules covering mobile radio and telephone equipment.

The vehicle has Retained Accessory Power (RAP). With RAP, the audio system can be played even after the ignition is turned off. See *Retained Accessory Power (RAP) on page 9-23*.

The vehicle may have a base radio, which is included in this manual. See the infotainment manual for information on the connective radio and the navigation system, audio players, phone, and voice recognition. There is also information on settings and downloadable applications (if equipped).

Theft-Deterrent Feature

The theft-deterrent feature works by learning a portion of the Vehicle Identification Number (VIN) to the infotainment system. The infotainment system does not operate if it is stolen or moved to a different vehicle.

Overview

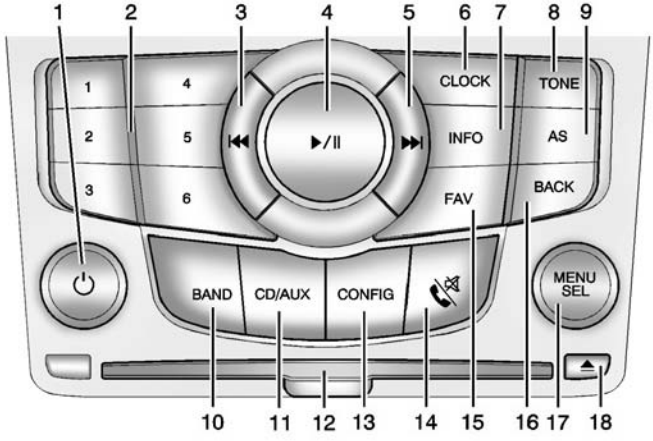

1. ⏻ (Power/Volume)
   - Turns the system on or off and adjusts the volume.
2. Buttons 1–6
   - Radio: Saves and selects favorite stations.
3. ⏮ (Previous/Reverse)
   - Radio: Seeks the previous station.
   - CD: Selects the previous track or rewinds within a track.
4. ▶/II (Play/Pause)
   - CD: Pauses playback, and stops playback.
5. ⏭ (Next/Fast Forward)
   - Radio: Seeks the next station.
   - CD: Selects the next track or fast forwards within a track.
6. CLOCK
   - Opens the clock menu.
7. INFO (Information)
   - Radio: Shows available information about the current station.
   - CD: Shows available information about the current track.
8. TONE
   - Opens the tone menu.
9. AS (Autostore)
   - Radio: Opens the autostore stations list.

10. BAND
    - Changes the band while listening to the radio.
    - Selects the radio when listening to a different audio source.
11. CD/AUX
    - Selects the CD player or an external audio source.
12. CD Slot
    - Insert a CD.
13. CONFIG (Configure)
    - Opens the settings menu.
14. ☎ \ ⊠ (Phone/Mute)
    - Opens the phone main menu.
    - Mutes the audio system.
15. FAV (Favorite Pages)
    - Radio: Opens the favorites list.
16. BACK
    - Menu: Moves one level back.
    - Character Input: Deletes the last character.
17. MENU/SEL
    - Turn to open menus, highlight menu items, or set numeric values while in a menu.
    - Press to select menu items.
    - Radio: Manually selects radio stations.
    - CD: Selects tracks.
18. ⏏ (Eject)
    - Removes a disc from the CD slot.

Operation

Controls

The infotainment system is operated by using the pushbuttons, multifunction knobs, menus shown on the display, and steering wheel controls, if equipped.

Turning the System On or Off

⏻ **(Power/Volume):** Press to turn the system on and off.

Automatic Switch-Off

If the infotainment system has been turned on after the ignition is turned off, the system will turn off automatically after 10 minutes.

Volume Control

⏻ **(Power/Volume):** Turn to adjust the volume.

☎ / ⊠ **(Phone/Mute):** Press to mute the infotainment system. Press ☎ / ⊠ again, or turn the ⏻ knob to cancel mute.

Menu System

The menu system appears on the display screen.

Controls

The MENU/SEL knob and the BACK button are used to navigate the menu system.

MENU/SEL Knob: Press to:

- Enter the menu system.
- Select or activate the highlighted menu option.
- Confirm a set value.
- Turn a system setting on or off.

Turn to:

- Highlight a menu option.
- Select a value.

BACK: Press to:

- Exit a menu.
- Return from a submenu screen to the previous menu screen.
- Delete the last character in a sequence.

Selecting a Menu Option

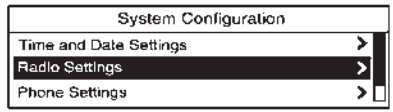

1. Turn the MENU/SEL knob to move the highlighted bar.
2. Press the MENU/SEL knob to select the highlighted option.

Submenus

An arrow on the right-hand edge of the menu indicates that it has a submenu with other options.

Activating a Setting

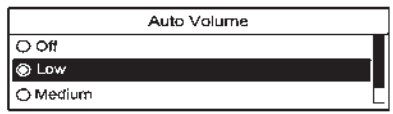

1. Turn the MENU/SEL knob to highlight the setting.
2. Press the MENU/SEL knob to activate the setting.

Setting a Value

1. Turn the MENU/SEL knob to change the current value of the setting.
2. Press the MENU/SEL knob to confirm the setting.

Turning a Function On or Off

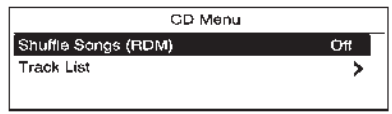

1. Turn the MENU/SEL knob to highlight the function.

2. Press the MENU/SEL knob to turn the function on or off.

Entering a Character Sequence

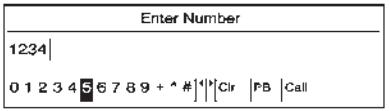

1. Turn the MENU/SEL knob to highlight the character.
2. Press the MENU/SEL knob to select the character.

Press the BACK button to delete the last character in the sequence or press and hold to delete the entire character sequence.

Audio Settings

The audio settings can be set for each radio band and each audio player source.

To quickly reset an audio setting value to 0:

1. Press the TONE button.
2. Select the audio setting.
3. Press and hold the MENU/SEL knob until the value changes to 0.

Press the BACK button to go back to the Tone Settings menu.

Adjusting the Treble, Midrange, and Bass

1. Press the TONE button.
2. Select Treble, Midrange, or Bass.
3. Select the value.

Press the BACK button to go back to the Tone Settings menu.

Adjusting the Fader and Balance

1. Press the TONE button.
2. Select Fader or Balance.
3. Select the value.

Press the BACK button to go back to the Tone Settings menu.

Adjusting the EQ (Equalizer)

If equipped with an equalizer:

1. Press the TONE button.
2. Select EQ presets.
3. Select the setting.

Press the BACK button to go back to the Tone Settings menu.

System Settings

Configuring the Number of Favorite Pages

To configure the number of available favorite pages:

1. Press the CONFIG button.
2. Select Radio Settings.
3. Select Radio Favorites.
4. Select the number of available favorite pages.
5. Press the BACK button to go back to the System Configuration menu.

Auto Volume

The auto volume feature automatically adjusts the radio volume to compensate for road and wind noise as the vehicle speeds up or slows down, so that the volume level is consistent.

The level of volume compensation can be selected, or the auto volume feature can be turned off.

1. Press the CONFIG button.
2. Select Radio Settings.
3. Select Auto Volume.
4. Select the setting.
5. Press the BACK button to go back to the System Configuration menu.

Maximum Startup Volume

The maximum volume played when the radio is first turned on can be set.

1. Press the CONFIG button.
2. Select Radio Settings.
3. Select Maximum Startup Volume.
4. Select the setting.
5. Press the BACK button to go back to the System Configuration menu.

Radio

AM-FM Radio

Control Buttons

The buttons used to control the radio are:

BAND: Press to turn the radio on and choose between AM, FM, and SiriusXM®, if equipped.

MENU/SEL: Turn to navigate the available menus and to search for stations.

INFO: Press to display additional information that may be available for the current song.

⏮ or ⏭ : Press to search for stations.

FAV: Press to open the favorites list and select the favorites page.

1 to 6: Press to select preset stations.

AS (Autostore): Press to open the autostore list.

RDS (Radio Data System)

The radio may have RDS. The RDS feature is available for use only on FM stations that broadcast RDS information. This feature only works when the information from the radio station is available. In rare cases, a radio station could broadcast incorrect information that causes the radio features to work improperly. If this happens, contact the radio station.

While the radio is tuned to an FM-RDS station, the station name or call letters display.

Radio Menus

Radio menus are available for AM and FM.

Turn the MENU/SEL knob to open the main radio menu for that band.

Selecting a Band

Press the BAND button to choose AM, FM, or SiriusXM, if equipped. The last station that was playing starts playing again.

Selecting a Station

Seek Tuning

If the radio station is not known:

Briefly press ⏮ or ⏭ to automatically search for the next available station. If a station is not found, the radio switches to a more sensitive search level. If a station still is not found, the frequency that was last active begins to play.

If the radio station is known:

Press and hold ⏮ or ⏭ until the station on the display is reached, then release the button.

Manual Tuning

Turn the MENU/SEL knob to select the frequency on the display.

Favorites List

1. Turn the MENU/SEL knob.
2. Select Favorites List.
3. Select the station.

Station Lists

1. Turn the MENU/SEL knob.
2. Select AM or FM Station List. All receivable stations in the current reception area are displayed. If a station list has not been created, an automatic station search is done.
3. Select the station.

Category Lists

Most stations that broadcast an RDS program type code specify the type of programming transmitted. Some stations change the program type code depending on the content. The system stores the RDS stations sorted by program type in the FM category list.

To search for a programming type determined by station:

1. Turn the MENU/SEL knob.
2. Select FM category list. A list of all programming types available displays.

3. Select the programming type. A list of stations that transmit programming of the selected type displays.
4. Select the station.

The category lists are updated when the station lists are updated.

Updating Station & Category Lists

If stations stored in the station list can no longer be received:

1. Turn the MENU/SEL knob.
2. Select Update AM or FM Station List, if the stations stored in the station list are no longer received. A station search will be completed and the first station in the updated list will play.

To cancel the station search, press the MENU/SEL knob.

Storing a Station as a Favorite

Stations from all bands can be stored in any order in the favorite pages.

Up to six stations can be stored in each favorite page and the number of available favorite pages can be set.

Storing Stations

To store the station to a position in the list, press the corresponding button 1 to 6 until a beep is heard.

Retrieving Stations

Press the FAV button to open a favorite page or to switch to another favorite page. Briefly press one of the 1 to 6 buttons to retrieve the station.

Autostore Stations

AS (Autostore): Autostore searches and stores 12 FM and 12 AM stations with the strongest signal on two pages with six stations stored on each page. To use autostore:

1. Press BAND to select FM or AM.
2. Press and hold AS until a beep sounds. SEARCH displays on the radio, followed by the number of stations found.
3. The radio will automatically store the 12 strongest stations found as autostore presets.
4. Repeat steps 1 and 2 to autostore stations on the other radio band.

Press the AS button to alternate between the autostore pages 1 and 2 of the selected radio band.

AS displays on the radio when using autostore presets.

Autostore does not delete previously stored favorite stations.

Autostore does not function with SiriusXM radio stations.

Satellite Radio

Vehicles with a SiriusXM® Satellite Radio tuner and a valid SiriusXM Satellite Radio subscription can receive SiriusXM programming.

SiriusXM Satellite Radio Service

SiriusXM is a satellite radio service based in the 48 contiguous United States and 10 Canadian provinces. SiriusXM Satellite Radio has a wide variety of programming and commercial-free music, coast to coast, and in digital-quality sound. A service fee is required to receive the SiriusXM service. If SiriusXM service needs to be reactivated, the radio will display "No Subscription Please Renew" on channel XM1. For more information, contact SiriusXM at www.siriusxm.com or 1-866-635-2349 in the U.S., or www.xmradio.ca or 1-877-209-0079 in Canada.

Control Buttons

The buttons used to control the SiriusXM radio are:

BAND: Press to turn the radio on and choose between AM, FM, and SiriusXM.

⏮ or ⏭ : Press to go to the previous or next channel.

FAV: Press to open the favorites list.

1 to 6: Press to select a favorite.

MENU/SEL: Turn to select a channel.

INFO: Press to display additional information that may be available about the current song.

▶/II (Play/Pause): Press to pause time shifted content, if equipped.

Selecting the SiriusXM Band

Press the BAND button to choose between the AM, FM, and SiriusXM bands. The last channel played in that band begins to play when that band is selected.

SiriusXM Categories

SiriusXM channels are organized in categories.

Removing or Adding Categories

Channels in a category that have been removed can still be accessed by using ⏮ or ⏭ , or the MENU/SEL knob.

To add or remove categories:

1. Press the CONFIG button.
2. Select Radio Settings.
3. Select XM Categories.
4. Turn the MENU/SEL knob to highlight the category.
5. Press the MENU/SEL knob to remove or add the category.

Selecting a SiriusXM Channel

SiriusXM channels can be selected by using ⏮, ⏭ , the MENU/SEL knob, or the Menu system.

Selecting a Channel Using ⏮ or ⏭

- Press and release ⏮ or ⏭ to go to the previous or next channel.
- Press and hold ⏮ or ⏭ to scroll through the previous or next channel until the channel is reached.

Selecting a Channel Using the MENU/SEL Knob

To select a SiriusXM channel using the MENU/SEL knob:

Turn the MENU/SEL knob to highlight a SiriusXM channel. The channel is selected after a short delay.

To select a channel using the MENU/SEL knob:

1. Turn the MENU/SEL knob and select Channel List.
2. Select the desired channel.

Selecting a Channel Using the Menu System

1. Turn the MENU/SEL knob.
2. Select XM Category List.
3. Select the category.
4. Select the channel.

Storing a SiriusXM Channel as a Favorite

Channels from all bands can be stored in any order in the favorite pages.

Up to six channels can be stored in each favorite page and the number of available favorite pages can be set.

Storing a Channel as a Favorite

To store the channel to a position in the list, press and hold the corresponding 1 to 6 button until the channel can be heard again.

Retrieving Channels

Press the FAV button to open a favorite page or to change to another favorite page. Briefly press one of the 1 to 6 buttons to retrieve the channel.

Radio Reception

Frequency interference and static can occur during normal radio reception if items such as phone chargers, vehicle convenience accessories, and external electronic devices are plugged into the accessory power outlet. If there is interference or static, unplug the item from the accessory power outlet.

FM

FM signals only reach about 16 to 65 km (10 to 40 mi). Although the radio has a built-in electronic circuit that automatically works to reduce interference, some static can occur,

especially around tall buildings or hills, causing the sound to fade in and out.

AM

The range for most AM stations is greater than for FM, especially at night. The longer range can cause station frequencies to interfere with each other. Static can also occur when things like storms and power lines interfere with radio reception. When this happens, try reducing the treble on the radio.

SiriusXM Satellite Radio Service

If equipped, SiriusXM Satellite Radio Service provides digital radio reception. Tall buildings or hills can interfere with satellite radio signals, causing the sound to fade in and out. In addition, traveling or standing under heavy foliage, bridges, garages, or tunnels may cause loss of the SiriusXM signal for a period of time.

Cell Phone Usage

Cell phone usage, such as making or receiving phone calls, charging, or just having the phone on may cause static interference in the radio. Unplug the phone or turn it off if this happens.

Satellite Radio Antenna

The SiriusXM Satellite Radio antenna is located on the roof of the vehicle. Keep the antenna clear of obstructions for clear radio reception.

If the vehicle has a sunroof, the performance of the SiriusXM system may be affected if the sunroof is open.

Multi-Band Antenna

The multi-band antenna is on the roof of the vehicle. The antenna is used for the AM-FM radio, OnStar, the SiriusXM Satellite Radio Service System, and GPS (Global Positioning System), if the vehicle has these features. Keep the antenna clear of obstructions for clear reception.

If the vehicle has a sunroof, the performance of the features listed above may be affected if the sunroof is open.

Audio Players

CD Player

The CD player can play audio CDs and MP3 CDs.

The CD player will not play 8 cm (3 in) CDs.

Care of CDs

Sound quality can be reduced due to disc quality, recording method, quality of the music recorded, and how the disc has been handled. Handle discs carefully and store them in their original cases or other protective cases away from direct sunlight and dust. If the bottom surface of a disc is damaged, the disc may not play properly or at all. Do not touch the bottom surface of a disc while handling it; this could damage the surface. Pick up discs by grasping the outer edges or the edge of the hole and the outer edge.

If the bottom surface of a disc is dirty, take a soft lint-free cloth, or dampen a clean soft cloth in a mild neutral detergent solution mixed with water, and clean it. Wipe the disc from the center to the outer edge.

Care of the CD Player

Do not add a label to a disc, as it could get caught in the CD player. If a label is needed, label the top of the recorded disc with a marking pen.

Do not use disc lens cleaners because they could contaminate the lens of the disc optics and damage the CD player.

⚠ Caution

If a label is added to a CD, more than one CD is inserted into the slot at a time, or an attempt is made to play scratched or damaged CDs, the CD player could be damaged. While using the CD player, use only CDs in good condition without any label,

(Continued)

Caution (Continued)

load one CD at a time, and keep the CD player and the loading slot free of foreign materials, liquids, and debris.

Control Buttons

The buttons used to control the CD player are:

CD/AUX: Press to use the CD player.

⏭ or ⏮ : Press to select tracks or to fast forward or rewind within a track.

INFO: Press to display additional information about the current track that may be available.

MENU/SEL: Turn to enter the menu.

⏏ : Press to eject the disc.

Inserting a CD

With the printed side facing up, insert a disc into the CD slot until it is drawn in.

Removing a CD

Press ⏏

The disc is pushed out of the CD slot.

If the disc is not removed after it is ejected, it is pulled back in after a few seconds.

Playing a CD or MP3 CD

Press the CD/AUX button if there is a disc in the player; it begins playing.

Information about the disc and current track is shown on the display depending on the data stored.

Selecting a CD Track

Using the control buttons:

- Press ⏮ or ⏭ to select the previous or next track.

Using the CD Menu:

1. Turn the MENU/SEL knob.
2. Select Tracks list.
3. Select the track.

Playing Tracks in Random Order

Turn the MENU/SEL knob and then set Shuffle Songs to On.

Fast Forward and Rewind

Press and hold ⏭ or ⏮ to fast forward or rewind within the current track.

Selecting an MP3 Track

Using the control buttons:

- Press ⏮ or ⏭ to select the previous or next track.

Using the CD Menu:

1. Turn the MENU/SEL knob.
2. Select Playlists/Folders.
3. Select the playlist or folder.
4. Select the track.

Searching for MP3 Tracks

The search feature may take some time to display the information after reading the disc due to the amount of information stored on the disc. FM automatically plays while the disc is being read.

Tracks can be searched by:

- Playlists
- Artists
- Albums
- Song Titles
- Genres
- Folder View

To search for tracks:

1. Turn the MENU/SEL knob.
2. Select Search.
3. Select: Playlists, Artists, Albums, Song Titles, Genres, or Folder View.
4. Select the track.

Auxiliary Devices

If equipped, the AUX inputs are in the center console and allow portable devices to connect to the vehicle using the 3.5 mm (1/8 in) auxiliary jack or USB port.

Portable devices are controlled by using the menu system described in *Operation on page 7-4*.

3.5 mm Jack

Connect a 3.5 mm (1/8 in) cable to the auxiliary input jack to use a portable audio player.

Playback of an audio device that is connected to the 3.5 mm jack can only be controlled using the controls on the device.

Adjusting the Volume

Turn the ⏻ knob to adjust the volume of the infotainment system after the volume level has been set on the portable audio device.

USB Port

For vehicles with a USB port, the following devices may be connected and controlled by the infotainment system.

- iPods
- PlaysForSure Devices (PFDs)
- USB Drives
- Zunes®

Not all iPods, PFDs, USB drives, and Zunes are compatible with the infotainment system. Devices are also charged while plugged into the USB port.

Connecting and Controlling an iPod

Not all iPods can be controlled by the infotainment system.

Connecting an iPod

Connect the iPod to the USB port.

Searching for a Track

Tracks that are found can be searched for by:

- Playlists
- Artists
- Albums
- Song Titles
- Podcasts
- Genres
- Audio Books
- Composers

To search for tracks:

1. Turn the MENU/SEL knob.
2. Select Search.
3. Select: Playlists, Artists, Albums, Song Titles, Podcasts, Genres, Audio Books, or Composers.
4. Select the track.

Shuffle

Turn the MENU/SEL knob and set Shuffle Songs (Random) to On or Off, then press the BACK button to return to the main screen.

On: Plays tracks in the current folder in random order.

Off: Plays tracks in the current folder in sequential order.

Repeat

Turn the MENU/SEL knob and set Repeat to On or Off, then press the BACK button to return to the main screen.

On: Repeats the current track.

Off: Starts playback from the beginning of the current track after the last track finishes.

Connecting and Controlling a PlaysForSure Device (PFD) or Zune

Connecting a PFD or Zune

Connect the PFD or Zune to the USB port.

Searching for a Track

Tracks can be searched for by:

- Playlists
- Artists
- Albums
- Song Titles
- Podcasts
- Genres

To search for tracks:

1. Turn the MENU/SEL knob.
2. Select Search.
3. Select: Playlists, Artists, Albums, Song Titles, Podcasts, or Genres.
4. Select the track.

Shuffle Functionality

Turn the MENU/SEL knob and set Shuffle Songs (Random) to On or Off.

On: Plays current tracks in random order.

Off: Plays current tracks in sequential order.

Repeat Functionality

Turn the MENU/SEL knob and set Repeat to On or Off.

Repeat On: Repeats the current track.

Repeat Off: Starts playback from the beginning of the current track after the last track finishes.

Connecting and Controlling a USB Drive

The infotainment system can only play back .mp3 and .wma files from a USB drive.

Only the first 10,000 songs are recognized on the device.

When a device is not supported, the message “No supported data found. You can safely disconnect the device” appears.

Connecting a USB Drive

Connect the USB drive to the USB port.

Searching for a Track

It is normal for the search feature to take some time to display the information after reading the device due to the amount of information stored.

Files that do not have any meta data stored in the ID3 tag display as Unknown.

Tracks can be searched for by:

- Playlists*
- Artists
- Albums
- Song Titles
- Genres
- Folder View

*This only displays if a playlist is found on the device.

To search for tracks:

1. Turn the MENU/SEL knob.
2. Select Search.
3. Select: Playlists, Artists, Albums, Song Titles, Genres, or Folder View.
4. Select the track.

Shuffle Functionality

Turn the MENU/SEL knob and set Shuffle Songs (Random) to On or Off.

On: Plays current tracks in random order.

Off: Plays current tracks in sequential order.

Repeat Functionality

Turn the MENU/SEL knob and set Repeat to On or Off.

Repeat On: Repeats the current track.

Repeat Off: Starts playback from the beginning of the current track after the last track finishes.

Phone

Bluetooth (Overview)

For vehicles equipped with Bluetooth capability, the system can interact with many cell phones, allowing:

- Placement and receipt of calls in a hands-free mode.
- Sharing of the cell phone's address book or contact list with the vehicle.

To minimize driver distraction, before driving, and with the vehicle parked:

- Become familiar with the features of the cell phone. Organize the phone book and contact lists clearly and delete duplicate or rarely used entries. If possible, program speed dial or other shortcuts.
- Review the controls and operation of the infotainment system.

- Pair cell phone(s) to the vehicle. The system may not work with all cell phones. See “Pairing” in this section.
- If the cell phone has voice dialing capability, learn to use that feature to access the address book or contact list. See “Voice Pass-Thru” in this section.
- See “Storing and Deleting Phone Numbers” in this section.

⚠ Warning

When using a cell phone, it can be distracting to look too long or too often at the screen of the phone or the infotainment system. Taking your eyes off the road too long or too often could cause a crash resulting in injury or death. Focus your attention on driving.

Vehicles with a Bluetooth system can use a Bluetooth-capable cell phone with a Hands-Free Profile to make and receive phone calls. The infotainment system and voice recognition are used to control the system. The system can be used while in ON/RUN or ACC/ACCESSORY. The range of the Bluetooth system can be up to 9.1 m (30 ft). Not all phones support all functions and not all phones work with the Bluetooth system. See www.gm.com/bluetooth for more information about compatible phones.

Bluetooth Controls

Use the buttons located on the infotainment system and the steering wheel to operate the Bluetooth system.

Steering Wheel Controls

/ (Push To Talk): Press to answer incoming calls, confirm system information, and start voice recognition.

/ (End Call/Mute): Press to end a call, reject a call, or cancel an operation.

Infotainment System Controls

If equipped, the infotainment system allows certain controls to be selected on the infotainment display. See *OnStar Overview on page 14-1*.

For information about how to navigate the menu system using the infotainment controls. See *Operation on page 7-4*.

\ (Phone/Mute): Press to enter the Phone main menu. Press to mute the audio system.

Voice Recognition

The voice recognition system uses commands to control the system and dial phone numbers.

Noise: The system may not recognize voice commands if there is too much background noise.

When to Speak: A tone sounds to indicate that the system is ready for a voice command. Wait for the tone and then speak.

How to Speak: Speak clearly in a calm and natural voice.

Audio System

When using the Bluetooth system, sound comes through the vehicle's front audio system speakers and overrides the audio system. Use the VOL/ ⏻ knob during a call to change the volume level. The adjusted volume level remains in memory for later calls. The system maintains a minimum volume level.

Other Information

See *Radio Frequency Statement on page 13-12*.

Bluetooth (Infotainment Controls)

For information about how to navigate the menu system using the infotainment controls, see *Operation on page 7-4*.

Pairing

A Bluetooth-enabled cell phone must be paired to the Bluetooth system and then connected to the vehicle before it can be used. See your cell phone manufacturer's user guide for Bluetooth functions before pairing the cell phone. If a Bluetooth phone is not connected, calls will be made using OnStar Hands-Free Calling, if available. See *Operation on page 7-4*.

Pairing Information

- A Bluetooth phone with MP3 capability cannot be paired to the vehicle as a phone and an MP3 player at the same time.
- Up to five cell phones can be paired to the Bluetooth system.
- The pairing process is disabled when the vehicle is moving.
- Pairing only needs to be completed once, unless the pairing information on the cell phone changes or the cell phone is deleted from the system.
- Only one paired cell phone can be connected to the Bluetooth system at a time.
- If multiple paired cell phones are within range of the system, the system connects to the first available paired cell phone in the order that they were first paired to the system. To link to a different paired phone, see “Linking to a Different Phone” later in this section.

Pairing a Phone

1. Press the CONFIG button.
2. Select Phone Settings.
3. Select Bluetooth.
4. Select Pair Device (Phone). A four-digit Personal Identification Number (PIN) appears on the display. The PIN is used in Step 6.
5. Start the pairing process on the cell phone to be paired to the vehicle. See the cell phone manufacturer's user guide for information on this process.
6. Locate the device named “Your Vehicle” in the list on the cell phone. Follow the instructions

on the cell phone to enter the PIN provided in Step 4. After the PIN is successfully entered, the system prompts you to provide a name for the paired cell phone. This name will be used to indicate which phones are paired and connected to the vehicle. The system responds with “<Phone name> has been successfully paired” after the pairing process is complete.

7. Repeat Steps 1–6 to pair additional phones.

Listing All Paired and Connected Phones

1. Press the CONFIG button.
2. Select Phone Settings.
3. Select Bluetooth.
4. Select Device List.

Deleting a Paired Phone

1. Press the CONFIG button.
2. Select Phone Settings.
3. Select Bluetooth.
4. Select Device List.
5. Select the phone to delete and follow the on screen prompts.

Linking to a Different Phone

To link to a different phone, the new phone must be in the vehicle and available to be connected to the Bluetooth system before the process is started.

1. Press the CONFIG button.
2. Select Phone Settings.
3. Select Bluetooth.
4. Select Device List.
5. Select the new phone to link to and follow the on screen prompts.

   If delete is selected, the highlighted phone will be deleted.

Making a Call Using Phone Book

For cell phones that support the phone book feature, the Bluetooth system can use the contacts stored on your cell phone to make calls. See your cell phone phone manufacturer's user guide or contact your wireless provider to find out if this feature is supported by your phone.

When a cell phone supports the phone book feature, the Phone Book and Call Lists menus are automatically available.

The Phone Book menu allows you to access the phone book stored in the cell phone to make a call.

The Call Lists menu allows you to access the phone numbers from the Incoming Calls, Outgoing Calls, and Missed Calls menus on your cell phone to make a call.

To make a call using the Phone Book menu:

1. Press ☎ \ ☒ once or twice (depending on the radio).
2. Select Phone Book.
3. Search through the list by selecting the letter group the phone book entry begins with, or press the MENU/SEL knob to scroll through the entire list of names/numbers in the phone book.
4. Select the name or number you want to call.

To make a call using the Call Lists menu:

1. Press ☎ \ ☒ once or twice (depending on the radio).
2. Select Call Lists.
3. Select the Incoming Calls, Outgoing Calls, or Missed Calls list.
4. Select the name or number you want to call.

Making a Call

To make a call:

1. Press ☎ \ ☒ once or twice (depending on the radio).
2. Enter the character sequence. See “Entering a Character Sequence” in *Operation on page 7-4*.
3. Select Call to start dialing the number.

Accepting or Declining a Call

When an incoming call is received, the infotainment system mutes and a ring tone is heard in the vehicle.

Accepting a Call

Turn the MENU/SEL knob to “Answer” and press the MENU/SEL knob to accept the call.

Declining a Call

Turn the MENU/SEL knob to “Decline” and press the MENU/SEL knob to decline the call.

Call Waiting

Call waiting must be supported on the Bluetooth phone and enabled by the wireless service carrier to work.

Accepting a Call

Turn the MENU/SEL knob to “Answer” and press the MENU/SEL knob to accept the call.

Declining a Call

Turn the MENU/SEL knob to “Decline” and press the MENU/SEL knob to decline the call.

Switching Between Calls (Call Waiting Calls Only)

To switch between calls:

1. Turn or press the MENU/SEL knob.
2. Select Switch Call from the menu.

Conference Calling

Conference calling and three-way calling must be supported on the Bluetooth phone and enabled by the wireless service carrier to work.

To start a conference while in a current call:

1. Turn or press the MENU/SEL knob.
2. Select Enter Number.
3. Enter the character sequence then select Call. See “Entering a Character Sequence” in *Operation on page 7-4*.
4. After the call has been placed, turn or press the MENU/SEL knob and choose Merge Calls.
5. To add more callers to the conference call, repeat Steps 1–4. The number of callers that can be added is limited by your wireless service carrier.

Ending a Call

Turn or press the MENU/SEL knob and select Hang Up.

Muting a Call

To Mute a Call

Turn or press the MENU/SEL knob and select Mute Call.

To Cancel Mute

Turn or press the MENU/SEL knob and select Mute Call.

Dual Tone Multi-Frequency (DTMF) Tones

The in-vehicle Bluetooth system can send numbers during a call. This is used when calling a menu-driven phone system.

1. Turn or press the MENU/SEL knob and select Enter Number.
2. Enter the character sequence. See “Entering a Character Sequence” in *Operation on page 7-4*.

Bluetooth (Voice Recognition)

Using Voice Recognition

To use voice recognition, press the / button on the steering wheel. Use the commands below for the various voice features. For additional information, say “Help” while you are in a voice recognition menu.

Pairing

A Bluetooth-enabled cell phone must be paired to the Bluetooth system and then connected to the vehicle before it can be used. See your cell phone manufacturer's user guide for Bluetooth functions before pairing the cell phone. If a Bluetooth phone is not connected, calls will be made using OnStar Hands-Free Calling, if available. See *Operation on page 7-4*.

Pairing Information

- A Bluetooth phone with MP3 capability cannot be paired to the vehicle as a phone and an MP3 player at the same time.
- Up to five cell phones can be paired to the Bluetooth system.
- The pairing process is disabled when the vehicle is moving.
- Pairing only needs to be completed once, unless the pairing information on the cell phone changes or the cell phone is deleted from the system.
- Only one paired cell phone can be connected to the Bluetooth system at a time.
- If multiple paired cell phones are within range of the system, the system connects to the first available paired cell phone in the order that they were first paired to the system. To link to a different paired phone, see “Linking to a Different Phone” later in this section.

Pairing a Phone

1. Press ✆ / ⁂. The system responds “Ready,” followed by a tone.
2. Say “Bluetooth.” This command can be skipped.
3. Say “Pair.” The system responds with instructions and a four-digit Personal Identification Number (PIN). The PIN is used in Step 5.
4. Start the pairing process on the cell phone that you want to pair. For help with this process, see your cell phone manufacturer's user guide.
5. Locate the device named “Your Vehicle” in the list on the cell phone. Follow the instructions on the cell phone to enter the PIN provided in Step 3. After the PIN is successfully entered, the system prompts you to provide a name for the paired cell phone. This name will be used to indicate which phones are paired and connected to the vehicle. The system responds with “<Phone name> has been successfully paired” after the pairing process is complete.
6. Repeat Steps 1–5 to pair additional phones.

Listing All Paired and Connected Phones

The system can list all cell phones paired to it. If a paired cell phone is also connected to the vehicle, the system responds with “is connected” after that phone name.

1. Press ✆ / ⁂. The system responds “Ready,” followed by a tone.
2. Say “Bluetooth.”
3. Say “List.”

Deleting a Paired Phone

If the phone name you want to delete is unknown, see “Listing All Paired and Connected Phones.”

1. Press / . The system responds “Ready,” followed by a tone.
2. Say “Bluetooth.”
3. Say “Delete.” The system asks for which phone to delete.
4. Say the name of the phone you want to delete.

Connecting to a Different Phone

To connect to a different cell phone, the Bluetooth system looks for the next available cell phone in the order in which all available cell phones were paired. Depending on which cell phone you want to connect to, you may have to use this command several times.

1. Press / . The system responds “Ready,” followed by a tone.
2. Say “Bluetooth.”
3. Say “Change phone.”
   - If another cell phone is found, the response will be “<Phone name> is now connected.”
   - If another cell phone is not found, the original phone remains connected.

Storing and Deleting Phone Numbers

The system can store up to 30 phone numbers as name tags in the Hands-Free Directory that is shared between the Bluetooth and OnStar systems.

The following commands are used to delete and store phone numbers.

Store: This command will store a phone number, or a group of numbers as a name tag.

Digit Store: This command allows a phone number to be stored as a name tag by entering the digits one at a time.

Delete: This command is used to delete individual name tags.

Delete All Name Tags: This command deletes all stored name tags in the Hands-Free Calling Directory and the Destinations Directory.

Using the “Store” Command

1. Press / . The system responds “Ready,” followed by a tone.
2. Say “Store.”
3. Say the phone number or group of numbers you want to store all at once with no pauses, then follow the directions given by the system to save a name tag for this number.

Using the “Digit Store” Command

If an unwanted number is recognized by the system, say “Clear” at any time to clear the last number.

To hear all of the numbers recognized by the system, say “Verify” at any time.

1. Press ✆ / ⁂. The system responds “Ready,” followed by a tone.
2. Say “Digit Store.”
3. Say each digit, one at a time, that you want to store. After each digit is entered, the system repeats back the digit it heard followed by a tone. After the last digit has been entered, say “Store,” and then follow the directions given by the system to save a name tag for this number.

Using the “Delete” Command

1. Press ✆ / ⁂. The system responds “Ready,” followed by a tone.
2. Say “Delete.”
3. Say the name tag you want to delete.

Using the “Delete All Name Tags” Command

This command deletes all stored name tags in the Hands Free Calling Directory and the Destinations Directory.

To delete all name tags:

1. Press ✆ / ⁂. The system responds “Ready,” followed by a tone.
2. Say “Delete all name tags.”

Listing Stored Numbers

The list command will list all stored numbers and name tags.

Using the “List” Command

1. Press ✆ / ⁂. The system responds “Ready,” followed by a tone.
2. Say “Directory.”
3. Say “Hands Free Calling.”
4. Say “List.”

Making a Call

Calls can be made using the following commands.

Dial or Call: The dial or call command can be used interchangeably to dial a phone number or a stored name tag.

Digit Dial: This command allows a phone number to be dialed by entering the digits one at a time.

Re-dial: This command is used to dial the last number used on the cell phone.

Using the “Dial” or “Call” Command

1. Press ✆ / ⁂. The system responds “Ready,” followed by a tone.
2. Say “Dial” or “Call.”
3. Say the entire number without pausing or say the name tag.

Once connected, the person called will be heard through the audio speakers.

Calling 911 Emergency

1. Press / . The system responds “Ready,” followed by a tone.
2. Say “Dial” or “Call.”
3. Say “911.”
4. Say “Dial” or “Call.”

Using the “Digit Dial” Command

The digit dial command allows a phone number to be dialed by entering the digits one at a time. After each digit is entered, the system repeats back the digit it heard followed by a tone.

If an unwanted number is recognized by the system, say “Clear” at any time to clear the last number.

To hear all of the numbers recognized by the system, say “Verify” at any time.

1. Press / . The system responds “Ready,” followed by a tone.
2. Say “Digit Dial.”
3. Say each digit, one at a time, that you want to dial. After each digit is entered, the system repeats back the digit it heard followed by a tone. After the last digit has been entered, say “Dial.”

Once connected, the person called will be heard through the audio speakers.

Using the “Re-dial” Command

1. Press / . The system responds “Ready,” followed by a tone.
2. After the tone, say “Re-dial.” The system dials the last number called from the connected cell phone.

Once connected, the person called will be heard through the audio speakers.

Receiving a Call

When an incoming call is received, the audio system mutes and a ring tone is heard in the vehicle.

- Press / to answer the call.
- Press / to ignore a call.

Call Waiting

Call waiting must be supported on the cell phone and enabled by the wireless service carrier.

- Press / to answer an incoming call when another call is active. The original call is placed on hold.
- Press / again to return to the original call.
- To ignore the incoming call, no action is required.
- Press / to disconnect the current call and switch to the call on hold.

Three-Way Calling

Three-way calling must be supported on the cell phone and enabled by the wireless service carrier.

1. While on a call, press ✆ / ⁂.
2. Say “Three-way call.”
3. Use the dial or call command to dial the number of the third party to be called.
4. Once the call is connected, press ✆ / ⁂ to link all callers together.

Ending a Call

Press ✆ / ☎ to end a call.

Muting a Call

During a call, all sounds from inside the vehicle can be muted so that the person on the other end of the call cannot hear them.

To mute a call, press ✆ / ⁂ , and then say “Mute Call.”

To cancel mute, press ✆ / ⁂ , and then say “Un-mute Call.”

Transferring a Call

Audio can be transferred between the Bluetooth system and the cell phone.

The cell phone must be paired and connected with the Bluetooth system before a call can be transferred. The connection process can take up to two minutes after the ignition is turned to ON/RUN.

To Transfer Audio from the Bluetooth System to a Cell Phone

During a call with the audio in the vehicle:

1. Press ✆ / ⁂.
2. Say “Transfer Call.”

To Transfer Audio to the Bluetooth System from a Cell Phone

During a call with the audio on the cell phone, press ✆ / ⁂. The audio transfers to the vehicle. If the audio does not transfer to the vehicle, use the audio transfer feature on the cell phone. See your cell phone manufacturer's user guide for more information.

Voice Pass-Thru

Voice pass-thru allows access to the voice recognition commands on the cell phone. See your cell phone manufacturer's user guide to see if the cell phone supports this feature.

To access contacts stored in the cell phone:

1. Press ✆ / ⁂. The system responds “Ready,” followed by a tone.
2. Say “Bluetooth.” This command can be skipped.
3. Say “Voice.” The system responds “OK, accessing <phone name>.”

The cell phone's normal prompt messages will go through their cycle according to the phone's operating instructions.

Dual Tone Multi-Frequency (DTMF) Tones

The Bluetooth system can send numbers and the numbers stored as name tags during a call. You can use this feature when calling a menu-driven phone system. Account numbers can also be stored for use.

Sending a Number or Name Tag During a Call

1. Press / . The system responds “Ready,” followed by a tone.
2. Say “Dial.”
3. Say the number or name tag to send.

Clearing the System

Unless information is deleted out of the in-vehicle Bluetooth system, it will be retained indefinitely. This includes all saved name tags in the phone book and phone pairing information. For information on how to delete this information, see the previous sections on “Deleting a Paired Phone” and “Deleting Name Tags.”

Trademarks and License Agreements

The Bluetooth® word mark and logos are owned by the Bluetooth® SIG, Inc. and any use of such marks by General Motors is under license. Other trademarks and trade names are those of their respective owners.

Manufactured under license under U.S. Patent #'s: 5,451,942; 5,956,674; 5,974,380; 5,978,762; 6,487,535 & other U.S. and worldwide patents issued & pending. DTS and the Symbol are registered trademarks and DTS Digital Surround and the DTS logos are trademarks of DTS Inc. All Rights Reserved.

Manufactured under license from Dolby Laboratories. Dolby and the double-D symbol are trademarks of Dolby Laboratories.

“Made for iPod and iPhone” means that an electronic accessory has been designed to connect specifically to iPod and has been certified by the developer to meet Apple performance standards.

iPod is a trademark of Apple Computer, Inc., registered in the U.S. and other countries.

Fees and Taxes — Subscription fee, taxes, one time activation fee, and other fees may apply. Subscription fee is consumer only. All fees and programming subject to change. Subscriptions subject to Customer Agreement available at www.siriusxm.com. XM® service only available in the 48 contiguous United States and Canada*.

*Canada — Some deterioration of service may occur in extreme northern latitudes. This is beyond the control of SiriusXM® Satellite Radio. Explicit Language Notice — Channels with frequent explicit language are indicated with an “XL” preceding the channel name. Channel blocking is available for SiriusXM Satellite Radio receivers by notifying SiriusXM at:

- USA Customers — See www.siriusxm.com or call 1-866-635-2349.
- Canadian Customers — See www.xmradio.ca or call 1-877-209-0079.

It is prohibited to copy, decompile, disassemble, reverse engineer, hack, manipulate, or otherwise make available any technology or software incorporated in receivers compatible with the SiriusXM® Satellite Radio System or that support the SiriusXM website, the Online Service or any of its content. Furthermore, the AMBER voice

compression software included in this product is protected by intellectual property rights including patent rights, copyrights, and trade secrets of Digital Voice Systems, Inc.

General Requirements:

1. A License Agreement from SiriusXM® is required for any product that incorporates SiriusXM Technology and/or for use of any of the SiriusXM marks to be manufactured, distributed or marketed in the SiriusXM Service Area.
2. For products to be distributed, marketed and/or sold in Canada, a separate agreement is required with Canadian Satellite Radio Inc. (operating as XM Canada).

Music and video recognition technology and related data are provided by Gracenote®. Gracenote is the industry standard in music recognition technology and related content delivery. For more information, visit www.gracenote.com.

CD, DVD, Blu-ray Disc, and music and video-related data from Gracenote, Inc., copyright © 2000 to present Gracenote. One or more patents owned by Gracenote apply to this product and service. See the Gracenote website for a non-exhaustive list of applicable Gracenote patents. Gracenote and CDDB, MusicID, Media VOCS, the Gracenote logo and logotype, and the “Powered by Gracenote” logo are either registered trademarks or trademarks of Gracenote in the United States and/or other countries.

If you require more information regarding the use of the Gracenote Service, visit: www.gracenote.com/corporate.

For the data provided by Gracenote® Music Recognition Service, the content is not necessarily guaranteed 100%.

Regarding the use of Gracenote Music Recognition Service, when this product is used, it is necessary to agree to the following articles.

Gracenote® End User License

This application or device contains software from Gracenote, Inc. of Emeryville, California (“Gracenote”). The software from Gracenote (the “Gracenote Software”) enables this application to perform disc and/or file identification and obtain music-related information, including name, artist, track, and title information (“Gracenote Data”) from

online servers or embedded databases (collectively, “Gracenote Servers”) and to perform other functions. You may use Gracenote Data only by means of the intended End-User functions of this application or device. You agree that you will use Gracenote Data, the Gracenote Software, and Gracenote Servers for your own personal non-commercial use only. You agree not to assign, copy, transfer or transmit the Gracenote Software or any Gracenote Data to any third party.

YOU AGREE NOT TO USE OR EXPLOIT GRACENOTE DATA, THE GRACENOTE SOFTWARE, OR GRACENOTE SERVERS, EXCEPT AS EXPRESSLY PERMITTED HEREIN. You agree that your non-exclusive license to use the Gracenote Data, the Gracenote Software, and Gracenote Servers will terminate if you violate these restrictions. If your license terminates, you agree to cease any and all use of the Gracenote Data, the Gracenote Software, and Gracenote Servers.

Gracenote reserves all rights in Gracenote Data, the Gracenote Software, and the Gracenote Servers, including all ownership rights.

Under no circumstances will Gracenote become liable for any payment to you for any information that you provide. You agree that Gracenote, Inc. may enforce its rights under this Agreement against you directly in its own name.

The Gracenote service uses a unique identifier to track queries for statistical purposes.

The purpose of a randomly assigned numeric identifier is to allow the Gracenote service to count queries without knowing anything about who you are. For more information, see the web page for the Gracenote Privacy Policy for the Gracenote service.

The Gracenote Software and each item of Gracenote Data are licensed to you “AS IS.” Gracenote makes no representations or warranties, express or implied, regarding the accuracy of any Gracenote Data from in the Gracenote Servers.

Gracenote reserves the right to delete data from the Gracenote Servers or to change data categories for any cause that Gracenote deems sufficient.

No warranty is made that the Gracenote Software or Gracenote Servers are error-free or that functioning of Gracenote Software or Gracenote Servers will be uninterrupted.

Gracenote is not obligated to provide you with new enhanced or additional data types or categories that Gracenote may provide in the future and is free to discontinue its services at any time.

Gracenote disclaims all warranties express or implied, including, but not limited to, implied warranties of merchantability, fitness for a particular purpose, title, and non-infringement. Gracenote does not warrant the results that will be obtained by your use of the Gracenote software or any Gracenote server. In no case will Gracenote be liable for any consequential or incidental damages or for any lost profits or lost revenues.

Climate Controls

Climate Control Systems
Climate Control Systems 8-1
Automatic Climate Control System 8-3

Air Vents
Air Vents 8-6

Maintenance
Passenger Compartment Air Filter 8-7
Service 8-7

Climate Control Systems

The heating, cooling, defrosting, and ventilation for the vehicle can be controlled with these systems.

Vehicles without Air Conditioning

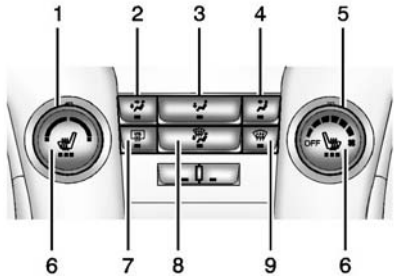

1. Temperature Control
2. Bi-level Air Mode
3. Floor Air Mode
4. Vent Air Mode
5. Fan Control
6. Driver and Passenger Heated Seats (If Equipped)
7. Rear Window Defogger
8. Defog
9. Defrost

Vehicles with Air Conditioning

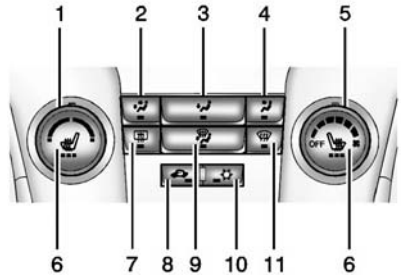

1. Temperature Control
2. Bi-level Air Mode
3. Floor Air Mode
4. Vent Air Mode
5. Fan Control

6. Driver and Passenger Heated Seats (If Equipped)
7. Rear Window Defogger
8. Recirculation
9. Defog
10. Air Conditioning
11. Defrost

(Fan Control): Turn to increase or decrease the fan speed.

Temperature Control: Turn to increase or decrease the temperature.

Air Delivery Mode Control: To change the current mode, press one of the following:

(Vent): Air is directed to the instrument panel outlets.

(Bi-level): Air is directed to the instrument panel outlets and the floor outlets.

(Floor): Air is directed to the floor outlets.

(Defog): Clears the windows of fog or moisture. Air is directed to the windshield and floor outlets.

(Defrost): Clears the windshield of fog or frost more quickly. Air is directed to the windshield and side window outlets.

For best results, clear all snow and ice from the windshield before defrosting.

Do not drive the vehicle until all windows are clear.

Air Conditioning

(Air Conditioning, If Equipped): Press to turn the air conditioning on or off. If the fan is turned off or the outside temperature falls below freezing, the air conditioning compressor will not work.

(Recirculation, If Equipped): Press to turn on the recirculation. An indicator light comes on. Air is recirculated inside the vehicle. It helps to quickly cool the air inside the vehicle and reduce the entry of outside air and odors.

To improve fuel efficiency and to cool the vehicle faster, recirculation may be automatically selected in warm weather. The recirculation light will not come on. Press to select recirculation; press it again to select outside air.

Rear Window Defogger

(Rear Defogger): Press to turn the rear window defogger on or off. An indicator light on the button comes on to show that the rear window defogger is on.

The defogger only works when the ignition is in ON/RUN. The defogger turns off if the ignition is in the ACC/ACCESSORY or LOCK/OFF position.

Do not drive the vehicle until all windows are clear.

If equipped with heated outside rearview mirrors, they turn on when the rear window defogger button is on and help to clear fog or frost from the surface of the mirrors. See *Heated Mirrors on page 2-19*.

⚠ Caution

Do not use a razor blade or sharp object to clear the inside rear window. Do not adhere anything to the defogger grid lines in the rear glass. These actions may damage the rear defogger. Repairs would not be covered by the vehicle warranty.

Heated Seats (If Equipped): Press to turn the heated seats on or off. See *Heated Front Seats on page 3-5*

Automatic Climate Control System

If equipped, the heating, cooling, and ventilation for the vehicle can be controlled with this system.

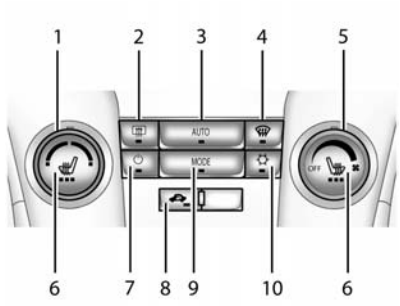

1. Temperature Control
2. Rear Window Defogger
3. AUTO (Automatic Operation)
4. Defrost
5. Fan Control
6. Driver and Passenger Heated Seats
7. Power
8. Recirculation
9. MODE (Air Delivery Mode)
10. Air Conditioning

Automatic Operation

The system automatically controls the fan speed, air delivery, air conditioning, and recirculation in order to heat or cool the vehicle to the desired temperature.

When the indicator light is on, the system is in full automatic operation. If the air delivery mode or fan setting is manually adjusted, the auto indicator turns off and displays will show the selected settings.

To place the system in automatic mode do the following:

1. Press AUTO.
2. Set the temperature. Allow the system time to stabilize. Then adjust the temperature as needed for best comfort.

To improve fuel efficiency and to cool the vehicle faster, recirculation may be automatically selected in warm weather. The recirculation light will not come on. Press to select recirculation; press it again to select outside air.

English units can be changed to metric units through the Driver Information Center (DIC). See *Driver Information Center (DIC) on page 5-23*.

Manual Operation

(Power): Press to turn the climate control system on or off.

Fan Control: Turn the knob clockwise or counterclockwise to increase or decrease the fan speed. The selected fan speed is indicated by a number on the display screen. Press AUTO to return to automatic operation.

MODE (Air Delivery Mode): Press to change the direction of the airflow. The current mode appears in the display screen. Automatic operation is canceled and manual mode is initiated. Press AUTO to return to automatic operation.

To change the current mode, select one of the following:

(Vent): Air is directed to the instrument panel outlets.

(Bi-level): Air is divided between the instrument panel outlets and the floor outlets.

(Tri-Level): Air is divided between the windshield, instrument panel, and floor outlets.

(Floor): Air is directed to the floor outlets.

(Defog): Clears the windows of fog or moisture. Air is directed to the windshield and floor outlets.

(Defrost): Clears the windshield of fog or frost more quickly. Air is directed to the windshield.

(Air Conditioning): Press to turn the automatic air conditioning on or off. If the fan is turned off or the outside temperature falls below freezing, the air conditioning compressor will not run.

Press AUTO to return to automatic operation and the air conditioner runs as needed. When the indicator light is on, the air conditioner runs automatically to cool the air inside the vehicle or to dry the air needed to defog the windshield faster.

(Recirculation): Press to turn on recirculation. An indicator light comes on. Air is recirculated to quickly cool the inside of the vehicle and reduce the entry of outside air and odors.

Automatic Air Recirculation: When the AUTO indicator light is on, the air is automatically recirculated as needed to help quickly cool the inside of the vehicle.

Auto Defog: The climate control system may have a sensor to automatically detect high humidity inside the vehicle. When high humidity is detected, the climate

control system may adjust to outside air supply and turn on the air conditioner. If the climate control system does not detect possible window fogging, it returns to normal operation. To turn Auto Defog off or on, see “Climate and Air Quality” under *Vehicle Personalization on page 5-36*.

Rear Window Defogger

(Rear Window Defogger): Press to turn the rear window defogger on or off. An indicator light on the button comes on to show that the rear window defogger is on.

The defogger only works when the ignition is in ON/RUN. The defogger turns off if the ignition is in the ACC/ACCESSORY or LOCK/OFF position.

The rear window defogger can be set to automatic operation. See “Climate and Air Quality” under *Vehicle Personalization on page 5-36*. When Auto Rear Defog is selected, the rear window defogger turns on automatically when the interior temperature is cold and the outside temperature is about 5°C (40°F) and below. The auto rear defogger turns off automatically. At higher speeds, the rear window defogger may stay on continuously.

If equipped with heated outside rearview mirrors, they turn on when the rear window defogger button is on and help to clear fog or frost from the surface of the mirrors. See *Heated Mirrors on page 2-19*.

⚠ Caution

Do not try to clear frost or other material from the inside of the front windshield and rear window with a razor blade or anything else that is sharp. This may damage the rear window defogger grid and affect the radio's ability to pick up stations clearly. The repairs would not be covered by the vehicle warranty.

Heated Seats (If Equipped): Press to turn the heated seats on or off. See *Heated Front Seats on page 3-5*.

Remote Start Climate Control Operation: If the vehicle is equipped with the remote vehicle start feature, the climate control system may run when the vehicle is started remotely. The system uses the driver’s previous settings to heat or cool the inside of the vehicle. The rear defog may come on during remote start based on cold ambient conditions. The rear defog indicator light does not come on during a remote start. If the vehicle has front heated seats, they may come on during a remote start. The heated seat indicator lights do not come on during a remote start. See *Remote Vehicle Start on page 2-9* and *Heated Front Seats on page 3-5*.

Sensors

The solar sensor, on top of the instrument panel near the windshield, monitors the solar heat.

The climate control system uses the sensor information to adjust the temperature, fan speed, recirculation, and air delivery mode for best comfort.

If the sensor is covered, the automatic climate control system may not work properly.

Air Vents

Adjustable air vents are in the center and on the side of the instrument panel.

Move the slats (1) to change the direction of the airflow.

Use the thumbwheels (2) near the air vents to open or close off the airflow.

Additional air vents are located beneath the windshield, driver and passenger side door windows, and in the footwells. These are fixed and cannot be adjusted.

Operation Tips

- Clear away any ice, snow, or leaves from air inlets at the base of the windshield that could block the flow of air into the vehicle.
- Keep the path under the front seats clear of objects to help circulate the air inside of the vehicle more effectively.
- Use of non-GM approved hood deflectors can adversely affect the performance of the system. Check with your dealer before adding equipment to the outside of the vehicle.

Maintenance

Passenger Compartment Air Filter

The filter reduces dust, pollen, and other airborne irritants from outside air that is pulled into the vehicle. The filter should be replaced as part of routine scheduled maintenance. See *Maintenance Schedule on page 11-2*.

See your dealer regarding replacement of the filter.

Service

All vehicles have a label underhood that identifies the refrigerant used in the vehicle. The refrigerant system should only be serviced by trained and certified technicians. The air conditioning evaporator should never be repaired or replaced by one from a salvage vehicle.
It should only be replaced by a new evaporator to ensure proper and safe operation.

During service, all refrigerants should be reclaimed with proper equipment. Venting refrigerants directly to the atmosphere is harmful to the environment and may also create unsafe conditions based on inhalation, combustion, frostbite, or other health-based concerns.

✍ NOTES

Driving and Operating

Driving Information
Distracted Driving 9-2
Defensive Driving 9-3
Drunk Driving 9-3
Control of a Vehicle 9-3
Braking 9-3
Steering 9-4
Off-Road Recovery 9-4
Loss of Control 9-5
Driving on Wet Roads 9-5
Hill and Mountain Roads 9-6
Winter Driving 9-7
If the Vehicle Is Stuck 9-8
Vehicle Load Limits 9-9

Starting and Operating
New Vehicle Break-In 9-14
Ignition Positions (Keyless Access) 9-14
Ignition Positions (Key Access) 9-16
Starting the Engine 9-18
Engine Heater 9-21
Retained Accessory Power (RAP) 9-23
Shifting Into Park 9-23
Shifting out of Park 9-24
Parking 9-25
Parking over Things That Burn 9-25

Engine Exhaust
Engine Exhaust 9-26
Diesel Particulate Filter 9-26
Diesel Exhaust Fluid 9-27
Running the Vehicle While Parked 9-32

Automatic Transmission
Automatic Transmission 9-33
Manual Mode 9-35

Manual Transmission
Manual Transmission 9-37

Brakes
Antilock Brake System (ABS) 9-38
Parking Brake 9-39
Brake Assist 9-40

Ride Control Systems
Traction Control/Electronic Stability Control 9-41

Cruise Control
Cruise Control 9-43

Driver Assistance Systems
Parking Assist 9-45
Side Blind Zone Alert (SBZA) 9-47
Rear Vision Camera (RVC) 9-48

Fuel
Fuel (Gasoline) 9-51
California Fuel Requirements 9-52
Fuels in Foreign Countries . . . 9-52
Fuel Additives (Gasoline) 9-52
Fuel for Diesel Engines 9-53
What Fuel to Use in Canada (Diesel) 9-58
Cold Weather Operation (Diesel) 9-59
Water in Fuel (Diesel) 9-60

Running Out of Fuel (Diesel) 9-60
Filling the Tank 9-60
Filling a Portable Fuel Container 9-62

Trailer Towing
General Towing Information 9-62
Driving Characteristics and Towing Tips 9-62
Trailer Towing (Fuel Economy Model or Diesel Engine) 9-66
Trailer Towing (Except Fuel Economy Model or Diesel Engine) 9-66
Towing Equipment 9-67

Conversions and Add-Ons
Add-On Electrical Equipment 9-68

Driving Information

Distracted Driving

Distraction comes in many forms and can take your focus from the task of driving. Exercise good judgment and do not let other activities divert your attention away from the road. Many local governments have enacted laws regarding driver distraction. Become familiar with the local laws in your area.

To avoid distracted driving, always keep your eyes on the road, hands on the wheel, and mind on the drive.

- Do not use a phone in demanding driving situations. Use a hands-free method to place or receive necessary phone calls.
- Watch the road. Do not read, take notes, or look up information on phones or other electronic devices.
- Designate a front seat passenger to handle potential distractions.
- Become familiar with vehicle features before driving, such as programming favorite radio stations and adjusting climate control and seat settings. Program all trip information into any navigation device prior to driving.
- Wait until the vehicle is parked to retrieve items that have fallen to the floor.
- Stop or park the vehicle to tend to children.
- Keep pets in an appropriate carrier or restraint.
- Avoid stressful conversations while driving, whether with a passenger or on a cell phone.

⚠ Warning

Taking your eyes off the road too long or too often could cause a crash resulting in injury or death. Focus your attention on driving.

Refer to the infotainment section for more information on using that system and the navigation system, if equipped, including pairing and using a cell phone.

Defensive Driving

Defensive driving means “always expect the unexpected.” The first step in driving defensively is to wear the safety belt. See *Safety Belts on page 3-8*.

- Assume that other road users (pedestrians, bicyclists, and other drivers) are going to be careless and make mistakes. Anticipate what they might do and be ready.
- Allow enough following distance between you and the driver in front of you.
- Focus on the task of driving.

Drunk Driving

Death and injury associated with drinking and driving is a global tragedy.

⚠ Warning

Drinking and then driving is very dangerous. Your reflexes, perceptions, attentiveness, and judgment can be affected by even a small amount of alcohol. You can have a serious — or even fatal — collision if you drive after drinking.

Do not drink and drive or ride with a driver who has been drinking. Ride home in a cab; or if you are with a group, designate a driver who will not drink.

Control of a Vehicle

Braking, steering, and accelerating are important factors in helping to control a vehicle while driving.

Braking

Braking action involves perception time and reaction time. Deciding to push the brake pedal is perception time. Actually doing it is reaction time.

Average driver reaction time is about three-quarters of a second. In that time, a vehicle moving at 100 km/h (60 mph) travels 20 m (66 ft), which could be a lot of distance in an emergency.

Helpful braking tips to keep in mind include:

- Keep enough distance between you and the vehicle in front of you.
- Avoid needless heavy braking.
- Keep pace with traffic.

If the engine ever stops while the vehicle is being driven, brake normally but do not pump the brakes. Doing so could make the pedal harder to push down. If the engine stops, there will be some power brake assist but it will be used when the brake is applied. Once the power assist is used up, it can take longer to stop and the brake pedal will be harder to push.

Steering

Electric Power Steering

The vehicle has electric power steering, it does not have power steering fluid. Regular maintenance is not required.

If power steering assist is lost due to a system malfunction, the vehicle can be steered, but may require increased effort. See your dealer if there is a problem.

If the steering wheel is turned until it reaches the end of its travel, and is held in that position for an extended period of time, power steering assist may be reduced.

If the steering assist is used for an extended period of time, power assist may be reduced.

Normal use of the power steering assist should return when the system cools down.

See specific vehicle steering messages under *Vehicle Messages on page 5-27*.

Curve Tips

- Take curves at a reasonable speed.
- Reduce speed before entering a curve.
- Maintain a reasonable steady speed through the curve.
- Wait until the vehicle is out of the curve before accelerating gently into the straightaway.

Steering in Emergencies

- There are some situations when steering around a problem may be more effective than braking.
- Holding both sides of the steering wheel allows you to turn 180 degrees without removing a hand.
- Antilock Brake System (ABS) allows steering while braking.

Off-Road Recovery

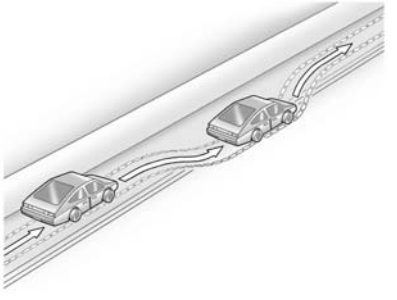

The vehicle's right wheels can drop off the edge of a road onto the shoulder while driving. Follow these tips:

1. Ease off the accelerator and then, if there is nothing in the way, steer the vehicle so that it straddles the edge of the pavement.
2. Turn the steering wheel about one-eighth of a turn, until the right front tire contacts the pavement edge.
3. Turn the steering wheel to go straight down the roadway.

Loss of Control

Skidding

There are three types of skids that correspond to the vehicle's three control systems:

- Braking Skid — wheels are not rolling.
- Steering or Cornering Skid — too much speed or steering in a curve causes tires to slip and lose cornering force.
- Acceleration Skid — too much throttle causes the driving wheels to spin.

Defensive drivers avoid most skids by taking reasonable care suited to existing conditions, and by not overdriving those conditions. But skids are always possible.

If the vehicle starts to slide, follow these suggestions:

- Ease your foot off the accelerator pedal and steer the way you want the vehicle to go. The vehicle may straighten out. Be ready for a second skid if it occurs.
- Slow down and adjust your driving according to weather conditions. Stopping distance can be longer and vehicle control can be affected when traction is reduced by water, snow, ice, gravel, or other material on the road. Learn to recognize warning clues — such as enough water, ice, or packed snow on the road to make a mirrored surface — and slow down when you have any doubt.
- Try to avoid sudden steering, acceleration, or braking, including reducing vehicle speed by shifting to a lower gear. Any sudden changes could cause the tires to slide.

Remember: Antilock brakes help avoid only the braking skid.

Driving on Wet Roads

Rain and wet roads can reduce vehicle traction and affect your ability to stop and accelerate. Always drive slower in these types of driving conditions and avoid driving through large puddles and deep-standing or flowing water.

⚠ Warning

Wet brakes can cause crashes. They might not work as well in a quick stop and could cause pulling to one side. You could lose control of the vehicle.

After driving through a large puddle of water or a car/vehicle wash, lightly apply the brake pedal until the brakes work normally.

Flowing or rushing water creates strong forces. Driving through flowing water could cause the vehicle to be carried away. If this happens, you and other vehicle occupants could drown. Do not ignore police warnings and be very cautious about trying to drive through flowing water.

Hydroplaning

Hydroplaning is dangerous. Water can build up under the vehicle's tires so they actually ride on the water. This can happen if the road is wet enough and you are going fast enough. When the vehicle is hydroplaning, it has little or no contact with the road.

There is no hard and fast rule about hydroplaning. The best advice is to slow down when the road is wet.

Other Rainy Weather Tips

Besides slowing down, other wet weather driving tips include:

- Allow extra following distance.
- Pass with caution.
- Keep windshield wiping equipment in good shape.
- Keep the windshield washer fluid reservoir filled.
- Have good tires with proper tread depth. See *Tires on page 10-43*.
- Turn off cruise control.

Hill and Mountain Roads

Driving on steep hills or through mountains is different than driving on flat or rolling terrain. Tips for driving in these conditions include:

- Keep the vehicle serviced and in good shape.
- Check all fluid levels and brakes, tires, cooling system, and transmission.
- Shift to a lower gear when going down steep or long hills.

⚠ Warning

Using the brakes to slow the vehicle on a long downhill slope can cause brake overheating, can reduce brake performance, and could result in a loss of braking. Shift the transmission to a lower gear to let the engine assist the brakes on a steep downhill slope.

⚠ Warning

Coasting downhill in N (Neutral) or with the ignition off is dangerous. This can cause overheating of the brakes and loss of steering. Always have the engine running and the vehicle in gear.

- Stay in your own lane. Do not swing wide or cut across the center of the road. Drive at speeds that let you stay in your own lane.
- Be alert on top of hills; something could be in your lane (stalled car, accident).
- Pay attention to special road signs (falling rocks area, winding roads, long grades, passing or no-passing zones) and take appropriate action.

Winter Driving

Driving on Snow or Ice

Drive carefully when there is snow or ice between the tires and the road, creating less traction or grip. Wet ice can occur at about 0°C (32° F) when freezing rain begins to fall, resulting in even less traction. Avoid driving on wet ice or in freezing rain until roads can be treated with salt or sand.

Drive with caution, whatever the condition. Accelerate gently so traction is not lost. Accelerating too quickly causes the wheels to spin and makes the surface under the tires slick, so there is even less traction.

Traction Control should be turned on. See *Traction Control/Electronic Stability Control on page 9-41*.

The Antilock Brake System (ABS) improves vehicle stability during hard stops on slippery roads, but apply the brakes sooner than when on dry pavement. See *Antilock Brake System (ABS) on page 9-38*.

Allow greater following distance on any slippery road and watch for slippery spots. Icy patches can occur on otherwise clear roads in shaded areas. The surface of a curve or an overpass can remain icy when the surrounding roads are clear. Avoid sudden steering maneuvers and braking while on ice.

Turn off cruise control on slippery surfaces.

Blizzard Conditions

Being stuck in snow can be a serious situation. Stay with the vehicle unless there is help nearby. If possible, use Roadside Assistance. See *Roadside Assistance Program on page 13-5*. To get help and keep everyone in the vehicle safe:

- Turn on the hazard warning flashers.

- Tie a red cloth to an outside mirror.

⚠ Warning

Snow can trap engine exhaust under the vehicle. This may cause exhaust gases to get inside. Engine exhaust contains carbon monoxide (CO) which cannot be seen or smelled. It can cause unconsciousness and even death.

If the vehicle is stuck in the snow:

- Clear away snow from around the base of your vehicle, especially any that is blocking the exhaust pipe.
- Check again from time to time to be sure snow does not collect there.
- Open a window about 5 cm (2 in) on the side of the vehicle that is away from the wind to bring in fresh air.

(Continued)

Warning (Continued)

- Fully open the air outlets on or under the instrument panel.
- Adjust the climate control system to a setting that circulates the air inside the vehicle and set the fan speed to the highest setting. See “Climate Control Systems.”

For more information about carbon monoxide, see *Engine Exhaust on page 9-26*.

To save fuel, run the engine for only short periods as needed to warm the vehicle and then shut the engine off and close the window most of the way to save heat. Repeat this until help arrives but only when you feel really uncomfortable from the cold. Moving about to keep warm also helps.

If it takes some time for help to arrive, now and then when you run the engine, push the accelerator pedal slightly so the engine runs faster than the idle speed. This keeps the battery charged to restart the vehicle and to signal for help with the headlamps. Do this as little as possible to save fuel.

If the Vehicle Is Stuck

Slowly and cautiously spin the wheels to free the vehicle when stuck in sand, mud, ice, or snow.

If stuck too severely for the traction system to free the vehicle, turn the traction system off and use the rocking method. See *Traction Control/Electronic Stability Control on page 9-41*.

⚠ Warning

If the vehicle's tires spin at high speed, they can explode, and you or others could be injured. The

(Continued)

Warning (Continued)

vehicle can overheat, causing an engine compartment fire or other damage. Spin the wheels as little as possible and avoid going above 56 km/h (35 mph).

Rocking the Vehicle to Get it Out

Turn the steering wheel left and right to clear the area around the front wheels. Turn off any traction system. Shift back and forth between R (Reverse) and a low forward gear, spinning the wheels as little as possible. To prevent transmission wear, wait until the wheels stop spinning before shifting gears. Release the accelerator pedal while shifting, and press lightly on the accelerator pedal when the transmission is in gear. Slowly spinning the wheels in the forward and reverse directions causes a rocking motion that could free the vehicle. If that does not get the vehicle out after a few tries, it might need to be towed out. If the vehicle does need to be towed out, see *Towing the Vehicle on page 10-85*.

Vehicle Load Limits

It is very important to know how much weight the vehicle can carry. This weight is called the vehicle capacity weight and includes the weight of all occupants, cargo, and all nonfactory-installed options. Two labels on the vehicle show how much weight it may properly carry: the Tire and Loading Information label and the Certification label.

⚠ Warning

Do not load the vehicle any heavier than the Gross Vehicle Weight Rating

(Continued)

Warning (Continued)

(GVWR), or either the maximum front or rear Gross Axle Weight Rating (GAWR). This can cause systems to break and change the way the vehicle handles. This could cause loss of control and a crash. Overloading can also shorten the life of the vehicle.

Tire and Loading Information Label

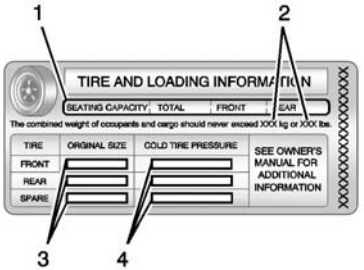

Label Example

A vehicle-specific Tire and Loading Information label is attached to the vehicle center pillar (B-pillar). With the driver door open, you will find the label attached below the door lock post. The Tire and Loading Information label shows the number of occupant seating positions (1), and the maximum vehicle capacity weight (2) in kilograms and pounds.

The Tire and Loading Information label also shows the tire size of the original equipment tires (3) and the recommended cold tire inflation pressures (4). For more information on tires and inflation see *Tires on page 10-43* and *Tire Pressure on page 10-51*.

There is also important loading information on the Certification label. It tells you the Gross Vehicle Weight Rating (GVWR) and the Gross Axle Weight Rating (GAWR) for the front and rear axle; see “Certification Label” later in this section.

“Steps for Determining Correct Load Limit–

1. Locate the statement "The combined weight of occupants and cargo should never exceed XXX kg or XXX lbs." on your vehicle’s placard.
2. Determine the combined weight of the driver and passengers that will be riding in your vehicle.
3. Subtract the combined weight of the driver and passengers from XXX kg or XXX lbs.

4. The resulting figure equals the available amount of cargo and luggage load capacity. For example, if the "XXX" amount equals 1400 lbs. and there will be five 150 lb passengers in your vehicle, the amount of available cargo and luggage load capacity is 650 lbs. (1400-750 (5 x 150) = 650 lbs.)
5. Determine the combined weight of luggage and cargo being loaded on the vehicle. That weight may not safely exceed the available cargo and luggage load capacity calculated in Step 4.
6. If your vehicle will be towing a trailer, load from your trailer will be transferred to your vehicle. Consult this manual to determine how this reduces the available cargo and luggage load capacity of your vehicle."

See *Trailer Towing (Fuel Economy Model or Diesel Engine) on page 9-66* or *Trailer Towing (Except Fuel Economy Model or Diesel Engine) on page 9-66* for important information on towing a trailer, towing safety rules, and trailering tips.

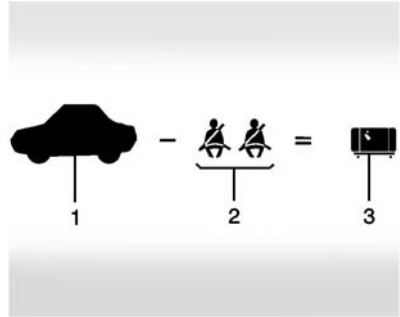

Example 1

1. Vehicle Capacity Weight for Example 1 = 453 kg (1,000 lbs).
2. Subtract Occupant Weight @ 68 kg (150 lbs) × 2 = 136 kg (300 lbs).
3. Available Occupant and Cargo Weight = 317 kg (700 lbs).

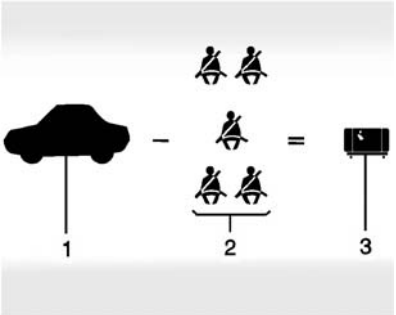

Example 2

1. Vehicle Capacity Weight for Example 2 = 453 kg (1,000 lbs).
2. Subtract Occupant Weight @ 68 kg (150 lbs) × 5 = 340 kg (750 lbs).
3. Available Cargo Weight = 113 kg (250 lbs).

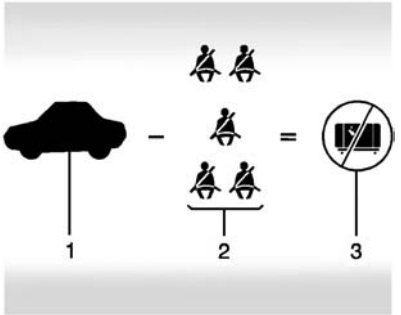

Example 3

1. Vehicle Capacity Weight for Example 3 = 453 kg (1,000 lbs).
2. Subtract Occupant Weight @ 91 kg (200 lbs) × 5 = 453 kg (1,000 lbs).
3. Available Cargo Weight = 0 kg (0 lbs).

Refer to the vehicle's Tire and Loading Information label for specific information about the vehicle's capacity weight and seating positions. The combined weight of the driver, passengers, and cargo should never exceed the vehicle's capacity weight.

Certification Label

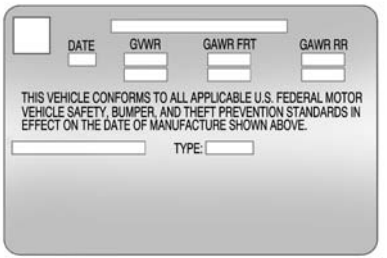

Label Example

A vehicle-specific Certification label, found on the vehicle center pillar (B-pillar), tells you the gross weight capacity of the vehicle, called the Gross Vehicle Weight Rating (GVWR). The GVWR includes the weight of the vehicle, all occupants, fuel,

and cargo. Never exceed the GVWR for the vehicle, or the Gross Axle Weight Rating (GAWR) for either the front or rear axle.

And, if you do have a heavy load, you should spread it out. See “Steps for Determining Correct Load Limit” earlier in this section.

⚠ Warning

Do not load the vehicle any heavier than the Gross Vehicle Weight Rating (GVWR), or either the maximum front or rear Gross Axle Weight Rating (GAWR). This can cause systems to break and change the way the vehicle handles. This could cause loss of control and a crash. Overloading can also shorten the life of the vehicle.

If you put things inside the vehicle — like suitcases, tools, packages, or anything else — they will go as fast as the vehicle goes. If you have to stop or turn quickly, or if there is a crash, they will keep going.

⚠ Warning

Things inside the vehicle can strike and injure people in a sudden stop or turn, or in a crash.

- Put things in the cargo area of the vehicle. In the cargo area, put them as far forward as possible. Try to spread the weight evenly.

(Continued)

Warning (Continued)

- Never stack heavier things, like suitcases, inside the vehicle so that some of them are above the tops of the seats.
- Do not leave an unsecured child restraint in the vehicle.
- Secure loose items in the vehicle.
- Do not leave a seat folded down unless needed.

Starting and Operating

New Vehicle Break-In

⚠ Caution

The vehicle does not need an elaborate break-in. But it will perform better in the long run if you follow these guidelines:

- Do not drive at any one constant speed, fast or slow, for the first 805 km (500 mi). Do not make full-throttle starts. Avoid downshifting to brake or slow the vehicle.
- Avoid making hard stops for the first 322 km (200 mi) or so. During this time the new brake linings are not yet broken in. Hard stops with new linings can mean premature wear and earlier replacement. Follow this

(Continued)

Caution (Continued)

breaking-in guideline every time you get new brake linings.

Following break-in, engine speed and load can be gradually increased.

Ignition Positions (Keyless Access)

The vehicle may be equipped with an electronic keyless ignition with pushbutton start.

Pressing the button cycles it through three modes: ACC/ACCESSORY, ON/RUN/START, and Stopping the Engine/OFF.

The transmitter must be in the vehicle for the system to operate. If the pushbutton start is not working, the vehicle may be near a strong radio antenna signal causing interference to the Keyless Access system. See *Remote Keyless Entry (RKE) System Operation on page 2-3*.

To shift out of P (Park), the vehicle must be in ACC/ACCESSORY or ON/RUN and the brake pedal must be applied.

Stopping the Engine/OFF (No Indicator Lights): When the vehicle is stopped, press the ENGINE START/STOP button once to turn the engine off.

If the vehicle is in P (Park), the ignition will turn off, and Retained Accessory Power (RAP) will remain active. See *Retained Accessory Power (RAP) on page 9-23*.

If the vehicle is not in P (Park), the ignition will return to ACC/ACCESSORY and the Driver Information Center (DIC) will display

the message SHIFT TO PARK in the Driver Information Center (DIC). See *Transmission Messages on page 5-34*. When the vehicle is shifted into P (Park), the ignition system will switch to OFF.

Do not turn the engine off when the vehicle is moving. This will cause a loss of power assist in the brake and steering systems and disable the airbags.

If the vehicle must be shut off in an emergency:

1. Brake using a firm and steady pressure. Do not pump the brakes repeatedly. This may deplete power assist, requiring increased brake pedal force.
2. Shift the vehicle to N (Neutral). This can be done while the vehicle is moving. After shifting to N (Neutral), firmly apply the brakes and steer the vehicle to a safe location.
3. Come to a complete stop. Shift to P (Park) with an automatic transmission, or Neutral with a manual transmission. Turn the ignition to LOCK/OFF.
4. Set the parking brake. See *Parking Brake on page 9-39*.

⚠ Warning

Turning off the vehicle while moving may cause loss of power assist in the brake and steering systems and disable the airbags. While driving, only shut the vehicle off in an emergency.

If the vehicle cannot be pulled over, and must be shut off while driving, press and hold the ENGINE START/STOP button for longer than two seconds, or press twice in five seconds.

ACC/ACCESSORY (Amber Indicator Light): This mode allows you to use some electrical accessories when the engine is off. With the ignition off, pressing the button one time without the brake pedal applied will place the ignition system in ACC/ACCESSORY.

The ignition will switch from ACC/ACCESSORY to OFF after five minutes to prevent battery rundown.

ON/RUN/START (Green Indicator Light): This mode is for driving and starting. With the ignition off, and the brake pedal applied, pressing the button once will place the ignition system in ON/RUN/START. Once engine cranking begins, release the button. Engine cranking will continue until the engine starts. See *Starting the Engine on page 9-18*. The ignition will then remain in ON/RUN.

Service Only Mode

This power mode is available for service and diagnostics, and to verify the proper operation of the malfunction indicator lamp as may be required for emission inspection purposes. With the vehicle off, and

the brake pedal not applied, pressing and holding the button for more than five seconds will place the vehicle in Service Only Mode. The instruments and audio systems will operate as they do in ON/RUN, but the vehicle will not be able to be driven. The engine will not start in Service Only Mode. Press the button again to turn the vehicle off.

Ignition Positions (Key Access)

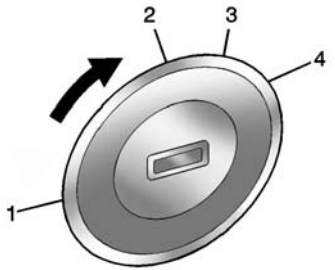

The ignition switch has four different positions.

⚠ Caution

Using a tool to force the key to turn in the ignition could cause damage to the switch or break the key. Use the correct key, make sure it is all the way in, and turn it only with your hand. If the key cannot be turned by hand, see your dealer.

The key must be fully extended to start the vehicle.

To shift out of P (Park), turn the ignition to ON/RUN and apply the brake pedal.

1 (STOPPING THE ENGINE/LOCK/OFF): When the vehicle is stopped, turn the ignition switch to LOCK/OFF to turn the engine off. Retained Accessory Power (RAP) will remain active. See *Retained Accessory Power (RAP) on page 9-23*.

This is the only position from which the key can be removed. This locks the ignition and automatic transmission. The steering wheel may also lock, if equipped.

Do not turn the engine off when the vehicle is moving. This will cause a loss of power assist in the brake and steering systems and disable the airbags.

If the vehicle must be shut off in an emergency:

1. Brake using a firm and steady pressure. Do not pump the brakes repeatedly. This may deplete power assist, requiring increased brake pedal force.
2. Shift the vehicle to Neutral. This can be done while the vehicle is moving. After shifting to Neutral, continue to firmly apply the brakes and steer the vehicle to a safe location.

3. Come to a complete stop. Shift to P (Park) with an automatic transmission, or Neutral with a manual transmission. Turn the ignition to LOCK/OFF.
4. Set the parking brake. See *Parking Brake on page 9-39*.

⚠ Warning

Turning off the vehicle while moving may cause loss of power assist in the brake and steering systems and disable the airbags. While driving, only shut the vehicle off in an emergency.

If the vehicle cannot be pulled over, and must be shut off while driving, turn the ignition to ACC/ACCESSORY.

2 (ACC/ACCESSORY): This position provides power to some of the electrical accessories. It unlocks the steering wheel and ignition. To move the key from ACC/ACCESSORY to LOCK/OFF, push in the key and then turn it to LOCK/OFF.

3 (ON/RUN): The ignition switch stays in this position when the engine is running. This position can be used to operate the electrical accessories, including the ventilation fan and 12-volt power outlet, as well as to display some warning and indicator lights. This position can also be used for service and diagnostics, and to verify the proper operation of the malfunction indicator lamp as may be required for emission inspection purposes. The transmission is also unlocked in this position on automatic transmission vehicles.

The battery could be drained if the key is left in the ACC/ACCESSORY or ON/RUN position with the engine off. The vehicle might not start if the battery is allowed to drain for an extended period of time.

4 (START): This position starts the engine. When the engine starts, release the key. The ignition switch will return to ON/RUN for normal driving.

A warning tone sounds when the driver door is opened if the ignition is still in ACC/ACCESSORY and the key is in the ignition.

If the ignition becomes difficult to turn, see *Keys on page 2-1*.

Key Lock Release

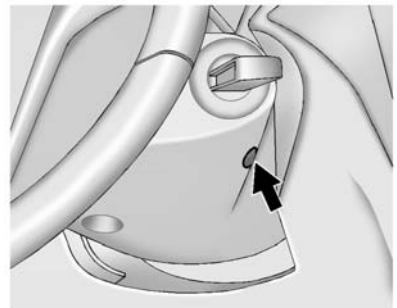

Vehicles with an automatic transmission are equipped with an electronic key lock release system. The key lock release is designed to prevent ignition key removal unless the shift lever is in P (Park).

The key lock release is always functional except in the case of an uncharged or low voltage (less than 9-volt) battery. If the vehicle has an uncharged battery or a battery with low voltage, try charging or jump starting the battery. See *Jump Starting on page 10-82*.

If charging or jump starting the battery does not work, locate the hole below the ignition lock. Insert a flat bladed tool or another key from the key chain into the opening. When the lever can be felt, actuate the lever toward the driver, and remove the key from the ignition.

Starting the Engine

Place the transmission in the proper gear.

> **⚠ Caution**
>
> If you add electrical parts or accessories, you could change the way the engine operates. Any resulting damage would not be covered by the vehicle warranty. See *Add-On Electrical Equipment on page 9-68*.

Automatic Transmission

Move the shift lever to P (Park) or N (Neutral). To restart the vehicle when it is already moving, use N (Neutral) only.

> **⚠ Caution**
>
> Do not try to shift to P (Park) if the vehicle is moving. If you do, you could damage the transmission. Shift to P (Park) only when the vehicle is stopped.

Manual Transmission

The shift lever should be in Neutral and the parking brake engaged. Hold the clutch pedal down to the floor and start the engine.

Gasoline Engine Starting Procedure (Key Access)

1. With your foot off the accelerator pedal, turn the ignition key to START. When the engine starts, let go of the key. The idle speed will go down as the engine warms. Do not race the engine immediately after starting it. Allow the oil to warm up and lubricate all moving parts.

⚠ Caution

Cranking the engine for long periods of time, by returning the ignition to the START position immediately after cranking has ended, can overheat and damage the cranking motor, and drain the battery. Wait at least 15 seconds between each try, to let the cranking motor cool down.

2. If the engine does not start after five to 10 seconds, especially in very cold weather (below −18°C or 0°F), it could be flooded with too much gasoline. Push the accelerator pedal all the way to the floor and hold it there as you hold the key in START for a maximum of 15 seconds. Wait at least 15 seconds between each try, to allow the cranking motor to cool. When the engine starts, let go of the key and accelerator. If the vehicle starts briefly but then stops again, repeat the procedure. This clears the extra gasoline from the engine. Do not race the engine immediately after starting it. Operate the engine and transmission gently until the oil warms up and lubricates all moving parts.

Gasoline Engine Starting Procedure (Keyless Access)

1. With the Keyless Access system, the RKE transmitter must be in the vehicle. Press the ENGINE START/STOP button with the brake pedal applied. When the engine begins cranking, let go of the button.

   The idle speed will go down as the engine gets warm. Do not race the engine immediately after starting it.

   If the RKE transmitter is not in the vehicle, if there is interference, or the RKE battery is low, a Driver Information Center (DIC) message will display. See *Driver Information Center (DIC) on page 5-23* and *Remote Keyless Entry (RKE) System Operation on page 2-3*.

⚠ Caution

Cranking the engine for long periods of time, by returning the ignition to the START position immediately after cranking has ended, can overheat and damage the cranking motor, and drain the battery. Wait at least 15 seconds between each try, to let the cranking motor cool down.

2. If the engine does not start after five to 10 seconds, especially in very cold weather (below −18°C or 0°F), it could be flooded with too much gasoline. Try pushing the accelerator pedal all the way to the floor and holding it there as you press the ENGINE START/STOP button, for up to a maximum of 15 seconds. Wait at least 15 seconds between each

try, to allow the cranking motor to cool down. When the engine starts, let go of the button, and the accelerator. If the vehicle starts briefly but then stops again, do the same thing. This clears the extra gasoline from the engine. Do not race the engine immediately after starting it. Operate the engine and transmission gently until the oil warms up and lubricates all moving parts.

Diesel Engine Starting Procedure

The diesel engine starts differently than a gasoline engine.

1. Turn the ignition key to ON/RUN.

   If the Wait-To-Start light is illuminated, wait until this light goes off to start the vehicle.

2. Then turn the ignition key to START. When the engine starts, let go of the key.

   The engine has a fast warm-up glow plug system. The wait-to-start light will illuminate for a much shorter time than most diesel engines, due to the rapid heating of the glow plug system.

> **⚠ Caution**
>
> If the wait-to-start light stays on after starting the vehicle, the vehicle may not run properly. Have the vehicle serviced right away.

3. If the engine does not start after 15 seconds of cranking, turn the ignition key to LOCK/OFF. Wait one minute for the cranking motor to cool, then try the same steps again.

If you are trying to start the engine after you have run out of fuel, follow the steps in *Running Out of Fuel (Diesel) on page 9-60*.

When the engine is cold, let it run for a few minutes before driving. This lets oil pressure build up. The engine will sound louder when it's cold.

Cold Weather Starting (Diesel Engine)

Use the recommended engine oil when the outside temperature drops below freezing. See *Engine Oil on page 10-11*. When the outside temperature drops below –18°C (0°F), use of the engine heater is recommended.

See *Fuel for Diesel Engines on page 9-53* for information on what fuel to use in cold weather.

If the Diesel Engine Will Not Start

If you have run out of fuel, see *Running Out of Fuel (Diesel) on page 9-60*.

If the vehicle is not out of fuel, and the engine will not start:

Turn the ignition key to ON/RUN. After the Wait-To-Start light goes off, turn the ignition key to START.

If the light does not go off, wait a few seconds, then try starting the engine again. See your dealer for a starting system check.

If the light comes on and then goes off, and it is known that the batteries are charged, but the engine still will not start, the vehicle needs service.

If the light does not come on when the engine is cold, the vehicle needs service.

If the batteries do not have enough charge to start the engine, see *Battery on page 10-28*.

Check that the correct engine oil has been used and changed at appropriate intervals. If the wrong oil is used, the engine may be harder to start.

Be sure you are using the proper fuel for existing weather conditions. See *Fuel for Diesel Engines on page 9-53*.

If the engine starts, runs a short time, then stops, the vehicle needs service.

⚠ Warning

Do not use gasoline or starting aids, such as ether, in the air intake. They could damage the engine, which may not be covered by the vehicle warranty. They could also cause a fire, which could cause serious personal injury.

Engine Heater

The gasoline engine heater and diesel engine oil heater, if equipped, can help in cold weather conditions at or below −18°C (0°F) for easier starting and better fuel economy during engine warm-up. Plug in the heater at least four hours before starting the vehicle. An internal thermostat in the plug end of the 1.4L engine's cord will prevent engine heater operation at temperatures above −18°C (0°F).

To Use the Heater

1. Turn off the engine.

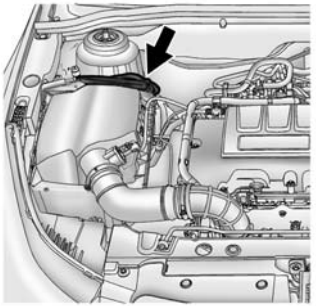

1.4L Engine Shown, 1.8L and 2.0L Similar

2. Open the hood and unwrap the electrical cord. The electrical cord is located on the passenger side of the engine compartment, behind the air cleaner.

   Check the heater cord for damage. If it is damaged, do not use it. See your dealer for a replacement. Inspect the cord for damage yearly.

3. Plug it into a normal, grounded 110-volt AC outlet.

⚠ Warning

Improper use of the heater cord or an extension cord can damage the cord and may result in overheating and fire.

- Plug the cord into a three-prong electrical utility receptacle that is protected by a ground fault detection function. An ungrounded outlet could cause an electric shock.
- Use a weatherproof, heavy-duty, 15 amp-rated extension cord if needed. Failure to use the recommended extension cord in good operating condition, or using a damaged heater or extension cord, could make it

(Continued)

Warning (Continued)

overheat and cause a fire, property damage, electric shock, and injury.

- Do not operate the vehicle with the heater cord permanently attached to the vehicle. Possible heater cord and thermostat damage could occur.
- While in use, do not let the heater cord touch vehicle parts or sharp edges. Never close the hood on the heater cord.
- Before starting the vehicle, unplug the cord, reattach the cover to the plug, and securely fasten the cord. Keep the cord away from any moving parts.

4. Before starting the engine, be sure to unplug and store the cord as it was before to keep it

away from moving engine parts. If you do not it could be damaged.

The length of time the heater should remain plugged in depends on several factors. Ask a dealer in the area where you will be parking the vehicle for the best advice on this.

Retained Accessory Power (RAP)

These vehicle accessories may be used for up to 10 minutes after the engine is turned off:

- Audio System
- Power Windows
- Sunroof

The power windows and sunroof will continue to work for up to 10 minutes or until any door is opened. The radio will work when the key is in ON/RUN or ACC/ACCESSORY. Once the key is turned from ON/RUN to LOCK/OFF, the radio will continue to work for 10 minutes, or until the driver door is opened or the key is removed from the ignition.

Shifting Into Park

Use this procedure to shift into P (Park):

1. Hold the brake pedal down and set the parking brake.

   See *Parking Brake on page 9-39* for more information.

2. Hold the button on the shift lever and push the lever toward the front of the vehicle into P (Park).
3. Turn the ignition to LOCK/OFF.

Leaving the Vehicle with the Engine Running

⚠ Warning

It can be dangerous to leave the vehicle with the engine running. It could overheat and catch fire.

(Continued)

Warning (Continued)

It is dangerous to get out of the vehicle if the shift lever is not fully in P (Park) with the parking brake firmly set. The vehicle can roll.

Do not leave the vehicle when the engine is running. If you have left the engine running, the vehicle can move suddenly. You or others could be injured. To be sure the vehicle will not move, even when you are on fairly level ground, always set the parking brake and move the shift lever to P (Park). See *Shifting Into Park on page 9-23*. If you are towing a trailer, see *Driving Characteristics and Towing Tips on page 9-62*.

If you have to leave the vehicle with the engine running, the vehicle must be in P (Park) and the parking brake set.

Release the button and check that the shift lever cannot be moved out of P (Park).

Torque Lock

Torque lock is when the weight of the vehicle puts too much force on the parking pawl in the transmission. This happens when parking on a hill and shifting the transmission into P (Park) is not done properly and then it is difficult to shift out of P (Park). To prevent torque lock, set the parking brake and then shift into P (Park). To find out how, see “Shifting Into Park” listed previously.

If torque lock does occur, the vehicle may need to be pushed uphill by another vehicle to relieve the parking pawl pressure, so you can shift out of P (Park).

Shifting out of Park

This vehicle is equipped with an automatic transmission shift lock control system. The shift lock is designed to:

- Prevent ignition key removal unless the shift lever is in P (Park) with the shift lever button fully released.
- Prevent movement of the shift lever out of P (Park) unless the ignition is in ON/RUN and the brake pedal is applied.

The shift lock release is always functional except in the case of an uncharged or low voltage (less than 9-volt) battery.

If the vehicle has an uncharged battery or a battery with low voltage, try charging or jump starting the battery. See *Jump Starting on page 10-82*

To shift out of P (Park):

1. Apply the brake pedal.
2. Turn the ignition to ON/RUN.
3. Press the shift lever button.
4. Move the shift lever to the desired position.

If still unable to shift out of P (Park):

1. Fully release the shift lever button.
2. Hold the brake pedal down and press the shift lever button again.
3. Move the shift lever to the desired position.

If the shift lever still cannot be moved from P (Park), see “Shift Lock Manual Release.”

This vehicle may have the Safety Belt Assurance System, which may prevent the vehicle from shifting out of P (Park). See *Safety Belt Messages on page 5-32*.

Shift Lock Manual Release

The automatic transmission has an electric park lock. The key must be in the ON/RUN position, and the brake pedal pressed so the shift

lever can be moved from the P (Park) position. If the battery has lost power, the shift lever cannot be moved from P (Park) unless the shift lock manual release is disengaged manually.

To access the shift lock manual release:

1. Apply the parking brake.

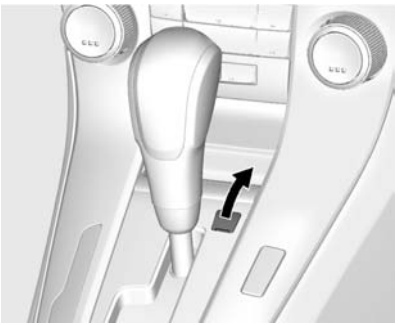

2. Open the cover to the right of the shift lever.

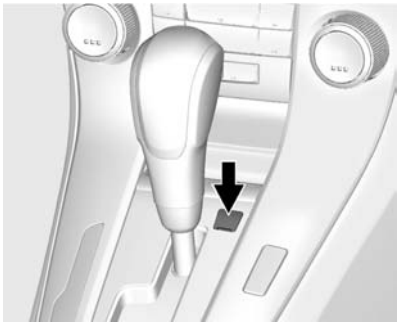

3. Insert a tool into the opening as far as it will go and move the shift lever out of P (Park). If P (Park) is selected again, the shift lever will be locked again. Have the cause of the problem fixed by your dealer.
4. Close the cover.

Parking

If the vehicle has a manual transmission, before getting out of the vehicle, move the shift lever into R (Reverse), and firmly apply the parking brake. Once the shift lever has been placed into R (Reverse) with the clutch pedal pressed in, turn the ignition to LOCK/OFF, and release the clutch.

If parking on a hill, or if the vehicle is pulling a trailer, see *Driving Characteristics and Towing Tips on page 9-62*.

Parking over Things That Burn

⚠ Warning

Things that can burn could touch hot exhaust parts under the vehicle and ignite. Do not park over papers, leaves, dry grass, or other things that can burn.

Engine Exhaust

⚠ Warning

Engine exhaust contains carbon monoxide (CO) which cannot be seen or smelled. Exposure to CO can cause unconsciousness and even death.

Exhaust may enter the vehicle if:

- The vehicle idles in areas with poor ventilation (parking garages, tunnels, deep snow that may block underbody airflow or tail pipes).
- The exhaust smells or sounds strange or different.
- The exhaust system leaks due to corrosion or damage.
- The vehicle exhaust system has been modified, damaged, or improperly repaired.

(Continued)

Warning (Continued)

- There are holes or openings in the vehicle body from damage or aftermarket modifications that are not completely sealed.

If unusual fumes are detected or if it is suspected that exhaust is coming into the vehicle:

- Drive it only with the windows completely down.
- Have the vehicle repaired immediately.

Never park the vehicle with the engine running in an enclosed area such as a garage or a building that has no fresh air ventilation.

Diesel Particulate Filter

The Diesel Particulate Filter (DPF) system filters soot particles out of the exhaust gases. The system includes a self-cleaning function that runs automatically during driving without any notification. The filter is cleaned by periodically burning off the soot particles at high temperature. This process takes place automatically under set driving conditions and may take up to 25 minutes. Fuel consumption may be higher during this period.

Under certain driving conditions, e.g. short distances, the system cannot clean itself automatically. If the cleaning of the filter is required and if previous driving conditions did not enable automatic cleaning, a warning message appears in the DIC. See *Diesel Particulate Filter Messages on page 5-30*. Start the cleaning process as soon as possible.

Cleaning Process

To activate the cleaning process, continue driving safely, and keep vehicle speed above 50 km/h (30 mph) until the warning message in the DIC goes off.

If the vehicle continues to be driven with the DPF warning message on, and the exhaust filter is not cleaned as required, the malfunction indicator lamp and the ENGINE POWER IS REDUCED message will come on and dealer service is necessary. See *Malfunction Indicator Lamp on page 5-14* and *Engine Power Messages on page 5-29*.

⚠ Warning

During DPF self cleaning or during extended idling in P (Park), the exhaust system and exhaust gases are very hot. Things that burn could touch hot exhaust parts under the vehicle and ignite. You or others could be burned. Do not park, or idle for an extended period of time, near or over papers, leaves, dry grass, or other things that can burn. Keep the exhaust area clear of

(Continued)

Warning (Continued)

material that could ignite or burn. See *Parking over Things That Burn on page 9-25* for more information.

Diesel Exhaust Fluid

⚠ Warning

Diesel Exhaust Fluid (DEF) is corrosive. Do not allow it to come in contact with your skin, eyes, or the finished surfaces of the vehicle. If exposed, it may cause skin and eye irritation. Wear skin and eye protection when handling. Inhalation may cause irritation to the upper respiratory tract. Store in a cool, well-ventilated area. For more safety and storage information, see the label of the Diesel Exhaust Fluid container.

DEF is used with diesel engines to reduce the amount of regulated emissions produced. The fluid level in the DEF tank must be maintained for the vehicle to run correctly. The capacity of the DEF tank is 18.5 L (4.9 gal).

It is normal to hear the DEF system purge fluid back into the tank after the vehicle is shut off.

Locating Diesel Exhaust Fluid

DEF can be purchased at a Chevrolet dealer. It can also be purchased at authorized vehicle dealerships. Additionally, some diesel fueling stations or retailers may have DEF for purchase. For vehicles with an active OnStar subscription, OnStar can help to locate a DEF retailer. See *Customer Assistance Offices on page 13-3* for phone numbers to assist in contacting a GM dealer. See *Recommended Fluids and Lubricants on page 11-12*.

Filling the DEF Tank

⚠ Caution

Use only exhaust fluid that is GM approved, or fluid containing the API certified or ISO 22241 label. The use of other fluids could damage the system, requiring costly repairs that will not be covered by the vehicle warranty.

When adding DEF to an empty or very low tank, always add at least 7.6 L (2 gal) of fluid to release the vehicle from speed limitation.

To prevent damage to the system, do not overfill the DEF tank. When fluid reaches the top of the fill pipe, stop filling. Do not top off the DEF tank.

If you spill DEF during filling, wipe any effected surface with a damp cloth.

For information on the DEF tank, see *Filling the Tank on page 9-60*.

Exhaust Fluid Low

A full DEF tank will last for several thousand kilometers (miles), depending on vehicle usage. As the exhaust fluid level drops, warnings will automatically be displayed in the DIC. Exhaust fluid level status is available on the DIC under the Vehicle Information menu. See “Diesel Exhaust Fluid Level (Diesel Engine Only)” in *Driver Information Center (DIC) on page 5-23*.

To avoid vehicle speed limitations, the DEF tank should be refilled at the first opportunity after a low warning indication. If DEF is added before the EXHAUST FLUID EMPTY REFILL NOW message appears, it may take several km/mi for the DIC message to update.

If the vehicle speed has been limited and DEF has been added, it may take up to 30 seconds after engine start with the vehicle stopped for the EXHAUST FLUID EMPTY REFILL NOW message to clear. If the vehicle is driven prior to the DIC message clearing, the vehicle speed will still be limited. If the DIC message clears while driving, the speed limitation will be removed gradually.

If DEF is added under freezing conditions, additional time may be required to remove speed limitations and may require less fluid to fill the DEF tank.

The following actions describe strategies required by the U.S. Environmental Protection Agency (EPA) and the California Air Resource Board (CARB). The DEF messages relate to these strategies.

The DIC message EXHAUST FLUID RANGE: XXXX km (mi) displays at approximately 1 600 km (1,000 mi) of fluid range remaining. This message appears again at approximately 500 km (300 mi) of remaining range before the exhaust fluid tank becomes empty.

Below 500 km (300 mi) of range remaining, these messages will appear every time the vehicle is started.

Below 121 km (75 mi) of range remaining, the DIC message EXHAUST FLUID LOW SPEED LIMITED SOON displays. This message will display every time the vehicle is started.

If these warnings are ignored and the DEF tank becomes empty, the DIC message EXHAUST FLUID EMPTY REFILL NOW - 563 KM (350 MI) UNTIL 105 KM/H (65 MPH) MAX SPEED displays. The displayed mileage will decrease as driving continues. A warning light also comes on.

When the mileage countdown is zero, the DIC message EXHAUST FLUID EMPTY REFILL NOW - TRANSITIONING TO 105 KM/H (65 MPH) MAX SPEED displays. A warning light and a chime also come on. Vehicle speed will be reduced to a maximum speed limit of 105 km/h (65 mph).

After the transition to 105 km/h (65 mph) is complete, the DIC message EXHAUST FLUID EMPTY REFILL NOW - SPEED LIMITED TO 105 KM/H (65 MPH) – 120 KM (75 MI) UNTIL 89 KM/H (55 MPH) MAX SPEED displays. The displayed mileage will decrease as driving continues. A warning light and a chime also come on.

When the mileage countdown is zero, the DIC message EXHAUST FLUID EMPTY REFILL NOW - TRANSITIONING TO 89 KM/H (55 MPH) MAX SPEED displays. A flashing warning light and a chime also come on. Vehicle speed will be reduced to a maximum speed limit of 89 km/h (55 mph).

After the transition to 89 km/h (55 mph) is complete, the DIC message EXHAUST FLUID EMPTY REFILL NOW - SPEED LIMITED TO 89 KM/H (55 MPH) – 120 KM (75 MI) UNTIL 7 KM/H (4 MPH) MAX SPEED displays. The displayed mileage will decrease as driving continues. A flashing warning light and a chime also come on.

When the mileage countdown is zero, the DIC message EXHAUST FLUID EMPTY REFILL NOW - TRANSITIONING TO 7 KM/H (4 MPH) MAX SPEED displays. A flashing warning light and a chime also come on. Vehicle speed will be reduced to a maximum speed limit of 7 km/h (4 mph).

After the transition to 7 km/h (4 mph) is complete, the DIC message EXHAUST FLUID EMPTY REFILL NOW - SPEED LIMITED TO 7 KM/H (4 MPH) displays. A flashing warning light and a chime also come on.

Add at least 7.6 L (2 gal) of fluid to release the vehicle from speed limitation from a very low or empty tank. The capacity of the DEF tank is 18.5 L (4.9 gal).

See *Diesel Exhaust Fluid Messages on page 5-29*, *Diesel Exhaust Fluid (DEF) Warning Light on page 5-21*, and *Recommended Fluids and Lubricants on page 11-12*.

Exhaust Fluid Quality Poor

Use only exhaust fluid that is GM approved, or fluid containing the API certified or ISO 22241 label.

All DEF has an expiration date. If the system detects poor quality, or contaminated or diluted DEF, the DIC message EXHAUST FLUID QUALITY POOR - SEE OWNERS MANUAL NOW – 160 KM (99 MI) UNTIL 105 KM/H (65 MPH) MAX SPEED displays. The displayed mileage will decrease as driving continues. A warning light also comes on. Adding fresh DEF to the system may resolve the problem, depending on several factors. If the DIC message persists, see your dealer or additional DIC messages may display.

When the mileage countdown is zero, a DIC message EXHAUST FLUID QUALITY POOR - SEE OWNERS MANUAL NOW - TRANSITIONING TO 105 KM/H (65 MPH) MAX SPEED displays. A warning light and a chime also come on. Vehicle speed will be reduced to a maximum speed limit of 105 km/h (65 mph).

After the transition to 105 km/h (65 mph) is complete, the DIC message EXHAUST FLUID QUALITY POOR - SEE OWNERS MANUAL NOW - SPEED LIMITED TO 105 KM/H (65 MPH) – 120 KM (75 MI) UNTIL 89 KM/H (55 MPH) MAX SPEED displays. The displayed mileage will decrease as driving continues. A warning light and a chime also come on.

When the mileage countdown is zero, the DIC message EXHAUST FLUID QUALITY POOR - SEE OWNERS MANUAL NOW - TRANSITIONING TO 89 KM/H (55 MPH) MAX SPEED displays. A flashing warning light and a chime also come on. Vehicle speed will be reduced to a maximum speed limit of 89 km/h (55 mph).

After the transition to 89 km/h (55 mph) is complete, a DIC message EXHAUST FLUID QUALITY POOR - SEE OWNERS MANUAL NOW - SPEED LIMITED TO 89 KM/H (55 MPH) – 120 KM (75 MI) UNTIL 7 KM/H (4 MPH) MAX SPEED displays. The displayed mileage will decrease as driving continues. A flashing warning light and a chime also come on.

When the mileage countdown is zero, a DIC message EXHAUST FLUID QUALITY POOR - SEE OWNERS MANUAL NOW - TRANSITIONING TO 7 KM/H (4 MPH) MAX SPEED displays. A flashing warning light and a chime also come on. Vehicle speed will be reduced to a maximum speed limit of 7 km/h (4 mph).

After the transition to 7 km/h (4 mph) is complete, a DIC message EXHAUST FLUID QUALITY POOR

- SEE OWNERS MANUAL NOW - SPEED LIMITED TO 7 KM/H (4 MPH) displays. A flashing warning light and a chime also come on.

Service Exhaust Fluid System

If a problem occurs with the DEF system, the DIC message SERVICE EXHAUST FLUID SYSTEM - SEE OWNERS MANUAL NOW – 160 KM (99 MI) UNTIL 105 KM/H (65 MPH) MAX SPEED displays. The displayed mileage will decrease as driving continues. A warning light also comes on. In some cases this message will clear itself, indicating that the DEF system was able to correct the condition. If the DIC message persists, see your dealer or additional DIC messages may display.

When the mileage countdown is zero, the DIC message SERVICE EXHAUST FLUID SYSTEM - SEE OWNERS MANUAL NOW - TRANSITIONING TO 105 KM/H (65 MPH) MAX SPEED displays. A warning light and a chime also come on. Vehicle speed will be reduced to a maximum speed limit of 105 km/h (65 mph).

After the transition to 105 km/h (65 mph) is complete, a DIC message SERVICE EXHAUST FLUID SYSTEM - SEE OWNERS MANUAL NOW - SPEED LIMITED TO 105 KM/H (65 MPH) – 120 KM (75 MI) UNTIL 89 KM/H (55 MPH) MAX SPEED displays. The displayed mileage will decrease as driving continues. A warning light and a chime also come on.

When the mileage countdown is zero, the DIC message SERVICE EXHAUST FLUID SYSTEM - SEE OWNERS MANUAL NOW - TRANSITIONING TO 89 KM/H (55 MPH) MAX SPEED displays. A flashing warning light and a chime also come on. Vehicle speed will be reduced down to a maximum speed limit of 89 km/h (55 mph).

After the transition to 89 km/h (55 mph) is complete, the DIC message SERVICE EXHAUST FLUID SYSTEM - SEE OWNERS MANUAL NOW - SPEED LIMITED TO 89 KM/H (55 MPH) – 120 KM (75 MI) UNTIL 7 KM/H (4 MPH) MAX SPEED displays. The displayed mileage will decrease as driving continues. A flashing warning light and a chime also come on.

When the mileage countdown is zero, the DIC message SERVICE EXHAUST FLUID SYSTEM - SEE OWNERS MANUAL NOW - TRANSITIONING TO 7 KM/H (4 MPH) MAX SPEED displays. A flashing warning light and a chime also come on. Vehicle speed will be reduced to a maximum speed limit of 7 km/h (4 mph).

After the transition to 7 km/h (4 mph) is complete, the DIC message SERVICE EXHAUST FLUID SYSTEM - SEE OWNERS MANUAL NOW - SPEED LIMITED

TO 7 KM/H (4 MPH) displays. A flashing warning light and a chime also come on.

Service Emission System

If a problem occurs with the vehicle emission system, the DIC message SERVICE EMISSION SYSTEM - SEE OWNERS MANUAL NOW – 282 KM (175 MI) UNTIL 105 KM/H (65 MPH) MAX SPEED displays. The displayed mileage will decrease as driving continues. In some cases this message will clear itself, indicating that the emission system was able to correct the condition. If the DIC message persists, see your dealer or additional DIC messages may display.

When the mileage countdown is zero, the DIC message SERVICE EMISSION SYSTEM - SEE OWNERS MANUAL NOW - TRANSITIONING TO 105 KM/H (65 MPH) MAX SPEED displays. A chime also comes on. Vehicle speed will be reduced to a maximum speed limit of 105 km/h (65 mph).

After the transition to 105 km/h (65 mph) is complete, the DIC message SERVICE EMISSION SYSTEM - SEE OWNERS MANUAL NOW - SPEED LIMITED TO 105 KM/H (65 MPH) – 120 KM (75 MI) UNTIL 89 KM/H (55 MPH) MAX SPEED displays. The displayed mileage will decrease as driving continues. A chime also comes on.

When the mileage countdown is zero, the DIC message SERVICE EMISSION SYSTEM - SEE OWNERS MANUAL NOW - TRANSITIONING TO 89 KM/H (55 MPH) MAX SPEED displays. A chime also comes on. Vehicle speed will be reduced to a maximum speed limit of 89 km/h (55 mph).

After the transition to 89 km/h (55 mph) is complete, the DIC message SERVICE EMISSION SYSTEM - SEE OWNERS MANUAL NOW - SPEED LIMITED TO 89 KM/H (55 MPH) displays. A chime also comes on.

Running the Vehicle While Parked

It is better not to park with the engine running.

If the vehicle is left with the engine running, follow the proper steps to be sure the vehicle will not move. See *Shifting Into Park on page 9-23* and *Engine Exhaust on page 9-26*. If the vehicle has a manual transmission, see *Parking on page 9-25*.

If parking on a hill and pulling a trailer, see *Driving Characteristics and Towing Tips on page 9-62*.

Automatic Transmission

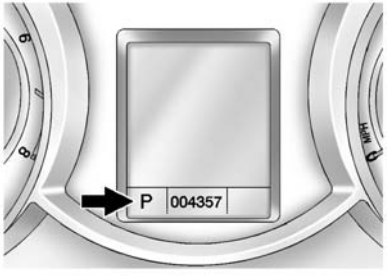

The selected gear is also shown in the instrument cluster.

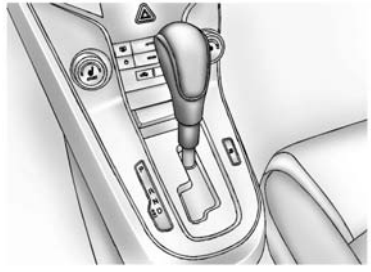

P (Park): This position locks the drive wheels. It is the best position to use when starting the engine because the vehicle cannot move easily.

⚠ Warning

It is dangerous to get out of the vehicle if the shift lever is not fully in P (Park) with the parking brake firmly set. The vehicle can roll.

(Continued)

Warning (Continued)

Do not leave the vehicle when the engine is running. If you have left the engine running, the vehicle can move suddenly. You or others could be injured. To be sure the vehicle will not move, even when you are on fairly level ground, always set the parking brake and move the shift lever to P (Park). See *Shifting Into Park on page 9-23* and *Driving Characteristics and Towing Tips on page 9-62*.

Make sure the shift lever is fully in P (Park) before starting the engine. The vehicle has an automatic transmission shift lock control system. The regular brake must be fully applied first and then the shift lever button pressed before shifting from P (Park) when the ignition key is in ON/RUN. If you cannot shift out of P (Park), ease pressure on the shift lever, then push the shift lever

all the way into P (Park) as you maintain brake application. Then press the shift lever button and move the shift lever into another gear. See *Shifting out of Park on page 9-24*.

R (Reverse): Use this gear to back up.

⚠ Caution

Shifting to R (Reverse) while the vehicle is moving forward could damage the transmission. The repairs would not be covered by the vehicle warranty. Shift to R (Reverse) only after the vehicle is stopped.

To rock the vehicle back and forth to get out of snow, ice, or sand without damaging the transmission, see *If the Vehicle Is Stuck on page 9-8*.

N (Neutral): In this position, the engine does not connect with the wheels. To restart the engine when the vehicle is already moving, use N (Neutral) only. Also, use N (Neutral) when the vehicle is being towed.

The vehicle has an automatic neutral shift feature which allows the transmission to automatically shift to N (Neutral) when the vehicle is stopped with a forward gear engaged. The reduced load on the engine improves vehicle fuel economy.

⚠ Warning

Shifting into a drive gear while the engine is running at high speed is dangerous. Unless your foot is firmly on the brake pedal, the vehicle could move very rapidly. You could lose control and hit people or objects. Do not shift into a drive gear while the engine is running at high speed.

⚠ Caution

Shifting out of P (Park) or N (Neutral) with the engine running at high speed may damage the transmission. The repairs would not be covered by the vehicle warranty. Be sure the engine is not running at high speed when shifting the vehicle.

D (Drive): This position is for normal driving. It provides the best fuel economy. If more power is needed for passing, and the vehicle is:

- Going less than 56 km/h (35 mph), push the accelerator pedal about halfway down.
- Going about 56 km/h (35 mph) or more, push the accelerator all the way down.

⚠ Caution

If the vehicle accelerates slowly, or does not shift gears, the transmission could be damaged. Have the vehicle serviced right away.

Manual Mode

Driver Shift Control (DSC)

All Models Except Fuel Economy Model

⚠ Caution

Driving with the engine at a high rpm without upshifting while using Driver Shift Control (DSC), could damage the vehicle. Always upshift when necessary while using DSC.

DSC allows you to shift an automatic transmission similar to a manual transmission.

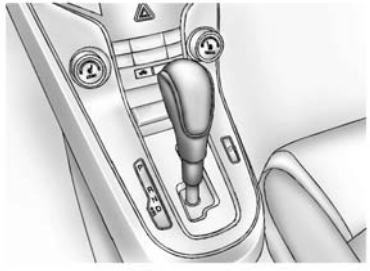

1. Move the shift lever from D (Drive) to the left into the (+) or (−) manual position.

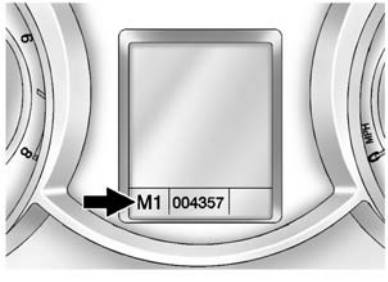

2. Press the shift lever forward (+) to upshift or rearward (−) to downshift. An M and the current gear will be displayed in the DIC.

While using the DSC feature, the vehicle will have firmer, quicker shifting. Use DSC for sport driving or when climbing or descending hills, to stay in gear longer, or to downshift for more power or engine braking.

The transmission will only allow shifting into gears appropriate for vehicle speed and engine revolutions per minute (rpm). The transmission will not automatically shift to the next lower gear if the engine rpm is too high, nor to the next higher gear when the maximum engine rpm is reached.

If shifting is prevented for any reason, the currently selected gear will flash multiple times, indicating that the transmission has not shifted gears.

While in the DSC mode, the transmission will automatically downshift when the vehicle comes to a stop. This will allow for more power during take-off.

When accelerating the vehicle from a stop in snowy and icy conditions, you may want to shift into second gear. A higher gear allows the vehicle to gain more traction on slippery surfaces.

Electronic Range Select (ERS) Mode

Fuel Economy Model

⚠ Caution

If the vehicle is driven at a high rpm without upshifting while using Electronic Range Select (ERS), the vehicle could be damaged. Always upshift when necessary while using ERS.

ERS allows for the selection of the range of gear positions. Use this mode when driving downhill or towing a trailer to limit the top gear and vehicle speed. The shift position indicator within the Driver Information Center (DIC) will display a number next to the M indicating the highest available gear under manual mode and the driving conditions when manual mode was selected.

1. Move the shift lever from D (Drive) to the left into the (+) or (−) manual position.
2. Press the shift lever forward (+) to upshift or rearward (−) to downshift. An M and the current gear will be displayed in the DIC.

When shifting to M (Manual Mode), the transmission will shift to the range of the current gear. For this range, the highest gear available is displayed next to the M in the DIC. See *Driver Information Center (DIC) on page 5-23* for more information. All gears below that number are available to use. For example, when 4 (Fourth) is shown next to the M, 1 (First) through 4 (Fourth) gears are shifted automatically. To shift to 5 (Fifth) gear, press the shift lever forward (+) to upshift or shift into D (Drive).

M (Manual Mode) will prevent shifting to a lower gear range if the engine speed is too high. If vehicle speed is not reduced within the time allowed, the lower gear range shift will not be completed. Slow the vehicle, then press the shift lever rearward (−) to downshift to the desired lower gear range.

While using the ERS, cruise control can be used.

Manual Transmission

Shift Pattern

All Models Except Fuel Economy Model

Fuel Economy Model

These are the shift patterns for the 6-speed manual transmissions.

To operate the transmissions:

> **⚠ Caution**
>
> Do not rest your hand on the shift lever while driving. The pressure could cause premature wear in the transmission. The repairs would not be covered by the vehicle warranty.

> **⚠ Caution**
>
> Do not rest your foot on the clutch pedal while driving or while stopped. The pressure can cause premature wear in the clutch. The repairs would not be covered by the vehicle warranty.

1 (First): Press the clutch pedal fully to the pedal stop and shift into 1 (First). Then slowly let up on the clutch pedal as the accelerator pedal is pressed.

If the vehicle comes to a complete stop and it is hard to shift into 1 (First), put the shift lever in Neutral and let up on the clutch. Press the clutch pedal back down. Then shift into 1 (First).

2 (Second): Press the clutch pedal fully to the pedal stop while letting up on the accelerator pedal and shifting into 2 (Second). Then, slowly let up on the clutch pedal as the accelerator pedal is pressed.

3 (Third), 4 (Fourth), 5 (Fifth), and 6 (Sixth): Shift into 3 (Third), 4 (Fourth), 5 (Fifth), and 6 (Sixth) the same way as for 2 (Second). Slowly let up on the clutch pedal as the accelerator pedal Is pressed.

For the best fuel economy, use 6 (Sixth) gear whenever vehicle speed and driving conditions allow.

An up-shift light in the instrument cluster indicates when to shift to the next higher gear for the best fuel economy.

During normal driving, upshifts should occur between 1300 and 2500 rpm, and downshifts should occur between 1500 and 1000 rpm.

To stop, let up on the accelerator pedal and press the brake pedal. Just before the vehicle stops, press the clutch pedal and the brake pedal, and shift to Neutral.

Neutral: Use this position when you start or idle the engine. The shift lever is in Neutral when it is centered in the shift pattern, not in any gear.

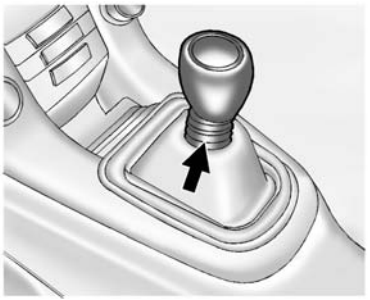

R (Reverse): To back up, with the vehicle at a complete stop, press down the clutch pedal. Then pull up the ring on the shift lever, and shift into R (Reverse). Let up on the clutch pedal slowly while pressing the accelerator pedal.

If the gear does not engage, shift the transmission to Neutral, release the clutch pedal, and press it back down. Repeat the gear selection.

⚠ Warning

If you skip a gear when downshifting, you could lose control of the vehicle. You could injure yourself or others. Do not shift down more than one gear at a time when downshifting.

⚠ Caution

Do not skip gears while upshifting. This can cause premature wear in the transmission. The repairs would not be covered by the vehicle warranty.

Brakes

Antilock Brake System (ABS)

This vehicle has ABS, an advanced electronic braking system that helps prevent a braking skid.

When the vehicle begins to drive away, ABS checks itself.
A momentary motor or clicking noise might be heard while this test is going on, and it might even be noticed that the brake pedal moves a little. This is normal.

If there is a problem with ABS, this warning light stays on. See *Antilock Brake System (ABS) Warning Light on page 5-17*.

If driving safely on a wet road and it becomes necessary to slam on the brakes and continue braking to avoid a sudden obstacle, a computer senses the wheels are slowing down. If one of the wheels is about to stop rolling, the computer will separately work the brakes at each wheel.

ABS can change the brake pressure to each wheel, as required, faster than any driver could. This can help you steer around the obstacle while braking hard.

As the brakes are applied, the computer keeps receiving updates on wheel speed and controls braking pressure accordingly.

Remember: ABS does not change the time needed to get a foot up to the brake pedal or always decrease stopping distance. If you get too close to the vehicle in front of you, there will not be enough time to apply the brakes if that vehicle suddenly slows or stops. Always leave enough room up ahead to stop, even with ABS.

Using ABS

Do not pump the brakes. Just hold the brake pedal down firmly and let ABS work. You may hear the ABS pump or motor operating and feel the brake pedal pulsate. This is normal.

Braking in Emergencies

ABS allows you to steer and brake at the same time. In many emergencies, steering can help more than even the very best braking.

Parking Brake

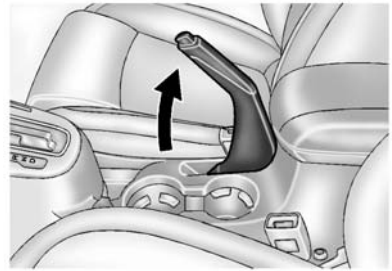

To apply the parking brake, pull up on the parking brake handle. It is not necessary to push in on the release button while applying the parking brake. If the ignition is in the ON/RUN position, the brake system warning light will come on. See *Brake System Warning Light on page 5-16*.

To release the parking brake:

1. Hold the brake pedal down.
2. Pull the parking brake handle up until you can press the release button.
3. Hold the release button in as you move the brake handle all the way down.

⚠ Caution

Driving with the parking brake on can overheat the brake system and cause premature wear or damage to brake system parts. Make sure that the parking brake is fully released and the brake warning light is off before driving.

Driving with the parking brake applied will cause a warning chime to sound and the RELEASE PARKING BRAKE message to appear in the DIC. The message will remain on until the parking brake is released or the vehicle is stopped.

If parking on a hill, or if the vehicle is pulling a trailer, see *Driving Characteristics and Towing Tips on page 9-62*.

Brake Assist

The Brake Assist feature is designed to assist the driver in stopping or decreasing vehicle speed in emergency driving conditions. This feature uses the stability system hydraulic brake control module to supplement the power brake system under conditions where the driver has quickly and forcefully applied the brake pedal in an attempt to quickly stop or slow down the vehicle. The stability system hydraulic brake control module increases brake pressure at each corner of the vehicle until the ABS activates. Minor brake pedal pulsation or pedal movement during this time is normal and the driver should continue to apply the brake pedal as the driving situation dictates. The Brake Assist feature will automatically disengage when the brake pedal is released or brake pedal pressure is quickly decreased.

Ride Control Systems

Traction Control/ Electronic Stability Control

System Operation

The vehicle has a Traction Control System (TCS) and StabiliTrak®, an electronic stability control system. These systems help limit wheel slip and assist the driver in maintaining control, especially on slippery road conditions.

TCS activates if it senses that any of the drive wheels are spinning or beginning to lose traction. When this happens, TCS applies the brakes to the spinning wheels and reduces engine power to limit wheel spin.

StabiliTrak activates when the vehicle senses a difference between the intended path and the direction the vehicle is actually traveling. StabiliTrak selectively applies braking pressure to any one of the vehicle wheel brakes to assist the driver in keeping the vehicle on the intended path.

If cruise control is being used and traction control or StabiliTrak begins to limit wheel spin, cruise control will disengage. Cruise control may be turned back on when road conditions allow.

Both systems come on automatically when the vehicle is started and begins to move. The systems may be heard or felt while they are operating or while performing diagnostic checks. This is normal and does not mean there is a problem with the vehicle.

It is recommended to leave both systems on for normal driving conditions, but it may be necessary to turn TCS off if the vehicle gets stuck in sand, mud, ice, or snow. See *If the Vehicle Is Stuck on page 9-8* and “Turning the Systems Off and On” later in this section.

The indicator light for both systems is in the instrument cluster. This light will:

- Flash when TCS is limiting wheel spin.
- Flash when StabiliTrak is activated.
- Turn on and stay on when either system is not working.

If either system fails to turn on or to activate, a message displays in the Driver Information Center (DIC), and comes on and stays on to indicate that the system is inactive and is not assisting the driver in maintaining control. The vehicle is safe to drive, but driving should be adjusted accordingly.

If comes on and stays on:

1. Stop the vehicle.
2. Turn the engine off and wait 15 seconds.
3. Start the engine.

Drive the vehicle. If comes on and stays on, the vehicle may need more time to diagnose the problem. If the condition persists, see your dealer.

Turning the Systems Off and On

The button for TCS and StabiliTrak is on the center console, beside the shift lever.

⚠ Caution

Do not repeatedly brake or accelerate heavily when TCS is off. The vehicle driveline could be damaged.

To turn off only TCS, press and release the button. The traction off light displays in the instrument cluster. To turn TCS on again, press and release the button. The traction off light displayed in the instrument cluster will turn off.

If TCS is limiting wheel spin when the button is pressed, the system will not turn off until the wheels stop spinning.

To turn off both TCS and StabiliTrak, press and hold the button until the traction off light and StabiliTrak OFF light come on and stay on in the instrument cluster. To turn TCS and StabiliTrak on again, press and release the button. The traction off light and StabiliTrak OFF light in the instrument cluster turn off.

Adding accessories can affect the vehicle performance. See *Accessories and Modifications on page 10-3*.

Cruise Control

If equipped with cruise control, the vehicle can maintain a speed of about 40 km/h (25 mph) or more without keeping your foot on the accelerator. Cruise control does not work at speeds below 40 km/h (25 mph).

⚠ Warning

Cruise control can be dangerous where you cannot drive safely at a steady speed. Do not use cruise control on winding roads or in heavy traffic.

Cruise control can be dangerous on slippery roads. On such roads, fast changes in tire traction can cause excessive wheel slip, and you could lose control. Do not use cruise control on slippery roads.

The vehicle has a Traction Control System (TCS) or StabiliTrak system that begins to limit wheel spin while using cruise control and the cruise control will automatically disengage. See *Traction Control/Electronic Stability Control on page 9-41*. When road conditions allow you to safely use it again, the cruise control can be turned on.

If the brakes are applied, the cruise control shuts off.

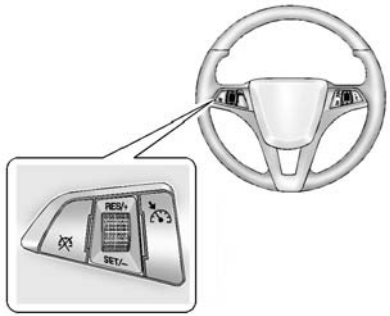

(On/Off): Press to turn the cruise control system on and off. A white indicator comes on in the instrument cluster when cruise is turned on.

RES/+ (Resume/Accelerate): If there is a set speed in memory, move the thumbwheel up briefly to resume to that speed or hold upward to accelerate. If cruise control is already active, use to increase vehicle speed.

SET/− (Set/Coast): Move the thumbwheel down briefly to set the speed and activate cruise control. If cruise control is already active, use to decrease speed.

(Cancel): Press to disengage cruise control without erasing the set speed from memory.

Setting Cruise Control

If is on when not in use, SET/- or RES/+ could get bumped and go into cruise when not desired.

Keep off when cruise control is not being used.

1. Press to turn the cruise system on.
2. Get up to the desired speed.

3. Move the thumbwheel down and release it.
4. Remove foot from the accelerator.

The cruise control indicator on the instrument cluster turns green after cruise control has been set to the desired speed. See *Instrument Cluster on page 5-8*.

Resuming a Set Speed

If the cruise control is set at a desired speed and then the brakes or clutch for manual transmissions are applied or is pressed, the cruise control is disengaged without erasing the set speed from memory.

Once the vehicle reaches about 40 km/h (25 mph) or more, move the thumbwheel up toward RES/+ briefly. The vehicle returns to the previous set speed.

Increasing Speed While Using Cruise Control

If the cruise control system is already activated:

- Move the thumbwheel up toward RES/+ and hold it until the desired speed is reached, then release it.
- To increase vehicle speed in small increments, move the thumbwheel up toward RES/+ briefly. For each press, the vehicle goes about 1.6 km/h (1 mph) faster.

The speedometer reading can be displayed in either English or metric units. See *Driver Information Center (DIC) on page 5-23*. The increment value used depends on the units displayed.

Reducing Speed While Using Cruise Control

If the cruise control system is already activated:

- Move the thumbwheel toward SET/− and hold until the desired lower speed is reached, then release it.
- To decrease the vehicle speed in small increments, move the thumbwheel toward SET/− briefly. For each press, the vehicle goes about 1.6 km/h (1 mph) slower.

The speedometer reading can be displayed in either English or metric units. See *Driver Information Center (DIC) on page 5-23*. The increment value used depends on the units displayed.

Passing Another Vehicle While Using Cruise Control

Use the accelerator pedal to increase the vehicle speed. When you take your foot off the pedal, the vehicle slows down to the previous

set cruise control speed. While pressing the accelerator pedal or shortly following the release to override cruise control, briefly moving the thumbwheel toward SET/− will result in cruise control set to the current vehicle speed.

Using Cruise Control on Hills

How well cruise control works on hills depends on the vehicle speed, load, and the steepness of the hills. When going up steep hills, you might have to step on the accelerator pedal to maintain the vehicle speed. When going downhill, you might have to brake or shift to a lower gear to keep your speed down. If the brake pedal is applied, cruise control will disengage.

Ending Cruise Control

There are four ways to end cruise control:

- Step lightly on the brake pedal or clutch for a manual transmission.
- Press .
- Shift the transmission to N (Neutral).
- To turn off cruise control, press .

Erasing Speed Memory

The cruise control set speed is erased from memory if is pressed or if the ignition is turned off.

Driver Assistance Systems

Parking Assist

If equipped, the Rear Parking Assist (RPA) system assists the driver with parking and avoiding objects while in R (Reverse). RPA operates at speeds less than 8 km/h (5 mph). The sensors on the rear bumper detect objects up to 2.5 m (8 ft) behind the vehicle, and at least 20 cm (8 in) off the ground. The distance objects can be detected may be less during warmer or humid weather.

⚠ Warning

The parking assist system does not detect children, pedestrians, bicyclists, animals, or objects below the bumper or that are too close or too far from the vehicle. It is not available at speeds

(Continued)

Warning (Continued)

greater than 8 km/h (5 mph). To prevent injury, death, or vehicle damage, even with parking assist, always check the area around the vehicle and check all mirrors before backing.

How the System Works

RPA comes on automatically when the shift lever is moved into R (Reverse). A single beep sounds to indicate the system is working.

An obstacle detection is indicated by beeps. The time between the beeps becomes shorter as the vehicle gets closer to the obstacle. When the distance is less than 30 cm (12 in), the beeping is a continuous beep for five seconds.

Turning the System On and Off

The RPA system can be turned on and off using the infotainment system controls. See *Vehicle Personalization on page 5-36*.

When the system is off, PARK ASSIST OFF displays on the Driver Information Center (DIC). The message disappears after a short period of time.

RPA defaults to the on setting each time the vehicle is started.

Turn off RPA when towing a trailer.

When the System Does Not Seem to Work Properly

The following messages may be displayed on the DIC:

SERVICE PARKING ASSIST: If this message occurs, check the following conditions:

- The sensors are not clean. Keep the vehicle's rear bumper free of mud, dirt, snow, ice, and slush. For cleaning instructions, see *Exterior Care on page 10-88*.
- The park assist sensors are covered by frost or ice. Frost or ice can form around and behind the sensors and may not always be seen; this can occur after washing the vehicle in cold weather. The message may not clear until the frost or ice has melted.

If the above conditions do not exist, take the vehicle to your dealer to repair the system.

PARK ASSIST OFF: If the RPA system does not activate due to a temporary condition, the message displays on the DIC. This can occur under the following conditions:

- The driver has disabled the system.
- An object was hanging out of the trunk during the last drive cycle. Once the object is removed, RPA will return to normal operation.
- The bumper is damaged. Take the vehicle to your dealer to repair the system.

- Other conditions, such as vibrations from a jackhammer or the compression of air brakes on a very large truck, are affecting system performance.

Side Blind Zone Alert (SBZA)

If equipped, the SBZA system is a lane-changing aid that assists drivers with avoiding crashes that occur with vehicles in the side blind zone (or spot) areas. The SBZA warning display will light up in the corresponding outside side mirror and will flash if the turn signal is on.

⚠ Warning

SBZA does not alert the driver to vehicles rapidly approaching outside of the side blind zones, pedestrians, bicyclists, or animals. It may not provide alerts when changing lanes under all driving conditions. Failure to

(Continued)

Warning (Continued)

use proper care when changing lanes may result in injury, death, or vehicle damage. Before making a lane change, always check mirrors, glance over your shoulder, and use the turn signals.

SBZA Detection Zones

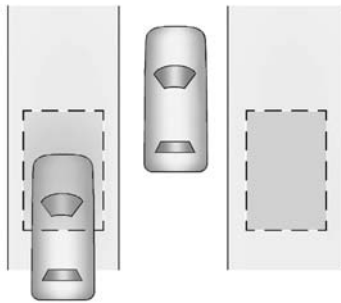

The SBZA sensor covers a zone of approximately one lane over from both sides of the vehicle, or 3.5 m (11 ft). The height of the zone is approximately between 0.5 m (1.5 ft) and 2 m (6 ft) off the ground. This zone starts at approximately the middle of the vehicle and goes back 5 m (16 ft).

How the System Works

The SBZA symbol lights up in the side mirrors when the system detects a vehicle in the next lane over that is in the side blind zone. This indicates it may be unsafe to change lanes. Before making a lane change, check the SBZA display, check mirrors, glance over your shoulder, and use the turn signals.

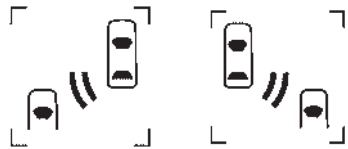

Left Side Mirror Display **Right Side Mirror Display**

When the vehicle is started, both outside mirror SBZA displays will briefly come on to indicate the system is operating. When the vehicle is in a forward gear, the left- or right-side mirror display will light up if a moving vehicle is detected in that blind zone. If the turn signal is activated in the same direction of a detected vehicle, this display will flash as an extra warning not to change lanes.

SBZA can be disabled through vehicle personalization. See “Collision Detection Systems” under *Vehicle Personalization on page 5-36*. If SBZA is disabled by the driver, the SBZA mirror displays will not light up.

When the System Does Not Seem to Work Properly

SBZA displays may not come on when passing a vehicle quickly, for a stopped vehicle, or when towing a trailer. The SBZA detection zones that extend back from the side of the vehicle do not move further back when a trailer is towed. Use caution while changing lanes when towing a trailer. SBZA may alert to objects attached to the vehicle, such as a trailer, bicycle, or object extending out to either side of the vehicle. This is normal system operation; the vehicle does not need service.

SBZA may not always alert the driver to vehicles in the side blind zone, especially in wet conditions. The system does not need to be serviced. The system may light up due to guardrails, signs, trees, shrubs, and other non-moving objects. This is normal system operation; the vehicle does not need service.

SBZA may not operate when the SBZA sensors in the left or right corners of the rear bumper are covered with mud, dirt, snow, ice, or slush, or in heavy rainstorms. For cleaning instructions, see "Washing the Vehicle" under *Exterior Care on page 10-88*. If the DIC still displays the system unavailable message after cleaning both sides of the vehicle toward the rear corners of the vehicle, see your dealer.

If the SBZA displays do not light up when vehicles are in the blind zone and the system is clean, the system may need service. Take the vehicle to your dealer.

When SBZA is disabled for any reason other than the driver turning it off, the Side Blind Zone Alert On option will not be available on the personalization menu.

Radio Frequency Information

See *Radio Frequency Statement on page 13-12*.

Rear Vision Camera (RVC)

If equipped, the RVC system can assist the driver when backing up by displaying a view of the area behind the vehicle.

⚠ Warning

The camera(s) do not display children, pedestrians, bicyclists, crossing traffic, animals, or any other object outside of the cameras' field of view, below the bumper, or under the vehicle. Shown distances may be different from actual distances. Do not drive or park the vehicle using only these camera(s). Always check behind and around the vehicle before driving. Failure to use proper care may result in injury, death, or vehicle damage.

An image appears on the infotainment screen when the vehicle is shifted into R (Reverse). The infotainment screen goes to the previous screen after approximately 10 seconds once the vehicle is shifted out of R (Reverse).

To return to the previous screen sooner, do one of the following:

- Press a hard key on the infotainment system.
- Shift into P (Park).

Symbols and Guidelines

The system may have a feature that lets the driver view caution symbols on the infotainment screen while using the RVC. The Rear Park Assist (RPA) system must not be disabled to use the caution symbols. The error message Rear Parking Assist Symbols Unavailable may display if RPA has been disabled and the symbols have been turned on.

The symbols appear and may cover an object when viewing the infotainment screen when an object is detected by the RPA system.

The RVC system may also have a guideline overlay that can help the driver align the vehicle when backing into a parking spot.

To turn the symbols or guidelines on or off:

1. Shift into P (Park).
2. Press the CONFIG button to enter the configure menu options.
3. Select Display.
4. Select Rear Camera Options.
5. Select Symbols or Guidelines. When a checkmark appears next to the feature, it is turned on.

Rear Cross Traffic Alert (RCTA)

On vehicles with the RCTA, a warning triangle with a left or right pointing arrow may also display on the RVC screen to warn of traffic coming from the left or the right. Three beeps will also sound from the left or right. This system detects objects coming from up to 20 m (65 ft) from the left or right side behind the vehicle. The RCTA system will not work properly if ice, snow, mud, or anything else builds up on the rear bumper sensors.

Use caution while backing up when towing a trailer, as the RCTA detection zones that extend out from the back of your vehicle do not move further back when a trailer is towed.

RCTA can be turned on or off through vehicle personalization. See “Collision Detection Systems” under *Vehicle Personalization on page 5-36*.

Rear Vision Camera Error Messages

SERVICE REAR VISION CAMERA SYSTEM: This message can display when the system is not operating properly.

If any other problem occurs or if a problem persists, see your dealer.

Rear Vision Camera Location

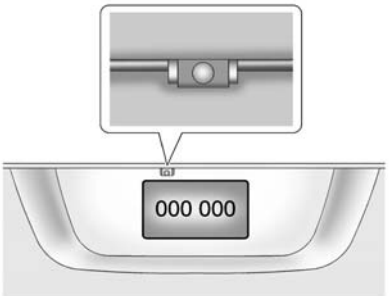

The camera is above the license plate.

The area displayed by the camera is limited. It does not display objects that are close to either corner or under the bumper and can vary depending on vehicle orientation or road conditions. Displayed images may be closer or farther than they appear.

The following illustrations show the field of view that the camera provides.

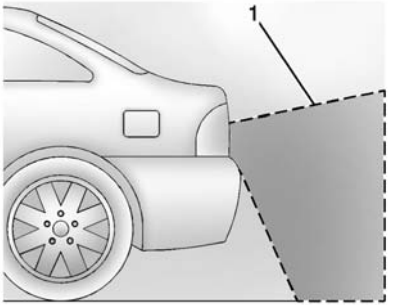

1. View displayed by the camera.

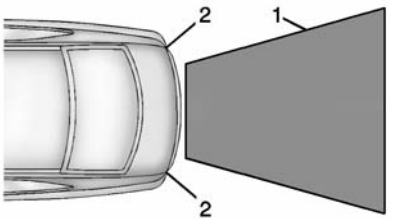

1. View displayed by the camera.
2. Corner of the rear bumper.

When the System Does Not Seem to Work Properly

The RVC system may not work properly or display a clear image if:

- It is dark.
- The sun or the beam of headlamps are shining directly into the camera lens.
- Ice, snow, mud, or anything else builds up on the camera lens. Clean the lens, rinse it with water, and wipe it with a soft cloth.
- The back of the vehicle is in an accident. The position and mounting angle of the camera can change or the camera can be affected. Be sure to have the camera and its position and mounting angle checked at your dealer.

Fuel

Fuel (Gasoline)

Use of the recommended fuel is an important part of the proper maintenance of this vehicle. When driving in the U.S. and Canada, to help keep the engine clean and maintain optimum vehicle performance, we recommend using TOP TIER Detergent Gasolines. See www.toptiergas.com for a list of TOP TIER Detergent Gasolines.

TOP TIER™ Detergent Gasoline

CATEGORIE SUPERIÉURE™ Essences Détergentes

Use regular unleaded gasoline meeting ASTM specification D4814 with a posted octane rating of 87 or higher. Do not use gasoline with an octane rating below 87, as it may cause engine damage and will lower fuel economy.

Use of Seasonal Fuels

Use summer and winter fuels in the appropriate season. The fuels industry automatically modifies the fuel for the appropriate season. If fuel is left in the vehicle tank for long periods of time, driving or starting could be affected. Drive the vehicle until the fuel is at one-half tank or less, then refuel with the current seasonal fuel.

Prohibited Fuels

Gasolines containing oxygenates such as ethers and ethanol, as well as reformulated gasolines, are available in some cities. If these gasolines comply with the previously described specification, then they are acceptable to use. However, E85 (85% ethanol) and

other fuels containing more than 15% ethanol must be used only in FlexFuel vehicles.

⚠ Caution

Do not use fuel containing methanol. It can corrode metal parts in the fuel system and also damage plastic and rubber parts. That damage would not be covered under the vehicle warranty.

Some gasolines, mainly high octane racing gasolines, can contain an octane-enhancing additive called methylcyclopentadienyl manganese tricarbonyl (MMT). Do not use gasolines and/or fuel additives with MMT as they can reduce spark plug life and affect emission control system performance. The malfunction indicator lamp may turn on. If this occurs, see your dealer for service.

California Fuel Requirements

If the vehicle is certified to meet California Emissions Standards, it is designed to operate on fuels that meet California specifications. See the underhood emission control label. If this fuel is not available in states adopting California Emissions Standards, the vehicle will operate satisfactorily on fuels meeting federal specifications, but emission control system performance might be affected. The malfunction indicator lamp could turn on and the vehicle may not pass a smog-check test. See *Malfunction Indicator Lamp on page 5-14*. If this occurs, return to your authorized dealer for diagnosis. If it is determined that the condition is caused by the type of fuel used, repairs may not be covered by the vehicle warranty.

Fuels in Foreign Countries

If planning to drive in countries outside the U.S. or Canada, the proper fuel might be hard to find. Check regional auto club or fuel retail brand websites for availability in the country where driving. Never use leaded gasoline, fuel containing methanol, manganese, or any other fuel not recommended. Costly repairs caused by use of improper fuel would not be covered by the vehicle warranty.

Fuel Additives (Gasoline)

To keep fuel systems clean, TOP TIER Detergent Gasoline is recommended. See *Fuel (Gasoline) on page 9-51*.

If TOP TIER Detergent Gasoline is not available, one bottle of Fuel System Treatment PLUS added to the fuel tank at every engine oil change, can help. Fuel System Treatment PLUS is the only

gasoline additive recommended by General Motors. It is available at your dealer.

Fuel for Diesel Engines

⚠ Caution

Use of diesel fuel other than Ultra Low Sulfur Diesel (15 ppm sulfur maximum) will cause damage to the exhaust after-treatment system. This damage would not be covered by the vehicle warranty. Do not use marine, locomotive, or boiler distillate fuel since it may contain higher sulfur levels.

The emission control system requires the use of diesel fuel with ultra low sulfur content (15 ppm or 0.0015% by weight, maximum). Look for the following label on the dispenser to ensure you are filling with Ultra Low Sulfur Diesel fuel.

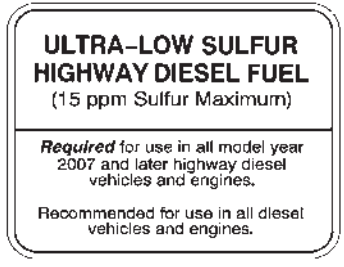

At a minimum, the diesel fuel you use should meet the latest version of ASTM specification D 975 (Grades number 2-D or number 1-D S15, commonly known as Ultra Low Sulfur Diesel) in the United States. If there are questions about the fuel you are using, contact your fuel supplier.

Diesel Fuel Grades

For best results use number 2-D diesel fuel year-round (above and below freezing conditions) as oil companies blend number 2-D fuel to address climate differences.

Number 1-D diesel fuel can be used in very cold temperatures (when it stays below −18°C or 0°F); however, it will produce a power and fuel economy loss. Avoid the use of number 1-D diesel fuel in warm or hot climates. It can result in stalling, poor starting when the engine is hot, and damage to the fuel injection system.

Premium Diesel Fuel

Diesel fuel corresponding to the Engine Manufacturers Association (EMA) Recommended Guideline on Premium Diesel Fuel (FQP-1A) could provide better starting, less noise, and better vehicle performance, but its use is not required.

Biodiesel

What is biodiesel?

Biodiesel is a fuel produced from vegetable oils or animal fats that have been chemically modified to reduce the possibility of damage to the fuel system and engine.

⚠ Caution

Do not use home-made biodiesel or home test kits because the quality cannot be verified by approved scientific methods. Do not use raw vegetable oil or other unmodified bio-oils, fats, or blends of vegetable oil with diesel. They could damage the fuel system and engine, and damages would not be covered by the vehicle warranty.

What not to use

Do not use home-made biodiesel in your vehicle since its quality cannot be verified by approved scientific methods. Home test kits are not approved scientific methods.

⚠ Caution

Any damage caused by raw, unmodified, or home-made biodiesel would not be covered by the vehicle warranty.

Biodiesel blends

It is acceptable to use diesel fuel containing up to 20% biodiesel (B20). The diesel fuel portion of the blend must meet the same specification, ASTM D975 (Grades number 2-D or number 1-D S15 commonly known as Ultra Low Sulfur Diesel), as other fuels used in your vehicle, and the biodiesel used for making this fuel must meet the latest version of ASTM specification D6751.

- Pump labeling — Retail pumps dispensing blends containing up to 5% biodiesel (B5) are not required to be labeled with the concentration of biodiesel. Blends up to B5 must meet ASTM D975 (Grades number 2-D or number 1-D S15 commonly known as Ultra Low Sulfur Diesel).

⚠ Caution

Do not use blends containing more than 20% biodiesel. Any engine, fuel system, or exhaust after-treatment system damage would not be covered by the vehicle warranty.

Pumps dispensing more than 5% and up to 20% biodiesel are required to be labeled with the concentration of biodiesel. When refueling with a biodiesel blend above B5, ensure one of the following two labels appears on the dispenser:

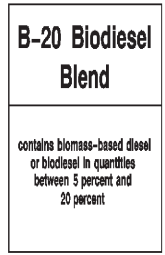

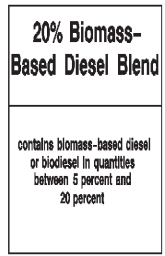

- Biodiesel quality — Blends containing more than 5% and up to 20% biodiesel must meet the latest version of ASTM specification D7467 (Biodiesel blend, B6 - B20). Biodiesel is an emerging product, and its quality can vary widely. To reduce the risk of poor quality fuel, we recommend that biodiesel users purchase biodiesel blends from a BQ-9000 certified marketer. A listing of certified marketers can be found at www.bq-9000.org. If there are questions about the biodiesel-containing fuels you are using, contact your fuel supplier.

⚠ Caution

Certain driving patterns are not compatible with biodiesel use. It is the operator's responsibility to ensure that biodiesel in the vehicle's tank does not lead to engine, fuel system, or exhaust after-treatment system damage.

We neither encourage nor discourage the use of biodiesel blends for vehicles. As a renewable fuel, biodiesel provides some environmental benefits. However, biodiesel has unique properties and needs to be handled differently than diesel fuel. Its use presents additional risks and may not be appropriate in all situations. Certain vehicle operating modes increase these risks and should be avoided. Read further to determine if your driving habits are compatible with the use of biodiesel.

- Biodiesel fuel quality degrades with time and exposure to high temperature much more quickly than conventional diesel fuel. More frequent refueling provides the best opportunity to have a supply of fresh fuel.

  Owners who have very low fuel usage or who have vehicles stored for extended periods of time should avoid the use of biodiesel. Storage at hot ambient temperatures will accelerate biodiesel degradation.

  When vehicles will be stored for extended periods of time (greater than one month), they should be run out of biodiesel to below one-quarter tank, refueled with conventional Ultra Low Sulfur Diesel fuel, and driven several miles before storage.

- Biodiesel gels sooner than conventional diesel fuel at cold temperature, and biodiesel fuel requires proper blending for winter time operation.

  Fuels improperly blended for cold temperature operation may result in restricted fuel filters and degraded vehicle performance. Your vehicle is equipped with a fuel heating system to provide a level of protection against filter plugging from gelling (waxing) of conventional diesel fuel and biodiesel blends. However, the system will not prevent all cases of plugged filters if the operating temperature is far below the temperature at which gelling or waxing of the fuel occurs (cloud point).

  Use of biodiesel blends greater than B5 (5% blend) should be avoided in cold temperatures.

- Vehicles operated for extended periods of time on conventional diesel fuel and then switched to biodiesel blends may experience premature fuel filter clogging and require more frequent fuel filter service.

  With long-term use of conventional diesel fuel, gum and varnish may be deposited within the tank and fuel system. These deposits, while not problematic with the use of conventional diesel fuel, may become loosened with a sudden switch to biodiesel blends and cause fuel filter plugging.

- Use of biodiesel blends will degrade the performance of your vehicle's water separator. Biodiesel reduces the effectiveness of the vehicle's water separator, and in the event of water contamination of the fuel, increases the risk of damage to the fuel system.

Refueling

Diesel fuel can foam when you fill the tank. This can cause the automatic pump nozzle to shut off, even though the tank is not full. If this happens, wait for the foaming to stop, and then try filling the tank more slowly. See *Filling the Tank on page 9-60*.

⚠ Warning

Heat coming from the engine can cause the fuel to expand and force the fuel out of the tank. If something ignites the fuel, a fire could start. To help avoid this, fill the tank slowly and only until the nozzle shuts off. Do not top it off. Clean up any spilled fuel.

Accidental Refueling with Gasoline

⚠ Caution

If the vehicle is accidentally refueled with gasoline, do not continue driving the vehicle except to get to a location where it can be stopped safely. Driving the vehicle will damage the fuel system. Have the vehicle towed to a qualified technician to have the gasoline removed from the tank, preferably until the fuel gauge reads near E (Empty). Refuel with Ultra Low Sulfur Diesel fuel.

What Fuel to Use in Canada (Diesel)

Use only diesel fuel with ultra low sulfur content (15 ppm maximum).

> **⚠ Caution**
>
> Use of diesel fuel other than Ultra Low Sulfur Diesel (15 ppm sulfur maximum) will cause damage to the exhaust after-treatment system. This damage would not be covered by the vehicle warranty. Do not use marine, locomotive, or boiler distillate fuel since it may contain higher sulfur levels.

Use diesel fuel that meets CAN/CGSB-3.517 specification in Canada. Contact a fuel supplier for questions about fuel.

Diesel Fuel Types

Fuels are blended for seasonal changes. Diesel Type A fuel is blended for better cold weather starting in extreme conditions. This may cause some power and fuel economy loss. If Type A fuel is used in warmer temperatures, stalling and hard starting may occur. Diesel Type B fuel is blended for higher temperatures experienced during most of the year.

Premium Diesel Fuel

If available, premium diesel fuel (FQP-1A) corresponding to the Engine Manufacturers Association (EMA) Recommended Guideline could provide better starting and vehicle performance with less noise.

Biodiesel

Biodiesel is a renewable fuel produced from vegetable oils or animal fats that have been chemically modified for normal engine performance.

> **⚠ Caution**
>
> Do not use home-made biodiesel or home test kits because the quality cannot be verified by approved scientific methods. Do not use raw vegetable oil or other unmodified bio-oils, fats, or blends of vegetable oil with diesel. They could damage the fuel system and engine, and damages would not be covered by the vehicle warranty.

Biodiesel blends

Biodiesel blends that meet the CAN/CGSB-3.522 specifications up to 20% (B20) can be used. Avoid the use of biodiesel blends above 20%, as they may damage the engine and fuel system. For detailed information on the use of biodiesel, see *Fuel for Diesel Engines on page 9-53*.

Refueling

Diesel fuel can foam when filling the tank. This can cause the automatic pump nozzle to shut off, even if the tank is not full. If this happens, wait for the foaming to stop, and then fill the tank more slowly. See *Filling the Tank on page 9-60*.

⚠ Warning

Heat coming from the engine can cause the fuel to expand and force the fuel out of the tank.
If something ignites the fuel, a fire could start. To help avoid this, fill the tank slowly and only until the nozzle shuts off. Do not top it off. Clean up any spilled fuel.

Accidental Refueling with Gasoline

⚠ Caution

If the vehicle is accidentally refueled with gasoline, do not continue driving the vehicle except to get to a location where it can be stopped safely. Driving the vehicle will damage the fuel system. Have the vehicle towed to a qualified technician to have the gasoline removed from the tank, preferably until the fuel gauge reads near E (Empty). Refuel with Ultra Low Sulfur Diesel fuel.

Cold Weather Operation (Diesel)

Follow the instructions under *Fuel for Diesel Engines on page 9-53*.

⚠ Caution

Using any fuel not approved for this vehicle can cause engine damage and would not be covered by the vehicle warranty. See “What Fuel to Use" for the proper fuel.

In cold weather, the fuel filter could become clogged by wax naturally present in the fuel. To unclog it, move the vehicle to a warm garage area and allow the filter to warm up to between 0°C (32°F) and 10°C (50°F). You will not need to replace the filter. Additional information on the fuel filter follows.

Use of biodiesel blends greater than B5 (5% blend) should be avoided in cold temperatures.

Water in Fuel (Diesel)

The fuel filter assembly has a sensor to determine if there is water in the fuel. If there is water in the fuel, a WATER IN FUEL CONTACT SERVICE message will display. See *Fuel System Messages on page 5-29*. The water will need to be drained. See your dealer.

Running Out of Fuel (Diesel)

Running out of diesel fuel requires priming after fuel is added.

With engine switched off, turn ignition key to ON, wait approximately 15 seconds, and turn key to LOCK to perform priming operation. Perform this operation three times or more while the engine is switched off, to avoid air entering the fuel line.

Filling the Tank

⚠ Warning

Fuel vapors and fuel fires burn violently and can cause injury or death.

- To help avoid injuries to you and others, read and follow all the instructions on the fuel pump island.
- Turn off the engine when refueling.
- Keep sparks, flames, and smoking materials away from fuel.
- Do not leave the fuel pump unattended.
- Do not reenter the vehicle while pumping fuel.
- Keep children away from the fuel pump and never let children pump fuel.

(Continued)

Warning (Continued)

- Fuel can spray out if the fuel cap is opened too quickly. This spray can happen if the tank is nearly full, and is more likely in hot weather. Open the fuel cap slowly and wait for any hiss noise to stop then unscrew the cap all the way.

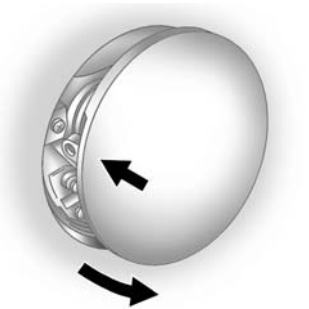

The fuel cap is behind a hinged fuel door on the passenger side of the vehicle. To open the fuel door, push and release the rearward center edge of the door.

Turn the fuel cap counterclockwise to remove. Reinstall the cap by turning it clockwise until it clicks.

On vehicles with gasoline engines, if the cap is not properly installed, the malfunction indicator lamp will come on. See *Malfunction Indicator Lamp on page 5-14*.

Do not top off or overfill the tank. Wait a few seconds before removing the nozzle. Clean fuel from painted surfaces as soon as possible. See *Exterior Care on page 10-88*.

⚠ Warning

If a fire starts while you are refueling, do not remove the nozzle. Shut off the flow of fuel by

(Continued)

Warning (Continued)

shutting off the pump or by notifying the station attendant. Leave the area immediately.

⚠ Caution

If a new fuel cap is needed, be sure to get the right type of cap from your dealer. The wrong type of fuel cap may not fit properly, may cause the malfunction indicator lamp to light, and could damage the fuel tank and emissions system. See *Malfunction Indicator Lamp on page 5-14*.

Diesel Exhaust Fluid (DEF)

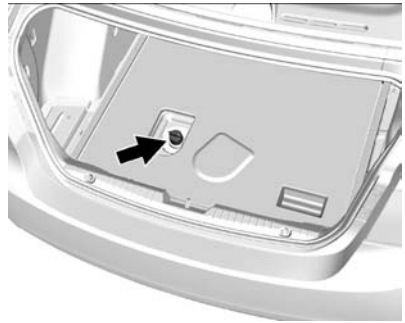

DEF is a non-toxic solution that is sprayed into the exhaust stream of diesel vehicles to cause a chemical reaction and break down NOx emissions into harmless nitrogen and water.

DEF is not a fuel additive and never comes into contact with diesel fuel. It is stored in a separate tank, under the load floor carpet in the trunk. It has a blue filler cap. See *Diesel Exhaust Fluid on page 9-27*.

Filling a Portable Fuel Container

⚠ Warning

Filling a portable fuel container while it is in the vehicle can cause fuel vapors that can ignite either by static electricity or other means. You or others could be badly burned and the vehicle could be damaged. Always:

- Use approved fuel containers.
- Remove the container from the vehicle, trunk, or pickup bed before filling.
- Place the container on the ground.
- Place the nozzle inside the fill opening of the container before dispensing fuel, and

(Continued)

Warning (Continued)

keep it in contact with the fill opening until filling is complete.

- Fill the container no more than 95% full to allow for expansion.
- Do not smoke, light matches, or use lighters while pumping fuel.
- Avoid using cell phones or other electronic devices.

Trailer Towing

General Towing Information

Only use towing equipment that has been designed for the vehicle. Contact your dealer or trailering dealer for assistance with preparing the vehicle for towing a trailer. Read the entire section before towing a trailer.

For towing a disabled vehicle, see *Towing the Vehicle on page 10-85*. For towing the vehicle behind another vehicle such as a motor home, see *Recreational Vehicle Towing on page 10-85*.

Driving Characteristics and Towing Tips

Driving with a Trailer

When towing a trailer:

- Become familiar with the state and local laws that apply specifically to trailer towing.

- Do not tow a trailer during the first 800 km (500 mi), to prevent damage to the engine, axle or other parts.
- Then, during the first 800 km (500 mi) trailer towing, do not drive over 80 km/h (50 mph) and do not make starts at full throttle.
- Vehicles with automatic transmissions can tow in D (Drive) but M (Manual Mode) is recommended. See *Manual Mode on page 9-35*. Use a lower gear if the transmission shifts too often. For vehicles with a manual transmission, it is better not to use the highest gear.
- Turn off Park Assist when towing.

⚠ Warning

When towing a trailer, exhaust gases may collect at the rear of the vehicle and enter if the liftgate, trunk/hatch, or rear-most window is open.

When towing a trailer:

- Do not drive with the liftgate, trunk/hatch, or rear-most window open.
- Fully open the air outlets on or under the instrument panel.
- Also adjust the Climate Control system to a setting that brings in only outside air. See “Climate Control Systems” in the Index.

For information about carbon monoxide, see *Engine Exhaust on page 9-26*.

Towing a trailer requires a certain amount of experience. The combination you are driving is longer and not as responsive as the vehicle itself. Get acquainted with the handling and braking of the rig before setting out for the open road.

Before starting, check all trailer hitch parts and attachments, safety chains, electrical connectors, lamps, tires and mirrors. If the trailer has electric brakes, start the combination moving and then apply the trailer brake controller by hand to be sure the brakes work.

During the trip, check occasionally to be sure that the load is secure and the lamps and any trailer brakes still work.

Towing with a Stability Control System

When towing, the sound of the stability control system might be heard. The system is reacting to the vehicle movement caused by the

trailer, which mainly occurs during cornering. This is normal when towing heavier trailers.

Following Distance

Stay at least twice as far behind the vehicle ahead as you would when driving the vehicle without a trailer. This can help to avoid situations that require heavy braking and sudden turns.

Passing

More passing distance is needed when towing a trailer. Because the rig is longer, it is necessary to go farther beyond the passed vehicle before returning to the lane.

Backing Up

Hold the bottom of the steering wheel with one hand. To move the trailer to the left, move your hand to the left. To move the trailer to the right, move your hand to the right. Always back up slowly and, if possible, have someone guide you.

Making Turns

⚠ Caution

Making very sharp turns while trailering could cause the trailer to come in contact with the vehicle. The vehicle could be damaged. Avoid making very sharp turns while trailering.

When turning with a trailer, make wider turns than normal so the trailer will not strike soft shoulders, curbs, road signs, trees or other objects. Use the turn signal well in advance and avoid jerky or sudden maneuvers.

Turn Signals When Towing a Trailer

The turn signal indicators on the instrument cluster flash whenever signaling a turn or lane change. Properly hooked up, the trailer lamps also flash, telling other drivers the vehicle is turning, changing lanes or stopping.

When towing a trailer, the arrows on the instrument cluster flash for turns even if the bulbs on the trailer are burned out. Check occasionally to be sure the trailer bulbs are still working.

Driving on Grades

Reduce speed and shift to a lower gear before starting down a long or steep downgrade. If the transmission is not shifted down, the brakes might have to be used so much that they would get hot and no longer work well.

The vehicle can tow in D (Drive). Use a lower gear if the transmission shifts too often.

When towing at high altitude on steep uphill grades, engine coolant boils at a lower temperature than at normal altitudes. If the engine is turned off immediately after towing at high altitude on steep uphill

grades, the vehicle could show signs similar to engine overheating. To avoid this, let the engine run while parked, preferably on level ground, with the transmission in P (Park) for a few minutes before turning the engine off. If the overheat warning comes on, see *Engine Overheating on page 10-23*.

Parking on Hills

⚠ Warning

Parking the vehicle on a hill with the trailer attached can be dangerous. If something goes wrong, the rig could start to move. People can be injured, and both the vehicle and the trailer can be damaged. When possible, always park the rig on a flat surface.

If parking the rig on a hill:

1. Press the brake pedal, but do not shift into P (Park) yet. Turn the wheels into the curb if facing downhill or into traffic if facing uphill.
2. Have someone place chocks under the trailer wheels.
3. When the wheel chocks are in place, release the brake pedal until the chocks absorb the load.
4. Reapply the brake pedal. Then apply the parking brake and shift into P (Park) for vehicles with an automatic transmission or into gear for vehicles with a manual transmission.
5. Release the brake pedal.

Leaving After Parking on a Hill

1. Apply and hold the brake pedal while you:
   - Start the engine.
   - Shift into a gear.
   - Release the parking brake.
2. Let up on the brake pedal.
3. Drive slowly until the trailer is clear of the chocks.
4. Stop and have someone pick up and store the chocks.

Maintenance When Trailer Towing

The vehicle needs service more often when pulling a trailer. See the *Maintenance Schedule on page 11-2*. Things that are especially important in trailer operation are automatic transmission fluid, engine oil, axle lubricant, belts, cooling system and brake system. Inspect these before and during the trip.

Check periodically to see that all hitch nuts and bolts are tight.

Engine Cooling When Trailer Towing

The cooling system may temporarily overheat during severe operating conditions. See *Engine Overheating on page 10-23*.

Trailer Towing (Fuel Economy Model or Diesel Engine)

The vehicle is neither designed nor intended to tow a trailer.

Trailer Towing (Except Fuel Economy Model or Diesel Engine)

Before pulling a trailer, there are three important considerations that have to do with weight:

- The weight of the trailer.
- The weight of the trailer tongue.
- The total weight on your vehicle's tires.

Weight of the Trailer

How heavy can a trailer safely be?

It should never weigh more than 454 kg (1,000 lb). But even that can be too heavy.

It depends on how the rig is used. For example, speed, altitude, road grades, outside temperature, and how much the vehicle is used to pull a trailer are all important. It can depend on any special equipment on the vehicle, and the amount of tongue weight the vehicle can carry. See “Weight of the Trailer Tongue” later in this section.

Maximum trailer weight is calculated assuming only the driver is in the tow vehicle and it has all the required trailering equipment. The weight of additional optional equipment, passengers, and cargo in the tow vehicle must be subtracted from the maximum trailer weight.

Ask your dealer for trailering information or advice.

Weight of the Trailer Tongue

The tongue load (1) of any trailer is an important weight to measure because it affects the total gross weight of the vehicle. The Gross Vehicle Weight (GVW) includes the curb weight of the vehicle, any cargo carried in it, and the people who will be riding in the vehicle. If there are a lot of options, equipment, passengers, or cargo in the vehicle, it will reduce the tongue weight the vehicle can carry, which will also reduce the trailer weight the vehicle can tow. If towing a trailer, the tongue load must be added to the GVW because the vehicle will be carrying that weight, too. See *Vehicle Load Limits on page 9-9*.

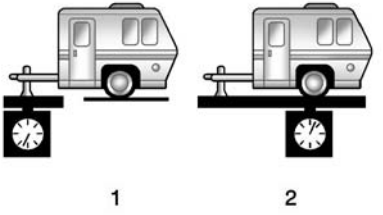

The trailer tongue (1) should weigh 10 to 15 percent of the total loaded trailer weight (2).

After loading the trailer, weigh the trailer and then the tongue, separately, to see if the weights are proper. If they are not, adjustments might be made by moving some items around in the trailer.

Total Weight on Your Vehicle's Tires

Be sure the vehicle's tires are inflated to the upper limit for cold tires. These numbers can be found on the Tire and Loading Information label. See *Vehicle Load Limits on page 9-9*. Make sure not to go over the GVW limit for the vehicle, including the weight of the trailer tongue.

Towing Equipment

Hitches

Use the correct hitch equipment. See your dealer or a hitch dealer for assistance.

- The rear bumper on the vehicle is not intended for hitches. Do not attach rental hitches or other bumper-type hitches to it. Use only a frame-mounted hitch that does not attach to the bumper.
- Will any holes be made in the body of the vehicle when the trailer hitch is installed? If so, seal the holes when the hitch is removed. If the holes are not sealed, dirt, water, and deadly carbon monoxide (CO) from the exhaust can get into the vehicle. See *Engine Exhaust on page 9-26*.

Safety Chains

Always attach chains between the vehicle and the trailer. Cross the safety chains under the tongue of the trailer to help prevent the tongue from contacting the road if it becomes separated from the hitch. Leave enough slack so the rig can turn. Never allow safety chains to drag on the ground.

Trailer Brakes

Does the trailer have its own brakes? Be sure to read and follow the instructions for the trailer brakes so they are installed, adjusted, and maintained properly.

Because the vehicle has antilock brakes, do not tap into the vehicle's brake system. If this is done, both brake systems will not work well or at all.

Conversions and Add-Ons

Add-On Electrical Equipment

⚠ Caution

Some electrical equipment can damage the vehicle or cause components to not work and would not be covered by the warranty. Always check with your dealer before adding electrical equipment.

Add-on equipment can drain the vehicle's 12-volt battery, even if the vehicle is not operating.

The vehicle has an airbag system. Before attempting to add anything electrical to the vehicle, see *Servicing the Airbag-Equipped Vehicle on page 3-26* and *Adding Equipment to the Airbag-Equipped Vehicle on page 3-27*.

Vehicle Care

General Information

General Information 10-2
California Proposition 65 Warning 10-2
California Perchlorate Materials Requirements 10-3
Accessories and Modifications 10-3

Vehicle Checks

Doing Your Own Service Work 10-4
Hood 10-4
Engine Compartment Overview 10-6
Engine Oil 10-11
Engine Oil Life System 10-15
Automatic Transmission Fluid 10-16
Manual Transmission Fluid 10-16
Hydraulic Clutch 10-16
Engine Air Cleaner/Filter 10-17
Cooling System 10-19
Engine Coolant 10-20
Engine Overheating 10-23
Overheated Engine Protection Operating Mode 10-25
Washer Fluid 10-25
Brakes 10-26
Brake Fluid 10-27
Battery 10-28
Starter Switch Check 10-29
Automatic Transmission Shift Lock Control Function Check 10-30
Ignition Transmission Lock Check 10-30
Park Brake and P (Park) Mechanism Check 10-30
Wiper Blade Replacement 10-31

Headlamp Aiming

Headlamp Aiming 10-32

Bulb Replacement

Bulb Replacement 10-32
Halogen Bulbs 10-32
Headlamps, Front Turn Signal and Parking Lamps 10-32
Taillamps, Turn Signal, Sidemarker, Stoplamps, and Back-Up Lamps 10-34
License Plate Lamp 10-36
Replacement Bulbs 10-37

Electrical System

Electrical System Overload 10-37
Fuses and Circuit Breakers 10-38
Engine Compartment Fuse Block 10-38
Instrument Panel Fuse Block 10-41

Wheels and Tires

Tires 10-43
All-Season Tires 10-44
Winter Tires 10-45
Low-Profile Tires 10-45
Tire Sidewall Labeling 10-45
Tire Designations 10-48
Tire Terminology and Definitions 10-48
Tire Pressure 10-51
Tire Pressure Monitor System 10-52

Tire Pressure Monitor Operation 10-53
Tire Inspection 10-57
Tire Rotation 10-57
When It Is Time for New Tires 10-58
Buying New Tires 10-59
Different Size Tires and Wheels 10-60
Uniform Tire Quality Grading 10-61
Wheel Alignment and Tire Balance 10-62
Wheel Replacement 10-63
Tire Chains 10-63
If a Tire Goes Flat 10-64
Tire Sealant and Compressor Kit 10-66
Storing the Tire Sealant and Compressor Kit 10-72
Storing the Tire Sealant and Compressor Kit (Diesel) . . . 10-73
Tire Changing 10-74
Compact Spare Tire 10-81

Jump Starting
Jump Starting 10-82

Towing the Vehicle
Towing the Vehicle 10-85
Recreational Vehicle Towing 10-85

Appearance Care
Exterior Care 10-88
Interior Care 10-93
Floor Mats 10-97

General Information

For service and parts needs, visit your dealer. You will receive genuine GM parts and GM-trained and supported service people.

Genuine GM parts have one of these marks:

California Proposition 65 Warning

WARNING: Most motor vehicles, including this one, contain and/or emit chemicals known to the State

of California to cause cancer and birth defects or other reproductive harm. Engine exhaust, many parts and systems, many fluids, and some component wear by-products contain and/or emit these chemicals.

See *Battery on page 10-28* and *Jump Starting on page 10-82*.

California Perchlorate Materials Requirements

Certain types of automotive applications, such as airbag initiators, safety belt pretensioners, and lithium batteries contained in Remote Keyless Entry transmitters, may contain perchlorate materials. Special handling may be necessary. For additional information, see www.dtsc.ca.gov/hazardouswaste/perchlorate.

Accessories and Modifications

Adding non-dealer accessories or making modifications to the vehicle can affect vehicle performance and safety, including such things as airbags, braking, stability, ride and handling, emissions systems, aerodynamics, durability, and electronic systems like antilock brakes, traction control, and stability control. These accessories or modifications could even cause malfunction or damage not covered by the vehicle warranty.

Damage to vehicle components resulting from modifications or the installation or use of non-GM certified parts, including control module or software modifications, is not covered under the terms of the vehicle warranty and may affect remaining warranty coverage for affected parts.

GM Accessories are designed to complement and function with other systems on the vehicle. See your dealer to accessorize the vehicle using genuine GM Accessories installed by a dealer technician.

Also, see *Adding Equipment to the Airbag-Equipped Vehicle on page 3-27*.

Vehicle Checks

Doing Your Own Service Work

⚠ Warning

It can be dangerous to work on your vehicle if you do not have the proper knowledge, service manual, tools, or parts. Always follow owner manual procedures and consult the service manual for your vehicle before doing any service work.

If doing some of your own service work, use the proper service manual. It tells you much more about how to service the vehicle than this manual can. To order the proper service manual, see *Service Publications Ordering Information on page 13-11*.

This vehicle has an airbag system. Before attempting to do your own service work, see *Servicing the Airbag-Equipped Vehicle on page 3-26*.

Keep a record with all parts receipts and list the mileage and the date of any service work performed. See *Maintenance Records on page 11-15*.

⚠ Caution

Even small amounts of contamination can cause damage to vehicle systems. Do not allow contaminants to contact the fluids, reservoir caps, or dipsticks.

Hood

To open the hood:

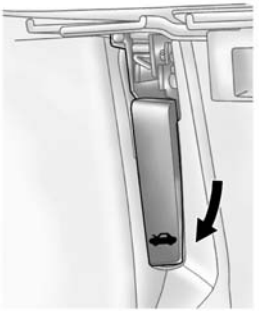

1. Pull up on the hood release handle. It is located inside the vehicle to the left of the steering column.

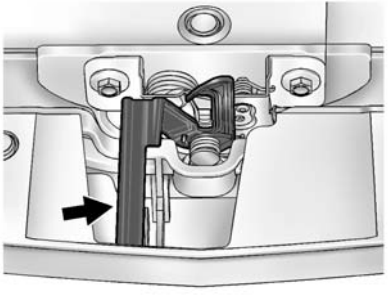

2. Go to the front of the vehicle and push the secondary hood release handle toward the driver side of the vehicle.

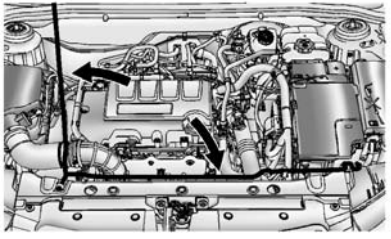

3. Lift the hood and release the hood prop from its retainer, located above the radiator. Securely place the hood prop into the slot on the underside of the hood.

To close the hood:

1. Before closing the hood, be sure all the filler caps are on properly. Then, lift the hood to relieve pressure on the hood prop. Remove the hood prop from the slot on the underside of the hood and return the prop to its retainer. The prop rod must click into place when returning it to the retainer to prevent hood damage.
2. Lower the hood 30 cm (12 in) above the vehicle and release it so it fully latches. Check to make sure the hood is closed and repeat the process if necessary.

Engine Compartment Overview

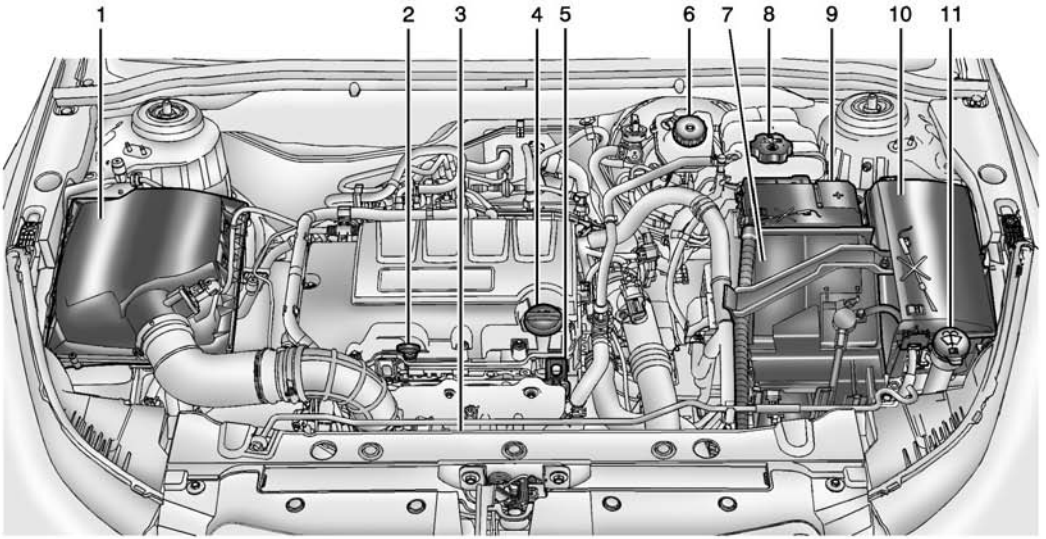

1.4L L4 Engine

1. *Engine Air Cleaner/Filter on page 10-17*.
2. Engine Oil Dipstick. See “Checking Engine Oil” under *Engine Oil on page 10-11*.
3. Engine Cooling Fan (Out of View). See *Cooling System on page 10-19*.
4. Engine Oil Fill Cap. See “When to Add Engine Oil” under *Engine Oil on page 10-11*.
5. Remote Negative (-) Grounding Point. See *Jump Starting on page 10-82*.
6. Brake/Clutch Fluid Reservoir. See “Brake Fluid” under *Brakes on page 10-26* and *Hydraulic Clutch on page 10-16*.
7. *Battery on page 10-28*.
8. Engine Coolant Surge Tank and Pressure Cap. See *Engine Coolant on page 10-20*.
9. Remote Positive (+) Terminal. See *Jump Starting on page 10-82*.
10. *Engine Compartment Fuse Block on page 10-38*.
11. Windshield Washer Fluid Reservoir. See “Adding Washer Fluid” under *Washer Fluid on page 10-25*.

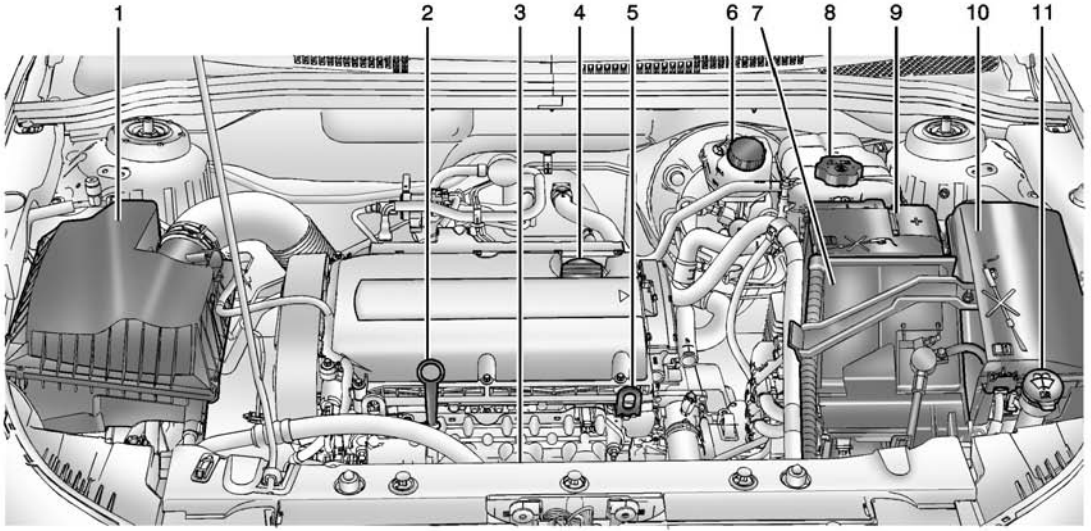

1.8L L4 Engine

1. *Engine Air Cleaner/Filter on page 10-17*.
2. Engine Oil Dipstick. See “Checking Engine Oil” under *Engine Oil on page 10-11*.
3. Engine Cooling Fan (Out of View). See *Cooling System on page 10-19*.
4. Engine Oil Fill Cap. See “When to Add Engine Oil” under *Engine Oil on page 10-11*.
5. Remote Negative (-) Grounding Point. See *Jump Starting on page 10-82*.
6. Brake/Clutch Fluid Reservoir. See “Brake Fluid” under *Brakes on page 10-26* and *Hydraulic Clutch on page 10-16*.
7. *Battery on page 10-28*.
8. Engine Coolant Surge Tank and Pressure Cap. See *Cooling System on page 10-19*.
9. Remote Positive (+) Terminal. See *Jump Starting on page 10-82*.
10. *Engine Compartment Fuse Block on page 10-38*.
11. Windshield Washer Fluid Reservoir. See “Adding Washer Fluid” under *Washer Fluid on page 10-25*.

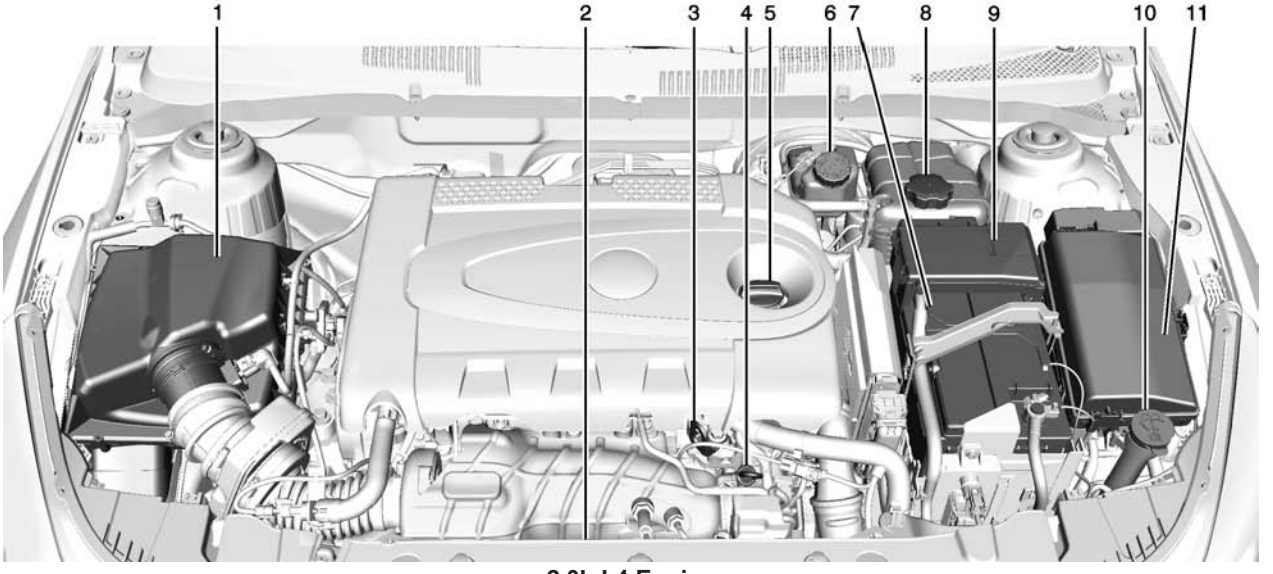

2.0L L4 Engine

1. *Engine Air Cleaner/Filter on page 10-17*.
2. Engine Cooling Fan (Out of View). See *Cooling System on page 10-19*.
3. Remote Negative (-) Grounding Point. See *Jump Starting on page 10-82*.
4. Engine Oil Dipstick. See “Checking Engine Oil” under *Engine Oil on page 10-11*.
5. Engine Oil Fill Cap. See “When to Add Engine Oil” under *Engine Oil on page 10-11*.
6. Brake Fluid Reservoir. See “Brake Fluid” under *Brakes on page 10-26*.
7. *Battery on page 10-28*.
8. Engine Coolant Surge Tank and Pressure Cap. See *Cooling System on page 10-19*.
9. Remote Positive (+) Terminal. See *Jump Starting on page 10-82*.
10. Windshield Washer Fluid Reservoir. See “Adding Washer Fluid” under *Washer Fluid on page 10-25*.
11. *Engine Compartment Fuse Block on page 10-38*.

Engine Oil

To ensure proper engine performance and long life, careful attention must be paid to engine oil. Following these simple, but important steps will help protect your investment:

- Always use engine oil approved to the proper specification and of the proper viscosity grade. See “Selecting the Right Engine Oil” in this section.
- Check the engine oil level regularly and maintain the proper oil level. See “Checking Engine Oil” and “When to Add Engine Oil” in this section.
- Change the engine oil at the appropriate time. See *Engine Oil Life System on page 10-15*.
- Always dispose of engine oil properly. See “What to Do with Used Oil” in this section.

Checking Engine Oil

It is a good idea to check the engine oil level at each fuel fill. In order to get an accurate reading, the vehicle must be on level ground. The engine oil dipstick handle is a loop. See *Engine Compartment Overview on page 10-6* for the location of the engine oil dipstick.

Obtaining an accurate oil level reading is essential:

1. If the engine has been running recently, turn off the engine and allow several minutes for the oil to drain back into the oil pan. Checking the oil level too soon after engine shutoff will not provide an accurate oil level reading.

⚠ Warning

The engine oil dipstick handle may be hot; it could burn you. Use a towel or glove to touch the dipstick handle.

2. Pull out the dipstick and wipe it with a clean paper towel or cloth, then push it back in all the way. Remove it again, keeping the tip down, and check the level.

When to Add Engine Oil

Gasoline

Diesel

If the oil is below the cross-hatched area at the tip of the dipstick, add 1 L (1 qt) of the recommended oil and then recheck the level. See “Selecting the Right Engine Oil” in this section for an explanation of what kind of oil to use. For engine oil crankcase capacity, see *Capacities and Specifications on page 12-2*.

⚠ Caution

Do not add too much oil. Oil levels above or below the acceptable operating range shown on the dipstick are harmful to the engine. If you find that you have an oil level above the operating range, i.e., the engine has so much oil that the oil level gets above the cross-hatched area that shows the proper operating range, the engine could be damaged. You should drain out the excess oil or limit driving of the vehicle and seek a service professional to remove the excess amount of oil.

See *Engine Compartment Overview on page 10-6* for the location of the engine oil fill cap.

Add enough oil to put the level somewhere in the proper operating range. Push the dipstick all the way back in when through.

Selecting the Right Engine Oil (Gasoline Engines)

Selecting the right engine oil depends on both the proper oil specification and viscosity grade. See *Recommended Fluids and Lubricants on page 11-12*.

Specification

Ask for and use engine oils that meet the dexos1™ specification.

Engine oils that have been approved by GM as meeting the dexos1 specification are marked with the dexos1 approved logo. See www.gmdexos.com.

⚠ Caution

Failure to use the recommended engine oil can result in engine damage not covered by the vehicle warranty. Check with your dealer or service provider on whether the oil is approved to the dexos1 specification.

Viscosity Grade

Use SAE 5W-30 viscosity grade engine oil.

Cold Temperature Operation: In an area of extreme cold, where the temperature falls below −29 °C (−20 °F), an SAE 0W-30 oil may be used. An oil of this viscosity grade will provide easier cold starting for the engine at extremely low temperatures. When selecting an oil of the appropriate viscosity grade, always select an oil of the correct specification. See “Specification” earlier in this section.

Selecting the Right Engine Oil (Diesel Engines)

Selecting the right engine oil depends on both the proper oil specification and viscosity grade:

Specification

Ask for and use engine oils that meet the dexos2™ specification. Engine oils that have been approved by GM as meeting the dexos2 specification are marked with the dexos2 approved logo. See www.gmdexos.com.

Use of Substitute Engine Oils if dexos2 is unavailable: In the event that dexos2-approved engine oil is not available at an oil change or for maintaining proper oil level, you may use substitute engine oil that meets ACEA C3 of the appropriate viscosity grade.

⚠ Caution

Use only engine oil that is approved to the dexos2 specification or equivalent engine oil as defined in the preceding paragraph. Failure to use the recommended engine oil can result in engine damage not covered by the vehicle warranty.

Viscosity Grade

Use SAE 5W-30 viscosity grade engine oil.

Cold Temperature Operation: In an area of extreme cold, where the temperature falls below −29 °C (−20 °F), an SAE 0W-40 oil may be used. An oil of this viscosity grade will provide easier cold starting for the engine at extremely low temperatures. When selecting an oil of the appropriate viscosity grade, always select an oil of the correct specification. See “Specification” earlier in this section.

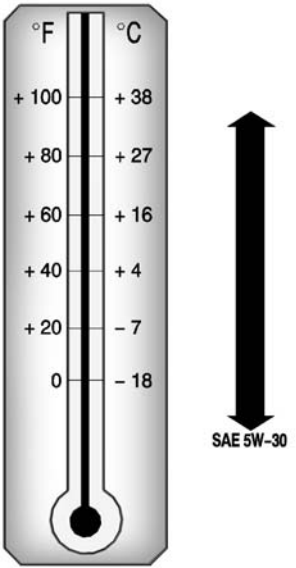

Engine Oil Additives/Engine Oil Flushes

Do not add anything to the oil. The recommended oils meeting the dexos specification are all that is needed for good performance and engine protection.

Engine oil system flushes are not recommended and could cause engine damage not covered by the vehicle warranty.

What to Do with Used Oil

Used engine oil contains certain elements that can be unhealthy for your skin and could even cause cancer. Do not let used oil stay on your skin for very long. Clean your skin and nails with soap and water, or a good hand cleaner. Wash or properly dispose of clothing or rags containing used engine oil. See the manufacturer's warnings about the use and disposal of oil products.

Used oil can be a threat to the environment. If you change your own oil, be sure to drain all the oil from the filter before disposal. Never dispose of oil by putting it in the trash or pouring it on the ground, into sewers, or into streams or bodies of water. Recycle it by taking it to a place that collects used oil.

Engine Oil Life System

When to Change Engine Oil

This vehicle has a computer system that indicates when to change the engine oil and filter. This is based on a combination of factors which include engine revolutions, engine temperature, and miles driven. Based on driving conditions, the mileage at which an oil change is indicated can vary considerably. For the oil life system to work properly, the system must be reset every time the oil is changed.

When the system has calculated that oil life has been diminished, it indicates that an oil change is necessary. A CHANGE ENGINE OIL SOON DIC message comes on. See *Engine Oil Messages on page 5-29*. Change the oil as soon as possible within the next 1 000 km (600 mi). It is possible that, if driving under the best conditions, the oil life system might indicate that an oil change is not necessary for up to a year. The engine oil and filter must be changed at least once a year and, at this time, the system must be reset. Your dealer has trained service people who will perform this work and reset the system. It is also important to check the oil regularly over the course of an oil drain interval and keep it at the proper level.

If the system is ever reset accidentally, the oil must be changed at 5 000 km (3,000 mi) since the last oil change. Remember to reset the oil life system whenever the oil is changed.

How to Reset the Engine Oil Life System

Reset the system whenever the engine oil is changed so that the system can calculate the next engine oil change. To reset the system:

1. Using the DIC MENU button and thumbwheel, scroll until you reach REMAINING OIL LIFE on the DIC (% for Canada).
2. Press the SET/CLR button to reset the oil life at 100%. When prompted, use the thumbwheel to highlight YES or NO. Press the SET/CLR button to confirm.

Be careful not to reset the oil life display accidentally at any time other than after the oil is changed. It cannot be reset accurately.

If the CHANGE ENGINE OIL SOON DIC message comes back on when the vehicle is started, the engine oil life system has not reset. Repeat the procedure.

Automatic Transmission Fluid

How to Check Automatic Transmission Fluid

It is not necessary to check the transmission fluid level.
A transmission fluid leak is the only reason for fluid loss. If a leak occurs, take the vehicle to your dealer and have it repaired as soon as possible.

The vehicle is not equipped with a transmission fluid level dipstick. There is a special procedure for checking and changing the transmission fluid. Because this procedure is difficult, this should be done at the dealer. Contact the dealer for additional information.

Change the fluid at the intervals listed in *Maintenance Schedule on page 11-2*, and be sure to use the fluid listed in *Recommended Fluids and Lubricants on page 11-12*.

Manual Transmission Fluid

How to Check Manual Transmission Fluid

It is not necessary to check the manual transmission fluid level.
A transmission fluid leak is the only reason for fluid loss. If a leak occurs, take the vehicle to your dealer and have it repaired as soon as possible. See *Recommended Fluids and Lubricants on page 11-12* for the proper fluid to use.

Hydraulic Clutch

For vehicles with a manual transmission, it is not necessary to regularly check brake/clutch fluid unless there is a leak suspected. Adding fluid will not correct a leak. A fluid loss in this system could indicate a problem. Have the system inspected and repaired.

When to Check and What to Use

The brake/hydraulic clutch fluid reservoir cap has either a symbol or text specifying the type of brake fluid. The common brake/clutch fluid reservoir is filled with GM approved DOT 3 brake fluid as indicated on the reservoir cap. See *Engine Compartment Overview on page 10-6* for reservoir location.

How to Check and Add Fluid

Visually check the brake/clutch fluid reservoir to make sure the fluid level is at the MIN (minimum) line on the side of the reservoir. The brake/hydraulic clutch fluid system should be closed and sealed.

Do not remove the cap to check the fluid level or to top off the fluid level. Remove the cap only when necessary to add the proper fluid until the level reaches the MIN line.

Engine Air Cleaner/Filter

See *Engine Compartment Overview on page 10-6* for the location of the engine air cleaner/filter.

When to Inspect the Engine Air Cleaner/Filter

Inspect the air cleaner/filter at the scheduled maintenance intervals and replace it at the first oil change after each 80 000 km (50,000 mi) interval. See *Maintenance Schedule on page 11-2*. If you are driving in dusty/dirty conditions, inspect the filter at each engine oil change.

How to Inspect the Engine Air Cleaner/Filter

To inspect the air cleaner/filter, remove the filter from the vehicle and lightly shake the filter to release loose dust and dirt. If the filter remains covered with dirt, a new filter is required.

To inspect or replace the engine air cleaner/filter:

1.4L L4 Engine

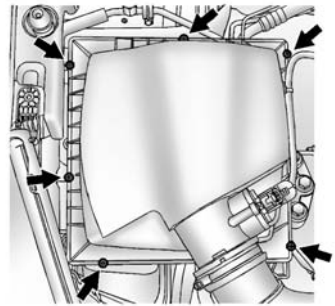

1.8L L4 Engine

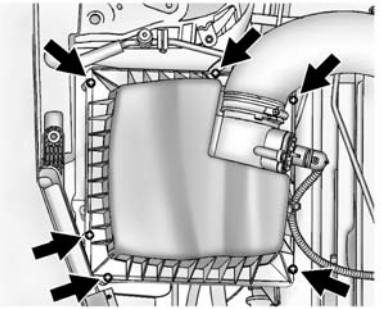

2.0L L4 Engine

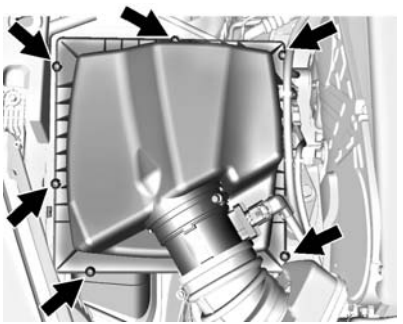

1. Remove the six screws that secure the cover on.
2. Lift off the cover.
3. Inspect or replace the engine air cleaner/filter.
4. Align the filter correctly.
5. Install the cover by lowering it over the filter and secure with the six screws.

⚠ Warning

Operating the engine with the air cleaner/filter off can cause you or others to be burned. The air cleaner not only cleans the air; it helps to stop flames if the engine backfires. Use caution when working on the engine and do not drive with the air cleaner/filter off.

⚠ Caution

If the air cleaner/filter is off, dirt can easily get into the engine, which could damage it. Always have the air cleaner/filter in place when you are driving.

Cooling System

The cooling system allows the engine to maintain the correct working temperature.

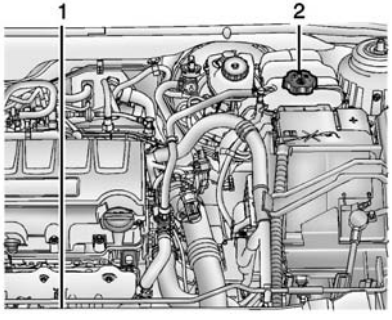

1.4L L4 Engine Shown, 1.8L L4 Engine Similar

1. Engine Cooling Fan (Out of View)
2. Engine Coolant Surge Tank and Pressure Cap

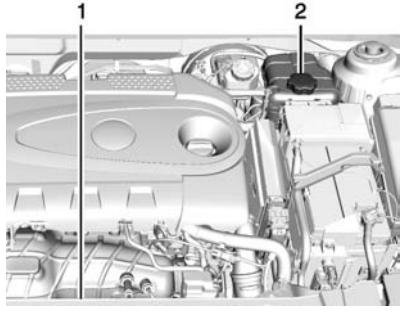

2.0L L4 Engine

1. Engine Cooling Fan (Out of View)
2. Engine Coolant Surge Tank and Pressure Cap

⚠ Warning

An electric engine cooling fan under the hood can start up even when the engine is not running and can cause injury. Keep hands, clothing, and tools away from any underhood electric fan.

⚠ Warning

Heater and radiator hoses, and other engine parts, can be very hot. Do not touch them. If you do, you can be burned.

Do not run the engine if there is a leak. If you run the engine, it could lose all coolant. That could cause an engine fire, and you could be burned. Get any leak fixed before you drive the vehicle.

⚠ Caution

Using coolant other than DEX-COOL® can cause premature engine, heater core, or radiator corrosion. In addition, the engine coolant could require changing sooner. Any repairs would not be covered by the

(Continued)

Caution (Continued)

vehicle warranty. Always use DEX-COOL (silicate-free) coolant in the vehicle.

Engine Coolant

The cooling system in the vehicle is filled with DEX-COOL engine coolant. This coolant is designed to remain in the vehicle for 5 years or 240 000 km (150,000 mi), whichever occurs first.

The following explains the cooling system and how to check and add coolant when it is low. If there is a problem with engine overheating, see *Engine Overheating on page 10-23*.

What to Use

⚠ Warning

Adding only plain water or some other liquid to the cooling system can be dangerous. Plain water and other liquids, can boil before the proper coolant mixture will. The coolant warning system is set for the proper coolant mixture. With plain water or the wrong mixture, the engine could get too hot but you would not get the overheat warning. The engine could catch fire and you or others could be burned. Use a 50/50 mixture of clean, drinkable water and DEX-COOL coolant.

Use a 50/50 mixture of clean, drinkable water and DEX-COOL coolant. If using this mixture, nothing else needs to be added. This mixture:

- Gives freezing protection down to −37°C (−34°F), outside temperature.
- Gives boiling protection up to 129°C (265°F), engine temperature.
- Protects against rust and corrosion.
- Will not damage aluminum parts.
- Helps keep the proper engine temperature.

⚠ Caution

If improper coolant mixture, inhibitors, or additives are used in the vehicle cooling system, the engine could overheat and be damaged. Too much water in the

(Continued)

Caution (Continued)

mixture can freeze and crack engine cooling parts. The repairs would not be covered by the vehicle warranty. Use only the proper mixture of engine coolant for the cooling system. See *Recommended Fluids and Lubricants on page 11-12*.

Never dispose of engine coolant by putting it in the trash, pouring it on the ground, or into sewers, streams, or bodies of water. Have the coolant changed by an authorized service center, familiar with legal requirements regarding used coolant disposal. This will help protect the environment and your health.

Checking Coolant

The vehicle must be on a level surface when checking the coolant level.

Check to see if coolant is visible in the coolant surge tank. If the coolant inside the coolant surge tank is boiling, do not do anything else until it cools down. If coolant is visible but the coolant level is not at the indicated mark, add a 50/50 mixture of clean, drinkable water and DEX-COOL coolant at the coolant surge tank, but be sure the cooling system is cool before this is done. See *Engine Overheating on page 10-23*.

The coolant surge tank is located in the engine compartment on the driver side of the vehicle. See *Engine Compartment Overview on page 10-6*.

How to Add Coolant to the Coolant Surge Tank

⚠ Caution

This vehicle has a specific coolant fill procedure. Failure to follow this procedure could cause the engine to overheat and be severely damaged.

If no problem is found, check to see if coolant is visible in the coolant surge tank. If coolant is visible but the coolant level is not at the indicated level mark, add a 50/50 mixture of clean, drinkable water and DEX-COOL coolant at the coolant surge tank, but be sure the cooling system, including the coolant surge tank pressure cap, is cool before you do it.

⚠ Warning

Steam and scalding liquids from a hot cooling system can blow out and burn you badly. They are under pressure, and if you turn the coolant surge tank pressure cap — even a little — they can come out at high speed. Never turn the cap when the cooling system, including the coolant surge tank pressure cap, is hot. Wait for the cooling system and coolant surge tank pressure cap to cool if you ever have to turn the pressure cap.

⚠ Warning

Adding only plain water or some other liquid to the cooling system can be dangerous. Plain water and other liquids, can boil before the proper coolant mixture will.

(Continued)

Warning (Continued)

The coolant warning system is set for the proper coolant mixture. With plain water or the wrong mixture, the engine could get too hot but you would not get the overheat warning. The engine could catch fire and you or others could be burned. Use a 50/50 mixture of clean, drinkable water and DEX-COOL coolant.

⚠ Caution

In cold weather, water can freeze and crack the engine, radiator, heater core, and other parts. Use the recommended coolant and the proper coolant mixture.

⚠ Warning

You can be burned if you spill coolant on hot engine parts. Coolant contains ethylene glycol and it will burn if the engine parts are hot enough. Do not spill coolant on a hot engine.

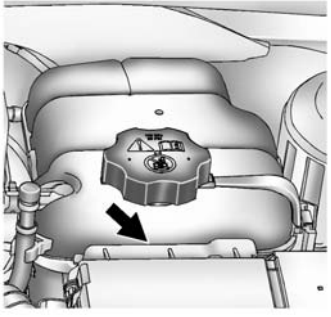

1.4L L4 Engine Shown, 1.8L L4 Engine, and 2.0L L4 Engine Similar

1. Remove the coolant surge tank pressure cap when the cooling system, including the coolant surge tank pressure cap and upper radiator hose, is no longer hot.

   Turn the pressure cap slowly counterclockwise about one-quarter of a turn. If you hear a hiss, wait for that to stop. This will allow any pressure still left to be vented out the discharge hose.

2. Keep turning the pressure cap slowly and remove it.

3. Fill the coolant surge tank with the proper DEX-COOL coolant mixture to the indicated level mark.

4. With the coolant surge tank pressure cap off, start the engine and let it run until the upper radiator hose can be felt getting hot. Watch out for the engine cooling fan.

   By this time, the coolant level inside the coolant surge tank may be lower. If the level is lower, add more of the proper DEX-COOL coolant mixture to the coolant surge tank until the level reaches the indicated level mark.

5. Replace the pressure cap. Be sure the pressure cap is hand-tight.

Check the level in the coolant surge tank when the cooling system has cooled down. If the coolant is not at the proper level, repeat Steps 1–3 and reinstall the pressure cap. If the coolant still is not at the proper level when the system cools down again, see your dealer.

Engine Overheating

There is an engine coolant temperature gauge on the vehicle instrument cluster to warn of engine overheating. See *Engine Coolant Temperature Gauge on page 5-11*.

If the decision is made not to lift the hood when this warning appears, get service help right away. See *Roadside Assistance Program on page 13-5*.

If the decision is made to lift the hood, make sure the vehicle is parked on a level surface.

Check to see if the engine cooling fan is running. If the engine is overheating, the fan should be

running. If it is not, do not continue to run the engine and have the vehicle serviced.

⚠ Caution

Running the engine without coolant may cause damage or a fire. Vehicle damage would not be covered by the vehicle warranty. See *Overheated Engine Protection Operating Mode on page 10-25* for information on driving to a safe place in an emergency.

If Steam Is Coming from the Engine Compartment

⚠ Warning

Steam from an overheated engine can burn you badly, even if you just open the hood. Stay away from the engine if you see or hear

(Continued)

Warning (Continued)

steam coming from it. Just turn it off and get everyone away from the vehicle until it cools down. Wait until there is no sign of steam or coolant before you open the hood.

If you keep driving when the engine is overheated, the liquids in it can catch fire. You or others could be badly burned. Stop the engine if it overheats, and get out of the vehicle until the engine is cool.

If No Steam Is Coming from the Engine Compartment

If an engine overheat warning is displayed but no steam can be seen or heard, the problem may not be too serious. Sometimes the engine can get a little too hot when the vehicle:

- Climbs a long hill on a hot day.
- Stops after high-speed driving.
- Idles for long periods in traffic.
- Tows a trailer.

If the overheat warning is displayed with no sign of steam:

1. Turn the air conditioning off.
2. Turn the heater on to the highest temperature and to the highest fan speed. Open the windows as necessary.
3. When it is safe to do so, pull off the road, shift to P (Park) or N (Neutral) and let the engine idle.

If the temperature overheat gauge is no longer in the overheat zone or an overheat warning no longer displays, the vehicle can be driven. Continue to drive the vehicle slowly for about 10 minutes. Keep a safe vehicle distance from the vehicle in front. If the warning does not come back on, continue to drive normally and have the cooling system checked for fill and function.

If the warning continues, pull over, stop, and park the vehicle right away.

If there is no sign of steam, idle the engine for three minutes while parked. If the warning is still displayed, turn off the engine until it cools down. Also, for gasoline engines only, see “Overheated Engine Protection Operating Mode” following.

Overheated Engine Protection Operating Mode

This emergency operating mode allows the vehicle to be driven to a safe place in an emergency situation. If an overheated engine condition exists, an overheat protection mode which alternates firing groups of cylinders helps prevent engine damage. In this mode, a significant loss in power and engine performance will be noticed. The temperature gauge will indicate an overheat condition exists. Driving extended distances and/or towing a trailer in the overheat protection mode should be avoided.

⚠ Caution

After driving in the overheated engine protection operating mode, the engine oil will be severely degraded. Any repairs performed before the engine is cool may cause engine damage. Allow the engine to cool before attempting any repair. Repair the cause of coolant loss, change the oil, and reset the oil life system. See *Engine Oil on page 10-11*.

Washer Fluid

What to Use

When windshield washer fluid is needed, be sure to read the manufacturer's instructions before use. If operating the vehicle in an area where the temperature may fall below freezing, use a fluid that has sufficient protection against freezing.

Adding Washer Fluid

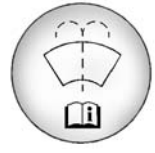

Open the cap with the washer symbol on it. Add washer fluid until the tank is full. See *Engine Compartment Overview on page 10-6* for reservoir location.

⚠ Caution

- Do not use engine coolant (antifreeze) in the windshield washer. It can damage the windshield washer system and paint.

(Continued)

Caution (Continued)

- Do not mix water with ready-to-use washer fluid. Water can cause the solution to freeze and damage the washer fluid tank and other parts of the washer system.
- When using concentrated washer fluid, follow the manufacturer instructions for adding water.
- Fill the washer fluid tank only three-quarters full when it is very cold. This allows for fluid expansion if freezing occurs, which could damage the tank if it is completely full.

Brakes

Disc brake pads have built-in wear indicators that make a high-pitched warning sound when the brake pads are worn and new pads are needed. The sound can come and go or be heard all the time the vehicle is moving, except when applying the brake pedal firmly.

⚠ Warning

The brake wear warning sound means that soon the brakes will not work well. That could lead to a crash. When the brake wear warning sound is heard, have the vehicle serviced.

⚠ Caution

Continuing to drive with worn-out brake pads could result in costly brake repair.

Some driving conditions or climates can cause a brake squeal when the brakes are first applied or lightly applied. This does not mean something is wrong with the brakes.

Properly torqued wheel nuts are necessary to help prevent brake pulsation. When tires are rotated, inspect brake pads for wear and evenly tighten wheel nuts in the proper sequence to torque specifications in *Capacities and Specifications on page 12-2*.

If the vehicle has rear drum brakes, they do not have wear indicators, but if a rear brake rubbing noise is heard, have the rear brake linings inspected immediately. Rear brake drums should be removed and inspected each time the tires are removed for rotation or changing. Drum brakes have an inspection hole to inspect lining wear during scheduled maintenance. When the front brake pads are replaced, have the rear brakes inspected, too.

Brake linings should always be replaced as complete axle sets.

Brake Pedal Travel

See your dealer if the brake pedal does not return to normal height, or if there is a rapid increase in pedal travel. This could be a sign that brake service may be required.

Replacing Brake System Parts

Always replace brake system parts with new, approved replacement parts. If this is not done, the brakes may not work properly. The braking performance expected can change in many other ways if the wrong replacement brake parts are installed or parts are improperly installed.

Brake Fluid

The brake/clutch master cylinder reservoir is filled with DOT 3 brake fluid as indicated on the reservoir cap. See *Engine Compartment Overview on page 10-6* for the location of the reservoir.

There are only two reasons why the brake fluid level in the reservoir might go down:

- The brake fluid level goes down because of normal brake lining wear. When new linings are installed, the fluid level goes back up.
- A fluid leak in the brake/clutch hydraulic system can also cause a low fluid level. Have the brake/clutch hydraulic system fixed, since a leak means that sooner or later the brakes will not work well.

Do not top off the brake/clutch fluid. Adding fluid does not correct a leak. If fluid is added when the linings are worn, there will be too much fluid when new brake linings are installed. Add or remove fluid, as necessary, only when work is done on the brake/clutch hydraulic system.

⚠ Warning

If too much brake fluid is added, it can spill on the engine and burn, if the engine is hot enough. You or others could be burned, and the vehicle could be damaged. Add brake fluid only when work is done on the brake/clutch hydraulic system.

Checking Brake Fluid

The brake/clutch fluid can be checked without taking off the cap by looking at the brake/clutch fluid reservoir.

The fluid level should be above MIN. If it is not, have the brake/clutch hydraulic system checked to see if there is a leak.

After work is done on the brake/clutch hydraulic system, make sure the level is above MIN but not over the MAX mark.

When the brake/clutch fluid falls to a low level, the brake warning light comes on. See *Brake System Warning Light on page 5-16*.

What to Add

Use only new DOT 3 brake fluid from a sealed container. See *Recommended Fluids and Lubricants on page 11-12*.

Always clean the brake/clutch fluid reservoir cap and the area around the cap before removing it. This helps keep dirt from entering the reservoir.

⚠ Warning

With the wrong kind of fluid in the brake/clutch hydraulic system, the brakes might not work well. This could cause a crash. Always use the proper brake/clutch fluid.

⚠ Caution

- Using the wrong fluid can badly damage brake/clutch hydraulic system parts. For example, just a few drops of mineral-based oil, such as engine oil, in the brake hydraulic system can damage brake hydraulic system parts so badly that they will have to be replaced. Do not let someone put in the wrong kind of fluid.
- If brake fluid is spilled on the vehicle's painted surfaces, the paint finish can be damaged. Be careful not to spill brake fluid on the vehicle. If you do, wash it off immediately.

Battery

The original equipment battery is maintenance free. Do not remove the cap and do not add fluid.

Refer to the replacement number on the original battery label when a new battery is needed.

⚠ Warning

WARNING: Battery posts, terminals, and related accessories contain lead and lead compounds, chemicals known to the State of California to cause cancer and birth defects or other reproductive harm. **Wash hands after handling.** See *California Proposition 65 Warning on page 10-2*.

Vehicle Storage

⚠ Warning

Batteries have acid that can burn you and gas that can explode. You can be badly hurt if you are not careful. See *Jump Starting on page 10-82* for tips on working around a battery without getting hurt.

Infrequent Usage: Remove the black, negative (−) cable from the battery to keep the battery from running down.

Extended Storage: Remove the black, negative (−) cable from the battery or use a battery trickle charger.

Starter Switch Check

⚠ Warning

When you are doing this inspection, the vehicle could move suddenly. If the vehicle moves, you or others could be injured.

1. Before starting this check, be sure there is enough room around the vehicle.
2. Apply both the parking brake and the regular brake.

   Do not use the accelerator pedal, and be ready to turn off the engine immediately if it starts.
3. For automatic transmission vehicles, try to start the engine in each gear. The vehicle should start only in P (Park) or N (Neutral). If the vehicle starts in any other position, contact your dealer for service.

   For manual transmission vehicles, put the shift lever in Neutral, push the clutch pedal down halfway, and try to start the engine. The vehicle should start only when the clutch pedal is pushed down all the way to the floor. If the vehicle starts when the clutch pedal is not pushed all the way down, contact your dealer for service.

Automatic Transmission Shift Lock Control Function Check

⚠ Warning

When you are doing this inspection, the vehicle could move suddenly. If the vehicle moves, you or others could be injured.

1. Before starting this check, be sure there is enough room around the vehicle. It should be parked on a level surface.
2. Apply the parking brake. Be ready to apply the regular brake immediately if the vehicle begins to move.
3. With the engine off, turn the ignition on, but do not start the engine. Without applying the regular brake, try to move the shift lever out of P (Park) with normal effort. If the shift lever moves out of P (Park), contact your dealer for service.

Ignition Transmission Lock Check

If equipped with a key type ignition, while parked and with the parking brake set, try to turn the ignition to LOCK/OFF in each shift lever position.

- The ignition should turn to LOCK/OFF only when the shift lever is in P (Park).
- The ignition key should come out only in LOCK/OFF.

Contact your dealer if service is required.

Park Brake and P (Park) Mechanism Check

⚠ Warning

When you are doing this check, the vehicle could begin to move. You or others could be injured and property could be damaged. Make sure there is room in front of the vehicle in case it begins to roll. Be ready to apply the regular brake at once should the vehicle begin to move.

Park on a fairly steep hill, with the vehicle facing downhill. Keeping your foot on the regular brake, set the parking brake.

- To check the parking brake's holding ability: With the engine running and the transmission in N (Neutral), slowly remove foot pressure from the regular brake pedal. Do this until the vehicle is held by the parking brake only.

- To check the P (Park) mechanism's holding ability: With the engine running, shift to P (Park). Then release the parking brake followed by the regular brake.

Contact your dealer if service is required.

Wiper Blade Replacement

Windshield wiper blades should be inspected for wear or cracking. See *Maintenance Schedule on page 11-2* for more information.

Replacement blades come in different types and are removed in different ways. For proper windshield wiper blade length and type, see *Maintenance Replacement Parts on page 11-13*.

⚠ Caution

Allowing the wiper arm to touch the windshield when no wiper blade is installed could damage the windshield. Any damage that occurs would not be covered by the vehicle warranty. Do not allow the wiper arm to touch the windshield.

To replace the windshield wiper blade:

1. Pull the wiper assembly (1) away from the windshield.

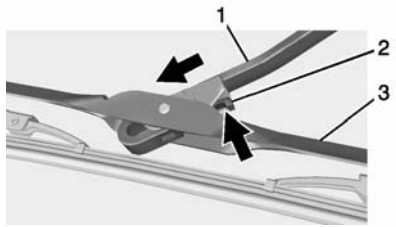

2. Lift up on the plastic latch (2) in the middle of the wiper blade where the wiper arm attaches.
3. With the latch open, pull the wiper blade (3) down toward the windshield far enough to release it from the J-hooked end of the wiper arm.
4. Remove the wiper blade.

   Allowing the wiper blade arm to touch the windshield when no wiper blade is installed could damage the windshield. Any damage that occurs would not be covered by the vehicle warranty. Do not allow the wiper blade to touch the windshield.
5. Reverse Steps 1–3 for wiper blade replacement.

Headlamp Aiming

Headlamp aim has been preset and should need no further adjustment.

If the vehicle is damaged in a crash, the headlamp aim may be affected. If adjustment to the headlamps is necessary, see your dealer.

Bulb Replacement

For the proper type of replacement bulbs, see *Replacement Bulbs on page 10-37*.

For any bulb-changing procedure not listed in this section, contact your dealer.

Halogen Bulbs

⚠ Warning

Halogen bulbs have pressurized gas inside and can burst if you drop or scratch the bulb. You or others could be injured. Be sure to read and follow the instructions on the bulb package.

Headlamps, Front Turn Signal and Parking Lamps

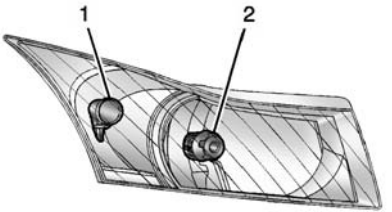

1. Parking/Turn Signal Lamp
2. High-Beam Headlamp/ Low-Beam Headlamp and DRL

High-Beam Headlamp/ Low-Beam Headlamp and DRL

1. Open the hood. See *Hood on page 10-4*.

2. For the driver side bulb, remove the windshield washer bottle filler neck by firmly pulling it straight up and out of the bottle.

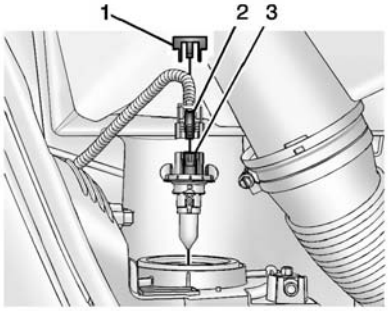

3. Remove the connector retaining tab (1).
4. Disconnect the wiring harness connector from the bulb (3) by pressing the connector release (2) and pulling straight back.
5. Remove the bulb (3) from the headlamp assembly by turning counterclockwise and pulling straight back.
6. Install the new bulb in the headlamp assembly by turning clockwise.
7. Install the wiring harness connector to the bulb. Be sure the connector release (2) locks into place.
8. Install the connector retaining tab (1).
9. For the driver side, reinstall the windshield washer bottle filler neck by firmly pushing it straight into the bottle. Ensure that the filler neck clip engages into the underhood electrical center retainer.

Parking/Turn Signal Lamp

1. Open the hood. See *Hood on page 10-4*.
2. For the driver side bulb, remove the windshield washer bottle filler neck by firmly pulling it straight up and out of the bottle.

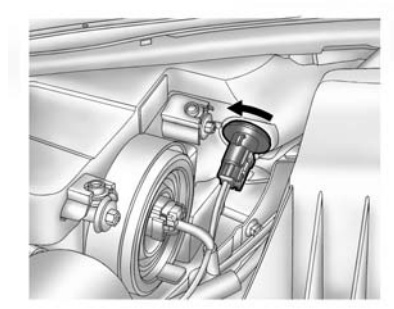

3. Remove the parking/turn signal lamp bulb socket from the headlamp assembly by turning counterclockwise.

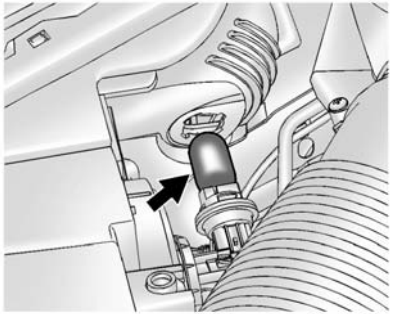

4. Remove the bulb from the bulb socket.
5. Install the new bulb in the bulb socket.
6. Install the bulb socket into the headlamp assembly by turning clockwise.
7. For the driver side, reinstall the windshield washer bottle filler neck by firmly pushing it straight into the bottle. Ensure that the filler neck clip engages into the underhood electrical center retainer.

Taillamps, Turn Signal, Sidemarker, Stoplamps, and Back-Up Lamps

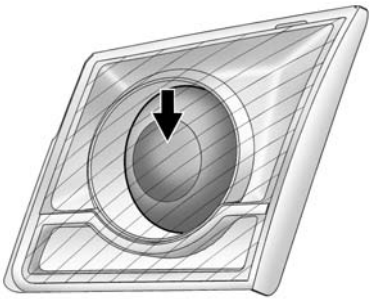

Trunk Deck Inboard Taillamps

1. Open the trunk.

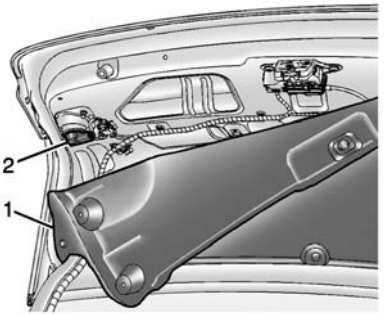

2. Remove the trunk deck trim cover (1).
3. Remove the bulb socket (2) by turning counterclockwise and pulling straight out.

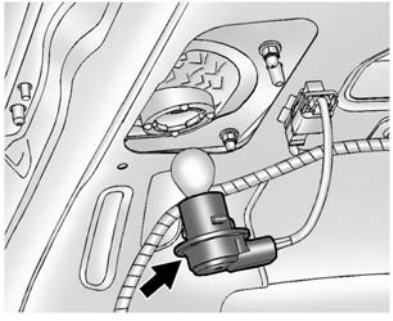

4. Remove the bulb from the socket.
5. Install the new bulb in the bulb socket.
6. Install the bulb socket by turning clockwise.
7. Install the trunk deck trim cover.

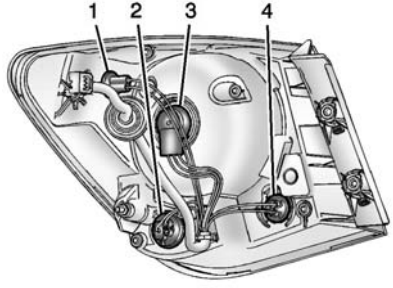

1. Sidemarker Lamp
2. Turn Signal Lamp
3. Stoplamp/Taillamp
4. Back-up Lamp

To replace any one of these bulbs:

Stoplamp/Taillamp, Turn Signal, Back-up, and Rear Sidemarker Lamp

1. Open the trunk.

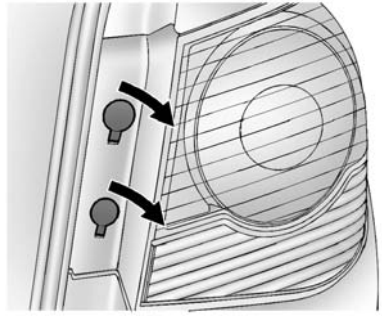

2. Open the two screw covers.

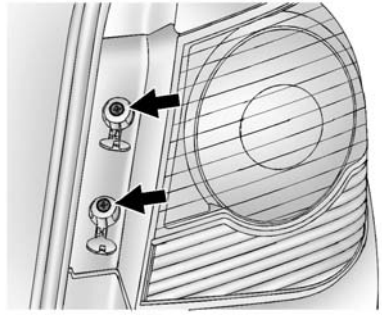

3. Remove the two screws that secure the taillamp assembly.

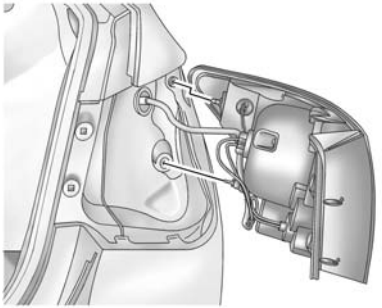

4. Remove the taillamp assembly by pulling it straight back.
5. Remove the bulb socket from the taillamp assembly by turning it counterclockwise.
6. Install a new bulb into the bulb socket.
7. Install the bulb socket into the taillamp assembly by turning it clockwise.
8. Install the taillamp assembly and tighten the two screws.
9. Close the two screw covers.

License Plate Lamp

To replace the license plate lamp bulb:

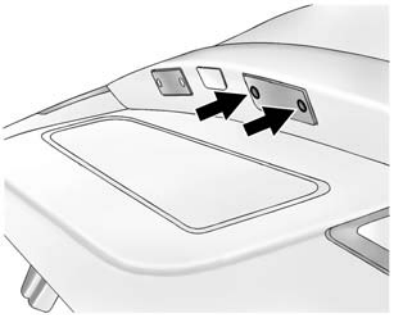

1. Remove the two screws from the license plate lamp assembly.
2. Turn and pull the license plate lamp assembly down.

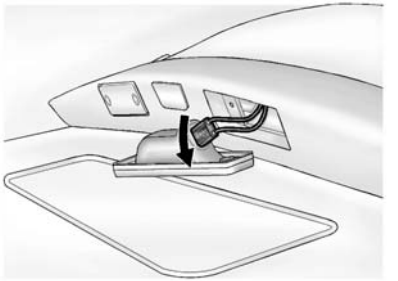

3. Turn the bulb socket counterclockwise and pull straight out of the lamp assembly.
4. Remove the bulb by pulling it straight out of the socket.
5. Push the new bulb into the socket.
6. Install the bulb socket by turning clockwise into the license plate lamp assembly.
7. Replace the license plate lamp assembly and tightien the two screws to secure.

Replacement Bulbs

Exterior Lamp	Bulb Number
Back-Up Lamp	921K
Front and Rear Sidemarker	194
Front Parking/Turn Signal Lamp	7444NA
High-Beam/Low-Bean and DRL Headlamp	H13LL
License Plate Lamp	W5W LL
Rear Turn Signal Lamp	7443NA
Stoplamp/Taillamp	3057K LCP

For replacement bulbs not listed here, contact your dealer.

Electrical System

Electrical System Overload

The vehicle has fuses and circuit breakers to protect against an electrical system overload.

When the current electrical load is too heavy, the circuit breaker opens and closes, protecting the circuit until the current load returns to normal or the problem is fixed. This greatly reduces the chance of circuit overload and fire caused by electrical problems.

Fuses and circuit breakers protect power devices in the vehicle.

Replace a bad fuse with a new one of the identical size and rating.

If there is a problem on the road and a fuse needs to be replaced, the same amperage fuse can be borrowed. Choose some feature of the vehicle that is not needed to use and replace it as soon as possible.

Headlamp Wiring

An electrical overload may cause the lamps to go on and off, or in some cases to remain off. Have the headlamp wiring checked right away if the lamps go on and off or remain off.

Windshield Wipers

If the wiper motor overheats due to heavy snow or ice, the windshield wipers will stop until the motor cools and will then restart.

Although the circuit is protected from electrical overload, overload due to heavy snow or ice may cause wiper linkage damage. Always clear ice and heavy snow from the windshield before using the windshield wipers.

If the overload is caused by an electrical problem and not snow or ice, be sure to get it fixed.

Fuses and Circuit Breakers

The wiring circuits in the vehicle are protected from short circuits by a combination of fuses and circuit breakers. This greatly reduces the chance of damage caused by electrical problems.

To check a fuse, look at the silver-colored band inside the fuse. If the band is broken or melted, replace the fuse. Be sure to replace a bad fuse with a new one of the identical size and rating.

Fuses of the same amperage can be temporarily borrowed from another fuse location, if a fuse goes out. Replace the fuse as soon as possible.

To identify and check fuses, circuit breakers, and relays, see *Engine Compartment Fuse Block on page 10-38* and *Instrument Panel Fuse Block on page 10-41*.

Engine Compartment Fuse Block

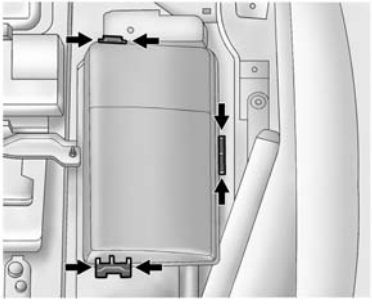

To remove the fuse block cover, squeeze the clips and swing it up.

⚠ Caution

Spilling liquid on any electrical component on the vehicle may damage it. Always keep the covers on any electrical component.

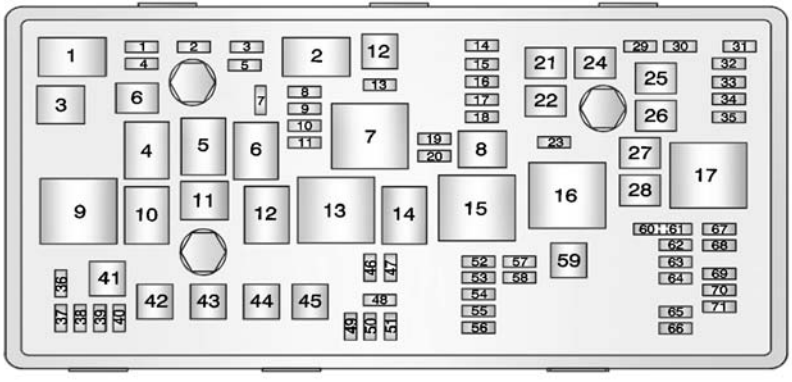

Engine Compartment Fuse Block

The vehicle may not be equipped with all of the fuses, relays, and features shown.

Mini Fuses	Usage
1	Transmission Control Module
2	Engine Control Module
3	Not Used
4	Canister Vent Solenoid
5	Ignition
7	Not Used
8	Fuel Injection
9	Fuel Injection/ Ignition System
10	Engine Control Module
11	Lambda Sensor
13	Canister Vent Solenoid
14	Air Solenoid
15	Not Used
16	Ignition/Air Quality Sensor/Aero-Shutter
17	Ignition/Airbag
18	Fuel Control Module
19	Not Used
20	Fuel Pump
23	Not Used

Mini Fuses	Usage
29	Not Used
30	Antilock Brake System
31	Body Control Module
32	Body Control Module
33	Front Seat Heating
34	Sunroof (If Equipped)
35	Infotainment System/Amplifier
36	Not Used
37	High Beam Right Side
38	High Beam Left Side
39	Not Used
40	Not Used
46	Cooling Fan
47	Lambda Sensor

Mini Fuses	Usage
48	Fog Lights
49	Not Used
50	Not Used
51	Horn
52	Malfunction Indicator Lamp
53	Automatic Dimming Rearview Mirror
54	Light Switch/Light Control
55	Mirror Folding
56	Windshield Washer
57	Not Used
58	Not Used
60	Heated Mirror
61	Heated Mirror
62	Air Conditioning
63	Rear Window Sensor

Mini Fuses	Usage
64	Automatic Occupant Sense
65	Not Used
66	Not Used
67	Fuel System Control Module
68	Not Used
69	Battery Voltage Sensor
70	Not Used
71	Not Used

J-Case Fuses	Usage
6	Front Wipers
12	Starter Solenoid
21	Rear Power Windows
22	Not Used

J-Case Fuses	Usage
24	Front Power Windows
25	Electronic Vacuum Pump
26	Antilock Brake System Pump
27	Electronic Key System/PEPS
28	Rear Window Defogger
41	Not Used
42	Cooling Fan K2
43	Not Used
44	Not Used
45	Cooling Fan K1
59	Diesel Fuel Heating/ SEC Air Pump

Micro Relays	Usage
1	A/C Clutch
2	Starter Solenoid
4	Front Wiper Speed
5	Front Wiper On
6	Air Solenoid
10	Cooling Fan K3
12	Cooling Fan K3
14	Not Used

U-Micro Relays	Usage
3	Cooling Fan K7
8	Fuel Pump
11	Not Used

HC Relays	Usage
9	Cooling Fan K2
13	Cooling Fan K1

Mini Relays	Usage
7	Ignition 87 Main
15	Ignition 15
16	Diesel Fuel Heating/ SEC Air Pump
17	Window and Mirror Defogger

Instrument Panel Fuse Block

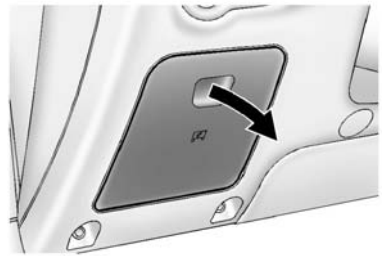

The instrument panel fuse block is in the driver side of the instrument panel. To access the fuses:

1. Open the fuse block cover by pulling out at the top.
2. Remove the lower edge of the cover.
3. Remove the cover.

To reinstall the cover, reverse the steps above.

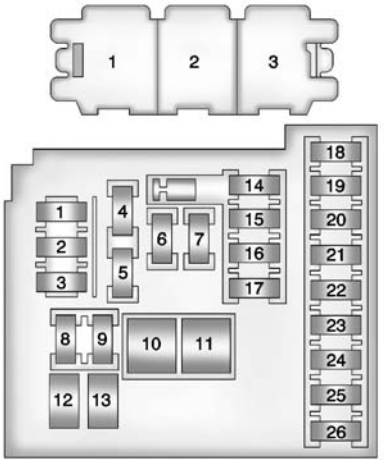

Instrument Panel Fuse Block

The vehicle may not be equipped with all of the fuses, relays, and features shown.

Fuses	Usage
1	Infotainment System/Hands-free Phone
2	Not Used
3	Body Control Module
4	Infotainment System
5	Information Display/ Parking Assist
6	Cigarette Lighter
7	Power Outlet
8	Body Control Module
9	Body Control Module
10	Body Control Module
11	Interior Fan

Fuses	Usage
12	Not Used
13	Power Seat
14	Diagnostic Connector
15	Airbag
16	Central Locking System/Tailgate
17	Air Conditioning System
18	Not Used
19	Not Used
20	Not Used
21	Instrument Cluster
22	Ignition/Electronic Key System

Fuses	Usage
23	Body Control Module
24	Body Control Module
25	Not Used
26	Not Used

Relays	Usage
1	Trunk Open
2	Not Used
3	RAP Relay

Wheels and Tires

Tires

Every new GM vehicle has high-quality tires made by a leading tire manufacturer. See the warranty manual for information regarding the tire warranty and where to get service. For additional information refer to the tire manufacturer.

⚠ Warning

- Poorly maintained and improperly used tires are dangerous.
- Overloading the tires can cause overheating as a result of too much flexing. There could be a blowout

(Continued)

Warning (Continued)

and a serious crash. See *Vehicle Load Limits on page 9-9*.

- Underinflated tires pose the same danger as overloaded tires. The resulting crash could cause serious injury. Check all tires frequently to maintain the recommended pressure. Tire pressure should be checked when the tires are cold.
- Overinflated tires are more likely to be cut, punctured, or broken by a sudden impact — such as when hitting a pothole. Keep tires at the recommended pressure.

(Continued)

Warning (Continued)

- Worn or old tires can cause a crash. If the tread is badly worn, replace them.
- Replace any tires that have been damaged by impacts with potholes, curbs, etc.
- Improperly repaired tires can cause a crash. Only the dealer or an authorized tire service center should repair, replace, dismount, and mount the tires.
- Do not spin the tires in excess of 56 km/h (35 mph) on slippery surfaces such as snow, mud, ice, etc. Excessive spinning may cause the tires to explode.

All-Season Tires

This vehicle may come with all-season tires. These tires are designed to provide good overall performance on most road surfaces and weather conditions. Original equipment tires designed to GM's specific tire performance criteria have a TPC specification code molded onto the sidewall. Original equipment all-season tires can be identified by the last two characters of this TPC code, which will be “MS.”

Consider installing winter tires on the vehicle if frequent driving on snow or ice-covered roads is expected. All-season tires provide adequate performance for most winter driving conditions, but they may not offer the same level of traction or performance as winter tires on snow or ice-covered roads. See *Winter Tires on page 10-45*.

Winter Tires

This vehicle was not originally equipped with winter tires. Winter tires are designed for increased traction on snow and ice-covered roads. Consider installing winter tires on the vehicle if frequent driving on ice or snow covered roads is expected. See your dealer for details regarding winter tire availability and proper tire selection. Also, see *Buying New Tires on page 10-59*.

With winter tires, there may be decreased dry road traction, increased road noise, and shorter tread life. After changing to winter tires, be alert for changes in vehicle handling and braking.

If using winter tires:

- Use tires of the same brand and tread type on all four wheel positions.
- Use only radial ply tires of the same size, load range, and speed rating as the original equipment tires.

Winter tires with the same speed rating as the original equipment tires may not be available for H, V, W, Y, and ZR speed rated tires. If winter tires with a lower speed rating are chosen, never exceed the tire's maximum speed capability.

Low-Profile Tires

If the vehicle has P225/45R18 size tires, they are classified as low-profile tires.

⚠ Caution

Low-profile tires are more susceptible to damage from road hazards or curb impact than standard profile tires. Tire and/or wheel assembly damage can occur when coming into contact

(Continued)

Caution (Continued)

with road hazards like potholes, or sharp edged objects, or when sliding into a curb. The warranty does not cover this type of damage. Keep tires set to the correct inflation pressure and when possible, avoid contact with curbs, potholes, and other road hazards.

Tire Sidewall Labeling

Useful information about a tire is molded into its sidewall. The examples show a typical passenger vehicle tire and a compact spare tire sidewall.

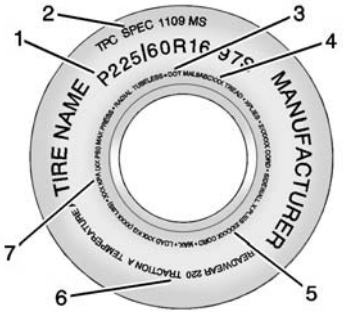

Passenger (P-Metric) Tire Example

(1) Tire Size: The tire size is a combination of letters and numbers used to define a particular tire's width, height, aspect ratio, construction type, and service description. See the "Tire Size" illustration later in this section.

(2) TPC Spec (Tire Performance Criteria Specification): Original equipment tires designed to GM's specific tire performance criteria have a TPC specification code molded onto the sidewall. GM's TPC specifications meet or exceed all federal safety guidelines.

(3) DOT (Department of Transportation): The Department of Transportation (DOT) code indicates that the tire is in compliance with the U.S. Department of Transportation Motor Vehicle Safety Standards.

DOT Tire Date of Manufacture: The last four digits of the TIN indicate the tire manufactured date. The first two digits represent the week (01–52) and the last two digits, the year. For example, the third week of the year 2010 would have a four-digit DOT date of 0310.

(4) Tire Identification Number (TIN): The letters and numbers following the DOT (Department of Transportation) code are the Tire Identification Number (TIN). The TIN shows the manufacturer and plant code, tire size, and date the tire was manufactured. The TIN is molded onto both sides of the tire, although only one side may have the date of manufacture.

(5) Tire Ply Material: The type of cord and number of plies in the sidewall and under the tread.

(6) Uniform Tire Quality Grading (UTQG): Tire manufacturers are required to grade tires based on three performance factors: treadwear, traction, and temperature resistance. For more information see *Uniform Tire Quality Grading on page 10-61*.

(7) Maximum Cold Inflation Load Limit: Maximum load that can be carried and the maximum pressure needed to support that load.

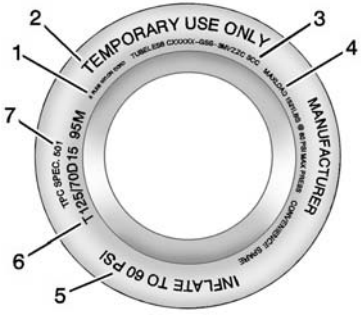

Compact Spare Tire Example

(1) Tire Ply Material: The type of cord and number of plies in the sidewall and under the tread.

(2) Temporary Use Only: The compact spare tire or temporary use tire should not be driven at speeds over 80 km/h (50 mph). The compact spare tire is for emergency use when a regular road tire has lost air and gone flat. If the vehicle has a compact spare tire, see *Compact Spare Tire on page 10-81* and *If a Tire Goes Flat on page 10-64*.

(3) Tire Identification Number (TIN): The letters and numbers following the DOT (Department of Transportation) code are the Tire Identification Number (TIN). The TIN shows the manufacturer and plant code, tire size, and date the tire was manufactured. The TIN is molded onto both sides of the tire, although only one side may have the date of manufacture.

(4) Maximum Cold Inflation Load Limit: Maximum load that can be carried and the maximum pressure needed to support that load.

(5) Tire Inflation: The temporary use tire or compact spare tire should be inflated to 420 kPa (60 psi). For more information on tire pressure and inflation see *Tire Pressure on page 10-51*.

(6) Tire Size: A combination of letters and numbers define a tire's width, height, aspect ratio, construction type, and service description. The letter T as the first character in the tire size means the tire is for temporary use only.

(7) TPC Spec (Tire Performance Criteria Specification): Original equipment tires designed to GM's specific tire performance criteria have a TPC specification code molded onto the sidewall. GM's TPC specifications meet or exceed all federal safety guidelines.

Tire Designations

Tire Size

The following is an example of a typical passenger vehicle tire size.

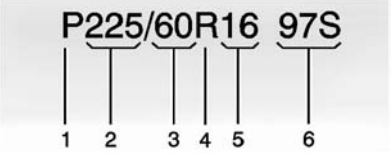

(1) Passenger (P-Metric) Tire: The United States version of a metric tire sizing system. The letter P as the first character in the tire size means a passenger vehicle tire engineered to standards set by the U.S. Tire and Rim Association.

(2) Tire Width: The three-digit number indicates the tire section width in millimeters from sidewall to sidewall.

(3) Aspect Ratio: A two-digit number that indicates the tire height-to-width measurements. For example, if the tire size aspect ratio is 60, as shown in item 3 of the illustration, it would mean that the tire's sidewall is 60 percent as high as it is wide.

(4) Construction Code: A letter code is used to indicate the type of ply construction in the tire. The letter R means radial ply construction; the letter D means diagonal or bias ply construction; and the letter B means belted-bias ply construction.

(5) Rim Diameter: Diameter of the wheel in inches.

(6) Service Description: These characters represent the load index and speed rating of the tire. The load index represents the load carrying capacity a tire is certified to carry. The speed rating is the maximum speed a tire is certified to carry a load.

Tire Terminology and Definitions

Air Pressure: The amount of air inside the tire pressing outward on each square inch of the tire. Air pressure is expressed in kPa (kilopascal) or psi (pounds per square inch).

Accessory Weight: The combined weight of optional accessories. Some examples of optional accessories are automatic transmission, power windows, power seats, and air conditioning.

Aspect Ratio: The relationship of a tire's height to its width.

Belt: A rubber coated layer of cords between the plies and the tread. Cords may be made from steel or other reinforcing materials.

Bead: The tire bead contains steel wires wrapped by steel cords that hold the tire onto the rim.

Bias Ply Tire: A pneumatic tire in which the plies are laid at alternate angles less than 90 degrees to the centerline of the tread.

Cold Tire Pressure: The amount of air pressure in a tire, measured in kPa (kilopascal) or psi (pounds per square inch) before a tire has built up heat from driving. See *Tire Pressure on page 10-51*.

Curb Weight: The weight of a motor vehicle with standard and optional equipment including the maximum capacity of fuel, oil, and coolant, but without passengers and cargo.

DOT Markings: A code molded into the sidewall of a tire signifying that the tire is in compliance with the U.S. Department of Transportation (DOT) Motor Vehicle Safety Standards. The DOT code includes the Tire Identification Number (TIN), an alphanumeric designator which can also identify the tire manufacturer, production plant, brand, and date of production.

GVWR: Gross Vehicle Weight Rating. See *Vehicle Load Limits on page 9-9*.

GAWR FRT: Gross Axle Weight Rating for the front axle. See *Vehicle Load Limits on page 9-9*.

GAWR RR: Gross Axle Weight Rating for the rear axle. See *Vehicle Load Limits on page 9-9*.

Intended Outboard Sidewall: The side of an asymmetrical tire that must always face outward when mounted on a vehicle.

Kilopascal (kPa): The metric unit for air pressure.

Light Truck (LT-Metric) Tire: A tire used on light duty trucks and some multipurpose passenger vehicles.

Load Index: An assigned number ranging from 1 to 279 that corresponds to the load carrying capacity of a tire.

Maximum Inflation Pressure: The maximum air pressure to which a cold tire can be inflated. The maximum air pressure is molded onto the sidewall.

Maximum Load Rating: The load rating for a tire at the maximum permissible inflation pressure for that tire.

Maximum Loaded Vehicle Weight: The sum of curb weight, accessory weight, vehicle capacity weight, and production options weight.

Normal Occupant Weight: The number of occupants a vehicle is designed to seat multiplied by 68 kg (150 lb). See *Vehicle Load Limits on page 9-9*.

Occupant Distribution: Designated seating positions.

Outward Facing Sidewall: The side of an asymmetrical tire that has a particular side that faces outward when mounted on a vehicle. The side of the tire that contains a whitewall, bears white lettering, or bears manufacturer, brand, and/or model name molding that is higher or deeper than the same moldings on the other sidewall of the tire.

Passenger (P-Metric) Tire: A tire used on passenger cars and some light duty trucks and multipurpose vehicles.

Recommended Inflation Pressure: Vehicle manufacturer's recommended tire inflation pressure as shown on the tire placard. See *Tire Pressure on page 10-51* and *Vehicle Load Limits on page 9-9*.

Radial Ply Tire: A pneumatic tire in which the ply cords that extend to the beads are laid at 90 degrees to the centerline of the tread.

Rim: A metal support for a tire and upon which the tire beads are seated.

Sidewall: The portion of a tire between the tread and the bead.

Speed Rating: An alphanumeric code assigned to a tire indicating the maximum speed at which a tire can operate.

Traction: The friction between the tire and the road surface. The amount of grip provided.

Tread: The portion of a tire that comes into contact with the road.

Treadwear Indicators: Narrow bands, sometimes called wear bars, that show across the tread of a tire when only 1.6 mm (1/16 in) of tread remains. See *When It Is Time for New Tires on page 10-58*.

UTQGS (Uniform Tire Quality Grading Standards): A tire information system that provides consumers with ratings for a

tire's traction, temperature, and treadwear. Ratings are determined by tire manufacturers using government testing procedures. The ratings are molded into the sidewall of the tire. See *Uniform Tire Quality Grading on page 10-61*.

Vehicle Capacity Weight: The number of designated seating positions multiplied by 68 kg (150 lb) plus the rated cargo load. See *Vehicle Load Limits on page 9-9*.

Vehicle Maximum Load on the Tire: Load on an individual tire due to curb weight, accessory weight, occupant weight, and cargo weight.

Vehicle Placard: A label permanently attached to a vehicle showing the vehicle capacity weight and the original equipment tire size and recommended inflation pressure. See “Tire and Loading Information Label” under *Vehicle Load Limits on page 9-9*.

Tire Pressure

Tires need the correct amount of air pressure to operate effectively.

⚠ Caution

Neither tire underinflation nor overinflation is good. Underinflated tires, or tires that do not have enough air, can result in:

- Tire overloading and overheating which could lead to a blowout.
- Premature or irregular wear.
- Poor handling.

(Continued)

Caution (Continued)

- Reduced fuel economy.

Overinflated tires, or tires that have too much air, can result in:

- Unusual wear.
- Poor handling.
- Rough ride.
- Needless damage from road hazards.

The Tire and Loading Information label on the vehicle indicates the original equipment tires and the correct cold tire inflation pressures. The recommended pressure is the minimum air pressure needed to support the vehicle's maximum load carrying capacity. See *Vehicle Load Limits on page 9-9*.

How the vehicle is loaded affects vehicle handling and ride comfort. Never load the vehicle with more weight than it was designed to carry.

When to Check

Check the tires once a month or more. Do not forget the compact spare, if the vehicle has one. The cold compact spare tire pressure should be at 420 kPa (60 psi). See *Compact Spare Tire on page 10-81*.

How to Check

Use a good quality pocket-type gauge to check tire pressure. Proper tire inflation cannot be determined by looking at the tire. Check the tire inflation pressure when the tires are cold, meaning the vehicle has not been driven for at least three hours or no more than 1.6 km (1 mi).

Remove the valve cap from the tire valve stem. Press the tire gauge firmly onto the valve to get a pressure measurement. If the cold tire inflation pressure matches the recommended pressure on the Tire and Loading Information label, no further adjustment is necessary. If the inflation pressure is low, add air until the recommended pressure is reached. If the inflation pressure is high, press on the metal stem in the center of the tire valve to release air.

Recheck the tire pressure with the tire gauge.

Return the valve caps on the valve stems to prevent leaks and keep out dirt and moisture.

Tire Pressure Monitor System

The Tire Pressure Monitor System (TPMS) uses radio and sensor technology to check tire pressure levels. The TPMS sensors monitor the air pressure in your tires and transmit tire pressure readings to a receiver located in the vehicle.

Each tire, including the spare (if provided), should be checked monthly when cold and inflated to the inflation pressure recommended by the vehicle manufacturer on the vehicle placard or tire inflation pressure label. (If your vehicle has tires of a different size than the size indicated on the vehicle placard or tire inflation pressure label, you should determine the proper tire inflation pressure for those tires.)

As an added safety feature, your vehicle has been equipped with a tire pressure monitoring system (TPMS) that illuminates a low tire

pressure telltale when one or more of your tires is significantly under-inflated.

Accordingly, when the low tire pressure telltale illuminates, you should stop and check your tires as soon as possible, and inflate them to the proper pressure. Driving on a significantly under-inflated tire causes the tire to overheat and can lead to tire failure. Under-inflation also reduces fuel efficiency and tire tread life, and may affect the vehicle's handling and stopping ability.

Please note that the TPMS is not a substitute for proper tire maintenance, and it is the driver's responsibility to maintain correct tire pressure, even if under-inflation has not reached the level to trigger illumination of the TPMS low tire pressure telltale.

Your vehicle has also been equipped with a TPMS malfunction indicator to indicate when the system is not operating properly.

The TPMS malfunction indicator is combined with the low tire pressure telltale. When the system detects a malfunction, the telltale will flash for approximately one minute and then remain continuously illuminated. This sequence will continue upon subsequent vehicle start-ups as long as the malfunction exists.

When the malfunction indicator is illuminated, the system may not be able to detect or signal low tire pressure as intended. TPMS malfunctions may occur for a variety of reasons, including the installation of replacement or alternate tires or wheels on the vehicle that prevent the TPMS from functioning properly. Always check the TPMS malfunction telltale after replacing one or more tires or wheels on your vehicle to ensure that the replacement or alternate tires and wheels allow the TPMS to continue to function properly.

See *Tire Pressure Monitor Operation on page 10-53*.

See *Radio Frequency Statement on page 13-12*.

Tire Pressure Monitor Operation

This vehicle may have a Tire Pressure Monitor System (TPMS). The TPMS is designed to warn the driver when a low tire pressure condition exists. TPMS sensors are mounted onto each tire and wheel assembly, excluding the spare tire and wheel assembly. The TPMS sensors monitor the air pressure in the tires and transmit the tire pressure readings to a receiver located in the vehicle.

When a low tire pressure condition is detected, the TPMS illuminates the low tire pressure warning light

located on the instrument cluster. If the warning light comes on, stop as soon as possible and inflate the tires to the recommended pressure shown on the Tire and Loading Information label. See *Vehicle Load Limits on page 9-9*.

A message to check the pressure in a specific tire displays in the Driver Information Center (DIC) display. The low tire pressure warning light and the DIC warning message come on at each ignition cycle until the tires are inflated to the correct inflation pressure. Using the DIC, tire pressure levels can be viewed. For additional information and details about the DIC operation and displays see *Driver Information Center (DIC) on page 5-23*.

The low tire pressure warning light may come on in cool weather when the vehicle is first started, and then turn off as the vehicle is driven. This could be an early indicator that the air pressure is getting low and must be inflated to the proper pressure.

A Tire and Loading Information label shows the size of the original equipment tires and the correct inflation pressure for the tires when they are cold. See *Vehicle Load Limits on page 9-9*, for an example of the Tire and Loading Information label and its location. Also see *Tire Pressure on page 10-51*.

The TPMS can warn about a low tire pressure condition but it does not replace normal tire maintenance. See *Tire Inspection on page 10-57*, *Tire Rotation on page 10-57* and *Tires on page 10-43*.

⚠ Caution

Tire sealant materials are not all the same. A non-approved tire sealant could damage the TPMS sensors. TPMS sensor damage caused by using an incorrect tire sealant is not covered by the vehicle warranty. Always use only

(Continued)

Caution (Continued)

the GM approved tire sealant available through your dealer or included in the vehicle.

Factory-installed Tire Inflator Kits use a GM-approved liquid tire sealant. Using non-approved tire sealants could damage the TPMS sensors. See *Tire Sealant and Compressor Kit on page 10-66* for information regarding the inflator kit materials and instructions.

TPMS Malfunction Light and Message

The TPMS will not function properly if one or more of the TPMS sensors are missing or inoperable. When the system detects a malfunction, the low tire warning light flashes for about one minute and then stays on for the remainder of the ignition cycle. A DIC warning message also displays. The malfunction light and DIC warning message come on at each ignition cycle until the problem is corrected. Some of the conditions that can cause these to come on are:

- One of the road tires has been replaced with the spare tire. The spare tire does not have a TPMS sensor. The malfunction light and DIC message should go off after the road tire is replaced and the sensor matching process is performed successfully. See "TPMS Sensor Matching Process" later in this section.
- The TPMS sensor matching process was not done or not completed successfully after rotating the tires. The malfunction light and the DIC message should go off after successfully completing the sensor matching process. See "TPMS Sensor Matching Process" later in this section.
- One or more TPMS sensors are missing or damaged. The DIC message and the malfunction light should go off when the TPMS sensors are installed and the sensor matching process is performed successfully. See your dealer for service.
- Replacement tires or wheels do not match the original equipment tires or wheels. Tires and wheels other than those recommended could prevent the TPMS from functioning properly. See *Buying New Tires on page 10-59*.
- Operating electronic devices or being near facilities using radio wave frequencies similar to the TPMS could cause the TPMS sensors to malfunction.

If the TPMS is not functioning properly, it cannot detect or signal a low tire condition. See your dealer for service if the TPMS malfunction light and DIC message come on and stay on.

TPMS Sensor Matching Process

Each TPMS sensor has a unique identification code. The identification code needs to be matched to a new tire/wheel position after rotating the tires or replacing one or more of the TPMS sensors. The TPMS sensor matching process should also be performed after replacing a spare tire with a road tire containing the TPMS sensor. The malfunction light and the DIC message should go off at the next ignition cycle. The sensors are matched to the tire/wheel positions, using a TPMS

relearn tool, in the following order: driver side front tire, passenger side front tire, passenger side rear tire, and driver side rear. See your dealer for service or to purchase a relearn tool. A TPMS relearn tool can also be purchased. See Tire Pressure Monitor Sensor Activation Tool at www.gmtoolsandequipment.com or call 1-800-GM TOOLS (1-800-468-6657).

There are two minutes to match the first tire/wheel position, and five minutes overall to match all four tire/wheel positions. If it takes longer, the matching process stops and must be restarted.

The TPMS sensor matching process is:

1. Set the parking brake.
2. Turn the ignition to ON/RUN with the engine off.
3. Use the MENU button to select the Vehicle Information menu in the Driver Information Center (DIC).
4. Use the thumbwheel to scroll to the Tire Pressure Menu item screen.
5. Press the SET/CLR button to begin the sensor matching process.

   A message requesting acceptance of the process should display.
6. Press the SET/CLR button again to confirm the selection.

   The horn sounds twice to signal the receiver is in relearn mode and the TIRE LEARNING ACTIVE message displays on the DIC screen.
7. Start with the driver side front tire.
8. Place the relearn tool against the tire sidewall, near the valve stem. Then press the button to activate the TPMS sensor.

   A horn chirp confirms that the sensor identification code has been matched to this tire and wheel position.
9. Proceed to the passenger side front tire, and repeat the procedure in Step 8.
10. Proceed to the passenger side rear tire, and repeat the procedure in Step 8.
11. Proceed to the driver side rear tire, and repeat the procedure in Step 8. The horn sounds two times to indicate the sensor identification code has been matched to the driver side rear tire, and the TPMS sensor matching process is no longer active. The TIRE LEARNING ACTIVE message on the DIC display screen goes off.
12. Turn the ignition to LOCK/OFF.
13. Set all four tires to the recommended air pressure level as indicated on the Tire and Loading Information label.

Tire Inspection

We recommend that the tires, including the spare tire, if the vehicle has one, be inspected for signs of wear or damage at least once a month.

Replace the tire if:

- The indicators at three or more places around the tire can be seen.
- There is cord or fabric showing through the tire's rubber.
- The tread or sidewall is cracked, cut, or snagged deep enough to show cord or fabric.
- The tire has a bump, bulge, or split.
- The tire has a puncture, cut, or other damage that cannot be repaired well because of the size or location of the damage.

Tire Rotation

Tires should be rotated every 12 000 km (7,500 mi). See *Maintenance Schedule on page 11-2*.

Tires are rotated to achieve a more uniform wear for all tires. The first rotation is the most important.

Anytime unusual wear is noticed, rotate the tires as soon as possible, check for proper tire inflation pressure, and check for damaged tires or wheels. If the unusual wear continues after the rotation, check the wheel alignment. See *When It Is Time for New Tires on page 10-58* and *Wheel Replacement on page 10-63*.

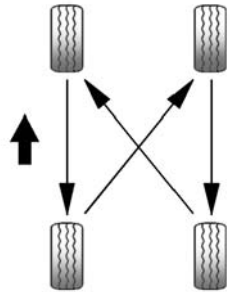

Use this rotation pattern when rotating the tires.

Do not include the compact spare tire in the tire rotation.

Adjust the front and rear tires to the recommended inflation pressure on the Tire and Loading Information label after

the tires have been rotated. See *Tire Pressure on page 10-51* and *Vehicle Load Limits on page 9-9*.

Reset the Tire Pressure Monitor System. See *Tire Pressure Monitor Operation on page 10-53*.

Check that all wheel nuts are properly tightened. See “Wheel Nut Torque” under *Capacities and Specifications on page 12-2*.

⚠ Warning

Rust or dirt on a wheel, or on the parts to which it is fastened, can make wheel nuts become loose after time. The wheel could come off and cause an accident. When changing a wheel, remove any rust or dirt from places where the wheel attaches to the vehicle. In

(Continued)

Warning (Continued)

an emergency, a cloth or a paper towel can be used; however, use a scraper or wire brush later to remove all rust or dirt.

Lightly coat the center of the wheel hub with wheel bearing grease after a wheel change or tire rotation to prevent corrosion or rust build-up. Do not get grease on the flat wheel mounting surface or on the wheel nuts or bolts.

When It Is Time for New Tires

Factors such as maintenance, temperatures, driving speeds, vehicle loading, and road conditions affect the wear rate of the tires.

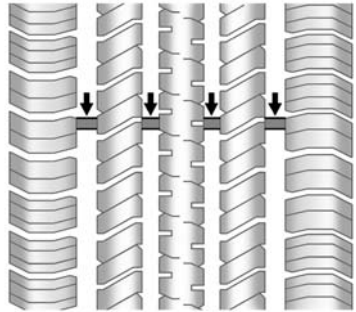

Treadwear indicators are one way to tell when it is time for new tires. Treadwear indicators appear when the tires have only 1.6 mm (1/16 in) or less of tread remaining. See *Tire Inspection on page 10-57* and *Tire Rotation on page 10-57*.

The rubber in tires ages over time. This also applies to the spare tire, if the vehicle has one, even if it is never used. Multiple factors including temperatures, loading conditions, and inflation pressure maintenance affect how fast aging takes place. GM recommends that tires, including the spare if

equipped, be replaced after six years, regardless of tread wear. The tire manufacture date is the last four digits of the DOT Tire Identification Number (TIN) which is molded into one side of the tire sidewall. The first two digits represent the week (01–52) and the last two digits, the year. For example, the third week of the year 2010 would have a four-digit DOT date of 0310.

Vehicle Storage

Tires age when stored normally mounted on a parked vehicle. Park a vehicle that will be stored for at least a month in a cool, dry, clean area away from direct sunlight to slow aging. This area should be free of grease, gasoline, or other substances that can deteriorate rubber.

Parking for an extended period can cause flat spots on the tires that may result in vibrations while driving. When storing a vehicle for at least a month, remove the tires or raise the vehicle to reduce the weight from the tires.

Buying New Tires

GM has developed and matched specific tires for the vehicle. The original equipment tires installed were designed to meet General Motors Tire Performance Criteria Specification (TPC Spec) system rating. When replacement tires are needed, GM strongly recommends buying tires with the same TPC Spec rating.

GM's exclusive TPC Spec system considers over a dozen critical specifications that impact the overall performance of the vehicle, including brake system performance, ride and handling, traction control, and tire pressure monitoring performance. GM's TPC Spec number is molded onto the tire's sidewall near the tire size. If the tires have an all-season tread design, the TPC Spec number will be followed by MS for mud and snow. See *Tire Sidewall Labeling on page 10-45*.

GM recommends replacing worn tires in complete sets of four. Uniform tread depth on all tires will help to maintain the performance of the vehicle. Braking and handling performance may be adversely affected if all the tires are not replaced at the same time.
If proper rotation and maintenance have been done, all four tires should wear out at about the same time. See *Tire Rotation on page 10-57*.
However, if it is necessary to replace only one axle set of worn tires, place the new tires on the rear axle.

Winter tires with the same speed rating as the original equipment tires may not be available for H, V, W, Y and ZR speed rated tires. Never exceed the winter tires' maximum speed capability when using winter tires with a lower speed rating.

⚠ Warning

Tires could explode during improper service. Attempting to mount or dismount a tire could cause injury or death. Only your dealer or authorized tire service center should mount or dismount the tires.

⚠ Warning

Mixing tires of different sizes, brands, or types may cause loss of control of the vehicle, resulting in a crash or other vehicle damage. Use the correct size, brand, and type of tires on all wheels.

⚠ Warning

Using bias-ply tires on the vehicle may cause the wheel rim flanges to develop cracks after many miles of driving. A tire and/or wheel could fail suddenly and cause a crash. Use only radial-ply tires with the wheels on the vehicle.

If the vehicle tires must be replaced with a tire that does not have a TPC Spec number, make sure they are the same size, load range, speed rating, and construction (radial) as the original tires.

Vehicles that have a tire pressure monitoring system could give an inaccurate low-pressure warning if non-TPC Spec rated tires are installed. See *Tire Pressure Monitor System on page 10-52*.

The Tire and Loading Information label indicates the original equipment tires on the vehicle. See *Vehicle Load Limits on page 9-9*.

Different Size Tires and Wheels

If wheels or tires are installed that are a different size than the original equipment wheels and tires, vehicle performance, including its braking, ride and handling characteristics, stability, and resistance to rollover

may be affected. If the vehicle has electronic systems such as antilock brakes, rollover airbags, traction control, electronic stability control, or All-Wheel Drive, the performance of these systems can also be affected.

⚠ Warning

If different sized wheels are used, there may not be an acceptable level of performance and safety if tires not recommended for those wheels are selected. This increases the chance of a crash and serious injury. Only use GM specific wheel and tire systems developed for the vehicle, and have them properly installed by a GM certified technician.

See *Buying New Tires on page 10-59* and *Accessories and Modifications on page 10-3*.

Uniform Tire Quality Grading

The following information relates to the system developed by the United States National Highway Traffic Safety Administration (NHTSA), which grades tires by treadwear, traction, and temperature performance. This applies only to vehicles sold in the United States. The grades are molded on the sidewalls of most passenger car tires. The Uniform Tire Quality Grading (UTQG) system does not apply to deep tread, winter tires, compact spare tires, tires with nominal rim diameters of 10 to 12 inches (25 to 30 cm), or to some limited-production tires.

While the tires available on General Motors passenger cars and light trucks may vary with respect to these grades, they must also conform to federal safety requirements and additional General Motors Tire Performance Criteria (TPC) standards.

Quality grades can be found where applicable on the tire sidewall between tread shoulder and maximum section width. For example:

Treadwear 200 Traction AA Temperature A

All Passenger Car Tires Must Conform to Federal Safety Requirements In Addition To These Grades.

Treadwear

The treadwear grade is a comparative rating based on the wear rate of the tire when tested under controlled conditions on a specified government test course. For example, a tire graded 150 would wear one and

one-half (1½) times as well on the government course as a tire graded 100. The relative performance of tires depends upon the actual conditions of their use, however, and may depart significantly from the norm due to variations in driving habits, service practices and differences in road characteristics and climate.

Traction

The traction grades, from highest to lowest, are AA, A, B, and C. Those grades represent the tire's ability to stop on wet pavement as measured under controlled conditions on specified government test surfaces of asphalt and concrete. A tire marked C may have poor traction performance. Warning: The traction grade assigned to this tire is based on straight-ahead braking traction tests, and does not include acceleration, cornering, hydroplaning, or peak traction characteristics.

Temperature

The temperature grades are A (the highest), B, and C, representing the tire's resistance to the generation of heat and its ability to dissipate heat when tested under controlled conditions on a specified indoor laboratory test wheel. Sustained high temperature can cause the material of the tire to degenerate and reduce tire life, and excessive temperature can lead to sudden tire failure. The grade C corresponds to a level of performance which all passenger car tires must meet under the Federal Motor Safety Standard No. 109. Grades B and A represent higher levels of performance on the laboratory test wheel than the minimum required by law. Warning: The temperature grade for this tire is established for a tire that is properly inflated and not overloaded. Excessive speed, underinflation, or excessive loading, either separately or in combination, can cause heat buildup and possible tire failure.

Wheel Alignment and Tire Balance

The tires and wheels were aligned and balanced at the factory to provide the longest tire life and best overall performance. Adjustments to wheel alignment and tire balancing are not necessary on a regular basis. Consider an alignment check if there is unusual tire wear or the vehicle is significantly pulling to one side or the other. Some slight pull to the left or right, depending on the crown of the road and/or other road surface variations such as troughs or ruts, is normal. If the vehicle is

vibrating when driving on a smooth road, the tires and wheels may need to be rebalanced. See your dealer for proper diagnosis.

Wheel Replacement

Replace any wheel that is bent, cracked, or badly rusted or corroded. If wheel nuts keep coming loose, the wheel, wheel bolts, and wheel nuts should be replaced. If the wheel leaks air, replace it. Some aluminum wheels can be repaired. See your dealer if any of these conditions exist.

Your dealer will know the kind of wheel that is needed.

Each new wheel should have the same load-carrying capacity, diameter, width, offset, and be mounted the same way as the one it replaces.

Replace wheels, wheel bolts, wheel nuts, or Tire Pressure Monitor System (TPMS) sensors with new GM original equipment parts.

⚠ Warning

Using the wrong replacement wheels, wheel bolts, or wheel nuts can be dangerous. It could affect the braking and handling of the vehicle. Tires can lose air, and cause loss of control, causing a crash. Always use the correct wheel, wheel bolts, and wheel nuts for replacement.

⚠ Caution

The wrong wheel can also cause problems with bearing life, brake cooling, speedometer or odometer calibration, headlamp aim, bumper height, vehicle ground clearance, and tire or tire chain clearance to the body and chassis.

Used Replacement Wheels

⚠ Warning

Replacing a wheel with a used one is dangerous. How it has been used or how far it has been driven may be unknown. It could fail suddenly and cause a crash. When replacing wheels, use a new GM original equipment wheel.

Tire Chains

⚠ Warning

Do not use tire chains. There is not enough clearance. Tire chains used on a vehicle without the proper amount of clearance can cause damage to the brakes, suspension, or other vehicle

(Continued)

Warning (Continued)

parts. The area damaged by the tire chains could cause loss of control and a crash.

Use another type of traction device only if its manufacturer recommends it for the vehicle's tire size combination and road conditions. Follow that manufacturer's instructions. To avoid vehicle damage, drive slow and readjust or remove the traction device if it contacts the vehicle. Do not spin the wheels. If traction devices are used, install them on the front tires.

If a Tire Goes Flat

It is unusual for a tire to blowout while driving, especially if the tires are maintained properly. See *Tires on page 10-43*. If air goes out of a tire, it is much more likely to leak out slowly. But if there ever is a blowout, here are a few tips about what to expect and what to do:

If a front tire fails, the flat tire creates a drag that pulls the vehicle toward that side. Take your foot off the accelerator pedal and grip the steering wheel firmly. Steer to maintain lane position, and then gently brake to a stop, well off the road, if possible.

A rear blowout, particularly on a curve, acts much like a skid and may require the same correction as used in a skid. Stop pressing the accelerator pedal and steer to straighten the vehicle. It may be very bumpy and noisy. Gently brake to a stop, well off the road, if possible.

⚠ Warning

Driving on a flat tire will cause permanent damage to the tire. Re-inflating a tire after it has been driven on while severely underinflated or flat may cause a blowout and a serious crash. Never attempt to re-inflate a tire that has been driven on while severely underinflated or flat. Have your dealer or an authorized tire service center repair or replace the flat tire as soon as possible.

⚠ Warning

Lifting a vehicle and getting under it to do maintenance or repairs is dangerous without the appropriate safety equipment and training. If a jack is provided with the vehicle, it is designed only for

(Continued)

Warning (Continued)

changing a flat tire. If it is used for anything else, you or others could be badly injured or killed if the vehicle slips off the jack. If a jack is provided with the vehicle, only use it for changing a flat tire.

If a tire goes flat, avoid further tire and wheel damage by driving slowly to a level place, well off the road, if possible. Turn on the hazard warning flashers. See *Hazard Warning Flashers on page 6-3*.

⚠ Warning

Changing a tire can be dangerous. The vehicle can slip off the jack and roll over or fall causing injury or death. Find a level place to change the tire. To help prevent the vehicle from moving:

(Continued)

Warning (Continued)

1. Set the parking brake firmly.
2. Put an automatic transmission in P (Park) or a manual transmission in 1 (First) or R (Reverse).
3. Turn off the engine and do not restart while the vehicle is raised.
4. Do not allow passengers to remain in the vehicle.
5. Place wheel blocks, if equipped, on both sides of the tire at the opposite corner of the tire being changed.

This vehicle may come with a jack, spare tire, and wheel block(s) or a tire sealant and compressor kit. To use the jacking equipment to change a spare tire safely, follow the instructions below. Then see *Tire Changing on page 10-74*.

To use the tire sealant and compressor kit, see *Tire Sealant and Compressor Kit on page 10-66*.

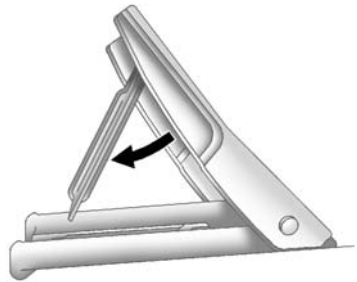

To use the wheel blocks, if equipped, lift the wheel block and lock it into place.

When the vehicle has a flat tire (2), use the following example as a guide to assist in the placement of the wheel blocks (1), if equipped.

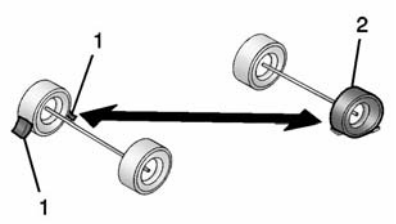

1. Wheel Block (If Equipped)
2. Flat Tire

The following information explains how to repair or change a tire.

Tire Sealant and Compressor Kit

⚠ Warning

Idling a vehicle in an enclosed area with poor ventilation is dangerous. Engine exhaust may enter the vehicle. Engine exhaust contains carbon monoxide (CO) which cannot be seen or smelled.

(Continued)

Warning (Continued)

It can cause unconsciousness and even death. Never run the engine in an enclosed area that has no fresh air ventilation. For more information, see *Engine Exhaust on page 9-26*.

⚠ Warning

Overinflating a tire could cause the tire to rupture and you or others could be injured. Be sure to read and follow the tire sealant and compressor kit instructions and inflate the tire to its recommended pressure. Do not exceed the recommended pressure.

⚠ Warning

Storing the tire sealant and compressor kit or other equipment in the passenger compartment of the vehicle could cause injury. In a sudden stop or collision, loose equipment could strike someone. Store the tire sealant and compressor kit in its original location.

If this vehicle has a tire sealant and compressor kit, there may not be a spare tire, tire changing equipment, and on some vehicles there may not be a place to store a tire.

The tire sealant and compressor can be used to temporarily seal punctures up to 6 mm (0.25 inch) in the tread area of the tire. It can also be used to inflate an under inflated tire.

If the tire has been separated from the wheel, has damaged sidewalls, or has a large puncture, the tire is

too severely damaged for the tire sealant and compressor kit to be effective. See *Roadside Assistance Program on page 13-5*.

Read and follow all of the tire sealant and compressor kit instructions.

The kit includes:

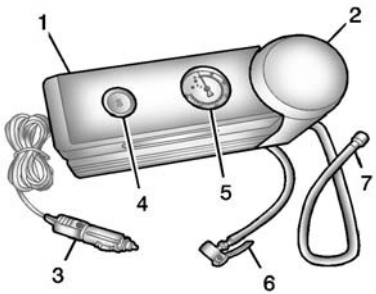

1. Air Compressor
2. Tire Sealant Canister
3. Power Plug
4. On/Off Button
5. Pressure Gauge
6. Air Only Hose (Black)
7. Sealant/Air Hose (Clear)

Tire Sealant

Read and follow the safe handling instructions on the label adhered to the sealant canister.

Check the tire sealant expiration date on the sealant canister. The sealant canister should be replaced before its expiration date. Replacement sealant canisters are available at your local dealer. See “Removal and Installation of the Sealant Canister” following.

There is only enough sealant to seal one tire. After usage, the sealant canister and sealant/air hose assembly must be replaced. See “Removal and Installation of the Sealant Canister” following.

Using the Tire Sealant and Compressor Kit to Temporarily Seal and Inflate a Punctured Tire

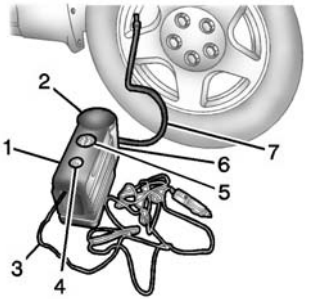

When using the tire sealant and compressor kit during cold temperatures, warm the kit in a heated environment for five minutes. This will help to inflate the tire faster.

If a tire goes flat, avoid further tire and wheel damage by driving slowly to a level place. Turn on the hazard warning flashers. See *Hazard Warning Flashers on page 6-3*.

See *If a Tire Goes Flat on page 10-64* for other important safety warnings.

Do not remove any objects that have penetrated the tire.

1. Remove the tire sealant and compressor kit from its storage location. See *Storing the Tire Sealant and Compressor Kit on page 10-72* or *Storing the Tire Sealant and Compressor Kit (Diesel) on page 10-73*.

   Make sure the on/off button (4) is in the off (O) position.

2. Unwrap the sealant/air hose (7) and the power plug (3).

3. Place the kit on the ground.

   Make sure the tire valve stem is positioned close to the ground so the hose will reach it.

4. Remove the valve stem cap from the flat tire by turning it counterclockwise.

5. Attach the sealant/air hose (7) onto the tire valve stem. Turn it clockwise until it is tight.

6. Plug the power plug (3) into the accessory power outlet in the vehicle. Unplug all items from other accessory power outlets. See *Power Outlets on page 5-6*.

   If the vehicle has an accessory power outlet, do not use the cigarette lighter.

   If the vehicle only has a cigarette lighter, use the cigarette lighter.

   Do not pinch the power plug cord in the door or window.

7. Start the vehicle. The vehicle must be running while using the air compressor.

8. Press the on/off button (4) to turn the tire sealant and compressor kit on.

   The compressor will inject sealant and air into the tire.

   The pressure gauge (5) will initially show a high pressure while the compressor pushes the sealant into the tire. Once the sealant is completely dispersed into the tire, the pressure will quickly drop and start to rise again as the tire inflates with air only.

9. Inflate the tire to the recommended inflation pressure using the pressure gauge (5). The recommended inflation pressure can be found on the Tire and Loading Information label. See *Tire Pressure on page 10-51*.

   The pressure gauge (5) may read higher than the actual tire pressure while the compressor is on. Turn the compressor off to get an accurate pressure

reading. The compressor may be turned on/off until the correct pressure is reached.

⚠ Caution

If the recommended pressure cannot be reached after approximately 25 minutes, the vehicle should not be driven farther. The tire is too severely damaged and the tire sealant and compressor kit cannot inflate the tire. Remove the power plug from the accessory power outlet and unscrew the inflating hose from the tire valve. See *Roadside Assistance Program on page 13-5*.

10. Press the on/off button (4) to turn the tire sealant and compressor kit off.

    The tire is not sealed and will continue to leak air until the vehicle is driven and the sealant is distributed in the tire. Therefore, Steps 11–17 must be done immediately after Step 10.

    Be careful while handling the tire sealant and compressor kit as it could be warm after usage.

11. Unplug the power plug (3) from the accessory power outlet in the vehicle.
12. Turn the sealant/air hose (7) counterclockwise to remove it from the tire valve stem.
13. Replace the tire valve stem cap.
14. Replace the sealant/air hose (7), and the power plug (3) back in their original location.

15. If the flat tire was able to inflate to the recommended inflation pressure, remove the maximum speed label from the sealant canister (2) and place it in a highly visible location.

    Do not exceed the speed on this label until the damaged tire is repaired or replaced.

16. Return the equipment to its original storage location in the vehicle.
17. Immediately drive the vehicle 8 km (5 mi) to distribute the sealant in the tire.

18. Stop at a safe location and check the tire pressure. Refer to Steps 1–11 under “Using the Tire Sealant and Compressor Kit without Sealant to Inflate a Tire (Not Punctured).”

    If the tire pressure has fallen more than 68 kPa (10 psi) below the recommended inflation pressure, stop driving the vehicle. The tire is too severely damaged and the tire sealant cannot seal the tire. See *Roadside Assistance Program on page 13-5*.

    If the tire pressure has not dropped more than 68 kPa (10 psi) from the recommended inflation pressure, inflate the tire to the recommended inflation pressure.

19. Wipe off any sealant from the wheel, tire or vehicle.

20. Dispose of the used sealant canister (2) and sealant/air hose (7) assembly at a local dealer or in accordance with local state codes and practices.

21. Replace it with a new canister available from your dealer.

22. After temporarily sealing a tire using the tire sealant and compressor kit, take the vehicle to an authorized dealer within 161 km (100 mi) of driving to have the tire repaired or replaced.

Using the Tire Sealant and Compressor Kit without Sealant to Inflate a Tire (Not Punctured)

To use the air compressor to inflate a tire with air only and not sealant:

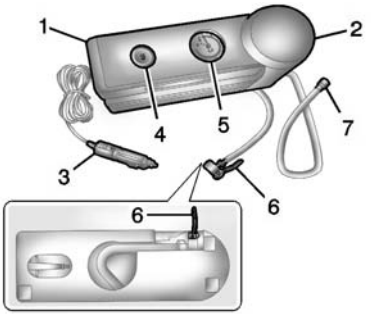

If a tire goes flat, avoid further tire and wheel damage by driving slowly to a level place. Turn on the hazard warning flashers. See *Hazard Warning Flashers on page 6-3*.

See *If a Tire Goes Flat on page 10-64* for other important safety warnings.

1. Remove the tire sealant and compressor kit from its storage location. See *Storing the Tire Sealant and Compressor Kit on page 10-72* or *Storing the Tire Sealant and Compressor Kit (Diesel) on page 10-73*.
2. Unlock the air only hose (6) from the sealant canister (2) by pulling up on the lever.
3. Pull the air only hose (6) from the sealant canister (2).
4. Remove the power plug (3) from the air compressor (1).
5. Place the kit on the ground.

   Make sure the tire valve stem is positioned close to the ground so the hose will reach it.
6. Remove the tire valve stem cap by turning it counterclockwise.
7. Attach the air only hose (6) onto the tire valve stem and press the lever down to secure it.
8. Plug the power plug (3) into the accessory power outlet in the vehicle. Unplug all items from other accessory power outlets. See *Power Outlets on page 5-6*.

   If the vehicle has an accessory power outlet, do not use the cigarette lighter.

   If the vehicle only has a cigarette lighter, use the cigarette lighter.

   Do not pinch the power plug cord in the door or window.
9. Start the vehicle. The vehicle must be running while using the air compressor.
10. Press the on/off button (4) to turn the compressor on.

    The compressor will inflate the tire with air only.
11. Inflate the tire to the recommended inflation pressure using the pressure gauge (5). The recommended inflation pressure can be found on the Tire and Loading Information label. See *Tire Pressure on page 10-51*.

    The pressure gauge (5) may read higher than the actual tire pressure while the compressor is on. Turn the compressor off to get an accurate reading. The compressor may be turned on/off until the correct pressure is reached.
12. Press the on/off button (4) to turn the tire sealant and compressor kit off.

    Be careful while handling the tire sealant and compressor kit as it could be warm after usage.
13. Unplug the power plug (3) from the accessory power outlet in the vehicle.

14. Disconnect the air only hose (6) from the tire valve stem by lifting the lever. Replace the tire valve stem cap.
15. Replace the air only hose (6) and the power plug (3) back in its original location.
16. Place the equipment in the original storage location in the vehicle.

The tire sealant and compressor kit has an accessory adapter located in a compartment on the bottom of its housing that may be used to inflate air mattresses, balls, etc.

Removal and Installation of the Sealant Canister

To remove the sealant canister:

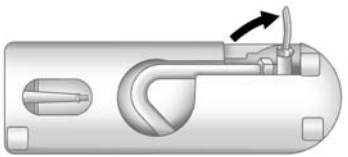

1. Unlock the air only hose (6) from the sealant canister (2) by pulling up on the lever.
2. Pull the air only hose (6) from the sealant canister (2).
3. Unwrap the sealant/air hose (7) from the compressor (1).

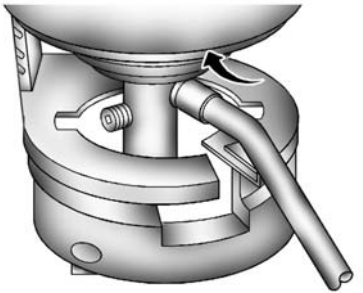

4. Turn the sealant canister (2) so the inflator filling hose is aligned with the slot in the compressor.
5. Lift the sealant canister (2) from the compressor and replace with a new sealant canister. See your dealer for more information.

To install a new sealant canister:

1. Align the sealant/air hose (7) with the slot in the air compressor.
2. Push the sealant canister (2) down and turn it clockwise.
3. Wrap the sealant/air hose (7) around the air compressor channel to stow it in its original location.
4. Push the air only hose (6) onto the sealant canister inlet and push the lever down.

Storing the Tire Sealant and Compressor Kit

The tire sealant and compressor kit is located in the trunk, under the load floor, behind an access panel.

To remove the kit:

1. Open the trunk. See *Trunk on page 2-14*.

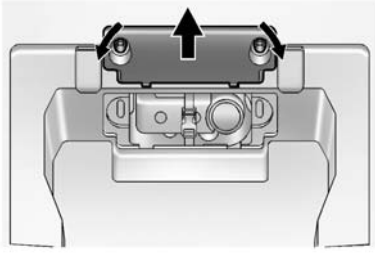

2. Turn the left knob counterclockwise and the right knob clockwise, 90 degrees, at the same time. Then pull the access panel rearward and up to remove it.

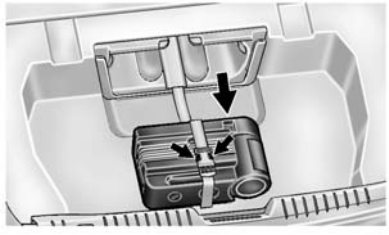

3. Pull the inflator kit rearward.

   Squeeze the two tabs of the quick release buckle to remove the tire sealant and compressor kit.

To store the inflator kit, reverse the steps.

Storing the Tire Sealant and Compressor Kit (Diesel)

The tire sealant and compressor kit is located in the trunk in a storage compartment on the driver side of the vehicle.

To remove the kit:

1. Open the trunk. See *Trunk on page 2-14*.

2. Turn the wing nut counterclockwise to remove it.

3. Remove the tire sealant and compressor kit from the storage compartment.
4. Remove the tire sealant and compressor kit from the bag.

To store the inflator kit, reverse the steps.

Tire Changing

Removing the Spare Tire and Tools

To access the spare tire and tools:

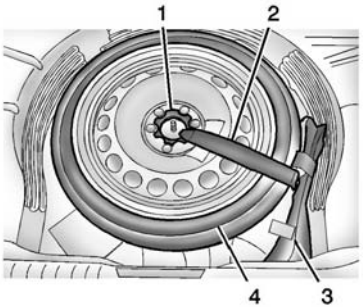

1. Retainer Nut
2. Tool Bag Tether
3. Tool Bag
4. Spare Tire

1. Open the trunk. See *Trunk on page 2-14*.
2. Lift the load floor.
3. Turn the retainer nut (1) counterclockwise to remove it. Then remove the tool bag tether (2) from the stow rod, the tool bag (3) containing the wheel wrench and wheel blocks, and the spare tire (4).
4. Remove the jack, jack handle extension, and two-piece wrench, if equipped.

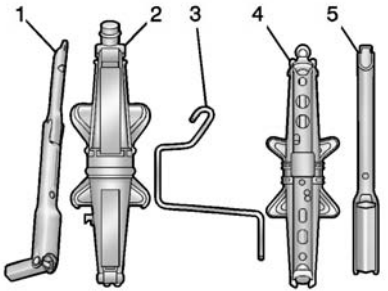

1. Three-Piece Wrench
2. Hex Head Jack
3. Jack Handle Extension
4. Coin/Pierce Jack
5. Two-Piece Wrench

This vehicle may have one of the following: A coin/pierce jack (4), a jack handle extension (3), and a two-piece wrench (5), or a hex head jack (2) and three-piece wrench (1).

Removing the Flat Tire and Installing the Spare Tire

This vehicle may have aluminum wheels with exposed wheel nuts. Use the wheel wrench to loosen all the wheel nuts. Do not remove them yet.

Or, this vehicle may have steel wheels with plastic covers.

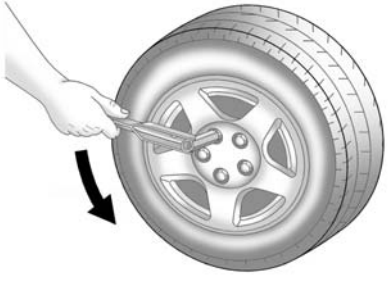

To remove the plastic covers and wheel nut caps, loosen the plastic nut caps with the wheel wrench in a counterclockwise direction.

If needed, finish loosening them with your fingers. The plastic nut caps will not come off.

If needed, use the flat end of the wheel wrench and pry along the edge of the cover until it comes off. The edge of the wheel cover could be sharp, so do not try to remove it with your bare hands. Do not drop the cover or lay it face down, as it could become scratched or damaged. Store the wheel cover in the trunk until the flat tire is repaired or replaced.

Once you have removed the wheel cover, use the following procedure to remove the flat tire and install the spare tire.

1. Do a safety check before proceeding. See *If a Tire Goes Flat on page 10-64* for more information.

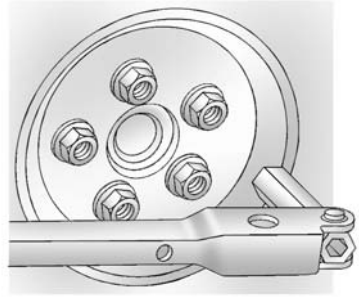

2. Turn the wheel wrench counterclockwise once on each wheel nut to loosen it. Do not remove them yet.
3. Place the jack near the flat tire.
4. Place the wheel blocks on both sides of the tire at the opposite corner of the tire being changed. See *If a Tire Goes Flat on page 10-64* for proper wheel block placement.

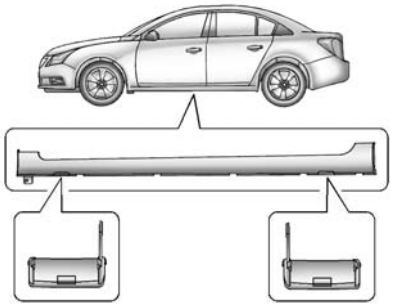

5. If this vehicle is the RS model, locate the front or rear jack cover on the rocker molding near the tire being changed.

   Place your hand behind the edge of the cover on the rocker molding. Pull down and out to remove the cover.

   The cover will remain attached to the molding by a tether.

6. Place the jack under the vehicle.

7. If you have a coin/pierce jack, attach the jack handle extension to the jack by sliding the hook through the end of the jack.

   If you have a hex head jack, place the hex tube end of the wrench over the hex head of the jack.

⚠ Caution

Make sure that the jack lift head is in the correct position or you may damage your vehicle. The repairs would not be covered by your warranty.

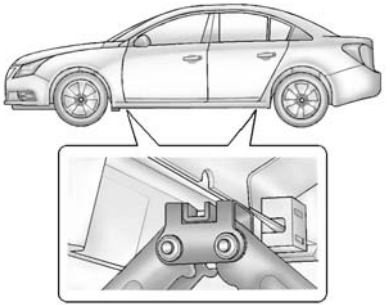

8. Position the jack lift head at the jack location nearest the flat tire. The location is indicated by a notch in the flange. The jack must not be used in any other position.

⚠ Warning

Getting under a vehicle when it is lifted on a jack is dangerous. If the vehicle slips off the jack, you could be badly injured or

(Continued)

Warning (Continued)

killed. Never get under a vehicle when it is supported only by a jack.

⚠ Warning

Raising the vehicle with the jack improperly positioned can damage the vehicle and even make the vehicle fall. To help avoid personal injury and vehicle damage, be sure to fit the jack lift head into the proper location before raising the vehicle.

⚠ Warning

Lifting a vehicle and getting under it to do maintenance or repairs is dangerous without the appropriate safety equipment and training. If a jack is provided with the vehicle, it is designed only for changing a flat tire. If it is used for anything else, you or others could be badly injured or killed if the vehicle slips off the jack. If a jack is provided with the vehicle, only use it for changing a flat tire.

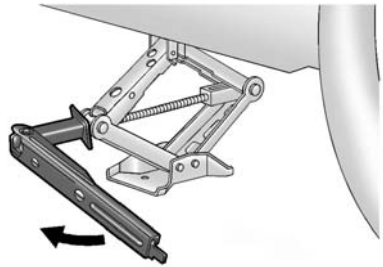

Hex Head Jack Shown, Coin/ Pierce Jack Similar

9. Raise the jack by turning the handle clockwise until it comes in contact with the notch in the flange.

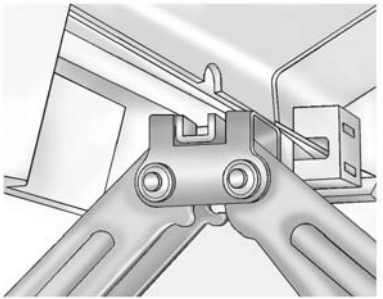

Make sure the jack lift head notch is placed in the flange notch.

Raise the vehicle far enough off the ground so there is enough room for the road tire to clear the ground.

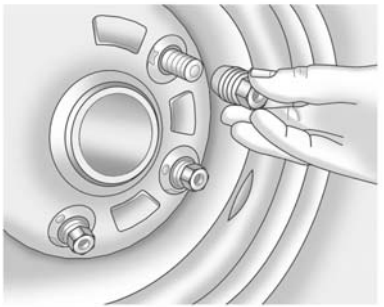

10. Remove all of the wheel nuts.
11. Remove the flat tire.

⚠ Warning

Rust or dirt on a wheel, or on the parts to which it is fastened, can make wheel nuts become loose after time. The wheel could come off and cause an accident. When changing a wheel, remove any rust or dirt from places where the wheel attaches to the vehicle. In

(Continued)

Warning (Continued)

an emergency, a cloth or a paper towel can be used; however, use a scraper or wire brush later to remove all rust or dirt.

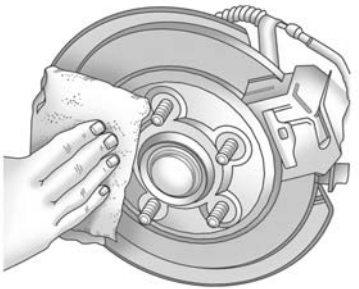

12. Remove any rust or dirt from the wheel bolts, mounting surfaces, and spare wheel.
13. Place the compact spare tire on the wheel-mounting surface.

⚠ Warning

Never use oil or grease on bolts or nuts because the nuts might come loose. The vehicle's wheel could fall off, causing a crash.

14. Reinstall the wheel nuts. Tighten each nut by hand until the wheel is held against the hub.
15. Lower the vehicle by turning the jack handle counterclockwise.

⚠ Warning

Wheel nuts that are improperly or incorrectly tightened can cause the wheels to become loose or come off. The wheel nuts should be tightened with a torque wrench to the proper torque specification after replacing. Follow the torque specification supplied by the

(Continued)

Warning (Continued)

aftermarket manufacturer when using accessory locking wheel nuts. See *Capacities and Specifications on page 12-2* for original equipment wheel nut torque specifications.

⚠ Caution

Improperly tightened wheel nuts can lead to brake pulsation and rotor damage. To avoid expensive brake repairs, evenly tighten the wheel nuts in the proper sequence and to the proper torque specification. See *Capacities and Specifications on page 12-2* for the wheel nut torque specification.

16. Tighten the wheel nuts firmly in a crisscross sequence, as shown.
17. Lower the jack all the way and remove the jack from under the vehicle.
18. Tighten the wheel nuts firmly with the wheel wrench.

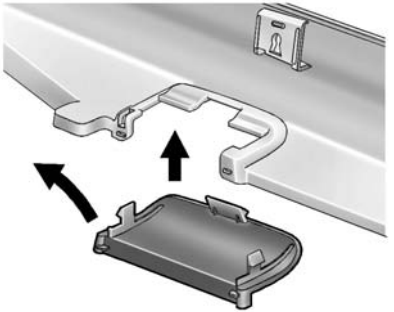

Front Jack Cover Shown, Rear Jack Cover Similar

19. If this vehicle is the RS model, snap the jack cover back into place.
20. Remove the wheel blocks and return them to their proper storage location.

When reinstalling the wheel cover or center cap on the full-size tire, tighten all five plastic caps hand snug with the aid of the wheel wrench and tighten them with the wheel wrench an additional one-quarter of a turn.

⚠ Caution

Wheel covers will not fit on the vehicle's compact spare. If you try to put a wheel cover on the compact spare, the cover or the spare could be damaged.

Storing a Flat or Spare Tire and Tools

⚠ Warning

Storing a jack, a tire, or other equipment in the passenger compartment of the vehicle could cause injury. In a sudden stop or collision, loose equipment could strike someone. Store all these in the proper place.

Storing the Flat Tire and Tools

1. Replace the wheel wrench and wheel blocks in the tool bag.
2. Remove the foam container from the rear storage compartment.

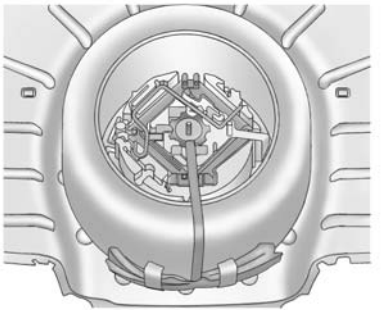

Coin/Pierce Jack Shown, Hex Head Jack Similar

3. Place the flat tire in the storage compartment with the valve stem down.
4. Place the jack and jack handle extension, if the vehicle has one, in the foam container.
5. Place the foam container inside the flat tire. Align the hole with the stow rod.

6. Place the tool bag tether over the stow rod and the tool bag rear of the flat tire.
7. Turn the retainer nut clockwise until tight.
8. Replace the load floor.

   The load floor may not lay flat.

The compact spare is for temporary use only. Replace the compact spare tire with a full-size tire as soon as you can.

Storing the Compact Spare Tire and Tools

Reverse the instructions for removing the spare tire and tools to store the compact spare tire.

Compact Spare Tire

⚠ Warning

Driving with more than one compact spare tire at a time could result in loss of braking and

(Continued)

Warning (Continued)

handling. This could lead to a crash and you or others could be injured. Use only one compact spare tire at a time.

If this vehicle has a compact spare tire, it was fully inflated when new; however, it can lose air over time. Check the inflation pressure regularly. It should be 420 kPa (60 psi).

Stop as soon as possible and check that the spare tire is correctly inflated after being installed on the vehicle. The compact spare tire is designed for temporary use only. The vehicle will perform differently with the spare tire installed and it is recommended that the vehicle speed be limited to 80 km/h (50 mph). To conserve the tread of the spare tire, have the standard tire repaired or replaced as soon as convenient and return the spare tire to the storage area.

When using a compact spare tire, the ABS and Traction Control systems may engage until the spare tire is recognized by the vehicle, especially on slippery roads. Adjust driving to reduce possible wheel slip.

⚠ Caution

When the compact spare is installed, do not take the vehicle through an automatic car wash with guide rails. The compact spare can get caught on the rails which can damage the tire, wheel, and other parts of the vehicle.

Do not use the compact spare on other vehicles.

Do not mix the compact spare tire or wheel with other wheels or tires. They will not fit. Keep the spare tire and its wheel together.

⚠ Caution

Tire chains will not fit the compact spare. Using them can damage the vehicle and the chains. Do not use tire chains on the compact spare.

Jump Starting

For more information about the vehicle battery, see *Battery on page 10-28*.

If the battery has run down, try to use another vehicle and some jumper cables to start your vehicle. Be sure to use the following steps to do it safely.

⚠ Warning

WARNING: Battery posts, terminals, and related accessories contain lead and lead compounds, chemicals known to the State of California to cause cancer and birth defects or other reproductive harm. **Wash hands after handling.** See *California Proposition 65 Warning on page 10-2*.

⚠ Warning

Batteries can hurt you. They can be dangerous because:

- They contain acid that can burn you.
- They contain gas that can explode or ignite.
- They contain enough electricity to burn you.

If you do not follow these steps exactly, some or all of these things can hurt you.

⚠ Caution

Ignoring these steps could result in costly damage to the vehicle that would not be covered by the vehicle warranty. Trying to start the vehicle by pushing or pulling it will not work, and it could damage the vehicle.

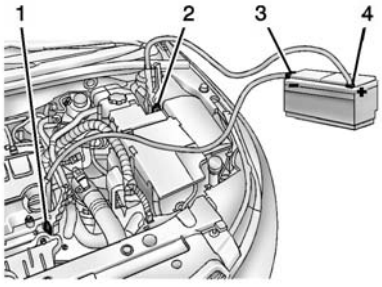

1.4L L4 Engine Shown, 1.8L L4 Engine, and 2.0L L4 Engine Similar

1. Discharged Battery Negative Grounding Point
2. Discharged Battery Positive Terminal
3. Good Battery Negative Terminal
4. Good Battery Positive Terminal

The jump start negative grounding point (1) for the discharged battery is the engine block or an engine mounting bolt. Connect to a spot as far away from the discharged battery as possible.

The jump start positive terminal on the discharged battery (2) is located in the engine compartment on the driver side of the vehicle.

The jump start positive terminal (4) and negative terminal (3) are on the battery of the vehicle providing the jump start.

The positive jump start connection for the discharged battery is under a trim cover. Open the cover to expose the terminal.

1. Check the other vehicle. It must have a 12-volt battery with a negative ground system.

⚠ Caution

If the other vehicle does not have a 12-volt system with a negative ground, both vehicles can be

(Continued)

Caution (Continued)

damaged. Only use a vehicle that has a 12-volt system with a negative ground for jump starting.

2. Position the two vehicles so that they are not touching.
3. Set the parking brake firmly and put the shift lever in P (Park) with an automatic transmission, or Neutral with a manual transmission. See *Shifting Into Park on page 9-23* with an automatic transmission, or *Parking on page 9-25* with a manual transmission.

⚠ Caution

If any accessories are left on or plugged in during the jump starting procedure, they could be damaged. The repairs would not be covered by the vehicle

(Continued)

Caution (Continued)

warranty. Whenever possible, turn off or unplug all accessories on either vehicle when jump starting.

4. Turn the ignition to LOCK/OFF. Turn off all lights and accessories in both vehicles, except the hazard warning flashers if needed.

⚠ Warning

An electric fan can start up even when the engine is not running and can injure you. Keep hands, clothing and tools away from any underhood electric fan.

⚠ Warning

Using a match near a battery can cause battery gas to explode. People have been hurt doing this, and some have been blinded. Use a flashlight if you need more light.

Battery fluid contains acid that can burn you. Do not get it on you. If you accidentally get it in your eyes or on your skin, flush the place with water and get medical help immediately.

⚠ Warning

Fans or other moving engine parts can injure you badly. Keep your hands away from moving parts once the engine is running.

5. Connect one end of the red positive (+) cable to the positive (+) terminal on the discharged battery.
6. Connect the other end of the red positive (+) cable to the positive (+) terminal of the good battery.
7. Connect one end of the black negative (–) cable to the negative (–) terminal of the good battery.
8. Connect the other end of the black negative (–) cable to the negative (–) grounding point for the discharged battery.
9. Start the engine in the vehicle with the good battery and run the engine at idle speed for at least four minutes.
10. Try to start the vehicle that had the dead battery. If it will not start after a few tries, it probably needs service.

⚠ Caution

If the jumper cables are connected or removed in the wrong order, electrical shorting may occur and damage the vehicle. The repairs would not be covered by the vehicle warranty. Always connect and remove the jumper cables in the correct order, making sure that the cables do not touch each other or other metal.

Jumper Cable Removal

Reverse the sequence exactly when removing the jumper cables.

Towing the Vehicle

⚠ Caution

Incorrectly towing a disabled vehicle may cause damage. The damage would not be covered by the vehicle warranty.

Have the vehicle towed on a flatbed car carrier or a wheel lift tow truck. If a wheel lift tow truck is used, the drive wheels cannot contact the road while the vehicle is being towed. A wheel dolly must be used to lift all drive wheels off the ground.

Consult your dealer or a professional towing service if the disabled vehicle must be towed.

Recreational Vehicle Towing

Recreational vehicle towing refers to towing the vehicle behind another vehicle – such as behind a motor home. The two most common types of recreational vehicle towing are known as dinghy towing and dolly towing. Dinghy towing is towing the vehicle with all four wheels on the ground. Dolly towing is towing the vehicle with two wheels on the ground and two wheels up on a device known as a dolly.

Here are some important things to consider before recreational vehicle towing:

- The towing capacity of the towing vehicle. Be sure to read the tow vehicle manufacturer's recommendations.
- How far the vehicle will be towed. Some vehicles have restrictions on how far and how long they can tow.
- The proper towing equipment. See your dealer or trailering professional for additional advice and equipment recommendations.

- If the vehicle is ready to be towed. Just as preparing the vehicle for a long trip, make sure the vehicle is prepared to be towed.

⚠ Caution

Use of a shield mounted in front of the vehicle grille could restrict airflow and cause damage to the transmission. The repairs would not be covered by the vehicle warranty. If using a shield, only use one that attaches to the towing vehicle.

Dinghy Towing (with Automatic Transmission)

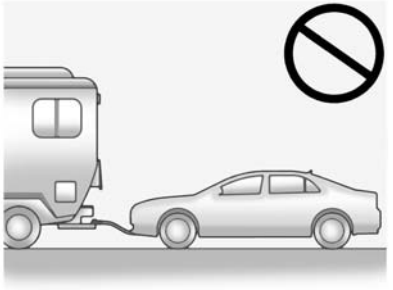

⚠ Caution

If the vehicle is towed with all four wheels on the ground, the drivetrain components could be damaged. The repairs would not be covered by the vehicle warranty. Do not tow the vehicle with all four wheels on the ground.

Vehicles with an automatic transmission should not be towed with all four wheels on the ground. If the vehicle must be towed, a dolly should be used. See "Dolly Towing" that follows.

Dinghy Towing (with Manual Transmission)

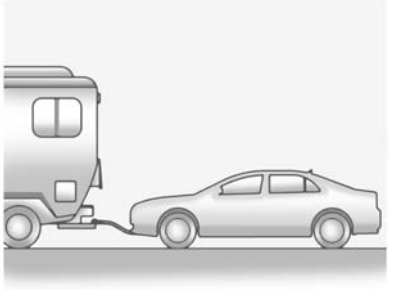

To dinghy tow the vehicle from the front with all four wheels on the ground:

1. Position the vehicle to tow and then secure it to the towing vehicle.

2. Shift the transmission to Neutral.
3. Turn the ignition to ACC/ ACCESSORY.
4. To prevent the battery from draining while the vehicle is being towed, remove fuse 22, 23, 24, and 25 from the instrument panel fuse block. See *Instrument Panel Fuse Block on page 10-41*.

Remember to reinstall the fuses once the destination has been reached.

⚠ Caution

If 105 km/h (65 mph) is exceeded while towing the vehicle, it could be damaged. Never exceed 105 km/h (65 mph) while towing the vehicle.

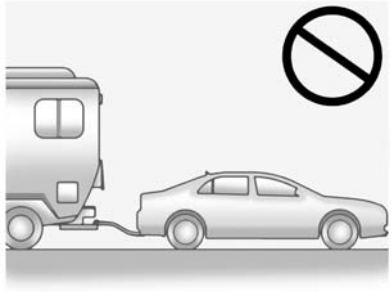

⚠ Caution

Towing the vehicle from the rear could damage it. Also, repairs would not be covered by the vehicle warranty. Never have the vehicle towed from the rear.

Dolly Towing

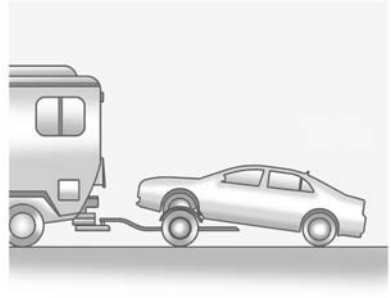

Tow the vehicle with the two rear wheels on the ground and the front wheels on a dolly:

To tow the vehicle with two wheels on the ground and a dolly:

1. Put the front wheels on a dolly.
2. Shift the automatic transmission into P (Park) or a manual transmission into 1 (First) gear.
3. Set the parking brake.

4. Clamp the steering wheel in a straight-ahead position with a clamping device designed for towing.
5. Remove the key from the ignition.
6. Secure the vehicle to the dolly.
7. Release the parking brake.

⚠ Caution

Towing the vehicle from the rear could damage it. Also, repairs would not be covered by the vehicle warranty. Never have the vehicle towed from the rear.

Appearance Care

Exterior Care

Locks

Locks are lubricated at the factory. Use a de-icing agent only when absolutely necessary, and have the locks greased after using. See *Recommended Fluids and Lubricants on page 11-12*.

Washing the Vehicle

To preserve the vehicle's finish, wash it often and out of direct sunlight.

⚠ Caution

Do not use petroleum-based, acidic, or abrasive cleaning agents as they can damage the vehicle's paint, metal, or plastic parts. If damage occurs, it would not be covered by the vehicle warranty. Approved cleaning

(Continued)

Caution (Continued)

products can be obtained from your dealer. Follow all manufacturer directions regarding correct product usage, necessary safety precautions, and appropriate disposal of any vehicle care product.

⚠ Caution

Avoid using high-pressure washes closer than 30 cm (12 in) to the surface of the vehicle. Use of power washers exceeding 8,274 kPa (1,200 psi) can result in damage or removal of paint and decals.

This symbol is on any underhood compartment electrical center that should not be power washed. This could cause damage that would not be covered by the vehicle warranty.

If using an automatic car wash, comply with the car wash instructions. The windshield wiper and rear window wiper, if equipped, must be off. Remove any accessories that may be damaged or interfere with the car wash equipment.

Rinse the vehicle well, before washing and after, to remove all cleaning agents completely. If they are allowed to dry on the surface, they could stain.

Dry the finish with a soft, clean chamois or an all-cotton towel to avoid surface scratches and water spotting.

Finish Care

Application of aftermarket clearcoat sealant/wax materials is not recommended. If painted surfaces are damaged, see your dealer to have the damage assessed and repaired. Foreign materials such as calcium chloride and other salts, ice melting agents, road oil and tar, tree sap, bird droppings, chemicals from industrial chimneys, etc., can damage the vehicle's finish if they remain on painted surfaces. Wash the vehicle as soon as possible. If necessary, use non-abrasive cleaners that are marked safe for painted surfaces to remove foreign matter.

Occasional hand waxing or mild polishing should be done to remove residue from the paint finish. See your dealer for approved cleaning products.

Do not apply waxes or polishes to uncoated plastic, vinyl, rubber, decals, simulated wood, or flat paint as damage can occur.

⚠ Caution

Machine compounding or aggressive polishing on a basecoat/clearcoat paint finish may damage it. Use only non-abrasive waxes and polishes that are made for a basecoat/clearcoat paint finish on the vehicle.

To keep the paint finish looking new, keep the vehicle garaged or covered whenever possible.

Protecting Exterior Bright Metal Moldings

⚠ Caution

Failure to clean and protect the bright metal moldings can result in a hazy white finish or pitting. This damage would not be covered by the vehicle warranty.

The bright metal moldings on the vehicle are aluminum or stainless steel. To prevent damage always follow these cleaning instructions:

- Be sure the molding is cool to the touch before applying any cleaning solution.
- Use a cleaning solution approved for aluminum or stainless steel. Some cleaners are highly acidic or contain alkaline substances and can damage the moldings.
- Always dilute a concentrated cleaner according to the manufacturer’s instructions.
- Do not use chrome cleaners.
- Do not use cleaners that are not intended for automotive use.
- Use a nonabrasive wax on the vehicle after washing to protect and extend the molding finish.

Cleaning Exterior Lamps/ Lenses, Emblems, Decals and Stripes

Use only lukewarm or cold water, a soft cloth, and a car washing soap to clean exterior lamps, lenses, emblems, decals and stripes. Follow instructions under "Washing the Vehicle" previously in this section.

Lamp covers are made of plastic, and some have a UV protective coating. Do not clean or wipe them while they are dry.

Do not use any of the following on lamp covers:

- Abrasive or caustic agents.
- Washer fluids and other cleaning agents in higher concentrations than suggested by the manufacturer.
- Solvents, alcohols, fuels, or other harsh cleaners.
- Ice scrapers or other hard items.

- Aftermarket appearance caps or covers while the lamps are illuminated, due to excessive heat generated.

⚠ Caution

Failure to clean lamps properly can cause damage to the lamp cover that would not be covered by the vehicle warranty.

⚠ Caution

Using wax on low gloss black finish stripes can increase the gloss level and create a non-uniform finish. Clean low gloss stripes with soap and water only.

Air Intakes

Clear debris from the air intakes, between the hood and windshield, when washing the vehicle.

Shutter System

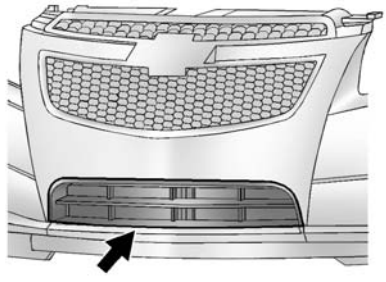

The vehicle may have a shutter system designed to help increase fuel economy. Keep the shutter system clean for proper operation.

Windshield and Wiper Blades

Clean the outside of the windshield with glass cleaner.

Clean rubber blades using lint-free cloth or paper towel soaked with windshield washer fluid or a mild detergent. Wash the windshield thoroughly when cleaning the blades. Bugs, road grime, sap, and a buildup of vehicle wash/wax treatments may cause wiper streaking.

Replace the wiper blades if they are worn or damaged. Damage can be caused by extreme dusty conditions, sand, salt, heat, sun, snow and ice.

Clear ice and snow from the wiper blades before using them. If frozen to the windshield, carefully loosen them or thaw them. Damaged wiper blades should be replaced. See *Wiper Blade Replacement on page 10-31* for more information.

Heavy snow or ice can overload the wipers. If the wiper motor overheats, the windshield wipers will stop until the motor cools and the wiper control is turned off. See *Electrical System Overload on page 10-37* for more information.

Weatherstrips

Apply Dielectric silicone grease on weatherstrips to make them last longer, seal better, and not stick or squeak. Lubricate weatherstrips at least once a year. Hot, dry climates may require more frequent application. Black marks from rubber material on painted surfaces can be removed by rubbing with a clean cloth. See *Recommended Fluids and Lubricants on page 11-12*.

Tires

Use a stiff brush with tire cleaner to clean the tires.

⚠ Caution

Using petroleum-based tire dressing products on the vehicle may damage the paint finish and/or tires. When applying a tire dressing, always wipe off any overspray from all painted surfaces on the vehicle.

Wheels and Trim — Aluminum or Chrome

Use a soft, clean cloth with mild soap and water to clean the wheels. After rinsing thoroughly with clean water, dry with a soft, clean towel. A wax may then be applied.

⚠ Caution

Chrome wheels and other chrome trim may be damaged if the vehicle is not washed after driving on roads that have been sprayed with magnesium, calcium, or sodium chloride. These chlorides are used on roads for conditions such as ice and dust. Always wash the chrome with soap and water after exposure.

⚠ Caution

To avoid surface damage, do not use strong soaps, chemicals, abrasive polishes, cleaners, brushes, or cleaners that contain acid on aluminum or chrome-plated wheels. Use only approved cleaners. Also, never drive a vehicle with aluminum or chrome-plated wheels through an automatic car wash that uses silicone carbide tire cleaning brushes. Damage could occur and the repairs would not be covered by the vehicle warranty.

Brake System

Visually inspect brake lines and hoses for proper hook-up, binding, leaks, cracks, chafing, etc. Inspect disc brake pads for wear and rotors for surface condition. Inspect drum brake linings/shoes for wear or cracks. Inspect other brake parts, including drums, wheel cylinders,

calipers, parking brake, master cylinder, brake fluid reservoir, vacuum pipes, electric vacuum pump including bracket and vent hose, if equipped.

Steering, Suspension, and Chassis Components

Visually inspect steering, suspension, and chassis components for damaged, loose, or missing parts or signs of wear at least once a year.

Inspect power steering for proper hook-up, binding, leaks, cracks, chafing, etc.

Visually check constant velocity joint boots and axle seals for leaks.

Body Component Lubrication

Lubricate all key lock cylinders, hood hinges, liftgate hinges, steel fuel door hinge and power assist step hinges, unless the components are plastic. Applying silicone grease on weatherstrips with a clean cloth will make them last longer, seal better, and not stick or squeak.

Underbody Maintenance

At least twice a year, spring and fall use plain water to flush any corrosive materials from the underbody. Take care to thoroughly clean any areas where mud and other debris can collect.

Sheet Metal Damage

If the vehicle is damaged and requires sheet metal repair or replacement, make sure the body repair shop applies anti-corrosion material to parts repaired or replaced to restore corrosion protection.

Original manufacturer replacement parts will provide the corrosion protection while maintaining the vehicle warranty.

Finish Damage

Quickly repair minor chips and scratches with touch-up materials available from your dealer to avoid corrosion. Larger areas of finish damage can be corrected in your dealer's body and paint shop.

Chemical Paint Spotting

Airborne pollutants can fall upon and attack painted vehicle surfaces causing blotchy, ring-shaped discolorations, and small, irregular dark spots etched into the paint surface. See “Finish Care” previously in this section.

Interior Care

To prevent dirt particle abrasions, regularly clean the vehicle's interior. Immediately remove any soils. Note that newspapers or dark garments that can transfer color to home furnishings can also permanently transfer color to the vehicle's interior.

Use a soft bristle brush to remove dust from knobs and crevices on the instrument cluster. Using a mild soap solution, immediately remove hand lotions, sunscreen, and insect repellent from all interior surfaces or permanent damage may result.

Your dealer may have products for cleaning the interior. Use cleaners specifically designed for the surfaces being cleaned to prevent permanent damage. Apply all cleaners directly to the cleaning cloth. Do not spray cleaners directly on any switches or controls. Cleaners should be removed quickly. Never allow cleaners to remain on the surface being cleaned for extended periods of time.

Cleaners may contain solvents that can become concentrated in the interior. Before using cleaners, read and adhere to all safety instructions on the label. While cleaning the interior, maintain adequate ventilation by opening the doors and windows.

To prevent damage, do not clean the interior using the following cleaners or techniques:

- Never use a razor or any other sharp object to remove a soil from any interior surface.
- Never use a brush with stiff bristles.
- Never rub any surface aggressively or with excessive pressure.
- Do not use laundry detergents or dishwashing soaps with degreasers. For liquid cleaners, use approximately 20 drops per 3.8 L (1 gal) of water.
  A concentrated soap solution will leave a residue that creates streaks and attracts dirt. Do not use solutions that contain strong or caustic soap.
- Do not heavily saturate the upholstery when cleaning.
- Do not use solvents or cleaners containing solvents.

Interior Glass

To clean, use a terry cloth fabric dampened with water. Wipe droplets left behind with a clean dry cloth. Commercial glass cleaners may be used, if necessary, after cleaning the interior glass with plain water.

⚠ Caution

To prevent scratching, never use abrasive cleaners on automotive glass. Abrasive cleaners or aggressive cleaning may damage the rear window defogger.

Cleaning the windshield with water during the first three to six months of ownership will reduce tendency to fog.

Speaker Covers

Vacuum around a speaker cover gently, so that the speaker will not be damaged. Clean spots with just water and mild soap.

Coated Moldings

Coated moldings should be cleaned.

- When lightly soiled, wipe with a sponge or soft lint-free cloth dampened with water.
- When heavily soiled, use warm soapy water.

Fabric/Carpet/Suede

Start by vacuuming the surface using a soft brush attachment. If a rotating brush attachment is being used during vacuuming, only use it on the floor carpet. Before cleaning, gently remove as much of the soil as possible using one of the following techniques:

- Gently blot liquids with a paper towel. Continue blotting until no more soil can be removed.
- For solid soils, remove as much as possible prior to vacuuming.

To clean:

1. Saturate a clean lint-free colorfast cloth with water. Microfiber cloth is recommended to prevent lint transfer to the fabric or carpet.
2. Remove excess moisture by gently wringing until water does not drip from the cleaning cloth.
3. Start on the outside edge of the soil and gently rub toward the center. Fold the cleaning cloth to a clean area frequently to prevent forcing the soil in to the fabric.
4. Continue gently rubbing the soiled area until there is no longer any color transfer from the soil to the cleaning cloth.
5. If the soil is not completely removed, use a mild soap solution followed only by plain water.

If the soil is not completely removed, it may be necessary to use a commercial upholstery cleaner or spot lifter. Test a small hidden area for colorfastness before using a commercial upholstery cleaner or spot lifter. If ring formation occurs, clean the entire fabric or carpet.

Following the cleaning process, a paper towel can be used to blot excess moisture.

Cleaning High Gloss Surfaces and Vehicle Information and Radio Displays

For vehicles with high gloss surfaces or vehicle displays, use a microfiber cloth to wipe surfaces. Before wiping the surface with the microfiber cloth, use a soft bristle brush to remove dirt that could scratch the surface. Then use the microfiber cloth by gently rubbing to clean. Never use window cleaners or solvents. Periodically hand wash the microfiber cloth separately, using mild soap. Do not use bleach or fabric softener. Rinse thoroughly and air dry before next use.

⚠ Caution

Do not attach a device with a suction cup to the display. This may cause damage and would not be covered by the vehicle warranty.

Instrument Panel, Leather, Vinyl, Other Plastic Surfaces, Low Gloss Paint Surfaces and Natural Open Pore Wood Surfaces

Use a soft microfiber cloth dampened with water to remove dust and loose dirt. For a more thorough cleaning, use a soft microfiber cloth dampened with a mild soap solution.

⚠ Caution

Soaking or saturating leather, especially perforated leather, as well as other interior surfaces, may cause permanent damage. Wipe excess moisture from these surfaces after cleaning and allow them to dry naturally. Never use heat, steam, or spot removers. Do not use cleaners that contain silicone or wax-based products. Cleaners containing these solvents can permanently change the appearance and feel of leather or soft trim, and are not recommended.

Do not use cleaners that increase gloss, especially on the instrument panel. Reflected glare can decrease visibility through the windshield under certain conditions.

⚠ Caution

Use of air fresheners may cause permanent damage to plastics and painted surfaces. If an air freshener comes in contact with any plastic or painted surface in the vehicle, blot immediately and clean with a soft cloth dampened with a mild soap solution. Damage caused by air fresheners would not be covered by the vehicle warranty.

Cargo Cover and Convenience Net

Wash with warm water and mild detergent. Do not use chlorine bleach. Rinse with cold water, and then dry completely.

Care of Safety Belts

Keep belts clean and dry.

⚠ Warning

Do not bleach or dye safety belts. It may severely weaken them. In a crash, they might not be able to provide adequate protection. Clean safety belts only with mild soap and lukewarm water.

Floor Mats

⚠ Warning

If a floor mat is the wrong size or is not properly installed, it can interfere with the pedals. Interference with the pedals can cause unintended acceleration and/or increased stopping distance which can cause a crash and injury. Make sure the floor mat does not interfere with the pedals.

Use the following guidelines for proper floor mat usage:

- The original equipment floor mats were designed for your vehicle. If the floor mats need replacing, it is recommended that GM certified floor mats be purchased. Non-GM floor mats may not fit properly and may interfere with the pedals. Always check that the floor mats do not interfere with the pedals.
- Do not use a floor mat if the vehicle is not equipped with a floor mat retainer on the driver side floor.
- Use the floor mat with the correct side up. Do not turn it over.
- Do not place anything on top of the driver side floor mat.
- Use only a single floor mat on the driver side.
- Do not place one floor mat on top of another.

Removing and Replacing the Floor Mats

If equipped, pull up on the rear of the floor mat to unlock each retainer and remove.

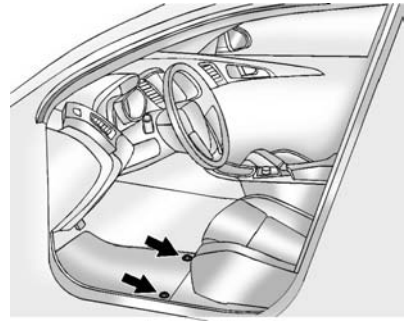

Reinstall by lining up the floor mat retainer openings over the carpet retainers and snapping into position.

Make sure the floor mat is properly secured in place.

Verify the floor mat does not interfere with the pedals.

✍ NOTES

Service and Maintenance

General Information
General Information 11-1

Maintenance Schedule
Maintenance Schedule 11-2

Special Application Services
Special Application Services 11-8

Additional Maintenance and Care
Additional Maintenance and Care 11-9

Recommended Fluids
Recommended Fluids and Lubricants 11-12
Maintenance Replacement Parts 11-13

Maintenance Records
Maintenance Records 11-15

General Information

Your vehicle is an important investment. This section describes the required maintenance for the vehicle. Follow this schedule to help protect against major repair expenses resulting from neglect or inadequate maintenance. It may also help to maintain the value of the vehicle if it is sold. It is the responsibility of the owner to have all required maintenance performed.

Your dealer has trained technicians who can perform required maintenance using genuine replacement parts. They have up-to-date tools and equipment for fast and accurate diagnostics. Many dealers have extended evening and Saturday hours, courtesy transportation, and online scheduling to assist with service needs.

Your dealer recognizes the importance of providing competitively priced maintenance and repair services. With trained technicians, the dealer is the place for routine maintenance such as oil changes and tire rotations and additional maintenance items like tires, brakes, batteries, and wiper blades.

⚠ Caution

Damage caused by improper maintenance can lead to costly repairs and may not be covered by the vehicle warranty. Maintenance intervals, checks, inspections, recommended fluids, and lubricants are important to keep the vehicle in good working condition.

The Tire Rotation and Required Services are the responsibility of the vehicle owner. It is recommended to have your dealer perform these services every 12 000 km/7,500 mi. Proper vehicle maintenance helps to keep the vehicle in good working condition, improves fuel economy, and reduces vehicle emissions.

Because of the way people use vehicles, maintenance needs vary. There may need to be more frequent checks and services. The Additional Required Services - Normal are for vehicles that:

- Carry passengers and cargo within recommended limits on the Tire and Loading Information label. See *Vehicle Load Limits on page 9-9*.
- Are driven on reasonable road surfaces within legal driving limits.
- Use the recommended fuel. See *Fuel (Gasoline) on page 9-51*.

Refer to the information in the Maintenance Schedule Additional Required Services - Normal chart.

The Additional Required Services - Severe are for vehicles that are:

- Mainly driven in heavy city traffic in hot weather.
- Mainly driven in hilly or mountainous terrain.
- Frequently towing a trailer.
- Used for high speed or competitive driving.
- Used for taxi, police, or delivery service.

Refer to the information in the Maintenance Schedule Additional Required Services - Severe chart.

⚠ Warning

Performing maintenance work can be dangerous and can cause serious injury. Perform maintenance work only if the required information, proper tools, and equipment are available.
If they are not, see your dealer to have a trained technician do the work. See *Doing Your Own Service Work on page 10-4*.

Maintenance Schedule

Owner Checks and Services

At Each Fuel Stop

- Check the engine oil level. See *Engine Oil on page 10-11*.

Once a Month

- Check the tire inflation pressures. See *Tire Pressure on page 10-51*.
- Inspect the tires for wear. See *Tire Inspection on page 10-57*.
- Check the windshield washer fluid level. See *Washer Fluid on page 10-25*.

Engine Oil Change

When the CHANGE ENGINE OIL SOON DIC message displays, have the engine oil and filter changed within the next 1 000 km/600 mi.
If driven under the best conditions, the engine oil life system may not indicate the need for vehicle service

for up to a year. The engine oil and filter must be changed at least once a year and the oil life system must be reset. Your trained dealer technician can perform this work. If the engine oil life system is reset accidentally, service the vehicle within 5 000 km/3,000 mi since the last service. Reset the oil life system when the oil is changed. See *Engine Oil Life System on page 10-15*.

On vehicles with diesel engines, it is recommended to drain the diesel fuel filter of water when the oil is changed or when the WATER IN FUEL CONTACT SERVICE message displays.

Tire Rotation and Required Services Every 12 000 km/ 7,500 mi

Rotate the tires, if recommended for the vehicle, and perform the following services. See *Tire Rotation on page 10-57*.

- Check engine oil level and oil life percentage. If needed, change engine oil and filter, and reset oil life system. See *Engine Oil on page 10-11* and *Engine Oil Life System on page 10-15*.
- Check engine coolant level. See *Engine Coolant on page 10-20*.
- Check windshield washer fluid level. See *Washer Fluid on page 10-25*.
- Visually inspect windshield wiper blades for wear, cracking, or contamination. See *Exterior Care on page 10-88*. Replace worn or damaged wiper blades. See *Wiper Blade Replacement on page 10-31*.
- Check tire inflation pressures. See *Tire Pressure on page 10-51*.
- Inspect tire wear. See *Tire Inspection on page 10-57*.
- Visually check for fluid leaks.
- Inspect engine air cleaner filter. See *Engine Air Cleaner/Filter on page 10-17*.
- Inspect brake system. See *Exterior Care on page 10-88*.
- Visually inspect steering, suspension, and chassis components for damaged, loose, or missing parts or signs of wear. See *Exterior Care on page 10-88*.
- Check restraint system components. See *Safety System Check on page 3-14*.
- Visually inspect fuel system for damage or leaks.
- Visually inspect exhaust system and nearby heat shields for loose or damaged parts.
- Lubricate body components. See *Exterior Care on page 10-88*.
- Check starter switch. See *Starter Switch Check on page 10-29*.

- Check automatic transmission shift lock control function. See *Automatic Transmission Shift Lock Control Function Check on page 10-30*.
- Check ignition transmission lock. See *Ignition Transmission Lock Check on page 10-30*.
- Check parking brake and automatic transmission park mechanism. See *Park Brake and P (Park) Mechanism Check on page 10-30*.
- Check accelerator pedal for damage, high effort, or binding. Replace if needed.
- Visually inspect gas strut for signs of wear, cracks, or other damage. Check the hold open ability of the strut. See your dealer if service is required.
- Check tire sealant expiration date, if equipped. See *Tire Sealant and Compressor Kit on page 10-66*.
- Inspect sunroof track and seal, if equipped. See *Sunroof on page 2-23*.

Maintenance Schedule Additional Required Services - Normal	12 000 km/7,500 mi	24 000 km/15,000 mi	36 000 km/22,500 mi	48 000 km/30,000 mi	60 000 km/37,500 mi	72 000 km/45,000 mi	84 000 km/52,500 mi	96 000 km/60,000 mi	108 000 km/67,500 mi	120 000 km/75,000 mi	132 000 km/82,500 mi	144 000 km/90,000 mi	156 000 km/97,500 mi	168 000 km/105,000 mi	180 000 km/112,500 mi	192 000 km/120,000 mi	204 000 km/127,500 mi	216 000 km/135,000 mi	228 000 km/142,500 mi	240 000 km/150,000 mi
Rotate tires and perform Required Services. Check engine oil level and oil life percentage. Change engine oil and filter, if needed. Drain the diesel fuel filter of water. (Diesel Only)	✓	✓	✓	✓	✓	✓	✓	✓	✓	✓	✓	✓	✓	✓	✓	✓	✓	✓	✓	✓
Replace passenger compartment air filter. (1)			✓			✓			✓			✓			✓			✓		
Inspect evaporative control system. (2)						✓						✓						✓		
2.0L Diesel Engine Only: Replace fuel filter. (3)				✓				✓				✓				✓				✓
Replace engine air cleaner filter. (4)						✓						✓						✓		
Except 1.4L Engine: Replace spark plugs. Inspect ignition coil boots.													✓							
1.4L Engine Only: Replace spark plugs. Inspect ignition coil boots.								✓								✓				
1.4L and 1.8L Engines Only: Change automatic transmission fluid.													✓							
1.8L Engine Only: Replace timing belt, idler pulley, and timing belt tensioner. (7)													✓							
2.0L Diesel Engine Only: Replace the timing belt, timing belt tensioner, idler pulley, and water pump. (7)													✓							
Drain and fill engine cooling system. (5)																				✓
Visually inspect accessory drive belts. (6)																				✓
Replace brake fluid. (7)						✓						✓						✓		
Replace clutch fluid. (7)						✓						✓						✓		

Footnotes — Maintenance Schedule Additional Required Services - Normal

(1) Or every two years, whichever comes first. More frequent replacement may be needed if the vehicle is driven in areas with heavy traffic, areas with poor air quality, or areas with high dust levels. Replacement may also be needed if there is a reduction in air flow, excessive window fogging, or odors.

(2) Check all fuel and vapor lines and hoses for proper hook-up, routing, and condition.

(3) Or every two years, whichever comes first.

(4) Or every four years, whichever comes first.

(5) Or every five years, whichever comes first. See *Cooling System on page 10-19*.

(6) Or every 10 years, whichever comes first. Inspect for fraying, excessive cracking, or damage; replace, if needed.

(7) Or every three years, whichever comes first.

Maintenance Schedule Additional Required Services - Severe	12 000 km/7,500 mi	24 000 km/15,000 mi	36 000 km/22,500 mi	48 000 km/30,000 mi	60 000 km/37,500 mi	72 000 km/45,000 mi	84 000 km/52,500 mi	96 000 km/60,000 mi	108 000 km/67,500 mi	120 000 km/75,000 mi	132 000 km/82,500 mi	144 000 km/90,000 mi	156 000 km/97,500 mi	168 000 km/105,000 mi	180 000 km/112,500 mi	192 000 km/120,000 mi	204 000 km/127,500 mi	216 000 km/135,000 mi	228 000 km/142,500 mi	240 000 km/150,000 mi
Rotate tires and perform Required Services. Check engine oil level and oil life percentage. Change engine oil and filter, if needed. Drain the diesel fuel filter of water. (Diesel Only)	✓	✓	✓	✓	✓	✓	✓	✓	✓	✓	✓	✓	✓	✓	✓	✓	✓	✓	✓	✓
Replace passenger compartment air filter. (1)			✓			✓			✓			✓			✓			✓		
Inspect evaporative control system. (2)						✓						✓						✓		
2.0L Diesel Engine Only: Replace fuel filter. (3)				✓				✓				✓				✓				✓
Replace engine air cleaner filter. (4)						✓						✓						✓		
Change automatic transmission fluid.						✓						✓						✓		
Change manual transmission fluid.						✓						✓						✓		
Except 1.4L Engine: Replace spark plugs. Inspect ignition coil boots.													✓							
1.4L Engine Only: Replace spark plugs. Inspect ignition coil boots.								✓								✓				
1.8L Engine Only: Replace timing belt. (7)													✓							
2.0L Diesel Engine Only: Replace the timing belt, timing belt tensioner, idler pulley, and water pump. (7)													✓							
Drain and fill engine cooling system. (5)																				✓
Visually inspect accessory drive belts. (6)																				✓
Replace brake fluid. (7)						✓						✓						✓		
Replace clutch fluid. (7)						✓						✓						✓		

Footnotes — Maintenance Schedule Additional Required Services - Severe

(1) Or every two years, whichever comes first. More frequent replacement may be needed if the vehicle is driven in areas with heavy traffic, areas with poor air quality, or areas with high dust levels. Replacement may also be needed if there is a reduction in air flow, excessive window fogging, or odors.

(2) Check all fuel and vapor lines and hoses for proper hook-up, routing, and condition.

(3) Or every two years, whichever comes first.

(4) Or every four years, whichever comes first.

(5) Or every five years, whichever comes first. See *Cooling System on page 10-19*.

(6) Or every 10 years, whichever comes first. Inspect for fraying, excessive cracking, or damage; replace, if needed.

(7) Or every three years, whichever comes first.

Special Application Services

- Severe Commercial Use Vehicles Only: Lubricate chassis components every 5 000 km/ 3,000 mi.
- Have underbody flushing service performed. See "Underbody Maintenance" in *Exterior Care on page 10-88*.

Additional Maintenance and Care

Your vehicle is an important investment and caring for it properly may help to avoid future costly repairs. To maintain vehicle performance, additional maintenance services may be required.

It is recommended that your dealer perform these services — their trained dealer technicians know your vehicle best. Your dealer can also perform a thorough assessment with a multi-point inspection to recommend when your vehicle may need attention.

The following list is intended to explain the services and conditions to look for that may indicate services are required.

Battery

The battery supplies power to start the engine and operate any additional electrical accessories.

- To avoid break-down or failure to start the vehicle, maintain a battery with full cranking power.
- Trained dealer technicians have the diagnostic equipment to test the battery and ensure that the connections and cables are corrosion-free.

Belts

- Belts may need replacing if they squeak or show signs of cracking or splitting.
- Trained dealer technicians have access to tools and equipment to inspect the belts and recommend adjustment or replacement when necessary.
- A message may indicate when scheduled maintenance on the timing belt and other components is required.

Brakes

Brakes stop the vehicle and are crucial to safe driving.

- Signs of brake wear may include chirping, grinding, or squealing noises, or difficulty stopping.
- Trained dealer technicians have access to tools and equipment to inspect the brakes and recommend quality parts engineered for the vehicle.

Fluids

Proper fluid levels and approved fluids protect the vehicle's systems and components. See *Recommended Fluids and Lubricants on page 11-12* for GM approved fluids.

- Engine oil and windshield washer fluid levels should be checked at every fuel fill.
- Instrument cluster lights may come on to indicate that fluids may be low and need to be filled.

Hoses

Hoses transport fluids and should be regularly inspected to ensure that there are no cracks or leaks. With a multi-point inspection, your dealer can inspect the hoses and advise if replacement is needed.

Lamps

Properly working headlamps, taillamps, and brake lamps are important to see and be seen on the road.

- Signs that the headlamps need attention include dimming, failure to light, cracking, or damage. The brake lamps need to be checked periodically to ensure that they light when braking.
- With a multi-point inspection, your dealer can check the lamps and note any concerns.

Shocks and Struts

Shocks and struts help aid in control for a smoother ride.

- Signs of wear may include steering wheel vibration, bounce/sway while braking, longer stopping distance, or uneven tire wear.
- As part of the multi-point inspection, trained dealer technicians can visually inspect the shocks and struts for signs of leaking, blown seals, or damage, and can advise when service is needed.

Tires

Tires need to be properly inflated, rotated, and balanced. Maintaining the tires can save money and fuel, and can reduce the risk of tire failure.

- Signs that the tires need to be replaced include three or more visible treadwear indicators; cord or fabric showing through the rubber; cracks or cuts in the tread or sidewall; or a bulge or split in the tire.
- Trained dealer technicians can inspect and recommend the right tires. Your dealer can also provide tire/wheel balancing services to ensure smooth vehicle operation at all speeds. Your dealer sells and services name brand tires.

Vehicle Care

To help keep the vehicle looking like new, vehicle care products are available from your dealer. For information on how to clean and protect the vehicle's interior and exterior, see *Interior Care on page 10-93* and *Exterior Care on page 10-88*.

Wheel Alignment

Wheel alignment is critical for ensuring that the tires deliver optimal wear and performance.

- Signs that the alignment may need to be adjusted include pulling, improper vehicle handling, or unusual tire wear.
- Your dealer has the required equipment to ensure proper wheel alignment.

Windshield

For safety, appearance, and the best viewing, keep the windshield clean and clear.

- Signs of damage include scratches, cracks, and chips.
- Trained dealer technicians can inspect the windshield and recommend proper replacement if needed.

Wiper Blades

Wiper blades need to be cleaned and kept in good condition to provide a clear view.

- Signs of wear include streaking, skipping across the windshield, and worn or split rubber.
- Trained dealer technicians can check the wiper blades and replace them when needed.

Recommended Fluids

Recommended Fluids and Lubricants

Usage	Fluid/Lubricant
Engine Oil (Gasoline)	Use only engine oil meeting the dexos1™ specification of the proper SAE viscosity grade. Look for the dexos1 approved logo for GM approved engine oil. See *Engine Oil on page 10-11*.
Engine Oil (Diesel)	Use only engine oil meeting the dexos2™ specification of the proper SAE viscosity grade. Look for the dexos2 approved logo for GM approved engine oil. See *Engine Oil on page 10-11*.
Engine Coolant	50/50 mixture of clean, drinkable water and use only DEX-COOL® Coolant. See *Engine Coolant on page 10-20*.
Hydraulic Brake/Clutch System	DOT 3 Hydraulic Brake Fluid (GM Part No. 19299818, in Canada 19299819).
Windshield Washer	Automotive windshield washer fluid that meets regional freeze protection requirements.
Diesel Exhaust Aftertreatment System	Diesel Exhaust Fluid (GM Part No. 19286291, in Canada 88862660) or diesel exhaust fluid that meets ISO 22241-1 or displays the API Diesel Exhaust Fluid Certification Mark.
Automatic Transmission (Except 2.0L Diesel)	DEXRON®-VI Automatic Transmission Fluid.

Usage	Fluid/Lubricant
Automatic Transmission (2.0L Diesel)	AW-1 Automatic Transmission Fluid (GM Part No. 19256039, in Canada 19256040).
Manual Transmission	Manual Transmission Fluid (GM Part No. 19259104, in Canada 19259105).
Hood Latch Assembly, Secondary Latch, Pivots, Spring Anchor, and Release Pawl	Lubriplate Lubricant Aerosol (GM Part No. 89021668, in Canada 89021674) or lubricant meeting requirements of NLGI #2, Category LB or GC-LB.
Key Lock Cylinders, Hood and Door Hinges	Multi-Purpose Lubricant, Superlube (GM Part No. 12346241, in Canada 10953474).
Weatherstrip Conditioning	Weatherstrip Lubricant (GM Part No. 3634770, in Canada 10953518) or Dielectric Silicone Grease (GM Part No. 12345579, in Canada 10953481).

Maintenance Replacement Parts

Replacement parts identified here by name, part number, or specification can be obtained from your dealer.

Part	GM Part Number	ACDelco Part Number
Engine Air Cleaner/Filter		
1.4L L4 Engine	13272719	AC3144C
1.8L L4 Engine	13272720	AC3145C
2.0L L4 Diesel Engine	13272719	AC3144C

Part	GM Part Number	ACDelco Part Number
Engine Oil Filter		
1.4L L4 Engine	55594651	PF2257G
1.8L L4 Engine	55594651	PF2257G
2.0L L4 Diesel Engine	19301505	PF2260G
Passenger Compartment Air Filter Element	13271191	CF176
Spark Plugs		
1.4L L4 Engine	55585534	41–122
1.8L L4 Engine	55585534	41–122
Wiper Blades		
Driver – 60.0 cm (23.6 in)	95161605	—
Passenger – 45.0 cm (17.7 in)	95161606	—

Maintenance Records

After the scheduled services are performed, record the date, odometer reading, who performed the service, and the type of services performed in the boxes provided. Retain all maintenance receipts.

Date	Odometer Reading	Serviced By	Services Performed

Date	Odometer Reading	Serviced By	Services Performed

Technical Data

Vehicle Identification
Vehicle Identification Number (VIN) 12-1
Service Parts Identification Label 12-1

Vehicle Data
Capacities and Specifications 12-2
Engine Drive Belt Routing . . . 12-4

Vehicle Identification

Vehicle Identification Number (VIN)

This legal identifier is in the front corner of the instrument panel, on the left side of the vehicle. It can be seen through the windshield from outside. The VIN also appears on the Vehicle Certification and Service Parts labels and certificates of title and registration.

Engine Identification

The eighth character in the VIN is the engine code. This code identifies the vehicle's engine, specifications, and replacement parts. See “Engine Specifications” under *Capacities and Specifications on page 12-2* for the vehicle's engine code.

Service Parts Identification Label

This label, on the inside of the glove box, has the following information:

- Vehicle Identification Number (VIN).
- Model designation.
- Paint information.
- Production options and special equipment.

Do not remove this label from the vehicle.

Vehicle Data

Capacities and Specifications

The following approximate capacities are given in English and metric conversions. Please refer to *Recommended Fluids and Lubricants on page 11-12* for more information.

Application	Capacities	
	Metric	English
Air Conditioning Refrigerant	For the air conditioning system refrigerant type and charge amount, see the refrigerant label under the hood. See your dealer for more information.	
Cooling System		
1.4L L4 Engine	5.5 L	5.8 qt
1.8L L4 Engine	6.5 L	6.9 qt
2.0L L4 Diesel Engine	8.3 L	8.8 qt
Engine Oil with Filter		
1.4L L4 Engine	4.0 L	4.25 qt
1.8L L4 Engine	4.0 L	4.25 qt
2.0L L4 Diesel Engine	4.5 L	4.75 qt

Application	Capacities	
	Metric	English
Fuel Tank		
Standard Fuel Tank	59.0 L	15.6 gal
With RPO NL6 Fuel Tank	48.0 L	12.6 gal
Diesel Exhaust Fluid (DEF)	18.5 L	4.9 gal
Wheel Nut Torque	140 N•m	100 lb ft
All capacities are approximate. When adding, be sure to fill to the approximate level, as recommended in this manual.		

Engine Specifications

Engine	VIN Code	Transmission	Spark Plug Gap
1.4L L4 (LUV)	B	Automatic Manual	0.60 – 0.70 mm (0.24 – 0.028 in)
1.8L L4 (LUW)	H	Automatic Manual	0.60 – 0.70 mm (0.24 – 0.028 in)
1.8L L4 (LWE)	G	Automatic Manual	0.60 – 0.70 mm (0.24 – 0.028 in)
2.0L L4 Diesel (LUZ)	Z	Automatic	-
Spark plug gap is for replacement spark plugs.			

Engine Drive Belt Routing

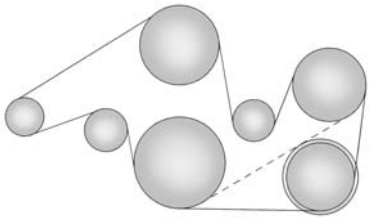

1.4L L4 Engine

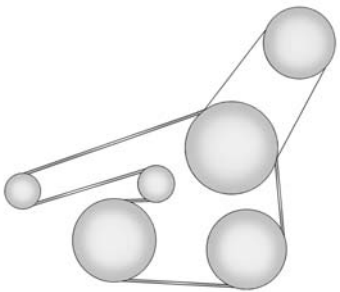

1.8L L4 Engine

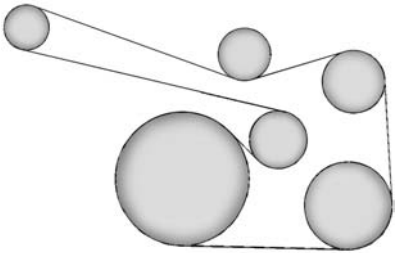

2.0L L4 Diesel Engine

Customer Information

Customer Information
Customer Satisfaction Procedure 13-1
Customer Assistance Offices 13-3
Customer Assistance for Text Telephone (TTY) Users 13-4
Online Owner Center 13-4
GM Mobility Reimbursement Program 13-5
Roadside Assistance Program 13-5
Scheduling Service Appointments 13-7
Courtesy Transportation Program 13-7
Collision Damage Repair 13-8
Service Publications Ordering Information 13-11
Radio Frequency Identification (RFID) 13-12
Radio Frequency Statement 13-12

Reporting Safety Defects
Reporting Safety Defects to the United States Government 13-12
Reporting Safety Defects to the Canadian Government 13-13
Reporting Safety Defects to General Motors 13-13

Vehicle Data Recording and Privacy
Vehicle Data Recording and Privacy 13-14
Event Data Recorders 13-14
Infotainment System 13-15

Customer Information

Customer Satisfaction Procedure

Your satisfaction and goodwill are important to your dealer and to Chevrolet. Normally, any concerns with the sales transaction or the operation of the vehicle will be resolved by your dealer's sales or service departments. Sometimes, however, despite the best intentions of all concerned, misunderstandings can occur. If your concern has not been resolved to your satisfaction, the following steps should be taken:

STEP ONE: Discuss your concern with a member of dealership management. Normally, concerns can be quickly resolved at that level. If the matter has already been reviewed with the sales, service, or parts manager, contact the owner of your dealership or the general manager.

STEP TWO: If after contacting a member of dealership management, it appears your concern cannot be resolved by your dealership without further help, in the U.S., call the Chevrolet Customer Assistance Center at 1-800–222–1020. In Canada, call General Motors of Canada Customer Care Centre at 1-800-263-3777 (English), or 1-800-263-7854 (French).

We encourage you to call the toll-free number in order to give your inquiry prompt attention. Have the following information available to give the Customer Assistance representative:

- Vehicle Identification Number (VIN). This is available from the vehicle registration or title, or the plate at the top left of the instrument panel and visible through the windshield.
- Dealership name and location.
- Vehicle delivery date and present mileage.

When contacting Chevrolet, remember that your concern will likely be resolved at a dealer's facility. That is why we suggest following Step One first.

STEP THREE — U.S. Owners: Both General Motors and your dealer are committed to making sure you are completely satisfied with the new vehicle. However, if you continue to remain unsatisfied after following the procedure outlined in Steps One and Two, you can file with the Better Business Bureau (BBB) Auto Line® Program to enforce your rights.

The BBB Auto Line Program is an out-of-court program administered by the Council of Better Business Bureaus to settle automotive disputes regarding vehicle repairs or the interpretation of the New Vehicle Limited Warranty. Although you may be required to resort to this informal dispute resolution program prior to filing a court action, use of the program is free of charge and your case will generally be heard within 40 days. If you do not agree with the decision given in your case, you may reject it and proceed with any other venue for relief available to you.

You may contact the BBB Auto Line Program using the toll-free telephone number or write them at the following address:

BBB Auto Line Program
Council of Better Business Bureaus, Inc.
4200 Wilson Boulevard
Suite 800
Arlington, VA 22203-1838

Telephone: 1-800-955-5100
www.dr.bbb.org/goauto

This program is available in all 50 states and the District of Columbia. Eligibility is limited by vehicle age, mileage, and other factors. General Motors reserves the right to change eligibility limitations and/or discontinue its participation in this program.

STEP THREE — Canadian Owners: In the event that you do not feel your concerns have been addressed after following the procedure outlined in Steps One and Two, General Motors of Canada Limited wants you to be aware of its participation in a no-charge Mediation/Arbitration Program. General Motors of Canada Limited has committed to binding arbitration of owner disputes involving factory-related vehicle service claims. The program provides for the review of the facts involved by an impartial third party arbiter, and may include an informal hearing before the arbiter. The program is designed so that the entire dispute settlement process, from the time you file your complaint to the final decision, should be completed in about 70 days. We believe our impartial program offers advantages over courts in most jurisdictions because it is informal, quick, and free of charge.

For further information concerning eligibility in the Canadian Motor Vehicle Arbitration Plan (CAMVAP), call toll-free 1-800-207-0685, or call the General Motors Customer Care Centre, 1-800-263-3777 (English), 1-800-263-7854 (French), or write to:

The Mediation/Arbitration Program
c/o Customer Care Centre
General Motors of Canada Limited
Mail Code: CA1-163-005
1908 Colonel Sam Drive
Oshawa, Ontario L1H 8P7

The inquiry should be accompanied by the Vehicle Identification Number (VIN).

Customer Assistance Offices

Chevrolet encourages customers to call the toll-free number for assistance. However, if a customer wishes to write or e-mail Chevrolet, the letter should be addressed to:

United States and Puerto Rico

Chevrolet Motor Division
Chevrolet Customer Assistance Center
P.O. Box 33170
Detroit, MI 48232-5170
www.Chevrolet.com

1-800-222-1020
1-800-833-2438 (For Text Telephone Devices (TTYs))
Roadside Assistance:
1-800-243-8872

From U.S. Virgin Islands:

1-800-496-9994

Canada

General Motors of Canada Limited
Customer Care Centre, Mail Code: CA1-163-005
1908 Colonel Sam Drive
Oshawa, Ontario L1H 8P7
www.gm.ca

1-800-263-3777 (English)
1-800-263-7854 (French)
1-800-263-3830 (For Text Telephone devices (TTYs))
Roadside Assistance:
1-800-268-6800

Overseas

Please contact the local General Motors Business Unit.

Customer Assistance for Text Telephone (TTY) Users

To assist customers who are deaf, hard of hearing, or speech-impaired and who use Text Telephones (TTYs), Chevrolet has TTY equipment available at its Customer Assistance Center. Any TTY user in the U.S. can communicate with Chevrolet by dialing: 1-800-833-2438. TTY users in Canada can dial 1-800-263-3830.

Online Owner Center

Online Owner Experience (U.S.) my.chevrolet.com

The Chevrolet online owner experience allows interaction with Chevrolet and keeps important vehicle-specific information in one place.

Membership Benefits

(Vehicle Information): Download owner manuals and view vehicle-specific how-to videos.

(Maintenance Information): View maintenance schedules, alerts, and OnStar onboard vehicle diagnostic information. Schedule service appointments.

(Service History): View and print dealer-recorded service records and self-recorded service records.

(Preferred Dealer Information): Select a preferred dealer and view locations, maps, phone numbers, and hours.

(Warranty Tracking Information): Track the vehicle's warranty information.

(Recall Information): View active recalls by Vehicle Identification Number (VIN). See *Vehicle Identification Number (VIN) on page 12-1*.

(Other Account Information): View GM Card, SiriusXM Satellite radio (if equipped), and OnStar account information.

(Live Chat Support): Chat live with online help representatives.

See my.chevrolet.com to register your vehicle.

Chevrolet Owner Centre (Canada) chevroletowner.ca

Visit the Chevrolet Owner Centre:

- Chat live with online help representatives.
- Locate owner resources such as lease-end, financing, and warranty information.
- Retrieve your favorite articles, quizzes, tips, and multimedia galleries organized into the Featured Articles and Auto Care Sections.
- Download owner manuals.
- Find the Chevrolet-recommended maintenance services.

GM Mobility Reimbursement Program

This program is available to qualified applicants for cost reimbursement of eligible aftermarket adaptive equipment required for the vehicle, such as hand controls or a wheelchair/scooter lift for the vehicle.

For more information on the limited offer, visit www.gmmobility.com or call the GM Mobility Assistance Center at 1-800-323-9935. Text Telephone (TTY) users, call 1-800-833-9935.

General Motors of Canada also has a Mobility Program. Visit www.gm.ca or call 1-800-GM-DRIVE (463-7483) for details. TTY users call 1-800-263-3830.

Roadside Assistance Program

For U.S.-purchased vehicles, call 1-800-243-8872. (Text Telephone (TTY): 1-888-889-2438.)

For Canadian-purchased vehicles, call 1-800-268-6800.

Service is available 24 hours a day, 365 days a year.

Calling for Assistance

When calling Roadside Assistance, have the following information ready:

- Your name, home address, and home telephone number.
- Telephone number of your location.
- Location of the vehicle.

- Model, year, color, and license plate number of the vehicle.
- Odometer reading, Vehicle Identification Number (VIN), and delivery date of the vehicle.
- Description of the problem.

Coverage

Services are provided up to 5 years/ 160 000 km (100,000 mi), whichever comes first.

In the U.S., anyone driving the vehicle is covered. In Canada, a person driving the vehicle without permission from the owner is not covered.

Roadside Assistance is not a part of the New Vehicle Limited Warranty. General Motors North America and Chevrolet reserve the right to make any changes or discontinue the Roadside Assistance program at any time without notification.

General Motors North America and Chevrolet reserve the right to limit services or payment to an owner or driver if they decide the claims are made too often, or the same type of claim is made many times.

Services Provided

- **Emergency Fuel Delivery:** Delivery of enough fuel for the vehicle to get to the nearest service station.
- **Lock-Out Service:** Service to unlock the vehicle if you are locked out. A remote unlock may be available if you have OnStar. For security reasons, the driver must present identification before this service is given.
- **Emergency Tow from a Public Road or Highway:** Tow to the nearest Chevrolet dealer for warranty service, or if the vehicle was in a crash and cannot be driven. Assistance is not given when the vehicle is stuck in the sand, mud, or snow.
- **Flat Tire Change:** Service to change a flat tire with the spare tire. The spare tire, if equipped, must be in good condition and properly inflated. It is the owner's responsibility for the repair or replacement of the tire if it is not covered by the warranty.
- **Battery Jump Start:** Service to jump start a dead battery.

Services Not Included in Roadside Assistance

- Impound towing caused by violation of any laws.
- Legal fines.
- Mounting, dismounting, or changing of snow tires, chains, or other traction devices.

Service is not provided if a vehicle is in an area that is not accessible to the service vehicle or is not a regularly traveled or maintained public road, which includes ice and winter roads. Off-road use is not covered.

Services Specific to Canadian-Purchased Vehicles

- **Fuel Delivery:** Reimbursement is up to 7 liters. Diesel fuel delivery may be restricted. Propane and other fuels are not provided through this service.
- **Lock-Out Service:** Vehicle registration is required.
- **Trip Interruption Benefits and Assistance:** Must be over 150 kilometers from where your trip was started to qualify. General Motors of Canada Limited requires pre-authorization, original detailed receipts, and a copy of the repair orders. Once authorization has been received, the Roadside Assistance advisor will help to make arrangements and explain how to receive payment.
- **Alternative Service:** If assistance cannot be provided right away, the Roadside Assistance advisor may give permission to get local emergency road service. You will receive payment, up to $100, after sending the original receipt to Roadside Assistance. Mechanical failures may be covered, however any cost for parts and labor for repairs not covered by the warranty are the owner responsibility.

Scheduling Service Appointments

When the vehicle requires warranty service, contact your dealer and request an appointment. By scheduling a service appointment and advising the service consultant of your transportation needs, your dealer can help minimize your inconvenience.

If the vehicle cannot be scheduled into the service department immediately, keep driving it until it can be scheduled for service, unless, of course, the problem is safety related. If it is, please call your dealership, let them know this, and ask for instructions.

If your dealer requests you to bring the vehicle for service, you are urged to do so as early in the work day as possible to allow for same-day repair.

Courtesy Transportation Program

To enhance your ownership experience, we and our participating dealers are proud to offer Courtesy Transportation, a customer support program for vehicles with the Bumper-to-Bumper (Base Warranty Coverage period in Canada), extended powertrain, and/or hybrid-specific warranties in both the U.S. and Canada.

Several Courtesy Transportation options are available to assist in reducing inconvenience when warranty repairs are required.

Courtesy Transportation is not a part of the New Vehicle Limited Warranty. A separate booklet entitled “Limited Warranty and Owner Assistance Information” furnished with each new vehicle provides detailed warranty coverage information.

Transportation Options

Warranty service can generally be completed while you wait. However, if you are unable to do so, your dealer may offer the following transportation options:

Shuttle Service

This includes one-way or round-trip shuttle service within reasonable time and distance parameters of your dealer's area.

Public Transportation or Fuel Reimbursement

If overnight warranty repairs are needed, and public transportation is used, the expense must be supported by original receipts and within the maximum amount allowed by GM for shuttle service. If U.S. customers arrange their own transportation, limited reimbursement for reasonable fuel expenses may be available. Claim amounts should reflect actual costs and be supported by original receipts. See your dealer for information.

Courtesy Rental Vehicle

For an overnight warranty repair, the dealer may provide an available courtesy rental vehicle or provide for reimbursement of a rental vehicle. Reimbursement is limited and must be supported by original receipts as well as a signed and completed rental agreement and meet state/provincial, local, and rental vehicle provider requirements. Requirements vary and may include minimum age requirements, insurance coverage, credit card, etc. Additional fees such as fuel usage charges, taxes, levies, usage fees, excessive mileage, or rental usage beyond the completion of the repair are also your responsibility. It may not be possible to provide a like vehicle as a courtesy rental.

Additional Program Information

All program options, such as shuttle service, may not be available at every dealer. Contact your dealer for specific availability.

General Motors reserves the right to unilaterally modify, change, or discontinue Courtesy Transportation at any time and to resolve all questions of claim eligibility pursuant to the terms and conditions described herein at its sole discretion.

Collision Damage Repair

If the vehicle is involved in a collision and it is damaged, have the damage repaired by a qualified technician using the proper equipment and quality replacement parts. Poorly performed collision repairs diminish the vehicle resale

value, and safety performance can be compromised in subsequent collisions.

Collision Parts

Genuine GM Collision parts are new parts made with the same materials and construction methods as the parts with which the vehicle was originally built. Genuine GM Collision parts are the best choice to ensure that the vehicle's designed appearance, durability, and safety are preserved. The use of Genuine GM parts can help maintain the GM New Vehicle Limited Warranty.

Recycled original equipment parts may also be used for repair. These parts are typically removed from vehicles that were total losses in prior crashes. In most cases, the parts being recycled are from undamaged sections of the vehicle. A recycled original equipment GM part may be an acceptable choice to maintain the vehicle's originally designed appearance and safety performance; however, the history of these parts is not known. Such parts are not covered by the GM New Vehicle Limited Warranty, and any related failures are not covered by that warranty.

Aftermarket collision parts are also available. These are made by companies other than GM and may not have been tested for the vehicle. As a result, these parts may fit poorly, exhibit premature durability/corrosion problems, and may not perform properly in subsequent collisions. Aftermarket parts are not covered by the GM New Vehicle Limited Warranty, and any vehicle failure related to such parts is not covered by that warranty.

Repair Facility

GM also recommends that you choose a collision repair facility that meets your needs before you ever need collision repairs. Your dealer may have a collision repair center with GM-trained technicians and state-of-the-art equipment, or be able to recommend a collision repair center that has GM-trained technicians and comparable equipment.

Insuring the Vehicle

Protect your investment in the GM vehicle with comprehensive and collision insurance coverage. There are significant differences in the quality of coverage afforded by various insurance policy terms. Many insurance policies provide reduced protection to the GM vehicle by limiting compensation for damage repairs by using aftermarket collision parts. Some insurance companies will not specify aftermarket collision parts. When purchasing insurance, we recommend that you ensure that the vehicle will be repaired with GM original equipment collision parts. If such insurance coverage is not available from your current insurance carrier, consider switching to another insurance carrier.

If the vehicle is leased, the leasing company may require you to have insurance that ensures repairs with Genuine GM Original Equipment Manufacturer (OEM) parts or Genuine Manufacturer replacement parts. Read the lease carefully, as you may be charged at the end of the lease for poor quality repairs.

If a Crash Occurs

If there has been an injury, call emergency services for help. Do not leave the scene of a crash until all matters have been taken care of. Move the vehicle only if its position puts you in danger, or you are instructed to move it by a police officer.

Give only the necessary information to police and other parties involved in the crash.

For emergency towing see *Roadside Assistance Program on page 13-5*.

Gather the following information:

- Driver name, address, and telephone number.
- Driver license number.
- Owner name, address, and telephone number.
- Vehicle license plate number.
- Vehicle make, model, and model year.
- Vehicle Identification Number (VIN).
- Insurance company and policy number.
- General description of the damage to the other vehicle.

Choose a reputable repair facility that uses quality replacement parts. See “Collision Parts” earlier in this section.

If the airbag has inflated, see *What Will You See after an Airbag Inflates? on page 3-20*.

Managing the Vehicle Damage Repair Process

In the event that the vehicle requires damage repairs, GM recommends that you take an active role in its repair. If you have a pre-determined repair facility of choice, take the vehicle there, or have it towed there. Specify to the facility that any required replacement collision parts be original equipment parts, either new Genuine GM parts or recycled original GM parts. Remember, recycled parts will not be covered by the GM vehicle warranty.

Insurance pays the bill for the repair, but you must live with the repair. Depending on your policy limits, your insurance company may initially value the repair using aftermarket parts. Discuss this with the repair professional, and insist on Genuine GM parts. Remember, if the vehicle is leased, you may be obligated to have the vehicle repaired with Genuine GM parts, even if your insurance coverage does not pay the full cost.

If another party's insurance company is paying for the repairs, you are not obligated to accept a repair valuation based on that insurance company's collision policy repair limits, as you have no contractual limits with that company. In such cases, you can have control of the repair and parts choices as long as the cost stays within reasonable limits.

Service Publications Ordering Information

Service Manuals

Service Manuals have the diagnosis and repair information on the engines, transmission, axle, suspension, brakes, electrical, steering, body, etc.

Service Bulletins

Service Bulletins give additional technical service information needed to knowledgeably service General Motors cars and trucks. Each bulletin contains instructions to assist in the diagnosis and service of the vehicle.

Owner Information

Owner publications are written specifically for owners and intended to provide basic operational information about the vehicle. The Owner Manual includes the Maintenance Schedule for all models.

In-Portfolio: Includes a Portfolio, Owner Manual, and Warranty Manual.

RETAIL SELL PRICE: $35.00 – $40.00 (U.S.) plus handling and shipping fees.

Without Pouch: Owner Manual only.

RETAIL SELL PRICE:
$25.00 (U.S.) plus handling and shipping fees.

Current and Past Models

Technical Service Bulletins and Manuals are available for current and past model GM vehicles.

ORDER TOLL FREE:
1-800-551-4123 Monday – Friday
8:00 AM – 6:00 PM Eastern Time

For Credit Card Orders Only (VISA-MasterCard-Discover), see Helm, Inc. at: www.helminc.com.

Or write to:

Helm, Incorporated
Attention: Customer Service
47911 Halyard Drive
Plymouth, MI 48170

Prices are subject to change without notice and without incurring obligation. Allow ample time for delivery.

All listed prices are quoted in U.S. funds. Make checks payable in U.S. funds.

Radio Frequency Identification (RFID)

RFID technology is used in some vehicles for functions such as tire pressure monitoring and ignition system security, as well as in connection with conveniences such as Remote Keyless Entry (RKE) transmitters for remote door locking/unlocking and starting, and in-vehicle transmitters for garage door openers. RFID technology in GM vehicles does not use or record personal information or link with any other GM system containing personal information.

Radio Frequency Statement

This vehicle has systems that operate on a radio frequency that complies with Part 15/Part 18 of the Federal Communications Commission (FCC) rules and with Industry Canada Standards RSS-GEN/210/220/310, ICES-001.

Operation is subject to the following two conditions:

1. The device may not cause harmful interference.
2. The device must accept any interference received, including interference that may cause undesired operation of the device.

Changes or modifications to any of these systems by other than an authorized service facility could void authorization to use this equipment.

Reporting Safety Defects

Reporting Safety Defects to the United States Government

If you believe that your vehicle has a defect which could cause a crash or could cause injury or death, you should immediately inform the National Highway Traffic Safety Administration (NHTSA) in addition to notifying General Motors.

If NHTSA receives similar complaints, it may open an investigation, and if it finds that a safety defect exists in a group of vehicles, it may order a recall and remedy campaign. However, NHTSA cannot become involved in individual problems between you, your dealer, or General Motors.

To contact NHTSA, you may call the Vehicle Safety Hotline toll-free at 1-888-327-4236 (TTY: 1-800-424-9153); go to *http://www.safercar.gov;* or write to:

Administrator, NHTSA
1200 New Jersey Avenue, S.E.
Washington, D.C. 20590

You can also obtain other information about motor vehicle safety from *http://www.safercar.gov*.

Reporting Safety Defects to the Canadian Government

If you live in Canada, and you believe that the vehicle has a safety defect, notify Transport Canada immediately, and notify General Motors of Canada Limited. Call Transport Canada at 1-800-333-0510 or write to:

Transport Canada
Road Safety Branch
80 rue Noel
Gatineau, QC J8Z 0A1

Reporting Safety Defects to General Motors

In addition to notifying NHTSA (or Transport Canada) in a situation like this, notify General Motors.

Call 1-800-222-1020, or write:

Chevrolet Motor Division
Chevrolet Customer Assistance Center
P.O. Box 33170
Detroit, MI 48232-5170

In Canada, call 1-800-263-3777 (English) or 1-800-263-7854 (French), or write:

General Motors of Canada Limited
Customer Care Centre, Mail Code: CA1-163-005
1908 Colonel Sam Drive
Oshawa, Ontario L1H 8P7

Vehicle Data Recording and Privacy

The vehicle has a number of computers that record information about the vehicle's performance and how it is driven. For example, the vehicle uses computer modules to monitor and control engine and transmission performance, to monitor the conditions for airbag deployment and deploy them in a crash, and, if equipped, to provide antilock braking to help the driver control the vehicle. These modules may store data to help the dealer technician service the vehicle. Some modules may also store data about how the vehicle is operated, such as rate of fuel consumption or average speed. These modules may retain personal preferences, such as radio presets, seat positions, and temperature settings.

Event Data Recorders

This vehicle is equipped with an event data recorder (EDR). The main purpose of an EDR is to record, in certain crash or near crash-like situations, such as an air bag deployment or hitting a road obstacle, data that will assist in understanding how a vehicle's systems performed. The EDR is designed to record data related to vehicle dynamics and safety systems for a short period of time, typically 30 seconds or less. The EDR in this vehicle is designed to record such data as:

- How various systems in your vehicle were operating;
- Whether or not the driver and passenger safety belts were buckled/fastened;
- How far (if at all) the driver was depressing the accelerator and/or brake pedal; and,
- How fast the vehicle was traveling.

These data can help provide a better understanding of the circumstances in which crashes and injuries occur. NOTE: EDR data are recorded by your vehicle only if a non-trivial crash situation occurs; no data are recorded by the EDR under normal driving conditions and no personal data (e.g., name, gender, age, and crash location) are recorded. However, other parties, such as law enforcement, could combine the EDR data with the type of personally identifying data routinely acquired during a crash investigation.

To read data recorded by an EDR, special equipment is required, and access to the vehicle or the EDR is needed. In addition to the vehicle manufacturer, other parties, such as law enforcement, that have the special equipment, can read the information if they have access to the vehicle or the EDR.

GM will not access this data or share it with others except: with the consent of the vehicle owner or,

if the vehicle is leased, with the consent of the lessee; in response to an official request by police or similar government office; as part of GM's defense of litigation through the discovery process; or, as required by law. Data that GM collects or receives may also be used for GM research needs or may be made available to others for research purposes, where a need is shown and the data is not tied to a specific vehicle or vehicle owner.

Infotainment System

If the vehicle is equipped with a navigation system as part of the infotainment system, use of the system may result in the storage of destinations, addresses, telephone numbers, and other trip information. See the infotainment manual for information on stored data and for deletion instructions.

✍ NOTES

OnStar

OnStar Overview
OnStar Overview 14-1

OnStar Services
Emergency 14-2
Security 14-3
Navigation 14-3
Connections 14-4
Vehicle Diagnostics 14-6

OnStar Additional Information
OnStar Additional Information 14-6

OnStar Overview

Voice Command Button

Blue OnStar Button

Emergency Button

This vehicle may be equipped with a comprehensive, in-vehicle system that can connect to a live OnStar Advisor for Emergency, Security, Navigation, Connection, and Diagnostic Services. OnStar services may require a paid subscription. OnStar requires the vehicle battery and electrical system, cellular service, and GPS satellite signals to be available and operating. OnStar acts as a link to existing public emergency service providers. OnStar may collect information about you and your vehicle, including location information. See OnStar's Terms and Conditions and Privacy Statement for more details including system limitations at www.onstar.com (U.S.) or www.onstar.ca (Canada).

The OnStar system status light is next to the OnStar buttons. If the status light is:

- Solid Green: System is on.
- Flashing Green: On a call.
- Red: Indicates a problem.
- Off: System is off. Press twice to speak with an OnStar Advisor.

Press or call 1-888-4-ONSTAR (1-888-466-7827) to speak to an Advisor.

Press to:

- Make a call, end a call, or answer an incoming call.
- Give OnStar Hands-Free Calling voice commands.

- Give OnStar Turn-by-Turn Navigation voice commands. Requires a specific OnStar subscription plan.
- Obtain the WiFi network name, or Service Set Identifier or SSID, and passphrase (if equipped).

Press On to connect to a live Advisor to:

- Verify account information or update contact information.
- Get driving directions. Requires a specific OnStar subscription plan.
- Receive On-Demand Diagnostics for a check of the vehicle's key operating systems.
- Receive Roadside Assistance.
- Manage WiFi Settings (if equipped).

Press SOS to get a priority connection to an OnStar Emergency Advisor available 24/7 to:

- Get help for an emergency.
- Be a Good Samaritan or respond to an AMBER Alert.
- Get assistance in severe weather or other crisis and evacuation routes.

OnStar Services

Emergency

With Automatic Crash Response, the OnStar system can automatically connect to an OnStar Emergency Advisor. The built-in system can automatically connect to help in certain crashes.

Press SOS to connect to an OnStar Emergency Advisor. GPS technology is used to identify the vehicle location and can provide important information to emergency personnel. OnStar Emergency Advisors are trained to provide assistance and link to existing public emergency service providers in emergency situations.

With OnStar Crisis Assist, specially trained Crisis Advisors are available 24 hours a day, 7 days a week, to provide a central point of contact, assistance, and information if a crisis occurs.

Security

OnStar provides services including Stolen Vehicle Assistance, Remote Ignition Block, and Roadside Assistance, if equipped. OnStar can unlock the vehicle doors remotely, if equipped with automatic door locks, and can help police locate the vehicle if it is stolen.

Navigation

OnStar navigation requires a specific OnStar subscription plan.

Press to receive directions or have them sent to the vehicle navigation screen, if equipped. Destinations can also be forwarded to the vehicle from MapQuest.com.

Turn-by-Turn Navigation

1. Press to connect to a live Advisor.
2. Request directions.
3. Directions are downloaded to the vehicle.
4. Follow the voice-guided commands.

Using Voice Commands During a Planned Route

Cancel Route

1. Press . System responds: “OnStar ready,” then a tone. Say “Cancel route.” System responds: “Do you want to cancel directions?”
2. Say “Yes.” System responds: “OK, request completed, thank you, goodbye.”

Route Preview

1. Press . System responds: “OnStar ready,” then a tone.
2. Say “Route preview.” System responds with the next three maneuvers.

Repeat

1. Press . System responds: “OnStar ready,” then a tone.
2. Say “Repeat.” System responds with the last direction given, then responds with “OnStar ready,” then a tone.

Get My Destination

1. Press . System responds: “OnStar ready,” then a tone.
2. Say “Get my destination.” System responds with the address and the distance to the destination, then responds with “OnStar ready,” then a tone.

Other Navigation Services Available from OnStar

OnStar eNav: Subscribers can send destinations from MapQuest.com to the vehicle Turn-by-Turn Navigation or screen-based navigation system (if equipped). When ready, the directions will be downloaded to the vehicle.

Destination Download: Press , then request the Advisor to download directions to the

navigation system in the vehicle (if equipped). After the call ends, press the “Go” button on the navigation screen to begin driving directions.

If directions are downloaded to the navigation system, the route can only be canceled through the navigation system.

Destinations can also be downloaded on the go. For information about eNav or Destination Download, see www.onstar.com (U.S.) or www.onstar.ca (Canada).

Connections

The required specific Onstar subscription plan includes the services that follow to help customers stay connected.

For coverage maps, see www.onstar.com (U.S.) or www.onstar.ca (Canada).

WiFi Connectivity (If Equipped)

The vehicle has a WiFi hotspot that provides a high-speed, wireless Internet connection to connect multiple mobile devices (data plan required).

1. To retrieve WiFi hotspot information, press and select or say “WiFi settings.”
2. The WiFi settings will display the WiFi network name/SSID, passphrase, and level of encryption.
3. To change the SSID or passphrase, press or call 1-888-4-ONSTAR to connect with an Advisor.

OnStar RemoteLink® Mobile App (If Equipped)

Download the OnStar RemoteLink mobile app to select Apple®, Android™, and BlackBerry® or Windows 7 or 8 mobile devices. From the mobile device, check the vehicle’s fuel level, oil life, or tire pressure (if the vehicle is equipped with the tire pressure monitoring system); or activate remote horn and lights. Also remote start the vehicle (if factory equipped) or unlock the doors from anywhere with a wireless connection (if equipped with automatic locks). With a required specific OnStar subscription plan, a destination can be sent to the vehicle. For OnStar RemoteLink information and compatibility, see www.onstar.com (U.S.) or www.onstar.ca (Canada).

OnStar RemoteLink® Key Fob Services

This feature is included for five years and allows for remote door lock/unlock (if equipped with automatic locks), remote start (if factory equipped), or activation of horn and lights from anywhere with a wireless signal. Download the app and start using it any time during the trial period to get started.

OnStar Hands-Free Calling

This service allows calls to be made and received from the vehicle.

To Make a Call

1. Press . System responds: “OnStar ready.”
2. Say “Call.” System responds: “Call. Please say the name or number to call.”
3. Say the entire number without pausing, including a “1” and the area code. System responds: “OK, calling.”

Calling 911 Emergency

1. Press . System responds: “OnStar ready,” followed by a tone.
2. Say “Call.” System responds: “Call. Please say the name or number to call.”
3. Say “911” without pausing. System responds: “911.”
4. Say “Call.” System responds: “OK, dialing 911.”

Retrieve My Number

1. Press . System responds: “OnStar ready.”
2. Say “My number.” System responds: “Your OnStar Hands-Free Calling number is,” then says the number.

End a Call

Press . System responds: “Call ended.”

Store a Name Tag for Speed Dialing

1. Press . System responds: “OnStar ready.”
2. Say “Store.” System responds: “Please say the number you would like to store.”
3. Say the entire number without pausing. System responds: “Please say the name tag.”
4. Pick a name tag. System responds: “About to store <name tag>. Does that sound OK?”
5. Say “Yes” or say “No” to try again. System responds: “OK, storing <name tag>.”

Place a Call Using a Stored Number

1. Press . System responds: “OnStar ready.”
2. Say “Call <name tag>.” System responds: “OK, calling <name tag>.”

Verify Minutes and Expiration

Press and say “Minutes” then “Verify” to check how many minutes remain and their expiration date.

Vehicle Diagnostics

OnStar Vehicle Diagnostics can perform a vehicle check every month. It will check the engine, transmission, antilock brakes, and other major vehicle systems. It also checks the tire pressures, if the vehicle is equipped with the Tire Pressure Monitoring System. If an On-Demand Diagnostics check is needed, press On, and an Advisor can run a check.

OnStar Additional Information

Transferring Service

Press On to request account transfer eligibility information. The Advisor can assist in canceling or removing account information.

Selling/Transferring the Vehicle

Call 1-888-4-ONSTAR immediately to terminate your OnStar services if the vehicle is disposed of, sold, transferred, or if the lease ends.

Reactivation for Subsequent Owners

Press On and follow the prompts to speak to an Advisor as soon as possible. The Advisor will update vehicle records and explain the OnStar service options available.

How OnStar Service Works

Automatic Crash Response, Emergency Services, Crisis Assist, Stolen Vehicle Assistance, Vehicle Diagnostics, Remote Door Unlock, Roadside Assistance, Turn-by-Turn Navigation, and Hands-Free Calling are available on most vehicles. Not all OnStar services are available everywhere or on all vehicles. For more information, a full description of OnStar services, system limitations, and OnStar terms and conditions:

- Call 1-888-4-ONSTAR (1-888-466-7827).
- See www.onstar.com (U.S.).
- See www.onstar.ca (Canada).
- Call TTY 1-877-248-2080.
- Press On to speak with an Advisor.

OnStar services cannot work unless the vehicle is in a place where OnStar has an agreement with a wireless service provider for service

in that area. The wireless service provider must also have coverage, network capacity, reception, and technology compatible with OnStar services. Service involving location information about the vehicle cannot work unless GPS signals are available, unobstructed, and compatible with the OnStar hardware. OnStar services may not work if the OnStar equipment is not properly installed or it has not been properly maintained. If equipment or software is added, connected, or modified, OnStar services may not work. Other problems beyond the control of OnStar may prevent service such as hills, tall buildings, tunnels, weather, electrical system design and architecture of the vehicle, damage to the vehicle in a crash, or wireless phone network congestion or jamming.

See *Radio Frequency Statement on page 13-12*.

Services for People with Disabilities

Advisors provide services to help subscribers with physical disabilities and medical conditions.

Press On for help with:

- Locating a gas station with an attendant to pump gas.
- Finding a hotel, restaurant, etc., that meets accessibility needs.
- Providing directions to the closest hospital or pharmacy in urgent situations.

TTY Users

OnStar has the ability to communicate to deaf, hard-of-hearing, or speech-impaired customers while in the vehicle. The available dealer-installed TTY system can provide in-vehicle access to all of the OnStar services, except Virtual Advisor and OnStar Turn-by-Turn Navigation.

OnStar Personal Identification Number (PIN)

A PIN is needed to access some of the OnStar services, like Remote Door Unlock and Stolen Vehicle Assistance. The PIN will need to be changed the first time when speaking with an Advisor. To change the OnStar PIN, contact an OnStar Advisor by pressing On or calling 1-888-4-ONSTAR.

Warranty

OnStar equipment may be warranted as part of the vehicle warranty.

Languages

The vehicle can be programmed to respond in multiple languages. Press On and ask for an Advisor. Advisors are available in English, Spanish, and French. Available languages may vary by country.

Potential Issues

OnStar cannot perform Remote Door Unlock or Stolen Vehicle Assistance after the vehicle has been off continuously for five days. After five days, OnStar can contact Roadside Assistance and a locksmith to help gain access to the vehicle.

Global Positioning System (GPS)

- Obstruction of the GPS can occur in a large city with tall buildings; in parking garages; around airports; in tunnels, underpasses; or in an area with very dense trees. If GPS signals are not available, the OnStar system should still operate to call OnStar. However, OnStar could have difficulty identifying the exact location.
- In emergency situations, OnStar can use the last stored GPS location to send to emergency responders.

A temporary loss of GPS can cause loss of the ability to send a Turn-by-Turn Navigation route. The Advisor may give a verbal route or may ask for a call back after the vehicle is driven into an open area.

Cellular and GPS Antennas

Do not place items over or near the antenna to prevent blocking cellular and GPS signal reception. Cellular reception is required for OnStar to send remote signals to the vehicle.

Unable to Connect to OnStar Message

If there is limited cellular coverage or the cellular network has reached maximum capacity, this message may come on. Press on to try the call again or try again after driving a few miles into another cellular area.

Vehicle and Power Issues

OnStar services require a vehicle electrical system, wireless service, and GPS satellite technologies to be available and operating for features to function properly. These systems may not operate if the battery is discharged or disconnected.

Add-on Electrical Equipment

The OnStar system is integrated into the electrical architecture of the vehicle. Do not add any electrical equipment. See *Add-On Electrical Equipment on page 9-68*. Added electrical equipment may interfere with the operation of the OnStar system and cause it to not operate.

Privacy

The complete OnStar Privacy Statement may be found at www.onstar.com (U.S.), or www.onstar.ca (Canada). We recommend that you review it. If you have any questions, call 1-888-4-ONSTAR (1-888-466-7827) or press on to speak with an Advisor. Users of wireless communications are cautioned that the privacy of any information sent via wireless cellular communications cannot be assured. Third parties

may unlawfully intercept or access transmissions and private communications without consent.

OnStar - software acknowledgements

Certain OnStar components include libcurl and unzip software and other third party software. Below are the notices and licenses associated with libcurl and unzip and for other third party software please see http://www.lg.com/global/support/opensource/index and https://www.onstar.com/web/portal/getdocuments

libcurl:

COPYRIGHT AND PERMISSION NOTICE

Copyright (c) 1996 - 2010, Daniel Stenberg, <daniel@haxx.se>.

All rights reserved.

Permission to use, copy, modify, and distribute this software for any purpose with or without fee is hereby granted, provided that the above copyright notice and this permission notice appear in all copies.

THE SOFTWARE IS PROVIDED “AS IS,” WITHOUT WARRANTY OF ANY KIND, EXPRESS OR IMPLIED, INCLUDING BUT NOT LIMITED TO THE WARRANTIES OF MERCHANTABILITY, FITNESS FOR A PARTICULAR PURPOSE AND NONINFRINGEMENT OF THIRD PARTY RIGHTS. IN NO EVENT SHALL THE AUTHORS OR COPYRIGHT HOLDERS BE LIABLE FOR ANY CLAIM, DAMAGES OR OTHER LIABILITY, WHETHER IN AN ACTION OF CONTRACT, TORT OR OTHERWISE, ARISING FROM, OUT OF OR IN CONNECTION WITH THE SOFTWARE OR THE USE OR OTHER DEALINGS IN THE SOFTWARE.

Except as contained in this notice, the name of a copyright holder shall not be used in advertising or otherwise to promote the sale, use or other dealings in this Software without prior written authorization of the copyright holder.

unzip:

This is version 2005-Feb-10 of the Info-ZIP copyright and license. The definitive version of this document should be available at ftp://ftp.info-zip.org/pub/infozip/license.html indefinitely.

Copyright (c) 1990-2005 Info-ZIP. All rights reserved.

For the purposes of this copyright and license, “Info-ZIP” is defined as the following set of individuals:

Mark Adler, John Bush, Karl Davis, Harald Denker, Jean-Michel Dubois, Jean-loup Gailly, Hunter Goatley, Ed Gordon, Ian Gorman, Chris Herborth, Dirk Haase, Greg Hartwig, Robert Heath, Jonathan Hudson, Paul Kienitz, David Kirschbaum, Johnny Lee, Onno van der Linden, Igor Mandrichenko, Steve P. Miller, Sergio Monesi, Keith Owens, George Petrov, Greg Roelofs, Kai

Uwe Rommel, Steve Salisbury, Dave Smith, Steven M. Schweda, Christian Spieler, Cosmin Truta, Antoine Verheijen, Paul von Behren, Rich Wales, Mike White.

This software is provided “as is,” without warranty of any kind, express or implied. In no event shall Info-ZIP or its contributors be held liable for any direct, indirect, incidental, special or consequential damages arising out of the use of or inability to use this software.

Permission is granted to anyone to use this software for any purpose, including commercial applications, and to alter it and redistribute it freely, subject to the following restrictions:

1. Redistributions of source code must retain the above copyright notice, definition, disclaimer, and this list of conditions.
2. Redistributions in binary form (compiled executables) must reproduce the above copyright notice, definition, disclaimer, and this list of conditions in documentation and/or other materials provided with the distribution. The sole exception to this condition is redistribution of a standard UnZipSFX binary (including SFXWiz) as part of a self-extracting archive; that is permitted without inclusion of this license, as long as the normal SFX banner has not been removed from the binary or disabled.
3. Altered versions–including, but not limited to, ports to new operating systems, existing ports with new graphical interfaces, and dynamic, shared, or static library versions–must be plainly marked as such and must not be misrepresented as being the original source. Such altered versions also must not be misrepresented as being Info-ZIP releases–including, but not limited to, labeling of the altered versions with the names “Info-ZIP” (or any variation thereof, including, but not limited to, different capitalizations), “Pocket UnZip,” “WiZ” or “MacZip” without the explicit permission of Info-ZIP. Such altered versions are further prohibited from misrepresentative use of the Zip-Bugs or Info-ZIP e-mail addresses or of the Info-ZIP URL(s).
4. Info-ZIP retains the right to use the names “Info-ZIP,” “Zip,” “UnZip,” “UnZipSFX,” “WiZ,” “Pocket UnZip,” “Pocket Zip,” and “MacZip” for its own source and binary releases.

A

Accessories and Modifications 10-3
Accessory Power 9-23
Add-On Electrical Equipment 9-68
Additional Information OnStar® 14-6
Additional Maintenance and Care 11-9
Air Cleaner/Filter, Engine 10-17
Air Conditioning 8-3
Air Filter, Passenger Compartment 8-7
Air Vents 8-6
Airbag System
  Check 3-27
  How Does an Airbag Restrain? 3-20
  Passenger Sensing System 3-22
  What Makes an Airbag Inflate? 3-20
Airbag System (cont'd)
  What Will You See after an Airbag Inflates? 3-20
  When Should an Airbag Inflate? 3-19
  Where Are the Airbags? 3-17
Airbags
  Adding Equipment to the Vehicle 3-27
  Passenger Status Indicator . . .5-13
  Readiness Light 5-12
  Servicing Airbag-Equipped Vehicles 3-26
  System Check 3-15
Alarm
  Vehicle Security 2-16
Alert
  Side Blind Zone (SBZA) 9-47
All-Season Tires 10-44
AM-FM Radio 7-7
Antenna
  Multi-band 7-12
  Satellite Radio 7-12
Antilock Brake
  System (ABS) 9-38
  Warning Light 5-17
Appearance Care
  Exterior 10-88
  Interior 10-93
Ashtrays 5-6
Assistance Program, Roadside 13-5
Audio Players 7-13
  CD 7-13
Audio System
  Radio Reception 7-11
  Theft-Deterrent Feature 7-2
Automatic
  Climate Control System 8-3
  Door Locks 2-13
  Headlamp System 6-3
  Transmission 9-33
  Transmission Fluid 10-16
Automatic Transmission
  Manual Mode 9-35
  Shift Lock Control Function Check 10-30
Auxiliary
  Devices 7-15

B

Battery 10-28
Jump Starting 10-82
Power Protection 6-6
Voltage and Charging Messages 5-27
Battery - California Propostion 65 Warning 10-2
Blade Replacement, Wiper . . . 10-31
Bluetooth Overview 7-17, 7-19, 7-22
Brake System Warning Light 5-16
Brakes 10-26
Antilock 9-38
Assist 9-40
Fluid 10-27
Parking 9-39
System Messages 5-27
Braking 9-3
Break-In, New Vehicle 9-14
Bulb Replacement 10-37
Halogen Bulbs 10-32
Headlamp Aiming 10-32
Headlamps 10-32
Bulb Replacement (cont'd)
Headlamps, Front Turn Signal, and Parking Lamps 10-32
License Plate Lamps 10-36
Taillamps, Turn Signal, Sidemarker, Stoplamps, and Backup Lamps 10-34
Buying New Tires 10-59

C

Calibration 5-4
California Fuel Requirements 9-52
Perchlorate Materials Requirements 10-3
California Propostion 65 Warning 10-2, 10-28, 10-82
Camera Rear Vision (RVC) 9-48
Canadian Vehicle Owners iii
Capacities and Specifications 12-2
Carbon Monoxide Engine Exhaust 9-26
Trunk 2-14
Winter Driving 9-7
Cautions, Danger, and Warnings iv
CD Player 7-13
Center Console Storage 4-1
Chains, Tire 10-63
Charging System Light 5-13
Check Engine Light 5-14
Ignition Transmission Lock 10-30
Child Restraints Infants and Young Children 3-30
Lower Anchors and Tethers for Children 3-36
Older Children 3-28
Securing 3-43, 3-46
Systems 3-33
Cigarette Lighter 5-6
Circuit Breakers 10-38

Cleaning
Exterior Care 10-88
Interior Care 10-93
Climate Control Systems 8-1
Air Conditioning 8-1
Automatic 8-3
Heating 8-1
Clock 5-4
Cluster, Instrument 5-8
Clutch, Hydraulic 10-16
Cold Weather Operation 9-59
Collision Damage Repair 13-8
Compact Spare Tire 10-81
Compartments
Storage 4-1
Compass 5-4
Messages 5-27
Compressor Kit, Tire
Sealant 10-66
Connections
OnStar® 14-4
Control
Traction and Electronic
Stability 9-41
Control of a Vehicle 9-3
Convex Mirrors 2-18
Coolant
Engine 10-20
Engine Temperature
Gauge 5-11
Cooling System 10-19
Engine Messages 5-28
Courtesy Lamps 6-5
Courtesy Transportation
Program 13-7
Cruise Control 9-43
Light 5-22
Messages 5-28
Cupholders 4-1
Customer Assistance 13-4
Offices 13-3
Text Telephone (TTY)
Users 13-4
Customer Information
Service Publications
Ordering Information 13-11
Customer Satisfaction
Procedure 13-1

D

Damage Repair, Collision 13-8
Danger, Warnings, and
Cautions iv
Data Recorders, Event 13-14
Daytime Running
Lamps (DRL) 6-2
Defensive Driving 9-3
Delayed Locking 2-12
Devices
Auxiliary 7-15
Diesel Exhaust Fluid 1-21
Diesel Exhaust Fluid (DEF)
Warning Light 5-21
Diesel Exhaust Fluid
Messages 5-29
Diesel Particulate Filter 9-26
Diesel Particulate Filter
Messages 5-30
Distracted Driving 9-2
Dome Lamps 6-5

Door
Ajar Light 5-22
Ajar Messages 5-28
Delayed Locking 2-12
Locks 2-11
Power Locks 2-12
Drive Belt Routing, Engine 12-4
Driver Information
Center (DIC) 5-23
Driving
Characteristics and
Towing Tips 9-62
Defensive 9-3
Drunk 9-3
For Better Fuel Economy 1-20
Hill and Mountain Roads 9-6
If the Vehicle is Stuck 9-8
Loss of Control 9-5
Off-Road Recovery 9-4
Vehicle Load Limits 9-9
Wet Roads 9-5
Winter 9-7

E

Electrical Equipment,
Add-On 9-68
Electrical System
Engine Compartment
Fuse Block 10-38
Fuses and Circuit
Breakers 10-38
Instrument Panel Fuse
Block 10-41
Overload 10-37
Emergency
OnStar® 14-2
Engine
Air Cleaner/Filter 10-17
Check and Service Engine
Soon Light 5-14
Compartment Overview 10-6
Coolant 10-20
Coolant Temperature
Gauge 5-11
Cooling System 10-19
Cooling System Messages ...5-28
Drive Belt Routing 12-4
Engine (cont'd)
Exhaust 9-26
Heater 9-21
Oil Life System 10-15
Oil Messages 5-29
Overheated Protection
Operating Mode 10-25
Overheating 10-23
Power Messages 5-29
Pressure Light 5-20
Reduced Power Light 5-21
Running While Parked 9-32
Starting 9-18
Engines
Diesel Fuel 9-53
Entry Lighting 6-6
Equipment, Towing 9-67
Event Data Recorders 13-14
Exit Lighting 6-6
Extender, Safety Belt 3-14
Exterior Lamp Controls 6-1

F

Filter
Diesel Particulate 9-26
Filter,
Engine Air Cleaner 10-17
Flash-to-Pass 6-2
Flashers, Hazard Warning 6-3
Flat Tire 10-64
Changing 10-74
Floor Mats 10-97
Fluid
Automatic Transmission 10-16
Brakes 10-27
Diesel Exhaust 1-21, 9-27
Washer 10-25
Fog Lamps
Front 6-4
Folding Mirrors 2-19
Frequency Statement
Radio 13-12
Front Fog Lamp
Light 5-22
Front Seats
Adjustment 3-3
Heated 3-5
Fuel 9-51
Additives 9-52
Cold Weather Operation 9-59
Diesel Engines 9-53
Economy Driving 1-20
Filling a Portable Fuel
Container 9-62
Filling the Tank 9-60
Foreign Countries 9-52
Gauge 5-10
Low Fuel Warning Light 5-20
Requirements, California 9-52
Running out of Fuel 9-60
System Messages 5-29
Water in Fuel 9-60
Fuel for Diesel Engines 9-53
Fuses
Engine Compartment
Fuse Block 10-38
Fuses and Circuit
Breakers 10-38
Instrument Panel Fuse
Block 10-41

G

Gauges
Engine Coolant
Temperature 5-11
Fuel 5-10
Odometer 5-10
Speedometer 5-10
Tachometer 5-10
Trip Odometer 5-10
Warning Lights and
Indicators 5-7
General Information
Service and Maintenance 11-1
Towing 9-62
Vehicle Care 10-2
Glove Box 4-1
GM Mobility Reimbursement
Program 13-5

H

Halogen Bulbs 10-32
Hazard Warning Flashers 6-3
Head Restraints 3-2

Headlamps
Aiming 10-32
Automatic 6-3
Bulb Replacement 10-32
Daytime Running
Lamps (DRL) 6-2
Flash-to-Pass 6-2
High-Beam On Light 5-22
High/Low Beam Changer 6-2
Lamps On Reminder 5-22
Heated Front Seats 3-5
Heated Mirrors 2-19
Heater
Engine 9-21
Heating and Air
Conditioning 8-1, 8-3
High-Beam On Light 5-22
Hill and Mountain Roads 9-6
Hood 10-4
Horn 5-3
How to Wear Safety Belts
Properly 3-10
Hydraulic Clutch 10-16

I

Ignition Positions 9-14, 9-16
Ignition Transmission Lock
Check 10-30
Immobilizer 2-17
Infants and Young Children,
Restraints 3-30
Infotainment 7-1
Infotainment System 13-15
Instrument Cluster 5-8
Instrument Panel Overview 1-2
Interior Rearview Mirrors 2-20
Introduction iii

J

Jump Starting 10-82
Jump Starting - California
Propostion 65 Warning 10-2

K

Key and Lock Messages 5-30
Keyless Entry
Remote (RKE) System 2-3
Keys 2-1

L

Labeling, Tire Sidewall 10-45
Lamps
Courtesy 6-5
Daytime Running (DRL) 6-2
Dome 6-5
Exterior Controls 6-1
Front Fog 6-4
Headlamps, Front Turn
Signal, and Parking
Lamps 10-32
License Plate 10-36
Malfunction Indicator 5-14
Messages 5-31
On Reminder 5-22
Reading 6-5
Lap-Shoulder Belt 3-11
LATCH System
Replacing Parts after a
Crash 3-43
LATCH, Lower Anchors and
Tethers for Children 3-36
Lighter, Cigarette 5-6

Lighting
Entry 6-6
Exit 6-6
Illumination Control 6-5
Lights
Airbag Readiness 5-12
Antilock Brake System (ABS) Warning 5-17
Brake System Warning 5-16
Charging System 5-13
Cruise Control 5-22
Door Ajar 5-22
Engine Oil Pressure 5-20
Flash-to-Pass 6-2
Front Fog Lamp 5-22
High-Beam On 5-22
High/Low Beam Changer 6-2
Low Fuel Warning 5-20
Reduced Engine Power 5-21
Safety Belt Reminders 5-11
Security 5-21
StabiliTrak® OFF 5-18
Tire Pressure 5-19
Traction Control System (TCS)/StabiliTrak® 5-19
Traction Off 5-18
Lights (cont'd)
Up-Shift 5-17
Wait to Start 5-19
Warning, Power Steering 5-18
Locks
Automatic Door 2-13
Delayed Locking 2-12
Door 2-11
Lockout Protection 2-13
Power Door 2-12
Safety 2-13
Loss of Control 9-5
Low Fuel Warning Light 5-20
Low-Profile Tires 10-45
Lower Anchors and Tethers for Children (LATCH System) 3-36

M

Maintenance
Records 11-15
Maintenance and Care
Additional 11-9
Maintenance Schedule 11-2
Recommended Fluids and Lubricants 11-12
Malfunction Indicator Lamp 5-14
Manual Mirrors 2-19
Manual Mode 9-35
Manual Transmission 9-37
Fluid 10-16
Messages
Airbag System 5-32
Battery Voltage and Charging 5-27
Brake System 5-27
Compass 5-27
Diesel Exhaust Fluid 5-29
Diesel Particulate Filter 5-30
Door Ajar 5-28
Engine Cooling System 5-28
Engine Oil 5-29
Engine Power 5-29
Fuel System 5-29
Key and Lock 5-30
Lamp 5-31
Object Detection System 5-31
Ride Control System 5-32
Safety Belt 5-32

Messages (cont'd)
Security 5-33
Service Vehicle 5-33
Starting the Vehicle 5-33
Tire 5-33
Transmission 5-34
Vehicle 5-27
Vehicle Reminder 5-34
Vehicle Speed 5-34
Mirrors
Automatic Dimming
Rearview 2-20
Convex 2-18
Folding 2-19
Heated 2-19
Manual 2-19
Manual Rearview 2-20
Power 2-19
Mirrors, Interior Rearview 2-20
Monitor System, Tire
Pressure 10-52
Multi-band Antenna 7-12

N

Navigation
OnStar® 14-3
New Vehicle Break-In 9-14

O

Object Detection System
Messages 5-31
Odometer 5-10
Trip 5-10
Off-Road
Recovery 9-4
Oil
Engine 10-11
Engine Oil Life System 10-15
Messages 5-29
Pressure Light 5-20
Older Children, Restraints 3-28
Online Owner Center 13-4
OnStar®
System, In Brief 1-22
OnStar® Additional
Information 14-6
OnStar® Connections 14-4
OnStar® Emergency 14-2
OnStar® Navigation 14-3
OnStar® Overview 14-1
OnStar® Security 14-3
OnStar® Vehicle
Diagnostics 14-6
Operating Mode
Overheated Engine
Protection 10-25
Operation, Infotainment
System 7-4
Ordering
Service Publications 13-11
Outlets
Power 5-6
Overheated Engine
Protection
Operating Mode 10-25
Overheating, Engine 10-23
Overview, Infotainment
System 7-3

P

Park
Shifting Into 9-23
Shifting Out of 9-24
Parking 9-25
Brake 9-39
Brake and P (Park)
Mechanism Check 10-30
Over Things That Burn 9-25
Parking Assist 9-45
Passenger Airbag Status
Indicator 5-13
Passenger Compartment Air
Filter 8-7
Passenger Sensing System . . . 3-22
Perchlorate Materials
Requirements, California 10-3
Personalization
Vehicle 5-36
Phone
Bluetooth 7-17, 7-19, 7-22
Power
Door Locks 2-12
Mirrors 2-19
Outlets 5-6
Protection, Battery 6-6
Power (cont'd)
Reduced Engine Light 5-21
Retained Accessory (RAP) . . . 9-23
Seat Adjustment 3-4
Windows 2-21
Power Steering Warning
Lights 5-18
Pregnancy, Using Safety
Belts 3-13
Privacy
Vehicle Data Recording 13-14
Program
Courtesy Transportation 13-7
Proposition
65 Warning,
California 10-2,
10-28, 10-82

R

Radio Frequency
Identification (RFID) 13-12
Radio Frequency
Statement 13-12
Radios
AM-FM Radio 7-7
Reception 7-11
Satellite 7-10
Reading Lamps 6-5
Rear Seats 3-6
Rear Vision Camera (RVC) 9-48
Rearview Mirrors 2-20
Automatic Dimming 2-20
Reclining Seatbacks 3-4
Recommended Fluids and
Lubricants 11-12
Records
Maintenance 11-15
Recreational Vehicle
Towing 10-85
Reduced Engine Power
Light 5-21
Reimbursement Program,
GM Mobility 13-5
Remote Keyless Entry
(RKE) System 2-2, 2-3
Remote Vehicle Start 2-9
Replacement Bulbs 10-37

Replacement Parts
Airbags 3-28
Maintenance 11-13
Replacing Airbag System 3-28
Replacing LATCH System
Parts after a Crash 3-43
Replacing Safety Belt
System Parts after a Crash . . . 3-14
Reporting Safety Defects
Canadian Government 13-13
General Motors 13-13
U.S. Government 13-12
Restraints
Where to Put 3-35
Retained Accessory
Power (RAP) 9-23
Ride Control Systems
Messages 5-32
Roads
Driving, Wet 9-5
Roadside Assistance
Program 13-5
Roof
Sunroof 2-23
Rotation, Tires 10-57
Routing, Engine Drive Belt 12-4
Running out of Fuel 9-60
Running the Vehicle While
Parked 9-32

S

Safety Belts 3-8
Care 3-14
Extender 3-14
How to Wear Safety Belts
Properly 3-10
Lap-Shoulder Belt 3-11
Messages 5-32
Reminders 5-11
Replacing after a Crash 3-14
Use During Pregnancy 3-13
Safety Defects Reporting
Canadian Government 13-13
General Motors 13-13
U.S. Government 13-12
Safety Locks 2-13
Safety System Check 3-14
Satellite Radio 7-10
Scheduling Appointments 13-7
Sealant Kit, Tire 10-66
Seats
Adjustment, Front 3-3
Head Restraints 3-2
Heated Front 3-5
Power Adjustment, Front 3-4
Rear 3-6
Reclining Seatbacks 3-4
Securing Child
Restraints 3-43, 3-46
Security
Light 5-21
Messages 5-33
OnStar® 14-3
Vehicle 2-16
Vehicle Alarm 2-16
Service 8-7
Accessories and
Modifications 10-3
Doing Your Own Work 10-4
Engine Soon Light 5-14
Maintenance Records 11-15

Service (cont'd)
Maintenance, General Information 11-1
Parts Identification Label 12-1
Publications Ordering Information 13-11
Scheduling Appointments 13-7
Vehicle Messages 5-33
Services
Special Application 11-8
Servicing the Airbag 3-26
Shift Lock Control Function Check, Automatic Transmission 10-30
Shifting
Into Park 9-23
Out of Park 9-24
Side Blind Zone Alert (SBZA) 9-47
Sidemarker Bulb Replacement 10-34
Signals, Turn and Lane-Change 6-4
Spare Tire
Compact 10-81
Special Application Services . . . 11-8
Specifications and Capacities 12-2
Speedometer 5-10
StabiliTrak OFF Light 5-18
Start Vehicle, Remote 2-9
Starter Switch Check 10-29
Starting the Engine 9-18
Starting the Vehicle Messages 5-33
Steering 9-4
Power, Warning Lights 5-18
Wheel Adjustment 5-2
Wheel Controls 5-2
Stoplamps and Back-Up Lamps Bulb Replacement 10-34
Storage Areas
Center Console 4-1
Glove Box 4-1
Storage Compartments 4-1
Storing the Tire Sealant and Compressor Kit 10-72, 10-73
Stuck Vehicle 9-8
Sun Visors 2-23
Sunroof 2-23
Symbols iv
System
Infotainment 7-1, 13-15

T

Tachometer 5-10
Taillamps
Bulb Replacement 10-34
Text Telephone (TTY) Users . . . 13-4
Theft-Deterrent Systems 2-17
Immobilizer 2-17
Time 5-4
Tires 10-43
All-Season 10-44
Buying New Tires 10-59
Chains 10-63
Changing 10-74
Compact Spare 10-81
Designations 10-48

Tires (cont'd)
Different Size 10-60
If a Tire Goes Flat 10-64
Inflation Monitor System 10-53
Inspection 10-57
Low Profile 10-45
Messages 5-33
Pressure Light 5-19
Pressure Monitor System ... 10-52
Rotation 10-57
Sealant and
Compressor Kit 10-66
Sealant and
Compressor Kit,
Storing 10-72, 10-73
Sidewall Labeling 10-45
Terminology and
Definitions 10-48
Uniform Tire Quality
Grading 10-61
Wheel Alignment and Tire
Balance 10-62
Wheel Replacement 10-63
When It Is Time for New
Tires 10-58
Winter 10-45

Towing
Driving Characteristics 9-62
Equipment 9-67
General Information 9-62
Recreational Vehicle 10-85
Trailer 9-66
Vehicle 10-85
Traction
Control System (TCS)/
StabiliTrak® Light 5-19
Off Light 5-18
Traction Control/Electronic
Stability Control 9-41
Trademarks and License
Agreements 7-28
Trailer
Towing 9-66
Transmission
Automatic 9-33
Fluid, Automatic 10-16
Fluid, Manual 10-16
Messages 5-34

Transportation Program,
Courtesy 13-7
Trip Odometer 5-10
Trunk 2-14
Turn and Lane-Change
Signals 6-4
Turn Signal
Bulb Replacement 10-34

U

Uniform Tire Quality
Grading 10-61
Up-Shift Light 5-17
Using This Manual iii

V

Vehicle
Alarm System 2-16
Canadian Owners iii
Control 9-3
Identification
Number (VIN) 12-1
Load Limits 9-9

Vehicle (cont'd)
Messages 5-27
Personalization 5-36
Reminder Messages 5-34
Remote Start 2-9
Security 2-16
Speed Messages 5-34
Towing 10-85
Vehicle Care
Storing the Tire
Sealant and
Compressor Kit 10-72, 10-73
Tire Pressure 10-51
Vehicle Data Recording
and Privacy 13-14
Vehicle Diagnostics
OnStar® 14-6
Ventilation, Air 8-6
Visors 2-23

W

Wait to Start Light 5-19
Warning
Brake System Light 5-16
Warning Light
Diesel Exhaust
Fluid (DEF).....5-21
Warning Lights, Gauges, and
Indicators 5-7
Warnings iv
Cautions and Danger iv
Hazard Flashers 6-3
Washer Fluid 10-25
Water in Fuel 9-60
What Fuel to Use in Canada ... 9-58
Wheels
Alignment and Tire
Balance 10-62
Different Size 10-60
Replacement 10-63
When It Is Time for New
Tires 10-58
Where to Put the Restraint 3-35
Windows 2-20
Power 2-21
Windshield
Wiper/Washer 5-3
Winter
Driving 9-7
Winter Tires 10-45
Wiper Blade Replacement 10-31

✍ NOTES