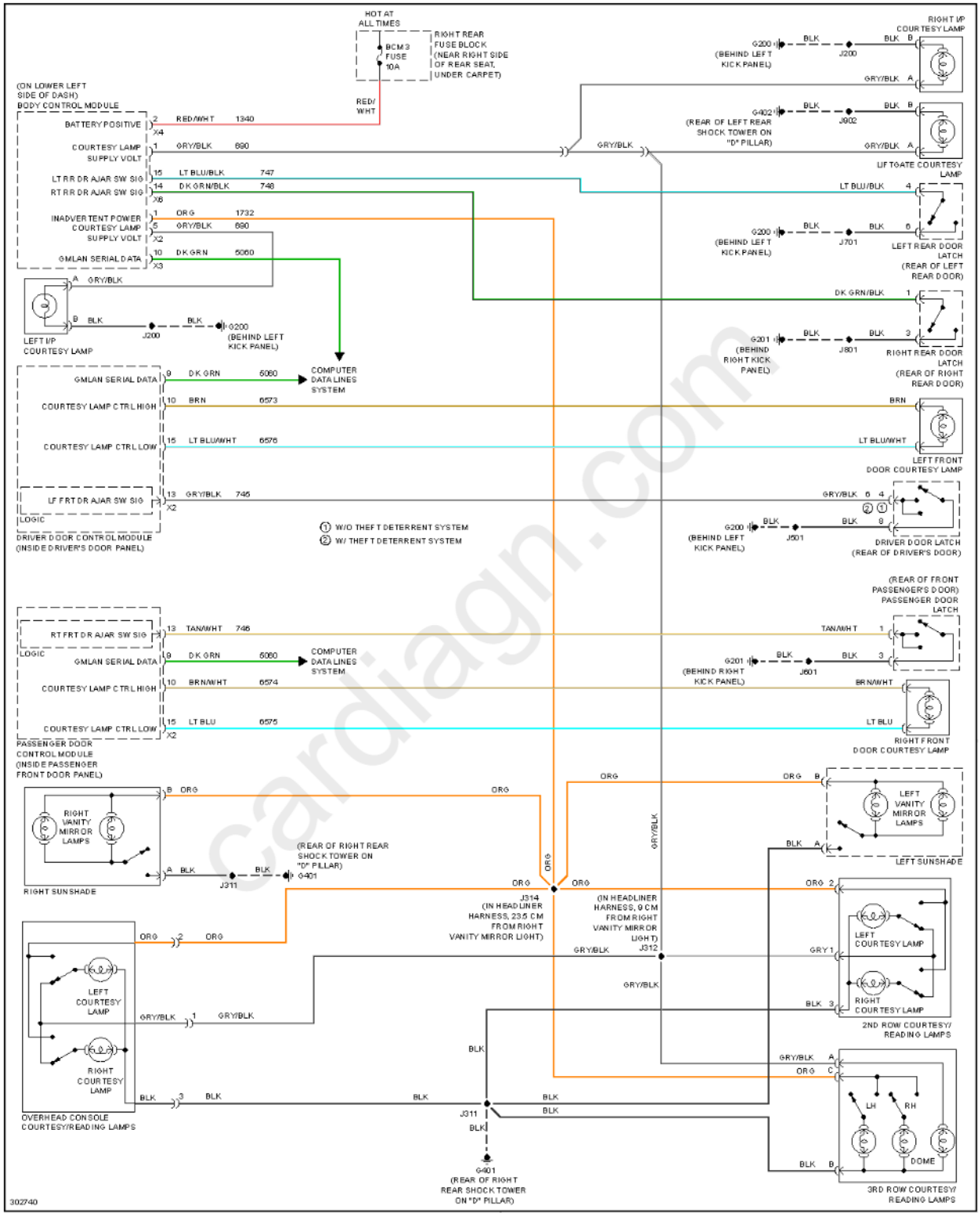

cardiagn.com

Fig. 42: Courtesy Lamps Circuit

cardiagn.com