BRAKES

Hydraulic Brakes - Escalade, Suburban, Tahoe, Yukon

SPECIFICATIONS

FASTENER SPECIFICATIONS

Application	Specification	
	Metric	English
Brake Hose Bracket Bolt - Front JD9	12 N.m	106 lb in
Brake Hose Bracket Bolt - Front J95	9 N.m	80 lb in
Brake Hose Bracket Bolt - Rear at Axle JD9	25 N.m	18 lb ft
Brake Hose Bracket Bolt - Rear at Frame JD9, J95	25 N.m	18 lb ft
Brake Hose Bracket Bolt - Rear to Caliper at Axle JD9	9 N.m	80 lb in
Brake Hose Bracket Bolt - Rear to Caliper at Axle J95	22 N.m	16 lb ft
Brake Hose Bracket Nut - Rear at Axle J95	25 N.m	18 lb ft
Brake Hose Bracket Nut - Rear at Frame J95	25 N.m	18 lb ft
Brake Hose Fitting Bolt - Front and Rear	40 N.m	30 lb ft
Brake Pedal Assembly Bolt	22 N.m	16 lb ft
Brake Pedal Pivot Nut	26 N.m	19 lb ft
Brake Pedal Position Sensor Bolt	3 N.m	27 lb in
Brake Pipe Fitting	25 N.m	18 lb ft
Brake Pipe Fitting - Master Cylinder	32 N.m	24 lb ft
Master Cylinder Nut	33 N.m	24 lb ft
Master Cylinder Reservoir Bolt - J95	8 N.m	71 lb in
Power Brake Booster Hose Pipe Fitting	33 N.m	24 lb ft
Power Brake Booster Nut	33 N.m	24 lb ft
Power Brake Booster Pushrod Retainer Clip Bolt	10 N.m	89 lb in
Power Vacuum Brake Booster Nut	33 N.m	24 lb ft

APPROXIMATE FLUID CAPACITIES

cardiagn.com

Application	Specification	
	Metric	US English
Hydraulic Brake System	1.0 L	2.11 pt

BRAKE COMPONENT SPECIFICATIONS

Application	Specification	
	Metric	English
Brake Caliper Bleeder Valve	10 N.m	89 lb in

BRAKE SYSTEM SPECIFICATIONS

Application	Specification	
	Metric	English
Brake Pedal Maximum Travel*		
• Vacuum Power Assist	60 mm	2.36 in
* Specification with 445 N (100 lb) of force applied to the brake pedal, the ignition OFF, and the brake booster power reserve depleted.		

ADHESIVES, FLUIDS, LUBRICANTS, AND SEALERS

Application	Type of Material	GM Part Number
Hydraulic Brake System	DOT 3 Motor Vehicle Brake Fluid	19299818 (Canada 19299819)
Brake Pedal Pivot Points	High Temperature Lubricant	12345996 (Canada 10953501)

SCHEMATIC WIRING DIAGRAMS

HYDRAULIC BRAKE WIRING SCHEMATICS

Hydraulic Brakes

cardiagn.com

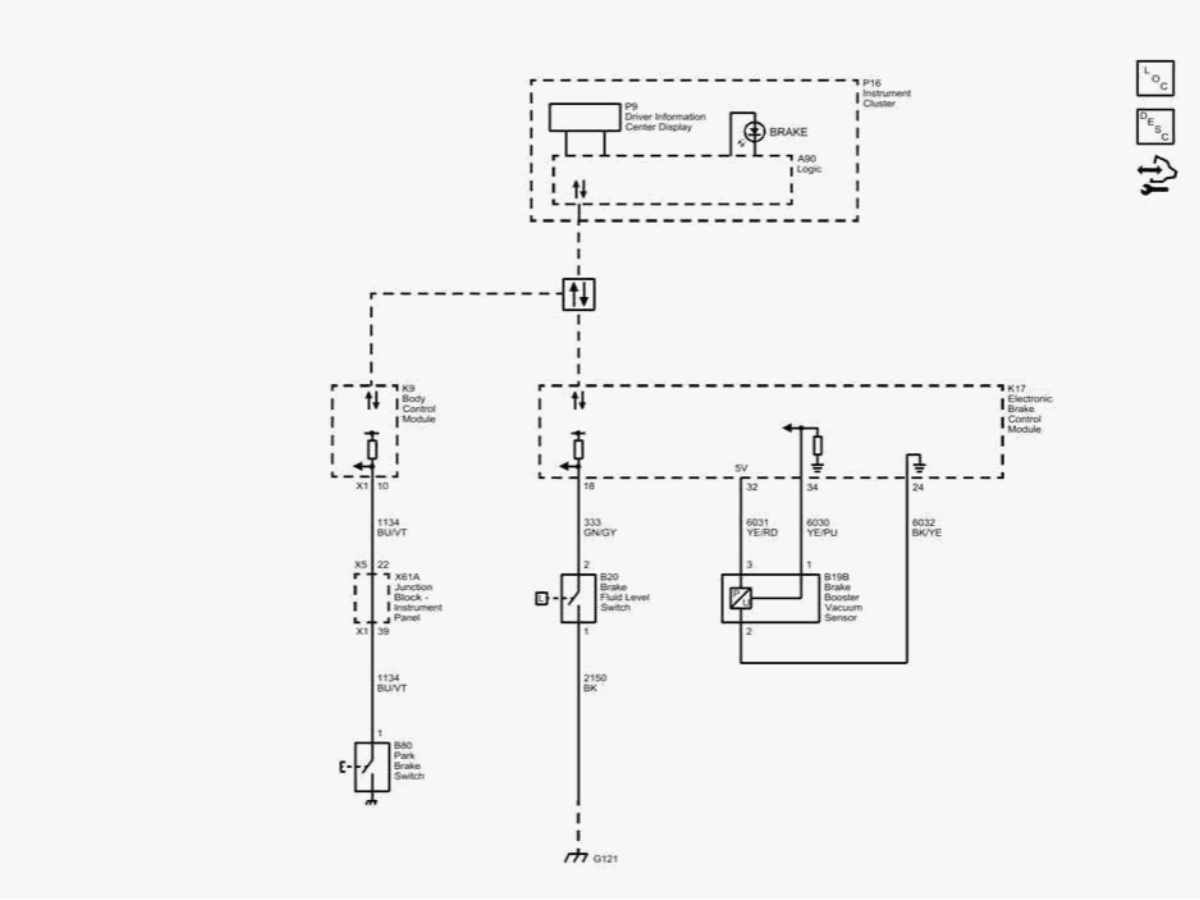

Fig. 1: Hydraulic Brakes
Courtesy of GENERAL MOTORS COMPANY

DIAGNOSTIC INFORMATION AND PROCEDURES

DTC C0267: LOW BRAKE FLUID INDICATED

Diagnostic Instructions

- Perform the **Diagnostic System Check - Vehicle** prior to using this diagnostic procedure.
- Review **Strategy Based Diagnosis** for an overview of the diagnostic approach.
- Refer to **Diagnostic Procedure Instructions** to provide an overview of each diagnostic category.

cardiagn.com

DTC Descriptor

DTC C0267

Low Brake Fluid Indicated

For symptom byte information refer to **Symptom Byte List** .

Diagnostic Fault Information

Circuit	Short to Ground	Open/High Resistance	Short to Voltage	Signal Performance
Signal	C0267 00	C0273 05	C0273 05	-
Ground	-	C0273 05	-	-

Circuit/System Description

The brake fluid level switch monitors the level of the brake fluid in the brake fluid reservoir. When the electronic brake control module sees low brake fluid level, the DTC is set.

Conditions for Running the DTC

Ignition ON.

Conditions for Setting the DTC

Low brake fluid level is detected for 8 s.

Action Taken When the DTC Sets

- The electronic brake control module disables the traction control and stability control for the duration of the ignition cycle.
- The traction control/stability control-active indicator turns ON.
- The brake warning indicator turns ON.

Conditions for Clearing the DTC

The condition for setting the DTC is no longer present.

Reference Information

cardiagn.com

Schematic Reference

Hydraulic Brake Schematics

Connector End View Reference

COMPONENT CONNECTOR END VIEWS - INDEX

Description and Operation

Hydraulic Brake System Description and Operation

Electrical Information Reference

- **Circuit Testing**
- **Connector Repairs**
- **Testing for Intermittent Conditions and Poor Connections**
- **Wiring Repairs**

Scan Tool Reference

Control Module References for scan tool information

Circuit/System Verification

1. Verify that the brake is above minimum level.
    - **If low**

      Refer to **Brake Fluid Loss**.

    - **If above minimum level**
2. Ignition ON.
3. Verify the scan tool Brake Fluid Level Sensor parameter is OK.
    - **If the parameter is Low**

      Refer to Circuit/System Testing.

cardiagn.com

- **If the parameter is OK**

4. All OK.

Circuit/System Testing

1. Ignition OFF, disconnect the harness connector at the B20 Brake Fluid Level Switch. It may take up to 2 min for all vehicle systems to power down.
2. Test for less than 10 Ω between the ground circuit terminal 1 and ground.
   - **If 10 Ω or greater**
   1. Ignition OFF.
   2. Test for less than 2 Ω in the ground circuit end to end.
      - If 2 Ω or greater, repair the open/high resistance in the circuit.
      - If less than 2 Ω, repair the open/high resistance in the ground connection.
   - **If less than 10 Ω**
3. Ignition ON.
4. Verify the scan tool Brake Fluid Level Sensor parameter is OK.
   - **If the parameter is not OK**
   1. Ignition OFF, disconnect the harness connector at the K17 Electronic Brake Control Module.
   2. Test for infinite resistance between the signal circuit terminal 2 and ground.
      - If less than infinite resistance, repair the short to ground on the circuit.
      - If infinite resistance, replace the K17 Electronic Brake Control Module.
   - **If the parameter is OK**
5. Install a 3 A fused jumper wire between the signal circuit terminal 2 and ground.
6. Verify the scan tool Brake Fluid Level Sensor parameter is Low.
   - **If the parameter is not Low**
   1. Ignition OFF, disconnect the harness connector at the K17 Electronic Brake Control Module, ignition ON.
   2. Test for less than 1 V between the signal circuit and ground.
      - If 1 V or greater, repair the short to voltage on the circuit.
      - If less than 1 V.
   3. Test for less than 2 Ω in the signal circuit end to end.

cardiagn.com

- If 2 Ω or greater, repair the open/high resistance in the circuit.
- If less than 2 Ω, replace the K17 Electronic Brake Control Module.

- **If the parameter is Low**

7. Test or replace the B20 Brake Fluid Level Switch.

Repair Instructions

Perform the **Diagnostic Repair Verification** after completing the repair.

- Refer to **Brake Fluid Level Indicator Switch Replacement**
- Refer to **Control Module References** for electronic brake control module replacement, programming and setup.

DTC C0273: BRAKE FLUID LEVEL SWITCH CIRCUIT

Diagnostic Instructions

- Perform the **Diagnostic System Check - Vehicle** prior to using this diagnostic procedure.
- Review **Strategy Based Diagnosis** for an overview of the diagnostic approach.
- Refer to **Diagnostic Procedure Instructions** to provide an overview of each diagnostic category.

DTC Descriptor

DTC C0273

Brake Fluid Level Switch Circuit

For symptom byte information refer to **Symptom Byte List** .

Diagnostic Fault Information

Circuit	Short to Ground	Open/High Resistance	Short to Voltage	Signal Performance
Signal	C0267 00	C0273 05	C0273 05	-
Ground	-	C0273 05	-	-

Circuit/System Description

cardiagn.com

The brake fluid level switch monitors the level of the brake fluid in the brake fluid reservoir. When the electronic brake control module sees the brake fluid level switch input open, the DTC is set.

Conditions for Running the DTC

Ignition ON.

Conditions for Setting the DTC

A open or short to battery is detected on the signal circuit.

Action Taken When the DTC Sets

- The brake warning indicator turns ON.
- Traction control indicator turns ON.

Conditions for Clearing the DTC

The condition for setting the DTC is no longer present.

Reference Information

Schematic Reference

Hydraulic Brake Schematics

Connector End View Reference

COMPONENT CONNECTOR END VIEWS - INDEX

Description and Operation

Hydraulic Brake System Description and Operation

Electrical Information Reference

- **Circuit Testing**
- **Connector Repairs**
- **Testing for Intermittent Conditions and Poor Connections**

cardiagn.com

- **Wiring Repairs**

Scan Tool Reference

Control Module References for scan tool information

Circuit/System Testing

1. Ignition OFF, disconnect the harness connector at the B20 Brake Fluid Level Switch. It may take up to 2 min for all vehicle systems to power down.
2. Test for less than 10 Ω between the ground circuit terminal 1 and ground.
   - **If 10 Ω or greater**
   1. Ignition OFF.
   2. Test for less than 2 Ω in the ground circuit end to end.
      - If 2 Ω or greater, repair the open/high resistance in the circuit.
      - If less than 2 Ω, repair the open/high resistance in the ground connection.
   - **If less than 10 Ω**
3. Ignition ON.
4. Verify the scan tool Brake Fluid Level Sensor parameter is OK.
   - **If the parameter is not OK**
   1. Ignition OFF, disconnect the harness connector at the K17 Electronic Brake Control Module.
   2. Test for infinite resistance between the signal circuit terminal 2 and ground.
      - If less than infinite resistance, repair the short to ground on the circuit.
      - If infinite resistance, replace the K17 Electronic Brake Control Module.
   - **If the parameter is OK**
5. Install a 3 A fused jumper wire between the signal circuit terminal 2 and ground.
6. Verify the scan tool Brake Fluid Level Sensor parameter is Low.
   - **If the parameter is not Low**
   1. Ignition OFF, disconnect the harness connector at the K17 Electronic Brake Control Module, ignition ON.
   2. Test for less than 1 V between the signal circuit and ground.
      - If 1 V or greater, repair the short to voltage on the circuit.

cardiagn.com

- If less than 1 V.

3. Test for less than 2 Ω in the signal circuit end to end.
   - If 2 Ω or greater, repair the open/high resistance in the circuit.
   - If less than 2 Ω, replace the K17 Electronic Brake Control Module.

- **If the parameter is Low**

7. Test or replace the B20 Brake Fluid Level Switch.

Repair Instructions

Perform the **Diagnostic Repair Verification** after completing the repair.

- Refer to **Brake Fluid Level Indicator Switch Replacement**
- Refer to **Control Module References** for electronic brake control module replacement, programming and setup.

DTC C0299: BRAKE BOOSTER LARGE VACUUM LEAK DETECTED

Diagnostic Instructions

- Perform the **Diagnostic System Check - Vehicle** prior to using this diagnostic procedure.
- Review **Strategy Based Diagnosis** for an overview of the diagnostic approach.
- Refer to **Diagnostic Procedure Instructions** to provide an overview of each diagnostic category.

DTC Descriptor

DTC C0299

Brake Booster Large Vacuum Leak Detected

For symptom byte information refer to **Symptom Byte List** .

Circuit/System Description

The brake booster vacuum sensor measures the vacuum in the brake booster assembly. The electronic brake control module (EBCM) supplies a 5 V reference and a low reference circuit to the brake booster vacuum sensor. The vacuum sensor supplies a voltage signal in relation to the pressure in the brake booster to the electronic brake control module.

Conditions for Running the DTC

cardiagn.com

- Engine running for a minimum of three minutes.
- Brake switch is off.

Conditions for Setting the DTC

The EBCM detected a too low vacuum in the brake booster assembly.

Action Taken When the DTC Sets

The brake warning indicator turns ON.

Conditions for Clearing the DTC

- A current DTC clears when the diagnostic runs and passes.
- The electronic brake control module will turn OFF the indicator in the next ignition cycle.

Reference Information

Schematic Reference

Hydraulic Brake Schematics

Connector End View Reference

COMPONENT CONNECTOR END VIEWS - INDEX

Description and Operation

Brake Assist System Description and Operation (Hydraulic Assist)Brake Assist System Description and Operation (Vacuum Assist)

Electrical Information Reference

- **Circuit Testing**
- **Connector Repairs**
- **Testing for Intermittent Conditions and Poor Connections**
- **Wiring Repairs**

Scan Tool Reference

cardiagn.com

Control Module References

Circuit/System Testing

1. Ignition ON.
2. Verify that DTC C025E is not set.
   - **If the DTC is set**

     Refer to **DTC C025E**.

   - **If the DTC is not set**
3. Verify that the brake booster vacuum system has no damage, leakage or incorrect installation.
   - **If damage, leakage or incorrect installation is found**

     Refer to **Brake Assist System Diagnosis**.

   - **If the inspection is OK**
4. Test or replace the B19B Brake Booster Vacuum Sensor.
5. Verify the DTC does not set while operating the vehicle under the Conditions for Running the DTC.
   - **If the DTC sets**

     Replace the K17 Electronic Brake Control Module.

   - **If the DTC does not set**
6. All OK.

Repair Instructions

Perform the **Diagnostic Repair Verification** after completing the repair.

- Refer to **Power Brake Booster Vacuum Sensor Replacement**
- Refer to **Control Module References** for electronic brake control module replacement, programming and setup

DTC C025E: BRAKE BOOSTER VACUUM SENSOR CIRCUIT

Diagnostic Instructions

cardiagn.com

- Perform the **Diagnostic System Check - Vehicle** prior to using this diagnostic procedure.
- Review **Strategy Based Diagnosis** for an overview of the diagnostic approach.
- Refer to **Diagnostic Procedure Instructions** to provide an overview of each diagnostic category.

DTC Descriptor

DTC C025E

Brake Booster Vacuum Sensor Circuit

For symptom byte information refer to **Symptom Byte List** .

Diagnostic Fault Information

Circuit	Short to Ground	Open/High Resistance	Short to Voltage	Signal Performance
5V Reference	C025E 00	C025E 06	C025E 00	-
Sensor Signal	C025E 06	C025E 06	C025E 01	C025E 1F, C025E 5A
Low Reference	-	C025E 01	-	-

Circuit/System Description

The brake booster vacuum sensor monitors the pressure in the brake booster. The electronic brake control module supplies a 5 V reference and a low reference circuit to the brake booster vacuum sensor. The vacuum sensor supplies a voltage signal in relation to the pressure in the brake booster to the electronic brake control module.

Conditions for Running the DTC

C025E 00, C025E 01, C025E 06, C025E 1F

Ignition ON

C025E 5A

- Ignition ON.
- Brakes are not applied.

Conditions for Setting the DTC

cardiagn.com

C025E 00

- A short to ground is detected on the 5V reference circuit.
- A short to voltage is detected on the 5V reference circuit.

C025E 01

- A short to voltage is detected on the signal circuit.
- An open/high resistance is detected on the low reference circuit.

C025E 06

- An open/high is detected on the signal circuit.
- A short to ground is detected on the signal circuit.
- An open/high is detected on the 5V reference circuit.

C025E 1F

The vacuum sensor signal is erratic.

C025E 5A

The vacuum sensor signal is not plausible.

Action Taken When the DTC Sets

Service Brake Assist message is displayed on the driver information center

Conditions for Clearing the DTC

The DTC clears when the diagnostic runs and passes

Reference Information

Schematic Reference

Hydraulic Brake Schematics

cardiagn.com

Connector End View Reference

COMPONENT CONNECTOR END VIEWS - INDEX

Description and Operation

Brake Assist System Description and Operation (Hydraulic Assist)Brake Assist System Description and Operation (Vacuum Assist)

Electrical Information Reference

- **Circuit Testing**
- **Connector Repairs**
- **Testing for Intermittent Conditions and Poor Connections**
- **Wiring Repairs**

DTC Type Reference

Powertrain Diagnostic Trouble Code (DTC) Type Definitions

Scan Tool Reference

Control Module References for scan tool information

Circuit/System Verification

1. Verify that the brake booster vacuum system has no damage, leakage or incorrect installation.
   - **If damage, leakage or incorrect installation is found**

     Refer to **Brake Assist System Diagnosis**

   - **If no damage, leakage or incorrect installation is found**
2. Refer to Circuit/System Testing.

Circuit/System Testing

1. Ignition OFF and all vehicle systems OFF, disconnect the harness connector at the B19B Brake Booster Vacuum Sensor. It may take up to 2 min for all vehicle systems to power down.

cardiagn.com

2. Test for less than 10 Ω between the low reference circuit terminal 2 and ground.
   - **If 10 Ω or greater**
   1. Disconnect the harness connector at the K17 Electronic Brake Control Module.
   2. Test for less than 2 Ω in the low reference circuit end to end.
      - If 2 Ω or greater, repair the open/high resistance in the circuit.
      - If less than 2 Ω, replace the K17 Electronic Brake Control Module.
   - **If less than 10 Ω**
3. Ignition ON.
4. Test for 4.8-5.2 V between the 5 V reference circuit terminal 3 and ground.
   - **If less than 4.8 V**
   1. Ignition OFF, disconnect the harness connector at the K17 Electronic Brake Control Module.
   2. Test for infinite resistance between the 5 V reference circuit and ground.
      - If less than infinite resistance, repair the short to ground on the circuit.
      - If infinite resistance
   3. Test for less than 2 Ω in the 5 V reference circuit end to end.
      - If 2 Ω or greater, repair the open/high resistance in the circuit.
      - If less than 2 Ω, replace the K17 Electronic Brake Control Module.
   - **If greater than 5.2 V**
   1. Ignition OFF, disconnect the harness connector at the K17 Electronic Brake Control Module, ignition ON.
   2. Test for less than 1 V between the 5 V reference circuit and ground.
      - If 1 V or greater, repair the short to voltage on the circuit.
      - If less than 1 V, replace the K17 Electronic Brake Control Module.
   - **If between 4.8-5.2 V**
5. Ignition OFF, disconnect the harness connector at the K17 Electronic Brake Control Module, Ignition ON.
6. Test for less than 1 V between the B19B Brake Booster Vacuum Sensor signal circuit terminal 1 and ground.
   - **If greater than 1 V**

     Repair the short to voltage on the circuit.

   - **If less than 1 V**

cardiagn.com

7. Ignition OFF.
8. Test for infinite resistance between the B19B Brake Booster Vacuum Sensor signal circuit terminal 1 and ground.
   - **If less than infinite resistance**

     Repair the short to ground on the circuit.

   - **If infinite resistance**
9. Test for less than 2 Ω between the B19B Brake Booster Vacuum Sensor signal circuit terminal 1 and the K17 Electronic Brake Control Module signal circuit terminal 34.
   - **If 2 Ω or greater**

     Repair the open/high resistance in the circuit.

   - **If less than 2 Ω**
10. Test or replace the B19B Brake Booster Vacuum Sensor.

Repair Instructions

Perform the **Diagnostic Repair Verification** after completing the repair.

- Refer to **Power Brake Booster Vacuum Sensor Replacement**
- Refer to **Control Module References** for electronic brake control module replacement, programming and setup

SYMPTOMS - HYDRAULIC BRAKES

NOTE: **The following steps must be completed before using the symptom tables.**

1. Perform the **Brake System Vehicle Road Test** before using the hydraulic brake symptom tables in order to duplicate the customers concern.
2. Review the system operation in order to familiarize yourself with the system functions. Refer to the following:
   - **Brake Warning System Description and Operation**
   - **Hydraulic Brake System Description and Operation**
   - **Brake Assist System Description and Operation (Hydraulic Assist)Brake Assist System Description and Operation (Vacuum Assist)**
   - **ABS Description and Operation**

cardiagn.com

Visual/Physical Inspection

- Inspect for aftermarket devices which could affect the operation of the hydraulic brake system. Refer to **Checking Aftermarket Accessories** .
- Inspect the easily accessible or visible system components, for obvious damage or conditions, which could cause the symptom.

Intermittent

Faulty electrical connections or wiring may be the cause of intermittent conditions. Refer to **Testing for Intermittent Conditions and Poor Connections** .

Symptom List

Refer to a symptom diagnostic procedure from the following list in order to diagnose the symptom:

- **Brake Warning Indicator Malfunction**
- **Brake Pulsation**
- **Brake System Noise**
- **Braking Action Uneven - Pulls to One Side**
- **Braking Action Uneven - Front to Rear**
- **Brake Pedal Excessive Travel**
- **Brake Pedal Excessive Effort**
- **Brakes Drag**
- **Brake System Slow Release**
- **Brake Fluid Loss**

BRAKE WARNING INDICATOR MALFUNCTION

Diagnostic Instructions

- Perform the **Diagnostic System Check - Vehicle** prior to using this diagnostic procedure.
- Review **Strategy Based Diagnosis** for an overview of the diagnostic approach.
- Refer to **Diagnostic Procedure Instructions** to provide an overview of each diagnostic category.

Diagnostic Fault Information

cardiagn.com

Circuit	Short to Ground	Open/High Resistance	Short to Voltage	Signal Performance
Signal	C0267 00	C0273 05	C0273 05	-
Park Brake Signal	1	1	1	-
Ground	-	C0273 05	-	-
1. Brake Warning Indicator Malfunction	Â	Â	Â	Â

Circuit/System Description

The instrument cluster turns ON the brake warning indicator for 5 s after ignition ON. The body control module monitors the parking brake switch and will request the instrument cluster via serial data to turn the brake warning indicator ON when the parking brake is applied. The electronic brake control module monitors the brake fluid level switch and will request the instrument cluster via serial data to turn the brake warning indicator ON when low brake fluid is detected.

Reference Information

Schematic Reference

Hydraulic Brake Schematics

Connector End View Reference

COMPONENT CONNECTOR END VIEWS - INDEX

Description and Operation

Brake Warning System Description and Operation

Electrical Information Reference

- **Circuit Testing**
- **Connector Repairs**
- **Testing for Intermittent Conditions and Poor Connections**
- **Wiring Repairs**

Scan Tool Reference

Control Module References for scan tool information

cardiagn.com

Circuit/System Verification

1. Verify that the brake fluid has the proper level. The fluid level should be above minimum level.
   - **If low**

     Refer to **Brake Fluid Loss**.

   - **If above minimum level**
2. Ignition ON.
3. Verify the scan tool Brake Fluid Level Sensor parameter. The reading should be Ok.
   - **If the parameter is Low**

     Refer to Circuit/System Testing

   - **If the parameter is Ok**
4. Verify the scan tool Park Brake Switch parameter changes between Applied and Released while applying and releasing the parking brake.
   - **If the parameter does not change**

     Refer to Circuit/System Testing - Park Brake Switch Malfunction.

   - **If the parameter changes**
5. Verify the brake warning indicator turns ON and OFF, when commanding the instrument cluster All Indicators On and Off with a scan tool.
   - **If the brake warning indicator does not turn ON and OFF**

     Replace the P16 Instrument Cluster.

   - **If the brake warning indicator turns ON and OFF**
6. All OK.

Circuit/System Testing

Brake Fluid Level Switch Malfunction

1. Ignition OFF, disconnect the harness connector at the B20 Brake Fluid Level Switch. It may take up to 2 min for all vehicle systems to power down.
2. Test for less than 10 Ω between the ground circuit terminal 1 and ground.

cardiagn.com

- **If 10 Ω or greater**

1. Ignition OFF.
2. Test for less than 2 Ω in the ground circuit end to end.
    - If 2 Ω or greater, repair the open/high resistance in the circuit.
    - If less than 2 Ω, repair the open/high resistance in the ground connection.

- **If less than 10 Ω**

3. Ignition ON.
4. Verify the scan tool Brake Fluid Level Sensor parameter is OK.

- **If the parameter is not OK**

1. Ignition OFF, disconnect the harness connector at the K17 Electronic Brake Control Module.
2. Test for infinite resistance between the signal circuit terminal 2 and ground.
    - If less than infinite resistance, repair the short to ground on the circuit.
    - If infinite resistance, replace the K17 Electronic Brake Control Module.

- **If the parameter is OK**

5. Install a 3 A fused jumper wire between the signal circuit terminal 2 and ground.
6. Verify the scan tool Brake Fluid Level Sensor parameter is Low.

- **If the parameter is not Low**

1. Ignition OFF, disconnect the harness connector at the K17 Electronic Brake Control Module, ignition ON.
2. Test for less than 1 V between the signal circuit and ground.
    - If 1 V or greater, repair the short to voltage on the circuit.
    - If less than 1 V.
3. Test for less than 2 Ω in the signal circuit end to end.
    - If 2 Ω or greater, repair the open/high resistance in the circuit.
    - If less than 2 Ω, replace the K17 Electronic Brake Control Module.

- **If the parameter is Low**

7. Test or replace the B20 Brake Fluid Level Switch.

Park Brake Switch Malfunction

1. Ignition OFF, disconnect the harness connector at the B80 Park Brake Switch.

cardiagn.com

2. Verify that the B80 Park Brake Switch has no physical damage or incorrect installation.
   - **If physical damage or incorrect installation is found**

     Test or replace the B80 Park Brake Switch.

   - **If the inspection is OK**
3. Ignition ON.
4. Verify the scan tool Park Brake Switch parameter is Released.
   - **If the parameter is Applied**
   1. Ignition OFF, disconnect the harness connector at the K9 Body Control Module.
   2. Test for infinite resistance between the signal circuit terminal 1 (or A) and ground.
      - If less than infinite resistance, repair the short to ground on the circuit.
      - If infinite resistance, replace the K9 Body Control Module.
   - **If the parameter is Released**
5. Install a 3 A fused jumper wire between the signal circuit terminal 1 (or A) and ground.
6. Verify the scan tool Park Brake Switch parameter is Applied.
   - **If the parameter is Released**
   1. Ignition OFF, disconnect the harness connector at the K9 Body Control Module, ignition ON.
   2. Test for less than 1 V between the signal circuit and ground.
      - If 1 V or greater, repair the short to voltage on the circuit.
      - If less than 1 V.
   3. Test for less than 2 Ω in the signal circuit end to end.
      - If 2 Ω or greater, repair the open/high resistance in the circuit.
      - If less than 2 Ω, replace the K9 Body Control Module.
   - **If the parameter is Applied**
7. Test or replace the B80 Park Brake Switch.

Repair Instructions

Perform the **Diagnostic Repair Verification** after completing the repair.

cardiagn.com

- Refer to **Control Module References** for electronic brake control module and instrument cluster replacement, programming and setup.

BRAKE PULSATION

Step	Action	Yes	No
DEFINITION: Fluctuation or pulsation is felt through the brake pedal, steering wheel, seat, floor, and/or in the vehicle ONLY when braking.			
1	Were you sent here from the Hydraulic Brake Symptom table?	Go to **Step 2**	Go to **Symptoms - Hydraulic Brakes**
2	1. Inspect the disc brake system for the following conditions. • Excessive thickness variation of rotor friction surfaces • Excessive assembled lateral runout (LRO) of rotor friction surfaces • Hard spots, heat checks, bluing discoloration of rotor friction surfaces; possibly due to brake drag • Excessive corrosion of rotor friction surfaces; including red, gray or black oxidation • Loose, damaged or missing caliper or lining hardware • Bent or damaged caliper or mounting component • Excessive LRO of wheel hub/axle flange; due to damage and/or loose or excessively worn bearings 2. Perform the disc brake system diagnostic procedure. Refer to **Disc Brake System Diagnosis** 3. Adjust, repair or replace components as necessary. Did you find and correct a condition?	Go to **Step 3**	Go to **Symptoms - Hydraulic Brakes**
3	1. Install or connect components that were removed or disconnected during diagnosis. 2. Road test the vehicle in order to confirm proper operation. Refer to **Brake System Vehicle Road Test** Is the condition still present?	Go to **Step 2**	System OK

BRAKE SYSTEM NOISE

cardiagn.com

Step	Action	Yes	No
DEFINITION: Vehicle exhibits abnormal noise when braking; vehicle may exhibit abnormal noise during motion just after brake pedal release.			
1	Were you sent here from the Hydraulic Brake Symptom table?	Go to **Step 2**	Go to **Diagnostic Starting Point - Vehicle**
2	1. Inspect the disc brake system for the following conditions. • Lining wear indicator contact with rotor • Debris trapped between rotor and splash shield or backing plate; and/or debris trapped between rotor and linings • Contaminated linings • Aftermarket linings • Glazed linings • Distorted, cracked or damaged linings • Excessively worn linings • Damaged or excessively worn caliper hardware and/or lining hardware • Incorrectly installed, loose or missing caliper hardware and/or lining hardware • Lack of lubrication or excessive corrosion on metal to metal contact surfaces • Bent or damaged splash shield or backing plate • Hard spots, heat checks, blueing discoloration of rotor friction surfaces • Glazed rotor friction surfaces • Bent or damaged caliper or mounting component 2. Adjust, repair or replace components as necessary. Refer to **Disc Brake System Diagnosis**. Did you find and correct a condition?	Go to **Step 9**	Go to **Step 3**
3	1. Inspect the brake assist system for the following conditions.	Go to **Step 9**	Go to **Step 4**

cardiagn.com

Step	Action	Yes	No
	• Lack of lubrication or excessively worn pushrod or pedal pivots or pivot bushings • Bent or damaged pedal pushrod, pedal, or pedal bracket • Damaged or improperly operating vacuum booster and/or check valve, if equipped • Low power steering fluid level, if equipped with hydraulic boost • Improperly tensioned, excessively worn or damaged power steering belt, if equipped with hydraulic boost • Restricted return hose from hydraulic booster, if equipped • Improperly operating hydraulic booster, if equipped • Improperly functioning power steering system, if equipped with a hydraulic booster assembly • Contaminated power steering fluid, if equipped with hydraulic boost 2. Adjust, repair or replace components as necessary. Refer to **Brake Assist System Diagnosis**. Did you find and correct a condition?		
4	1. Inspect the hydraulic brake system for the following conditions. • Improper operation of caliper pistons • Contaminated brake fluid 2. Adjust, repair or replace components as necessary. Refer to **Hydraulic Brake System Diagnosis**. Did you find and correct a condition?	Go to **Step 9**	Go to **Step 5**
5	Is the vehicle equipped with a drum-in-rotor type of park brake system?	Go to **Step 6**	Go to **Step 9**
6	Ensure the park brake shoes are not adjusted too tightly, possibly causing a noise under certain conditions. Are the park brake shoes adjusted too tightly?	Go to **Step 7**	Go to **Step 9**

cardiagn.com

Step	Action	Yes	No
7	1. Clean and inspect the park brake shoes for excessive wear and/or damage. 2. Inspect the drum portion of the rotors for excessive wear, blueing discoloration, heat spots, and excessive radial runout. 3. If any of these conditions are present, replace the affected components. 4. Adjust the park brake system. Did you find and correct a condition?	Go to **Step 9**	Go to **Step 8**
8	Inspect the park brake system for proper operation. Refer to **Park Brake System Diagnosis** . Did you find and correct a condition?	Go to **Step 9**	Go to **Diagnostic Starting Point - Vehicle**
9	1. Install or connect components that were removed or disconnected during diagnosis. 2. Road test the vehicle in order to confirm proper operation. Refer to **Brake System Vehicle Road Test**. Is the condition still present?	Go to **Step 2**	System OK

BRAKING ACTION UNEVEN - PULLS TO ONE SIDE

Test Description

The numbers below refer to the step numbers on the diagnostic table.

4

Suspension components that are not operating properly may cause a disturbance to the vehicle during application of the brake system.

5

Steering components that are not operating properly may cause a disturbance to the vehicle during application of the brake system.

Step	Action	Yes	No

cardiagn.com

Step	Action	Yes	No
DEFINITION: Vehicle pulls to one side only when braking.			
1	Were you sent here from the Hydraulic Brake Symptom table?	Go to **Step 2**	Go to **Symptoms - Hydraulic Brakes**
2	1. Inspect the hydraulic brake system for the following conditions. • Kinked, pinched or damaged brake pipe or flexible brake hose • Sticking or improperly operating caliper piston • Brake fluid leak 2. Perform the hydraulic brake system diagnostic procedure. Refer to **Hydraulic Brake System Diagnosis**. 3. Adjust, repair or replace components as necessary. Did you find and correct a condition?	Go to **Step 6**	Go to **Step 3**
3	1. Inspect the disc brake system for the following conditions. • Contaminated linings • Glazed linings • Distorted, cracked or damaged linings on one side • Loose, damaged or missing caliper hardware and/or lining hardware • Incorrect linings on one side • Hard spots, heat checks, blueing discoloration of rotor friction surfaces; possibly due to brake drag • Glazed rotor friction surfaces • Bent or damaged caliper or mounting component 2. Perform the disc brake system diagnostic procedure. Refer to **Disc Brake System Diagnosis**. 3. Adjust, repair or replace components as necessary. Did you find and correct a condition?	Go to **Step 6**	Go to **Step 4**
4	1. Inspect the suspension system for the following conditions.	Go to **Step 6**	Go to **Step 5**

cardiagn.com

Step	Action	Yes	No
	• Incorrect tire pressures • Loose suspension component connections • Excessively worn or damaged suspension components 2. Adjust, repair or replace components as necessary. Refer to **Symptoms - Suspension General Diagnosis** . Did you find and correct a condition?		
5	1. Inspect the steering system for the following conditions. • Loose steering component connections • Excessively worn or damaged steering components 2. Adjust, repair or replace components as necessary. Refer to **Symptoms - Power Steering System** . Did you find and correct a condition?	Go to **Step 6**	Go to **Symptoms - Hydraulic Brakes**
6	1. Install or connect components that were removed or disconnected during diagnosis. 2. Road test the vehicle in order to confirm proper operation. Refer to **Brake System Vehicle Road Test**. Is the condition still present?	Go to **Step 2**	System OK

BRAKING ACTION UNEVEN - FRONT TO REAR

Test Descriptions

The number below refers to the step number on the diagnostic table.

4

Suspension components that are not operating properly may cause a disturbance to the vehicle during application of the brake system.

Step	Action	Yes	No
DEFINITION: Braking action or stopping force sensitive or grabbing and/or more pronounced at the front or at the rear axle. Sensitive or			

cardiagn.com

Step	Action	Yes	No
grabbing brakes: Excessive brake jump-in force relative to brake pedal input.			
1	Were you sent here from the Hydraulic Brake Symptom table?	Go to **Step 2**	Go to **Diagnostic Starting Point - Vehicle**
2	1. Inspect the hydraulic brake system for the following conditions: • Improper operation of caliper pistons • Kinked, pinched or damaged brake pipe or flexible brake hose • Brake fluid leak • Improperly functioning proportion valve, if equipped • Improper operation of dynamic rear proportion (DRP) system, if equipped 2. Adjust, repair or replace components as necessary. Refer to **Hydraulic Brake System Diagnosis**. Did you find and correct a condition?	Go to **Step 6**	Go to **Step 3**
3	1. Inspect the disc brake system for the following conditions: • Contaminated linings • Glazed linings • Distorted, cracked or damaged linings • Excessively worn linings • Aftermarket linings • Damaged or excessively worn caliper hardware and/or lining hardware • Hard spots, heat checks, blueing discoloration of rotor friction surfaces • Glazed rotor friction surfaces 2. Adjust, repair or replace components as necessary. Refer to **Disc Brake System Diagnosis**. Did you find and correct a condition?	Go to **Step 6**	Go to **Step 4**

cardiagn.com

Step	Action	Yes	No
4	1. Inspect the suspension system for the following conditions: • Loose suspension component connections • Excessively worn or damaged suspension components 2. Adjust, repair or replace components as necessary. Refer to **Diagnostic Starting Point - Vehicle** . Did you find and correct a condition?	Go to **Step 6**	Go to **Step 5**
5	1. Inspect the brake assist system for the following conditions: • Binding, bent or damaged pedal pushrod, pedal, or pedal bracket • Damaged or improperly operating vacuum booster, if equipped • Damaged or improperly operating hydraulic booster, if equipped 2. Adjust, repair or replace components as necessary. Refer to **Brake Assist System Diagnosis**. Did you find and correct a condition?	Go to **Step 6**	Go to **Diagnostic Starting Point - Vehicle**
6	1. Install or connect components that were removed or disconnected during diagnosis. 2. Road test the vehicle in order to confirm proper operation. Refer to **Brake System Vehicle Road Test**. Is the condition still present?	Go to **Step 2**	System OK

BRAKE PEDAL EXCESSIVE TRAVEL

Step	Action	Yes	No
DEFINITION: Brake pedal travels further than expected to obtain firm pedal and/or firm pedal cannot be obtained, pedal fades away, or pedal is spongy.			
1	Were you sent here from the Hydraulic Brake Symptom table?	Go to **Step 2**	Go to **Symptoms - Hydraulic Brakes**

cardiagn.com

Step	Action	Yes	No
2	Inspect the travel and feel of brake pedal applies. Perform the following: 1. Apply the brake pedal several times to fully deplete the power reserve. 2. With power reserve depleted, apply the brake pedal with light, steady pressure and hold for 15 seconds. Observe pedal travel and feel. 3. Apply the brake pedal with light, steady pressure, then without pumping the pedal, reduce pressure and reapply pressure several times. Observe pedal travel and feel for each apply. 4. Apply the brake pedal slowly, then release and apply the pedal quickly. Observe pedal travel and feel for each apply. Did you complete the brake pedal travel and feel inspections?	Go to **Step 3**	-

3	1. Inspect the hydraulic brake system for the conditions listed, based on the following symptoms observed during the pedal travel and feel inspections:
	• Pedal feel was spongy
	  • Air in hydraulic system
	  • External brake fluid leaks
	  • Soft, weak or damaged hydraulic hoses; expanding under pressure
	• Pedal fell away and/or traveled to or almost to floor
	  • External brake fluid leaks
	  • Poor brake fluid quality; low boiling point
	  • Internal brake fluid leaks; improperly functioning master cylinder
	• Pedal was somewhat firm then dropped slightly, or pedal rose with successive applies, or pedal travel was different between slow and quick applies
	  • Internal brake fluid leaks; improperly functioning master
		Go to **Step 8**	Go to **Step 4**

cardiagn.com

Step	Action	Yes	No
	cylinder • Poor brake fluid quality; low boiling point • Pedal returned to rest slowly after any of the applies • Internally damaged flexible brake hoses; hindering fluid return • Binding caliper pistons • Internal brake fluid leaks; improperly functioning master cylinder 2. Repair or replace components as necessary. Refer to **Hydraulic Brake System Diagnosis**. 3. Re-inspect brake pedal apply travel and feel. Did you find and correct a condition?		
4	1. Inspect the disc brake system for the following conditions: • Cracked, excessively worn or damaged linings • Cracked, excessively worn or damaged rotors • Improperly operating, binding or damaged caliper hardware and/or lining hardware • Loose or missing caliper hardware and/or lining hardware • Excessive assembled lateral runout (LRO) of rotor friction surfaces • Bent or damaged caliper or mounting component 2. Adjust, repair or replace components as necessary. Refer to **Disc Brake System Diagnosis**. 3. Re-inspect brake pedal apply travel and feel. Did you find and correct a condition?	Go to **Step 8**	Go to **Step 5**
5	Inspect for proper brake pedal travel. Refer to **Brake Pedal Travel Measurement and Inspection**. Is the brake pedal travel distance within the acceptable limits?	Go to **Step 7**	Go to **Step 6**

cardiagn.com

Step	Action	Yes	No
6	1. Inspect for worn, missing, misaligned, bent or damaged brake pedal system components. • For the brake pedal pushrod component inspection, refer to **Brake Pedal Pushrod Inspection**. • Inspect the brake pedal bushings for binding, excessive wear and/or damage and inspect the brake pedal for a misaligned, bent, and/or damaged condition. 2. Replace the brake pedal system components that are worn, missing, misaligned, bent or damaged. Did you find and replace any worn, missing, misaligned, bent or damaged brake pedal system components?	Go to **Step 8**	Go to **Step 7**
7	1. Inspect the brake assist system for the following conditions: • Vacuum leaks and/or improperly operating check valve, if equipped with vacuum assist • Power steering fluid leaks, if equipped with hydraulic power assist • Damaged or improperly operating brake booster assembly 2. Adjust, repair or replace components as necessary. Refer to **Brake Assist System Diagnosis**. Did you find and correct a condition?	Go to **Step 8**	Go to **Symptoms - Hydraulic Brakes**
8	1. Install or connect components that were removed or disconnected during diagnosis. 2. Road test the vehicle in order to confirm proper operation. Refer to **Brake System Vehicle Road Test**. Is the condition still present?	Go to **Step 2**	System OK

BRAKE PEDAL EXCESSIVE EFFORT

Step	Action	Yes	No

cardiagn.com

Step	Action	Yes	No
DEFINITION: Brake pedal requires an increased amount of input from the driver to obtain good braking action and/or stopping distance is increased.			
1	Were you sent here from the Hydraulic Brake Symptom table?	Go to **Step 2**	Go to **Diagnostic Starting Point - Vehicle**
2	1. Inspect the brake assist system for the following conditions: • Vacuum leaks, if equipped with vacuum power assist • Power steering fluid leaks, if equipped with hydraulic power assist • Lack of lubrication, binding or excessively worn pushrod or pedal pivots or pivot bushings • Bent or damaged pedal pushrod, pedal, or pedal bracket • Damaged or improperly operating brake booster assembly 2. Adjust, repair or replace components as necessary. Refer to **Brake Assist System Diagnosis**. Did you find and correct a condition?	Go to **Step 5**	Go to **Step 3**
3	1. Inspect the hydraulic brake system for the following conditions: • Binding caliper pistons • Internally damaged flexible brake hoses; hindering fluid flow • External brake fluid leaks • Kinked or damaged flexible brake hoses and/or pipes • Internal brake fluid leaks; improperly operating master cylinder • Poor brake fluid quality; low boiling point 2. Adjust, repair or replace components as necessary. Refer to **Hydraulic Brake System Diagnosis**. Did you find and correct a condition?	Go to **Step 5**	Go to **Step 4**
4	1. Inspect the disc brake system for the following conditions: • Excessively worn linings	Go to **Step 5**	Go to **Diagnostic Starting Point - Vehicle**

cardiagn.com

Step	Action	Yes	No
	• Glazed linings • Cracked, distorted or damaged linings • Contaminated linings • Binding, damaged or excessively worn caliper hardware and/or lining hardware • Lack of lubrication or excessive corrosion on metal to metal contact surfaces • Excessively worn or corroded rotor friction surfaces • Glazed rotor friction surfaces • Hard spots, heat checks, blueing discoloration of rotor friction surfaces 2. Adjust, repair or replace components as necessary. Refer to **Disc Brake System Diagnosis**. Did you find and correct a condition?		
5	1. Install or connect components that were removed or disconnected during diagnosis. 2. Road test the vehicle in order to confirm proper operation. Refer to **Brake System Vehicle Road Test**. Is the condition still present?	Go to **Step 2**	System OK

BRAKES DRAG

Step	Action	Yes	No
DEFINITION: Brake system does not fully release or has delayed release; vehicle motion may be hindered by brake system without applying brakes.			
1	Were you sent here from the Hydraulic Brake Symptom table?	Go to **Step 2**	Go to **Diagnostic Starting Point - Vehicle**
2	Is the vehicle equipped with an adjustable stop lamp switch and/or an adjustable cruise control release switch?	Go to **Step 3**	Go to **Step 4**

cardiagn.com

Step	Action	Yes	No
3	1. Inspect the stop lamp switch for proper adjustment to ensure that the brake pedal is fully releasing. 2. Inspect the cruise control release switch, if equipped, for proper adjustment to ensure that the brake pedal is fully releasing. Did you find and correct a condition?	Go to **Step 14**	Go to **Step 4**
4	Is the vehicle equipped with a drum-in-rotor type of park brake system?	Go to **Step 5**	Go to **Step 7**
5	Ensure the park brake shoes are not adjusted too tightly, possibly causing drag under certain conditions. Are the park brake shoes adjusted too tightly?	Go to **Step 6**	Go to **Step 7**
6	1. Clean and inspect the park brake shoes for excessive wear and/or damage. 2. Inspect the drum portion of the rotors for excessive wear, blueing discoloration and heat spots. 3. If any of these conditions are present, replace the affected components. 4. Adjust the park brake system. Did you find and correct a condition?	Go to **Step 14**	Go to **Step 7**
7	Inspect the park brake system for proper operation. Refer to **Park Brake System Diagnosis** Did you find and correct a condition?	Go to **Step 14**	Go to **Step 8**
8	1. Inspect the disc brake system for the following conditions: • Binding, incorrectly installed or missing caliper hardware and/or lining hardware-Ensure free movement of linings and of caliper, if equipped with sliding type caliper • Lack of lubrication or excessive corrosion on metal to metal contact surfaces • Distorted or damaged linings • Damaged or excessively worn caliper hardware and/or lining hardware	Go to **Step 14**	Go to **Step 9**

cardiagn.com

Step	Action	Yes	No
	• Bent or damaged caliper or mounting component 2. Adjust, repair or replace components as necessary. Refer to **Disc Brake System Diagnosis** Did you find and correct a condition?		
9	1. Separate the brake booster pushrod from the brake pedal. 2. Inspect the brake corners to determine if the brake drag condition is still present. Do the brake corners still exhibit the brake drag condition?	Go to **Step 11**	Go to **Step 10**
10	1. Inspect the pushrod for improper positioning and/or damage. Correctly position or replace the pushrod if necessary. 2. Inspect the brake pedal assembly for damage and replace if necessary. Did you complete the repair or replacement?	Go to **Step 14**	-
11	1. For vacuum boost systems, disconnect the vacuum check valve from the booster to relieve vacuum reserve. 2. Separate the master cylinder from the brake booster. Do not disconnect any brake pipes. 3. Inspect the brake corners to determine if the brake drag condition is still present. Do the brake corners still exhibit the brake drag condition?	Go to **Step 13**	Go to **Step 12**
12	Replace the brake booster assembly. Did you complete the replacement?	Go to **Step 14**	-
13	1. Inspect the hydraulic brake system for the following conditions. • Improper operation of caliper pistons • Contaminated brake fluid • Internally damaged flexible brake hoses; hindering brake release	Go to **Step 14**	Go to **Diagnostic Starting Point - Vehicle**

cardiagn.com

Step	Action	Yes	No
	• Damaged or improperly operating master cylinder 2. Adjust, repair or replace components as necessary. Refer to **Hydraulic Brake System Diagnosis** Did you find and correct a condition?		
14	1. Install or connect components that were removed or disconnected during diagnosis. 2. Road test the vehicle in order to confirm proper operation. Refer to **Brake System Vehicle Road Test** Is the condition still present?	Go to **Step 2**	System OK

BRAKE SYSTEM SLOW RELEASE

Step	Action	Yes	No
DEFINITION: Brake system releases and returns to rest slowly; vehicle motion is hindered by brake system briefly after release of brake pedal.			
1	Were you sent here from the Hydraulic Brake Symptom table?	Go to **Step 2**	Go to **Diagnostic Starting Point - Vehicle**
2	1. Inspect the hydraulic brake system for the following conditions: • Improper operation of caliper pistons • Internally damaged flexible brake hoses; hindering brake release • Contaminated brake fluid • Damaged or improperly operating master cylinder 2. Adjust, repair or replace components as necessary. Refer to **Hydraulic Brake System Diagnosis**. Did you find and correct a condition?	Go to **Step 5**	Go to **Step 3**
3	1. Inspect the brake assist system for the following conditions: • Binding, bent or damaged pedal pushrod, pedal, or pedal	Go to **Step 5**	Go to **Step 4**

cardiagn.com

Step	Action	Yes	No
	bracket • Damaged or improperly operating vacuum booster, if equipped • Restricted return hose from hydraulic booster, if equipped • Damaged or improperly operating hydraulic booster, if equipped 2. Adjust, repair or replace components as necessary. Refer to **Brake Assist System Diagnosis**. Did you find and correct a condition?		
4	1. Inspect the disc brake system for the following conditions: • Damaged or excessively worn caliper hardware and/or lining hardware • Distorted or damaged linings • Lack of lubrication or excessive corrosion on metal to metal contact surfaces • Bent or damaged caliper or mounting component 2. Adjust, repair or replace components as necessary. Refer to **Disc Brake System Diagnosis**. Did you find and correct a condition?	Go to **Step 5**	Go to **Diagnostic Starting Point - Vehicle**
5	1. Install or connect components that were removed or disconnected during diagnosis. 2. Road test the vehicle in order to confirm proper operation. Refer to **Brake System Vehicle Road Test**. Is the condition still present?	Go to **Step 2**	System OK

BRAKE FLUID LOSS

Step	Action	Yes	No
DEFINITION: Brake fluid level is low not related to lining wear.			

cardiagn.com

Step	Action	Yes	No
1	Were you sent here from the Hydraulic Brake Symptom table?	Go to **Step 2**	Go to **Diagnostic Starting Point - Vehicle**
2	1. Inspect the following hydraulic brake system components for brake fluid leaks: • Flexible brake hose connections; threaded and bolted • Flexible brake hose crimp joints • Brake pipe fittings • Caliper piston seals • Wheel cylinder piston seals, if equipped • Master cylinder reservoir • Master cylinder reservoir low pressure hose, if equipped • Brake pressure modulator valve (BPMV) assembly, if equipped 2. Repair or replace components as necessary. Refer to **Hydraulic Brake System Diagnosis** Did you find and correct a condition?	Go to **Step 8**	Go to **Step 3**
3	Is the vehicle equipped with a vacuum brake booster?	Go to **Step 4**	Go to **Step 6**
4	1. Disconnect the vacuum check valve from the booster to relieve vacuum reserve. 2. Separate the master cylinder from the vacuum brake booster. Do not disconnect any brake pipes. 3. Inspect the rear of the master cylinder for a brake fluid leak. 4. Inspect for brake fluid in the vacuum brake booster. Did you find a brake fluid leak?	Go to **Step 5**	Go to **Diagnostic Starting Point - Vehicle**
5	Replace the brake master cylinder and the vacuum brake booster. Did you complete the replacement?	Go to **Step 8**	-
6	1. Wipe clean the external surface of the master cylinder to hydraulic brake booster area, if equipped.	Go to **Step 7**	Go to **Diagnostic Starting Point - Vehicle**

cardiagn.com

Step	Action	Yes	No
	2. Separate the master cylinder from the hydraulic brake booster, if equipped. Do not disconnect any brake pipes. 3. Inspect the rear of the master cylinder for a brake fluid leak. Did you find a brake fluid leak?		
7	Replace the brake master cylinder. Did you complete the replacement?	Go to **Step 8**	-
8	1. Install or connect components that were removed or disconnected during diagnosis. 2. Road test the vehicle to confirm proper operation. Refer to **Brake System Vehicle Road Test** Is the condition still present?	Go to **Step 2**	System OK

BRAKES SELF APPLY WHEN TURNING STEERING WHEEL

Step	Action	Yes	No
1	Were you sent here from the Hydraulic Brake Symptom table?	Go to **Step 2**	Go to **Symptoms - Hydraulic Brakes**
2	Inspect the hydraulic brake booster to power steering reservoir return hose for kinks and/or other restrictions. Replace the return hose if restrictions are present. Did you find and correct a condition?	Go to **Step 5**	Go to **Step 3**
3	Inspect the brake assist system for proper operation. Refer to **Brake Assist System Diagnosis**. Did you find and correct a condition?	Go to **Step 5**	Go to **Step 4**
4	Inspect the steering system for proper operation. Did you find and correct a condition?	Go to **Step 5**	Go to **Symptoms - Hydraulic Brakes**
5	Road test the vehicle in order to confirm proper operation. Refer to **Brake System Vehicle Road Test**. Is the condition still present?	Go to **Step 2**	System OK

DISC BRAKE SYSTEM DIAGNOSIS

cardiagn.com

Test Description

The numbers below refer to the step numbers on the diagnostic table:

9

Lubricant leaks from non-brake system components may come in contact with and contaminate brake system components.

10

Lubricant leaks from non-brake system components may come in contact with and contaminate brake system components.

12

Disc brake rotor shields/backing plates that come in contact with disc brake rotors may cause brake system noise.

15

Disc brake rotor thickness variation that exceeds the maximum acceptable level can cause brake pulsation.

19

Disc brake rotor thickness variation that exceeds the maximum acceptable level can cause brake pulsation.

22

Disc brake rotor assembled lateral runout (LRO) that exceeds the maximum acceptable level can lead to thickness variation.

Step	Action	Yes	No
DEFINITION: This diagnostic table is designed to diagnose ONLY the components of the DISC brake system in order to determine if the DISC brake system is operating properly. You will be directed by the appropriate Symptom table to go to other brake system diagnostic tables as appropriate.			
1	Were you sent here from a Brake Symptom table?	Go to **Step 2**	Go to **Symptoms - Hydraulic Brakes**
2	Visually inspect the disc brake pads for the following conditions: Refer to **Brake Pad Inspection** . • Lining thickness below specifications	Go to **Step 3**	Go to **Step 12**

cardiagn.com

Step	Action	Yes	No
	• Uneven and/or abnormal wear - edge-to-edge and/or side-to-side • Looseness or damage - including pad hardware • Evidence of contamination from an external substance Did you find any conditions to indicate a concern with any of the front and/or rear disc brake pads?		
3	Are any of the front and/or rear disc brake pads contaminated?	Go to **Step 8**	Go to **Step 4**
4	Are any of the front and/or rear disc brake pads worn unevenly?	Go to **Step 7**	Go to **Step 5**
5	Are any of the front and/or rear disc brake pads and/or pad hardware loose or damaged?	Go to **Step 7**	Go to **Step 6**
6	1. Remove and inspect the worn disc brake pads for glazing, looseness, heat spots or damage. 2. Replace the worn disc brake pads as a complete axle set. Refer to **Front Disc Brake Pads Replacement (JD9)** **Front Disc Brake Pads Replacement (J95)** , and/or **Rear Disc Brake Pads Replacement (JD9)** **Rear Disc Brake Pads Replacement (J95)** . Did you complete the inspection and replacement?	Go to **Step 12**	-
7	**CAUTION:** **Support the brake caliper with heavy mechanic wire, or equivalent, whenever it is separated from its mount and the hydraulic flexible**	Go to **Step 12**	-

cardiagn.com

Step	Action	Yes	No
	brake hose is still connected. Failure to support the caliper in this manner will cause the flexible brake hose to bear the weight of the caliper, which may cause damage to the brake hose and in turn may cause a brake fluid leak. **NOTE:** **Do NOT disconnect the hydraulic brake flex hoses from the calipers.** 1. Remove the front and/or rear disc brake calipers, as appropriate, from the mounting brackets and support the calipers. Refer to **Front Brake Caliper Replacement (JD9)** **Front Brake Caliper Replacement (J95)** , and/or **Rear Brake Caliper Replacement**		

cardiagn.com

Step	Action	Yes	No
	(JD9) Rear Brake Caliper Replacement (J95) . 2. Inspect the disc brake caliper mounting bracket and the mounting/sliding hardware for the following conditions: Refer to Front Disc Brake Mounting and Hardware Inspection , and/or Rear Disc Brake Mounting and Hardware Inspection . • Binding or seized hardware • Worn, damaged or missing hardware components • Loose, bent, cracked, or damaged caliper mounting bracket 3. Replace components as required. Refer to the following procedures in Disc Brakes, as required: • Front Brake Caliper Bracket Replacement (JD9) Front Brake Caliper Bracket Replacement (J95) • Rear Brake Caliper Bracket Replacement (JD9) Rear Brake Caliper Bracket Replacement (J95) 4. Replace the unevenly-worn, loose or damaged disc brake pads as a complete axle set. Refer to Front Disc Brake Pads Replacement (JD9) Front Disc Brake Pads Replacement (J95) , and/or Rear Disc Brake Pads Replacement (JD9) Rear Disc Brake Pads Replacement (J95) . Did you complete the inspection and replacement?		
8	1. Inspect the disc brake calipers, brake hoses and brake pipes for evidence of an external brake fluid leak. 2. Replace any components found to be leaking brake fluid. Refer to the following procedures as required: • Front Brake Caliper Overhaul (J95) Front Brake Caliper Overhaul (JD9) , or Front Brake Caliper Replacement (JD9) Front Brake Caliper Replacement (J95) • Rear Brake Caliper Overhaul (J95) Rear Brake Caliper Overhaul (JD9) , or Rear Brake Caliper Replacement	Go to **Step 11**	Go to **Step 9**

cardiagn.com

Step	Action	Yes	No
	(JD9) Rear Brake Caliper Replacement (J95) • Front Brake Hose Replacement (JD9)Front Brake Hose Replacement (J95) • Rear Brake Hose Replacement (JD9 to Rear Axle)Rear Brake Hose Replacement (JD9 to Caliper)Rear Brake Hose Replacement (J95 to Rear Axle)Rear Brake Hose Replacement (J95 to Caliper) • Brake Pipe Replacement Did you find and correct the source of the leak causing contamination of the pads?		
9	1. Inspect the wheel drive shaft outer seals, if equipped, for damage and evidence of a grease leak. 2. Replace any wheel drive shaft seal that is found to be leaking grease which may be the source of the contamination to the pads. Refer to Front Wheel Drive Shaft Outer Joint and Boot Replacement , if equipped. 3. Inspect the rear axle seals for damage and evidence of a lubricant leak. 4. Replace any rear axle seal that is found to be leaking lubricant which may be the source of the contamination to the pads. Refer to Rear Axle Shaft Seal Replacement . Did you find and correct the source of the leak causing contamination of the pads?	Go to **Step 11**	Go to **Step 10**
10	1. Inspect the automatic transmission cooling system lines, if equipped, for damage and evidence of an external fluid leak which may be the source of the contamination to the pads. 2. Inspect the power steering system hoses for damage and evidence of an external fluid leak which may be the source of the contamination to the pads. 3. Replace any components found to be leaking fluid which may be the	Go to **Step 11**	-

cardiagn.com

Step	Action	Yes	No
	source of the contamination to the pads. Did you find and correct the source of the leak causing contamination of the pads?		
11	1. Clean the remaining disc brake system components to remove any traces of the contaminant. **CAUTION:** **Support the brake caliper with heavy mechanic wire, or equivalent, whenever it is separated from its mount and the hydraulic flexible brake hose is still connected. Failure to support the caliper in this manner will cause the flexible brake hose to bear the weight of the caliper, which may cause**	Go to **Step 12**	-

cardiagn.com

Step	Action	Yes	No
	damage to the brake hose and in turn may cause a brake fluid leak. **NOTE:** **Do NOT disconnect the hydraulic brake flex hoses from the calipers.** 2. Remove the front and/or rear disc brake calipers, as appropriate, from the mounting brackets and support the calipers. Refer to **Front Brake Caliper Replacement (JD9)** **Front Brake Caliper Replacement (J95)** , and/or **Rear Brake Caliper Replacement (JD9)** **Rear Brake Caliper Replacement (J95)** . 3. Inspect the disc brake caliper mounting/sliding hardware for the following conditions: Refer to **Front Disc Brake Mounting and Hardware Inspection** , and/or **Rear Disc Brake Mounting and Hardware Inspection** . • Binding or seized hardware • Distorted, worn, damaged or missing hardware components 4. Replace the caliper mounting/sliding hardware components as required. Refer to **Front Brake Caliper Bracket Replacement (JD9)** **Front Brake Caliper Bracket Replacement (J95)** , and/or **Rear Brake Caliper Bracket Replacement (JD9)** **Rear Brake Caliper Bracket Replacement (J95)** .		

cardiagn.com

Step	Action	Yes	No
	5. Replace the contaminated disc brake pads as a complete axle set. Refer to **Front Disc Brake Pads Replacement (JD9)** **Front Disc Brake Pads Replacement (J95)** , and/or **Rear Disc Brake Pads Replacement (JD9)** **Rear Disc Brake Pads Replacement (J95)** . Did you complete the cleaning, inspection and replacement?		
12	Visually inspect each of the disc brake rotor shields/backing plates for evidence of contact with the brake rotors. Are any of the brake rotor shields/backing plates contacting the brake rotors?	Go to **Step 13**	Go to **Step 14**
13	Repair or replace the disc brake rotor shields/backing plates as required. Refer to **Front Brake Shield Replacement (J95)** **Front Brake Shield Replacement (JD9)** , and/or **Rear Brake Shield Replacement (JD9)** **Rear Brake Shield Replacement (J95)** . Did you complete the repair or replacement?	Go to **Step 14**	-
14	1. Check the thickness of each of the disc brake rotors. **NOTE:** **Make the following determination AND ANSWER the question INDIVIDUALLY for EACH rotor.** 2. Make a determination for each brake rotor if the rotor can be REFINISHED and REMAIN ABOVE the minimum requirements. Refer to **Brake Rotor Thickness Measurement** .Does the disc brake rotor meet the minimum requirements for REFINISHING?	Go to **Step 15**	Go to **Step 18**
15	**NOTE:**	Go to **Step 17**	Go to **Step 16**

cardiagn.com

Step	Action	Yes	No
	Perform the following inspection AND ANSWER the question INDIVIDUALLY for EACH rotor. Inspect each of the disc brake rotors for thickness variation that exceeds the maximum acceptable level. Refer to **Brake Rotor Thickness Variation Measurement** .Does the brake rotor exhibit thickness variation that exceeds the maximum acceptable level?		
16	1. Inspect each of the disc brake rotors for the following surface and wear conditions: Refer to **Brake Rotor Surface and Wear Inspection** . • Heavy rust and/or pitting • Cracks and/or heat spots • Excessive blueing discoloration • Deep or excessive scoring beyond maximum acceptable level **NOTE:** **Make the following determination AND ANSWER the question INDIVIDUALLY for EACH rotor.** 2. Make a determination for each brake rotor if the rotor requires	Go to **Step 17**	Go to **Step 22**

cardiagn.com

Step	Action	Yes	No
	refinishing based upon the results of the inspection. If the brake rotor exhibits any of the conditions listed previously, it requires refinishing. Does the brake rotor require REFINISHING?		
17	1. Refinish the brake rotor. Refer to **Brake Rotor Refinishing** . 2. Inspect the brake rotor thickness. Refer to **Brake Rotor Thickness Measurement** . Were you able to REFINISH the brake rotor within the minimum requirements?	Go to **Step 22**	Go to **Step 21**
18	Is the brake rotor at or below the DISCARD requirements?	Go to **Step 21**	Go to **Step 19**
19	**NOTE:** **Perform the following inspection AND ANSWER the question INDIVIDUALLY for EACH rotor.** Inspect each of the disc brake rotors for thickness variation that exceeds the maximum acceptable level. Refer to **Brake Rotor Thickness Variation Measurement** .Does the brake rotor exhibit thickness variation that exceeds the maximum acceptable level?	Go to **Step 21**	Go to **Step 20**
20	1. Inspect each of the disc brake rotors for the following surface and wear conditions: Refer to **Brake Rotor Surface and Wear Inspection** . • Heavy rust and/or pitting • Cracks and/or heat spots	Go to **Step 21**	Go to **Step 22**

cardiagn.com

Step	Action	Yes	No
	• Excessive blueing discoloration • Deep or excessive scoring beyond maximum acceptable level **NOTE:** **Make the following determination AND ANSWER the question INDIVIDUALLY for EACH rotor.** 2. Make a determination for each brake rotor if the rotor requires replacement based upon the results of the inspection. If the brake rotor exhibits any of the conditions listed previously, it requires replacement. Does the brake rotor require REPLACEMENT?		
21	**NOTE:** **Whenever a brake rotor is replaced, the assembled lateral runout (LRO) of the rotor must be measured to ensure optimum performance**	Go to **Step 24**	-

cardiagn.com

Step	Action	Yes	No
	of the disc brakes. Replace the brake rotor. Refer to **Front Brake Rotor Replacement (JD9)** **Front Brake Rotor Replacement (J95)** , or **Rear Brake Rotor Replacement (JD9)** **Rear Brake Rotor Replacement (J95)** .Did you complete the replacement?		
22	**NOTE:** **Perform the following inspection AND ANSWER the question INDIVIDUALLY for EACH rotor.** Inspect each of the disc brake rotors for assembled LRO that exceeds the maximum acceptable level. Refer to **Brake Rotor Assembled Lateral Runout Measurement** .Does the brake rotor exhibit assembled LRO that exceeds the maximum acceptable level?	Go to **Step 23**	Go to **Step 24**
23	Correct the LRO for each brake rotor that was determined to have LRO exceeding the maximum acceptable level. Refer to **Brake Rotor Assembled Lateral Runout Correction** . Did you complete the operation?	Go to **Step 24**	-
24	Install or connect components that were removed or disconnected during diagnosis. Did you complete the operation?	Disc Brake System OK Return to Symptom Table	-

HYDRAULIC BRAKE SYSTEM DIAGNOSIS

Step	Action	Yes	No
DEFINITION: This diagnostic table is designed to diagnose ONLY the components of the HYDRAULIC brake system in order to determine if the HYDRAULIC brake system is operating properly. You will be directed by the appropriate Symptom table to go to other brake system			

cardiagn.com

Step	Action	Yes	No
diagnostic tables as appropriate.			
1	Were you sent here from a Brake Symptom table?	Go to **Step 2**	Go to **Symptoms - Hydraulic Brakes**
2	Inspect and adjust the brake fluid level in the brake master cylinder. Refer to **Master Cylinder Reservoir Filling**. Was the brake fluid level low?	Go to **Step 3**	Go to **Step 4**
3	1. Inspect the brake fluid for the following conditions, indicating brake fluid contamination: • Fluid separation, indicating two types of fluid are present • Swirled appearance - oil-based substance • Layered appearance - silicone-based substance • Fluid discoloration • Cloudy appearance - moisture • Dark appearance/suspended particles in fluid - dirt, rust, corrosion, brake dust 2. Inspect the master cylinder reservoir cap diaphragm and the reservoir-to-master cylinder grommets for swelling, indicating fluid contamination. Do any of the above conditions exist?	Go to **Step 5**	Go to **Step 6**
4	1. Inspect the brake fluid for the following conditions, indicating brake fluid contamination: • Fluid separation, indicating two types of fluid are present • Swirled appearance - oil-based substance • Layered appearance - silicone-based substance • Fluid discoloration • Cloudy appearance - moisture • Dark appearance/suspended particles in fluid - dirt, rust, corrosion, brake dust 2. Inspect the master cylinder reservoir cap diaphragm and the reservoir-	Go to **Step 5**	Go to **Step 12**

cardiagn.com

Step	Action	Yes	No
	to-master cylinder grommets for swelling, indicating fluid contamination. Do any of the above conditions exist?		
5	1. Flush the hydraulic brake system. Refer to **Hydraulic Brake System Flushing**. 2. If the brake fluid WAS contaminated with an oil-based or a silicone-based fluid, indicated by fluid separation and/or a swollen master cylinder reservoir cap diaphragm and/or swollen reservoir-to-master cylinder grommets, perform the following steps. Refer to the procedures indicated. 1. Remove ALL of the following components listed. Each component contains internal rubber seals/linings which have been contaminated. 2. Clean out the hydraulic brake pipes using denatured alcohol, or equivalent. 3. Dry the brake pipes using non-lubricated, filtered air. 4. Repair or replace ALL of the following components listed. Each component contains internal rubber seals/linings which have been contaminated. • **Master Cylinder Replacement** • Brake master cylinder reservoir: Clean the brake master cylinder reservoir using denatured alcohol, or equivalent, then dry the reservoir using non-lubricated, filtered air, or if necessary, replace the brake master cylinder reservoir. • Replace the brake master cylinder reservoir cap diaphragm. • **Front Brake Hose Replacement (JD9)Front Brake Hose Replacement (J95)** • **Rear Brake Hose Replacement (JD9 to Rear Axle)Rear Brake Hose Replacement (JD9 to**	Go to **Step 9**	-

cardiagn.com

Step	Action	Yes	No
	Caliper)Rear Brake Hose Replacement (J95 to Rear Axle)Rear Brake Hose Replacement (J95 to Caliper) • Front Brake Caliper Overhaul (J95) Front Brake Caliper Overhaul (JD9) , or Front Brake Caliper Replacement (JD9) Front Brake Caliper Replacement (J95) • Rear Brake Caliper Overhaul (J95) Rear Brake Caliper Overhaul (JD9) , or Rear Brake Caliper Replacement (JD9) Rear Brake Caliper Replacement (J95) • Brake Pressure Modulator Valve Replacement 3. If the brake fluid was NOT contaminated with an oil-based fluid, but WAS contaminated with water or dirt, rust, corrosion, and/or brake dust, replace the brake master cylinder reservoir cap diaphragm which may have allowed moisture or dirt to enter the system. 4. Refill and bleed the hydraulic brake system. Refer to Hydraulic Brake System Bleeding (Pressure)Hydraulic Brake System Bleeding (Manual). Did you complete the operation and any required repairs and/or replacements?		
6	1. Inspect the following hydraulic brake system components for external fluid leaks Repair or replace any of the components found to be leaking brake fluid. Refer to the appropriate procedures: • Master Cylinder Replacement Brake master cylinder reservoir cap diaphragm • Front Brake Hose Replacement (JD9)Front Brake Hose Replacement (J95) • Rear Brake Hose Replacement (JD9 to Rear Axle)Rear Brake Hose Replacement (JD9 to Caliper)Rear Brake Hose Replacement (J95 to Rear Axle)Rear Brake Hose	Go to **Step 7**	Go to **Step 12**

cardiagn.com

Step	Action	Yes	No
	Replacement (J95 to Caliper) • Brake Pipe Replacement • Front Brake Caliper Overhaul (J95) Front Brake Caliper Overhaul (JD9) , or Front Brake Caliper Replacement (JD9) Front Brake Caliper Replacement (J95) • Rear Brake Caliper Overhaul (J95) Rear Brake Caliper Overhaul (JD9) , or Rear Brake Caliper Replacement (JD9) Rear Brake Caliper Replacement (J95) • Brake Pressure Modulator Valve Replacement 2. If you repaired or replaced any of the brake system components listed, bleed the hydraulic brake system. Refer to Hydraulic Brake System Bleeding (Pressure)Hydraulic Brake System Bleeding (Manual). While bleeding the hydraulic brake system, observe for the following conditions: • The presence of air in the system at a bleeder valve location other than at the repair location, except if the brake master cylinder was replaced • An unrestricted and even flow of brake fluid per axle during the bleeding procedure Did you find and correct a condition?		
7	Was there air in the system at a bleeder valve location other than at the repair location, except if the brake master cylinder was replaced?	Go to **Step 19**	Go to **Step 8**
8	Was the flow of brake fluid unrestricted and even per axle during the bleeding procedure?	Go to **Step 9**	Go to **Step 10**
9	Inspect the hydraulic function of the brake calipers for proper operation. Refer to Hydraulic Brake Component Operation Visual Inspection. Was the hydraulic function of the brake calipers operating properly?	Go to **Step 21**	Go to **Step 14**
10	Was the flow of brake fluid restricted or uneven through front axle hydraulic components during the bleeding procedure?	Go to **Step 13**	Go to **Step 11**
11	Was the flow of brake fluid restricted or uneven through rear axle hydraulic components during the bleeding procedure?	Go to **Step 17**	-

cardiagn.com

Step	Action	Yes	No
12	Inspect the hydraulic function of the brake calipers for proper operation. Refer to **Hydraulic Brake Component Operation Visual Inspection**. Was the hydraulic function of the brake calipers operating properly?	Go to **Step 15**	Go to **Step 13**
13	Determine if the brake caliper is restricting the flow of brake fluid and/or not operating properly: 1. Raise and support the vehicle. Refer to **Lifting and Jacking the Vehicle** . 2. Remove the tire and wheel assemblies. Refer to **Tire and Wheel Removal and Installation (6-Lug Wheel)** **Tire and Wheel Removal and Installation (8-Lug Wheel)** . 3. Open the suspected caliper bleeder valve. 4. Using a large C-clamp, compress the caliper piston and observe for an unrestricted flow of brake fluid and for free movement of the caliper piston. 5. Close the caliper bleeder valve. Was the flow of brake fluid unrestricted and did the caliper piston move freely?	Go to **Step 17**	Go to **Step 14**
14	Repair or replace any brake caliper that was not operating properly. Refer to the appropriate procedure: • **Front Brake Caliper Overhaul (J95)** **Front Brake Caliper Overhaul (JD9)** , or **Front Brake Caliper Replacement (JD9)** **Front Brake Caliper Replacement (J95)** • **Rear Brake Caliper Overhaul (J95)** **Rear Brake Caliper Overhaul (JD9)** , or **Rear Brake Caliper Replacement (JD9)** **Rear Brake Caliper Replacement (J95)** Did you complete the repair and/or replacement?	Go to **Step 21**	-

cardiagn.com

Step	Action	Yes	No
15	Bleed the hydraulic brake system to observe for the presence of air in the system and to observe for an unrestricted and even flow of brake fluid per axle during the bleeding procedure. Refer to **Hydraulic Brake System Bleeding (Pressure)Hydraulic Brake System Bleeding (Manual)**. Was there air in the system?	Go to **Step 19**	Go to **Step 16**
16	Was the flow of brake fluid unrestricted and even per axle during the bleeding procedure?	Go to **Step 21**	Go to **Step 17**
17	1. Inspect the hydraulic brake pipes and flexible brake hoses for signs of a fluid restriction; such as being bent, kinked, pinched or damaged. Refer to **Brake Pipe and Hose Inspection**. 2. Replace any of the hydraulic brake pipes and/or flexible brake hoses found to be bent, kinked, pinched, or damaged. Refer to the following procedures as necessary: • **Front Brake Hose Replacement (JD9)Front Brake Hose Replacement (J95)** • **Rear Brake Hose Replacement (JD9 to Rear Axle)Rear Brake Hose Replacement (JD9 to Caliper)Rear Brake Hose Replacement (J95 to Rear Axle)Rear Brake Hose Replacement (J95 to Caliper)** • **Brake Pipe Replacement** 3. If none of the hydraulic brake pipes or flexible brake hoses were visibly bent, kinked, pinched, or damaged, replace the hydraulic brake flex hose at the restricted location. Did you find and correct a condition?	Go to **Step 21**	Go to **Step 18**
18	Replace the brake pressure modulator valve (BPMV), in order to correct the hydraulic brake dynamic rear proportioning mechanical operation. Refer to **Brake Pressure Modulator Valve Replacement** . Did you complete the replacement?	Go to **Step 21**	-
19	1. Inspect the hydraulic brake system components for brake fluid seepage at a seal and/or fitting location, which may have drawn air into the system.	Go to **Step 21**	Go to **Step 20**

cardiagn.com

Step	Action	Yes	No
	2. Inspect the hydraulic brake system components for evidence of a recent repair, which may have introduced air into the system. 3. Repair or replace any of the components found to be installed incorrectly or seeping brake fluid. Did you find and correct a condition?		
20	1. Inspect the brake master cylinder for internal fluid leaks. Refer to **Brake System Internal Leak Test**. 2. Repair or replace the brake master cylinder if it is found to be leaking brake fluid internally. Refer to **Master Cylinder Replacement**. Did you find and correct a condition?	Go to **Step 21**	Return to Symptom Table
21	Install or connect components that were removed or disconnected during diagnosis. Did you complete the operation?	Hydraulic Brake System OK Return to Symptom Table	-

BRAKE ASSIST SYSTEM DIAGNOSIS

Step	Action	Yes	No
DEFINITION: This diagnostic table is designed to diagnose ONLY the components of the brake ASSIST system in order to determine if the brake ASSIST system is operating properly. You will be directed by the appropriate Symptom table to go to other brake system diagnostic tables as appropriate.			
1	Were you sent here from a Brake Symptom table?	Go to **Step 3**	Go to **Step 2**
2	Were you sent here directly from an electrical diagnostic to investigate vacuum as a possible concern?	Go to **Step 5**	Go to **Diagnostic Starting Point - Vehicle**
3	Inspect for proper brake pedal travel. **Brake Pedal Travel Measurement and Inspection** Is the brake pedal travel distance within the acceptable limits?	Go to **Step 5**	Go to **Step 4**
4	1. Inspect for worn, missing, misaligned, bent or damaged brake pedal system components. • Perform the brake pedal pushrod component inspection. Refer to **Brake Pedal Pushrod Inspection**	Go to **Step 5**	Go to **Hydraulic Brake System Diagnosis** to check for internal and external fluid leaks and air in the hydraulic brake system

cardiagn.com

Step	Action	Yes	No
	• Inspect the brake pedal bushings for excessive wear and/or damage and inspect the brake pedal for a misaligned, bent and/or damaged condition. 2. Replace the brake pedal system components that are worn, missing, misaligned, bent or damaged. Did you find and replace any worn, missing, misaligned, bent or damaged brake pedal system components?		
5	Check the engine vacuum source that supplies vacuum to the vacuum brake booster. Refer to **Brake System Vacuum Source Test** Is the vacuum reading within the acceptable limits?	Go to **Step 6**	Go to Engine Controls Diagnostics Information to check for vacuum issues
6	Does the condition occur during cold start-up conditions?	Go to **Step 7**	Go to **Step 8**
7	Check engine vacuum, and vacuum pump operation, if equipped, under the same cold start-up conditions. Refer to Engine Controls Diagnostics. Did you find and correct a condition?	Go to **Step 22**	Go to **Step 9**
8	During the vacuum source test, did the vacuum booster check valve operate properly?	Go to **Step 10**	Go to **Step 9**
9	Replace the vacuum booster check valve. Refer to **Power Brake Booster Vacuum Sensor Replacement** Did you complete the replacement?	Go to **Step 10**	-
10	If equipped with a booster mounted separate vacuum sensor, inspect the vacuum sensor grommet for cracks, cuts, dry-rot, or damage. Does the vacuum sensor grommet exhibit any of the conditions listed?	Go to **Step 11**	Go to **Step 12**
11	Replace the vacuum sensor grommet. Did you complete the replacement?	Go to **Step 12**	-
12	1. If the vehicle is equipped with a vacuum sensor, install a scan tool. 2. Using the Data Display function, determine if brake booster vacuum sensor data is available within either the chassis brake controls area or the powertrain engine controls area. Is vacuum sensor data available through the scan tool?	Go to **Step 13**	Go to **Step 16**
13	Perform the vacuum booster leak-down test using a scan tool:	Go to **Step 18**	Go to **Step 14**

cardiagn.com

Step	Action	Yes	No
	1. Release the brake pedal. 2. Accelerate the engine to approximately 3000 RPM, then release the throttle. Wait 2-3 seconds and repeat once. 3. Turn the ignition OFF. 4. Turn the ignition ON. Do not start the engine. 5. Observe and record the vacuum sensor reading on the scan tool over a period of 60 seconds. **NOTE:** **Vacuum readings will decrease by approximately 2.7 kPa (0.8 Hg) for every 305 m (1000 ft) of elevation above sea level.** 6. Determine the rate of vacuum leak. Was the rate of vacuum leak below the specified allowable range of 10 kPa (3 in Hg) in 60 seconds?		
14	1. Deplete the vacuum reserve by pressing the brake pedal several times, or by removing the vacuum booster check valve. 2. Separate the master cylinder from the vacuum brake booster. Do not disconnect any brake pipes. Refer to **Master Cylinder Replacement** 3. If equipped with a vacuum seal on the rear of the master cylinder, inspect the seal for damage and correct positioning on the master	Go to **Step 15**	-

cardiagn.com

Step	Action	Yes	No
	cylinder. Replace the vacuum seal as necessary. 4. Carefully reinstall the master cylinder to the brake booster. Refer to **Master Cylinder Replacement** Did you complete the operation?		
15	Perform the vacuum booster leak-down test using a scan tool: 1. Release the brake pedal. 2. Accelerate the engine to approximately 3000 RPM, then release the throttle. Wait 2-3 seconds and repeat once. 3. Turn the ignition OFF. 4. Turn the ignition ON. Do not start the engine. 5. Observe and record the vacuum sensor reading on the scan tool over a period of 60 seconds. **NOTE:** **Vacuum readings will decrease by approximately 2.7 kPa (0.8 Hg) for every 305 m (1000 ft) of elevation above sea level.** 6. Determine the rate of vacuum leak. Was the rate of vacuum leak below the specified allowable range of 10 kPa (3 in Hg) in 60 seconds?	Go to **Step 22**	Go to **Step 21**

cardiagn.com

Step	Action	Yes	No
16	1. Separate the master cylinder from the vacuum brake booster. Do not disconnect any brake pipes. Before removing the master cylinder, first deplete the vacuum by removing the check valve or applying the brake pedal several times. Refer to **Master Cylinder Replacement** 2. If equipped with a vacuum seal on the rear of the master cylinder, inspect the seal for damage and correct positioning on the master cylinder. 3. If equipped with a vacuum seal that is part of the booster, inspect the seal for damage. Does the vacuum seal exhibit any of the conditions listed?	Go to **Step 17**	Go to **Step 18**
17	1. If equipped with a vacuum seal on the rear of the master cylinder, replace the vacuum seal as necessary. Ensure the seal is positioned correctly during installation. 2. If equipped with a vacuum seal that requires replacement and which is part of the booster, the booster assembly must be replaced. 3. Carefully reinstall the master cylinder to the brake booster. Refer to **Master Cylinder Replacement** Did you complete the replacement?	Go to **Step 18**	-
18	Perform the vacuum boost functional test: 1. If still separated, reinstall the master cylinder to the booster. Refer to **Master Cylinder Replacement** 2. If the engine was started after reinstalling the master cylinder to the booster, perform the following: With the engine OFF, depress the brake pedal several times to deplete the vacuum reserve. 3. Depress and maintain moderate foot pressure on the brake pedal. 4. Start the engine and observe pedal operation.	Go to **Step 21**	Go to **Step 19**

cardiagn.com

Step	Action	Yes	No
	5. Observe for audible vacuum leaks. The brake pedal should fall slightly, then hold. Is there an audible vacuum leak coming from the brake pedal area?		
19	Did the brake pedal fall slightly after the engine was started, then hold?	Go to **Step 20**	Go to **Step 21**
20	Perform the vacuum booster leak-down test: 1. Release the brake pedal. 2. Accelerate the engine to approximately 3000 RPM, then release the throttle. Wait 2-3 seconds and repeat once. 3. Turn the ignition OFF. 4. Wait 60 seconds. 5. Depress the brake pedal 2 times to check for vacuum booster available vacuum reserve. Observe pedal effort. • Both pedal applies should be assisted • The amount of assist could diminish slightly with the second apply Were both pedal applies power assisted?	Go to **Step 22**	Go to **Step 21**
21	Replace the vacuum brake booster. Refer to **Power Vacuum Brake Booster Replacement** Did you complete the replacement?	Go to **Step 22**	-
22	Install or connect any components that were removed or disconnected during diagnosis. Did you complete the operation?	Brake Assist System OK Return to Symptom Table	-

BRAKE SYSTEM VEHICLE ROAD TEST

Preliminary Inspections

1. Visually inspect easily accessible brake system components for obvious damage and/or leaks which may indicate that the vehicle should not be

cardiagn.com

driven until further inspections have been completed.

2. Inspect the brake master cylinder reservoir fluid level and adjust only if necessary for brake system road testing. Refer to **Master Cylinder Reservoir Filling**
3. Inspect the tire inflation pressures and adjust as necessary.
4. Inspect the tire tread patterns to ensure that they are the same or very similar, especially per axle.
5. Ensure that the vehicle is not loaded unevenly prior to brake system road testing.

Road Testing Procedure

WARNING: Road test a vehicle under safe conditions and while obeying all traffic laws. Do not attempt any maneuvers that could jeopardize vehicle control. Failure to adhere to these precautions could lead to serious personal injury and vehicle damage.

1. Start the engine and allow it to idle.
2. Check to see if the brake system warning lamp remains illuminated.
3. If the brake system warning lamp remains illuminated, DO NOT proceed to test drive the vehicle until it is diagnosed and repaired. Refer to **Symptoms - Hydraulic Brakes**
4. Select a smooth, dry, clean and level road or large lot that is as free of traffic and obstacles as possible for brake system low speed road testing.
5. With the transmission in PARK, lightly apply the brake pedal. Observe both the pedal feel and the pedal travel.
6. If the brake pedal apply felt spongy, or the pedal travel was excessive, DO NOT drive the vehicle until it is repaired.
7. If the brake pedal apply did not feel spongy and the pedal travel was not excessive, proceed to step 8.
8. Release and apply the brakes.
9. While continuing to apply the brakes, shift the transmission into DRIVE, release the brakes and allow the engine to idle the vehicle away from the stopped position. Observe for a slow release of the brake system.
10. With the aid of an assistant to observe the vehicle's performance from outside of the vehicle, drive the vehicle at a low speed and lightly apply the brakes while driving past the assistant. Have the assistant observe for brake system noise from the side of the vehicle closest to them, while you observe both the pedal effort and the pedal travel.
11. If the brake pedal apply effort was excessive, or the pedal travel was excessive, DO NOT continue to test drive the vehicle until it is repaired.
12. If the brake pedal apply effort was not excessive and the pedal travel was not excessive, proceed to step 13.
13. Drive the vehicle in the opposite direction, at the same low speed and lightly apply the brakes while driving past the assistant. Have the assistant observe for brake system noise from the side of the vehicle closest to him.
14. Drive the vehicle at a low speed and shift the transmission into NEUTRAL without applying the brakes. Observe for a rapid deceleration in

cardiagn.com

vehicle speed, indicating possible brake drag.

15. Select a smooth, dry, clean and level road that is as free of heavy traffic as possible for brake system moderate speed road testing.
16. Drive the vehicle at a moderate speed. Observe for a pull and/or incorrect tracking of the vehicle without the brakes applied.
17. While continuing to drive the vehicle at a moderate speed, perform several light applies of the brakes. Observe the pedal effort and the pedal travel, observe for brake system noise, pulsation and/or brake drag.
18. If the brake pedal apply effort was excessive, or the pedal travel was excessive, DO NOT continue to test drive the vehicle until it is repaired.
19. If the brake pedal apply effort was not excessive and the pedal travel was not excessive, proceed to step 20.
20. While continuing to drive the vehicle at a moderate speed, perform several moderate applies of the brakes. Observe the pedal effort and the pedal travel, observe for brake system pulsation and/or uneven braking action - either side to side, or front to rear.

    A small amount of vehicle front end dip is expected during a moderate apply of the brakes.

21. If the brake pedal apply effort was excessive, or the pedal travel was excessive, DO NOT continue to test drive the vehicle until it is repaired.

BRAKE PEDAL TRAVEL MEASUREMENT AND INSPECTION

Special Tools

CH-28662 Brake Pedal Effort Gauge

For equivalent regional tools, refer to **Special Tools**.

1. With the ignition OFF and the brakes cool, apply the brakes 3-5 times, or until the brake pedal becomes firm, in order to deplete the brake booster power reserve.
2. Install the **CH-28662** brake pedal effort gauge to the brake pedal.

cardiagn.com

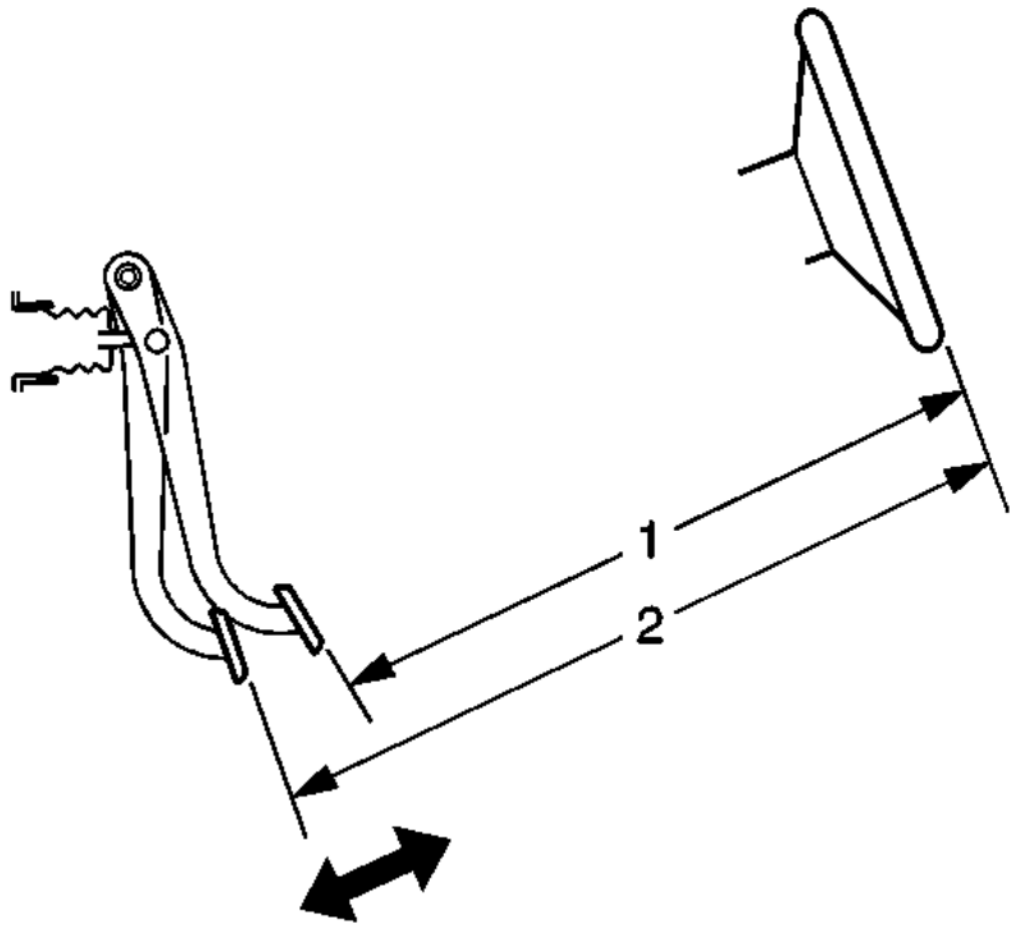

Fig. 2: Measuring Brake Pedal Travel
Courtesy of GENERAL MOTORS COMPANY

3. Measure and record the distance (1) from the brake pedal to the rim of the steering wheel; note the points of measurement.
4. Apply and maintain the brakes with 445 N (100 lb) of force to the brake pedal, as indicated on the **CH-28662** brake pedal effort gauge.
5. While maintaining 445 N (100 lb) of force to the brake pedal, measure and record the distance (2) from the same point on the brake pedal to the same point on the rim of the steering wheel.

cardiagn.com

6. Release the brakes and repeat steps 4 and 5 to obtain a second measurement. After obtaining a second measurement, proceed to step 7.
7. Average the first and second measurements recorded during the two applies of the brakes.
8. Subtract the initial measurement, unapplied (1), from the averaged, applied measurement (2) to obtain the brake pedal travel distance.

Specification

- Vacuum assist equipped, maximum brake pedal travel (measured with the ignition OFF, brake booster power assist depleted, and the brakes cool): 60 mm (2.36 in)
- Hydraulic assist equipped, maximum brake pedal travel (measured with the ignition OFF, brake booster power assist depleted, and the brakes cool): 90 mm (3.54 in)

BRAKE SYSTEM VACUUM SOURCE TEST

NOTE:

- **Engine temperature, accessory load, and elevation level will affect engine vacuum.**
- **Vacuum readings will decrease by approximately 2.7 kPa (0.8 in Hg) for every 305 m (1000 ft) of elevation above sea level.**

1. Disconnect the engine vacuum hose from the vacuum brake booster check valve.
2. Install a vacuum gauge to the engine vacuum hose.
3. Start the engine and allow the engine to idle until normal operating temperatures are reached.
4. With the vehicle in PARK, the engine idling, and the air conditioning (A/C) system OFF, check to see if the engine vacuum reading is within the specified normal engine vacuum range.

Specification

90 kPa (27 in Hg)

5. Turn the ignition OFF.
6. If the engine vacuum reading was within the specified normal range, proceed to step 10.
7. If the engine vacuum reading was NOT within the specified normal range, inspect the engine vacuum hose for the following conditions:
   - Loose connection to the engine
   - Collapse, deformation or contamination
   - Cracks, cuts, dry-rot

cardiagn.com

8. If any of these conditions were found with the engine vacuum hose, replace the hose, then repeat steps 2-4.
9. If none of these conditions were found with the engine vacuum hose, then there is an engine vacuum source problem, check the engine vacuum system.
10. Remove the vacuum brake booster check valve from the booster.
11. Install the check valve to the engine vacuum hose.
12. Install the vacuum gauge to the check valve.
13. Start the engine and allow the engine to idle in PARK with the A/C system OFF, until normal operating temperatures are reached.
14. Turn the ignition OFF.
15. Check to see if the engine vacuum reading is maintained within the specified normal engine vacuum range.

    Specification

    90 kPa (27 in Hg)

16. If the engine vacuum reading is maintained within the specified normal range, proceed to step 18.
17. If the engine vacuum reading is NOT maintained within the specified normal range, replace the brake booster check valve, then repeat steps 11-15.
18. Inspect the brake booster check valve grommet for the following conditions:
    - Loose connection to the vacuum brake booster
    - Deformation or contamination
    - Cracks, cuts, dry-rot
19. If any of these conditions were found with the check valve grommet, replace the grommet.

HYDRAULIC BRAKE BOOSTER LEAK INSPECTION

cardiagn.com

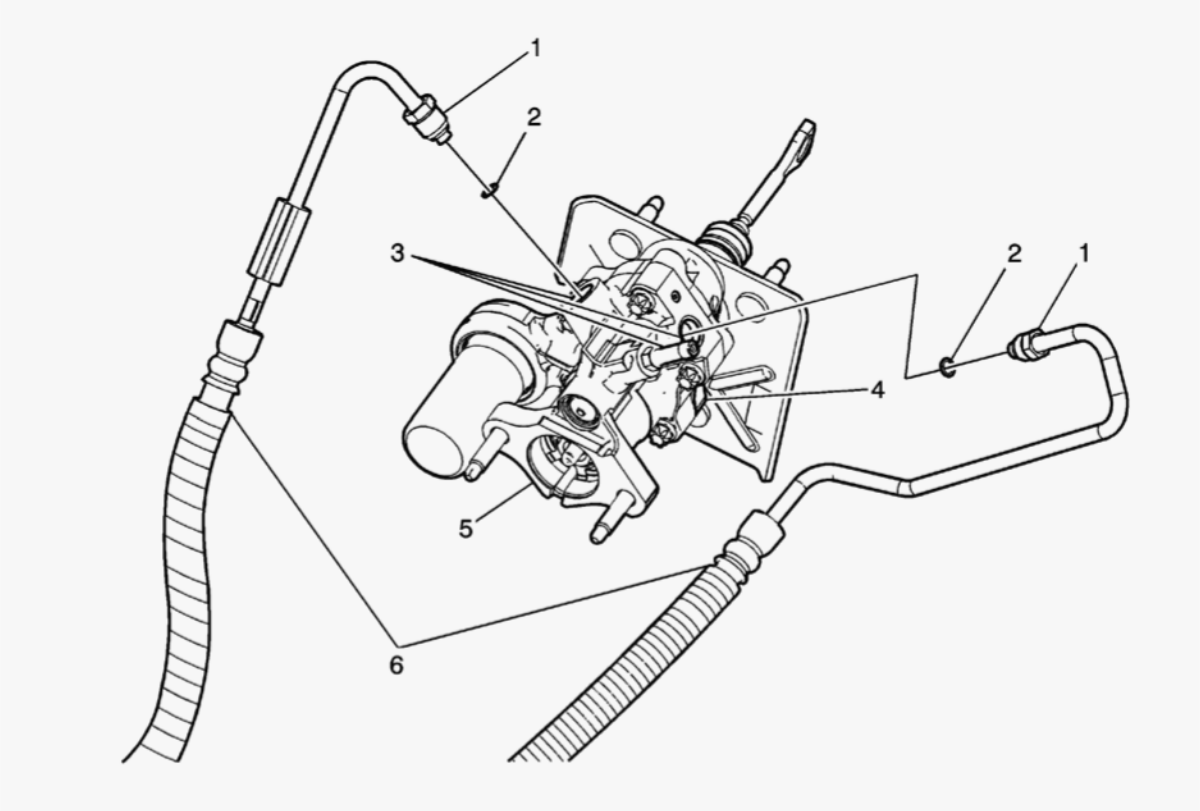

Fig. 3: Hydraulic Brake Booster Leak Inspection points
Courtesy of GENERAL MOTORS COMPANY

NOTE: **The power brake booster may appear wet due to excessive assembly fluid used during manufacture or brake fluid which may have been spilled during hydraulic brake system fill. To prevent unnecessary replacement of the power brake booster, perform the following power brake booster leak inspection before replacing the power brake booster.**

1. Check the power steering system fluid level and adjust as necessary. Refer to **Checking and Adding Power Steering Fluid** .
2. Clean any fluid from the following areas:
   - The power steering hose fittings (1)
   - The power steering hose ports (3)
   - The joint between the power brake booster housing and end cap (4)

cardiagn.com

- The joint between the power brake booster housing and the master cylinder (5)
- The end cap
- The power steering inlet and outlet hoses at the crimp joints (6)

NOTE: **To properly diagnose a leak condition, an assistant may be required. The power brake booster system must be observed while performing this inspection.**

3. Start the engine and allow the power steering fluid to reach operating temperature.
4. Allow the engine to idle and slowly apply the brake pedal to run-out, holding until the power steering pump reaches the pressure relief valve setting and hisses.

   Maintain the brake pedal force approximately two seconds, then release the brake pedal.

5. With the brakes fully released, allow the engine to idle for fifteen seconds.
6. Repeat steps 4 and 5 four times.

NOTE: **Do not hold the steering wheel at full stop for more than three seconds. Holding the steering wheel at full stop for more than three seconds will increase the power steering fluid in the power steering pump to above normal operating temperature.**

7. With the engine idling, turn the steering wheel from stop to stop four times holding the steering wheel at each stop for two seconds.
8. Increase the engine speed to approximately 1, 000 RPM and turn the steering wheel approximately every one second. Do not hold the steering wheel at full stop.
9. Allow the engine to idle without pressure applied to the brake pedal for thirty seconds.
10. With the engine idling, apply the brake pedal to run-out and hold the pedal force at run-out for approximately one second and then release the brake pedal.
11. Repeat steps 7 through 10 four times.
12. Allow the engine to idle for thirty seconds and then turn the engine OFF.

NOTE: **On low mileage vehicles, light moisture at the joint between the power brake booster housing and the end cap is acceptable. If fluid droplets develop during the hydraulic brake booster leak inspection diagnosis, the power brake booster must be replaced.**

13. Inspect the power brake booster, the power steering hose fitting ports (3), and the power steering inlet and outlet hoses at the crimp joints (6)

cardiagn.com

for any leaks.

14. If there are leaks at the power steering inlet and/or outlet hoses at the crimp joints, the affected power steering hose requires replacement.
15. If there are leaks at the power steering hose fittings (1) to the hydraulic booster ports (3), perform the following steps:
    - Tighten the leaking power steering hose assembly fittings to the proper specifications
    - Inspect again for fluid leaks at the affected locations
16. If there are leaks at the power steering hose fittings after tightening the fittings, perform the following steps:
    - At each affected location, disconnect the power steering hose fitting
    - Inspect the sealing end of the power steering hose fitting for damage and replace the hose if damaged
    - Install a new O-ring seal (2) to the power steering hose
    - Install the power steering hose and tighten the fitting to the proper specification
    - Inspect again for fluid leaks at the affected location

NOTE: **A leak between the power brake booster and the master cylinder is not acceptable. If a leak is present, the type of fluid must be determined. Power steering fluid indicates the power brake booster requires replacement. Brake fluid indicates an issue with the brake master cylinder.**

17. If the power brake booster is leaking, replace the power brake booster. Refer to **Power Brake Booster Replacement**.
18. If brake fluid is leaking, refer to **Brake Fluid Loss**.

HYDRAULIC BRAKE ASSIST SYSTEM NOISE INSPECTION

Tools Required

J 28662 Brake Pedal Effort Gauge

1. Install the **J 28662** Brake Pedal Effort Gauge to the brake pedal.
2. Start the engine and allow it to idle. Ensure that the wheels are directed straight ahead.
3. Apply and maintain the brakes with 111 N (25 lb) of force to the brake pedal, as indicated on the **J 28662** Brake Pedal Effort Gauge. Observe for noises.
4. Quickly release the brakes. Observe for noises.
5. If chatter and/or a vibration of the brake pedal was apparent during the brake system apply of 111 N (25 lb) of force, the power steering pump drive belt not may have proper tension or may be excessively worn.
6. If any significant noise was apparent during the quick release of the brakes following the brake system apply of 111 N (25 lb) of force, there is

cardiagn.com

likely a restriction in the hydraulic brake booster power steering return hose.

IMPORTANT: Do NOT apply 445 N (100 lb) of force or more to the brake system pedal for more than 5 seconds at a time.

7. Apply the brakes with 178 N (40 lb) of force to the brake pedal, as indicated on the **J 28662** Brake Pedal Effort Gauge, then gradually increase pedal effort up to 445 N (100 lb) of force for not more than 5 seconds at a time. Observe for noises.
8. Quickly release the brakes. Observe for noises.
9. If a hiss noise was apparent and increased during the brake system increasing apply of 178-445 N (40-100 lb) of force, the hydraulic brake booster assist system is operating normally from an audible standpoint.
10. If a clunk, chatter, and/or clicking noise was apparent during the quick release of the brakes following the brake system increasing apply of 178-445 N (40-100 lb) of force, the hydraulic brake booster assist system is operating normally from an audible standpoint.

BRAKE SYSTEM EXTERNAL LEAK INSPECTION

WARNING: Refer to Brake Fluid Irritant Warning .

CAUTION: Refer to Brake Fluid Effects on Paint and Electrical Components Caution .

1. In order to inspect for external brake fluid leaks, first check the fluid level in the master cylinder.

   While a slight brake fluid level drop can be considered a normal condition due to brake lining wear, a very low level may indicate a brake fluid leak in the hydraulic system.

   If the fluid level is abnormally low, adjust the brake fluid level. Refer to **Master Cylinder Reservoir Filling**

2. Start the engine and allow it to idle.
3. Apply constant, moderate foot pressure to the brake pedal.

   If the brake pedal gradually falls away while under foot pressure, there may be a brake fluid leak.

4. Turn OFF the ignition.
5. Visually inspect the following brake system components for brake fluid leaks, excessive corrosion, and damage. Give particular attention to all brake pipe and flexible hose connections to ensure that there are not any slight brake fluid leaks - even though the brake pedal may feel firm and hold steady:
   - Master cylinder brake pipe fittings

cardiagn.com

- All brake pipe connections
- Brake pipes
- Brake hoses and connections
- Brake calipers and/or wheel cylinders, if equipped

6. While slight dampness around the master cylinder reservoir can be considered acceptable, brake fluid leaking from any of the brake system components requires immediate attention. If any of these components exhibit signs of brake fluid leakage, repair or replace those components. After the repair or replacement, reinspect the hydraulic brake system to assure proper function.

BRAKE SYSTEM INTERNAL LEAK TEST

WARNING: Refer to Brake Fluid Irritant Warning

CAUTION: Refer to Brake Fluid Effects on Paint and Electrical Components Caution .

1. Start the engine and allow it to idle.
2. Apply light, steady pressure to the brake pedal. Observe both the brake pedal feel and travel.
3. Release the brakes and turn OFF the ignition.
4. If the brake pedal apply felt spongy, but the brake pedal travel was not excessive, perform the following steps:
    1. Inspect the brake system for external leaks. Refer to **Brake System External Leak Inspection**.
    2. Pressure bleed the brake system in order to purge any air that may be trapped in the system. Refer to **Hydraulic Brake System Bleeding (Pressure)Hydraulic Brake System Bleeding (Manual)**.

cardiagn.com

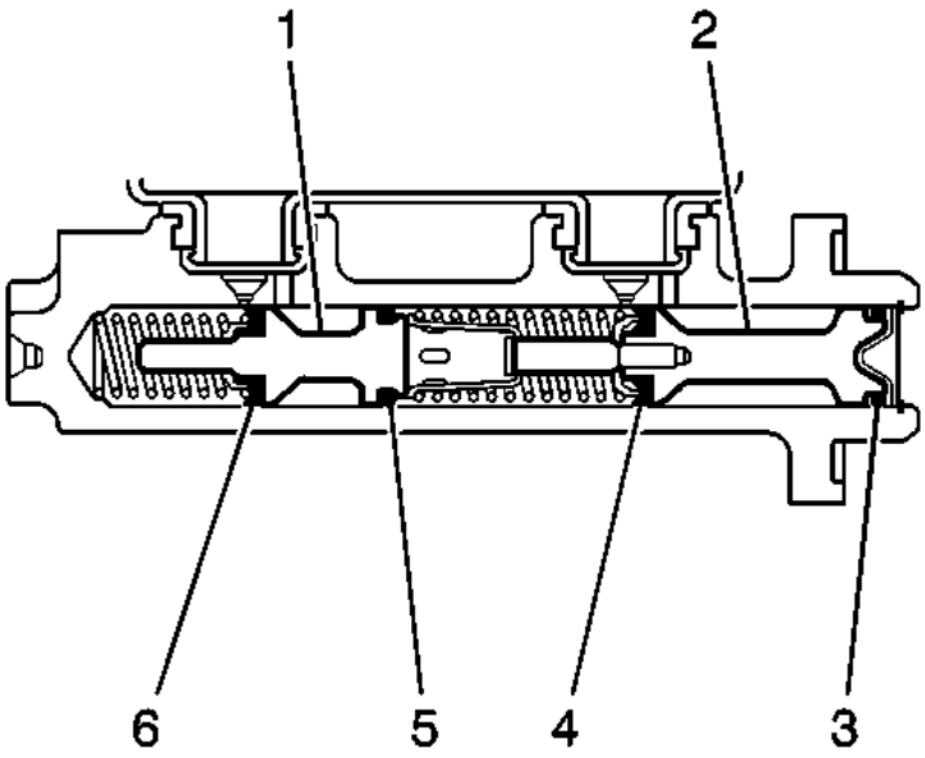

Fig. 4: Cross Sectional View Of Brake Master Cylinder And Components
Courtesy of GENERAL MOTORS COMPANY

5. If the brake pedal apply did not feel spongy, but the brake pedal travel was excessive, perform the following steps:
    1. Loosen the master cylinder-to-brake power booster mounting nuts.
    2. Carefully pull the master cylinder away from the brake power booster just enough to inspect the mounting surface of the master cylinder.
    3. Inspect the master cylinder mounting surface at the primary piston (2) for brake fluid leaks.

cardiagn.com

6. If the master cylinder exhibits any leakage around the primary piston (2), then the primary piston primary seal (4) and/or secondary seal (3) is leaking and the master cylinder requires overhaul or replacement.
7. If the master cylinder primary piston (2) does not exhibit any leakage, pressure bleed the brake system. Refer to **Hydraulic Brake System Bleeding (Pressure)Hydraulic Brake System Bleeding (Manual)**.
8. If the brake pedal apply did not feel spongy, and the brake pedal travel was initially steady and not excessive, but then gradually fell, then the master cylinder requires overhaul or replacement due to an internal leak past the secondary piston (1) from the secondary piston primary seal (6) or secondary seal (5).
9. If the brake pedal apply did not feel spongy, and the brake pedal travel was initially steady and not excessive, then fell slightly, then became steady again, then the brake pressure modulator valve (BPMV) may be leaking internally, and may require replacement.

HYDRAULIC BRAKE COMPONENT OPERATION VISUAL INSPECTION

cardiagn.com

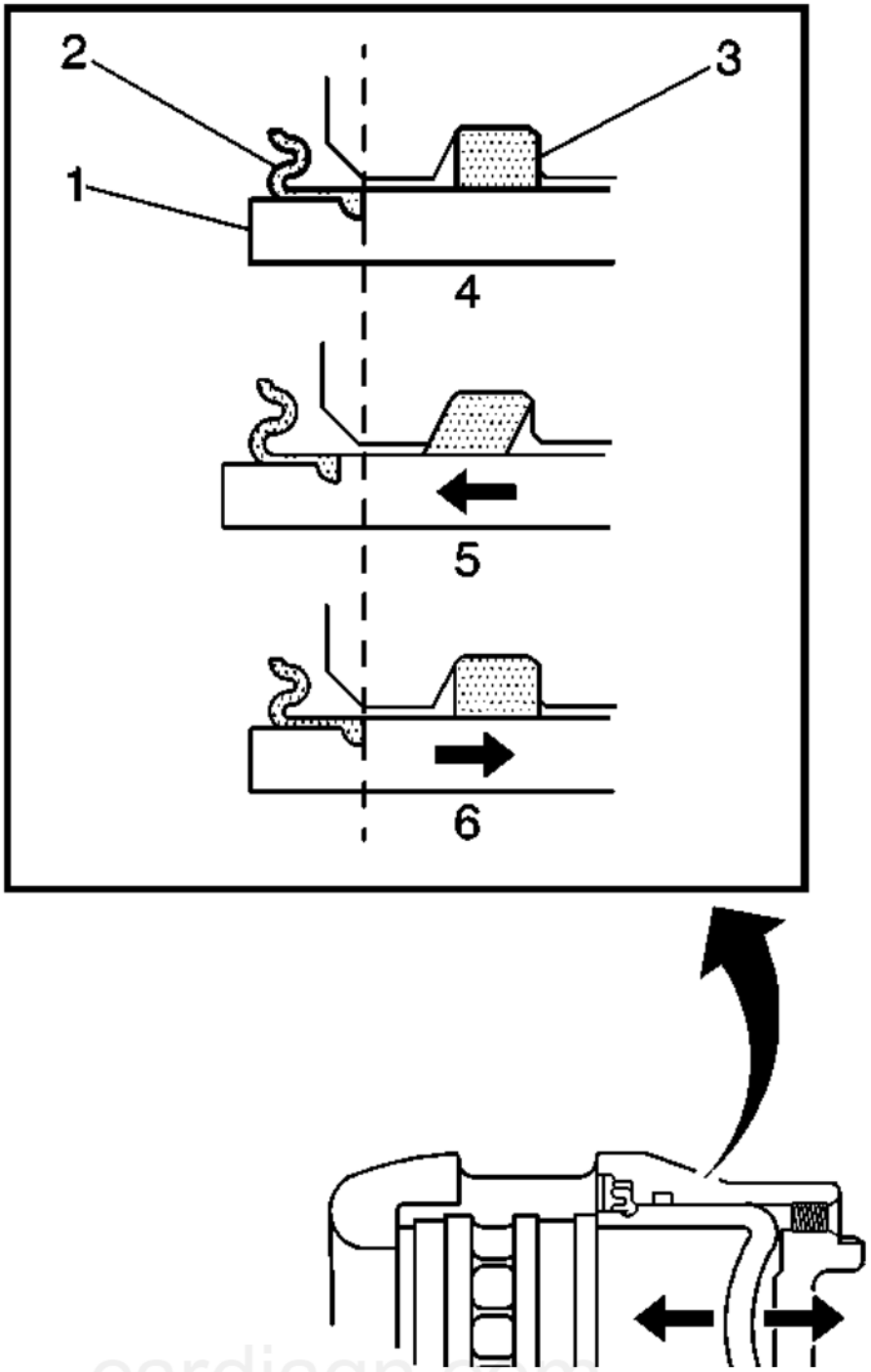

cardiagn.com

Fig. 5: Brake Caliper/Pad Inspection Areas
Courtesy of GENERAL MOTORS COMPANY

WARNING: Refer to Brake Fluid Irritant Warning .

CAUTION: Refer to Brake Fluid Effects on Paint and Electrical Components Caution .

1. With the tire and wheel assemblies removed and the brake rotors retained by wheel lug nuts, visually inspect the caliper piston dust boot (2) sealing area to ensure that there are no brake fluid leaks.
2. If any evidence of a brake fluid leak is present, the brake caliper requires overhaul or replacement.
3. While the brake system is at rest (4), observe the position of the caliper piston (1) in relation to the caliper housing.
4. Have an assistant apply and release the brake pedal several times while you observe the operation of the hydraulic brake caliper.
    1. Observe the caliper piston (1) for unrestricted and even movement during each apply of the brake system (5).
    2. Observe the caliper piston (1) for an unrestricted and even return motion during each release of the brake system (6).
5. If the caliper piston (1) did not exhibit unrestricted and even movement during brake system apply and/or release, the piston square seal (3) may be worn or damaged and the caliper may require overhaul or replacement.

BRAKE PIPE AND HOSE INSPECTION

WARNING: Refer to Brake Fluid Irritant Warning .

CAUTION: Refer to Brake Fluid Effects on Paint and Electrical Components Caution .

1. Visually inspect all of the brake pipes for the following conditions:
    - Kinks, improper routing, missing or damaged retainers
    - Leaking fittings, excessive corrosion
2. If any of the brake pipes exhibited any of the conditions listed, then the identified pipe, or pipes, require replacement.
3. Ensure that the vehicle axles are properly supported at ride height in order to maintain the proper relationship of the flexible brake hoses to the chassis.

cardiagn.com

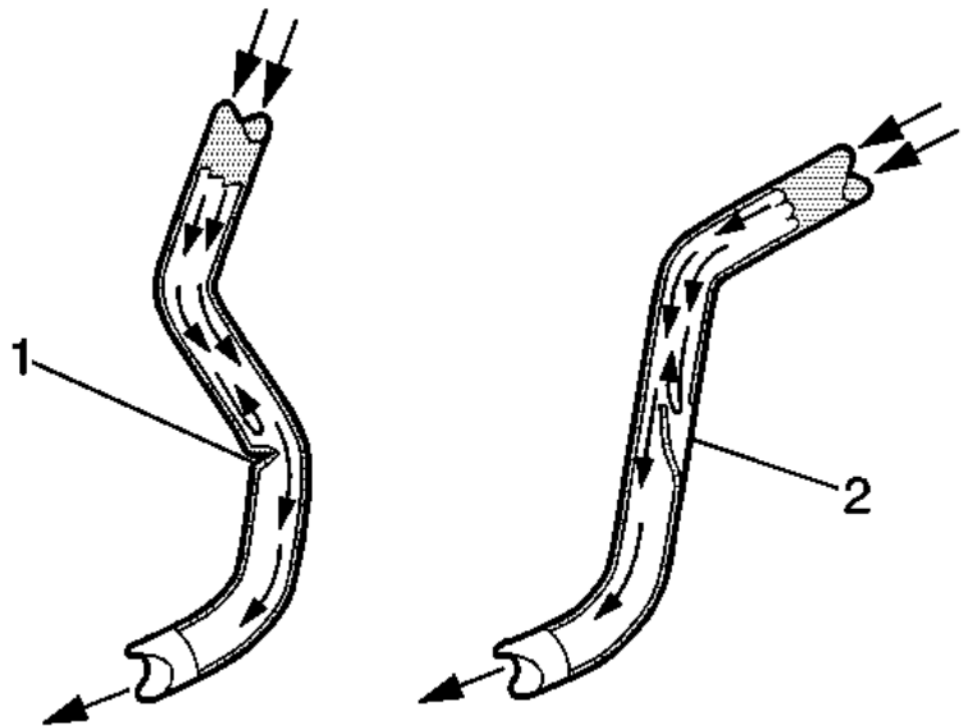

Fig. 6: Flexible Brake Hose Failure Conditions
Courtesy of GENERAL MOTORS COMPANY

4. Visually inspect all of the flexible brake hoses for the following conditions:
    - Kinks (1), improper routing, twists, chafing, missing or damaged retainers
    - Leaking connections, cracking, dry-rot, blisters, bulges
5. If any of the flexible brake hoses exhibited any of the conditions listed, then the identified flexible brake hose, or hoses require replacement.

cardiagn.com

6. Squeeze the flexible brake hoses with firm finger pressure to check for soft spots (2), indicating an internal restriction. Check the entire length of each flexible brake hose.
7. If any of the flexible brake hoses were found to have soft spots (2), then the identified flexible brake hose, or hoses require replacement.

BRAKE PEDAL PUSHROD INSPECTION

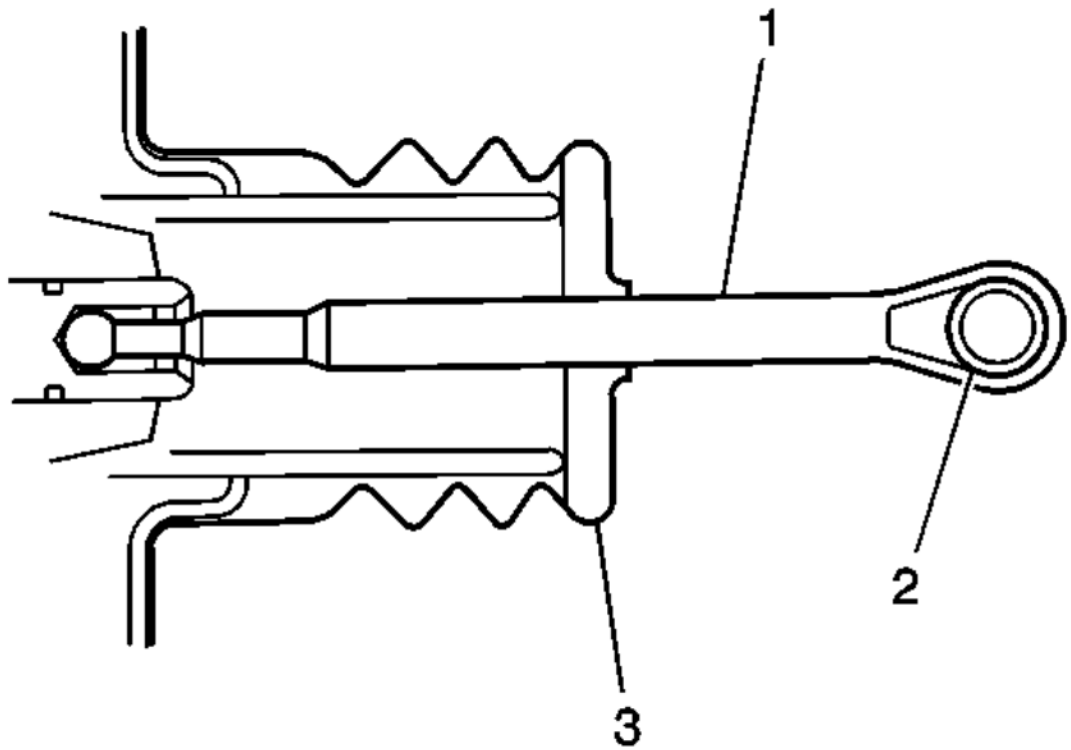

Fig. 7: Brake Pedal Pushrod Components
Courtesy of GENERAL MOTORS COMPANY

cardiagn.com

1. Disconnect the brake pedal pushrod (1) from the brake pedal.
2. Inspect the brake pedal pushrod eyelet bushing (2), if equipped, for cracks and/or excessive wear.
3. Reposition the pedal pushrod boot (3) toward the front of the vehicle to expose as much of the pedal pushrod (1) as possible.
4. Inspect the brake pedal pushrod (1) for straightness.
5. If the brake pedal pushrod eyelet bushing (2) exhibited cracks and/or excessive wear, then the bushing requires replacement.
6. If the brake pedal pushrod (1) is not straight, then the pushrod requires replacement.
7. Return the pedal pushrod boot (3) to its original position on the pedal pushrod (1).
8. Connect the brake pedal pushrod (1) to the brake pedal.

REPAIR INSTRUCTIONS

HYDRAULIC BRAKE FLUID REPLACEMENT

WARNING: **Refer to Brake Fluid Irritant Warning**

CAUTION: **Refer to Brake Fluid Effects on Paint and Electrical Components Caution**

CAUTION: **Only use products that comply with GM specifications and check manufacturer information respectively. We recommend the use of GM genuine products. Instructions must be followed at all times. The use of any type of fluid other than the recommended type of brake fluid, may cause contamination which could result in damage to the internal rubber seals and/or rubber linings of hydraulic brake system components.**

1. With the engine OFF, apply and release the brake pedal several times until the pedal effort becomes firm to deplete the brake booster power reserve.
2. Clean the outer surface of the master cylinder brake fluid reservoir, on and around the reservoir cap, prior to removing the cap and diaphragm. Refer to **Master Cylinder Reservoir Filling**
3. Fill the master cylinder brake fluid reservoir to the maximum-fill level with GM approved brake fluid from a clean, sealed brake fluid container. Refer to **Adhesives, Fluids, Lubricants, and Sealers**
4. Maintain the brake fluid level in the master cylinder brake fluid reservoir to between the minimum and maximum-fill level during the brake fluid replacement procedure.
5. Following the hydraulic brake system bleeding procedure, bleed each of the hydraulic brake wheel circuits until clean, clear brake fluid is observed coming from each bleeder valve. Refer to **Hydraulic Brake System Bleeding (Pressure)Hydraulic Brake System Bleeding (Manual)**

cardiagn.com

6. Fill the master cylinder brake fluid reservoir to the maximum-fill level with GM approved brake fluid from a clean, sealed brake fluid container. Refer to **Master Cylinder Reservoir Filling**
7. Securely install the master cylinder brake fluid reservoir diaphragm and cap.
8. Slowly apply and release the brake pedal, observing the brake pedal feel.
9. If the brake pedal feels spongy, perform the following:
    1. Visually inspect the hydraulic brake system for external leaks. Refer to **Brake System External Leak Inspection**
    2. Using a scan tool, perform the antilock brake system automated bleed procedure to remove any air that may have become trapped in the brake pressure modulator valve (BPMV). Refer to **Antilock Brake System Automated Bleed** , or **Antilock Brake System Automated Bleed**

MASTER CYLINDER RESERVOIR FILLING

WARNING: Refer to Brake Fluid Irritant Warning .

CAUTION: Refer to Brake Fluid Effects on Paint and Electrical Components Caution .

1. Visually inspect the brake fluid level through the brake master cylinder reservoir.
2. If the brake fluid level is at or below the half-full point during routine fluid checks, the brake system should be inspected for wear and possible brake fluid leaks.
3. If the brake fluid level is at or below the half-full point during routine fluid checks, and an inspection of the brake system did not reveal wear or brake fluid leaks, the brake fluid may be topped-off up to the maximum-fill level.
4. If brake system service was just completed, the brake fluid may be topped-off up to the maximum-fill level.
5. If the brake fluid level is above the half-full point, adding brake fluid is not recommended under normal conditions.
6. If brake fluid is to be added to the master cylinder reservoir, clean the outside of the reservoir on and around the reservoir cap prior to removing the cap and diaphragm. Use only Delco Supreme 11Â®, GM P/N 12377967 (Canadian P/N 992667), or equivalent DOT-3 brake fluid from a clean, sealed brake fluid container.

MASTER CYLINDER RESERVOIR REPLACEMENT (JD9)

Removal Procedure

WARNING: Refer to Brake Fluid Irritant Warning .

CAUTION: Refer to Brake Fluid Effects on Paint and Electrical Components Caution .

cardiagn.com

1. Remove and properly discard the brake fluid from the master cylinder reservoir.
2. Remove the driver side front fender rear upper brace. Refer to **Front Fender Rear Upper Brace Replacement** .
3. Disconnect the brake fluid level indicator switch electrical connector.

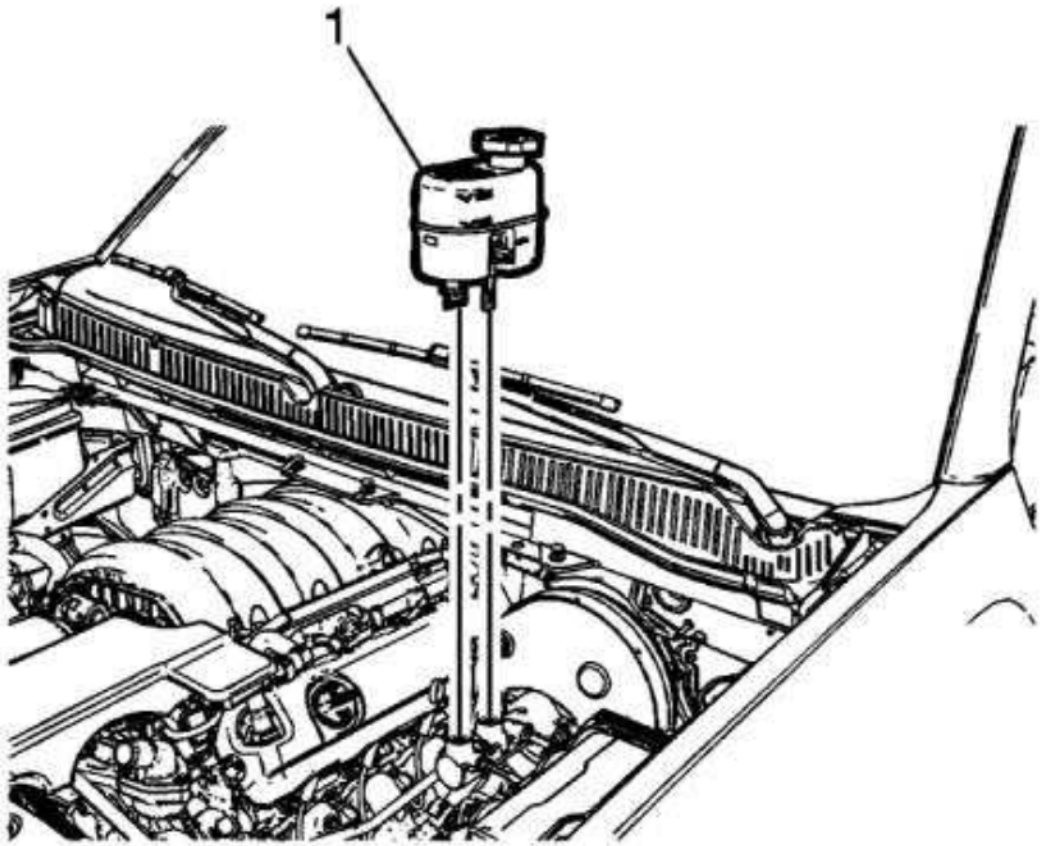

Fig. 8: Master Cylinder Reservoir
Courtesy of GENERAL MOTORS COMPANY

4. Carefully spread the locking tabs on the sides of the master cylinder reservoir (1) and lift the reservoir straight upward.

cardiagn.com

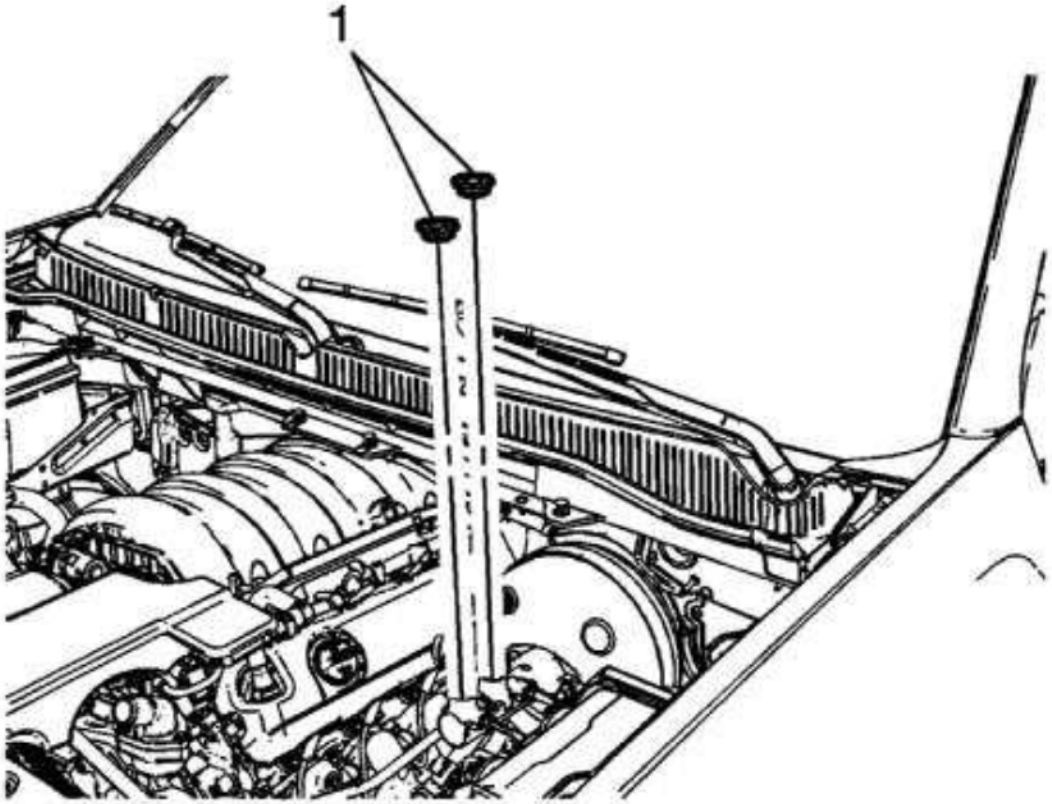

Fig. 9: Master Cylinder Reservoir Seals
Courtesy of GENERAL MOTORS COMPANY

5. Remove the master cylinder reservoir seals (1).

Installation Procedure

1. If installing the original master cylinder reservoir, clean the master cylinder reservoir with denatured alcohol and dry with filtered, non-

cardiagn.com

lubricated compressed air.

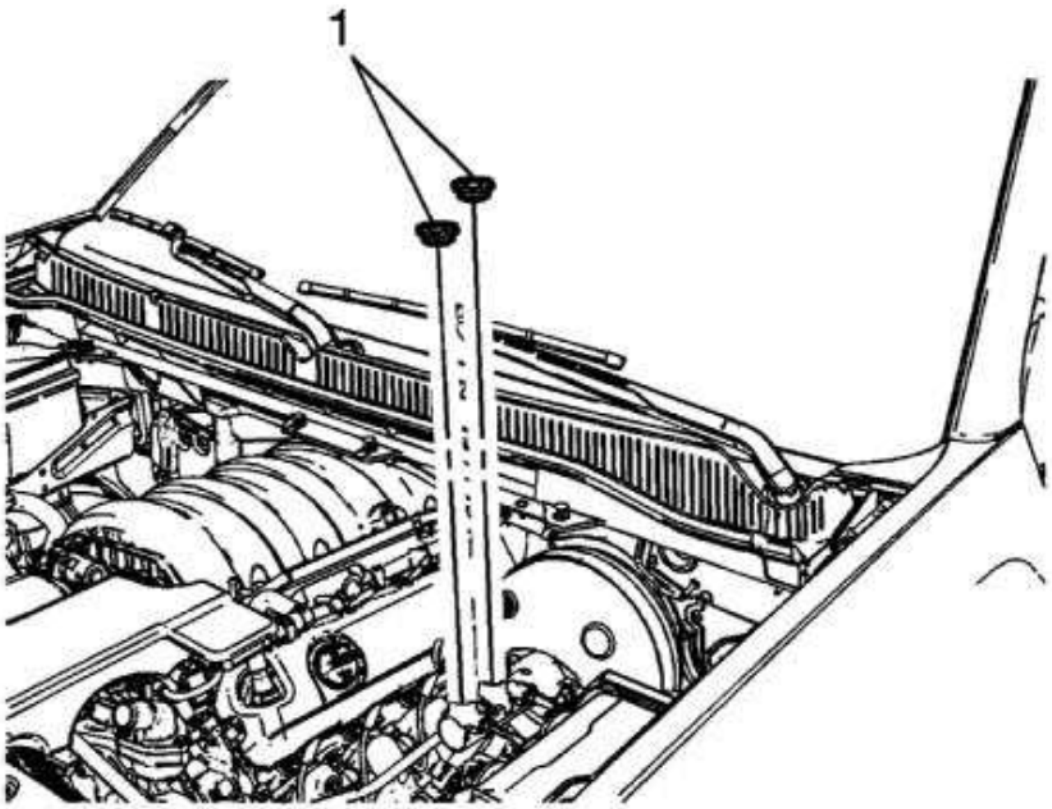

Fig. 10: Master Cylinder Reservoir Seals
Courtesy of GENERAL MOTORS COMPANY

2. Lubricate the seals with GM approved brake fluid from a clean, sealed brake fluid container. Refer to **Adhesives, Fluids, Lubricants, and Sealers**.
3. Install the master cylinder reservoir seals (1).

cardiagn.com

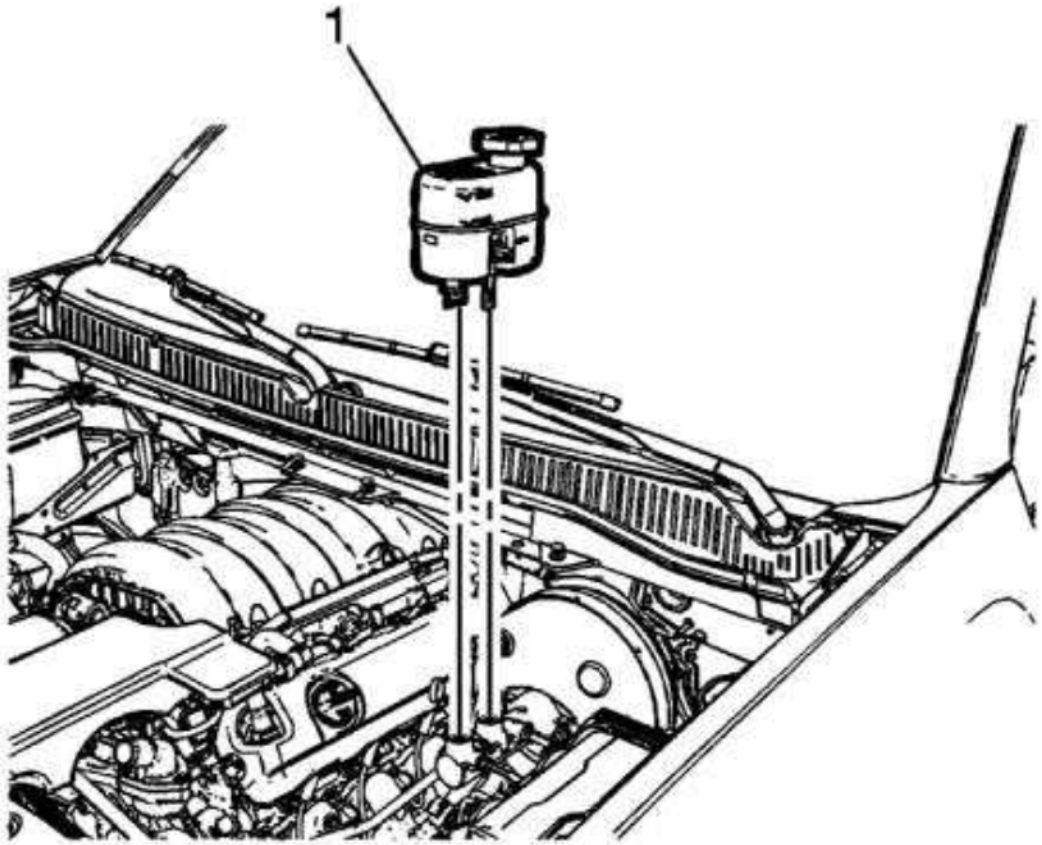

Fig. 11: Master Cylinder Reservoir
Courtesy of GENERAL MOTORS COMPANY

4. Install the master cylinder reservoir (1).
5. Carefully press the reservoir straight downward.
6. Ensure the master cylinder reservoir locking tabs are fully engaged in the master cylinder body.
7. Connect the brake fluid level indicator switch electrical connector.

cardiagn.com

8. Install the driver side front fender rear upper brace. Refer to **Front Fender Rear Upper Brace Replacement** .
9. Fill the master cylinder reservoir. Refer to **Master Cylinder Reservoir Filling**.

MASTER CYLINDER RESERVOIR REPLACEMENT (J95)

Removal Procedure

WARNING: Refer to Brake Fluid Irritant Warning .

CAUTION: Refer to Brake Fluid Effects on Paint and Electrical Components Caution .

1. Remove and properly discard the brake fluid from the master cylinder reservoir.
2. Remove the driver side front fender rear upper brace. Refer to **Front Fender Rear Upper Brace Replacement** .
3. Disconnect the brake fluid level indicator switch electrical connector.

cardiagn.com

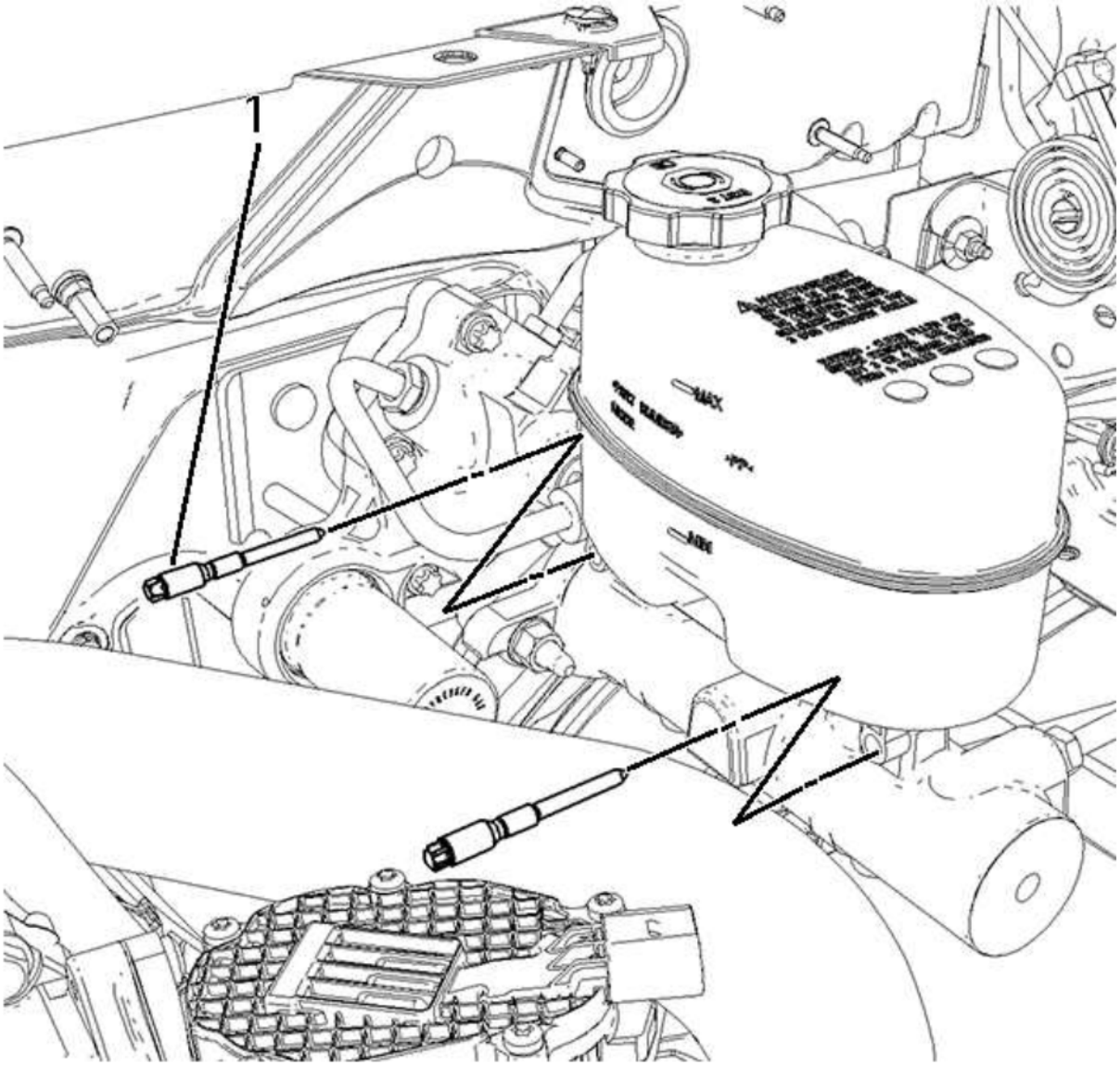

Fig. 12: Master Cylinder Reservoir Bolts
Courtesy of GENERAL MOTORS COMPANY

4. Remove the 2 master cylinder reservoir bolts (1).

cardiagn.com

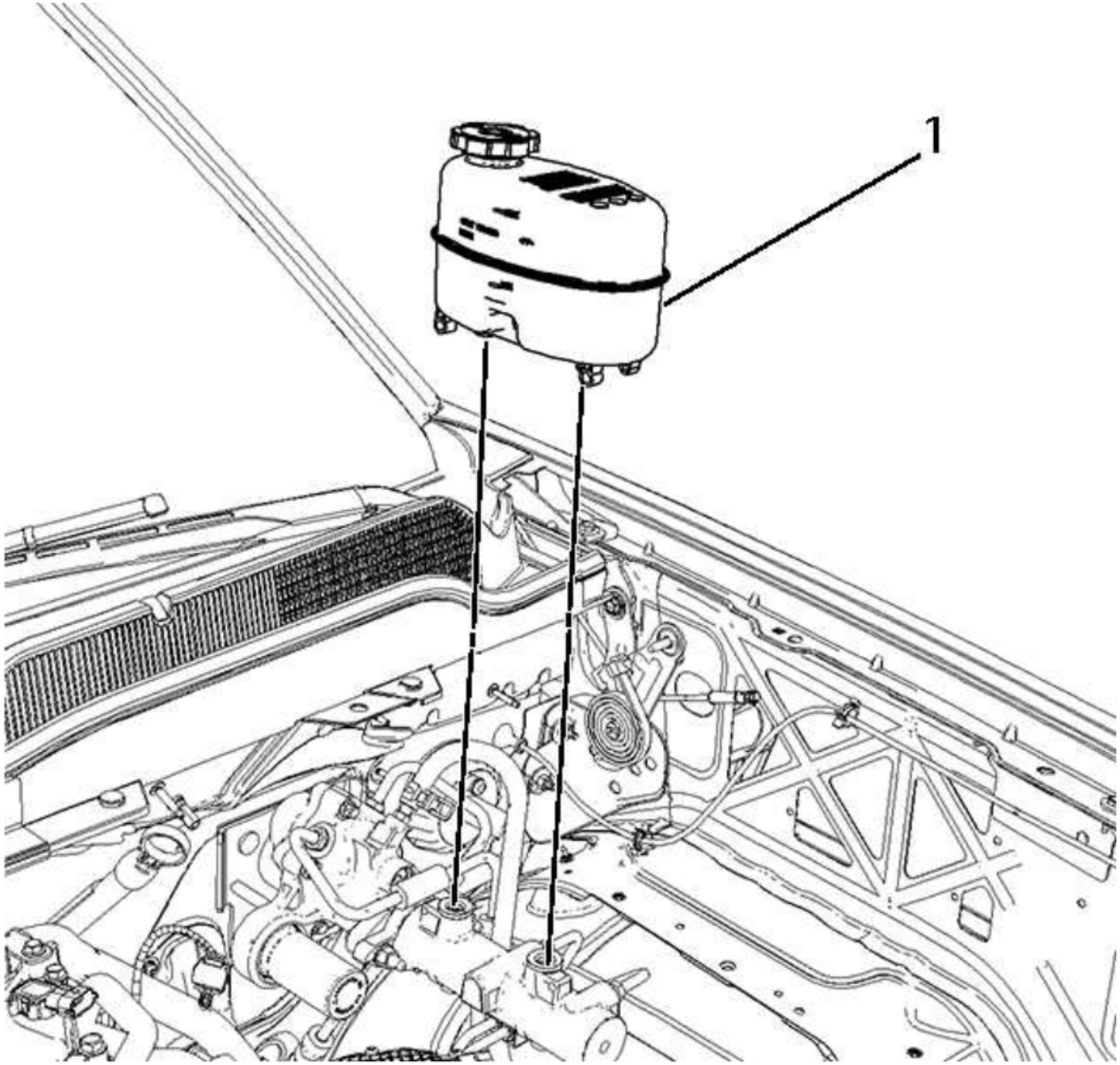

Fig. 13: Master Cylinder Reservoir
Courtesy of GENERAL MOTORS COMPANY

5. Lift the master cylinder reservoir (1) upward to release the reservoir from the master cylinder.

cardiagn.com

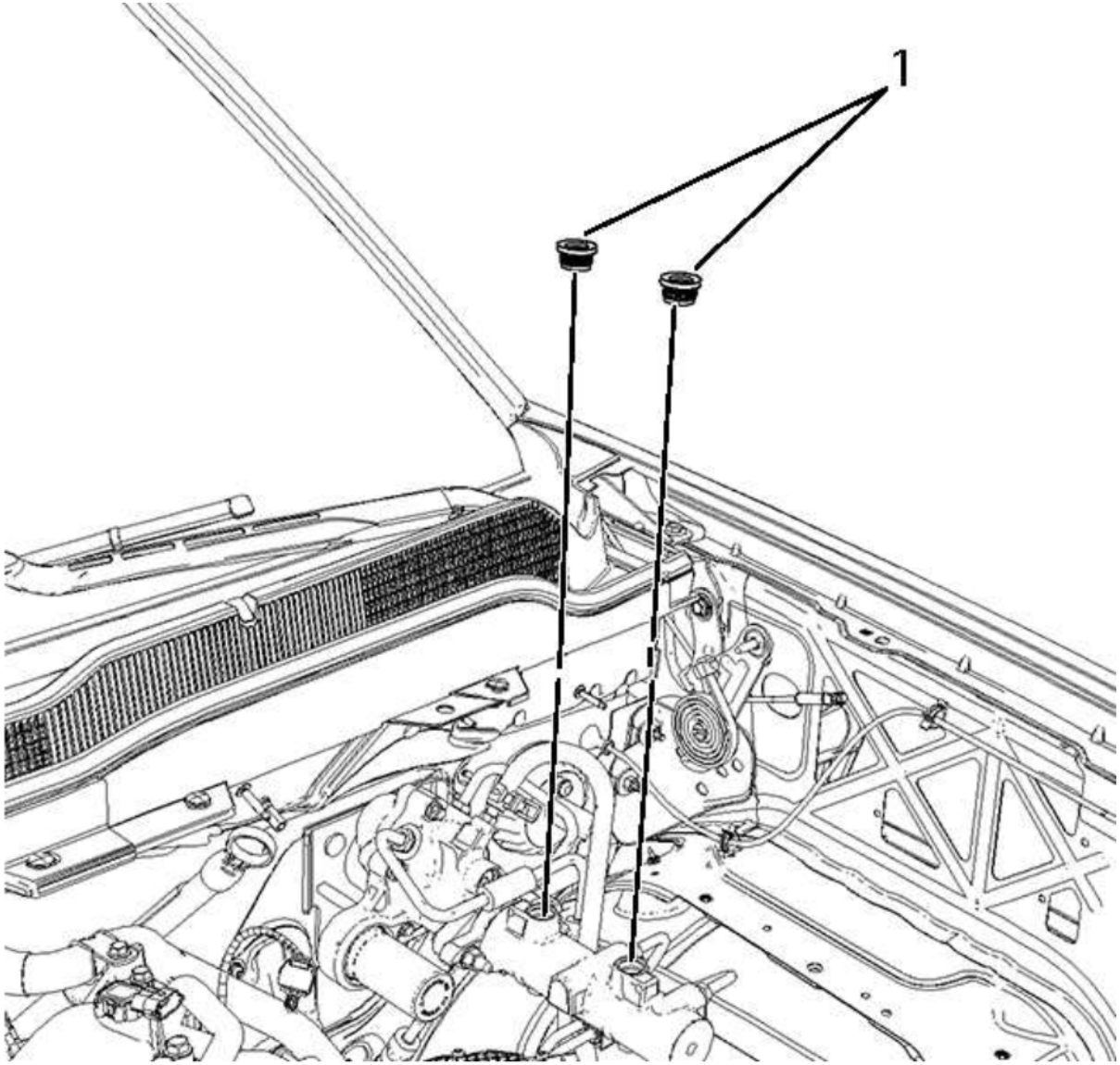

Fig. 14: Master Cylinder Reservoir Seals
Courtesy of GENERAL MOTORS COMPANY

6. Remove the master cylinder reservoir seals (1).
7. Remove the brake fluid level indicator switch, if necessary. Refer to **Brake Fluid Level Indicator Switch Replacement**.

cardiagn.com

Installation Procedure

1. If installing the original master cylinder reservoir, clean the master cylinder reservoir with denatured alcohol and dry with filtered, non-lubricated compressed air.
2. If removed, install brake fluid level indicator switch. Refer to **Brake Fluid Level Indicator Switch Replacement**.

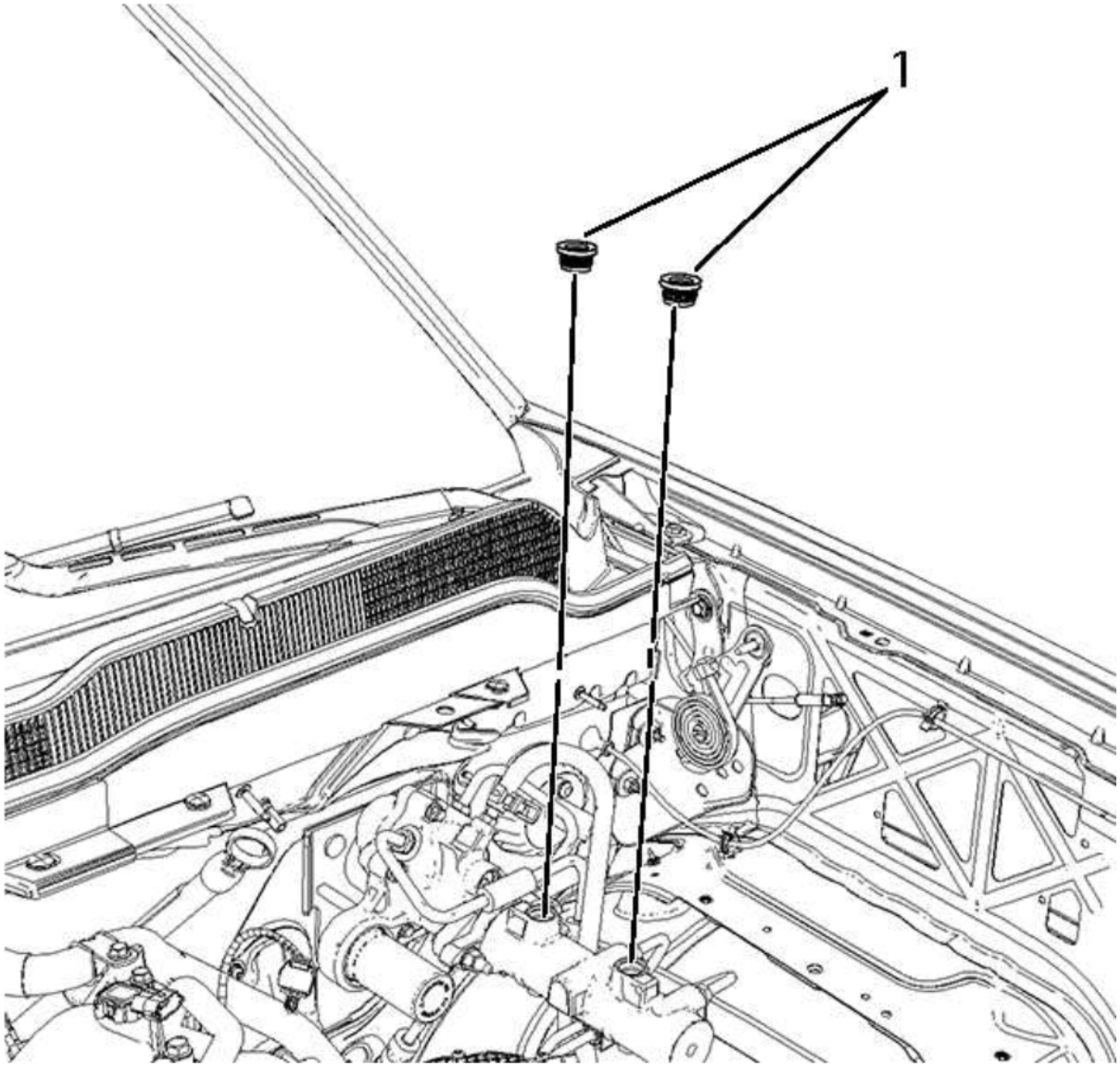

cardiagn.com

Fig. 15: Master Cylinder Reservoir Seals
Courtesy of GENERAL MOTORS COMPANY

3. Lubricate the seals with GM approved brake fluid from a clean, sealed brake fluid container. Refer to **Adhesives, Fluids, Lubricants, and Sealers**.
4. Install the master cylinder reservoir seals (1).

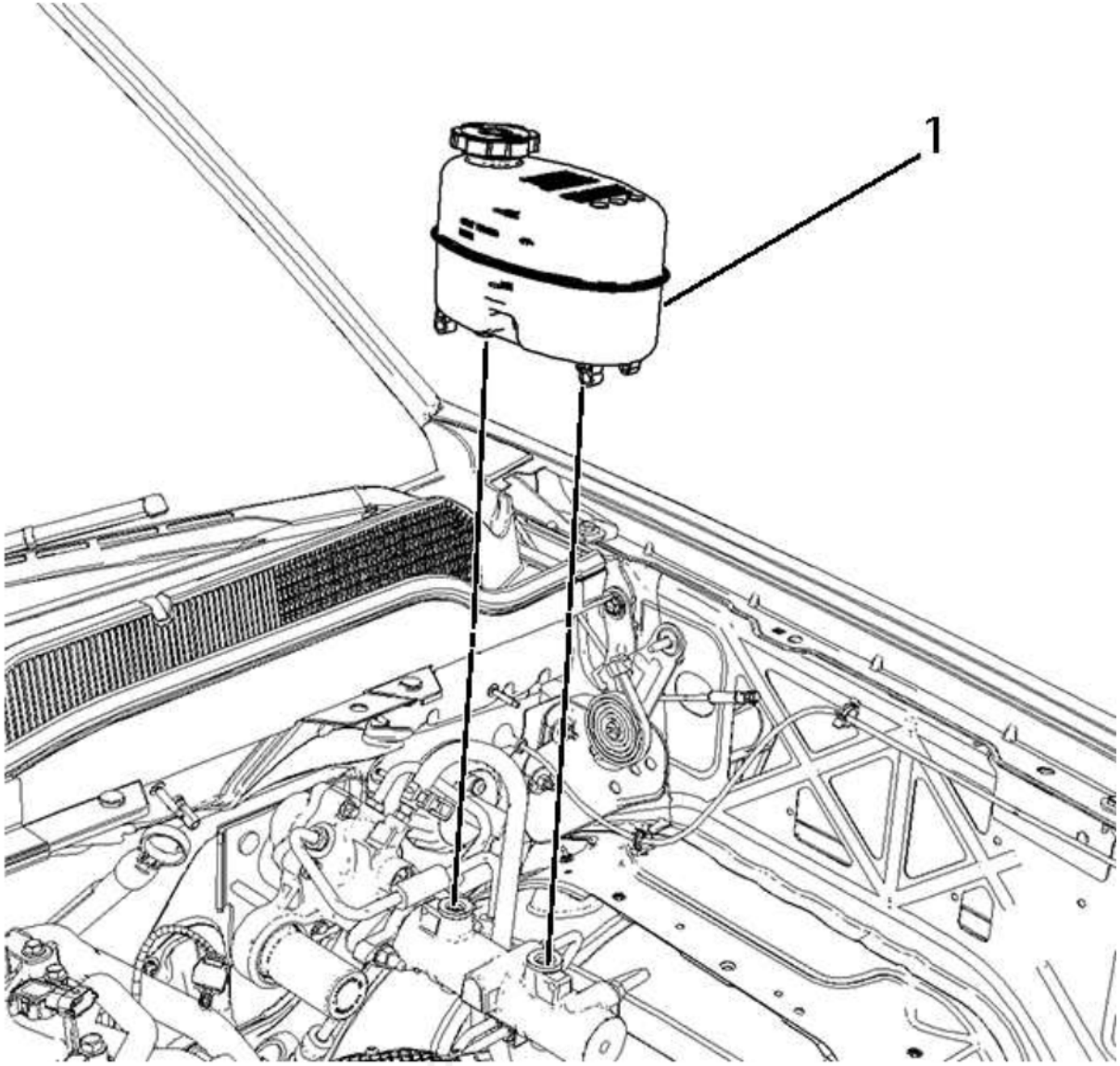

cardiagn.com

Fig. 16: Master Cylinder Reservoir
Courtesy of GENERAL MOTORS COMPANY

5. Install the master cylinder reservoir (1).
6. Carefully press the reservoir straight downward.

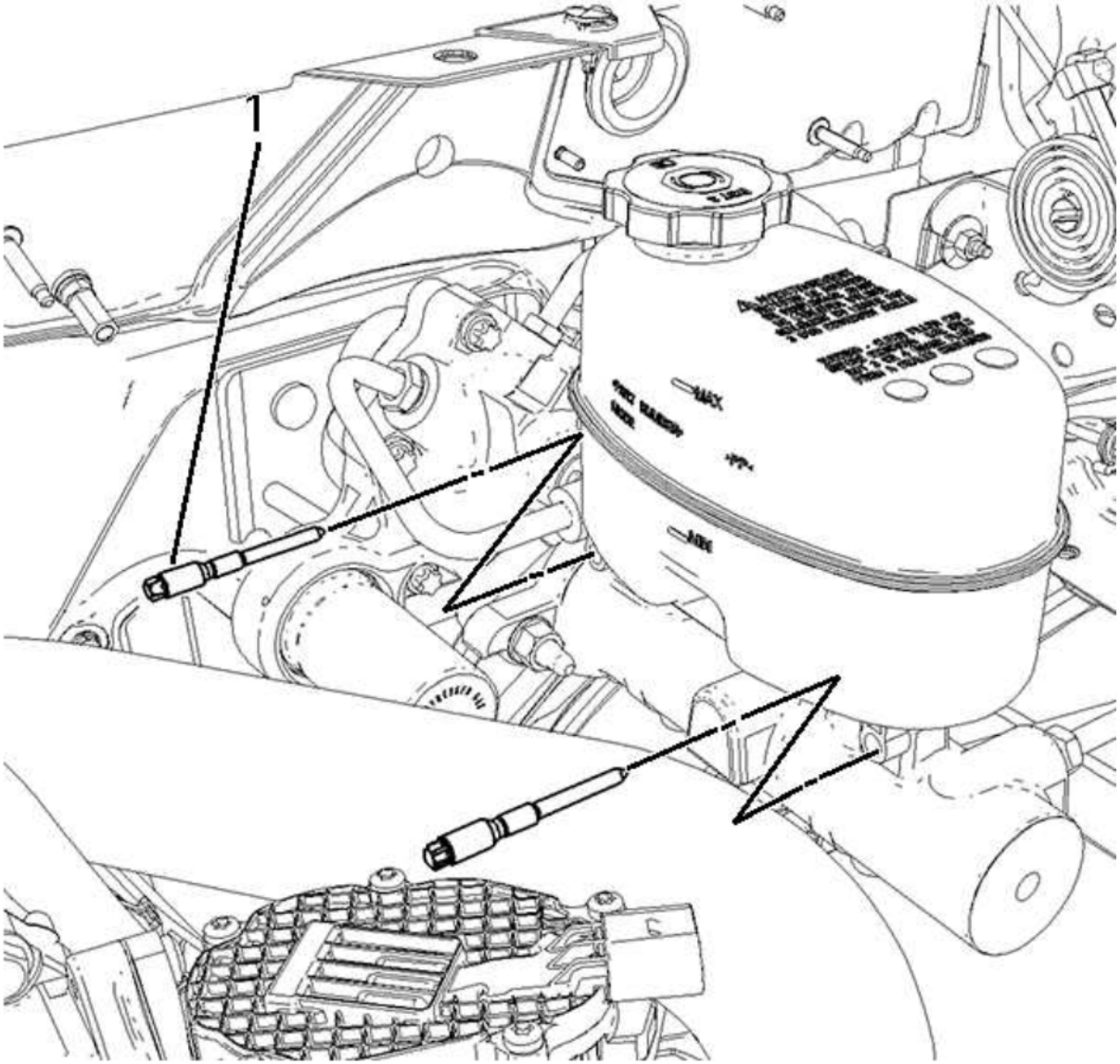

cardiagn.com

Fig. 17: Master Cylinder Reservoir Bolts
Courtesy of GENERAL MOTORS COMPANY

CAUTION: Refer to Fastener Caution .

7. Install the 2 master cylinder reservoir bolts (1) and tighten to 8 N.m (71 lb in).
8. Connect the brake fluid level indicator switch electrical connector.
9. Install the driver side front fender rear upper brace. Refer to **Front Fender Rear Upper Brace Replacement** .
10. Fill the master cylinder reservoir. Refer to **Master Cylinder Reservoir Filling**.

MASTER CYLINDER REPLACEMENT

Removal Procedure

WARNING: Refer to Brake Fluid Irritant Warning .

CAUTION: Refer to Brake Fluid Effects on Paint and Electrical Components Caution .

1. With the engine OFF, apply and release the brake pedal several times until the pedal becomes firm to deplete the brake booster reserve assist.
2. Remove the driver side front fender rear upper brace. Refer to **Front Fender Rear Upper Brace Replacement** .
3. Disconnect the brake fluid level indicator switch electrical connector.

cardiagn.com

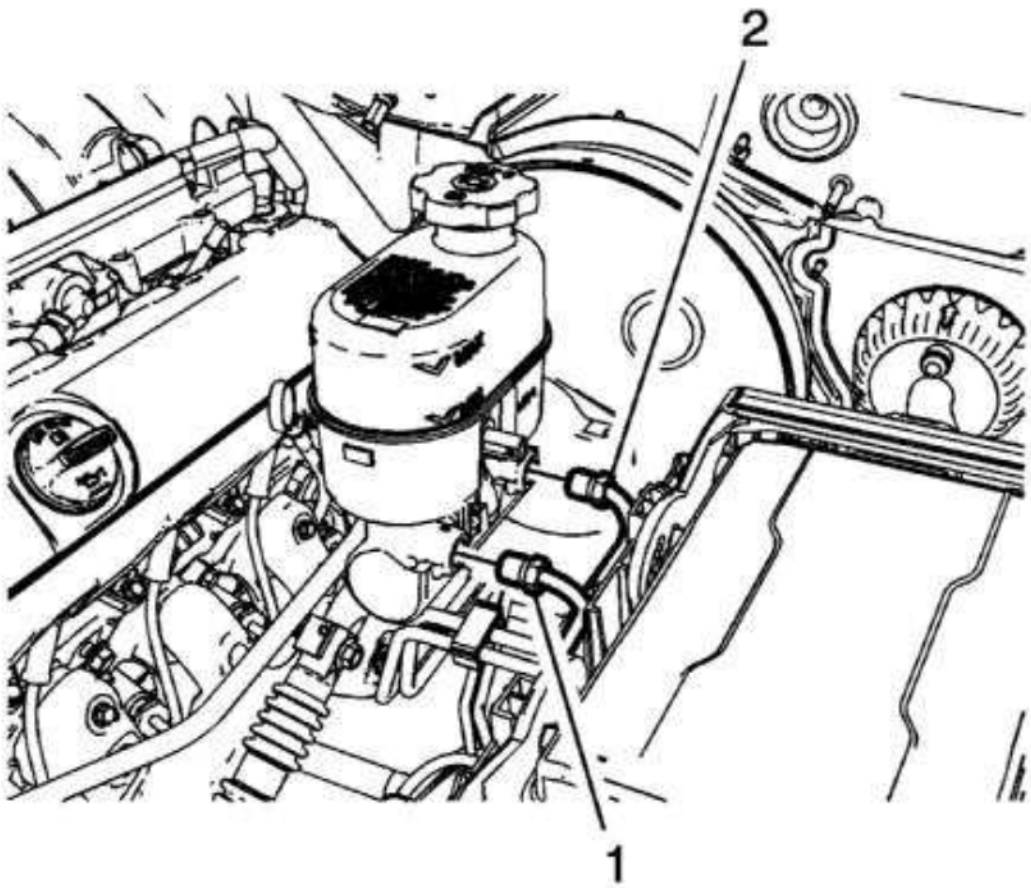

Fig. 18: Master Cylinder Secondary And Primary Brake Pipe Fittings
Courtesy of GENERAL MOTORS COMPANY

4. Disconnect the master cylinder secondary brake pipe fitting (1).
5. Cap the brake pipe fitting and plug the master cylinder outlet port to prevent brake fluid loss and contamination.
6. Disconnect the master cylinder primary brake pipe fitting (2).
7. Cap the brake pipe fitting and plug the master cylinder outlet port to prevent brake fluid loss and contamination.

cardiagn.com

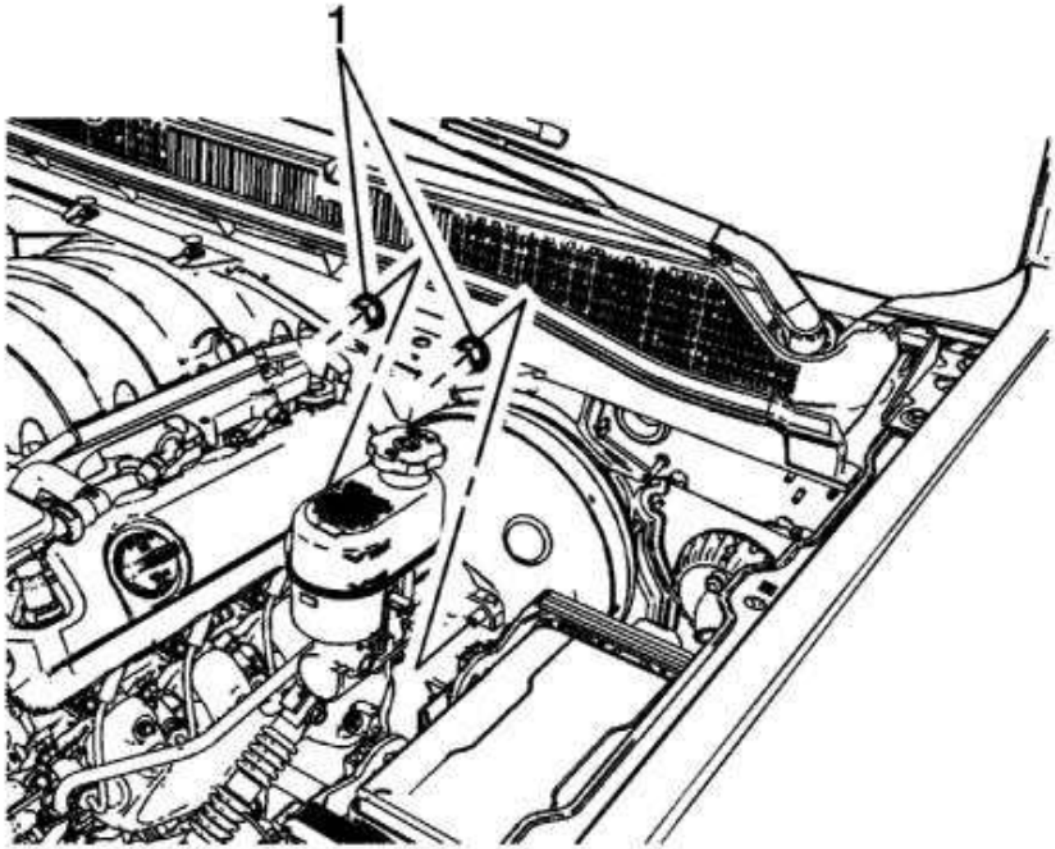

Fig. 19: Master Cylinder Nuts
Courtesy of GENERAL MOTORS COMPANY

8. Remove the master cylinder nuts (1).

cardiagn.com

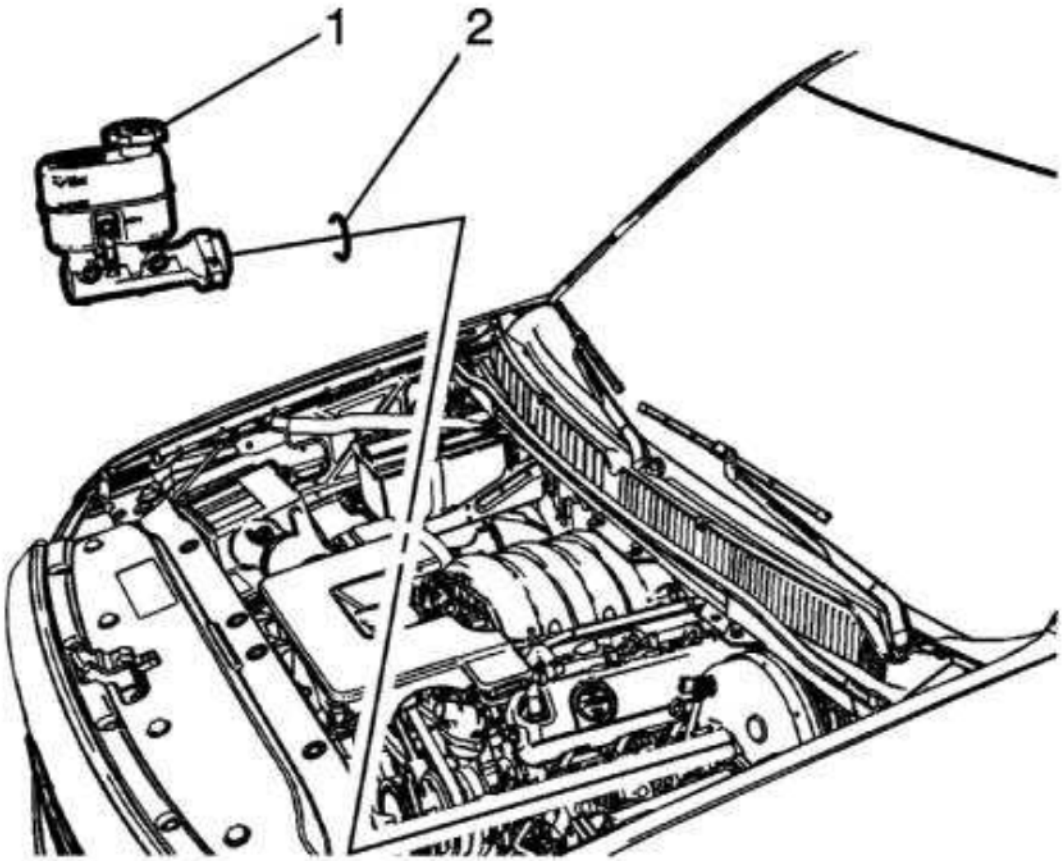

Fig. 20: Master Cylinder And Power Vacuum Brake Booster
Courtesy of GENERAL MOTORS COMPANY

9. Remove the master cylinder (1) from the power vacuum brake booster.
10. Inspect the O-ring seal (2) for damage and replace, if necessary.

Installation Procedure

cardiagn.com

1. If installing a new master cylinder, bench bleed the master cylinder. Refer to **Master Cylinder Bench Bleeding**.

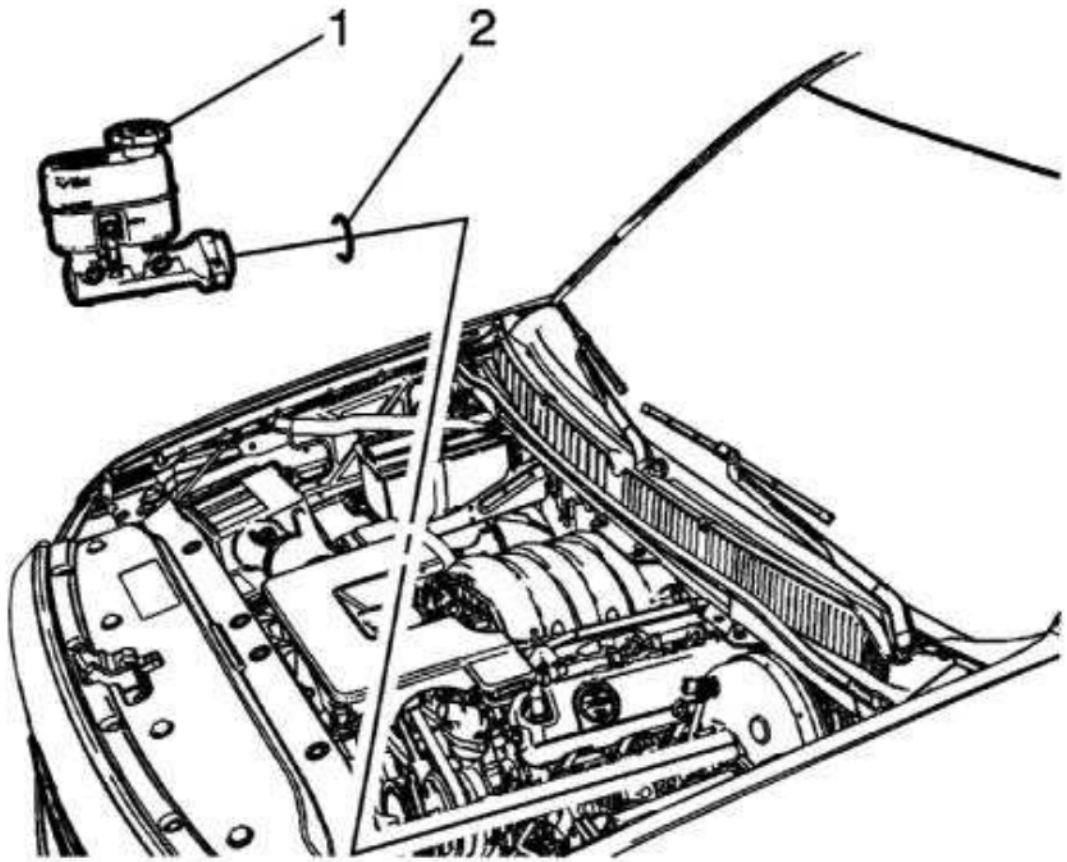

Fig. 21: Master Cylinder And Power Vacuum Brake Booster
Courtesy of GENERAL MOTORS COMPANY

2. Assemble the master cylinder (1) to the O-ring seal (2).

NOTE: **Do not place the O-ring seal in the groove in the master cylinder body.**

cardiagn.com

3. Ensure the O-ring seal is properly seated against the base of the brake master cylinder body.
4. Install the master cylinder assembly to the power vacuum brake booster.

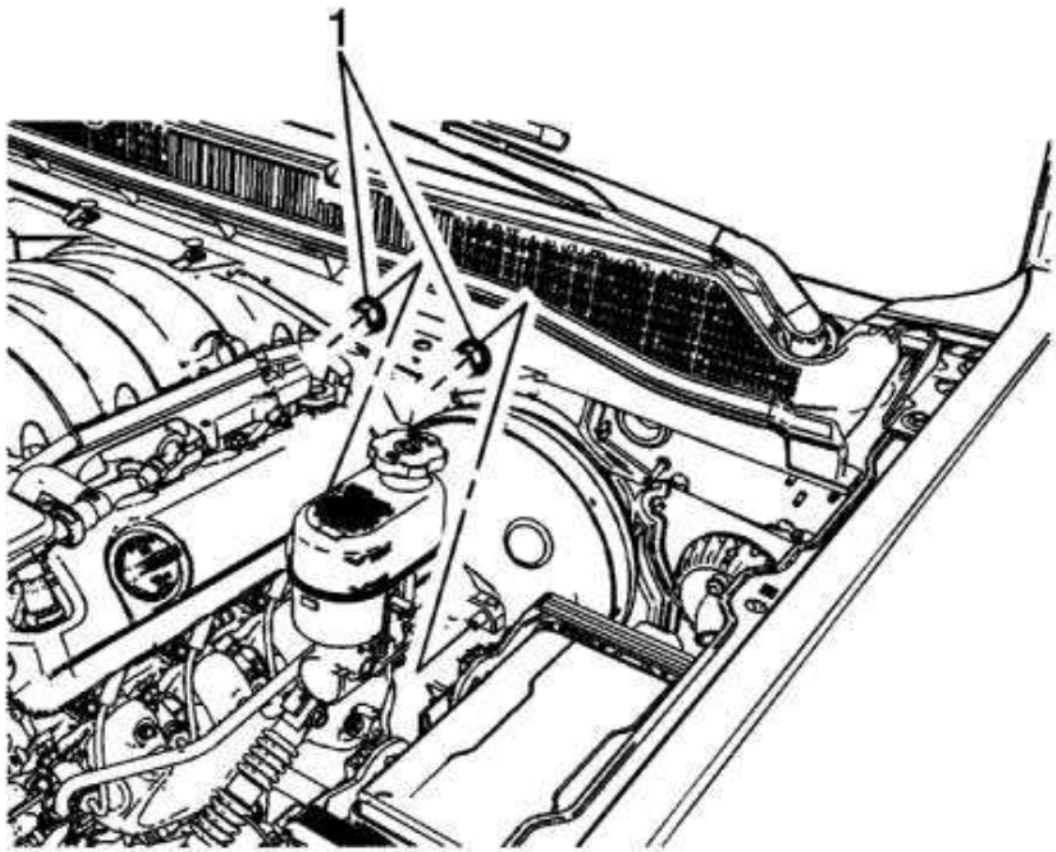

Fig. 22: Master Cylinder Nuts
Courtesy of GENERAL MOTORS COMPANY

CAUTION: **Refer to Fastener Caution .**

cardiagn.com

5. Install the master cylinder nuts (1) and tighten to 32 N.m (24 lb ft).

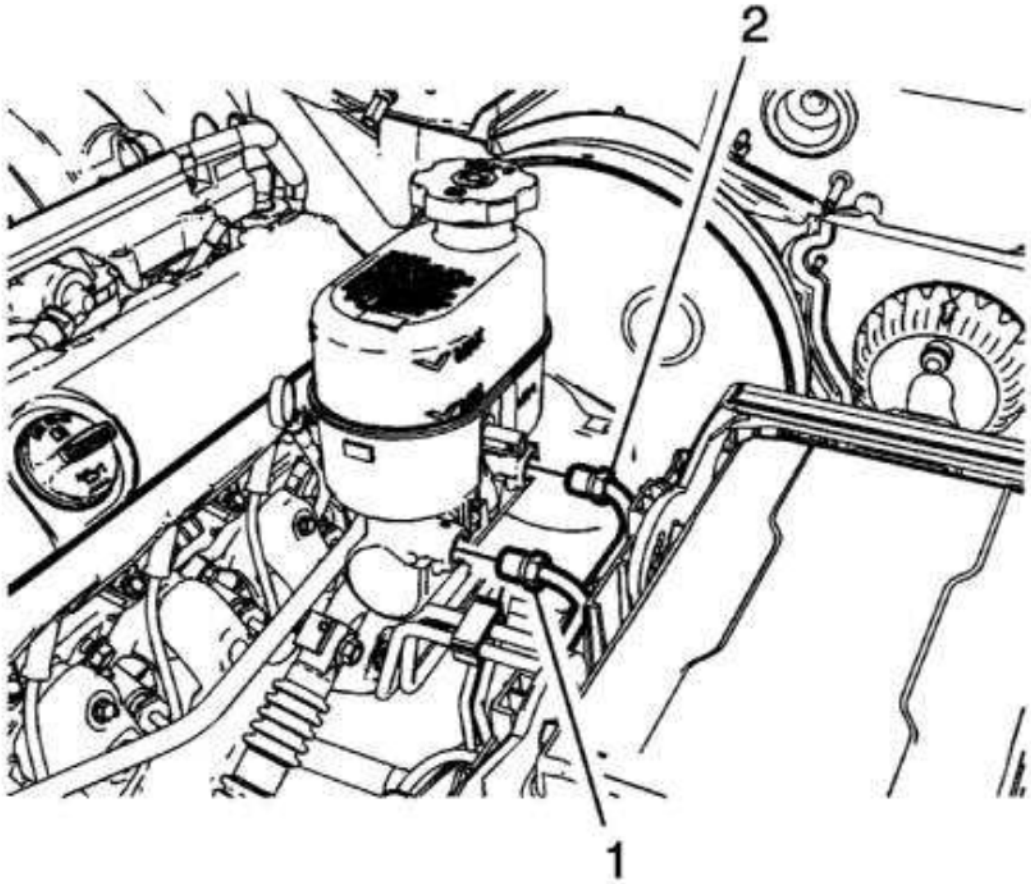

Fig. 23: Master Cylinder Secondary And Primary Brake Pipe Fittings
Courtesy of GENERAL MOTORS COMPANY

6. Connect the master cylinder secondary brake pipe fitting (1) and tighten the fitting to 32 N.m (24 lb ft).
7. Connect the master cylinder primary brake pipe fitting (2) and tighten the fitting to 32 N.m (24 lb ft).
8. Connect the brake fluid level indicator switch electrical connector.

cardiagn.com

9. Install the driver side front fender rear upper brace. Refer to **Front Fender Rear Upper Brace Replacement** .
10. Bleed the hydraulic brake system. Refer to **Hydraulic Brake System Bleeding (Pressure)Hydraulic Brake System Bleeding (Manual)**.

MASTER CYLINDER BENCH BLEEDING

WARNING: **Refer to Brake Fluid Irritant Warning .**

CAUTION: **Refer to Brake Fluid Effects on Paint and Electrical Components Caution .**

cardiagn.com

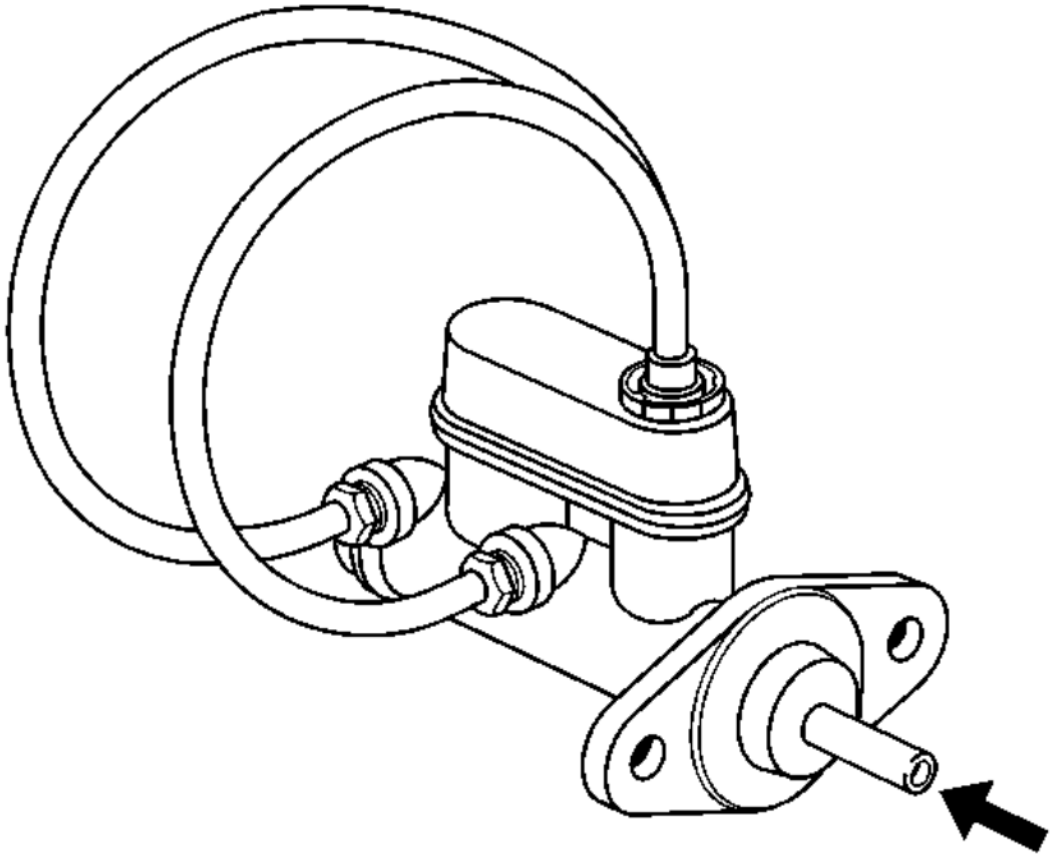

Fig. 24: Bleeding Master Cylinder
Courtesy of GENERAL MOTORS COMPANY

1. Secure the mounting flange of the brake master cylinder in a bench vise so that the rear of the primary piston is accessible.
2. Remove the master cylinder reservoir cap and diaphragm.
3. Install suitable fittings to the master cylinder ports that match the type of flare seat required and also provide for hose attachment.

cardiagn.com

4. Install transparent hoses to the fittings installed to the master cylinder ports, then route the hoses into the master cylinder reservoir.
5. Fill the master cylinder reservoir to at least the half-way point with GM approved brake fluid from a clean, sealed brake fluid container. Refer to **Master Cylinder Reservoir Filling**.
6. Ensure that the ends of the transparent hoses running into the master cylinder reservoir are fully submerged in the brake fluid.
7. Using a smooth, round-ended tool, depress and release the primary piston as far as it will travel, a depth of about 25 mm (1 in), several times. Observe the flow of fluid coming from the ports.

   As air is bled from the primary and secondary pistons, the effort required to depress the primary piston will increase and the amount of travel will decrease.

8. Continue to depress and release the primary piston until fluid flows freely from the ports with no evidence of air bubbles.
9. Remove the transparent hoses from the master cylinder reservoir.
10. Install the master cylinder reservoir cap and diaphragm.
11. Remove the fittings with the transparent hoses from the master cylinder ports. Wrap the master cylinder with a clean shop cloth to prevent brake fluid spills.
12. Remove the master cylinder from the vise.

BRAKE FLUID LEVEL INDICATOR SWITCH REPLACEMENT

cardiagn.com

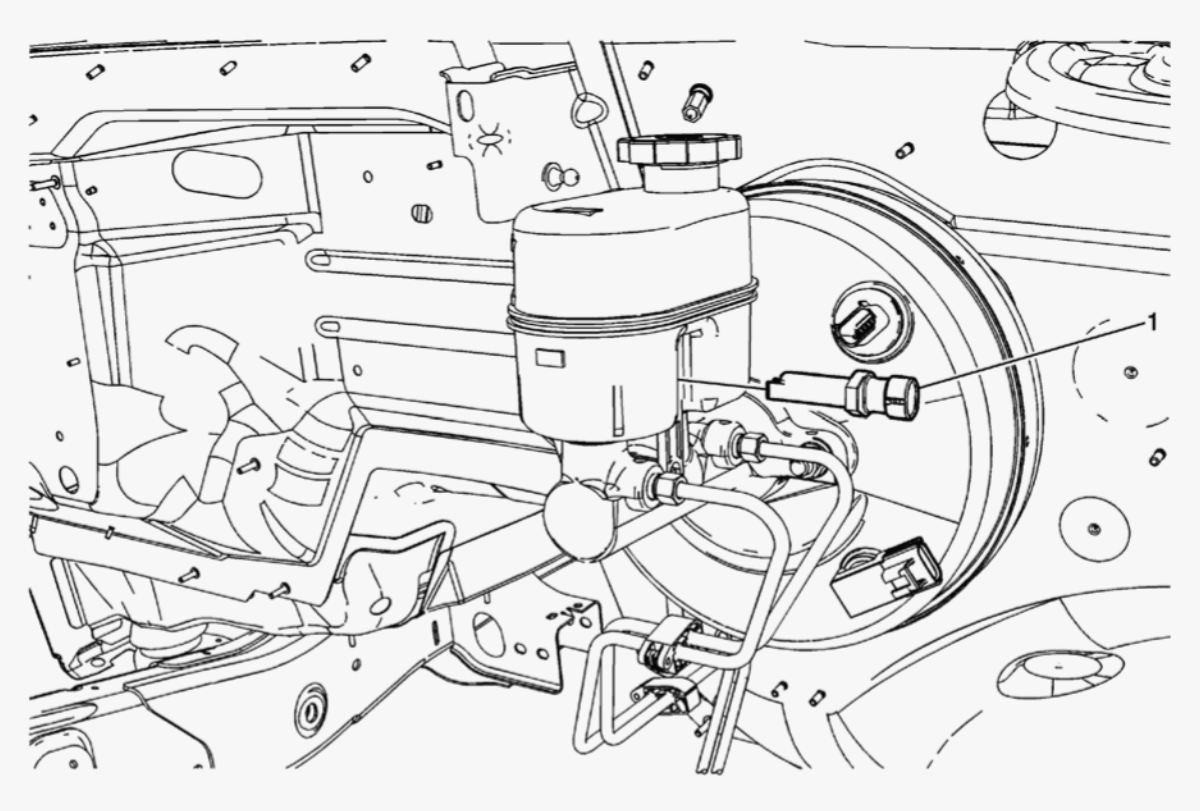

Fig. 25: Master Cylinder Brake Fluid Level Sensor
Courtesy of GENERAL MOTORS COMPANY

Callout	Component Name
Preliminary Procedure Disconnect the master cylinder fluid level sensor electrical connector.	
1	Master Cylinder Fluid Level Sensor **TIP:** Compress the locking tabs on the sensor to release the sensor from the brake master cylinder reservoir.

BRAKE PEDAL ASSEMBLY REPLACEMENT (WITH JF4)

Removal Procedure

1. Block the drive wheels.

cardiagn.com

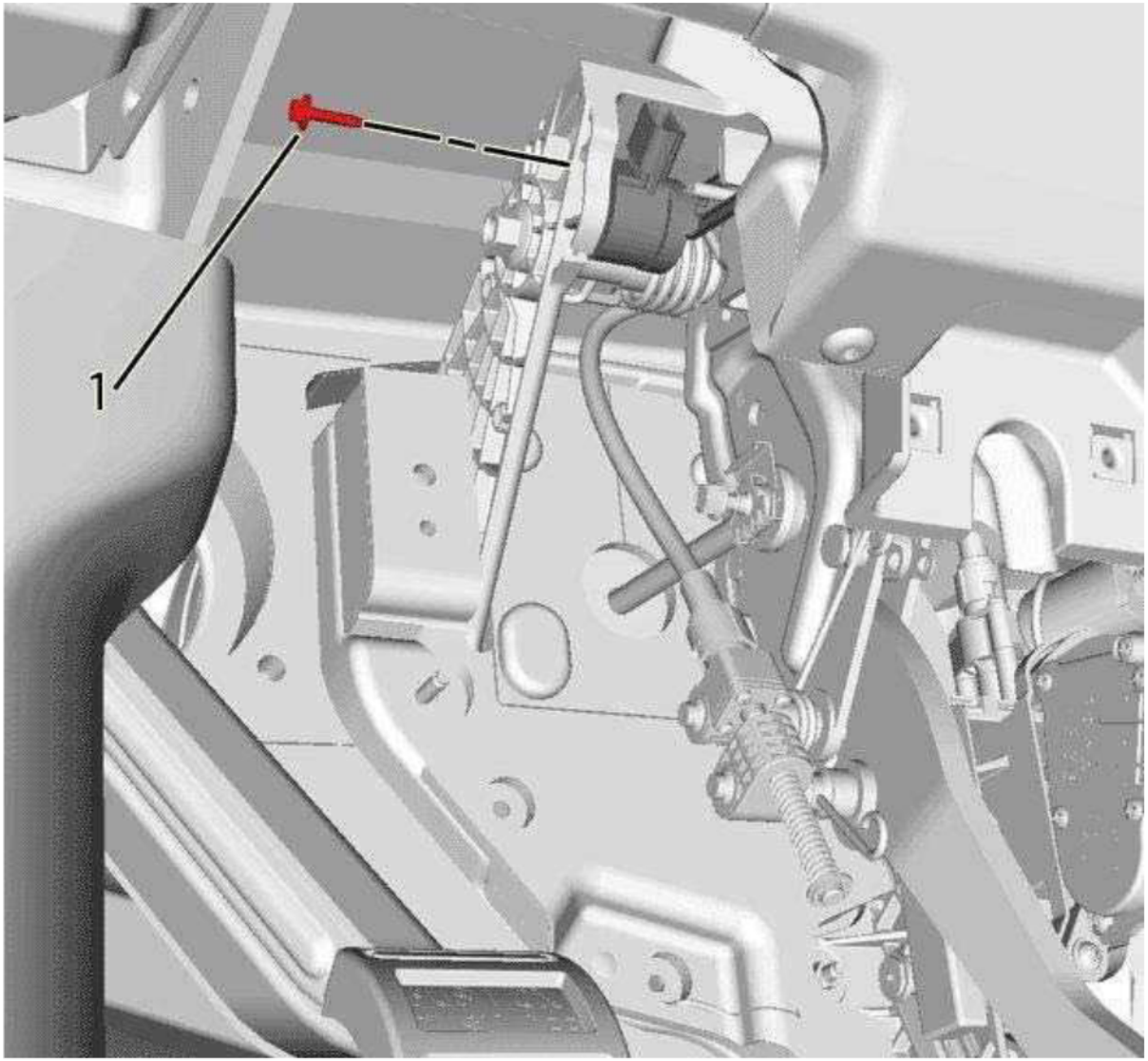

Fig. 26: Brake Pedal Position Sensor Bolt
Courtesy of GENERAL MOTORS COMPANY

2. Disconnect the brake pedal position sensor electrical connector.
3. Remove the brake pedal position sensor bolt (1).

cardiagn.com

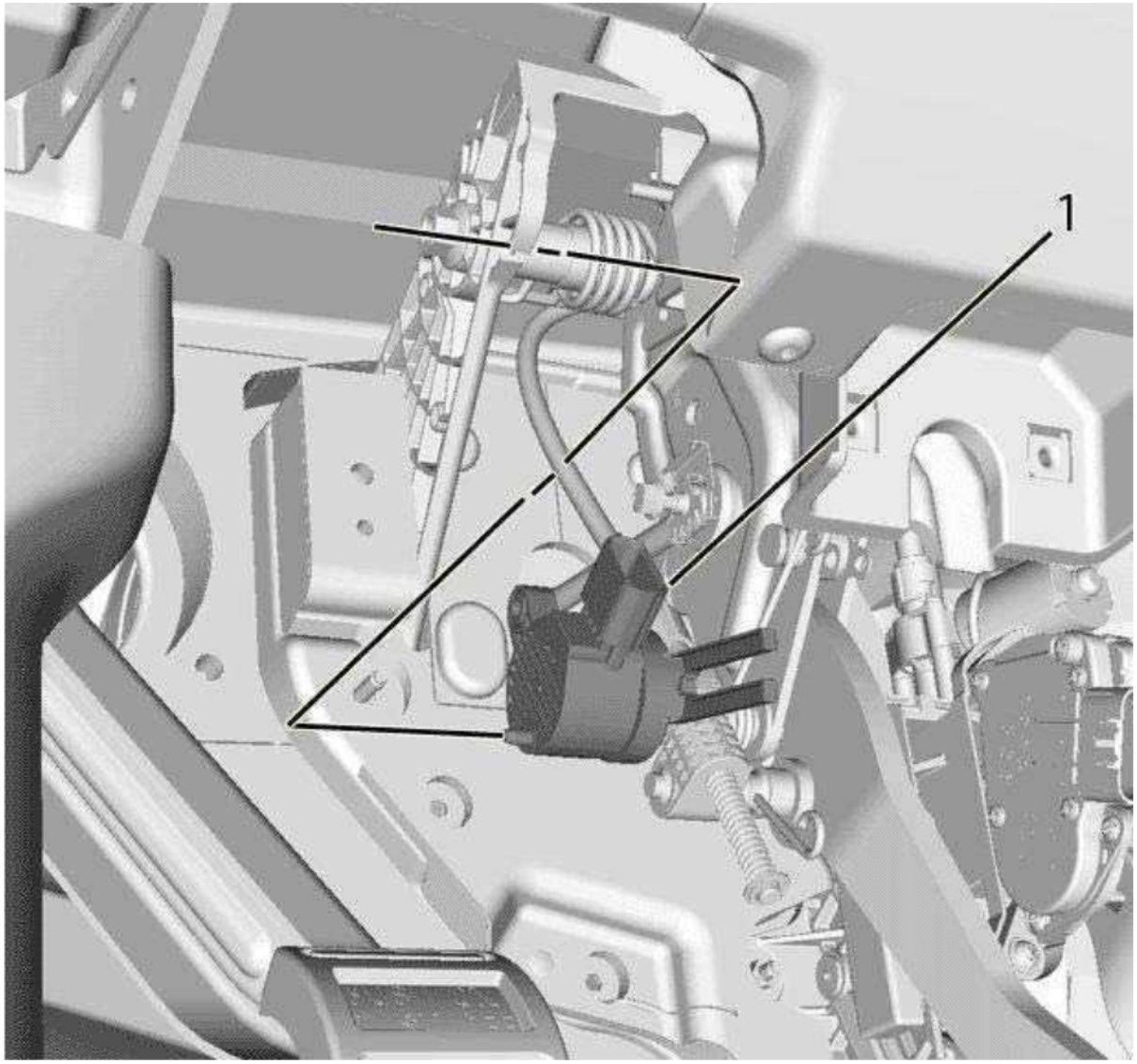

Fig. 27: Brake Pedal Position Sensor
Courtesy of GENERAL MOTORS COMPANY

4. Remove the brake pedal position sensor (1).

cardiagn.com

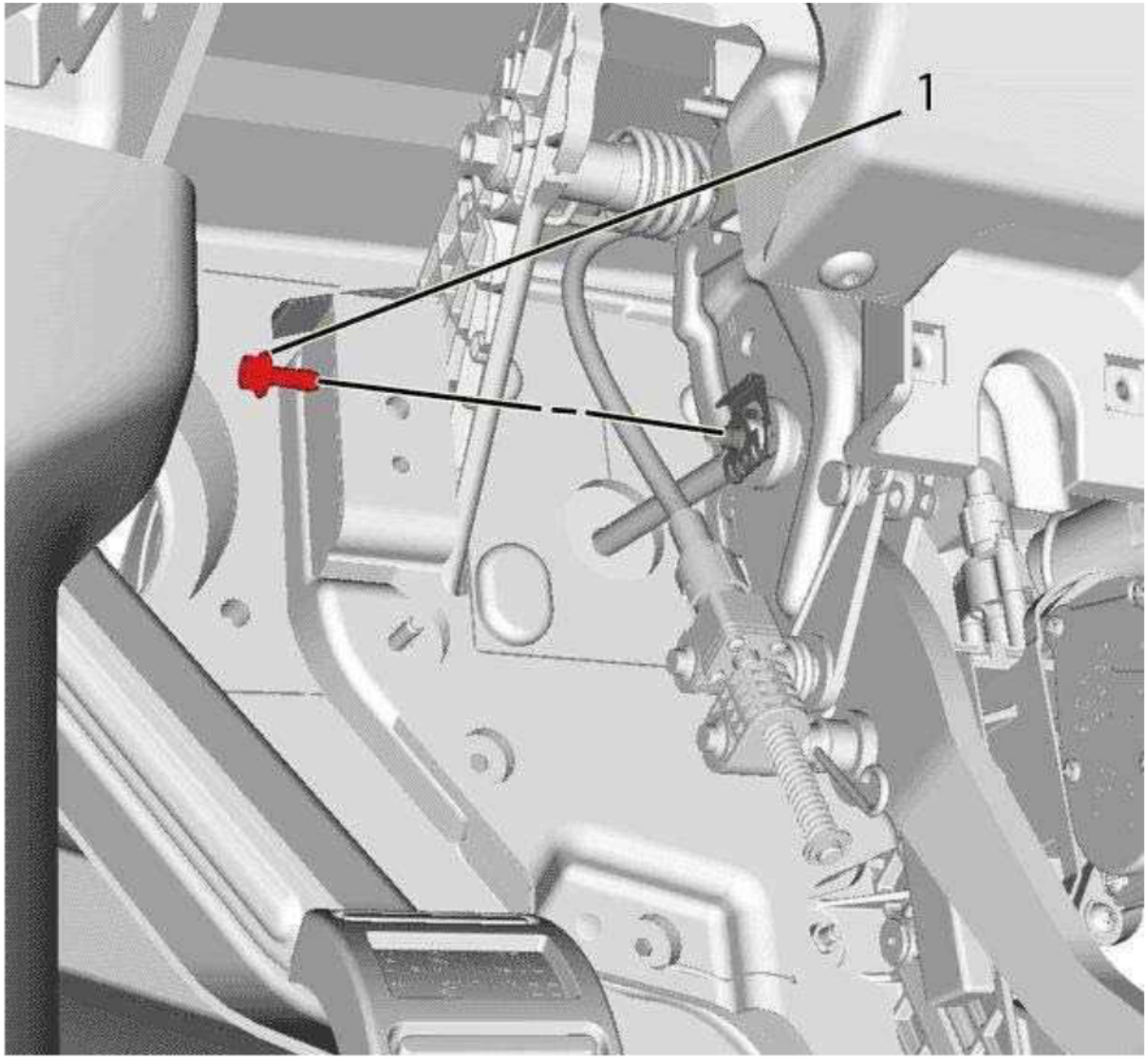

Fig. 28: Power Brake Booster Pushrod Retaining Clip Bolt
Courtesy of GENERAL MOTORS COMPANY

5. Remove the power brake booster pushrod retainer clip bolt (1).

cardiagn.com

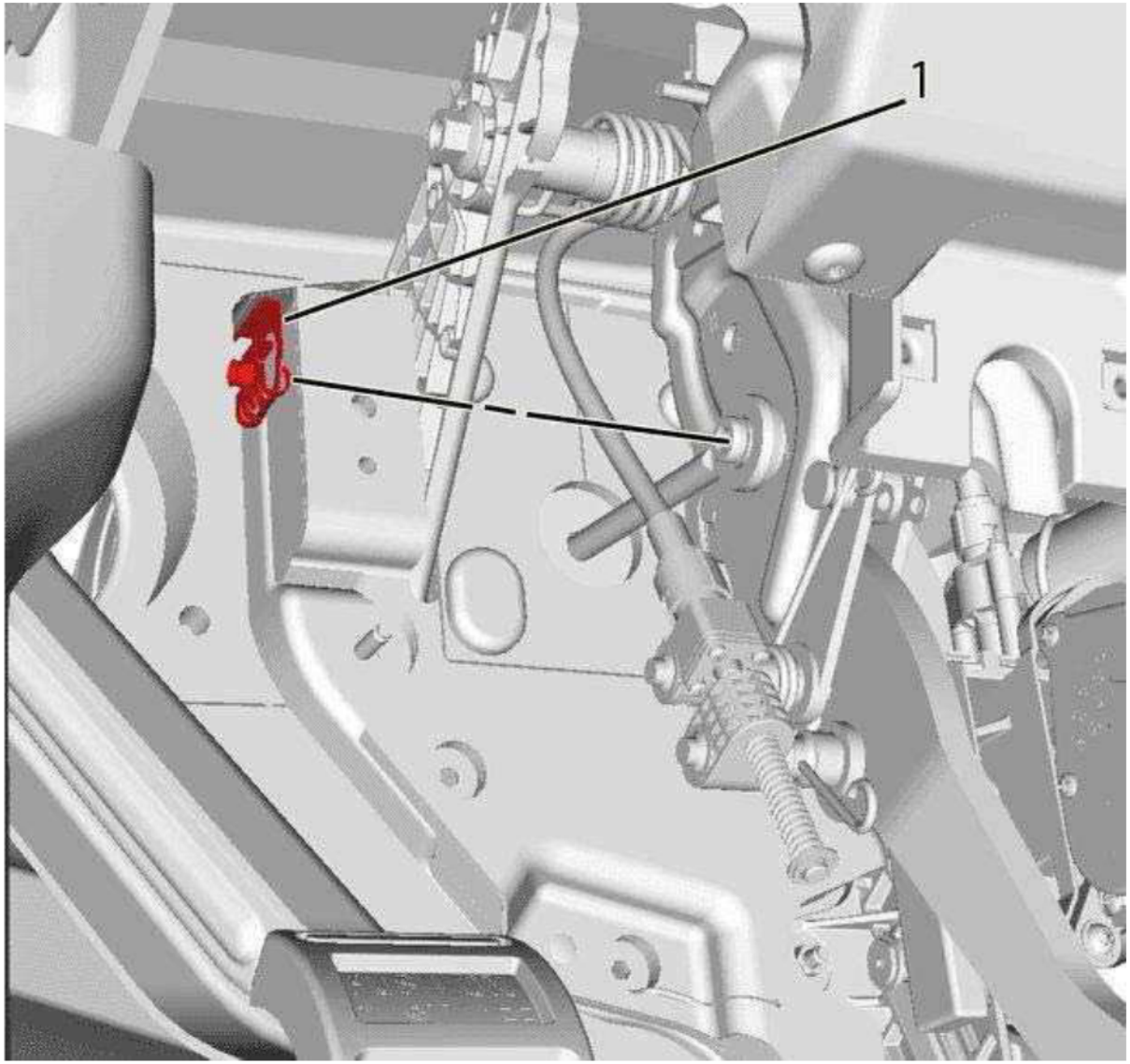

Fig. 29: Power Brake Booster Pushrod Retaining Clip
Courtesy of GENERAL MOTORS COMPANY

6. Remove the power brake booster pushrod retainer clip (1).
7. Disconnect the power brake booster pushrod.

cardiagn.com

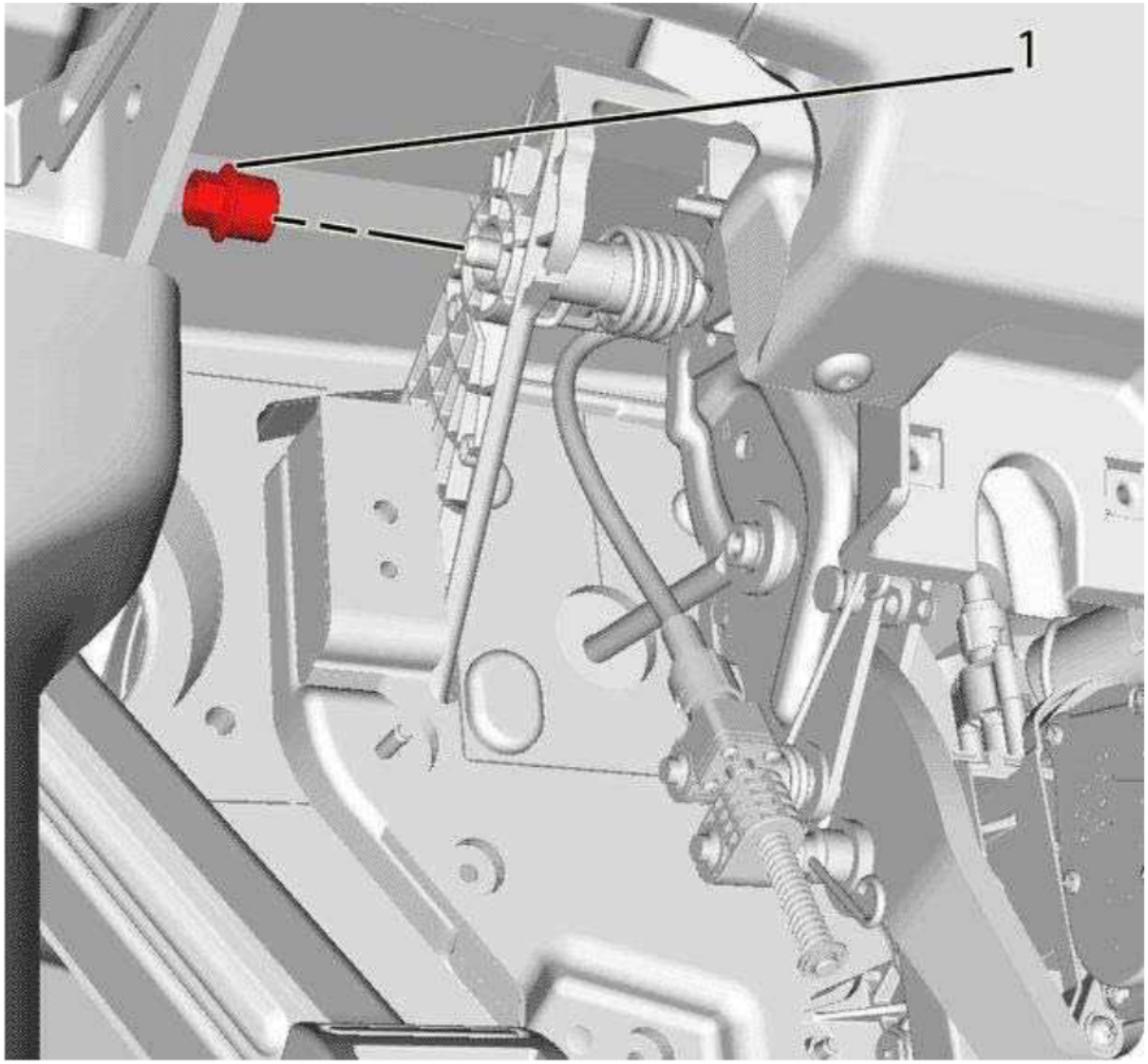

Fig. 30: Brake Pedal Pivot Nut
Courtesy of GENERAL MOTORS COMPANY

8. Remove the brake pedal pivot nut (1).

cardiagn.com

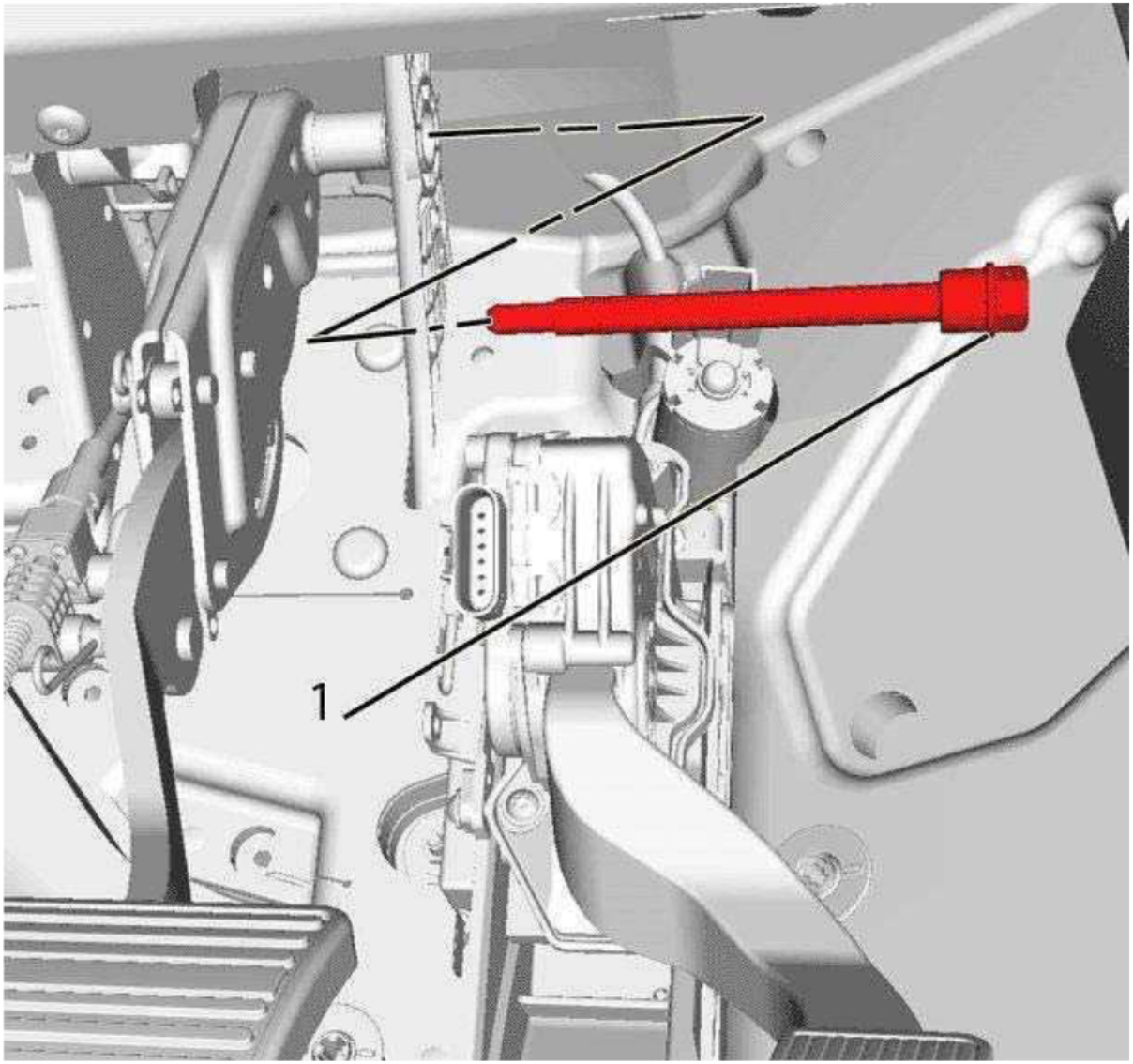

Fig. 31: Brake Pedal Pivot Bolt
Courtesy of GENERAL MOTORS COMPANY

9. Remove the brake pedal pivot bolt (1).

cardiagn.com

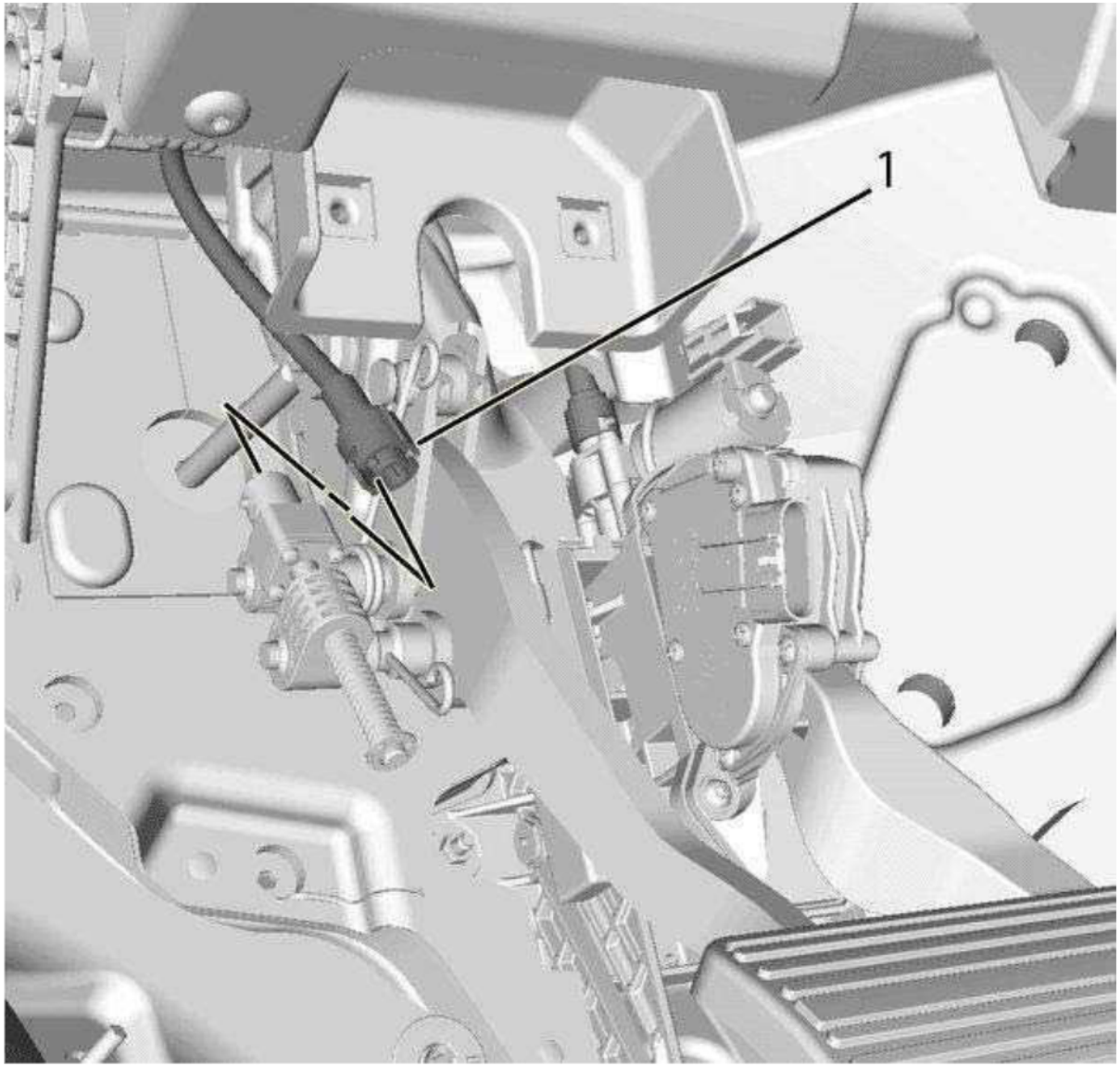

Fig. 32: Brake Pedal Adjuster Actuator Cable
Courtesy of GENERAL MOTORS COMPANY

10. Disconnect the brake pedal adjuster actuator cable (1) from the brake pedal adjuster actuator.
    1. Rotate the brake pedal adjuster actuator cable collar counter clockwise.
    2. Compress the secondary locking tabs located below the cable collar alignment pins with a pointed tool.

cardiagn.com

3. Pull the brake pedal adjuster actuator cable upward and position aside.

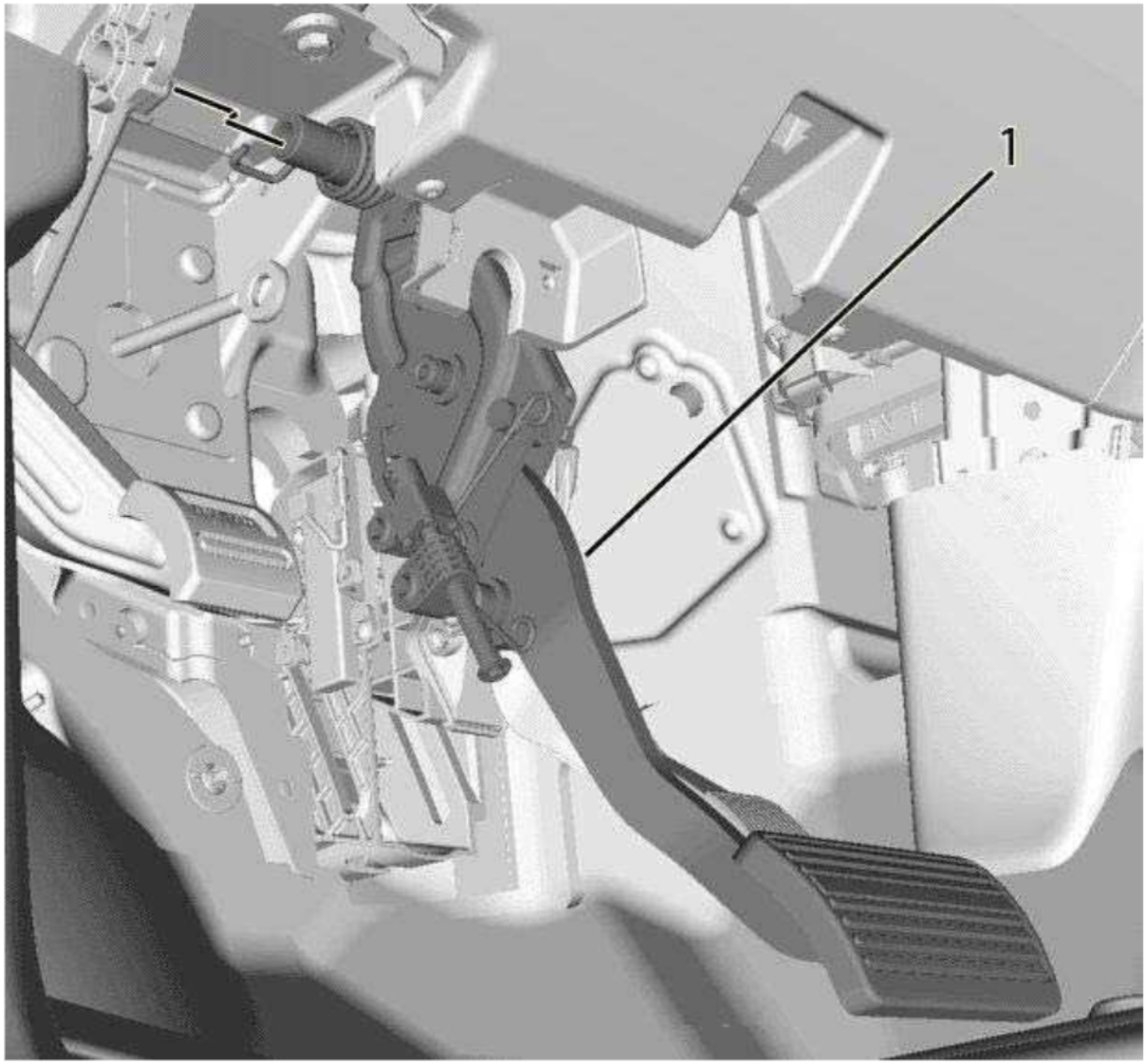

Fig. 33: Brake Pedal
Courtesy of GENERAL MOTORS COMPANY

11. Remove the brake pedal (1).

Installation Procedure

cardiagn.com

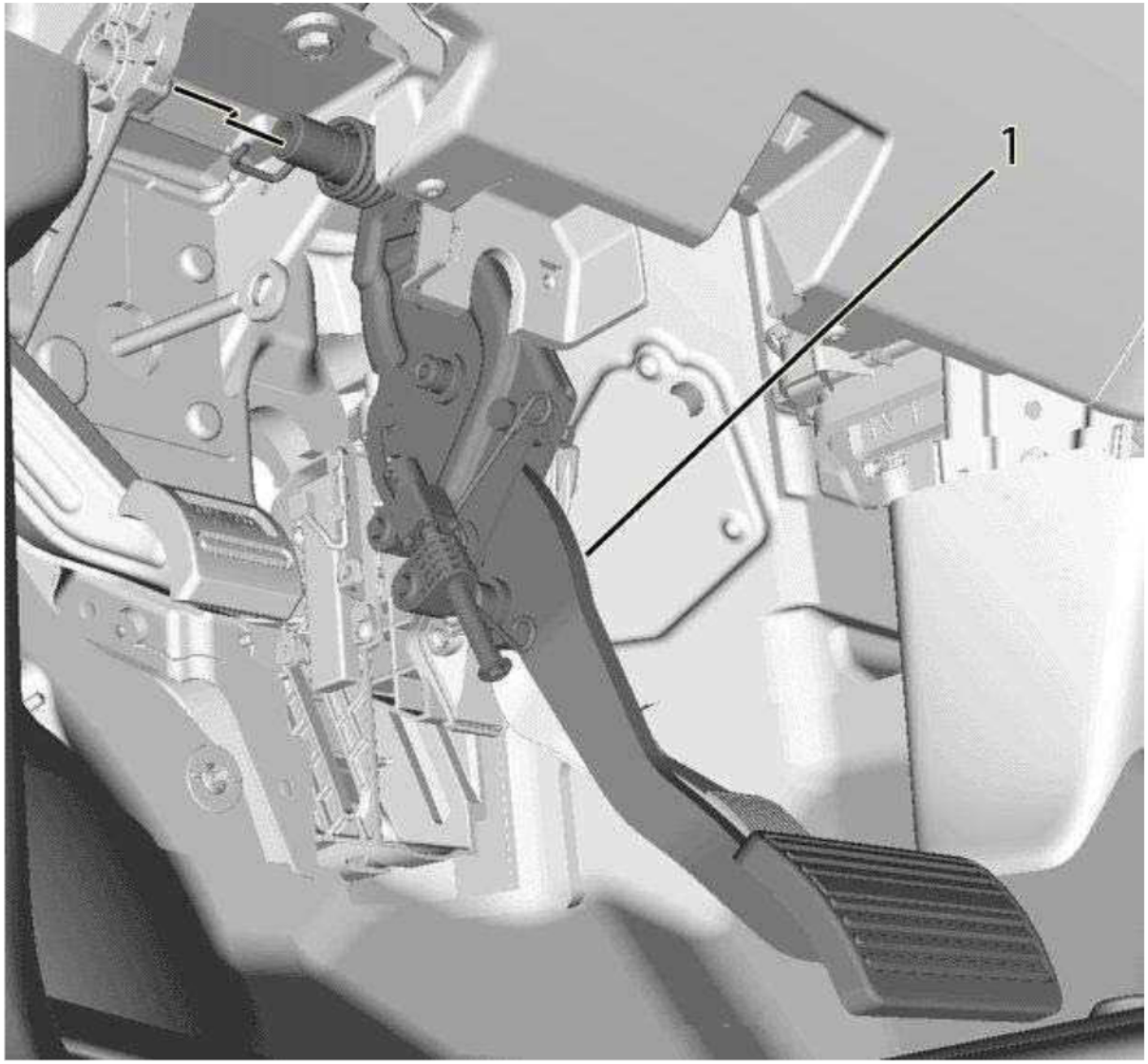

Fig. 34: Brake Pedal
Courtesy of GENERAL MOTORS COMPANY

1. Install the brake pedal (1).

cardiagn.com

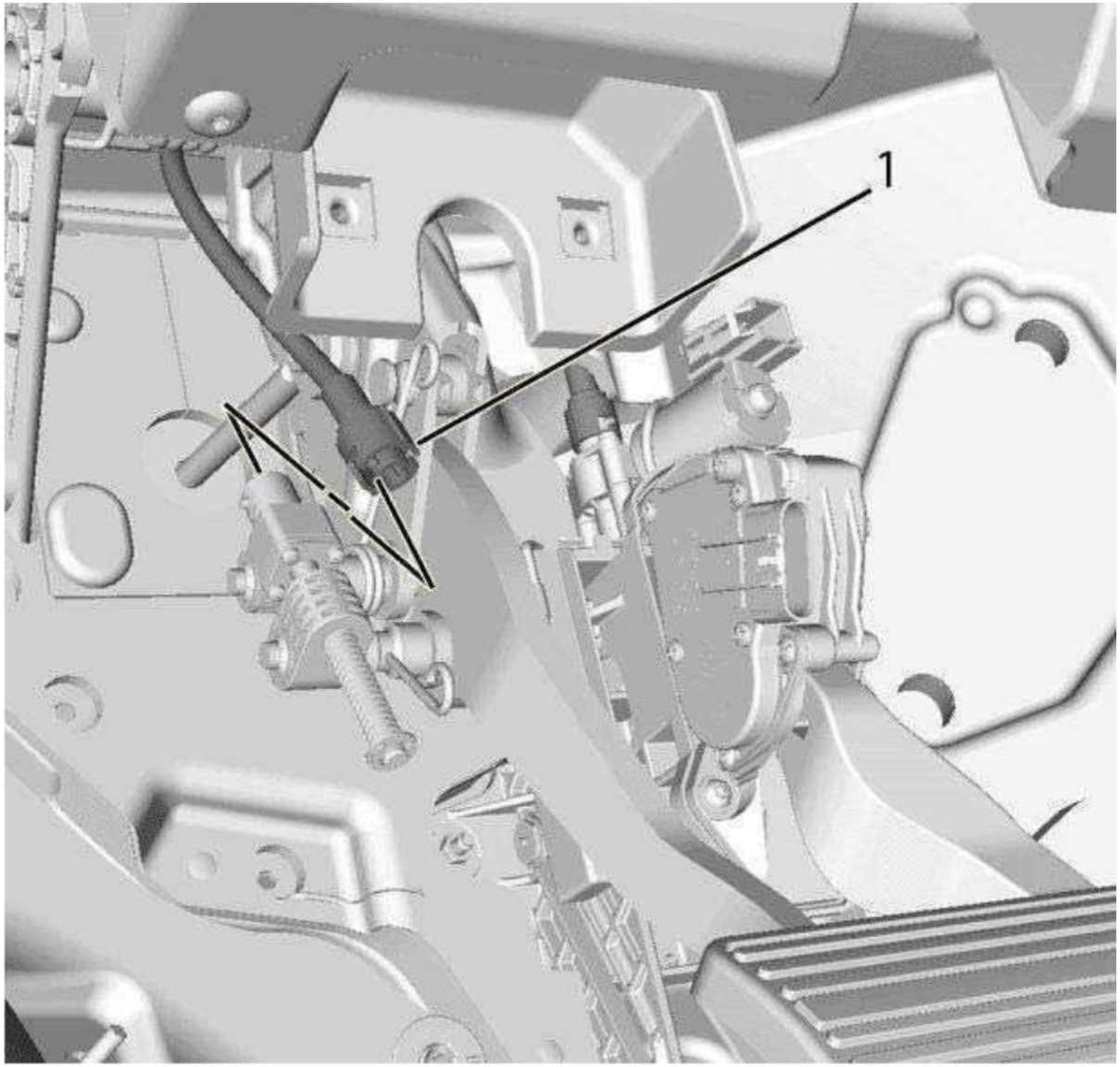

Fig. 35: Brake Pedal Adjuster Actuator Cable
Courtesy of GENERAL MOTORS COMPANY

2. Connect the brake pedal adjuster actuator cable (1) to the brake pedal adjuster actuator.
    1. Push the brake pedal adjuster actuator cable downward until the locking tabs are fully engaged in the brake pedal adjuster actuator.
    2. Rotate the brake pedal adjuster actuator cable collar clockwise.

cardiagn.com

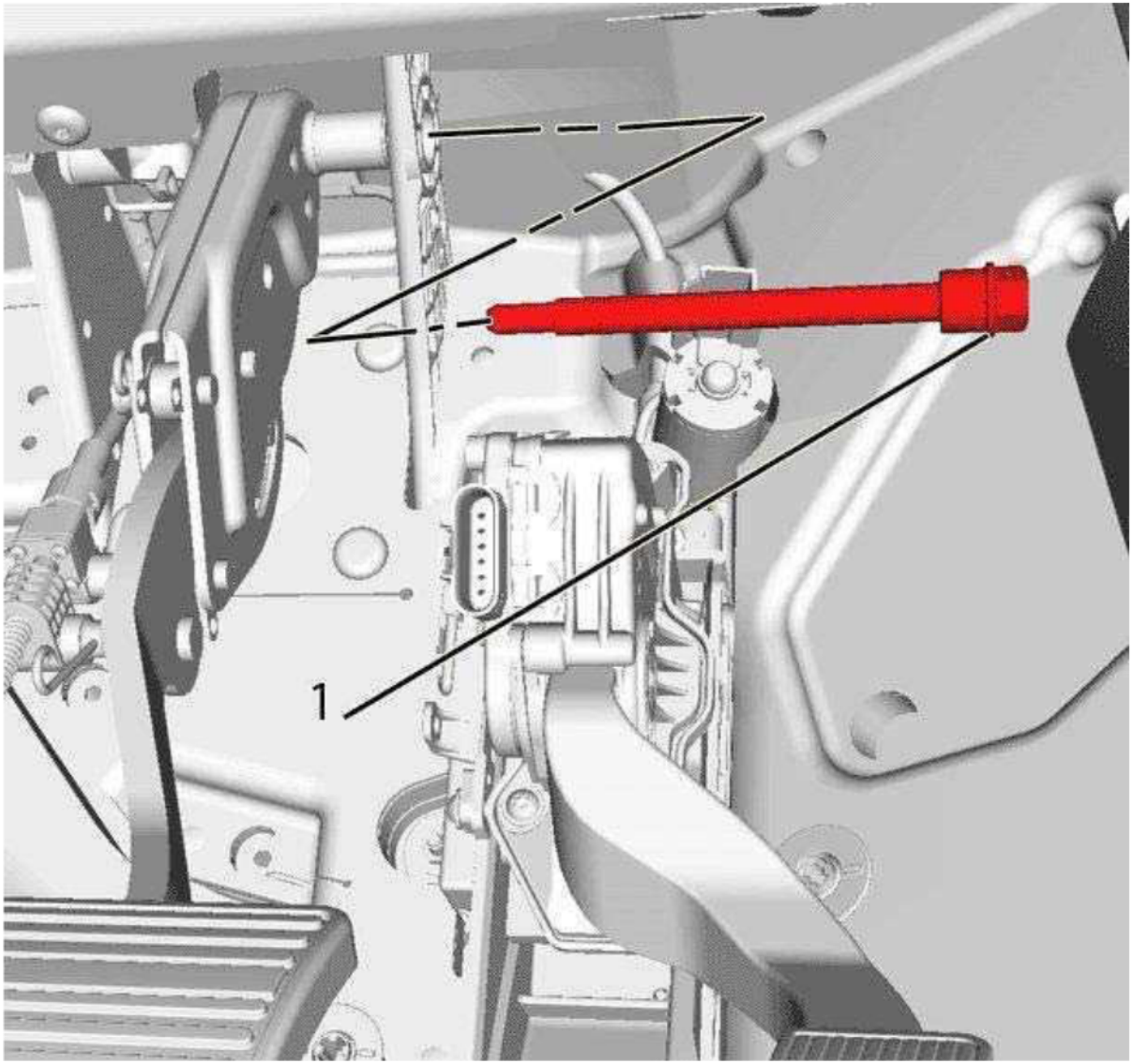

Fig. 36: Brake Pedal Pivot Bolt
Courtesy of GENERAL MOTORS COMPANY

3. If installing a new brake pedal pivot bushing, ensure the conical flange end of the bushing is on the inboard side of the pedal.
4. For installation, apply high temperature lubricant to the ID of the brake pedal pivot bushing. Refer to **Adhesives, Fluids, Lubricants, and Sealers**.

cardiagn.com

5. Install the brake pedal pivot bolt (1).

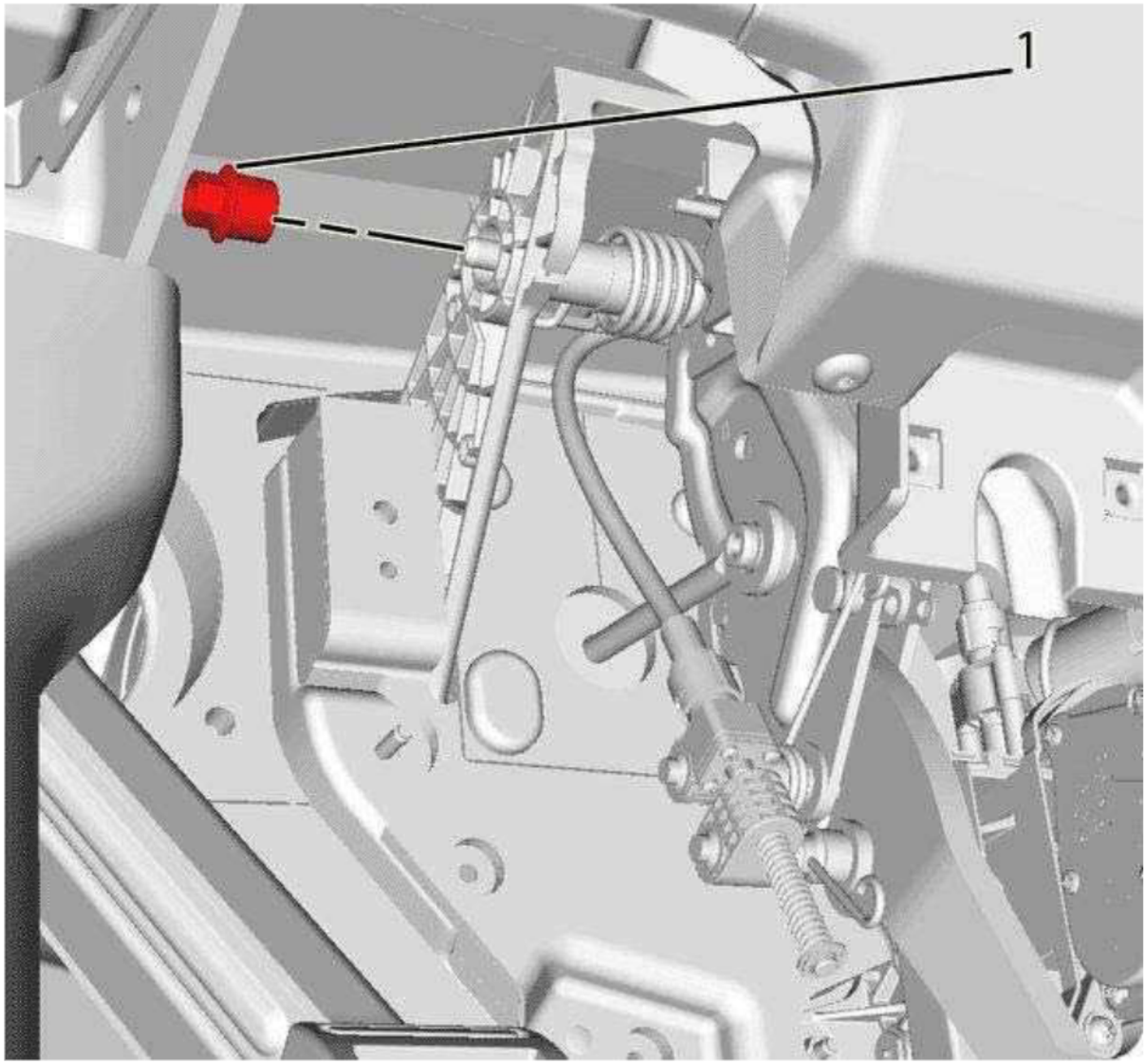

Fig. 37: Brake Pedal Pivot Nut
Courtesy of GENERAL MOTORS COMPANY

CAUTION: Refer to Fastener Caution .

cardiagn.com

6. While holding the brake pedal pivot bolt stationary, install the brake pedal pivot nut (1) and tighten to 26 N.m (19 lb ft).
7. Apply a thin coat of high temperature lubricant to the brake pedal pivot pin. Refer to **Adhesives, Fluids, Lubricants, and Sealers**.
8. Connect the power brake booster pushrod.

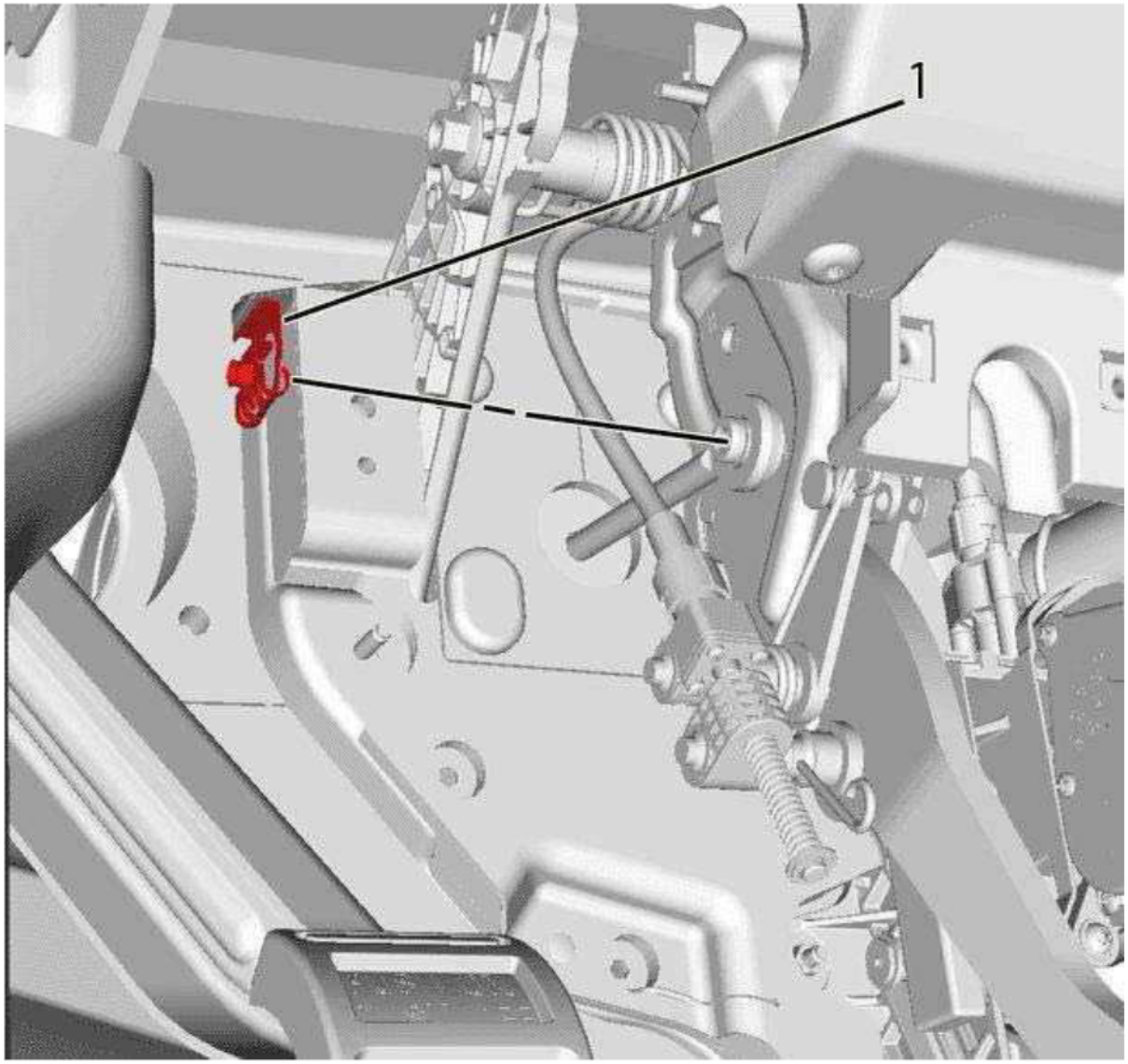

Fig. 38: Power Brake Booster Pushrod Retaining Clip
Courtesy of GENERAL MOTORS COMPANY

cardiagn.com

9. Install the power brake booster pushrod retainer clip (1).
10. Rotate the power brake booster retainer clip 360 degrees to ensure the clip is fully engaged in the brake pedal pivot pin groove.

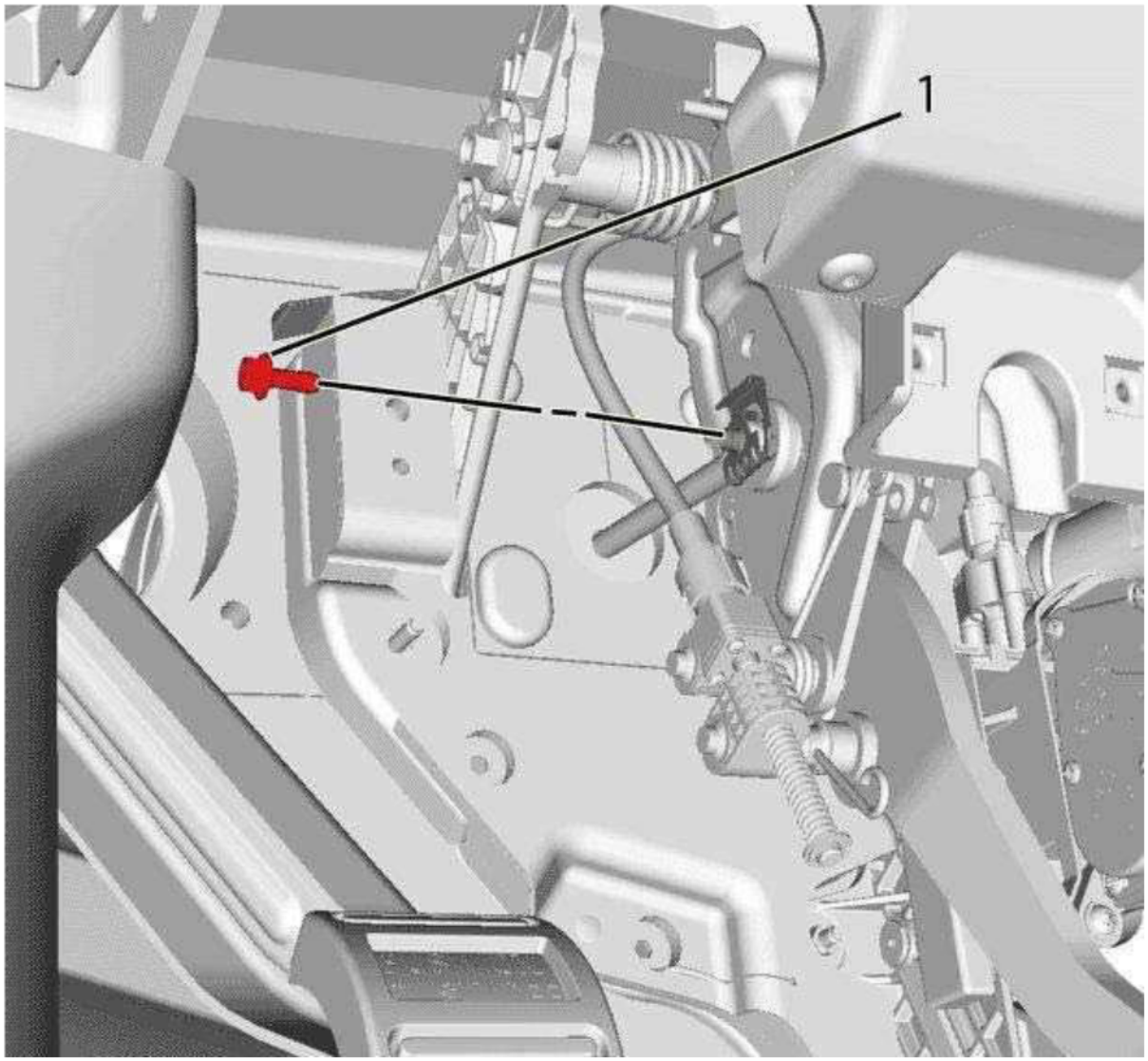

Fig. 39: Power Brake Booster Pushrod Retaining Clip Bolt
Courtesy of GENERAL MOTORS COMPANY

11. Install the power brake booster pushrod retainer clip bolt (1) and tighten to 10 N.m (89 lb in).

cardiagn.com

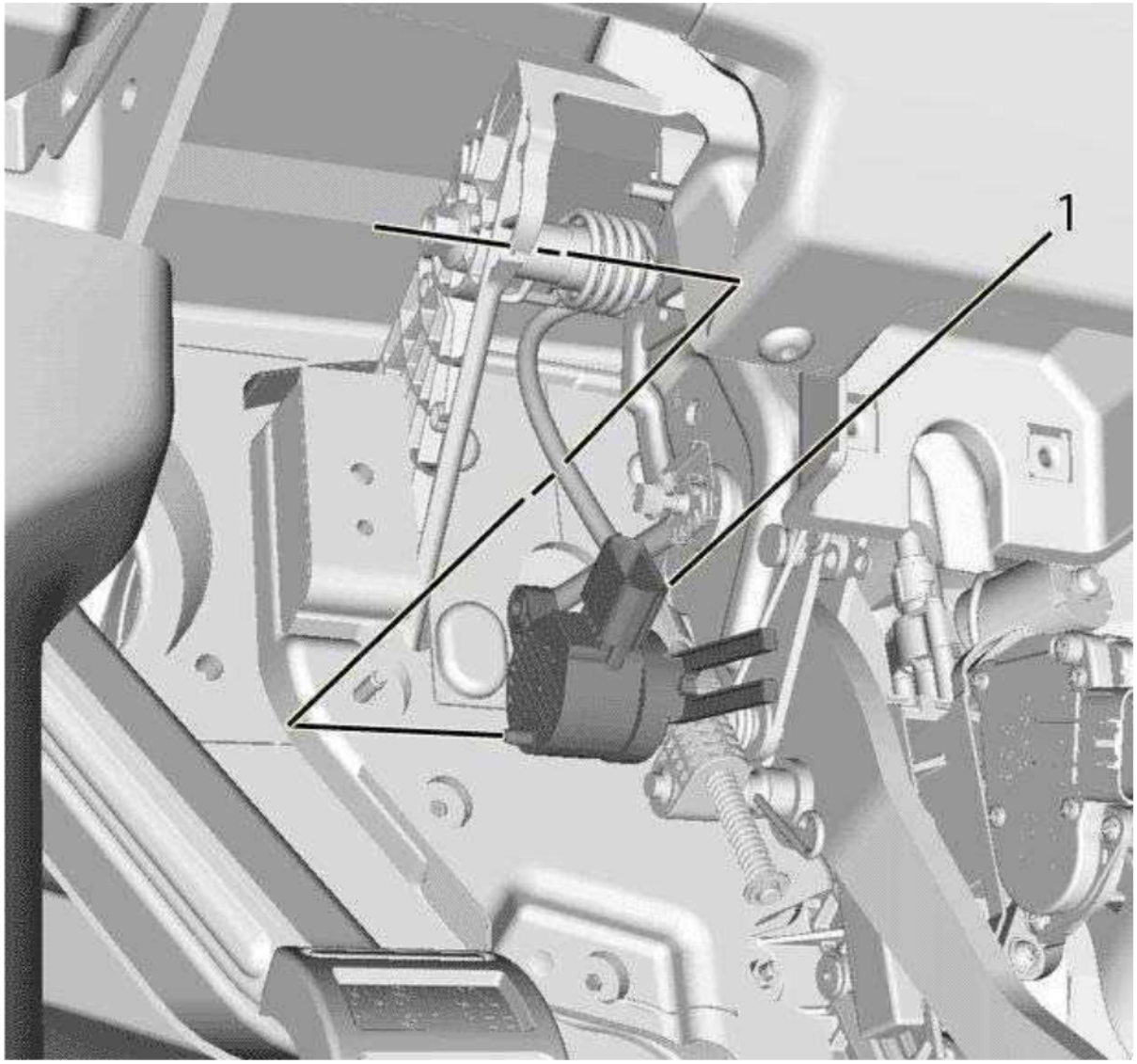

Fig. 40: Brake Pedal Position Sensor
Courtesy of GENERAL MOTORS COMPANY

12. Install the brake pedal position sensor (1).

cardiagn.com

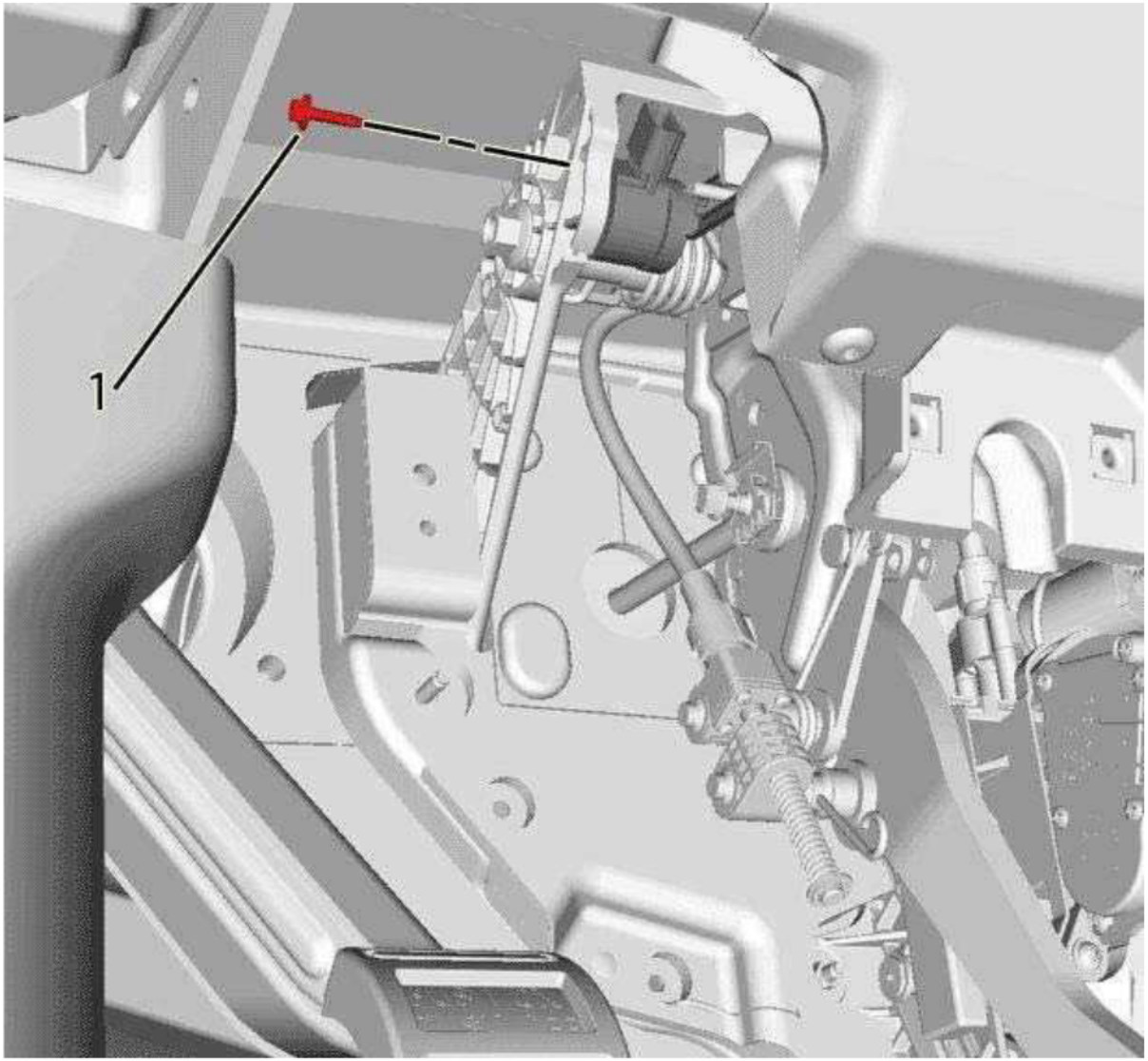

Fig. 41: Brake Pedal Position Sensor Bolt
Courtesy of GENERAL MOTORS COMPANY

13. Install the brake pedal position sensor bolt (1) and tighten to 3 N.m (27 lb in).
14. Connect the brake pedal position sensor electrical connector.
15. Calibrate the brake pedal position sensor. Refer to **Brake Pedal Position Sensor Calibration** .

cardiagn.com

BRAKE PEDAL ASSEMBLY REPLACEMENT (WITHOUT JF4)

Removal Procedure

1. Block the drive wheels.

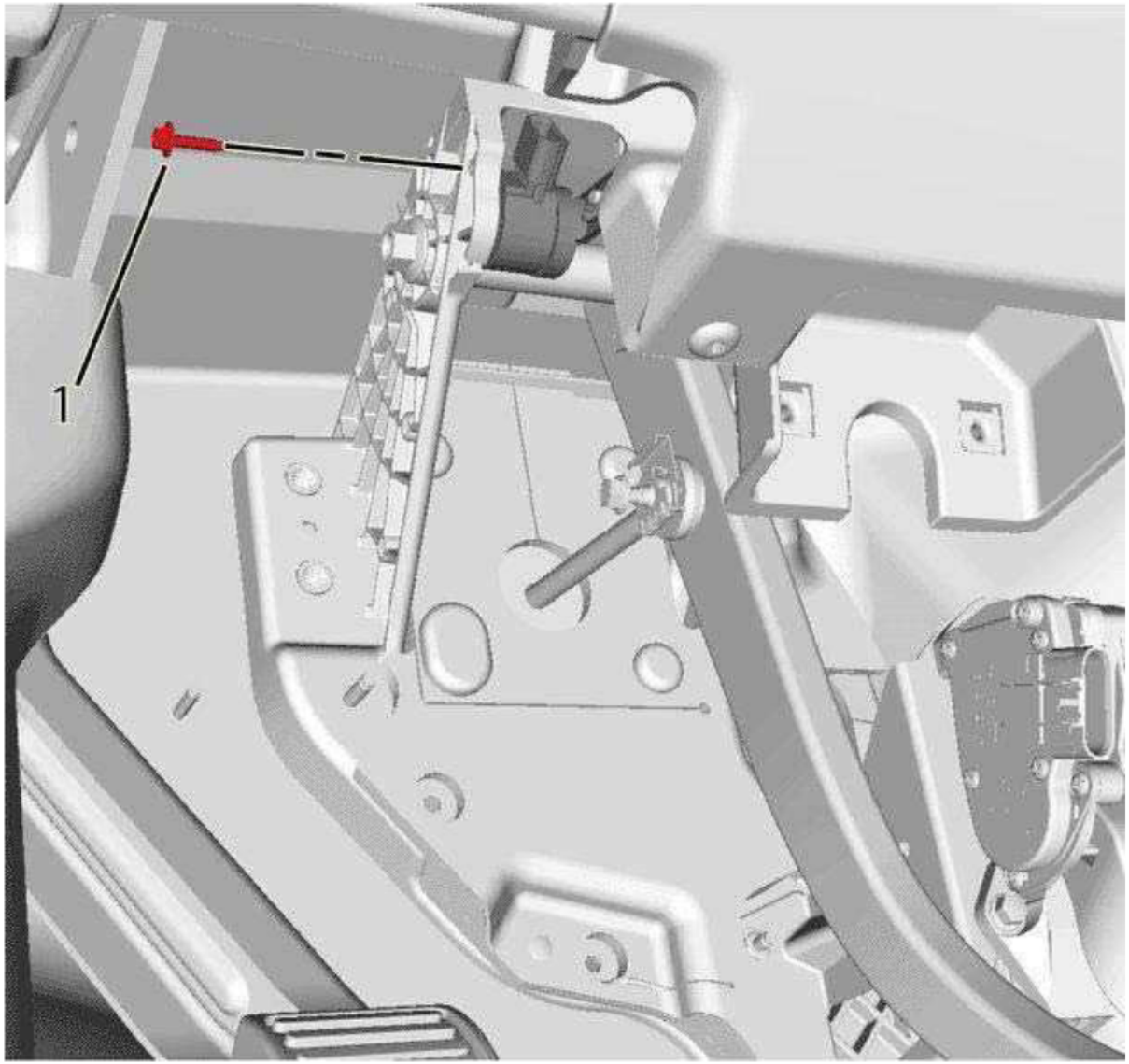

Fig. 42: Brake Pedal Position Sensor Bolt

cardiagn.com

Courtesy of GENERAL MOTORS COMPANY

2. Disconnect the brake pedal position sensor electrical connector.
3. Remove the brake pedal position sensor bolt (1).

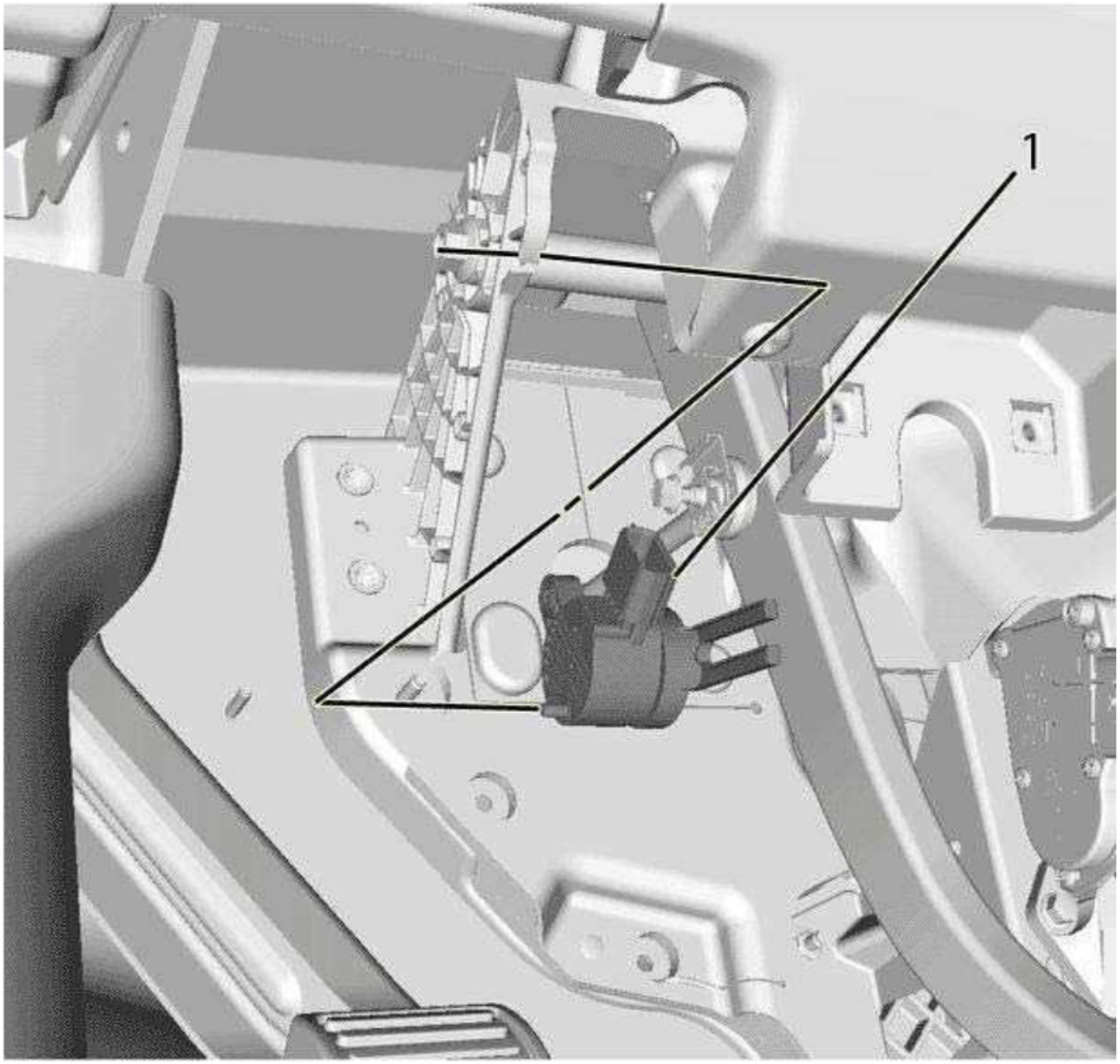

Fig. 43: Brake Pedal Position Sensor

cardiagn.com

Courtesy of GENERAL MOTORS COMPANY

4. Remove the brake pedal position sensor (1).

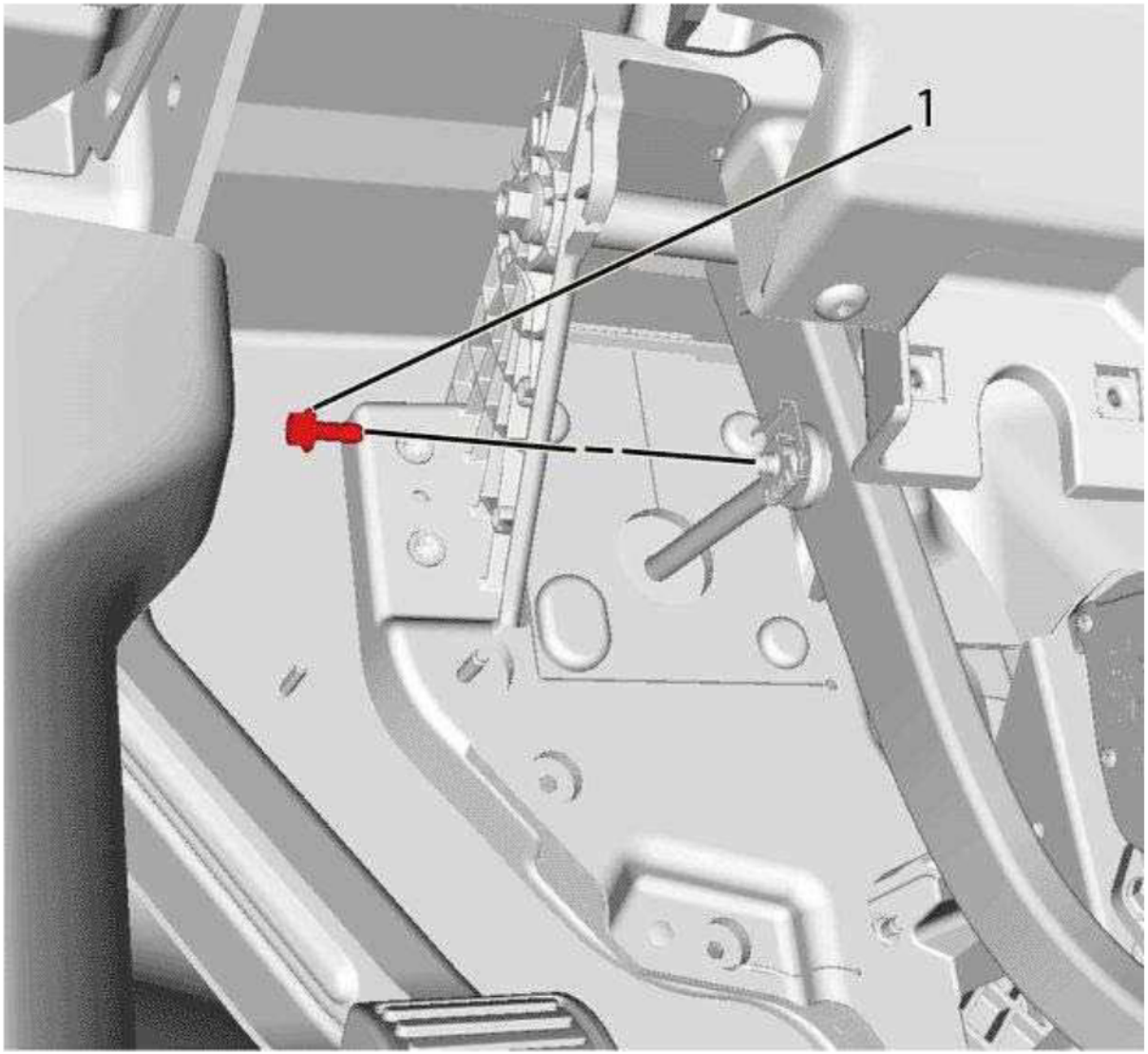

Fig. 44: Power Brake Booster Pushrod Retaining Clip Bolt
Courtesy of GENERAL MOTORS COMPANY

5. Remove the power brake booster pushrod retainer clip bolt (1).

cardiagn.com

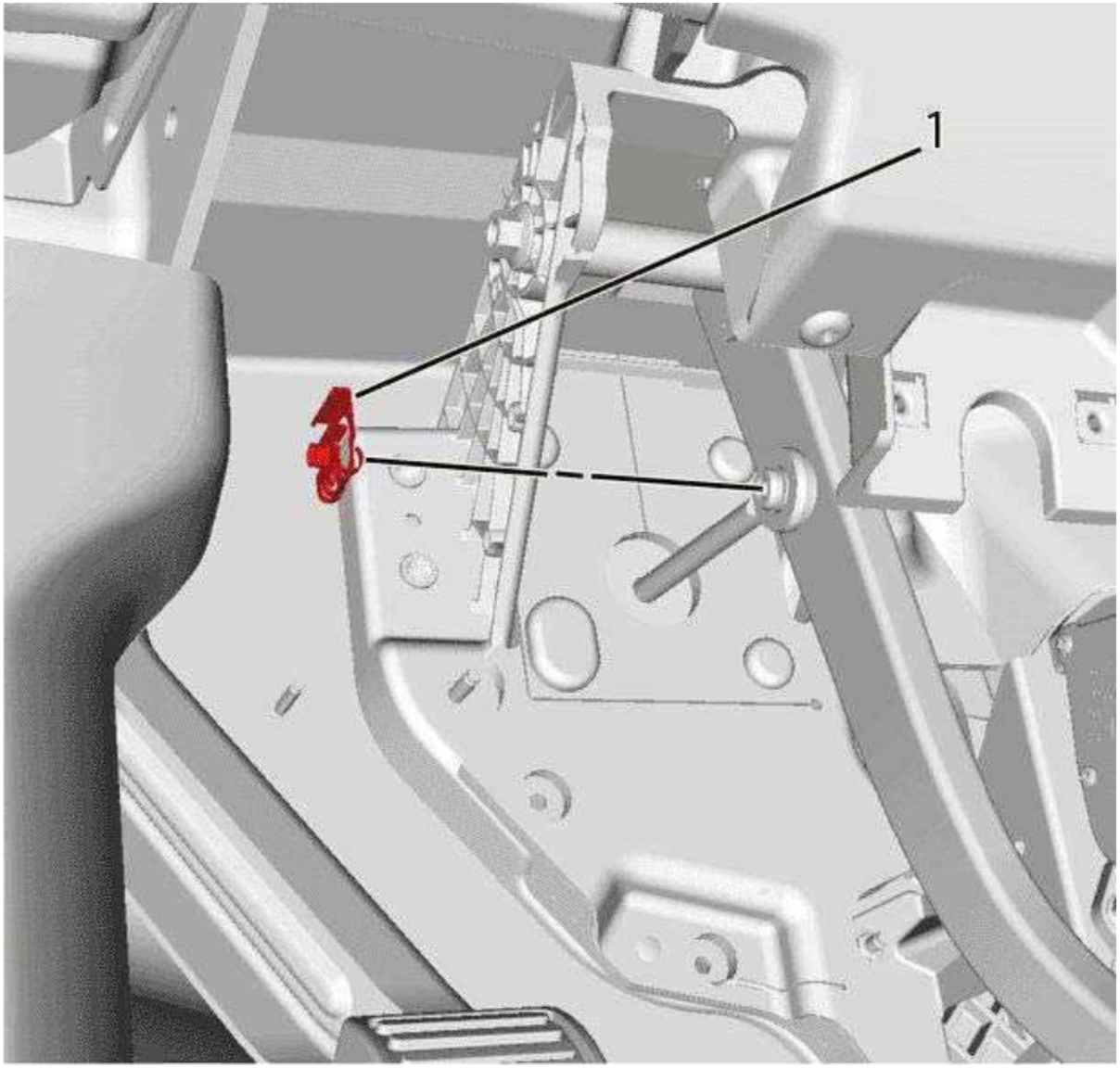

Fig. 45: Power Brake Booster Pushrod Retaining Clip
Courtesy of GENERAL MOTORS COMPANY

6. Remove the power brake booster pushrod retainer clip (1).
7. Disconnect the power brake booster pushrod.

cardiagn.com

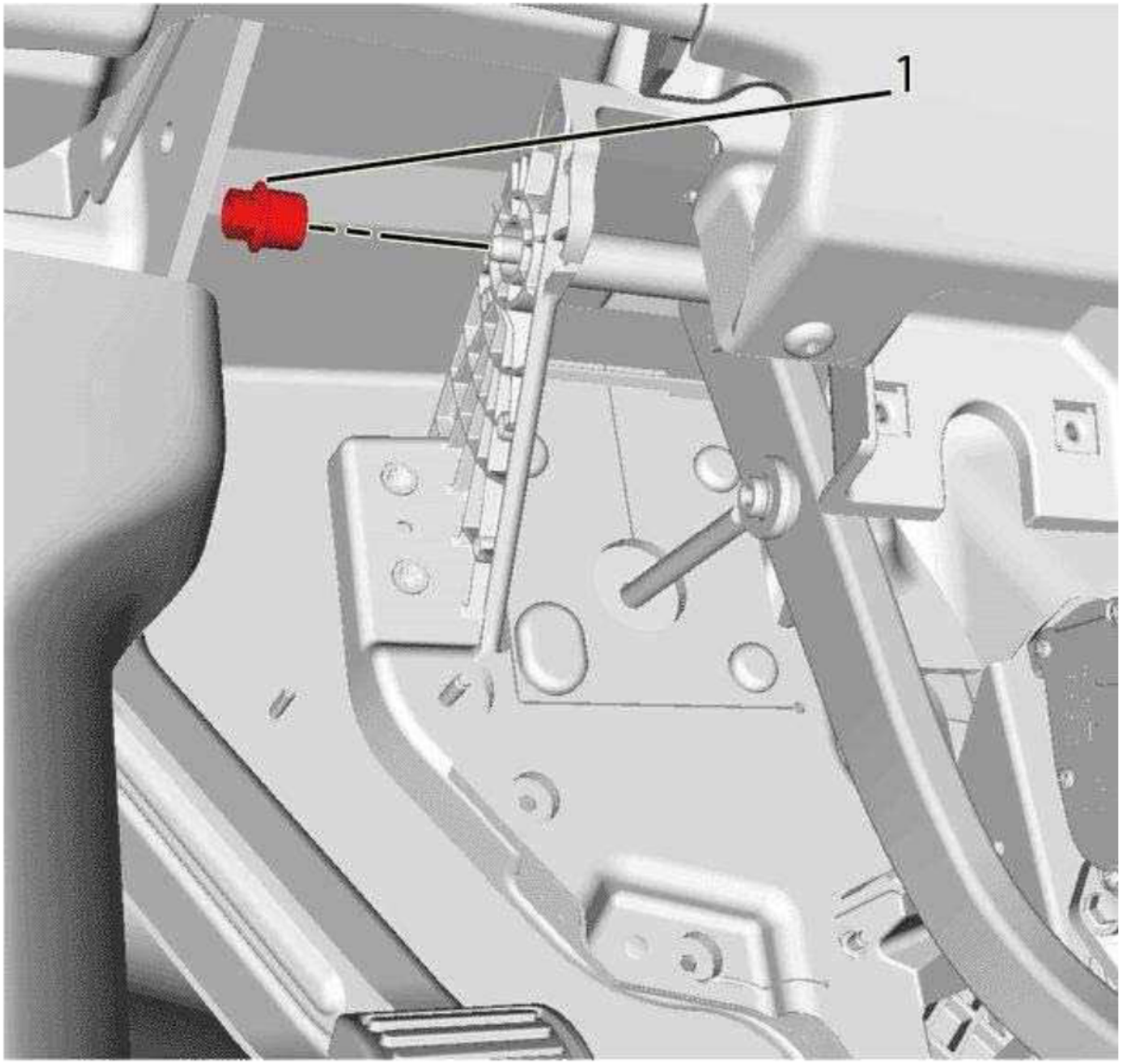

Fig. 46: Brake Pedal Pivot Nut
Courtesy of GENERAL MOTORS COMPANY

8. Remove the brake pedal pivot nut (1).

cardiagn.com

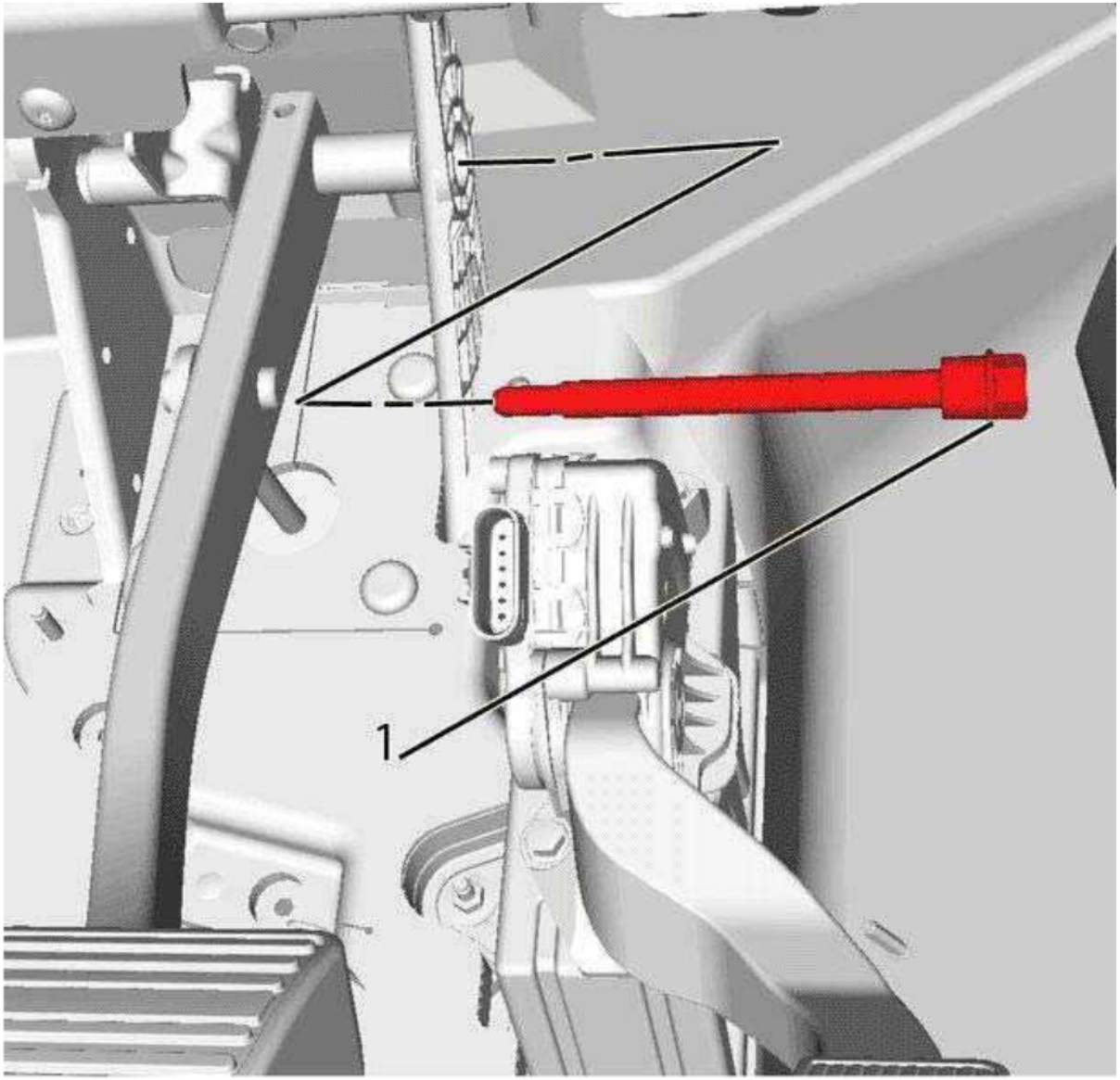

Fig. 47: Brake Pedal Pivot Bolt
Courtesy of GENERAL MOTORS COMPANY

9. Remove the brake pedal pivot bolt (1).

cardiagn.com

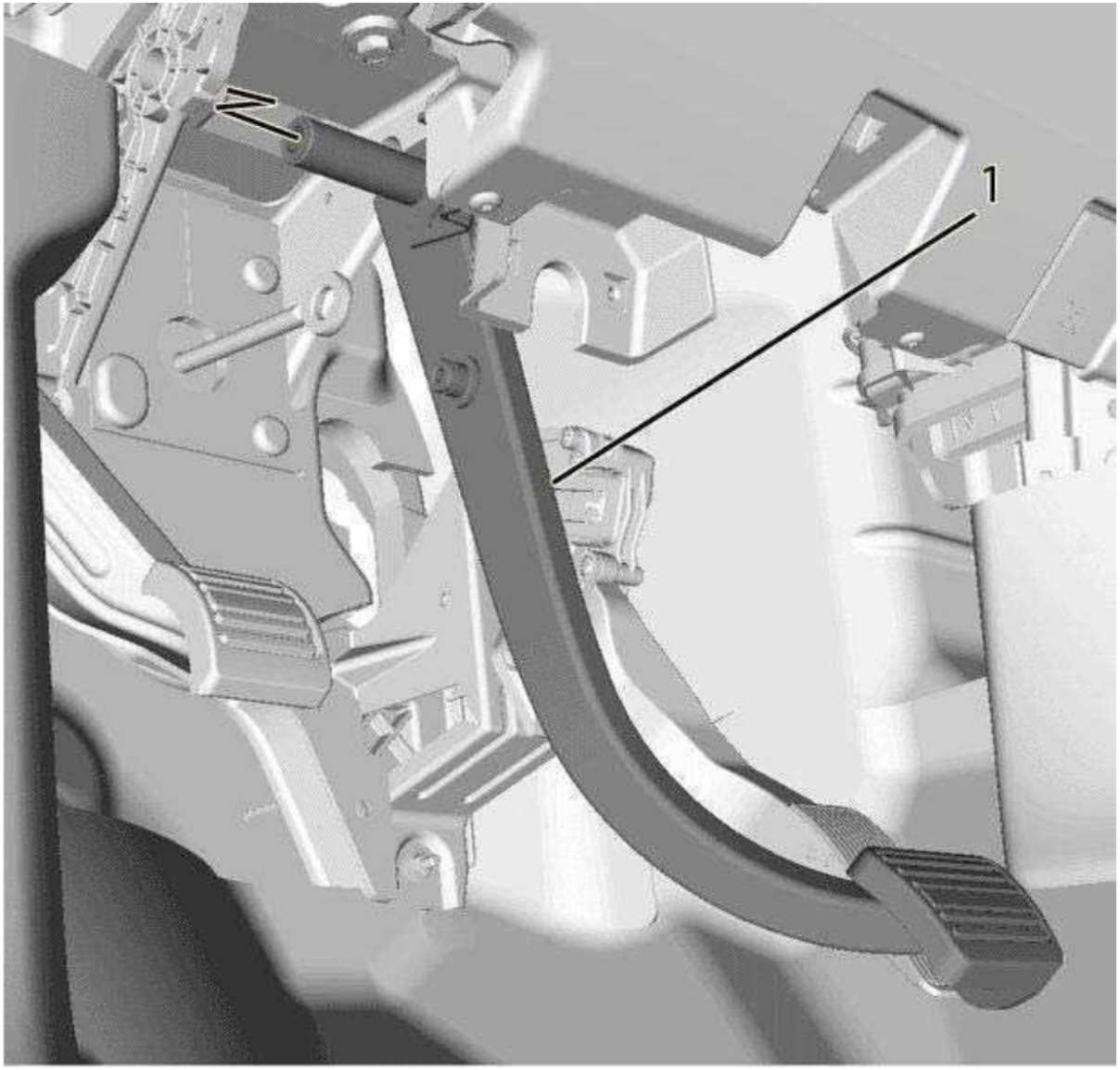

Fig. 48: Brake Pedal
Courtesy of GENERAL MOTORS COMPANY

10. Remove the brake pedal (1).

Installation Procedure

cardiagn.com

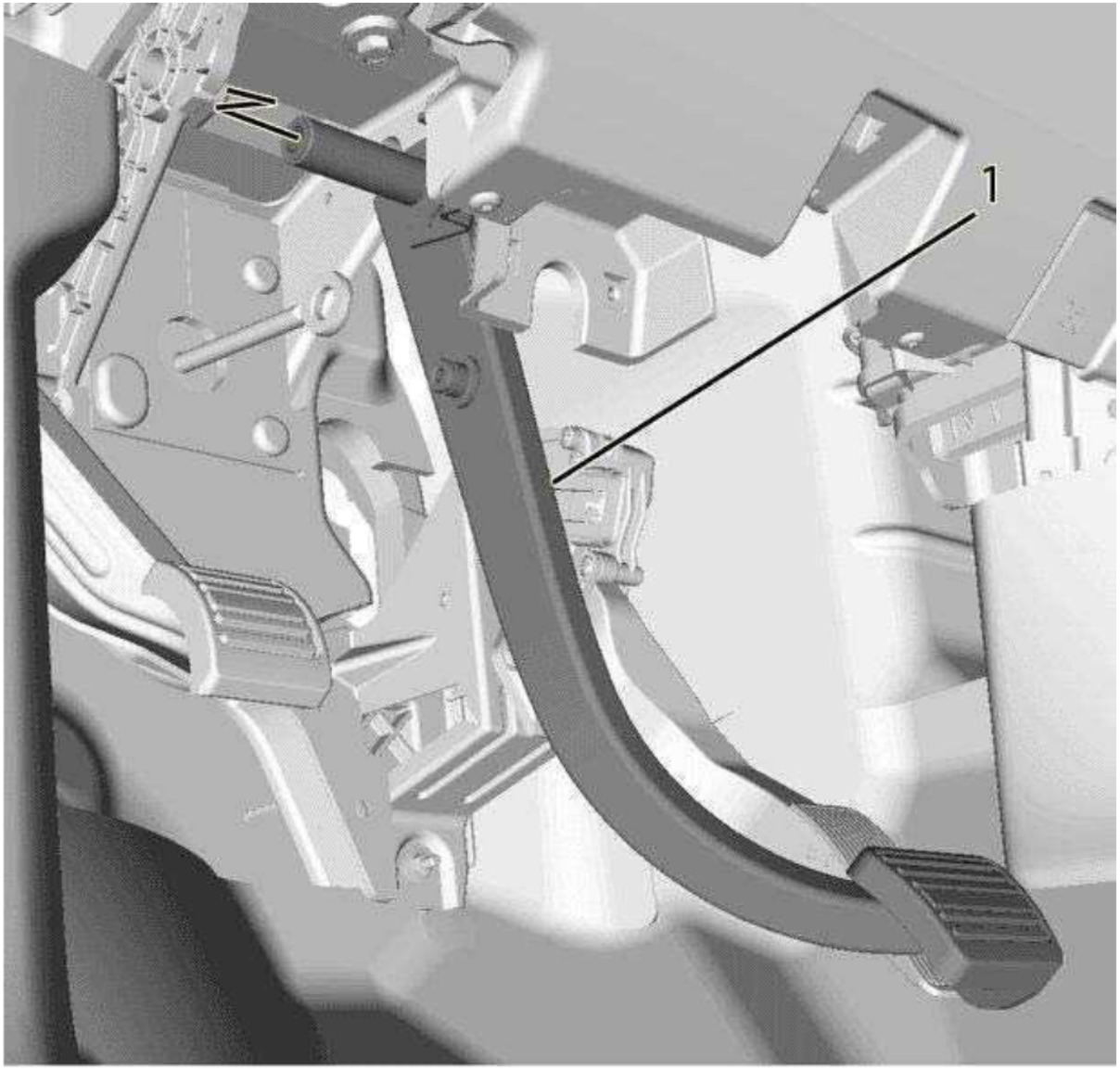

Fig. 49: Brake Pedal
Courtesy of GENERAL MOTORS COMPANY

1. Install the brake pedal (1).

cardiagn.com

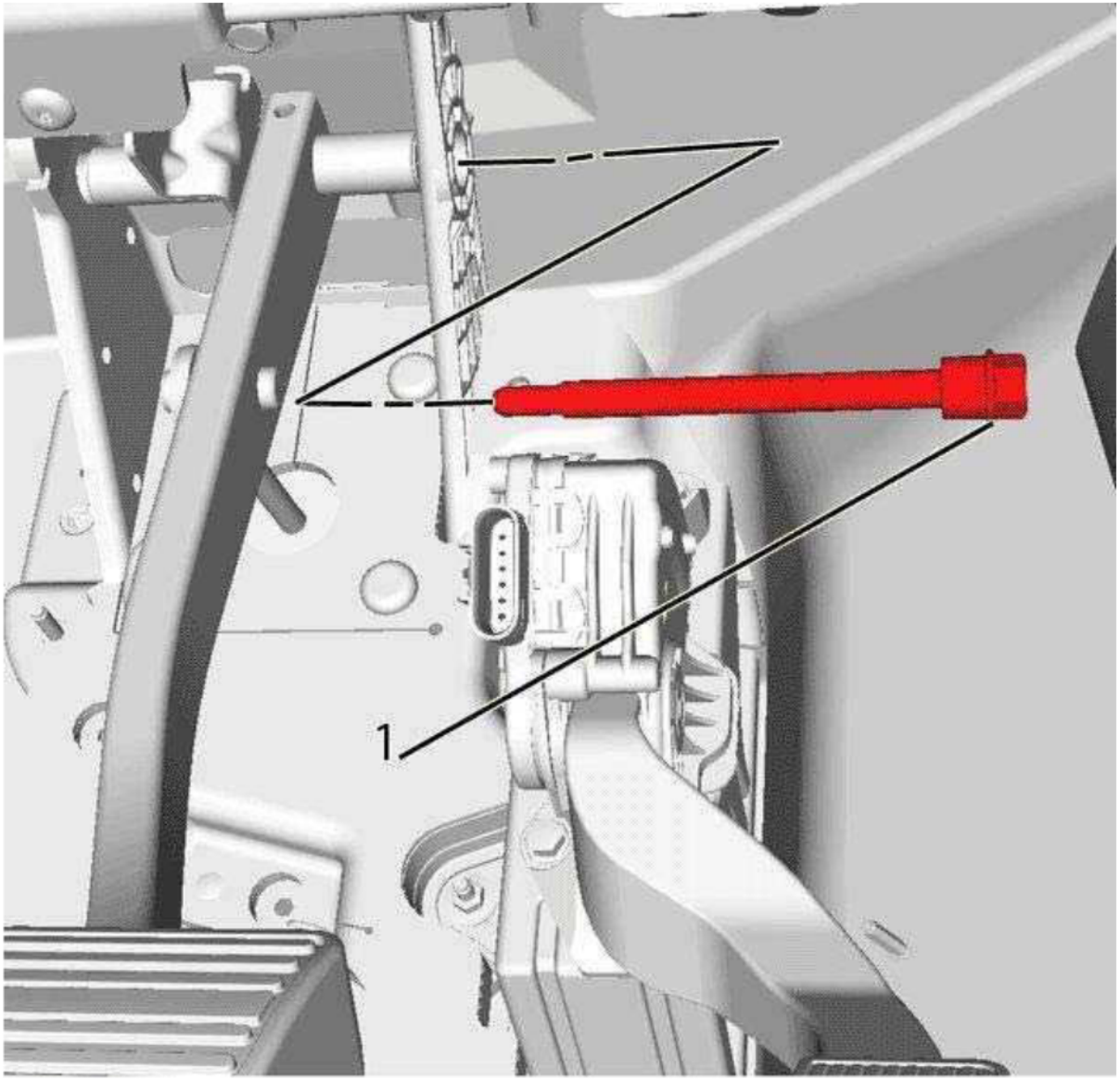

Fig. 50: Brake Pedal Pivot Bolt
Courtesy of GENERAL MOTORS COMPANY

2. If installing a new brake pedal pivot bushing, ensure the conical flange end of the bushing is on the inboard side of the pedal.
3. For installation, apply high temperature lubricant to the ID of the brake pedal pivot bushing. Refer to **Adhesives, Fluids, Lubricants, and Sealers**.

cardiagn.com

4. Install the brake pedal pivot bolt (1).

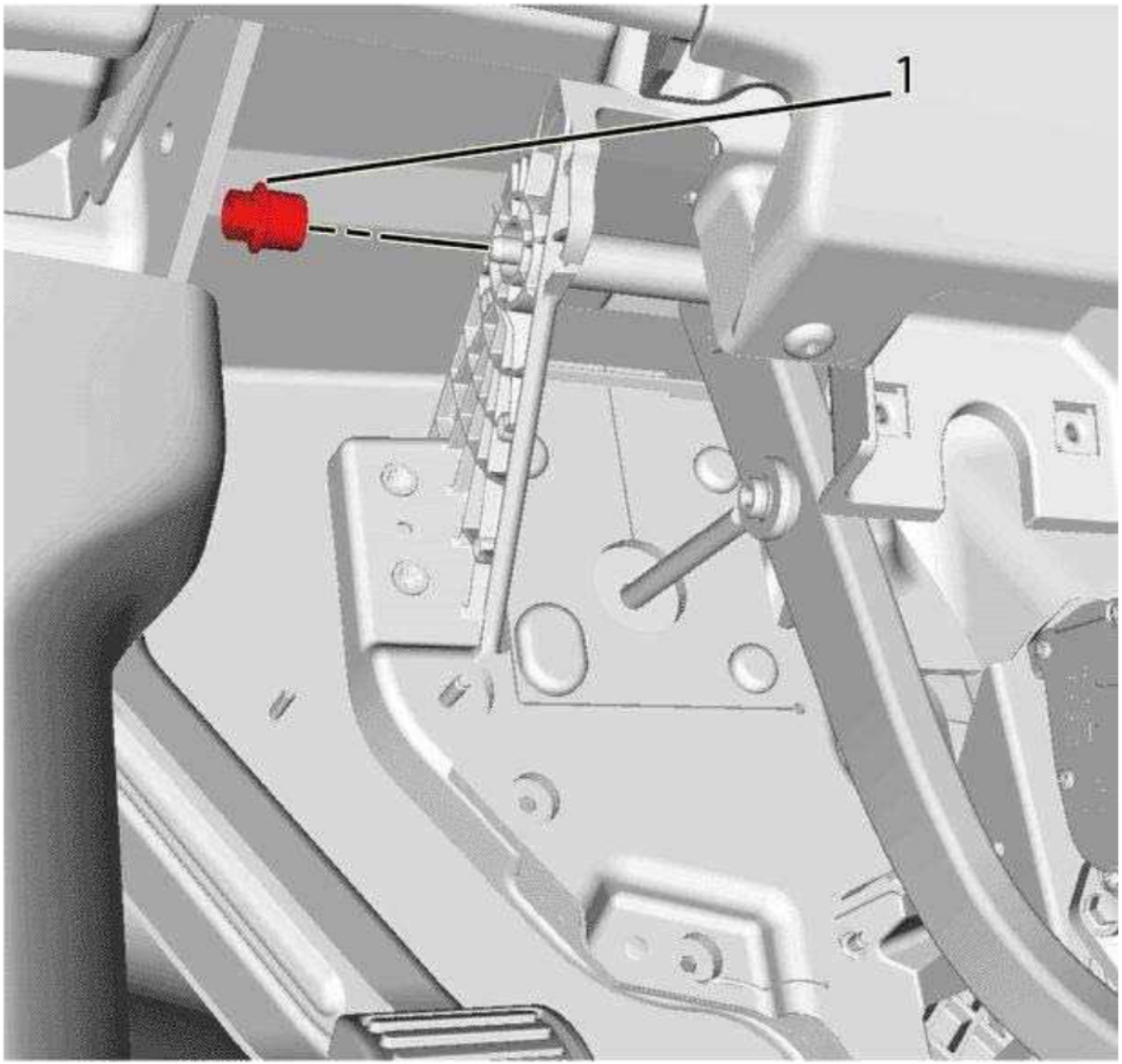

Fig. 51: Brake Pedal Pivot Nut
Courtesy of GENERAL MOTORS COMPANY

CAUTION: Refer to Fastener Caution .

cardiagn.com

5. While holding the brake pedal pivot bolt stationary, install the brake pedal pivot nut (1) and tighten to 26 N.m (19 lb ft).
6. Apply a thin coat of high temperature lubricant to the brake pedal pivot pin. Refer to **Adhesives, Fluids, Lubricants, and Sealers**.
7. Connect the power brake booster pushrod.

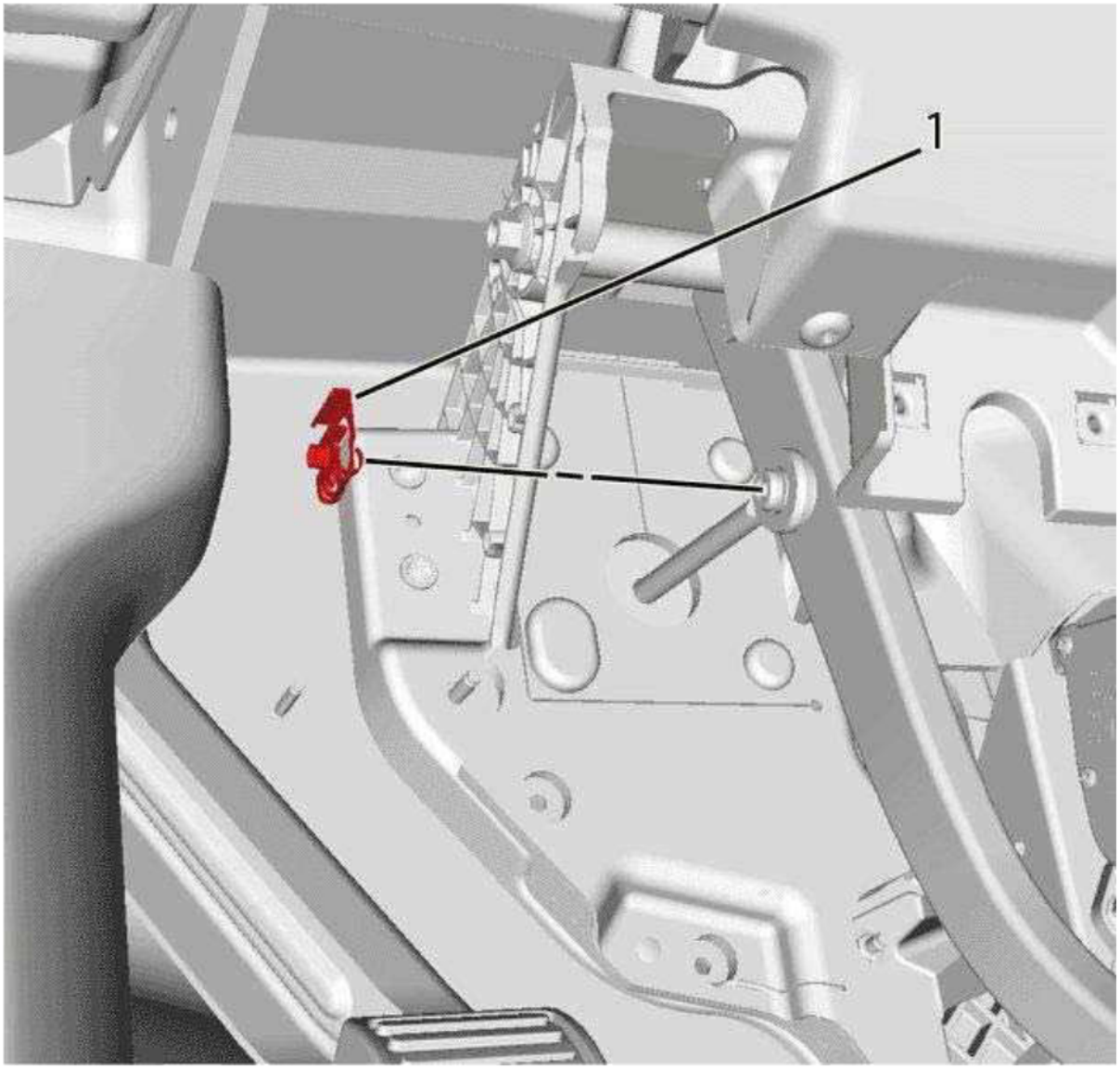

Fig. 52: Power Brake Booster Pushrod Retaining Clip
Courtesy of GENERAL MOTORS COMPANY

cardiagn.com

8. Install the power brake booster pushrod retainer clip (1).
9. Rotate the power brake booster retainer clip 360 degrees to ensure the clip is fully engaged in the brake pedal pivot pin groove.

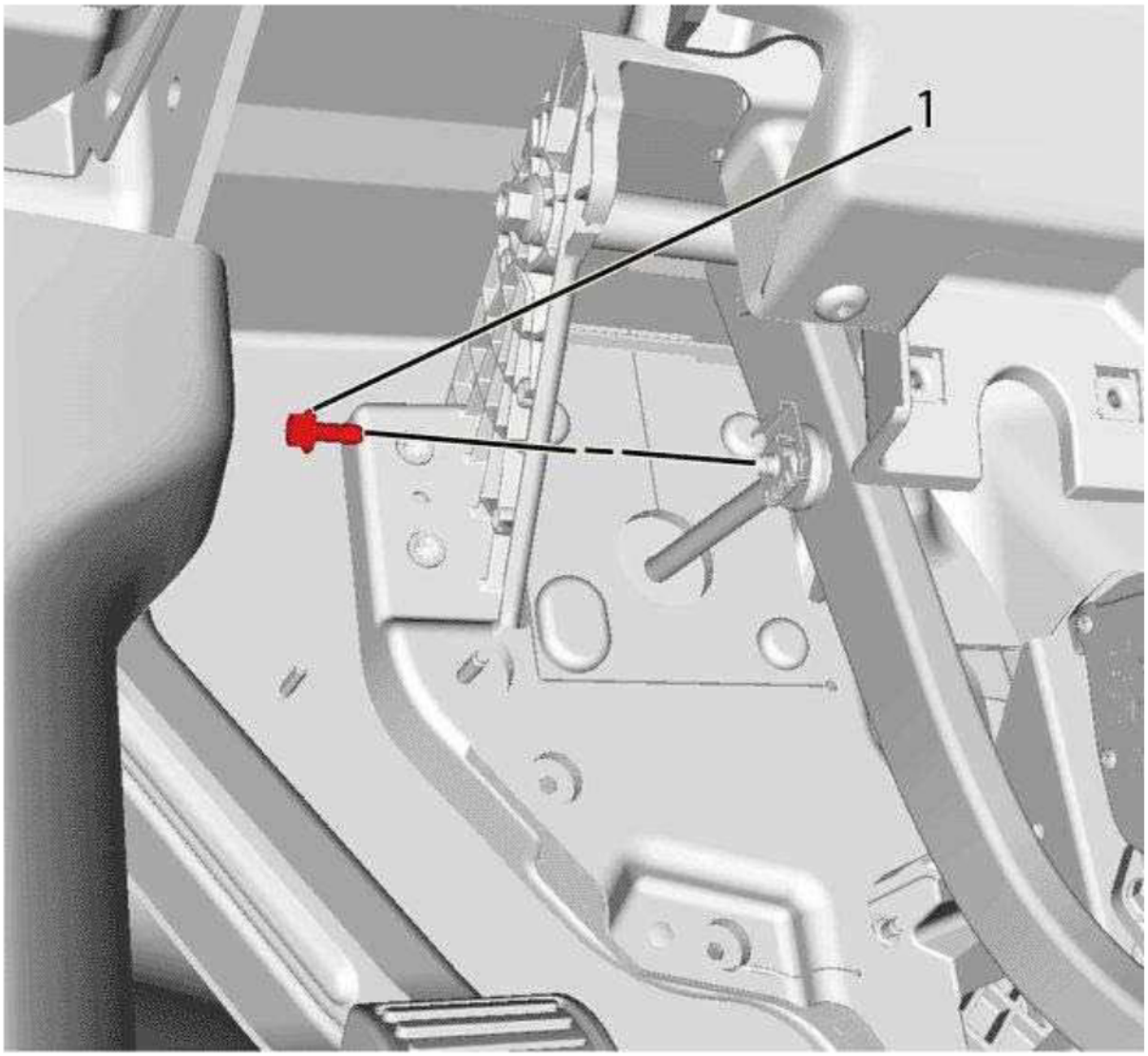

Fig. 53: Power Brake Booster Pushrod Retaining Clip Bolt
Courtesy of GENERAL MOTORS COMPANY

10. Install the power brake booster pushrod retainer clip bolt (1) and tighten to 10 N.m (89 lb in).

cardiagn.com

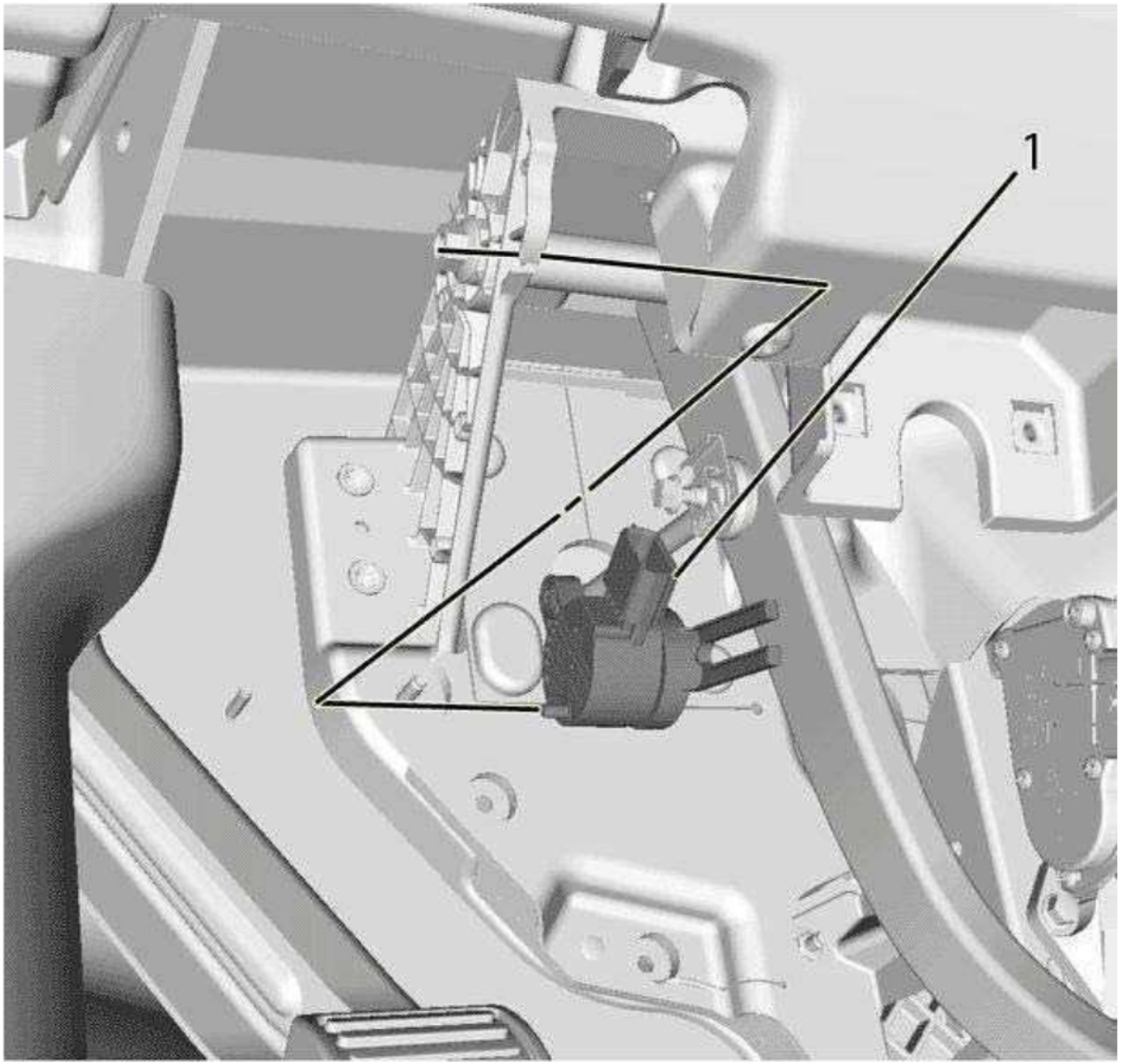

Fig. 54: Brake Pedal Position Sensor
Courtesy of GENERAL MOTORS COMPANY

11. Install the brake pedal position sensor (1).

cardiagn.com

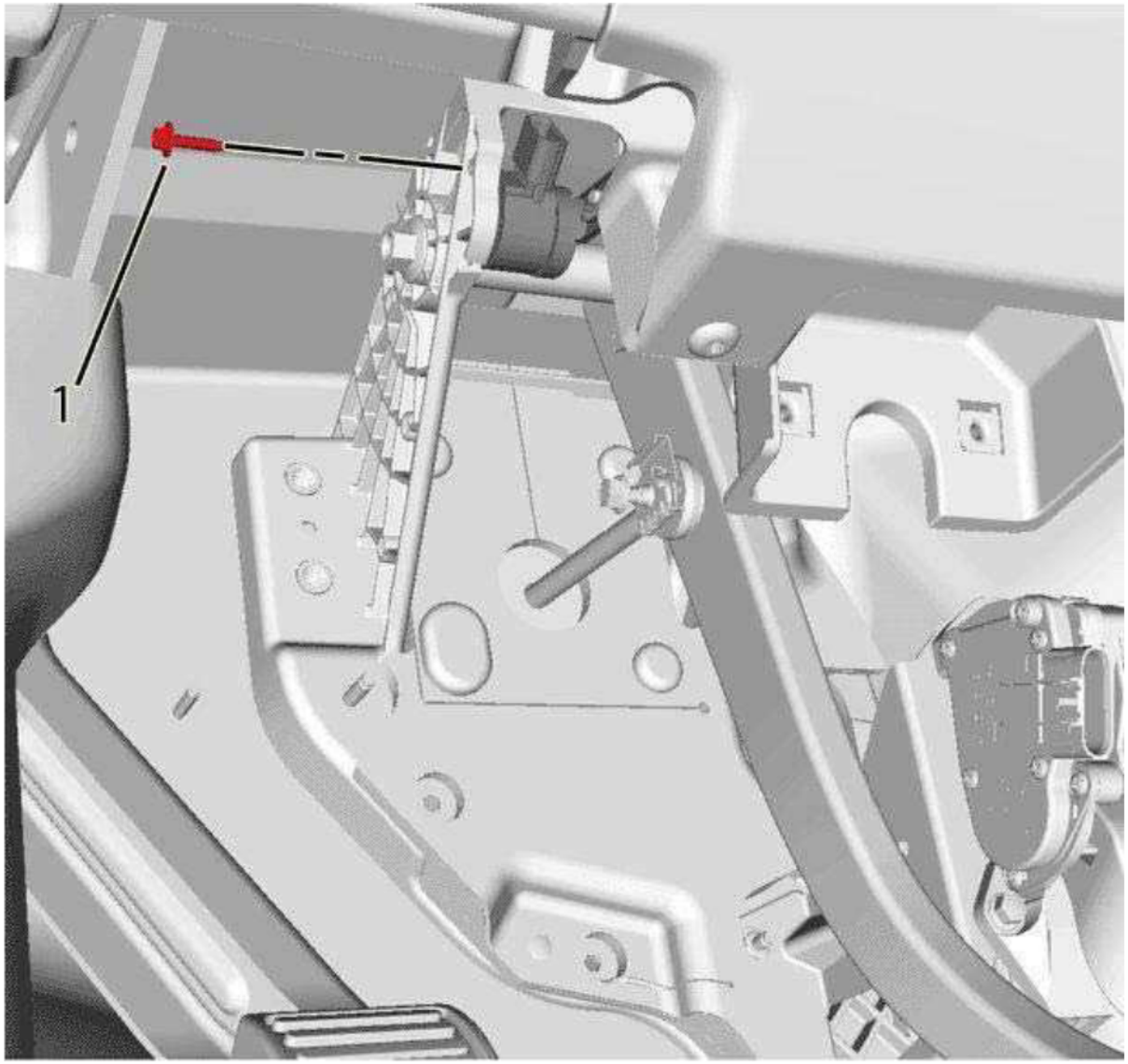

Fig. 55: Brake Pedal Position Sensor Bolt
Courtesy of GENERAL MOTORS COMPANY

12. Install the brake pedal position sensor bolt (1) and tighten to 3 N.m (27 lb in).
13. Connect the brake pedal position sensor electrical connector.
14. Calibrate the brake pedal position sensor. Refer to **Brake Pedal Position Sensor Calibration** .

cardiagn.com

BRAKE PEDAL RETURN SPRING REPLACEMENT

Removal Procedure

1. Remove the brake pedal position sensor. Refer to **Brake Pedal Position Sensor Replacement** .

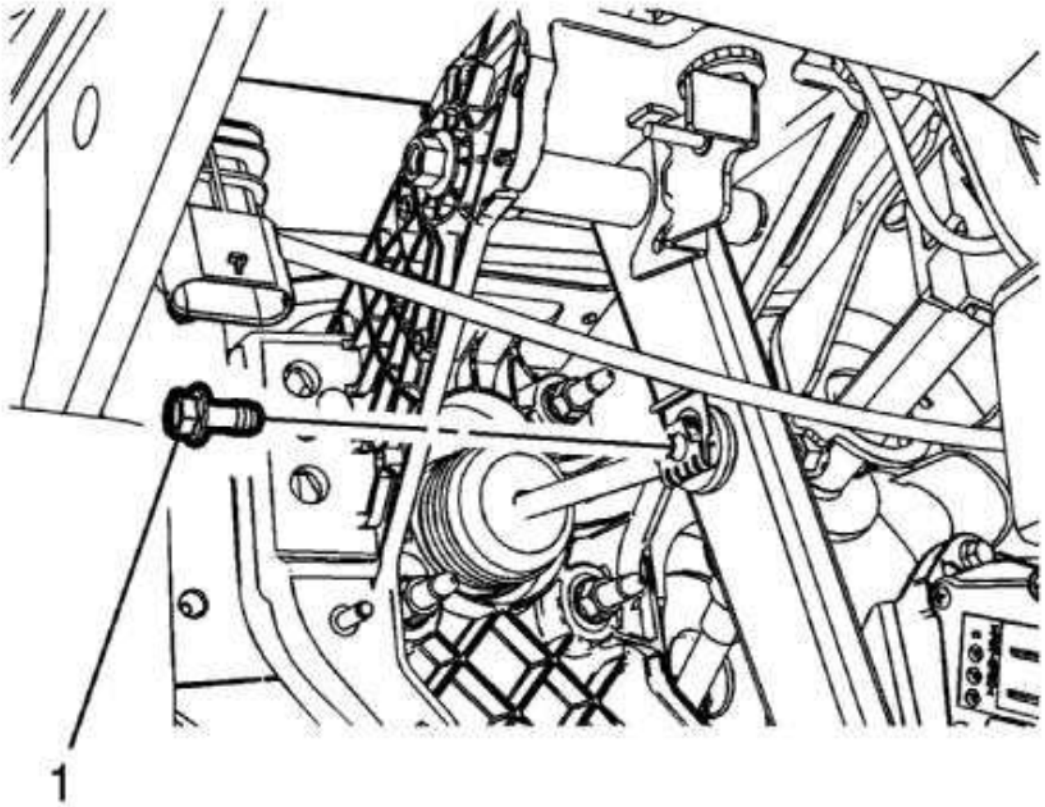

Fig. 56: Power Brake Booster Pushrod Retainer Clip Bolt
Courtesy of GENERAL MOTORS COMPANY

cardiagn.com

2. Remove the power brake booster pushrod retainer clip bolt (1).

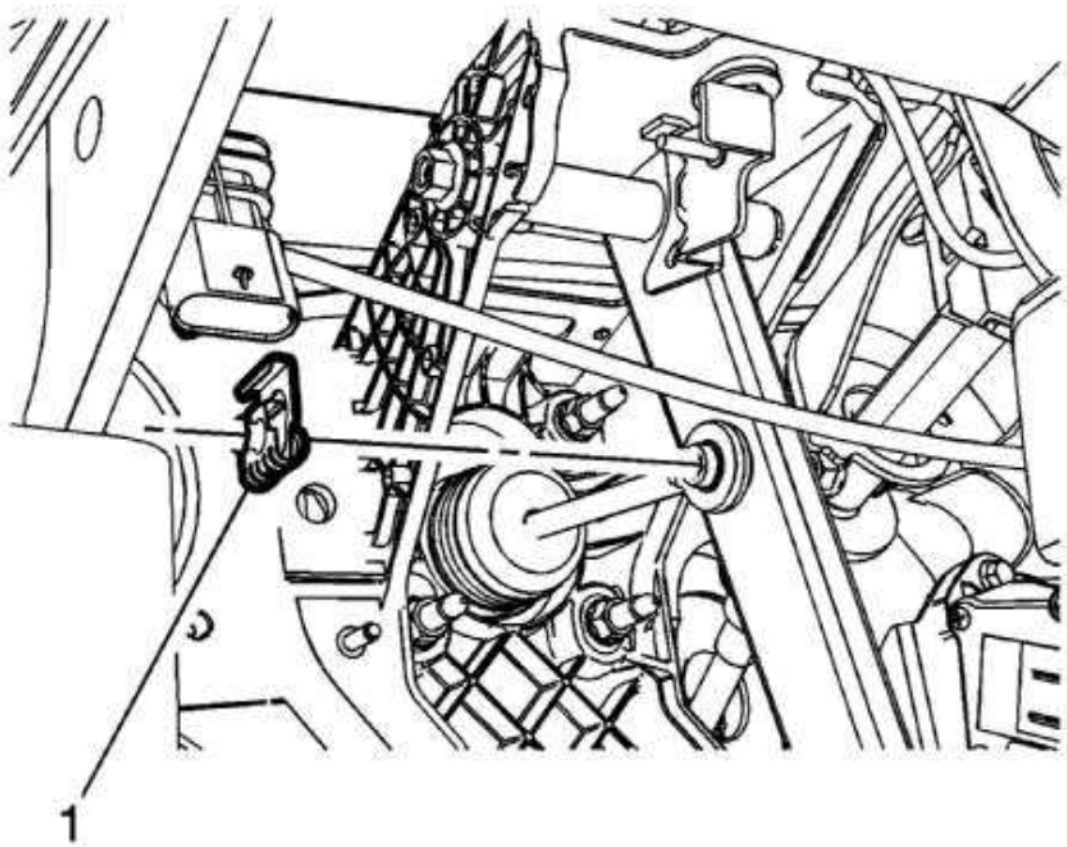

Fig. 57: Power Brake Booster Pushrod Retainer Clip
Courtesy of GENERAL MOTORS COMPANY

3. Remove the power brake booster pushrod retainer clip (1).
4. Disconnect the power brake booster pushrod.

cardiagn.com

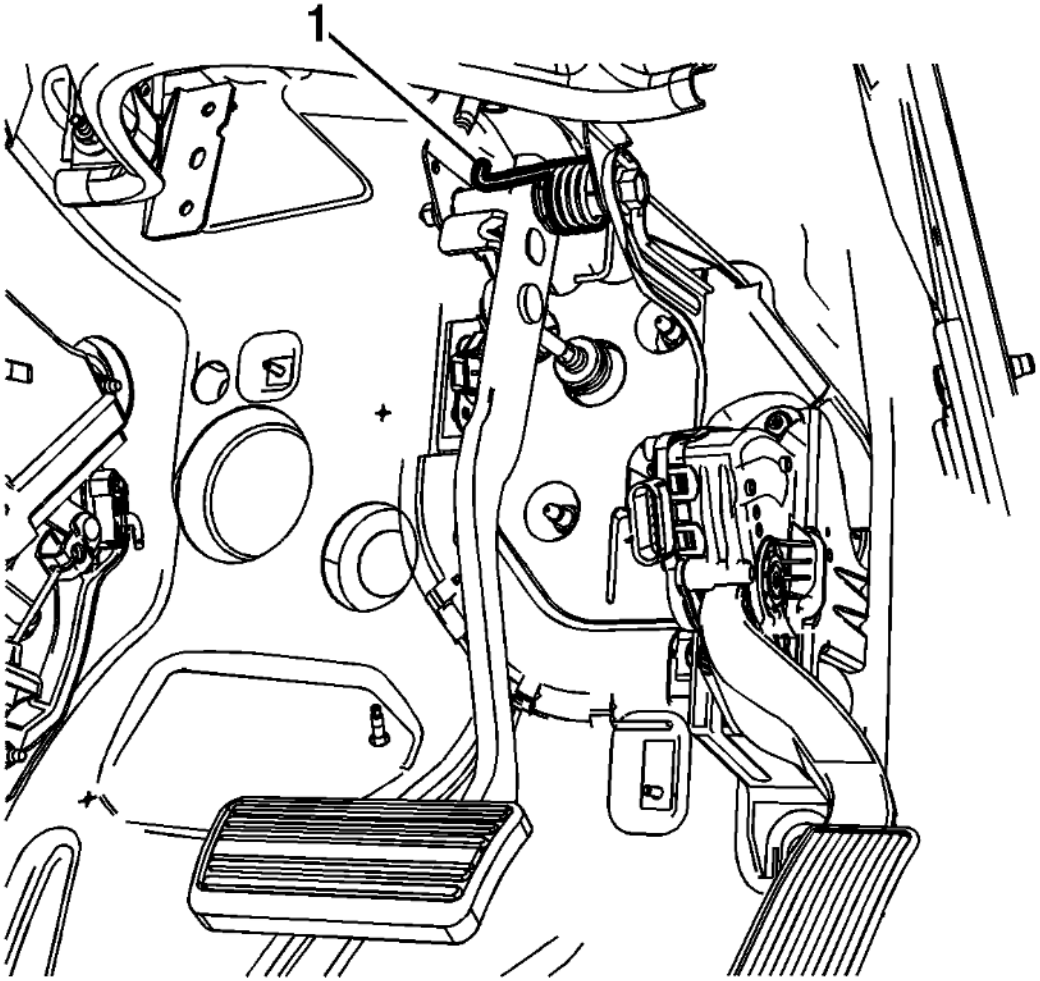

Fig. 58: Brake Pedal Return Assist Spring
Courtesy of GENERAL MOTORS COMPANY

5. Unhook the brake pedal return assist spring (1) from the brake pedal arm to release the spring tension.

cardiagn.com

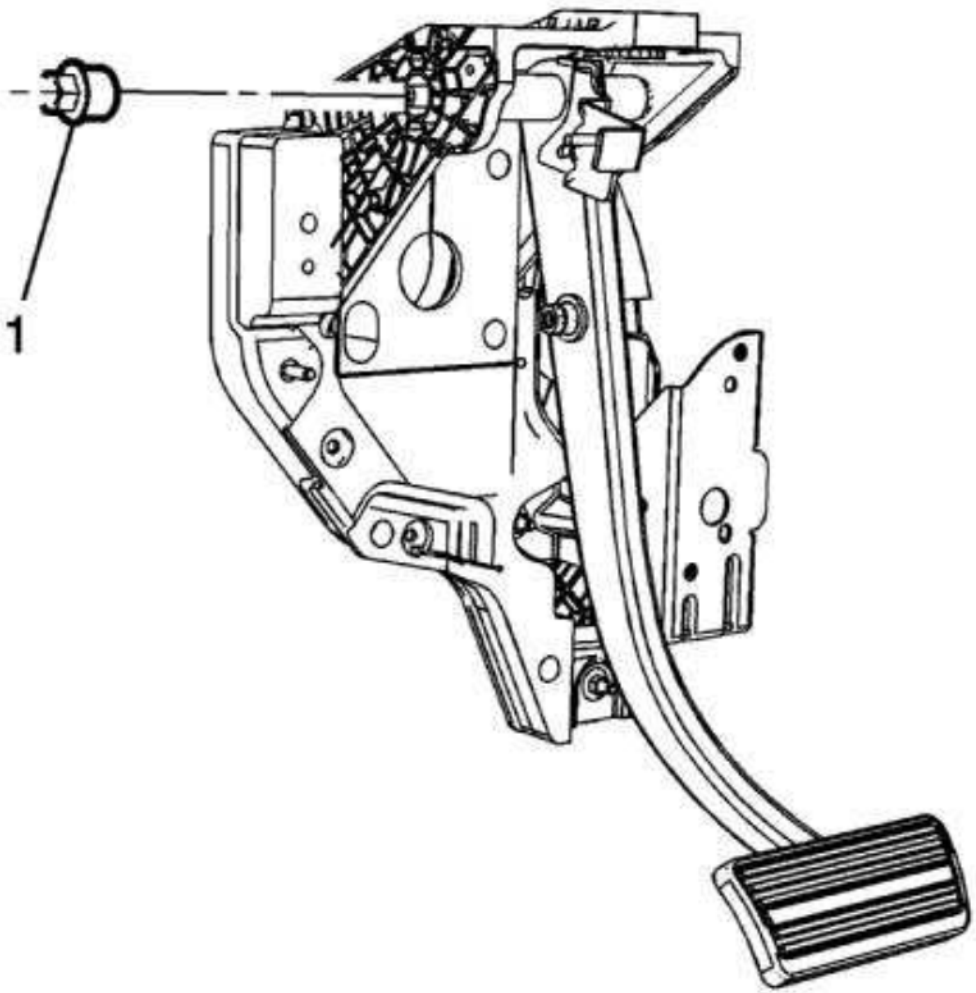

Fig. 59: Brake Pedal Pivot Nut
Courtesy of GENERAL MOTORS COMPANY

6. Remove the brake pedal pivot nut (1).

cardiagn.com

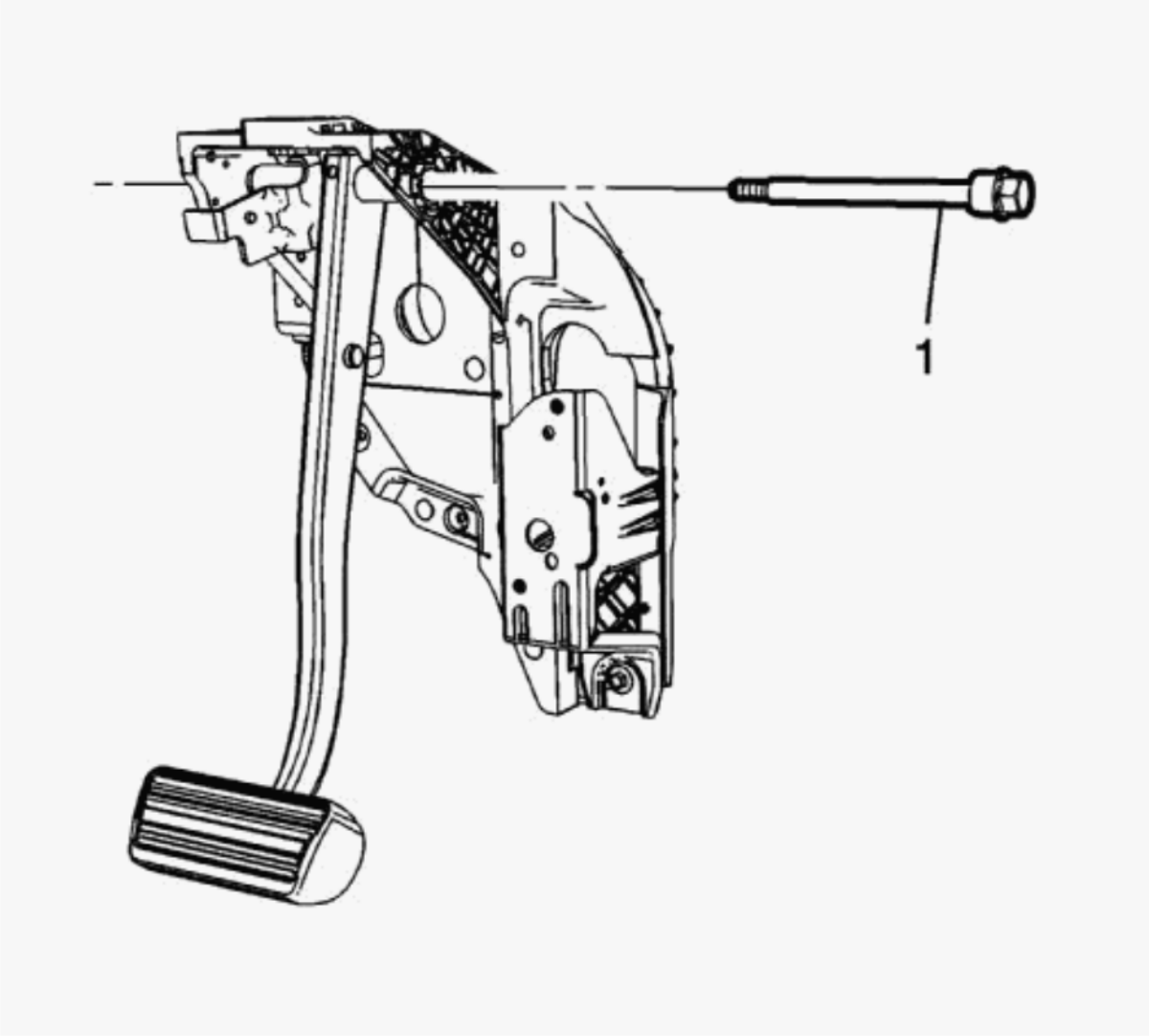

Fig. 60: Brake Pedal Pivot Bolt
Courtesy of GENERAL MOTORS COMPANY

7. Remove the brake pedal pivot bolt (1).

cardiagn.com

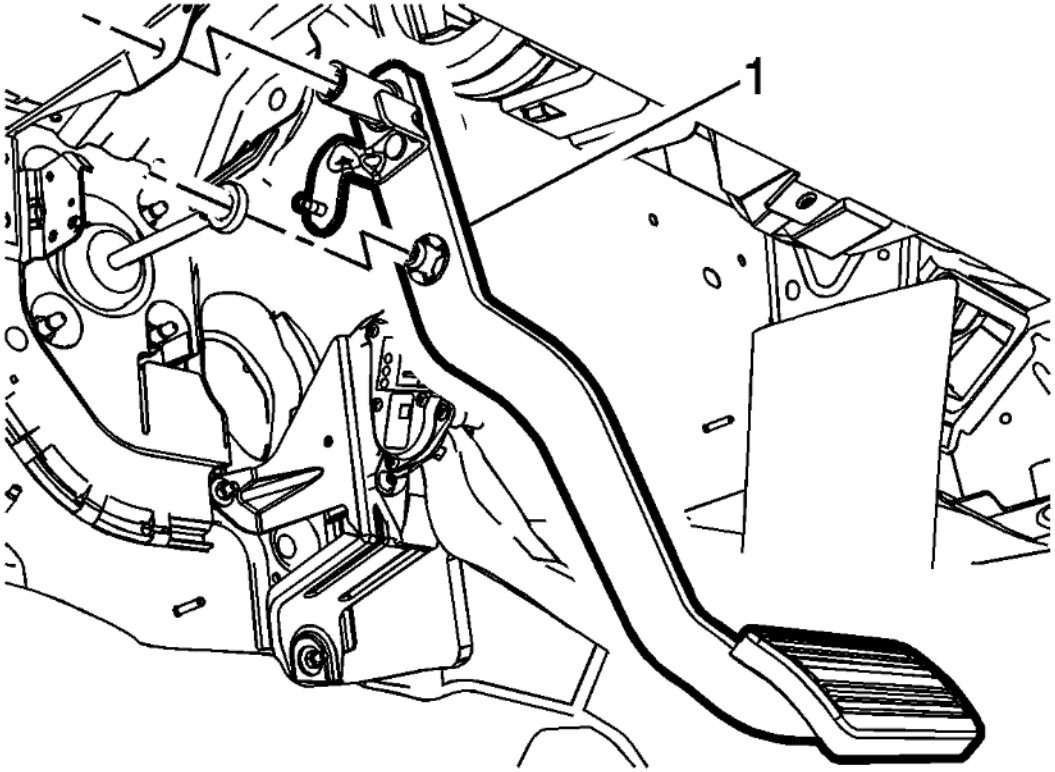

Fig. 61: Brake Pedal
Courtesy of GENERAL MOTORS COMPANY

8. Remove the brake pedal (1).

cardiagn.com

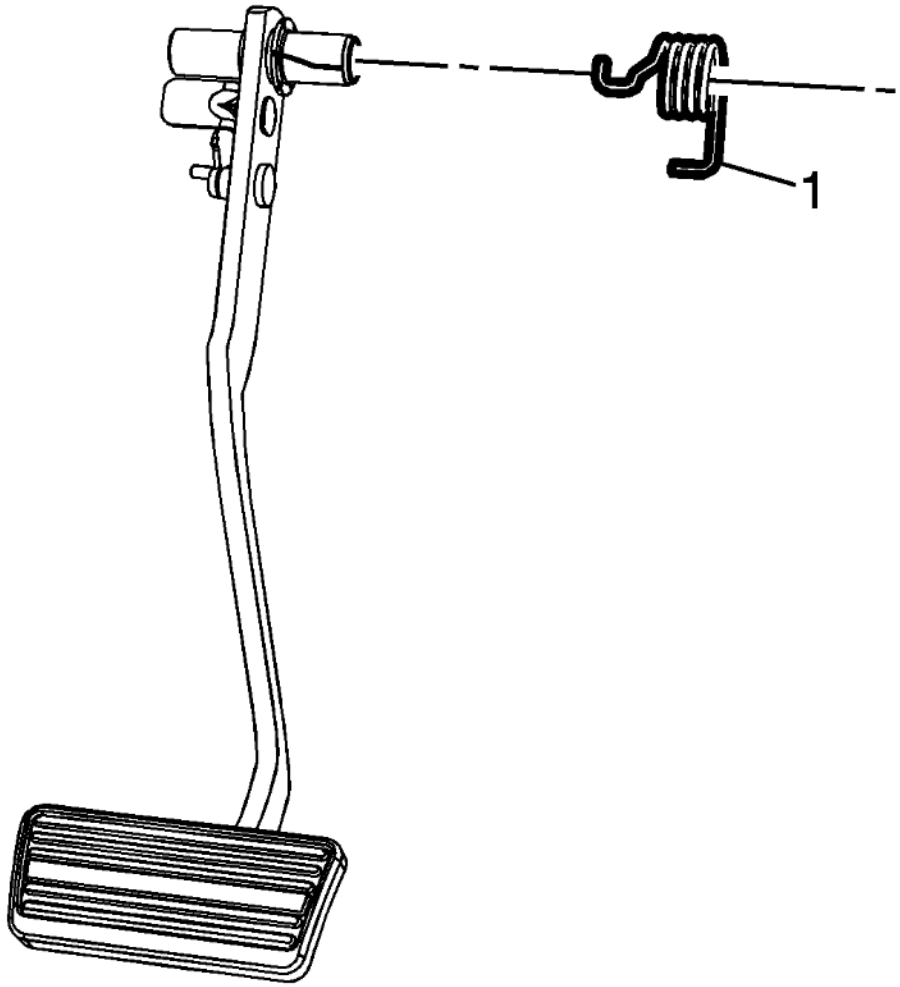

Fig. 62: Brake Pedal Return Assist Spring
Courtesy of GENERAL MOTORS COMPANY

9. Remove the brake pedal return assist spring (1).
10. Inspect the brake pedal return assist spring and bushings for wear or damage and replace, if necessary.

Installation Procedure

cardiagn.com

1. Apply a thin coat of high temperature silicone brake lubricant to the following areas:
    - The bushing side of the brake pedal pivot hub between the brake pedal arm and the pivot hub flange.
    - The inner diameter of the brake pedal assist spring bushing and both sides of the bushing flange.
    - The inner diameter of the brake pedal return assist spring.
    - The 90 degree end and the hook end of the brake pedal return assist spring.

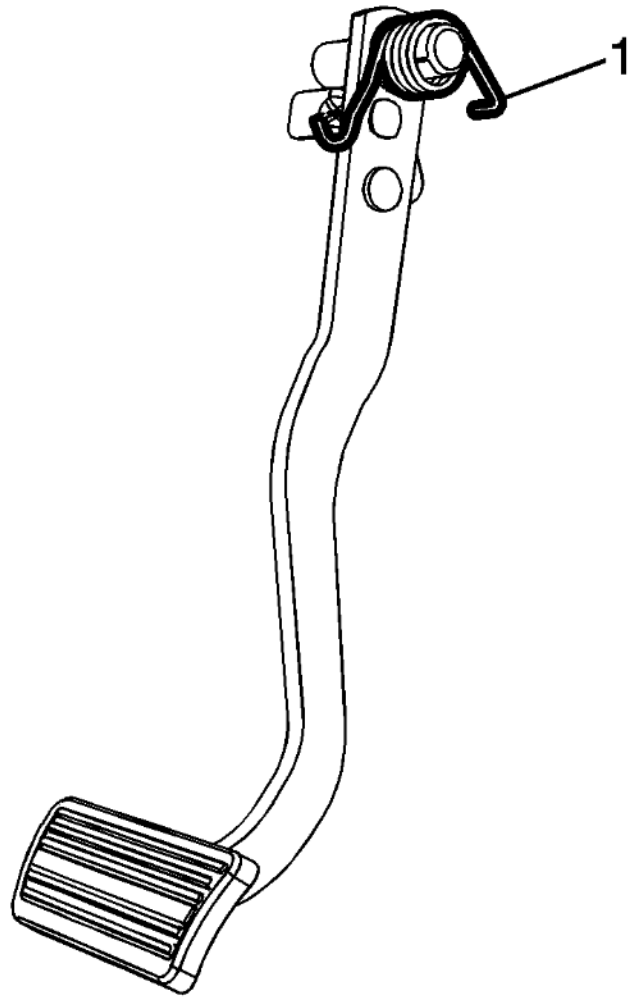

Fig. 63: Brake Pedal Return Assist Spring

cardiagn.com

Courtesy of GENERAL MOTORS COMPANY

2. Install the brake pedal return assist spring (1) to the brake pedal pivot hub with the hook end of the spring against the driver side edge of the brake pedal arm.
3. Apply a thin coat of high temperature silicone brake lubricant to the brake pedal pivot bolt shoulder.
4. With the brake pedal return assist spring resting on the driver side of the brake pedal arm, install the brake pedal.

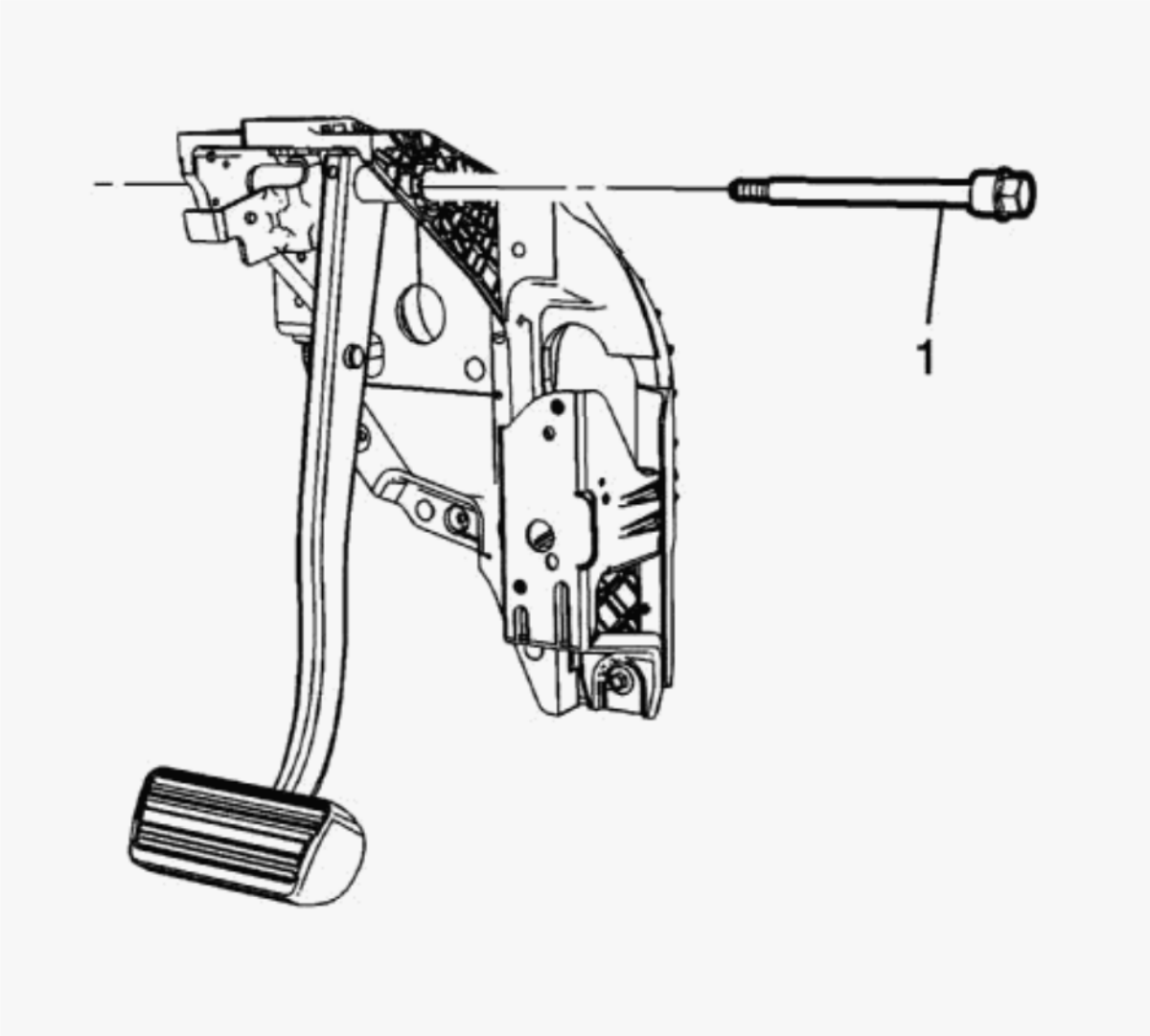

Fig. 64: Brake Pedal Pivot Bolt

cardiagn.com

Courtesy of GENERAL MOTORS COMPANY

5. Install the brake pedal pivot bolt (1).
6. Clean the brake pedal pivot bolt threads of any grease after the bolt is inserted through the brake pedal pivot.
7. Apply threadlocker to the brake pedal pivot bolt threads. Refer to **Adhesives, Fluids, Lubricants, and Sealers**.

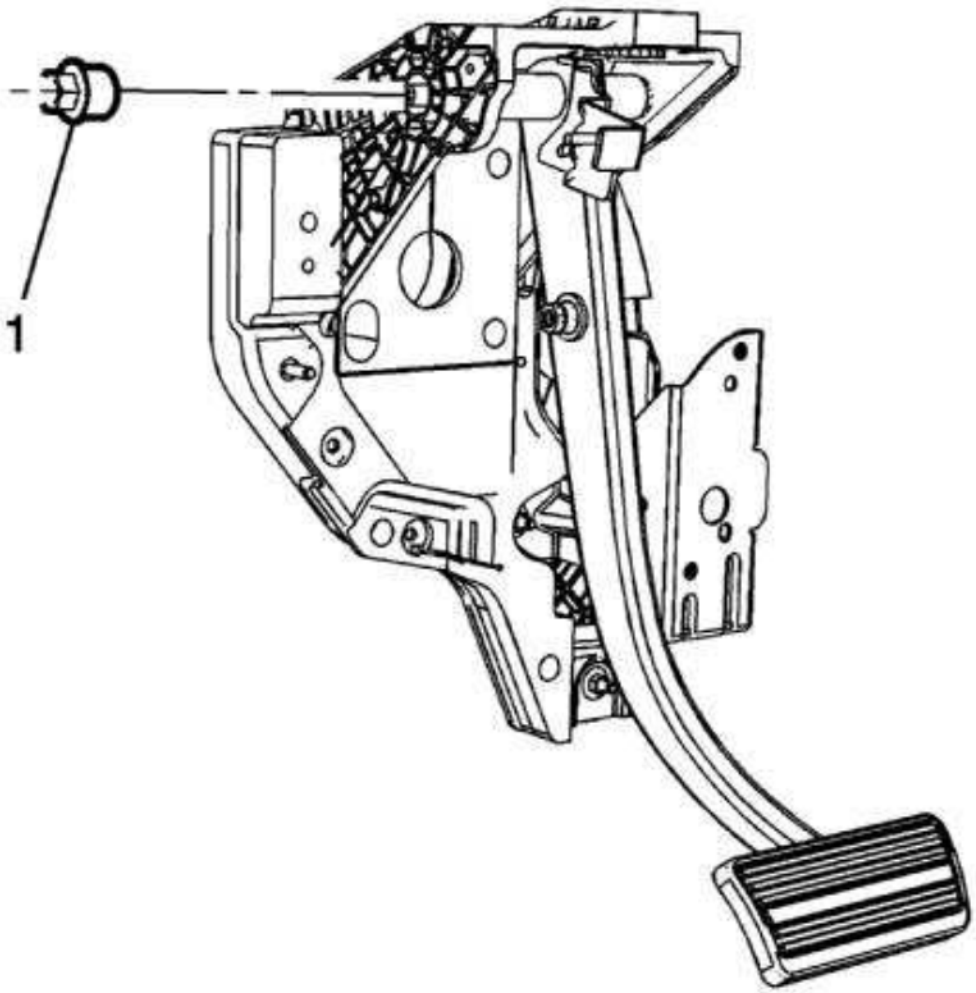

Fig. 65: Brake Pedal Pivot Nut
Courtesy of GENERAL MOTORS COMPANY

cardiagn.com

CAUTION: **Refer to Fastener Caution .**

8. While holding the brake pedal pivot bolt stationary, install the brake pedal pivot nut (1) and tighten to 26 N.m (19 lb ft).

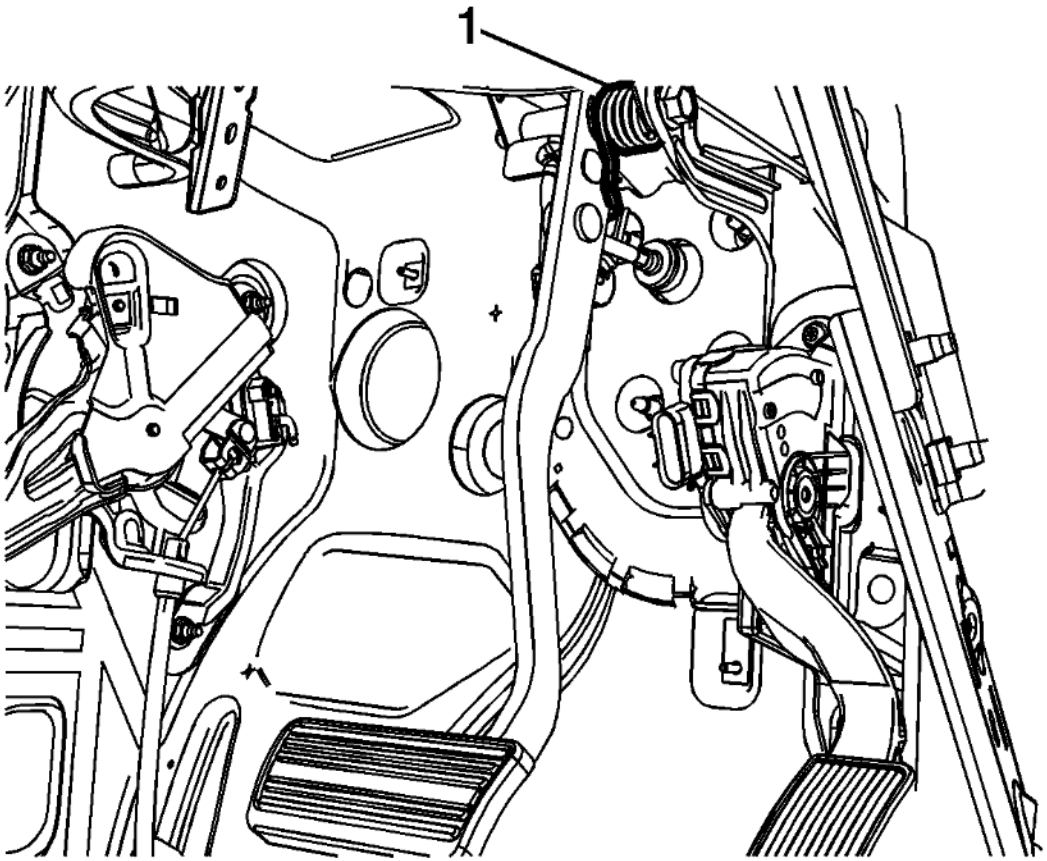

Fig. 66: Brake Pedal Assist Return Spring And Brake Pedal Arm
Courtesy of GENERAL MOTORS COMPANY

9. Loosely assemble a tie strap to the hook end of the brake pedal return assist spring.

cardiagn.com

10. Using the tie strap, pull and hook the brake pedal assist return spring (1) into position against the leading edge of the brake pedal arm.
11. Remove and discard the tie strap.
12. With the power brake booster pushrod disconnected, inspect the brake pedal return assist spring function by pressing the brake pedal until it is parallel with the accelerator pedal and releasing.
13. Ensure the brake pedal returns to the at rest position.
14. Apply a thin coat of high temperature silicone brake lubricant to the brake pedal pivot pin.
15. Connect the power brake booster pushrod.

cardiagn.com

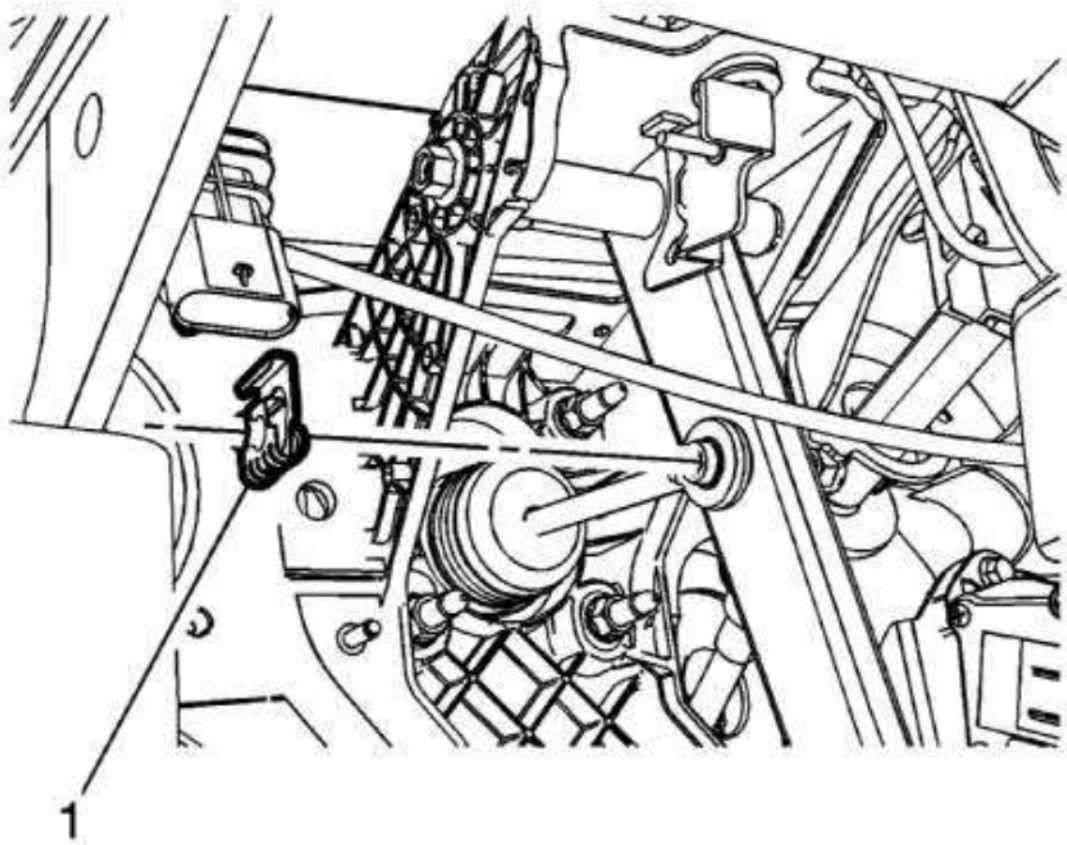

Fig. 67: Power Brake Booster Pushrod Retainer Clip
Courtesy of GENERAL MOTORS COMPANY

16. Install the power brake booster pushrod retainer clip (1).
17. Rotate the power brake booster retaining clip 360 degrees to ensure the clip is fully engaged in the brake pedal pivot pin groove.

cardiagn.com

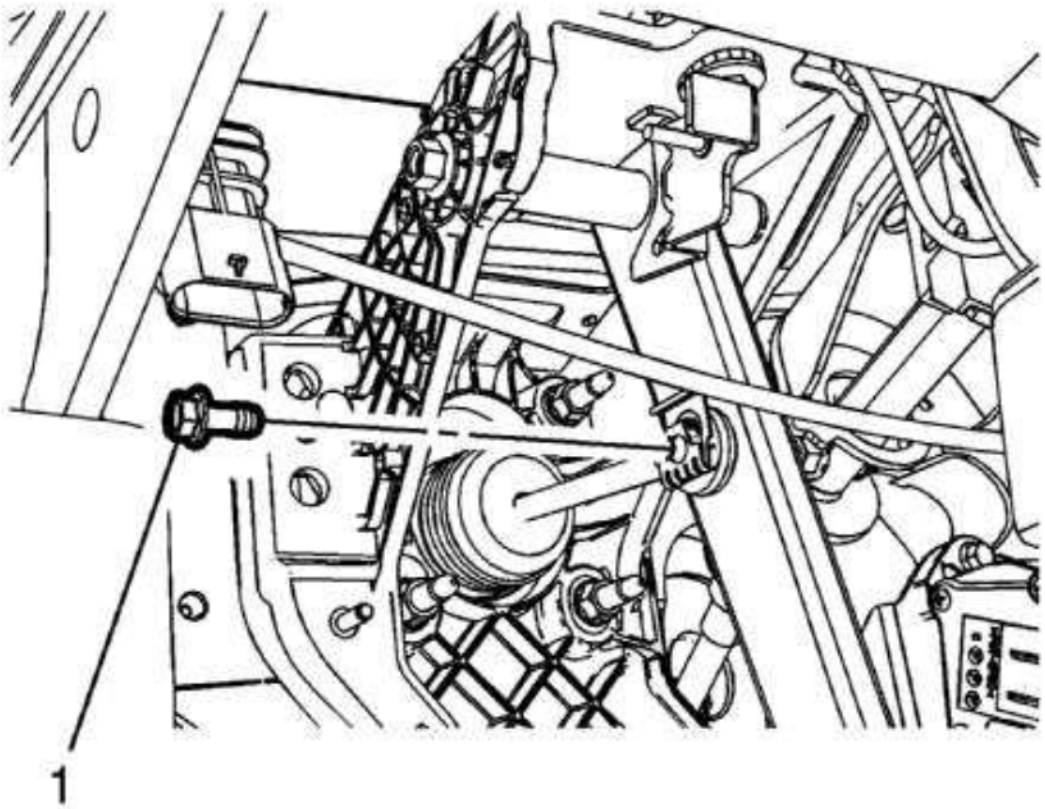

Fig. 68: Power Brake Booster Pushrod Retainer Clip Bolt
Courtesy of GENERAL MOTORS COMPANY

18. Install the power brake booster pushrod retainer clip bolt (1) and tighten to 10 N.m (89 lb in).
19. Install the brake pedal position sensor. Refer to **Brake Pedal Position Sensor Replacement** .

BRAKE AND ACCELERATOR PEDAL ASSEMBLY REPLACEMENT

cardiagn.com

Removal Procedure

1. Remove the brake pedal position sensor. Refer to **Brake Pedal Position Sensor Replacement** .
2. Remove the steering column. Refer to **Steering Column Replacement (N33, N37)** **Steering Column Replacement (N38)** .
3. Disconnect the accelerator pedal position sensor electrical connector.

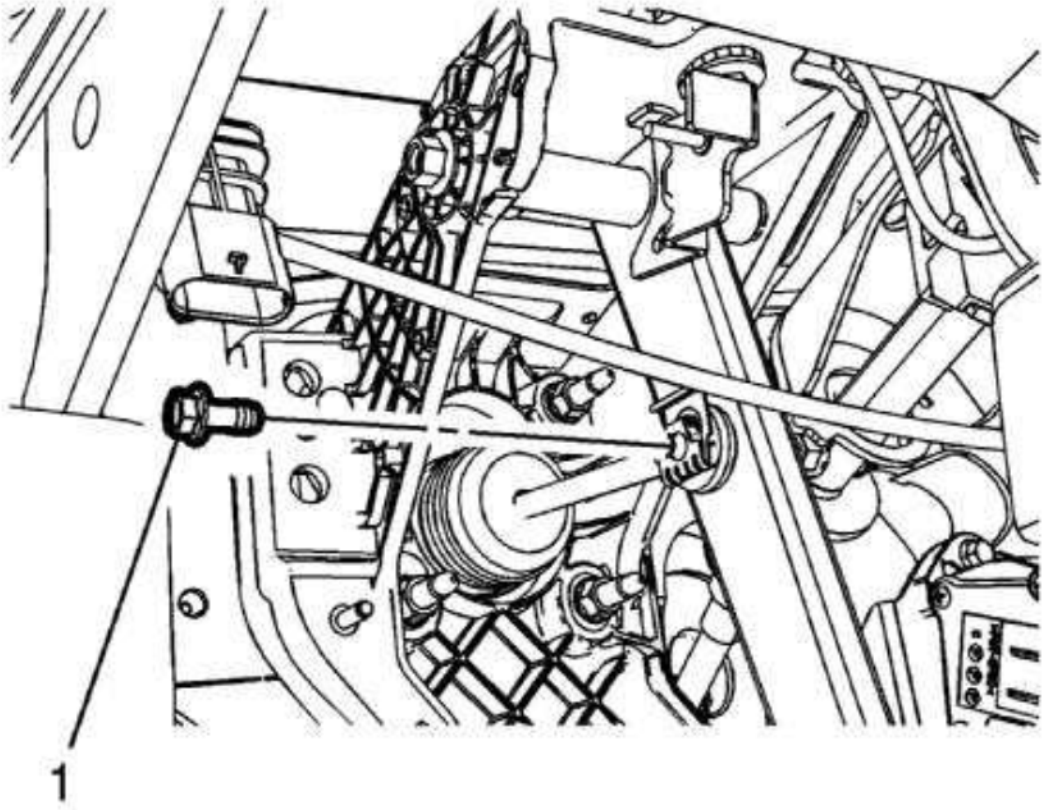

Fig. 69: Power Brake Booster Pushrod Retainer Clip Bolt
Courtesy of GENERAL MOTORS COMPANY

cardiagn.com

4. Remove the power brake booster pushrod retainer clip bolt (1).

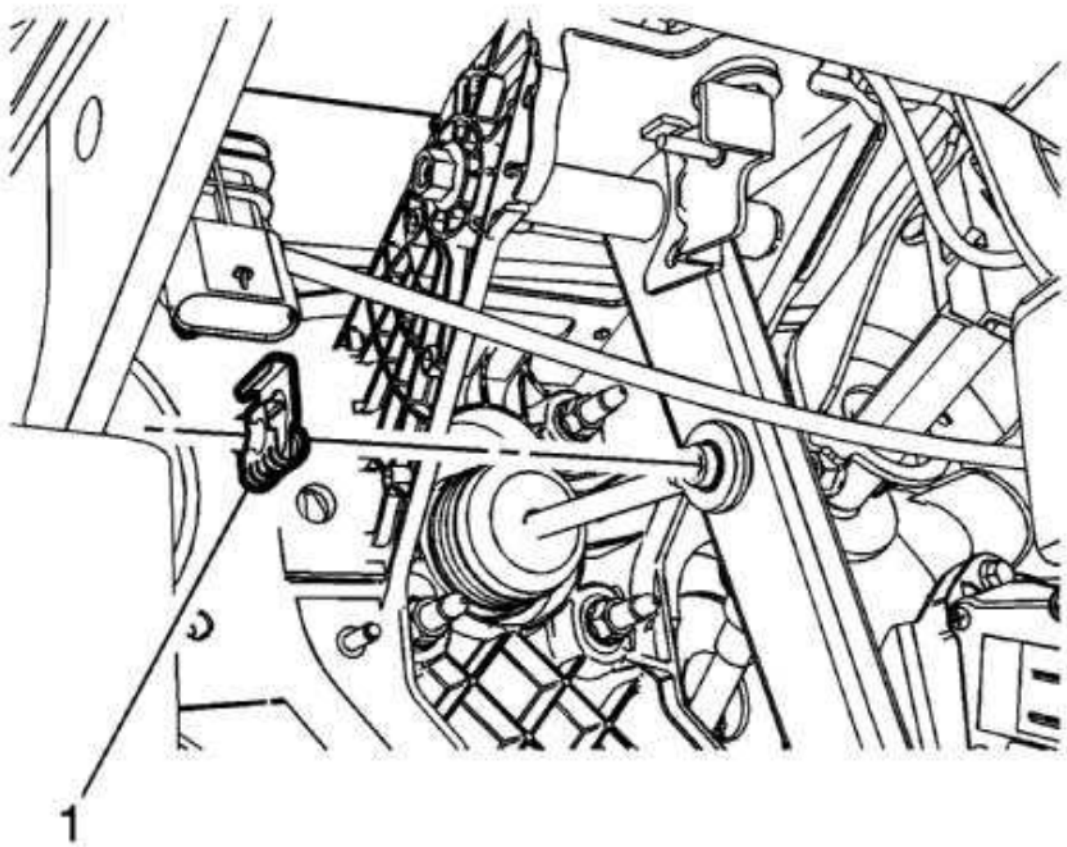

Fig. 70: Power Brake Booster Pushrod Retainer Clip
Courtesy of GENERAL MOTORS COMPANY

5. Remove the power brake booster pushrod retainer clip (1).

cardiagn.com

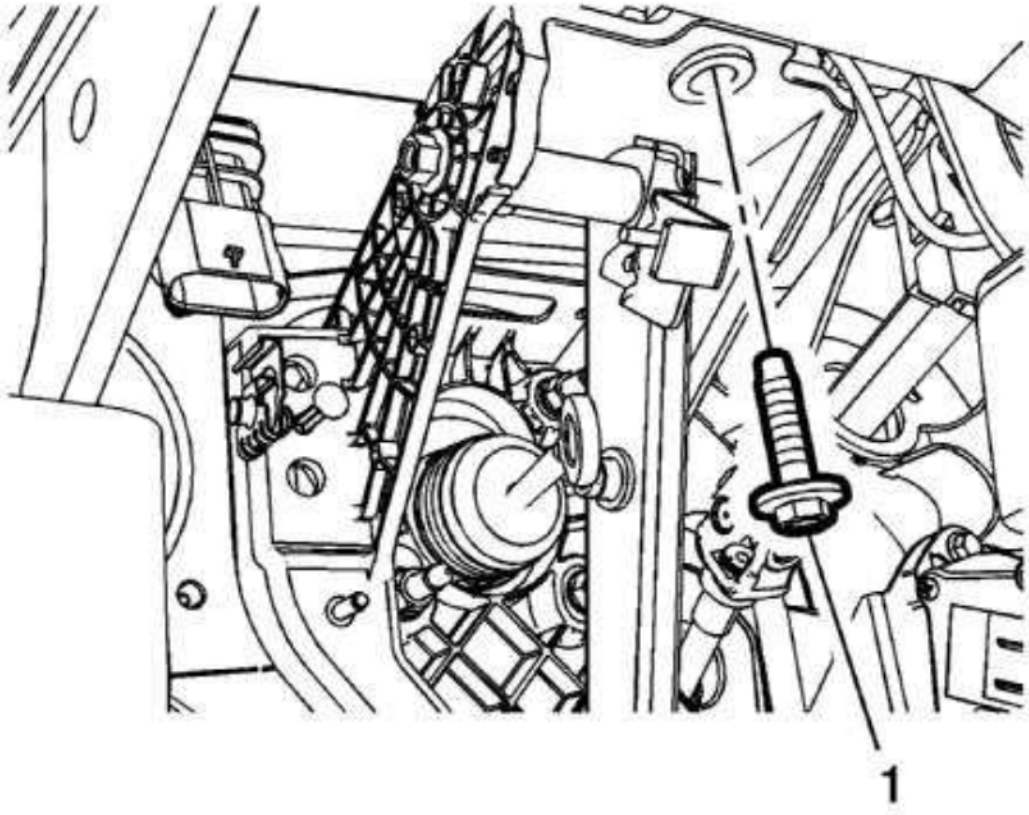

Fig. 71: Brake Pedal Assembly Bolt
Courtesy of GENERAL MOTORS COMPANY

6. Remove the brake pedal assembly bolt (1).

cardiagn.com

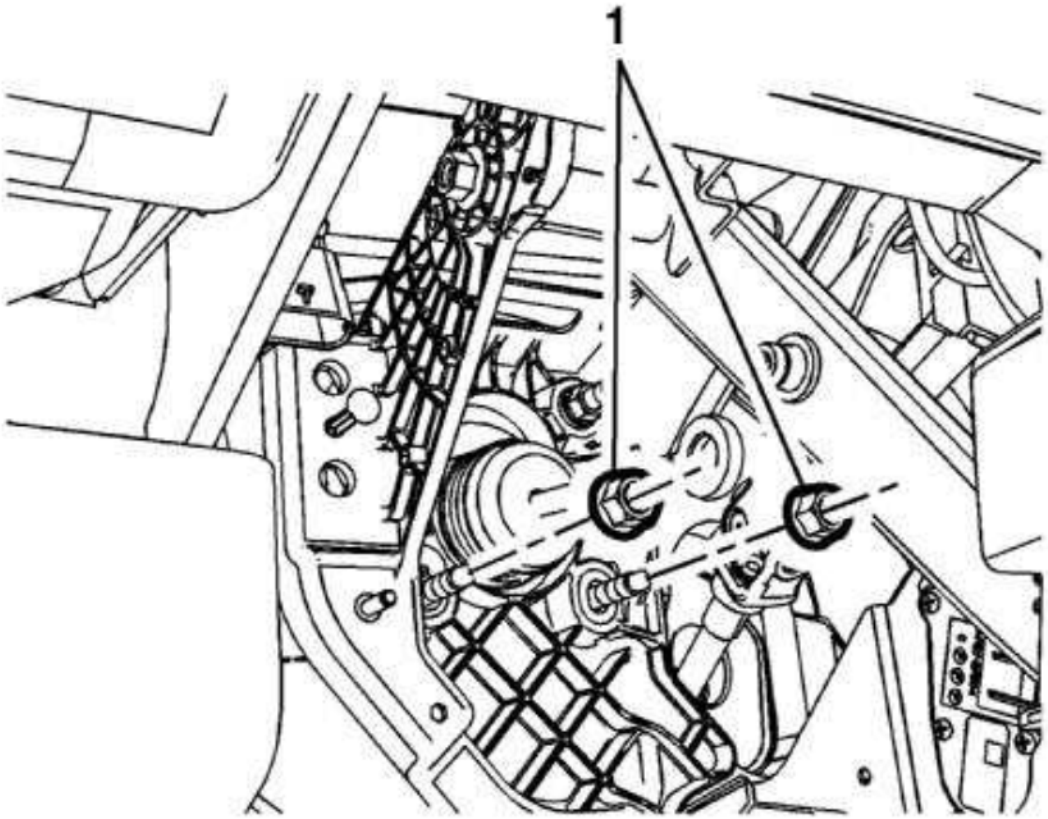

Fig. 72: Power Brake Booster Lower Nuts
Courtesy of GENERAL MOTORS COMPANY

7. Remove the lower power brake booster nuts (1).

cardiagn.com

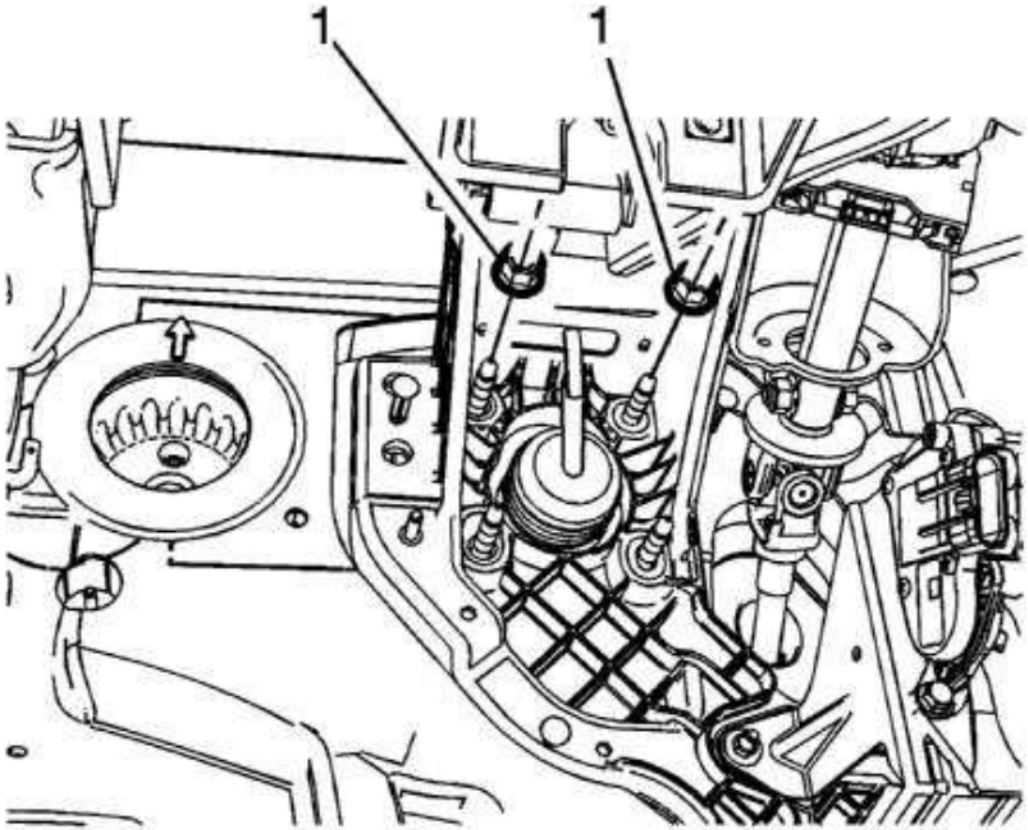

Fig. 73: Power Brake Booster Upper Nuts
Courtesy of GENERAL MOTORS COMPANY

8. Remove the upper power brake booster nuts (1).
9. Disconnect the power brake booster pushrod from the brake pedal.
10. Release the electrical harness from the retaining clips on the brake pedal bracket assembly.
11. Carefully push against the power brake booster studs to position the power brake booster forward slightly.

cardiagn.com

12. Maneuver the brake pedal assembly from under the instrument panel and remove the brake pedal assembly from the vehicle.

Installation Procedure

1. Maneuver the brake pedal assembly into the installed position from under the instrument panel.
2. Position the power brake booster rearward.
3. Ensure the power brake booster studs engage the brake pedal assembly.

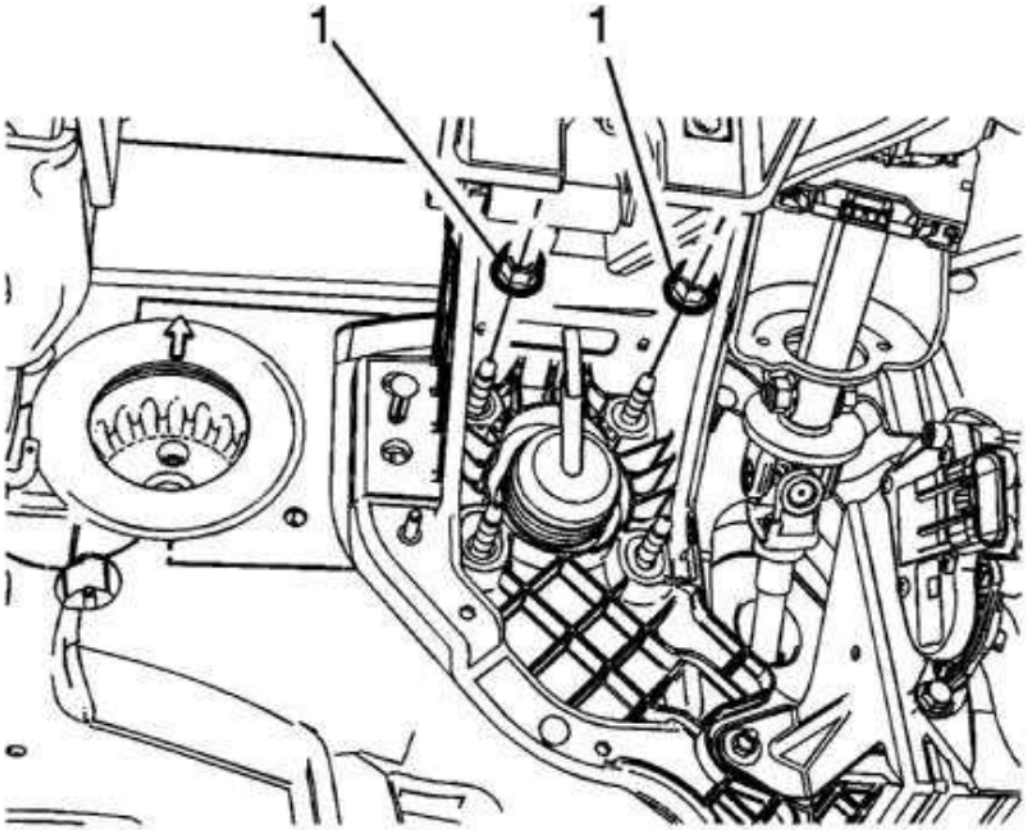

cardiagn.com

Fig. 74: Power Brake Booster Upper Nuts
Courtesy of GENERAL MOTORS COMPANY

CAUTION: **Refer to Fastener Caution .**

4. Install the upper power brake booster nuts (1) and tighten to 33 N.m (24 lb ft).

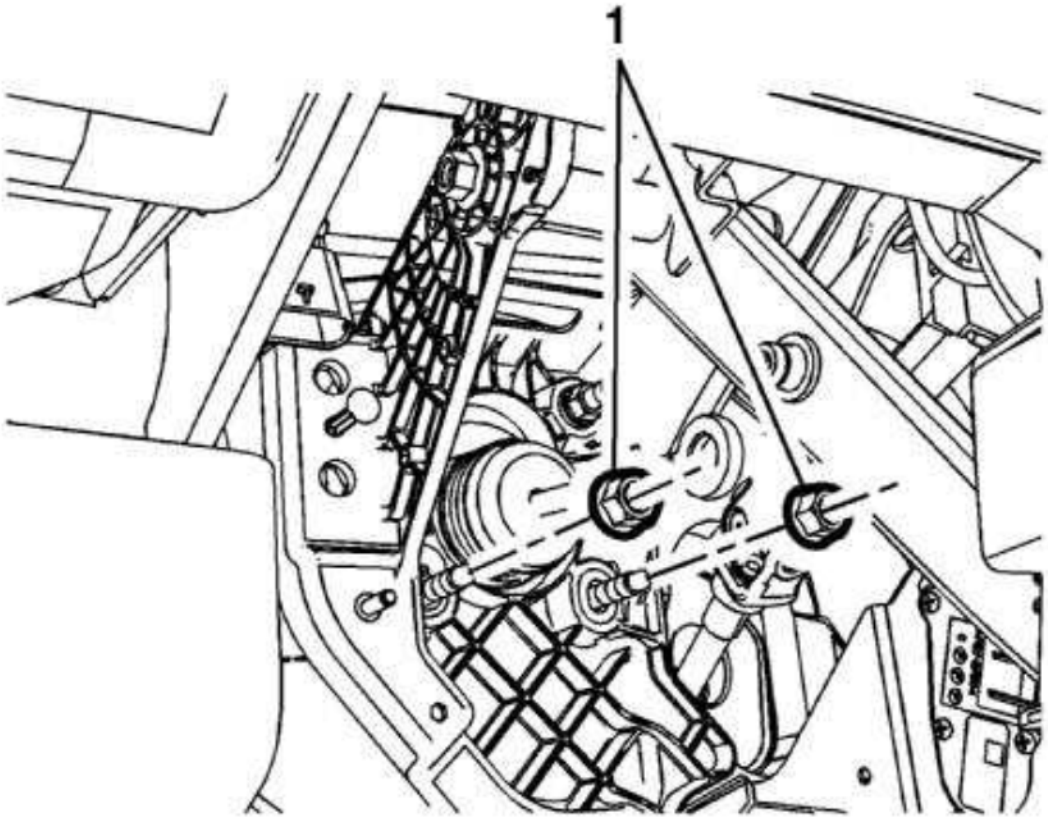

Fig. 75: Power Brake Booster Lower Nuts

cardiagn.com

Courtesy of GENERAL MOTORS COMPANY

5. Install the lower power brake booster nuts (1) and tighten to 33 N.m (24 lb ft).

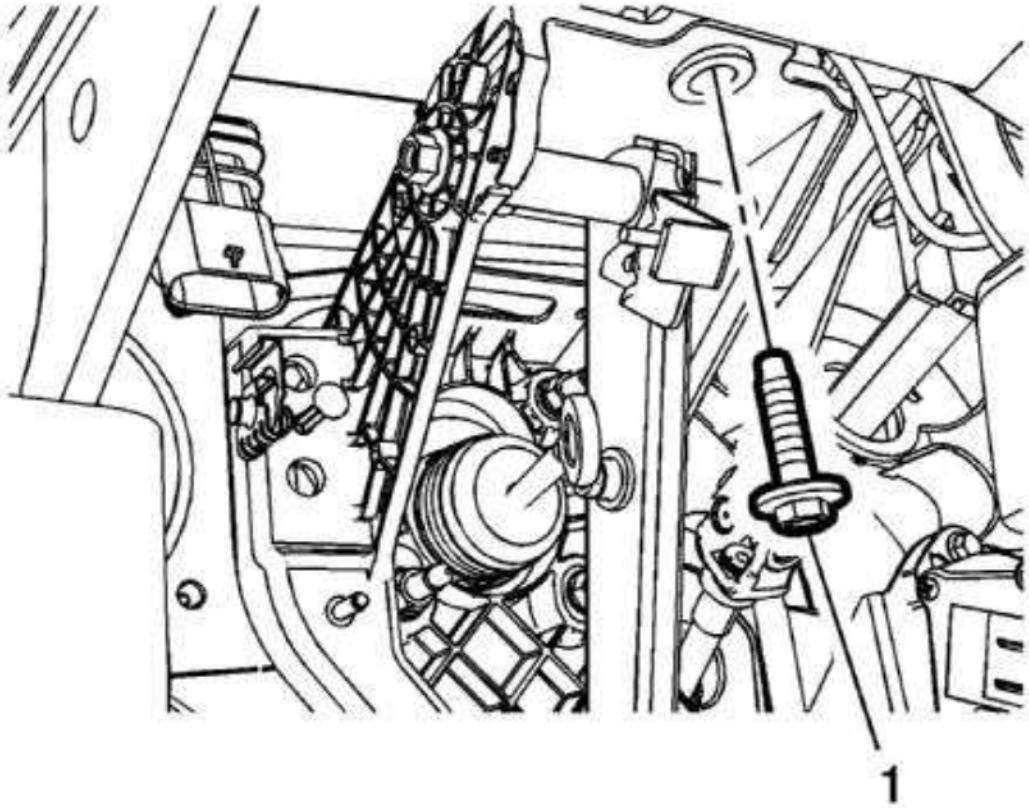

Fig. 76: Brake Pedal Assembly Bolt
Courtesy of GENERAL MOTORS COMPANY

6. Install the brake pedal assembly bolt (1) and tighten to 22 N.m (16 lb ft).

cardiagn.com

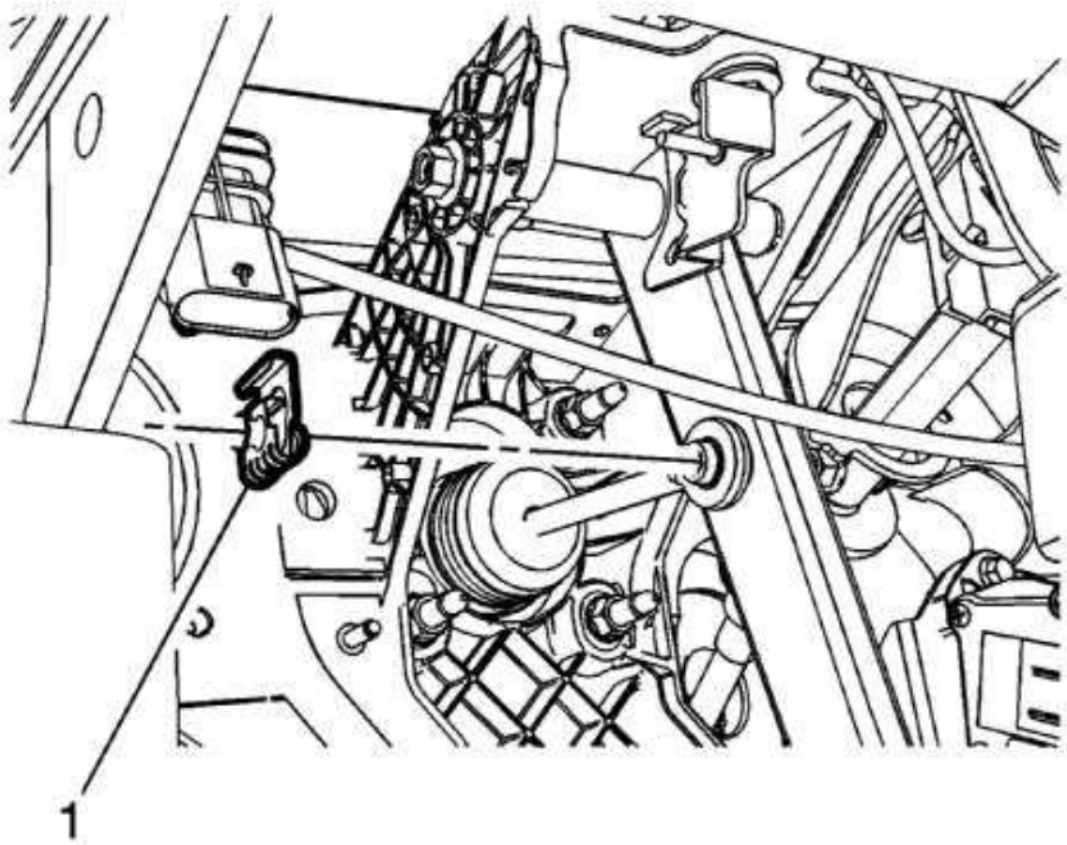

Fig. 77: Power Brake Booster Pushrod Retainer Clip
Courtesy of GENERAL MOTORS COMPANY

7. Connect the power brake booster pushrod to the brake pedal pivot pin.
8. Install the power brake booster pushrod retainer clip (1).

cardiagn.com

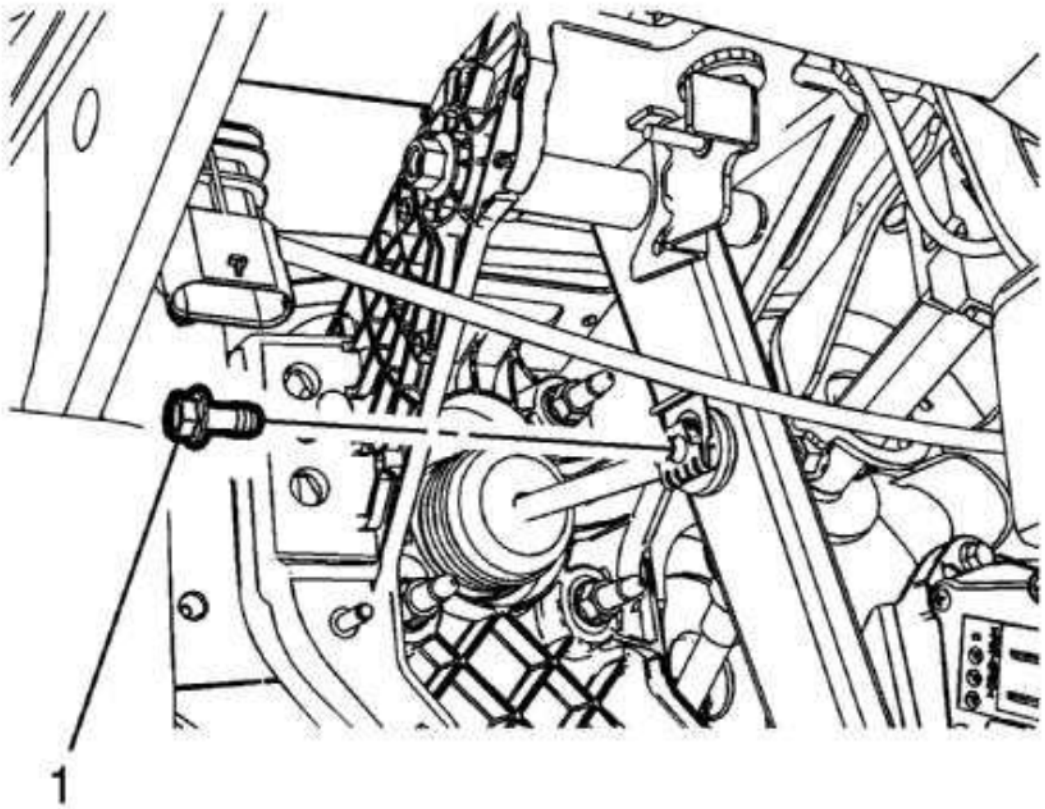

Fig. 78: Power Brake Booster Pushrod Retainer Clip Bolt
Courtesy of GENERAL MOTORS COMPANY

9. Install the power brake booster pushrod retainer clip bolt (1) and tighten to 10 N.m (89 lb in).
10. Position the electrical harness to the brake pedal bracket assembly and secure to the routing clips.
11. Connect the accelerator pedal position sensor electrical connector.
12. Install the steering column. Refer to **Steering Column Replacement (N33, N37)** **Steering Column Replacement (N38)** .

cardiagn.com

13. Install the brake pedal position sensor. Refer to **Brake Pedal Position Sensor Replacement** .

BRAKE AND ACCELERATOR PEDAL BRACKET REPLACEMENT

Removal Procedure

1. Remove the brake and accelerator pedal assembly. Refer to **Brake and Accelerator Pedal Assembly Replacement**.
2. Remove the accelerator pedal position sensor. Refer to **Accelerator Pedal Position Sensor Replacement** .

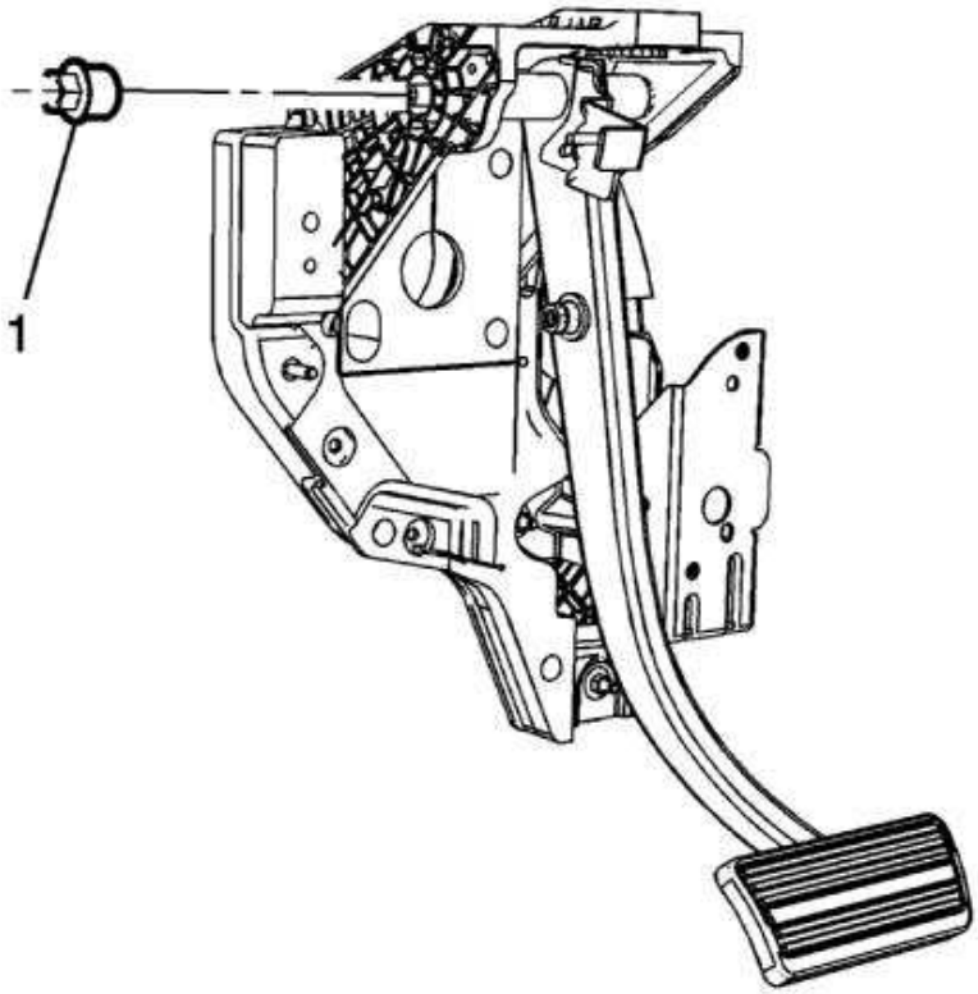

cardiagn.com

Fig. 79: Brake Pedal Pivot Nut
Courtesy of GENERAL MOTORS COMPANY

3. Remove the brake pedal pivot nut (1).

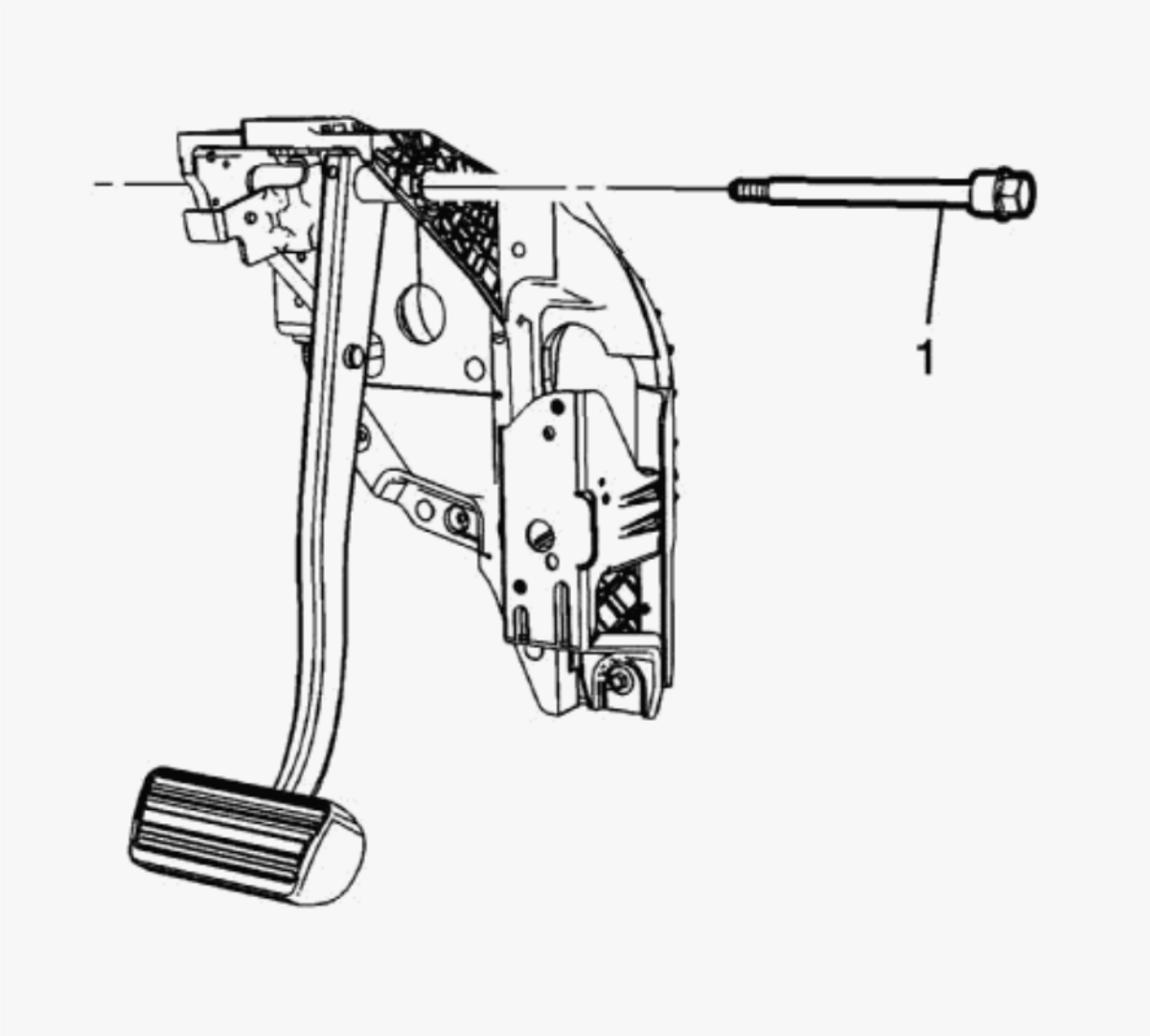

Fig. 80: Brake Pedal Pivot Bolt
Courtesy of GENERAL MOTORS COMPANY

cardiagn.com

4. Remove the brake pedal pivot bolt (1).

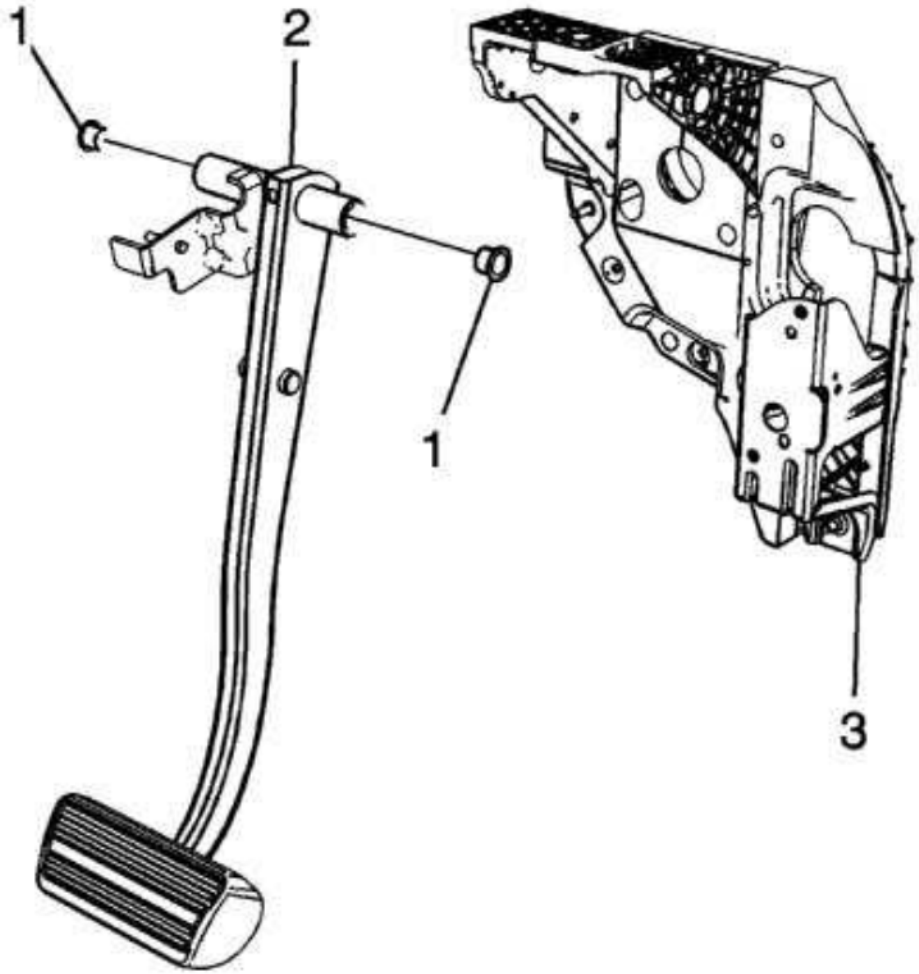

Fig. 81: Brake Pedal And Brake Pedal Pivot Bushings
Courtesy of GENERAL MOTORS COMPANY

5. Remove the brake pedal (1) and the brake pedal pivot bushings (2) from the brake pedal bracket (3).

Installation Procedure

cardiagn.com

1. Lightly lubricate the brake pedal pivot bushing with high temperature silicone brake lubricant.

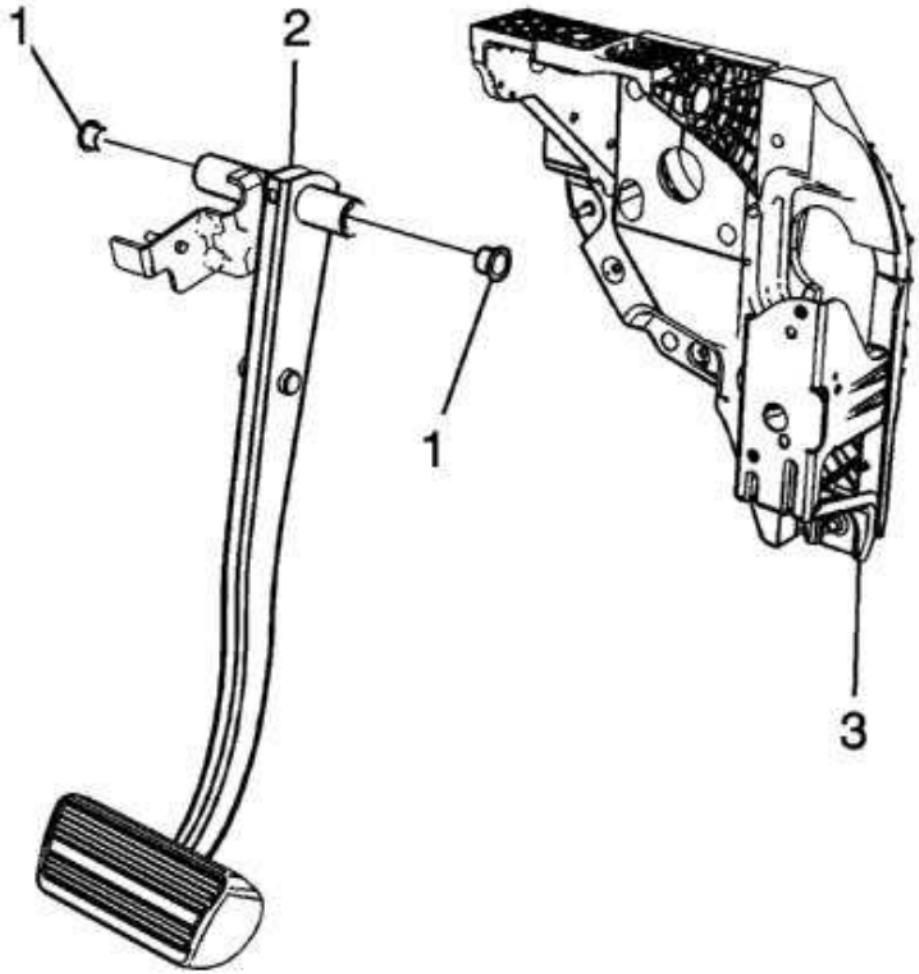

Fig. 82: Brake Pedal And Brake Pedal Pivot Bushings
Courtesy of GENERAL MOTORS COMPANY

2. Install the brake pedal (1) and the brake pedal pivot bushings (2) to the brake pedal bracket (3).
3. Lightly lubricate the brake pedal pivot bolt shoulder with high temperature silicone brake lubricant.

cardiagn.com

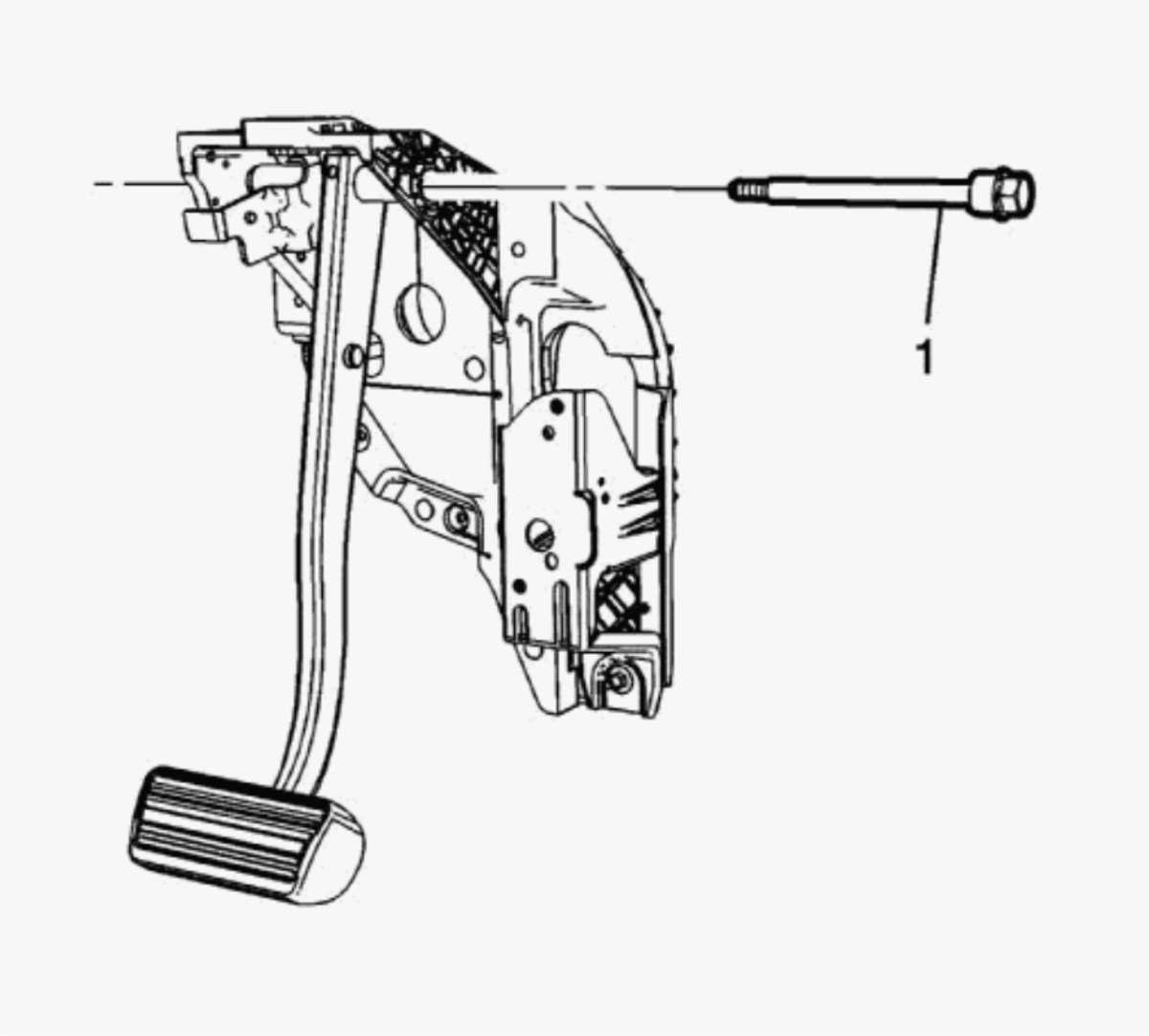

Fig. 83: Brake Pedal Pivot Bolt
Courtesy of GENERAL MOTORS COMPANY

4. Install the brake pedal pivot bolt (1).
5. Clean any lubricant from the pivot bolt threads.
6. Apply threadlocker to the brake pedal pivot bolt threads and allow to cure for approximately 10 minutes. Refer to **Adhesives, Fluids, Lubricants, and Sealers**.

cardiagn.com

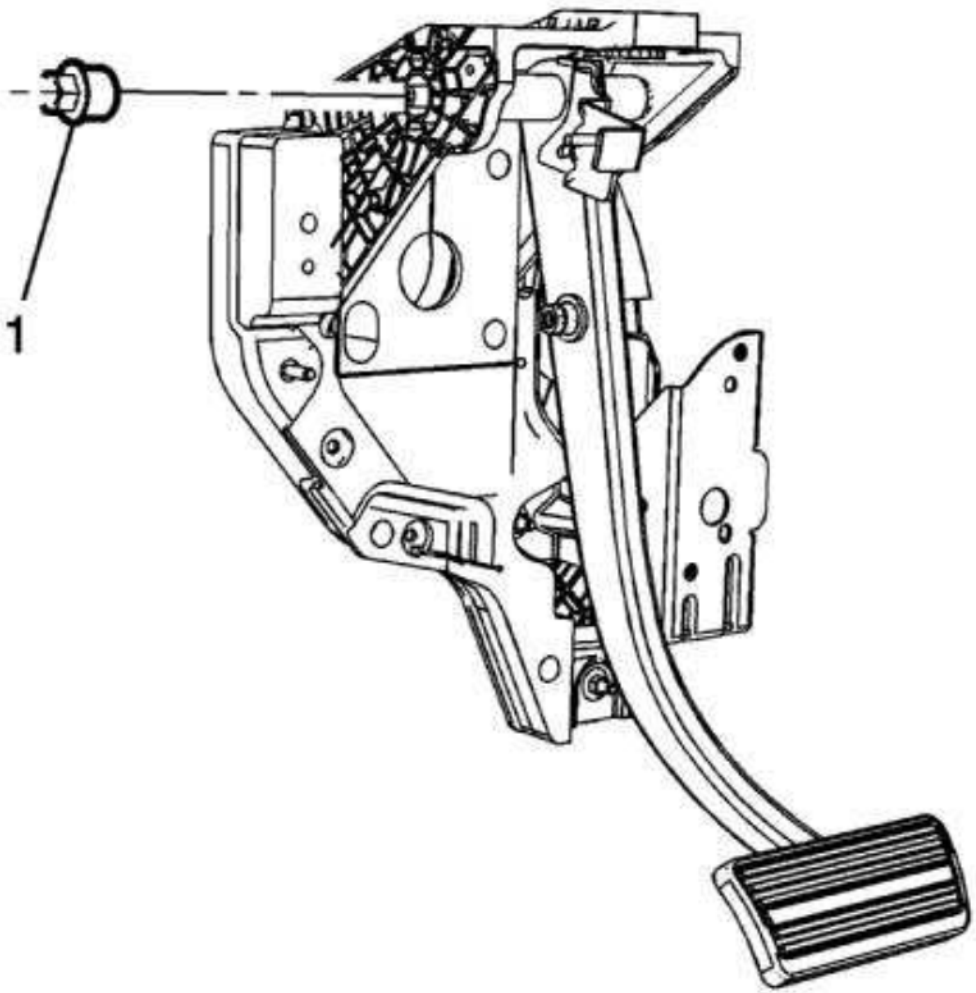

Fig. 84: Brake Pedal Pivot Nut
Courtesy of GENERAL MOTORS COMPANY

CAUTION: Refer to Fastener Caution .

7. While holding the brake pedal pivot bolt stationary, install the brake pedal pivot nut (1) and tighten to 26 N.m (19 lb ft).
8. Install the accelerator pedal position sensor. Refer to **Accelerator Pedal Position Sensor Replacement** .

cardiagn.com

9. Install the brake and accelerator pedal assembly. Refer to **Brake and Accelerator Pedal Assembly Replacement**.

BRAKE PIPE REPLACEMENT

Special Tools

CH-45405 Brake Pipe Flaring Kit

For equivalent regional tools, refer to **Special Tools**.

cardiagn.com

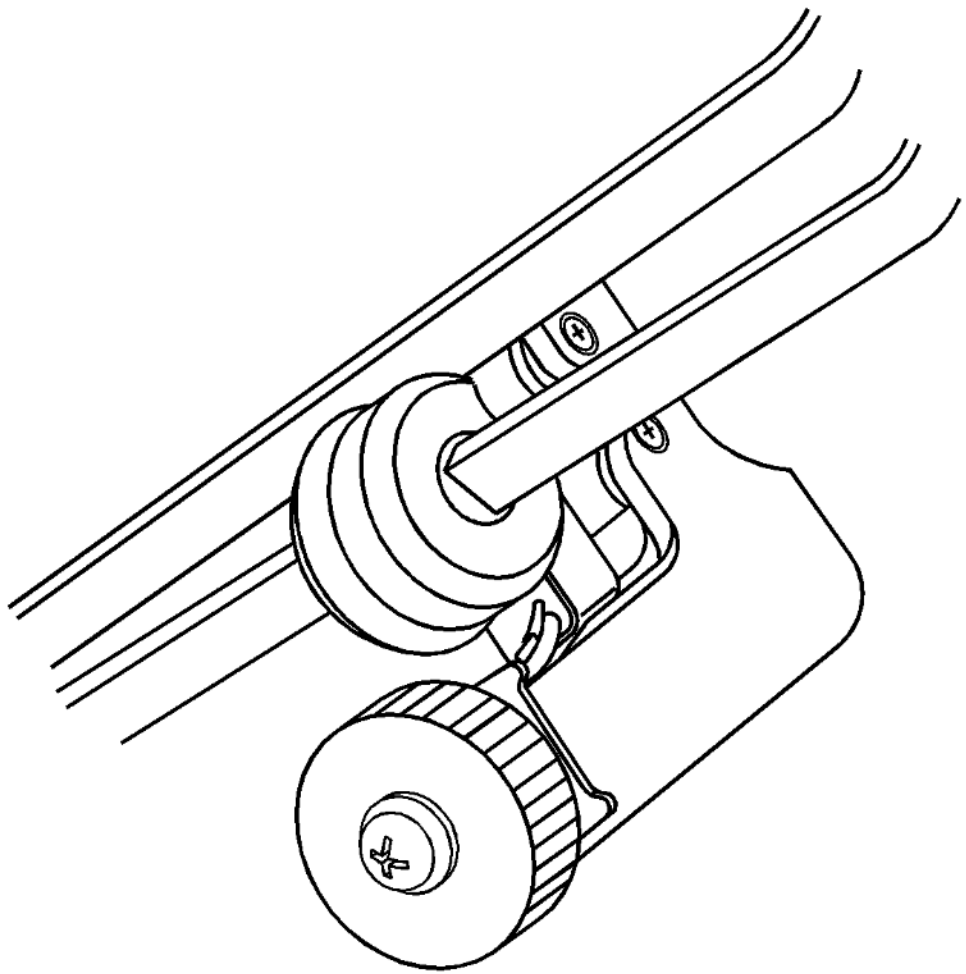

Fig. 85: Brake Pipe And Pipe Cutter
Courtesy of GENERAL MOTORS COMPANY

WARNING: Refer to Brake Fluid Irritant Warning .

WARNING: Always use double walled steel brake pipe when replacing brake pipes. The use of any other pipe is not recommended and may cause brake system failure. Carefully route and retain replacement brake pipes. Always use the correct fasteners and the original location for replacement brake pipes. Failure to properly

cardiagn.com

route and retain brake pipes may cause damage to the brake pipes and cause brake system failure.

CAUTION: **Refer to Brake Fluid Effects on Paint and Electrical Components Caution .**

NOTE: **When servicing the brake pipes, note the following:**

- **If sectioning the brake pipe, use replacement pipe of the same type and outside diameter.**
- **Use fittings of the appropriate size and type.**
- **Only create flares of the same type or design as originally equipped on the vehicle.**

1. Inspect the area of brake pipe to be repaired or replaced.
2. Release the brake pipe to be replaced from the retainers, as required.
3. Select an appropriate location to section the brake pipe, if necessary.
   - Allow adequate clearance in order to maneuver the **CH-45405** Brake Pipe Flaring Kit.
   - Avoid sectioning the brake pipe at bends or mounting points.
4. Using a string or wire, measure the length of the pipe to be replaced including all pipe bends.
5. Add to the measurement taken the appropriate additional length required for each flare to be created.

Specification

- 6.35 mm (0.250 in) for 4.76 mm (3/16 in) diameter pipe
- 9.50 mm (0.374 in) for 6.35 mm (1/4 in) diameter pipe
- 12.67 mm (0.499 in) for 7.94 mm (5/16 in) diameter pipe

NOTE: **Ensure that the brake pipe end to be flared is cut at a square, 90 degree angle to the pipe length.**

6. Using the pipe cutter included in the **CH-45405** Brake Pipe Flaring Kit, carefully cut the brake pipe squarely to the measured length.
7. Remove the sectioned brake pipe from the vehicle.
8. Select the appropriate size of brake pipe and tube nuts, as necessary. The brake pipe outside diameter determines brake pipe size.

cardiagn.com

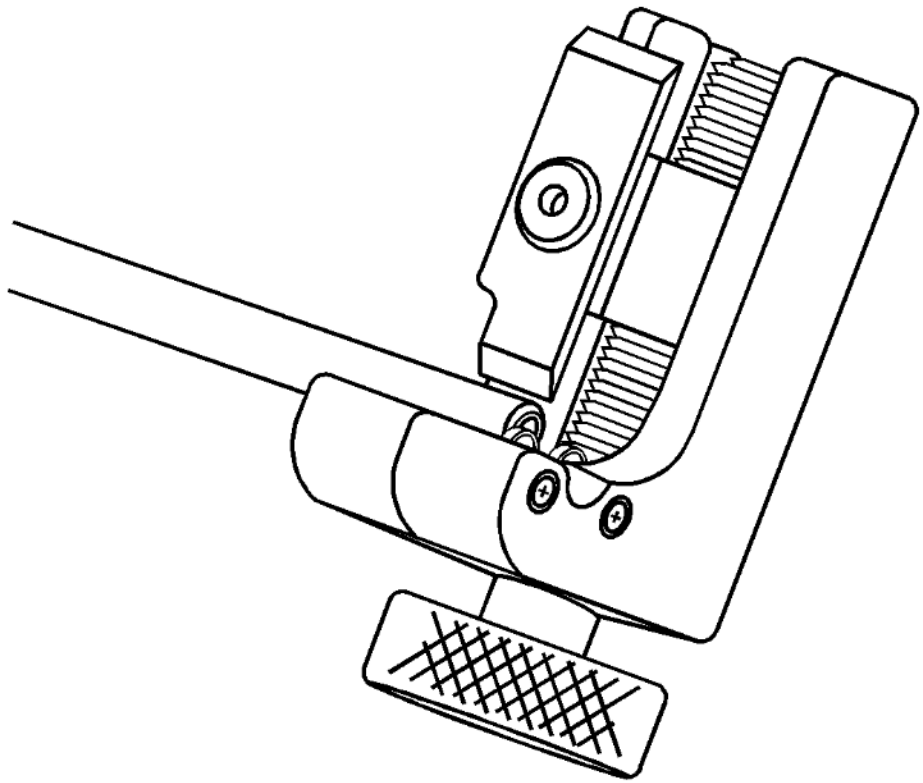

Fig. 86: Stripping Nylon Coating From Brake Pipe Ends
Courtesy of GENERAL MOTORS COMPANY

9. Strip the nylon coating from the brake pipe end to be flared, if necessary.
    - Select the appropriate blade on the coating stripping tool included in the **CH-45405** Brake Pipe Flaring Kit, by unthreading the blade block from the stripping tool and installing the block with the desired blade facing the tool rollers.

      Specification

cardiagn.com

  - 6.35 mm (0.250 in) blade for 4.76 mm (3/16 in) diameter pipe
  - 9.50 mm (0.374 in) blade for 6.35 mm (1/4 in) and 7.94 mm (5/16 in) diameter pipe
- Insert the brake pipe end to be flared into the stripping tool to the depth of the ledge on the tool rollers.
- While holding the brake pipe firmly against the stripping tool roller ledges, rotate the thumbwheel of the tool until the blade contacts the brake pipe coated surface.

NOTE: **Do not gouge the metal surface of the brake pipe.**

- Rotate the stripping tool in a clockwise direction, ensuring that the brake pipe end remains against the tool roller ledges.
- After each successive revolution of the stripping tool, carefully rotate the thumbwheel of the tool clockwise, in order to continue stripping the coating from the brake pipe until the metal pipe surface is exposed.
- Loosen the thumbwheel of the tool and remove the brake pipe.

NOTE: **Ensure that all loose remnants of the nylon coating have been removed from the brake pipe.**

- Inspect the stripped end of the brake pipe to ensure that the proper amount of coating has been removed.

Specification

  - 6.35 mm (0.250 in) for 4.76 mm (3/16 in) diameter pipe
  - 9.50 mm (0.374 in) for 6.35 mm (1/4 in) and 7.94 mm (5/16 in) diameter pipe

cardiagn.com

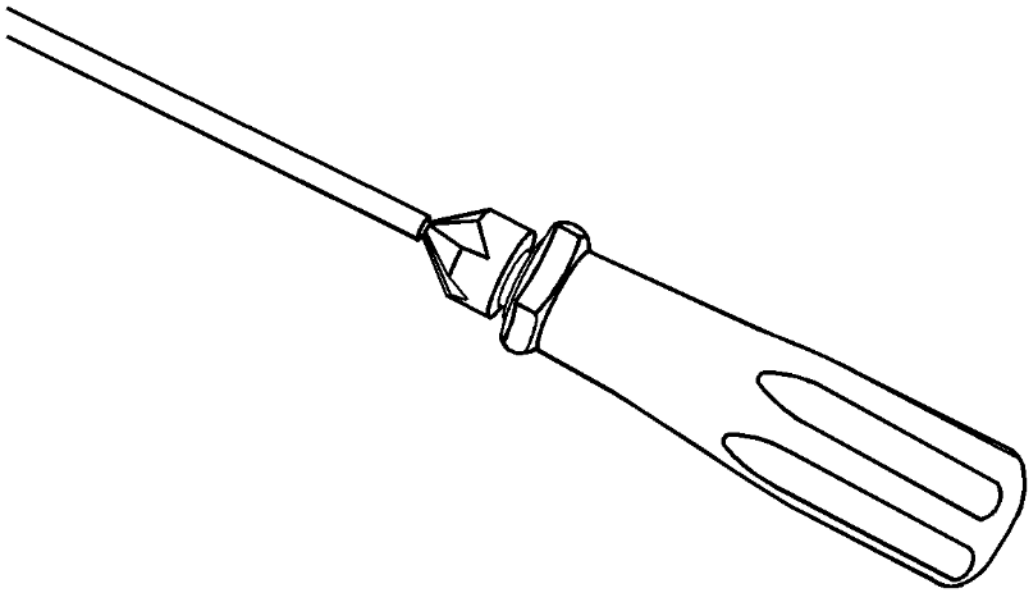

Fig. 87: Chamfering Pipe Using De-Burring Tool
Courtesy of GENERAL MOTORS COMPANY

10. Chamfer the inside and outside diameter of the pipe with the de-burring tool included in the **CH-45405** Brake Pipe Flaring Kit.
11. Install the tube nuts on the brake pipe, noting their orientation.
12. Clean the brake pipe and the **CH-45405** Brake Pipe Flaring Kit of lubricant, contaminants, and debris.

cardiagn.com

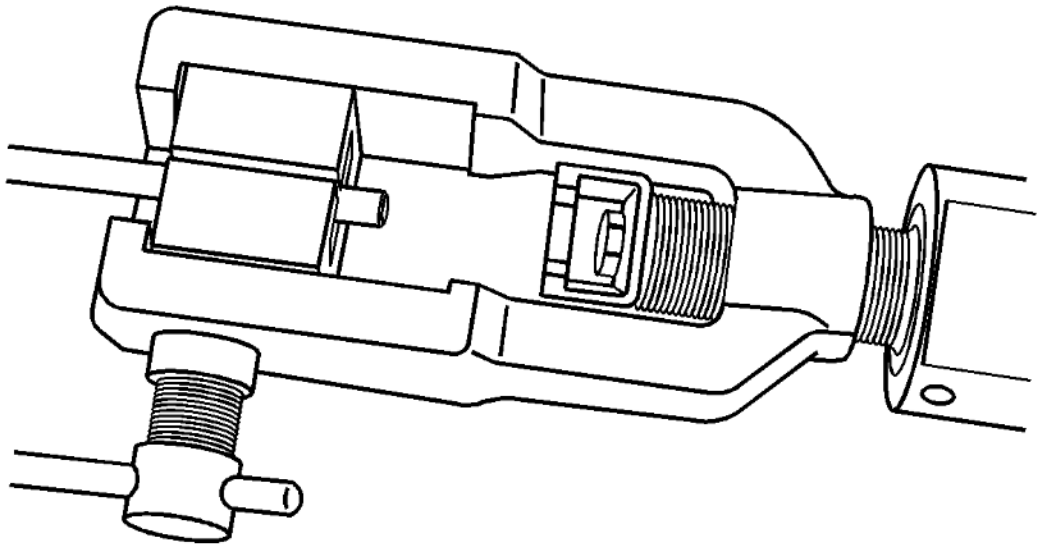

Fig. 88: Installing Die Halves Into Die Cage
Courtesy of GENERAL MOTORS COMPANY

13. Loosen the die clamping screw of the **CH-45405** Brake Pipe Flaring Kit.
14. Select the corresponding die set and install the die halves into the die cage with the full, flat face of one die facing the clamping screw, and the counterbores of both dies facing the forming ram.

cardiagn.com

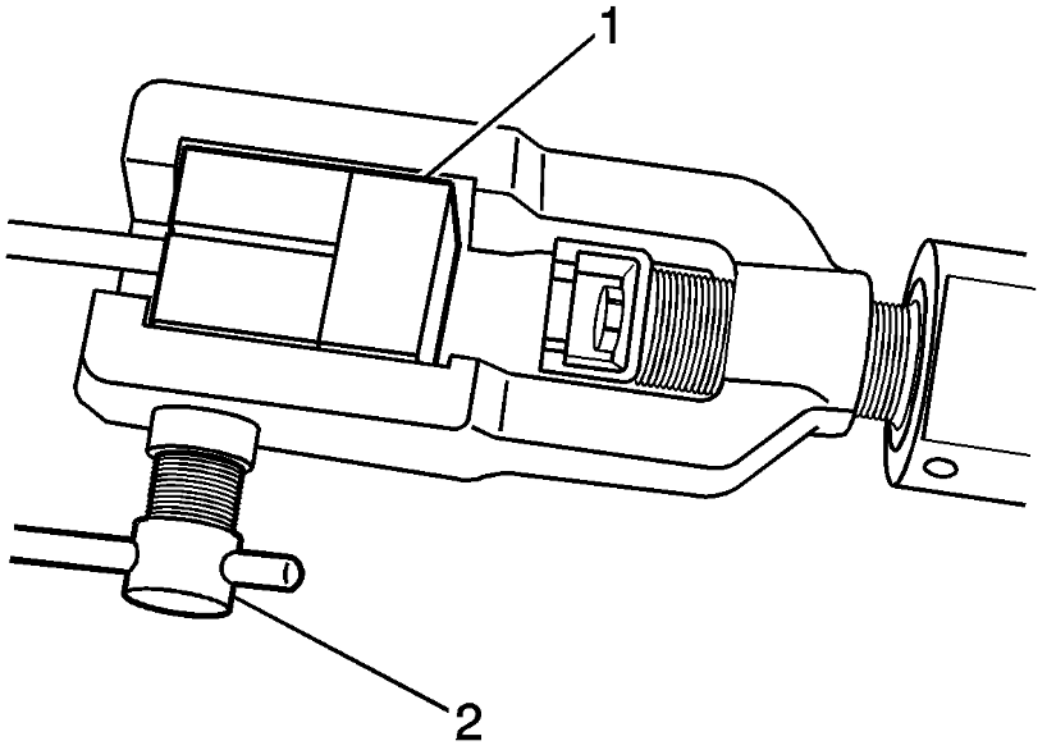

Fig. 89: Clamping Screw And Unused Die
Courtesy of GENERAL MOTORS COMPANY

15. Place the flat face of an unused die (1) against the die halves in the clamping cage and hold firmly against the counterbored face of the dies.
16. Insert the prepared end of the pipe to be flared through the back of the dies until the pipe is seated against the flat surface of the unused die (1).
17. Remove the unused die (1).
18. Ensure that the rear of both dies are seated firmly against the enclosed end of the die cage.

cardiagn.com

19. Firmly hand tighten the clamping screw (2) against the dies.

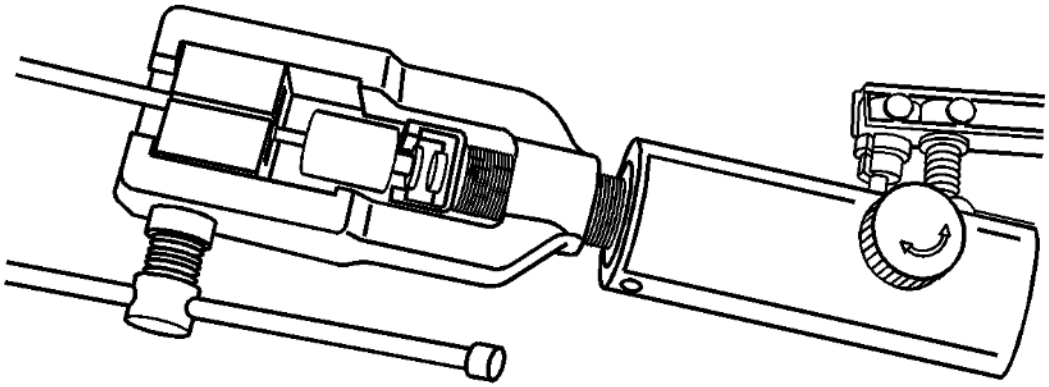

Fig. 90: Rotating Body Of Special Tool To Bottom Against Die Cage
Courtesy of GENERAL MOTORS COMPANY

20. Select the appropriate forming mandrel and place into the forming ram.
21. Rotate the hydraulic fluid control valve clockwise to the closed position.
22. Rotate the body of the **CH-45405** Brake Pipe Flaring Kit until it bottoms against the die cage.

cardiagn.com

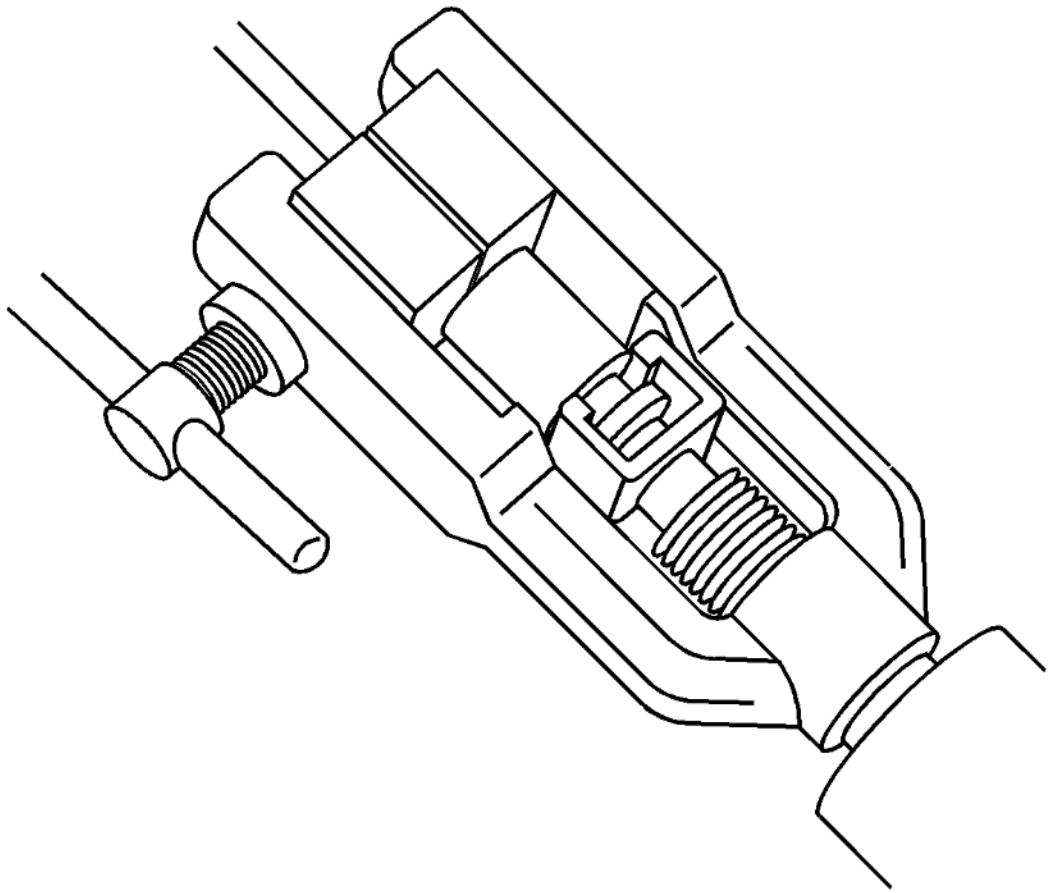

Fig. 91: Bottoming Forming Mandrel Against Clamping Dies Using Pipe Flaring Tool
Courtesy of GENERAL MOTORS COMPANY

23. While guiding the forming mandrel into the exposed end of pipe to be flared, operate the lever of the **CH-45405** Brake Pipe Flaring Kit until the forming mandrel bottoms against the clamping dies.
24. Rotate the hydraulic fluid control valve counterclockwise to the open position to allow the hydraulic forming ram to retract.

cardiagn.com

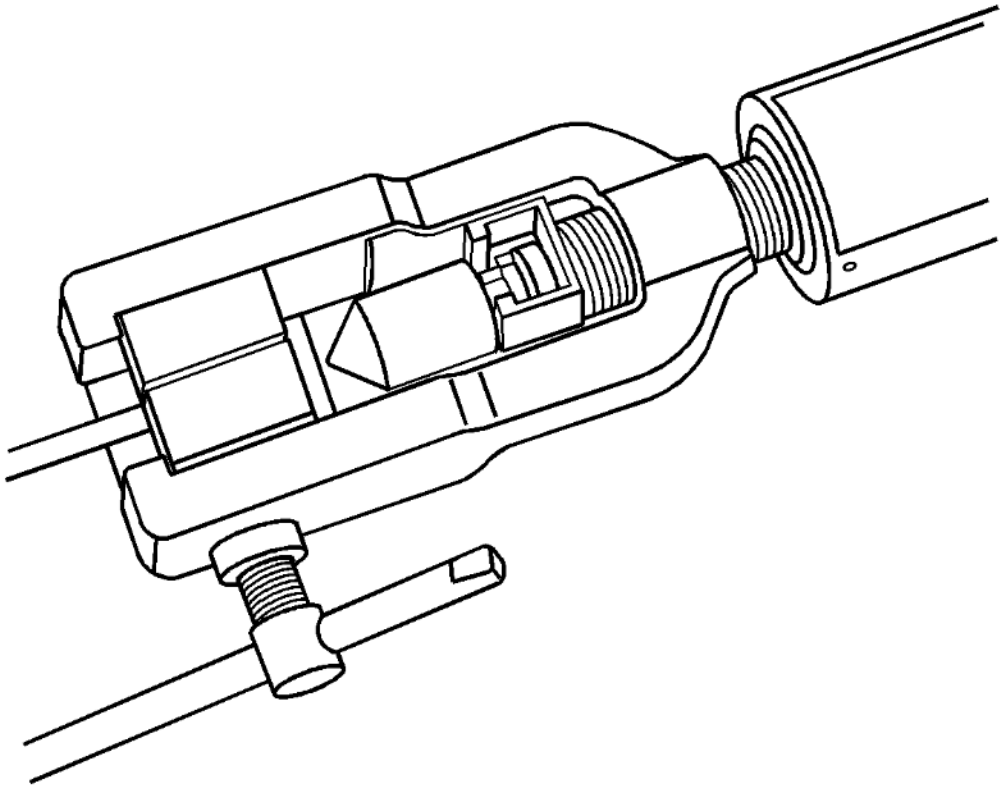

Fig. 92: Using Pipe Flaring Tool
Courtesy of GENERAL MOTORS COMPANY

25. Insert the finishing cone into the forming ram.
26. Rotate the hydraulic fluid control valve clockwise to the closed position.
27. Rotate the body of the **CH-45405** Brake Pipe Flaring Kit until it bottoms against the die cage.
28. While guiding the finishing cone into the exposed end of pipe to be flared, operate the lever of the **CH-45405** Brake Pipe Flaring Kit until the

cardiagn.com

finishing cone bottoms against the dies.

29. Rotate the hydraulic fluid control valve counterclockwise to the open position to allow the hydraulic forming ram to retract.
30. Loosen the die clamping screw and remove the dies and pipe.
31. If necessary, lightly tap the dies until the die halves separate.

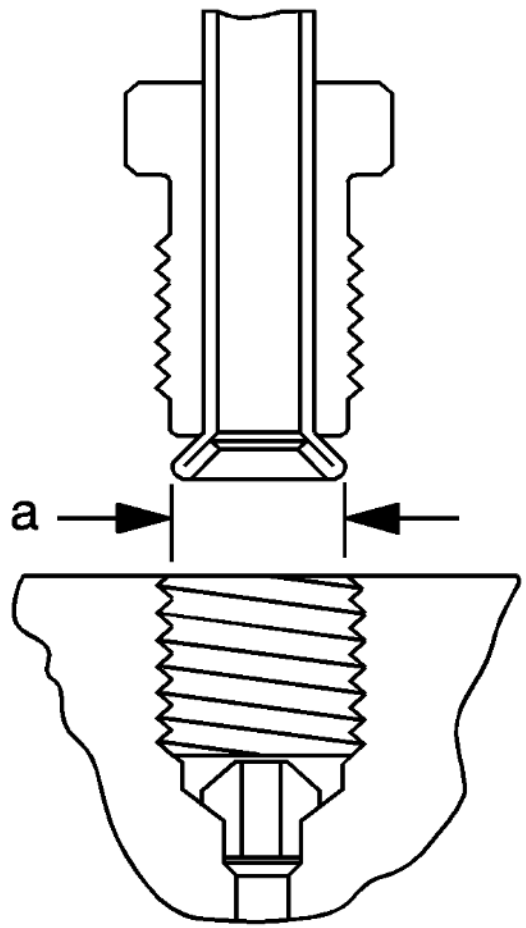

Fig. 93: Correct Brake Pipe Flare Shape And Diameter
Courtesy of GENERAL MOTORS COMPANY

cardiagn.com

32. Inspect the brake pipe flare for correct shape and diameter (a).

Specification

- 6.74-7.10 mm (0.265-0.279 in) flare diameter for 4.76 mm (3/16 in) diameter pipe
- 8.57-9.27 mm (0.344-0.358 in) flare diameter for 6.35 mm (1/4 in) diameter pipe
- 10.42-10.79 mm (0.410-0.425 in) flare diameter for 7.94 mm (5/16 in) diameter pipe

33. If necessary, using the removed section of brake pipe as a template, shape the new pipe with a suitable brake pipe bending tool.

NOTE: **When installing the pipe, maintain a clearance of 19 mm (3/4 in) from all moving or vibrating components.**

34. Install the pipe to the vehicle with the appropriate brake pipe unions, as required.
35. If previously released, secure the brake pipe to the retainers.
36. Bleed the hydraulic brake system. Refer to **Hydraulic Brake System Bleeding (Pressure)Hydraulic Brake System Bleeding (Manual)**.
37. With the aid of an assistant, inspect the brake pipe flares for leaks by starting the engine and applying the brakes.

FRONT BRAKE HOSE REPLACEMENT (JD9)

Removal Procedure

WARNING: **Refer to Brake Dust Warning .**

WARNING: **Refer to Brake Fluid Irritant Warning .**

1. Raise and support the vehicle. Refer to **Lifting and Jacking the Vehicle** .
2. Remove the tire and wheel assembly. Refer to **Tire and Wheel Removal and Installation (6-Lug Wheel)** **Tire and Wheel Removal and Installation (8-Lug Wheel)** .

cardiagn.com

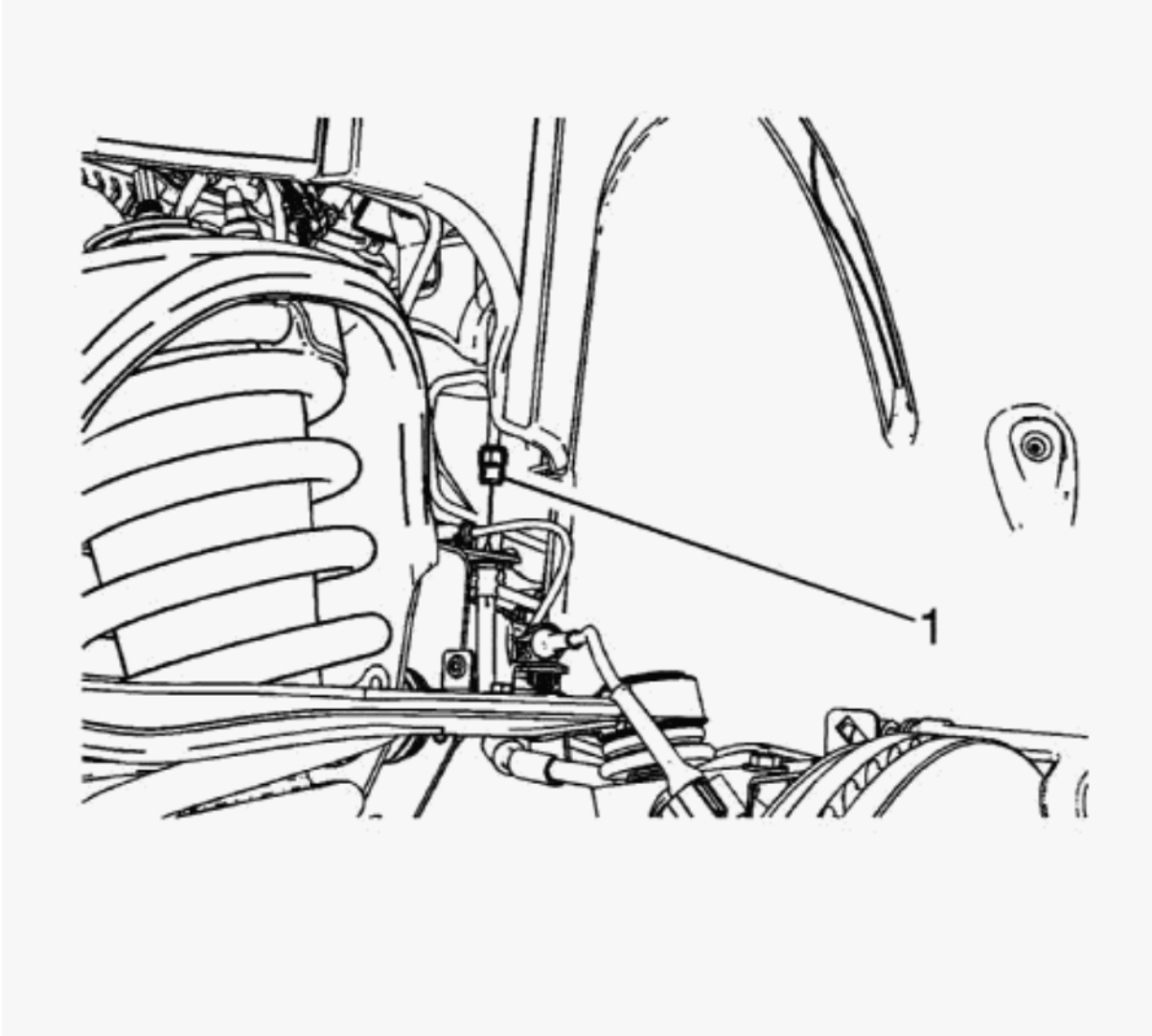

Fig. 94: Brake Pipe Fitting
Courtesy of GENERAL MOTORS COMPANY

3. Disconnect the brake pipe fitting (1).
4. Cap the brake pipe fitting to prevent brake fluid loss and contamination.

cardiagn.com

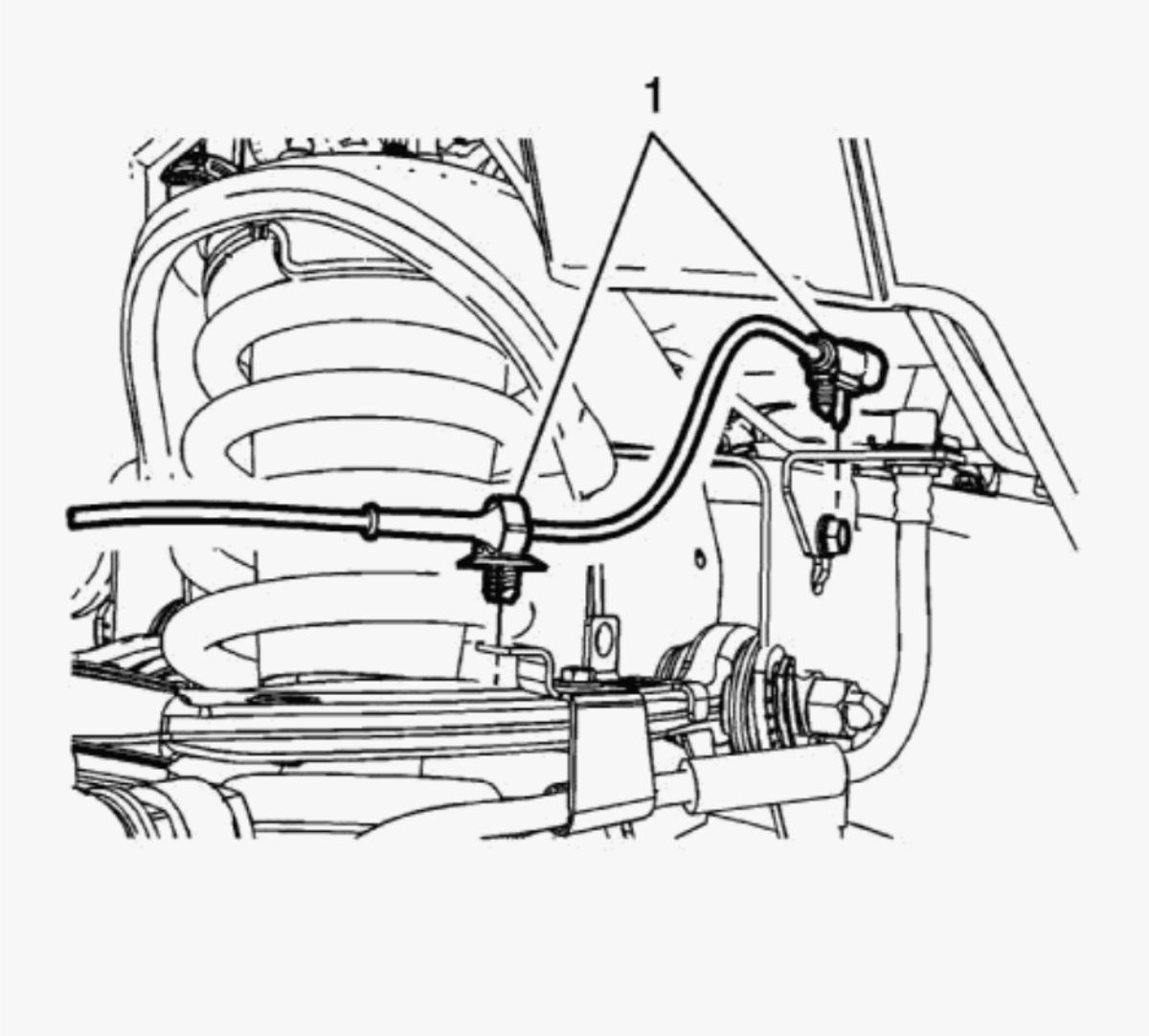

Fig. 95: Wheel Speed Sensor Harness Retainers
Courtesy of GENERAL MOTORS COMPANY

5. Release the wheel speed sensor harness retainers (1) from the brake hose brackets.

cardiagn.com

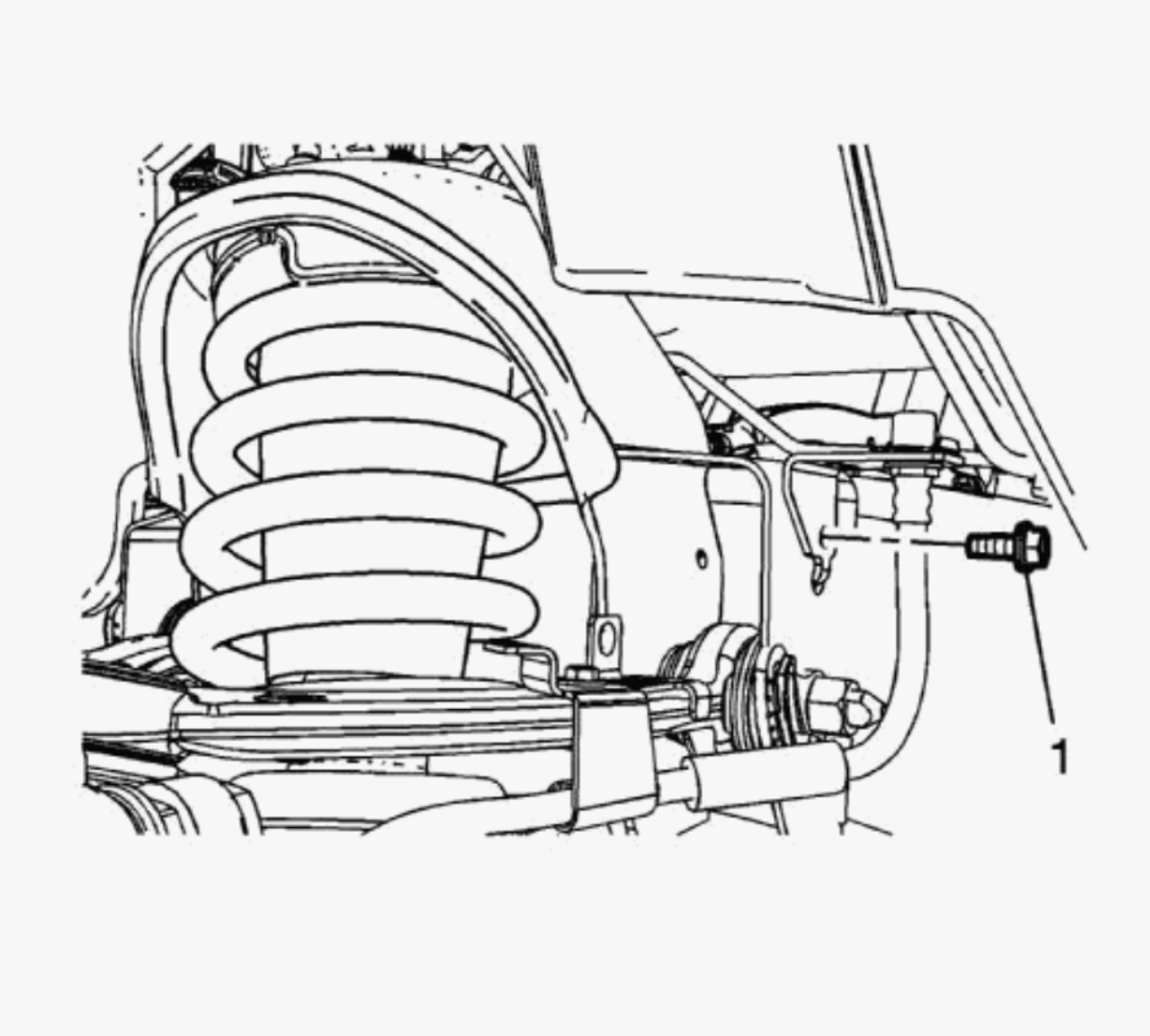

Fig. 96: Brake Hose Bracket Bolt
Courtesy of GENERAL MOTORS COMPANY

6. Remove the brake hose bracket bolt (1) from the frame.

cardiagn.com

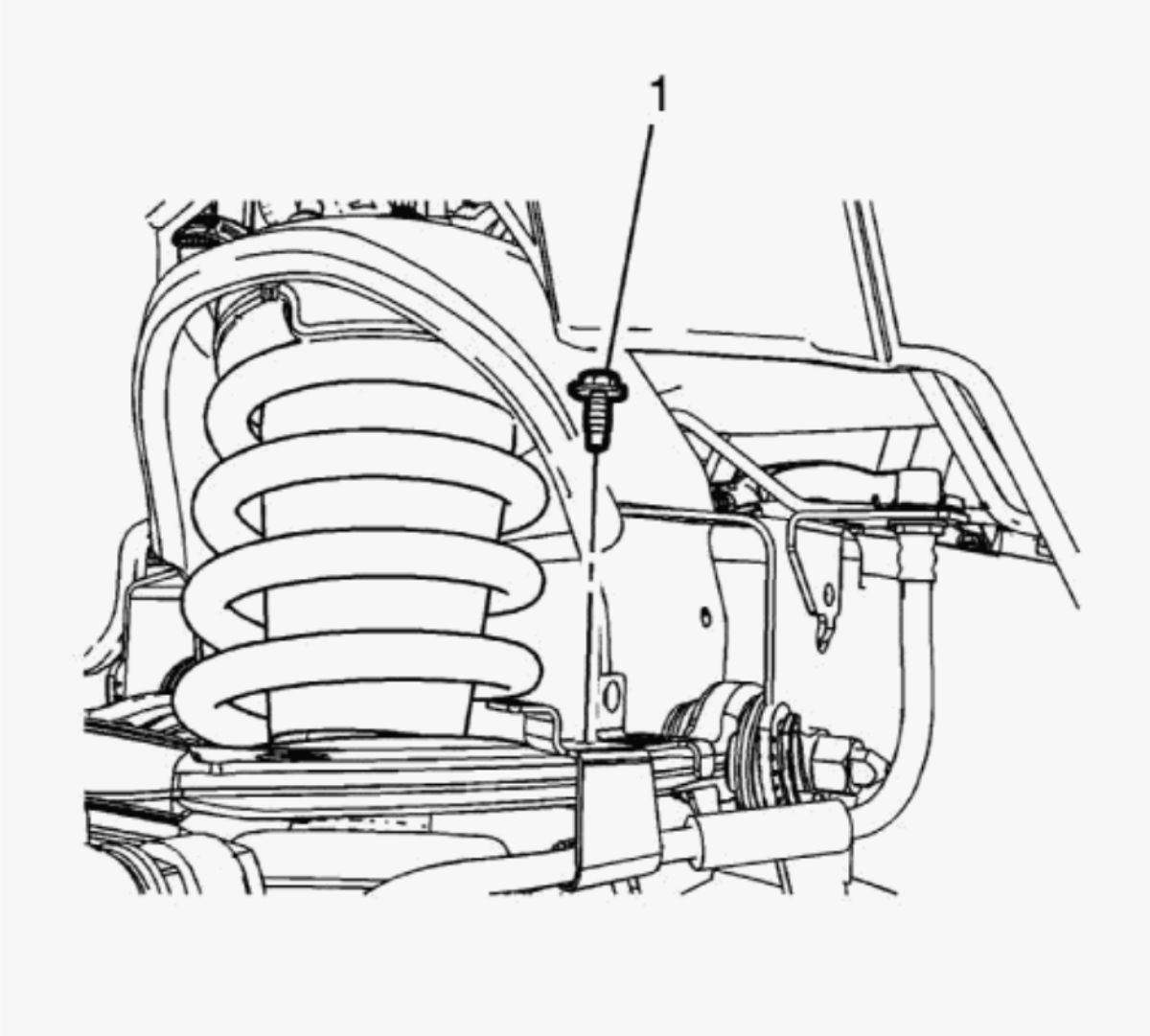

Fig. 97: Brake Hose Bracket Bolt
Courtesy of GENERAL MOTORS COMPANY

7. Remove the brake hose bracket bolt (1) from the upper control arm.

cardiagn.com

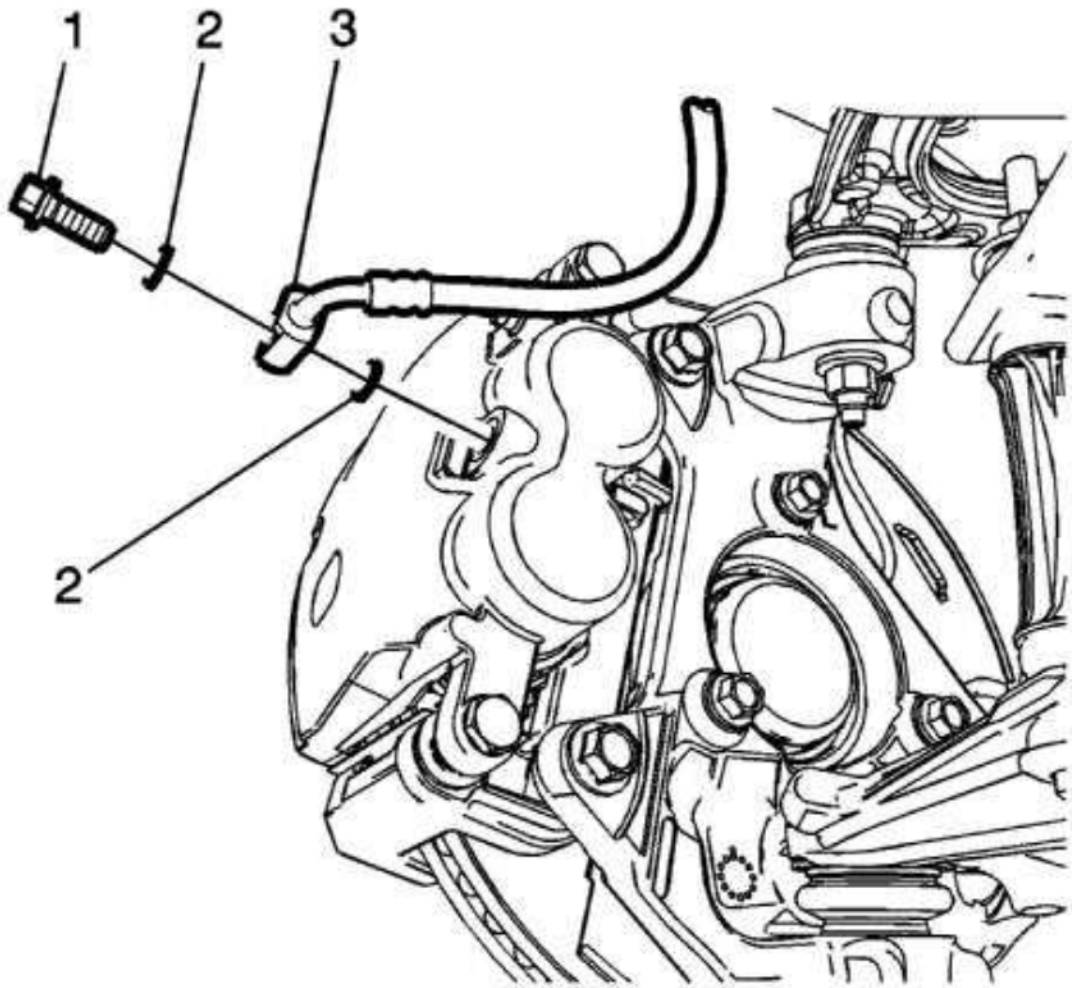

Fig. 98: Brake Hose Fitting Bolt
Courtesy of GENERAL MOTORS COMPANY

8. Remove the brake hose fitting bolt (1).

NOTE: **Do not reuse the brake hose fitting gaskets.**

9. Remove and discard the brake hose fitting gaskets (2) from the brake hose (3).

cardiagn.com

10. Remove the brake hose.

Installation Procedure

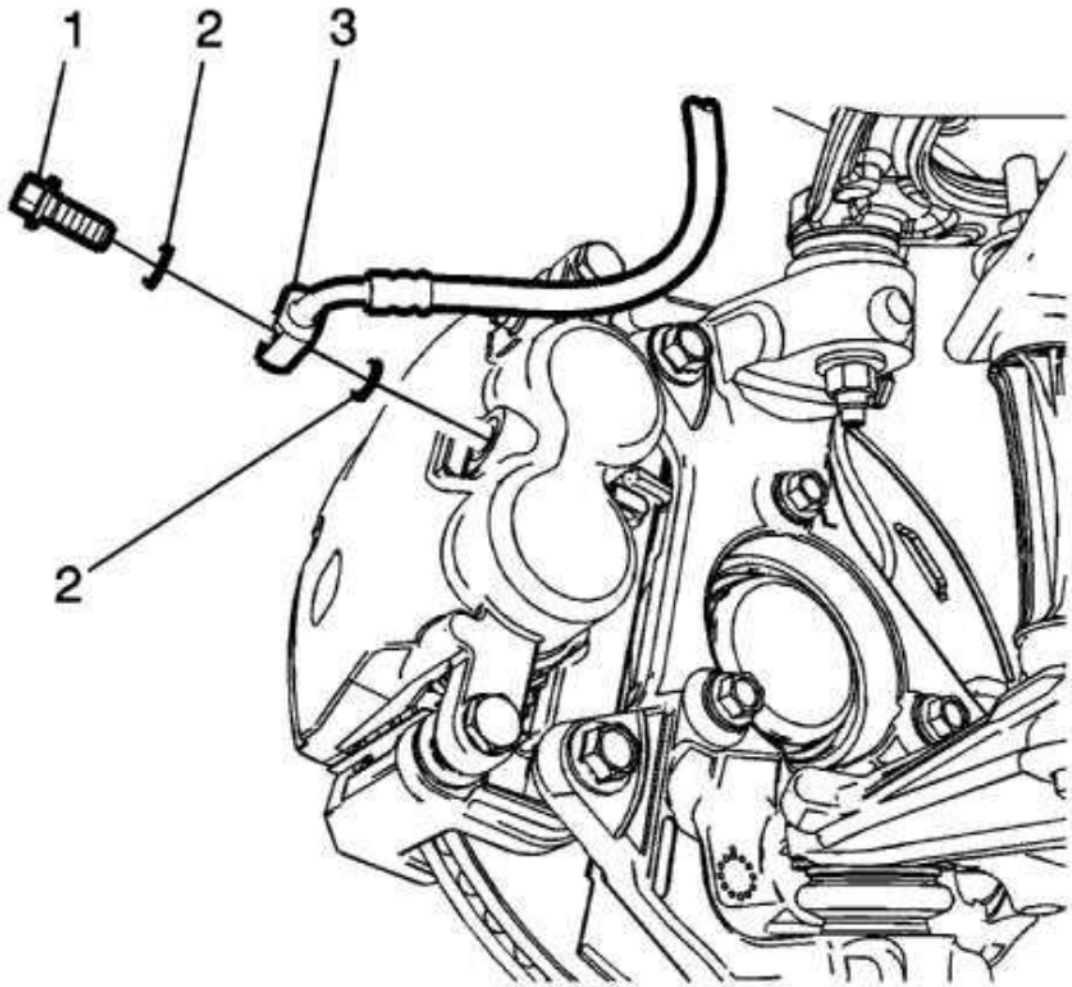

Fig. 99: Brake Hose Fitting Bolt
Courtesy of GENERAL MOTORS COMPANY

1. Assemble the brake hose fitting bolt (1) with 2 new brake hose fitting gaskets (2) to the brake hose (3).

cardiagn.com

CAUTION: **Refer to Fastener Caution .**

2. Install the brake hose assembly to the brake caliper and tighten the brake hose fitting bolt to 40 N.m (30 lb ft).

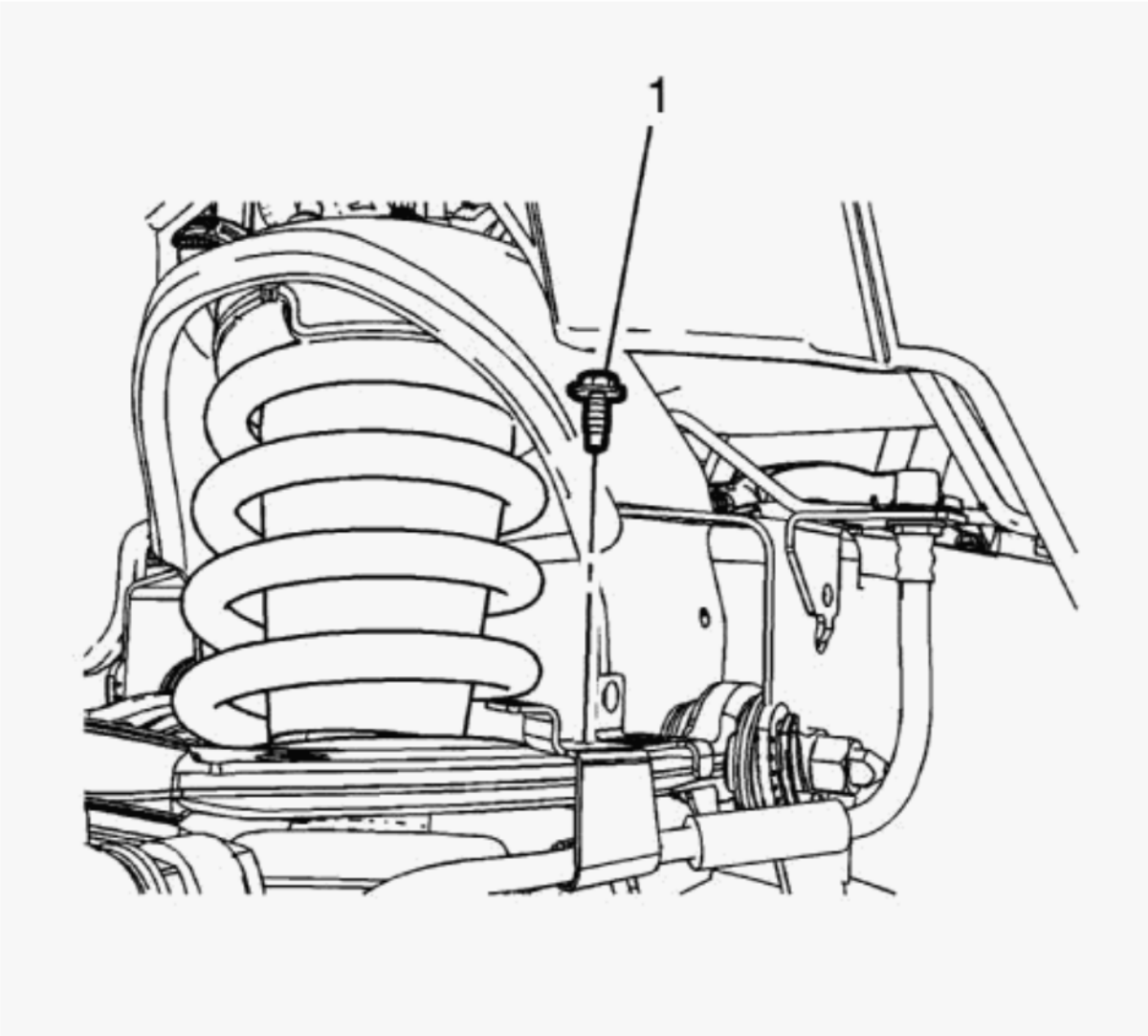

Fig. 100: Brake Hose Bracket Bolt
Courtesy of GENERAL MOTORS COMPANY

3. Install the brake hose bracket and bolt (1) to the upper control arm and tighten the bolt to 12 N.m (106 lb in).

cardiagn.com

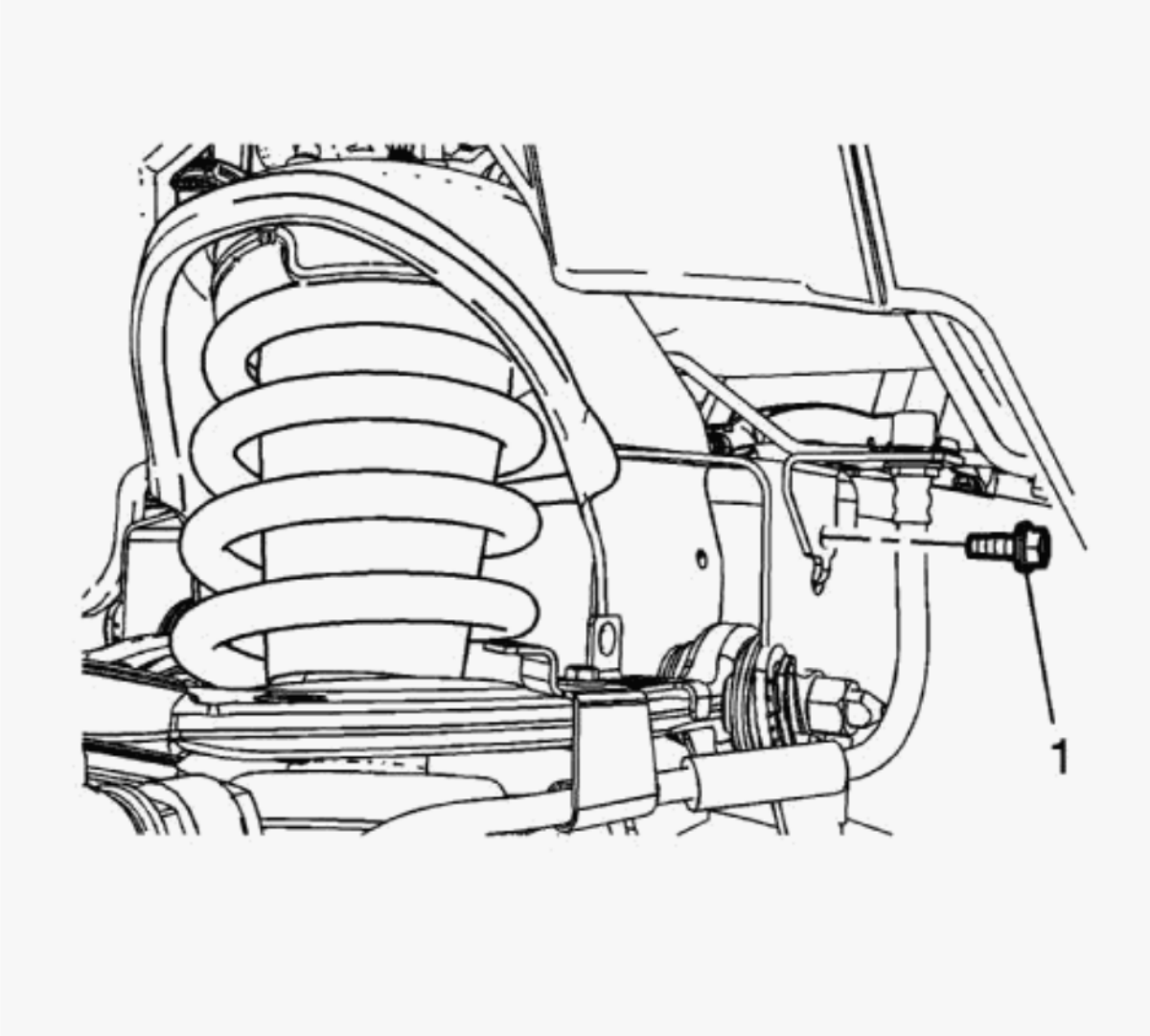

Fig. 101: Brake Hose Bracket Bolt
Courtesy of GENERAL MOTORS COMPANY

4. Install the brake hose bracket and bolt (1) to the frame and tighten the bolt to 12 N.m (106 lb in).

cardiagn.com

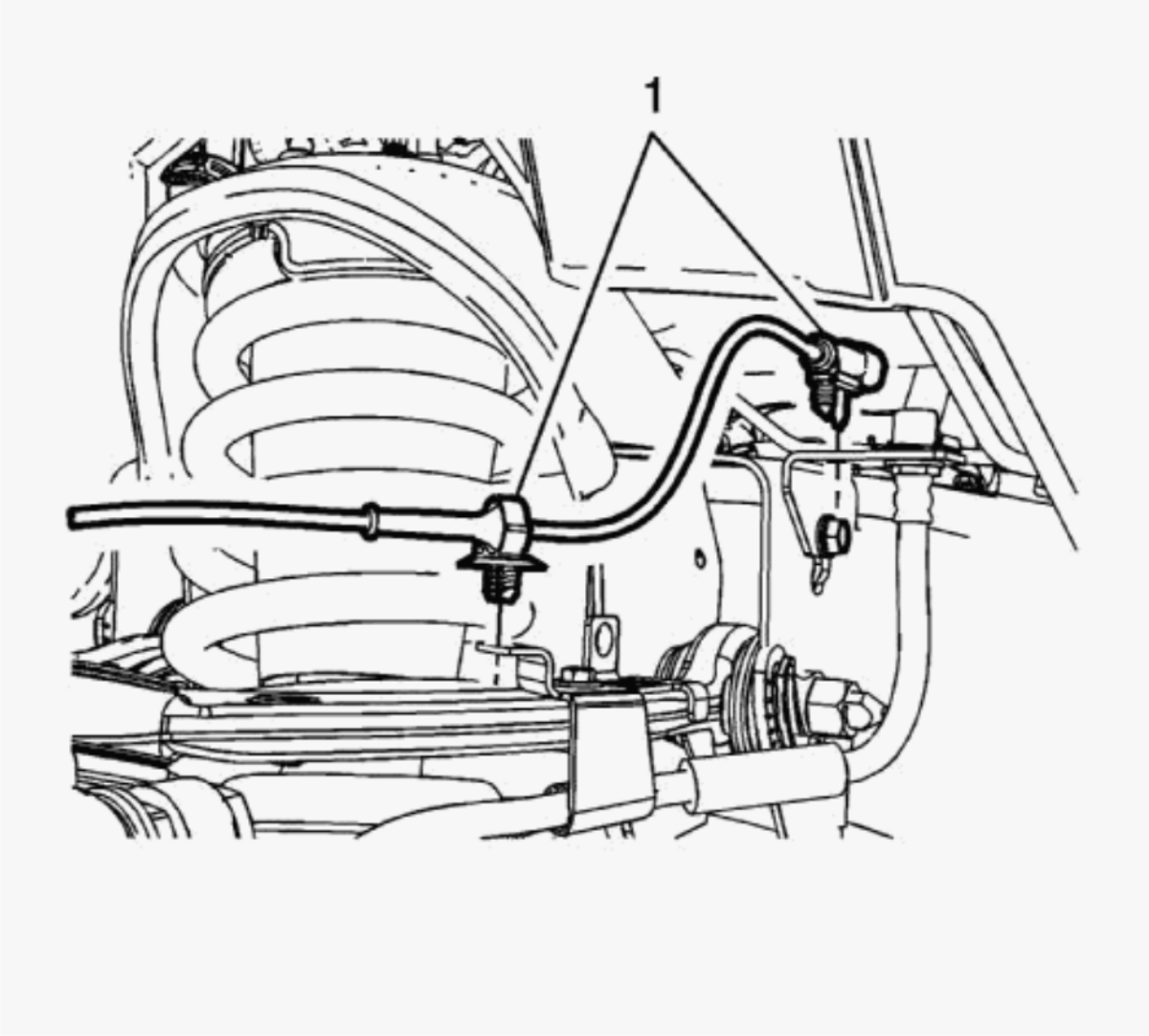

Fig. 102: Wheel Speed Sensor Harness Retainers
Courtesy of GENERAL MOTORS COMPANY

5. Secure the wheel speed sensor harness retainers (1) to the brake hose brackets.

cardiagn.com

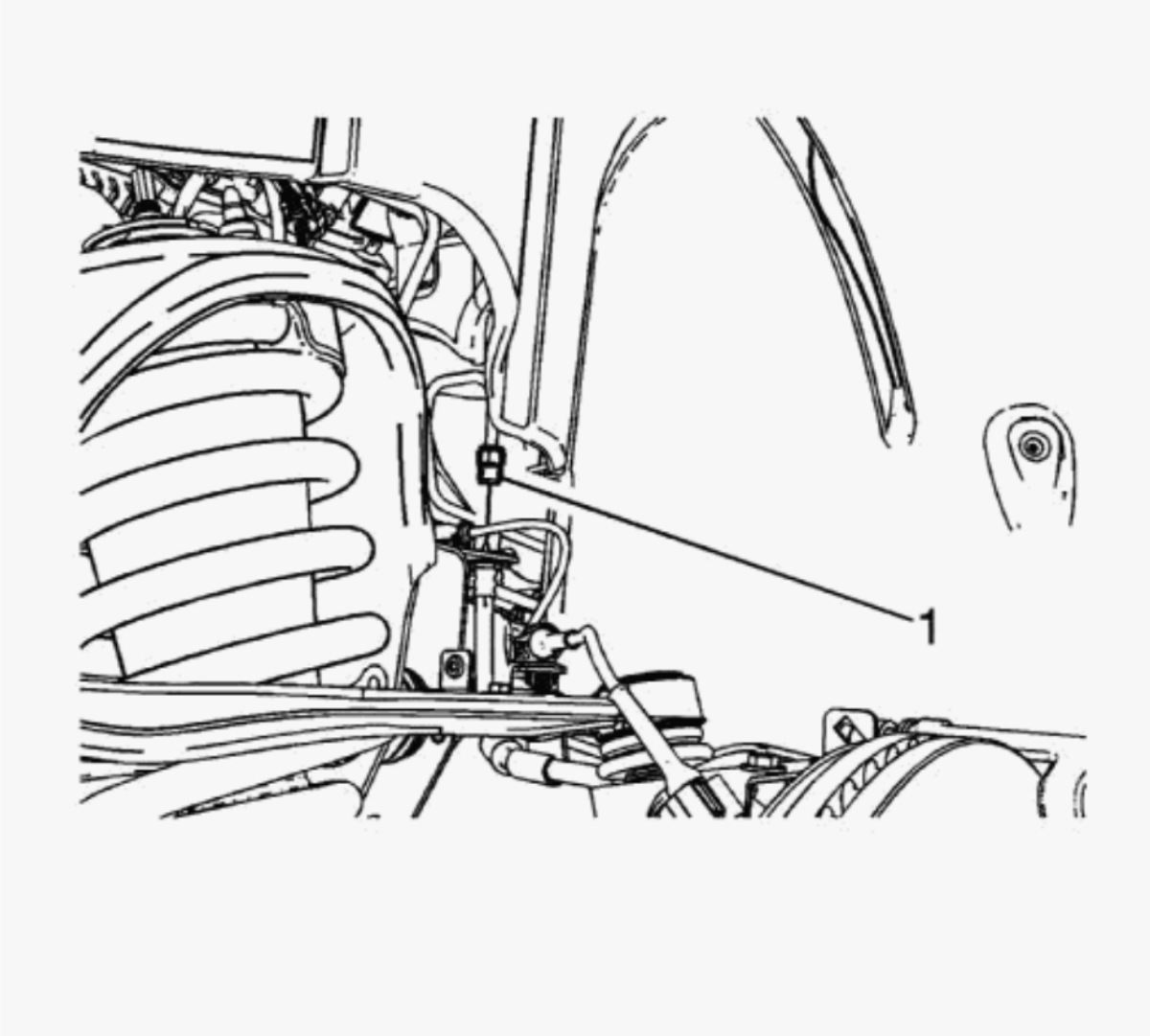

Fig. 103: Brake Pipe Fitting
Courtesy of GENERAL MOTORS COMPANY

6. Connect the brake pipe fitting (1) and tighten to 25 N.m (18 lb ft).
7. Bleed the hydraulic brake system. Refer to **Hydraulic Brake System Bleeding (Pressure)Hydraulic Brake System Bleeding (Manual)**.
8. Install the tire and wheel assembly. Refer to **Tire and Wheel Removal and Installation (6-Lug Wheel)** **Tire and Wheel Removal and Installation (8-Lug Wheel)** .

cardiagn.com

FRONT BRAKE HOSE REPLACEMENT (J95)

Removal Procedure

WARNING: Refer to Brake Dust Warning .

WARNING: Refer to Brake Fluid Irritant Warning .

1. Raise and support the vehicle. Refer to Lifting and Jacking the Vehicle
2. Remove the tire and wheel assembly. Refer to Tire and Wheel Removal and Installation (6-Lug Wheel) Tire and Wheel Removal and Installation (8-Lug Wheel)

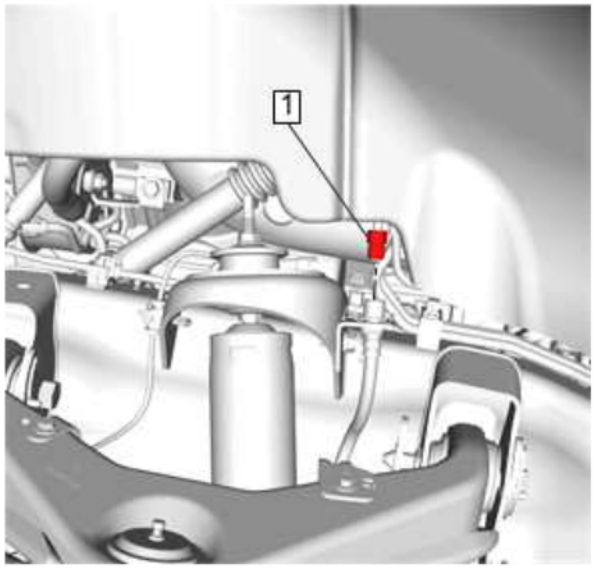

Fig. 104: Brake Pipe Fitting
Courtesy of GENERAL MOTORS COMPANY

3. Disconnect Brake Pipe Fitting (1)

cardiagn.com

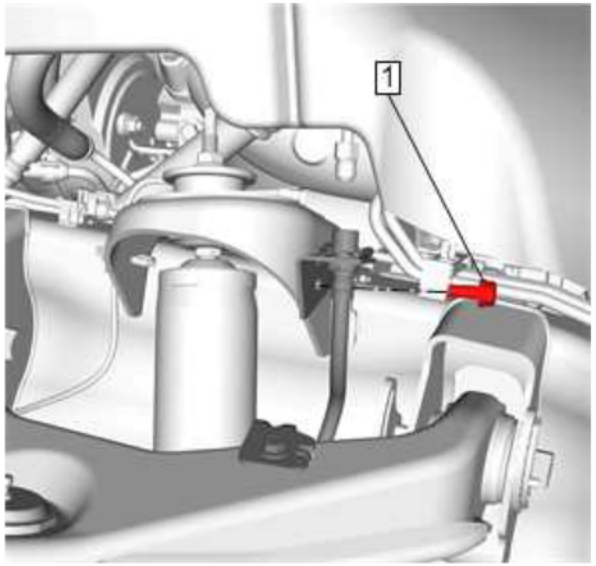

Fig. 105: Brake Hose Bracket Bolt
Courtesy of GENERAL MOTORS COMPANY

4. Remove Brake Hose Bracket Bolt (1)

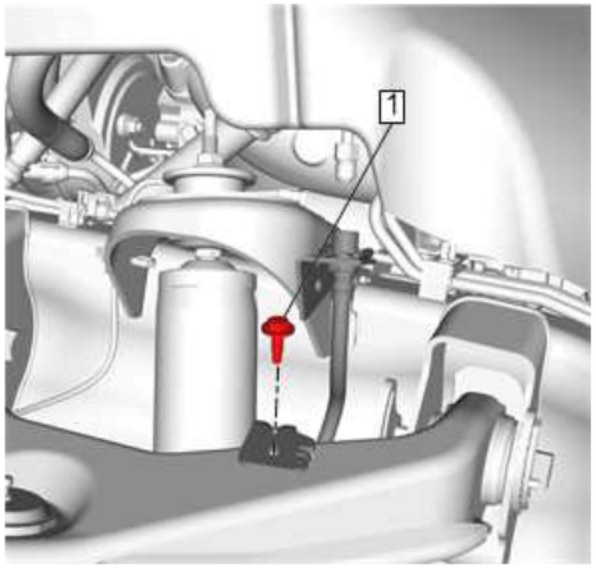

Fig. 106: Brake Hose Bracket Bolt

cardiagn.com

Courtesy of GENERAL MOTORS COMPANY

5. Remove Brake Hose Bracket Bolt (1)

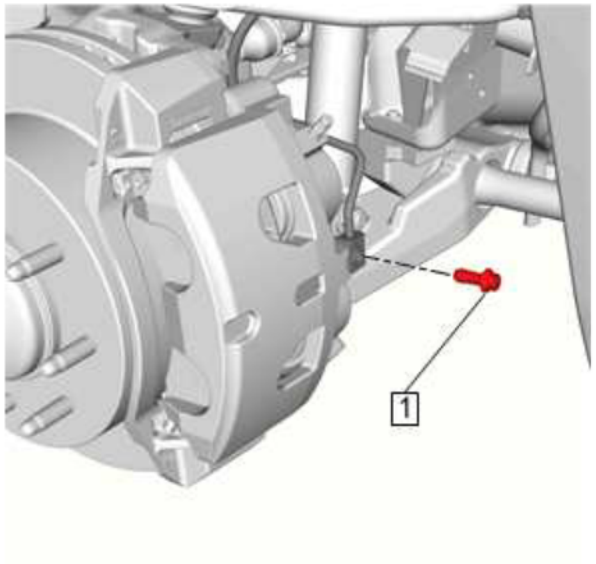

Fig. 107: Brake Hose Fitting Bolt
Courtesy of GENERAL MOTORS COMPANY

6. Remove Brake Hose Fitting Bolt (1)

cardiagn.com

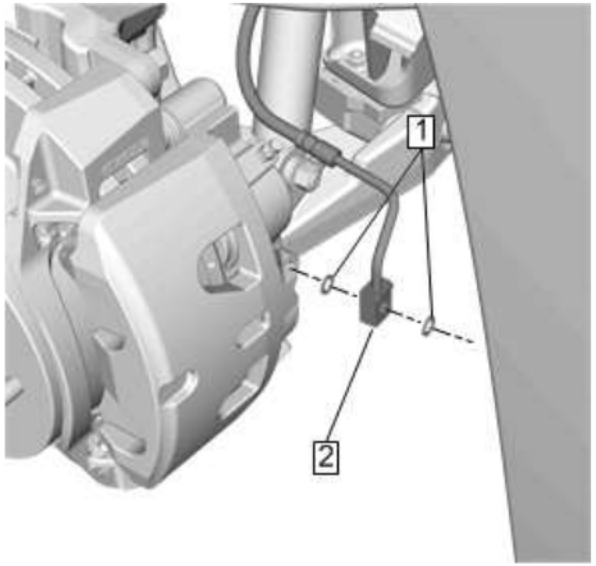

Fig. 108: Brake Hose Fitting And Gaskets
Courtesy of GENERAL MOTORS COMPANY

NOTE: **Do not reuse the brake hose fitting gaskets.**

7. Remove and DISCARD Brake Hose Fitting Gasket (1) (Qty: 2) @ Brake Hose Fitting (2)
8. Plug the caliper inlet to prevent brake fluid loss and contamination.
9. Remove the brake hose.

Installation Procedure

1. Install the brake hose to the vehicle.

cardiagn.com

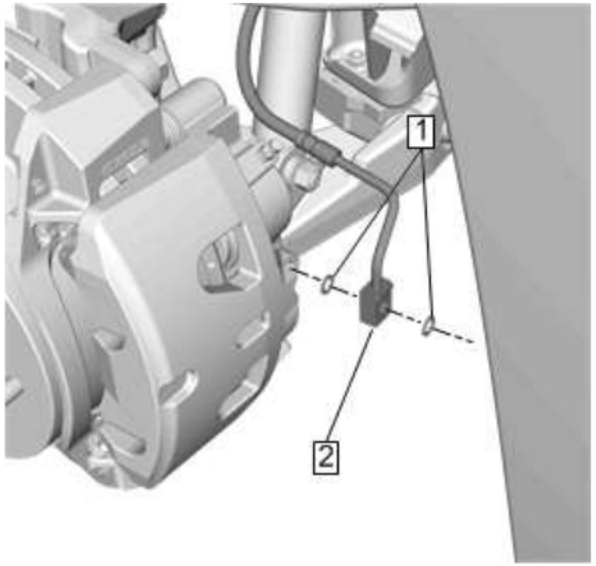

Fig. 109: Brake Hose Fitting And Gaskets
Courtesy of GENERAL MOTORS COMPANY

NOTE: **Install NEW brake hose fitting gaskets.**

2. Install Brake Hose Fitting Gasket (1) (Qty: 2) @ Brake Hose Fitting (2)

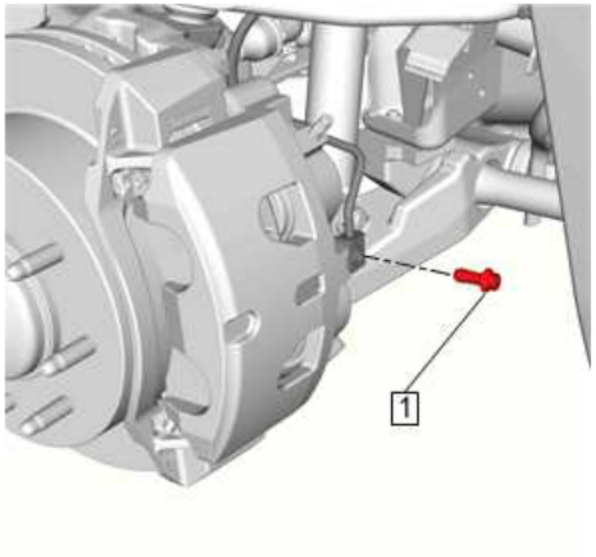

cardiagn.com

Fig. 110: Brake Hose Fitting Bolt
Courtesy of GENERAL MOTORS COMPANY

CAUTION: Refer to Fastener Caution .

3. Install and tighten Brake Hose Fitting Bolt (1) to 40 N.m (30 lb ft)

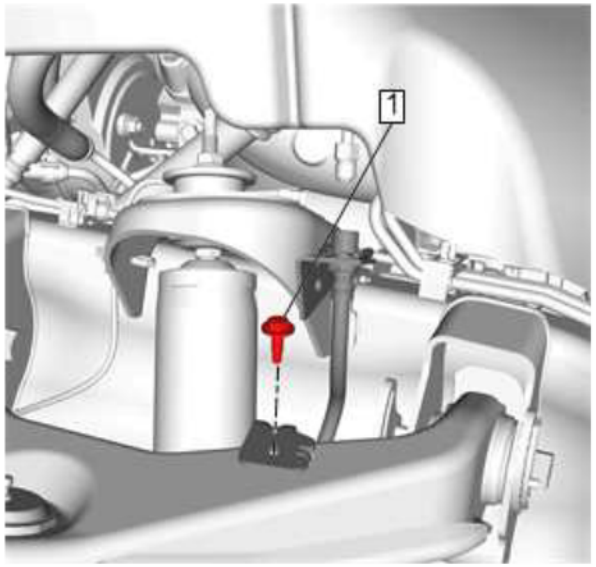

Fig. 111: Brake Hose Bracket Bolt
Courtesy of GENERAL MOTORS COMPANY

4. Install and tighten Brake Hose Bracket Bolt (1) to 9 N.m (80 lb in)

cardiagn.com

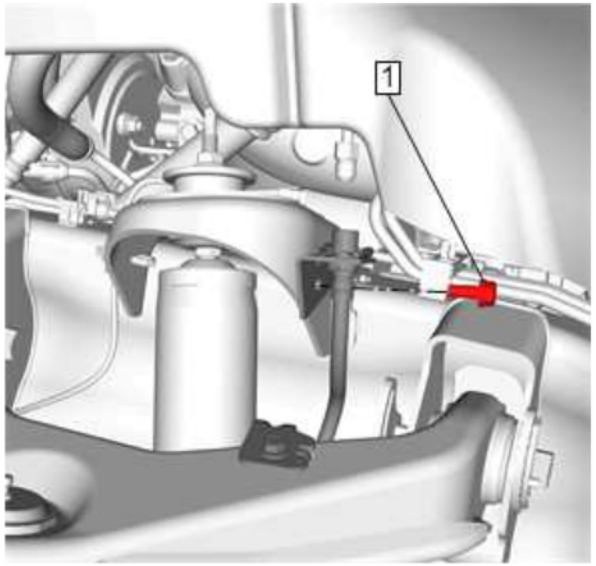

Fig. 112: Brake Hose Bracket Bolt
Courtesy of GENERAL MOTORS COMPANY

5. Install and tighten Brake Hose Bracket Bolt (1) to 9 N.m (80 lb in)

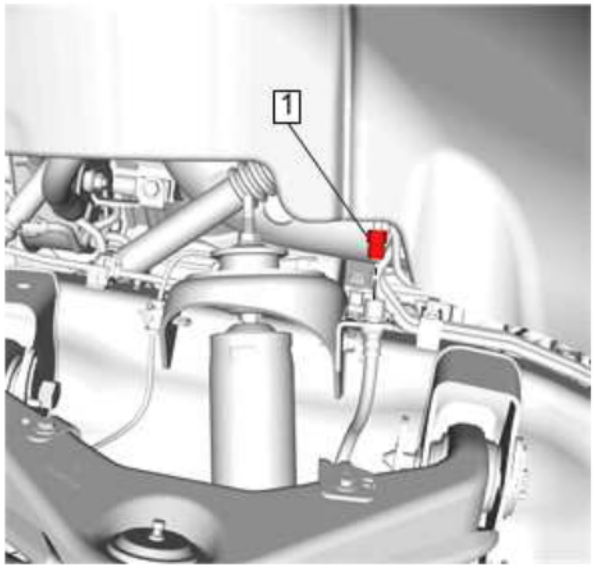

Fig. 113: Brake Pipe Fitting

cardiagn.com

Courtesy of GENERAL MOTORS COMPANY

6. Install and tighten Brake Pipe Fitting (1) to 25 N.m (18 lb ft)
7. Bleed the brake system. Refer to **Hydraulic Brake System Bleeding (Pressure)Hydraulic Brake System Bleeding (Manual)**
8. Install the tire and wheel assembly. Refer to **Tire and Wheel Removal and Installation (6-Lug Wheel)** **Tire and Wheel Removal and Installation (8-Lug Wheel)**

REAR BRAKE HOSE REPLACEMENT (JD9 TO REAR AXLE)

Removal Procedure

WARNING: Refer to Brake Dust Warning .

WARNING: Refer to Brake Fluid Irritant Warning .

1. Raise and support the vehicle. Refer to **Lifting and Jacking the Vehicle** .
2. Remove the spare tire and wheel assembly.
3. Remove any dirt or debris from the brake pipe fittings at the rear brake hose.

cardiagn.com

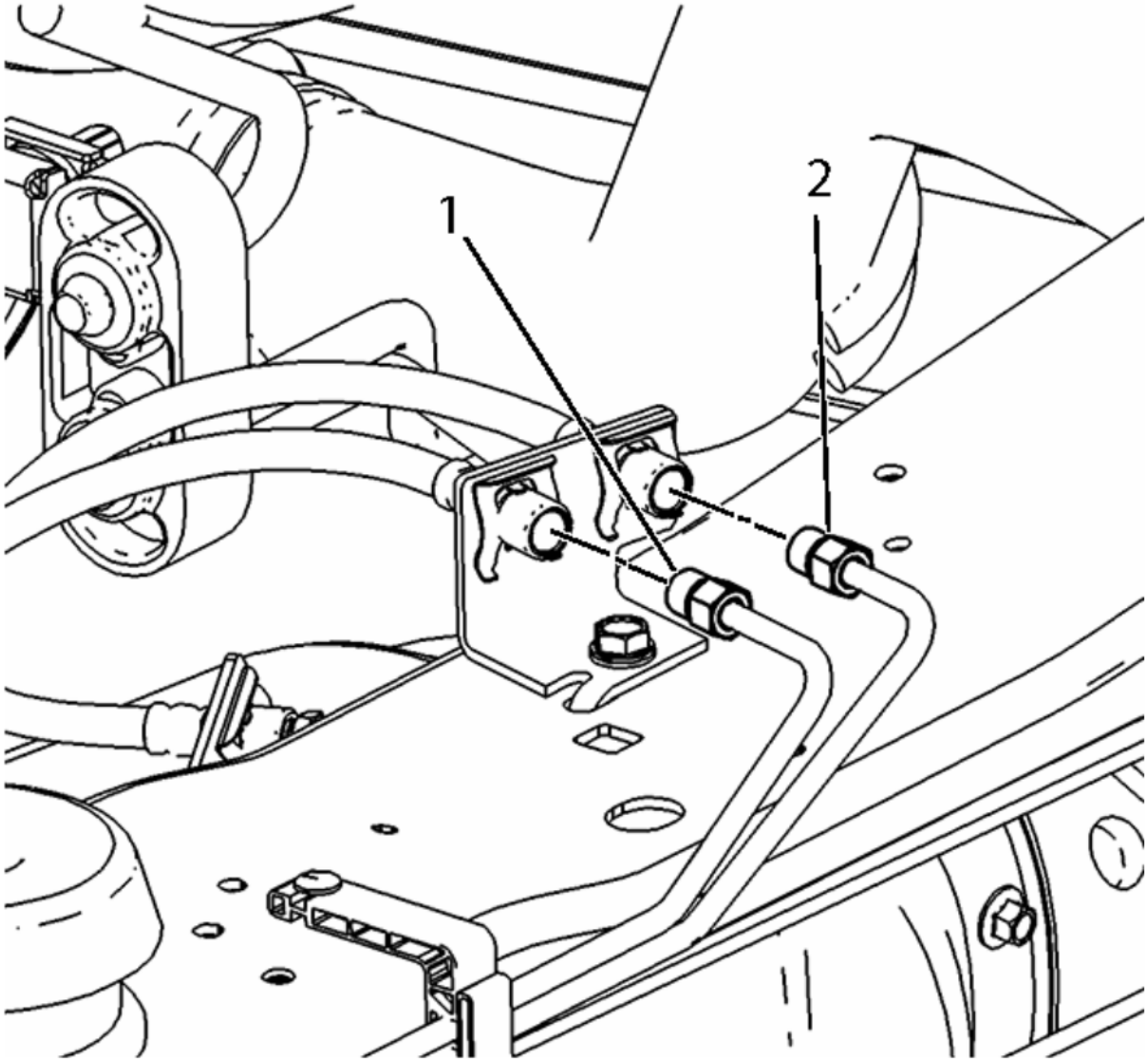

Fig. 114: Left And Right Rear Brake Pipe Fitting
Courtesy of GENERAL MOTORS COMPANY

4. Disconnect the left rear brake pipe fitting (1) from the rear brake hose.
5. Cap the brake pipe fitting to prevent brake fluid loss and contamination.
6. Disconnect the right rear brake pipe fitting (2) from the rear brake hose.

cardiagn.com

7. Cap the brake pipe fitting to prevent brake fluid loss and contamination.

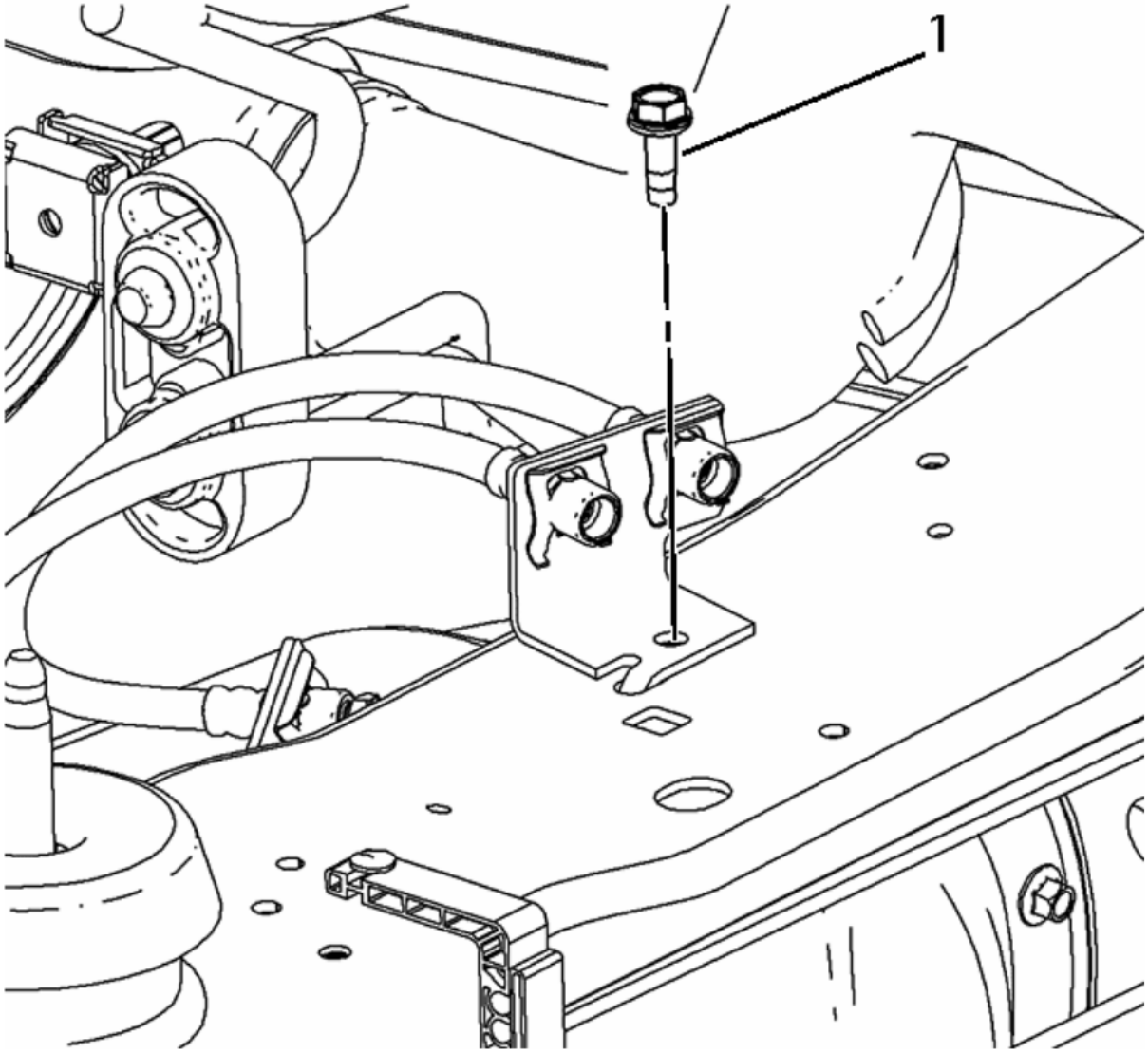

Fig. 115: Brake Hose Bracket Bolt
Courtesy of GENERAL MOTORS COMPANY

8. Remove the brake hose bracket bolt (1) from the frame crossmember.

cardiagn.com

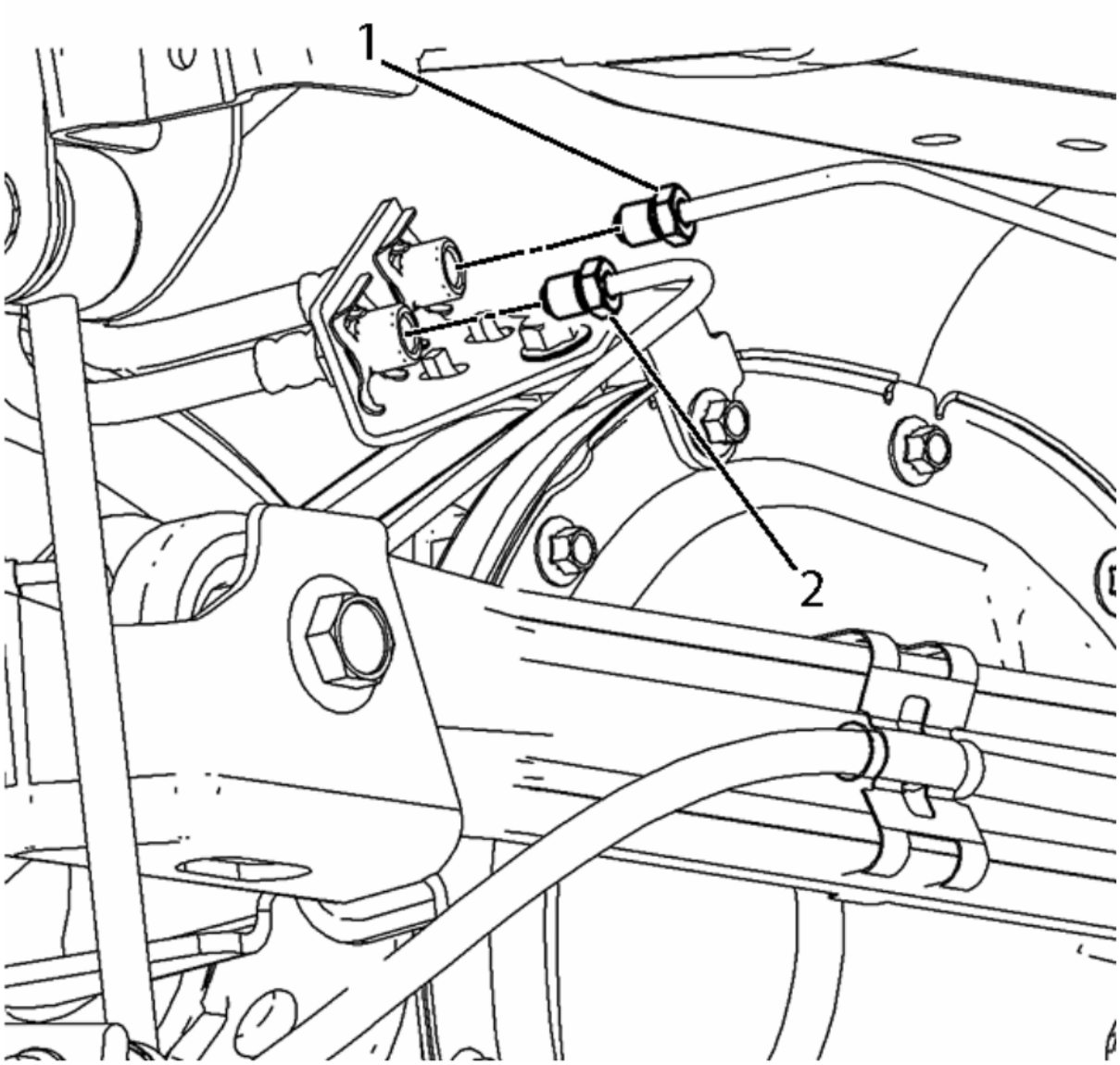

Fig. 116: Right And Left Rear Brake Pipe Fitting
Courtesy of GENERAL MOTORS COMPANY

9. Disconnect the right rear brake pipe fitting (1) from the rear brake hose.
10. Cap the brake pipe fitting to prevent brake fluid loss and contamination.
11. Disconnect the left rear brake pipe fitting (2) from the rear brake hose.

cardiagn.com

12. Cap the brake pipe fitting to prevent brake fluid loss and contamination.

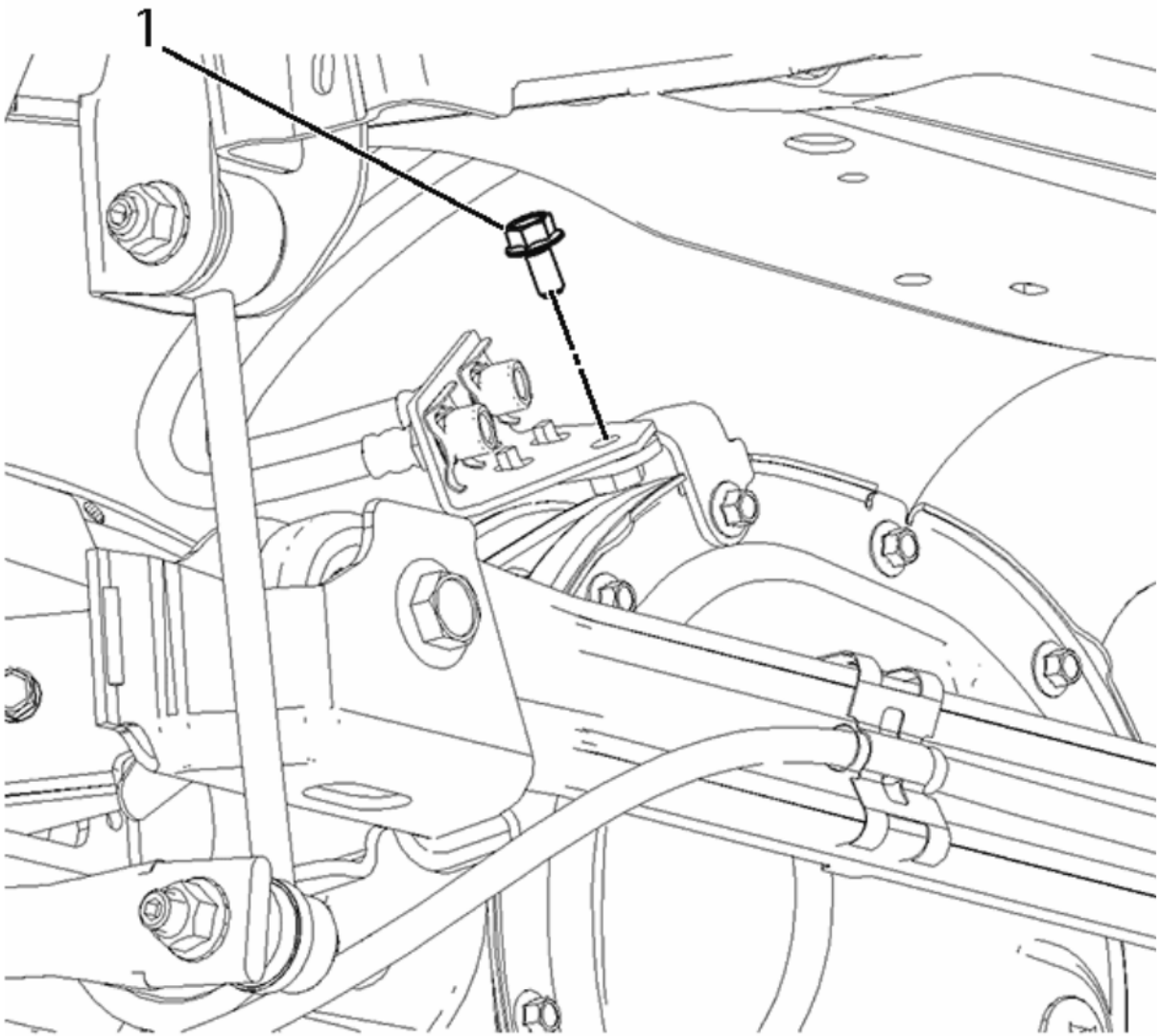

Fig. 117: Brake Hose Bracket Bolt
Courtesy of GENERAL MOTORS COMPANY

13. Remove the brake hose bracket bolt (1) from the rear axle.

cardiagn.com

14. Remove the rear brake hose.

Installation Procedure

1. Install the rear brake hose.

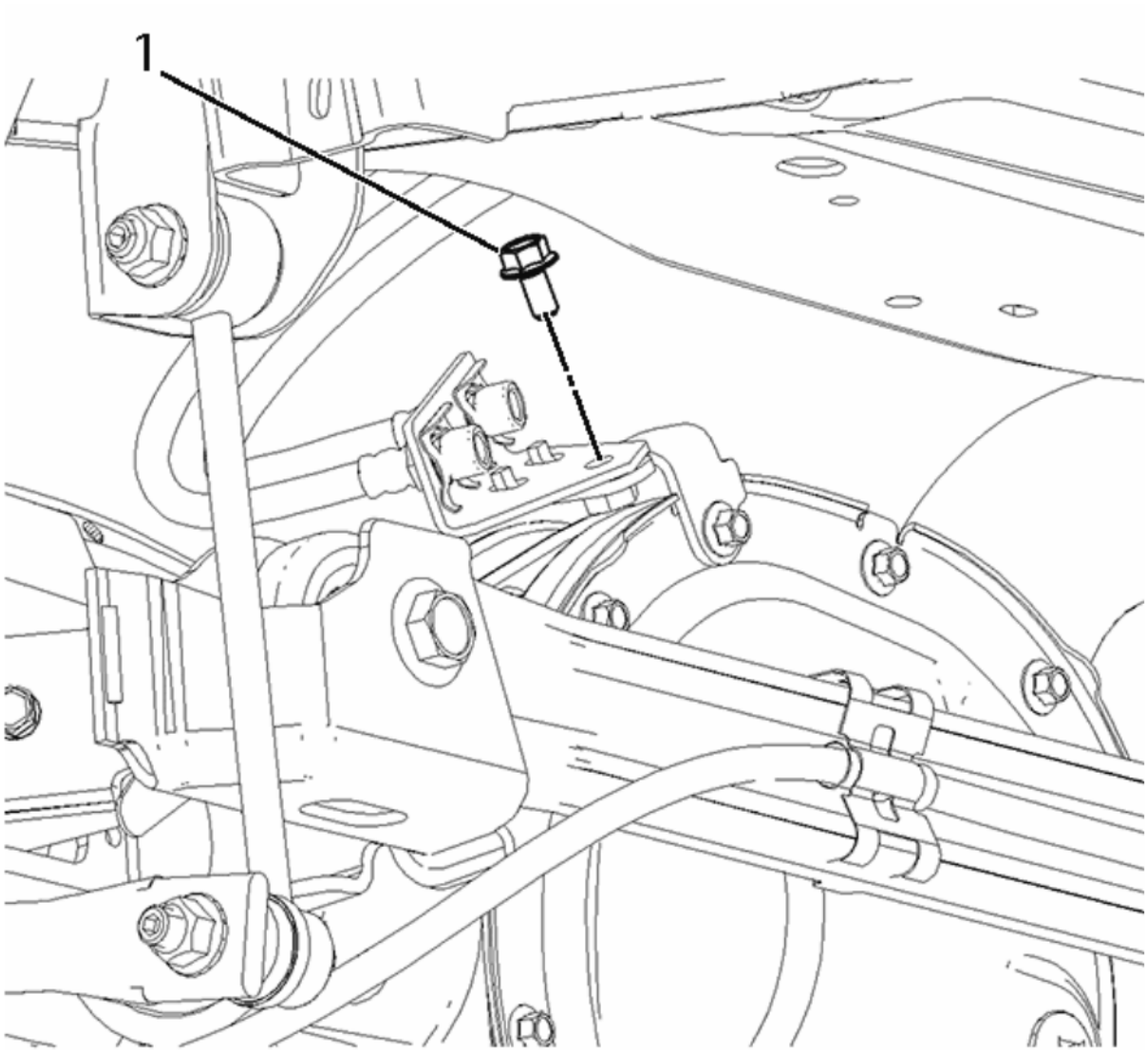

Fig. 118: Brake Hose Bracket Bolt

cardiagn.com

Courtesy of GENERAL MOTORS COMPANY

CAUTION: **Refer to Fastener Caution .**

2. Install the brake hose bracket bolt (1) to the rear axle and tighten to 25 N.m (18 lb ft).

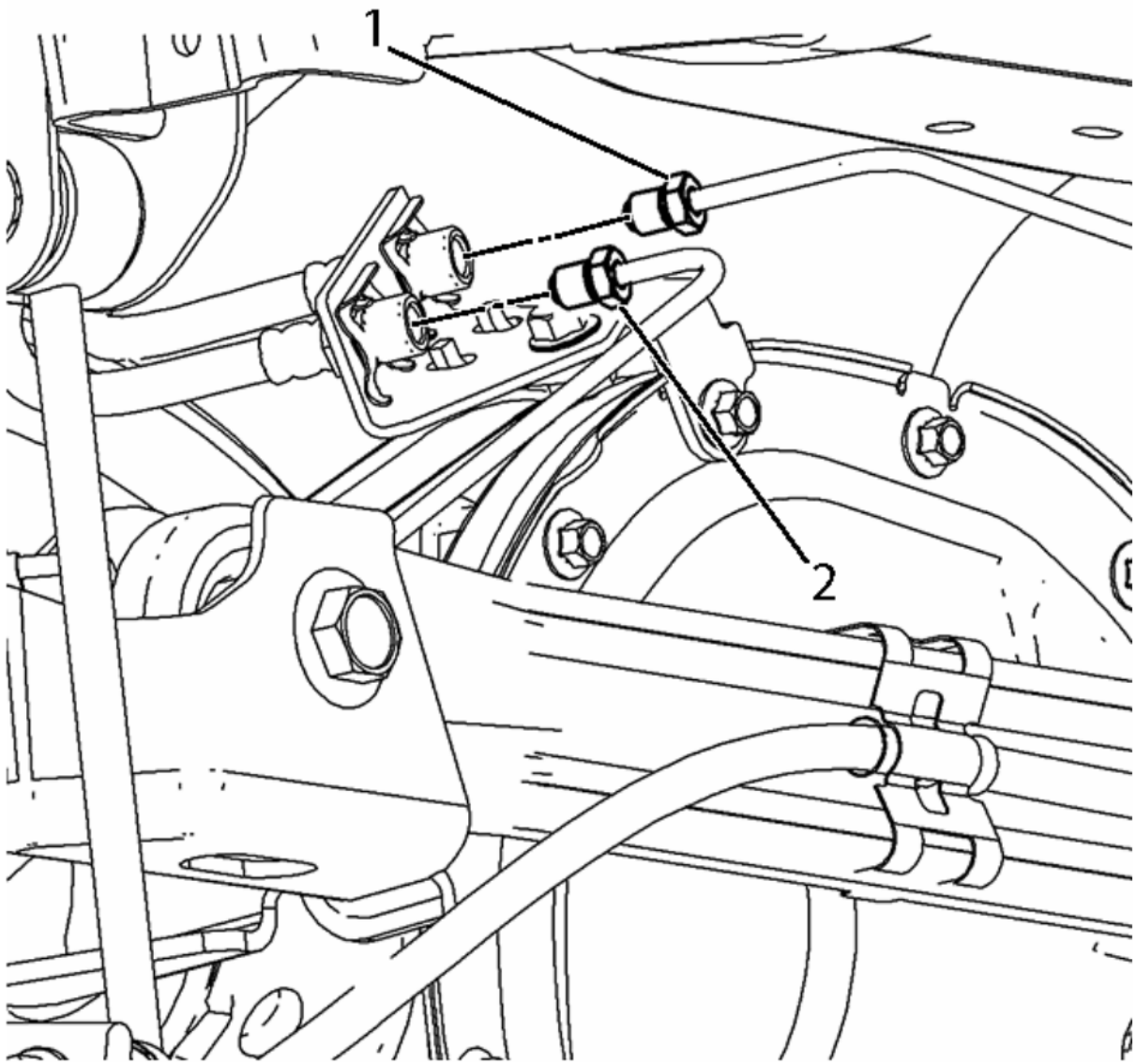

cardiagn.com

Fig. 119: Right And Left Rear Brake Pipe Fitting
Courtesy of GENERAL MOTORS COMPANY

3. Connect the right rear brake pipe fitting (1) to the rear brake hose and tighten to 25 N.m (18 lb ft).
4. Connect the left rear brake pipe fitting (2) to the rear brake hose and tighten to 25 N.m (18 lb ft).

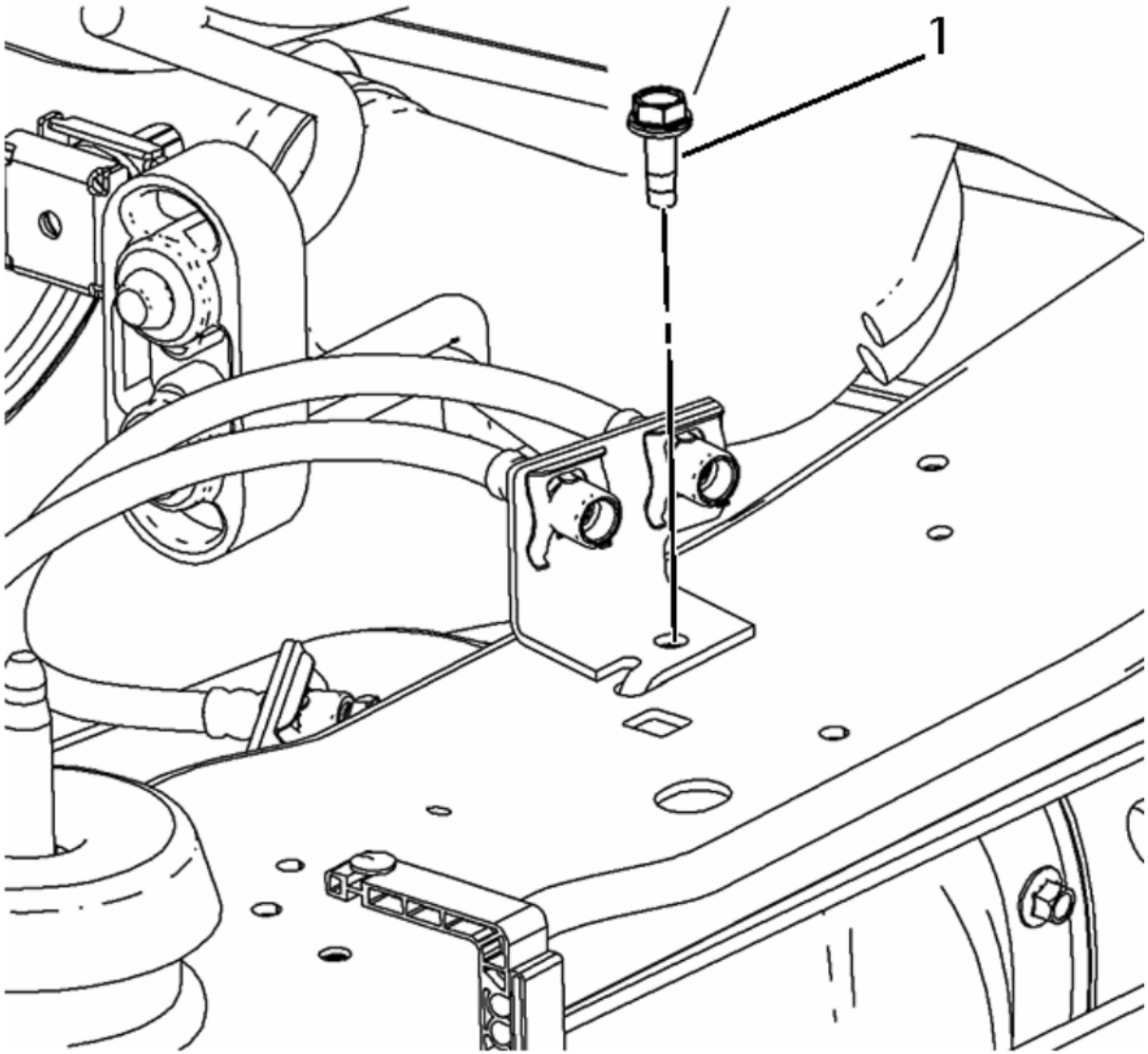

cardiagn.com

Fig. 120: Brake Hose Bracket Bolt
Courtesy of GENERAL MOTORS COMPANY

5. Install the brake hose bracket bolt (1) to the frame crossmember and tighten to 25 N.m (18 lb ft).

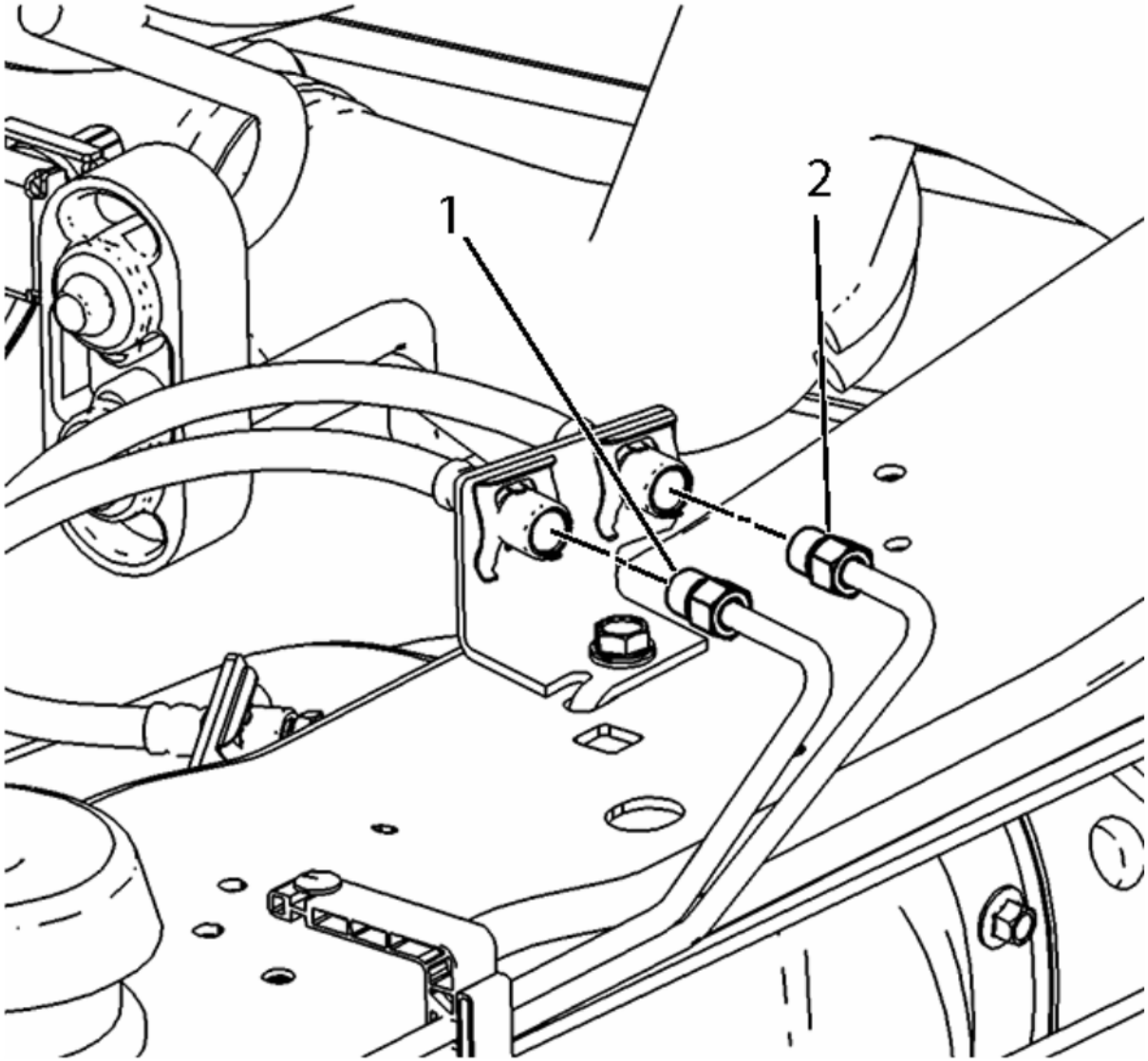

Fig. 121: Left And Right Rear Brake Pipe Fitting
Courtesy of GENERAL MOTORS COMPANY

cardiagn.com

6. Connect the left rear brake pipe fitting (1) to the rear brake hose and tighten to 25 N.m (18 lb ft).
7. Connect the right rear brake pipe fitting (2) to the rear brake hose and tighten to 25 N.m (18 lb ft).
8. Install the spare tire and wheel assembly.
9. Bleed the hydraulic brake system. Refer to **Hydraulic Brake System Bleeding (Pressure)Hydraulic Brake System Bleeding (Manual)**.

REAR BRAKE HOSE REPLACEMENT (JD9 TO CALIPER)

Removal Procedure

WARNING: **Refer to Brake Dust Warning .**

WARNING: **Refer to Brake Fluid Irritant Warning .**

CAUTION: **Refer to Brake Fluid Effects on Paint and Electrical Components Caution .**

1. Raise and support the vehicle. Refer to **Lifting and Jacking the Vehicle** .
2. Remove the tire and wheel assembly. Refer to **Tire and Wheel Removal and Installation (6-Lug Wheel)** **Tire and Wheel Removal and Installation (8-Lug Wheel)** .

cardiagn.com

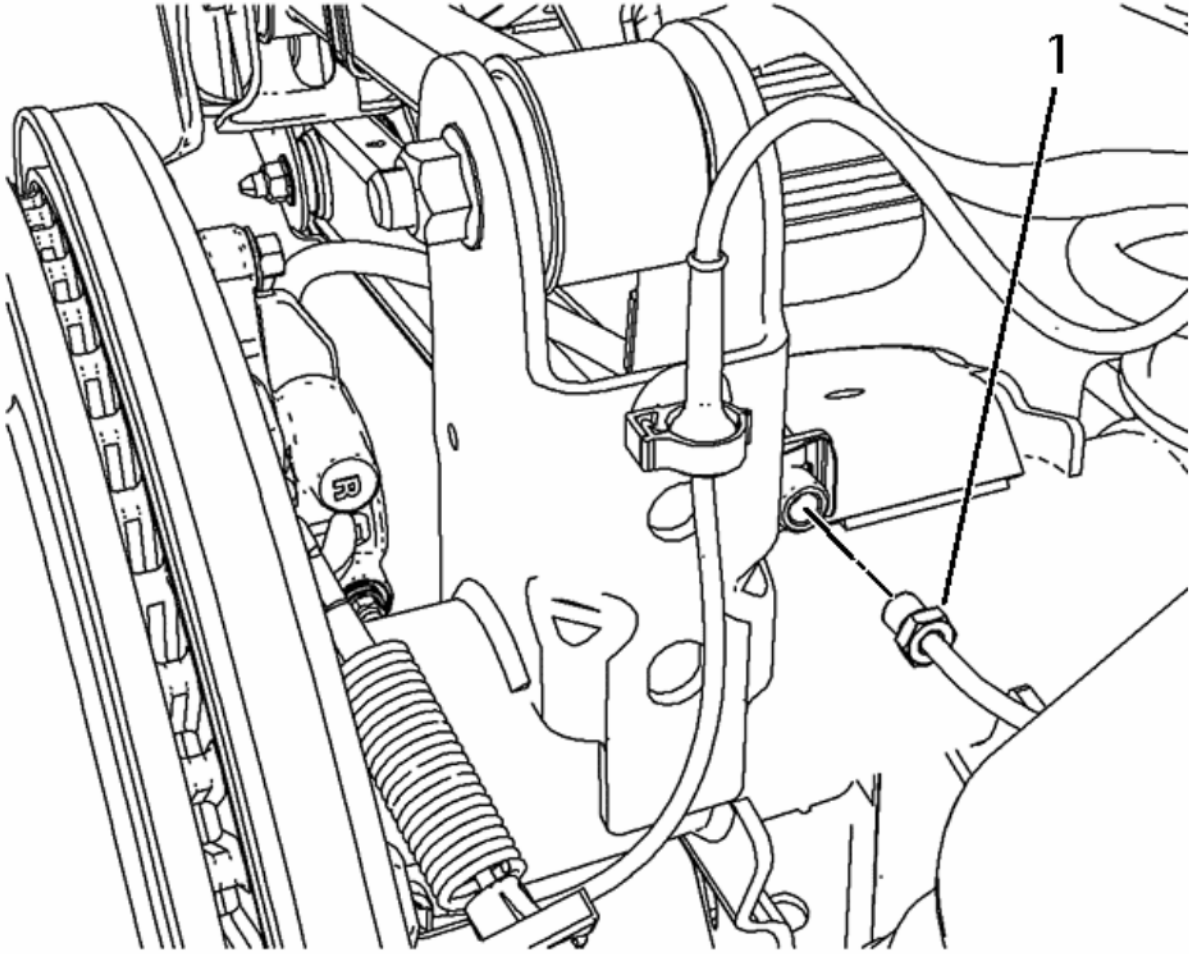

Fig. 122: Brake Pipe Fitting
Courtesy of GENERAL MOTORS COMPANY

3. Disconnect the brake pipe fitting (1).
4. Cap the brake pipe fitting to prevent brake fluid loss and contamination.

cardiagn.com

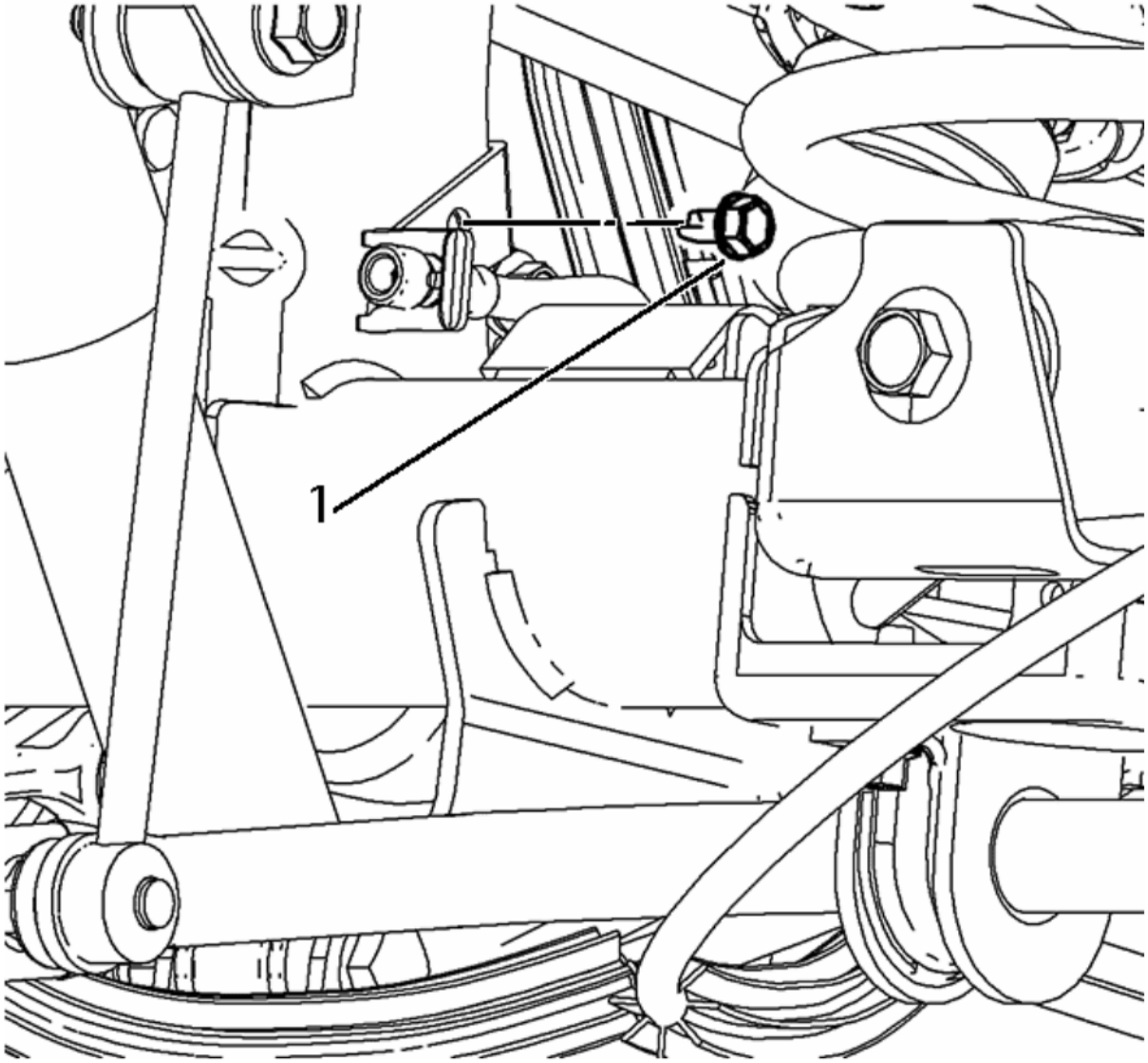

Fig. 123: Brake Hose Bracket Bolt
Courtesy of GENERAL MOTORS COMPANY

5. Remove the brake hose bracket bolt (1).

cardiagn.com

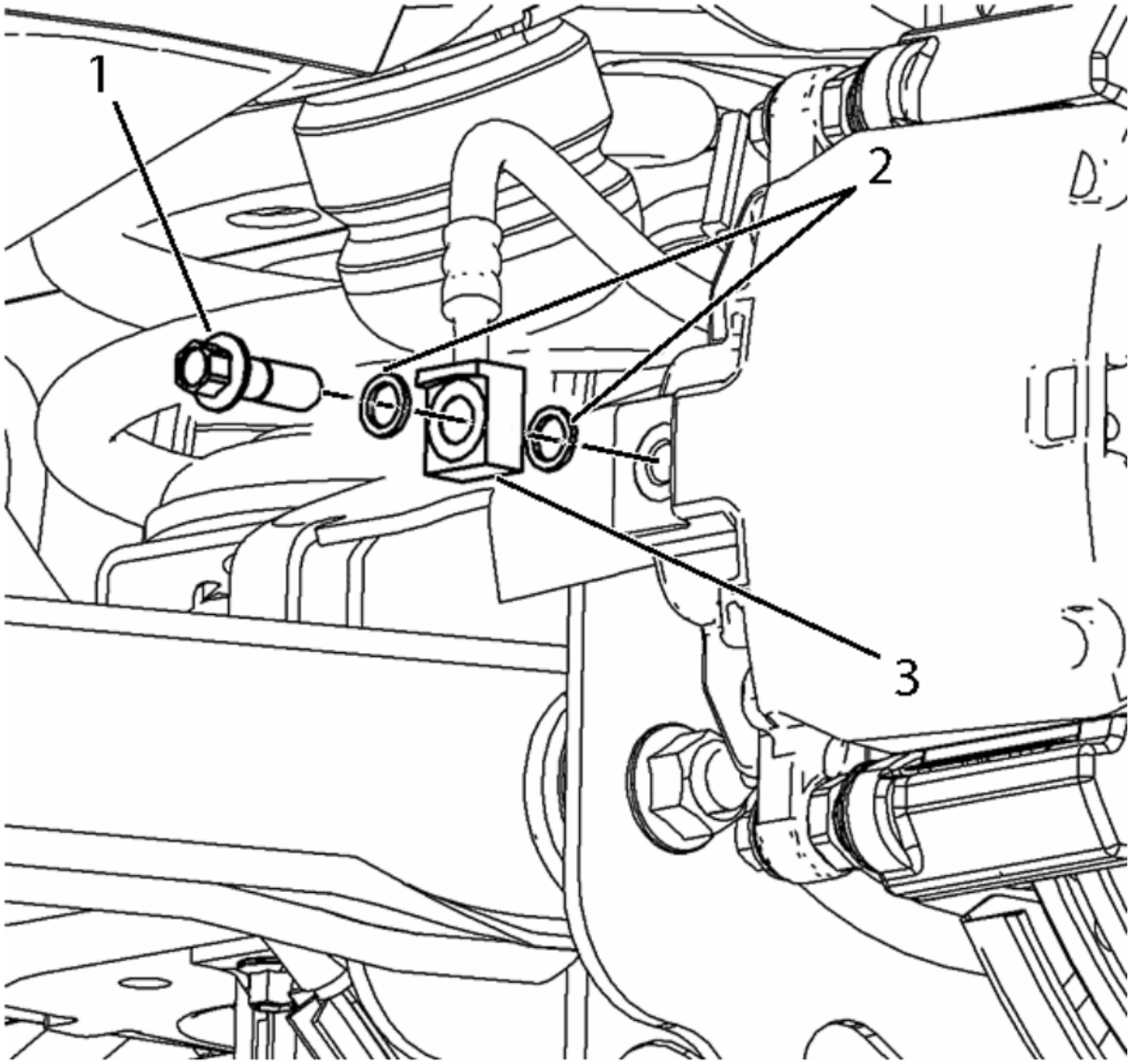

Fig. 124: Brake Hose Fitting Bolt And Gaskets
Courtesy of GENERAL MOTORS COMPANY

6. Remove the brake hose fitting bolt (1).

NOTE: **Do not reuse the brake hose fitting gaskets.**

cardiagn.com

7. Remove the brake hose fitting gaskets (2) from the brake hose (3).
8. Discard the brake hose fitting gaskets.
9. Remove the brake hose.

Installation Procedure

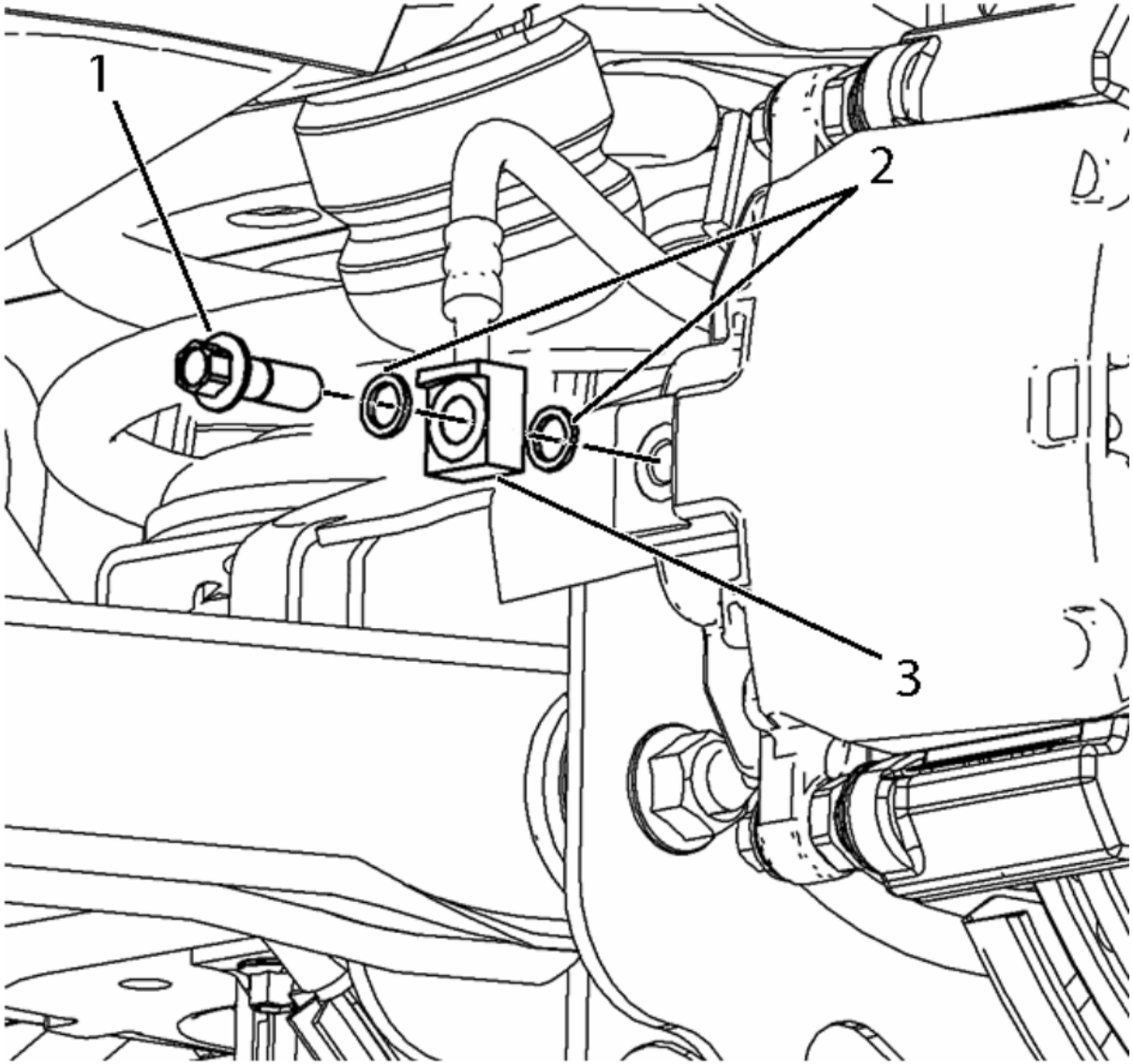

cardiagn.com

Fig. 125: Brake Hose Fitting Bolt And Gaskets
Courtesy of GENERAL MOTORS COMPANY

1. Assemble the brake hose fitting bolt (1) with 2 new brake hose fitting gaskets (2) to the brake hose (3).

CAUTION: **Refer to Fastener Caution .**

2. Install the brake hose assembly to the brake caliper and tighten the brake hose fitting bolt to 40 N.m (30 lb ft).

cardiagn.com

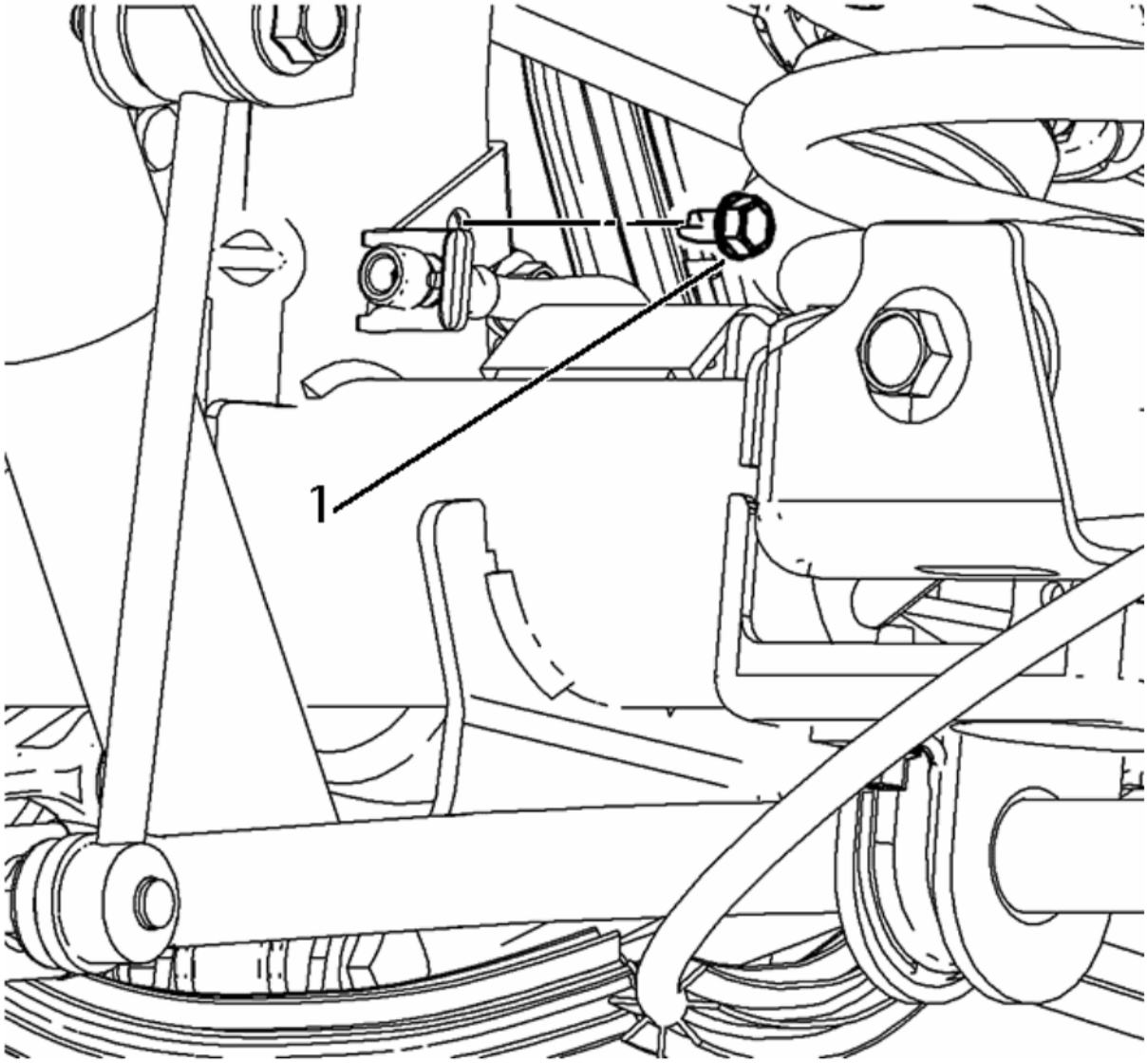

Fig. 126: Brake Hose Bracket Bolt
Courtesy of GENERAL MOTORS COMPANY

3. Install the brake hose bracket bolt (1) and tighten to 9 N.m (80 lb in).

cardiagn.com

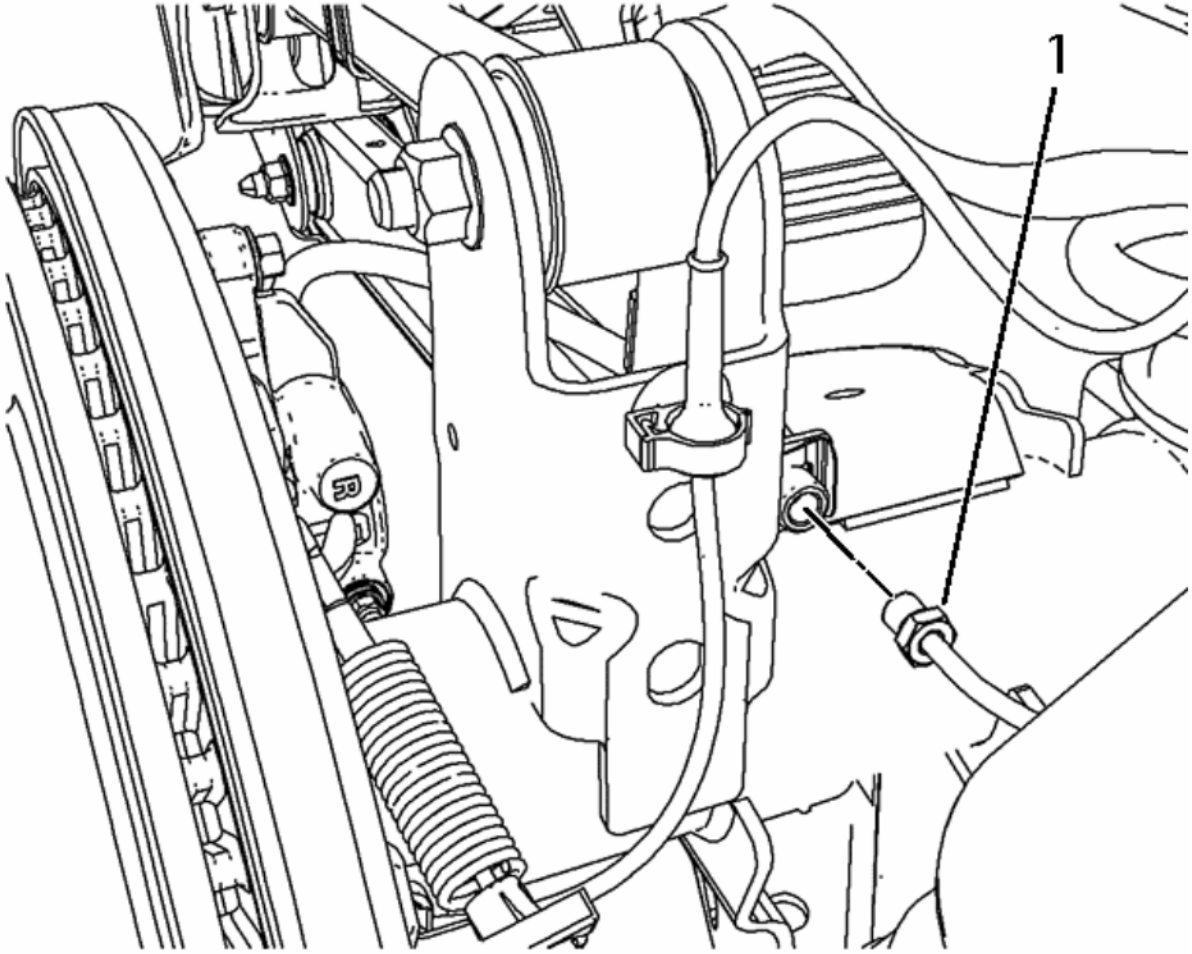

Fig. 127: Brake Pipe Fitting
Courtesy of GENERAL MOTORS COMPANY

4. Install the brake pipe fitting nut (1) and tighten to 25 N.m (18 lb ft).
5. Bleed the hydraulic brake system. Refer to **Hydraulic Brake System Bleeding (Pressure)Hydraulic Brake System Bleeding (Manual)**.
6. Install the tire and wheel assembly. Refer to **Tire and Wheel Removal and Installation (6-Lug Wheel)** **Tire and Wheel Removal and**

cardiagn.com

Installation (8-Lug Wheel) .

REAR BRAKE HOSE REPLACEMENT (J95 TO REAR AXLE)

Removal Procedure

WARNING: Refer to Brake Dust Warning .

WARNING: Refer to Brake Fluid Irritant Warning .

1. Raise and support the vehicle. Refer to Lifting and Jacking the Vehicle

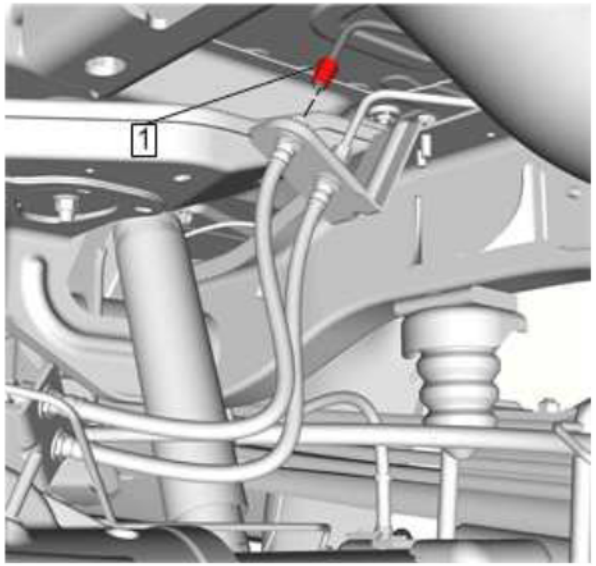

Fig. 128: Brake Pipe Fitting
Courtesy of GENERAL MOTORS COMPANY

2. Disconnect Brake Pipe Fitting (1)
3. Cap the brake pipe fitting to prevent brake fluid loss and contamination.

cardiagn.com

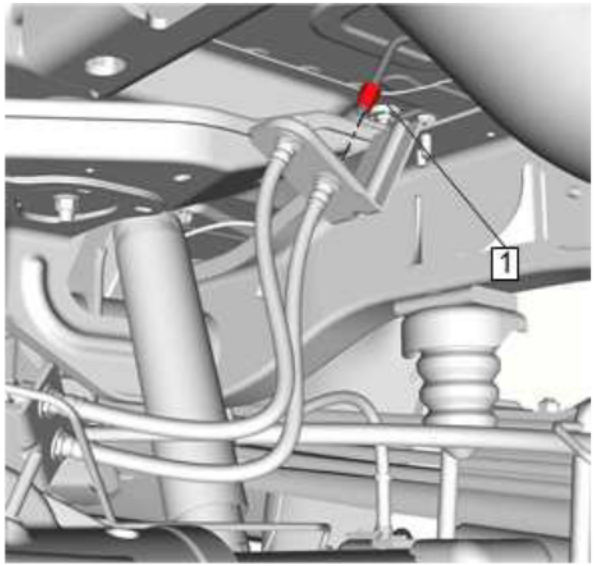

Fig. 129: Brake Pipe Fitting
Courtesy of GENERAL MOTORS COMPANY

4. Disconnect Brake Pipe Fitting (1)
5. Cap the brake pipe fitting to prevent brake fluid loss and contamination.

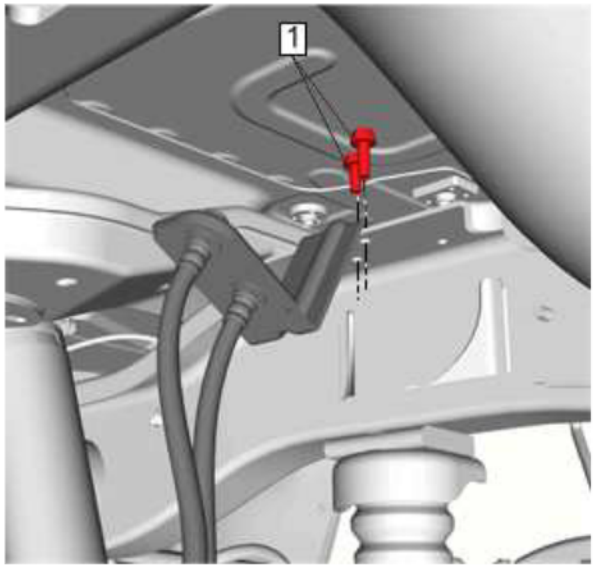

cardiagn.com

Fig. 130: Brake Hose Bracket Bolt
Courtesy of GENERAL MOTORS COMPANY

6. Remove Brake Hose Bracket Bolt (1) (Qty: 2)

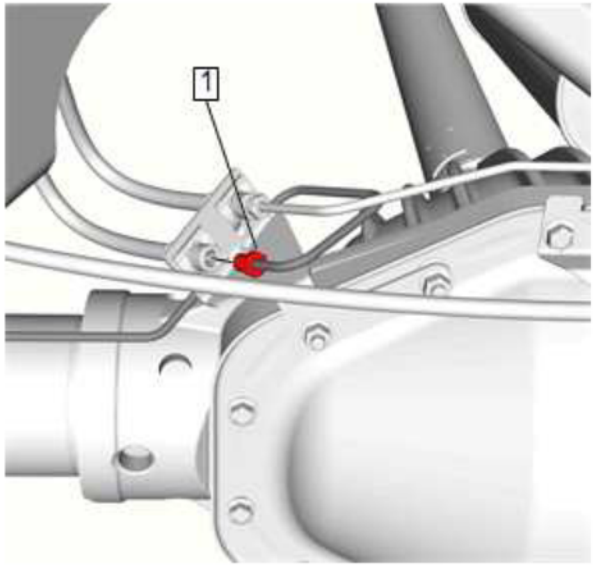

Fig. 131: Brake Pipe Fitting
Courtesy of GENERAL MOTORS COMPANY

7. Disconnect Brake Pipe Fitting (1)
8. Cap the brake pipe fitting to prevent brake fluid loss and contamination.

cardiagn.com

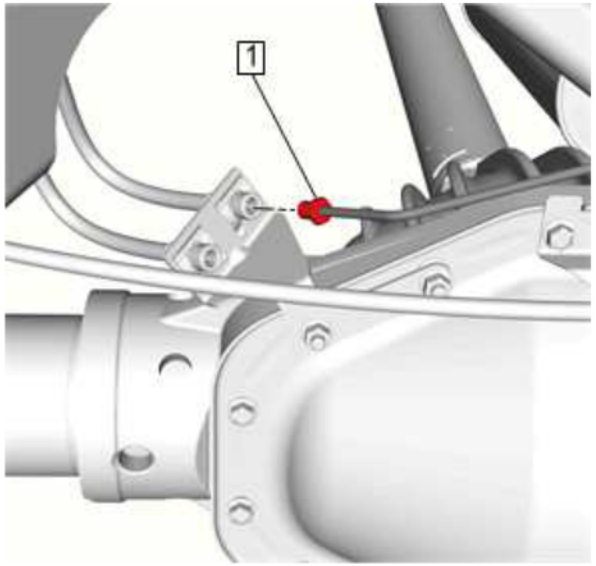

Fig. 132: Brake Pipe Fitting
Courtesy of GENERAL MOTORS COMPANY

9. Disconnect Brake Pipe Fitting (1)
10. Cap the brake pipe fitting to prevent brake fluid loss and contamination.

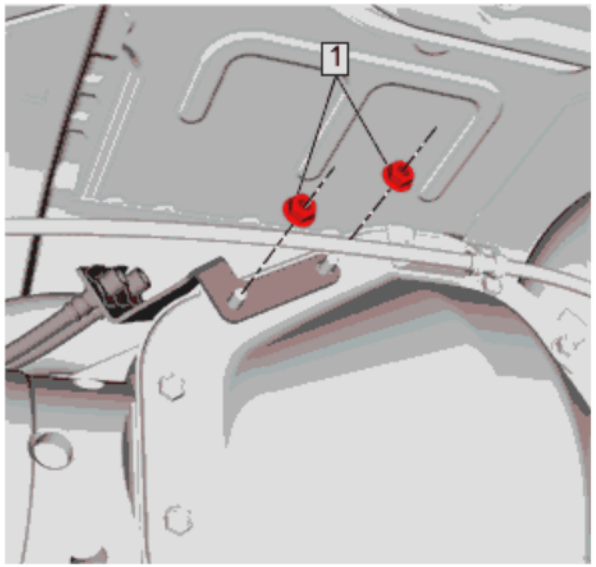

cardiagn.com

Fig. 133: Brake Hose Bracket Nut
Courtesy of GENERAL MOTORS COMPANY

11. Remove Brake Hose Bracket Nut (1) (Qty: 2)
12. Remove the brake hose.

Installation Procedure

1. Install the brake hose to the vehicle.

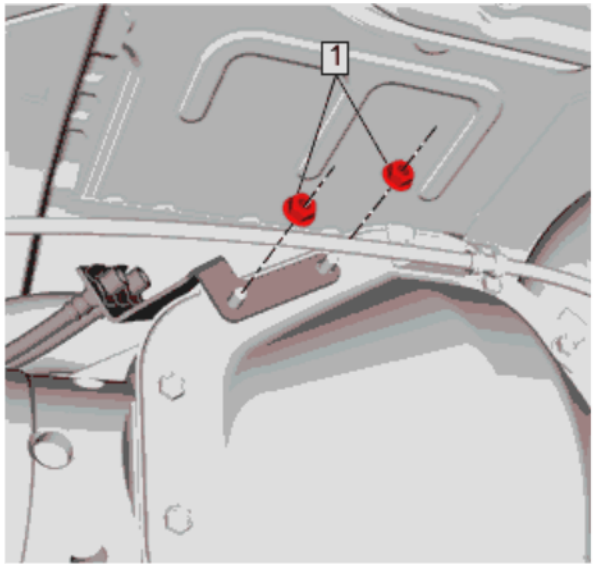

Fig. 134: Brake Hose Bracket Nut
Courtesy of GENERAL MOTORS COMPANY

CAUTION: Refer to Fastener Caution .

2. Install and tighten Brake Hose Bracket Nut (1) to 25 N.m (18 lb ft) (Qty: 2)

cardiagn.com

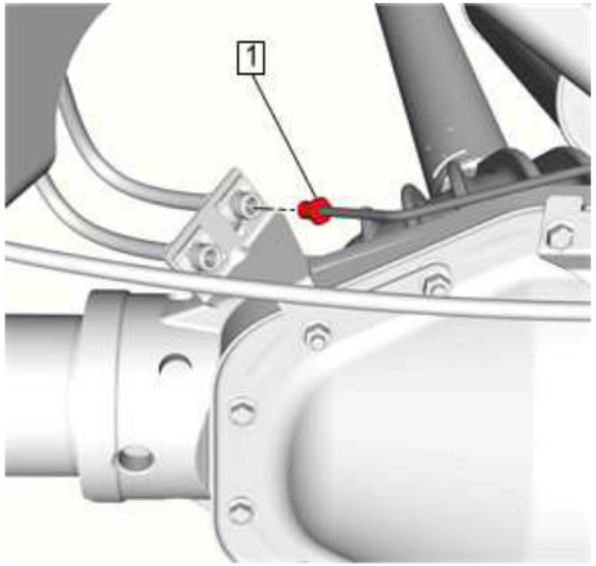

Fig. 135: Brake Pipe Fitting
Courtesy of GENERAL MOTORS COMPANY

3. Install and tighten Brake Pipe Fitting (1) to 25 N.m (18 lb ft)

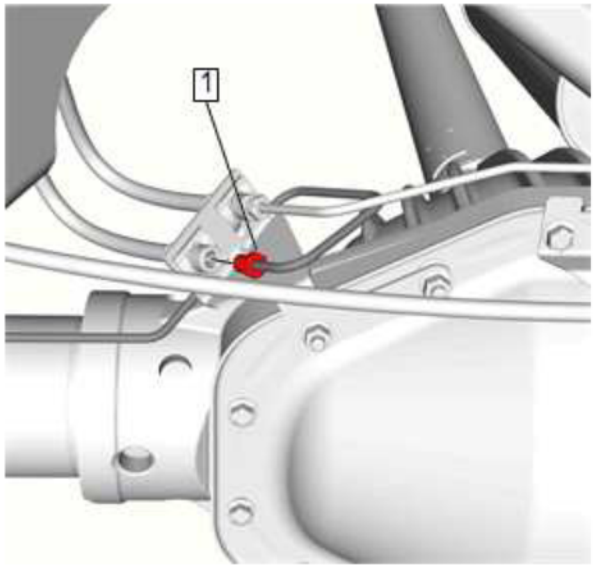

Fig. 136: Brake Pipe Fitting

cardiagn.com

Courtesy of GENERAL MOTORS COMPANY

4. Install and tighten Brake Pipe Fitting (1) to 25 N.m (18 lb ft)

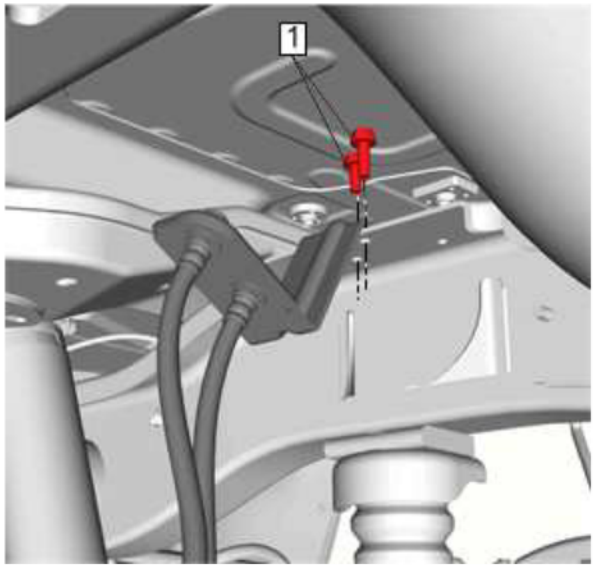

Fig. 137: Brake Hose Bracket Bolt
Courtesy of GENERAL MOTORS COMPANY

5. Install and tighten Brake Hose Bracket Bolt (1) to 25 N.m (18 lb ft) (Qty: 2)

cardiagn.com

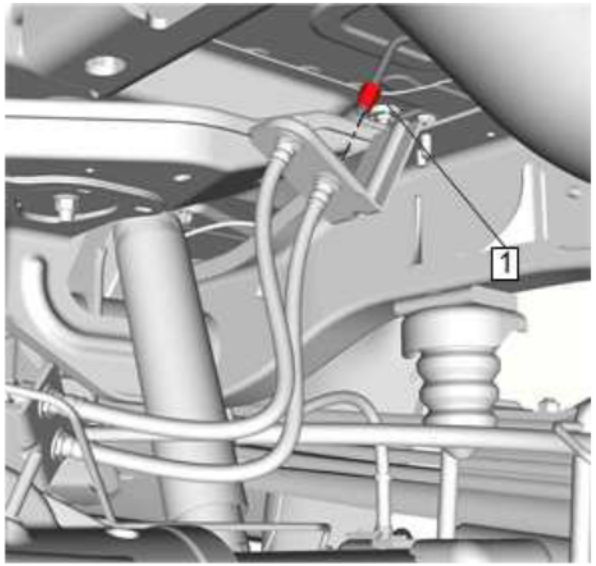

Fig. 138: Brake Pipe Fitting
Courtesy of GENERAL MOTORS COMPANY

6. Install and tighten Brake Pipe Fitting (1) to 25 N.m (18 lb ft)

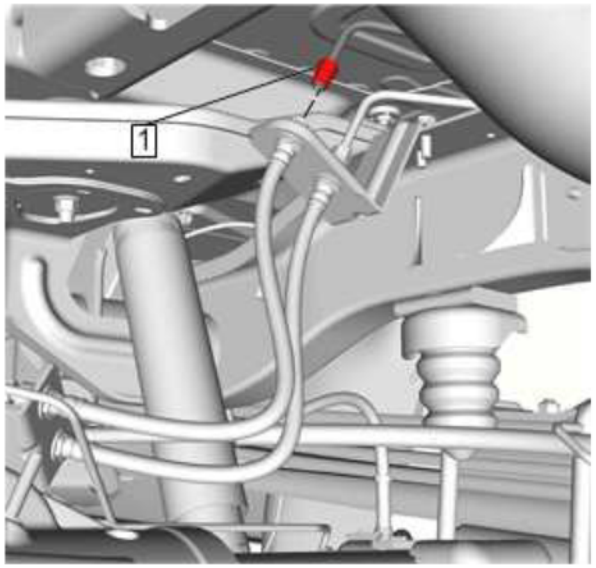

Fig. 139: Brake Pipe Fitting

cardiagn.com

Courtesy of GENERAL MOTORS COMPANY

7. Install and tighten Brake Pipe Fitting (1) to 25 N.m (18 lb ft)
8. Bleed the brake system. Refer to **Hydraulic Brake System Bleeding (Pressure)Hydraulic Brake System Bleeding (Manual)**

REAR BRAKE HOSE REPLACEMENT (J95 TO CALIPER)

Removal Procedure

WARNING: Refer to Brake Dust Warning .

WARNING: Refer to Brake Fluid Irritant Warning .

1. Raise and support the vehicle. Refer to **Lifting and Jacking the Vehicle**
2. Remove the tire and wheel assembly. Refer to **Tire and Wheel Removal and Installation (6-Lug Wheel)** **Tire and Wheel Removal and Installation (8-Lug Wheel)**

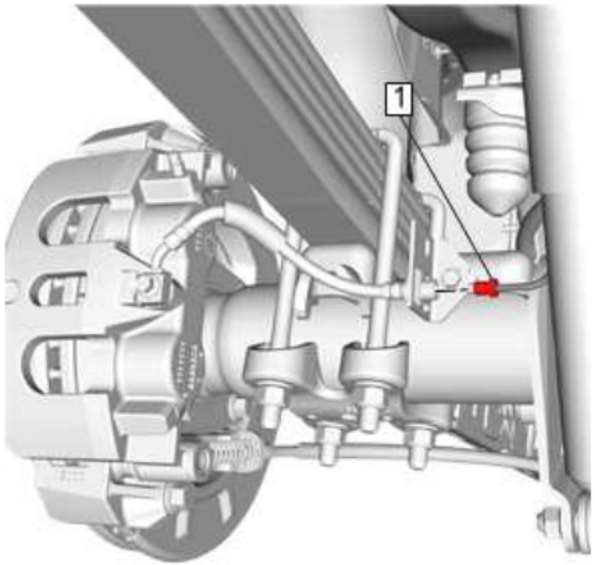

Fig. 140: Brake Pipe Fitting
Courtesy of GENERAL MOTORS COMPANY

3. Disconnect Brake Pipe Fitting (1)

cardiagn.com

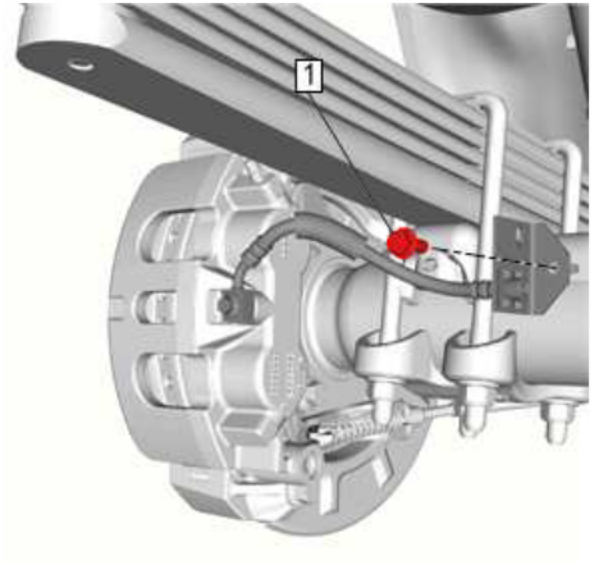

Fig. 141: Brake Hose Bracket Bolt
Courtesy of GENERAL MOTORS COMPANY

4. Remove Brake Hose Bracket Bolt (1)

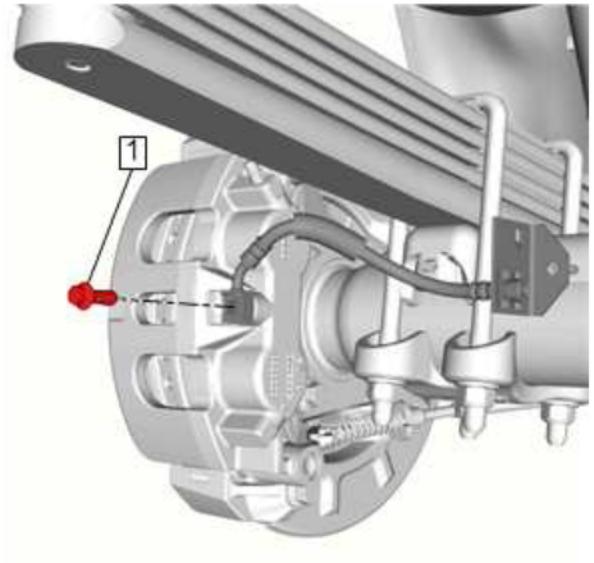

Fig. 142: Brake Hose Fitting Bolt

cardiagn.com

Courtesy of GENERAL MOTORS COMPANY

5. Remove Brake Hose Fitting Bolt (1)

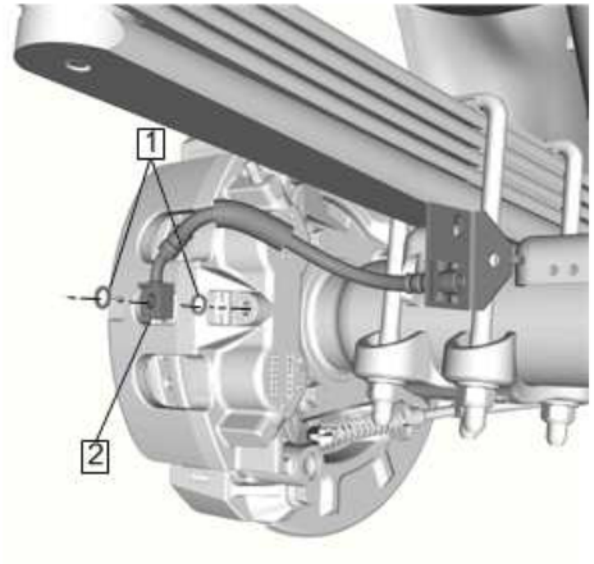

Fig. 143: Brake Hose Fitting And Gaskets
Courtesy of GENERAL MOTORS COMPANY

NOTE: **Do not reuse the brake hose fitting gaskets.**

6. Remove and DISCARD Brake Hose Fitting Gasket (1) (Qty: 2) @ Brake Hose Fitting (2)
7. Plug the caliper inlet to prevent brake fluid loss and contamination.
8. Remove the brake hose.

Installation Procedure

1. Install the brake hose to the vehicle.

cardiagn.com

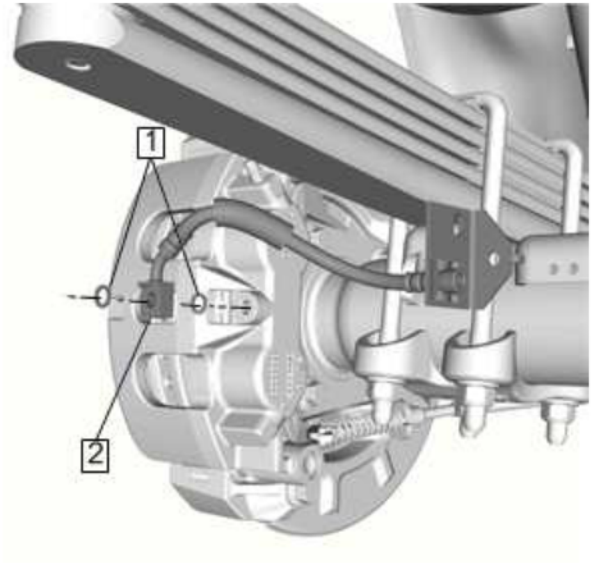

Fig. 144: Brake Hose Fitting And Gaskets
Courtesy of GENERAL MOTORS COMPANY

NOTE: **Install NEW brake hose fitting gaskets.**

2. Install Brake Hose Fitting Gasket (1) (Qty: 2) @ Brake Hose Fitting (2)

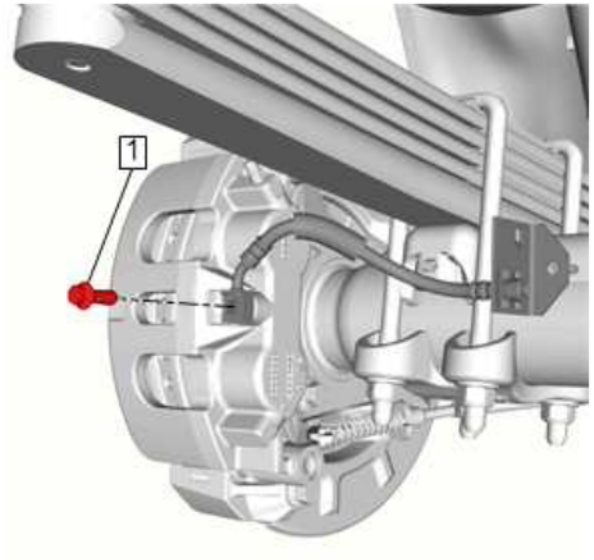

cardiagn.com

Fig. 145: Brake Hose Fitting Bolt
Courtesy of GENERAL MOTORS COMPANY

CAUTION: Refer to Fastener Caution .

3. Install and tighten Brake Hose Fitting Bolt (1) to 40 N.m (30 lb ft)

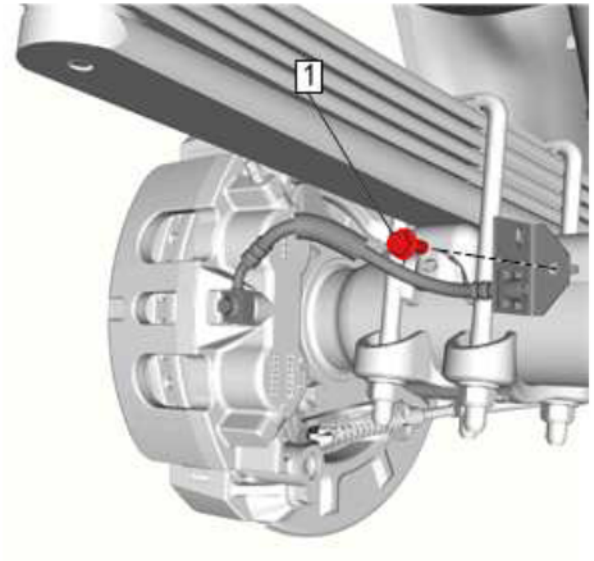

Fig. 146: Brake Hose Bracket Bolt
Courtesy of GENERAL MOTORS COMPANY

4. Install and tighten Brake Hose Bracket Bolt (1) to 22 N.m (16 lb ft)

cardiagn.com

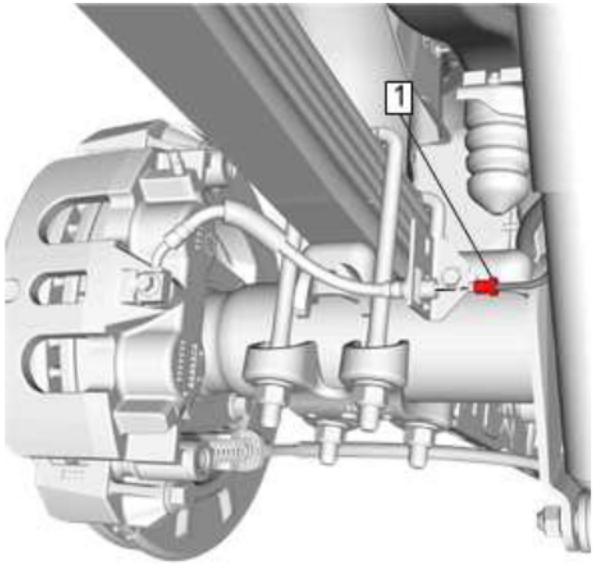

Fig. 147: Brake Pipe Fitting
Courtesy of GENERAL MOTORS COMPANY

5. Install and tighten Brake Pipe Fitting (1) to 25 N.m (18 lb ft)
6. Bleed the brake system. Refer to Hydraulic Brake System Bleeding (Pressure)Hydraulic Brake System Bleeding (Manual)
7. Install the tire and wheel assembly. Refer to Tire and Wheel Removal and Installation (6-Lug Wheel) Tire and Wheel Removal and Installation (8-Lug Wheel)

HYDRAULIC BRAKE SYSTEM BLEEDING (PRESSURE)

Special Tools

- **CH-29532-A** Pressure Brake Bleeder
- **CH-35589-A** Brake Bleeder Adapter

WARNING: **Refer to Brake Fluid Irritant Warning .**

CAUTION: **Refer to Brake Fluid Effects on Paint and Electrical Components Caution .**

CAUTION: **Only use products that comply with GM specifications and check manufacturer information respectively. We recommend the use of GM genuine products. Instructions must be followed at all times. The use of any type of**

cardiagn.com

fluid other than the recommended type of brake fluid, may cause contamination which could result in damage to the internal rubber seals and/or rubber linings of hydraulic brake system components.

1. Place a clean shop cloth beneath the brake master cylinder to prevent brake fluid spills.
2. With the ignition OFF and the brakes cool, apply the brakes 3-5 times, or until the brake pedal effort increases significantly, in order to deplete the brake booster power reserve.
3. If you have performed a brake master cylinder bench bleeding on this vehicle, or if you disconnected the brake pipes from the master cylinder, you must perform the following steps:
    1. Ensure that the brake master cylinder reservoir is full to the maximum-fill level. If necessary add GM approved brake fluid from a clean, sealed brake fluid container. Refer to **Adhesives, Fluids, Lubricants, and Sealers**.

       If removal of the reservoir cap and diaphragm is necessary, clean the outside of the reservoir on and around the cap prior to removal.
    2. With the rear brake pipe installed securely to the master cylinder, loosen and separate the front brake pipe from the front port of the brake master cylinder.
    3. Allow a small amount of brake fluid to gravity bleed from the open port of the master cylinder.
    4. Reconnect the brake pipe to the master cylinder port and tighten securely.
    5. Have an assistant slowly depress the brake pedal fully and maintain steady pressure on the pedal.
    6. Loosen the same brake pipe to purge air from the open port of the master cylinder.
    7. Tighten the brake pipe, then have the assistant slowly release the brake pedal.
    8. Wait 15 seconds, then repeat steps 3.3-3.7 until all air is purged from the same port of the master cylinder.
    9. With the front brake pipe installed securely to the master cylinder, after all air has been purged from the front port of the master cylinder, loosen and separate the rear brake pipe from the master cylinder, then repeat steps 3.3-3.8.
    10. After completing the final master cylinder port bleeding procedure, ensure that both of the brake pipe-to-master cylinder fittings are properly tightened.

NOTE: **Clean the outside of the reservoir on and around the reservoir cap prior to removing the cap and diaphragm.**

4. Fill the brake master cylinder reservoir to the maximum-fill level with GM approved brake fluid from a clean, sealed brake fluid container. Refer to **Adhesives, Fluids, Lubricants, and Sealers**.
5. Install the **CH-35589-A** Brake Bleeder Adapter to the brake master cylinder reservoir.
6. Check the brake fluid level in the **CH-29532-A** Pressure Brake Bleeder. Add GM approved brake fluid from a clean, sealed brake fluid

cardiagn.com

container as necessary to bring the level to approximately the half-full point. Refer to **Adhesives, Fluids, Lubricants, and Sealers**.

7. Connect the **CH-29532-A** Pressure Brake Bleeder, to the **J-35589-A** Brake Bleeder Adapter.
8. Charge the **CH-29532-A** Pressure Brake Bleeder, air tank to 175-205 kPa (25-30 psi).
9. Open the **CH-29532-A** Pressure Brake Bleeder, fluid tank valve to allow pressurized brake fluid to enter the brake system.
10. Wait approximately 30 seconds, then inspect the entire hydraulic brake system in order to ensure that there are no existing external brake fluid leaks.

    Any brake fluid leaks identified require repair prior to completing this procedure.

11. Install a proper box-end wrench onto the RIGHT REAR wheel hydraulic circuit bleeder valve.
12. Install a transparent hose over the end of the bleeder valve.
13. Submerge the open end of the transparent hose into a transparent container partially filled with GM approved brake fluid from a clean, sealed brake fluid container. Refer to **Adhesives, Fluids, Lubricants, and Sealers**.
14. Loosen the bleeder valve to purge air from the wheel hydraulic circuit. Allow fluid to flow until air bubbles stop flowing from the bleeder, then tighten the bleeder valve.
15. With the right rear wheel hydraulic circuit bleeder valve tightened securely, after all air has been purged from the right rear hydraulic circuit, install a proper box-end wrench onto the LEFT REAR wheel hydraulic circuit bleeder valve.
16. Install a transparent hose over the end of the bleeder valve, then repeat steps 13-14.
17. With the left rear wheel hydraulic circuit bleeder valve tightened securely, after all air has been purged from the left rear hydraulic circuit, install a proper box-end wrench onto the RIGHT FRONT wheel hydraulic circuit bleeder valve.
18. Install a transparent hose over the end of the bleeder valve, then repeat steps 13-14.
19. With the right front wheel hydraulic circuit bleeder valve tightened securely, after all air has been purged from the right front hydraulic circuit, install a proper box-end wrench onto the LEFT FRONT wheel hydraulic circuit bleeder valve.
20. Install a transparent hose over the end of the bleeder valve, then repeat steps 13-14.
21. After completing the final wheel hydraulic circuit bleeding procedure, ensure that each of the 4 wheel hydraulic circuit bleeder valves are properly tightened.
22. Close the **CH-29532-A** Pressure Brake Bleeder, fluid tank valve, then disconnect the **CH-29532-A** Pressure Brake Bleeder, from the **CH-35589-A** Brake Bleeder Adapter.
23. Remove the **CH-35589-A** Brake Bleeder Adapter from the brake master cylinder reservoir.
24. Fill the brake master cylinder reservoir to the maximum-fill level with GM approved brake fluid from a clean, sealed brake fluid container. Refer to **Adhesives, Fluids, Lubricants, and Sealers**.

cardiagn.com

25. Slowly depress and release the brake pedal. Observe the feel of the brake pedal.
26. If the brake pedal feels spongy perform the following steps:
    1. Inspect the brake system for external leaks. Refer to **Brake System External Leak Inspection**.
    2. Using a scan tool, perform the antilock brake system automated bleeding procedure to remove any air that may have been trapped in the brake pressure modulator valve (BPMV). Refer to **Antilock Brake System Automated Bleed** .
27. Turn the ignition key ON, with the engine OFF. Check to see if the brake system warning lamp remains illuminated.

NOTE: **If the brake system warning lamp remains illuminated, DO NOT allow the vehicle to be driven until it is diagnosed and repaired.**

28. If the brake system warning lamp remains illuminated, refer to **Symptoms - Hydraulic Brakes**.

HYDRAULIC BRAKE SYSTEM BLEEDING (MANUAL)

WARNING: **Refer to Brake Fluid Irritant Warning .**

CAUTION: **Refer to Brake Fluid Effects on Paint and Electrical Components Caution .**

1. Place a clean shop cloth beneath the brake master cylinder to prevent brake fluid spills.
2. With the ignition OFF and the brakes cool, apply the brakes 3-5 times, or until the brake pedal effort increases significantly, in order to deplete the brake booster power reserve.
3. If you have performed a brake master cylinder bench bleeding on this vehicle, or if you disconnected the brake pipes from the master cylinder, you must perform the following steps:
    1. Ensure that the brake master cylinder reservoir is full to the maximum-fill level. If necessary add GM approved brake fluid from a clean, sealed brake fluid container. Refer to **Adhesives, Fluids, Lubricants, and Sealers**.

       If removal of the reservoir cap and diaphragm is necessary, clean the outside of the reservoir on and around the cap prior to removal.

    2. With the rear brake pipe installed securely to the master cylinder, loosen and separate the front brake pipe from the front port of the brake master cylinder.
    3. Allow a small amount of brake fluid to gravity bleed from the open port of the master cylinder.
    4. Reconnect the brake pipe to the master cylinder port and tighten securely.
    5. Have an assistant slowly depress the brake pedal fully and maintain steady pressure on the pedal.
    6. Loosen the same brake pipe to purge air from the open port of the master cylinder.

cardiagn.com

7. Tighten the brake pipe, then have the assistant slowly release the brake pedal.
8. Wait 15 seconds, then repeat steps 3.3-3.7 until all air is purged from the same port of the master cylinder.
9. With the front brake pipe installed securely to the master cylinder, after all air has been purged from the front port of the master cylinder, loosen and separate the rear brake pipe from the master cylinder, then repeat steps 3.3-3.8.
10. After completing the final master cylinder port bleeding procedure, ensure that both of the brake pipe-to-master cylinder fittings are properly tightened.

4. Fill the brake master cylinder reservoir with GM approved brake fluid from a clean, sealed brake fluid container. Refer to **Master Cylinder Reservoir Filling**. Ensure that the brake master cylinder reservoir remains at least half-full during this bleeding procedure. Add fluid as needed to maintain the proper level.

   Clean the outside of the reservoir on and around the reservoir cap prior to removing the cap and diaphragm.

5. Install a proper box-end wrench onto the RIGHT REAR wheel hydraulic circuit bleeder valve.
6. Install a transparent hose over the end of the bleeder valve.
7. Submerge the open end of the transparent hose into a transparent container partially filled with GM approved brake fluid from a clean, sealed brake fluid container. Refer to **Adhesives, Fluids, Lubricants, and Sealers**.
8. Have an assistant slowly depress the brake pedal fully and maintain steady pressure on the pedal.
9. Loosen the bleeder valve to purge air from the wheel hydraulic circuit.
10. Tighten the bleeder valve, then have the assistant slowly release the brake pedal.
11. Wait 15 seconds, then repeat steps 8-10 until all air is purged from the same wheel hydraulic circuit.
12. With the right rear wheel hydraulic circuit bleeder valve tightened securely, after all air has been purged from the right rear hydraulic circuit install a proper box-end wrench onto the LEFT REAR wheel hydraulic circuit bleeder valve.
13. Install a transparent hose over the end of the bleeder valve, then repeat steps 7-11.
14. With the left rear wheel hydraulic circuit bleeder valve tightened securely, after all air purged from the left rear hydraulic circuit, install a proper box-end wrench onto the RIGHT FRONT wheel hydraulic circuit bleeder valve.
15. Install a transparent hose over the end of the bleeder valve, then repeat steps 7-11.
16. With the right front wheel hydraulic circuit bleeder valve tightened securely, after all air has been purged from the right front hydraulic circuit, install a proper box-end wrench onto the LEFT FRONT wheel hydraulic circuit bleeder valve.
17. Install a transparent hose over the end of the bleeder valve, then repeat steps 7-11.
18. After completing the final wheel hydraulic circuit bleeding procedure, ensure that each of the 4 wheel hydraulic circuit bleeder valves are properly tightened.

cardiagn.com

19. Fill the brake master cylinder reservoir to the maximum-fill level with GM approved brake fluid from a clean, sealed brake fluid container. Refer to **Master Cylinder Reservoir Filling**.
20. Slowly depress and release the brake pedal. Observe the feel of the brake pedal.
21. If the brake pedal feels spongy, repeat the bleeding procedure again. If the brake pedal still feels spongy after repeating the bleeding procedure, perform the following steps:
    1. Inspect the brake system for external leaks. Refer to **Brake System External Leak Inspection**.
    2. Pressure bleed the hydraulic brake system in order to purge any air that may still be trapped in the system.
22. Turn the ignition key ON, with the engine OFF. Check to see if the brake system warning lamp remains illuminated.

NOTE: **If the brake system warning lamp remains illuminated, DO NOT allow the vehicle to be driven until it is diagnosed and repaired.**

23. If the brake system warning lamp remains illuminated, refer to **Symptoms - Hydraulic Brakes**.

HYDRAULIC BRAKE SYSTEM FLUSHING

WARNING: **Refer to Brake Fluid Irritant Warning .**

CAUTION: **Refer to Brake Fluid Effects on Paint and Electrical Components Caution .**

CAUTION: **Only use products that comply with GM specifications and check manufacturer information respectively. We recommend the use of GM genuine products. Instructions must be followed at all times. The use of any type of fluid other than the recommended type of brake fluid, may cause contamination which could result in damage to the internal rubber seals and/or rubber linings of hydraulic brake system components.**

1. Inspect the brake fluid for the following conditions, indicating brake fluid contamination:
    - Fluid separation, indicating two types of fluid are present; a substance other than the recommended brake fluid has been introduced into the brake hydraulic system
        - Swirled appearance - oil-based substance
        - Layered appearance - silicone-based substance
    - Fluid discoloration, indicating the presence of moisture or particles that have been introduced into the brake hydraulic system
        - Cloudy appearance - moisture
        - Dark appearance/suspended particles in fluid - dirt, rust, corrosion, brake dust

cardiagn.com

2. Inspect the master cylinder reservoir cap diaphragm and the reservoir-to-master cylinder grommets for swelling, indicating brake fluid contamination.
3. If the brake fluid WAS contaminated with an oil-based or a silicone-based substance, indicated by fluid separation and/or a swollen master cylinder reservoir cap diaphragm and/or swollen reservoir-to-master cylinder grommets, perform the following:
    1. Remove ALL of the following components listed from the vehicle. Each component contains internal rubber seals/linings which have been contaminated by the contaminated brake fluid in the brake hydraulic system.

       Refer to the procedures indicated:

       - **Master Cylinder Replacement**
       - **Front Brake Hose Replacement (JD9)Front Brake Hose Replacement (J95)**
       - **Rear Brake Hose Replacement (JD9 to Rear Axle)Rear Brake Hose Replacement (JD9 to Caliper)Rear Brake Hose Replacement (J95 to Rear Axle)Rear Brake Hose Replacement (J95 to Caliper)**
       - **Front Brake Caliper Replacement (JD9)** **Front Brake Caliper Replacement (J95)**
       - **Rear Brake Caliper Replacement (JD9)** **Rear Brake Caliper Replacement (J95)**
       - **Brake Pressure Modulator Valve Replacement**
    2. Clean out all the hydraulic brake pipes using denatured alcohol, or equivalent.
    3. Dry the brake pipes using non-lubricated, filtered air.
    4. Repair or replace ALL of the following components listed and install them to the vehicle. Each component contains internal rubber seals/linings which have been contaminated by the contaminated brake fluid in the brake hydraulic system.

       Refer to the procedures indicated:

       - **Master Cylinder Replacement** ; also perform the following:

         Clean the brake master cylinder reservoir using denatured alcohol, or equivalent, then dry the reservoir using non-lubricated, filtered air. Inspect the reservoir for cracks and/or damage and replace if necessary. Refer to **Master Cylinder Reservoir Replacement (JD9)Master Cylinder Reservoir Replacement (J95)**.

         Replace the brake master cylinder reservoir cap diaphragm.

       - **Front Brake Hose Replacement (JD9)Front Brake Hose Replacement (J95)**
       - **Rear Brake Hose Replacement (JD9 to Rear Axle)Rear Brake Hose Replacement (JD9 to Caliper)Rear Brake Hose Replacement (J95 to Rear Axle)Rear Brake Hose Replacement (J95 to Caliper)**

cardiagn.com

- **Front Brake Caliper Overhaul (J95)** **Front Brake Caliper Overhaul (JD9)** , or **Front Brake Caliper Replacement (JD9)** **Front Brake Caliper Replacement (J95)**
- **Rear Brake Caliper Overhaul (J95)** **Rear Brake Caliper Overhaul (JD9)** , or **Rear Brake Caliper Replacement (JD9)** **Rear Brake Caliper Replacement (J95)**
- **Brake Pressure Modulator Valve Replacement**

4. If the brake fluid was NOT contaminated with an oil-based or a silicone-based substance, but WAS contaminated with water or dirt, rust, corrosion, and/or brake dust, replace the brake master cylinder reservoir cap diaphragm. The diaphragm may have allowed the moisture or particles to enter the hydraulic system.
5. Fill the brake master cylinder reservoir to the maximum-fill level with GM approved brake fluid from a clean, sealed brake fluid container. Refer to **Adhesives, Fluids, Lubricants, and Sealers**.
6. Pressure bleed the hydraulic brake system. Begin the procedure with the pressure bleeder reservoir filled to the maximum-fill level with the correct brake fluid as indicated. Refer to **Hydraulic Brake System Bleeding (Pressure)Hydraulic Brake System Bleeding (Manual)**.

POWER VACUUM BRAKE BOOSTER REPLACEMENT

Removal Procedure

1. With the engine OFF, apply and release the brake pedal several times until the pedal becomes firm to deplete the power vacuum brake booster vacuum reserve.
2. Remove the brake pedal position sensor. Refer to **Brake Pedal Position Sensor Replacement** .

cardiagn.com

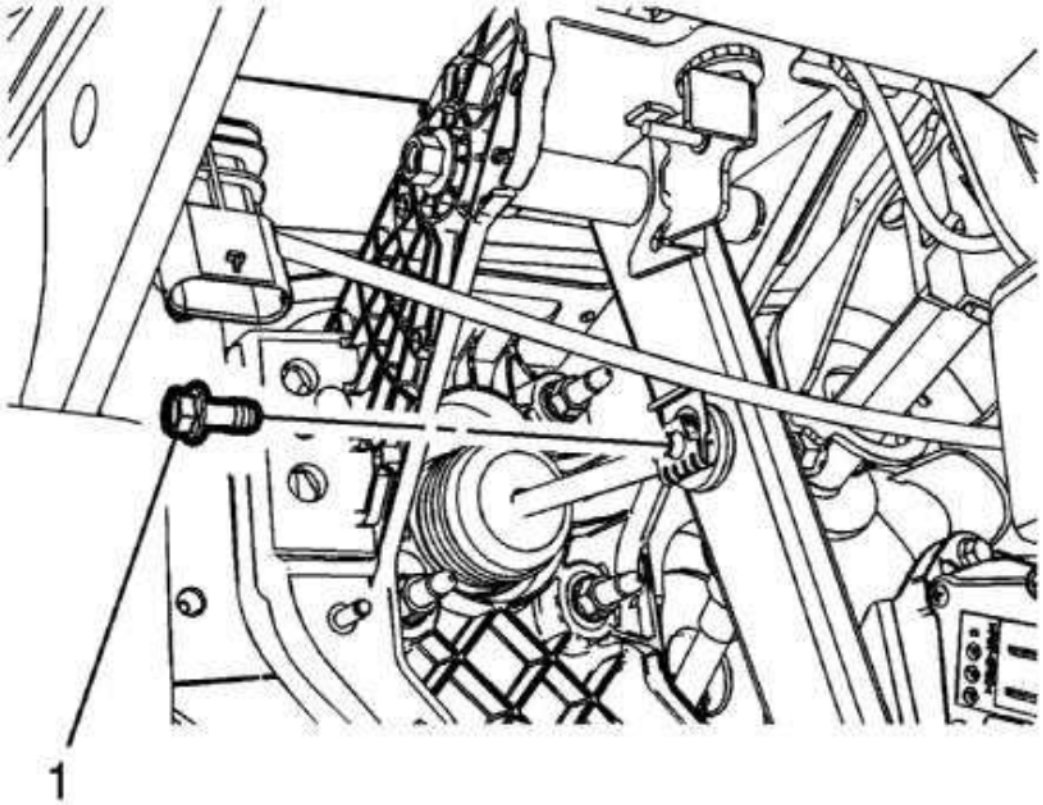

Fig. 148: Power Brake Booster Pushrod Retainer Clip Bolt
Courtesy of GENERAL MOTORS COMPANY

3. Remove the power brake booster pushrod retainer clip bolt (1).

cardiagn.com

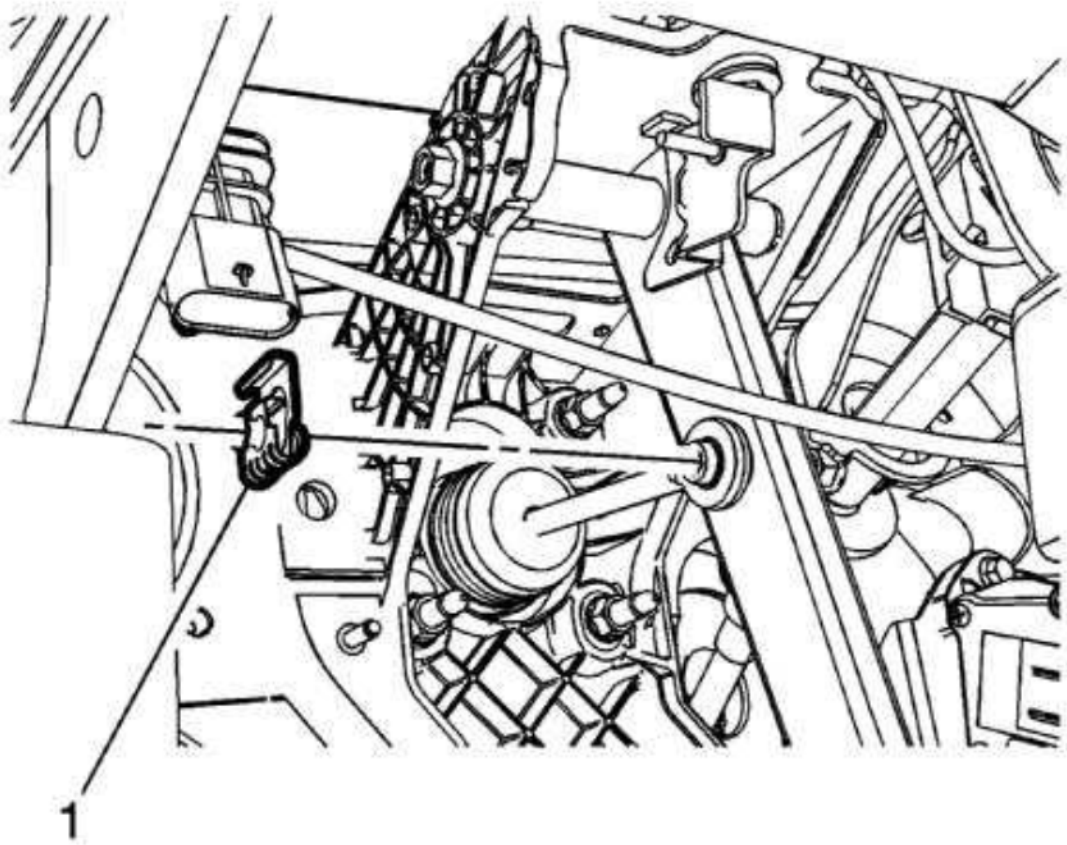

Fig. 149: Power Brake Booster Pushrod Retainer Clip
Courtesy of GENERAL MOTORS COMPANY

4. Remove the power brake booster pushrod retainer clip (1).

cardiagn.com

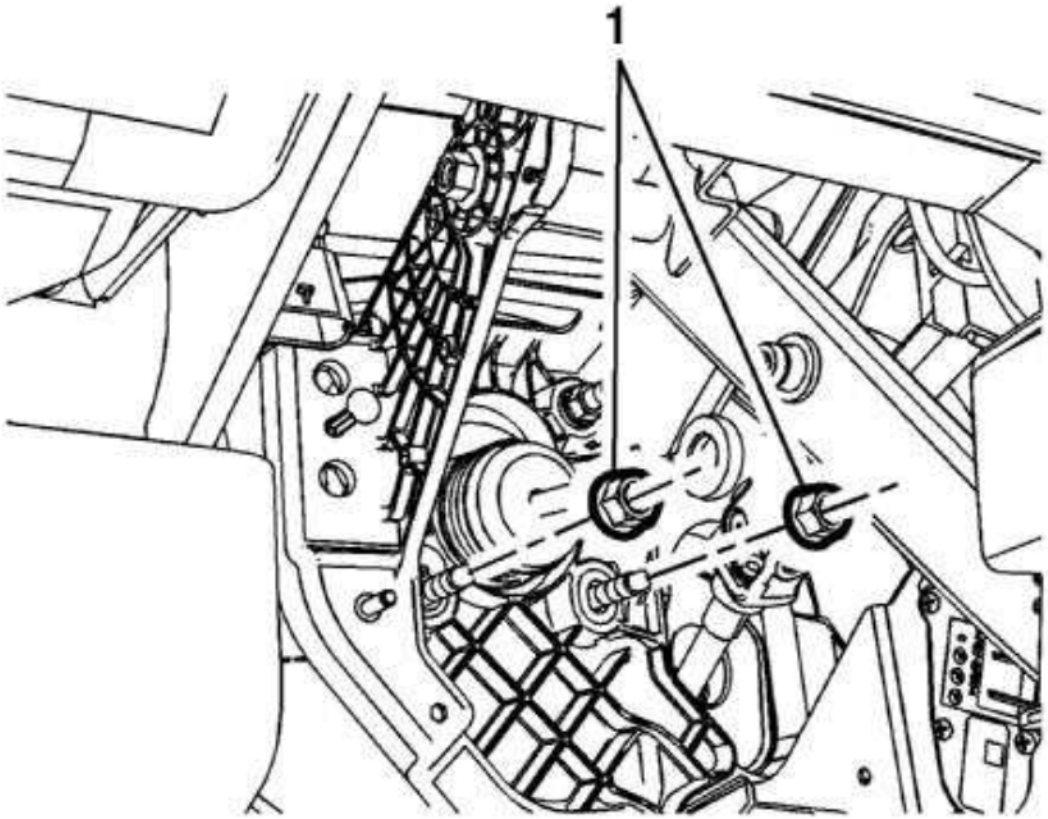

Fig. 150: Power Brake Booster Lower Nuts
Courtesy of GENERAL MOTORS COMPANY

5. Remove the lower power brake booster lower nuts (1).

cardiagn.com

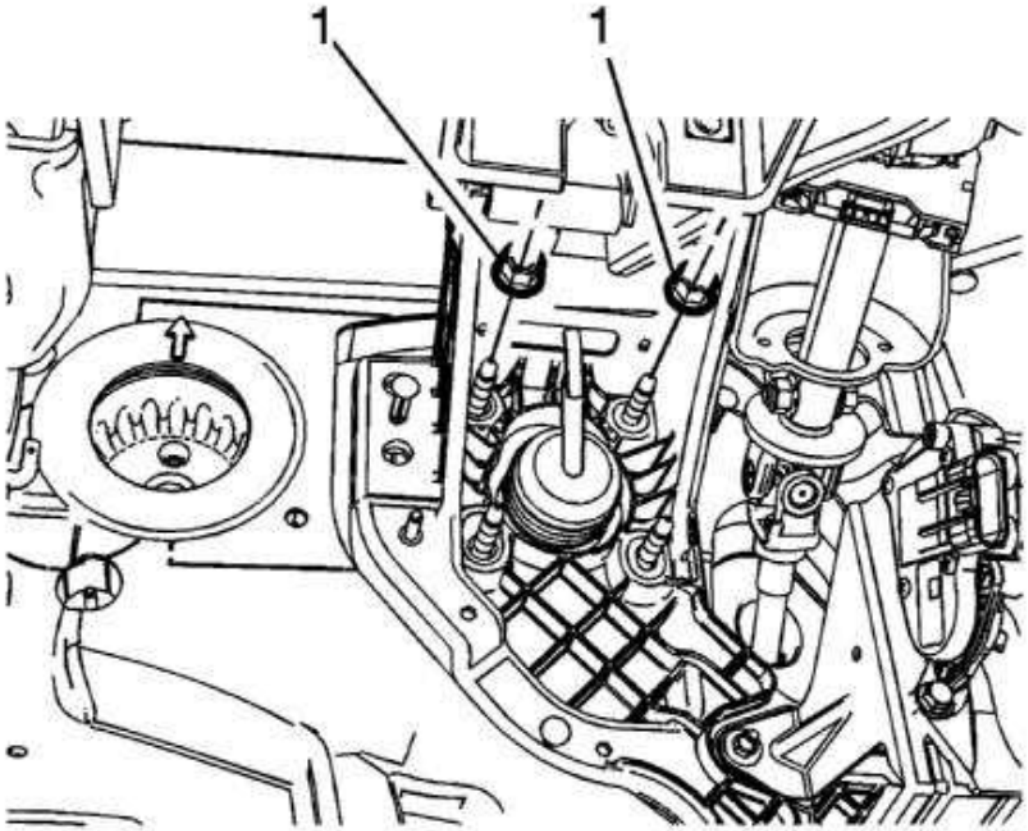

Fig. 151: Power Brake Booster Upper Nuts
Courtesy of GENERAL MOTORS COMPANY

6. Remove the upper power brake booster nuts (1).
7. Disconnect the power brake booster pushrod from the brake pedal.
8. Remove the driver side front fender rear upper brace. Refer to **Front Fender Rear Upper Brace Replacement** .
9. Without disconnecting the brake pipes, remove the nuts and carefully position aside the brake master cylinder. Refer to **Master Cylinder**

cardiagn.com

Replacement.

10. Disconnect the power brake booster vacuum sensor electrical connector.

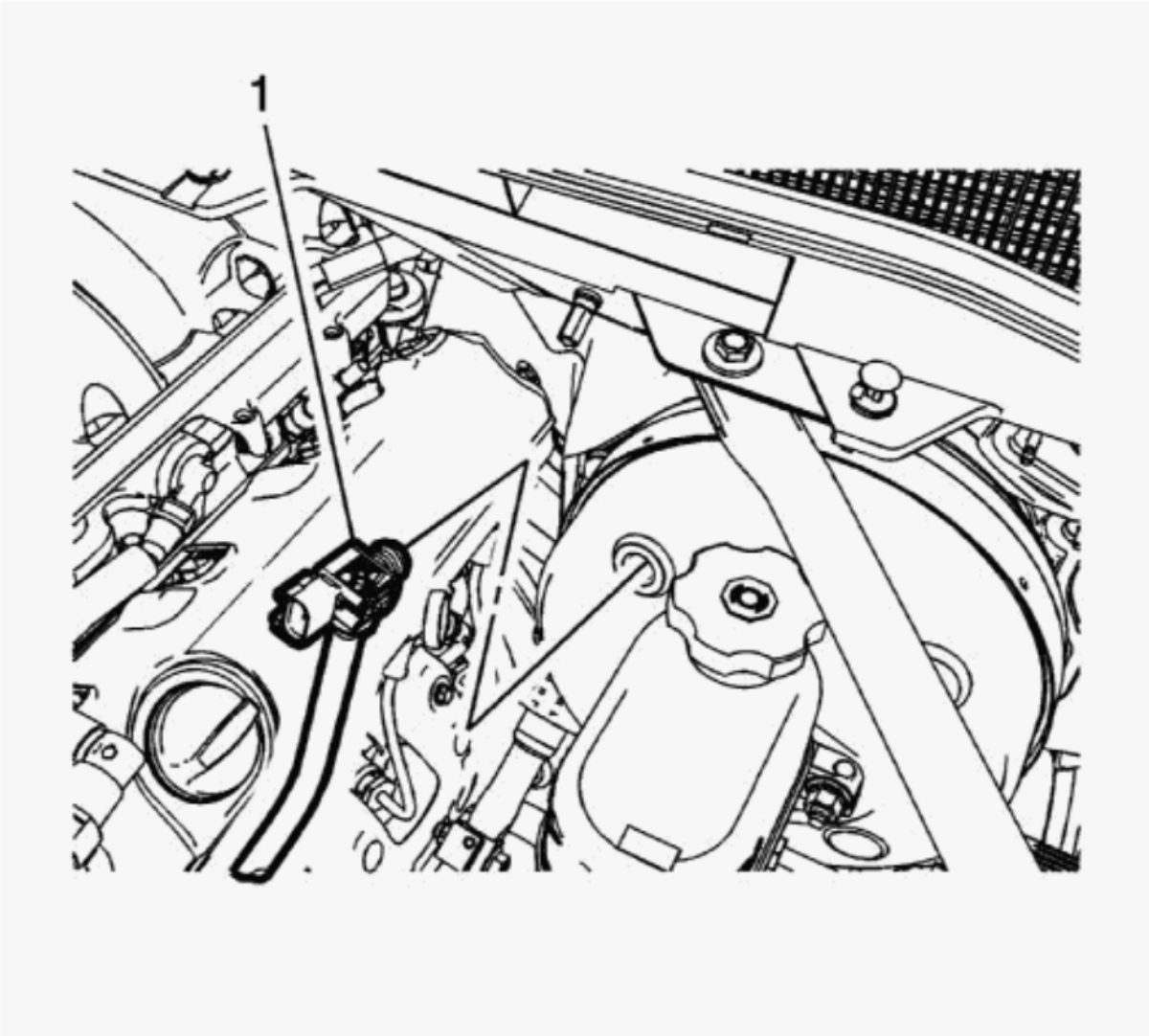

Fig. 152: Power Brake Booster Vacuum Sensor And Pipe Assembly
Courtesy of GENERAL MOTORS COMPANY

11. Remove and position aside the power brake booster vacuum sensor (1) and pipe assembly.

cardiagn.com

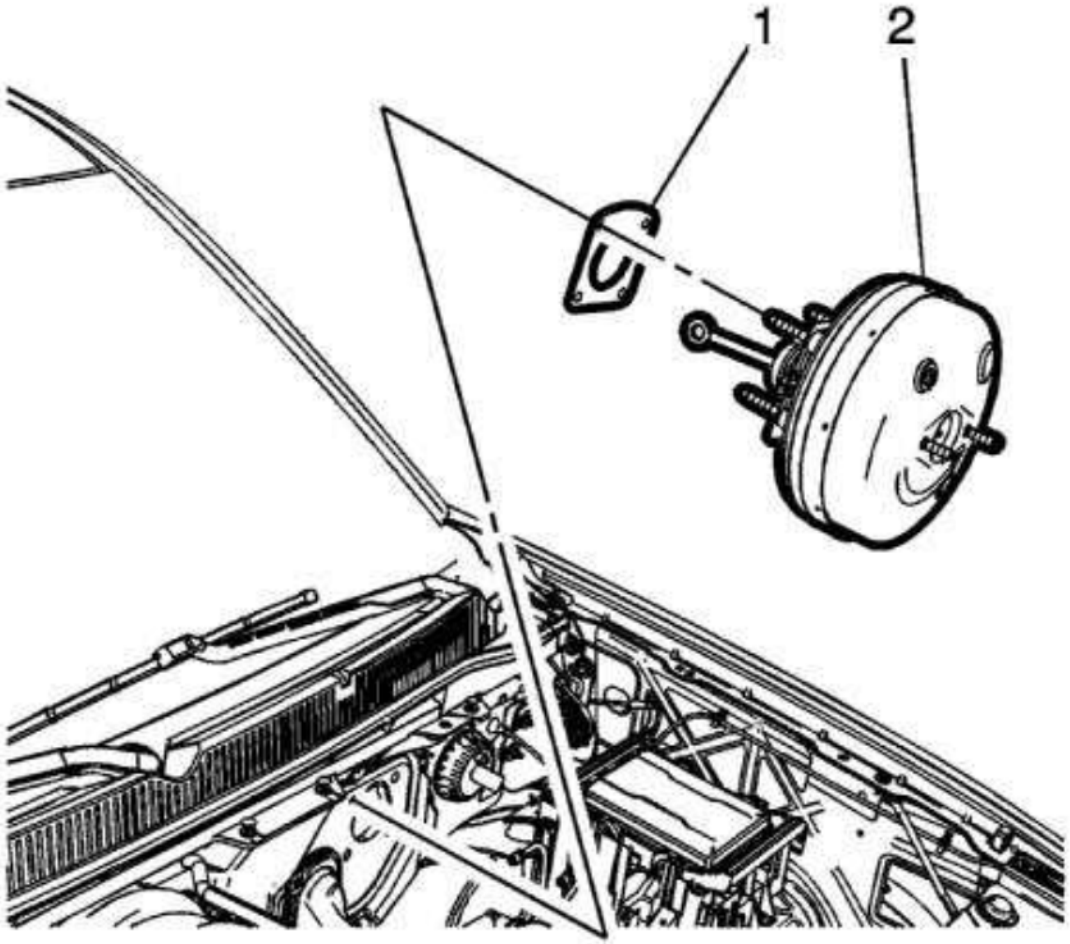

Fig. 153: Power Vacuum Brake Booster Gasket
Courtesy of GENERAL MOTORS COMPANY

12. Remove the power vacuum brake booster gasket (1) with the power vacuum brake booster (2).

Installation Procedure

cardiagn.com

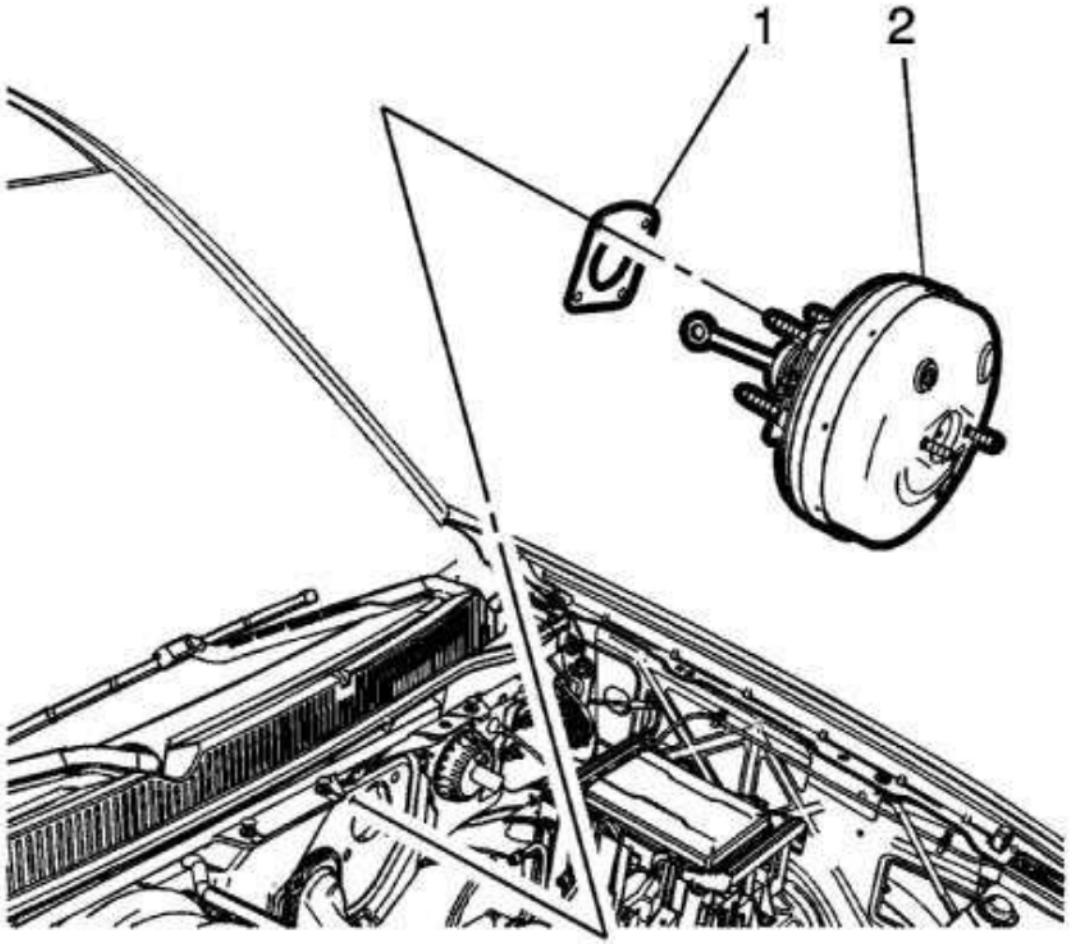

Fig. 154: Power Vacuum Brake Booster Gasket
Courtesy of GENERAL MOTORS COMPANY

1. Inspect the power vacuum brake booster gasket (1) for damage and replace, if necessary.
2. Install the power vacuum brake booster (2) with the gasket to the vehicle.
3. Ensure the power vacuum brake booster studs engage the brake pedal assembly.

cardiagn.com

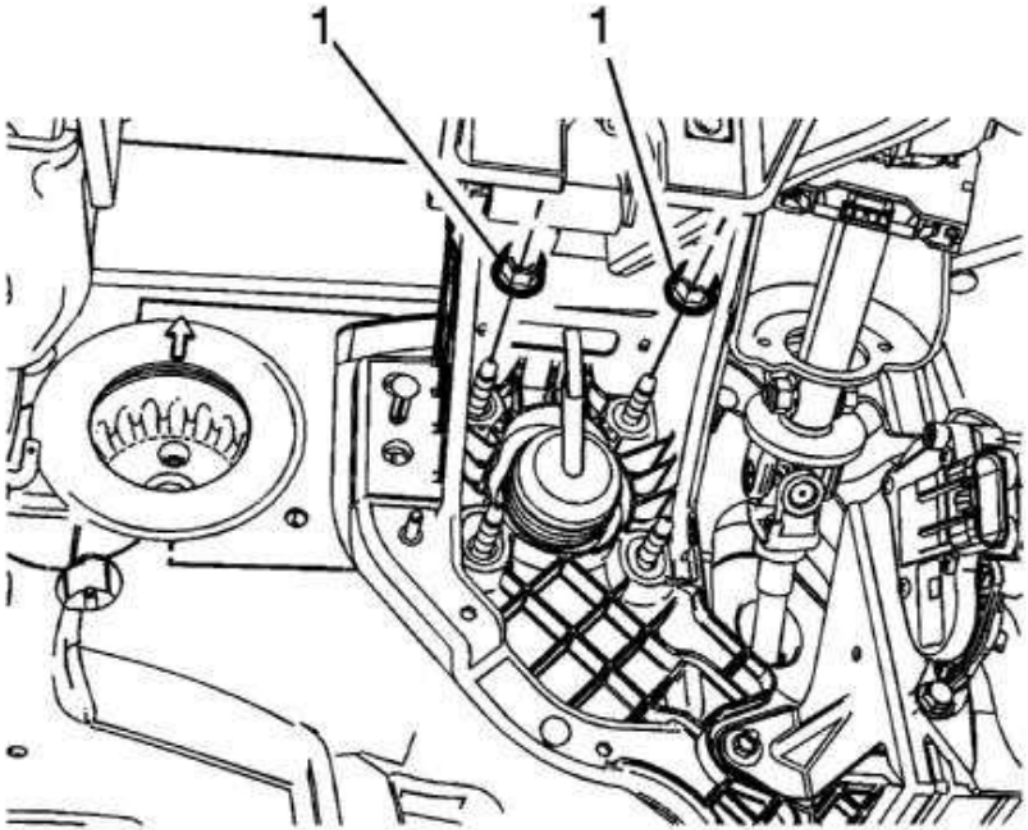

Fig. 155: Power Brake Booster Upper Nuts
Courtesy of GENERAL MOTORS COMPANY

CAUTION: Refer to Fastener Caution .

4. Install the upper power brake booster nuts (1) and tighten to 33 N.m (24 lb ft).

cardiagn.com

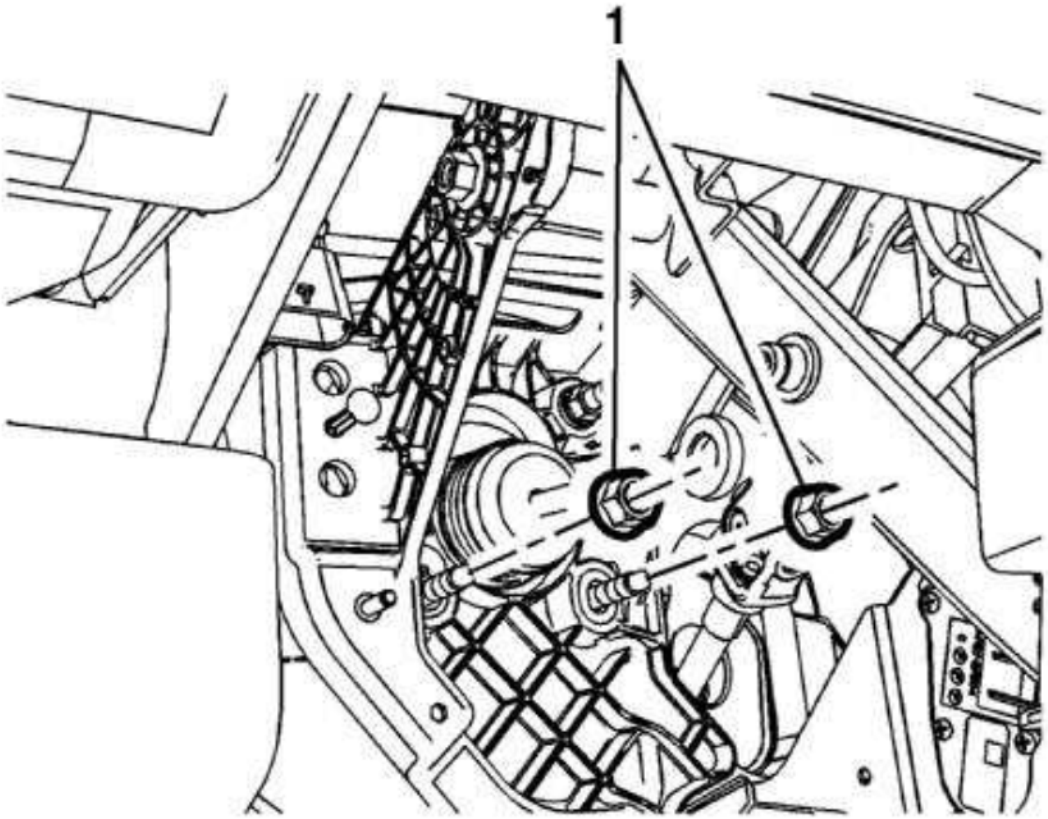

Fig. 156: Power Brake Booster Lower Nuts
Courtesy of GENERAL MOTORS COMPANY

5. Install the lower power brake booster nuts (1) and tighten to 33 N.m (24 lb ft).

cardiagn.com

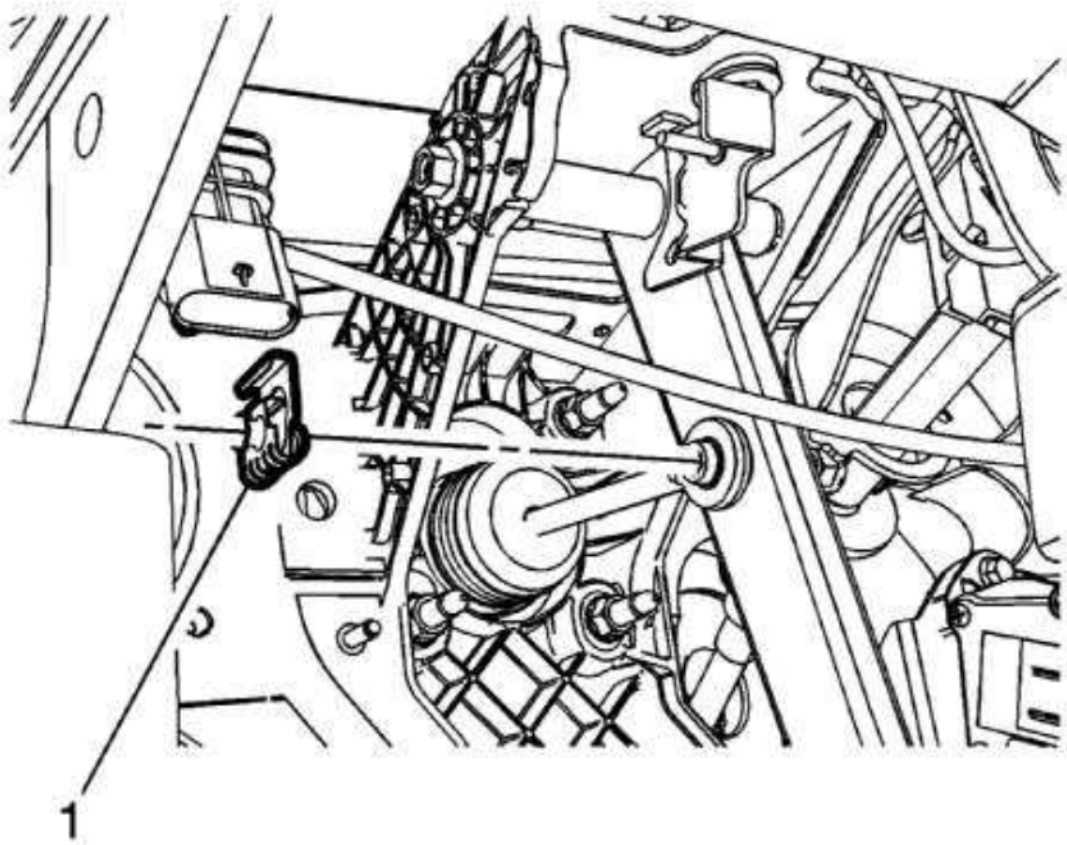

Fig. 157: Power Brake Booster Pushrod Retainer Clip
Courtesy of GENERAL MOTORS COMPANY

6. Connect the power vacuum brake booster pushrod to the brake pedal pivot pin.
7. Install the power brake booster pushrod retainer clip (1).

cardiagn.com

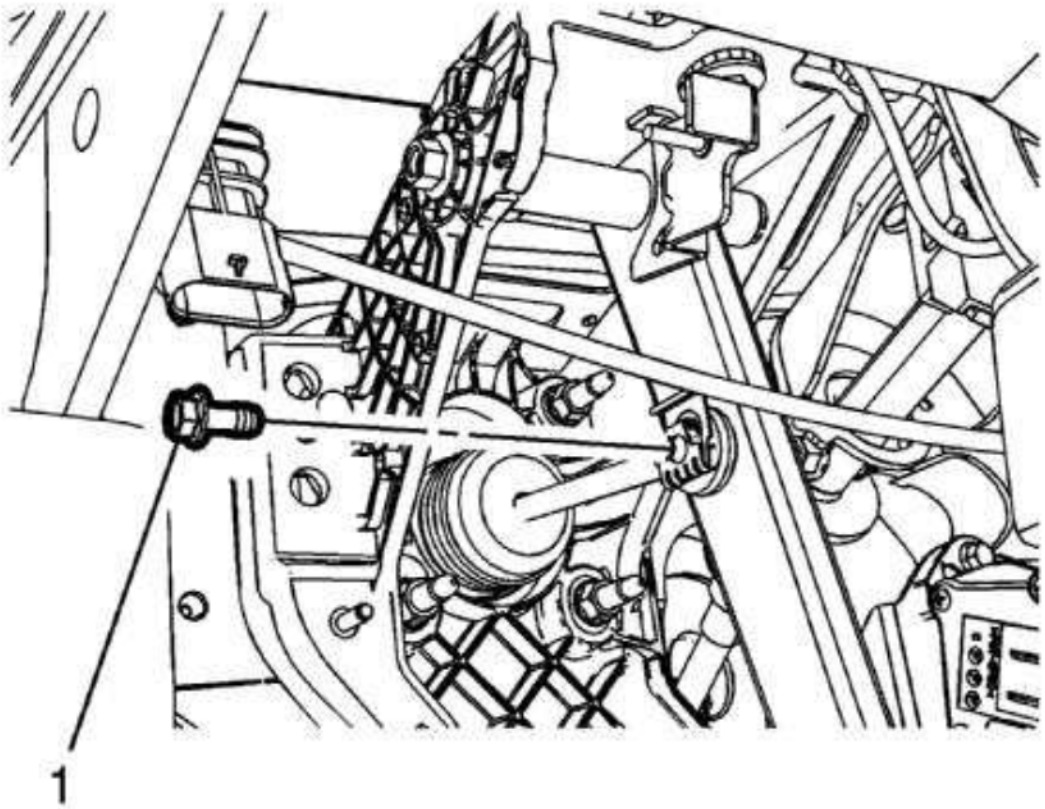

Fig. 158: Power Brake Booster Pushrod Retainer Clip Bolt
Courtesy of GENERAL MOTORS COMPANY

8. Install the power brake booster pushrod retainer clip bolt (1) and tighten to 10 N.m (89 lb in).
9. Install the brake master cylinder. Refer to **Master Cylinder Replacement**.
10. Install the driver side front fender rear upper brace. Refer to **Front Fender Rear Upper Brace Replacement** .
11. Install the brake pedal position sensor. Refer to **Brake Pedal Position Sensor Replacement** .

cardiagn.com

POWER BRAKE BOOSTER VACUUM CHECK VALVE GROMMET REPLACEMENT

Removal Procedure

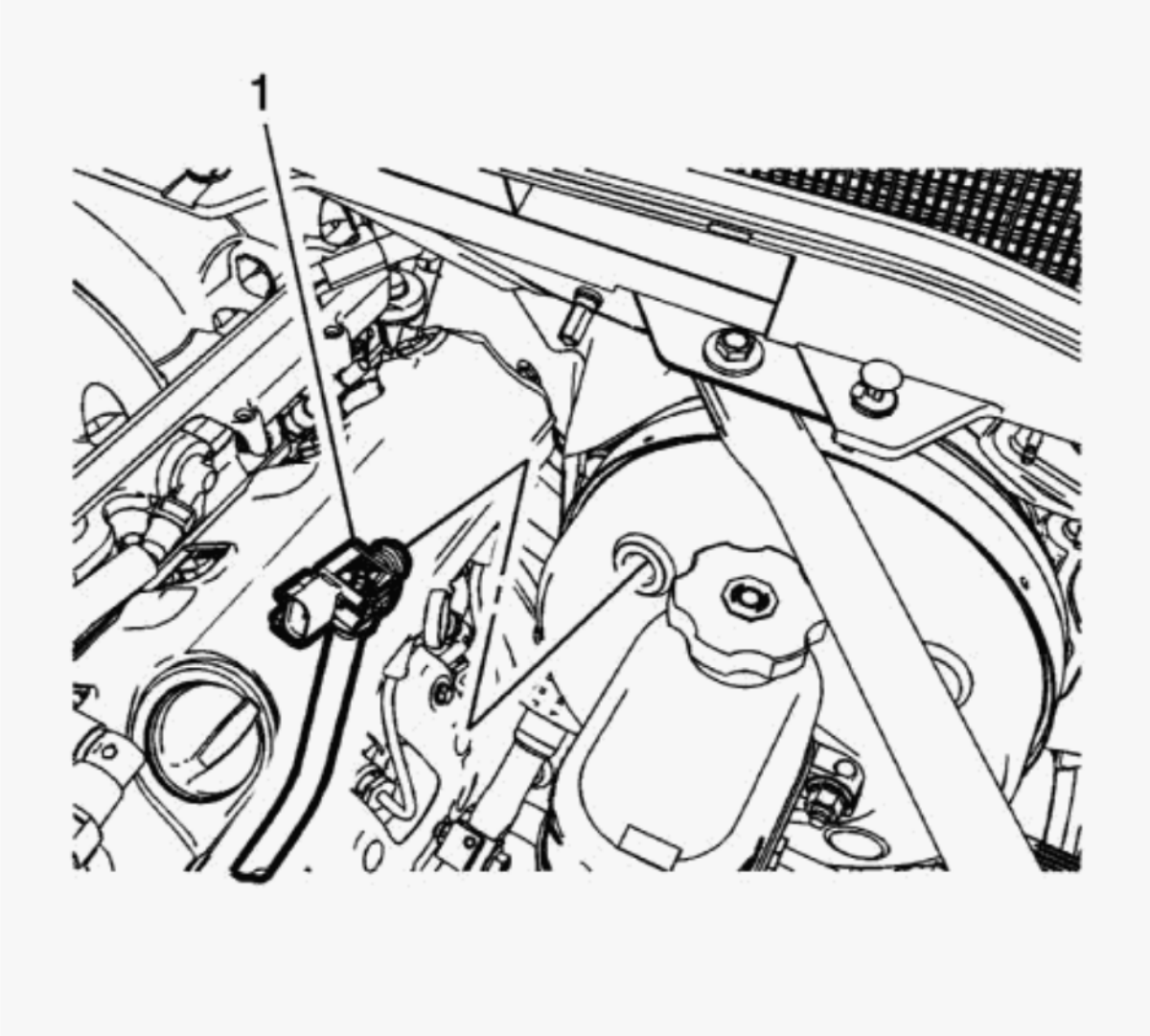

Fig. 159: Power Brake Booster Vacuum Sensor And Pipe Assembly
Courtesy of GENERAL MOTORS COMPANY

1. With the engine OFF, apply the brake pedal several times until the pedal becomes firm to deplete the power vacuum brake booster vacuum reserve.

cardiagn.com

2. Disconnect the power brake booster vacuum sensor electrical connector.
3. Remove the power brake booster vacuum sensor (1) and pipe assembly from the power vacuum brake booster and position aside.

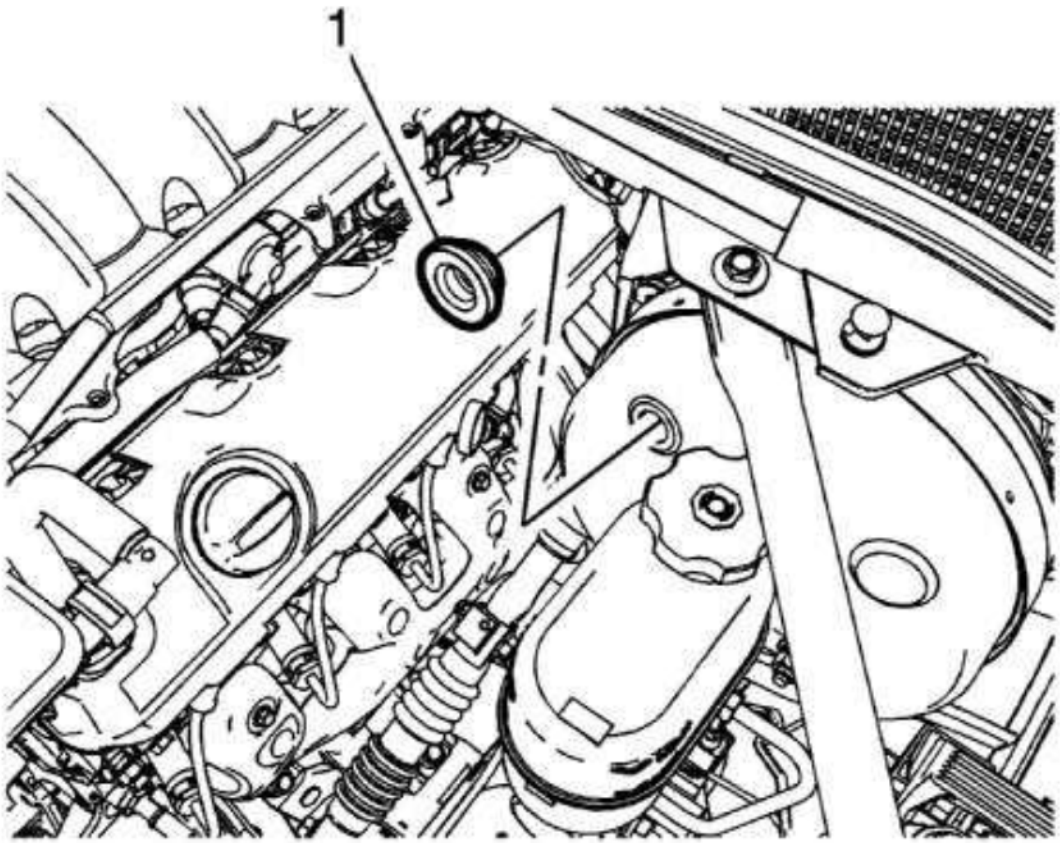

Fig. 160: Power Brake Booster Vacuum Check Valve Grommet
Courtesy of GENERAL MOTORS COMPANY

4. Remove the power brake booster vacuum check valve grommet (1).

cardiagn.com

Installation Procedure

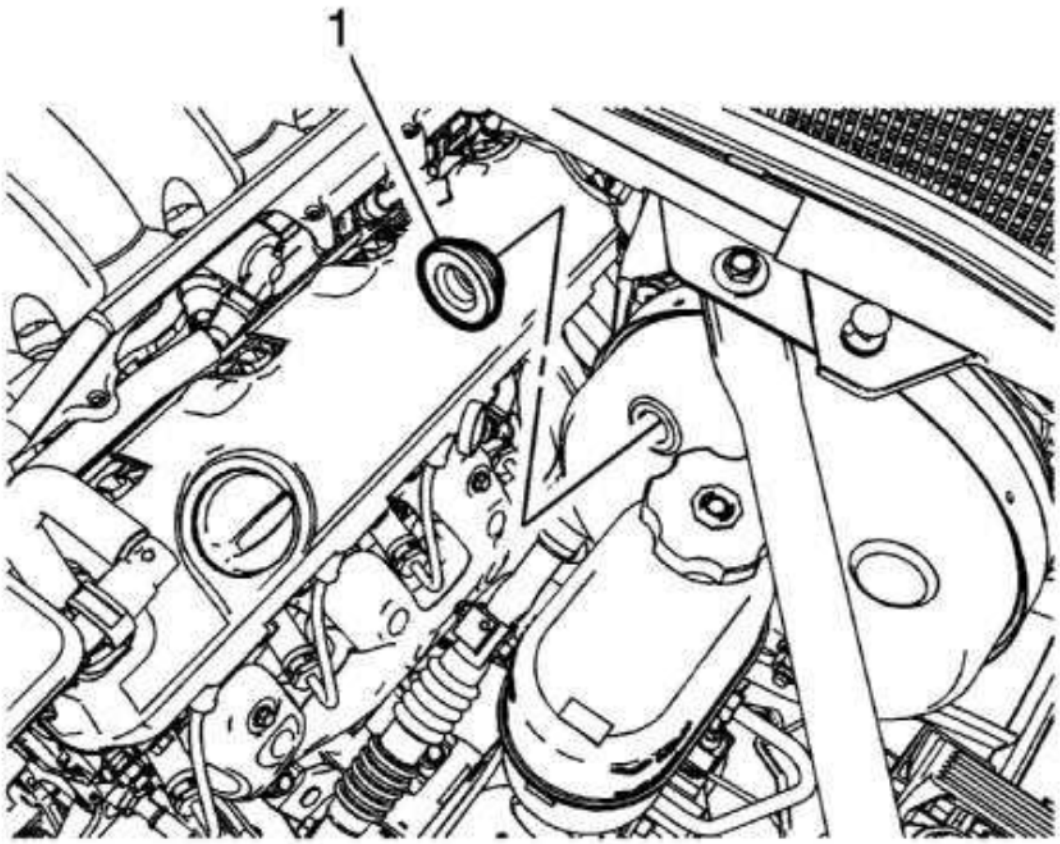

Fig. 161: Power Brake Booster Vacuum Check Valve Grommet
Courtesy of GENERAL MOTORS COMPANY

NOTE: **If necessary, a small amount of denatured alcohol may be used as a lubricant for assembly. Do not use soap.**

cardiagn.com

1. Install the power brake booster vacuum check valve grommet (1).

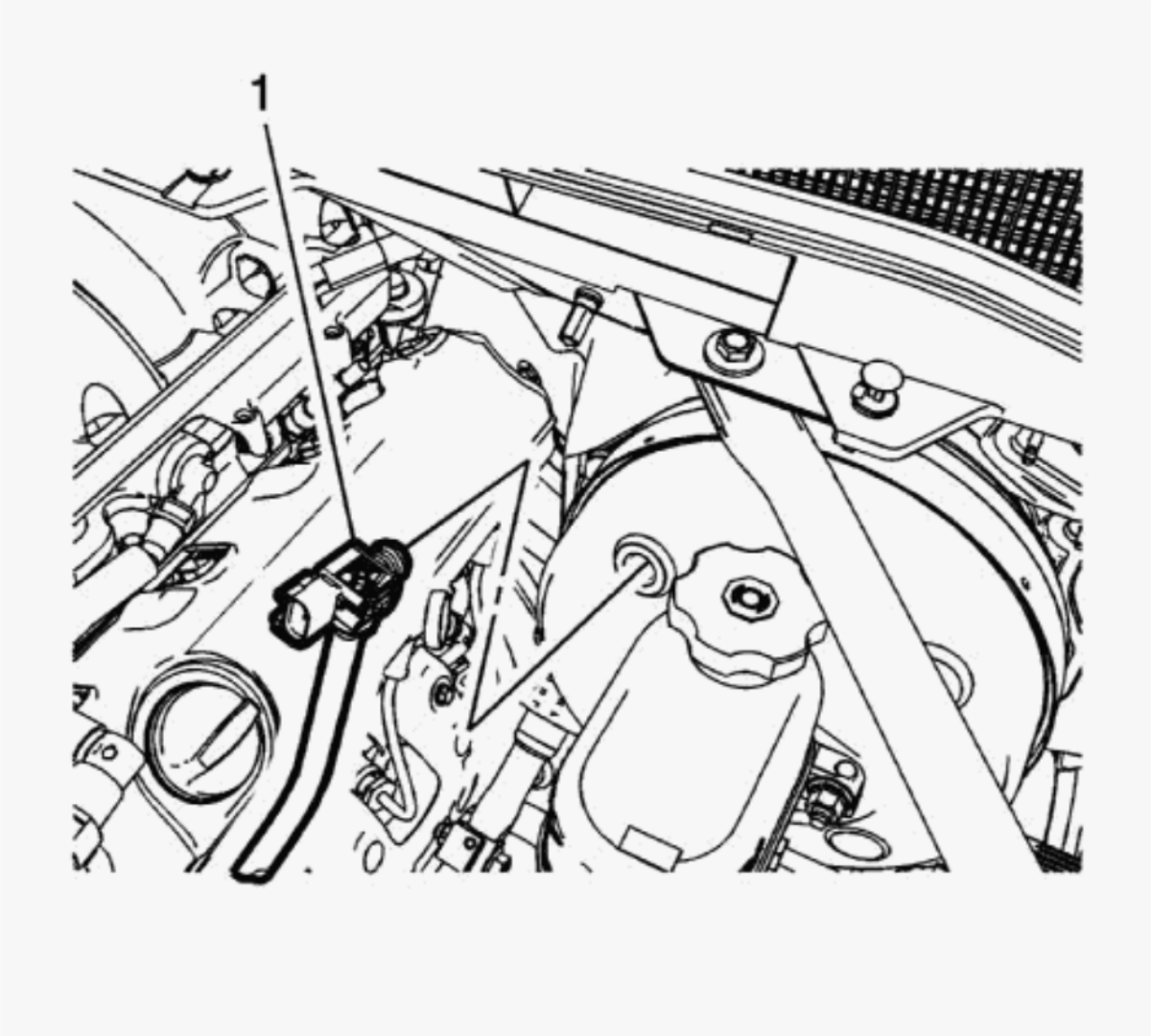

Fig. 162: Power Brake Booster Vacuum Sensor And Pipe Assembly
Courtesy of GENERAL MOTORS COMPANY

NOTE: **If necessary, a small amount of denatured alcohol may be used as a lubricant for assembly. Do not use soap.**

cardiagn.com

2. Install the power brake booster vacuum sensor (1) and pipe assembly to the power vacuum brake booster.
3. Connect the power brake booster vacuum sensor electrical connector.

POWER BRAKE BOOSTER VACUUM SENSOR REPLACEMENT

Removal Procedure

NOTE: **The power brake booster vacuum sensor and the power brake booster vacuum pipe cannot be separated, and must be replaced as an assembly.**

cardiagn.com

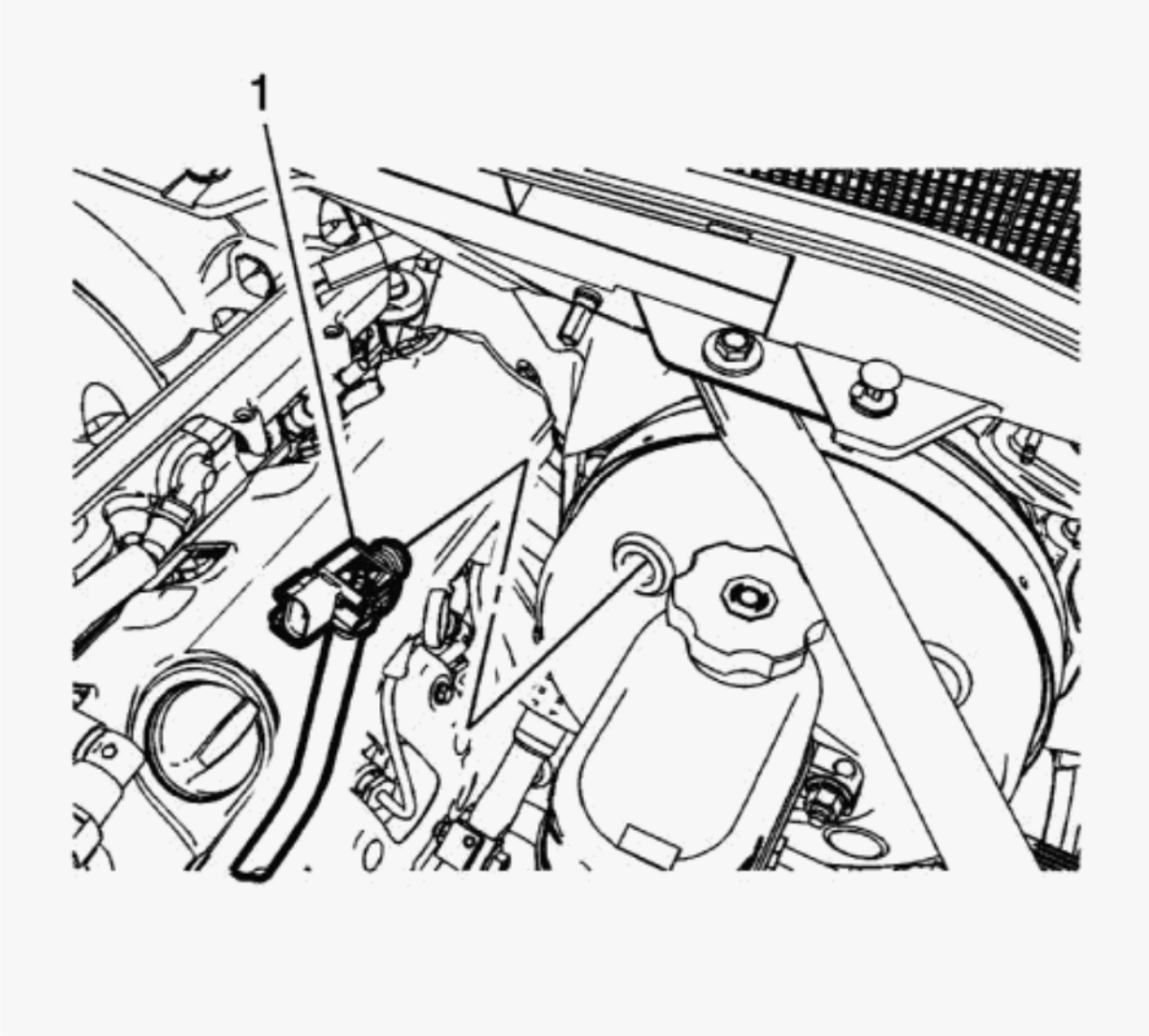

Fig. 163: Power Brake Booster Vacuum Sensor And Pipe Assembly
Courtesy of GENERAL MOTORS COMPANY

1. With the engine OFF, apply the brake pedal several times until the pedal becomes firm to deplete the power vacuum brake booster vacuum reserve.
2. Disconnect the power brake booster vacuum sensor electrical connector.
3. Remove the power brake booster vacuum sensor (1) and pipe assembly from the power vacuum brake booster.

cardiagn.com

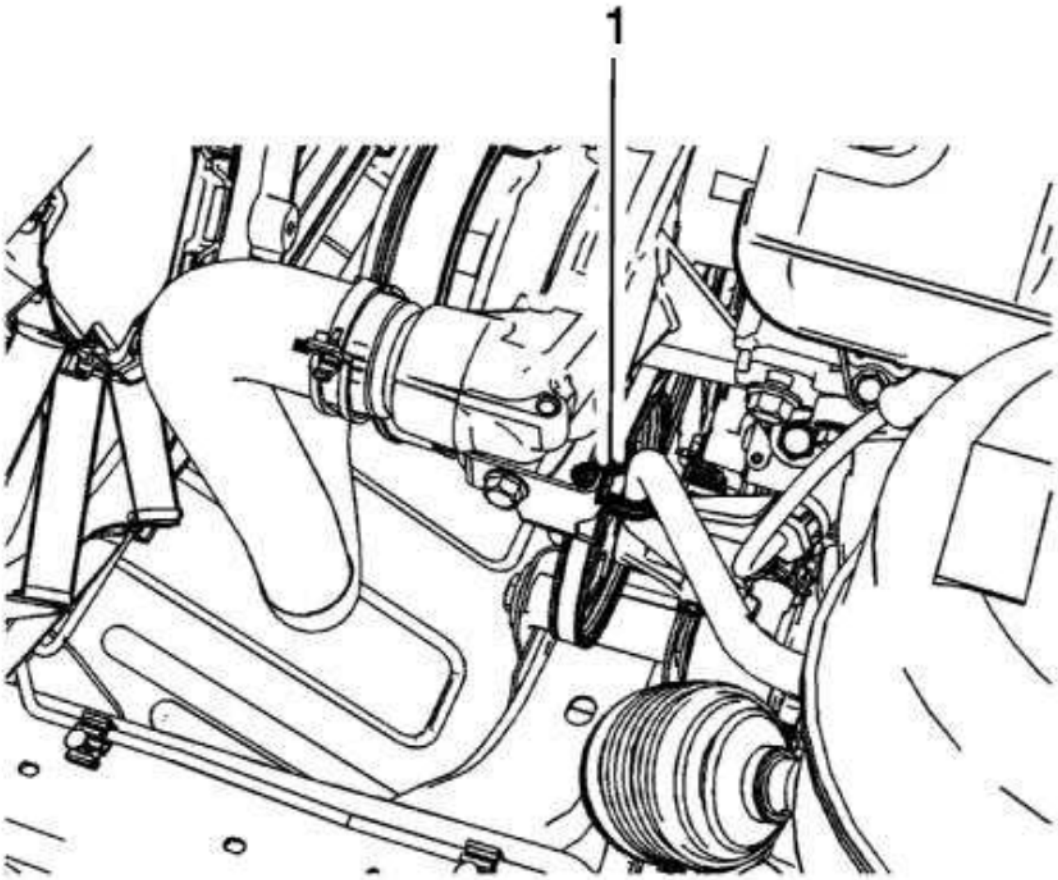

Fig. 164: Power Brake Booster Vacuum Pipe Clip
Courtesy of GENERAL MOTORS COMPANY

4. Release the power brake booster vacuum pipe clip (1) from the harness bracket.

cardiagn.com

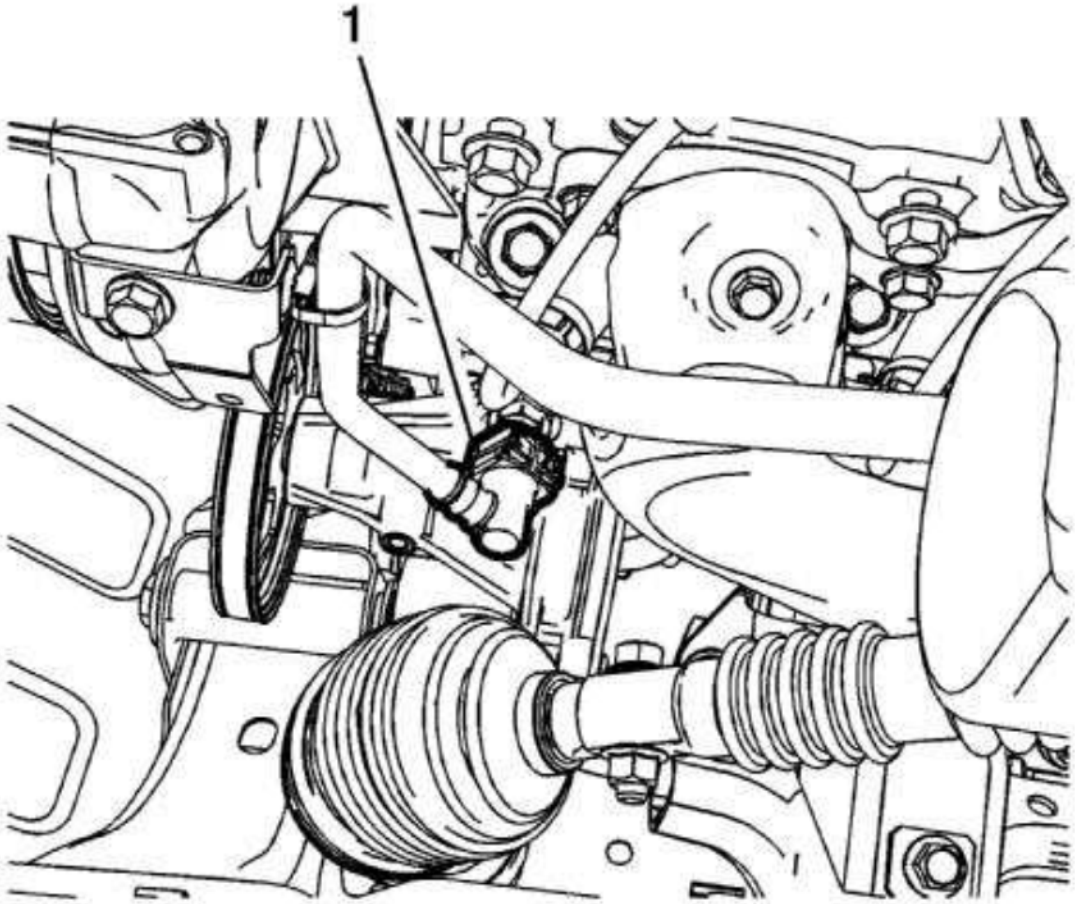

Fig. 165: Power Brake Booster Vacuum Pipe Quick Connect
Courtesy of GENERAL MOTORS COMPANY

5. Release the power brake booster vacuum pipe quick connect (1) from the vacuum pump port.
6. Remove the power brake booster vacuum pipe assembly from the vehicle.

Installation Procedure

cardiagn.com

1. Install the power brake booster vacuum pipe assembly to the vehicle.

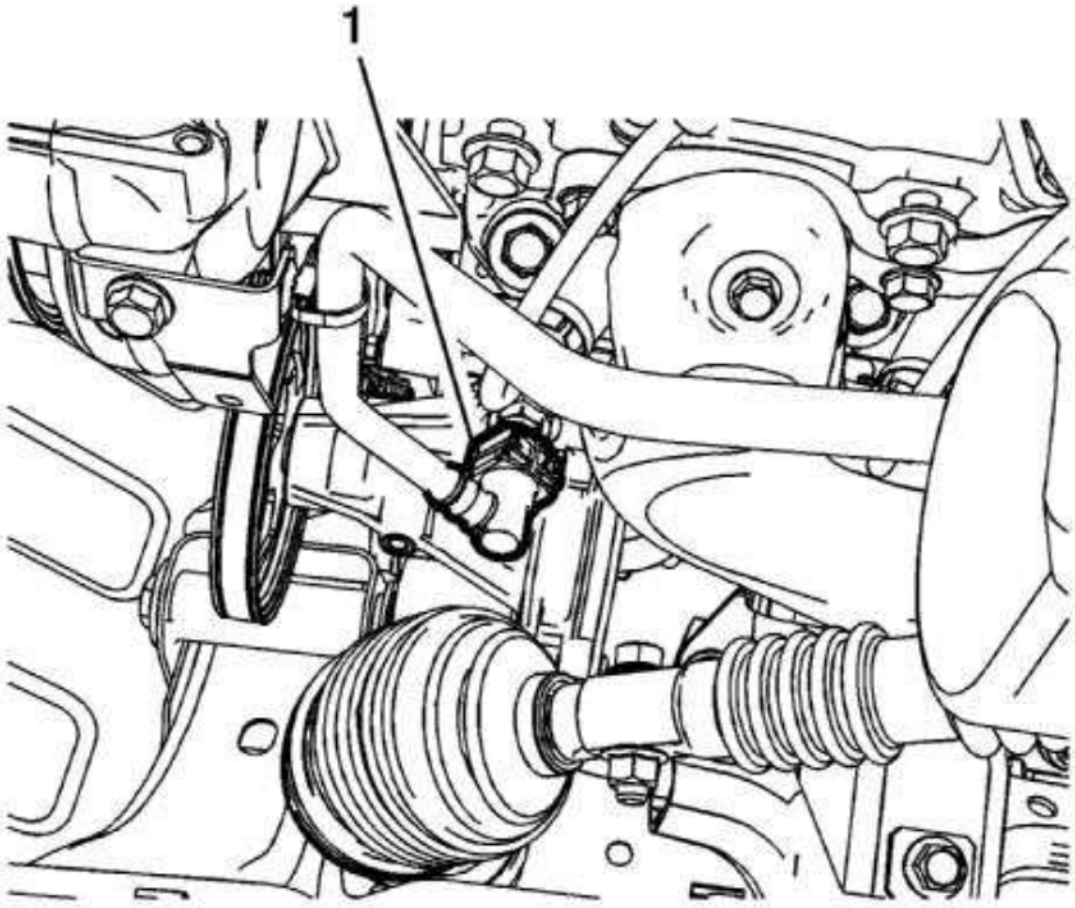

Fig. 166: Power Brake Booster Vacuum Pipe Quick Connect
Courtesy of GENERAL MOTORS COMPANY

2. Connect the power brake booster vacuum pipe quick connect (1) to the vacuum pump port.

cardiagn.com

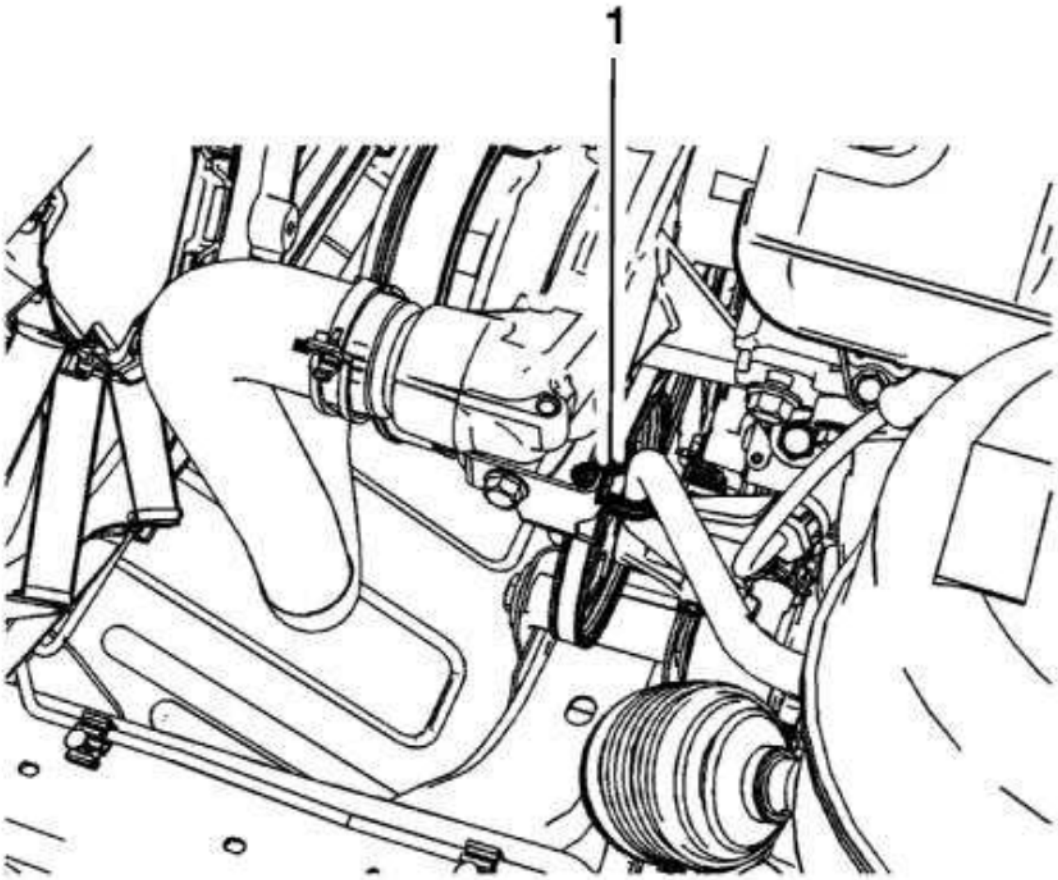

Fig. 167: Power Brake Booster Vacuum Pipe Clip
Courtesy of GENERAL MOTORS COMPANY

3. Install the power brake booster vacuum pipe clip (1) to the harness bracket.

cardiagn.com

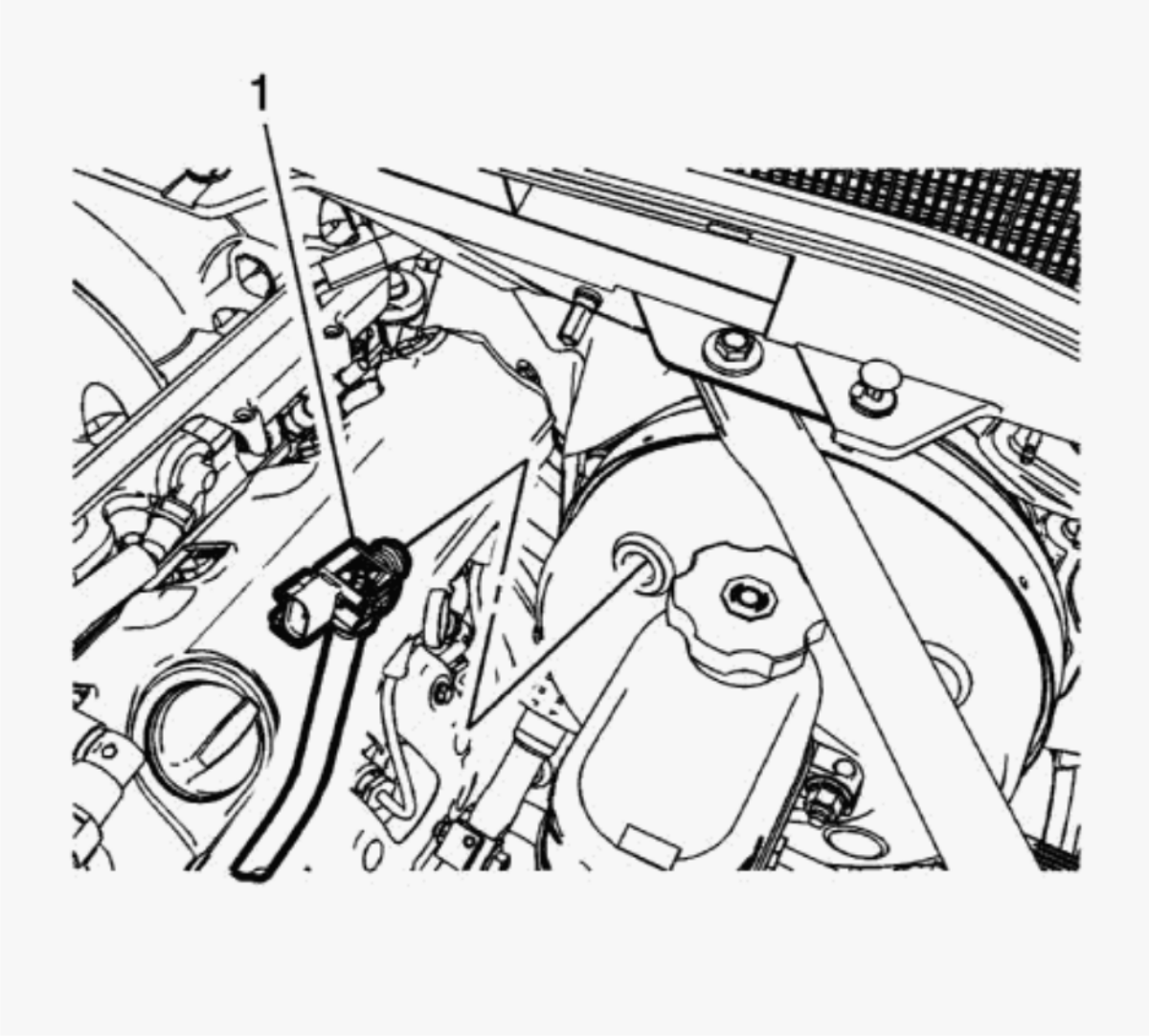

Fig. 168: Power Brake Booster Vacuum Sensor And Pipe Assembly
Courtesy of GENERAL MOTORS COMPANY

NOTE: **If necessary, a small amount of denatured alcohol may be used as a lubricant for assembly. Do not use soap.**

4. Install the power brake booster vacuum sensor (1) and pipe assembly to the power vacuum brake booster.
5. Connect the power brake booster vacuum sensor electrical connector.

cardiagn.com

POWER BRAKE BOOSTER VACUUM PIPE REPLACEMENT

Removal Procedure

NOTE: **The power brake booster vacuum sensor and the power brake booster vacuum pipe cannot be separated, and must be replaced as an assembly.**

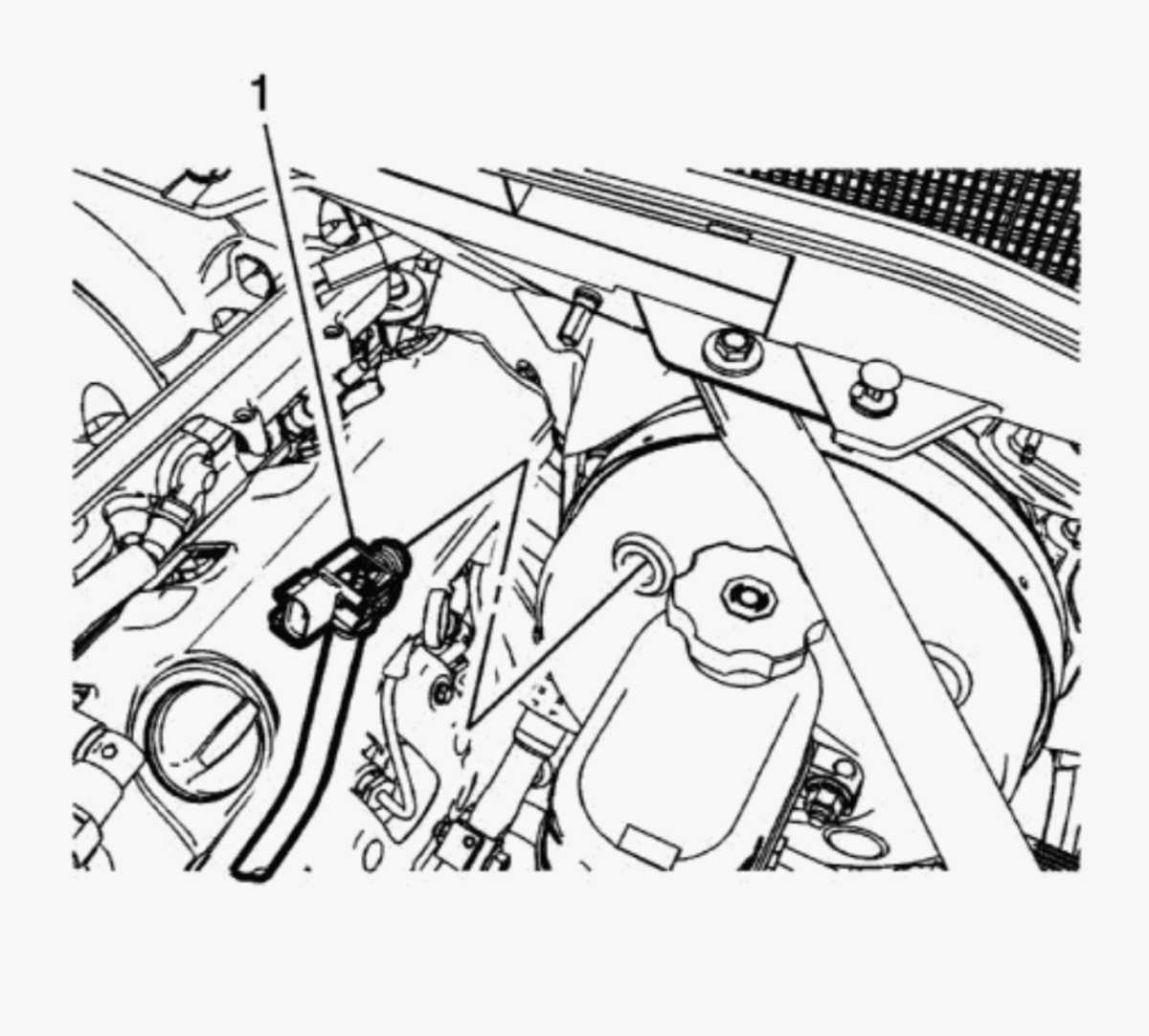

Fig. 169: Power Brake Booster Vacuum Sensor And Pipe Assembly

cardiagn.com

Courtesy of GENERAL MOTORS COMPANY

1. With the engine OFF, apply the brake pedal several times until the pedal becomes firm to deplete the power vacuum brake booster vacuum reserve.
2. Disconnect the power brake booster vacuum sensor electrical connector.
3. Remove the power brake booster vacuum sensor (1) and pipe assembly from the power vacuum brake booster.

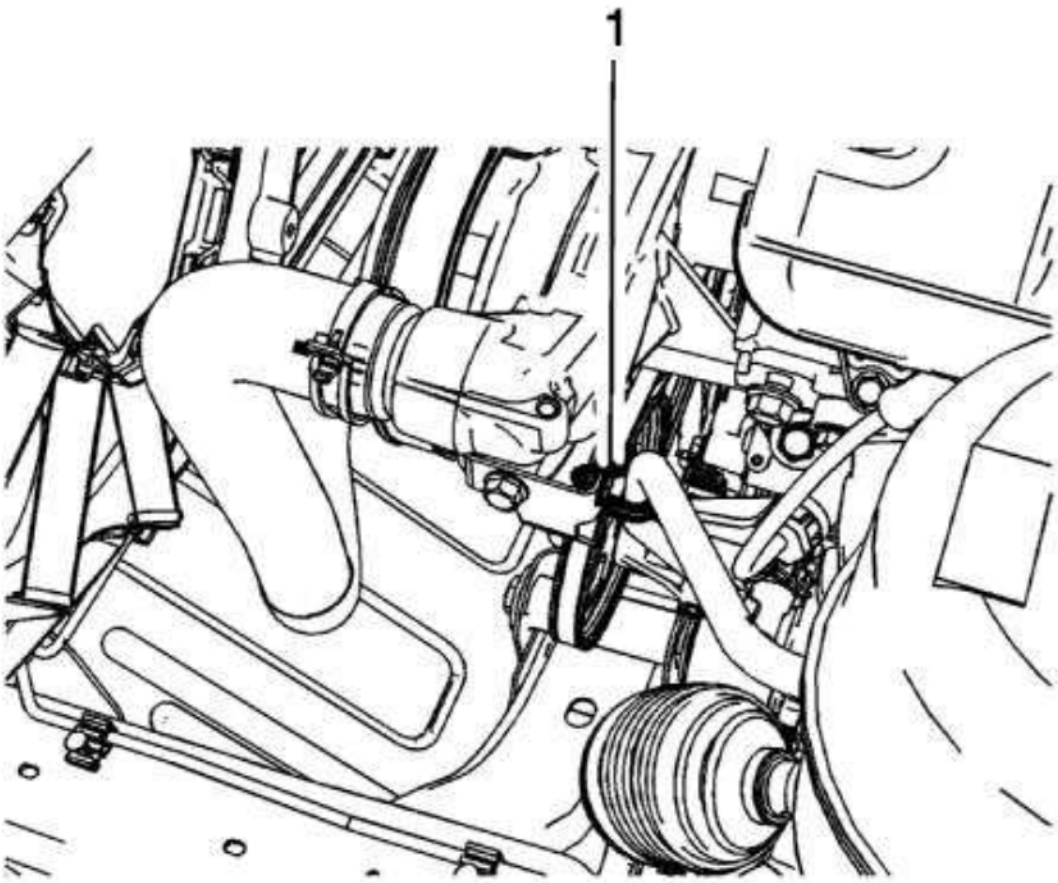

Fig. 170: Power Brake Booster Vacuum Pipe Clip

cardiagn.com

Courtesy of GENERAL MOTORS COMPANY

4. Release the power brake booster vacuum pipe clip (1) from the harness bracket.

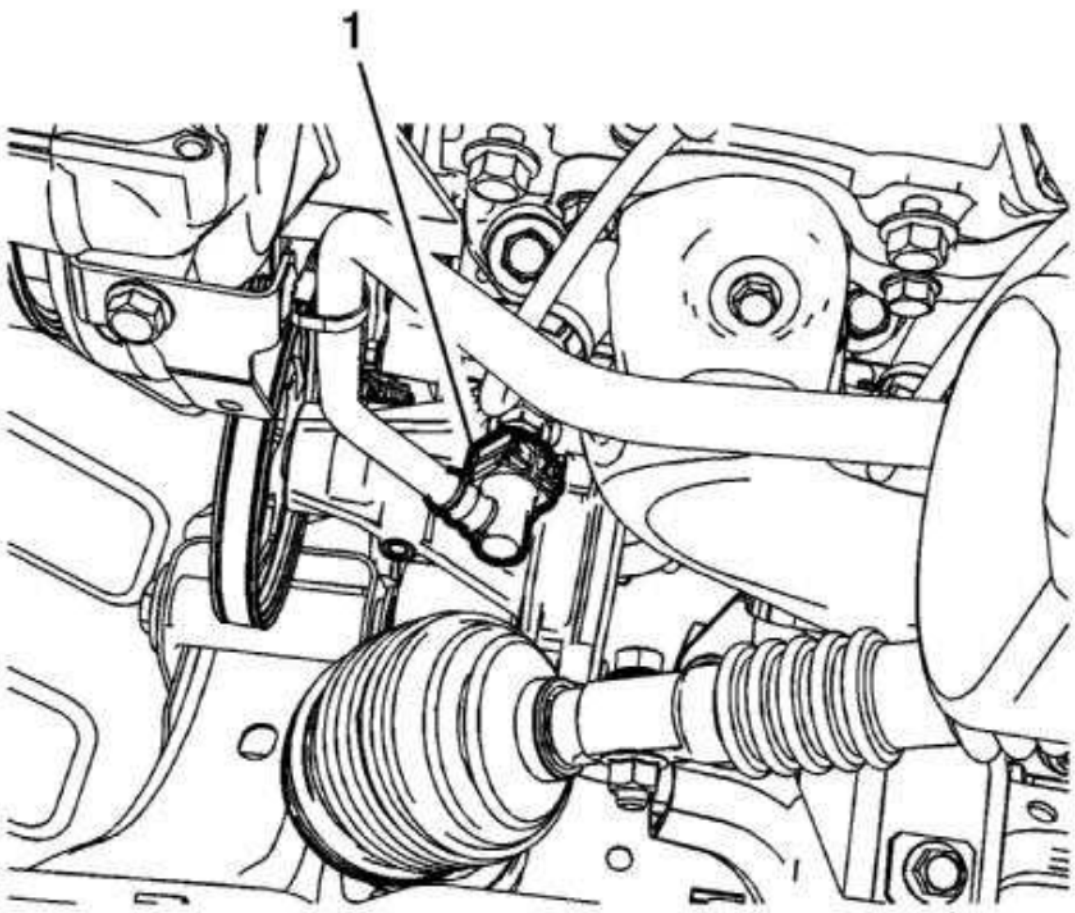

Fig. 171: Power Brake Booster Vacuum Pipe Quick Connect
Courtesy of GENERAL MOTORS COMPANY

5. Release the power brake booster vacuum pipe quick connect (1) from the vacuum pump port.

cardiagn.com

6. Remove the power brake booster vacuum pipe assembly from the vehicle.

Installation Procedure

1. Install the power brake booster vacuum pipe assembly to the vehicle.

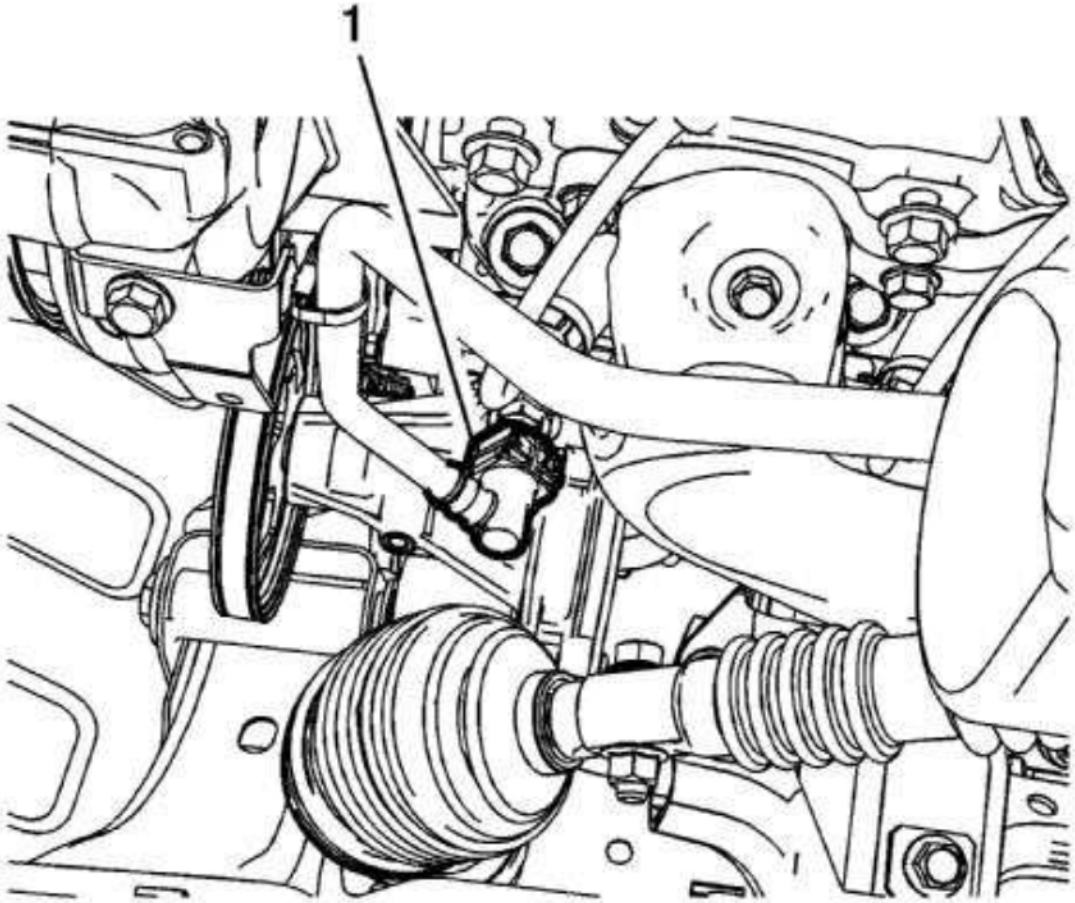

Fig. 172: Power Brake Booster Vacuum Pipe Quick Connect
Courtesy of GENERAL MOTORS COMPANY

cardiagn.com

2. Connect the power brake booster vacuum pipe quick connect (1) to the vacuum pump port.

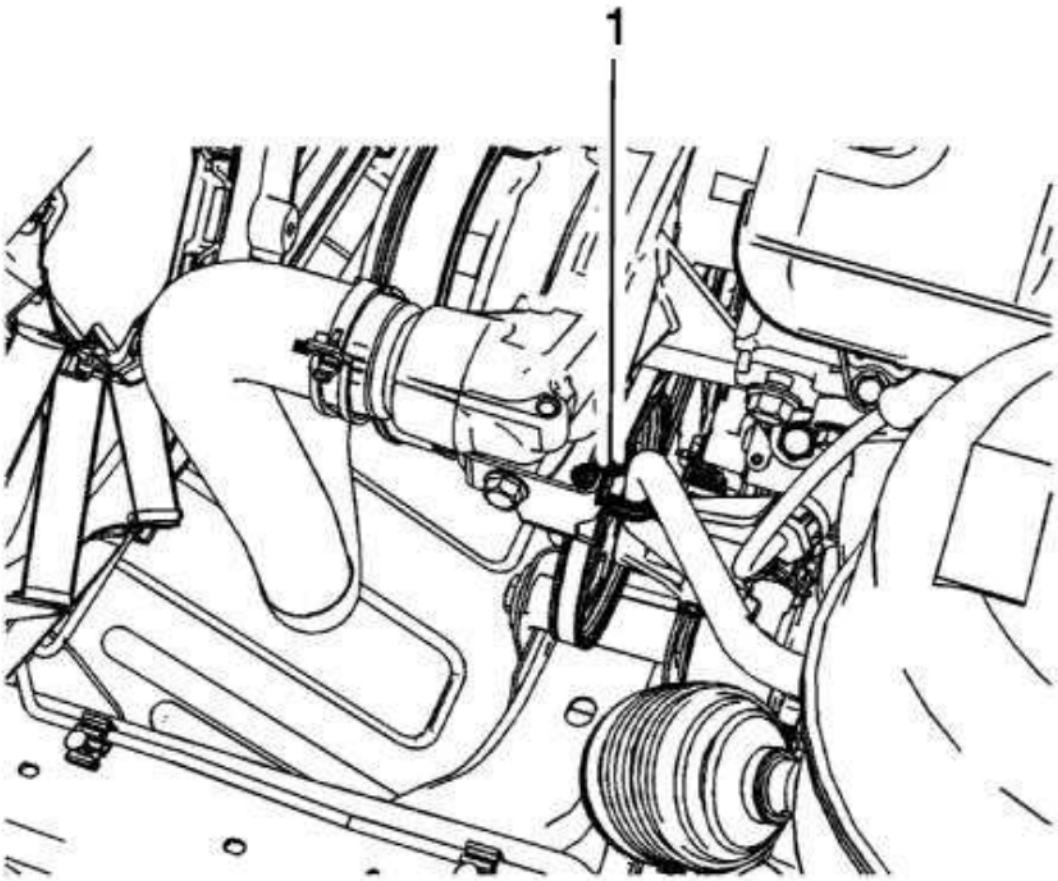

Fig. 173: Power Brake Booster Vacuum Pipe Clip
Courtesy of GENERAL MOTORS COMPANY

3. Install the power brake booster vacuum pipe clip (1) to the harness bracket.

cardiagn.com

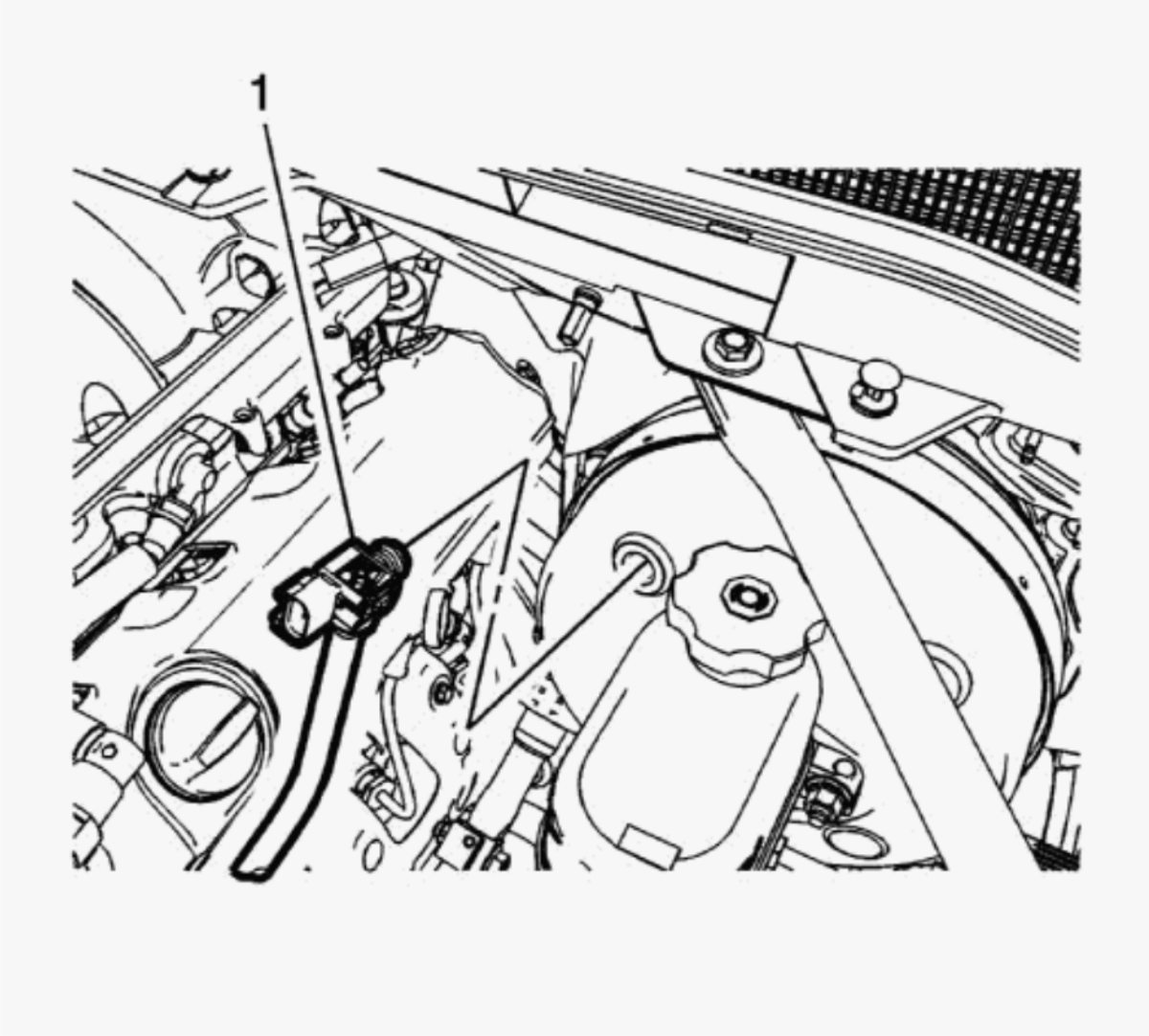

Fig. 174: Power Brake Booster Vacuum Sensor And Pipe Assembly
Courtesy of GENERAL MOTORS COMPANY

NOTE: **If necessary, a small amount of denatured alcohol may be used as a lubricant for assembly. Do not use soap.**

4. Install the power brake booster vacuum sensor (1) and pipe assembly to the power vacuum brake booster.
5. Connect the power brake booster vacuum sensor electrical connector.

cardiagn.com

POWER BRAKE BOOSTER REPLACEMENT

Removal Procedure

CAUTION: Hydraulic brake systems use two distinct and incompatible fluids. Power steering fluid is used in the hydraulic brake booster system. Brake fluid is used in the master cylinder and brake pipes. Use extreme care when selecting brake system fluids, or seal damage can result. Refer to General Information to select the correct fluid.

1. Apply the parking brake.
2. With the engine OFF, apply and release the brake pedal several times until the pedal becomes firm to deplete the power brake booster reserve.
3. Without disconnecting the brake pipes, remove and position aside the brake master cylinder and secure with heavy mechanics wire or equivalent. Refer to **Master Cylinder Replacement**.

cardiagn.com

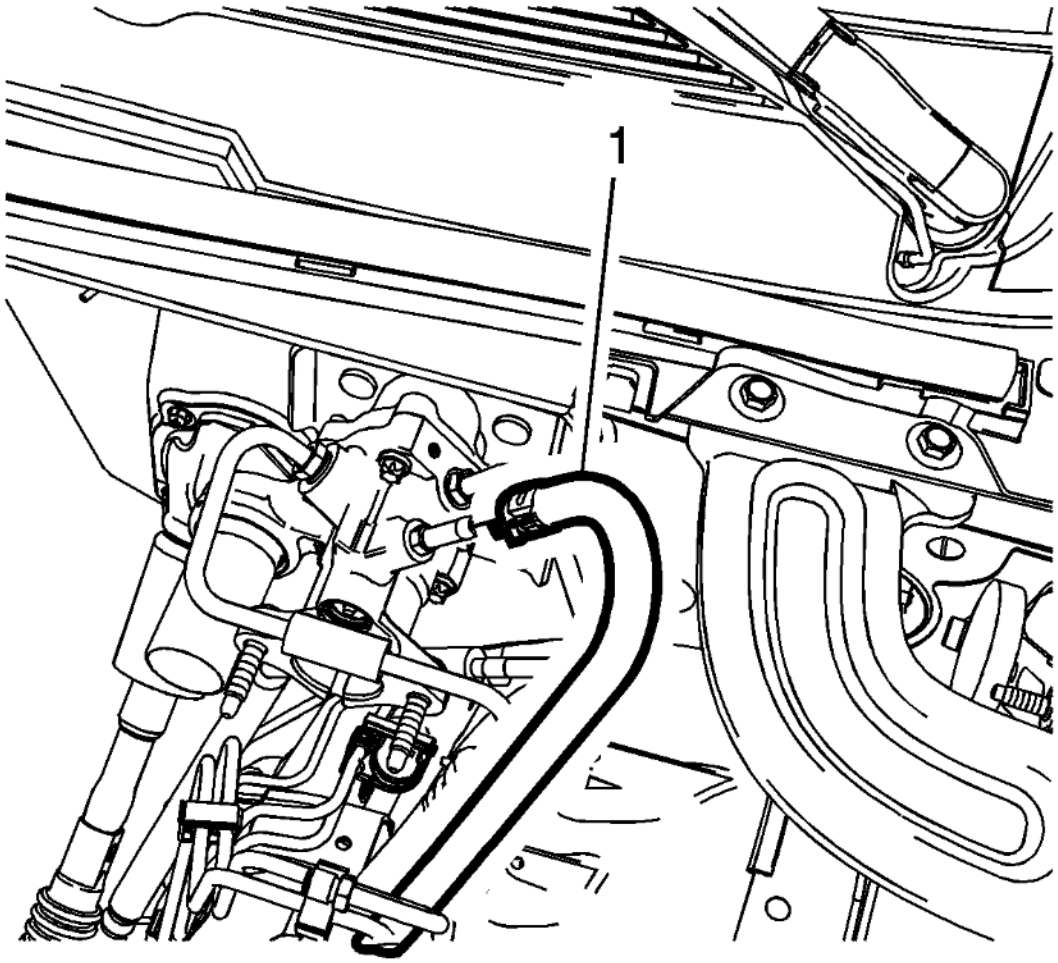

Fig. 175: Power Brake Booster Fluid Return Hose
Courtesy of GENERAL MOTORS COMPANY

4. Release the clamp and disconnect the power brake booster fluid return hose (1).

cardiagn.com

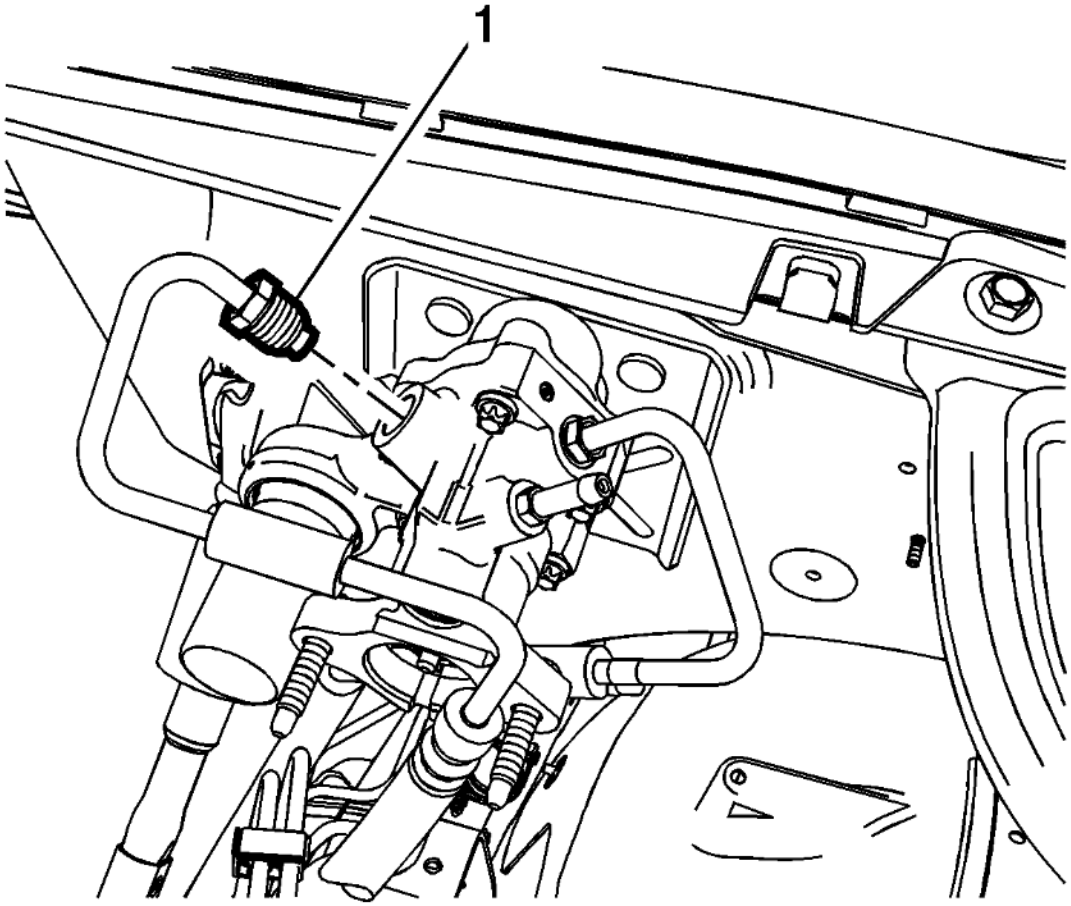

Fig. 176: Power Brake Booster Fluid Inlet Pipe Fitting
Courtesy of GENERAL MOTORS COMPANY

5. Disconnect the power brake booster hose inlet pipe fitting (1).

cardiagn.com

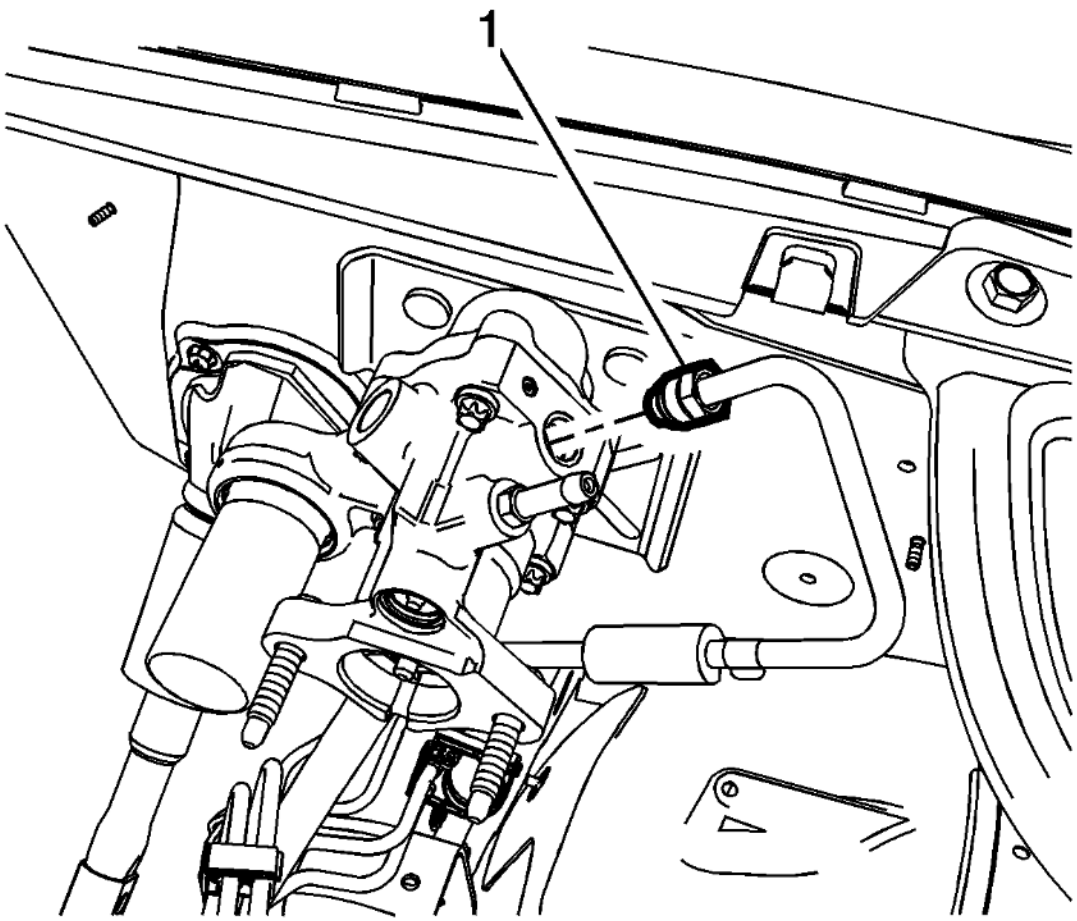

Fig. 177: Power Brake Booster Fluid Outlet Pipe Fitting
Courtesy of GENERAL MOTORS COMPANY

6. Disconnect the power brake booster hose outlet pipe fitting (1).

cardiagn.com

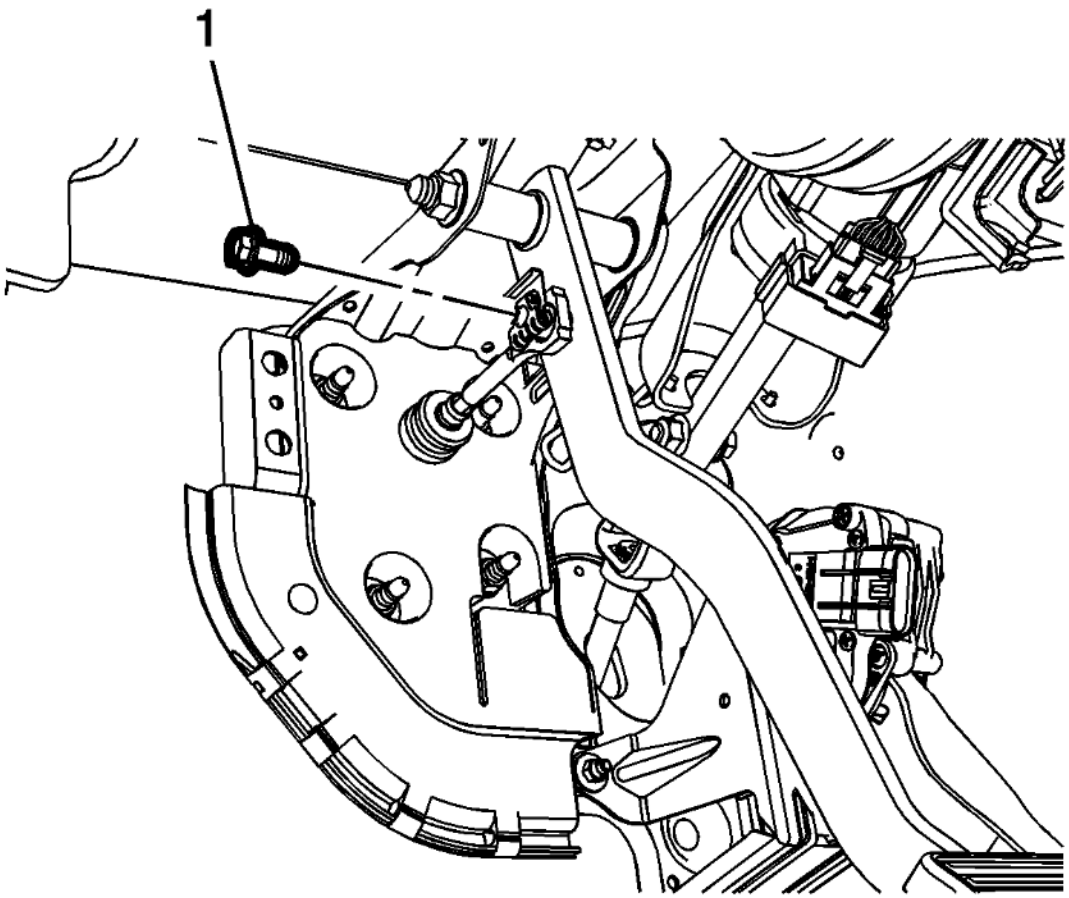

Fig. 178: Brake Booster Pushrod Retainer Clip Bolt
Courtesy of GENERAL MOTORS COMPANY

7. Remove the power brake booster pushrod retainer clip bolt (1).

cardiagn.com

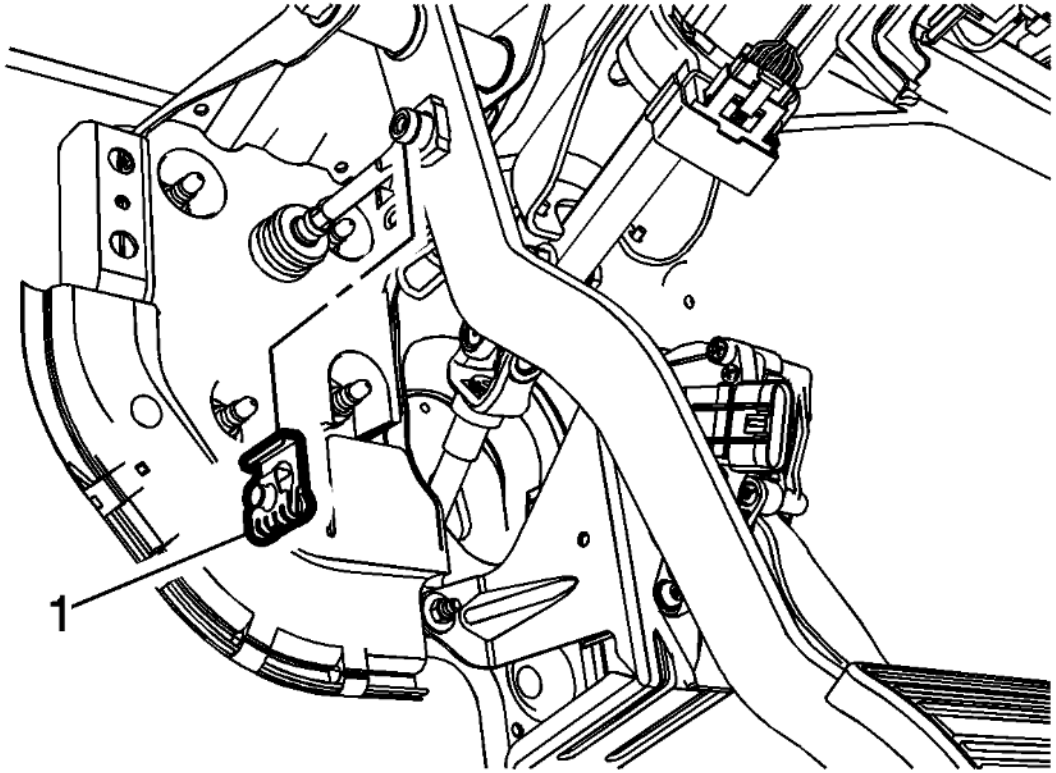

Fig. 179: Brake Booster Pushrod Retainer Clip
Courtesy of GENERAL MOTORS COMPANY

8. Remove the brake booster pushrod retainer clip (1).
9. Disconnect the power brake booster pushrod from the brake pedal pin.

cardiagn.com

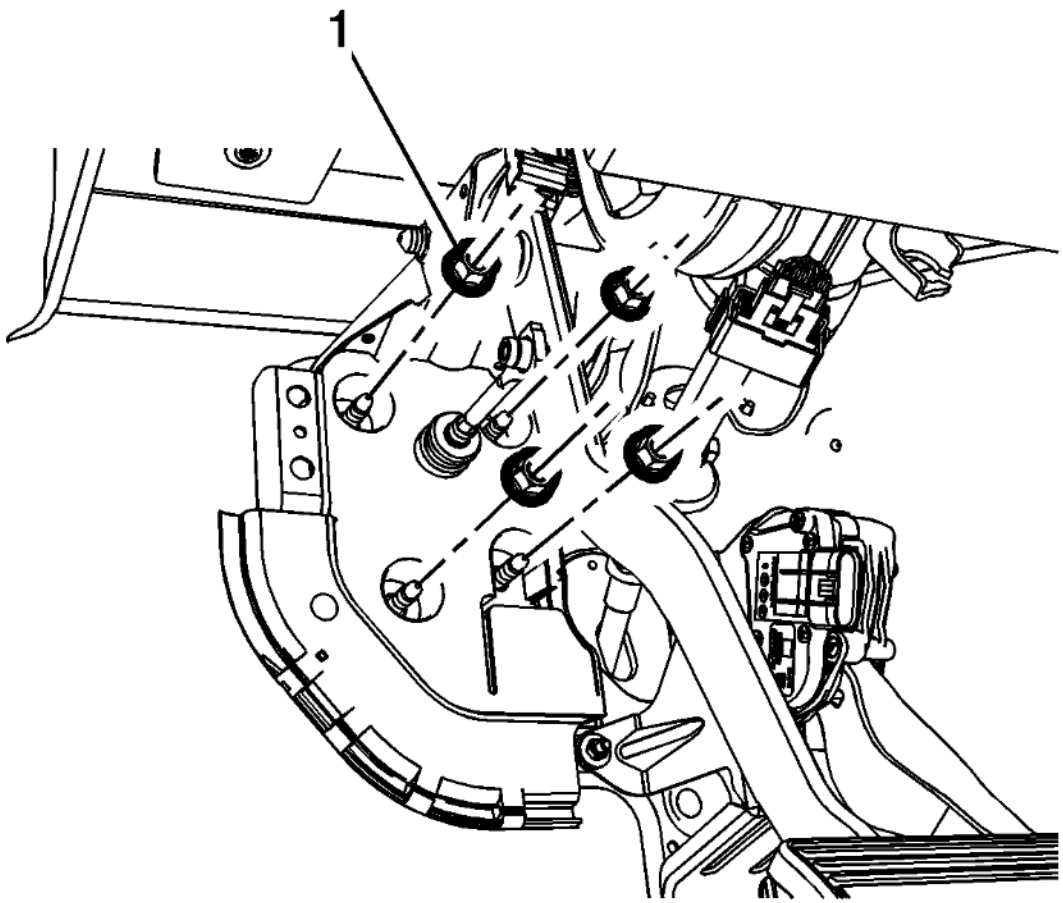

Fig. 180: Power Brake Booster Nuts
Courtesy of GENERAL MOTORS COMPANY

10. Remove the 4 power brake booster nuts (1).
11. Remove the power brake booster.

Installation Procedure

cardiagn.com

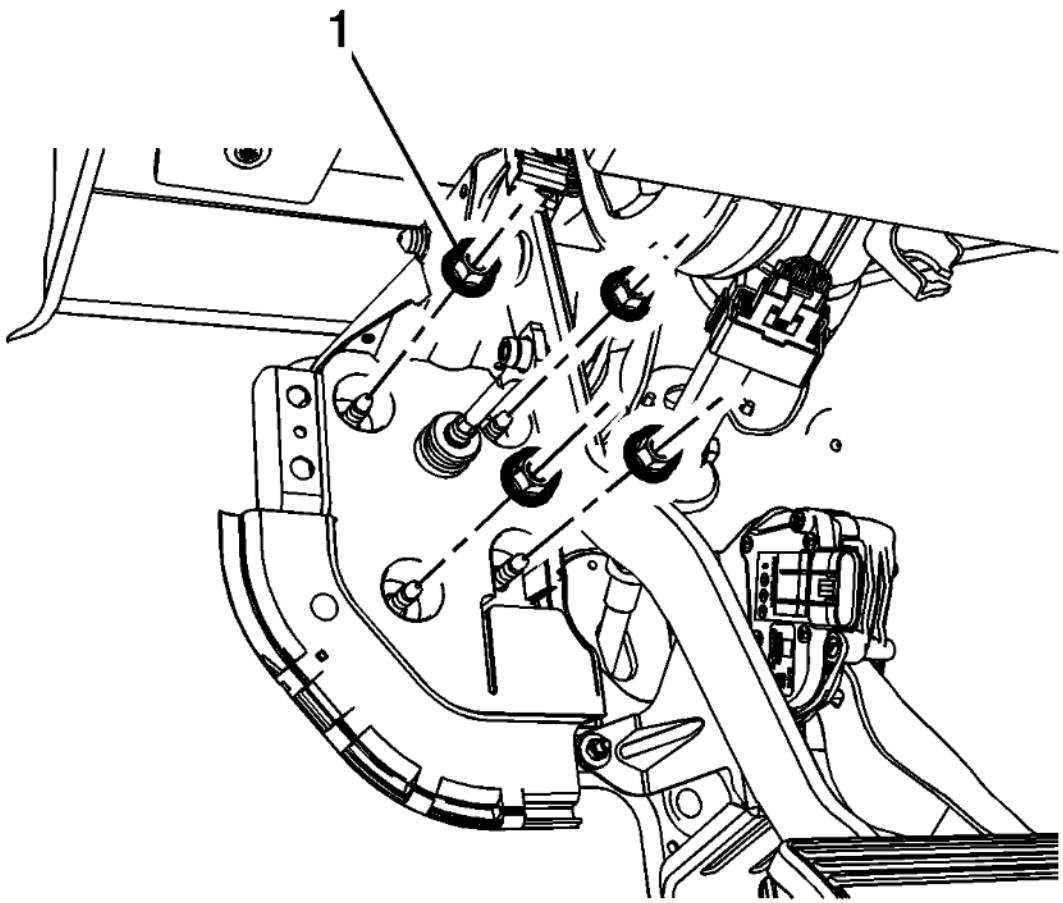

Fig. 181: Power Brake Booster Nuts
Courtesy of GENERAL MOTORS COMPANY

1. Install the power brake booster.

CAUTION: **Refer to Fastener Caution .**

NOTE: **Tighten the upper right hand nut first.**

cardiagn.com

2. Install the 4 power brake booster nuts (1) and tighten to 33 N.m (24 lb ft).

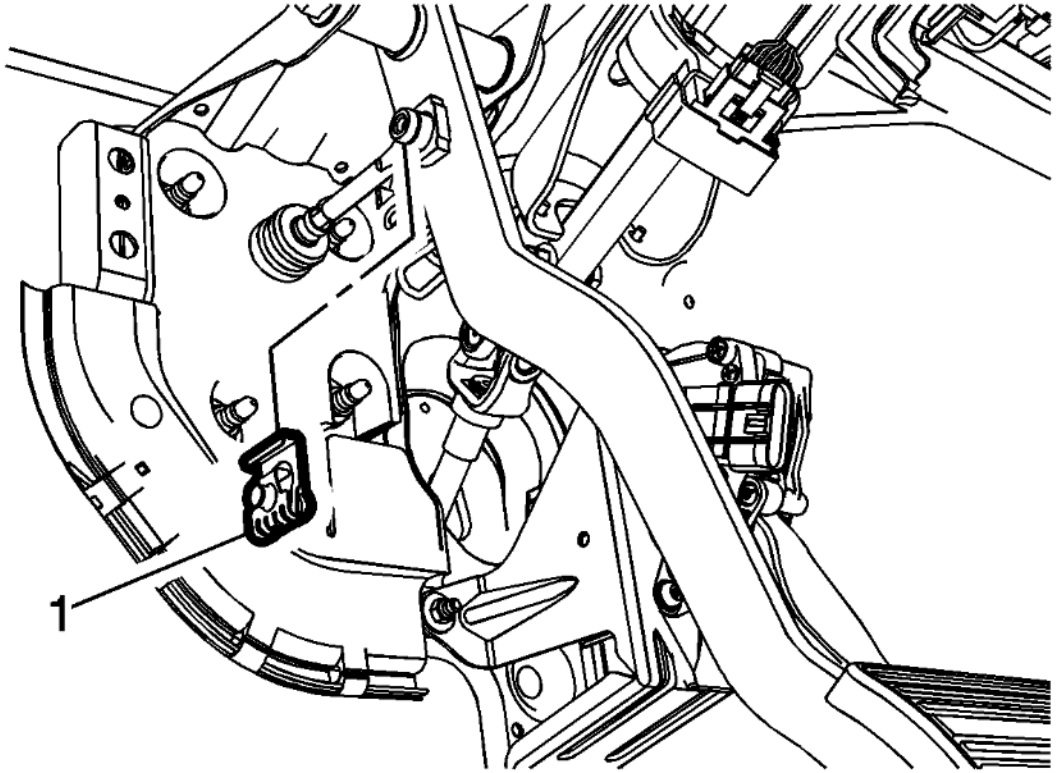

Fig. 182: Brake Booster Pushrod Retainer Clip
Courtesy of GENERAL MOTORS COMPANY

3. Install the power brake booster pushrod to the brake pedal pin.
4. Install the brake booster pushrod retainer clip (1).

cardiagn.com

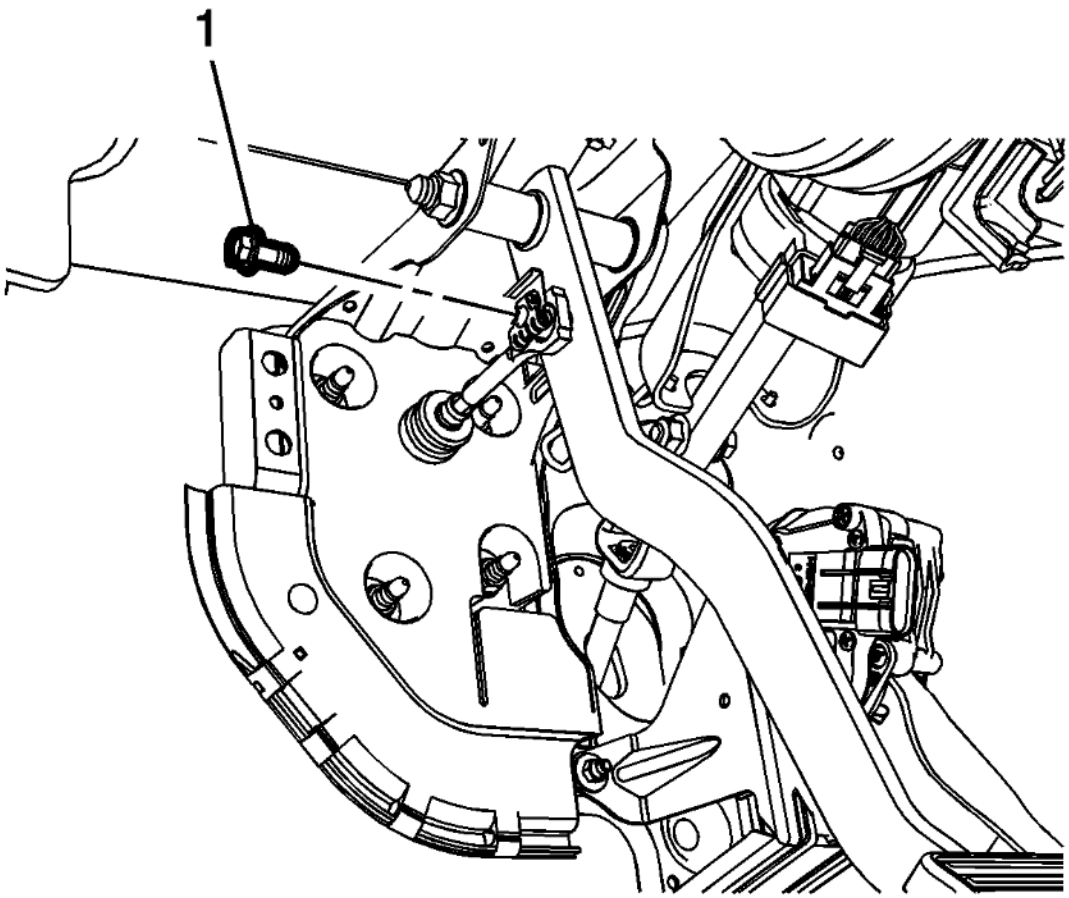

Fig. 183: Brake Booster Pushrod Retainer Clip Bolt
Courtesy of GENERAL MOTORS COMPANY

5. Install the power brake booster pushrod retainer clip bolt (1) and tighten to 10 N.m (89 lb in).

cardiagn.com

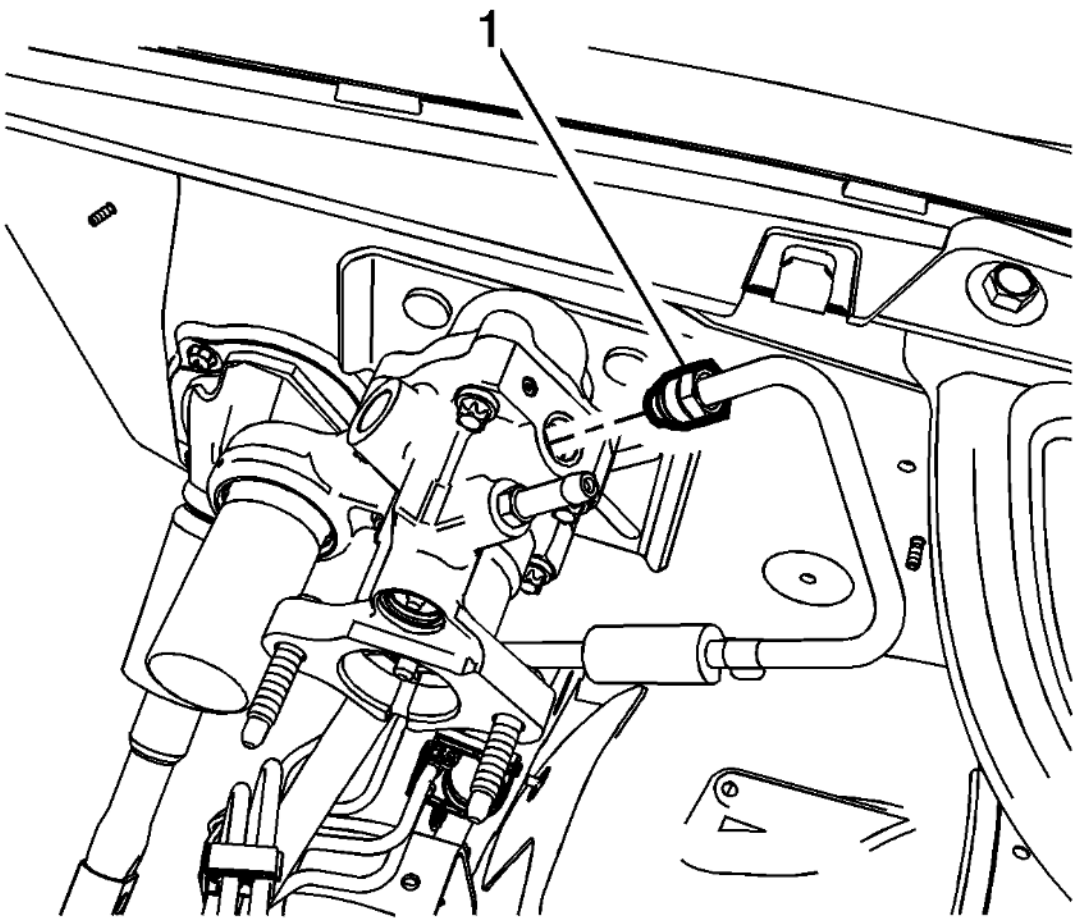

Fig. 184: Power Brake Booster Fluid Outlet Pipe Fitting
Courtesy of GENERAL MOTORS COMPANY

6. Install the power brake booster hose outlet pipe fitting (1) and tighten to 33 N.m (24 lb ft).

cardiagn.com

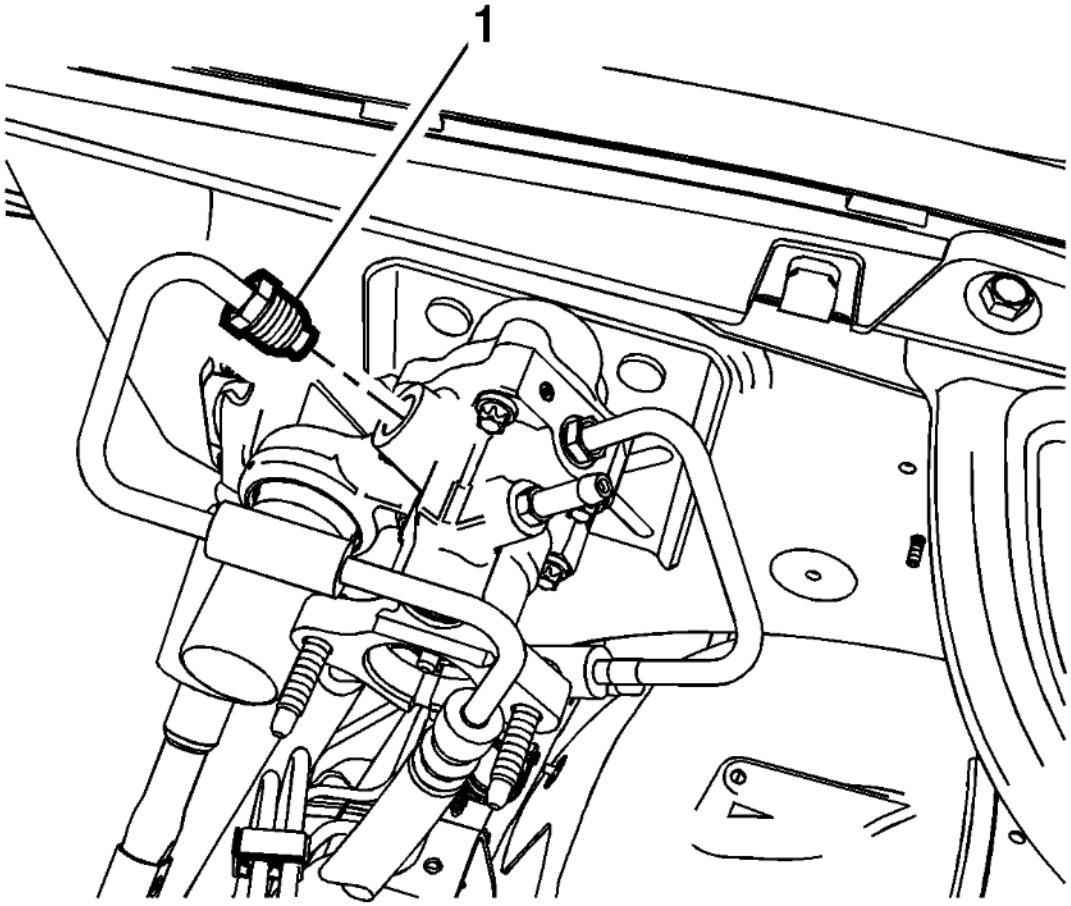

Fig. 185: Power Brake Booster Fluid Inlet Pipe Fitting
Courtesy of GENERAL MOTORS COMPANY

7. Install the power brake booster hose inlet pipe fitting (1) and tighten to 33 N.m (24 lb ft).

cardiagn.com

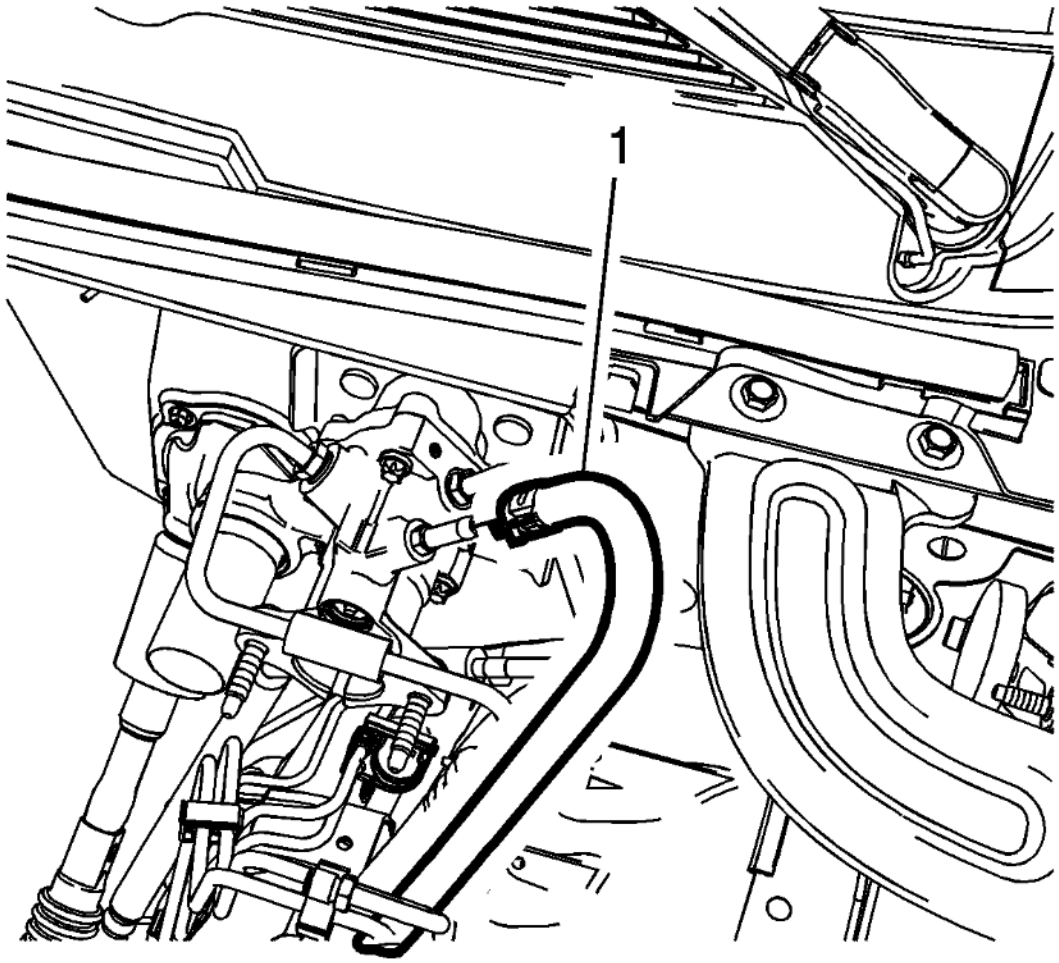

Fig. 186: Power Brake Booster Fluid Return Hose
Courtesy of GENERAL MOTORS COMPANY

8. Install the power brake booster fluid return hose (1) and secure the clamp.
9. Install the brake master cylinder. Refer to **Master Cylinder Replacement**.
10. Bleed the power steering system. Refer to **Power Steering System Bleeding** .
11. Calibrate the brake pedal position sensor. Refer to **Brake Pedal Position Sensor Calibration** .

cardiagn.com

DESCRIPTION AND OPERATION

BRAKE ASSIST SYSTEM DESCRIPTION AND OPERATION (HYDRAULIC ASSIST)

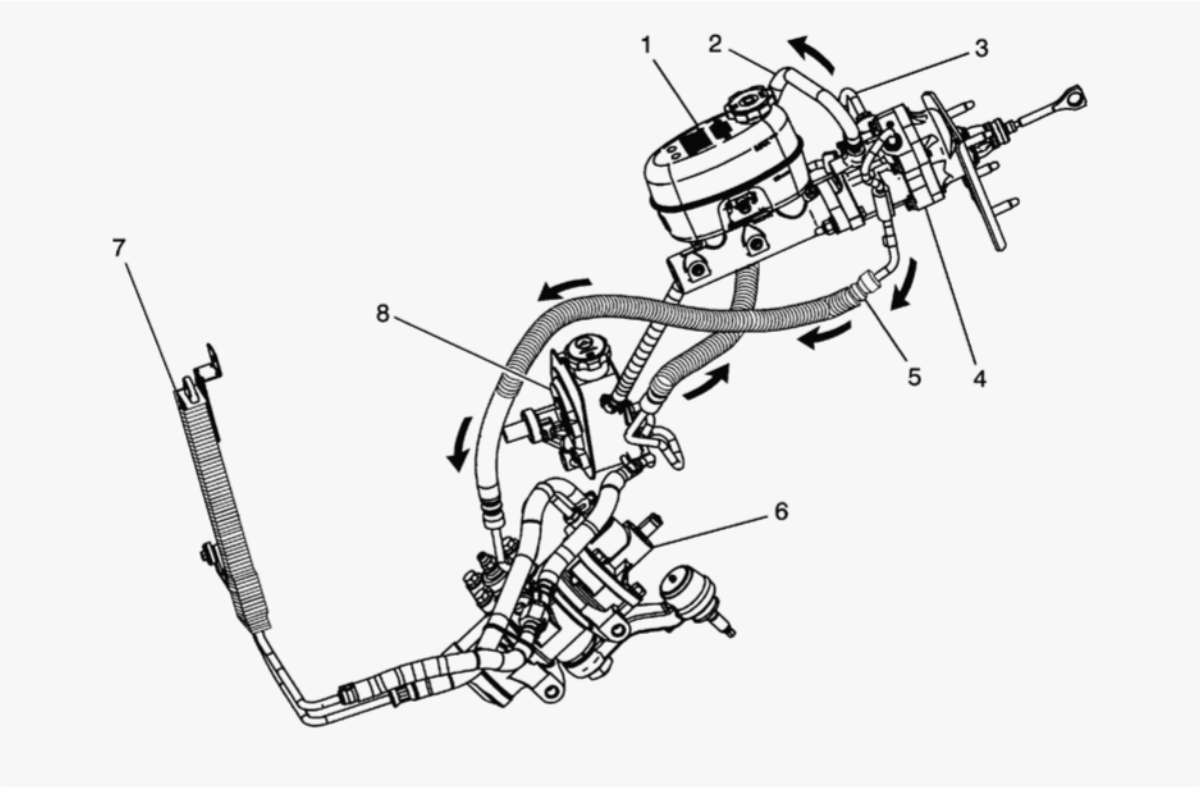

Fig. 187: Brake Assist System Components (Hydraulic Assist)
Courtesy of GENERAL MOTORS COMPANY

Callout	Component Name
1	Master Cylinder
2	Power Brake Booster Outlet Hose
3	Power Brake Booster Inlet Pipe/Hose
4	Hydraulic Brake Booster
5	Power Steering Gear Inlet Pipe/Hose
6	Steering Gear

cardiagn.com

Callout	Component Name
7	Power Steering Cooler
8	Power Steering Pump

System Component Description

The brake assist system consists of the following:

Brake Pedal

Receives, multiplies and transfers brake system input force from driver.

Brake Pedal Pushrod

Transfers multiplied input force received from brake pedal to brake booster.

Hydraulic Brake Booster

Uses power steering fluid pressure to decrease effort required by driver when applying brake system input force.

Power Steering System

Supplies pressurized power steering fluid used by hydraulic brake booster to decrease brake pedal effort.

System Operation

The hydraulic brake boost system uses fluid from the power steering pump (8) through the hydraulic boost inlet hose (3) and to the brake booster assembly (4). In addition to supplying the brake system with fluid for increased apply, the power steering pump is also connected to the power steering gear (6) and cooler (7).

The steering pump (8) is a continuous flow device supplying approximately 3 GPM at 1000 RPM, at the pump shaft. The fluid flows through the booster spool valve, then the return hose (5), and then to the steering gear (6). Pressure is produced by applying the brake pedal, resulting in the spool valve being actuated, internal to the hydraulic brake booster. The spool valve produces a marginal restriction that causes pressure in the booster (4) to rise and forces the power piston and therefore the output rod forward to generate force and motion at the master cylinder (1). The brake corners are actuated by the fluid impulse generated by the master cylinder (1). Internal blow by, or pressure relief, is directed to the low pressure return hose (2) back to the power steering pump (8).

BRAKE ASSIST SYSTEM DESCRIPTION AND OPERATION (VACUUM ASSIST)

cardiagn.com

System Component Description

The brake assist system consists of the following:

Brake Pedal

Receives, multiplies and transfers brake system input force from driver.

Brake Pedal Pushrod

Transfers multiplied input force received from brake pedal to brake booster.

Vacuum Brake Booster

Uses source vacuum to decrease effort required by driver when applying brake system input force.
When brake system input force is applied, air at atmospheric pressure is admitted to the rear of both vacuum diaphragms, providing a decrease in brake pedal effort required. When input force is removed, vacuum replaces atmospheric pressure within the booster.

Vacuum Source

Supplies force used by vacuum brake booster to decrease brake pedal effort.

Vacuum Source Delivery System

Enables delivery and retention of source vacuum for vacuum brake booster.

System Operation

Brake system input force is multiplied by the brake pedal and transferred by the pedal pushrod to the hydraulic brake master cylinder. Effort required to apply the brake system is reduced by the vacuum brake booster.

BRAKE WARNING SYSTEM DESCRIPTION AND OPERATION

Brake Warning Indicator

cardiagn.com

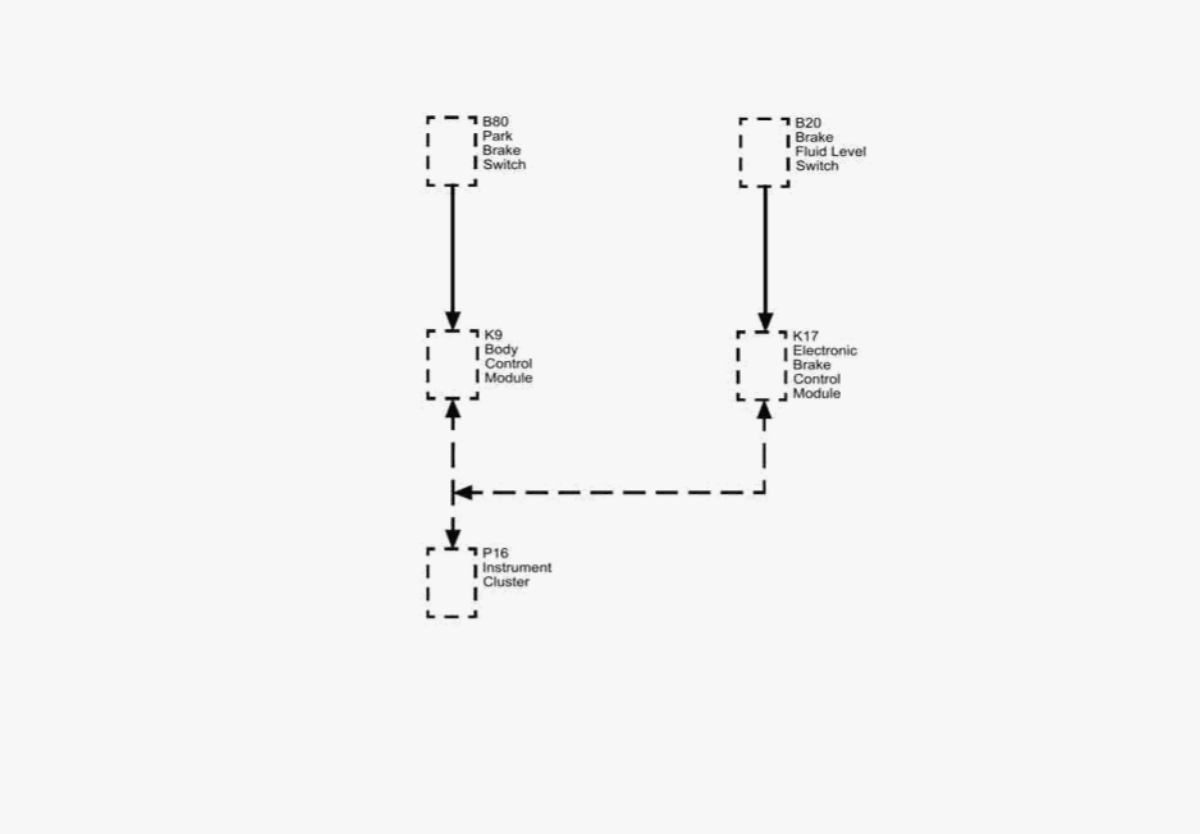

Fig. 188: Hydraulic Brake Warning System Block Diagram
Courtesy of GENERAL MOTORS COMPANY

Callout	Component Name
B80	B80 Park Brake Switch
B20	B20 Brake Fluid Level Switch
K9	K9 Body Control Module
K17	K17 Electronic Brake Control Module
P16	P16 Instrument Cluster

The instrument cluster turns the brake warning indicator ON when the following occurs:

- The instrument cluster performs the bulb check. The brake warning indicator illuminates for 5 s.

cardiagn.com

- When the Electronic Brake Control Module (EBCM) detects low brake fluid level it sets DTC C0267 and sends a serial data message to the instrument cluster, which will illuminate the red brake indicator.
- The Body Control Module (BCM) detects that the parking brake is engaged. The instrument cluster receives a serial data message from the BCM requesting illumination.

Driver Information Center Messages

When the Electronic Brake Control Module (EBCM) detects low brake fluid level it sets DTC C0267 and sends a serial data message to the Driver Information Center, which will display Brake Fluid Low message.

HYDRAULIC BRAKE SYSTEM DESCRIPTION AND OPERATION

System Component Description

The hydraulic brake system consists of the following:

Hydraulic Brake Master Cylinder Fluid Reservoir

Contains supply of brake fluid for the hydraulic brake system.

Hydraulic Brake Master Cylinder

Converts mechanical input force into hydraulic output pressure.
Hydraulic output pressure is distributed from the master cylinder through 2 hydraulic circuits, supplying front-rear opposed wheel apply circuits.

Hydraulic Brake Pressure Balance Control System

Regulates brake fluid pressure delivered to hydraulic brake wheel circuits, in order to control the distribution of braking force.
Pressure balance control is achieved through dynamic rear proportioning (DRP), which is a function of the ABS modulator. Refer to **ABS Description and Operation** for specific information on the operation of DRP.

Hydraulic Brake Pipes and Flexible Brake Hoses

Carries brake fluid to and from hydraulic brake system components.

Hydraulic Brake Wheel Apply Components

Converts hydraulic input pressure into mechanical output force.

cardiagn.com

System Operation

Mechanical force is converted into hydraulic pressure by the master cylinder, regulated to meet braking system demands by the pressure balance control system, and delivered to the hydraulic brake wheel circuits by the pipes and flexible hoses. The wheel apply components then convert the hydraulic pressure back into mechanical force which presses linings against rotating brake system components.

SPECIAL TOOLS AND EQUIPMENT

SPECIAL TOOLS

Illustrations	Tool Number/Description

cardiagn.com

Illustrations	Tool Number/Description
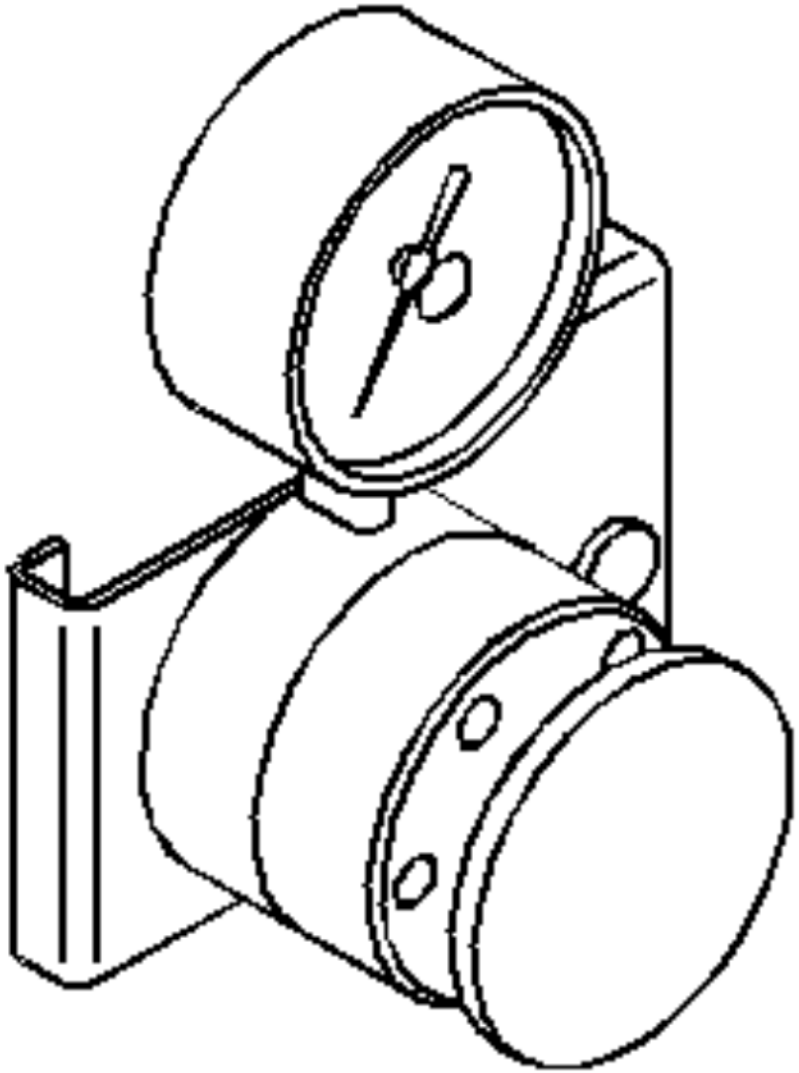	CH 28662 J 28662 Brake Pedal Effort Gauge

cardiagn.com

Illustrations	Tool Number/Description
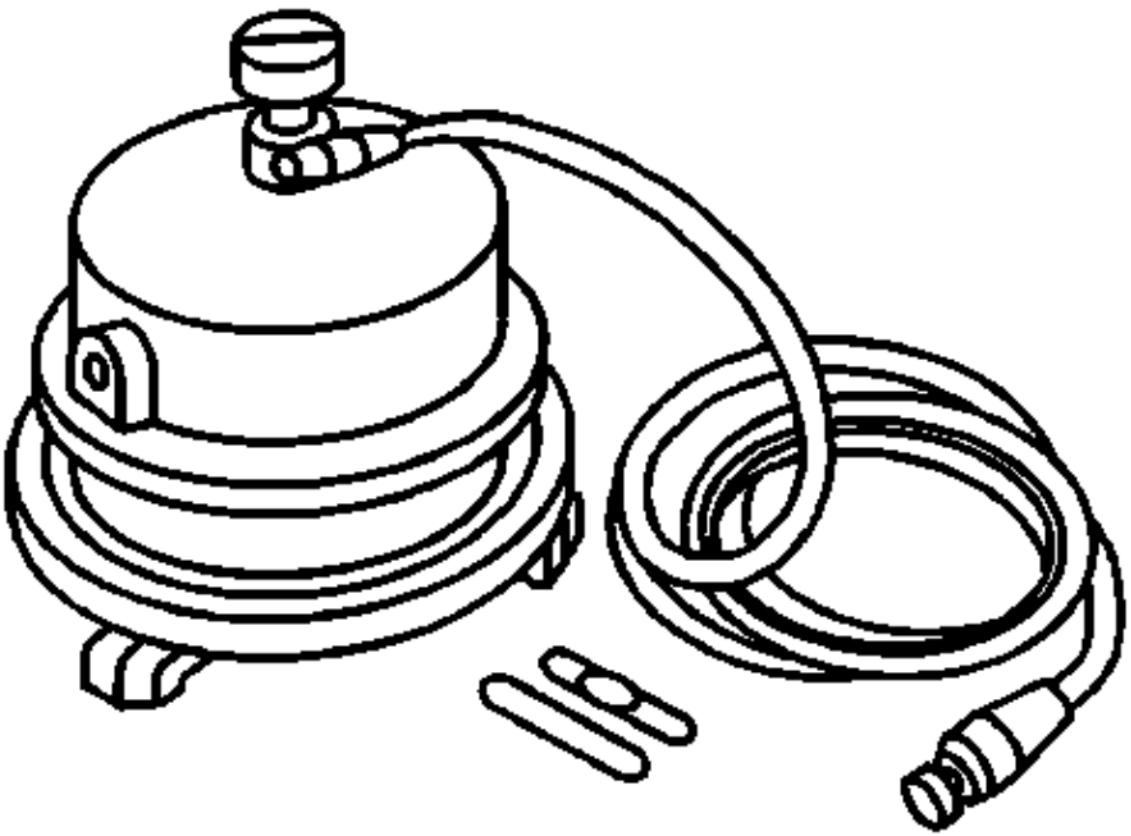	CH 29532-A J 29532-A Pressure Brake Bleeder

cardiagn.com

Illustrations	Tool Number/Description
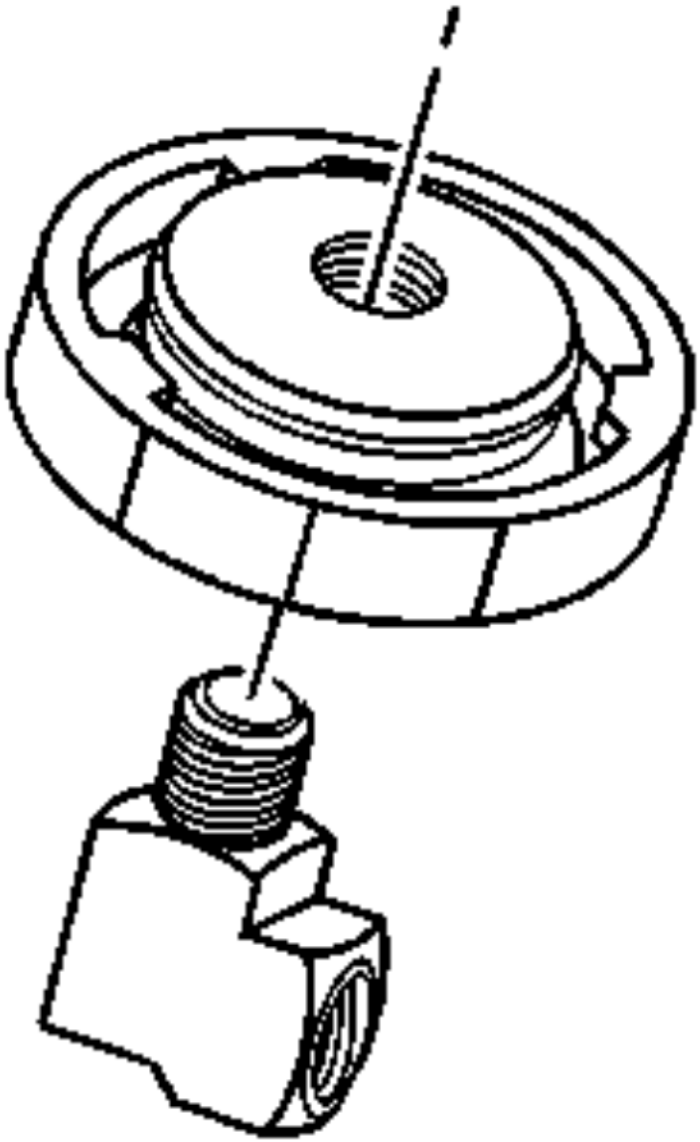	CH 35589-A J 35589-A Brake Bleeder Adapter

cardiagn.com

Illustrations	Tool Number/Description
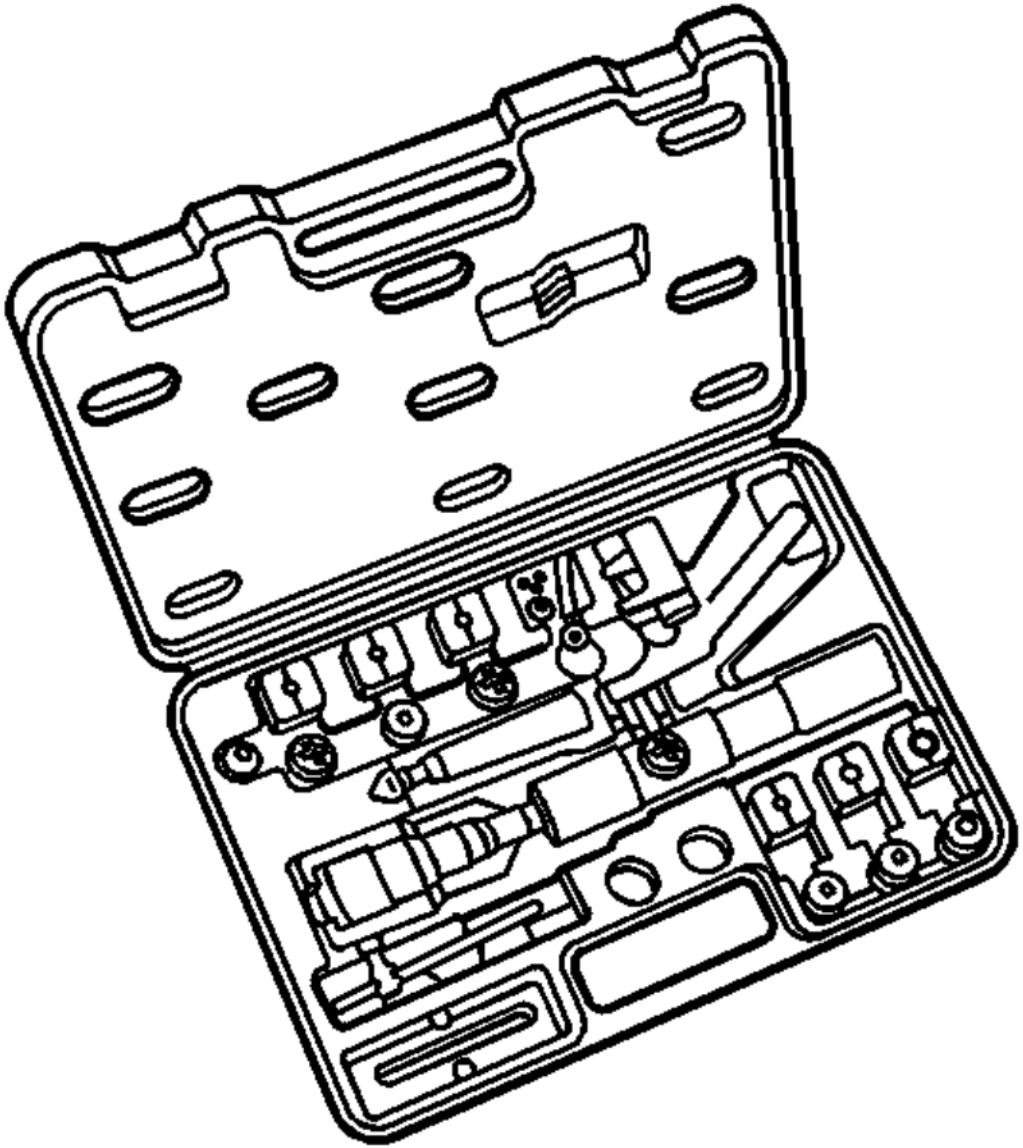	CH 45405 J 45405 Brake Pipe Flaring Kit

cardiagn.com