Workshop Manual

Audi A1 2011 ➤ , Audi A3 2013 ➤ , Audi A3 Limousine China 2014 ➤ , Audi Q2 2016 ➤ , Audi Q3 2012 ➤ , Audi Q3 2019 ➤ , Audi Q3 China 2013 ➤ , Audi Q3 China 2019 ➤ , Audi TT 2015 ➤

Servicing 4-cylinder engine, 2.0 ltr. 4-valve TFSI (EA 888, Gen. III)

Engine ID	CWZA	DAJB	CJSA	CJSB	CJXB	CJXC	CNSB	CNTC	CHHB
	CJXF	CYFB	CJXD	CJHA	CJXG	CJHB	CULB	CULC	DBRA
	CHHC	DJHA	DJHB	DJJA	DBSA	DHHA	DKTB	DLRA	DNUF
	DNUE	DKTA	DKTC	DKXA					

Protected by copyright. Copying for private or commercial purposes, in part or in whole, is not permitted unless authorised by AUDI AG. AUDI AG does not guarantee or accept any liability with respect to the correctness of information in this document. Copyright by AUDI AG.

Edition 12.2019

List of Workshop Manual Repair Groups

Repair Group

00 - Technical data
10 - Removing and installing engine
13 - Crankshaft group
15 - Cylinder head, valve gear
17 - Lubrication
19 - Cooling
21 - Turbocharging/supercharging
24 - Mixture preparation - injection
26 - Exhaust system
28 - Ignition system

Protected by copyright. Copying for private or commercial purposes, in part or in whole, is not permitted unless authorised by AUDI AG. AUDI AG does not guarantee or accept any liability with respect to the correctness of information in this document. Copyright by AUDI AG.

Technical information should always be available to the foremen and mechanics, because their careful and constant adherence to the instructions is essential to ensure vehicle road-worthiness and safety. In addition, the normal basic safety precautions for working on motor vehicles must, as a matter of course, be observed.

All rights reserved.
No reproduction without prior agreement from publisher.

Copyright © 2019 Audi AG, Ingolstadt

Contents

00 - Technical data 1

1 Identification 1
1.1 Engine number/engine data 1
1.2 Engine versions 1

2 Safety precautions 5
2.1 Safety precautions when working on the fuel supply system 5
2.2 Safety precautions when working on vehicles with start/stop system 5
2.3 Safety precautions when using testers and measuring instruments during a road test 6
2.4 Safety precautions when working on the cooling system 6
2.5 Safety precautions when working on the exhaust system 6
2.6 Safety precautions when working on the ignition system 7

3 Repair instructions 8
3.1 Identification plates 8
3.2 Use of impact wrenches 8
3.3 Nuts, bolts 9
3.4 Rules for cleanliness 9
3.5 Foreign particles in engine 9
3.6 Contact corrosion 10
3.7 Routing and attachment of pipes, hoses and wiring 10
3.8 Installing radiators and condensers 10
3.9 Checking vacuum system 10

10 - Removing and installing engine 12

1 Removing and installing engine 12
1.1 Removing engine 12
1.2 Separating engine and gearbox 12
1.3 Securing engine to engine and gearbox support 12
1.4 Installing engine 13

2 Assembly mountings 14

3 Engine cover panel 15
3.1 Removing and installing engine cover panel 15

13 - Crankshaft group 16

1 Cylinder block (pulley end) 16
1.1 Exploded view - cylinder block (pulley end) 16
1.2 Removing and installing poly V-belt 18
1.3 Removing and installing poly V-belt tensioner 19
1.4 Removing and installing vibration damper 19
1.5 Removing and installing bracket for ancillaries 26
1.6 Removing and installing engine support 27

2 Cylinder block (gearbox end) 28
2.1 Exploded view - cylinder block (gearbox end) 28
2.2 Exploded view - drive plate 29
2.3 Removing and installing flywheel 30
2.4 Removing and installing drive plate 31
2.5 Removing and installing sealing flange (gearbox end) 33

3 Crankshaft 37
3.1 Exploded view - crankshaft 37
3.2 Crankshaft dimensions 39
3.3 Allocation of main bearing shells 39
3.4 Renewing needle bearing in crankshaft 40
3.5 Measuring axial clearance of crankshaft 42

Protected by copyright. Copying for private or commercial purposes, in part or in whole, is not permitted unless authorised by AUDI AG. AUDI AG does not guarantee or accept any liability with respect to the accuracy or completeness of the information in this document. Copyright by AUDI AG.

3.6 Measuring radial clearance of crankshaft . . . 43
3.7 Removing and installing sender wheel . . . 44

4 Balance shaft . . . 45
4.1 Exploded view - balance shaft . . . 45
4.2 Removing and installing balance shaft . . . 46
4.3 Renewing oil seal for balance shaft (inlet side) . . . 50

5 Pistons and conrods . . . 52
5.1 Exploded view - pistons and conrods . . . 52
5.2 Removing and installing pistons . . . 55
5.3 Removing and installing oil spray jets . . . 56
5.4 Checking pistons and cylinder bores . . . 58
5.5 Separating parts of new conrod . . . 59
5.6 Checking radial clearance of conrod bearings . . . 60

Protected by copyright. Copying for private or commercial purposes, in part or in whole, is not permitted unless authorised by AUDI AG. AUDI AG does not guarantee or accept any liability with respect to the correctness of information in this document. Copyright by AUDI AG.

15 - Cylinder head, valve gear . . . 61

1 Timing chain cover . . . 61
1.1 Exploded view - timing chain cover . . . 61
1.2 Removing and installing timing chain cover . . . 65
1.3 Renewing oil seal for vibration damper . . . 70

2 Chain drive . . . 73
2.1 Exploded view - camshaft timing chains . . . 73
2.2 Exploded view - drive chain for balance shaft . . . 77
2.3 Removing and installing bearing saddle . . . 79
2.4 Removing and installing camshaft timing chain . . . 90
2.5 Removing and installing drive chain for balance shaft . . . 118
2.6 Checking timing chain . . . 119
2.7 Checking valve timing . . . 121

3 Cylinder head . . . 126
3.1 Exploded view - cylinder head . . . 126
3.2 Removing and installing cylinder head . . . 129
3.3 Checking compression . . . 133

4 Valve gear . . . 135
4.1 Exploded view - valve gear . . . 135
4.2 Removing and installing camshaft . . . 142
4.3 Installing ball for slider . . . 182
4.4 Removing and installing actuators for camshaft adjustment . . . 183
4.5 Removing and installing camshaft control valve 1 N205 . . . 184
4.6 Removing and installing valve stem oil seals . . . 184

5 Inlet and exhaust valves . . . 195
5.1 Checking valve guides . . . 195
5.2 Checking valves . . . 195
5.3 Valve dimensions . . . 196

17 - Lubrication . . . 197

1 Sump/oil pump . . . 197
1.1 Exploded view - sump/oil pump . . . 197
1.2 Engine oil . . . 200
1.3 Removing and installing sump (bottom section) . . . 200
1.4 Removing and installing oil pump . . . 202
1.5 Removing and installing sump (top section) . . . 204
1.6 Removing and installing oil level and oil temperature sender G266 . . . 207

2 Engine oil cooler . . . 209
2.1 Exploded view - engine oil cooler . . . 209
2.2 Removing and installing engine oil cooler . . . 209
2.3 Removing and installing mechanical switching valve . . . 210

3 Crankcase breather . . . 211
3.1 Exploded view - crankcase breather system . . . 211
3.2 Removing and installing oil separator . . . 212
4 Oil filter/oil pressure switches . . . 214
4.1 Exploded view - oil filter . . . 214
4.2 Exploded view - oil pressure switches/oil pressure control . . . 215
4.3 Removing and installing oil pressure switch F22 . . . 216
4.4 Removing and installing oil pressure switch for reduced oil pressure F378 . . . 216
4.5 Removing and installing stage 3 oil pressure switch F447 . . . 217
4.6 Removing and installing valve for oil pressure control N428 . . . 218
4.7 Removing and installing piston cooling jet control valve N522 . . . 219
4.8 Checking oil pressure . . . 219

19 - Cooling . . . 223
1 Cooling system/coolant . . . 223
1.1 Connection diagram - coolant hoses . . . 223
1.2 Checking cooling system for leaks . . . 223
1.3 Draining and filling cooling system . . . 226
2 Coolant pump/thermostat assembly . . . 227
2.1 Exploded view - coolant pump/thermostat . . . 227
2.2 Exploded view - electric coolant pump . . . 229
2.3 Exploded view - coolant valves . . . 229
2.4 Exploded view - coolant temperature senders . . . 229
2.5 Removing and installing electric coolant pump . . . 230
2.6 Removing and installing coolant pump . . . 230
2.7 Removing and installing toothed belt for coolant pump . . . 231
2.8 Removing and installing actuator for engine temperature regulation N493 . . . 232
2.9 Removing and installing coolant temperature sender G62 . . . 234
2.10 Removing and installing radiator outlet coolant temperature sender G83 . . . 235
2.11 Removing and installing coolant valves . . . 235
3 Coolant pipes . . . 236
4 Radiator/radiator fans . . . 237

21 - Turbocharging/supercharging . . . 238
1 Turbocharger . . . 238
2 Charge air system . . . 239
2.1 Exploded view - charge air system . . . 239
2.2 Exploded view - hose connections for charge air system . . . 239
2.3 Removing and installing charge air cooler . . . 239
2.4 Removing and installing charge pressure sender G31 . . . 239
2.5 Checking charge air system for leaks . . . 239

24 - Mixture preparation - injection . . . 241
1 Injection system . . . 241
2 Air cleaner . . . 242
3 Intake manifold . . . 243
3.1 Exploded view - intake manifold . . . 243
3.2 Removing and installing intake manifold . . . 244
3.3 Removing and installing throttle valve module GX3 . . . 247
3.4 Cleaning throttle valve module . . . 248
3.5 Checking intake manifold change-over function . . . 249
4 Injectors . . . 251
4.1 Exploded view - fuel rail with injectors . . . 251
4.2 Removing and installing fuel rail . . . 253

Protected by copyright. Copying for private or commercial purposes, in part or in whole, is not permitted unless authorised by AUDI AG. AUDI AG does not guarantee or accept any liability with respect to the correctness of information in this document. Copyright by AUDI AG.

4.3 Removing and installing injectors . . . 254
4.4 Cleaning injectors . . . 261
5 Senders and sensors . . . 263
5.1 Exploded view - actuator for structure-borne sound and control unit for structure-borne sound . . . 263
5.2 Removing and installing actuator for structure-borne sound R214 . . . 263
5.3 Removing and installing control unit for structure-borne sound J869 . . . 263
5.4 Removing and installing intake air temperature sender G42 / intake manifold pressure sender G71 . . . 263
5.5 Removing and installing fuel pressure sender G247 . . . 264
5.6 Checking fuel pressure sender G247 . . . 265
5.7 Removing and installing fuel pressure sender for low pressure G410 . . . 267
5.8 Removing and installing pressure differential sender for particulate filter G1037 . . . 268
6 High-pressure pump . . . 269
6.1 Exploded view - high-pressure pump . . . 269
6.2 Removing and installing high-pressure pump . . . 272
6.3 Removing and installing high-pressure pipe . . . 275
7 Lambda probe . . . 278
7.1 Exploded view - Lambda probe . . . 278
7.2 Removing and installing Lambda probe . . . 280
8 Engine control unit . . . 281

26 - Exhaust system . . . 282

1 Exhaust pipes/silencers . . . 282
1.1 Exploded view - silencers . . . 282
1.2 Separating exhaust pipes/silencers . . . 282
1.3 Removing and installing front silencers . . . 282
1.4 Stress-free alignment of exhaust system . . . 282
1.5 Checking exhaust system for leaks . . . 282
2 Emission control system . . . 283
3 Exhaust gas temperature control . . . 284
3.1 Exploded view - exhaust gas temperature control . . . 284
3.2 Removing and installing parts of exhaust gas temperature control . . . 285
4 Secondary air system . . . 290
4.1 Exploded view - secondary air system . . . 290
4.2 Removing and installing secondary air pump motor V101 . . . 292
4.3 Removing and installing secondary air inlet valve N112 . . . 293
4.4 Removing and installing sender 1 for secondary air pressure G609 . . . 293

28 - Ignition system . . . 295

1 Ignition system . . . 295
1.1 Exploded view - ignition system . . . 295
1.2 Removing and installing ignition coils . . . 296
1.3 Removing and installing knock sensor 1 G61 . . . 298
1.4 Removing and installing Hall senders . . . 299
1.5 Removing and installing engine speed sender G28 . . . 301

Protected by copyright. Copying for private or commercial purposes, in part or in whole, is not permitted unless authorised by AUDI AG. AUDI AG does not guarantee or accept any liability with respect to the correctness of information in this document. Copyright by AUDI AG.

00 – Technical data

Protected by copyright. Copying for private or commercial purposes, in part or in whole, is not permitted unless authorised by AUDI AG. AUDI AG does not guarantee or accept any liability with respect to the correctness of information in this document. Copyright by AUDI AG.

1 Identification

(ARL006766; Edition 12.2019)

⇒ “1.1 Engine number/engine data”, page 1

⇒ “1.2 Engine versions”, page 1

1.1 Engine number/engine data

Engine number

- The engine number (“engine code” and “serial number”) can be found at the front of the joint between engine and gearbox.
- There is also a sticker on the timing chain cover (top) showing the engine code and the serial number.
- In addition, the engine code is listed on the vehicle data stickers.

Engine data

⇒ Technical data for petrol engines; Rep. gr. 00 ; Overview of engines

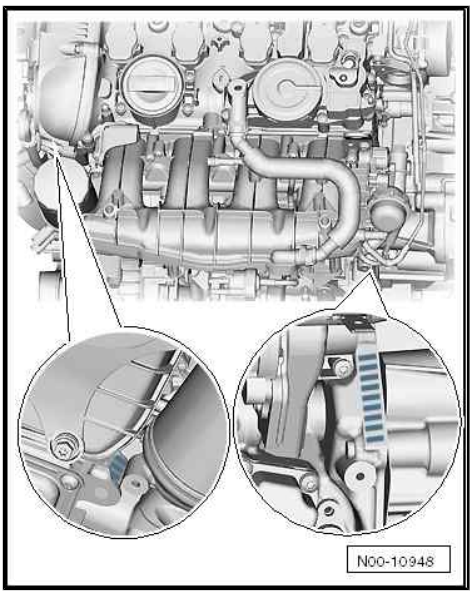

1.2 Engine versions

⇒ “1.2.1 Camshaft adjuster”, page 1

⇒ “1.2.2 Guide rail for camshaft timing chain”, page 2

⇒ “1.2.3 Engine with additional MPI fuel injection (exhaust system version)”, page 3

⇒ “1.2.4 Engine with secondary air system (country-specific version)”, page 3

⇒ “1.2.5 Vehicles with particulate filter (exhaust system version)”, page 3

1.2.1 Camshaft adjuster

The components listed below are visible on the timing chain cover (top) after the engine cover panel has been removed ⇒ page 15 .

Engine with two camshaft adjusters

2 - Exhaust camshaft control valve 1 - N318-

4 - Camshaft control valve 1 - N205- (inlet)

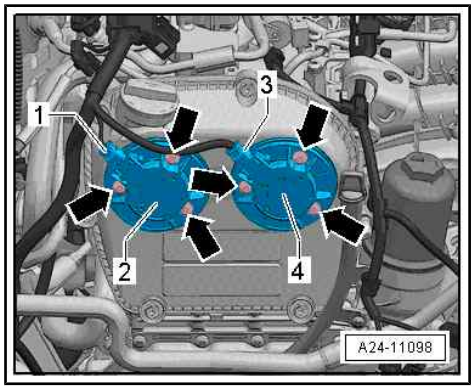

Engine with one camshaft adjuster

2 - Camshaft control valve 1 - N205- (inlet)

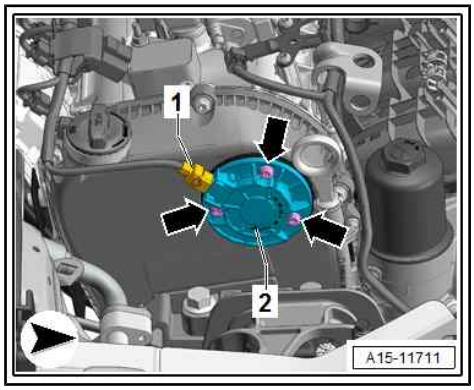

1.2.2 Guide rail for camshaft timing chain

It is necessary to distinguish between the different versions to determine the procedure for removing the camshafts. It is possible to see which version of the guide rail for camshaft timing chain is fitted after removing the timing chain cover (top).

A - Version 1: long version -arrow A- of guide rail -1- for 2.0 ltr. engines manufactured from 30.07.2013 onwards

- Removing and installing camshafts
  ⇒ “4.2.1 Removing and installing camshaft - engine with guide rail, version 1”, page 142

B - Version 2: short version -arrow B- of guide rail -2- for 2.0 ltr. engines manufactured up to 30.07.2013

- Removing and installing camshafts
  ⇒ “4.2.2 Removing and installing camshaft - engine with guide rail, version 2”, page 155

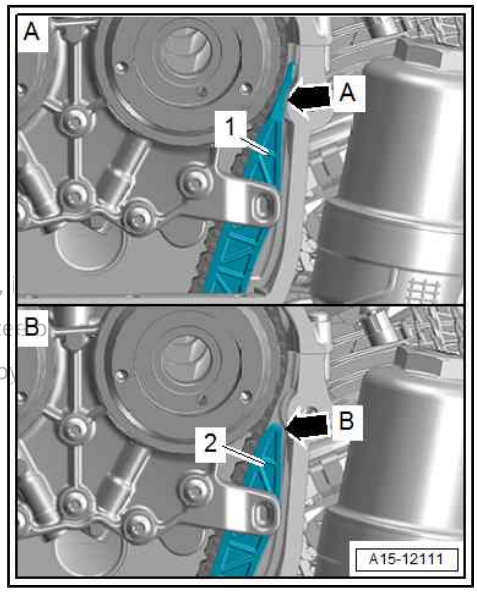

Protected by copyright. Copying for private or commercial purposes, permitted unless authorised by AUDI AG. AUDI AG does not guarantee or assume any liability with respect to the correctness of information in this document. Copyright by AUDI AG.

1.2.3 Engine with additional MPI fuel injection (exhaust system version)

The components listed below are visible after the engine cover panel has been removed ⇒ page 15 .

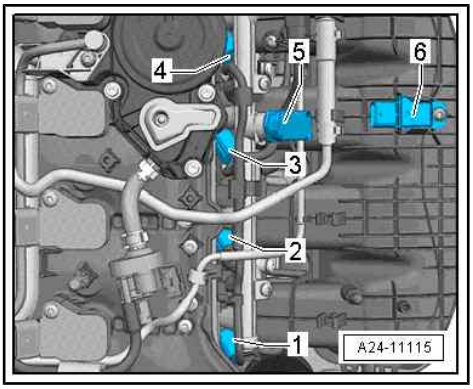

1 - Injector 2, cylinder 1 - N532-

2 - Injector 2, cylinder 2 - N533-

3 - Injector 2, cylinder 3 - N534-

4 - Injector 2, cylinder 4 - N535-

5 - Fuel pressure sender for low pressure - G410-

1.2.4 Engine with secondary air system (country-specific version)

The following components are visible from above on the left side of the cylinder head between the engine cover panel and the air cleaner housing:

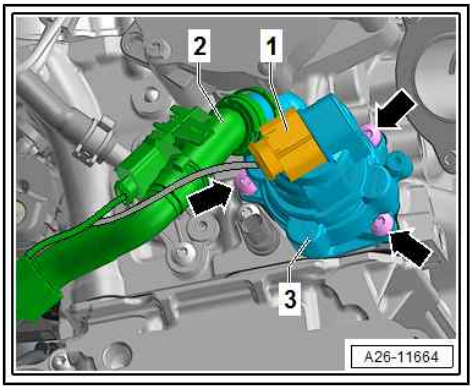

2 - Sender 1 for secondary air pressure - G609-

3 - Secondary air inlet valve - N112-

1.2.5 Vehicles with particulate filter (exhaust system version)

The following component is visible after the engine cover panel has been removed ⇒ page 15 :

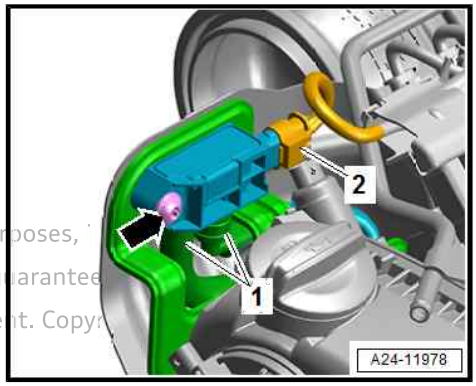

- Pressure differential sender for particulate filter - G1037-

Protected by copyright. Copying for private or commercial purposes, is not permitted unless authorised by AUDI AG. AUDI AG does not guarantee or assume any liability with respect to the correctness of information in this document. Copyright by AUDI AG.

The following components are visible on the underbody:

- Temperature sender before particulate filter - G506- -arrow-

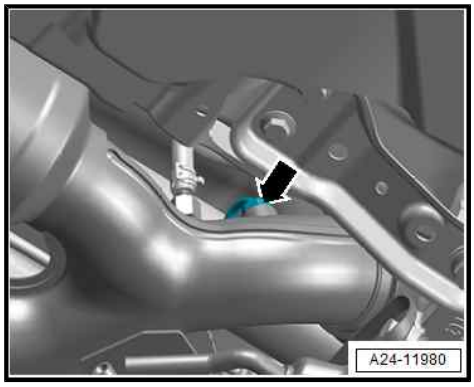

- Temperature sender after particulate filter - G527- -arrow-

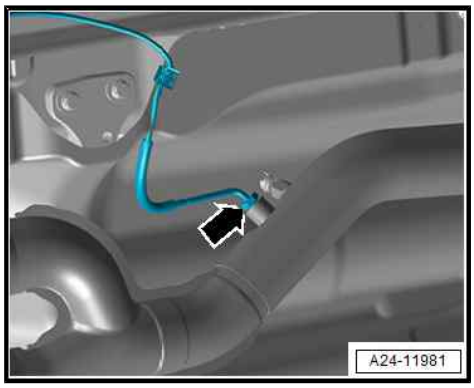

Protected by copyright. Copying for private or commercial purposes, in part or in whole, is not permitted unless authorised by AUDI AG. AUDI AG does not guarantee or accept any liability with respect to the correctness of information in this document. Copyright by AUDI AG.

2 Safety precautions

⇒ “2.1 Safety precautions when working on the fuel supply system”, page 5

⇒ “2.2 Safety precautions when working on vehicles with start/stop system”, page 5

⇒ “2.3 Safety precautions when using testers and measuring instruments during a road test”, page 6

⇒ “2.4 Safety precautions when working on the cooling system”, page 6

⇒ “2.5 Safety precautions when working on the exhaust system”, page 6

⇒ “2.6 Safety precautions when working on the ignition system”, page 7

Protected by copyright. Copying for private or commercial purposes, in part or in whole, is not permitted unless authorised by AUDI AG. AUDI AG does not guarantee or accept any liability with respect to the correctness of information in this document. Copyright by AUDI AG.

2.1 Safety precautions when working on the fuel supply system

Risk of injury - fuel system operates under high pressure

The fuel system is pressurised. There is a risk of injury as fuel may spray out.

Before opening the fuel system:

– Put on safety goggles.

– Put on protective gloves.

– Release pressure (wrap a clean cloth around connection and open connection carefully).

Risk of fire due to escaping fuel

If the battery is connected, the door contact switch activates the fuel pump when the driver's door is opened. Escaping fuel may ignite, causing a fire.

– Before opening the fuel system, disconnect power supply to fuel pump.

2.2 Safety precautions when working on vehicles with start/stop system

Risk of injury - engine may start unexpectedly

The engine can start unexpectedly if the vehicle's start/stop system is activated. A message in the instrument cluster indicates whether the start/stop system is activated.

– To deactivate the start/stop system, switch off the ignition.

2.3 Safety precautions when using testers and measuring instruments during a road test

Risk of injury if test equipment is not secured

If an accident occurs and the front passenger's airbag is triggered, test equipment which is not secured adequately may be catapulted through the vehicle with potentially serious consequences.

– Secure test equipment on the rear seat with a strap.

Or:

– Have a second mechanic operate test equipment on the rear seat.

2.4 Safety precautions when working on the cooling system

Risk of scalding as hot coolant can escape

The cooling system is under pressure when the power unit is hot. Risk of scalding due to hot steam and hot coolant.

– Put on protective gloves.

– Put on safety goggles.

– Cover filler cap on expansion tank with a cloth and open carefully to release pressure.

Protected by copyright. Copying for private or commercial purposes, in part or in whole, is not permitted unless authorised by AUDI AG. AUDI AG does not guarantee or accept any liability with respect to the correctness of information in this document. Copyright by AUDI AG.

2.5 Safety precautions when working on the exhaust system

Risk of damage to flexible joint

The flexible joint can be damaged or develop leaks if it is handled incorrectly.

– Do not bend flexible joint more than 10°.

– Install flexible joint so that it is not under tension.

Risk of injury caused by components of the exhaust system

Danger of injury to hands and other parts of the body due to hot or sharp parts of the exhaust system.

– Allow exhaust system to cool down.

– Put on protective gloves.

Components of the exhaust system can pose health risk

Risk to health if exhaust gas temperature sender is dismantled.

– Do not dismantle exhaust gas temperature sender.

2.6 Safety precautions when working on the ignition system

Protected by copyright. Copying for private or commercial purposes, in part or in whole, is not permitted unless authorized by AUDI AG. AUDI AG does not guarantee or accept any liability with respect to the correctness of information in this document. Copyright by AUDI AG.

Risk of injury due to electric shock

When the engine is running, there are high voltage levels in the ignition system. There is a risk of electric shock when touching the ignition system!

– Never touch or disconnect ignition wiring when the engine is running or being turned at cranking speed.

Risk of damage to components

Washing the engine or connecting/disconnecting electrical wiring may result in components being damaged if the engine is running.

– Switch off ignition before connecting/disconnecting electrical wiring.

– Switch off ignition before cleaning engine.

3 Repair instructions

⇒ “3.1 Identification plates”, page 8

⇒ “3.2 Use of impact wrenches”, page 8

⇒ “3.3 Nuts, bolts”, page 9

⇒ “3.4 Rules for cleanliness”, page 9

⇒ “3.5 Foreign particles in engine”, page 9

⇒ “3.6 Contact corrosion”, page 10

⇒ “3.7 Routing and attachment of pipes, hoses and wiring”, page 10

⇒ “3.8 Installing radiators and condensers”, page 10

⇒ “3.9 Checking vacuum system”, page 10

3.1 Identification plates

When renewing vehicle components, the identification plates on the old parts that have a replacement part number (see ⇒ Electronic parts catalogue) must be attached to the new parts due to approval regulations.

3.2 Use of impact wrenches

In general, it is permitted to use an impact wrench to unscrew bolts and nuts. An exception to this is when work is performed inside an open high-voltage battery. For this work, it is not permitted to use an impact wrench.

An impact wrench may be used to screw in bolts and nuts when performing repair work if the following requirements are observed. In general, electric and compressed-air impact wrenches should be used.

Requirements:

- Only screw in bolts with locking fluid or self-locking nuts at low speed.
- Use a suitable impact wrench with variable speed and adjustable torque range.
- Use suitable bits when working in the vicinity of sensitive surfaces, e.g. plastic-coated bits for aluminium rims.
- When working in the vicinity of natural gas systems, observe the information in the Workshop Manual “Natural gas engines - General information”.

Use:

- Fit bolts/nuts by hand.
- Only use an impact wrench to screw in bolts/nuts until the head of the bolt/nut makes contact and then continue tightening with a torque wrench.
- Clean threaded pins before unscrewing the bolt/nut.

Protected by copyright. Copying for private or commercial purposes, in part or in whole, is not permitted without the prior consent of AUDI AG. AUDI AG does not guarantee or accept any liability with respect to the correctness of information in this document. Copyright by AUDI AG.

3.3 Nuts, bolts

- Loosen bolts in reverse sequence to specified tightening sequence.
- Bolts and nuts used to secure covers and housings must be tightened in steps according to the specified tightening sequence and method.
- Bolts and nuts which secure covers and housings should be loosened and tightened in diagonal sequence and in stages if no tightening sequence is specified.
- Always renew self-locking bolts and nuts.
- Unless otherwise specified, use a wire brush to clean the threads of bolts which are secured with locking fluid. Then install bolts with locking fluid; for locking fluid refer to ⇒ Electronic parts catalogue .
- Threaded holes which take self-locking bolts or bolts coated with locking fluid must be cleaned using a thread tap or similar. Otherwise there is a danger of the bolts shearing off the next time they are removed.
- The tightening torques stated apply to non-oiled nuts and bolts.

3.4 Rules for cleanliness

Even small quantities of dirt can lead to defects. For this reason, please observe the following rules when working on the fuel supply system, turbocharger and injection system:

- Carefully clean connection points and the surrounding area with engine cleaner or brake cleaner and dry thoroughly before opening.
- Immediately seal open lines and connections with clean plugs, for example from engine bung set - VAS 6122- .
- Place removed parts on a clean surface and cover them. Use only lint-free cloths.
- Carefully cover or seal open components if repairs cannot be carried out immediately.
- Only install clean components; replacement parts should only be unpacked immediately prior to installation. Do not use parts that have been previously unpacked and stored away loose (e.g. in toolboxes, etc.).
- When the system is open, do not work with compressed air and do not move the vehicle.
- Make sure that no fuel runs onto the fuel hoses. Should this occur, the fuel hoses must be cleaned again immediately.
- Protect unplugged electrical connectors against dirt and moisture and make sure connections are dry when attaching.

Protected by copyright. Copying for private or commercial purposes, in part or in whole, is not permitted unless authorised by AUDI AG. AUDI AG does not guarantee or accept any liability with respect to the correctness of information in this document. Copyright by AUDI AG.

3.5 Foreign particles in engine

- When performing assembly work on the engine, all open passages in the intake and exhaust systems must be sealed with suitable plugs (e.g. from engine bung set - VAS 6122-) to prevent foreign particles from entering the engine.
- If the turbocharger has suffered mechanical damage, refer to ⇒ 4-cylinder direct injection engine (1.8, 2.0 ltr. 4-valve TFSI); Rep. gr. 21 ; Turbocharger; Removing and installing turbocharger .

3.6 Contact corrosion

Contact corrosion can occur if unsuitable fasteners are used (e.g. bolts, nuts, washers, etc.).

For this reason, only fasteners with a special surface coating are fitted.

Additionally, all rubber and plastic parts and all adhesives are made of non-conductive materials.

Always install new parts if you are not sure whether used parts can be re-fitted ⇒ Electronic parts catalogue .

Please note:

- We recommend using only genuine replacement parts; these have been tested and are compatible with aluminium.
- We recommend using Audi Genuine Accessories.
- Damage caused by contact corrosion is not covered by warranty.

3.7 Routing and attachment of pipes, hoses and wiring

- Mark fuel lines, hydraulic lines, vacuum lines, lines for activated charcoal filter and electrical wiring etc. before removal so they can be re-installed in the original positions and correctly connected. Make sketches or take photographs if necessary.
- Because of the limited space in the engine compartment, it is important to ensure that there is adequate clearance to any moving or hot components to avoid damage to lines and wiring.

Protected by copyright. Copying for private or commercial purposes, in part or in whole, is not permitted unless authorised by AUDI AG. AUDI AG does not guarantee or accept any liability with respect to the correctness of information in this document. Copyright by AUDI AG.

3.8 Installing radiators and condensers

Even when the radiator, condenser and charge air cooler are correctly installed, slight impressions may be visible on the fins of these components. This does not mean that the components are damaged. If the fins are only very slightly distorted, this does not justify renewal of the radiator, condenser or charge air cooler.

3.9 Checking vacuum system

Special tools and workshop equipment required

- Hand vacuum pump - VAS 6213-

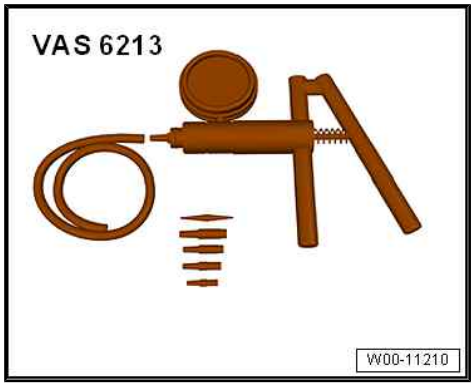

Procedure

– Check all vacuum lines in the complete vacuum system for:

- Cracks
- Traces of animal bites

- ♦ Kinked or crushed lines
- ♦ Porous or leaking lines
- – Check vacuum line to solenoid valve and from solenoid valve to corresponding component.
- – If a fault is stored in the event memory, check the vacuum lines leading to the corresponding component and also check the remaining vacuum lines in the system.
- – If it is not possible to build up pressure with the hand vacuum pump - VAS 6213- or if the pressure drops again immediately, check the hand vacuum pump and connecting hoses for leaks.

Protected by copyright. Copying for private or commercial purposes, in part or in whole, is not permitted unless authorised by AUDI AG. AUDI AG does not guarantee or accept any liability with respect to the correctness of information in this document. Copyright by AUDI AG.

10 – Removing and installing engine

Protected by copyright. Copying for private or commercial purposes, in part or in whole, is not permitted unless authorised by AUDI AG. AUDI AG does not guarantee or accept any liability with respect to the correctness of information in this document. Copyright by AUDI AG.

1 Removing and installing engine

⇒ “1.1 Removing engine”, page 12

⇒ “1.2 Separating engine and gearbox”, page 12

⇒ “1.3 Securing engine to engine and gearbox support”, page 12

⇒ “1.4 Installing engine”, page 13

1.1 Removing engine

All procedures are described in ⇒ 4-cylinder direct injection engine (1.8, 2.0 ltr. 4-valve TFSI); Rep. gr. 10 ; Removing and installing engine; Removing engine .

1.2 Separating engine and gearbox

All procedures are described in ⇒ 4-cylinder direct injection engine (1.8, 2.0 ltr. 4-valve TFSI); Rep. gr. 10 ; Removing and installing engine; Separating engine and gearbox .

1.3 Securing engine to engine and gearbox support

Special tools and workshop equipment required

- Lifting tackle - 2024 A-

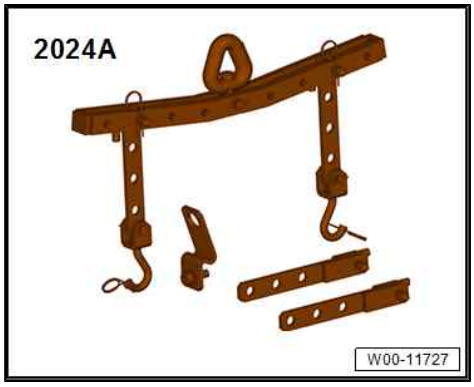

- Engine and gearbox support - VAS 6095A-

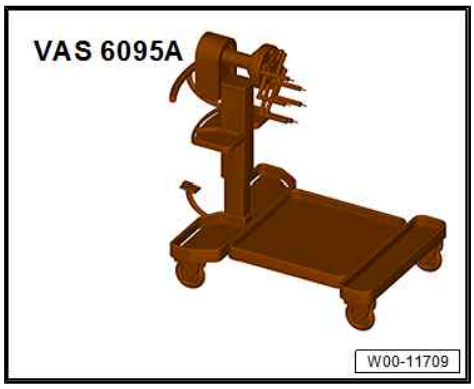

Procedure

- Gearbox detached from engine ⇒ 4-cylinder direct injection engine (1.8, 2.0 ltr. 4-valve TFSI); Rep. gr. 10 ; Removing and installing engine; Separating engine and gearbox .

– If fitted, release catch -arrow- and pull off mounting -1- for engine cover panel.

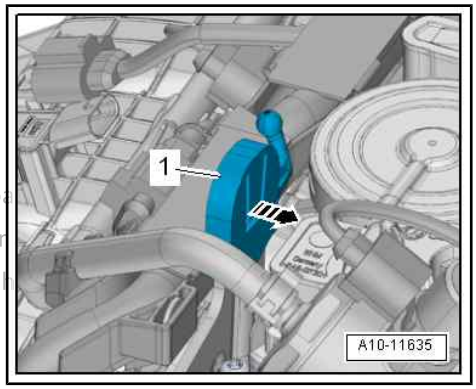

Protected by copyright. Copying for private or commercial purposes, in pa
permitted unless authorised by AUDI AG. AUDI AG does not guarantee or
with respect to the correctness of information in this document. Copyrigh

– Engage lifting tackle - 2024 A- on engine and workshop hoist - VAS 6100- .

• To adjust to the centre of gravity of the engine block, position the perforated rails on the support hooks as shown.

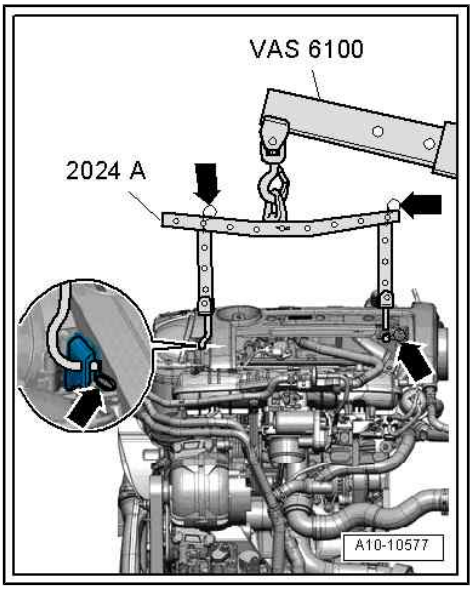

CAUTION

Risk of injury if engine drops when it is lifted.

Danger of trapping or crushing parts of the body.

– **The support hooks and retaining pins on the lifting tackle must be secured with locking pins.**

– Secure support hooks and retaining pins with locking pins -arrows-.

– Secure engine to engine and gearbox support - VAS 6095A- using universal mounting - VAS 6095/1- .

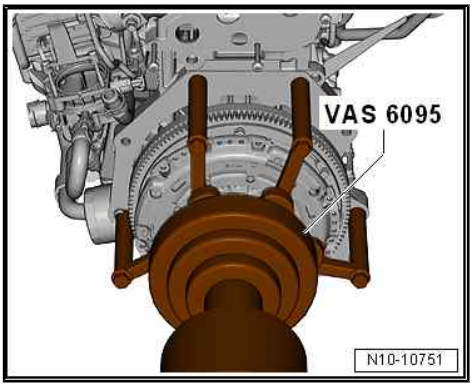

Tightening torque

Component		Nm
Bolts/nuts	M6	10
	M8	20
	M10	45
	M12	65

1.4 Installing engine

All procedures are described in ⇒ 4-cylinder direct injection engine (1.8, 2.0 ltr. 4-valve TFSI); Rep. gr. 10 ; Removing and installing engine; Installing engine .

2 Assembly mountings

All procedures and components are described in ⇒ 4-cylinder direct injection engine (1.8, 2.0 ltr. 4-valve TFSI); Rep. gr. 10 ; Assembly mountings .

Protected by copyright. Copying for private or commercial purposes, in part or in whole, is not permitted unless authorised by AUDI AG. AUDI AG does not guarantee or accept any liability with respect to the correctness of information in this document. Copyright by AUDI AG.

3 Engine cover panel

⇒ “3.1 Removing and installing engine cover panel”, page 15

3.1 Removing and installing engine cover panel

Protected by copyright. Copying for private or commercial purposes, in part or in whole, is not permitted unless authorised by AUDI AG. AUDI AG does not guarantee or assume liability with respect to the correctness of information in this document.

Removing (version 1)

– Carefully pull engine cover panel off retaining pins one after another -arrows-. Do not jerk engine cover panel away, and do not try to pull on one side only.

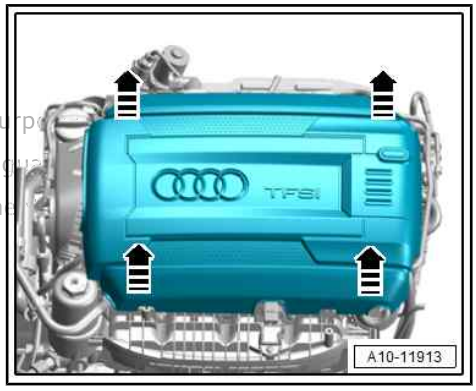

Removing (version 2)

– Carefully pull engine cover panel off retaining pins one after another -arrows-. Do not jerk engine cover panel away, and do not try to pull on one side only.

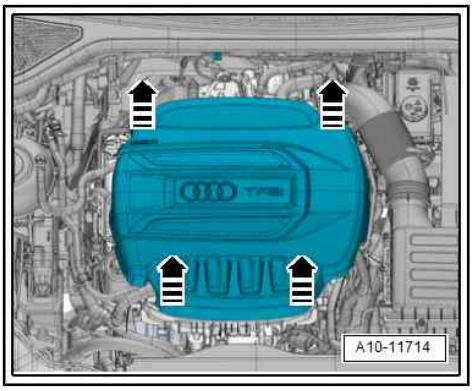

Installing

– To avoid damage, do not strike the engine cover panel with your fist or with any kind of tool.

– Position engine cover panel, paying attention to oil filler neck and dipstick.

– Press engine cover panel into rubber grommets first on left side, then on right side.

13 – Crankshaft group

1 Cylinder block (pulley end)

⇒ "1.1 Exploded view - cylinder block (pulley end)", page 16

⇒ "1.2 Removing and installing poly V-belt", page 18

⇒ "1.3 Removing and installing poly V-belt tensioner", page 19

⇒ "1.4 Removing and installing vibration damper", page 19

⇒ "1.5 Removing and installing bracket for ancillaries", page 26

⇒ "1.6 Removing and installing engine support", page 27

1.1 Exploded view - cylinder block (pulley end)

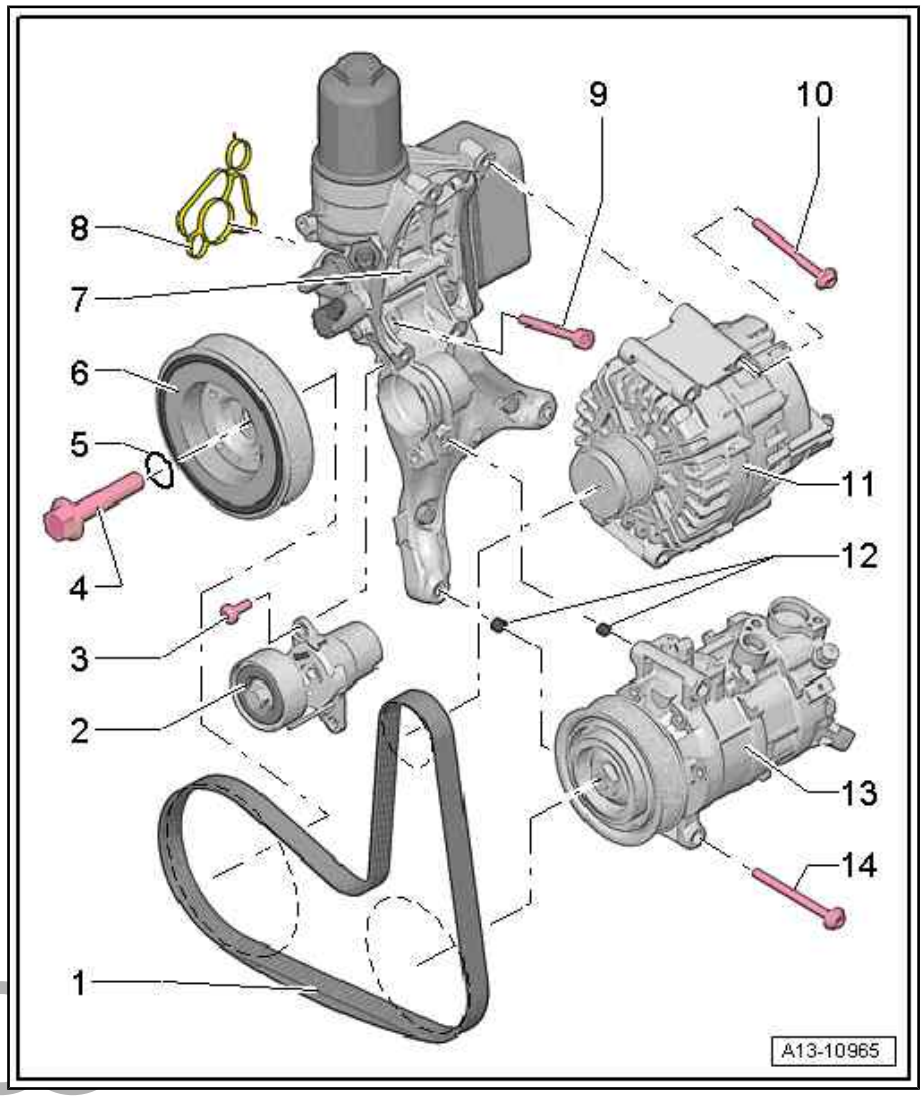

1 - Poly V-belt

- ❑ Check for wear
- ❑ Do not kink
- ❑ Routing of poly V-belt ⇒ page 17
- ❑ Before removing, mark direction of rotation with chalk or felt-tip pen
- ❑ Removing and installing ⇒ page 18
- ❑ When installing, make sure it is properly seated on pulleys.

2 - Tensioner for poly V-belt

- ❑ Pivot with wrench to slacken poly V-belt
- ❑ Lock in position with locking pin - T10060A- .
- ❑ Removing and installing ⇒ page 19

3 - Bolt

- ❑ Renew after removing
- ❑ 8 Nm +45°

4 - Bolt

- ❑ Renew after removing
- ❑ Use counterhold tool - T10355- when loosening and tightening
- ❑ Lubricate O-ring with engine oil
- ❑ Different versions
- ❑ Property class 8.8: 150 Nm + 90°
- ❑ Property class 10.9: 100 Nm + 180°
- ❑ The property class of the bolt is visible on the bolt head

5 - O-ring

- ❑ Not available as replacement part, supplied together with bolt

Protected by copyright. Copying for private or commercial purposes, in part or in whole, is not permitted unless authorised by AUDI AG. AUDI AG does not guarantee or accept any liability with respect to the correctness of information in this document. Copyright by AUDI AG.

6 - Vibration damper

- ❑ With poly V-belt pulley
- ❑ Removing and installing ⇒ page 19

7 - Bracket for ancillaries

- ❑ With oil filter housing and engine oil cooler
- ❑ Removing and installing bracket for ancillaries ⇒ page 26
- ❑ Removing and installing engine oil cooler ⇒ page 209

8 - Gasket

- ❑ Renew after removing

9 - Bolt

- ❑ Renew after removing
- ❑ Tightening torques and sequence ⇒ page 18

10 - Bolt

- ❑ Tightening torques ⇒ Electrical system; Rep. gr. 27 ; Alternator; Exploded view - alternator

11 - Alternator

- ❑ Removing and installing ⇒ Electrical system; Rep. gr. 27 ; Alternator; Removing and installing alternator

12 - Dowel sleeves

- ❑ For air conditioner compressor

Protected by copyright. Copying for private or commercial purposes, in part or in whole, is not permitted unless authorised by AUDI AG. AUDI AG does not guarantee or accept any liability with respect to the correctness of information in this document. Copyright by AUDI AG.

13 - Air conditioner compressor

- ❑ Do not unscrew or disconnect refrigerant hoses or pipes
- ❑ Removing and installing ⇒ Heating, air conditioning; Rep. gr. 87 ; Air conditioner compressor; Detaching and attaching air conditioner compressor at bracket

14 - Bolt

- ❑ Tightening torque ⇒ Heating, air conditioning; Rep. gr. 87 ; Air conditioner compressor; Exploded view - air conditioner compressor drive unit

Routing of poly V-belt

1 - Vibration damper

2 - Tensioner for poly V-belt

3 - Alternator

4 - Air conditioner compressor

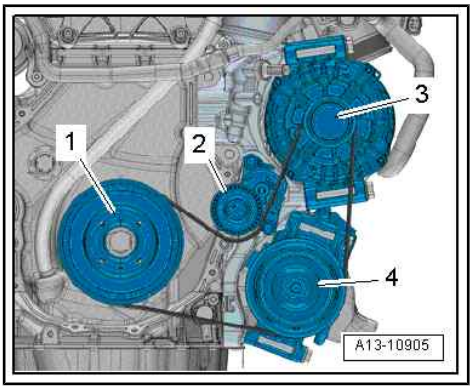

Bracket for ancillaries - tightening torques and tightening sequence

– Fit bracket for ancillaries (first tighten bolt -4-).

• After removing, renew bolts tightened with specified tightening angle.

– Tighten bolts in stages in the sequence shown:

Stage	Bolts	Tightening torques/angle specification
1.	-1 … 5-	Screw in by hand until contact is made
2.	-1 … 5-	20 Nm
3.	-1 … 5-	Turn 90° further

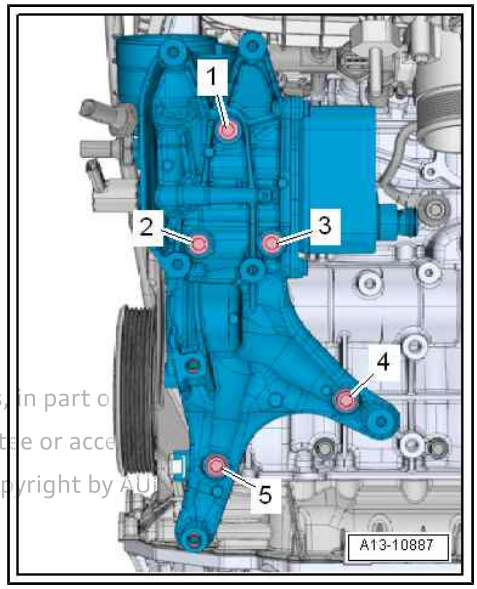

Protected by copyright. Copying for private or commercial purposes, in part o
permitted unless authorised by AUDI AG. AUDI AG does not guarantee or acce
with respect to the correctness of information in this document. Copyright by AU

1.2 Removing and installing poly V-belt

Special tools and workshop equipment required

♦ Locking pin - T10060A-

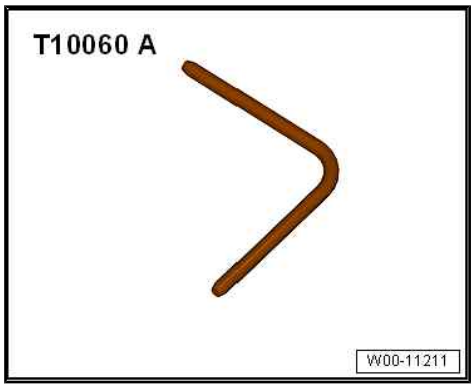

Removing

Preparatory work may be necessary depending on model ⇒ 4-cylinder direct injection engine (2.0 ltr. 4-valve TFSI); Rep. gr. 13 ; Cylinder block (pulley end); Removing and installing poly V-belt .

Audi S3 and Audi SQ2 only:

– Remove noise insulation ⇒ General body repairs, exterior; Rep. gr. 66 ; Noise insulation; Exploded view - noise insulation .

All vehicles (continued):

NOTICE

Risk of irreparable damage due to running a used belt in the opposite direction when it is refitted.

– **Mark running direction before removing.**

– **Pay attention to running direction when reinstalling.**

– Mark direction of rotation with chalk or felt-tip pen.

– To slacken poly V-belt turn tensioner in direction of -arrow-.
– Lock tensioner with locking pin - T10060A- .
– Take off poly V-belt.

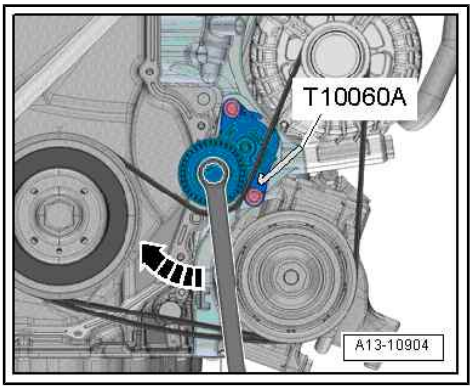

Installing

Installation is carried out in reverse order; note the following:

– Fit poly V-belt ⇒ page 17 .

– Turn tensioner slightly in direction of -arrow- and remove locking pin - T10060A- .
– Release tensioner.
– Check that poly V-belt is properly seated.
– Start engine and check that poly V-belt runs properly.

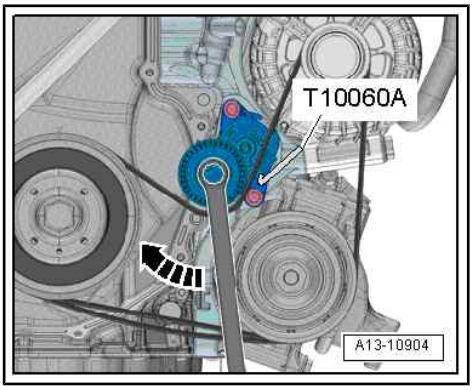

Additional work depending on model ⇒ 4-cylinder direct injection engine (2.0 ltr. 4-valve TFSI); Rep. gr. 13 ; Cylinder block (pulley end); Removing and installing poly V-belt

Tightening torques

♦ ⇒ General body repairs, exterior; Rep. gr. 66 ; Noise insulation; Exploded view - noise insulation

1.3 Removing and installing poly V-belt tensioner

Removing

Preparatory work may be necessary depending on model ⇒ 4-cylinder direct injection engine (1.8, 2.0 ltr. 4-valve TFSI); Rep. gr. 13 ; Cylinder block (pulley end); Removing and installing tensioner for poly V-belt .

– Detach poly V-belt from tensioner ⇒ page 18 .
– Remove bolts -arrows- and take off tensioner -1- for poly V-belt from bracket for ancillaries.

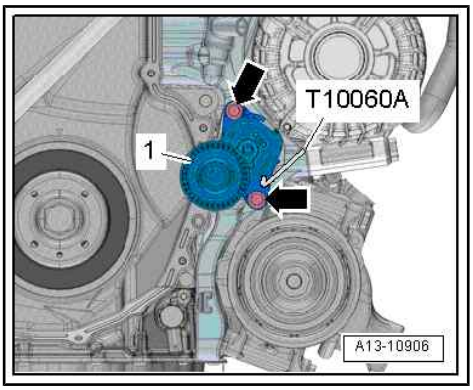

Installing

Installation is carried out in reverse order; note the following:

– Install poly V-belt ⇒ page 18 .

Additional work depending on model ⇒ 4-cylinder direct injection engine (1.8, 2.0 ltr. 4-valve TFSI); Rep. gr. 13 ; Cylinder block (pulley end); Removing and installing tensioner for poly V-belt

Tightening torques

♦ ⇒ "1.1 Exploded view - cylinder block (pulley end)", page 16

1.4 Removing and installing vibration damper

Special tools and workshop equipment required

Protected by copyright. Copying or publication in other media, in part or in whole, is not permitted unless authorised by AUDI AG. AUDI AG does not guarantee or accept any liability with respect to the accuracy of the contents of this document. Copyright by AUDI AG.

- Counterhold tool - T10355-

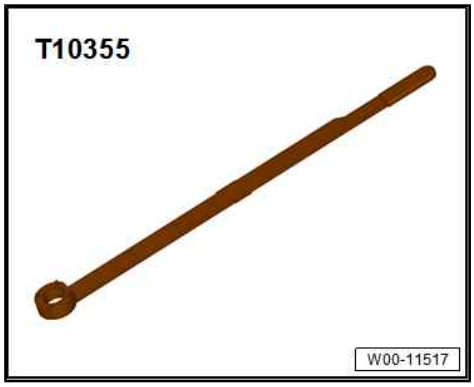

- Ratchet wrench (21 mm) - T40263-

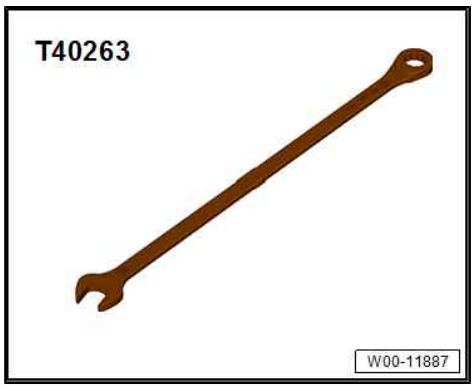

- Adapter - T40314-

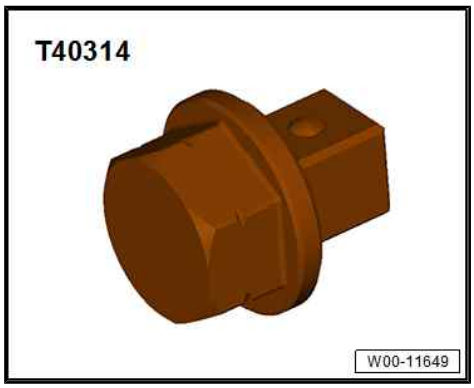

- Assembly tool - T10531-

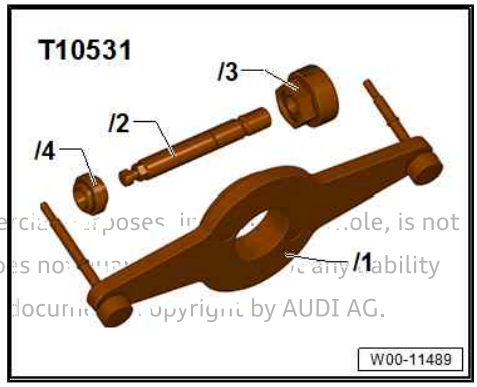

Protected by copyright. Copying for private or commercial purposes, in part or whole, is not permitted unless authorised by AUDI AG. AUDI AG does not warrant or accept any liability with respect to the correctness of information in this document. Copyright by AUDI AG.

Components of assembly tool - T10531- :

- Support - T10531/1-
- Clamping pin - T10531/2-
- Turning-over tool - T10531/3-
- Flange nut - T10531/4-

- The bolt for the vibration damper -A- secures the vibration damper -1-, timing chain sprocket -2- and crankshaft -3- to each other. Before removing the bolt, the timing chain sprocket must be secured to the crankshaft as described below.

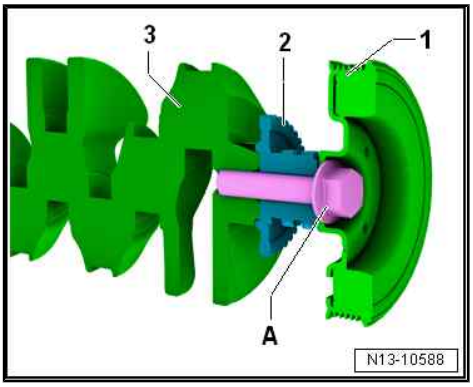

Removing

Preparatory work may be necessary depending on model ⇒ 4-cylinder direct injection engine (1.8, 2.0 ltr. 4-valve TFSI); Rep. gr. 13 ; Cylinder block (pulley end); Removing and installing vibration damper .

– If still fitted, remove noise insulation ⇒ General body repairs, exterior; Rep. gr. 66 ; Noise insulation; Exploded view - noise insulation .

– Remove pulley without locking tensioner in place ⇒ page 18 .

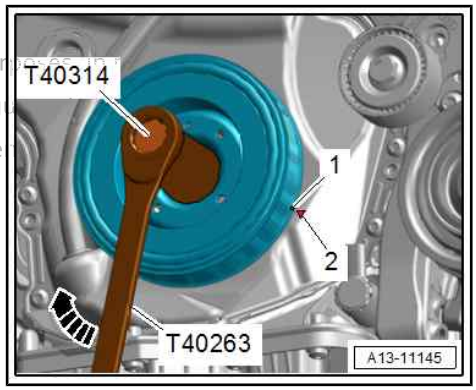

NOTICE

Risk of engine damage if valve gear drive slips

– **Only turn engine in normal direction of rotation.**

al purposes only
permitted unless authorised by AUDI AG. AUDI AG does not gu
with respect to the correctness of information in this docume

– Use ratchet wrench (21 mm) - T40263- , adapter - T40314- and socket (24 mm) to turn crankshaft in direction of engine rotation -arrow- until vibration damper is at “TDC” position.

- Notch -1- on vibration damper must align with arrow marking -2- on cover for timing chains (bottom).
- Marking on cover must be in »4 o'clock position«.
- Do not loosen bolt for vibration damper by more than a half turn at this stage.

– Loosen bolt for vibration damper by approx. a half turn using counterhold tool - T10355- .

– If vibration damper has been rotated out of position, correct “TDC” position.

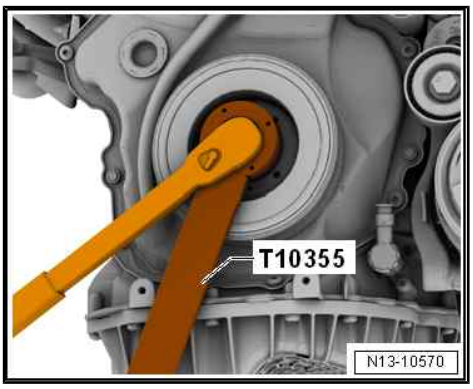

– Remove bolts -arrows- for timing chain cover (bottom).

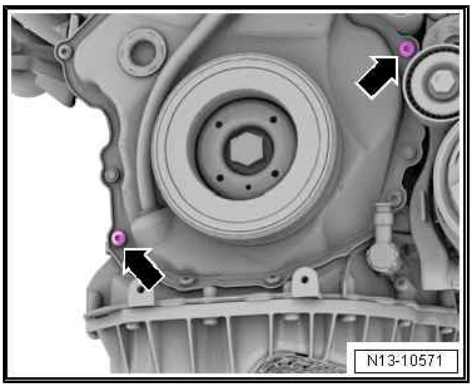

– Apply support - T10531/1- (as illustrated) to vibration damper and screw in knurled screws -arrows- hand-tight.

• Arrow marking on support - T10531/1- must point upwards.

– Remove bolt for vibration damper completely.

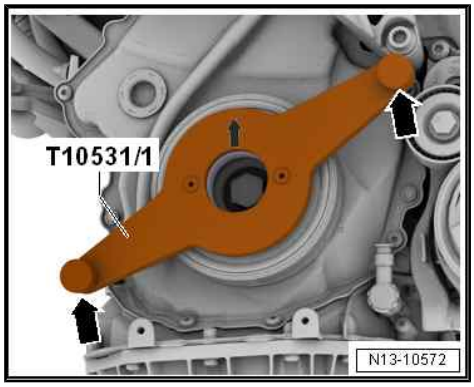

– Check whether turning-over tool - T10531/3- -item A- slides easily over clamps -B-. Turn tensioning bolt -arrow- if necessary.

• Do not turn the tensioning bolt from this stage onwards; otherwise the clamping pin - T10531/2- will get stuck when it is screwed into the crankshaft.

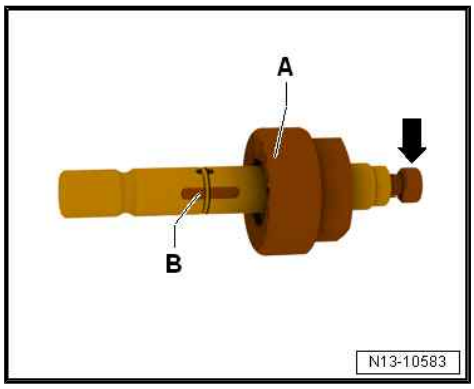

– Screw clamping pin - T10531/2- into crankshaft and hand-tighten with open-end spanner (12 mm) -item A-.

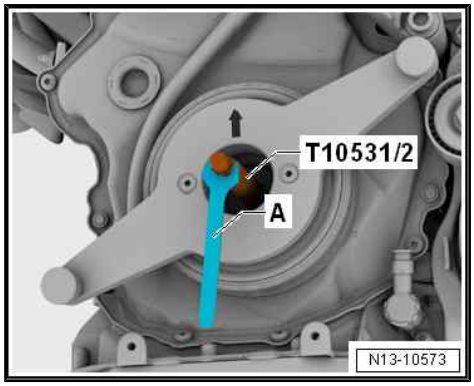

– Hand-tighten tensioning bolt -A- to secure chain sprocket to crankshaft.

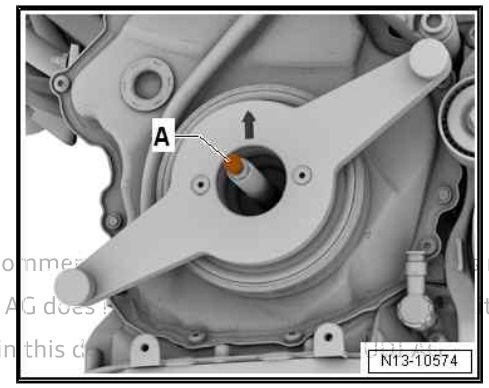

Protected by copyright. Copying for private or commer[illegible] not permitted unless authorised by AUDI AG. AUDI AG does [illegible] ty with respect to the correctness of information in this d[illegible]

– Remove knurled screws -arrows-. Detach support - T10531/1- and vibration damper -A-.

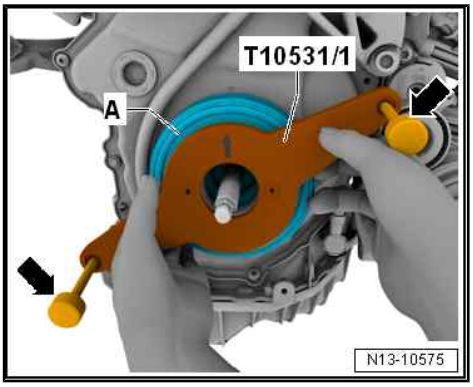

If crankshaft needs to be rotated without vibration damper:

– Fit turning-over tool - T10531/3- -item A- onto clamping pin - T10531/2- (pay attention to tooth-shaped profile on chain sprocket).

• In TDC position, flat surface of tool faces upwards.

– Tighten turning-over tool with flange nut - T10531/4- -item B-.

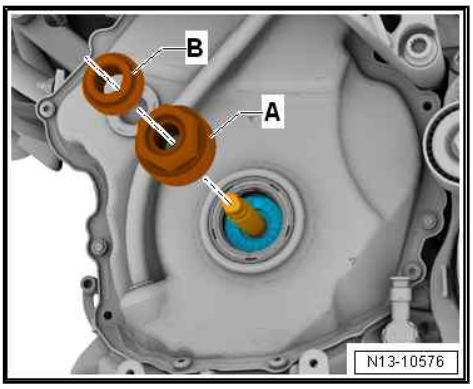

– Crankshaft can now be rotated at hexagon flats -arrow-.

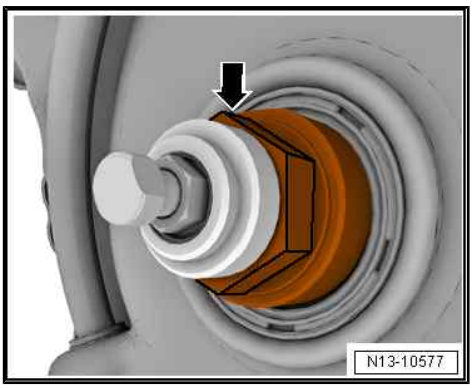

Installing

Installation is carried out in reverse order; note the following:

• Renew bolt with O-ring after removal.

– If necessary, detach flange nut - T10531/4- -item B- and turning-over tool - T10531/3- -item A- from clamping pin - T10531/2- .

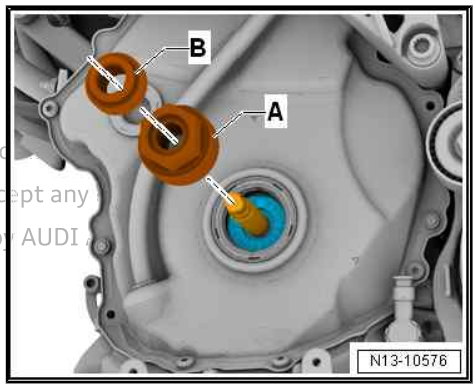

Protected by copyright. Copy for private or commercial purposes, in part or
permitted unless authorised by AUDI AG. AUDI AG does not guarantee or accept any
with respect to the correctness of information in this document. Copyright by AUDI

– Fit vibration damper in TDC position (pay attention to tooth-shaped profile -arrow- on chain sprocket).

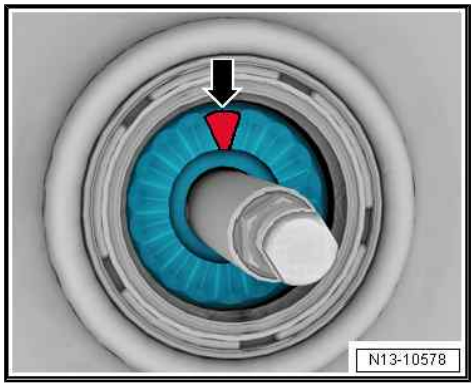

– Fit turning-over tool - T10531/3- -item A- onto clamping pin - T10531/2- .

• The hexagon flats should face the vibration damper.

– Screw flange nut - T10531/4- -item B- on while moving vibration damper back and forth slightly to check whether vibration damper is seated correctly in tooth-shaped profile.

– Tighten flange nut until vibration damper can no longer be rotated.

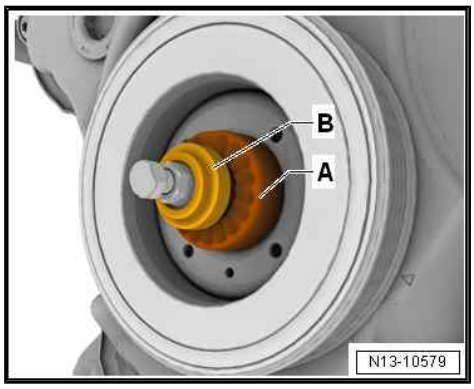

– Apply support - T10531/1- (as illustrated) to vibration damper and secure hand-tight with knurled screws -arrows-.

• Arrow marking on support - T10531/1- must point upwards.

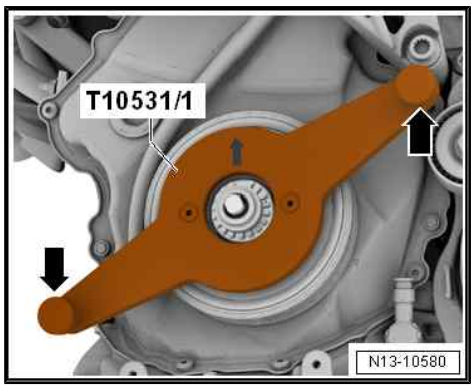

– Unscrew flange nut - T10531/4- -item A- and loosen tensioning bolt -B-.

– Unscrew clamping pin - T10531/2- and remove with turning-over tool - T10531/3- .

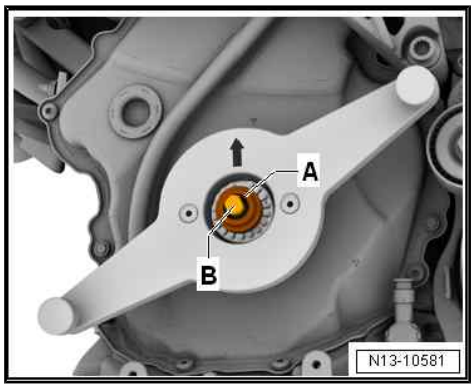

Protected by copyright. Copying for private or commercial purposes, in part or in whole, is not permitted unless authorised by AUDI AG. AUDI AG does not guarantee or accept any liability with respect to the correctness of information in this document. Copyright by AUDI AG.

– Screw in new bolt for vibration damper with lubricated O-ring -1- hand-tight.

Protected by copyright. Copying for private or commercial purposes, in part or
permitted unless authorised by AUDI AG. AUDI AG does not guarantee or accept any lia
with respect to the correctness of information in this document. Copyright by AUDI AG

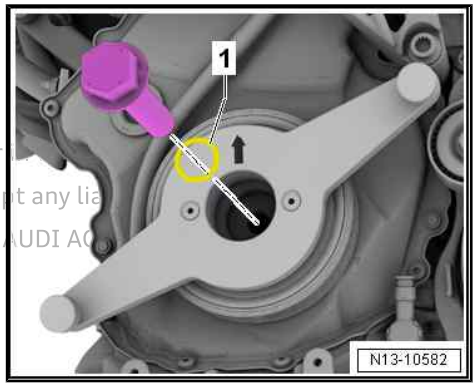

– Remove knurled screws -arrows- and detach support - T10531/1- .

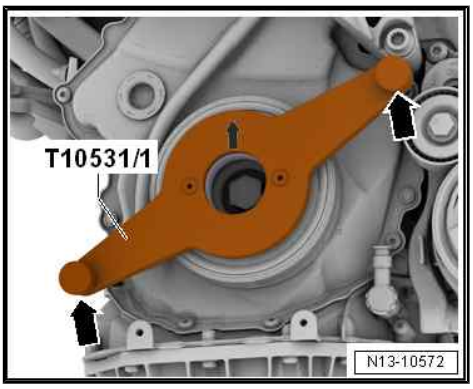

– Tighten bolt for vibration damper using counterhold tool - T10355- .

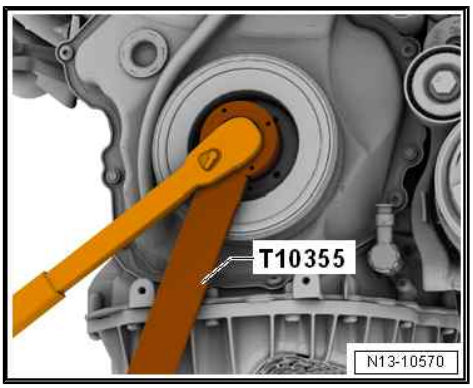

Remaining installation steps are carried out in reverse sequence; note the following:

- Renew bolts -arrows- for timing chain cover after removing.

– Install poly V-belt ⇒ page 18 .

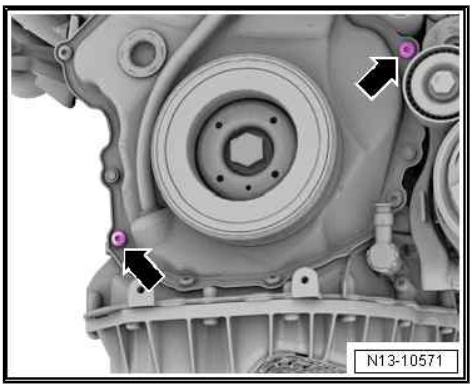

Additional work depending on model ⇒ 4-cylinder direct injection engine (1.8, 2.0 ltr. 4-valve TFSI); Rep. gr. 13 ; Cylinder block (pulley end); Removing and installing vibration damper

Tightening torques

- ⇒ “1.1 Exploded view - cylinder block (pulley end)”, page 16
- ⇒ “1.1 Exploded view - timing chain cover”, page 61
- ⇒ General body repairs, exterior; Rep. gr. 66 ; Noise insulation; Exploded view - noise insulation

1.5 Removing and installing bracket for ancillaries

Removing

Preparatory work may be necessary depending on model ⇒ 4-cylinder direct injection engine (1.8, 2.0 ltr. 4-valve TFSI); Rep. gr. 13 ; Cylinder block (pulley end); Removing and installing bracket for ancillaries .

Protected by copyright. Copying for private or commercial purposes, in part or in whole, is not permitted unless authorised by AUDI AG. AUDI AG does not guarantee or accept any liability with respect to the correctness of information in this document. Copyright by AUDI AG.

- Drain coolant ⇒ 4-cylinder direct injection engine (1.8, 2.0 ltr. 4-valve TFSI); Rep. gr. 19 ; Cooling system/coolant; Draining and filling cooling system .
- Remove poly V-belt ⇒ page 18 .
- Remove alternator ⇒ Electrical system; Rep. gr. 27 ; Alternator; Removing and installing alternator .
- Unplug electrical connectors:

1 - For oil pressure switch - F22- -item 2-

3 - For oil pressure switch for reduced oil pressure - F378- -item 4-

5 - For piston cooling jet control valve - N522- -item 7-

- Remove oil filter element ⇒ page 200 .

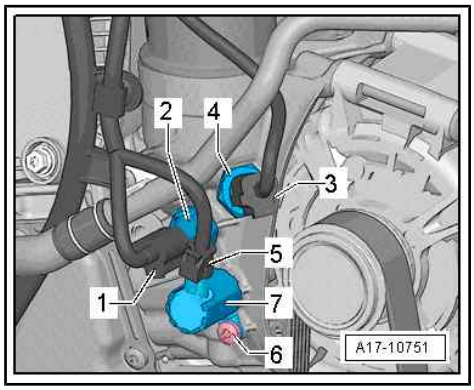

- Move retaining clip -2- for electrical wiring harness clear.
- Remove bolt -1-.
- If necessary, unclip guide tube from timing chain cover (top) in direction of -arrow-.
- Place a cloth underneath bracket for ancillaries to catch any escaping oil.

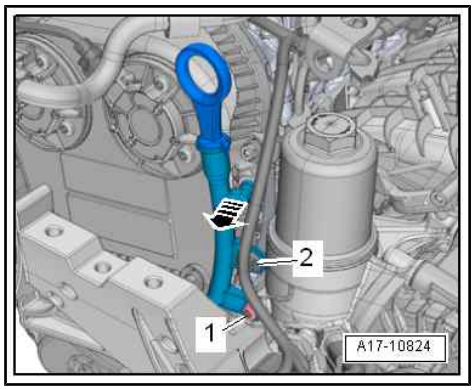

– Move electrical wiring harness clear.

– Unscrew bolts -1 ... 5- and detach bracket for ancillaries from coolant pump housing.

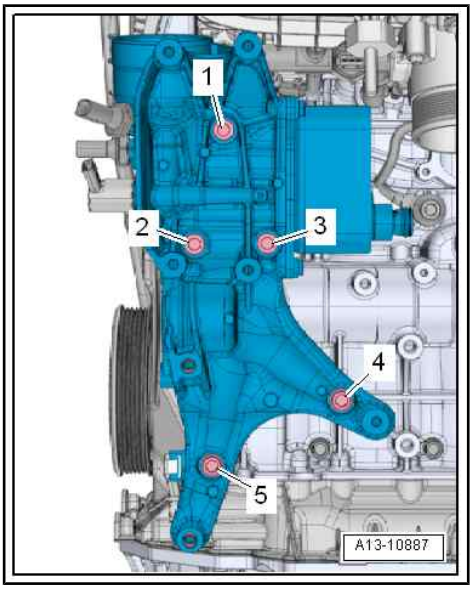

Installing

Installation is carried out in reverse order; note the following:

- After removing, renew bolts tightened with specified tightening angle.
- Renew seals, gaskets and O-rings after removal.
- Do not reuse coolant.

– Moisten new O-rings -4- with coolant.

– Insert connection -2- into coolant pump housing -3-.

– Push bracket for ancillaries -1- onto connection, fit bolts and tighten.

– Install oil filter element and check oil level ⇒ page 200 .

– Install alternator ⇒ Electrical system; Rep. gr. 27 ; Alternator; Removing and installing alternator .

– Install air conditioner compressor ⇒ Heating, air conditioning; Rep. gr. 87 ; Air conditioner compressor; Detaching and attaching air conditioner compressor at bracket .

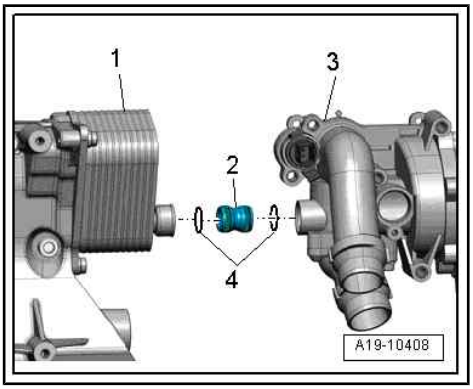

– Install poly V-belt ⇒ page 18 .

– Fill up coolant ⇒ 4-cylinder direct injection engine (1.8, 2.0 ltr. 4-valve TFSI); Rep. gr. 19 ; Cooling system/coolant; Draining and filling cooling system .

Protected by copyright. Copying for private or commercial purposes, in part or in whole, is not permitted unless authorised by AUDI AG. AUDI AG does not guarantee or accept any liability with respect to the correctness of information in this document. Copyright by AUDI AG.

Tightening torques

◆ ⇒ Fig. ""Bracket for ancillaries - tightening torques and tightening sequence"" , page 18

◆ ⇒ "1.1 Exploded view - cylinder block (pulley end)", page 16

◆ ⇒ "1.1 Exploded view - timing chain cover", page 61

1.6 Removing and installing engine support

All procedures are described in ⇒ 4-cylinder direct injection engine (1.8, 2.0 ltr. 4-valve TFSI); Rep. gr. 13 ; Cylinder block (pulley end); Removing and installing engine support .

2 Cylinder block (gearbox end)

⇒ "2.1 Exploded view - cylinder block (gearbox end)", page 28

⇒ "2.2 Exploded view - drive plate", page 29

⇒ "2.3 Removing and installing flywheel", page 30

⇒ "2.4 Removing and installing drive plate", page 31

⇒ "2.5 Removing and installing sealing flange (gearbox end)", page 33

2.1 Exploded view - cylinder block (gearbox end)

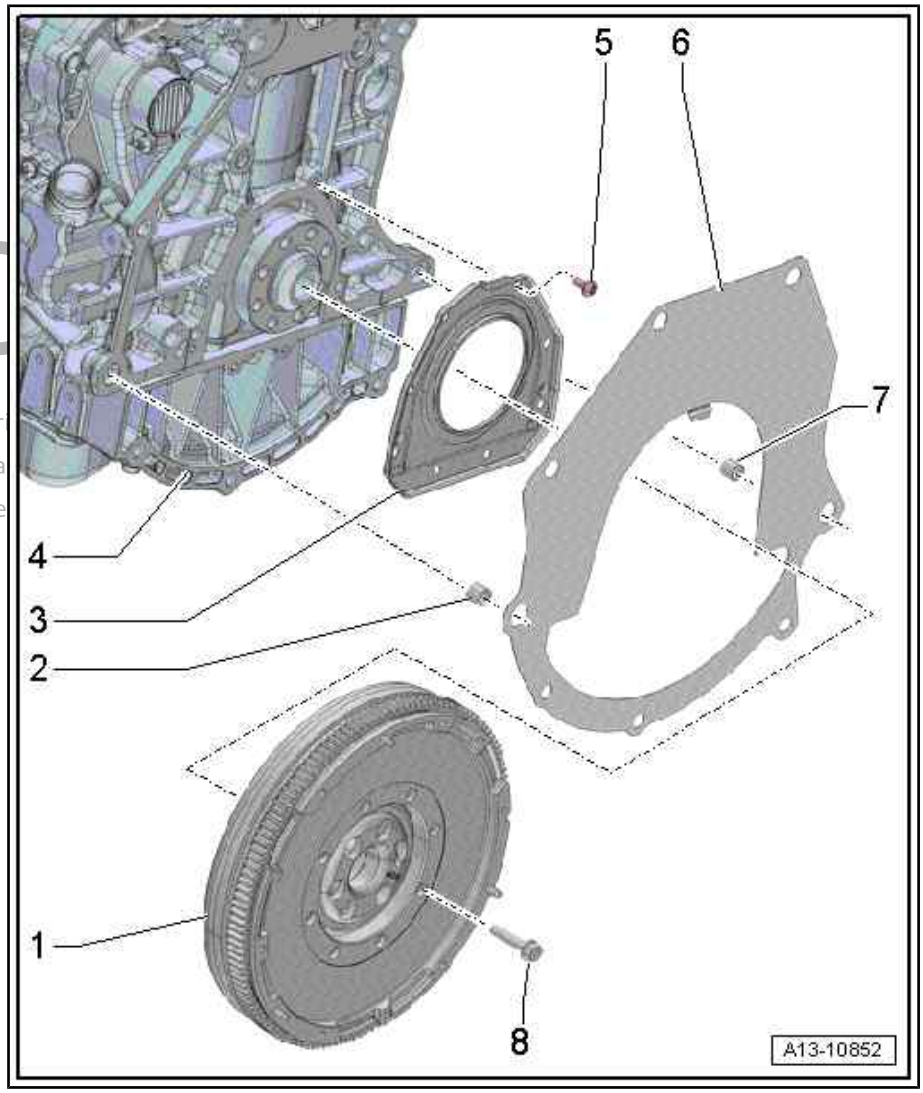

1 - Flywheel

- ❑ Removing and installing ⇒ page 30
- ❑ Can only be installed in one position. Holes are off-set

2 - Dowel sleeve

3 - Sealing flange (gearbox end)

- ❑ With oil seal
- ❑ Do not lubricate oil seal
- ❑ Renewing ⇒ page 33
- ❑ Before installing, remove oil residue from crankshaft journal with a clean cloth.
- ❑ Guide sleeve is not to be removed until sealing flange has been slipped onto crankshaft journal

4 - Cylinder block

5 - Bolt

- ❑ Tightening torque and sequence

◆ Version with 6 bolts ⇒ page 29

◆ Version with 8 bolts ⇒ page 29

6 - Intermediate plate

- ❑ Version fitted in vehicle may differ from illustration
- ❑ Do not damage/bend when assembling
- ❑ Installing ⇒ page 29

7 - Dowel sleeve

8 - Bolt

- ❑ Renew after removing
- ❑ 60 Nm +90°

Protected by copyright. Copying for private or commercial purposes, in part or in whole, is not permitted unless authorised by AUDI AG. AUDI AG does not guarantee or assume any liability with respect to the correctness of information in this document.

Sealing flange (gearbox end) - tightening torque and sequence, with 6 bolts

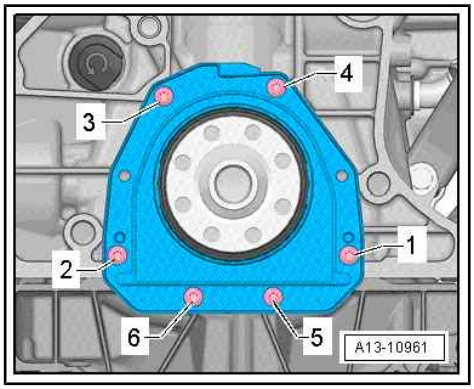

- After removing, renew bolts tightened with specified tightening angle.

– Tighten bolts in stages in the sequence shown:

Stage	Bolts	Tightening torque/angle specification
1.	-1 … 6-	Screw in by hand until contact is made
2.	-1 … 6-	Steel bolts: 9 Nm Aluminium bolts: 4 Nm
3.	-1 … 6-	Aluminium bolts: Turn 45° further

Protected by copyright. Copying for private or commercial purposes, in part or in whole, is not permitted unless authorised by AUDI AG. AUDI AG does not guarantee or accept any liability with respect to the correctness of information in this document. Copyright by AUDI AG.

Note:

Only 6 bolts are fitted; 2 bolt holes remain free.

Sealing flange (gearbox end) - tightening torques and sequence, with 8 bolts

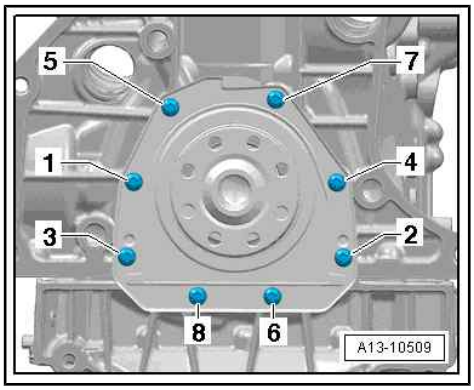

- After removing, renew bolts tightened with specified tightening angle.

– Tighten bolts in stages in the sequence shown:

Stage	Bolts	Tightening torques/angle specification
1.	-1 … 8-	Screw in by hand until contact is made
2.	-1 … 8-	Steel bolts: 9 Nm Aluminium bolts: 4 Nm
3.	-1 … 8-	Aluminium bolts: Turn 45° further

Installing intermediate plate

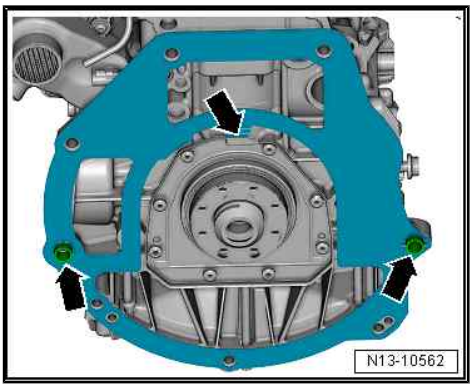

– Engage intermediate plate on sealing flange -top arrow- and push onto dowel sleeves -bottom arrows-.

2.2 Exploded view - drive plate

Protected [illegible] ivate or commercial purposes, in part or in whole, is not permitted [illegible] AG. AUDI AG does not guarantee or accept any liability with resp[illegible] rmation in this document. Copyright by AUDI AG.

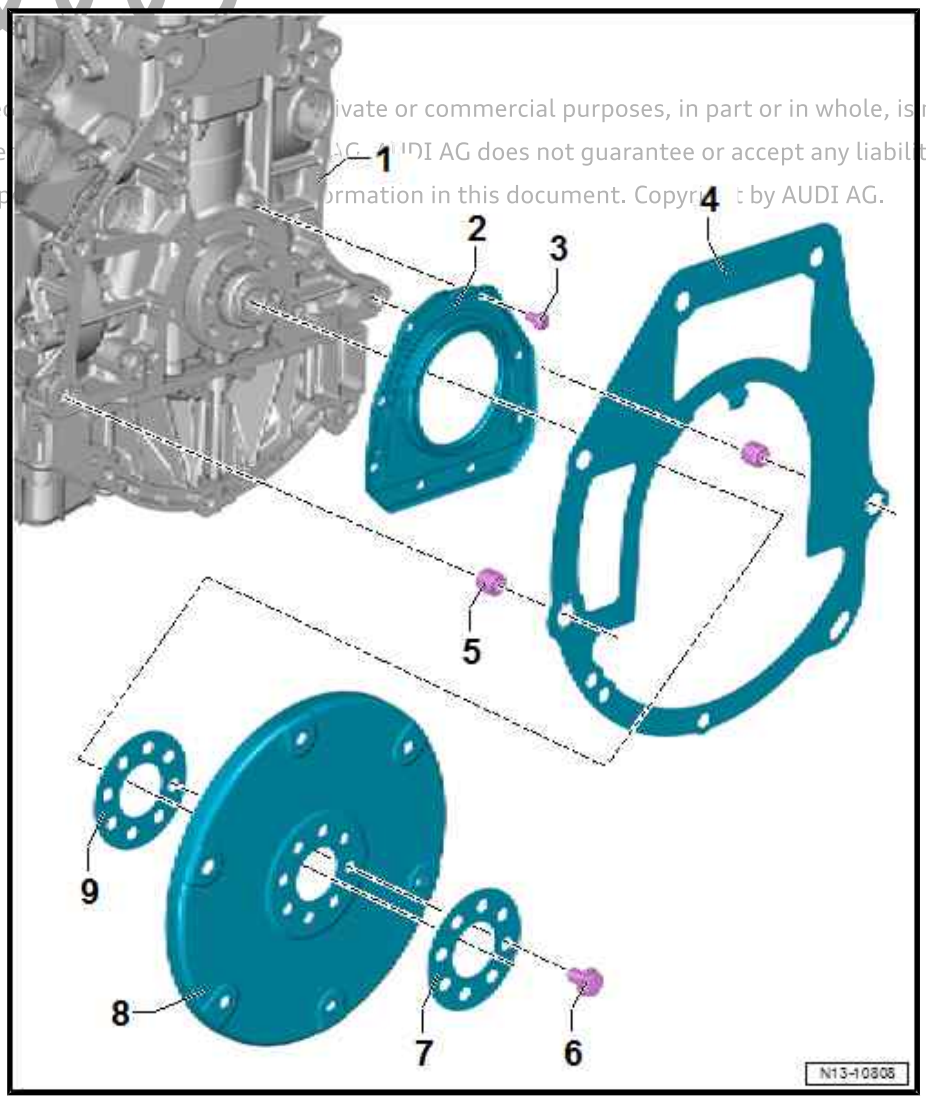

1 - Cylinder block

2 - Sealing flange (gearbox end)

- ❑ With oil seal
- ❑ Do not lubricate oil seal
- ❑ Renewing ⇒ page 33
- ❑ Before installing, remove oil residue from crankshaft journal with a clean cloth.
- ❑ Guide sleeve is not to be removed until sealing flange has been slipped onto crankshaft journal

3 - Bolt

- ❑ Tightening torque and sequence ⇒ page 29

4 - Intermediate plate

- ❑ Do not damage/bend when assembling
- ❑ Installing ⇒ page 29

5 - Dowel sleeve

6 - Bolt

- ❑ Renew after removing
- ❑ 60 Nm +90°

7 - Washer

8 - Drive plate

- ❑ Removing and installing ⇒ page 31
- ❑ Can only be installed in one position. Holes are off-set
- ❑ Collar faces cylinder block

9 - Shim

- ❑ Use ⇒ page 32

2.3 Removing and installing flywheel

Special tools and workshop equipment required

- ♦ Counterhold tool - 3067-

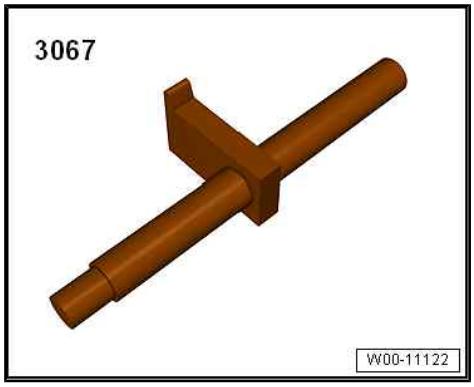

Removing

- Gearbox removed ⇒ Gearbox; Rep. gr. 34 ; Removing and installing gearbox; Removing gearbox .

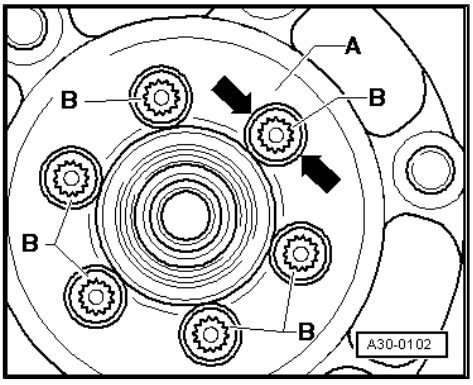

NOTICE

Risk of irreparable damage to flywheel if handled incorrectly.

- **Bolts must never be removed with a pneumatic or impact driver.**
- **When removing the bolts, make sure that the bolt heads do not come into contact with the flywheel.**

– Rotate the flywheel -A- so that the bolts -B- align centrally with the holes -arrows-.

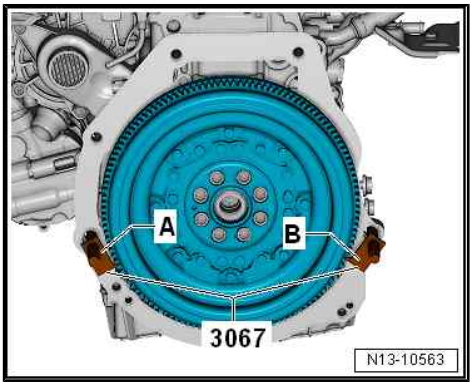

– Insert counterhold tool - 3067- in hole on cylinder block -item B-.

– Loosen and remove flywheel bolts.

Installing

Installation is carried out in reverse order; note the following:

- After removing, renew bolts tightened with specified tightening angle.

– Insert counterhold - 3067- in hole on cylinder block -item A-.

Tightening torques

♦ ⇒ “2.1 Exploded view - cylinder block (gearbox end)”, page 28

2.4 Removing and installing drive plate

Special tools and workshop equipment required

♦ Counterhold tool - VW 558-

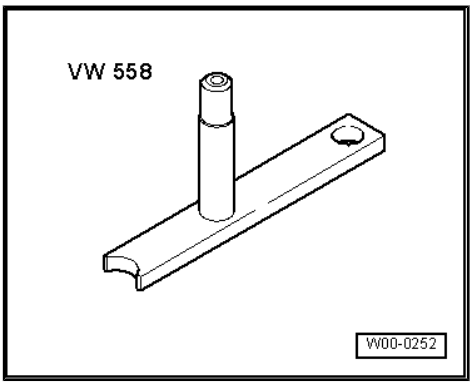

♦ Depth gauge - VAS 6082-

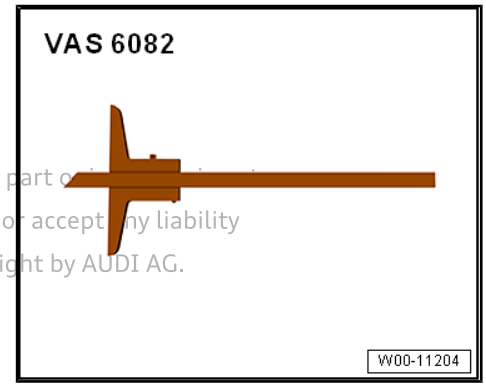

Protected by copyright. Copying for private or commercial purposes, in part or in whole, is not permitted unless authorised by AUDI AG. AUDI AG does not guarantee or accept any liability with respect to the correctness of information in this document. Copyright by AUDI AG.

- M8x40 bolt
- Nut M8

Preparing counterhold tool - VW 558- :

– Tighten M8x40 bolt on counterhold tool - VW 558- with M8 nut.

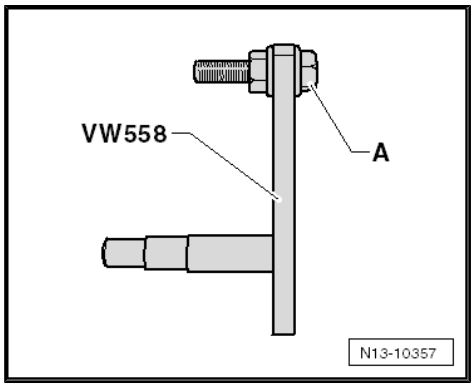

Removing

– Fit counterhold tool - VW 558- in cylinder block and in hole -A- in drive plate.

– Remove bolts and take off drive plate.

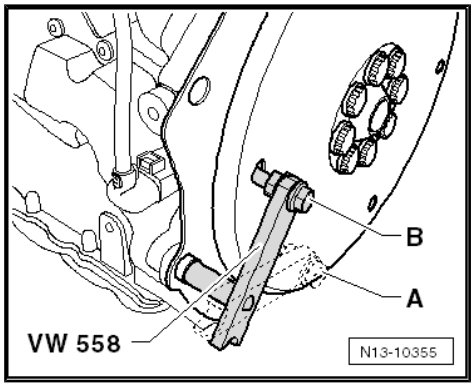

Installing

- Renew bolts tightened with specified tightening angle.

– Initially fit drive plate -1- and washer -2- without shim -A- and tighten bolts -3- to 30 Nm.

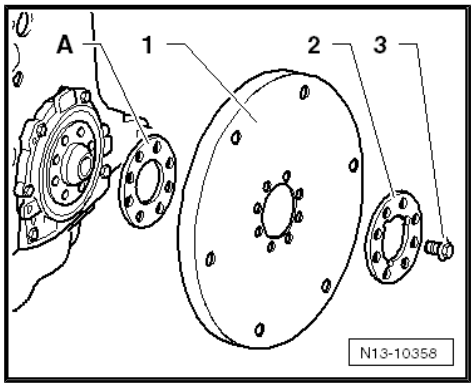

– Check distance between drive plate and cylinder block at three locations (measure through hole in drive plate).

– Calculate mean.

Protected by copyright. Copying for private or commercial purposes, in part or in whole, is not permitted unless authorised by AUDI AG. AUDI AG does not guarantee or accept any liability with respect to the correctness of information in this document. Copyright by AUDI AG

Specification:

- For measurement at machined surface of cylinder block: 19.5 ... 21.1 mm
- For measurement at intermediate plate: 18.8 ... 20.4 mm

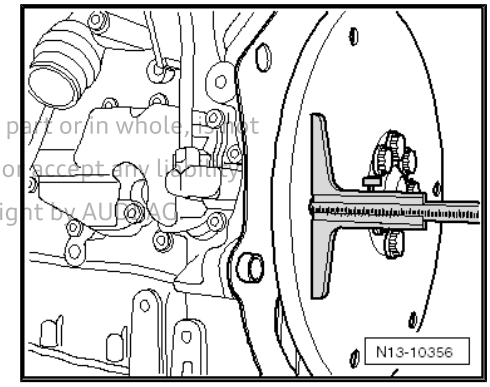

If value is below specification:

– Remove drive plate again, fit shim -A- and tighten bolts -3- to 30 Nm.

– Repeat measurement procedure.

If the specification is attained:

– Fit counterhold tool - VW 558- in hole -B- and tighten bolts through specified angle.

Tightening torques

♦ ⇒ “2.2 Exploded view - drive plate”, page 29

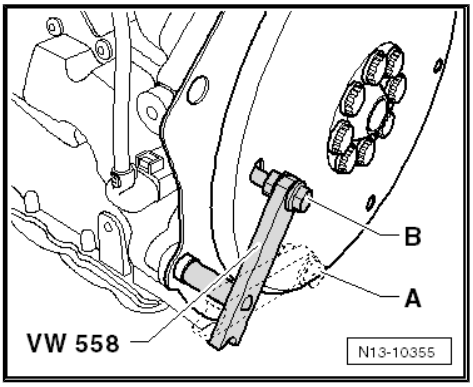

2.5 Removing and installing sealing flange (gearbox end)

Special tools and workshop equipment required

♦ Guide piece - T10122/6- or -T10122/6A- from fitting tool - T10122B- or -T10122C-

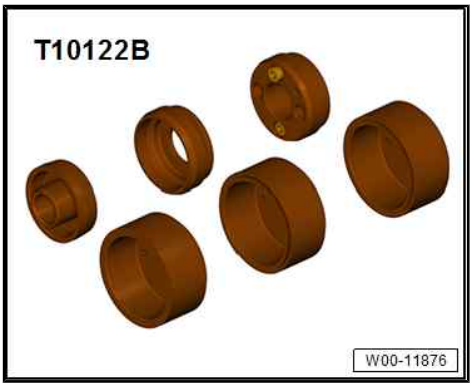

Protected by copyright. Copying for private or commercial purposes, in part or in whole, is not permitted unless authorised by AUDI AG. AUDI AG does not warrant or accept any liability with respect to the correctness of information in this document. Copyright by AUDI AG

♦ Assembly aid - T10122/1- from fitting tool - T10122B- or - T10122C-

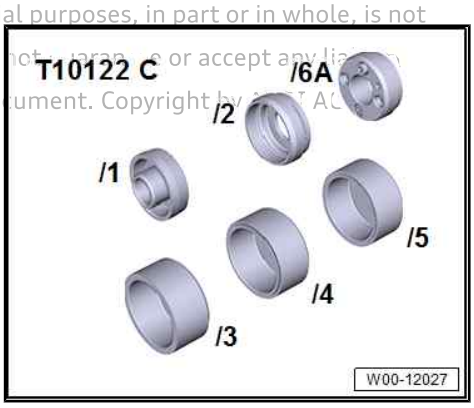

♦ Electric drill with plastic brush attachment

♦ Safety goggles

♦ Sealant ⇒ Electronic parts catalogue (ETKA)

Removing

• Gearbox removed ⇒ Gearbox; Rep. gr. 34 ; Removing and installing gearbox; Removing gearbox .

– Remove flywheel ⇒ page 30 .

– Detach intermediate plate at dowel sleeves and sealing flange -arrows-.

Protected by copyright. Copying for private or commercial purpo
permitted unless authorised by AUDI AG. AUDI AG does not gua
with respect to the correctness of information in this docume

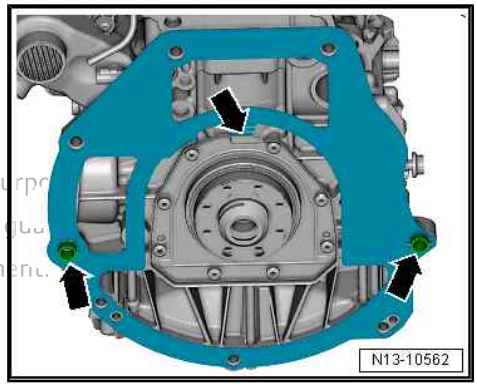

– Remove bolts -1 ... 8-. (Some versions may only have six bolts.)

– Release sealing flange from bonded joint and take off sealing flange.

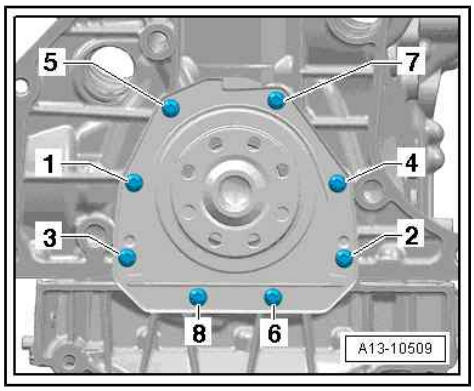

Installing

- Renew sealing flange after removing.

– Cover exposed parts of the engine.

CAUTION
Risk of eye injury due to sealant residue. **– Put on safety goggles.**

– Remove sealant remaining on cylinder block -1- with flat scraper or rotating plastic brush.

– Clean sealing surfaces and crankshaft journals; they must be free of oil and grease.

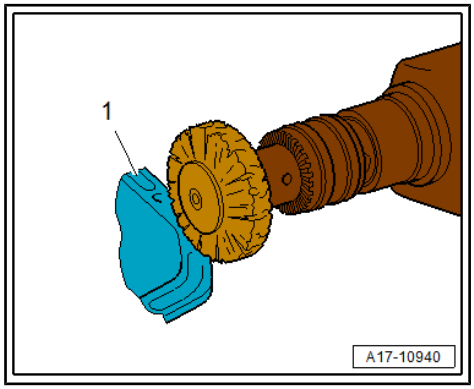

Note:

Note expiry date of sealant.

– Cut off nozzle of tube at front marking (nozzle ∅ approx. 2 mm).

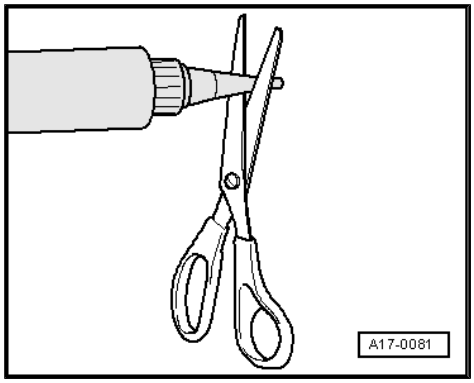

NOTICE

Risk of engine damage due to excessive sealant in lubrication system.

– **The sealant bead must not be thicker than specified.**

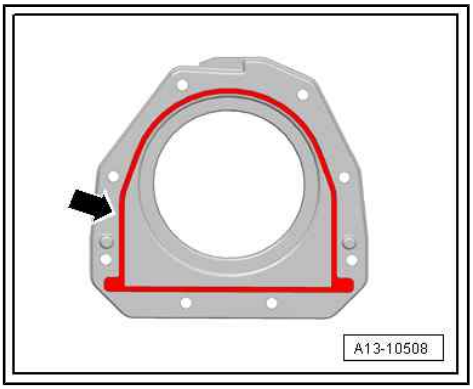

- Thickness of sealant bead: 2 ... 3 mm
- The sealing flange must be installed within 5 minutes after applying sealant.
- Check that sealing lip of sealing flange is not bent or damaged.
- Sealing lip must face engine after installation -arrow-. If the sealing lip faces outwards after installation this will result in oil leakage.

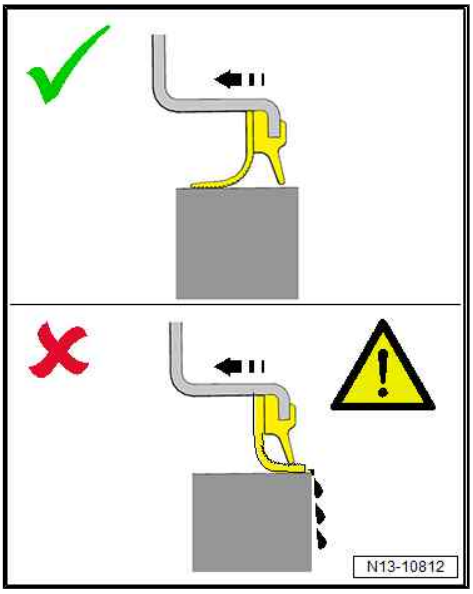

– Check guide piece - T10122/6A- -B-; it must not have sharp edges or be dirty.
– Fit assembly aid - T10122/1- -A- onto guide piece -B-.
– Push sealing flange -C- onto guide piece -B-, starting with outer edge.
– Detach assembly aid -A-.

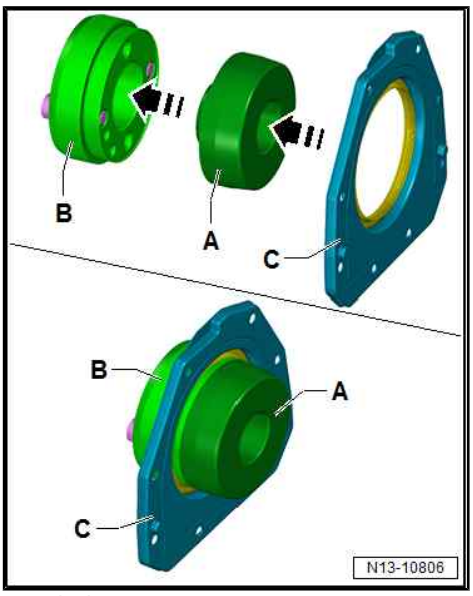

Protected by copyright. Copying for private or commercial purposes, in part or in whole, is not permitted unless authorised by AUDI AG. AUDI AG does not guarantee or accept any liability with respect to the correctness of information in this document. Copyright by AUDI AG.

– Fit guide piece -A- with sealing flange -B- on crankshaft journal.

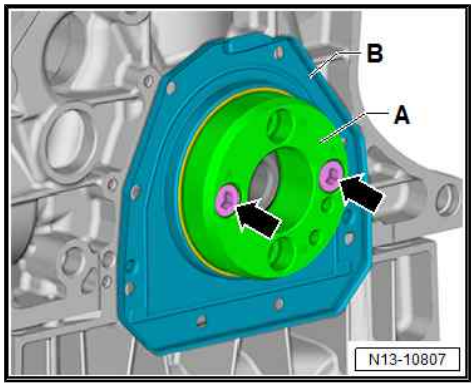

Note:

It is not necessary to tighten bolts -arrows-.

– Push sealing flange -B- over guide piece -A- onto crankshaft journal.

– Detach guide piece -A-.

– Secure sealing flange with bolts.

• After installing sealing flange, wait about 30 minutes for sealant to dry. Then (and only then) fill the engine with engine oil.

Remaining installation steps are carried out in reverse sequence; note the following:

– Install intermediate plate ⇒ page 29 .

– Install flywheel ⇒ page 30 .

– Check oil level ⇒ page 200 .

Tightening torques

♦ ⇒ Fig. ""Sealing flange (gearbox end) - tightening torque and sequence, with 6 bolts"" , page 29

♦ ⇒ Fig. ""Sealing flange (gearbox end) - tightening torques and sequence, with 8 bolts"" , page 29

Protected by copyright. Copying for private or commercial purposes, in part or in whole, is not permitted unless authorised by AUDI AG. AUDI AG does not guarantee or accept any liability with respect to the correctness of information in this document. Copyright by AUDI AG.

3 Crankshaft

⇒ "3.1 Exploded view - crankshaft", page 37
⇒ "3.2 Crankshaft dimensions", page 39
⇒ "3.3 Allocation of main bearing shells", page 39
⇒ "3.4 Renewing needle bearing in crankshaft", page 40
⇒ "3.5 Measuring axial clearance of crankshaft", page 42
⇒ "3.6 Measuring radial clearance of crankshaft", page 43
⇒ "3.7 Removing and installing sender wheel", page 44

Protected by copyright. Copying for private or commercial purposes, in part or in whole, is not permitted unless authorised by AUDI AG. AUDI AG does not guarantee or accept any liability with respect to the correctness of information in this document. Copyright by AUDI AG.

3.1 Exploded view - crankshaft

- Secure engine to engine and gearbox support when performing assembly work ⇒ page 12

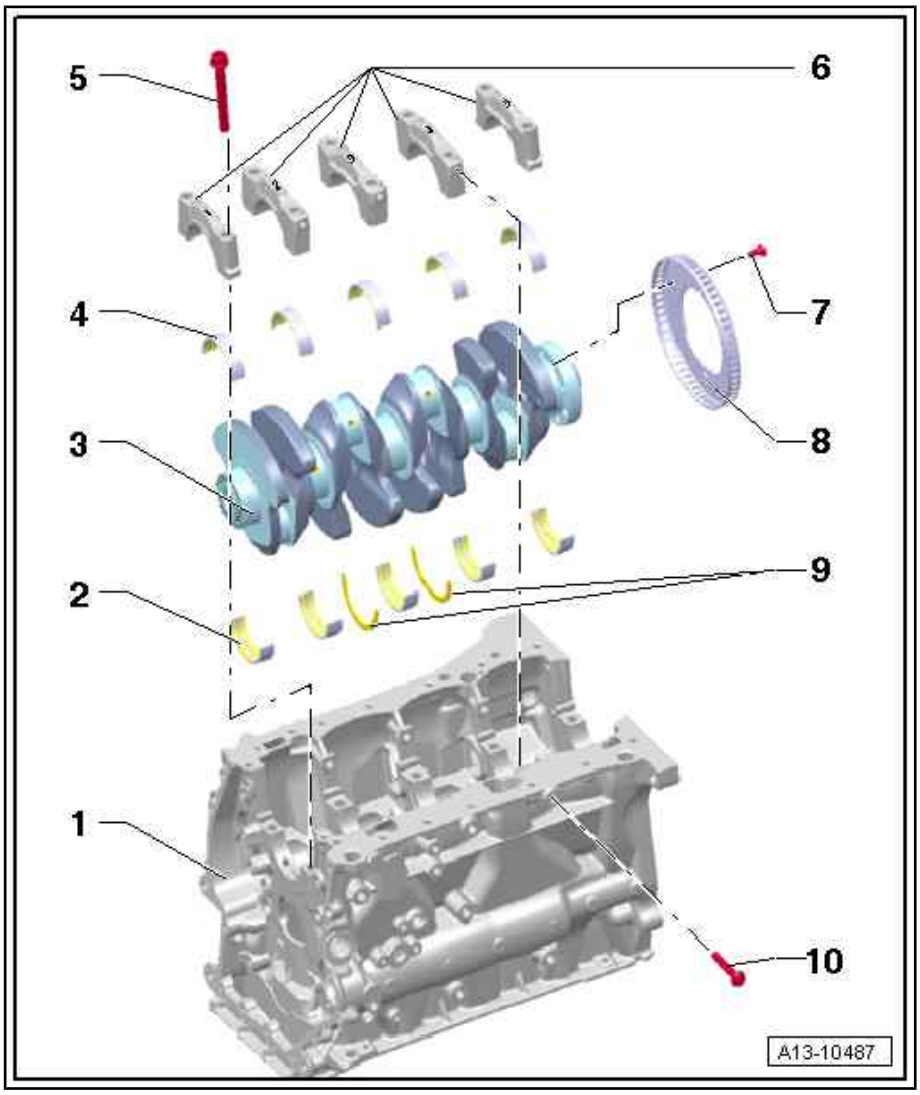

1 - Cylinder block

2 - Bearing shell for cylinder block
- ❑ With oil groove
- ❑ Renew used bearing shells
- ❑ Classification of crankshaft bearing shells ⇒ page 39
- ❑ Lubricate with engine oil

3 - Crankshaft
- ❑ After removing, place it down so that the sender wheel ⇒ Item 8 (page 38) does not become damaged
- ❑ If crankshaft is renewed, new bearing shells must be assigned to bearing caps ⇒ page 39
- ❑ Measuring axial clearance ⇒ page 42
- ❑ Measuring radial clearance ⇒ page 43
- ❑ Crankshaft dimensions ⇒ page 39
- ❑ After removal or renewal, perform adaption ⇒ Vehicle diagnostic tester `01 - Engine electronics, functions`, `01 - Chain elongation adaption diagnosis`

4 - Bearing shell for bearing cap
- ❑ Without oil groove
- ❑ Renew used bearing shells
- ❑ Classification of crankshaft bearing shells ⇒ page 39
- ❑ Lubricate with engine oil

5 - Bolt

- ❑ Renew after removing
- ❑ Use old bolts when measuring radial clearance
- ❑ Tightening torque and sequence ⇒ page 38

6 - Bearing caps

- ❑ Bearing cap 1: Pulley end
- ❑ Bearing caps 2, 3 and 4 are secured additionally with bolts at side
- ❑ Mark installation position for re-installation ⇒ page 39

7 - Bolt

- ❑ Renew after removing
- ❑ Sender wheel ⇒ Item 8 (page 38) must be renewed if bolts are loosened ⇒ page 44
- ❑ 10 Nm +90°

Protected by copyright. Copying for private or commercial purposes, in part or in whole, is not permitted unless authorised by AUDI AG. AUDI AG does not guarantee or accept any liability with respect to the correctness of information in this document. Copyright by AUDI AG.

8 - Sender wheel

- ❑ For engine speed sender - G28-
- ❑ Can only be installed in one position
- ❑ Sender wheel must be renewed if bolts ⇒ Item 7 (page 38) are loosened
- ❑ Removing and installing ⇒ page 44

9 - Thrust washers

- ❑ For bearing No. 3
- ❑ Lubricate with engine oil

10 - Bolt

- ❑ Renew after removing
- ❑ Tightening torques and sequence ⇒ page 38

Crankshaft - tightening torques and sequence

- Renew bolts tightened with specified tightening angle.

– Tighten bolts in stages in the sequence shown:

Stage	Bolts	Tightening torques/angle specification
1.	-1 … 10- and -arrows A-	Screw in by hand until contact is made
2.	-1 … 10-	65 Nm
3.	-1 … 10-	Turn 90° further
4.	-Arrows A-	15 Nm
5.	-Arrows A-	Turn 90° further

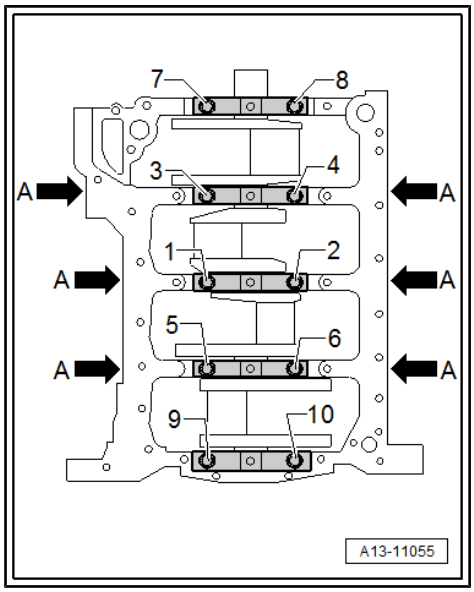

Markings on crankshaft bearing caps

– Mark position of bearing caps -1 ... 5- for re-installation.

• Lugs -arrows- on bearing caps face crankshaft bearing 3 on inlet side.

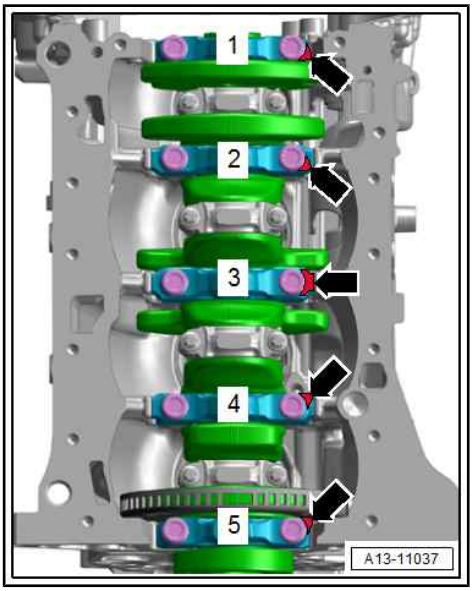

3.2 Crankshaft dimensions

Honing dimension 1)	Crankshaft main bearing journal ∅ mm	Conrod journal ∅ mm
Basic dimension	52.00	47.80

1) There is currently no provision for machining used crankshafts.

3.3 Allocation of main bearing shells

Bearing shells of the correct thickness are allocated to the cylinder block and crankshaft at the factory. Coloured dots are used to identify the thickness of the bearing shells.

Letter codes on lower sealing surface or end of cylinder block indicate which bearing shell is to be fitted in cylinder block (top bearing shell) at each location.

Letter codes on crankshaft indicate which bearing shell is to be fitted in bearing cap (bottom bearing shell).

The first letter stands for bearing cap 1, the second letter for bearing cap 2, etc.

Marking on bearing shell for cylinder block:

Markings on cylinder block are applied either onto sealing surface for sump or gearbox end of cylinder block.

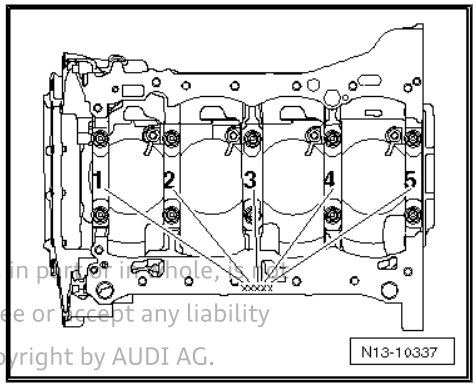

Protected by copyright. Copying for private or commercial purposes, in part or in whole, is not permitted unless authorised by AUDI AG. AUDI AG does not guarantee or accept any liability with respect to the correctness of information in this document. Copyright by AUDI AG.

Marking on cylinder block refers to top bearing shell (bearing shell for cylinder block).

– Note down letter and select colour coding to be fitted from the table.

S	=	Black
R	=	Red
G	=	Yellow
B	=	Blue
V	=	Violet
W	=	White

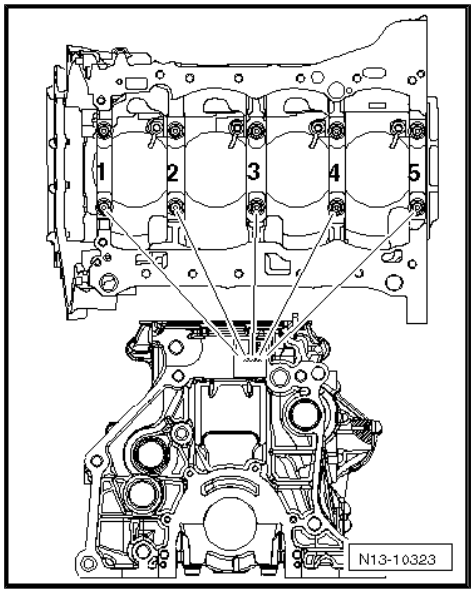

Marking on bearing shell for bearing cap:

Marking on crankshaft refers to bottom bearing shell (bearing shell for bearing cap).

– Note down letter and select colour coding to be fitted from the table.

R	=	Red
G	=	Yellow
B	=	Blue
W	=	White
V	=	Violet
S	=	Black

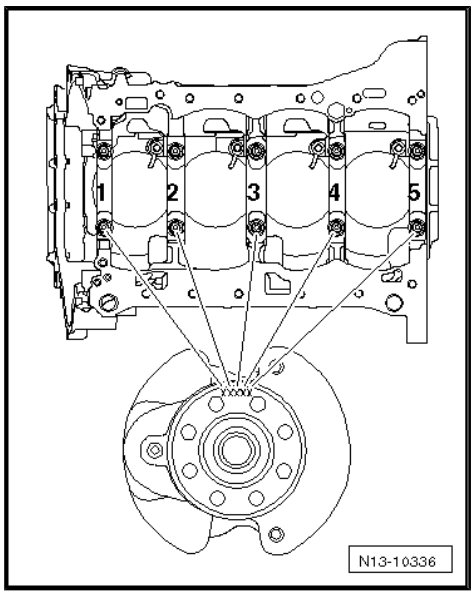

3.4 Renewing needle bearing in crankshaft

Special tools and workshop equipment required

♦ Pin - VW 207 C-

Protected by copyright. Copying for private or commercial purposes, in part or in whole, is not permitted unless authorised by AUDI AG. AUDI AG does not guarantee or accept any liability with respect to the correctness of information in this document. Copyright by AUDI AG.

♦ Counter-support - VAS 251 621-

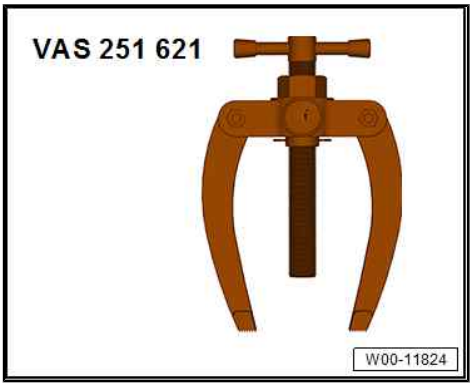

♦ Internal puller - VAS 251 635-

Important:

- The needle bearing must always be renewed if the engine is separated from the gearbox.
- The front edges of the internal puller must not be chipped.

Protected by copyright. Copying for private or commercial purposes, in part or in whole, is not permitted unless authorised by AUDI AG. AUDI AG does not guarantee or assume any liability with respect to the correctness of information in this document. Copyright

Extracting needle bearing

– Remove needle bearing -1- from crankshaft -2- using internal puller - VAS 251 635- -A- and counter-support - VAS 251 621- -B-.

– Internal puller must be positioned behind needle roller -arrow-.

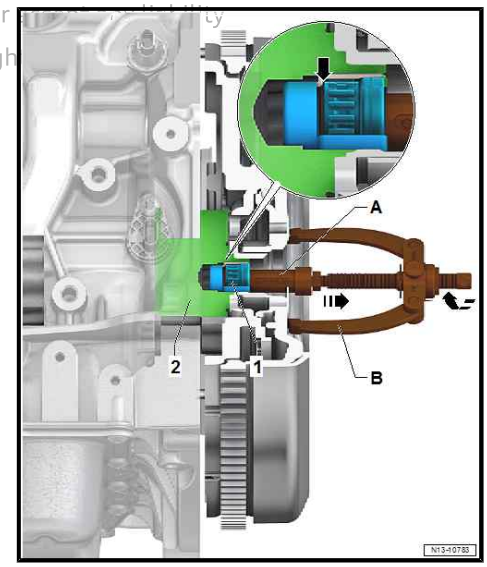

Installing

– Clean bearing seat in crankshaft and grease lightly.

– Drive needle bearing into crankshaft with drift - VW 207C- until it reaches installation depth.

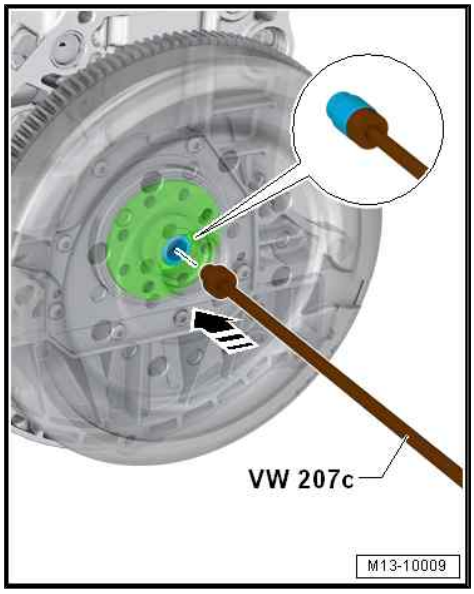

Installation depth: dimension -a- = 2.0 mm

- Renew needle bearing if you drive it in too far (needle bearing is damaged when it is pulled out again).

3.5 Measuring axial clearance of crankshaft

Special tools and workshop equipment required

♦ Universal dial gauge bracket - VW 387-

Protected by copyright. Copying for private or commercial purposes, in part or in whole, is not permitted unless authorised by AUDI AG. AUDI AG does not guarantee or assume any liability with respect to the correctness of information in this document. Copyright by AUDI AG.

♦ Dial gauge - VAS 6079-

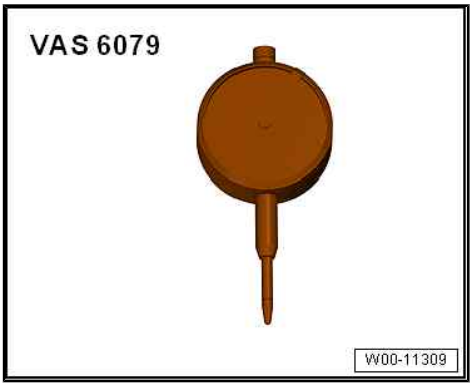

Procedure

– Bolt dial gauge - VAS 6079- with universal dial gauge bracket - VW 387- onto cylinder block and set it against crank web.

– Press crankshaft against dial gauge by hand and set gauge to “0”.

– Push crankshaft away from dial gauge and read off value.

Axial clearance:

- New: 0.070 ... 0.231 mm.
- Wear limit: 0.30 mm.

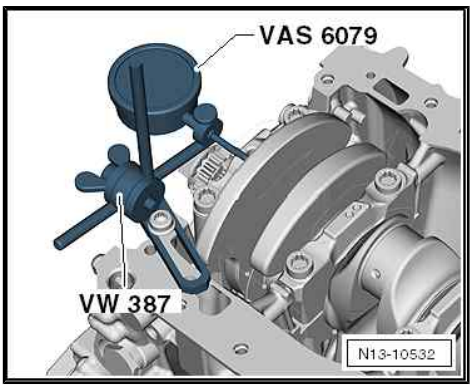

3.6 Measuring radial clearance of crankshaft

Special tools and workshop equipment required

♦ Plastigauge

Procedure

- Use old bolts when measuring radial clearance.
- Renew used bearing shells.

– Remove crankshaft bearing caps and clean bearing caps and journals.

– Place a length of Plastigauge corresponding to the width of the bearing on the bearing journal or bearing shell.

- The Plastigauge must be positioned in the centre of the bearing shell

Protected by copyright. Copying for private or commercial purposes, in part or in whole, is not permitted unless authorised by AUDI AG. AUDI AG does not guarantee or accept any liability with respect to the correctness of information in this document. Copyright by AUDI AG.

– Fit crankshaft bearing caps and secure with old bolts -1 ... 10- ⇒ page 38 without rotating crankshaft.

– Remove crankshaft bearing caps again.

– Compare width of Plastigauge with measurement scale.

Radial clearance:

- New: 0.017 ... 0.037 mm.
- Wear limit: 0.15 mm.

– When carrying out final assembly, renew bolts.

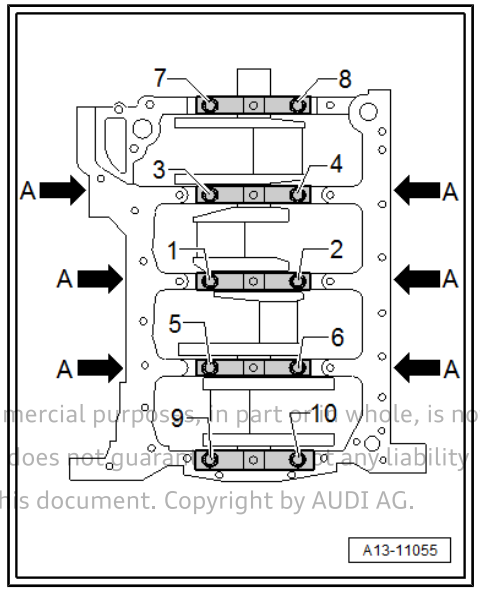

Protected by copyright. Copying for private or commercial purposes, in part or whole, is not permitted unless authorised by AUDI AG. AUDI AG does not guarantee or assume any liability with respect to the correctness of information in this document. Copyright by AUDI AG.

3.7 Removing and installing sender wheel

Removing

- Engine removed and secured to engine and gearbox support ⇒ page 12

– Remove sealing flange (gearbox end) ⇒ page 33 .

– Remove sump (top section) ⇒ page 204 .

– Remove balance shaft timing chain ⇒ page 90 .

– Unbolt conrod bearing caps.

– Remove crankshaft bearing caps.

– Remove crankshaft and unbolt sender wheel.

Installing

Installation is carried out in reverse order; note the following:

– Sender wheel -2- must always be renewed after slackening off bolts -1-.

- If the countersunk bolts are tightened a second time, the seats for the bolt heads in the sender wheel will be deformed to such an extent that the bolt heads make contact with the crankshaft -3- -arrows- and the sender wheel beneath the bolts will be loose.
- Sender wheel can only be installed in one position. Holes are off-set.

– After renewing sender wheel, perform adaption ⇒ Vehicle diagnostic tester

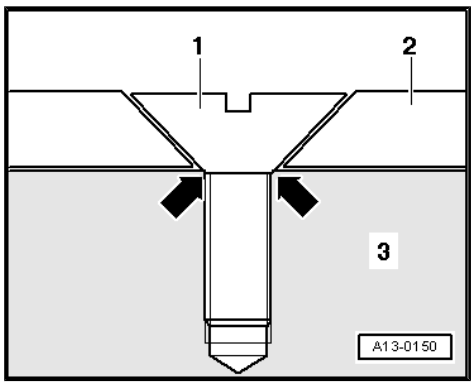

Tightening torques

♦ ⇒ “3.1 Exploded view - crankshaft”, page 37

4 Balance shaft

⇒ "4.1 Exploded view - balance shaft", page 45

⇒ "4.2 Removing and installing balance shaft", page 46

⇒ "4.3 Renewing oil seal for balance shaft (inlet side)", page 50

4.1 Exploded view - balance shaft

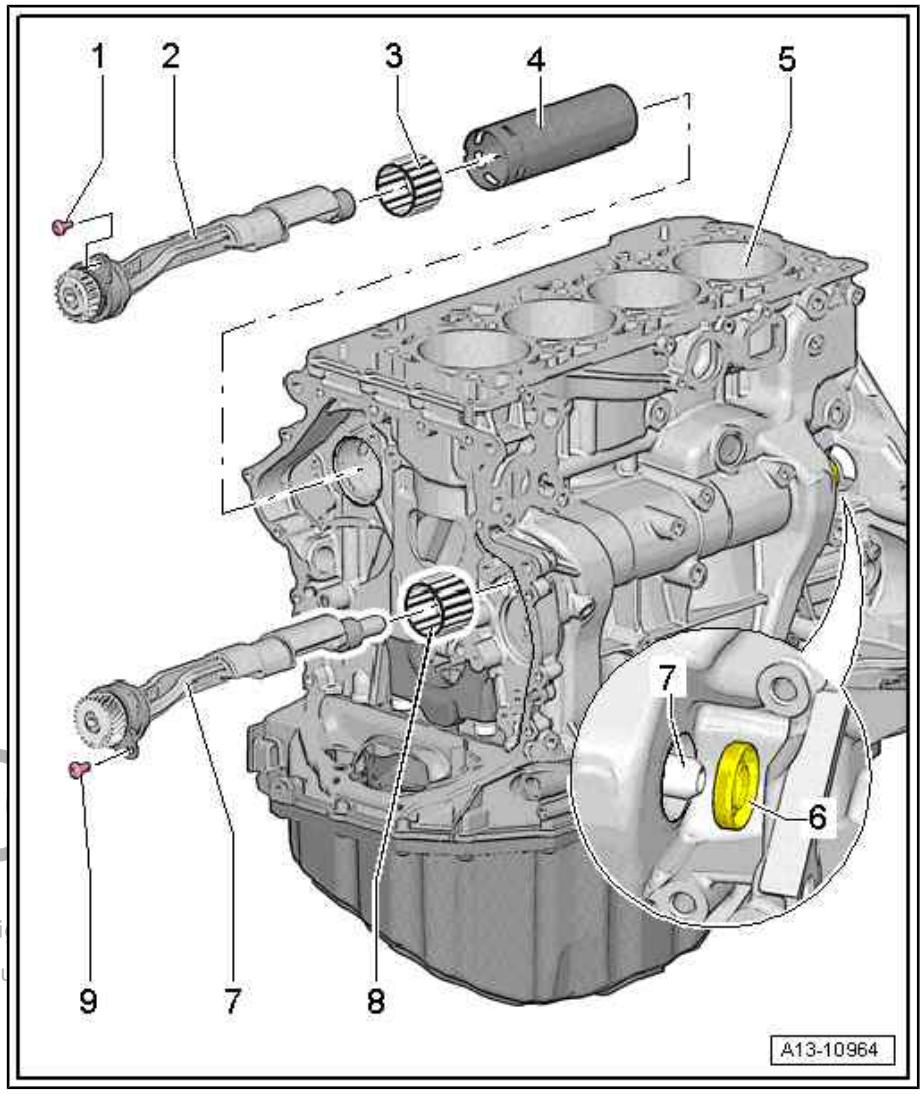

1 - Bolt

- ❑ Renew aluminium bolt after removal
- ❑ Tightening torques:
- ♦ Steel bolt: 9 Nm
- ♦ Aluminium bolt: 4 Nm +45°

2 - Balance shaft

- ❑ Exhaust side
- ❑ Lubricate bearing with engine oil
- ❑ Always renew both sides together ⇒ page 49

3 - Needle bearing

- ❑ Renew after removing
- ❑ Needle bearing is colour-coded; a needle bearing with the same colour must be installed
- ❑ Lubricate bearing with engine oil

4 - Tube for balance shaft

- ❑ Installation position ⇒ page 46

5 - Cylinder block

6 - Oil seal for balance shaft (inlet side)

- ❑ Renewing ⇒ page 50

7 - Balance shaft

- ❑ Inlet side
- ❑ Lubricate bearing with engine oil
- ❑ Always renew both sides together ⇒ page 46

8 - Needle bearing

- ❑ Renew after removing
- ❑ Needle bearing is colour-coded; a needle bearing with the same colour must be installed
- ❑ Lubricate bearing with engine oil

9 - Bolt

- ❑ Renew aluminium bolt after removal
- ❑ Tightening torques:
- ♦ Steel bolt: 9 Nm

Protected by copyri
permitted unless au
with respect to the

♦ Aluminium bolt: 4 Nm +45°

Tube for balance shaft (exhaust side) - installation position

- Openings -right arrow- must face chain side.

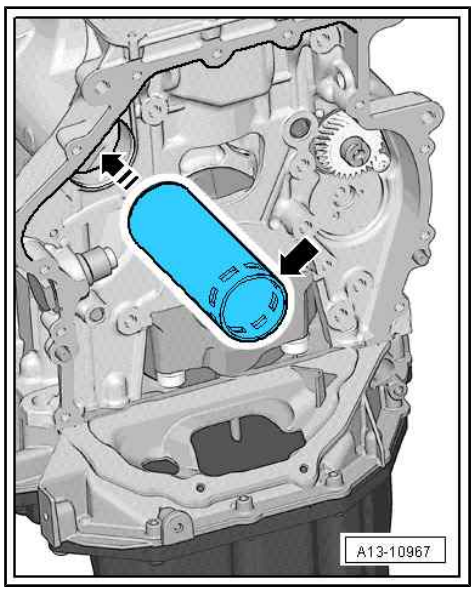

– Insert tube -2- for balance shaft into cylinder block -1-.
- Installation position is correct when dimension -a- = 21 mm.

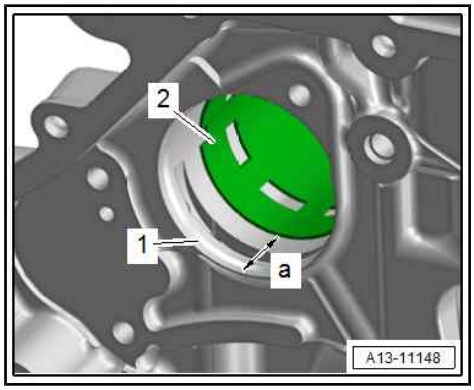

4.2 Removing and installing balance shaft

⇒ "4.2.1 Removing and installing balance shaft (inlet side)", page 46

⇒ "4.2.2 Removing and installing balance shaft (exhaust side)", page 49

4.2.1 Removing and installing balance shaft (inlet side)

- The needle bearing must be renewed when removing and installing the balance shaft.
- The needle bearing is colour-coded; a needle bearing with the same colour must be installed.

Removing

Protected by copyright. Copying for private or commercial purposes, in part or in whole, is not permitted unless authorised by AUDI AG. AUDI AG does not guarantee or accept any liability with respect to the correctness of information in this document. Copyright by AUDI AG.

- Engine removed and secured to engine and gearbox support ⇒ page 12

– Remove toothed belt for coolant pump ⇒ page 231 .
– Remove drive chain for balance shafts ⇒ page 118 .

- Please note that the drive sprocket bolt has a left-hand thread and will be damaged if turned in the wrong direction.

– Remove bolt -2-.

– Detach drive sprocket -1- for toothed belt for coolant pump.

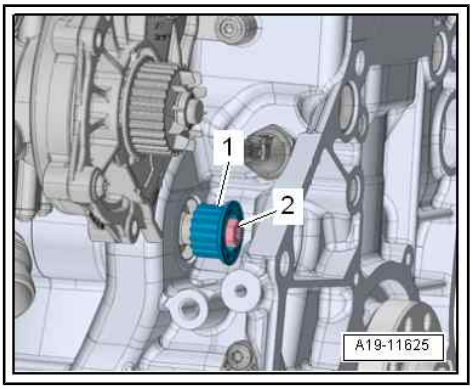

– Unscrew bolt -1- and remove idler gear.

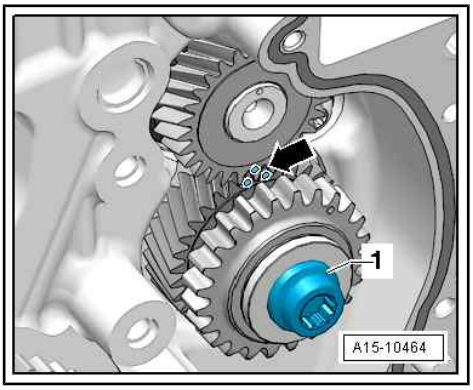

– Detach bearing mounting -1-.

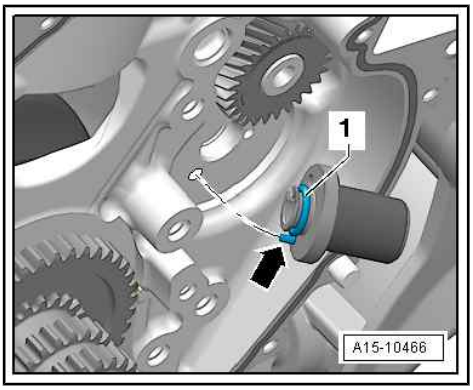

– Remove bolt -2- and pull out balance shaft (inlet side).

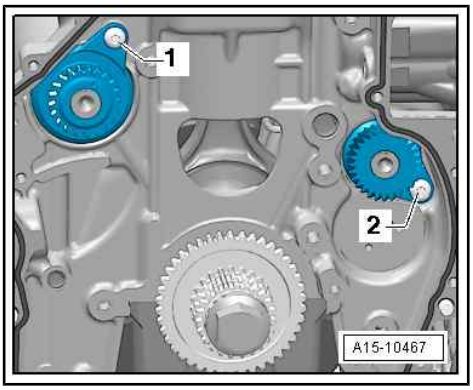

Protected by copyright. Copying for private or commercial purposes, in part or in whole, is not permitted unless authorised by AUDI AG. AUDI AG does not guarantee or accept any liability with respect to the correctness of information in this document. Copyright by AUDI AG.

Installing

- Renew needle bearing after removing balance shaft.
- Needle bearing is colour-coded; a needle bearing with the same colour must be installed.

– Lubricate balance shaft bearings -arrows- with engine oil.

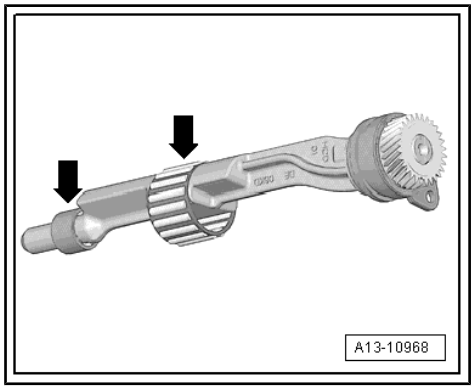

– Insert balance shaft (inlet side) and tighten bolt -2-.

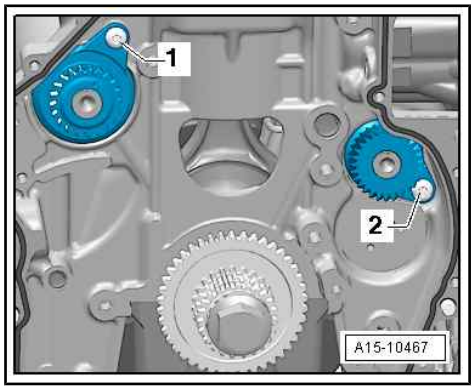

– Lubricate new O-ring -1- with engine oil.

– Lubricate bearing mounting with engine oil and insert it.

- Dowel pin -arrow- for bearing mounting must engage in bore in cylinder block.

NOTICE

Risk of irreparable damage to engine if there is no backlash.

– Renew idler gear.

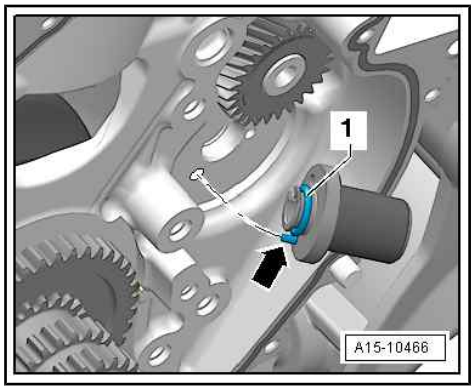

Note:

The new idler gear has a special lubricant coating which wears off after a short running period and thus automatically creates the specified backlash.

– Mark faces of gear teeth of idler gear with paint marker -arrow-.

– Insert idler gear.

- Marking on balance shaft must be positioned between markings on faces of gear teeth.

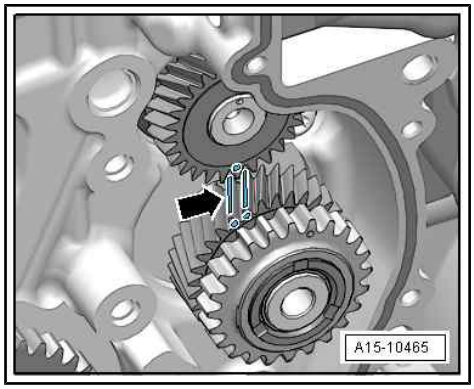

Protected by copyright. Copying for private or commercial purposes, in part or in whole, is not permitted unless authorised by AUDI AG. AUDI AG does not guarantee or accept any liability with respect to the correctness of information in this document. Copyright by AUDI AG.

– With gear in this position, tighten bolt -1- for idler gear: tightening sequence ⇒ page 79 .

– Check markings on idler gear/balance shaft -arrow-.

Remaining installation steps are carried out in reverse sequence; note the following:

– Install drive chain for balance shafts ⇒ page 118 .

– Renew oil seal for balance shaft (inlet side) ⇒ page 50 .

– Install toothed belt for coolant pump ⇒ page 231 .

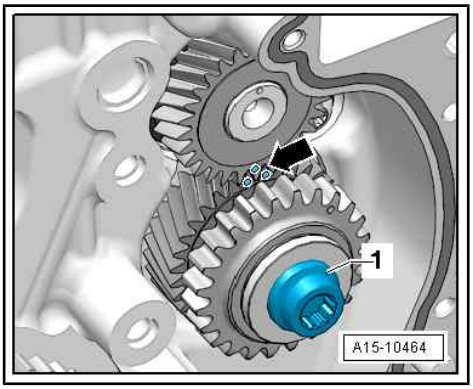

Tightening torques

◆ ⇒ “4.1 Exploded view - balance shaft”, page 45

4.2.2 Removing and installing balance shaft (exhaust side)

- The needle bearing must be renewed when removing and installing the balance shaft.
- The needle bearing is colour-coded; a needle bearing with the same colour must be installed.

Removing

- Engine removed and secured to engine and gearbox support ⇒ page 12

Protected by copyright. Copying for private or commercial purposes, in part or in whole, is not permitted unless authorised by AUDI AG. AUDI AG does not guarantee or accept any liability with respect to the correctness of information in this document. Copyright by AUDI AG.

– Remove drive chain for balance shafts ⇒ page 118 .

– Remove bolt -1- and pull out balance shaft (exhaust side).

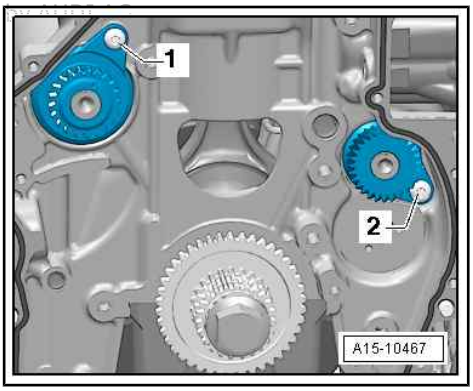

Installing

- Renew needle bearing after removing balance shaft.
- Needle bearing is colour-coded; a needle bearing with the same colour must be installed.

– Check installation position of tube for balance shaft; openings -arrow- must face chain side.

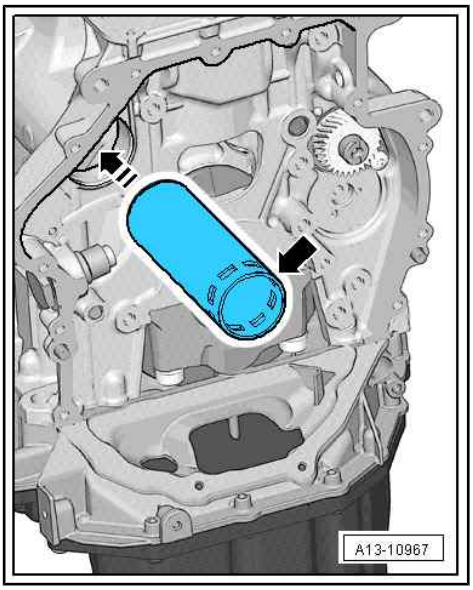

– Lubricate balance shaft bearings -arrows- with engine oil.

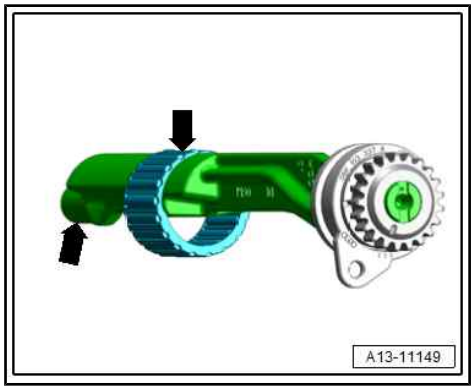

Protected by copyright. Copying for private or commercial purposes, in part or complete, is not permitted unless authorised by AUDI AG. AUDI AG does not guarantee or accept any liability with respect to the correctness of information in this document.

– Install balance shaft (exhaust side).
– Make sure that balance shaft is in full contact with crankcase before tightening bolt -1-.
• Insert tube for balance shaft again if balance shaft does not make full surface contact.

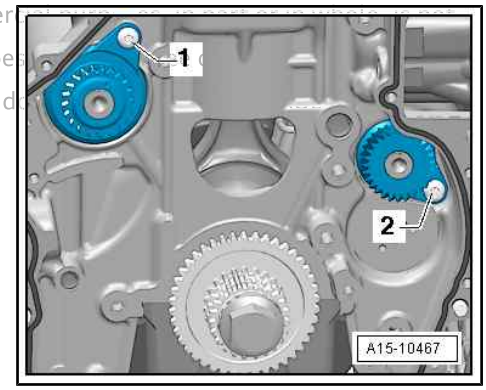

Remaining installation steps are carried out in reverse sequence; note the following:

– Install drive chain for balance shafts ⇒ page 118 .

Tightening torques

♦ ⇒ “4.1 Exploded view - balance shaft”, page 45

4.3 Renewing oil seal for balance shaft (inlet side)

Special tools and workshop equipment required

♦ Thrust piece - T10353/1-

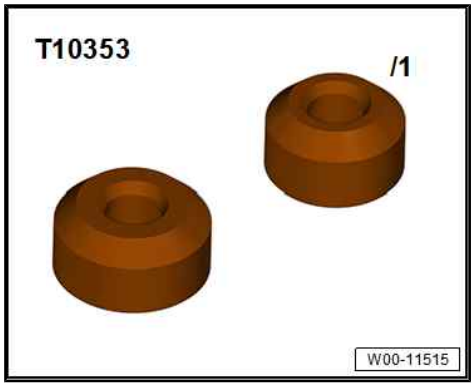

Procedure

– Remove toothed belt for coolant pump ⇒ page 231 .
• Please note that the drive sprocket bolt has a left-hand thread and will be damaged if turned in the wrong direction.
– Unscrew bolt -2- and detach drive sprocket -1- for toothed belt for coolant pump.

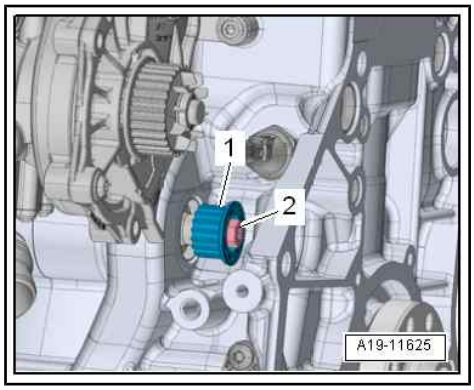

– Press screwdriver -1- firmly onto section -2- of oil seal -arrow B-.
– Lever out oil seal -arrow A-.
– Clean contact surface and sealing surface.

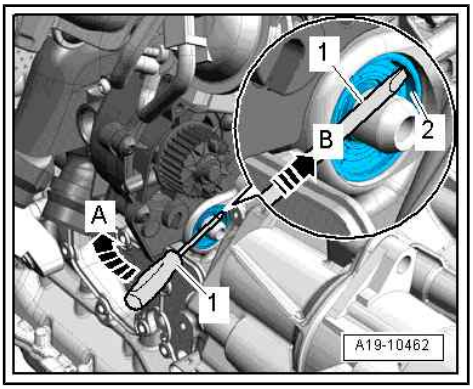

– Lubricate sealing surface of balance shaft -2- with gear oil.
– Fit oil seal -1- onto balance shaft.
• Marking “Inside” -arrow- must face towards engine.

Protected by copyright. Copying for private or commer
permitted unless authorised by AUDI AG. AUDI AG does
with respect to the correctness of information in this d

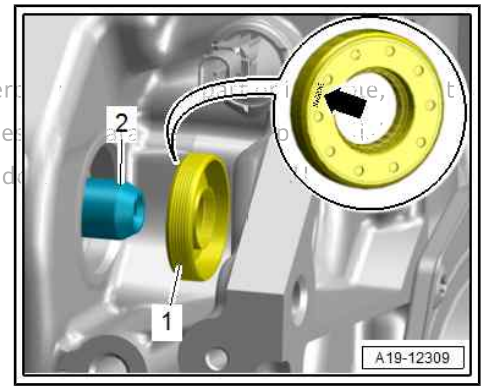

• Please note that the drive sprocket bolt has a left-hand thread and will be damaged if turned in the wrong direction.
– Apply thrust piece - T10353/1- to oil seal -1- and carefully press into cylinder block as far as stop using bolt -2- (take care not to tilt oil seal).
– Install toothed belt for coolant pump ⇒ page 231 .

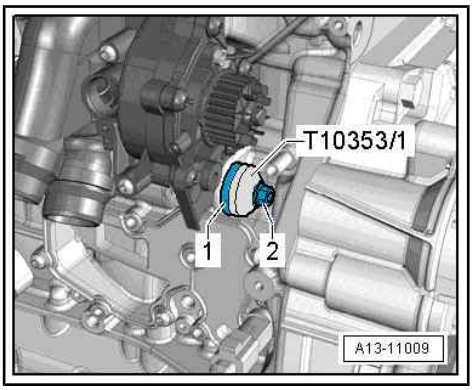

5 Pistons and conrods

⇒ "5.1 Exploded view - pistons and conrods", page 52

⇒ "5.2 Removing and installing pistons", page 55

⇒ "5.3 Removing and installing oil spray jets", page 56

⇒ "5.4 Checking pistons and cylinder bores", page 58

⇒ "5.5 Separating parts of new conrod", page 59

⇒ "5.6 Checking radial clearance of conrod bearings", page 60

5.1 Exploded view - pistons and conrods

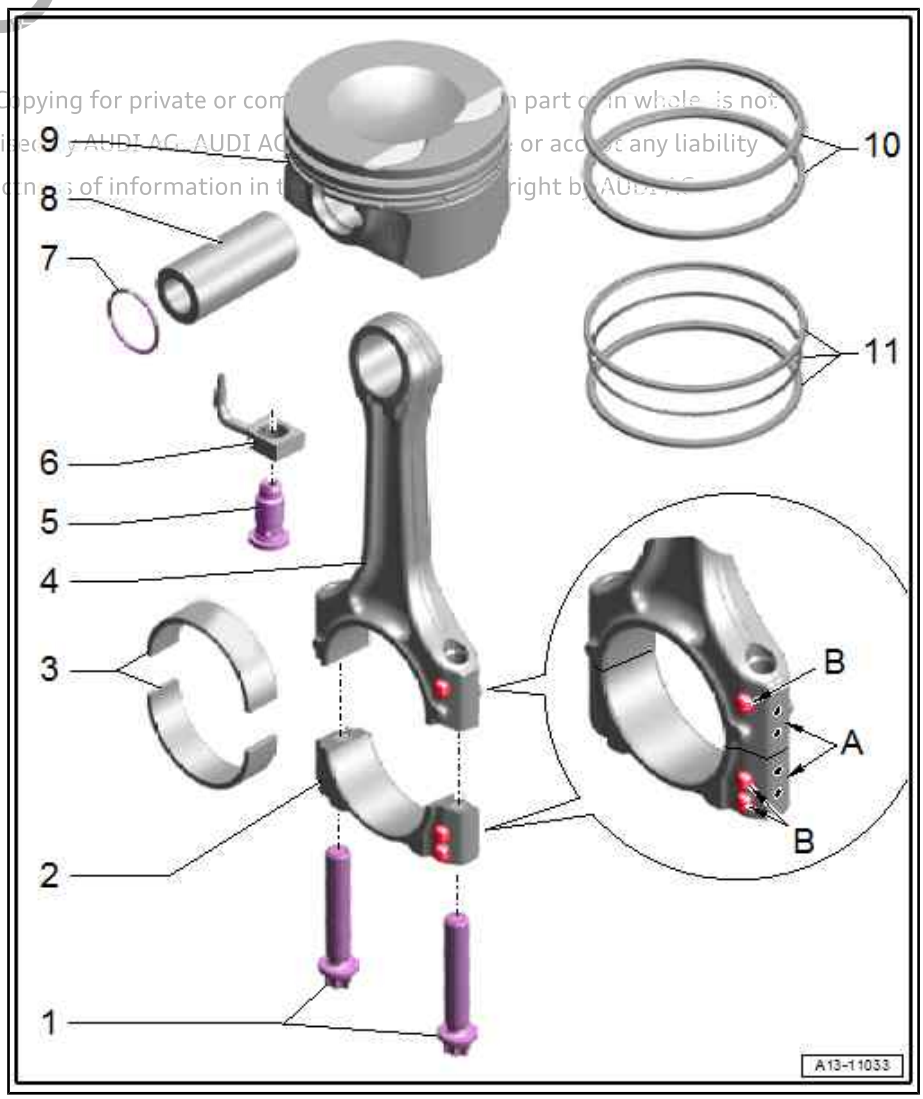

Copyright. Copying for private or com... in part or in whole, is not permitted unless authorised by AUDI AG. AUDI AG ... or accept any liability with respect to the correctness of information in t... right by AUDI AG.

1 - Bolts

- ❑ Renew after removing
- ❑ Lubricate thread and contact surface with engine oil
- ❑ Use old bolts when measuring radial clearance
- ❑ 45 Nm +90°

2 - Conrod bearing cap

- ❑ Note installation position
- ❑ Due to the cracking method used to separate the bearing cap from the conrod in manufacture, the caps only fit in one position and only on the appropriate conrod
- ❑ Mark cylinder and conrod allocation in colour -A-
- ❑ Installation position: Marking -B- faces towards pulley end
- ❑ Separating parts of new conrod ⇒ page 59

3 - Bearing shells

- ❑ Installation position ⇒ page 53
- ❑ Renew used bearing shells
- ❑ Lubricate with engine oil before installing
- ❑ Axial clearance

♦ New: 0.10 ... 0.35 mm

♦ Wear limit: 0.40 mm

- ❑ Measuring radial clearance ⇒ page 60

4 - Conrod

- ❑ Only renew as a complete set
- ❑ Mark cylinder and conrod bearing cap allocation

- ❑ Installation position: Marking -B- faces towards pulley end
- ❑ Separating parts of new conrod ⇒ page 59
- ❑ Measuring radial clearance ⇒ page 60

5 - Pressure relief valve

- ❑ 27 Nm

6 - Oil spray jet

- ❑ For piston cooling
- ❑ Installation position ⇒ page 55
- ❑ Removing and installing ⇒ page 56

7 - Circlip

- ❑ Renew after removing

8 - Piston pin

- ❑ Lubricate with engine oil before installing

9 - Piston

- ❑ Only renew as a complete set
- ❑ Mark allocation to cylinder
- ❑ Install with funnel - T40347-
- ❑ Removing and installing ⇒ page 55
- ❑ Installation position: arrow on piston crown points to pulley end
- ❑ Checking pistons and cylinder bores ⇒ page 58

Protected by copyright. Copying for private or commercial purposes, in part or in whole, is not permitted unless authorised by AUDI AG. AUDI AG does not guarantee or accept any liability with respect to the correctness of information in this document. Copyright by AUDI AG.

10 - Compression rings

- ❑ Install using piston ring pliers - VAS 211 003- ⇒ page 54
- ❑ Allocation and installation position ⇒ page 54
- ❑ Checking ring gap ⇒ page 59
- ❑ Check ring-to-groove clearance in combination with two-part oil scraper ring ⇒ page 59
- ❑ Ring-to-groove clearance cannot be measured in combination with three-part oil scraper ring.
- ❑ Offset gaps by 120°

11 - Oil scraper ring

- ❑ Depending on version, has two or three parts
- ❑ Remove and install 3-part oil scraper ring carefully by hand
- ❑ When installing, offset top gap of 3-part oil scraper ring by 120° to next compression ring
- ❑ Gap cannot be measured
- ❑ Ring-to-groove clearance cannot be checked
- ❑ Installation position ⇒ page 54
- ❑ Allocation ⇒ page 54

Installation position of bearing shell

– Position bearing shells in centre of conrod and conrod bearing cap when fitting.

• Dimension -a- = dimension -a-

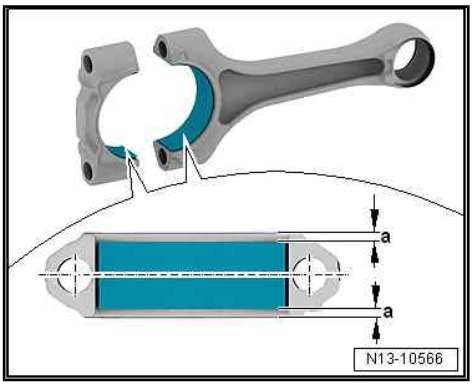

Allocation of piston rings in conjunction with three-part oil scraper ring

1 - Compression ring with chamfer -arrow A- on inside at top. »TOP« marking or lettering faces upwards

2 - Compression ring with shoulder -arrow B- on outside at bottom. »TOP« marking or lettering faces upwards

3 - Three-part oil scraper ring

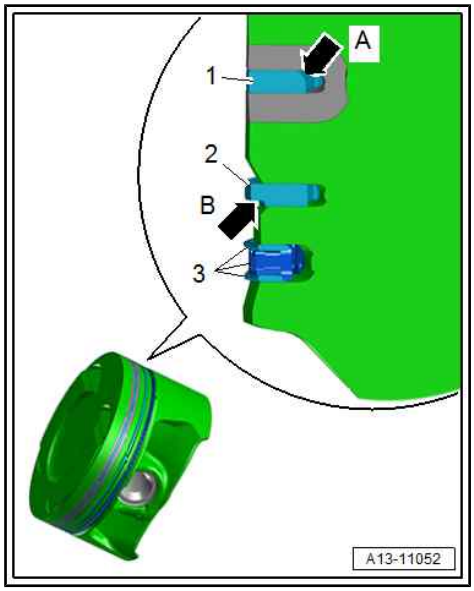

Installing compression rings

- »TOP« marking or lettering faces upwards.
- Open up compression ring -2- using piston ring pliers - VAS 211 003- just far enough to be able to slide it over piston -1-.

Installing three-part oil scraper ring

– Note installation position of spring:

- Ends of fins -2, 3- and spring -1- must be offset from one another by at least 90°.

– Install by hand.

Installation sequence:

– 1. Insert spring -1- in groove.

– 2. Insert bottom fin -3- in groove.

– 3. Insert top fin -2- in groove.

- Offset top gap of 3-part oil scraper ring by 120° to next compression ring.

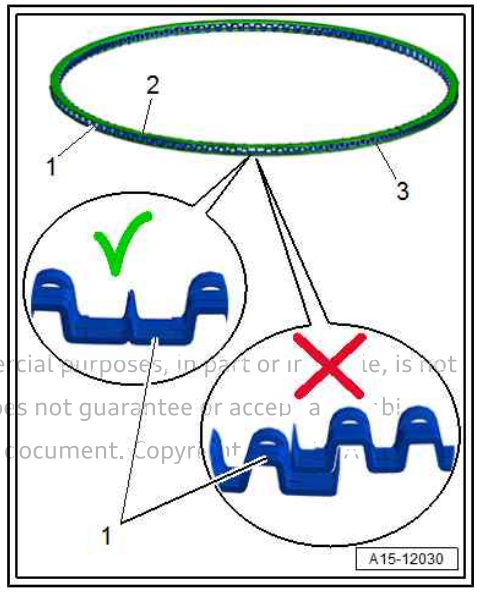

Protected by copyright. Copying for private or commercial purposes, in part or in whole, is not permitted unless authorised by AUDI AG. AUDI AG does not guarantee or accept any liability with respect to the correctness of information in this document. Copyright by AUDI AG.

Oil spray jets - installation position

- Side surface of oil spray jet -1- must be parallel with adjacent crankshaft bearing -2-.
- Dimension -a- = dimension -a-

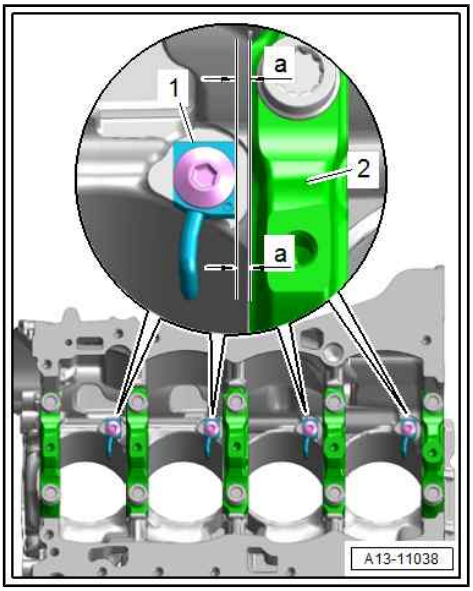

5.2 Removing and installing pistons

Special tools and workshop equipment required

♦ Pin - VW 222A-

♦ Funnel - T40347-

Protected by copyright. Copying for private or commercial purposes, in part or in whole, is not permitted unless authorised by AUDI AG. AUDI AG does not guarantee or accept any liability with respect to the correctness of information in this document. Copyright by AUDI AG.

Removing

- Engine removed and secured to engine and gearbox support ⇒ page 12

– Remove cylinder head ⇒ page 129 .

– Remove sump (top section) ⇒ page 204 .

– Mark installation position and matching of:

♦ Pistons to cylinders

♦ Conrods to cylinders ⇒ Item 4 (page 52)

– Remove conrod bearing cap and pull out piston and conrod upwards.
– Take circlip -2- out of piston pin boss.
– Use drift - VW 222A- to drive out piston pin -3-.

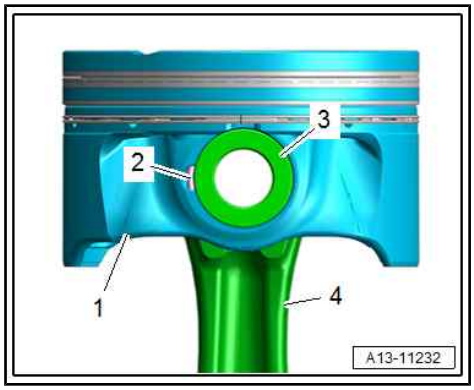

Note:

If piston pin is difficult to remove, heat piston to approx. 60 °C.

– Detach piston -1- from conrod -4-.

Installing

Installation is carried out in reverse order; note the following:

- After removing, renew bolts tightened with specified tightening angle.
- Arrow on piston crown points to pulley end.
- When installing, offset top gap of 3-part oil scraper ring by 120° to next compression ring.

– Install compression rings ⇒ page 54 .
– Install oil scraper ring ⇒ page 54 .

– Lubricate running surfaces of bearing shells and cylinder walls with engine oil.
– Carefully push piston -1- into cylinder by hand -arrow- using funnel - T40347- .

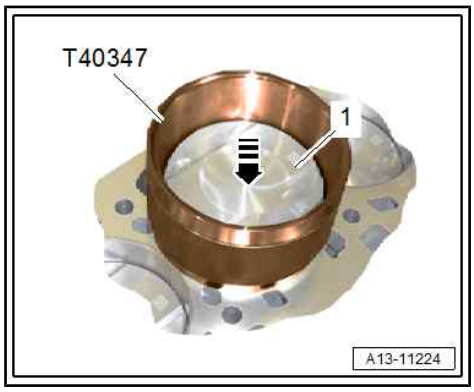

- Arrow on piston crown points to pulley end.

– Install conrod bearing cap; note installation position ⇒ Item 2 (page 52) .
– Install cylinder head ⇒ page 129 .
– Install sump (upper section) ⇒ page 204 .

Tightening torques

♦ ⇒ “5.1 Exploded view - pistons and conrods”, page 52

5.3 Removing and installing oil spray jets

Special tools and workshop equipment required

♦ Socket - T10545-

Protected by copyright. Copying for private or commercial purposes, in part or in whole, is not permitted unless authorised by AUDI AG. AUDI AG does not guarantee or accept any liability with respect to the correctness of information in this document. Copyright by AUDI AG.

♦ Ratchet wrench (21 mm) - T40263-

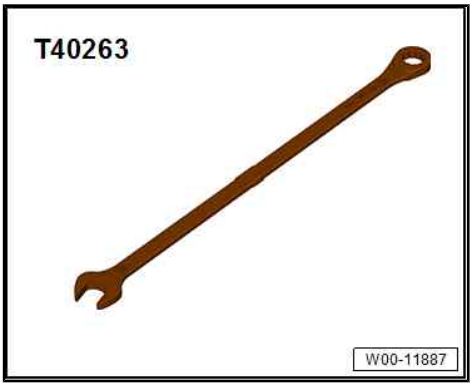

♦ Adapter - T40314-

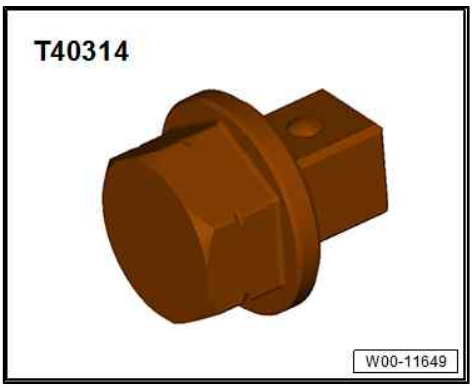

Removing cylinders “1” to “3”:

- Gearbox removed ⇒ Gearbox; Rep. gr. 34 ; Removing and installing gearbox; Removing gearbox .

– Remove sump (top section) ⇒ page 204 .

NOTICE

Risk of engine damage if valve gear drive slips

– **Only turn engine in normal direction of rotation.**

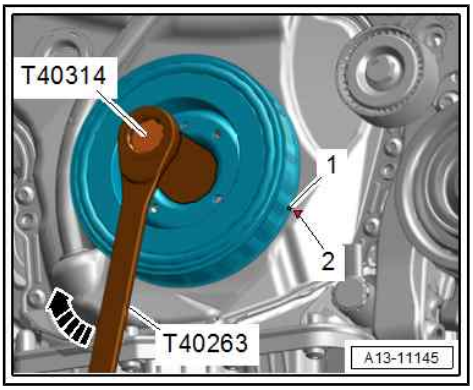

– Using ratchet wrench (21 mm) - T40263- , adapter - T40314- and socket (24 mm), turn crankshaft -arrow- until corresponding bolt is accessible.

Removing cylinder 4:

- Engine removed and secured to engine and gearbox support ⇒ page 12

– Remove sump (top section) ⇒ page 204 .

– Remove balance shaft timing chain ⇒ page 90 .

– Unbolt conrod bearing caps.

– Remove crankshaft bearing caps.

– Remove crankshaft.

Protected by copyright. Copying for private or commercial purposes, in part or in whole, is not permitted unless authorised by AUDI AG. AUDI AG does not guarantee or accept any liability with respect to the correctness of information in this document. Copyright by AUDI AG.

Continued for all cylinders:

– Unscrew pressure relief valve -1- using socket - T10545- .

– Remove oil spray jet -2-.

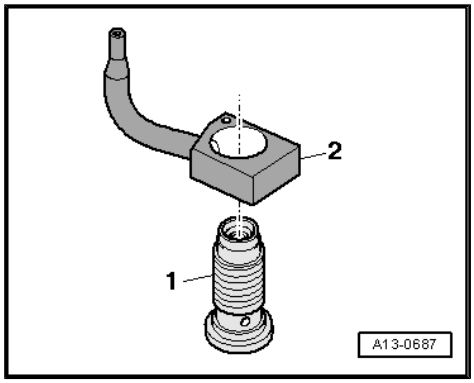

Installing

Installation is carried out in reverse order; note the following:

- Installation position ⇒ page 55

NOTICE

Risk of damage to oil spray jets due to deformation.

– Never bend oil spray jets.

– Install balance shaft timing chain ⇒ page 90 .

– Install sump (upper section) ⇒ page 204 .

Tightening torques

♦ ⇒ “5.1 Exploded view - pistons and conrods”, page 52

♦ ⇒ “3.1 Exploded view - crankshaft”, page 37

5.4 Checking pistons and cylinder bores

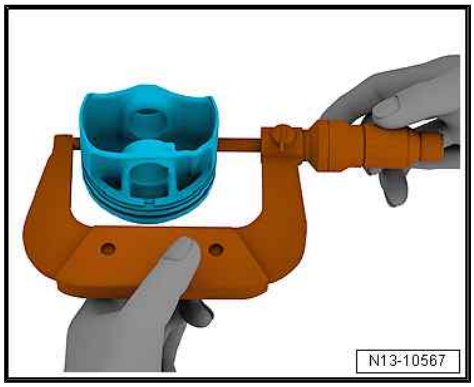

Checking piston

– Using a micrometer (75 ... 100 mm), measure approx. 15 mm from the lower edge, perpendicular to the piston pin axis.

♦ Maximum deviation from nominal dimension: 0.04 mm.

Piston ∅ mm	
Nominal dimension	82.42[1)]
• [1)] Dimensions not including coating (thickness 0.02 mm). The coating will wear down in service.	

Checking cylinder bore

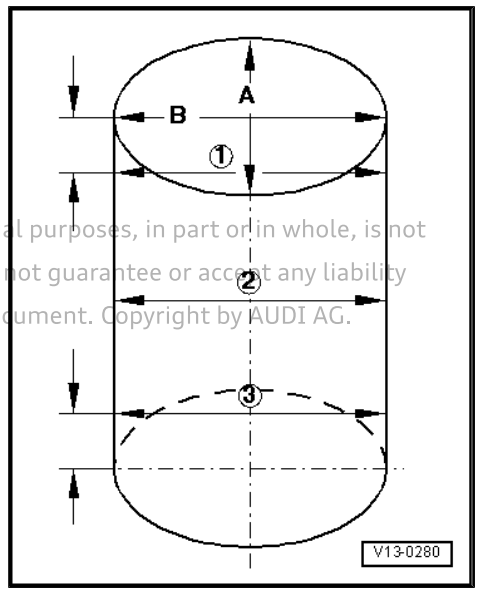

Protected by copyright. Copying for private or commercial purposes, in part or in whole, is not permitted unless authorised by AUDI AG. AUDI AG does not guarantee or accept any liability with respect to the correctness of information in this document. Copyright by AUDI AG.

Special tools and workshop equipment required

♦ Cylinder gauge - VAS 6078-

- Do not measure the cylinder bores when the cylinder block is mounted to the engine and gearbox support, as this may result in incorrect measurements.

NOTICE

Risk of damage to surface of cylinder bore through incorrect machining.

– **Never machine the cylinder bore (reboring, honing, grinding) with workshop equipment.**

– Use cylinder gauge - VAS 6078- to take measurements at 3 points in transverse direction -A- and in longitudinal direction -B-.

♦ Maximum deviation from nominal dimension: 0.08 mm.

Cylinder bore ∅ mm	
Nominal dimension	82.51[1)]
• [1)] Measure at 50 mm into cylinder bore.	

Checking piston ring gap

– Insert piston ring at right angle to cylinder wall from above and push down into lower cylinder opening approx. 15 mm from bottom of cylinder. Use a piston without rings to push ring into bore.

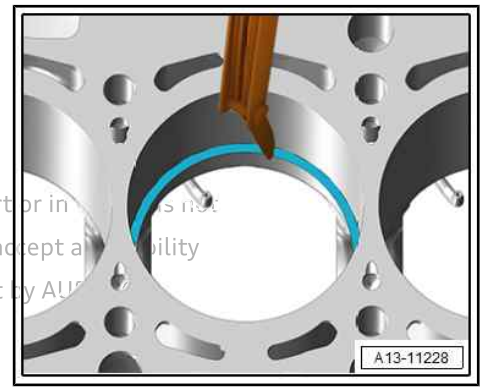

Piston ring	new mm	Wear limit mm
1st compression ring	0.30 … 0.40	0.80
2nd compression ring	0.40 … 0.50	0.80
Two-part oil scraper rings	0.20 … 0.40	0.80
Three-part oil scraper rings	Cannot be measured	

Protected by copyright. Copying for private or commercial purposes, in part or in [illegible] is not permitted unless authorised by AUDI AG. AUDI AG does not guarantee or accept a[illegible]bility with respect to the correctness of information in this document. Copyright by AU[illegible]

Checking ring-to-groove clearance

– Clean groove in piston before checking clearance.

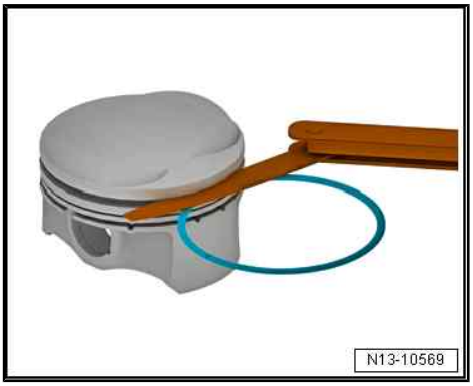

Piston ring in combination with two-part oil scraper ring	new mm	Wear limit mm
1st compression ring	0.06 … 0.09	0.20
2nd compression ring	0.03 … 0.06	0.15
Oil scraper rings	Cannot be measured	

5.5 Separating parts of new conrod

It is possible that the two parts of a new conrod are not completely separated as intended. If it is not possible to take off the conrod bearing cap by hand, proceed as follows:

– Mark cylinder number of conrod ⇒ Item 4 (page 52) .

– Clamp conrod -1- lightly in a vice using aluminium jaw covers as shown in illustration.

• To avoid any risk of damage, the conrod should only be clamped lightly.

• The conrod is clamped in a position below the dotted line.

– Loosen the two bolts -2- approx. 5 turns.

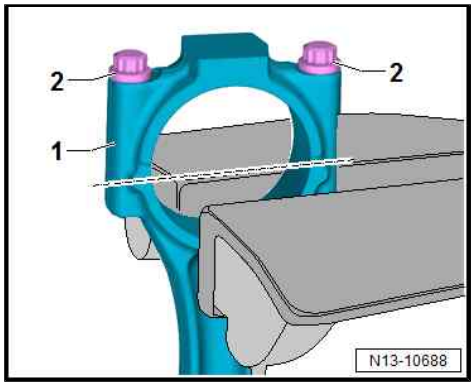

– Using a plastic hammer, carefully knock conrod bearing cap -1- loose in direction of -arrow-.

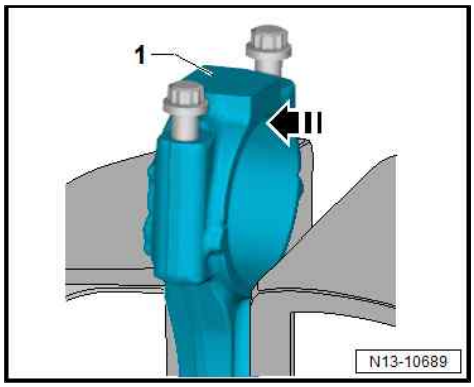

5.6 Checking radial clearance of conrod bearings

Special tools and workshop equipment required

♦ Plastigauge

Procedure

– Remove conrod bearing cap.

– Clean bearing cap and bearing journal.

– Place a length of Plastigauge corresponding to the width of the bearing on the bearing journal or in the bearing shell.

– Fit conrod bearing cap and secure with old bolts ⇒ Item 1 (page 52) without rotating crankshaft.

– Remove conrod bearing cap again.

– Compare width of Plastigauge with measurement scale.

Radial clearance:

• New: 0.02 ... 0.06 mm.

• Wear limit: 0.09 mm.

– When carrying out final assembly, renew bolts.

Protected by copyright. Copying for private or commercial purposes, in part or in whole, is not permitted unless authorised by AUDI AG. AUDI AG does not guarantee or accept any liability with respect to the correctness of information in this document. Copyright by AUDI AG.

15 – Cylinder head, valve gear

1 Timing chain cover

⇒ "1.1 Exploded view - timing chain cover", page 61

⇒ "1.2 Removing and installing timing chain cover", page 65

⇒ "1.3 Renewing oil seal for vibration damper", page 70

1.1 Exploded view - timing chain cover

⇒ "1.1.1 Exploded view - timing chain cover, engine with two camshaft adjusters", page 61

⇒ "1.1.2 Exploded view - timing chain cover, engine with one camshaft adjuster", page 63

1.1.1 Exploded view - timing chain cover, engine with two camshaft adjusters

Engine with two camshaft adjusters
⇒ "1.2.1 Camshaft adjuster", page 1

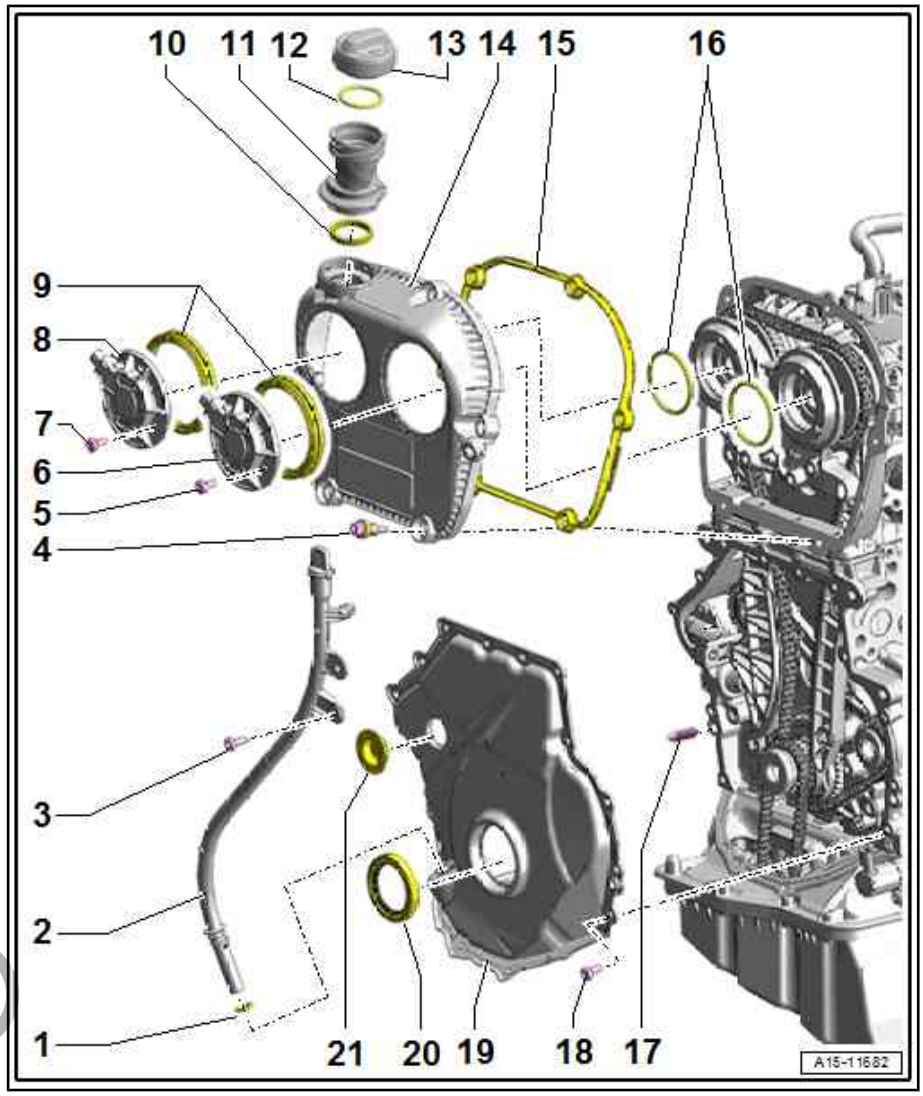

1 - O-ring
- ❑ Renew after removing
- ❑ Lubricate with engine oil

2 - Dipstick guide tube

3 - Bolt
- ❑ 9 Nm

4 - Bolt
- ❑ Tightening sequence ⇒ page 62

5 - Bolt
- ❑ Renew aluminium bolt after removal
- ❑ Tightening torques:
- ♦ Steel bolt: 9 Nm
- ♦ Aluminium bolt: 4 Nm +45°

6 - Camshaft control valve 1 - N205-
- ❑ Removing and installing ⇒ page 184
- ❑ Renew O-ring ⇒ Item 16 (page 62)

7 - Bolt
- ❑ Renew aluminium bolt after removal
- ❑ Tightening torques:
- ♦ Steel bolt: 9 Nm
- ♦ Aluminium bolt: 4 Nm +45°

8 - Exhaust camshaft control valve 1 - N318-
- ❑ Removing and installing ⇒ page 184
- ❑ Renew O-ring ⇒ Item 16 (page 62)

Protected by copyright. Copying for private or commercial purposes, in part or in whole, is not permitted unless authorised by AUDI AG. AUDI AG does not guarantee or accept any liability with respect to the correctness of information in this document. Copyright by AUDI AG.

9 - Seals

- ❑ Renew after removing
- ❑ Lubricate before installing

10 - Seal

- ❑ Renew if damaged

11 - Filler neck

- ❑ Depending on version

12 - Seal

- ❑ Depending on version
- ❑ Renew if damaged

13 - Sealing cap

14 - Timing chain cover (top)

- ❑ Removing and installing ⇒ page 65

15 - Gasket

- ❑ Renew if damaged

16 - O-rings

- ❑ Renew after removing
- ❑ Lubricate lightly with engine oil

17 - Dowel pin

- ❑ 2x
- ❑ For timing chain cover (bottom)

18 - Bolt

- ❑ Renew after removing
- ❑ Tightening torque and sequence

♦ Version with 15 bolts ⇒ page 63

♦ Version with 8 bolts ⇒ page 63

19 - Timing chain cover (bottom)

- ❑ Renewing ⇒ page 67

20 - Oil seal

- ❑ For vibration damper
- ❑ Renewing ⇒ page 70

21 - Sealing plug

- ❑ Renew after removing

Protected by copyright. Copying for private or commercial purposes, in part or in whole, is not permitted unless authorised by AUDI AG. AUDI AG does not guarantee or accept any liability with respect to the correctness of information in this document. Copyright by AUDI AG.

Timing chain cover (top) - tightening torques and tightening sequence

– Tighten bolts -1 ... 6- to 9 Nm in the sequence shown.

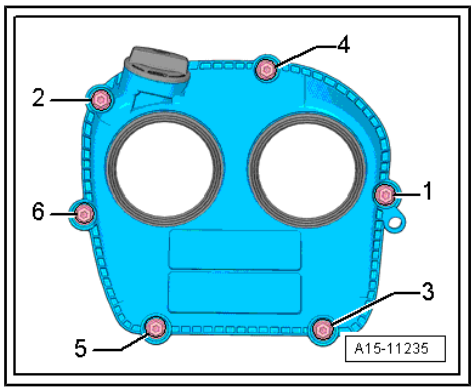

Timing chain cover (bottom) with 15 bolts - tightening torques and tightening sequence

- After removing, renew bolts tightened with specified tightening angle.

– Tighten bolts in stages in the sequence shown:

Stage	Bolts	Tightening torques/angle specification
1.	-1 … 15-	Screw in by hand until contact is made
2.	-1 … 15-	8 Nm
3.	-1, 2, 4, 5- and -7 … 15-	Turn 45° further
4.	-3, 6-	Turn 45° further after installing vibration damper

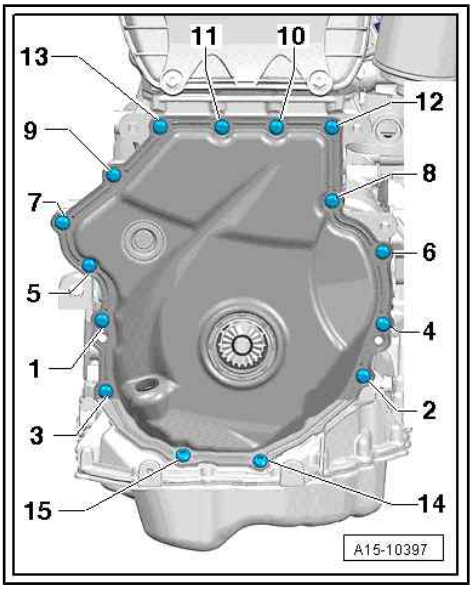

Timing chain cover (bottom) with 8 bolts - tightening torques and tightening sequence

- After removing, renew bolts tightened with specified tightening angle.

– Tighten bolts in stages in the sequence shown:

Stage	Bolts	Tightening torques/angle specification
1.	-1 … 8-	Screw in by hand until contact is made
2.	-1 … 8-	8 Nm
3.	-2, 3- and -5 … 8-	Turn 45° further
4.	-1, 4-	Turn 45° further after installing vibration damper

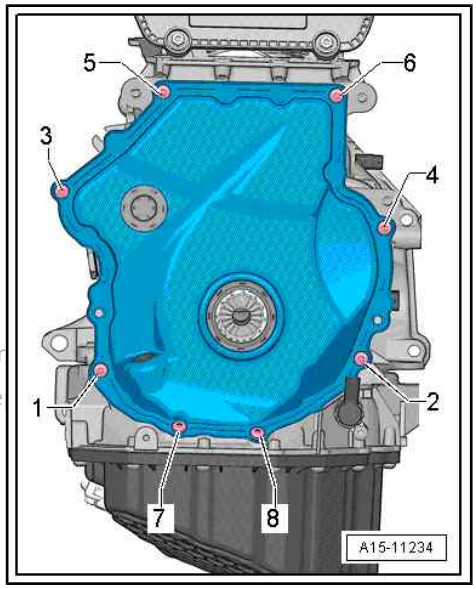

Protected by copyright. Copying for private or commercial purposes, in part or
permitted unless authorised by AUDI AG. AUDI AG does not guarantee or acce
with respect to the correctness of information in this document. Copyright by

1.1.2 Exploded view - timing chain cover, engine with one camshaft adjuster

Engine with one camshaft adjuster

⇒ "1.2.1 Camshaft adjuster", page 1

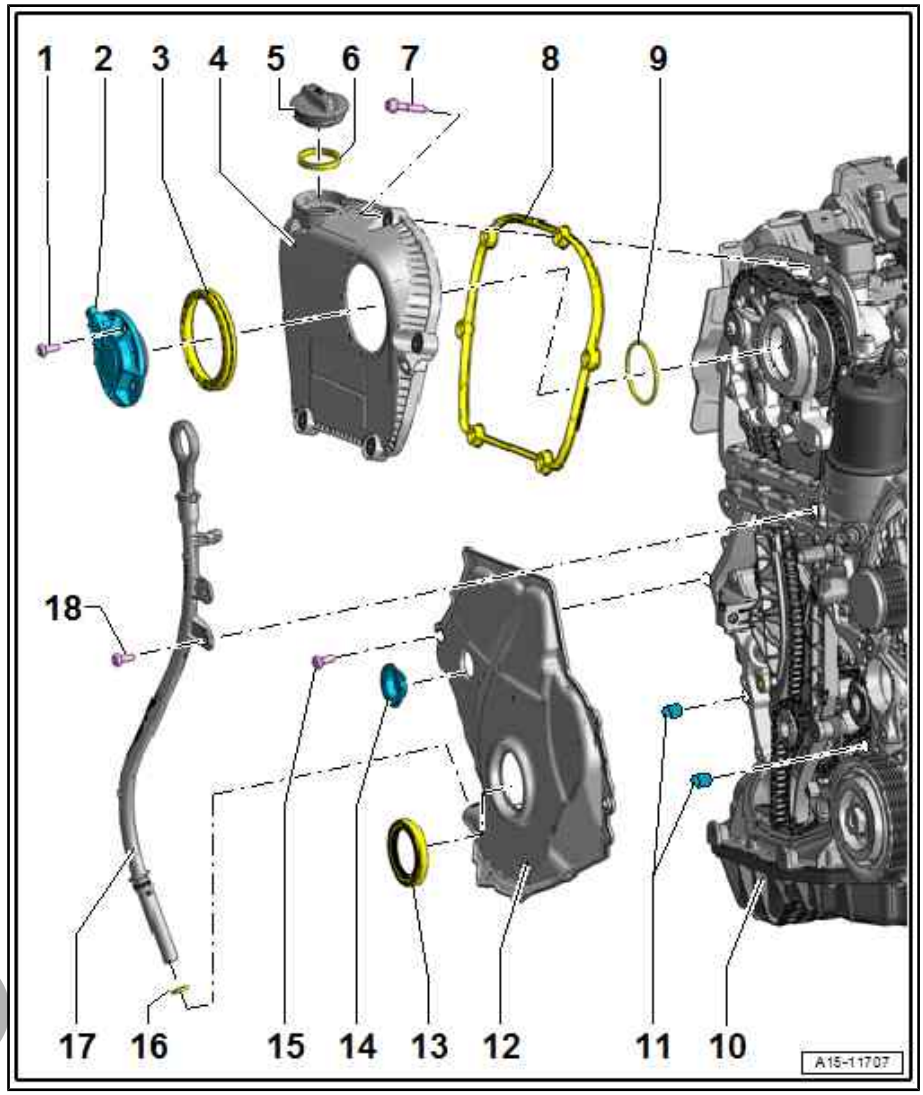

1 - Bolt

- ❑ Renew aluminium bolt after removal
- ❑ Tightening torques:

- ♦ Steel bolt: 9 Nm
- ♦ Aluminium bolt: 4 Nm +45°

2 - Camshaft control valve 1 - N205-

- ❑ Removing and installing ⇒ page 184
- ❑ Renew O-ring ⇒ Item 9 (page 64)

3 - Oil seal

- ❑ Renew after removing
- ❑ Lubricate before installing

4 - Timing chain cover (top)

- ❑ Removing and installing ⇒ page 66

5 - Sealing cap

6 - Oil seal

- ❑ Renew after removing

7 - Bolt

- ❑ Tightening sequence ⇒ page 65

8 - Gasket

- ❑ Renew if damaged

9 - O-ring

- ❑ Renew after removing
- ❑ Lubricate before installing

Protected by copyright. Copying for private or commercial purposes, in part or in whole, is not permitted unless authorised by AUDI AG. AUDI AG does not guarantee or accept any liability whatsoever with respect to the correctness of information in this document. Copyright by AUDI AG.

10 - Engine

11 - Dowel pins

- ❑ For centring cover

12 - Timing chain cover (bottom)

- ❑ Renewing ⇒ page 67

13 - Oil seal

- ❑ For vibration damper
- ❑ Renewing ⇒ page 70

14 - Sealing plug

- ❑ Renew after removing

15 - Bolt

- ❑ Renew after removing
- ❑ Tightening torque and sequence

- ♦ Version with 15 bolts ⇒ page 63
- ♦ Version with 8 bolts ⇒ page 63

16 - O-ring

- ❑ Renew after removing

❑ Lubricate before installing

17 - Dipstick guide tube

18 - Bolt

❑ 9 Nm

Timing chain cover (top) - tightening sequence

– Tighten bolts -1 ... 6- to 9 Nm in the sequence shown.

Protected by copyright. Copying for private or commercial purposes, in part or
permitted unless authorised by AUDI AG. AUDI AG does not guarantee or acce
with respect to the correctness of information in this document. Copyright by

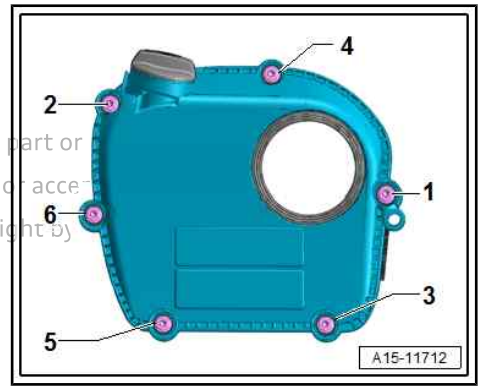

1.2 Removing and installing timing chain cover

⇒ "1.2.1 Removing and installing timing chain cover (top) - engine with two camshaft adjusters", page 65

⇒ "1.2.2 Removing and installing timing chain cover (top) - engine with one camshaft adjuster", page 66

⇒ "1.2.3 Renewing timing chain cover (bottom)", page 67

1.2.1 Removing and installing timing chain cover (top) - engine with two camshaft adjusters

Engine with two camshaft adjusters
⇒ "1.2.1 Camshaft adjuster", page 1

Removing

Preparatory work may be necessary depending on model ⇒ 4-cylinder direct injection engine (1.8, 2.0 ltr. 4-valve TFSI); Rep. gr. 15 ; Timing chain cover; Removing and installing timing chain cover .

– Remove camshaft control valves ⇒ page 184 .

– Move retaining clip -2- for electrical wiring harness clear.

– Remove bolt -1-.

– If necessary, unclip guide tube for oil dipstick from timing chain cover (top) -arrow-.

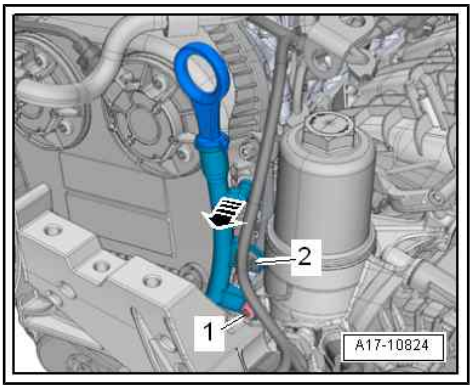

– Unscrew bolts -1 ... 6- and remove timing chain cover (top).

– Remove bolts -3, 5- if necessary.

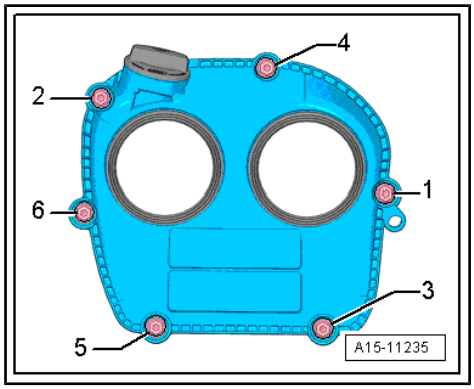

Installing

Installation is carried out in reverse order; note the following:

- Renew seals and O-rings after removing.

– Lubricate seals and O-rings with engine oil.

- Installation position of seals: side with small inner diameter faces outwards

– Install camshaft control valves ⇒ page 184 .

Additional work depending on model ⇒ 4-cylinder direct injection engine (1.8, 2.0 ltr. 4-valve TFSI); Rep. gr. 15 ; Timing chain cover; Removing and installing timing chain cover

Tightening torques

◆ ⇒ Fig. ""Timing chain cover (top) - tightening torques and tightening sequence"" , page 62

◆ ⇒ "1.1 Exploded view - timing chain cover", page 61

Protected by copyright. Copying for private or commercial purposes, in part or in whole, is not permitted unless authorised by AUDI AG. AUDI AG does not guarantee or accept any liability with respect to the correctness of information in this document. Copyright by AUDI AG.

1.2.2 Removing and installing timing chain cover (top) - engine with one camshaft adjuster

Engine with one camshaft adjuster
⇒ "1.2.1 Camshaft adjuster", page 1

Removing

Preparatory work may be necessary depending on model ⇒ 4-cylinder direct injection engine (1.8, 2.0 ltr. 4-valve TFSI); Rep. gr. 15 ; Timing chain cover; Removing and installing timing chain cover .

– Remove camshaft control valve 1 - N205- ⇒ page 184 .

– Move retaining clip -2- for electrical wiring harness clear.

– Remove bolt -1-.

– If necessary, unclip guide tube for oil dipstick from timing chain cover (top) -arrow-.

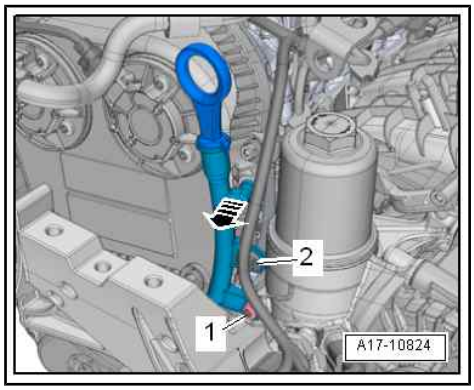

– Unscrew bolts -1 ... 6- and remove timing chain cover (top).

– Remove bolts -3, 5- if necessary.

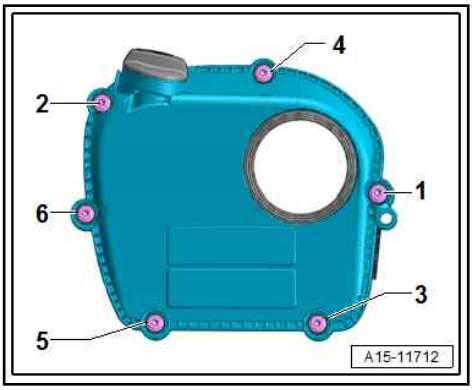

Installing

Installation is carried out in reverse order; note the following:

- Renew seal and O-ring after removing.

– Lubricate seal and O-ring with engine oil.

- Installation position of seal: side with small inner diameter faces outwards

– Install camshaft control valve 1 - N205- ⇒ page 184 .

Additional work depending on model ⇒ 4-cylinder direct injection engine (1.8, 2.0 ltr. 4-valve TFSI); Rep. gr. 15 ; Timing chain cover; Removing and installing timing chain cover

Tightening torques

♦ ⇒ “1.1.2 Exploded view - timing chain cover, engine with one camshaft adjuster”, page 63

1.2.3 Renewing timing chain cover (bottom)

Note

The timing chain cover is bent out of shape when it is removed because of the adhesive strength of the sealant; it must therefore always be renewed.

Special tools and workshop equipment required

♦ Sealant ⇒ Electronic parts catalogue

Removing

- Engine oil drained ⇒ page 200 .

Preparatory work may be necessary depending on model ⇒ 4-cylinder direct injection engine (1.8, 2.0 ltr. 4-valve TFSI); Rep. gr. 15 ; Timing chain cover; Removing and installing timing chain cover .

– Remove engine support ⇒ 4-cylinder direct injection engine (1.8, 2.0 ltr. 4-valve TFSI); Rep. gr. 13 ; Cylinder block (pulley end); Removing and installing engine support .

– Remove vibration damper ⇒ page 19 .

Protected by copyright. Copying for private or commercial purposes, in part or in whole, is not permitted unless authorised by AUDI AG. AUDI AG does not guarantee or accept any liability with respect to the correctness of information in this document. Copyright

– Remove tensioner for poly V-belt ⇒ page 19 .

– Move retaining clip -2- for electrical wiring harness clear.

– Remove bolt -1-.

– If necessary, unclip guide tube for oil dipstick from timing chain cover (top) -arrow-.

– Pull guide tube out of timing chain cover (bottom).

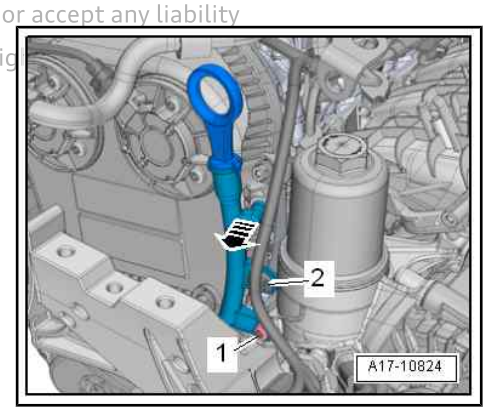

– Unplug electrical connector -1- for valve for oil pressure control - N428- .

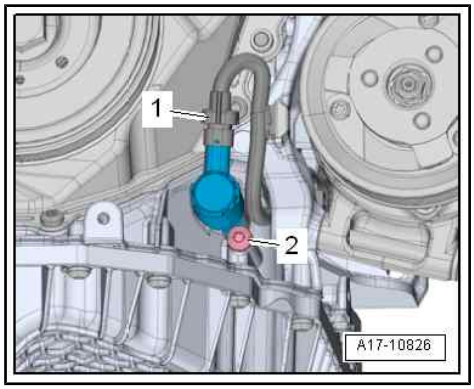

– If fitted, remove bolt -2- and detach bracket -1- for air pipe.

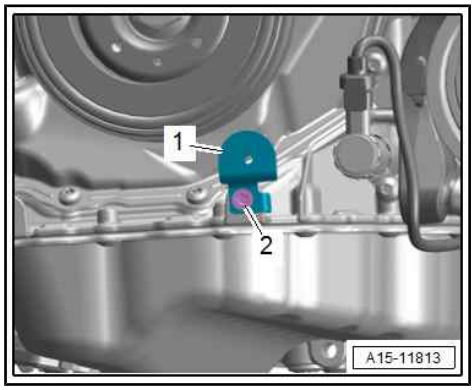

– Remove bolts -1 ... 15-.

Note:

Some versions have only 8 bolts.

– Lever timing chain cover (bottom) off bonded joint.

Installing

- After removing, renew bolts tightened with specified tightening angle.
- Renew timing chain cover (bottom) and seal after removal.

– Place clean cloths over open sections of engine to prevent lubrication system from being contaminated by sealant residue.

– Remove sealant remaining on cylinder block with flat scraper.

– Clean sealing surfaces; they must be free of oil and grease.

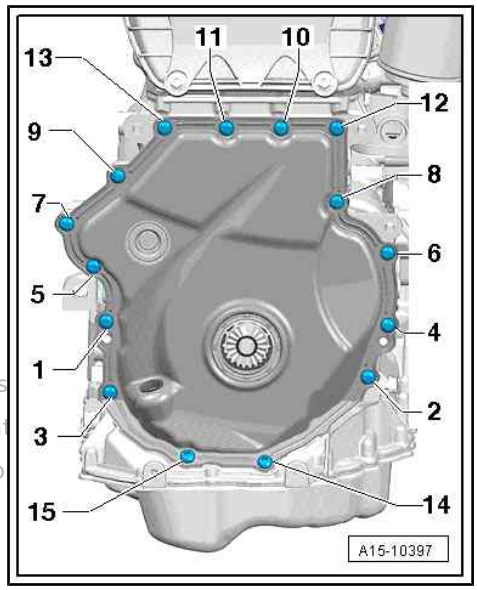

Protected by copyright. Inquiries regarding commercial purposes permitted unless authorised by AUDI AG. AUDI AG does not guarant with respect to the correctness of information in this document. Co

– Check that both dowel pins -arrows- for centring cover are fitted.

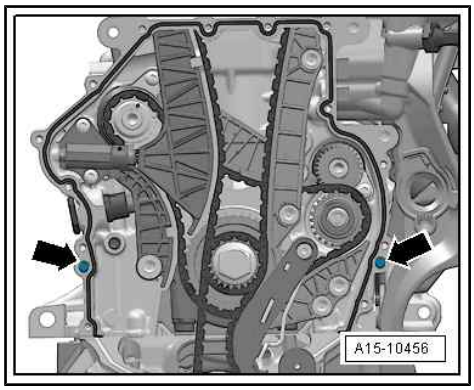

Note:

Note expiry date of sealant.

– Cut off nozzle of tube at front marking (nozzle ∅ approx. 3 mm).

Protected by copyright. Copying for private or commercial purposes, in part or in whole, is not permitted unless authorised by AUDI AG. AUDI AG does not guarantee or accept any liability with respect to the correctness of information in this document. Copyright by AUDI AG.

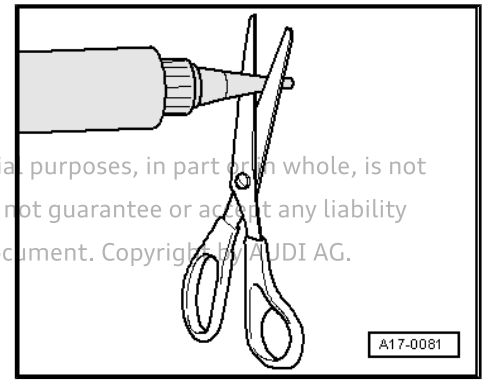

Cover with 15 bolts

– Apply sealant onto clean sealing surface -arrow 1- and onto edges -arrows 2- of new cover.

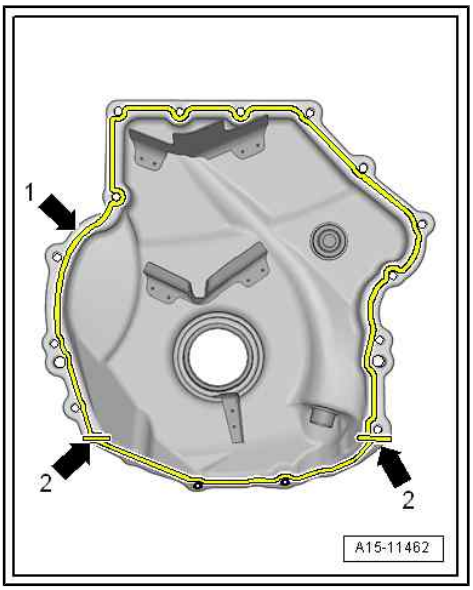

Cover with 8 bolts

– Apply sealant as shown onto clean sealing surface -arrow 1- and onto edges -arrows 2- of new cover.

Continued

- Thickness of sealant bead: 2 ... 3 mm
- The bead of sealant must not be thicker than specified, otherwise excess sealant can enter the sump and obstruct the strainer in the oil intake pipe.
- The cover must be installed within 5 minutes after applying sealant.

– Immediately fit cover and tighten bolts.

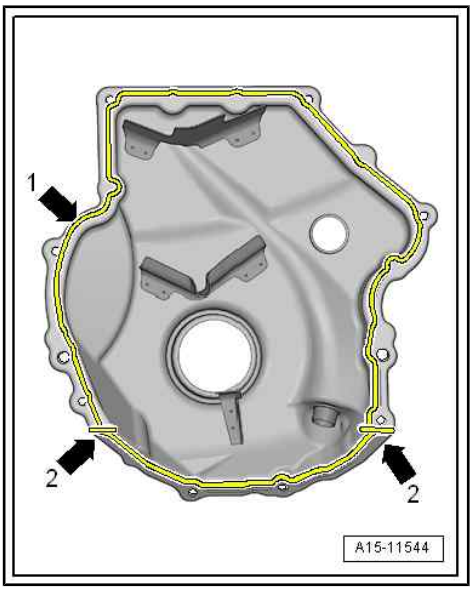

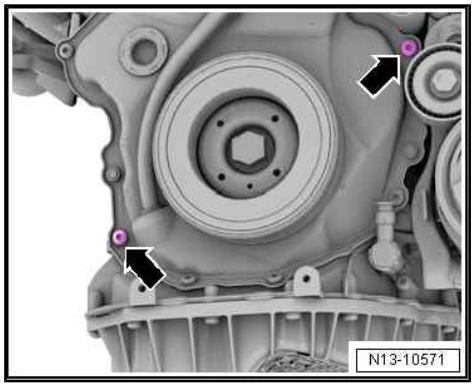

- Only tighten bolts -arrows- to final tightening angle after installing the vibration damper. The bolts must be unscrewed again to install the vibration damper.
- After fitting cover, the sealant must dry for approx. 30 minutes. Then (and only then) fill the engine with engine oil.

– Install poly V-belt tensioner ⇒ page 19 .

– Install vibration damper ⇒ page 19 .

– Install engine support ⇒ 4-cylinder direct injection engine (1.8, 2.0 ltr. 4-valve TFSI); Rep. gr. 13 ; Cylinder block (pulley end); Removing and installing engine support .

– Top up engine oil and check oil level ⇒ page 200 .

Additional work depending on model ⇒ 4-cylinder direct injection engine (1.8, 2.0 ltr. 4-valve TFSI); Rep. gr. 15 ; Timing chain cover; Removing and installing timing chain cover

Tightening torques

- ⇒ Fig. ""Timing chain cover (bottom) with 15 bolts - tightening torques and tightening sequence"" , page 63
- ⇒ Fig. ""Timing chain cover (bottom) with 8 bolts - tightening torques and tightening sequence"" , page 63
- ⇒ "1.1 Exploded view - timing chain cover", page 61

Protected by copyright. Copying for private or commercial purposes, in part or in whole, is not permitted unless authorised by AUDI AG. AUDI AG does not guarantee or accept any liability with respect to the correctness of information in this document. Copyright by AUDI AG.

1.3 Renewing oil seal for vibration damper

Special tools and workshop equipment required

- Thrust piece - T10354-

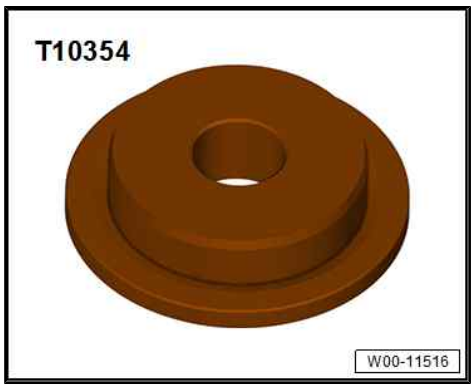

- Thrust pad - T10375-

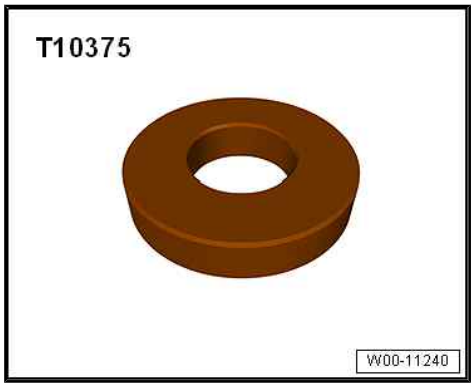

♦ Flange nut - 10531/4- from assembly tool - T10531-

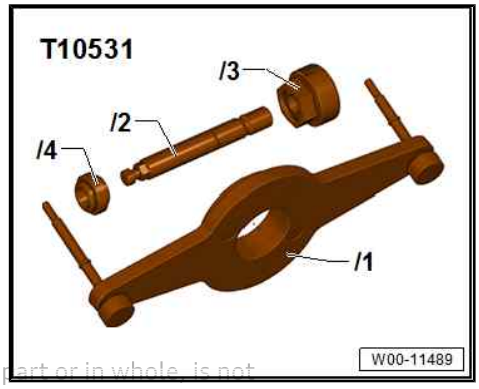

Protected by copyright. Copying for private or commercial purposes, in part or in whole, is not permitted unless authorised by AUDI AG. AUDI AG does not guarantee or accept any liability with respect to the correctness of information in this document. Copyright* AUDI AG.

♦ Extractor hook - T40274-

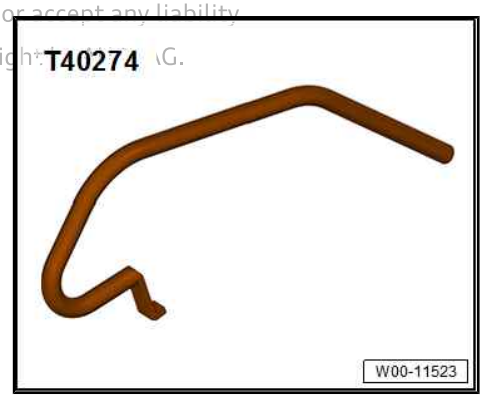

Procedure

– Remove vibration damper ⇒ page 19 .

• Clamping pin - T10531/2- is inserted.

– Pry out oil seal -arrow- using extractor hook - T40274- .

– Clean contact surface and sealing surface.

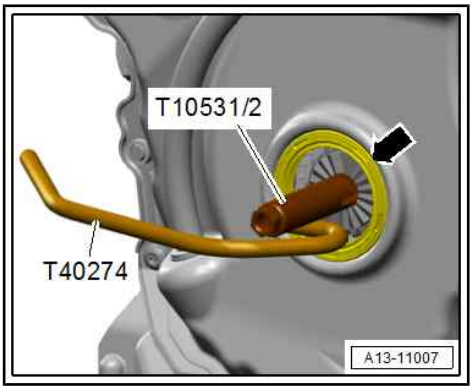

– Fit oil seal -arrow- onto thrust piece - T10354- .

• Closed side of oil seal faces thrust piece - T10354- .

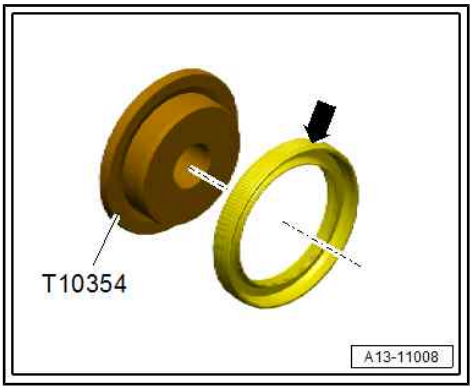

– Slide oil seal -arrow- with thrust piece - T10354- onto clamping pin - T10531/2- and position on timing chain cover (bottom).

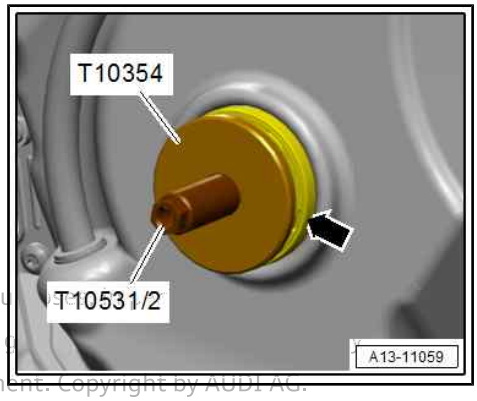

Protected by copyright. Copying for private or commercial pu
permitted unless authorised by AUDI AG. AUDI AG does not g
with respect to the correctness of information in this document. Copyright by AUDI AG.

– Also fit thrust pad - T10375- and tighten flange nut - 10531/4- .

– Drive oil seal in as far as stop using thrust piece - T10354- .

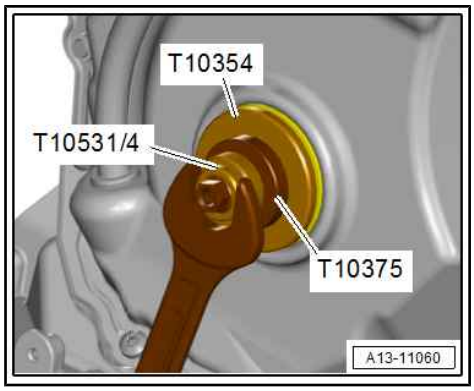

Installing

Installation is carried out in reverse order; note the following:

- Renew bolt with O-ring for vibration damper after removal.

– Install vibration damper ⇒ page 19 .

2 Chain drive

⇒ “2.1 Exploded view - camshaft timing chains”, page 73

⇒ “2.2 Exploded view - drive chain for balance shaft”, page 77

⇒ “2.3 Removing and installing bearing saddle”, page 79

⇒ “2.4 Removing and installing camshaft timing chain”, page 90

⇒ “2.5 Removing and installing drive chain for balance shaft”, page 118

⇒ “2.6 Checking timing chain”, page 119

⇒ “2.7 Checking valve timing”, page 121

2.1 Exploded view - camshaft timing chains

⇒ “2.1.1 Exploded view - camshaft timing chain, engine with two camshaft adjusters”, page 73

⇒ “2.1.2 Exploded view - camshaft timing chain, engine with one camshaft adjuster”, page 76

2.1.1 Exploded view - camshaft timing chain, engine with two camshaft adjusters

- Learnt values for chain elongation must be re-adapted after removing or renewing components of the chain drive ⇒ Vehicle diagnostic tester `01 - Engine electronics, functions`, `01 - Chain elongation adaption diagnosis`.

Engine with two camshaft adjusters
⇒ “1.2.1 Camshaft adjuster”, page 1

Protected by copyright. Copying for private or commercial purposes, in part or in whole, is not permitted unless authorised by AUDI AG. AUDI AG does not guarantee or accept any liability with respect to the correctness of information in this document. Copyright by AUDI AG.

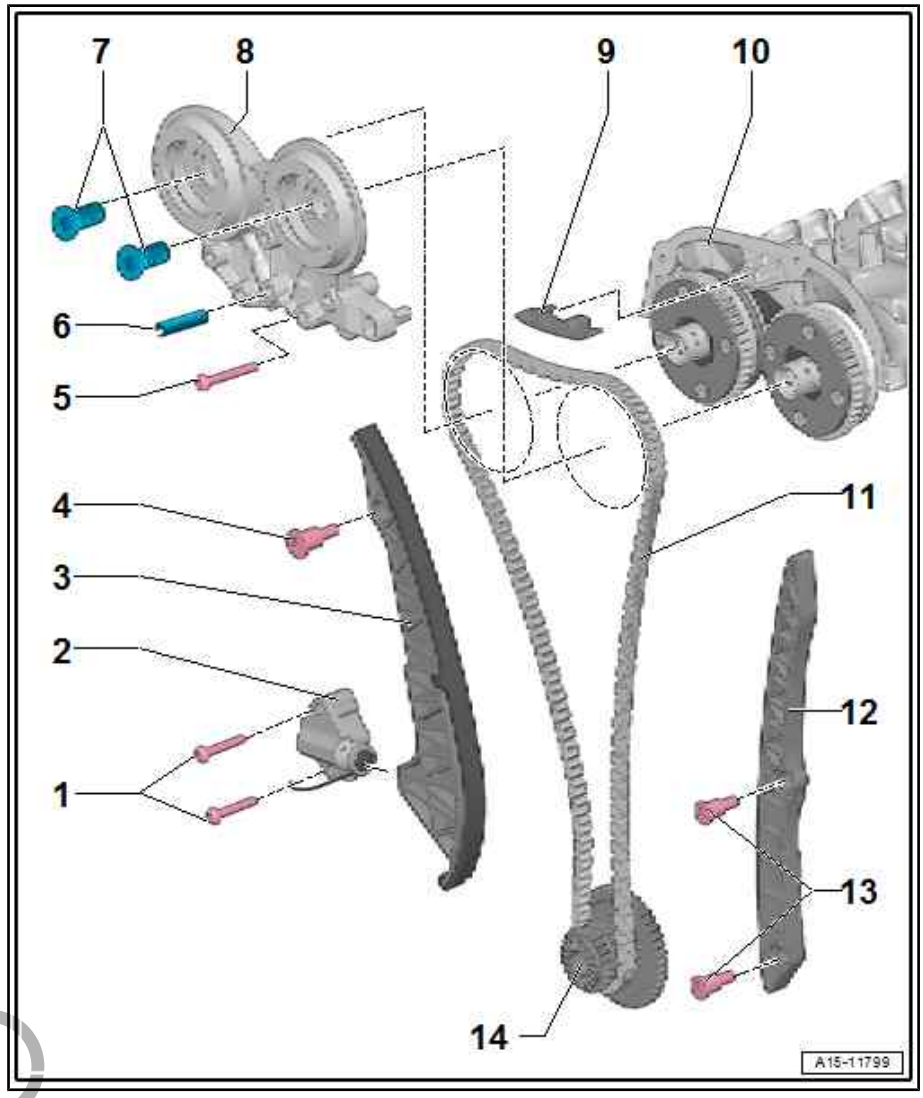

1 - Bolt

- ❑ Renew after removing
- ❑ For aluminium bolts: 4 Nm + 90°
- ❑ For steel bolts: 9 Nm

2 - Chain tensioner

- ❑ Exerts spring pressure
- ❑ Before removing, lock in place using locking tool - T40267-

3 - Tensioning rail for timing chain

4 - Guide pin

- ❑ 20 Nm

5 - Bolt

- ❑ Renew aluminium bolt after removal
- ❑ Tightening torques and sequence ⇒ page 75

6 - Clamping sleeve

- ❑ Not fitted on all bearing saddle versions

7 - Timing valves

- ❑ Left-hand thread
- ❑ Different types depending on production version
- ❑ Checking ⇒ page 75
- ❑ 35 Nm

8 - Bearing saddle

- ❑ Fitting instructions ⇒ page 75
- ❑ Removing and installing ⇒ "2.3.1 Removing and installing bearing saddle - engine with two camshaft adjusters", page 79

Protected by copyright. Copying for private or commercial purposes, in part or in whole, is not permitted unless authorised by AUDI AG. AUDI AG does not guarantee or accept any liability with respect to the correctness of information in this document. Copyright by AUDI AG.

9 - Guide rail for camshaft timing chain

10 - Camshaft housing

11 - Camshaft timing chain

- ❑ Before removing, mark running direction with paint
- ❑ Removing and installing ⇒ "2.4.1 Removing and installing camshaft timing chain - engine with two camshaft adjusters", page 90

12 - Guide rail for camshaft timing chain

13 - Guide pin

- ❑ 20 Nm

14 - Three-part chain sprocket assembly

- ❑ Crankshaft
- ❑ Installation position ⇒ page 76

Checking control valve

- It should be possible to press in piston -1- by approx. 3 mm against spring pressure without it sticking.

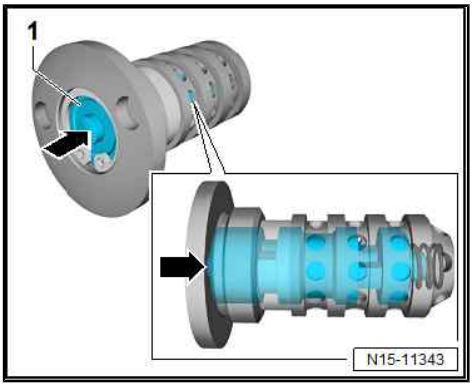

Bearing saddle - installation instructions

When installing a new bearing saddle -3- with spring pin -4-: Check hole -arrow- in cylinder head -1- before installing bearing saddle.

If hole -arrow- is not suitable for use of spring pin -4-, spring pin must be removed from bearing saddle. In this case, a shorter bolt -2- must be used for this hole. For correct type of bolt, refer to ⇒ Electronic parts catalogue (ETKA) .

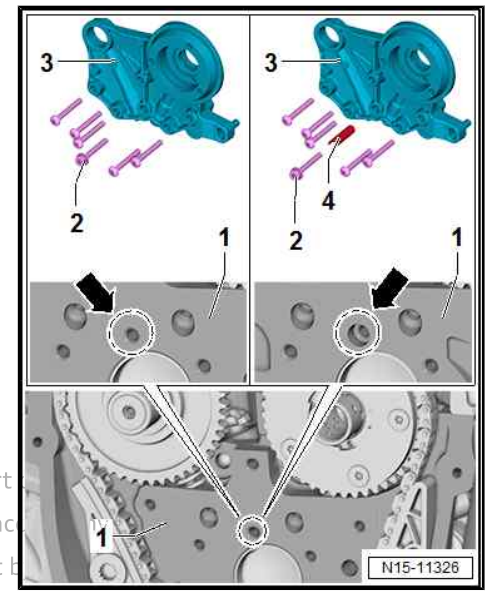

Protected by copyright. Copying for private or commercial purposes, in part
permitted unless authorised by AUDI AG. AUDI AG does not guarantee or ac
with respect to the correctness of information in this document. Copyright b

Bearing saddle - tightening torques and sequence

– Tighten bolts in stages in the sequence shown:

For steel bolts

Stage	Bolts	Tightening torques
1.	-1 … 6-	Screw in by hand until contact is made
2.	-1 … 6-	9 Nm

For aluminium bolts

- After removing, renew bolts tightened with specified tightening angle.

Stage	Bolts	Tightening torques/angle specification
1.	-1 … 6-	Screw in by hand until contact is made
2.	-1 … 6-	4 Nm
3.	-1 … 6-	Turn 180° further

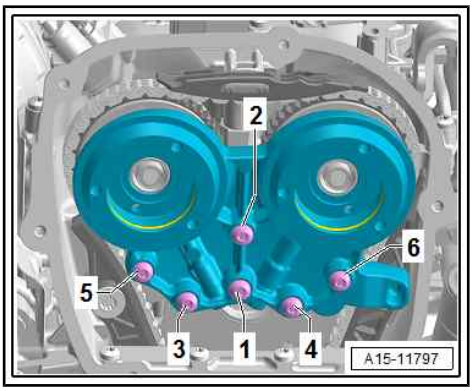

Three-part chain sprocket assembly - installation position

- The two sections -arrows- must be aligned.

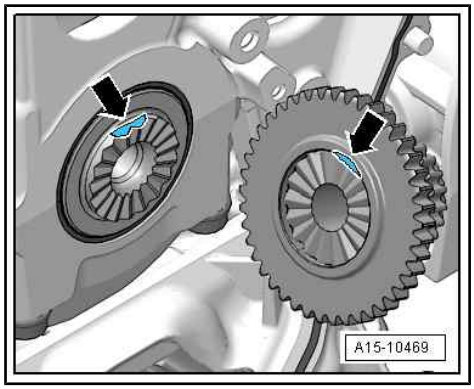

2.1.2 Exploded view - camshaft timing chain, engine with one camshaft adjuster

- Learnt values for chain elongation must be re-adapted after removing or renewing components of the chain drive ⇒ Vehicle diagnostic tester `01 - Engine electronics, functions`, `01 - Chain elongation adaption diagnosis`.

Engine with one camshaft adjuster
⇒ "1.2.1 Camshaft adjuster", page 1

1 - Bolt
- ❑ Renew after removing
- ❑ For aluminium bolts: 4 Nm + 90°
- ❑ For steel bolts: 9 Nm

2 - Chain tensioner
- ❑ Exerts spring pressure
- ❑ Before removing, lock in place using locking tool - T40267-

3 - Tensioning rail for timing chain

4 - Guide pin
- ❑ 20 Nm

5 - Bolt
- ❑ Renew aluminium bolt after removal
- ❑ Tightening torques and sequence ⇒ Fig. ""Bearing saddle - tightening torque and sequence"" , page 77

6 - Clamping sleeve
- ❑ Not fitted on all bearing saddle versions

7 - Timing valve
- ❑ Left-hand thread
- ❑ Different types depending on production version
- ❑ Checking ⇒ page 75
- ❑ 35 Nm

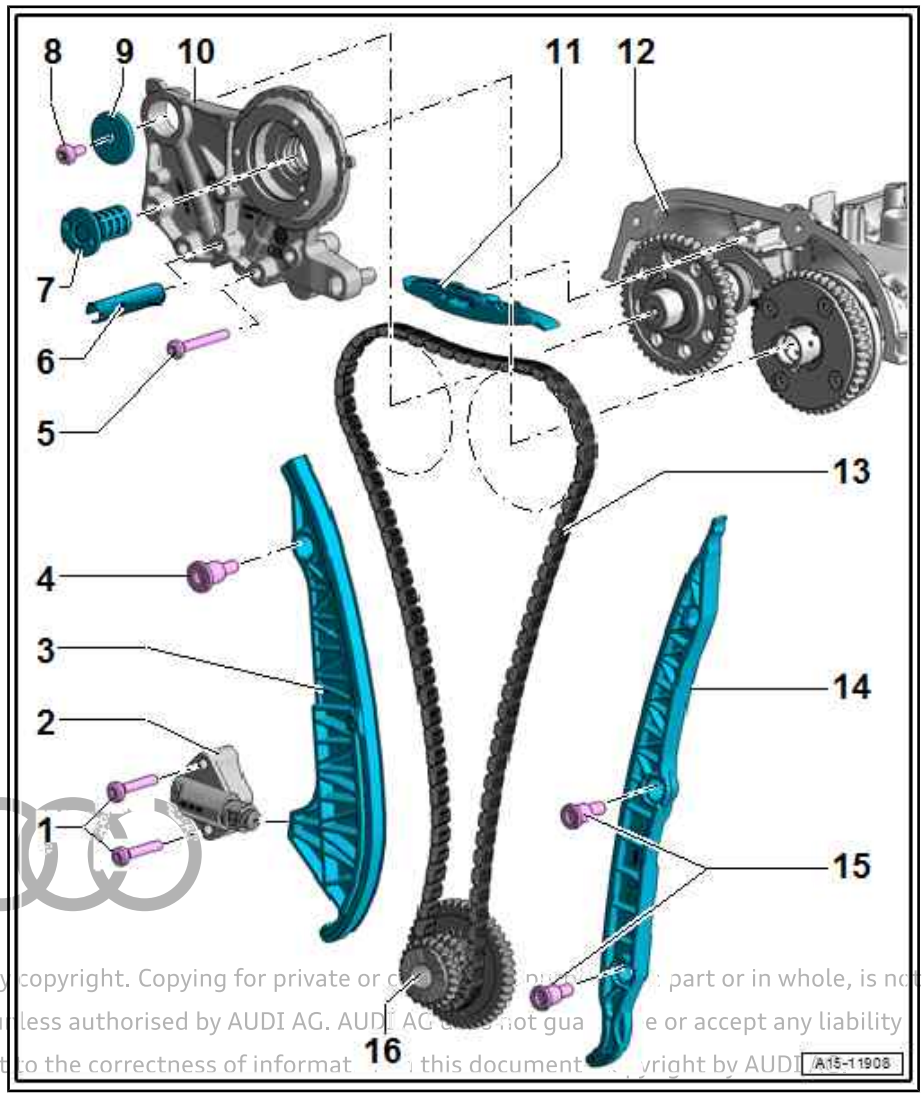

Protected by copyright. Copying for private or commercial purposes, in part or in whole, is not permitted unless authorised by AUDI AG. AUDI AG does not guarantee or accept any liability with respect to the correctness of information in this document. Copyright by AUDI AG.

8 - Bolt

- ❑ Renew after removing
- ❑ Tightening torques and sequence
  ⇒ Fig. ""Bearing saddle - tightening torque and sequence"" , page 77

9 - Washer

10 - Bearing saddle

- ❑ Fitting instructions ⇒ page 75
- ❑ Removing and installing
  ⇒ "2.3.2 Removing and installing bearing saddle - engine with one camshaft adjuster", page 85

11 - Guide rail for camshaft timing chain

12 - Camshaft housing

13 - Camshaft timing chain

- ❑ Before removing, mark running direction with paint
- ❑ Removing and installing
  ⇒ "2.4.2 Removing and installing camshaft timing chain - engine with one camshaft adjuster", page 104

14 - Guide rail for camshaft timing chain

15 - Guide pin

- ❑ 20 Nm

16 - Three-part chain sprocket assembly

- ❑ Crankshaft
- ❑ Installation position ⇒ page 76

Bearing saddle - tightening torque and sequence

– Tighten bolts in stages in the sequence shown:

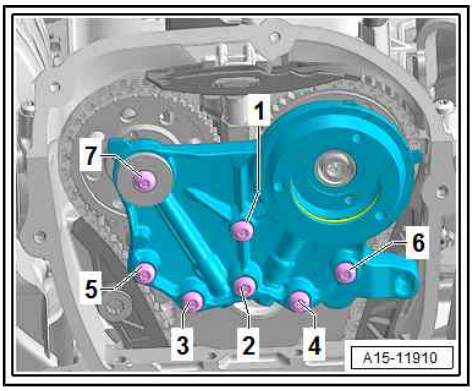

For steel bolts

- After removing, renew bolts tightened with specified tightening angle.

Stage	Bolts	Tightening torque/angle specification
1.	-1 … 7-	Screw in by hand until contact is made
2.	-1 … 6-	9 Nm
3.	-7-	Pre-tighten to 8 Nm
4.	-7-	Turn 90° further

For aluminium bolts

- After removing, renew bolts tightened with specified tightening angle.

Stage	Bolts	Tightening torque/angle specification
1.	-1 … 7-	Screw in by hand until contact is made
2.	-1 … 6-	Pre-tighten to 4 Nm
3.	-1 … 6-	Turn 180° further
4.	-7-	Pre-tighten to 8 Nm
5.	-7-	Turn 90° further

Protected by copyright. Copying for private or commercial purposes, in part or in whole, is not permitted unless authorised by AUDI AG. AUDI AG does not guarantee or accept any liability with respect to the correctness of information in this document. Copyright by AUDI AG.

2.2 Exploded view - drive chain for balance shaft

- Learnt values for chain elongation must be re-adapted after removing or renewing components of the chain drive ⇒ Vehicle

diagnostic tester 01 - Engine electronics, functions, 01 - Chain elongation adaption diagnosis.

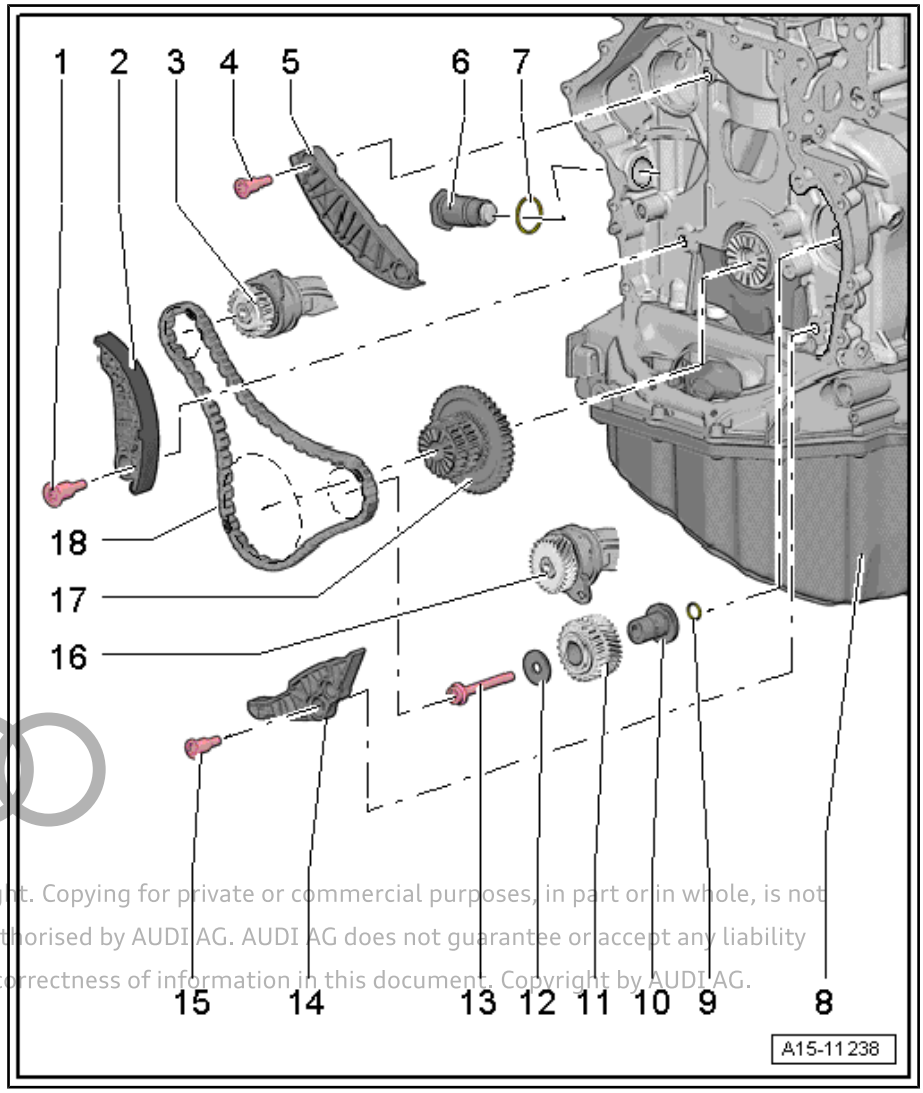

1 - Guide pin
- ❑ 20 Nm

2 - Tensioning rail
- ❑ For timing chain

3 - Balance shaft
- ❑ Exhaust side
- ❑ Lubricate bearing with engine oil
- ❑ Always renew both sides together ⇒ page 49

4 - Guide pin
- ❑ 20 Nm

5 - Guide rail
- ❑ For timing chain

6 - Chain tensioner
- ❑ 85 Nm
- ❑ Apply locking fluid when installing; refer to ⇒ Electronic parts catalogue

7 - Seal

8 - Cylinder block

9 - O-ring
- ❑ Lubricate with engine oil

10 - Pivot pin
- ❑ Lubricate with engine oil
- ❑ Installation position ⇒ page 79

Protected by copyright. Copying for private or commercial purposes, in part or in whole, is not permitted unless authorised by AUDI AG. AUDI AG does not guarantee or accept any liability with respect to the correctness of information in this document. Copyright by AUDI AG.

11 - Idler gear
- ❑ If bolt ⇒ Item 13 (page 78) has been loosened, idler gear must be renewed

12 - Thrust washer

13 - Bolt
- ❑ Renew after removing
- ❑ If bolt has been loosened, idler gear ⇒ Item 11 (page 78) must be renewed
- ❑ Tightening sequence ⇒ page 79

14 - Guide rail
- ❑ For balance shaft timing chain

15 - Guide pin
- ❑ 20 Nm

16 - Balance shaft
- ❑ Inlet side
- ❑ Lubricate bearing with engine oil
- ❑ Always renew both sides together ⇒ page 46

Protected by copyright. Copying for private or commercial purposes, in part or in whole, is not permitted unless authorised by AUDI AG. AUDI AG does not guarantee or accept any liability with respect to the correctness of information in this document. Copyright by AUDI AG.

17 - Three-part chain sprocket assembly

❑ Installation position ⇒ page 76

18 - Drive chain for balance shafts

❑ Removing ⇒ "2.4 Removing and installing camshaft timing chain", page 90

Bearing mounting - installation position

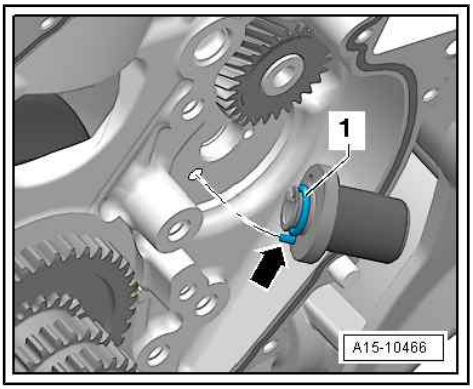

– Lubricate new O-ring -1- with engine oil prior to installation.

• Dowel pin -arrow- for bearing mounting must engage in bore in cylinder block.

– Lubricate bearing mounting with engine oil.

Idler gear - tightening torques and sequence

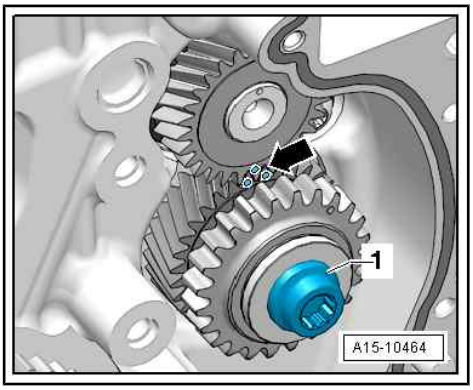

• After removing, renew bolts tightened with specified tightening angle.

– Tighten bolt -1- in stages:

Stage	Tightening torques/angle specification
1.	10 Nm
2.	– Turn idler gear • Idler gear must be without play; otherwise loosen bolt and tighten again
3.	25 Nm
4.	Turn 90° further

2.3 Removing and installing bearing saddle

⇒ "2.3.1 Removing and installing bearing saddle - engine with two camshaft adjusters", page 79

⇒ "2.3.2 Removing and installing bearing saddle - engine with one camshaft adjuster", page 85

2.3.1 Removing and installing bearing saddle - engine with two camshaft adjusters

Engine with two camshaft adjusters
⇒ "1.2.1 Camshaft adjuster", page 1

Special tools and workshop equipment required

- Assembly tool - T10352A- , assembly tool - T10352/3- , assembly tool - T10352/4-

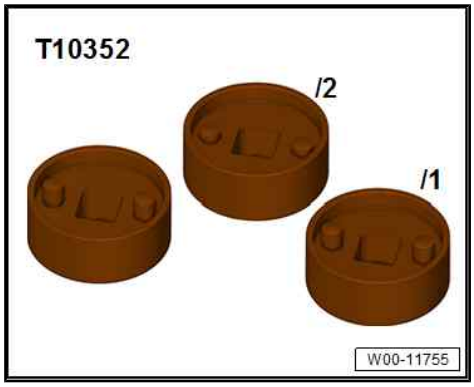

- Lever - T40243-

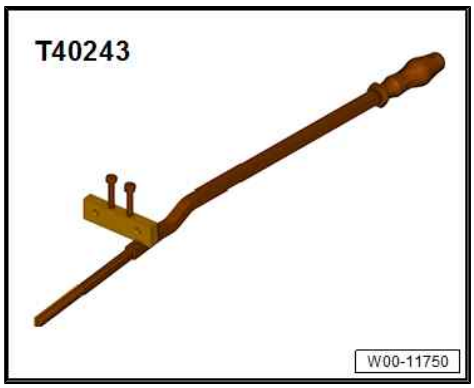

- Ratchet wrench (21 mm) - T40263-

Protected by copyright. Copying for private or commercial purposes, in part or in whole, is not permitted unless authorised by AUDI AG. AUDI AG does not guarantee or accept any liability with respect to the correctness of information in this document. Copyright by AUDI AG.

- Locking tool - T40267-

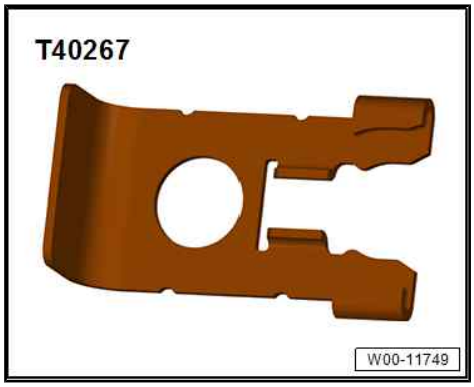

♦ Adapter - T40314-

Protected by copyright. Copying for private or commercial purposes, i
permitted unless authorised by AUDI AG. AUDI AG does not guarantee
with respect to the correctness of information in this document. Copyrigh

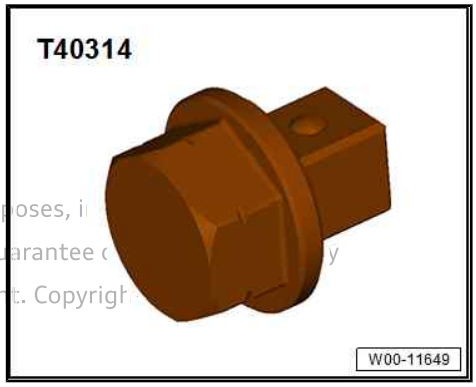

Removing

Preparatory work may be necessary depending on model ⇒ 4-cylinder direct injection engine (2.0 ltr. 4-valve TFSI); Rep. gr. 15 ; Chain drive ; Removing and installing bearing saddle.

– If not already removed, remove noise insulation ⇒ General body repairs, exterior; Rep. gr. 66 ; Noise insulation; Exploded view - noise insulation .

– Remove timing chain cover (top) ⇒ page 65 .

• Please note that the timing valves have a left-hand thread and will be damaged if turned in the wrong direction.

Depending on version of timing valve, use one of the following tools:

♦ Assembly tool - T10352-

♦ Assembly tool - T10352/1A-

♦ Assembly tool - T10352/2-

♦ Assembly tool - T10352/3-

♦ Assembly tool - T10352/4-

– Remove timing valve (both sides) in direction of -arrow-.

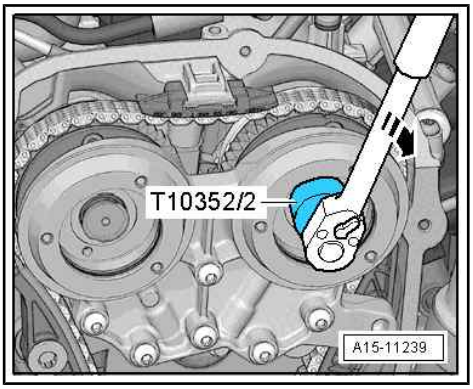

– When doing so, counterhold crankshaft at vibration damper with ratchet wrench (21 mm) - T40263- , adapter - T40314- and socket (24 mm).

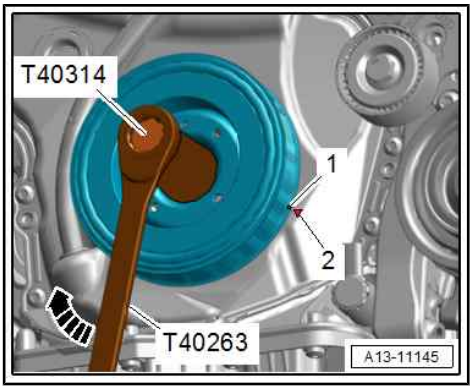

– Remove bolts -arrows-.

• Detach bearing saddle carefully without tilting it - risk of damage.

– Detach bearing saddle.

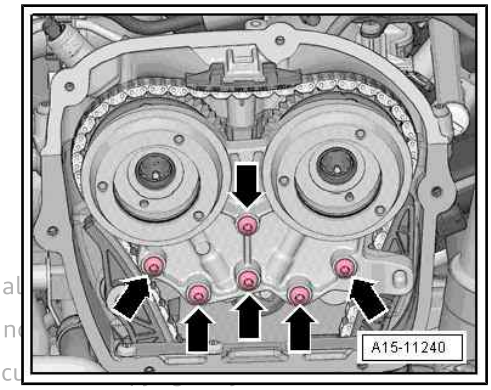

Protected by copyright. Copying for private or commercial
permitted unless authorised by AUDI AG. AUDI AG does n
with respect to the correctness of information in this docu

– Remove sealing plug -arrow-.

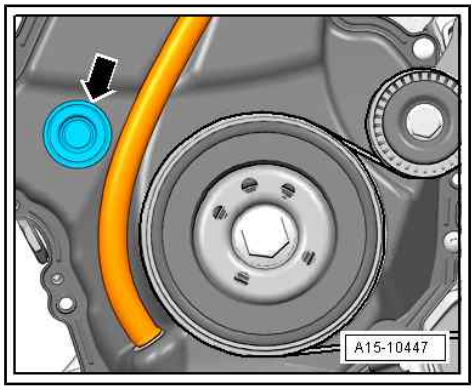

– Remove bolts -arrows-.

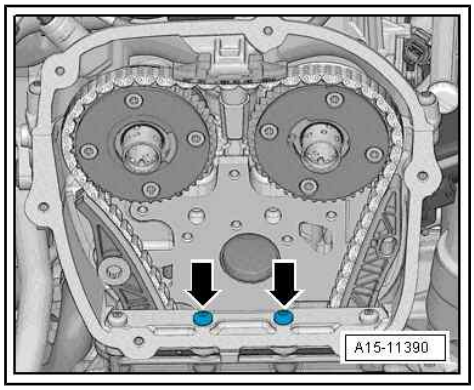

– Remove bolt -arrow-.

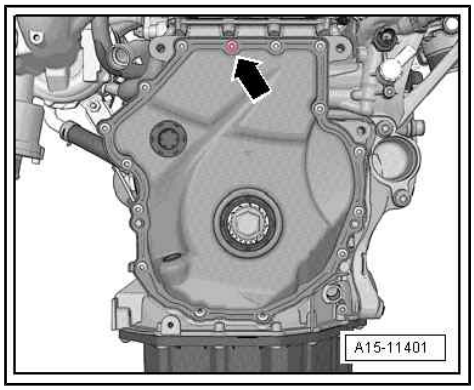

– Bolt lever - T40243- onto cylinder head -bottom arrows-.

• A second mechanic is required for the following steps.

– Compress and hold circlip -1- for chain tensioner.

– Push lever - T40243- slowly in direction of -arrow- and hold in place.

• This will press the chain tensioner back.

Note:

The chain tensioner is oil-damped and can therefore only be pressed back slowly by applying constant pressure.

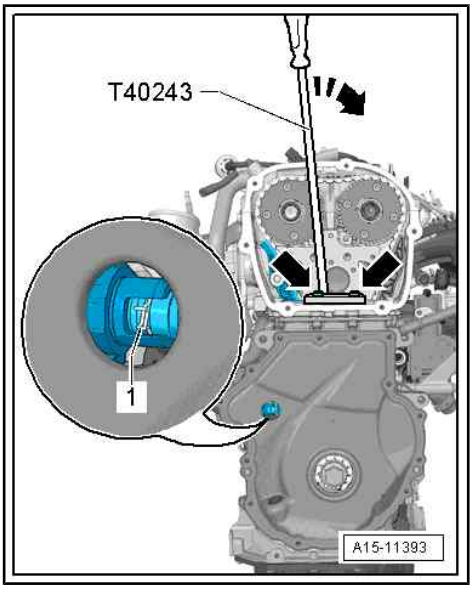

– Lock chain tensioner with locking tool - T40267- .

– Remove lever - T40243- .

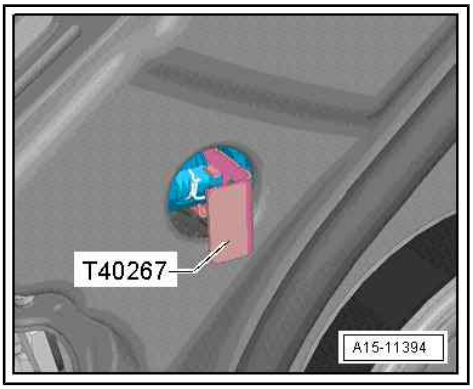

Installing

– Fit and tighten bolts -arrows-. Tightening torque
⇒ Item 4 (page 126)

Protected by copyright. Copying for private or commercial purposes, in par
permitted unless authorised by AUDI AG. AUDI AG does not guarantee or a
with respect to the correctness of information in this document. Copyright

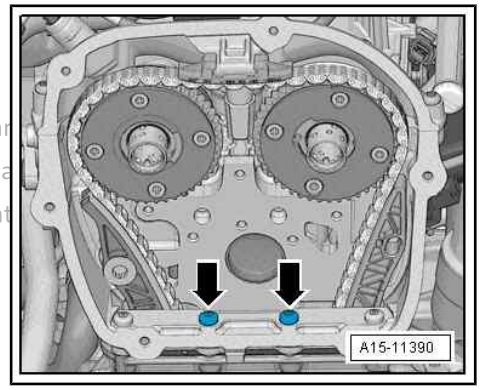

– Lubricate holes -arrows- with engine oil.

– Check whether spring pin -1- is fitted.

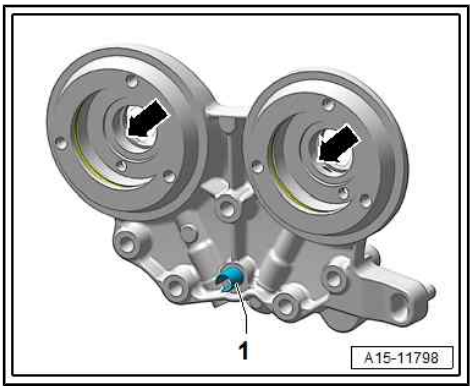

- When installing a new bearing saddle -3- with spring pin -4-: Check hole -arrow- in cylinder head -1- before installing bearing saddle.
- If hole -arrow- is not suitable for use of spring pin -4-, spring pin must be removed from bearing saddle. In this case, a shorter bolt -2- must be used for this hole. Bolt ⇒ Electronic parts catalogue (ETKA)

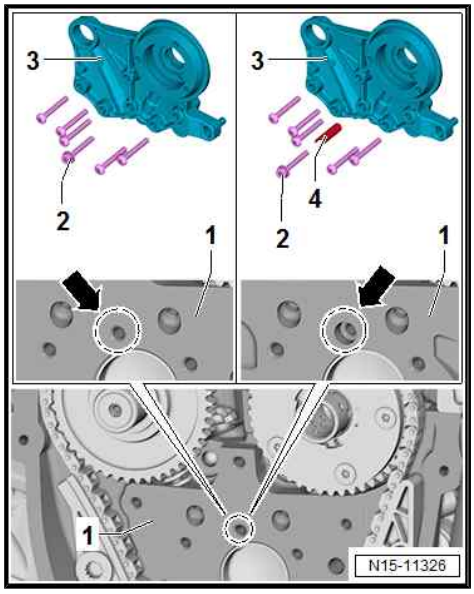

Protected by copyright. Copying for private or commercial purposes, in part or in whole, is not permitted unless authorised by AUDI AG. AUDI AG does not guarantee or accept any liability with respect to the correctness of information in this document. Copyright by AUDI AG.

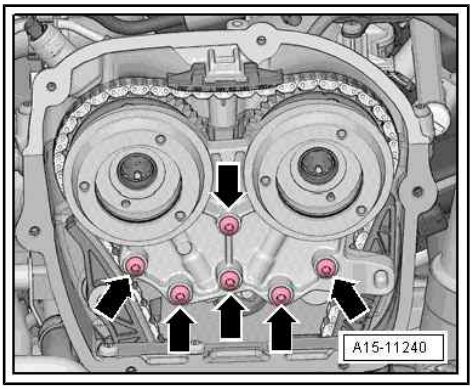

- Carefully attach bearing saddle without tilting it - risk of damage.

– Attach bearing saddle and screw in bolts -arrows- hand-tight.

– Remove locking tool - T40267- .

– Tighten bolts for bearing saddle ⇒ page 75 .

Remaining installation steps are carried out in reverse sequence; note the following:

– Install timing chain cover (top) ⇒ page 65 .

Additional work depending on model ⇒ 4-cylinder direct injection engine (2.0 ltr. 4-valve TFSI); Rep. gr. 15 ; Chain drive ; Removing and installing bearing saddle.

Learnt values for chain elongation must be re-adapted after removing or renewing components of the chain drive.

– Connect ⇒ Vehicle diagnostic tester.

– Select `Diagnosis` mode and then `Start diagnosis`.

– Choose `Select own test` tab and select following options one after the other:

◆ `Drive train`

◆ `Select engine code and engine`

◆ `01 - Self-diagnosis compatible systems`

◆ `01 - Engine electronics`

◆ `01 - Engine electronics, functions`

◆ `01 - Chain elongation adaption diagnosis`

Protected by copyright. Copying for private or commercial purposes, in part or in whole, is not permitted unless authorised by AUDI AG. AUDI AG does not guarantee or accept any liability with respect to the correctness of information in this document. Copyright by AUDI AG.

Tightening torques

◆ ⇒ Fig. ""Bearing saddle - tightening torques and sequence"" , page 75

◆ ⇒ Fig. ""Timing chain cover (bottom) with 15 bolts - tightening torques and tightening sequence"" , page 63

◆ ⇒ Fig. ""Timing chain cover (bottom) with 8 bolts - tightening torques and tightening sequence"" , page 63

◆ ⇒ "2.1.1 Exploded view - camshaft timing chain, engine with two camshaft adjusters", page 73

◆ ⇒ "3.1 Exploded view - cylinder head", page 126

◆ ⇒ General body repairs, exterior; Rep. gr. 66 ; Noise insulation; Exploded view - noise insulation

2.3.2 Removing and installing bearing saddle - engine with one camshaft adjuster

Engine with one camshaft adjuster
⇒ "1.2.1 Camshaft adjuster", page 1

Special tools and workshop equipment required

- Assembly tool - T10352A- , assembly tool - T10352/3- , assembly tool - T10352/4-

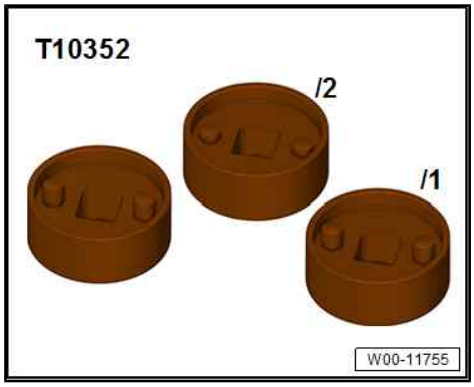

- Lever - T40243-

Protected by copyright. Copying for private or commercial purposes, in part or in whole, is not permitted unless authorised by AUDI AG. AUDI AG does not guarantee or accept any liability with respect to the correctness of information in this document. Copyright by AUDI AG.

- Ratchet wrench (21 mm) - T40263-

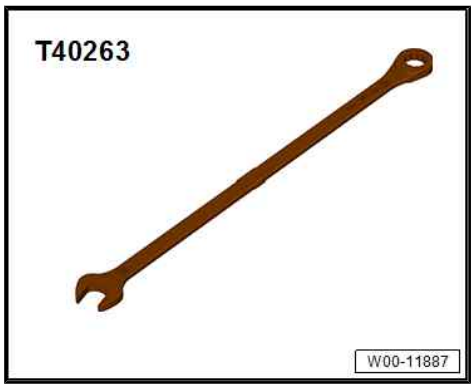

- Locking tool - T40267-

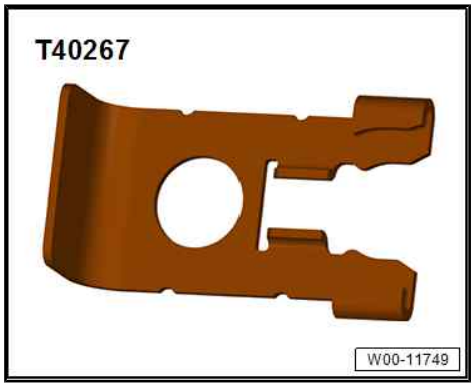

♦ Adapter - T40314-

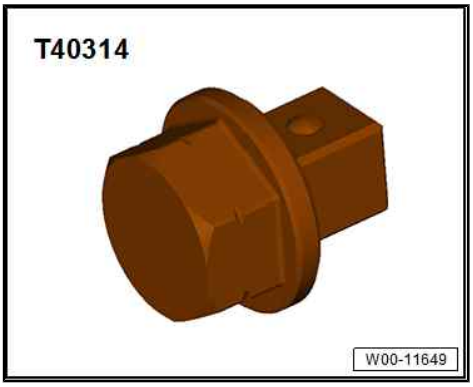

Removing

– Remove noise insulation ⇒ General body repairs, exterior; Rep. gr. 66 ; Noise insulation; Exploded view - noise insulation .

– Remove timing chain cover (top) ⇒ page 66 .

• Please note that the timing valves have a left-hand thread and will be damaged if turned in the wrong direction.

– Remove timing valve in direction of -arrow-.

Depending on version of timing valve, use one of the following tools:

♦ Assembly tool - T10352-

♦ Assembly tool - T10352/1A-

♦ Assembly tool - T10352/2-

♦ Assembly tool - T10352/3-

♦ Assembly tool - T10352/4-

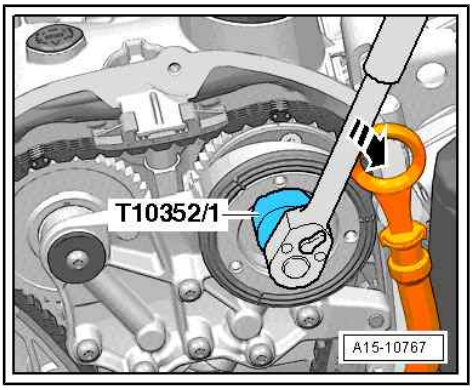

– When doing so, counterhold crankshaft at vibration damper with ratchet wrench (21 mm) - T40263- , adapter - T40314- and socket (24 mm).

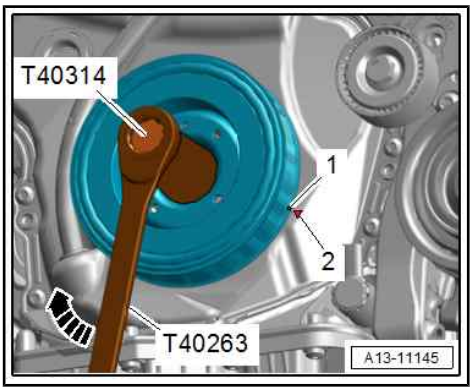

– Remove bolts -arrows-.

• Detach bearing saddle carefully without tilting it.

– Detach bearing saddle.

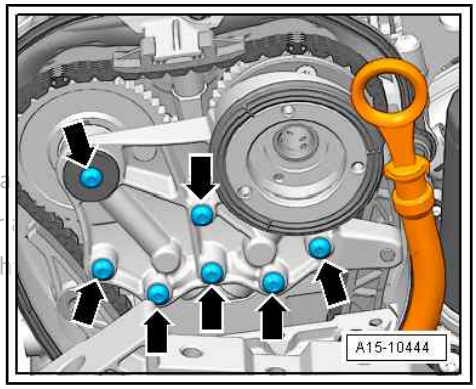

Protected by copyright. Copying for private or commercial purposes, in pa
permitted unless authorised by AUDI AG. AUDI AG does not guarantee or
with respect to the correctness of information in this document. Copyrigh

– Remove sealing plug -arrow-.

Protected by copyright. Copying for private or comme
permitted unless authorised by AUDI AG. AUDI AG do
with respect to the correctness of information in this d

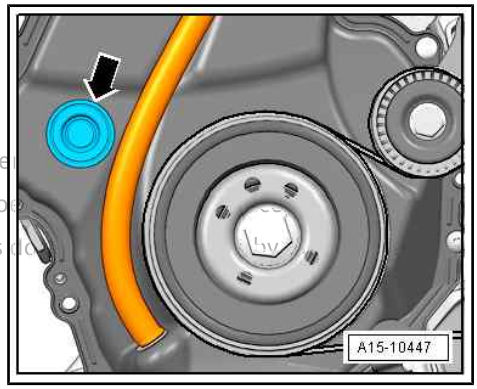

– Remove bolts -arrows-.

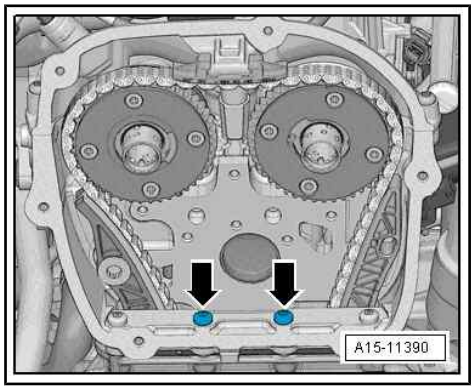

– Remove bolt -arrow-.

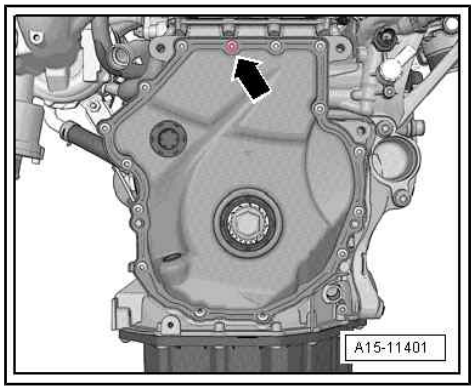

– Bolt lever - T40243- onto cylinder head -bottom arrows-.

• A second mechanic is required for the following steps.

– Compress and hold circlip -1- for chain tensioner.

– Push lever - T40243- slowly in direction of -arrow- and hold in place.

• This will press the chain tensioner back.

Note:

The chain tensioner is oil-damped and can therefore only be pressed back slowly by applying constant pressure.

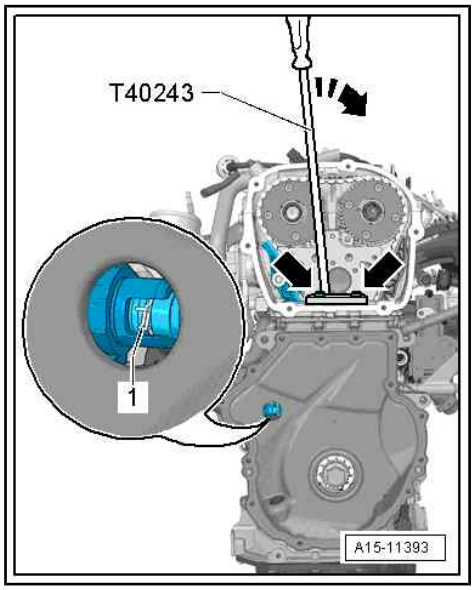

– Lock chain tensioner with locking tool - T40267- .

– Remove lever - T40243- .

Protected by copyright. Copying for private or commercia
permitted unless authorised by AUDI AG. AUDI AG does n
with respect to the correctness of information in this doc

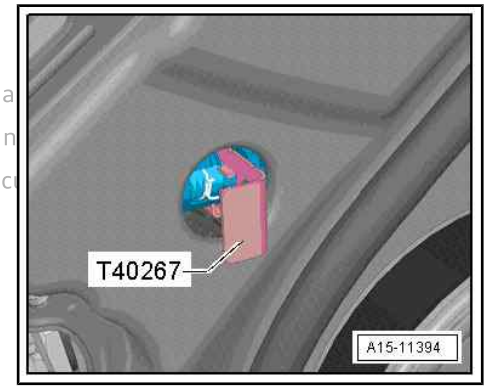

Installing

– Fit and tighten bolts -arrows-. Tightening torque
⇒ Item 4 (page 126)

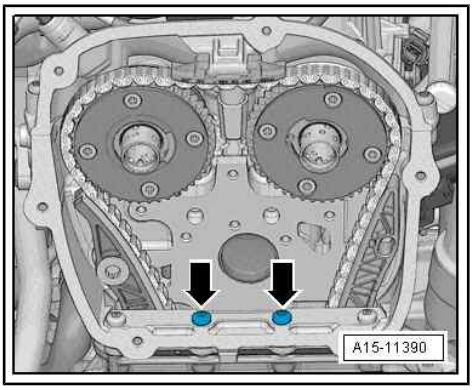

– Lubricate hole -arrow- with engine oil.

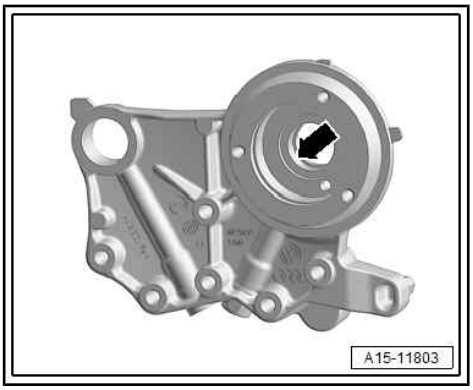

- When installing a new bearing saddle -3- with spring pin -4-: Check hole -arrow- in cylinder head -1- before installing bearing saddle.
- If hole -arrow- is not suitable for use of spring pin -4-, spring pin must be removed from bearing saddle. In this case, a shorter bolt -2- must be used for this hole. Bolt ⇒ Electronic parts catalogue (ETKA)

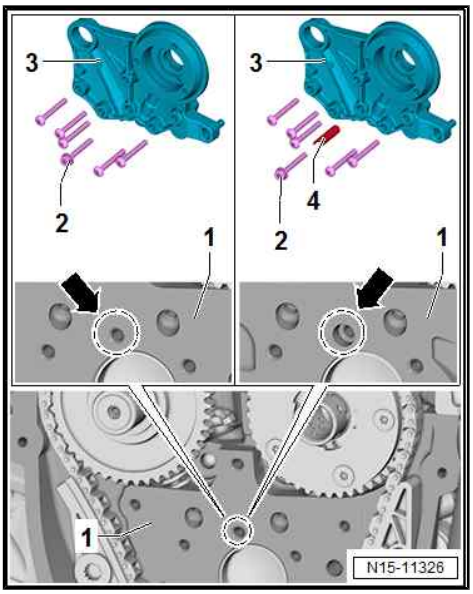

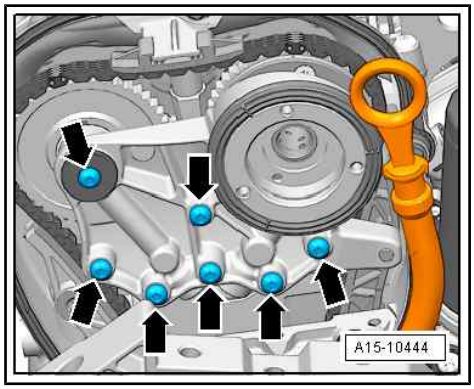

- Carefully attach bearing saddle without tilting it - risk of damage.

– Attach bearing saddle and screw in bolts -arrows- hand-tight.

– Remove locking tool - T40267- .

– Tighten bolts -arrows- for bearing saddle ⇒ page 77 .

Remaining installation steps are carried out in reverse sequence; note the following:

– Install timing chain cover (top) ⇒ page 66 .

Learnt values for chain elongation must be re-adapted after removing or renewing components of the chain drive.

– Connect ⇒ Vehicle diagnostic tester.

– Select `Diagnosis` mode and then `Start diagnosis`.

– Choose `Select own test` tab and select following options one after the other:

◆ `Drive train`

◆ `Select engine code and engine`

◆ `01 - Self-diagnosis compatible systems`

◆ `01 - Engine electronics`

◆ `01 - Engine electronics, functions`

◆ `01 - Chain elongation adaption diagnosis`

Tightening torques

◆ ⇒ Fig. ""Bearing saddle - tightening torque and sequence"" , page 77

◆ ⇒ Fig. ""Timing chain cover (bottom) with 15 bolts - tightening torques and tightening sequence"" , page 63

◆ ⇒ Fig. ""Timing chain cover (bottom) with 8 bolts - tightening torques and tightening sequence"" , page 63

◆ ⇒ "2.1.2 Exploded view - camshaft timing chain, engine with one camshaft adjuster", page 76

◆ ⇒ "3.1 Exploded view - cylinder head", page 126

◆ ⇒ General body repairs, exterior; Rep. gr. 66 ; Noise insulation; Exploded view - noise insulation

2.4 Removing and installing camshaft timing chain

⇒ "2.4.1 Removing and installing camshaft timing chain - engine with two camshaft adjusters", page 90

⇒ "2.4.2 Removing and installing camshaft timing chain - engine with one camshaft adjuster", page 104

2.4.1 Removing and installing camshaft timing chain - engine with two camshaft adjusters

Engine with two camshaft adjusters
⇒ "1.2.1 Camshaft adjuster", page 1

Special tools and workshop equipment required

Protected by copyright. Copying for private or commercial purposes, in part or in whole, is not permitted unless authorised by AUDI AG. AUDI AG does not guarantee or accept any liability with respect to the correctness of information in this document. Copyright by AUDI AG.

- Assembly tool - T10352A- , assembly tool - T10352/3- , assembly tool - T10352/4-

Protected by copyright. Copying for private or commercial purposes, in part or in whole, is not permitted unless authorised by AUDI AG. AUDI AG does not guarantee or accept any liability with respect to the correctness of information in this document. Copyright by AUDI AG.

- Locking pin - T40011-

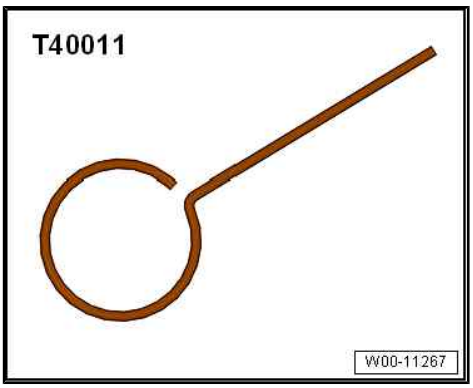

- Lever - T40243-

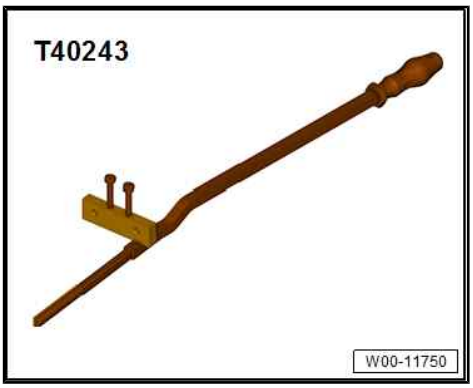

- Ratchet wrench (21 mm) - T40263-

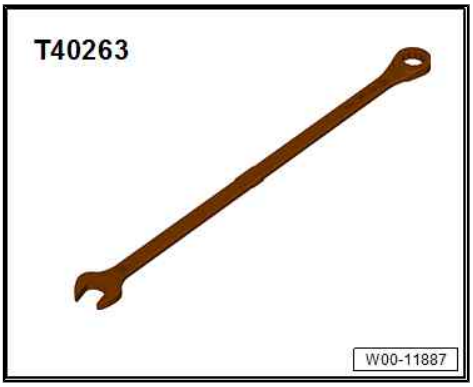

- Assembly tool - T40266-

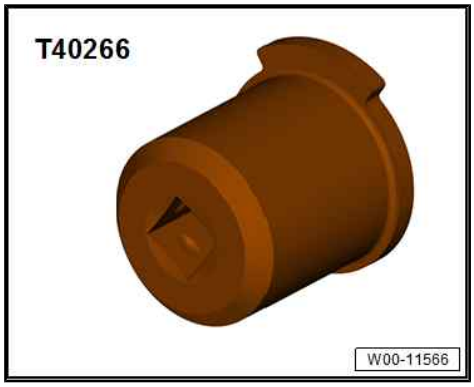

- Locking tool - T40267-

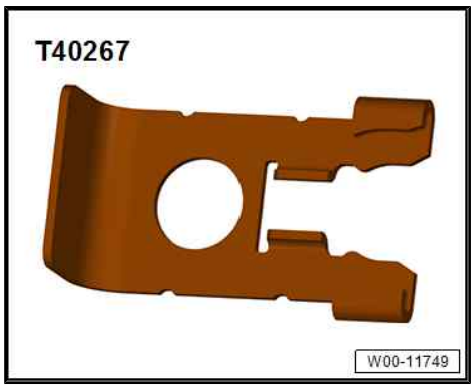

- Camshaft clamp - T40271-

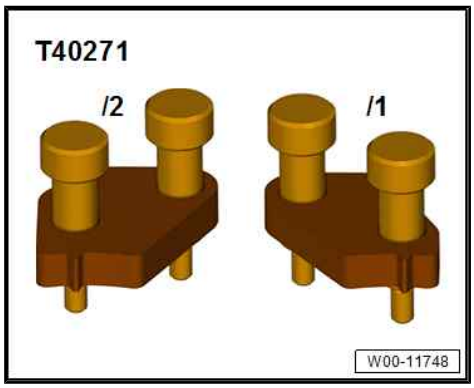

- Adapter - T40314-

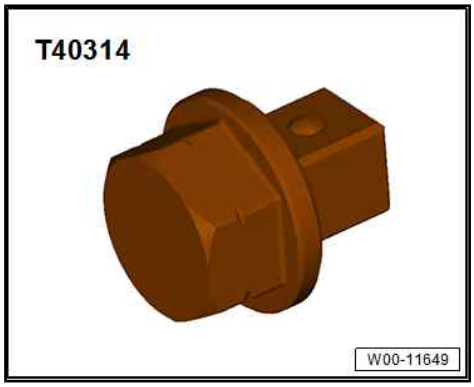

Removing

Protected by copyright. Copying for private or commercial purposes, in part or in whole, is not permitted unless authorised by AUDI AG. AUDI AG does not guarantee or accept any liability with respect to the correctness of information in this document. Copyright by AUDI AG.

Preparatory work may be necessary depending on model ⇒ 4-cylinder direct injection engine (1.8, 2.0 ltr. 4-valve TFSI); Rep. gr. 15 ; Chain drive; Removing and installing camshaft timing chain .

– Remove noise insulation ⇒ General body repairs, exterior; Rep. gr. 66 ; Noise insulation; Exploded view - noise insulation .

– Remove timing chain cover (top) ⇒ page 65 .

• Please note that the timing valves have a left-hand thread and will be damaged if turned in the wrong direction.

– Remove timing valve (both sides) in direction of -arrow-.

Depending on version of timing valve, use one of the following tools:

♦ Assembly tool - T10352-

♦ Assembly tool - T10352/1A-

♦ Assembly tool - T10352/2-

♦ Assembly tool - T10352/3-

♦ Assembly tool - T10352/4-

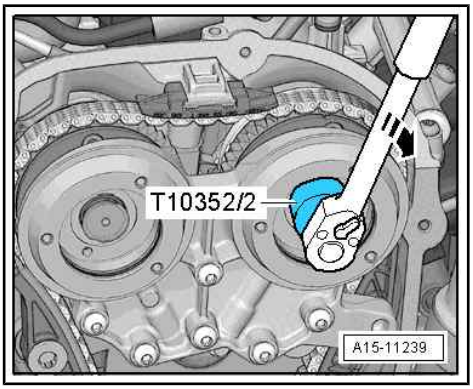

– When doing so, counterhold crankshaft at vibration damper with ratchet wrench (21 mm) - T40263- , adapter - T40314- and socket (24 mm).

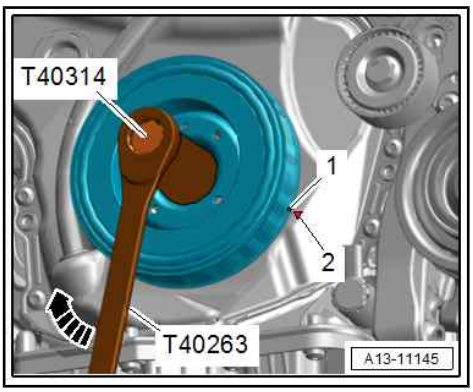

– Remove bolts -arrows-.

• Detach bearing saddle carefully without tilting it.

– Detach bearing saddle.

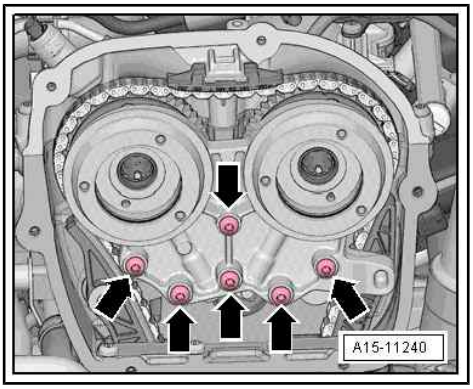

Protected by copyright. Copying for private or commercial purposes, in part or in whole, is not permitted unless authorised by AUDI AG. AUDI AG does not guarantee or accept any liability with respect to the correctness of information in this document. Copyright by AUDI AG.

– Turn vibration damper to “TDC” position.

NOTICE

Risk of engine damage if valve gear drive slips

– **Only turn engine in normal direction of rotation.**

- Notch on vibration damper and marking on cover for timing chains (bottom) must be aligned -arrow-.
- The markings -1- on the camshafts must face upwards.

Note:

The combination of ratchet wrench (21 mm) - T40263- , adapter - T40314- and socket (24 mm) can be fitted onto the vibration damper better than the counterhold tool - T10355- .

– Remove timing chain cover (bottom) ⇒ page 67 .

– Check “TDC” position again.

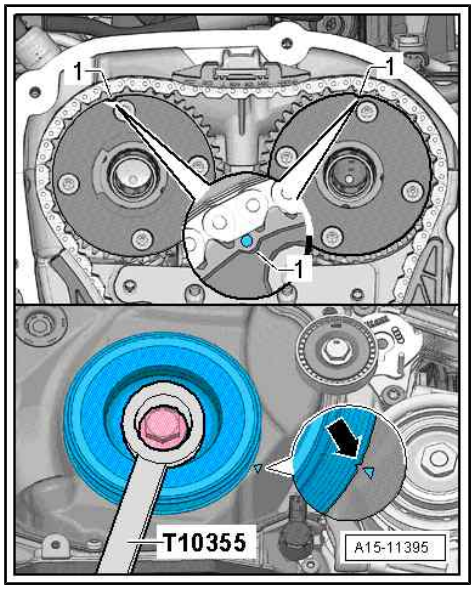

– Press retainer for oil pump chain tensioner in direction of -arrow- and lock in place using locking pin - T40011- .

– Remove bolt -1- and detach chain tensioner -2-.

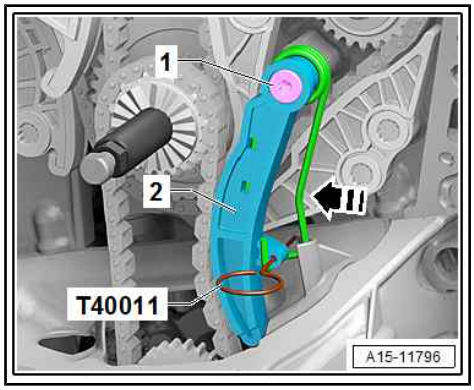

– Remove bolts -arrows-.

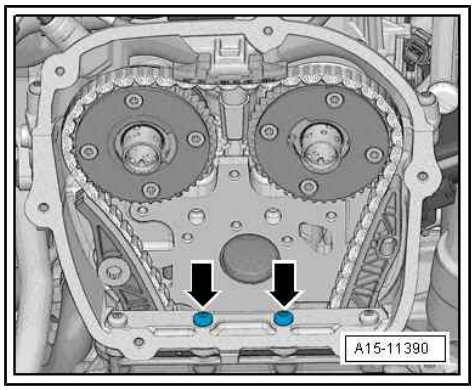

Protected by copyright. Copying for private or commercial purposes, in part or in whole, is not permitted unless authorised by AUDI AG. AUDI AG does not guarantee or accept any liability with respect to the correctness of information in this document. Copyright by AUDI AG.

– Bolt lever - T40243- onto cylinder head -bottom arrows-.
– Compress and hold circlip -1- for chain tensioner.
– Push lever - T40243- slowly in direction of -arrow- and hold in place.
• This will press the chain tensioner back.

Note:

The chain tensioner is oil-damped and can therefore only be pressed back slowly by applying constant pressure.

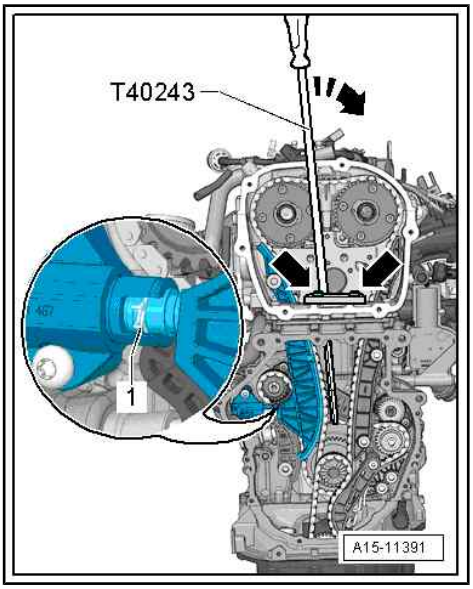

– Lock chain tensioner with locking tool - T40267- .
– Remove lever - T40243- .

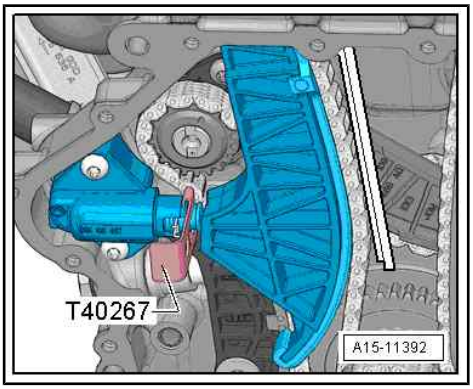

– Bolt camshaft clamp - T40271/2- onto cylinder head and slide into teeth on chain sprocket in direction of -arrow 2-; if necessary, use assembly tool - T40266- to turn inlet camshaft in direction of -arrow 1-.

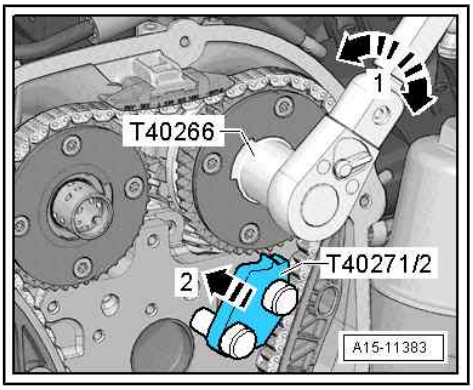

– Bolt camshaft clamp - T40271/1- onto cylinder head.
• A second mechanic is required for the following step.
– Turn exhaust camshaft in direction of -arrow A- using assembly tool - T40266- and hold in place. Remove bolt -1- and guide tensioning rail -2- downwards.
– Continue turning exhaust camshaft clockwise -arrow A- until camshaft clamp - T40271/1- can be pressed into teeth -C- on chain sprocket in direction of -arrow B-.

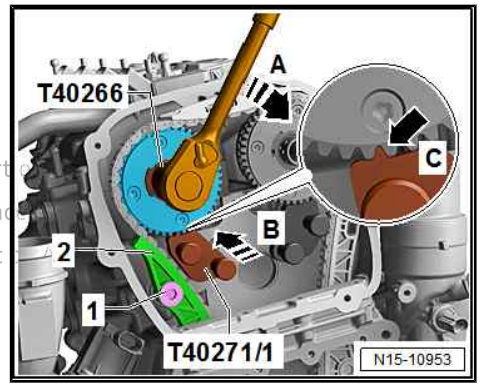

Protected by copyright. Copying for private or commercial purposes, in part or in whole, is not permitted unless authorised by AUDI AG. AUDI AG does not guarantee or accept any liability with respect to the correctness of information in this document. Copyright by AUDI AG.

– Use screwdriver to release catch -arrow- and press off guide rail -1- towards front.

Protected by copyright. Copying for private or commercial purposes, in whole or in part, is not permitted unless authorised by AUDI AG. AUDI AG does not guarantee or assume any liability with respect to the correctness of information in this document.

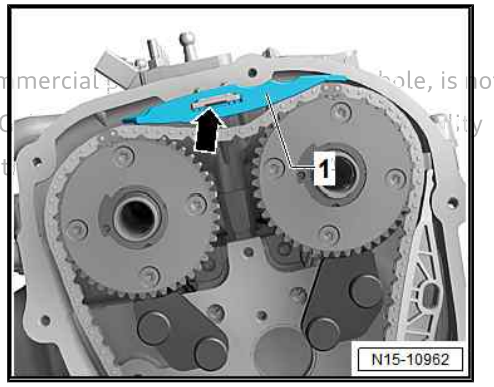

– Unscrew bolts -arrows- and remove chain tensioner -1-.

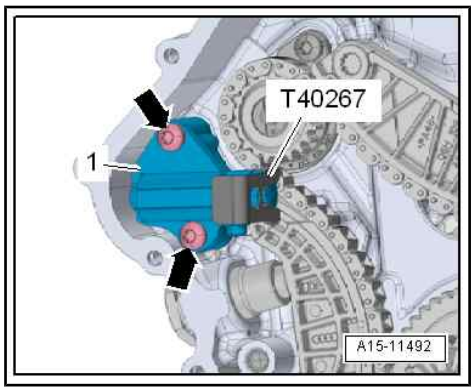

– Unscrew bolts -1- and remove guide rail -2-.

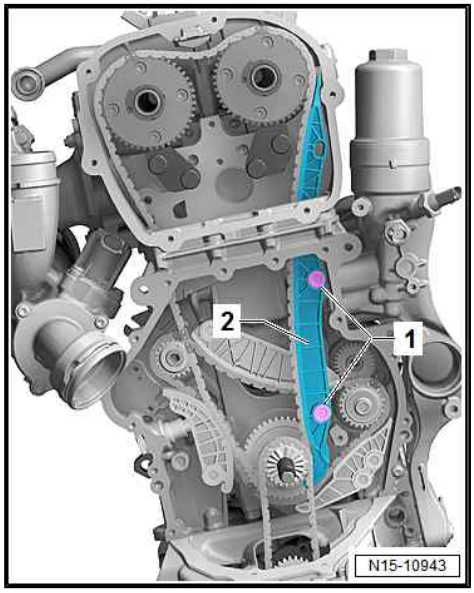

– Remove camshaft timing chain from camshaft sprockets and place onto camshaft journals -arrows-.

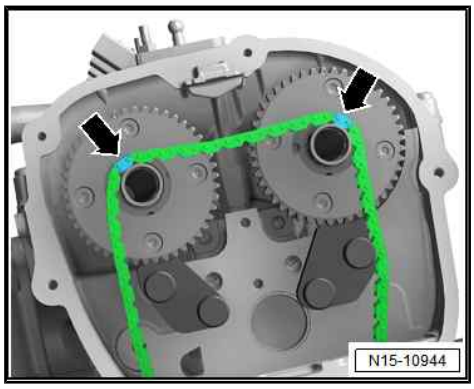

– Remove chain tensioner -1- for balance shaft timing chain.

Protected by copyright. Copying for private or commercial purposes is not permitted unless authorised by AUDI AG. AUDI AG does not guarantee or assume liability with respect to the correctness of information in this document. Copyright by AUDI AG.

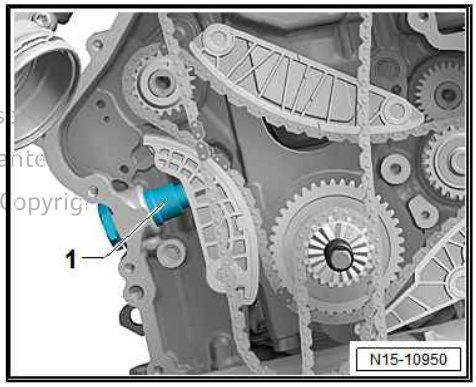

– Remove bolts -1-. Remove tensioning rail -2- and guide rails -3- and -4-.

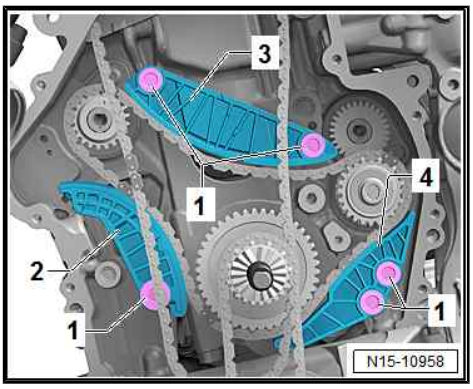

– Loosen tensioning bolt -A- and remove clamping pin -B-.
– Remove three-part chain sprocket assembly; to do so, remove oil pump chain.
– Detach camshaft timing chain and drive chain for balance shaft.

NOTICE

Risk of damage to valves and piston crowns.

– **Never turn the crankshaft when the camshaft timing chain is removed.**

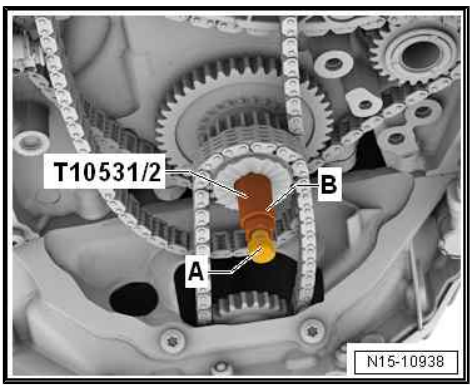

Installing

– Check TDC position of crankshaft; flat surface of crankshaft -arrow- must be horizontal.
– Use a waterproof pen to mark cylinder block -1-.

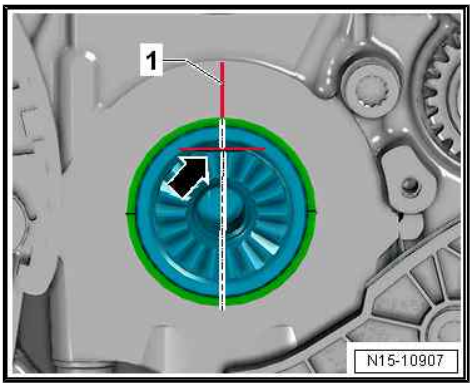

– Mark tooth -1- of three-part chain sprocket adjacent to marking -2- using waterproof pen.

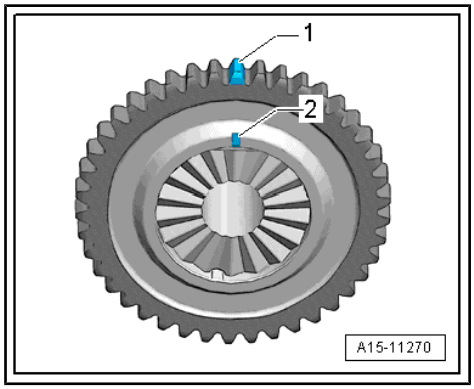

– Turn idler gear/balance shaft to markings -arrow- (do not slacken bolt -1-).

Protected by copyright. Copying for private or commer
permitted unless authorised by AUDI AG. AUDI AG doe
with respect to the correctness of information in this d

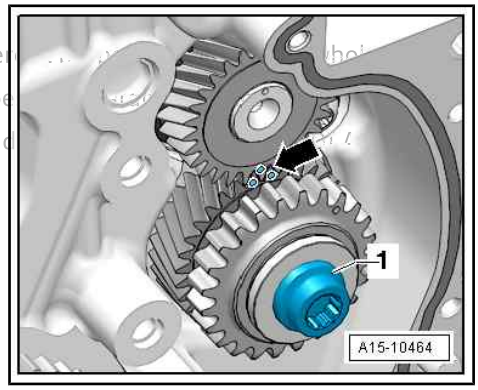

- The links with coloured markings must be positioned at the markings on the chain sprockets.
- There is no need to note the position of any other coloured links.

– Fit drive chain for balance shafts; links with coloured markings -arrows- must be positioned at markings on chain sprockets.

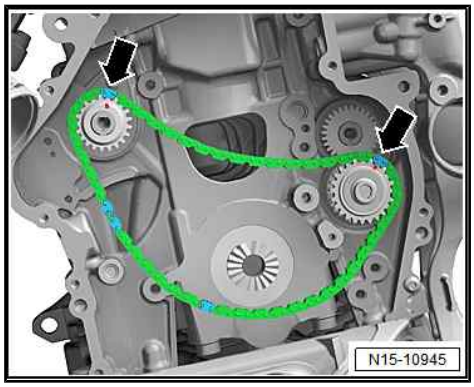

– Install guide rail -1- and tighten bolts -arrows-.

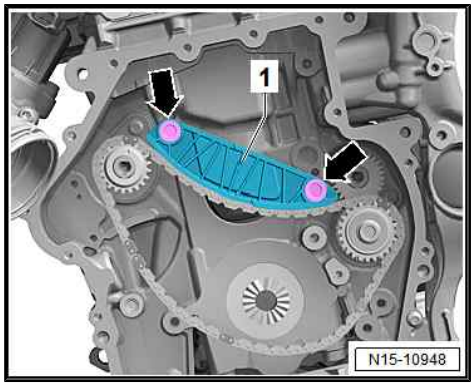

– Fit camshaft timing chain so that coloured markings -arrows- are positioned on camshaft journals.

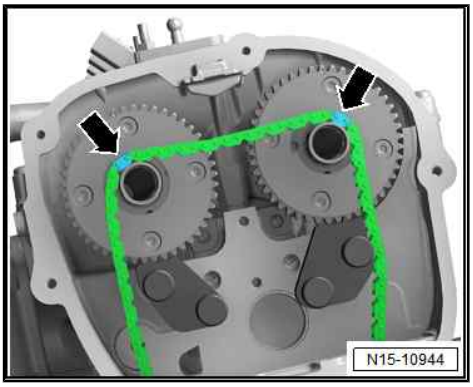

– Fit oil pump chain onto three-part chain sprocket assembly.
– Swivel three-part chain sprocket assembly towards engine in direction of -arrow- and secure on crankshaft. The marks -arrows- must align.

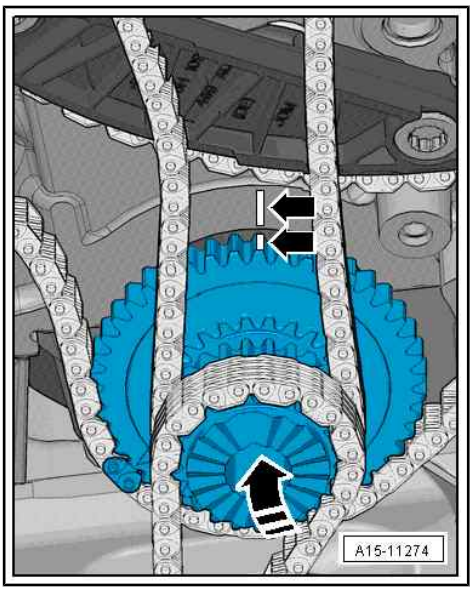

1. Screw clamping pin - T10531/2- into crankshaft and hand-tighten.
2. Attach turning-over tool - T10531/3- . Screw on flange nut - T10531/4- and hand-tighten. Move turning-over tool back and forth slightly using open-end spanner, 32 mm; at the same time, tighten flange nut until chain sprocket is firmly seated on teeth of crankshaft. Now (and not before) tighten tensioning bolt -A-.

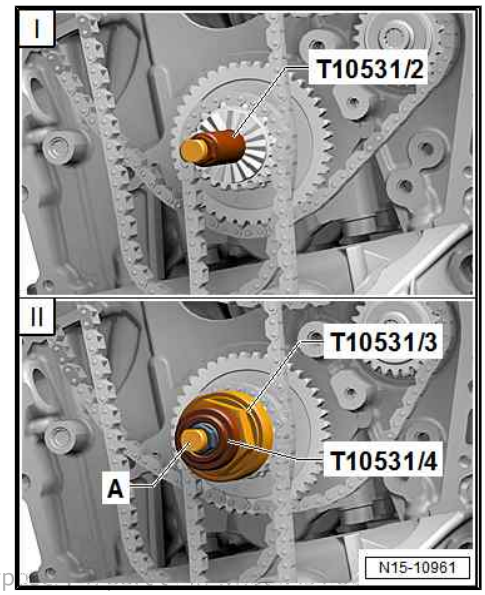

Protected by copyright. Copying for private or commercial purp
permitted unless authorised by AUDI AG. AUDI AG does not guarantee or accept any liability
with respect to the correctness of information in this document. Copyright by AUDI AG.

– Position link of drive chain for balance shafts with coloured marking -arrow- at marking on three-part chain sprocket assembly. Install tensioning rail -1- and guide rail -2-. Tighten bolts -3-.

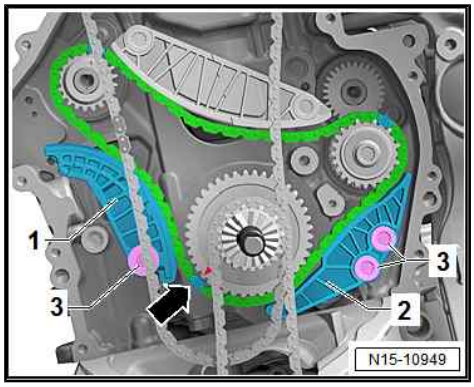

– Install chain tensioner -1-.

Protected by copyright. Copying for private or commercial purpos
permitted unless authorised by AUDI AG. AUDI AG does not gua
with respect to the correctness of information in this document. Cop

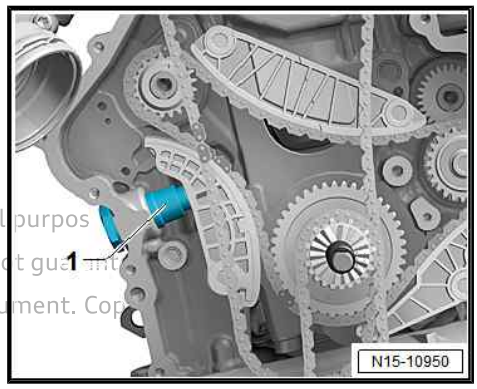

– Check setting again; links with coloured markings -arrows- must be positioned at markings on chain sprockets.

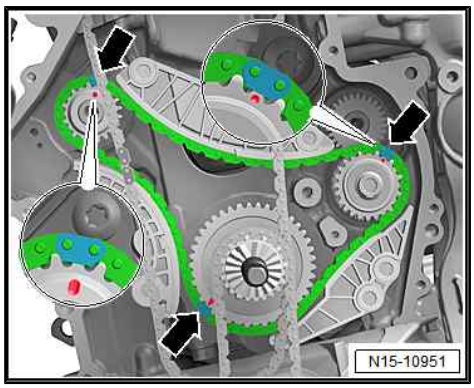

– Fit camshaft timing chain onto inlet camshaft, exhaust camshaft and crankshaft. Position links with coloured markings -arrows- at markings on chain sprockets.

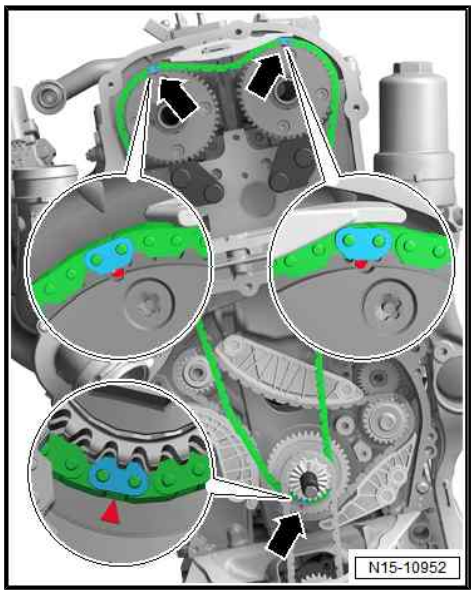

– Install guide rail -2- and tighten bolts -1-.

Protected by copyright. Copying for private or commercial purposes, in
permitted unless authorised by AUDI AG. AUDI AG does not guarantee
with respect to the correctness of information in this document. Copyri

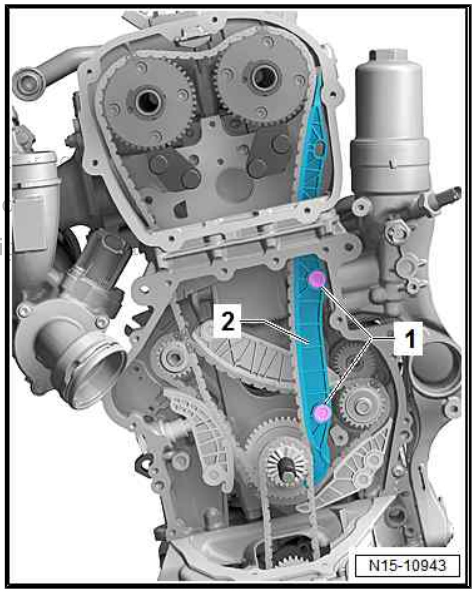

– Install top guide rail -1-.

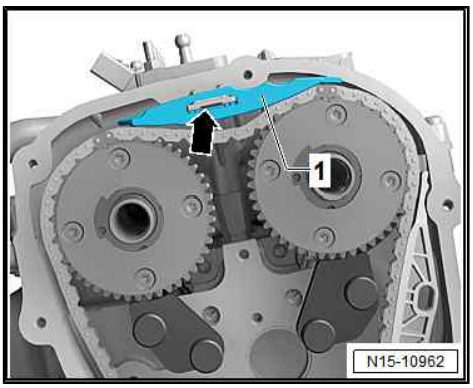

- A second mechanic is required for the following step.

– Use assembly tool - T40266- to turn exhaust camshaft slightly in direction of -arrow A- and slide camshaft clamp - T40271/1- out of teeth on chain sprocket in direction of -arrow B-.

– Release camshaft in direction of -arrow C- until timing chain is in contact with guide rail -1-. Hold camshaft in this position, install tensioning rail -2- and tighten bolt -3-.

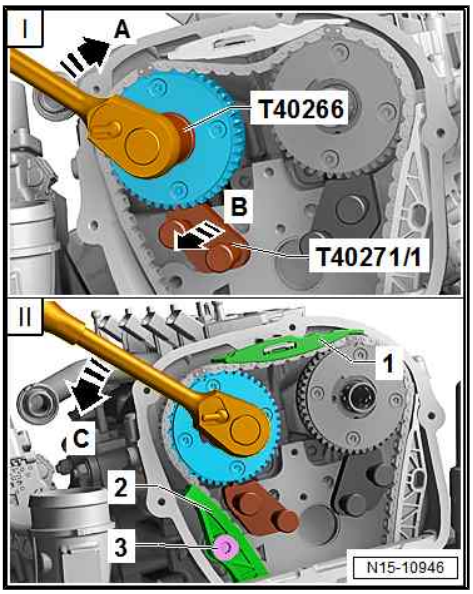

– Install chain tensioner -1- and tighten bolts -arrows-.

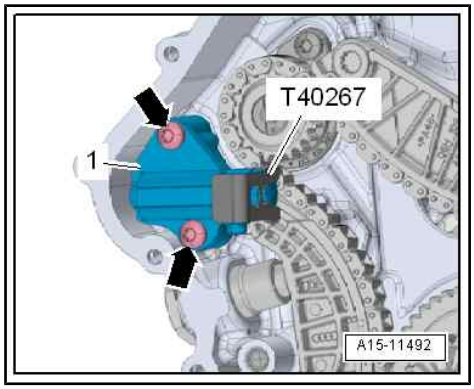

– Turn inlet camshaft in direction of -arrow 1- with assembly tool - T40266- , slide camshaft clamp - T40271/2- out of teeth on chain sprocket in direction of -arrow 2- and release camshaft.

– Remove camshaft clamp - T40271/2- .

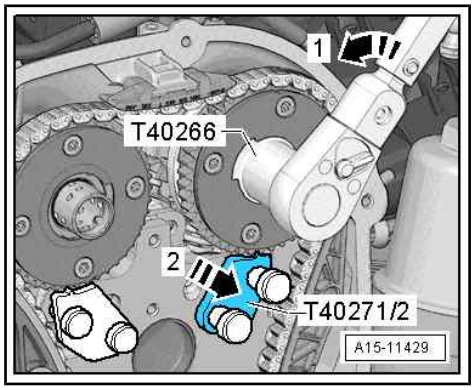

– Check setting; links with coloured markings -arrows- must be positioned at markings on chain sprockets.

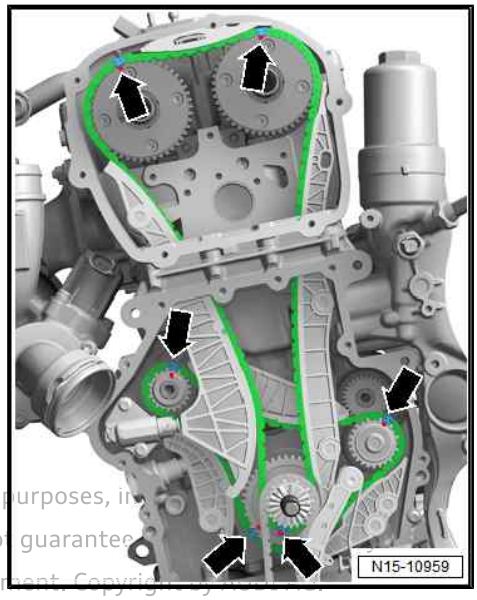

Protected by copyright. Copying for private or commercial purposes, in
permitted unless authorised by AUDI AG. AUDI AG does not guarantee
with respect to the correctness of information in this document. Copyright by AUDI AG.

– Install chain tensioner -2- and tighten bolt -1-. Remove locking pin - T40011- ; retainer for oil pump chain tensioner must come into contact with opening -arrow- on sump (top section).

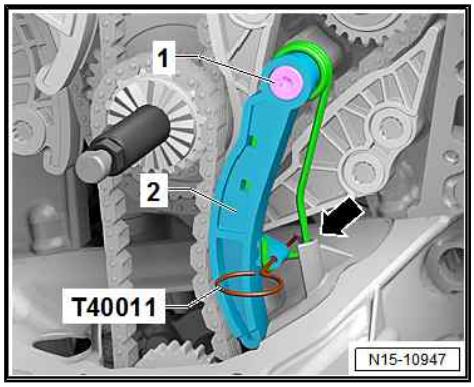

– Fit and tighten bolts -arrows-. Tightening torque
⇒ Item 4 (page 126)

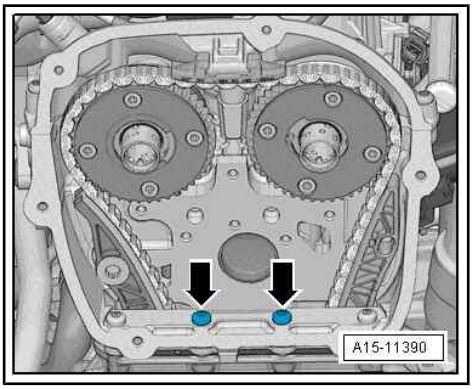

– Lubricate holes -arrows- with engine oil.
– Check whether spring pin -1- is fitted. (Not fitted on all bearing saddles.)

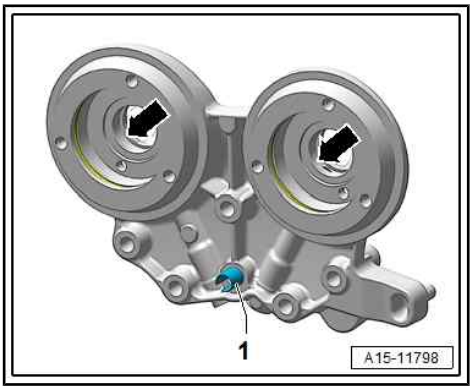

• Carefully attach bearing saddle without tilting it - risk of damage.
– Attach bearing saddle and screw in bolts -arrows- hand-tight.

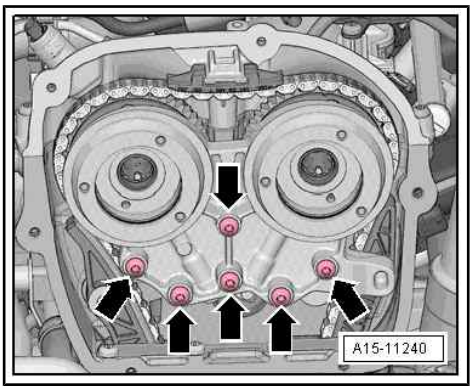

Protected by copyright. Copying for private or commercial purposes, in part or in whole, is not permitted unless authorised by AUDI AG. AUDI AG does not guarantee or accept any liability with respect to the correctness of information in this document. Copyright by AUDI AG.

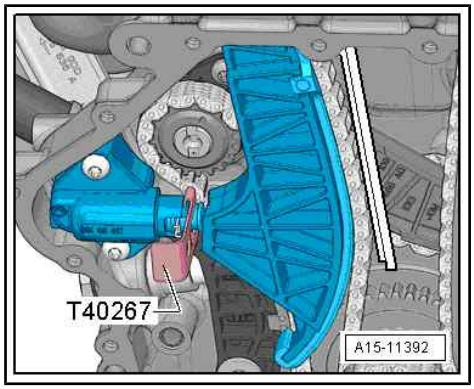

– Remove locking tool - T40267- .

– Tighten bolts for bearing saddle ⇒ page 75 .

– Install timing valves ⇒ Item 7 (page 74) .

– Turn the engine carefully at least 2 rotations to ensure that none of the valves make contact when the starter is operated.

Note:

Due to the ratio, the timing chain links with coloured markings are no longer aligned after the engine has been turned.

Remaining installation steps are carried out in reverse sequence; note the following:

– Detach turning-over tool and install timing chain cover (bottom) ⇒ page 67 .

– Install timing chain cover (top) ⇒ page 65 .

Additional work depending on model ⇒ 4-cylinder direct injection engine (1.8, 2.0 ltr. 4-valve TFSI); Rep. gr. 15 ; Chain drive; Removing and installing camshaft timing chain .

Learnt values for chain elongation must be re-adapted after removing or renewing components of the chain drive.

– Connect ⇒ Vehicle diagnostic tester.

– Select `Diagnosis` mode and then `Start diagnosis`.

– Choose `Select own test` tab and select following options one after the other:

- `Drive train`
- `Select engine code and engine`
- `01 - Self-diagnosis compatible systems`
- `01 - Engine electronics`
- `01 - Engine electronics, functions`
- `01 - Chain elongation adaption diagnosis`

Tightening torques

- ⇒ “2.1.1 Exploded view - camshaft timing chain, engine with two camshaft adjusters”, page 73
- ⇒ “2.2 Exploded view - drive chain for balance shaft”, page 77
- ⇒ General body repairs, exterior; Rep. gr. 66 ; Noise insulation; Exploded view - noise insulation

Protected by copyright. Copyright for private or commercial purposes, in part or in whole, is not permitted unless authorised by AUDI AG. AUDI AG does not guarantee or accept any liability with respect to the correctness of information in this document. Copyright by AUDI AG.

2.4.2 Removing and installing camshaft timing chain - engine with one camshaft adjuster

Engine with one camshaft adjuster
⇒ “1.2.1 Camshaft adjuster”, page 1

Special tools and workshop equipment required

- Assembly tool - T10352A- , assembly tool - T10352/3- , assembly tool - T10352/4-

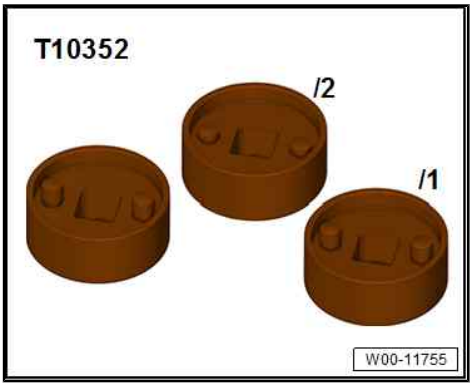

- Locking pin - T40011-

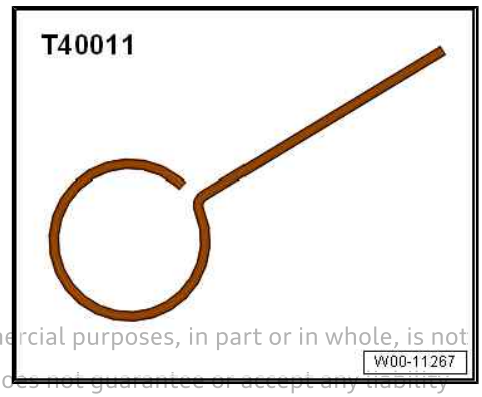

Protected by copyright. Copying for private or commercial purposes, in part or in whole, is not permitted unless authorised by AUDI AG. AUDI AG does not guarantee or accept any liability with respect to the correctness of information in this document. Copyright by AUDI AG.

- Lever - T40243-

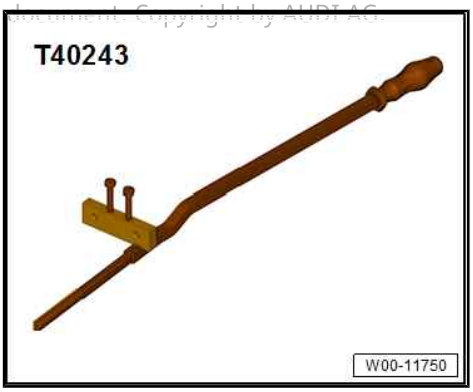

- Ratchet wrench (21 mm) - T40263-

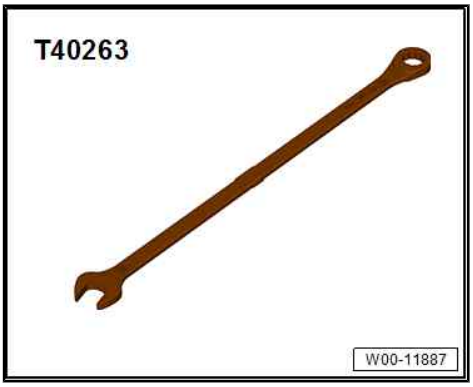

- Assembly tool - T40266-

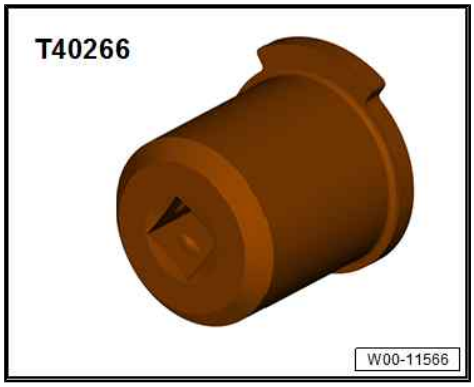

- Locking tool - T40267-

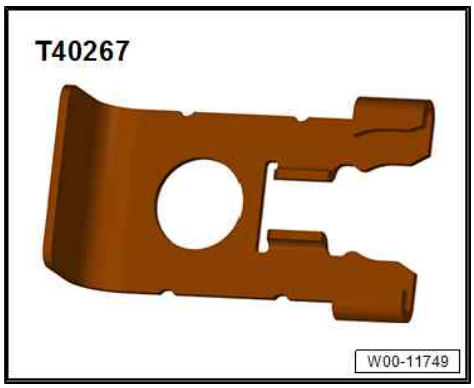

Protected by copyright. Copying for private or commercial purposes, in part or in whole, is not permitted unless authorised by AUDI AG. AUDI AG does not guarantee or accept any liability with respect to the correctness of information in this document. Copyright by AUDI AG.

- Camshaft clamp - T40271-

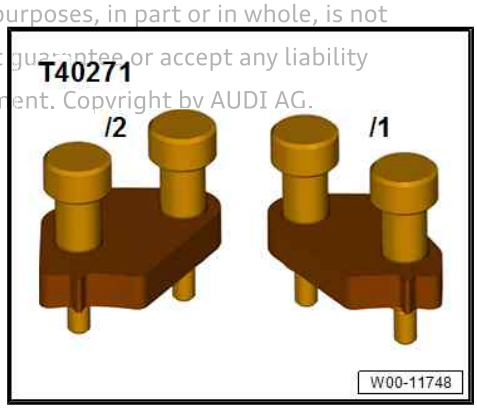

- Adapter - T40314-

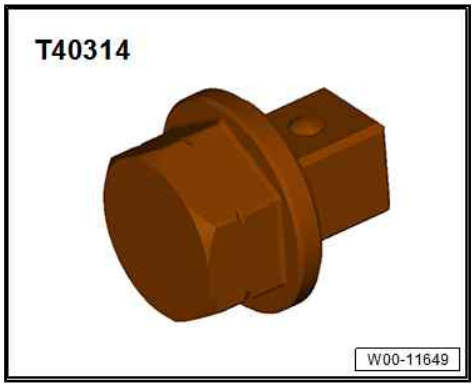

Removing

– Remove noise insulation ⇒ General body repairs, exterior; Rep. gr. 66 ; Noise insulation; Exploded view - noise insulation .

– Remove timing chain cover (top) ⇒ page 66 .

- Please note that the timing valve has a left-hand thread and will be damaged if turned in the wrong direction.

– Remove timing valve in direction of -arrow-.

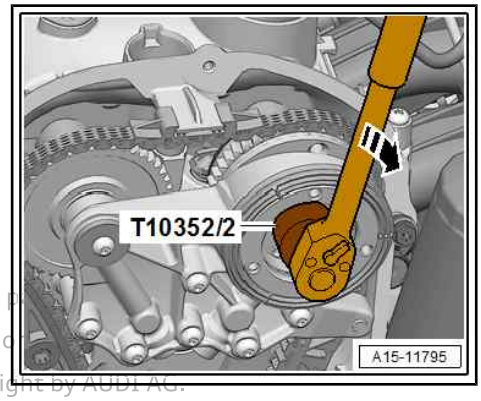

Depending on version of timing valve, use one of the following tools:

♦ Assembly tool - T10352-

♦ Assembly tool - T10352/1A-

♦ Assembly tool - T10352/2-

♦ Assembly tool - T10352/3-

♦ Assembly tool - T10352/4-

Protected by copyright. Copying for private or commercial purposes, in part or in whole, is not permitted unless authorised by AUDI AG. AUDI AG does not guarantee or assume any liability with respect to the correctness of information in this document. Copyright by AUDI AG.

– When doing so, counterhold crankshaft at vibration damper with ratchet wrench (21 mm) - T40263- , adapter - T40314- and socket (24 mm).

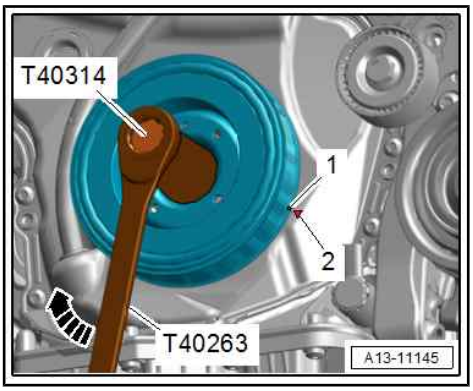

– Remove bolts -arrows-.

- Detach bearing saddle carefully without tilting it.

– Detach bearing saddle.

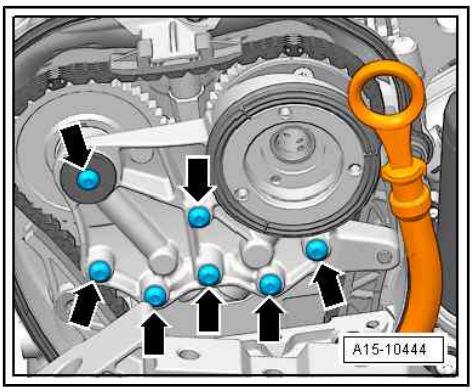

– Turn vibration damper to “TDC” position.

NOTICE

Risk of engine damage if valve gear drive slips

– Only turn engine in normal direction of rotation.

- Notch on vibration damper and marking -arrow- on cover for timing chains (bottom) must be aligned.

- Markings -1- on camshaft chain sprockets must be aligned with markings -2- and -3-.

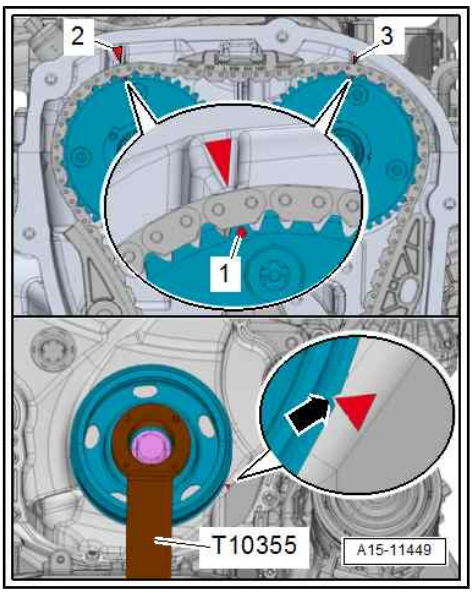

Note:

The combination of ratchet wrench (21 mm) - T40263- , adapter - T40314- and socket (24 mm) can be fitted onto the vibration damper better than the counterhold tool - T10355- .

– Remove timing chain cover (bottom) ⇒ page 67 .

– Check “TDC” position again.

– Press retainer for oil pump chain tensioner in direction of -arrow- and lock in place using locking pin - T40011- .
– Unscrew bolt -1- and remove chain tensioner -2-.

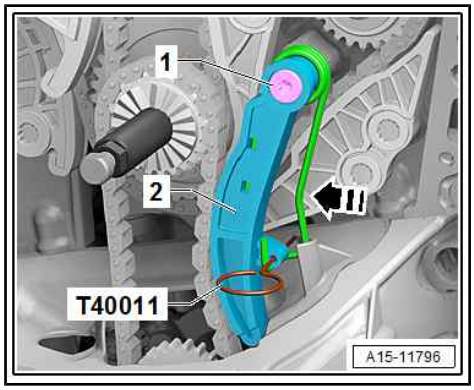

– Remove bolts -arrows-.

Protected by copyright. Copying for private or co not
permitted unless authorised by AUDI AG. AUDI A ity
with respect to the correctness of information in

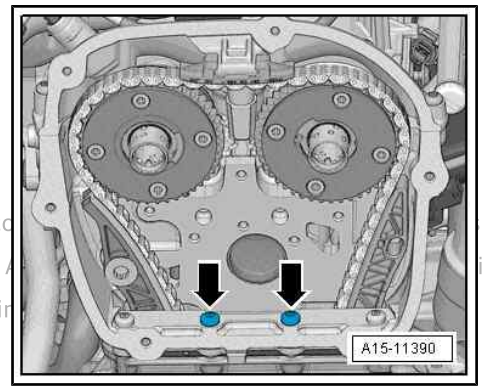

– Bolt lever - T40243- onto cylinder head -bottom arrows-.
– Compress and hold circlip -1- for chain tensioner.
– Push lever - T40243- slowly in direction of -arrow- and hold in place.
• This will press the chain tensioner back.

Note:

The chain tensioner is oil-damped and can therefore only be pressed back slowly by applying constant pressure.

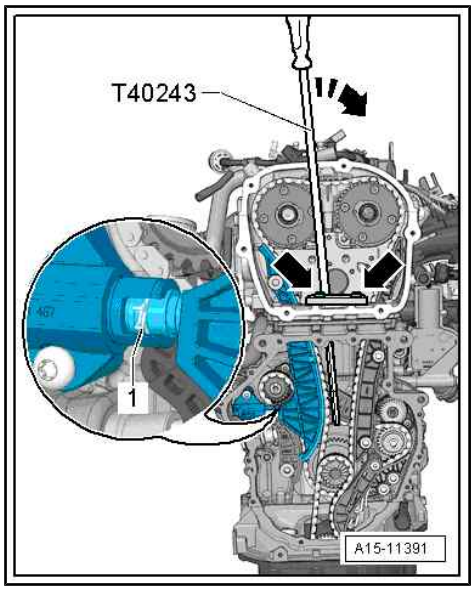

– Hold chain tensioner in position with locking tool - T40267- .
– Remove lever - T40243- .

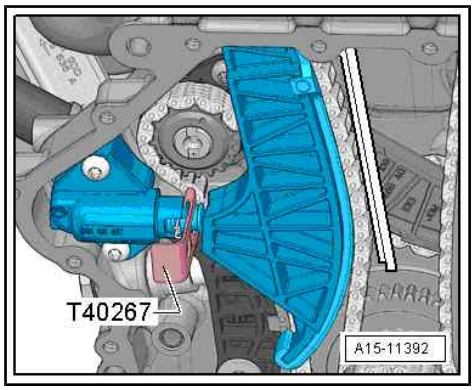

Protected by copyright. Copying for private or commercial purposes, in part or in
permitted unless authorised by AUDI AG. AUDI AG does not guarantee or accep
with respect to the correctness of information in this document. Copyright by A

– Bolt camshaft clamp - T40271/2- onto cylinder head and slide it into teeth of chain sprocket in direction of -arrow 2-. If necessary, rotate inlet camshaft using assembly tool - T40266- -1-.

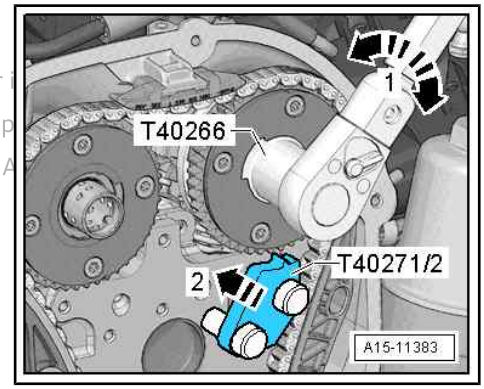

– Bolt camshaft clamp - T40271/1- onto cylinder head.

• A second mechanic is required for the following step.

– Turn exhaust camshaft in direction of -arrow A- using counterhold tool - T10172- and hold in place. Remove bolt -1- and guide tensioning rail -2- downwards.

– Continue turning exhaust camshaft clockwise -arrow A- until camshaft clamp - T40271/1- can be pressed into teeth -C- on chain sprocket in direction of -arrow B-.

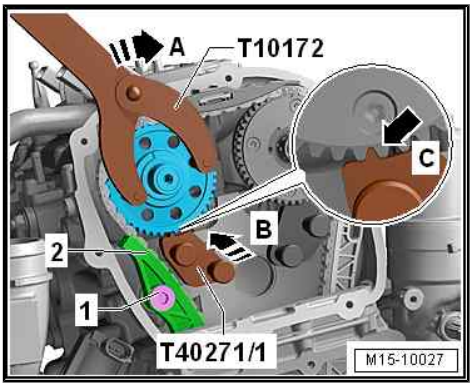

– Use screwdriver to release catch -arrow- and press off guide rail -1- towards front.

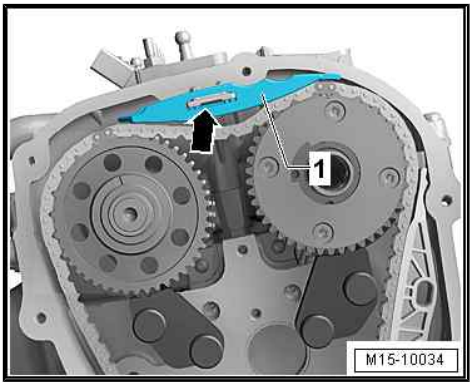

– Unscrew bolts -arrows- and remove chain tensioner -1-.

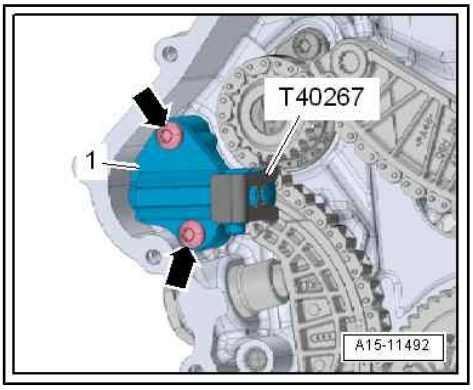

– Unscrew bolts -1- and remove guide rail -2-.

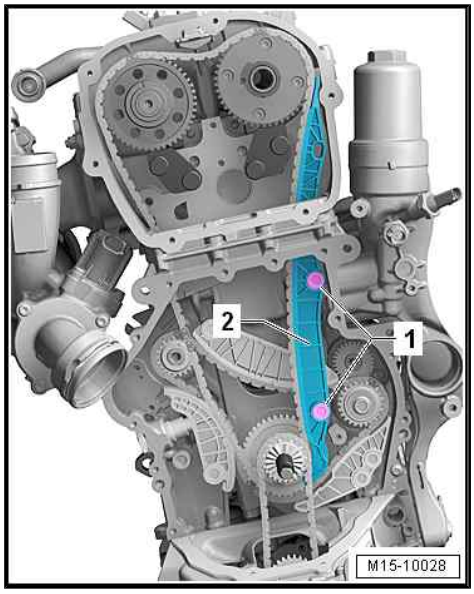

– Remove camshaft timing chain from camshaft sprockets and place onto camshaft journals -arrows-.

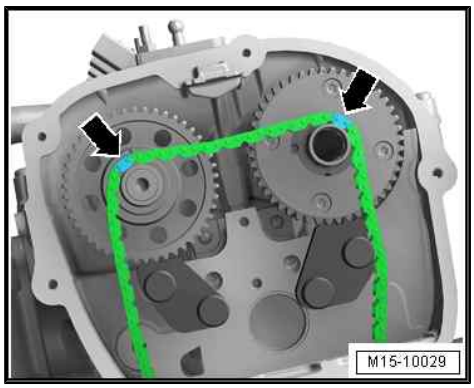

– Remove chain tensioner for balance shaft timing chain -1-.

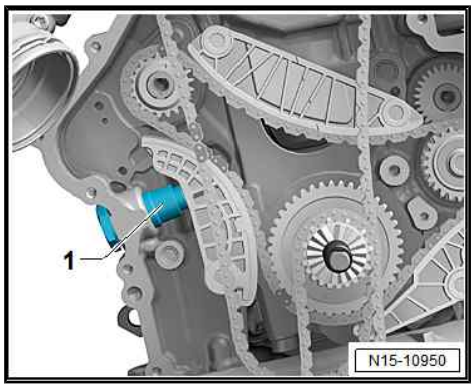

– Unscrew bolts -1-, and remove tensioning rail -2- and guide rails -3- and -4-.

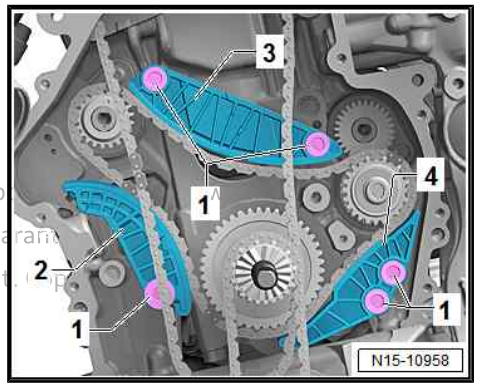

Protected by copyright. Copying for private or commercial purp
permitted unless authorised by AUDI AG. AUDI AG does not guaran
with respect to the correctness of information in this document.

– Loosen tensioning bolt -A- and remove clamping pin -B-.
– Remove three-part chain sprocket assembly; to do so, remove oil pump chain.
– Detach camshaft timing chain and drive chain for balance shaft.

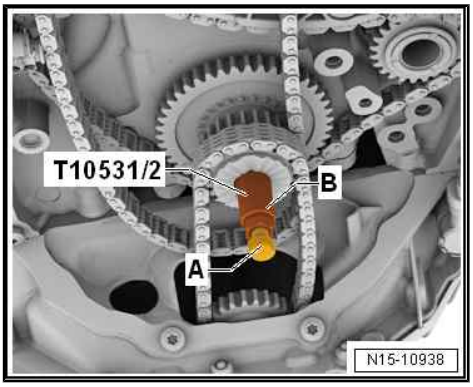

Installing

Protected by copyright. Copying for private or commercial purposes, in part or in whole, is not permitted unless authorized by AUDI AG. AUDI AG does not guarantee the correctness of information in this document. Copyright by AUDI AG.

– Check TDC position of crankshaft; flat surface of crankshaft -arrow- must be horizontal.
– Use a waterproof pen to mark cylinder block -1-, as shown.

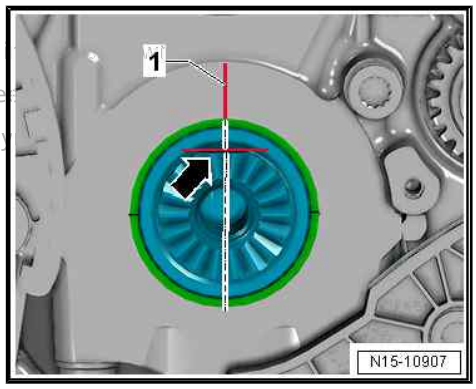

– Mark tooth -1- of three-part chain sprocket adjacent to marking -2- using waterproof pen.

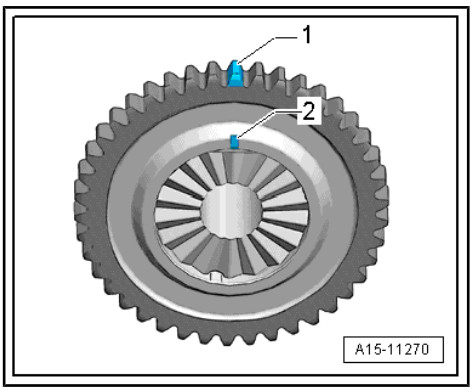

– Turn idler gear/balance shaft to markings -arrow- (do not slacken bolt -1-).

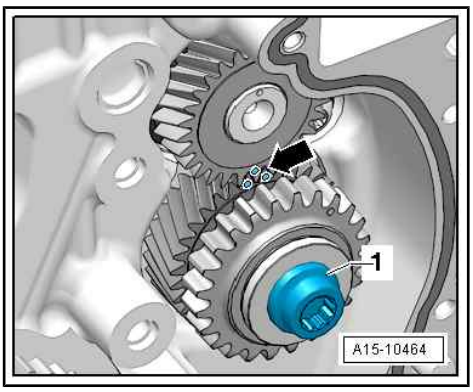

Note

- *The drive chain links with coloured markings must be positioned at the markings on the chain sprockets.*
- *There is no need to note the position of any other coloured links.*

– Fit drive chain for balance shafts; links with coloured markings -arrows- must be positioned at markings on chain sprockets.

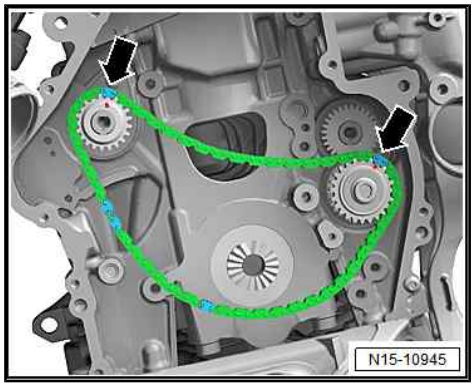

– Install guide rail -1- and tighten bolts -arrows-.

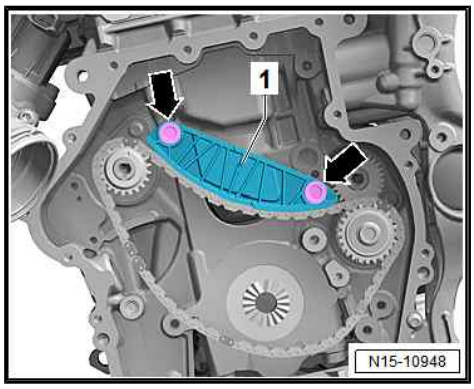

– Fit camshaft timing chain so that markings -arrows- are positioned on camshaft journals.

Protected by copyright. Copying for private or commercial purposes, in
permitted unless authorised by AUDI AG. AUDI AG does not guarantee
with respect to the correctness of information in this document. Copyri

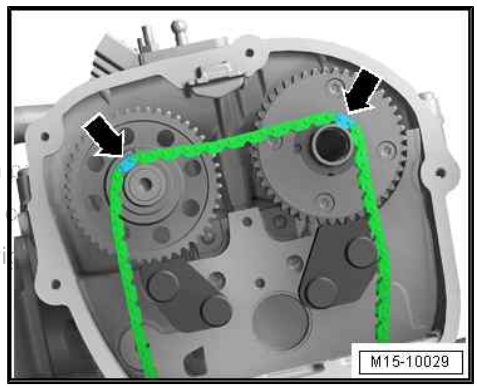

– Fit oil pump chain onto three-part chain sprocket assembly.
– Swivel three-part chain sprocket assembly towards engine in direction of -arrow- and fit on crankshaft. The marks -arrows- must align.

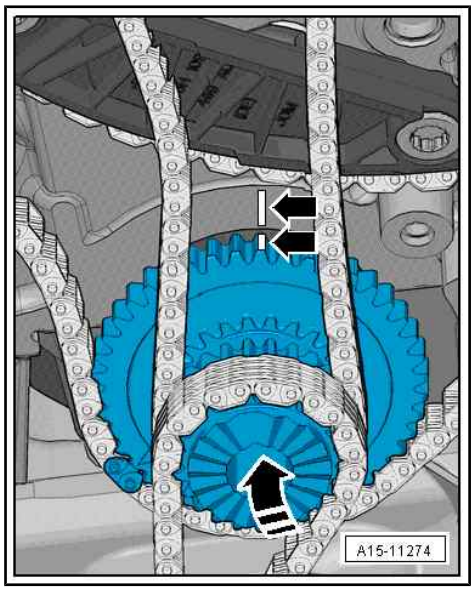

1. Screw clamping pin - T10531/2- into crankshaft and hand-tighten.
2. Attach turning-over tool - T10531/3- . Screw on flange nut - T10531/4- and hand-tighten. Move turning-over tool back and forth slightly using open-end spanner, 32 mm; at the same time, tighten flange nut until chain sprocket is firmly seated on teeth of crankshaft. Now (and not before) tighten tensioning bolt -A-.

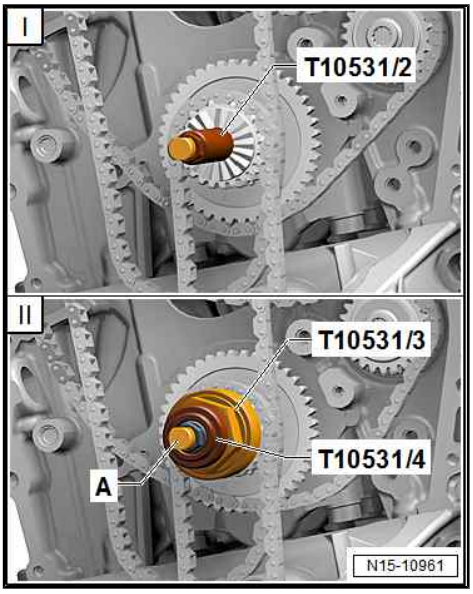

– Position link of drive chain for balance shafts with coloured marking -arrow- at marking on three-part chain sprocket assembly. Install tensioning rail -1- and guide rail -2-, and tighten bolts -3-.

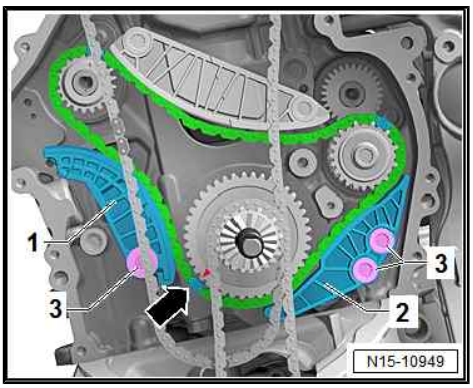

– Install chain tensioner -1-.

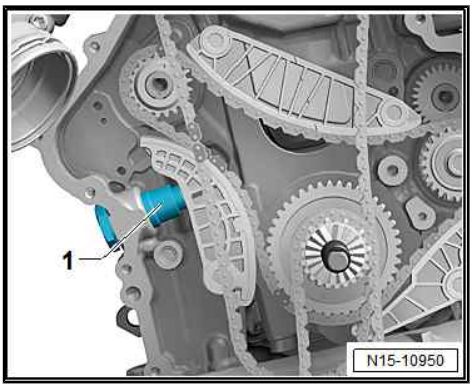

– Check setting again; links with coloured markings -arrows- must be positioned at markings on chain sprockets.

Protected by copyright. Copying for private or commercial p
permitted unless authorised by AUDI AG. AUDI AG does
with respect to the correctness of information in this do

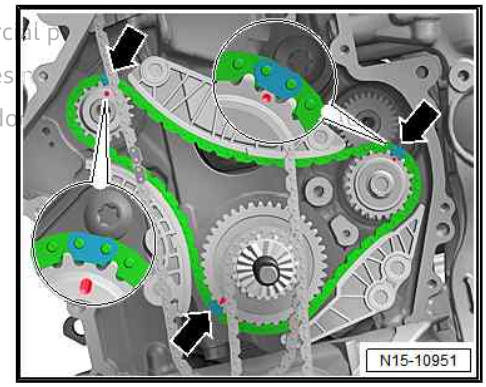

– Fit camshaft timing chain onto inlet camshaft, exhaust camshaft and crankshaft. Position links with coloured markings -arrows- at markings on chain sprockets.

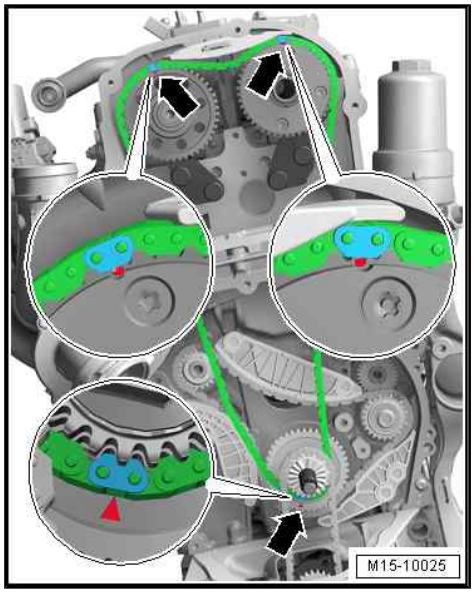

– Install guide rail -2- and tighten bolts -1-.

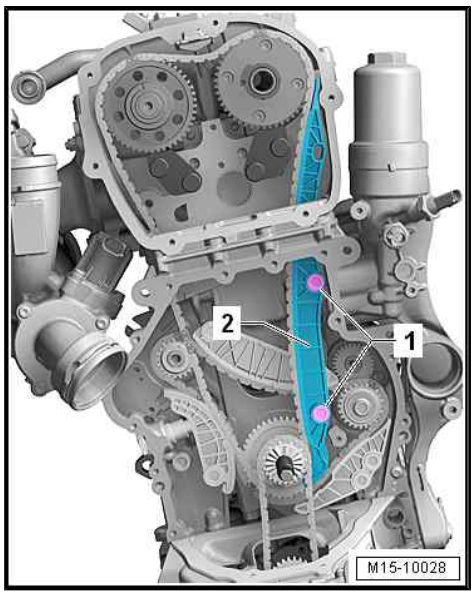

– Install top guide rail -arrow-.

A second mechanic is required for the following step.

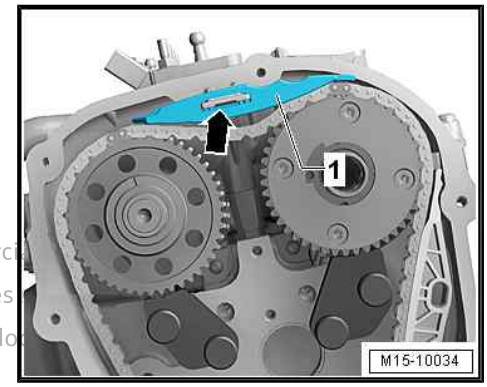

Protected by copyright. Copying for private or commerci
permitted unless authorised by AUDI AG. AUDI AG does
with respect to the correctness of information in this do

– Use counterhold tool - T10172 A- to turn exhaust camshaft slightly in direction of -arrow A- and slide camshaft clamp - T40271/1- out of teeth on chain sprocket in direction of -arrow B-.

– Release camshaft in direction of -arrow C- until timing chain is in contact with guide rail -1-. Hold camshaft in this position, install tensioning rail -2- and tighten bolt -3-.

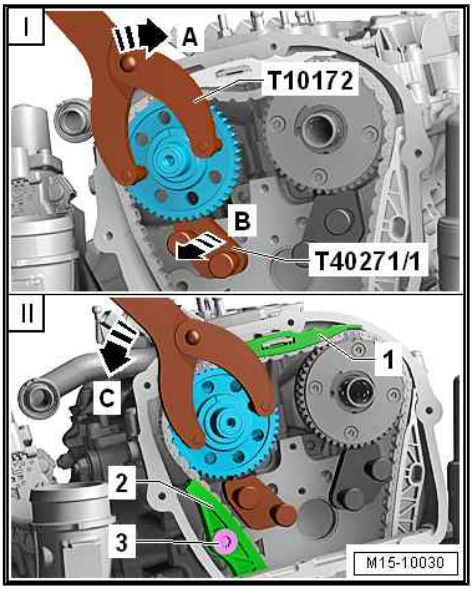

– Install chain tensioner -1- and tighten bolts -arrows-.

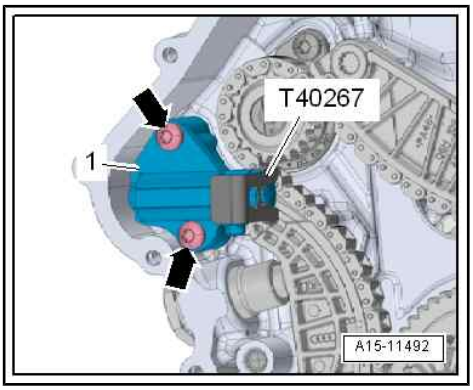

– Turn inlet camshaft in direction of -arrow 1- using assembly tool - T40266- . Slide camshaft clamp - T40271/2- out of teeth on chain sprocket in direction of -arrow 2- and release camshaft.

– Remove camshaft clamps - T40271/1- and -T40271/2- .

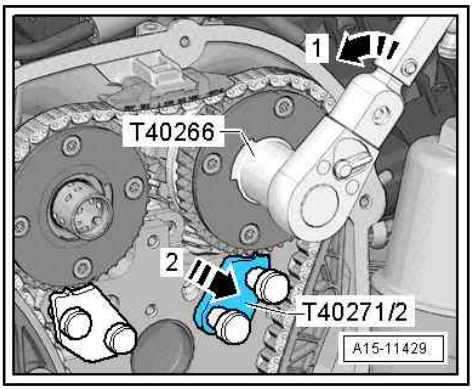

Protected by copyright. Copying for private or commercial purposes, in part or in whole, is not permitted unless authorised by AUDI AG. AUDI AG does not guarantee or accept any liability with respect to the correctness of information in this document. Copyright by AUDI AG.

– Check setting; links with coloured markings -arrows- must be positioned at markings on chain sprockets.

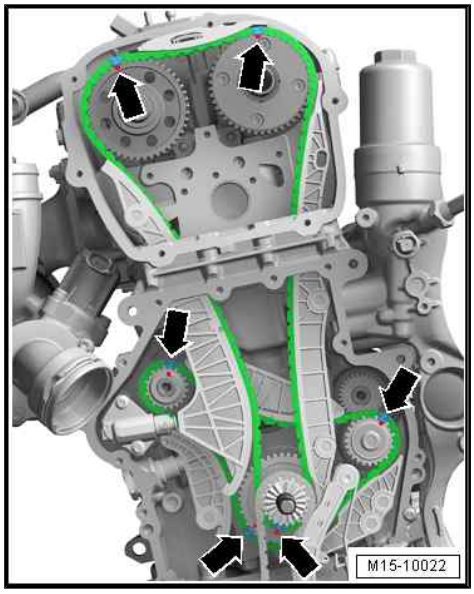

– Install chain tensioner -2- and tighten bolt -1-. Remove locking pin - T40011- ; retainer for oil pump chain tensioner must come into contact with opening -arrow- on sump (top section).

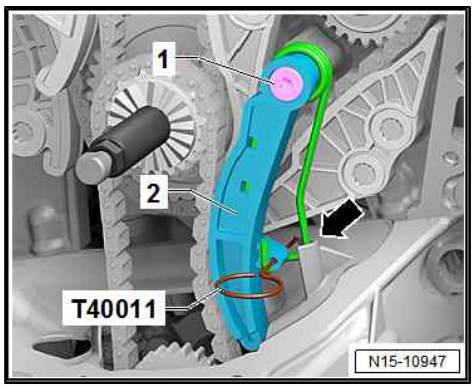

– Fit and tighten bolts -arrows-. Tightening torque
⇒ Item 4 (page 126)

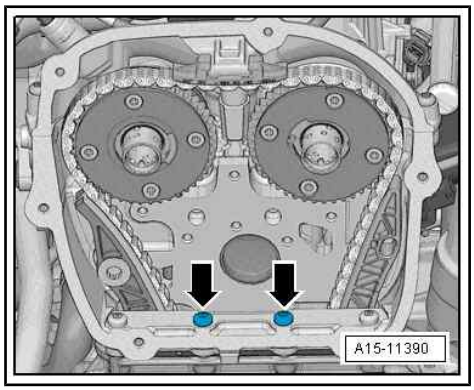

– Lubricate hole -arrow- with engine oil.

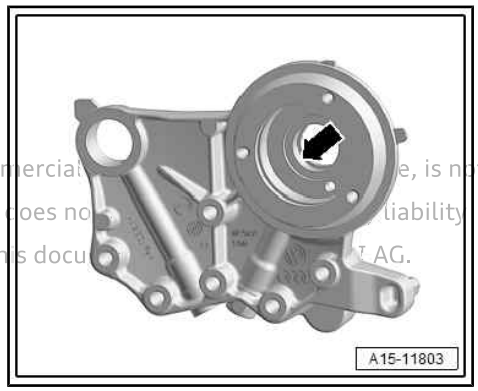

Protected by copyright. Copying for private or commercial use, is not permitted unless authorised by AUDI AG. AUDI AG does not accept liability with respect to the correctness of information in this document. © AUDI AG.

- Carefully attach bearing saddle without tilting it - risk of damage.

– Attach bearing saddle and screw in bolts -arrows- hand-tight.

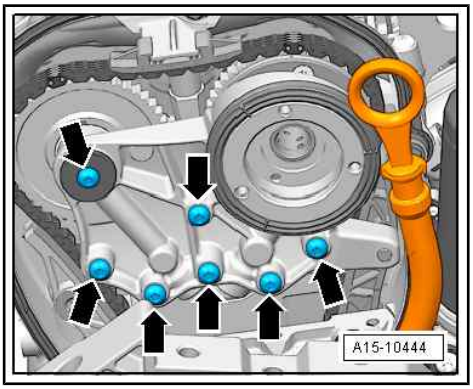

– Remove locking tool - T40267- .

– Tighten bolts for bearing saddle ⇒ page 77 .

– Install timing valve ⇒ Item 7 (page 76) .

– Turn the engine carefully at least 2 rotations to ensure that none of the valves make contact when the starter is operated.

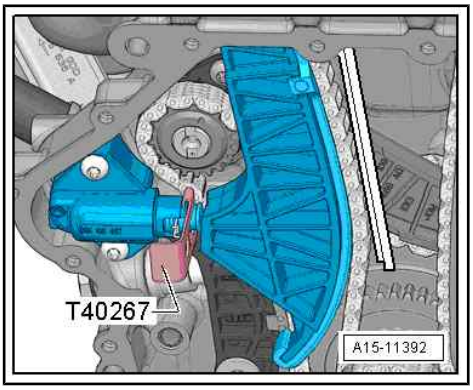

Note:

Due to the ratio, the timing chain links with coloured markings are no longer aligned after the engine has been turned.

Remaining installation steps are carried out in reverse sequence; note the following:

– Detach turning-over tool and install timing chain cover (bottom) ⇒ page 67 .

– Install timing chain cover (top) ⇒ page 65 .

Learnt values for chain elongation must be re-adapted after removing or renewing components of the chain drive.

– Connect ⇒ Vehicle diagnostic tester.

– Select `Diagnosis` mode and then `Start diagnosis`.

– Choose `Select own test` tab and select following options one after the other:

- ♦ `Drive train`
- ♦ `Select engine code and engine`
- ♦ `01 - Self-diagnosis compatible systems`
- ♦ `01 - Engine electronics`
- ♦ `01 - Engine electronics, functions`
- ♦ `01 - Chain elongation adaption diagnosis`

Tightening torques

- ♦ ⇒ “2.1.2 Exploded view - camshaft timing chain, engine with one camshaft adjuster”, page 76
- ♦ ⇒ “2.2 Exploded view - drive chain for balance shaft”, page 77
- ♦ ⇒ General body repairs, exterior; Rep. gr. 66 ; Noise insulation; Exploded view - noise insulation

Protected by copyright. Copying for private or commercial purposes, in part or in whole, is not permitted unless authorised by AUDI AG. AUDI AG does not guarantee or accept any liability with respect to the correctness of information in this document. Copyright by AUDI AG.

2.5 Removing and installing drive chain for balance shaft

⇒ “2.5.1 Removing and installing drive chain for balance shaft - engine with two camshaft adjusters”, page 118

⇒ “2.5.2 Removing and installing drive chain for balance shaft - engine with one camshaft adjuster”, page 118

2.5.1 Removing and installing drive chain for balance shaft - engine with two camshaft adjusters

Protected by copyright. Copying for private or commercial purposes, in part or in whole, is not permitted unless authorised by AUDI AG. AUDI AG does not guarantee or accept any liability with respect to the correctness of information in this document. Copyright by AUDI AG.

Engine with two camshaft adjusters
⇒ “1.2 Engine versions”, page 1

The procedure “Removing and installing drive chain for balance shaft” can be found in the chapter “Removing and installing camshaft timing chain”
⇒ “2.4.1 Removing and installing camshaft timing chain - engine with two camshaft adjusters”, page 90 .

2.5.2 Removing and installing drive chain for balance shaft - engine with one camshaft adjuster

Engine with one camshaft adjuster
⇒ “1.2 Engine versions”, page 1

Removing

– Remove camshaft timing chain
⇒ “2.4.2 Removing and installing camshaft timing chain - engine with one camshaft adjuster”, page 104 .

– Remove bolts -arrows-.

– Remove chain tensioner -1- for camshaft timing chain.

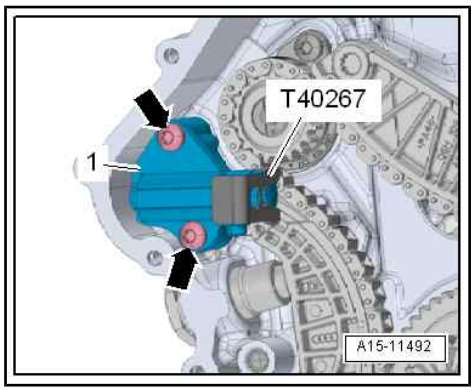

– Remove guide rail -3-.

– Detach drive chain for balance shafts.

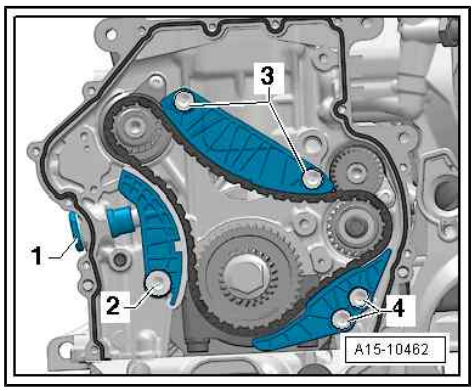

Installing

– Turn idler gear/balance shaft to markings -arrow- (do not slacken bolt -1-).

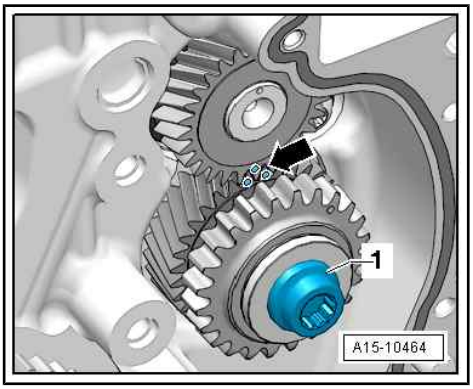

Note

The links of the drive chain for balance shafts with coloured markings must be positioned at the markings on the chain sprockets.

– Fit drive chain for balance shafts; links with coloured markings -arrows- must be positioned at markings on chain sprockets.

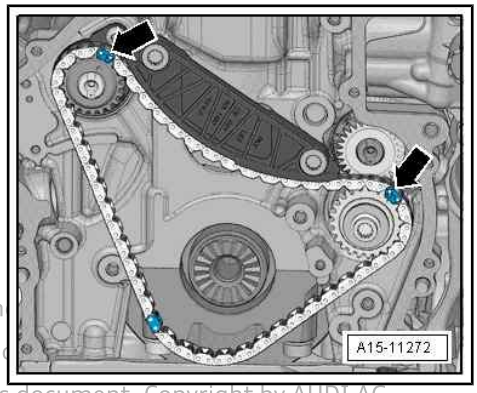

Protected by copyright. Copying for private or comm
permitted unless authorised by AUDI AG. AUDI AG d
with respect to the correctness of information in this document. Copyright by AUDI AG.

– Fit guide rail for timing chain and tighten bolts -3-.

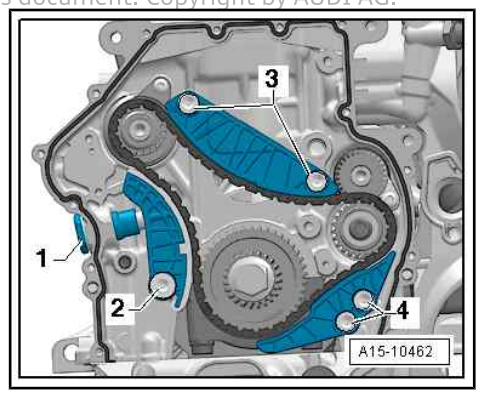

– Install chain tensioner -1- for camshaft timing chain.

– Install camshaft timing chain ⇒ page 90 .

Tightening torques

- ⇒ “2.1.2 Exploded view - camshaft timing chain, engine with one camshaft adjuster”, page 76
- ⇒ “2.2 Exploded view - drive chain for balance shaft”, page 77

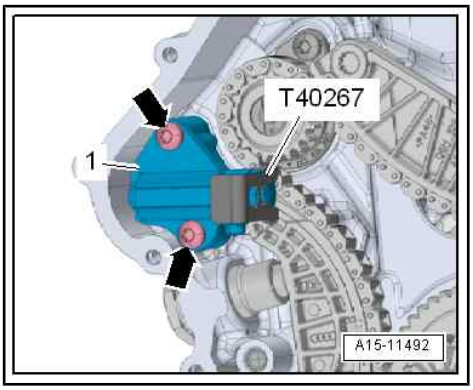

2.6 Checking timing chain

If an elongated camshaft timing chain is suspected as a result of a complaint (such as noises), the timing chain can be checked as described below.

Special tools and workshop equipment required

♦ Ratchet wrench (21 mm) - T40263-

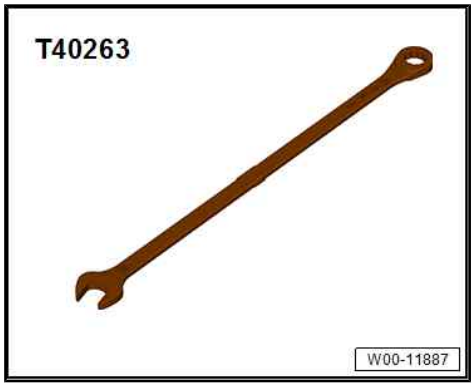

♦ Adapter - T40314-

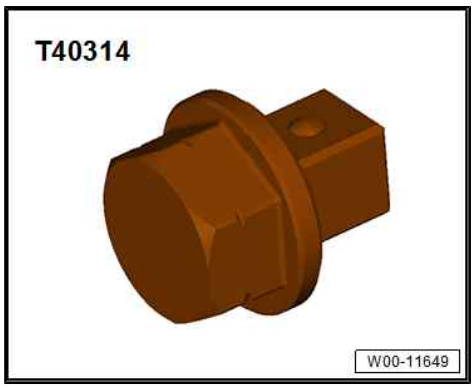

Procedure

Preparatory work may be necessary depending on model ⇒ 4-cylinder direct injection engine (1.8, 2.0 ltr. 4-valve TFSI); Rep. gr. 15 ; Chain drive; Checking timing chain .

– Remove sealing plug -arrow-. Sealing plug must be renewed.

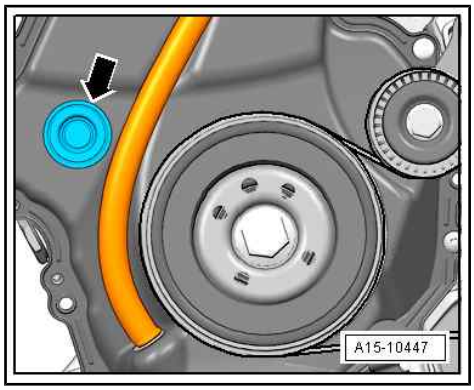

NOTICE

Risk of engine damage if valve gear drive slips

– **Only turn engine in normal direction of rotation.**

– Turn crankshaft only in direction of normal engine rotation -arrow- using ratchet wrench (21 mm) - T40263- , adapter - T40314- and socket (24 mm).

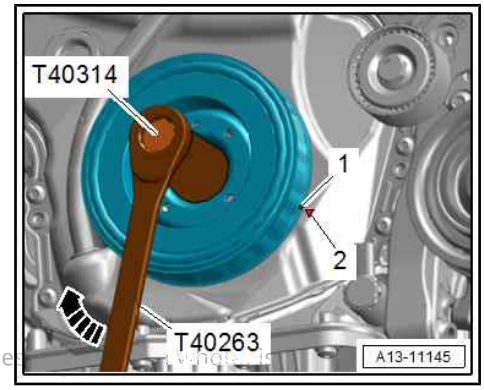

Protected by copyright. Copying for private or commercial purposes, in part, is not permitted unless authorised by AUDI AG. AUDI AG does not guarantee or accept any liability with respect to the correctness of information in this document. Copyright by AUDI AG.

– Turn crankshaft in direction of engine rotation until piston of chain tensioner has extended as far as it will go in direction of -arrow-.

– Count visible teeth of piston.

Note:

Visible teeth are all teeth to the right of the chain tensioner housing -arrow-.

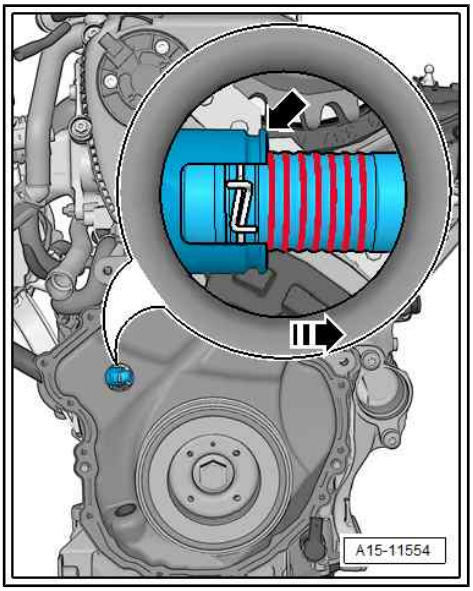

- The timing chain must not be renewed if six or fewer teeth are visible.
- If six or fewer teeth are visible and there is an entry in the event memory: Adapt chain elongation (⇒ Vehicle diagnostic tester , `01 - Chain elongation adaption diagnosis`) and delete event memory.
- If seven or more teeth are visible: Renew camshaft timing chain
⇒ "2.4 Removing and installing camshaft timing chain", page 90 .

Additional work depending on model ⇒ 4-cylinder direct injection engine (1.8, 2.0 ltr. 4-valve TFSI); Rep. gr. 15 ; Chain drive; Checking timing chain

2.7 Checking valve timing

Special tools and workshop equipment required

- Spark plug spanner - 3122B-

Protected by copyright. Copying for private or commercial purposes, in part or in whole, is not permitted unless authorised by AUDI AG. AUDI AG does not guarantee or accept any liability with respect to the correctness of information in this document. Copyright by AUDI AG.

- Dial gauge set, 4-part - VAS 6341-

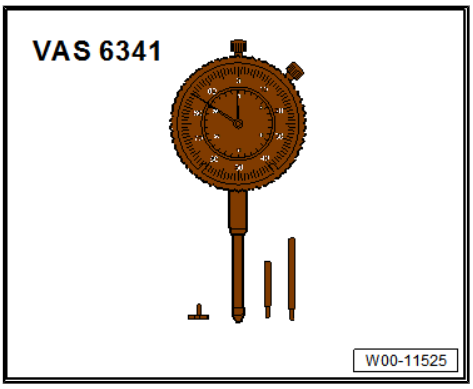

- Adapter for dial gauge - T10170 A-

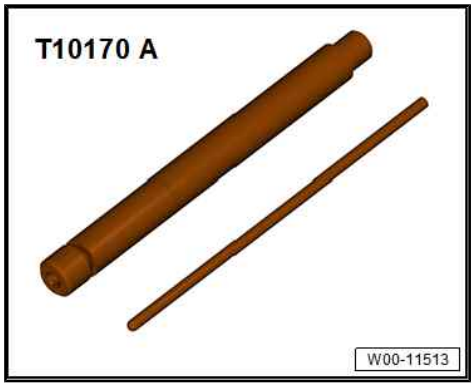

- Ratchet wrench (21 mm) - T40263-

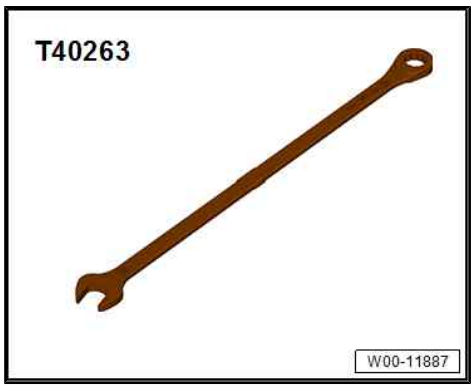

- Adapter - T40314-

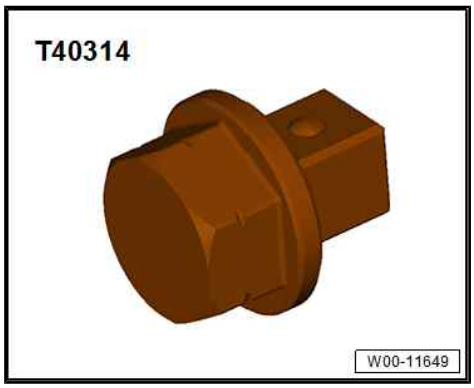

Procedure

Preparatory work may be necessary depending on model ⇒ 4-cylinder direct injection engine (2.0 ltr. 4-valve TFSI); Rep. gr. 15 ; Chain drive; Checking timing chain .

– Remove timing chain cover (top)
  ⇒ “1.2.1 Removing and installing timing chain cover (top) - engine with two camshaft adjusters”, page 65 .
– If not already removed, remove noise insulation ⇒ General body repairs, exterior; Rep. gr. 66 ; Noise insulation; Exploded view - noise insulation .

Protected by copyright. Copying for private or commercial purposes, in part or in whole, is not permitted unless authorised by AUDI AG. AUDI AG does not guarantee or accept any liability with respect to the correctness of information in this document. Copyright by AUDI AG.

– Apply ratchet wrench (21 mm) - T40263- , adapter - T40314- and socket (24 mm) to vibration damper to turn crankshaft in direction of normal engine rotation until markings -1, 2- are positioned almost at top.

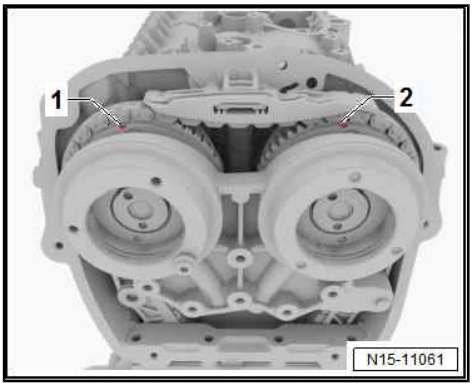

– Remove spark plug for cylinder 1 with spark plug socket and extension - 3122B- .

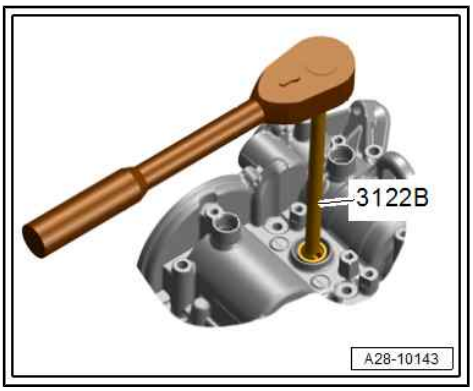

– Screw dial gauge adapter - T10170/A- into spark plug thread as far as stop.
– Insert dial gauge from dial gauge set, 4-part - VAS 6341- with extension - T10170A/1- as far as stop and secure with locking nut -arrow-.
– Turn crankshaft slowly in normal direction of engine rotation until needle in dial gauge has reached maximum position. When needle has reached maximum position (i.e. turning point in dial gauge), piston is at »TDC«.

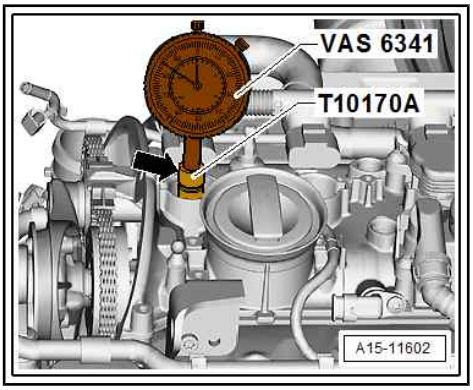

Note:

♦ If the crankshaft has been turned beyond the “TDC” position, it must be turned two rotations further in normal direction of engine rotation. Do not turn engine in opposite direction to normal rotation.

♦ The combination of ratchet wrench (21 mm) - T40263- , adapter - T40314- and socket (24 mm) can be fitted onto the vibration damper better than the counterhold tool - T10355- described below.

Protected by copyright. Copying for private or commercial purposes, in part or in whole, is not permitted unless authorised by AUDI AG. AUDI AG does not guarantee or accept any liability with respect to the correctness of information in this document. Copyright by AUDI AG.

With markings on cylinder head cover

- Notch on vibration damper must align with arrow marking on timing chain cover (bottom) -arrow-.
- Markings -1- on camshaft chain sprockets must be positioned opposite markings -2 and 3- on cylinder head.

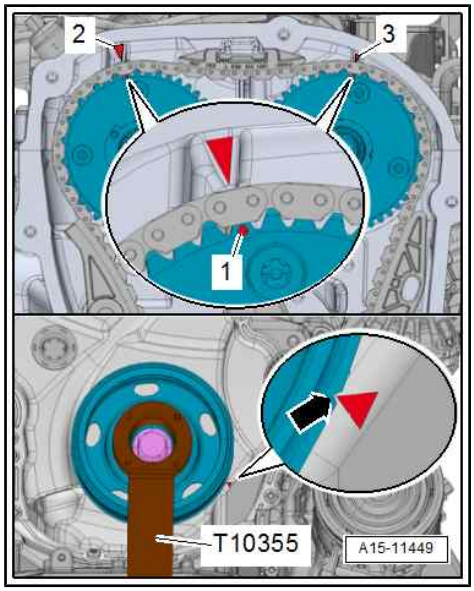

Without markings on cylinder head cover

- Notch on vibration damper and marking on cover for timing chains (bottom) must be aligned -arrow-.
- The markings -1- on the camshaft chain sprockets must face upwards.

Protected by copyright. Copying for private or commercia
permitted unless authorised by AUDI AG. AUDI AG does n
with respect to the correctness of information in this doc

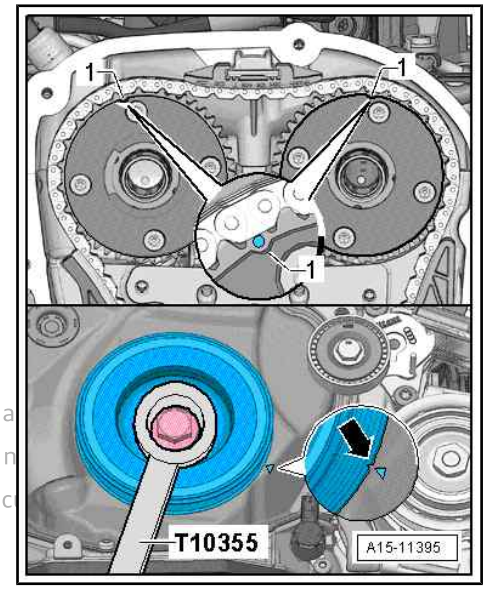

– Measure distance from edge -1- to marking -2- on exhaust camshaft chain sprocket.
- Specification: 74 ... 77 mm

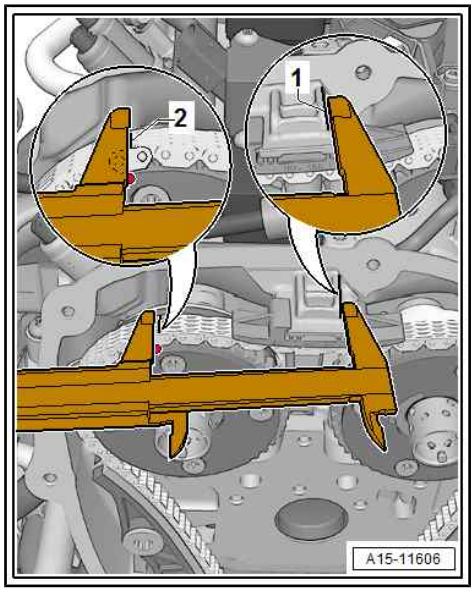

– If specification is obtained, measure distance between marking on exhaust camshaft chain sprocket -3- and marking on inlet camshaft chain sprocket -4-.

• Specification: 124 ... 127 mm

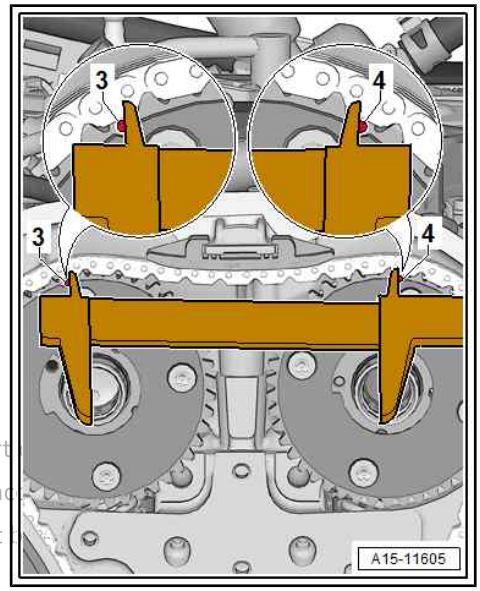

Note

If the timing chain is one tooth out of position, this results in a deviation of approx. 6 mm from specification. The timing chain must be refitted if it is not in the correct position.

Additional work depending on model ⇒ 4-cylinder direct injection engine (2.0 ltr. 4-valve TFSI); Rep. gr. 15 ; Chain drive; Checking timing chain

Protected by copyright. Copying for private or commercial purposes, in part
permitted unless authorised by AUDI AG. AUDI AG does not guarantee or ac
with respect to the correctness of information in this document. Copyright

Tightening torques

♦ ⇒ General body repairs, exterior; Rep. gr. 66 ; Noise insulation; Exploded view - noise insulation

3 Cylinder head

⇒ “3.1 Exploded view - cylinder head”, page 126

⇒ “3.2 Removing and installing cylinder head”, page 129

⇒ “3.3 Checking compression”, page 133

3.1 Exploded view - cylinder head

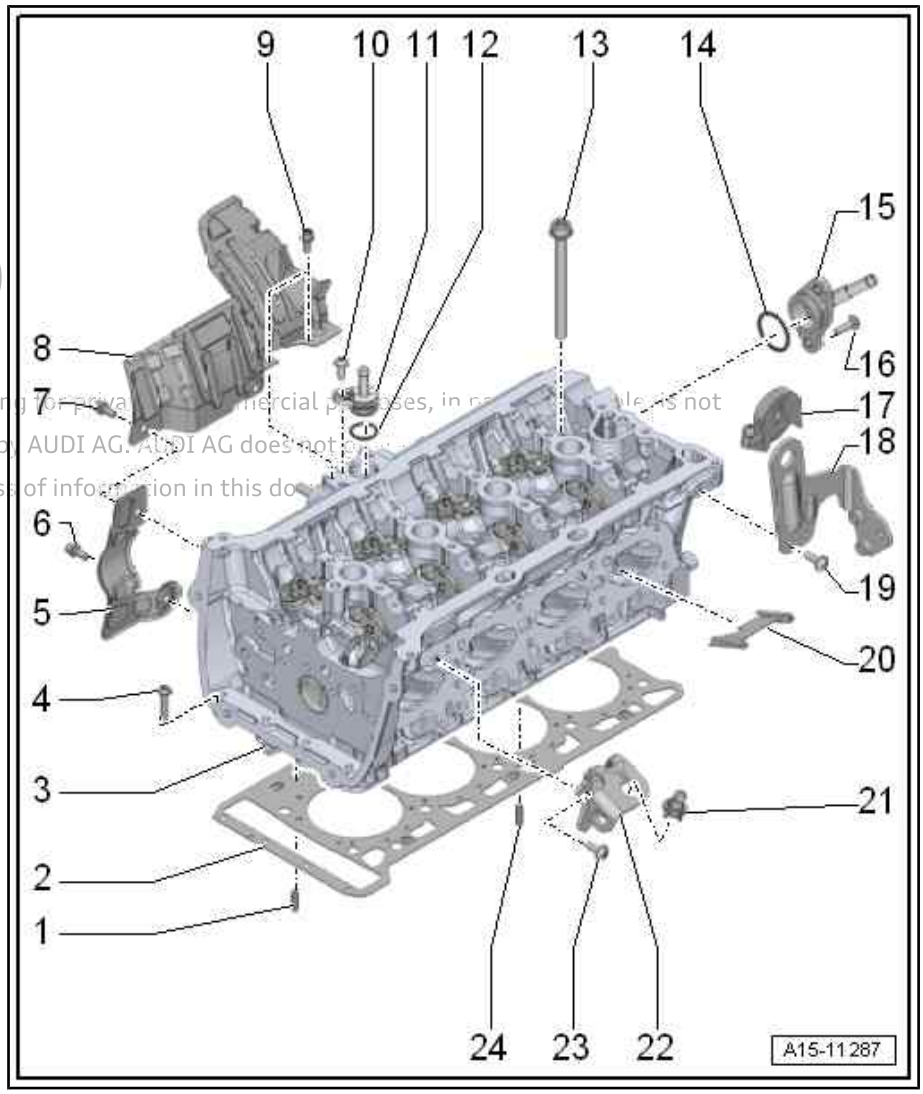

1 - Dowel pin

- ❑ 2x

2 - Cylinder head gasket

- ❑ Renewing ⇒ page 129
- ❑ Installation position: part number must face cylinder head
- ❑ If renewed, change coolant and engine oil
- ❑ After renewal, perform adaption ⇒ Vehicle diagnostic tester 01 - Engine electronics, functions, 01 - Chain elongation adaption diagnosis

Protected by copyright. Copying for private or commercial purposes, in part or in whole, is not permitted unless authorised by AUDI AG. AUDI AG does not give any warranty with respect to the correctness of information in this document.

3 - Cylinder head

- ❑ Removing and installing ⇒ page 129
- ❑ Checking for distortion ⇒ page 128
- ❑ Do not machine sealing surface (top)
- ❑ Cylinder head and cylinder head cover must be renewed together
- ❑ If renewed, change coolant and engine oil
- ❑ After removal or renewal, perform adaption ⇒ Vehicle diagnostic tester 01 - Engine electronics, functions, 01 - Chain elongation adaption diagnosis

4 - Bolt

- ❑ Renew after removing
- ❑ Slackening ⇒ page 128
- ❑ Tightening torque and sequence ⇒ page 128

5 - Heat shield

- ❑ Optional equipment

6 - Bolt

- ❑ 9 Nm

7 - Bolt

- ❑ 9 Nm

8 - Heat shield

- ❑ Different versions available; for allocation refer to ⇒ Electronic parts catalogue

9 - Bolt

- ❑ 9 Nm

10 - Bolt

- ❑ 9 Nm

11 - Connection

- ❑ For coolant hose

12 - O-ring

- ❑ Renew after removing
- ❑ Lubricate with coolant

13 - Bolt

- ❑ Renew after removing
- ❑ Slackening ⇒ page 128
- ❑ Tightening torques and sequence ⇒ page 128

14 - O-ring

- ❑ Renew after removing
- ❑ Lubricate with coolant

15 - Connection

- ❑ For coolant hose

16 - Bolt

- ❑ 9 Nm

Protected by copyright. Copying for private or commercial purposes, in part or in whole, is not permitted unless authorised by AUDI AG. AUDI AG does not guarantee or accept any liability with respect to the correctness of information in this document. Copyright by AUDI AG.

17 - Mounting

- ❑ For engine cover panel

18 - Engine lifting eye

19 - Bolt

- ❑ Renew after removing
- ❑ 10 Nm +90°

20 - Separating plate

21 - Ball stud

- ❑ For engine cover panel

22 - Engine lifting eye

23 - Bolt

- ❑ Renew after removing
- ❑ 10 Nm +90°

24 - Dowel pin

Slackening cylinder head bolts

– Remove bolts -arrows-.

– Loosen and remove cylinder head bolts in sequence -1 ... 10-.

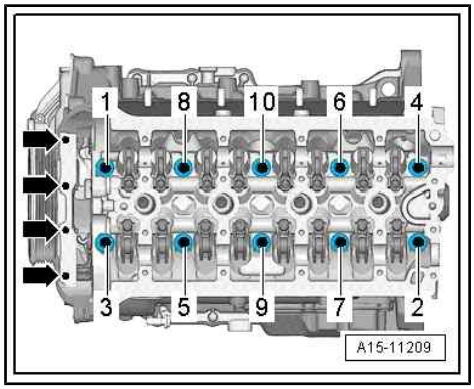

Tightening torques and sequence for cylinder head

- After removing, renew bolts tightened with specified tightening angle.
- Bolts - difference:
- Bolt without collar
- Bolt with collar -arrow-

– Tighten bolts in stages in the sequence shown:

Stage	Bolts	Tightening torques/angle specification
1.	-1 … 10-	Screw in by hand until contact is made
2.	-1 … 10-	Without collar: 40 Nm; with collar: 50 Nm (difference ⇒ page 128)
3.	-1 … 10-	Turn 90° further
4.	-1 … 10-	Turn 90° further
5.	-Arrows-	10 Nm
6.	-Arrows-	Turn 90° further

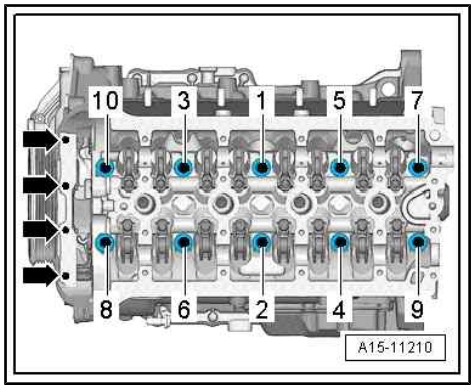

Checking cylinder head for distortion

– Use straight edge 500 mm - VAS 6075- and feeler gauge to measure cylinder head for distortion at several points.

♦ Max. permissible distortion: 0.05 mm

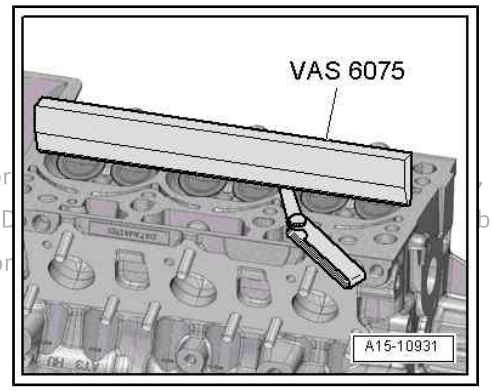

Protected by copyright. Copying for private or ... is not permitted unless authorised by AUDI AG. AUD... bility with respect to the correctness of informatio...

3.2 Removing and installing cylinder head

Special tools and workshop equipment required

- Spark plug spanner - 3122B-

- Engine bung set - VAS 6122-

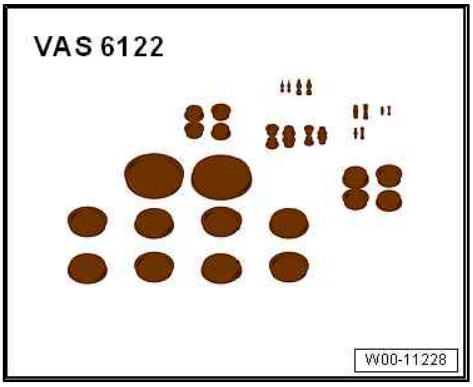

- Special wrench (Polydrive) - T10070-

- Bit XZN 12 - T40270-

- Blade scraper; blade width at least 40 mm (commercially available)

Protected by copyright. Copying for private or commercial purposes, in part or in whole, is not permitted unless authorised by AUDI AG. AUDI AG does not guarantee or accept any liability with respect to the correctness of information in this document. Copyright by AUDI AG.

Protected by copyright. Copying for private or commercial purposes, in part or in whole, is not permitted unless authorized by AUDI AG. AUDI AG does not guarantee or accept any liability with respect to the correctness of information in this document. Copyright by AUDI AG.

Removing

Preparatory work may be necessary depending on model ⇒ 4-cylinder direct injection engine (1.8, 2.0 ltr. 4-valve TFSI); Rep. gr. 15 ; Cylinder head; Removing and installing cylinder head .

– Unscrew spark plugs using spark plug socket and extension - 3122 B- .

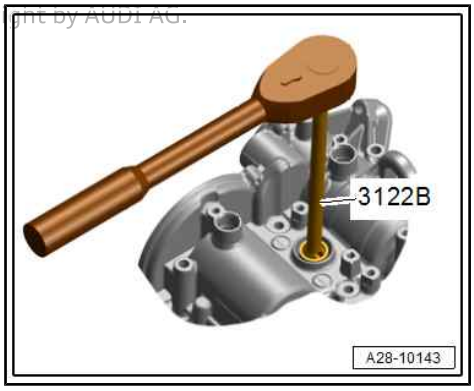

– Remove bolts -arrows-.

– Use special wrench (Polydrive) - T10070- or bit XZN 12 - T40270- to remove cylinder head bolts in the sequence -1 ... 10-.

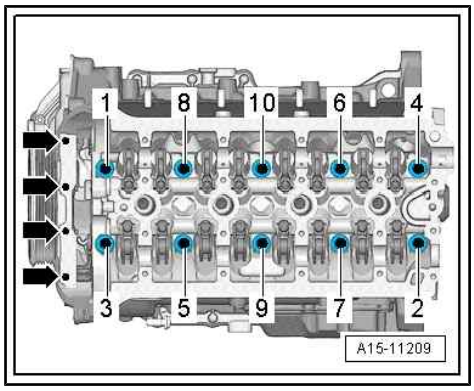

• All hose and wiring connections must be disconnected.

– Take off cylinder head.

– Place cylinder head onto soft surface (foam plastic).

• Seal off all open passages in the intake and exhaust system with clean cloths or plugs (thoroughly cleaned) from engine bung set - VAS 6122- .

Installing

NOTICE

Risk of damage to sealing surfaces if handled incorrectly.

– **Carefully remove sealant residue from cylinder head and cylinder block.**

- Do NOT use abrasive materials (sandpaper, sanding discs, sanding pads, abrasive web, wire wool, etc.).
- Sealing surface must not be raised.
- Dark discolouration does not have to be removed.
- When removing sealant residue, make sure none of the residue enters the open channels of the engine.
- Ensure that nearby workspaces are kept clean and that the abrasive materials listed above are not being used there.
- Use of non-approved abrasive materials can lead to subsequent damage to the turbocharger, conrod bearings, etc.

⚠ CAUTION

Risk of eye injury due to sealant residue.

– Put on safety goggles.

– Sealant residue may only be removed from the cylinder head and cylinder block using a commercially available blade scraper (blade width at least 40 mm).

– Remove loose residue with a lint-free cloth.

- No oil or coolant must be allowed to remain in the blind holes for the cylinder head bolts in the cylinder block.
- Carefully remove any remaining emery and abrasive material.
- Do not remove new cylinder head gasket from packaging until it is ready to be fitted.
- Handle the cylinder head gasket very carefully to prevent damage to the silicone coating or the indented area of the gasket.
- When installing an exchange cylinder head, the plastic protectors fitted to protect the open valves should not be removed until the cylinder head is ready to be fitted.
- After removing, renew bolts tightened with specified tightening angle.
- Renew self-locking nuts, as well as seals, gaskets and O-rings after removing.
- When installing an exchange cylinder head, the contact surfaces between roller rocker finger and cam must be oiled before installing the cylinder head cover.
- Secure all hose connections with correct type of hose clips (as original equipment) ⇒ Electronic parts catalogue .
- After fitting a new cylinder head or cylinder head gasket, change engine oil and coolant in entire cooling system.

Protected by copyright. Copying or distribution to third parties, in part or in whole, is not permitted unless authorised by AUDI AG. AUDI AG does not guarantee or accept any liability with respect to the correctness of information in this document. Copyright by AUDI AG.

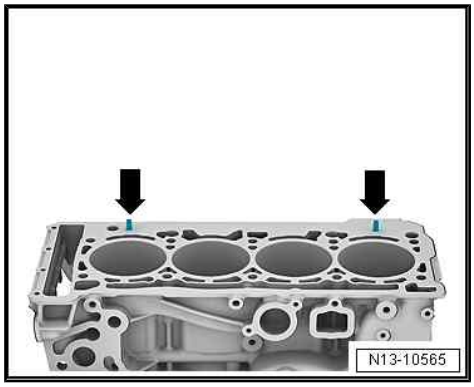

– Check that centring pins are fitted in cylinder block -arrows-.

– Place cylinder head gasket in position.

♦ Note installation position of cylinder head gasket. Part No. should be legible from inlet side.

– If crankshaft has been rotated: Set piston of cylinder 1 to top dead centre and then turn crankshaft 90° anti-clockwise back to “TDC” position.

– Fit cylinder head.

– Insert and hand-tighten cylinder head bolts.

– Tightening sequence for cylinder head ⇒ page 128

Note:

Cylinder head bolts do not have to be torqued down again later after repair work.

Remove engine mounting and engine support again if re-installed previously.

♦ ⇒ 4-cylinder direct injection engine (1.8, 2.0 ltr. 4-valve TFSI); Rep. gr. 10 ; Assembly mountings; Removing and installing engine mountings

♦ ⇒ 4-cylinder direct injection engine (1.8, 2.0 ltr. 4-valve TFSI); Rep. gr. 13 ; Cylinder block (pulley end); Removing and installing engine support

– Install camshafts ⇒ page 142 .

– Install spark plugs ⇒ page 295 .

– Change engine oil ⇒ page 200 .

– Change coolant ⇒ 4-cylinder direct injection engine (1.8, 2.0 ltr. 4-valve TFSI); Rep. gr. 19 ; Cooling system/coolant; Draining and filling cooling system .

Additional work depending on model ⇒ 4-cylinder direct injection engine (1.8, 2.0 ltr. 4-valve TFSI); Rep. gr. 15 ; Cylinder head; Removing and installing cylinder head

Learnt values for chain elongation must be re-adapted after removing or renewing cylinder head.

– Connect ⇒ Vehicle diagnostic tester.

– Select `Diagnosis` mode and then `Start diagnosis`.

– Choose `Select own test` tab and select following options one after the other:

♦ `Drive train`

♦ `Select engine code and engine`

♦ `01 - Self-diagnosis compatible systems`

♦ `01 - Engine electronics`

♦ `01 - Engine electronics, functions`

♦ `01 - Chain elongation adaption diagnosis`

Protected by copyright. Copying for private or commercial purposes, in part or in whole, is not permitted unless authorised by AUDI AG. AUDI AG does not guarantee or accept any liability with respect to the correctness of information in this document. Copyright by AUDI AG.

Tightening torques

♦ ⇒ Fig. ““Tightening torques and sequence for cylinder head”“ , page 128

3.3 Checking compression

Special tools and workshop equipment required

♦ Spark plug spanner - 3122 B-

Protected by copyright. Copying for private or commercial purposes, in part or in whole, is not permitted unless authorised by AUDI AG. AUDI AG does not guarantee or accept any liability with respect to the correctness of information in this document. Copyright by AUDI AG.

♦ Compression tester - V.A.G 1763-

♦ Adapter - V.A.G 1763/13- (not illustrated)

Test sequence

- Engine oil temperature at least 30 °C
- Battery voltage at least 12.7 V

– Remove ignition coils ⇒ page 296 .

– Unplug electrical connectors:

1 - For FSI injectors in cylinder head

2 - For MPI injectors in intake manifold

– Remove ignition coils ⇒ page 296 .

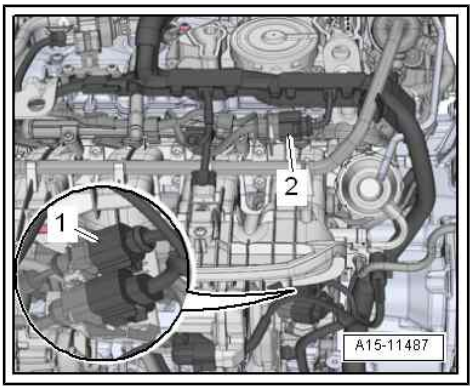

– Unscrew spark plugs using spark plug socket and extension - 3122 B- .

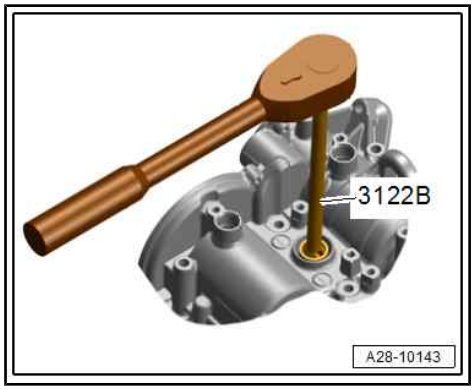

– Screw adapter - V.A.G 1381/13- into corresponding spark plug hole, as shown, and connect compression tester - V.A.G 1763- .

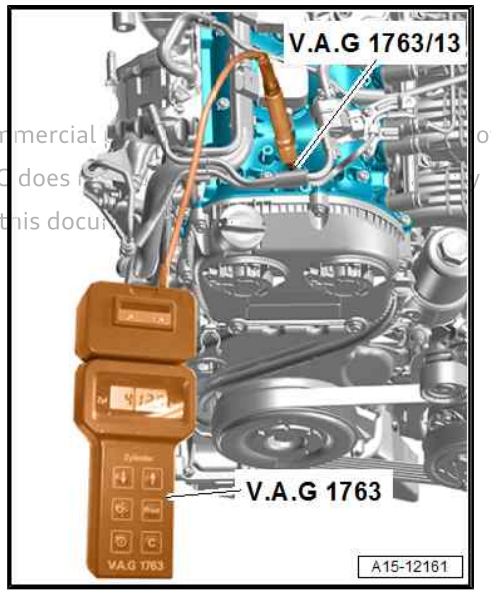

– Check compression pressure with compression tester - V.A.G 1763- (see ⇒ operating instructions for details of how to use tester).

– Press down accelerator pedal completely and simultaneously operate starter until pressure no longer increases on tester display.

– Repeat procedure on each cylinder.

Compression pressure	bar
When new	11.0 … 14.0
Wear limit	7.0
Maximum difference between cylinders	3.0

Assembling

– Install spark plugs ⇒ page 295 .

– Install ignition coils ⇒ page 296 .

– Erase any entries in engine control unit event memory resulting from testing ⇒ Vehicle diagnostic tester.

4 Valve gear

⇒ “4.1 Exploded view - valve gear”, page 135

⇒ “4.2 Removing and installing camshaft”, page 142

⇒ “4.3 Installing ball for slider”, page 182

⇒ “4.4 Removing and installing actuators for camshaft adjustment”, page 183

⇒ “4.5 Removing and installing camshaft control valve 1 N205 ”, page 184

⇒ “4.6 Removing and installing valve stem oil seals”, page 184

Copyright. Copying for private or commercial purposes, in part or in whole, is not permitted unless authorised by AUDI AG. AUDI AG does not guarantee or accept any liability with respect to the correctness of information in this document. Copyright by AUDI AG.

4.1 Exploded view - valve gear

⇒ “4.1.1 Exploded view - valve gear, engine with two camshaft adjusters”, page 135

⇒ “4.1.2 Exploded view - valve gear, engine with one camshaft adjuster”, page 139

4.1.1 Exploded view - valve gear, engine with two camshaft adjusters

Engine with two camshaft adjusters
⇒ “1.2.1 Camshaft adjuster”, page 1

Part I

Part II ⇒ page 138

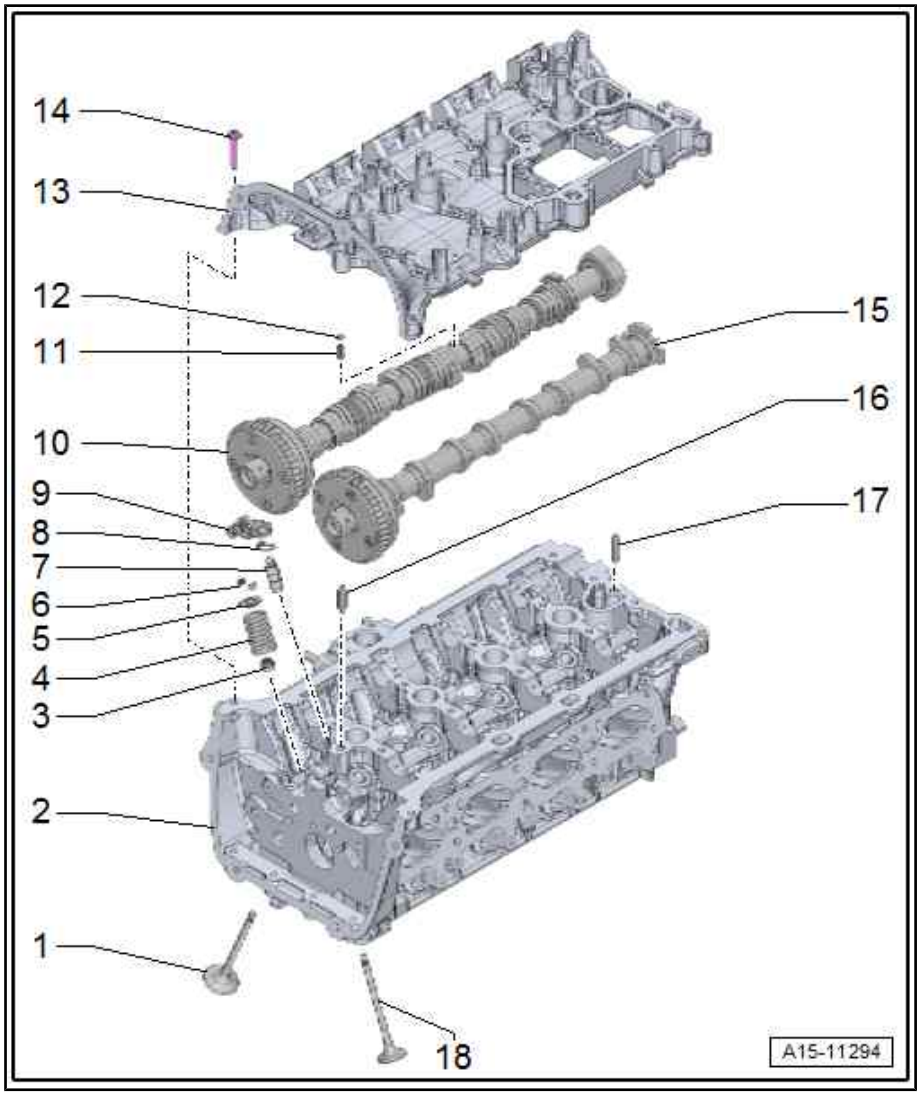

1 - Exhaust valve

- ❑ Do not machine, only grinding-in is permitted
- ❑ Valve dimensions ⇒ page 196
- ❑ Checking valve guides ⇒ page 195

2 - Cylinder head

- ❑ Do not machine sealing surface (top)
- ❑ Cylinder head and cylinder head cover must be renewed together

3 - Valve stem oil seal

- ❑ Different versions ⇒ page 138
- ❑ Renewing ⇒ page 184

4 - Valve spring

5 - Valve spring plate

6 - Valve cotters

7 - Hydraulic compensation element

- ❑ Do not interchange
- ❑ Lubricate contact surface

8 - Securing clip

- ❑ For hydraulic compensation element

9 - Roller rocker finger

- ❑ Removing and installing ⇒ "4.2 Removing and installing camshaft", page 142
- ❑ Mark installation position for re-installation
- ❑ Check roller bearings for ease of movement
- ❑ Lubricate contact surfaces before installing

10 - Exhaust camshaft

- ❑ Removing and installing ⇒ page 142
- ❑ Check radial clearance with Plastigauge (roller rocker fingers removed)
- ❑ Radial clearance: 0.024 ... 0.066 mm
- ❑ Runout: max. 0.04 mm
- ❑ After removal or renewal, perform adaption ⇒ Vehicle diagnostic tester `01 - Engine electronics, functions`, `01 - Chain elongation adaption diagnosis`

11 - Spring

- ❑ Not available as replacement part

12 - Ball

- ❑ For slider
- ❑ Installing ⇒ page 182

13 - Cylinder head cover

- ❑ With integrated camshaft bearings
- ❑ Clean sealing surface; machining not permitted
- ❑ Remove old sealant residues

Protected by copyright. Copying for private or commercial purposes, in part or in whole, is not permitted unless authorised by AUDI AG. AUDI AG does not guarantee or accept any liability with respect to the correctness of information in this document. Copyright by AUDI AG.

- ❑ Removing ⇒ “4.2 Removing and installing camshaft”, page 142
- ❑ Cylinder head and cylinder head cover must be renewed together
- ❑ After removal or renewal, perform adaption ⇒ Vehicle diagnostic tester `01 - Engine electronics, functions`, `01 - Chain elongation adaption diagnosis`

14 - Bolt

- ❑ Renew after removing
- ❑ Slackening ⇒ page 137
- ❑ Tightening sequence ⇒ page 137

15 - Inlet camshaft

- ❑ Removing and installing ⇒ page 142
- ❑ Check radial clearance with Plastigauge (roller rocker fingers removed)
- ❑ Radial clearance: 0.024 ... 0.066 mm
- ❑ Runout: max. 0.04 mm
- ❑ After removal or renewal, perform adaption ⇒ Vehicle diagnostic tester `01 - Engine electronics, functions`, `01 - Chain elongation adaption diagnosis`

16 - Dowel pin

17 - Dowel pin

18 - Inlet valve

- ❑ Do not machine, only grinding-in is permitted
- ❑ Valve dimensions ⇒ page 196
- ❑ Checking valve guides ⇒ page 195

Loosening cylinder head cover

– Loosen cylinder head cover bolts in the sequence -1 ... 6-.

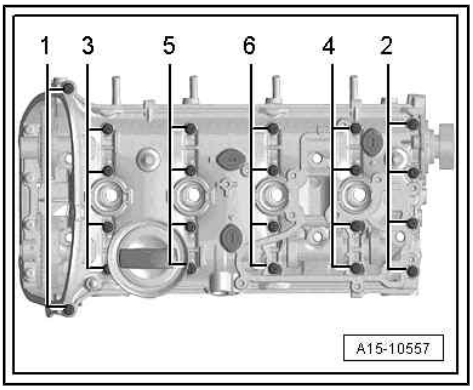

Tightening torques and sequence for cylinder head cover

- After removing, renew bolts tightened with specified tightening angle.
- Take care to keep cylinder head cover straight.

– Tighten bolts in stages in the sequence shown:

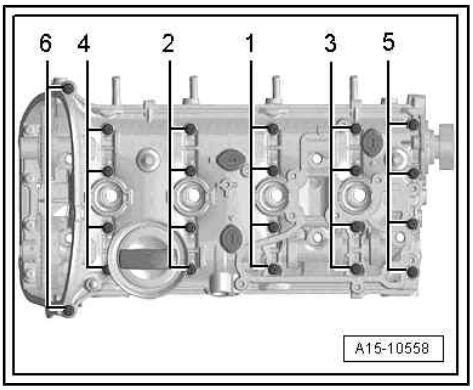

Stage	Bolts	Tightening torques/angle specification
1.	-1 … 6-	Screw in by hand in several stages until contact is made
2.	-1 … 6-	8 Nm
3.	-1 … 6-	Turn 90° further

Protected by copyright. Copying for private or commercial purposes, in part or in whole, is not permitted unless authorised by AUDI AG. AUDI AG does not guarantee or accept any liability with respect to the correctness of information in this document. Copyright by AUDI AG.

Different versions of valve stem oil seal

A - Valve stem oil seal with one sealing lip -A-

- For inlet and exhaust sides

B - Valve stem oil seal with two sealing lips -B-

- Only for exhaust side on some engines; for allocation refer to ⇒ Electronic parts catalogue

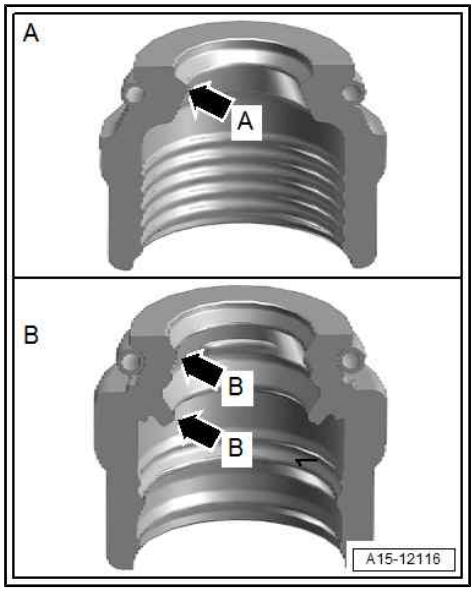

Part II

Part I ⇒ page 135

1 - Cylinder head

- ❑ Do not machine sealing surface (top)
- ❑ Cylinder head and cylinder head cover must be renewed together

2 - O-ring

- ❑ Check for damage
- ❑ Not available separately; supplied with ⇒ Item 3 (page 138)
- ❑ Lubricate lightly with engine oil

3 - Actuator for camshaft adjustment

- Actuator 1 for camshaft adjustment - F366-
- Actuator 2 for camshaft adjustment - F367-
- Actuator 3 for camshaft adjustment - F368-
- Actuator 4 for camshaft adjustment - F369-
- Actuator 5 for camshaft adjustment - F370-
- Actuator 6 for camshaft adjustment - F371-
- Actuator 7 for camshaft adjustment - F372-
- Actuator 8 for camshaft adjustment - F373-
  - ❑ Removing and installing ⇒ page 183

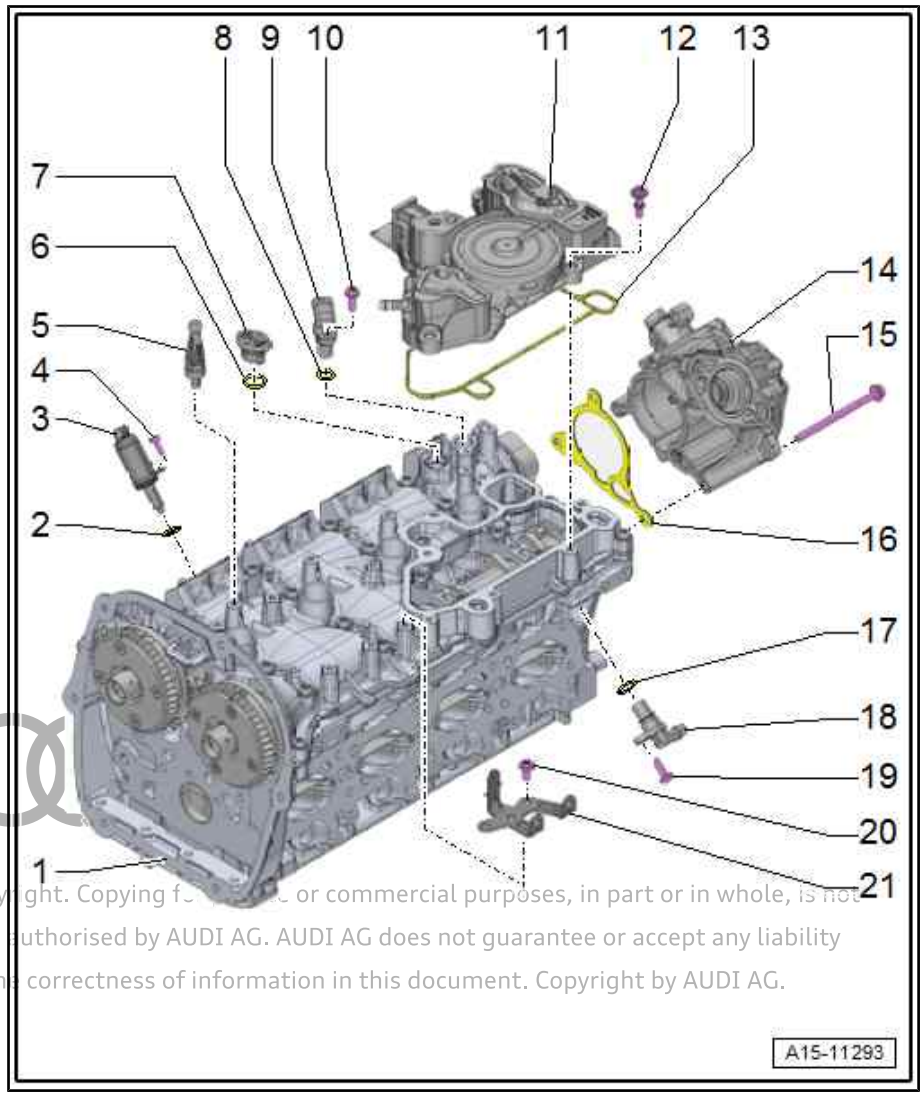

Copyright. Copying for private or commercial purposes, in part or in whole, is not permitted unless authorised by AUDI AG. AUDI AG does not guarantee or accept any liability with respect to the correctness of information in this document. Copyright by AUDI AG.

- ❑ Bringing into installation position ⇒ page 183

4 - Bolt

- ❑ 5 Nm

5 - Ball stud

- ❑ For engine cover panel
- ❑ 9 Nm

6 - O-ring

- ❑ Renew if damaged
- ❑ Lubricate lightly with engine oil

7 - Sealing plug

8 - O-ring

- ❑ Exploded view ⇒ page 295

9 - Hall sender 3 - G300-

- ❑ Exploded view ⇒ page 295

10 - Bolt

- ❑ Exploded view ⇒ page 295

11 - Oil separator

- ❑ Removing and installing ⇒ page 212

12 - Bolt

- ❑ Tightening torque and sequence ⇒ page 212

13 - Gasket

- ❑ Renew after removing

14 - Vacuum pump

- ❑ Exploded view ⇒ Brake system; Rep. gr. 47 ; Vacuum system; Exploded view - vacuum pump

15 - Bolt

- ❑ Tightening torque ⇒ Brake system; Rep. gr. 47 ; Vacuum system; Exploded view - vacuum pump

16 - Gasket

- ❑ Renew if damaged

Protected by copyright. Copying for private or commercial purposes, in part or in whole, is not permitted unless authorised by AUDI AG. AUDI AG does not guarantee or accept any liability with respect to the correctness of information in this document. Copyright by AUDI AG.

17 - O-ring

- ❑ Exploded view ⇒ page 295

18 - Hall sender - G40-

- ❑ Exploded view ⇒ page 295

19 - Bolt

- ❑ Exploded view ⇒ page 295

20 - Bolt

- ❑ 9 Nm

21 - Bracket

- ❑ For activated charcoal filter solenoid valve 1 - N80-

4.1.2 Exploded view - valve gear, engine with one camshaft adjuster

Engine with one camshaft adjuster
⇒ "1.2.1 Camshaft adjuster", page 1

Part I

Part II ⇒ page 141

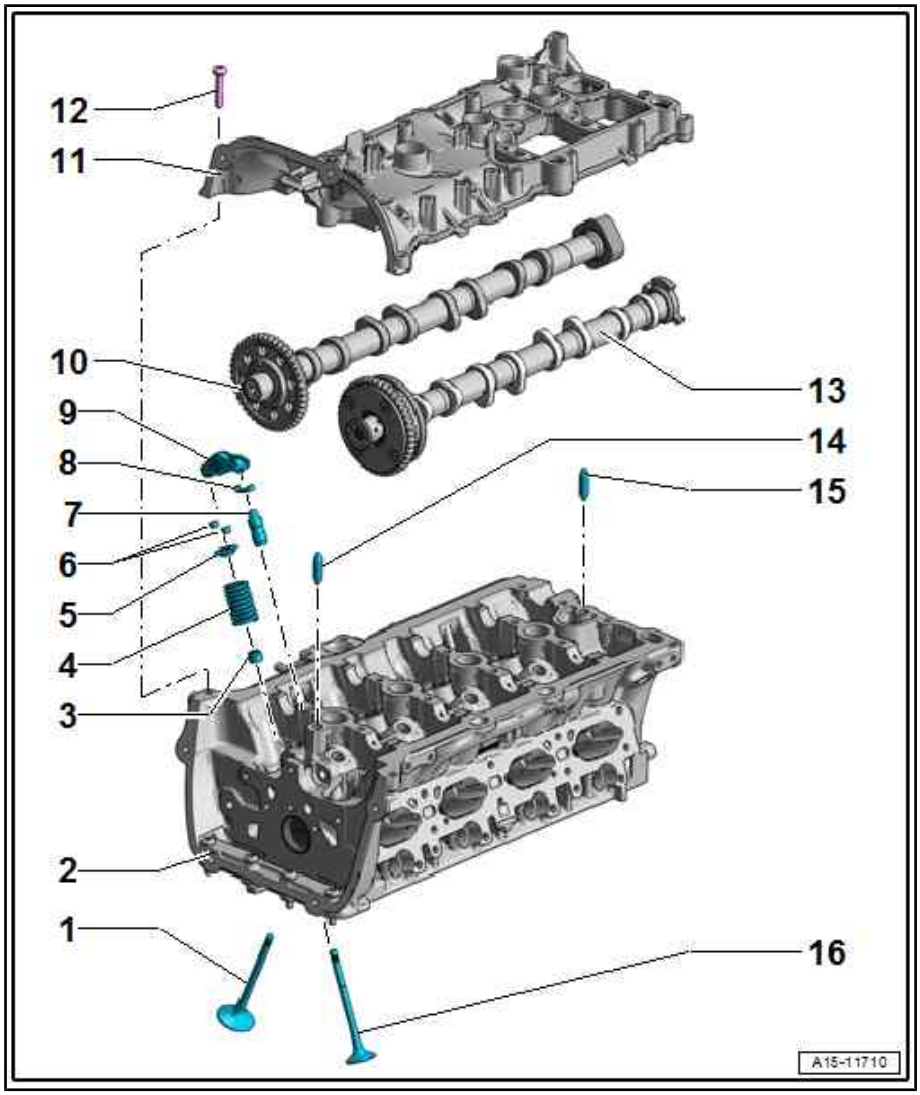

1 - Exhaust valve

- ❑ Do not machine, only grinding-in is permitted
- ❑ Valve dimensions ⇒ page 196
- ❑ Checking valve guides ⇒ page 195

2 - Cylinder head

- ❑ Do not machine sealing surface (top)
- ❑ Cylinder head and cylinder head cover must be renewed together

3 - Valve stem oil seal

- ❑ Renewing ⇒ page 184

4 - Valve spring

5 - Valve spring plate

6 - Valve cotters

7 - Hydraulic compensation element

- ❑ Do not interchange
- ❑ Lubricate contact surface

8 - Securing clip

- ❑ For hydraulic compensation element

9 - Roller rocker finger

- ❑ Removing and installing ⇒ "4.2 Removing and installing camshaft", page 142
- ❑ Mark installation position for re-installation
- ❑ Check roller bearings for ease of movement
- ❑ Lubricate contact surfaces before installing

10 - Exhaust camshaft

- ❑ Removing and installing ⇒ page 142
- ❑ Check radial clearance with Plastigauge (roller rocker fingers removed)
- ❑ Radial clearance: 0.024 ... 0.066 mm
- ❑ Runout: max. 0.04 mm

11 - Cylinder head cover

- ❑ With integrated camshaft bearings
- ❑ Clean sealing surface; machining not permitted
- ❑ Remove old sealant residues
- ❑ Removing ⇒ "4.2 Removing and installing camshaft", page 142
- ❑ Cylinder head and cylinder head cover must be renewed together

12 - Bolt

- ❑ Renew after removing
- ❑ Slackening ⇒ page 137
- ❑ Tightening torques and sequence ⇒ page 137

13 - Inlet camshaft

- ❑ Removing and installing ⇒ page 142

Protected by copyright. Copying for private or commercial purposes, in part or in whole, is not permitted unless authorised by AUDI AG. AUDI AG does not guarantee or accept any liability with respect to the correctness of information in this document. Copyright by AUDI AG.

- ❑ Check radial clearance with Plastigauge (roller rocker fingers removed)
- ❑ Radial clearance: 0.024 ... 0.066 mm
- ❑ Runout: max. 0.04 mm

14 - Dowel pin

15 - Dowel pin

16 - Inlet valve

- ❑ Do not machine, only grinding-in is permitted
- ❑ Valve dimensions ⇒ page 196
- ❑ Checking valve guides ⇒ page 195

Part II

Part I ⇒ page 139

Protected by copyright. Copying for private or commercial purposes, in part or in whole, is not permitted unless authorized by AUDI AG. AUDI AG does not guarantee or accept any liability with respect to the correctness of information in this document. Copyright by AUDI AG.

1 - Cylinder head

- ❑ Do not machine sealing surface (top)
- ❑ Cylinder head and cylinder head cover must be renewed together

2 - Ball stud

- ❑ For engine cover panel
- ❑ 9 Nm

3 - O-ring

- ❑ Renew after removing
- ❑ Lubricate lightly with engine oil

4 - Sealing plug

5 - Oil separator

- ❑ Removing and installing ⇒ page 212

6 - Bolt

- ❑ Tightening torque and sequence ⇒ page 212

7 - Gasket

- ❑ Renew after removing

8 - Vacuum pump

- ❑ Exploded view ⇒ Brake system; Rep. gr. 47 ; Vacuum system; Exploded view - vacuum pump

9 - Bolt

- ❑ Tightening torque ⇒ Brake system; Rep. gr. 47 ; Vacuum system; Exploded view - vacuum pump

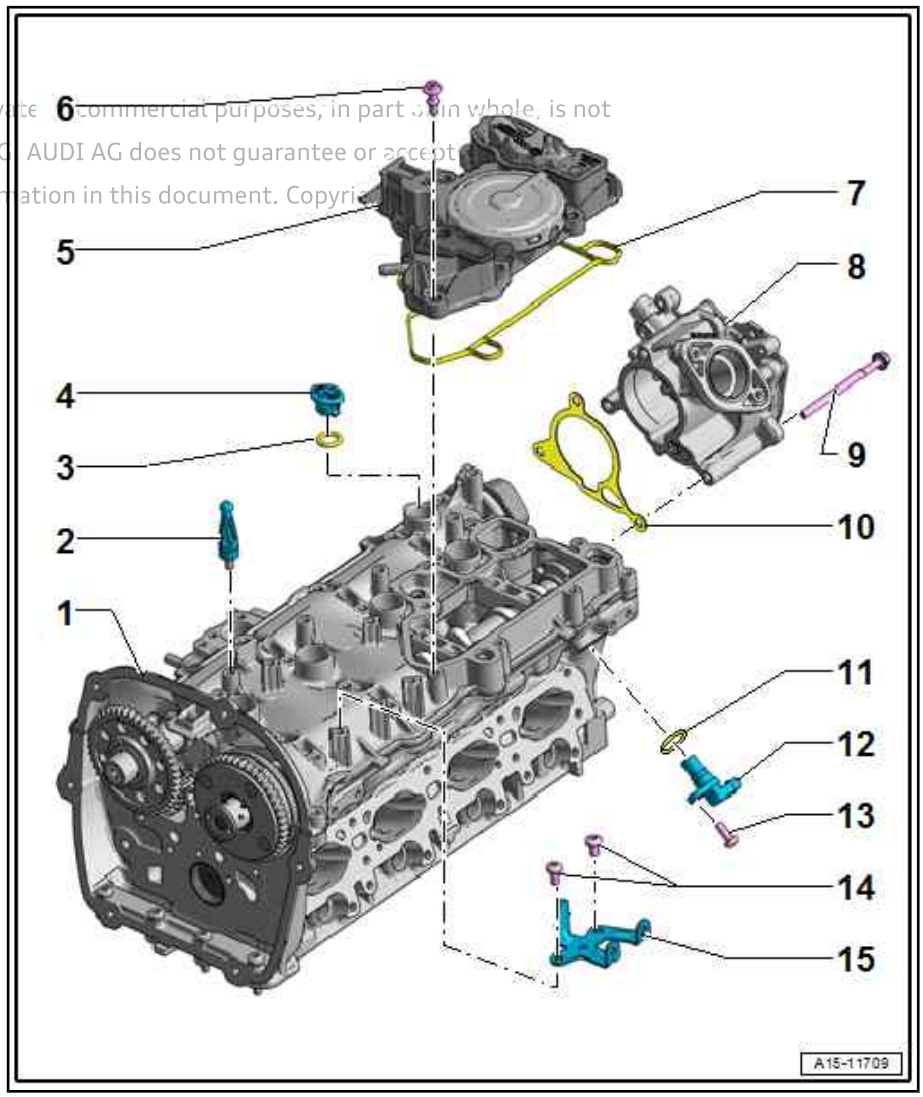

10 - Gasket

- ❑ Renew if damaged

11 - O-ring

- ❑ Renew after removing
- ❑ Lubricate lightly with engine oil

12 - Hall sender - G40-

- ❑ Exploded view ⇒ page 295

13 - Bolt

- ❑ Tightening torque ⇒ Item 13 (page 296)

14 - Bolts

- ❑ 9 Nm

15 - Bracket

- ❑ For activated charcoal filter solenoid valve 1 - N80-

Protected by copyright. Copying for private or commercial purposes, in part or in whole, is not permitted unless authorised by AUDI AG. AUDI AG does not guarantee or accept any liability with respect to the correctness of information in this document. Copyright by AUDI AG.

4.2 Removing and installing camshaft

⇒ "4.2.1 Removing and installing camshaft - engine with guide rail, version 1", page 142

⇒ "4.2.2 Removing and installing camshaft - engine with guide rail, version 2", page 155

⇒ "4.2.3 Removing and installing camshaft - engine with one camshaft adjuster", page 168

4.2.1 Removing and installing camshaft - engine with guide rail, version 1

Engine with guide rail, version 1
⇒ "1.2.2 Guide rail for camshaft timing chain", page 2

Special tools and workshop equipment required

- ♦ Assembly tool - T10352A- , assembly tool - T10352/3- , assembly tool - T10352/4-

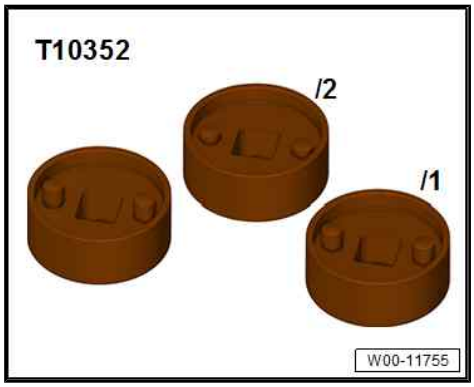

- ♦ Locking pin - T40011-

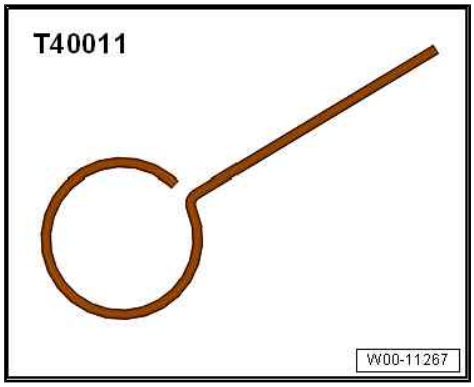

- Lever - T40243-

Protected by copyright. Copying for private or commercial purposes, in part or in whole, is not permitted unless authorised by AUDI AG. AUDI AG does not guarantee or accept any liability with respect to the correctness of information in this document. Copyright by AUDI AG

- Ratchet wrench (21 mm) - T40263-

- Assembly tool - T40266-

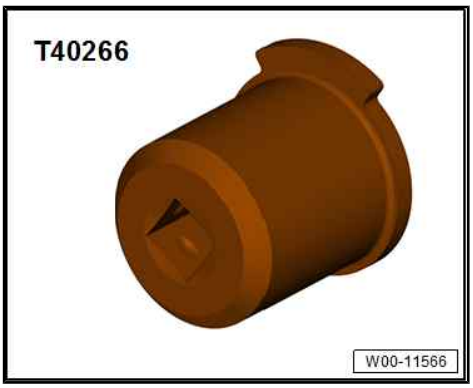

- Locking tool - T40267-

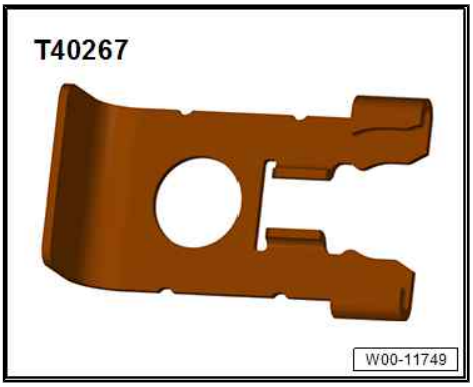

♦ Camshaft clamp - T40271-

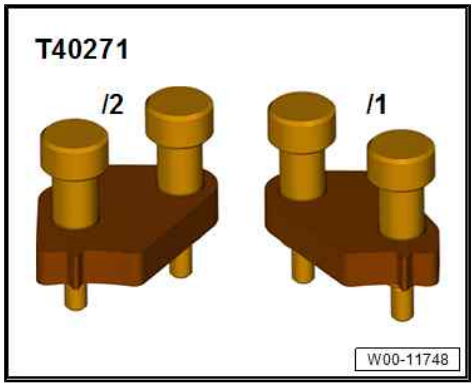

Removing

- Do not machine the sealing surfaces between the cylinder head cover and the cylinder head.
- The camshaft bearings are integrated into the cylinder head and cylinder head cover. The timing chain must be slackened before removing the cylinder head cover.
- Re-install all cable ties in original positions.

Preparatory work may be necessary depending on model ⇒ 4-cylinder direct injection engine (1.8, 2.0 ltr. 4-valve TFSI); Rep. gr. 15 ; Valve gear; Removing and installing camshaft .

– Remove timing chain cover (top) ⇒ page 65 .

– Remove high-pressure pump ⇒ page 272 .

– Remove vacuum pump ⇒ Brake system; Rep. gr. 47 ; Vacuum system; Exploded view - vacuum pump .

– Remove engine support ⇒ 4-cylinder direct injection engine (1.8, 2.0 ltr. 4-valve TFSI); Rep. gr. 13 ; Cylinder block (pulley end); Removing and installing engine support .

Protected by copyright. Copying for private or commercial purposes, in part or in whole, is not permitted without the consent of AUDI AG. AUDI AG does not guarantee the accuracy or completeness of information in this document.

– Turn vibration damper to “TDC” position.

- Markings -1- on camshaft chain sprockets must be aligned with markings -2- and -3-.
- Notch on vibration damper and marking -arrow- on cover for timing chains (bottom) must be aligned.

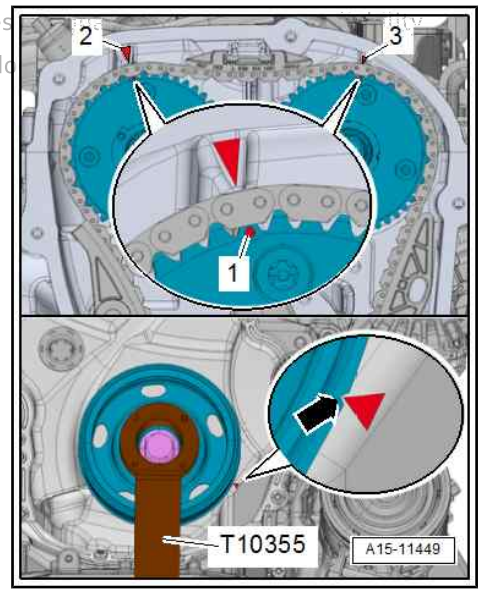

Note:

The combination of ratchet wrench (21 mm) - T40263- , adapter - T40314- and socket (24 mm) can be fitted onto the vibration damper better than the counterhold tool - T10355- .

– Remove timing chain cover (bottom) ⇒ page 67 .

- Please note that the timing valves have a left-hand thread and will be damaged if turned in the wrong direction.

– Remove timing valve (both sides) in direction of -arrow-.

Depending on version of timing valve, use one of the following tools:

♦ Assembly tool - T10352-

♦ Assembly tool - T10352/1A-

♦ Assembly tool - T10352/2-

♦ Assembly tool - T10352/3-

♦ Assembly tool - T10352/4-

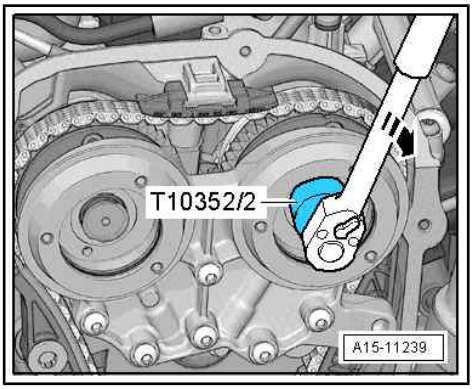

– When doing so, counterhold crankshaft at vibration damper with ratchet wrench (21 mm) - T40263- , adapter - T40314- and socket (24 mm).

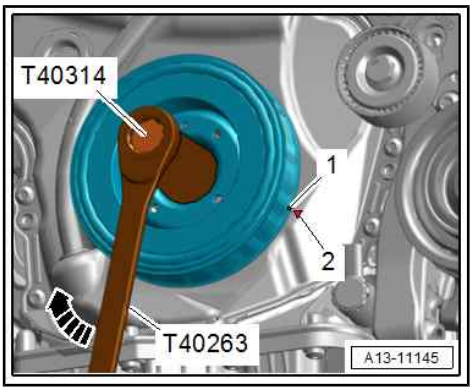

– Remove bolts -arrows-.

- Detach bearing saddle carefully without tilting it.

– Detach bearing saddle.

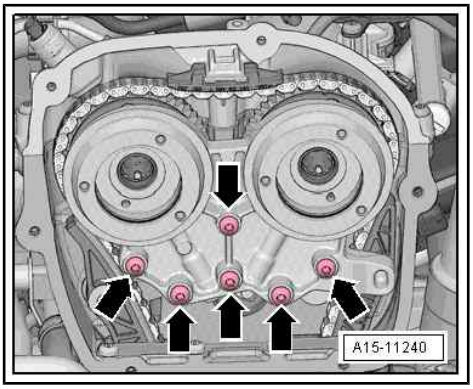

– Remove bolts -arrows-.

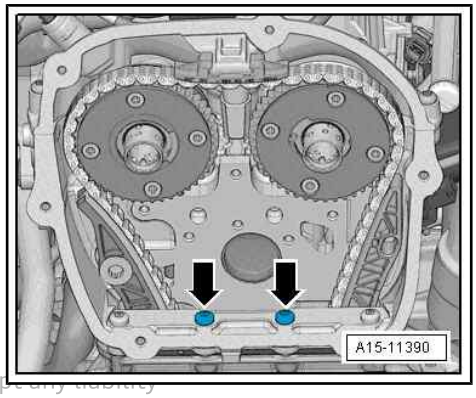

Protected by copyright. Copying for private or commercial purposes, in part or
permitted unless authorised by AUDI AG. AUDI AG does not guarantee or accept any liability
with respect to the correctness of information in this document. Copyright by AUDI AG.

– Remove bolt -arrow-.

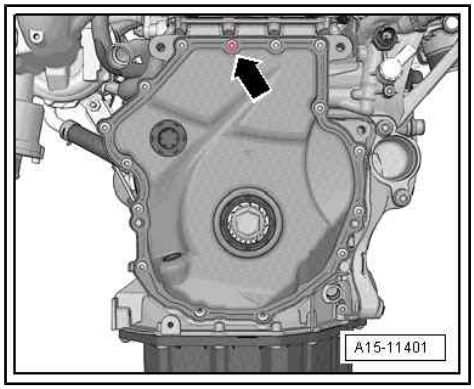

– Screw in lever - T40243- -arrows-.
– Compress and hold circlip -1- for chain tensioner.
– Push lever - T40243- slowly in direction of -arrow- and hold in place.

Protected by copyright. Copying for private or commercial purposes, in
permitted unless authorised by AUDI AG. AUDI AG does not guarantee
with respect to the correctness of information in this document. Copyr

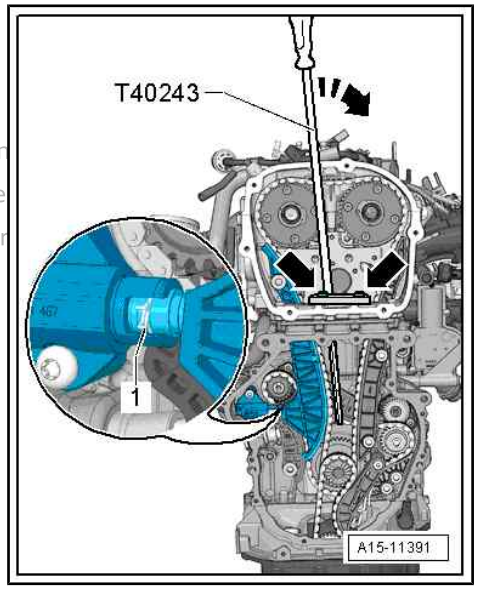

– Hold chain tensioner in position with locking tool - T40267- .
– Remove lever - T40243- .

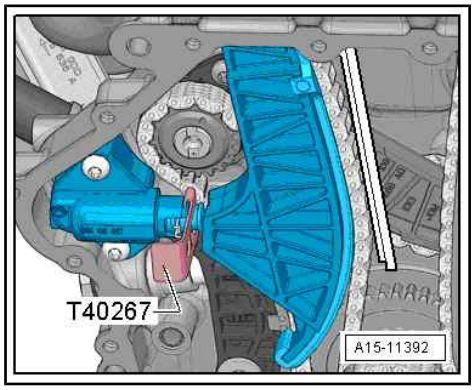

– Bolt camshaft clamp - T40271/2- onto cylinder head and slide it into teeth of chain sprocket in direction of -arrow 2-. If necessary, rotate inlet camshaft using assembly tool - T40266- -1-.

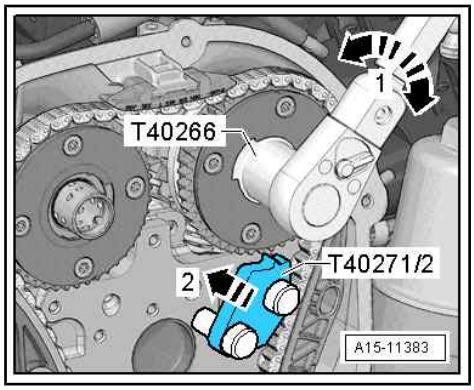

– Bolt camshaft clamp - T40271/1- onto cylinder head.

A second mechanic is required for the following step.

– Turn exhaust camshaft in direction of -arrow A- using assembly tool - T40266- and hold in place. Remove bolt -1- and guide tensioning rail -2- downwards. Continue turning camshaft clockwise -arrow A- until camshaft clamp - T40271/1- can be pressed into teeth on chain sprocket -arrow B-.

– Check installation position -C- of camshaft clamp - T40271/1- .

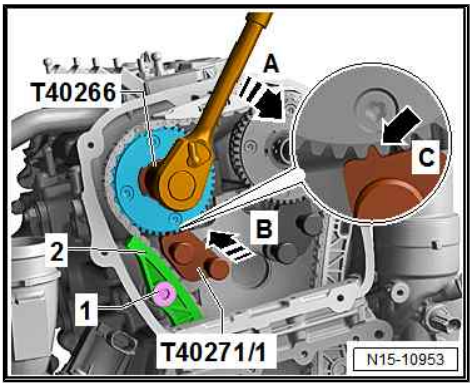

– Use screwdriver to release catch -arrow- and press off guide rail -1- towards front.

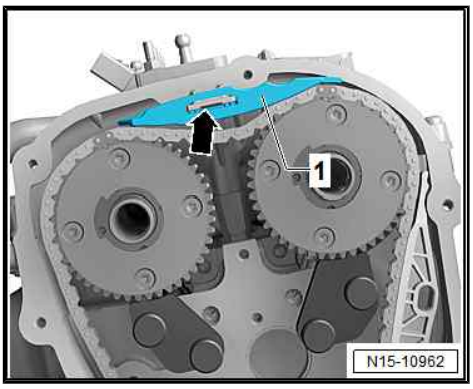

– Press retainer for oil pump chain tensioner in direction of -arrow- and lock in place using locking pin - T40011- .

– Unscrew bolt -1- and remove chain tensioner.

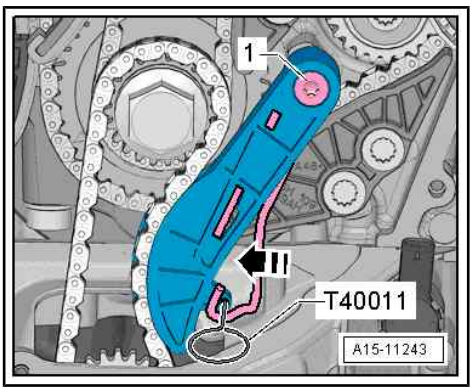

– Unscrew bolts -1- and remove guide rail -2-.

– Detach camshaft timing chain from sprockets and guide it downwards.

Protected by copyright. Copying for private or commercial pur
permitted unless authorised by AUDI AG. AUDI AG does
with respect to the correctness of information in this do

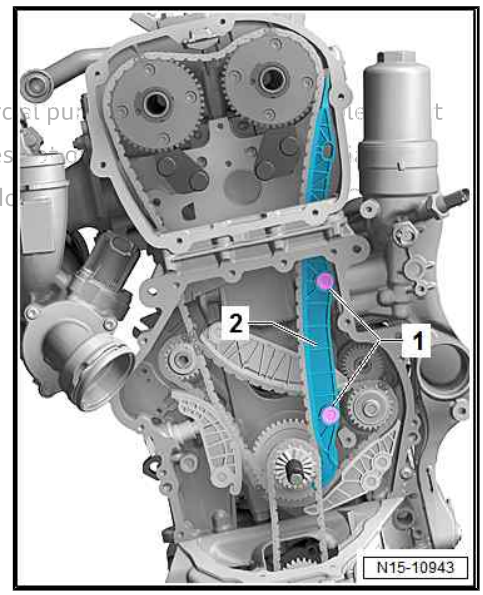

– Attach turning-over tool - T10531/3- . In “TDC” position, flat surface -1- is positioned at top (facing cylinder head). Screw on flange nut - T10531/4- . Turn crankshaft anti-clockwise out of “TDC” position using open-end spanner, 32 mm.

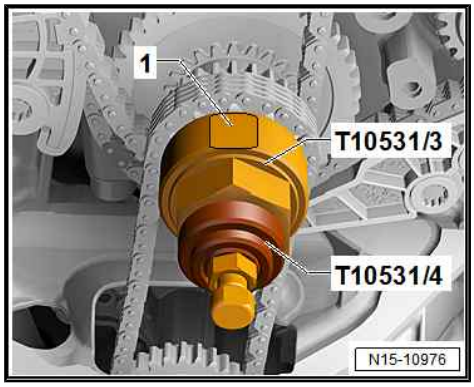

– Turn inlet camshaft in direction of -arrow 1- with assembly tool - T40266- , slide camshaft clamp - T40271/2- out of teeth on chain sprocket in direction of -arrow 2- and move camshaft into rest position.

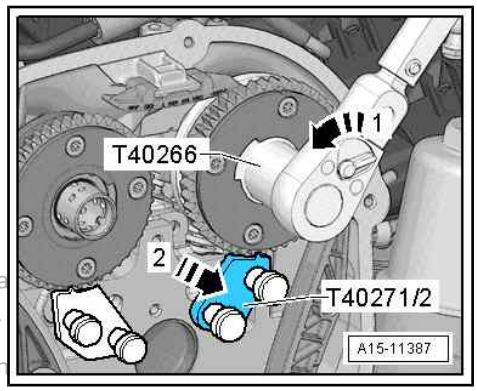

Protected by copyright. Copying for private or commercial purposes, in pa
permitted unless authorised by AUDI AG. AUDI AG does not guarantee or
with respect to the correctness of information in this document. Copyrigh

– Turn exhaust camshaft in direction of -arrow 1- with assembly tool - T40266- , slide camshaft clamp - T40271/1- out of teeth on chain sprocket in direction of -arrow 2- and move camshaft into rest position.

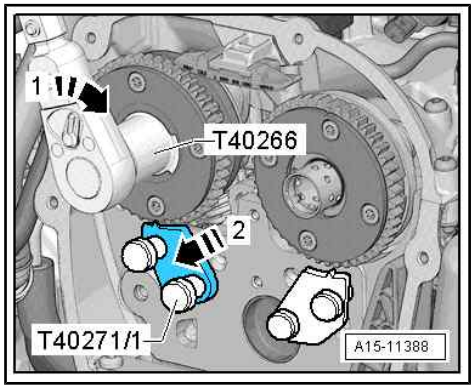

– Remove cylinder head cover bolts in the sequence -1 ... 6-.

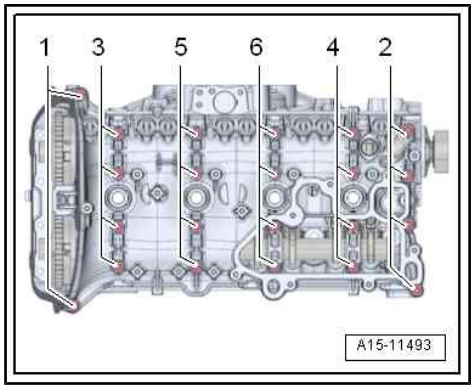

Protected by copyright. Copying for private or commercial purposes, in part or in whole, is not permitted unless authorised by AUDI AG. AUDI AG does not guarantee or accept any liability with respect to the correctness of information in this document. Copyright by AUDI AG.

– Prise cylinder head cover -2- off using tool such as screwdriver -1-, starting from chain side.
– Detach cylinder head cover.
– Detach camshafts and cover exposed parts of engine.
– If necessary for additional work, mark roller rocker fingers and hydraulic compensation elements for re-installation, remove them and place them on a clean surface.

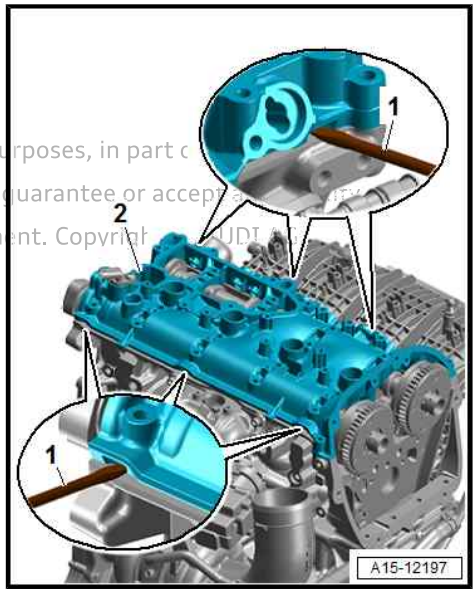

Installing camshafts

Note

- *The sealing surfaces must be free of oil and grease.*
- *Ensure that all roller rocker fingers make contact with the ends of the valve stems correctly.*
- *Crankshaft must not be at "TDC" position.*

– If crankshaft has been rotated: Set piston of cylinder 1 to top dead centre and then turn crankshaft back slightly.

CAUTION

Risk of eye injury due to sealant residue.
– Put on safety goggles.

– Place clean cloths over open sections of engine to prevent lubrication system from being contaminated by sealant residue.
– Remove sealant remaining on cylinder head with flat scraper.
– Remove sealant residue from groove in cylinder head cover and from sealing surfaces.
– Clean sealing surfaces; they must be free of oil and grease.
– Install actuators for camshaft adjustment ⇒ page 183 .
– Oil running surfaces of both camshafts.

– Fit inlet camshaft -A- in cylinder head. Rotate cams of cylinder 4 -arrows- so that they face upwards.

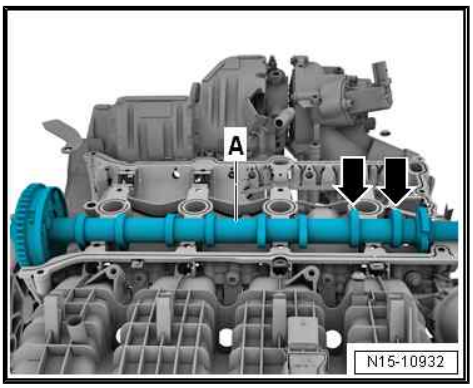

CAUTION

Ball for slider may spring out - risk of eye injury.

– Put on safety goggles.

– Fit exhaust camshaft in cylinder head cover, as shown in illustration. Pairs of cams -A- and -B- must be pushed together.

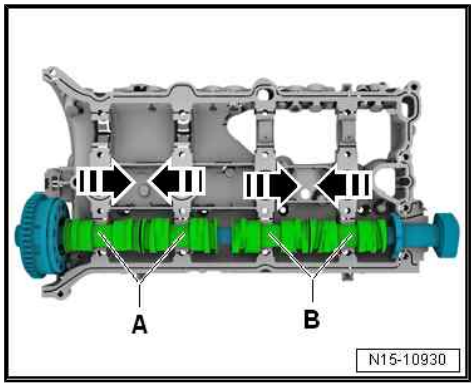

– Rotate exhaust camshaft until markings -A- and -B- are aligned.

Protected by copyright. Copying for private or commercial purposes is not permitted unless authorised by AUDI AG. AUDI AG does not guarantee the accuracy with respect to the correctness of information in this document.

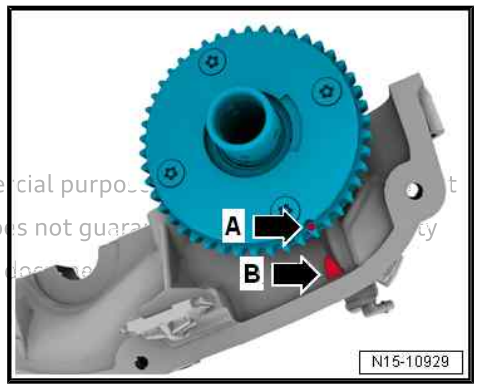

– Apply sealant onto clean sealing surface -arrows- of cylinder head cover, as shown in illustration.

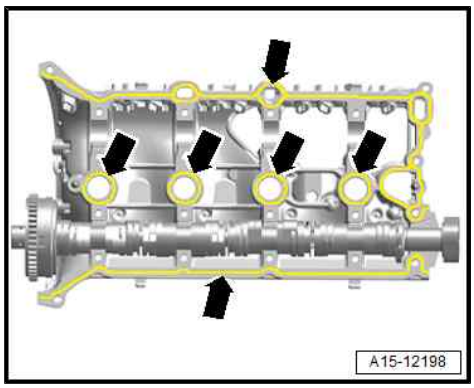

NOTICE

Risk of engine damage due to excessive sealant in lubrication system.

– The sealant bead must not be thicker than specified.

♦ Thickness of sealant bead: 1.5 ... 2.5 mm

– Hold camshaft in position and place cylinder head cover on cylinder head with camshaft fitted.

– Press lightly on cylinder head cover with your hand and rotate camshafts slightly until cylinder head cover comes into contact with cylinder head such that it is free of tension.

– Renew bolts for cylinder head cover.

– Tighten bolts in several stages; tightening sequence ⇒ page 137 .

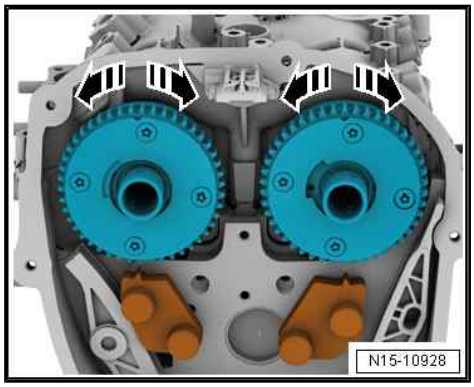

Note

Take care to keep cylinder head cover straight.

– Turn inlet camshaft in direction of -arrow A- using assembly tool - T40266- until markings -1- and -2- are aligned. Slide camshaft clamp - T40271/2- into teeth of chain sprocket in direction of -arrow B-.

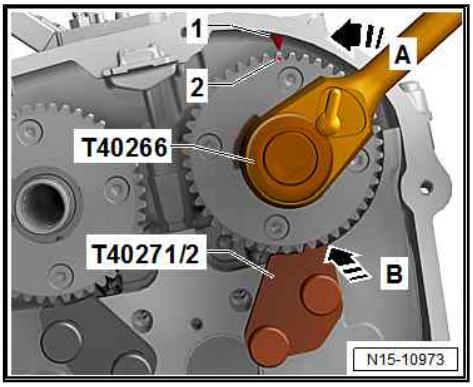

– Turn exhaust camshaft in direction of -arrow A- using assembly tool - T40266- until markings -1- and -2- are aligned. Slide camshaft clamp - T40271/1- into teeth of chain sprocket in direction of -arrow B-. Marking -2- is offset slightly to the right.

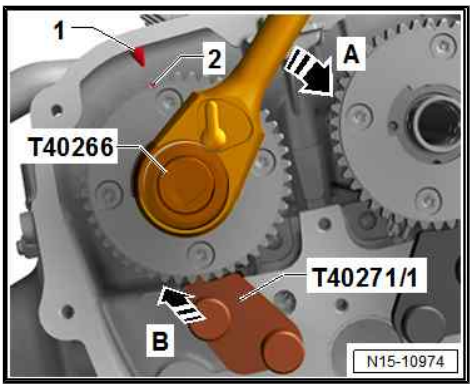

– Turn crankshaft at hexagon flats -2- into “TDC” position. In “TDC” position, flat surface -1- is positioned at top (facing cylinder head).

Protected by copyright. Copying for private or commercial purp is not permitted unless authorised by AUDI AG. AUDI AG does not guar with respect to the correctness of information in this document.

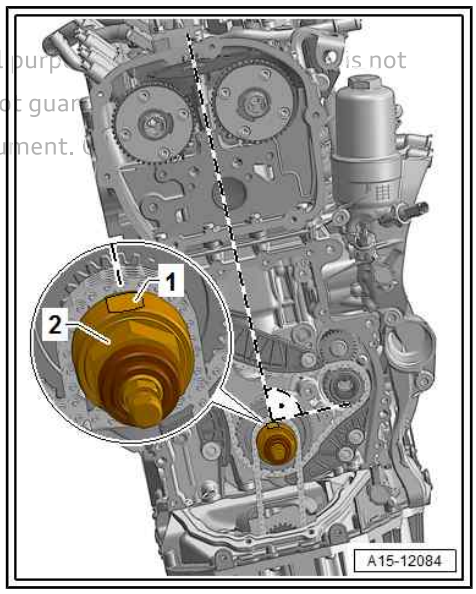

Installing camshaft timing chain

– Fit camshaft timing chain so that coloured markings -arrows- are positioned on camshaft journals.

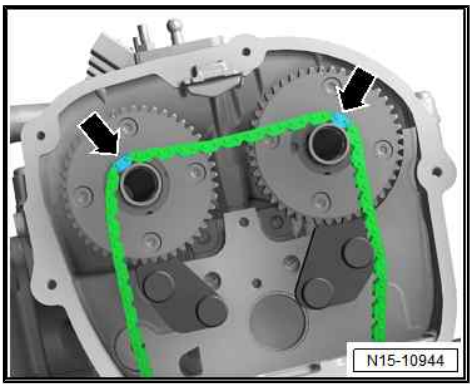

– Fit camshaft timing chain onto inlet camshaft, exhaust camshaft and crankshaft. Position links with coloured markings -arrows- at markings on chain sprockets.

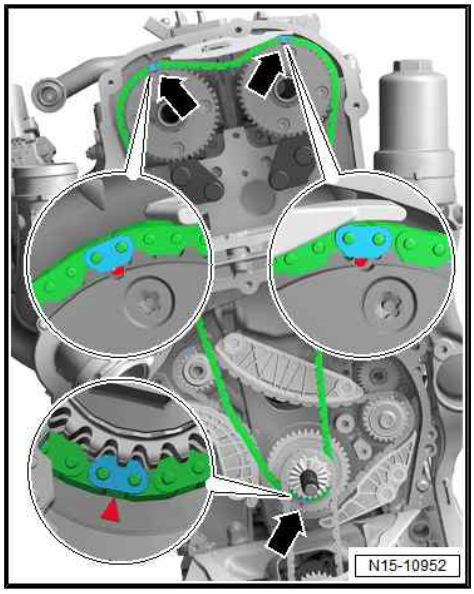

– Install guide rail -2- and tighten bolts -1-.

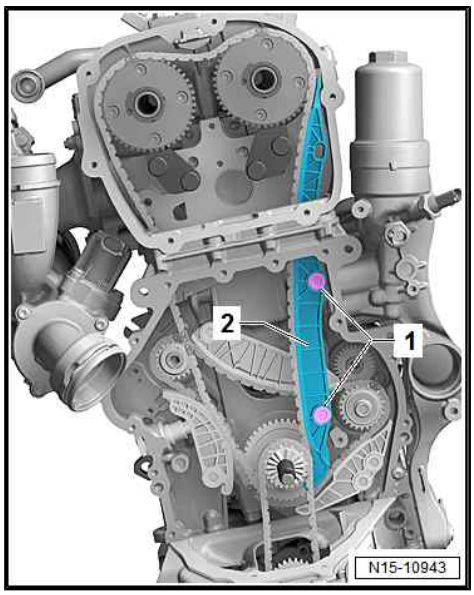

– Install top guide rail -1-.

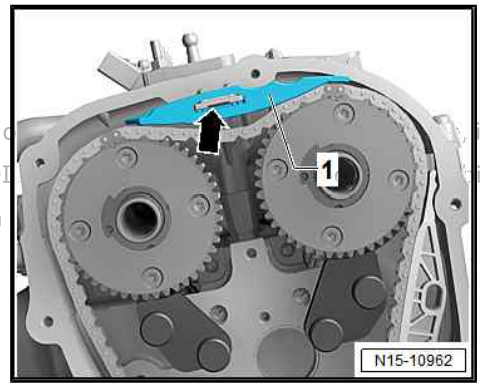

Protected by copyright. Copying for private or c is not
permitted unless authorised by AUDI AG. AUDI ility
with respect to the correctness of information

A second mechanic is required for the following step.

I - Use assembly tool - T40266- to turn exhaust camshaft slightly in direction of -arrow A- and slide camshaft clamp - T40271/1- out of teeth on chain sprocket in direction of -arrow B-.

II - Release camshaft in direction of -arrow C- until timing chain is in contact with guide rail -1-. Hold camshaft in this position, install tensioning rail -2- and tighten bolt -3-. Then release camshaft.

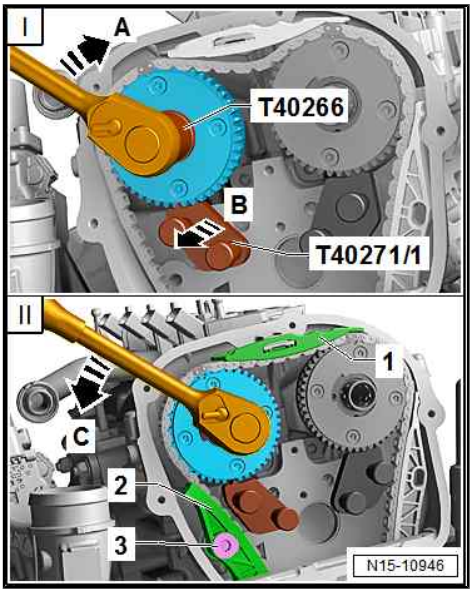

– Use assembly tool - T40266- to turn inlet camshaft in direction of -arrow 1- until it is possible to slide camshaft clamp - T40271/2- out of teeth on chain sprocket in direction of -arrow 2-. Then release camshaft.

– Remove camshaft clamps - T40271/1- and -T40271/2- .

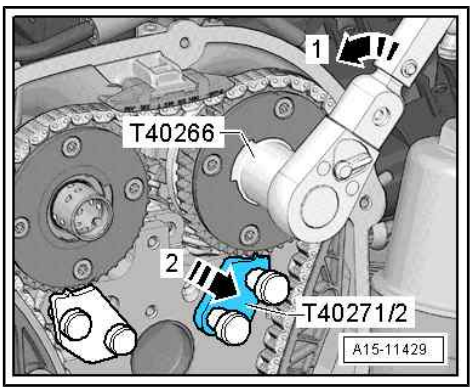

– Fit and tighten bolts -arrows-. Tightening torque ⇒ Item 4 (page 126)

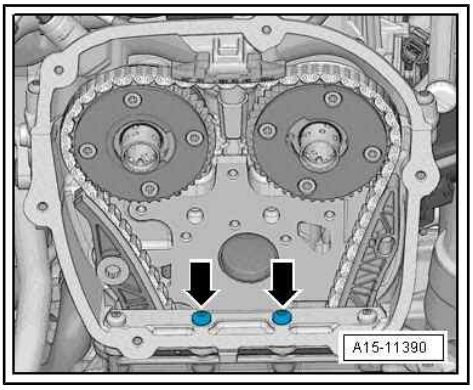

– Lubricate holes -arrows- with engine oil.

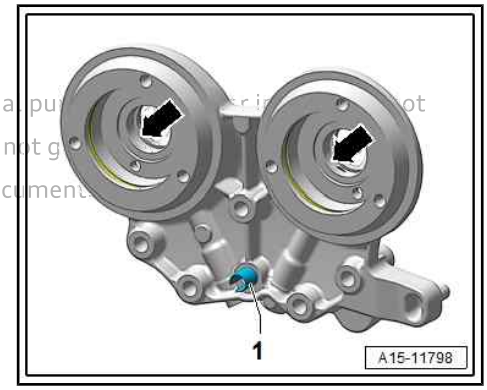

Note

Spring pin -1- is not fitted on all bearing saddles.

Protected by copyright. Copying for private or commercial pu ot
permitted unless authorised by AUDI AG. AUDI AG does not g
with respect to the correctness of information in this docum

- Carefully attach bearing saddle without tilting it - risk of damage.

– Attach bearing saddle and screw in bolts -arrows- hand-tight.

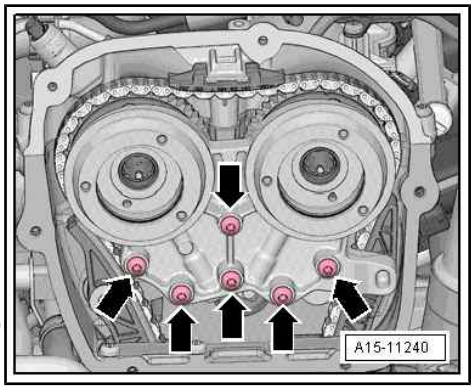

Protected by copyright. Copying for private or commercial p
permitted unless authorised by AUDI AG. AUDI AG does not
with respect to the correctness of information in this docum

– Remove locking tool - T40267- .

– Tighten bolts for bearing saddle ⇒ page 75 .

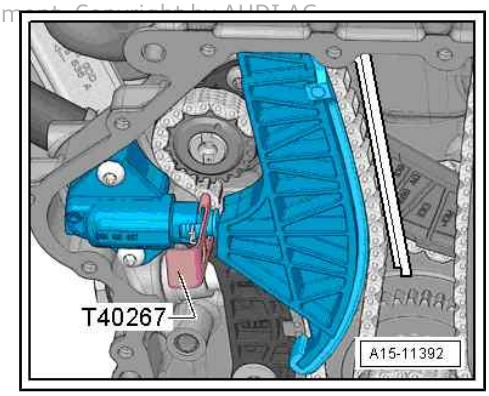

– Install chain tensioner -2- and tighten bolt -1-. Remove locking pin - T40011- ; retainer for oil pump chain tensioner must come into contact with opening -arrow- on sump (top section).

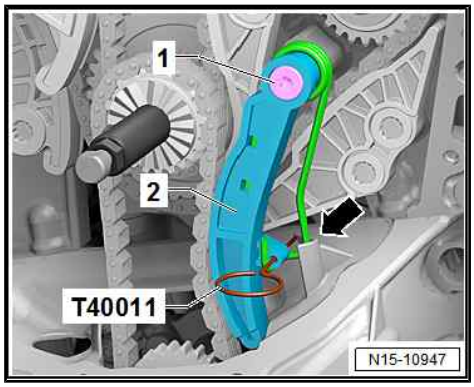

– Check setting; links with coloured markings -arrows- must be positioned at markings on chain sprockets.

– Install timing valves ⇒ Item 7 (page 74) .

– Turn engine two rotations in direction of engine rotation.

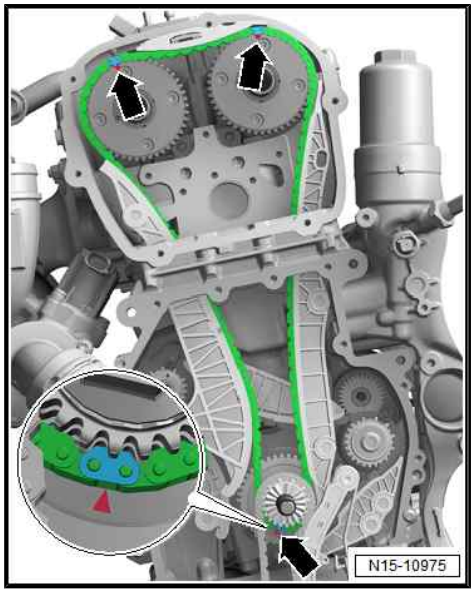

Note

Due to the ratio, the timing chain links with coloured markings are no longer aligned after the engine has been turned.

– Unscrew flange nut - T10531/4- and remove turning-over tool - T10531/3- .

– Install timing chain cover (bottom) ⇒ page 67 .

– Install engine support ⇒ 4-cylinder direct injection engine (1.8, 2.0 ltr. 4-valve TFSI); Rep. gr. 13 ; Cylinder block (pulley end); Removing and installing engine support .

– Install vacuum pump ⇒ Brake system; Rep. gr. 47 ; Vacuum system; Exploded view - vacuum pump .

– Install high-pressure pump ⇒ page 272 .

– Install timing chain cover (top) ⇒ page 65 .

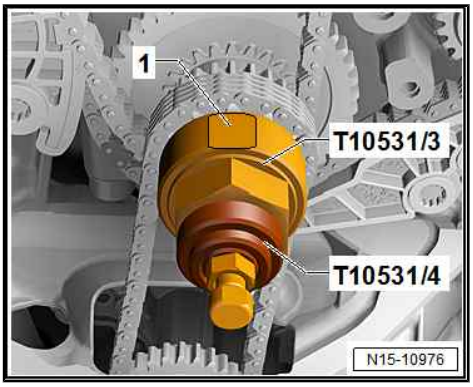

Additional work depending on model ⇒ 4-cylinder direct injection engine (1.8, 2.0 ltr. 4-valve TFSI); Rep. gr. 15 ; Valve gear; Removing and installing camshaft

Learnt values for chain elongation must be re-adapted after removing or renewing camshafts.

– Connect ⇒ Vehicle diagnostic tester.

– Select `Diagnosis` mode and then `Start diagnosis`.

– Choose `Select own test` tab and select following options one after the other:

◆ `Drive train`

◆ `Select engine code and engine`

◆ `01 - Self-diagnosis compatible systems`

◆ `01 - Engine electronics`

◆ `01 - Engine electronics, functions`

◆ `01 - Chain elongation adaption diagnosis`

Tightening torques

◆ ⇒ “4.1 Exploded view - valve gear”, page 135

4.2.2 Removing and installing camshaft - engine with guide rail, version 2

Engine with guide rail, version 2
⇒ “1.2.2 Guide rail for camshaft timing chain”, page 2

Special tools and workshop equipment required

◆ Assembly tool - T10352A- , assembly tool - T10352/3- , assembly tool - T10352/4-

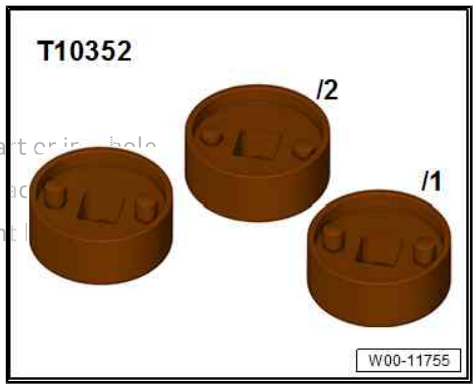

Protected by copyright. Copying for private or commercial purposes, in part or in whole, is not permitted unless authorised by AUDI AG. AUDI AG does not guarantee or assume liability with respect to the correctness of information in this document. Copyright by AUDI AG.

- Lever - T40243-

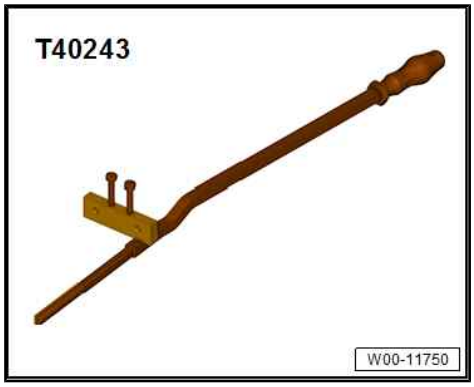

- Ratchet wrench (21 mm) - T40263-

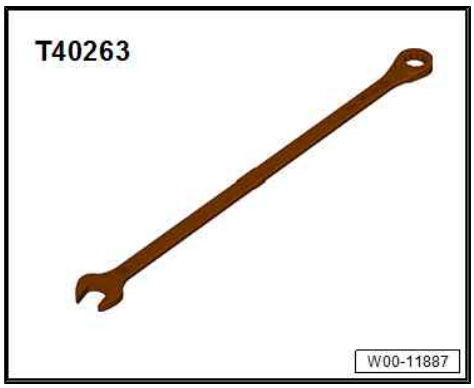

- Assembly tool - T40266-

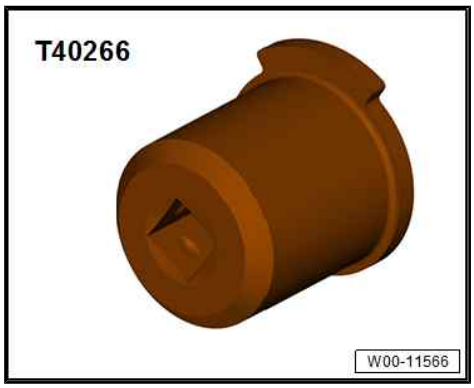

Protected by copyright. Copying for private or commercial purposes, in part or in whole, is not permitted unless authorised by AUDI AG. AUDI AG does not guarantee or accept any liability with respect to the correctness of information in this document. Copyright by AUDI AG.

- Locking tool - T40267-

♦ Camshaft clamp - T40271-

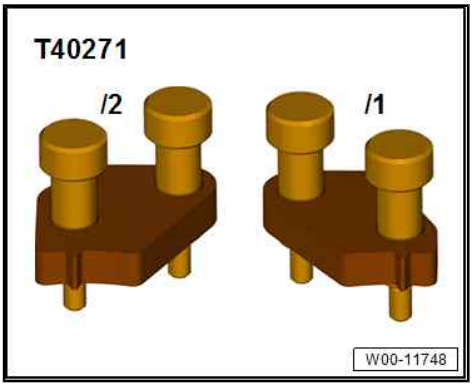

Removing

- Do not machine the sealing surfaces between the cylinder head cover and the cylinder head.
- The camshaft bearings are integrated into the cylinder head and cylinder head cover. The timing chain must be slackened before removing the cylinder head cover.
- Re-install all cable ties in original positions.

Preparatory work may be necessary depending on model ⇒ 4-cylinder direct injection engine (1.8, 2.0 ltr. 4-valve TFSI); Rep. gr. 15 ; Valve gear; Removing and installing camshaft .

– Remove timing chain cover (top) ⇒ page 65 .

– Remove high-pressure pump ⇒ page 272 .

– Remove vacuum pump ⇒ Brake system; Rep. gr. 47 ; Vacuum system; Exploded view - vacuum pump .

- Please note that the timing valves have a left-hand thread and will be damaged if turned in the wrong direction.

– Remove timing valve (both sides) in direction of -arrow-.

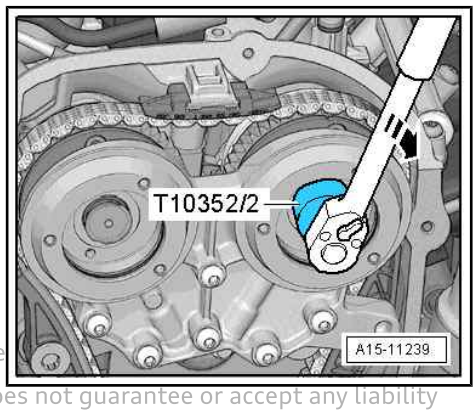

Depending on version of timing valve, use one of the following tools:

♦ Assembly tool - T10352-

♦ Assembly tool - T10352/1A-

♦ Assembly tool - T10352/2-

♦ Assembly tool - T10352/3-

♦ Assembly tool - T10352/4-

Protected by copyright. Copying for private or commercial purposes, in part, is not permitted unless authorised by AUDI AG. AUDI AG does not guarantee or accept any liability with respect to the correctness of information in this document. Copyright by AUDI AG.

– When doing so, counterhold crankshaft at vibration damper with ratchet wrench (21 mm) - T40263- , adapter - T40314- and socket (24 mm).

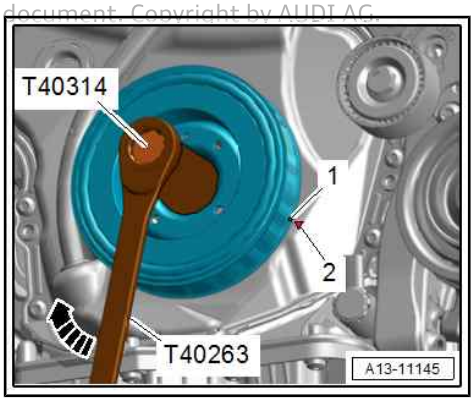

– Remove bolts -arrows-.

• Detach bearing saddle carefully without tilting it - risk of damage.

– Detach bearing saddle.

Note:

The combination of ratchet wrench (21 mm) - T40263- , adapter - T40314- and socket (24 mm) can be fitted onto the vibration damper better than the counterhold tool - T10355- .

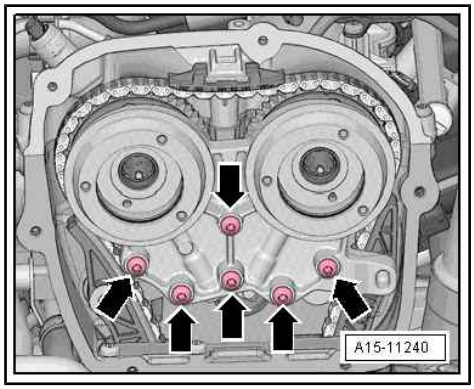

With markings on cylinder head cover

– Turn vibration damper to “TDC” position.

• Notch on vibration damper must align with arrow marking on timing chain cover (bottom) -arrow-.

• Markings -1- on camshaft chain sprockets must be aligned with markings -2 and 3- on cylinder head.

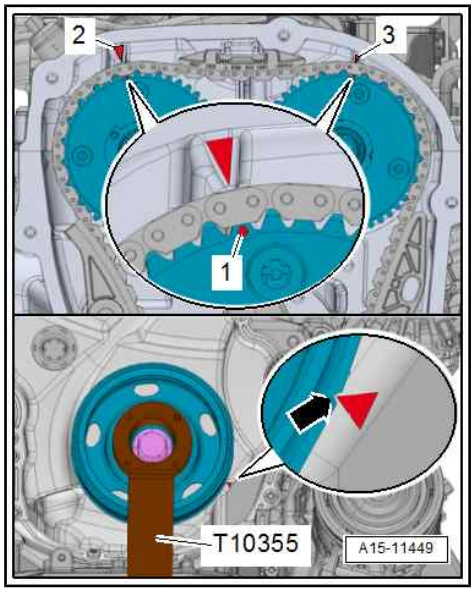

Without markings on cylinder head cover

– Turn vibration damper to “TDC” position.

• Notch on vibration damper and marking on cover for timing chains (bottom) must be aligned -arrow-.

• The markings -1- on the camshafts must face upwards.

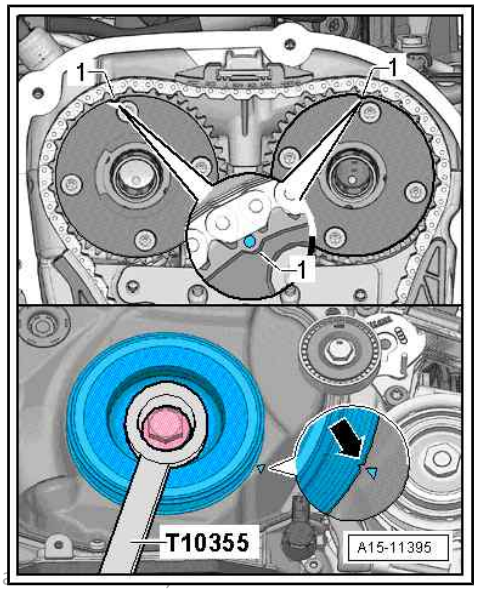

Protected by copyright. Copying for private or commercial purposes, in p
permitted unless authorised by AUDI AG. AUDI AG does not guarantee or accept any liability
with respect to the correctness of information in this document. Copyright by AUDI AG.

– Use a waterproof pen to mark camshaft timing chain and cylinder head -arrows- relative to markings on chain sprockets -1-.
– Use a waterproof pen to mark camshaft timing chain relative to guide rail of timing chain -2- as well.

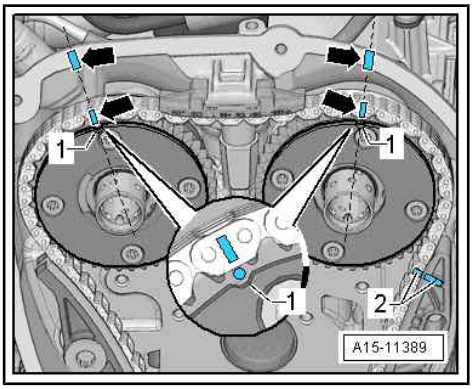

All engine versions (continued):

– Remove sealing plug -arrow-.

Protected by copyright. Copying for private or commercial purposes, in part or in whole, is not permitted unless authorised by AUDI AG. AUDI AG does not guarantee or assume liability with respect to the correctness of information in this document. Copyright by AUDI AG.

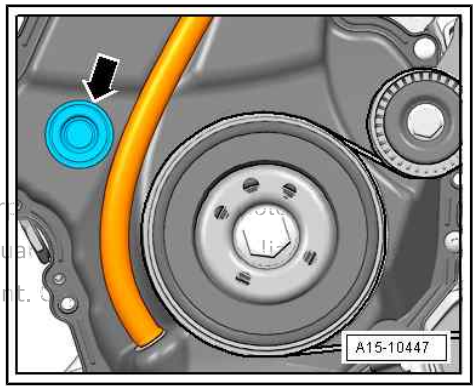

– Remove bolts -arrows-.

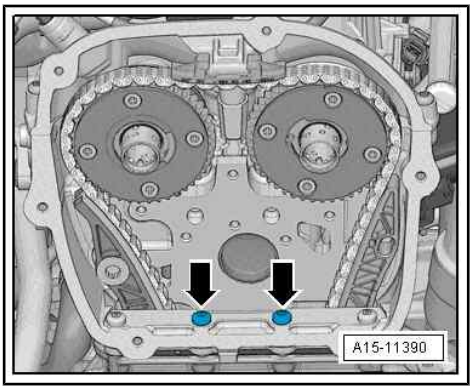

– Remove bolt -arrow-.

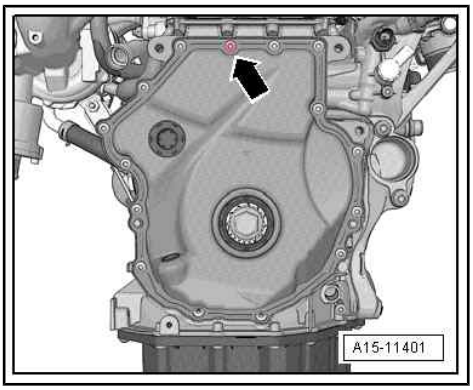

– Screw in lever - T40243- -arrows-.

• A second mechanic is required for the following steps.

– Compress and hold circlip -1- for chain tensioner.

– Push lever - T40243- slowly in direction of -arrow- and hold in place.

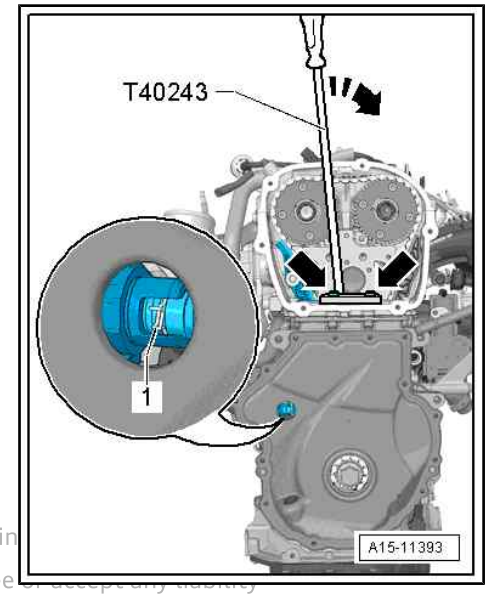

Protected by copyright. Copying for private or commercial purposes, in
permitted unless authorised by AUDI AG. AUDI AG does not guarantee or accept any liability
with respect to the correctness and completeness of this document. Copyr

– Hold chain tensioner in position with locking tool - T40267- .

– Remove lever - T40243- .

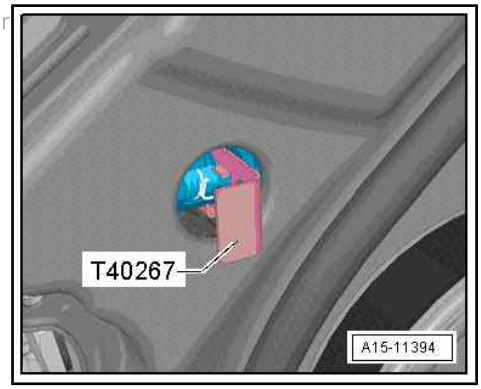

– Bolt camshaft clamp - T40271/2- onto cylinder head and slide into teeth on chain sprocket in direction of -arrow 2-; if necessary, use assembly tool - T40266- to turn inlet camshaft in direction of -arrow 1-.

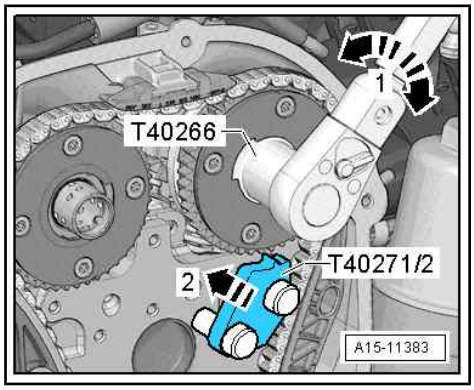

– Remove bolt -1- and guide tensioning rail -2- downwards.

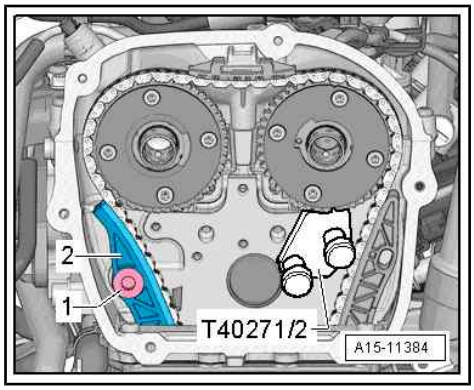

– Bolt camshaft clamp - T40271/1- onto cylinder head.

– Use assembly tool - T40266- to turn exhaust camshaft in direction of -arrow 1- and slide camshaft clamp - T40271/1- into teeth on chain sprocket in direction of -arrow 2-.

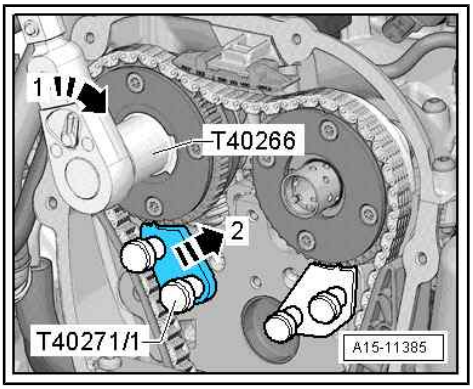

– Mark camshaft chain sprockets relative to camshaft clamp - T40271/1- and camshaft clamp - T40271/2- -arrows-.

– Use screwdriver to release catch and press off top guide rail -1- forwards.

– Remove camshaft timing chain from camshaft sprockets.

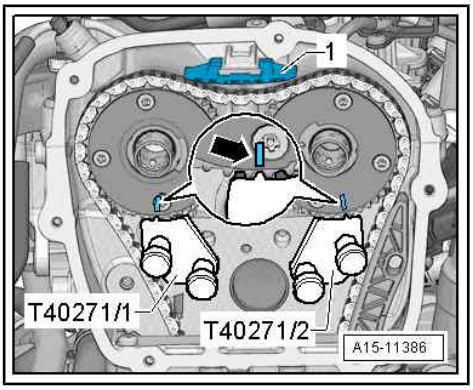

NOTICE

Risk of damage to valves and piston crowns.

– **Never turn the crankshaft when the camshaft timing chain is removed.**

– Rotate vibration damper out of “TDC” against normal direction of rotation.

– Turn inlet camshaft in direction of -arrow 1- with assembly tool - T40266- , slide camshaft clamp - T40271/2- out of teeth on chain sprocket in direction of -arrow 2- and move camshaft into rest position.

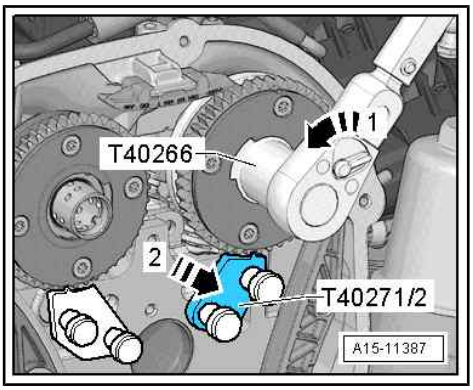

– Turn exhaust camshaft in direction of -arrow 1- with assembly tool - T40266- , slide camshaft clamp - T40271/1- out of teeth on chain sprocket in direction of -arrow 2- and move camshaft into rest position.

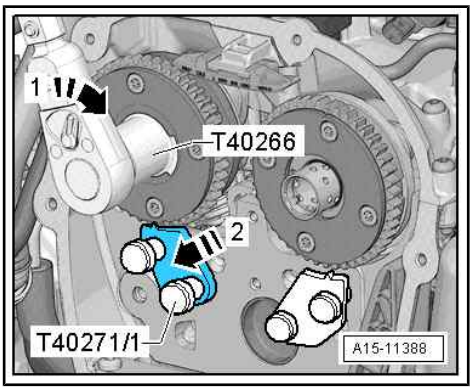

Protected by copyright. Copying for private or commercial purposes, in part or in whole, is not permitted unless authorised by AUDI AG. AUDI AG does not guarantee or accept any liability with respect to the correctness of information in this document. Copyright by AUDI AG.

– Remove cylinder head cover bolts in the sequence -1 ... 6-.

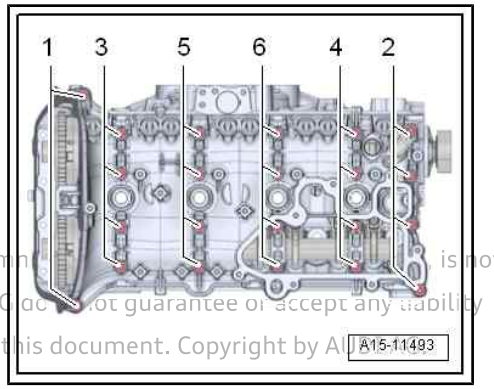

Protected by copyright. Copying for private or com is not
permitted unless authorised by AUDI AG. AUDI AG do not guarantee or accept any liability
with respect to the correctness of information in this document. Copyright by AU

– Prise cylinder head cover -2- off using tool such as screwdriver -1-, starting from chain side.

– Guide cylinder head cover out under permanent breather.

– Detach camshafts and cover exposed parts of engine.

– If necessary for additional work, mark roller rocker fingers and hydraulic compensation elements for re-installation, remove them and place them on a clean surface.

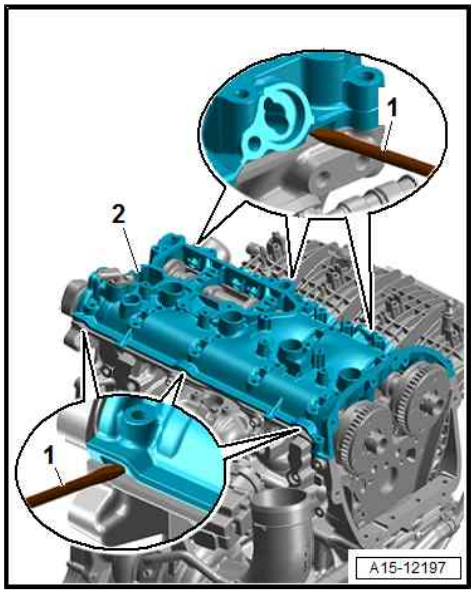

Installing

- Crankshaft must not be at “TDC” position.
- After removing, renew bolts tightened with specified tightening angle.

– Ensure that all roller rocker fingers make contact with the ends of the valve stems correctly and are clipped onto their respective hydraulic compensation elements.

– If crankshaft has been rotated: Set piston of cylinder 1 to top dead centre and then turn crankshaft back slightly.

⚠ CAUTION

Risk of eye injury due to sealant residue.

– Put on safety goggles.

– Place clean cloths over open sections of engine to prevent lubrication system from being contaminated by sealant residue.

– Remove sealant remaining on cylinder head with flat scraper.

– Remove sealant residue from groove in cylinder head cover and from sealing surfaces.

– Clean sealing surfaces; they must be free of oil and grease.

- Pins of actuators must not be in extended position.

– Press down pins of actuators for camshaft adjustment -arrow- by hand.

– Oil running surfaces of both camshafts.

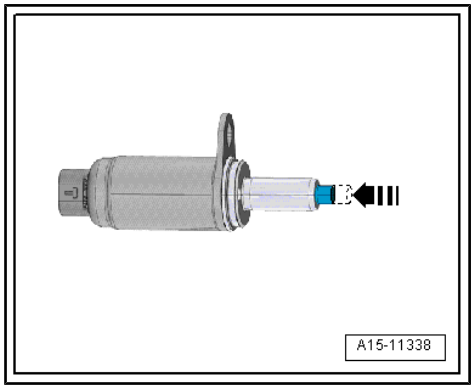

– If camshafts are renewed, markings -arrow- must be transferred to new camshafts.

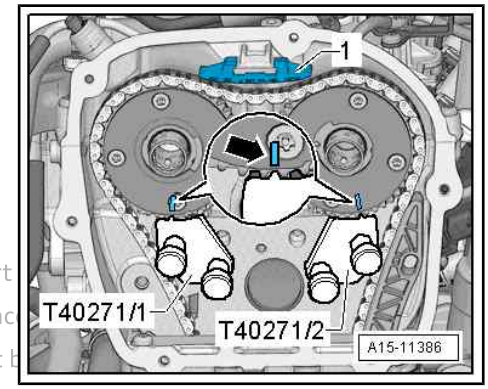

Protected by copyright. Copying for private or commercial purposes, in part
permitted unless authorised by AUDI AG. AUDI AG does not guarantee or ac
with respect to the correctness of information in this document. Copyright b

– Fit inlet camshaft -A- in cylinder head. Rotate cams of cylinder 4 -arrows- so that they face upwards.

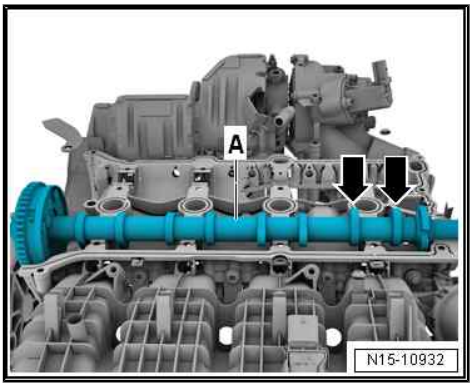

CAUTION

Ball for slider may spring out - risk of eye injury.

– Put on safety goggles.

– Fit exhaust camshaft in cylinder head cover, as shown in illustration. Pairs of cams -A- and -B- must be pushed together.

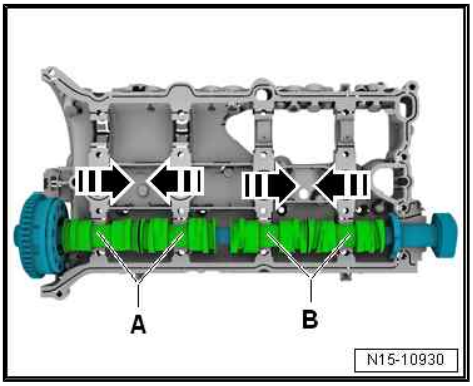

– Rotate exhaust camshaft until markings -A- and -B- are aligned.

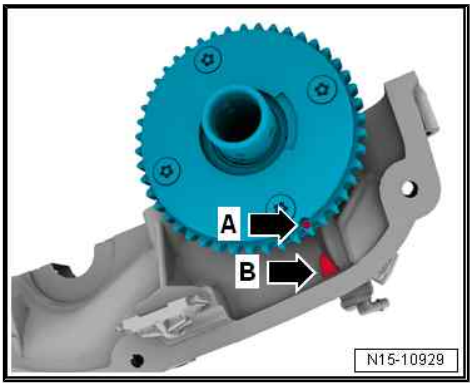

– Apply sealant onto clean sealing surface -arrows- of cylinder head cover, as shown in illustration.

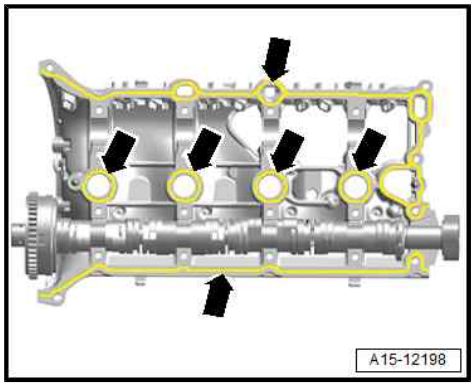

NOTICE

Risk of engine damage due to excessive sealant in lubrication system.

– **The sealant bead must not be thicker than specified.**

♦ Thickness of sealant bead: 1.5 ... 2.5 mm

– Hold camshaft in position and place cylinder head cover on cylinder head with camshaft fitted.

– Press lightly on cylinder head cover with your hand and rotate camshafts slightly until cylinder head cover comes into contact with cylinder head such that it is free of tension.

– Renew bolts for cylinder head cover.

– Tighten bolts in several stages; tightening sequence ⇒ page 137 .

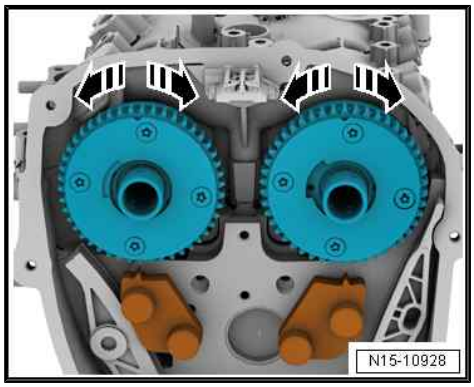

Note

Take care to keep cylinder head cover straight.

– Turn inlet camshaft in direction of -arrow 1- until marking -3- aligns with camshaft clamp - T40271/2- .

– Slide camshaft clamp - T40271/2- into teeth of chain sprocket in direction of -arrow 2-.

Protected by copyright. Copying for private or commercial purposes
permitted unless authorised by AUDI AG. AUDI AG does not guaran
with respect to the correctness of information in this document. Co

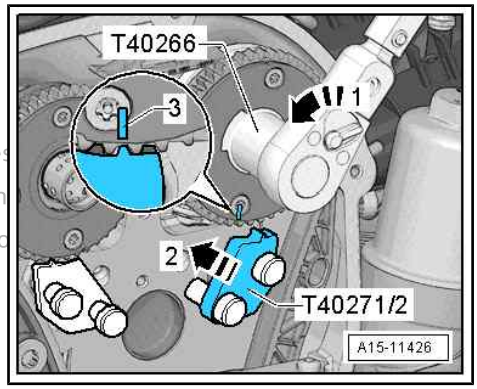

– Turn exhaust camshaft in direction of -arrow 1- until marking -3- aligns with camshaft clamp - T40271/1- .

– Slide camshaft clamp - T40271/1- into teeth of chain sprocket in direction of -arrow 2-.

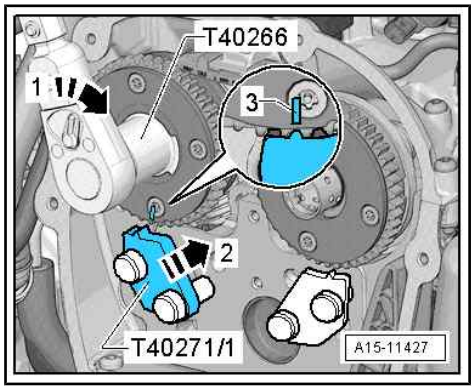

– Turn vibration damper to “TDC” position.

• Notch on vibration damper and marking on cover for timing chains (bottom) must be aligned -arrow-.

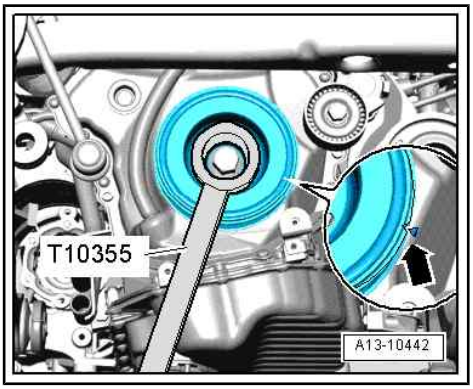

– Fit timing chain; to do so, position markings on chain links -arrows- at markings on chain sprockets -1-.

– Install top guide rail -2-.

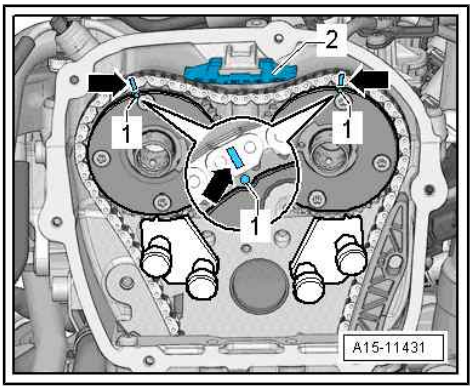

– Turn exhaust camshaft in direction of -arrow 1- with assembly tool - T40266- , slide camshaft clamp - T40271/1- out of teeth on chain sprocket in direction of -arrow 2- and release camshaft.

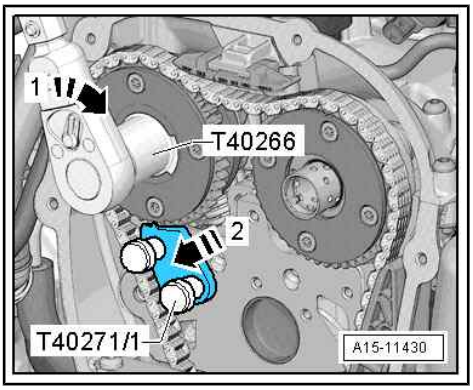

– Move guide rail -2- upwards and screw in bolt -1-.

Protected by copyright. Copying for private or commercial purposes, in
permitted unless authorised by AUDI AG. AUDI AG does not guarantee
with respect to the correctness of information in this document. Copyr

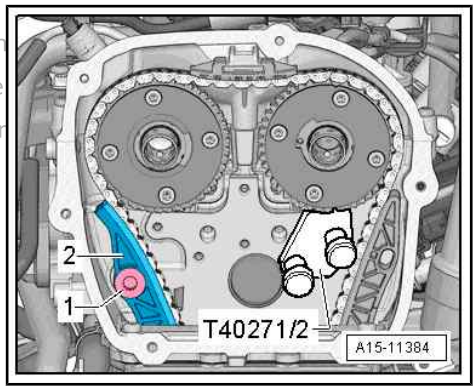

– Turn inlet camshaft in direction of -arrow 1- with assembly tool - T40266- , slide camshaft clamp - T40271/2- out of teeth on chain sprocket in direction of -arrow 2- and release camshaft.

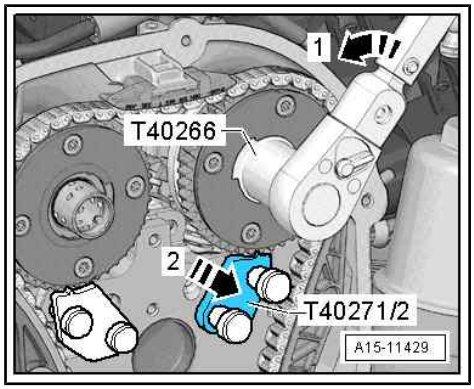

Checking valve timing - with markings on cylinder head cover

– Turn vibration damper to “TDC” position.

- Notch on vibration damper must align with arrow marking on timing chain cover (bottom) -arrow-.
- Markings -1- on camshaft chain sprockets must be aligned with markings -2 and 3- on cylinder head.

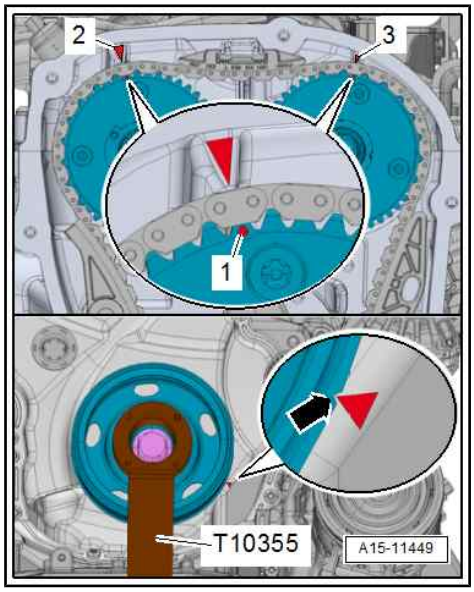

Checking valve timing - without markings on cylinder head cover

– Markings on camshaft timing chain and cylinder head -arrows- must align with markings on chain sprockets -1-.

– Markings on camshaft timing chain and on guide rail for camshaft timing chain -2- must be opposite one another.

– Notch on vibration damper must align with marking on timing chain cover (bottom) -3-.

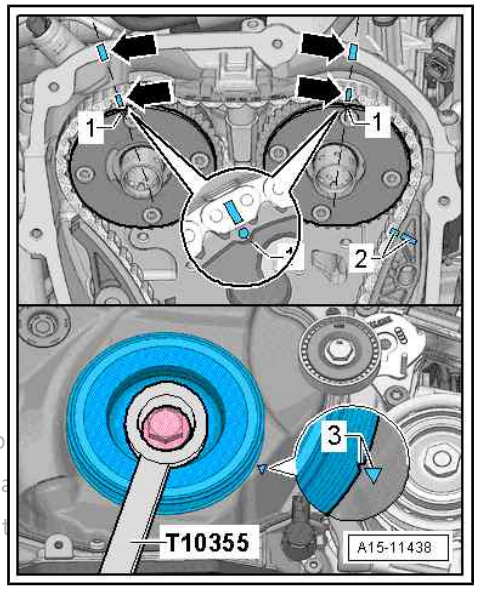

Note

If the markings you have made are no longer visible, check the valve timing ⇒ page 121 .

Protected by copyright. Copying for private or commercial purp
permitted unless authorised by AUDI AG. AUDI AG does not gua
with respect to the correctness of information in this document

All engine versions (continued)

– Fit and tighten bolts -arrows-. Tightening torque
⇒ Item 4 (page 126)

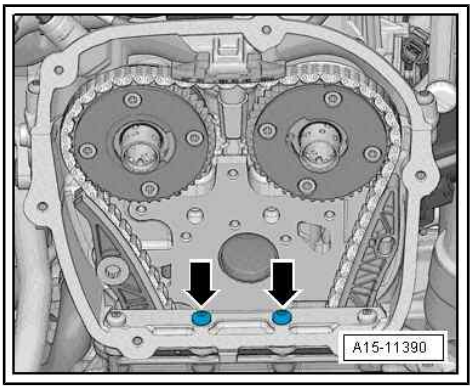

– Lubricate holes -arrows- with engine oil.

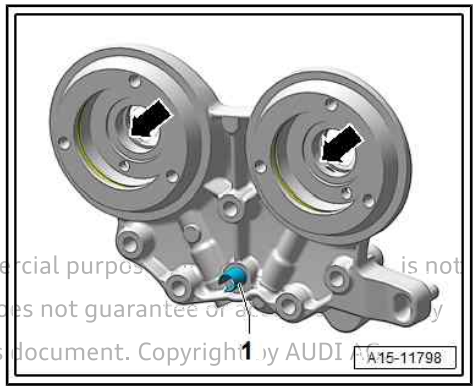

Note

Spring pin -1- is not fitted on all bearing saddles.

Protected by copyright. Copying for private or commercial purposes, in part or in whole, is not permitted unless authorised by AUDI AG. AUDI AG does not guarantee or assume liability with respect to the correctness of information in this document. Copyright by AUDI AG.

- Carefully attach bearing saddle without tilting it - risk of damage.

– Attach bearing saddle and screw in bolts -arrows- hand-tight.

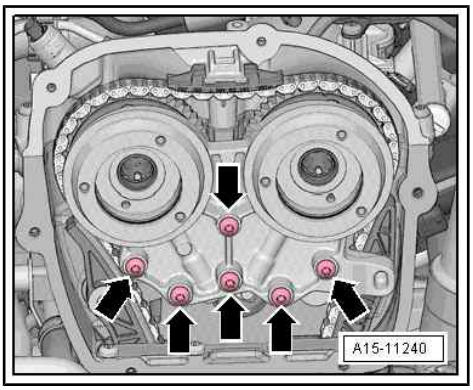

– Remove locking tool - T40267- .
– Tighten bolts for bearing saddle ⇒ page 75 .
– Install timing valves ⇒ Item 7 (page 74) .
– Install vacuum pump ⇒ Brake system; Rep. gr. 47 ; Vacuum system; Exploded view - vacuum pump .
– Install high-pressure pump ⇒ page 272 .
– Install timing chain cover (top) ⇒ page 65 .

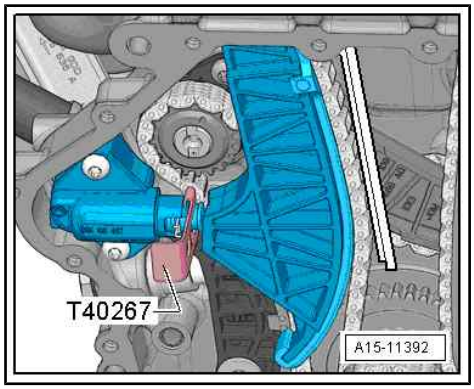

Additional work depending on model ⇒ 4-cylinder direct injection engine (1.8, 2.0 ltr. 4-valve TFSI); Rep. gr. 15 ; Valve gear; Removing and installing camshaft

Learnt values for chain elongation must be re-adapted after removing or renewing camshafts.

– Connect ⇒ Vehicle diagnostic tester.
– Select `Diagnosis` mode and then `Start diagnosis`.
– Choose `Select own test` tab and select following options one after the other:

- `Drive train`
- `Select engine code and engine`
- `01 - Self-diagnosis compatible systems`
- `01 - Engine electronics`
- `01 - Engine electronics, functions`
- `01 - Chain elongation adaption diagnosis`

Tightening torques

- ⇒ "4.1 Exploded view - valve gear", page 135

Protected by copyright. Copying for private or commercial purposes, in part or in whole, is not permitted unless authorised by AUDI AG. AUDI AG does not guarantee or accept any liability with respect to the correctness of information in this document. Copyright by AUDI AG.

4.2.3 Removing and installing camshaft - engine with one camshaft adjuster

Engine with one camshaft adjuster
⇒ "1.2.1 Camshaft adjuster", page 1

Special tools and workshop equipment required

- Assembly tool - T10352A- , assembly tool - T10352/3- , assembly tool - T10352/4-

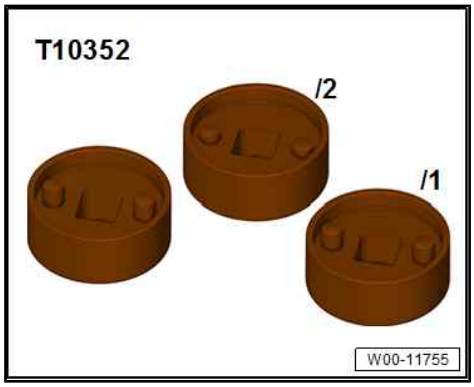

- Locking pin - T40011-

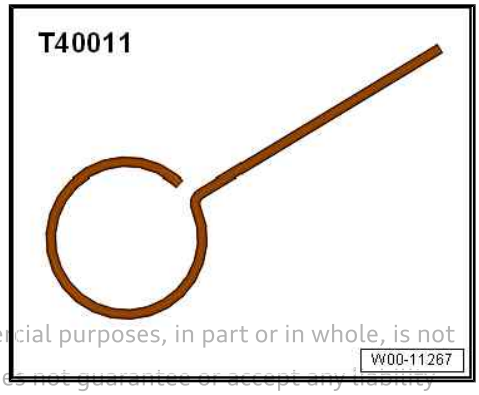

Protected by copyright. Copying for private or commercial purposes, in part or in whole, is not permitted unless authorised by AUDI AG. AUDI AG does not guarantee or accept any liability with respect to the correctness of information in this document. Copyright by AUDI AG.

- Lever - T40243-

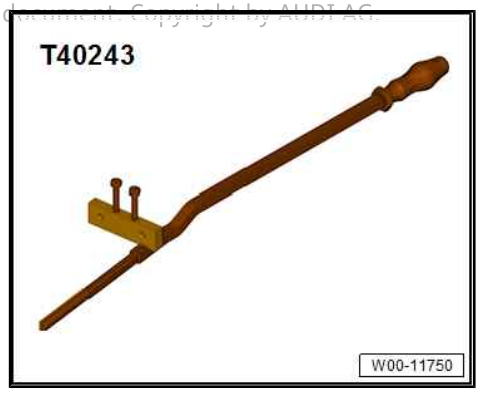

- Ratchet wrench (21 mm) - T40263-

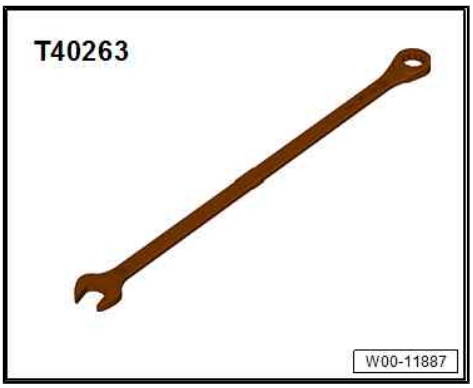

- Assembly tool - T40266-

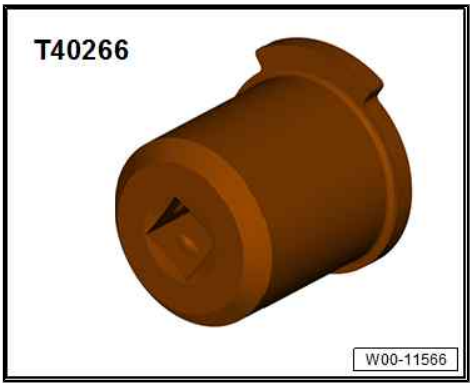

- Locking tool - T40267-

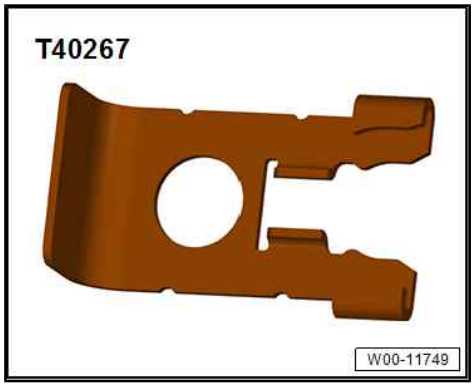

- Camshaft clamp - T40271-

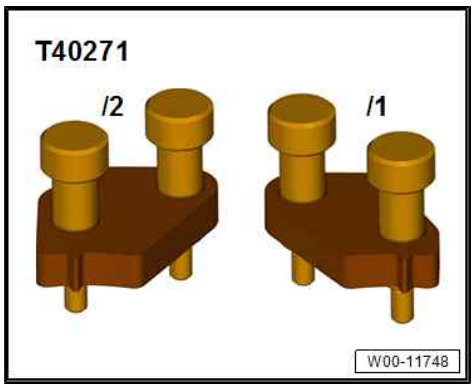

- Adapter - T40314-

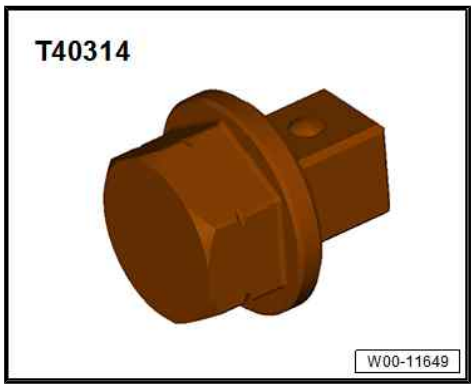

- Sealant ⇒ Electronic parts catalogue

Removing

- Do not machine the sealing surfaces between the cylinder head cover and the cylinder head.
- The camshaft bearings are integrated into the cylinder head and cylinder head cover. The timing chain must be slackened before removing the cylinder head cover.
- Re-install all cable ties in original positions.

Preparatory work may be necessary depending on model ⇒ 4-cylinder direct injection engine (1.8, 2.0 ltr. 4-valve TFSI); Rep. gr. 15 ; Valve gear; Removing and installing camshaft .

Protected by copyright. Copying for private or commercial purposes, in part or in whole, is not permitted unless authorised by AUDI AG. AUDI AG does not guarantee or accept any liability with respect to the correctness of information in this document. Copyright by AUDI AG.

– Remove timing chain cover (top) ⇒ page 65 .
– Remove high-pressure pump ⇒ page 272 .
– Remove vacuum pump ⇒ Brake system; Rep. gr. 47 ; Vacuum system; Exploded view - vacuum pump .

– Remove engine support ⇒ 4-cylinder direct injection engine (1.8, 2.0 ltr. 4-valve TFSI); Rep. gr. 13 ; Cylinder block (pulley end); Removing and installing engine support .

– Turn vibration damper to “TDC” position.

• Markings -1- on camshaft chain sprockets must be aligned with markings -2- and -3-.

• Notch on vibration damper and marking -arrow- on cover for timing chains (bottom) must be aligned.

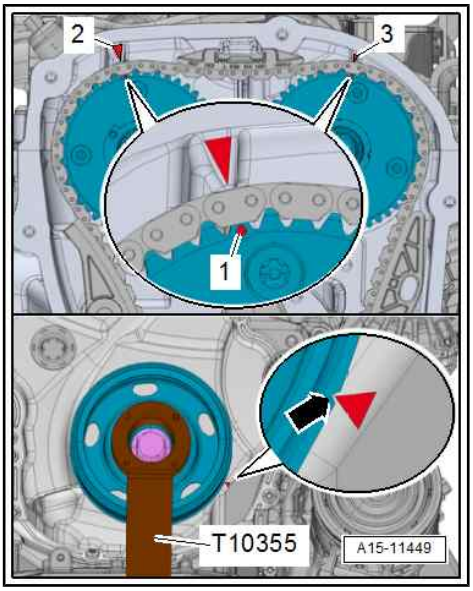

Note:

The combination of ratchet wrench (21 mm) - T40263- , adapter - T40314- and socket (24 mm) can be fitted onto the vibration damper better than the counterhold tool - T10355- .

– Remove timing chain cover (bottom) ⇒ page 67 .

• Please note that the timing valves have a left-hand thread and will be damaged if turned in the wrong direction.

– Remove timing valve (both sides) in direction of -arrow-.

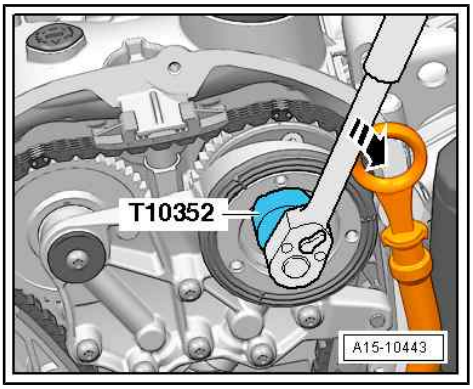

Depending on version of timing valve, use one of the following tools:

♦ Assembly tool - T10352-

♦ Assembly tool - T10352/1A-

♦ Assembly tool - T10352/2-

♦ Assembly tool - T10352/3-

♦ Assembly tool - T10352/4-

– Turn assembly tool -T10352/2- in direction of -arrow- to remove timing valve.

– When doing so, counterhold crankshaft at vibration damper with ratchet wrench (21 mm) - T40263- , adapter - T40314- and socket (24 mm).

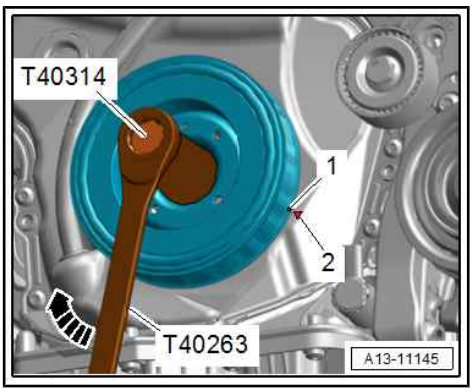

Protected by copyright. Copying for private or commercial purposes, in part or in whole, is not permitted unless authorised by AUDI AG. AUDI AG does not guarantee or accept any liability with respect to the correctness of information in this document. Copyright by AUDI AG.

– Remove bolts -arrows-.

• Detach bearing saddle carefully without tilting it - risk of damage.

– Detach bearing saddle.

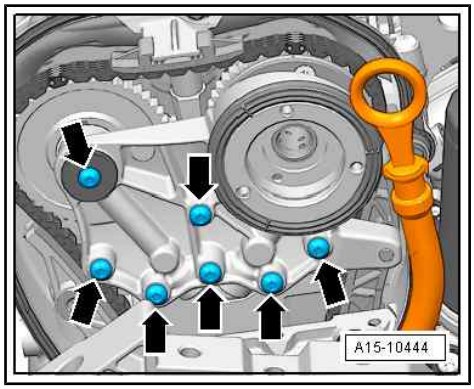

– Remove bolts -arrows-.

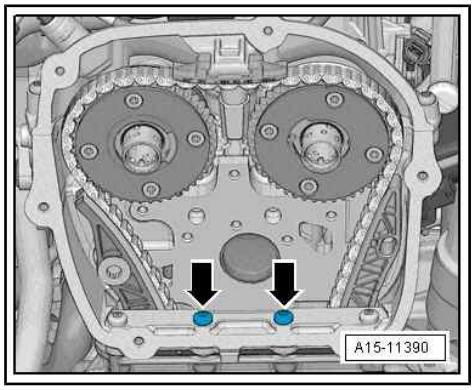

– Remove bolt -arrow-.

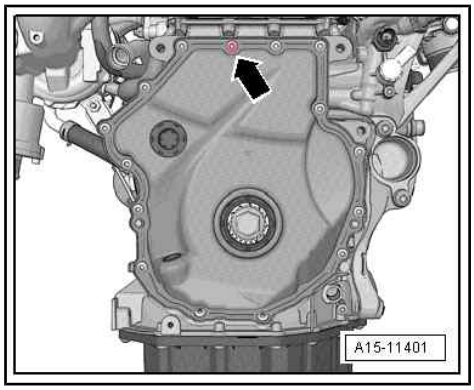

– Screw in lever - T40243- -arrows-.

– Compress and hold circlip -1- for chain tensioner.

– Push lever - T40243- slowly in direction of -arrow- and hold in place.

Protected by copyright. Copying for private or commercial
permitted unless authorised by AUDI AG. AUDI AG does n
with respect to the correctness of information in this docu

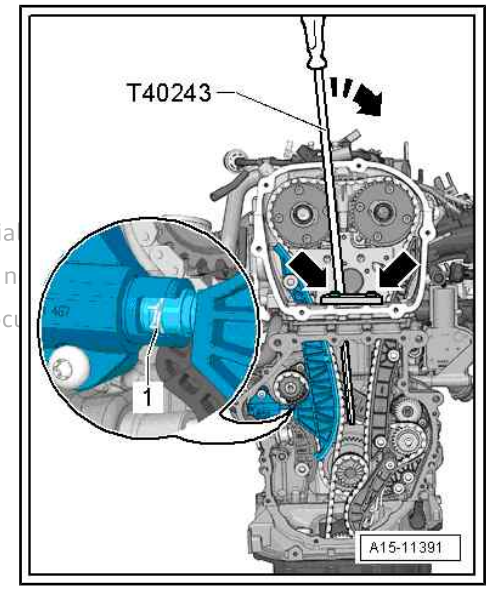

– Hold chain tensioner in position with locking tool - T40267- .

– Remove lever - T40243- .

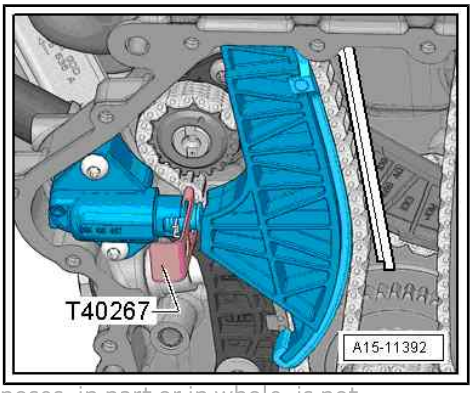

Protected by copyright. Copying for private or commercial purposes, in part or in whole, is not permitted unless authorised by AUDI AG. AUDI AG does not guarantee with respect to the correctness of information in this documen

– Bolt camshaft clamp - T40271/2- onto cylinder head and slide it into teeth of chain sprocket in direction of -arrow 2-. If necessary, rotate inlet camshaft using assembly tool - T40266- -1-.

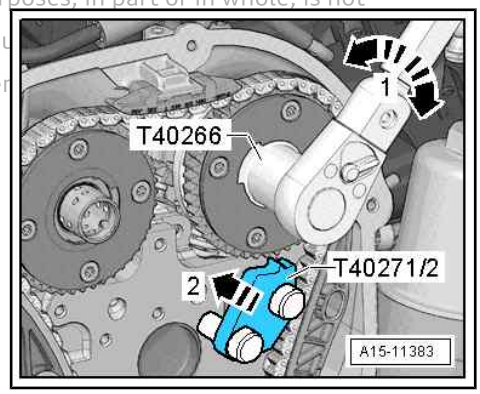

– Bolt camshaft clamp - T40271/1- onto cylinder head.

A second mechanic is required for the following step.

– Turn exhaust camshaft in direction of -arrow A- using counterhold tool - T10172A- and hold in place. Remove bolt -1- and guide tensioning rail -2- downwards. Continue turning camshaft clockwise -arrow A- until camshaft clamp - T40271/1- can be pressed into teeth -C- on chain sprocket in direction of -arrow B-.

– Check installation position -C- of camshaft clamp - T40271/1- .

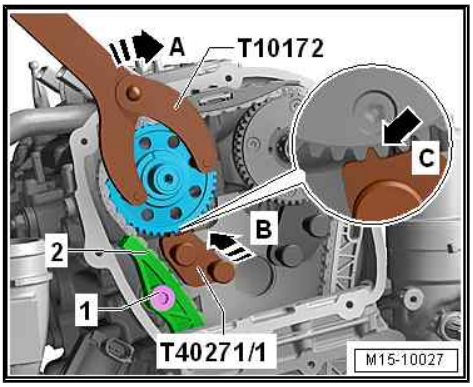

– Use screwdriver to release catch -arrow- and press off guide rail -1- towards front.

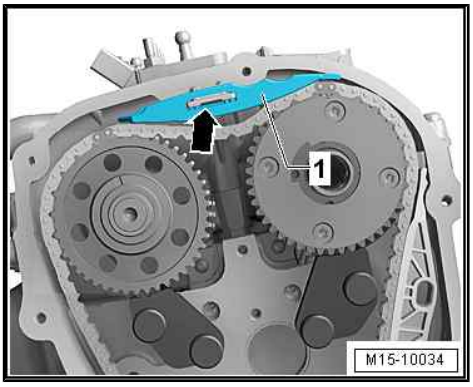

– Press retainer for oil pump chain tensioner in direction of -arrow- and lock in place using locking pin - T40011- .
– Unscrew bolt -1- and remove chain tensioner.

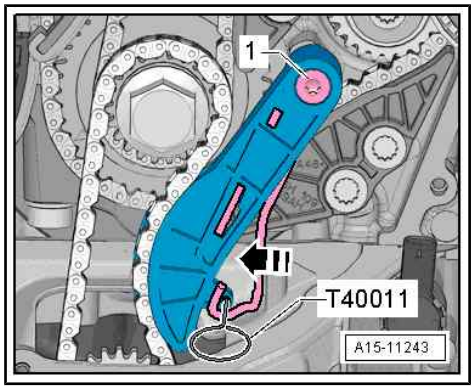

– Unscrew bolts -1- and remove guide rail -2-.
– Detach camshaft timing chain from sprockets and guide it downwards.

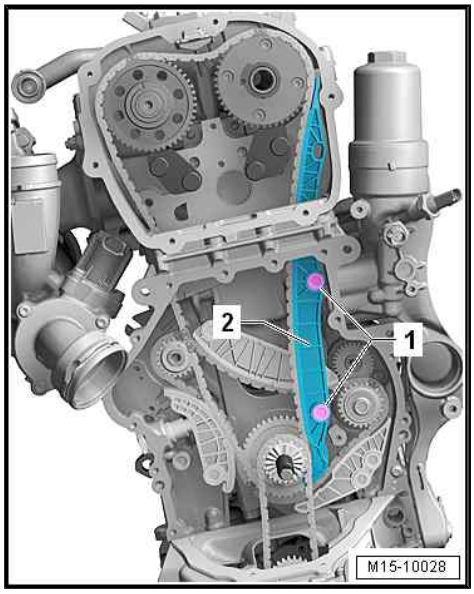

– Attach turning-over tool - T10531/3- . In “TDC” position, flat surface -1- is positioned at top (facing cylinder head). Screw on flange nut - T10531/4- . Turn crankshaft anti-clockwise out of “TDC” position using open-end spanner, 32 mm.

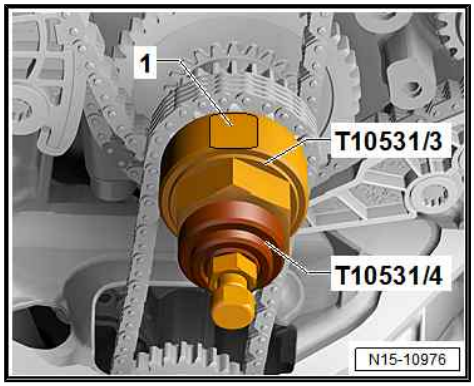

– Turn inlet camshaft in direction of -arrow 1- with assembly tool - T40266- , slide camshaft clamp - T40271/2- out of teeth on chain sprocket in direction of -arrow 2- and move camshaft into rest position.

Protected by copyright. Copying for private or comm
permitted unless authorised by AUDI AG. AUDI AG
with respect to the correctness of information in th

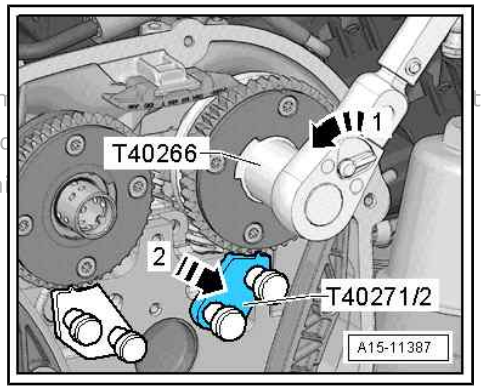

– Turn exhaust camshaft in direction of -arrow A- using counterhold tool - T10172A- , slide camshaft clamp - T40271/1- out of teeth on chain sprocket in direction of -arrow B- and move camshaft into rest position.

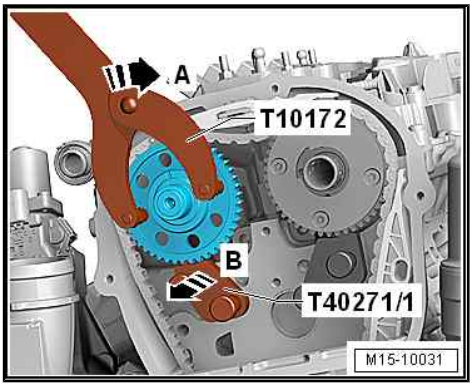

– Remove cylinder head cover bolts in the sequence -1 ... 6-.

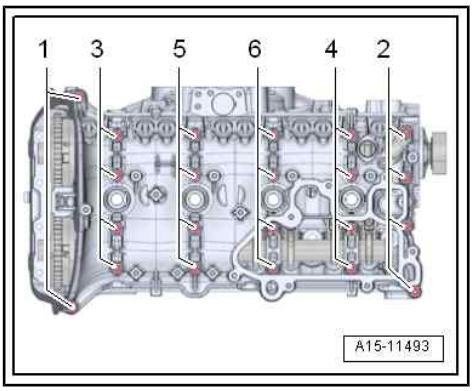

– Prise cylinder head cover -2- off using tool such as screwdriver -1-, starting from chain side.

– Detach cylinder head cover.

– Detach camshafts and cover exposed parts of engine.

– If necessary for additional work, mark roller rocker fingers and hydraulic compensation elements for re-installation, remove them and place them on a clean surface.

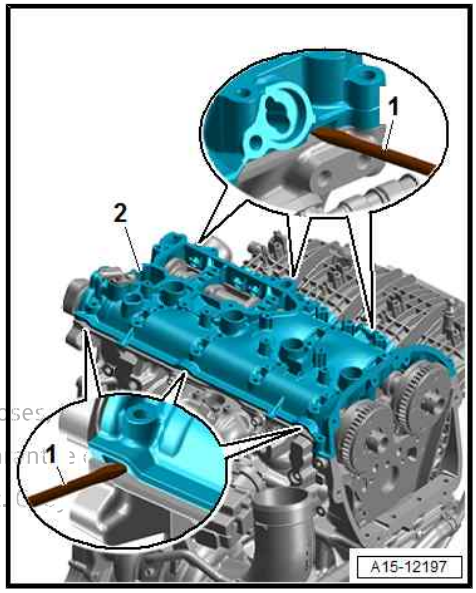

Installing camshafts

Note

Protected by copyright. Copying for private or commercial purposes, in part, is not permitted unless authorised by AUDI AG. AUDI AG does not guarantee or assume any liability with respect to the correctness of information in this document.

- *The sealing surfaces must be free of oil and grease.*
- *Ensure that all roller rocker fingers make contact with the ends of the valve stems correctly.*

– If crankshaft has been rotated: Set piston of cylinder 1 to top dead centre and then turn crankshaft back slightly.

– Remove sealant residue from groove in cylinder head cover and from sealing surfaces.

– Clean sealing surfaces; they must be free of oil and grease.

– Oil running surfaces of both camshafts.

– Fit inlet camshaft -A- in cylinder head. Rotate cams of cylinder 4 -arrows- so that they face upwards.

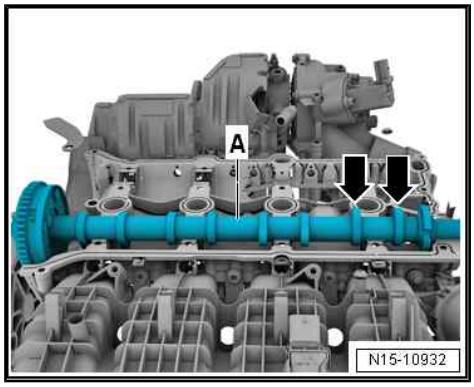

– Insert exhaust camshaft -1- in cylinder head cover. Rotate cams of cylinder 4 -arrows- so that they face upwards.

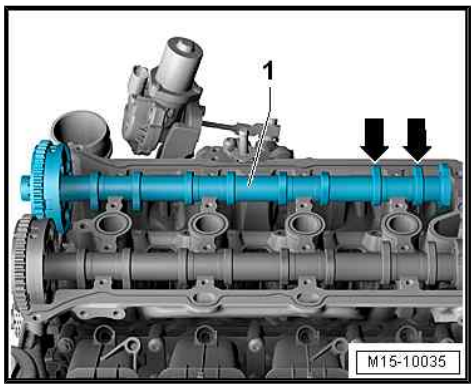

– Rotate inlet camshaft -1- and exhaust camshaft -2- until markings -arrows- are in positions shown in illustration.

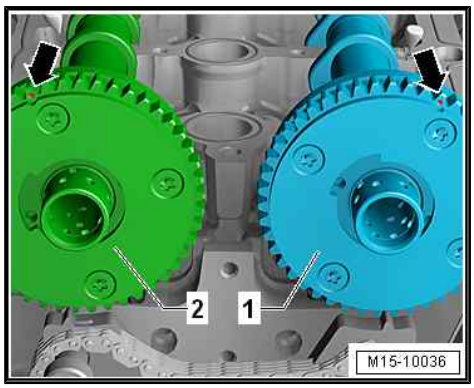

– Cams on inlet camshaft -1- and exhaust camshaft -2- must face upwards as shown in illustration -arrows-.

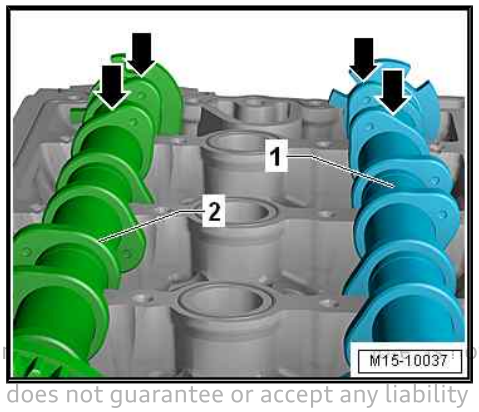

Protected by copyright. Copying for private or com ot permitted unless authorised by AUDI AG. AUDI AG does not guarantee or accept any liability with respect to the correctness of information in this document. Copyright by AUDI AG.

– Apply sealant onto clean sealing surface -arrows- of cylinder head cover, as shown in illustration.

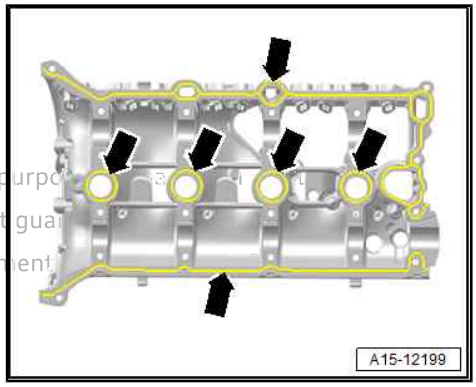

NOTICE

Risk of engine damage due to excessive sealant in lubrication system.

– **The sealant bead must not be thicker than specified.**

Protected by copyright. Copying for private or commercial purpo
permitted unless authorized by AUDI AG. AUDI AG does not guar
with respect to the correctness of information in this document.

♦ Thickness of sealant bead: 1.5 ... 2.5 mm

– Fit cylinder head cover on cylinder head.

– Press lightly on cylinder head cover with your hand and rotate camshafts slightly until cylinder head cover comes into contact with cylinder head such that it is free of tension.

– Renew bolts for cylinder head cover.

– Tighten bolts in several stages; tightening sequence ⇒ page 137 .

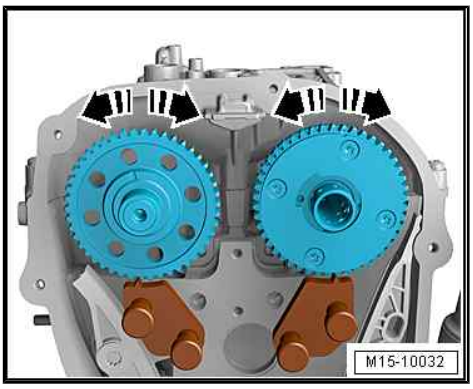

Note

Take care to keep cylinder head cover straight.

– Turn inlet camshaft in direction of -arrow A- using assembly tool - T40266- until markings -1- and -2- are aligned. Slide camshaft clamp - T40271/2- into teeth of chain sprocket in direction of -arrow B-.

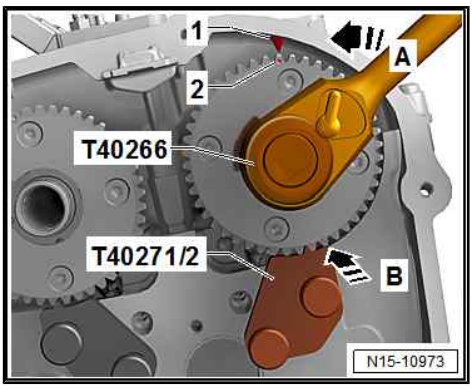

– Turn exhaust camshaft in direction of -arrow A- using counterhold tool - T10172A- until markings -1- and -2- are aligned. Slide camshaft clamp - T40271/1- into teeth of chain sprocket in direction of -arrow B-. Marking -2- is offset slightly to the right.

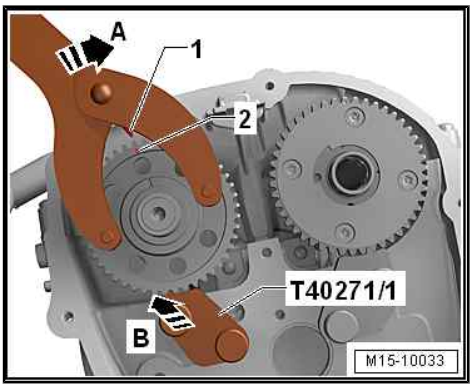

– Turn crankshaft at hexagon flats -2- into “TDC” position. In “TDC” position, flat surface -1- is positioned at top (facing cylinder head).

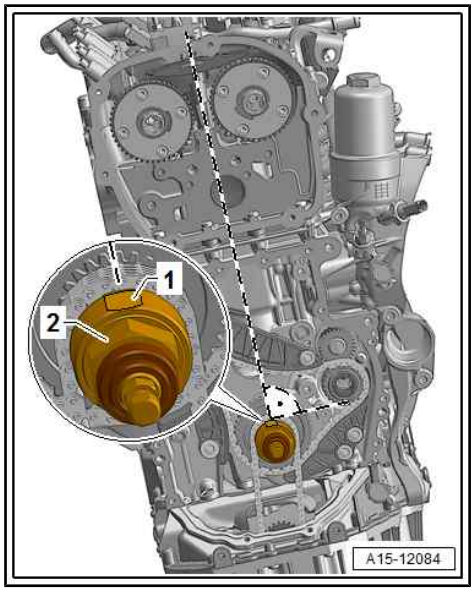

Installing camshaft timing chain

– Fit camshaft timing chain so that coloured markings -arrows- are positioned on camshaft journals.

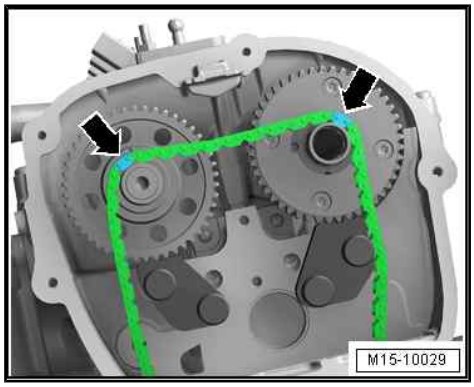

– Fit camshaft timing chain onto inlet camshaft, exhaust camshaft and crankshaft. Position links with coloured markings -arrows- at markings on chain sprockets.

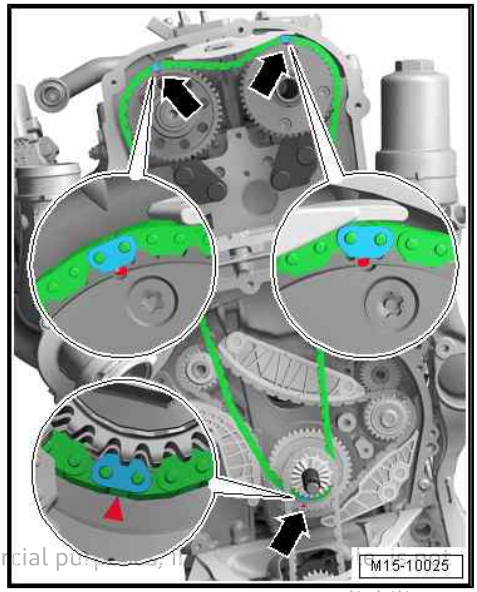

Protected by copyright. Copying for private or commercial purposes, in part, is not permitted unless authorised by AUDI AG. AUDI AG does not guarantee or accept any liability with respect to the correctness of information in this document. Copyright by AUDI AG.

– Install guide rail -2- and tighten bolts -1-.

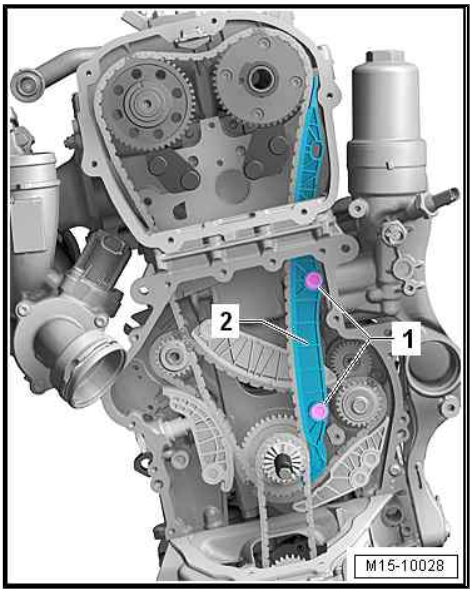

– Install top guide rail -1-.

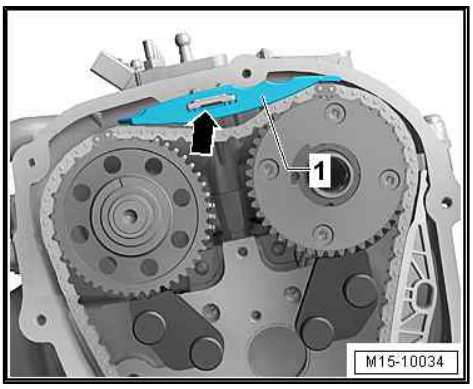

A second mechanic is required for the following step.

I - Turn exhaust camshaft slightly in direction of -arrow A- using counterhold tool - T10172A- . Slide camshaft clamp - T40271/1- out of teeth of chain sprocket in direction of -arrow B-.

II - Release camshaft in direction of -arrow C- until timing chain is in contact with guide rail -1-. Hold camshaft in this position, install tensioning rail -2- and tighten bolt -3-. Then release camshaft.

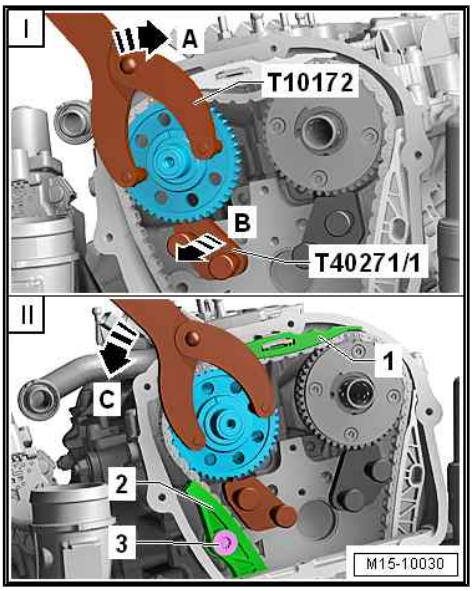

Protected by copyright. Copying for private or commercial purposes, in part or in whole, is not permitted unless authorised by AUDI AG. AUDI AG does not guarantee or accept any liability with respect to the correctness of information in this document. Copyright by AUDI AG.

– Use assembly tool - T40266- to turn inlet camshaft in direction of -arrow 1- until it is possible to slide camshaft clamp - T40271/2- out of teeth on chain sprocket in direction of -arrow 2-. Then release camshaft.

– Remove camshaft clamps - T40271/1- and -T40271/2- .

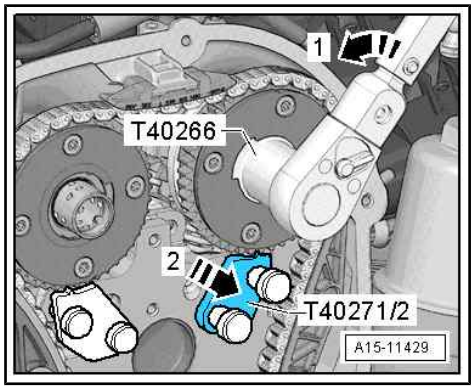

– Fit and tighten bolts -arrows-. Tightening torque
⇒ Item 4 (page 126)

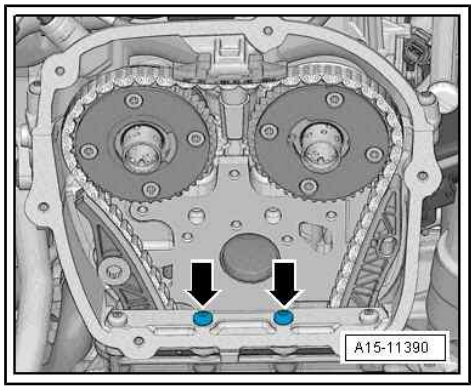

• Carefully attach bearing saddle without tilting it - risk of damage.

– Attach bearing saddle and screw in bolts -arrows- hand-tight.

Protected by copyright. Copying for private or commercia
permitted unless authorised by AUDI AG. AUDI AG does n
with respect to the correctness of information in this doc

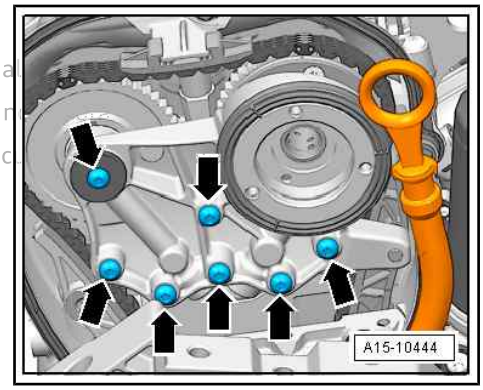

– Remove locking tool - T40267- .

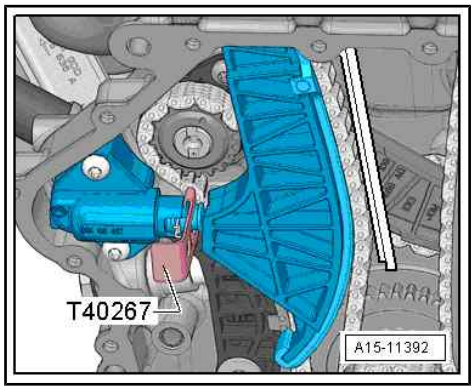

– Tighten bolts -arrows- for bearing saddle. Tightening torque ⇒ page 73

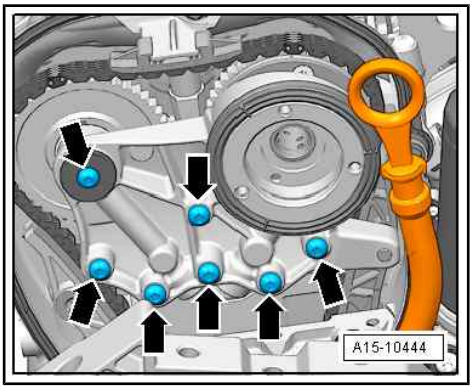

– Install chain tensioner -2- and tighten bolt -1-. Remove locking pin - T40011- ; retainer for oil pump chain tensioner must come into contact with opening -arrow- on sump (top section).

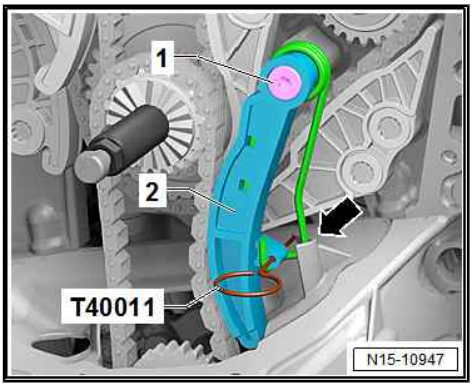

– Check setting; links with coloured markings -arrows- must be positioned at markings on chain sprockets.
– Install timing valve ⇒ Item 7 (page 76) .
– Turn engine two rotations in direction of engine rotation.

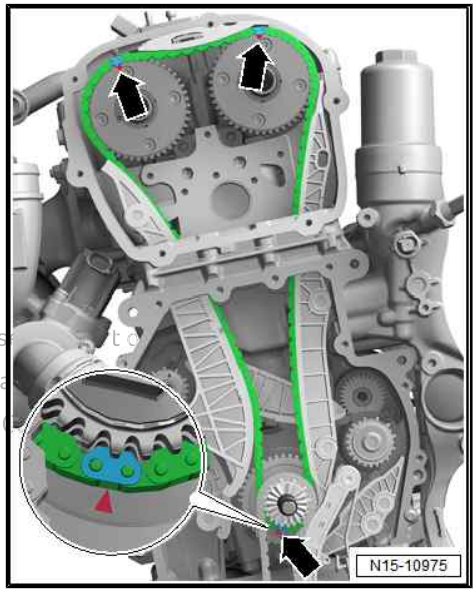

Note

Due to the ratio, the timing chain links with coloured markings are no longer aligned after the engine has been turned.

Protected by copyright. Copying for private or commercial purpos
permitted unless authorised by AUDI AG. AUDI AG does not guara
with respect to the correctness of information in this document.

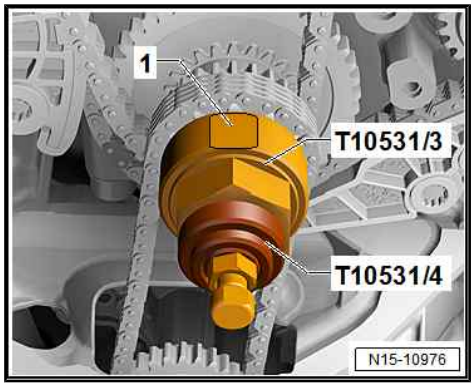

– Unscrew flange nut - T10531/4- and remove turning-over tool - T10531/3- .
– Install timing chain cover (bottom) ⇒ page 67 .
– Install engine support ⇒ 4-cylinder direct injection engine (1.8, 2.0 ltr. 4-valve TFSI); Rep. gr. 13 ; Cylinder block (pulley end); Removing and installing engine support .
– Install vacuum pump ⇒ Brake system; Rep. gr. 47 ; Vacuum system; Exploded view - vacuum pump .
– Install high-pressure pump ⇒ page 272 .
– Install timing chain cover (top) ⇒ page 65 .

Additional work depending on model ⇒ 4-cylinder direct injection engine (1.8, 2.0 ltr. 4-valve TFSI); Rep. gr. 15 ; Valve gear; Removing and installing camshaft

Protected by copyright. Copying for private or commercial purposes, in part or in whole, is not permitted unless authorised by AUDI AG. AUDI AG does not guarantee or accept any liability with respect to the correctness of information in this document. Copyright by AUDI AG.

Learnt values for chain elongation must be re-adapted after removing or renewing camshafts.

– Connect ⇒ Vehicle diagnostic tester.
– Select `Diagnosis` mode and then `Start diagnosis`.
– Choose `Select own test` tab and select following options one after the other:

♦ `Drive train`
♦ `Select engine code and engine`
♦ `01 - Self-diagnosis compatible systems`
♦ `01 - Engine electronics`
♦ `01 - Engine electronics, functions`
♦ `01 - Chain elongation adaption diagnosis`

Tightening torques

♦ ⇒ “4.1 Exploded view - valve gear”, page 135

4.3 Installing ball for slider

The description only applies to engines with two camshaft adjusters ⇒ “1.2 Engine versions”, page 1 .

Special tools and workshop equipment required

♦ Spacers - T40191-

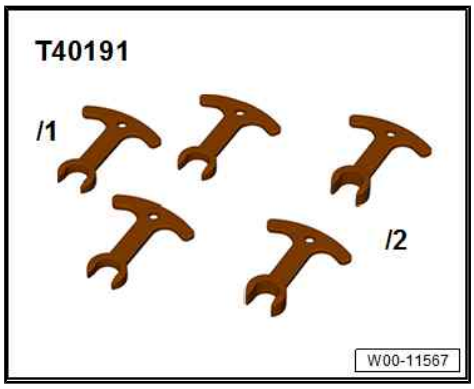

♦ Safety goggles

Installing

CAUTION

Ball for slider may spring out - risk of eye injury.
– Put on safety goggles.

– Insert spring -1- in camshaft.
– Place ball -2- on spring in camshaft.
– Push ball and spring downwards in direction of -arrow A- with spacer - T40191/1- and hold in place.
– Push slider -3- in direction of -arrow B-.

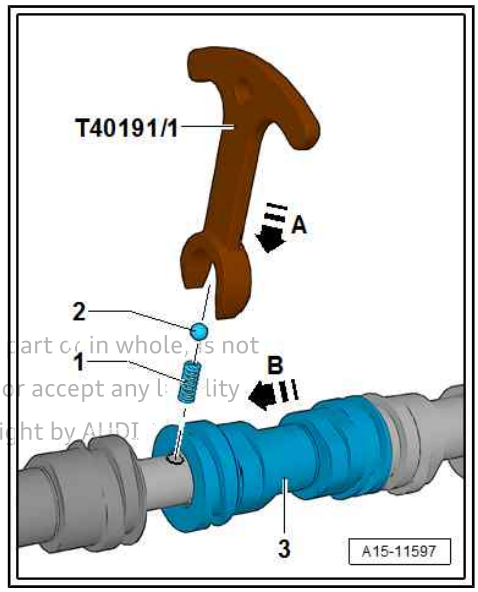

Protected by copyright. Copying for private or commercial purposes, in part or in whole, is not permitted unless authorised by AUDI AG. AUDI AG does not guarantee or accept any liability with respect to the correctness of information in this document. Copyright by AUDI

4.4 Removing and installing actuators for camshaft adjustment

Removing

– Remove engine cover panel ⇒ page 15 .
– Unplug relevant electrical connector -2-.
– Unscrew bolt -1- and detach actuator for camshaft adjustment.

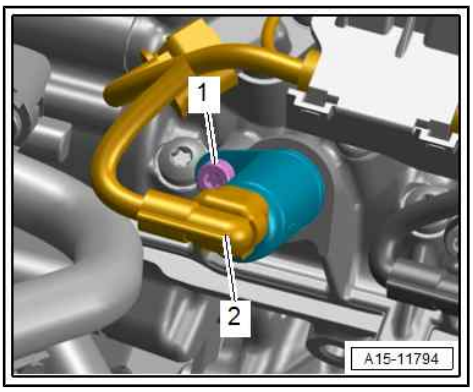

Installing

Installation is carried out in reverse order; note the following:

- Check O-rings for damage.

- Pin of actuator for camshaft adjustment must be brought into installation position.

– Press down pin of actuator for camshaft adjustment -arrow- by hand.

- Pin of actuator must not be in extended position.

– Lubricate O-rings with engine oil.
– Install engine cover panel ⇒ page 15 .

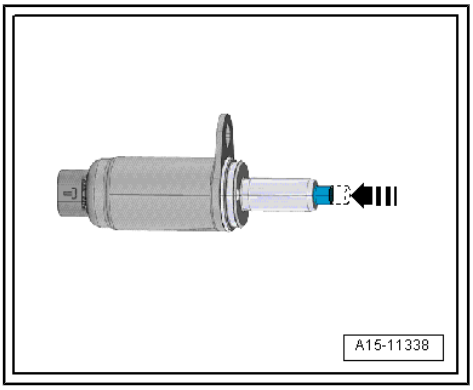

Tightening torques

♦ ⇒ “4.1 Exploded view - valve gear”, page 135

4.5 Removing and installing camshaft control valve 1 - N205-

The description applies to camshaft control valve 1 - N205- and, if fitted, exhaust camshaft control valve 1 - N318-
⇒ "1.2.1 Camshaft adjuster", page 1 .

Removing

– Remove engine cover panel ⇒ page 15 .

– Unplug electrical connectors:

1 - For exhaust camshaft control valve 1 - N318-

3 - For camshaft control valve 1 - N205-

– Remove bolts -arrows- and detach camshaft control valves:

2 - Exhaust camshaft control valve 1 - N318-

4 - Camshaft control valve 1 - N205-

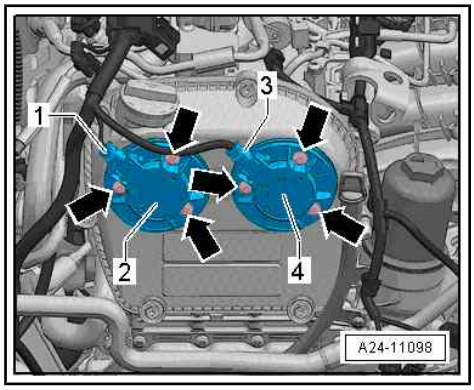

Installing

Installation is carried out in reverse order; note the following:

• Renew seals and O-rings after removing.

– Use engine oil to lubricate O-rings on sealing surface for camshaft control valve.

– Install engine cover panel ⇒ page 15 .

Tightening torques

♦ ⇒ "1.1 Exploded view - timing chain cover", page 61

Protected by copyright. Copying for private or commercial purposes, in part or in whole, is not permitted unless authorised by AUDI AG. AUDI AG does not guarantee or accept any liability with respect to the correctness of information in this document. Copyright by AUDI AG.

4.6 Removing and installing valve stem oil seals

⇒ "4.6.1 Removing and installing valve stem oil seals (cylinder head installed)", page 184

⇒ "4.6.2 Removing and installing valve stem oil seals (cylinder head removed)", page 189

4.6.1 Removing and installing valve stem oil seals (cylinder head installed)

Special tools and workshop equipment required

♦ Spark plug spanner - 3122B-

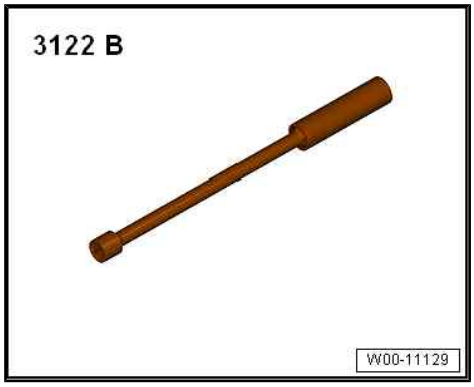

- Valve stem seal puller - 3364-

- Valve stem oil seal fitting tool - 3365- for valve stem oil seal with one sealing lip ⇒ page 138

Protected by copyright. Copying for private or commercial purposes, in part or in whole, is not permitted unless authorised by AUDI AG. AUDI AG does not guarantee or accept any liability with respect to the correctness of information in this document. Copyright by AUDI AG.

- Valve stem oil seal fitting tool - T40376/1- for valve stem oil seal with two sealing lips ⇒ page 138

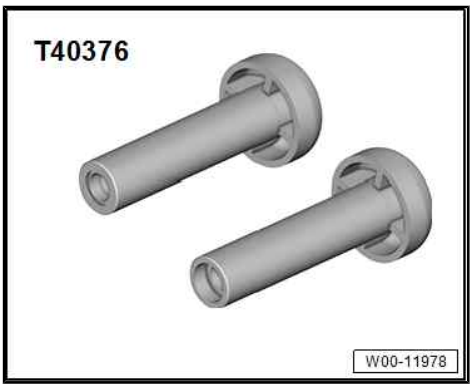

- Removal and installation device for valve cotters - VAS 5161 A- with guide plate -VAS 5161/19C-

♦ Adapter - T40012-

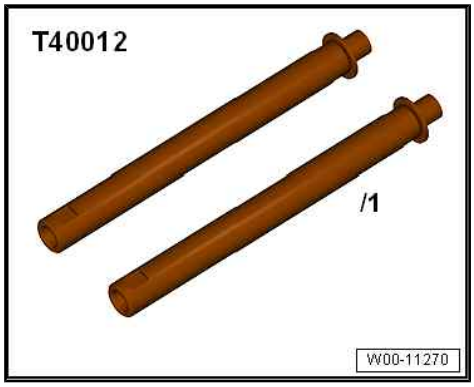

♦ Assembly sleeve ⇒ Electronic parts catalogue

Procedure

– Remove camshafts ⇒ page 142 .

– Remove spark plugs with spark plug spanner - 3122B- .

Protected by copyright. Copying for private or commercial purpo[illegible] is not permitted unless authorised by AUDI AG. AUDI AG does n[illegible] ty with respect to the correctness of information in th[illegible] ent.

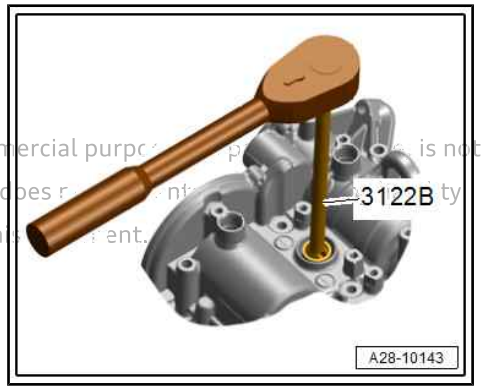

Machining guide plate:

– Check whether there is a recess -arrow-.

– If necessary, machine guide plate for 2.0 ltr. and 3.0 ltr. FSI engine - VAS 5161/19C- -arrow- so that guide plate rests on cylinder head and guide pin -1- does not make contact.

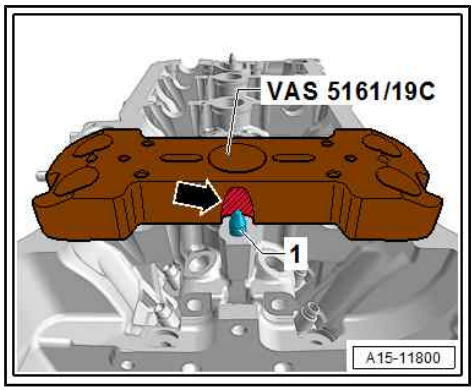

Continued:

– Secure guide plate for 2.0 ltr. and 3.0 ltr. FSI engine - VAS 5161/19C- to cylinder head with knurled screws - VAS 5161/12- as shown.

– Set piston of appropriate cylinder to “bottom dead centre”.

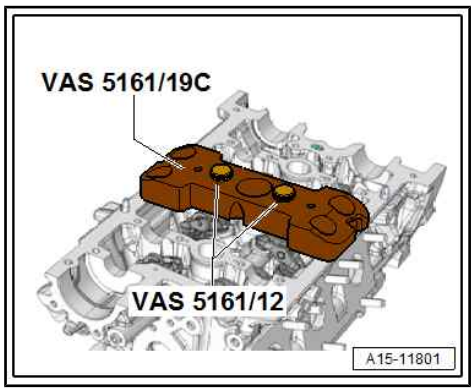

– Screw adapter - T40012- into spark plug thread.
– Connect to compressed air supply of at least 6 bar.
– Knock loose sticking valve cotters using punch - VAS 5161/3- and a plastic-headed hammer.

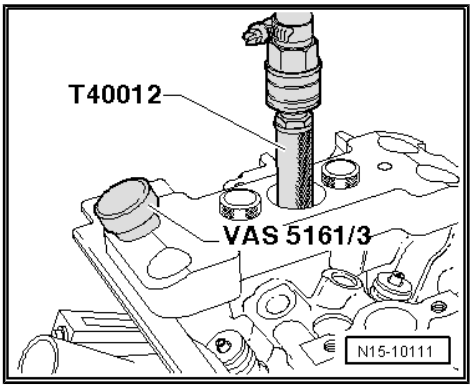

Inlet side:

– Screw snap-in device - VAS 5161/6- with engaging fork - VAS 5161/5- into centre thread on guide plate for 2.0 ltr. and 3.0 ltr. FSI engine - VAS 5161/19C- .

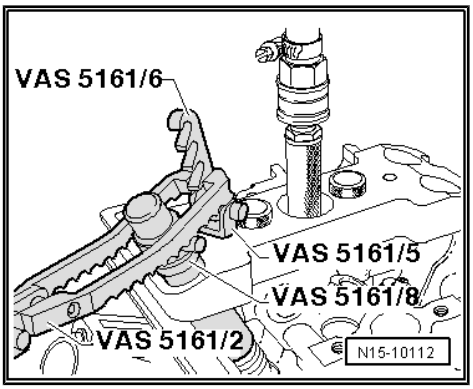

Exhaust side:

– Screw snap-in device - VAS 5161/6- with engaging fork - VAS 5161/5- into outer thread on guide plate for 2.0 ltr. and 3.0 ltr. FSI engine - VAS 5161/19C- .

Continued:

– Insert assembly cartridge - VAS 5161/8- into guide plate for 2.0 ltr. and 3.0 ltr. FSI engine - VAS 5161/19C- .
– Engage pressure fork - VAS 5161/2- on snap-in device - VAS 5161/6- .
– Press down assembly cartridge - VAS 5161/8- and at the same time, turn knurled screw of assembly cartridge - VAS 5161/8- clockwise until tips engage in valve cotters.
– Move knurled screw back and forth slightly; the valve cotters are thus forced apart and taken up by the assembly cartridge.
– Release pressure fork - VAS 5161/2- .
– Take out assembly cartridge - VAS 5161/8- .

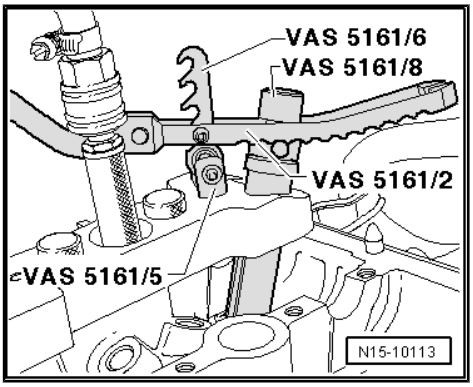

Protected by copyright. Copying for private or commercial purposes, in part or in whole, is not permitted unless authorised by AUDI AG. AUDI AG does not guarantee or accept any liability with respect to the correctness of information in this document. Copyright by AUDI AG.

– Pull off valve stem oil seal with valve stem seal puller - 3364- .

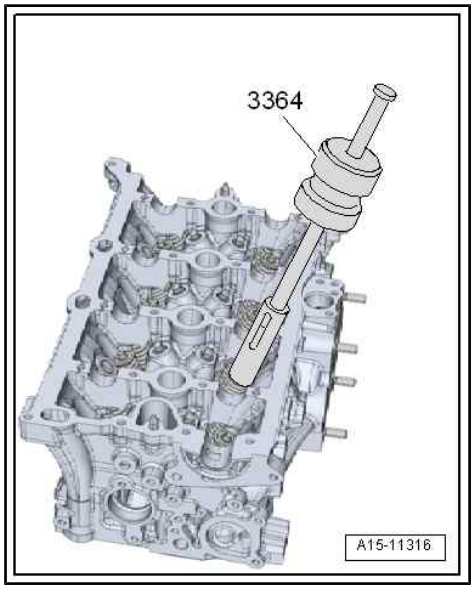

- To avoid damaging the new valve stem oil seal -4- during installation, fit the assembly sleeve -3- onto the valve stem -2-.

– Lightly oil sealing lip of valve stem oil seal.

– Insert valve stem oil seal into valve stem oil seal fitting tool -5- and use assembly sleeve to press it carefully onto valve guide -1- as far as stop.

– Remove assembly sleeve .

– Insert valve spring and valve spring plate.

– Set up removal and installation device for valve cotters - VAS 5161 A- as shown.

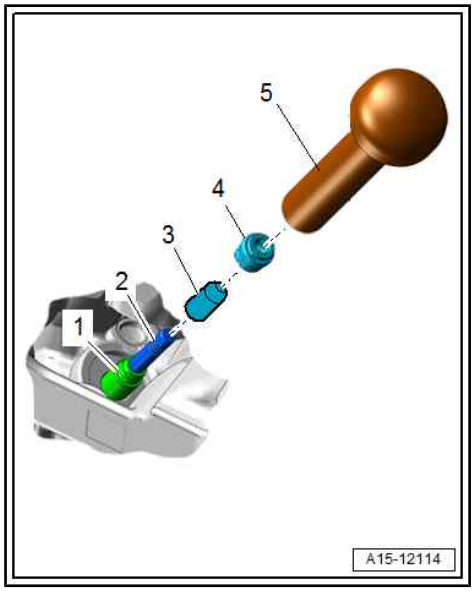

Inlet side:

Protected by copyright. Copying for private or commercial purposes, in part or in whole, is not permitted unless authorised by AUDI AG. AUDI AG does not guarantee or accept any liability with respect to the correctness of information in this document. Copyright by AUDI AG.

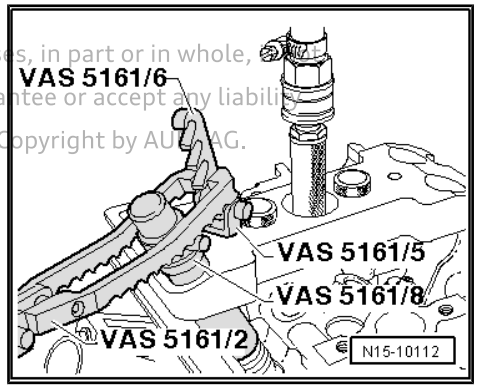

Exhaust side:

Protected by copyright. Copying for private or commercial purposes, in part or in whole, is not permitted unless authorised by AUDI AG. AUDI AG does not guarantee or accept any liability with respect to the correctness of information in this document. Copyright by AUDI AG.

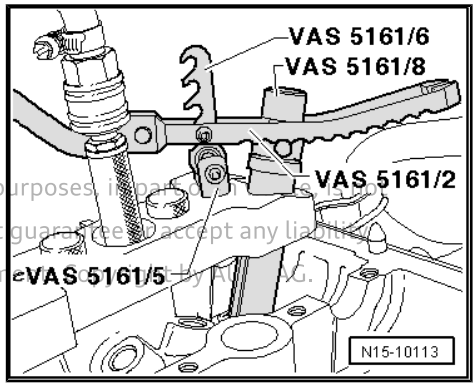

Continued:

- If valve cotters have been removed from assembly cartridge, they need to be put into insertion device - VAS 5161/18- first.
- Press assembly cartridge -VAS 5161/8- onto insertion device from above and pick up valve cotters.

– Use pressure fork - VAS 5161/8- to press down assembly cartridge - VAS 5161/2- , then turn knurled screw of assembly cartridge back and forth while pulling upwards.

– Release pressure fork - VAS 5161/2- with knurled screw in pulled position.

– Detach removal and installation device for valve cotters - VAS 5161A- .

– Repeat procedure for each valve.

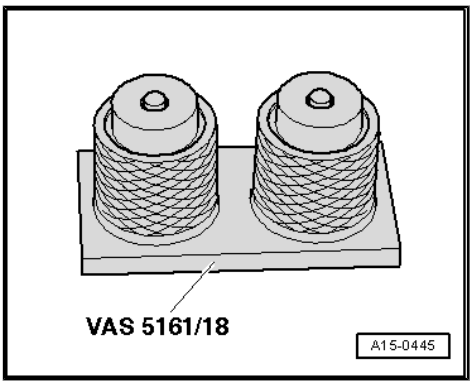

Assembling

Assembly is performed in reverse sequence; note the following:

– Install camshafts ⇒ page 142 .

– Install spark plugs ⇒ page 295 .

4.6.2 Removing and installing valve stem oil seals (cylinder head removed)

Special tools and workshop equipment required

♦ Valve stem seal puller - 3364-

- Valve stem oil seal fitting tool - 3365- for valve stem oil seal with one sealing lip ⇒ page 138

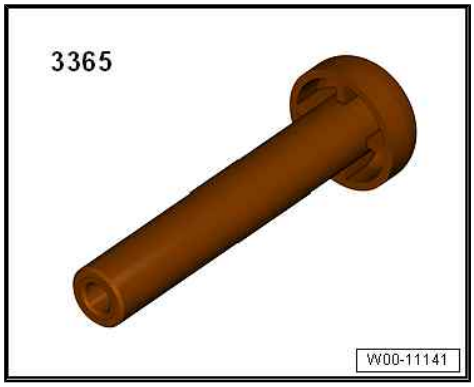

- Valve stem oil seal fitting tool - T40376/1- for valve stem oil seal with two sealing lips ⇒ page 138

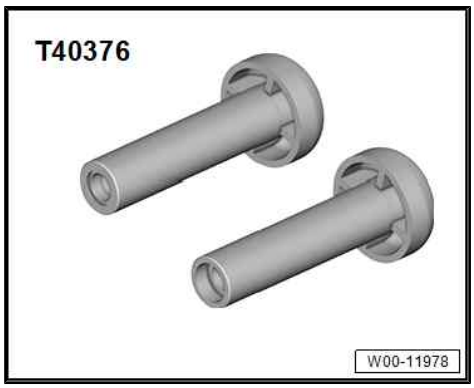

- Removal and installation device for valve cotters - VAS 5161 A- with guide plate -VAS 5161/19C-

- Engine and gearbox support - VAS 6095A-

Protected by copyright. Copying for private or commercial purposes, in part or in whole, is not permitted unless authorised by AUDI AG. AUDI AG does not guarantee or accept any liability with respect to the correctness of information in this document. Copyright by AUDI AG.

♦ Cylinder head tensioning device - VAS 6419-

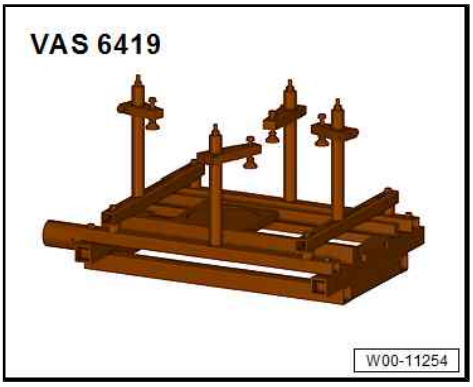

♦ Assembly sleeve ⇒ Electronic parts catalogue

Procedure

– Remove fuel rail (if necessary) ⇒ page 253 .

– Insert cylinder head tensioning device - VAS 6419- into engine and gearbox support - VAS 6095A- .

Protected by copyright. Copying for private or commercial purposes, in part or
permitted unless authorized by AUDI AG. AUDI AG does not guarantee or accep
with respect to the correctness of information, messages and data. Copyright by A

– Secure cylinder head in cylinder head tensioning device, as shown in illustration.

– Connect cylinder head tensioning device to compressed air supply.

– Using lever -arrow-, slide air pad under combustion chamber where valve stem oil seal is to be removed.

– Apply just enough compressed air to bring air pad into contact with valve heads.

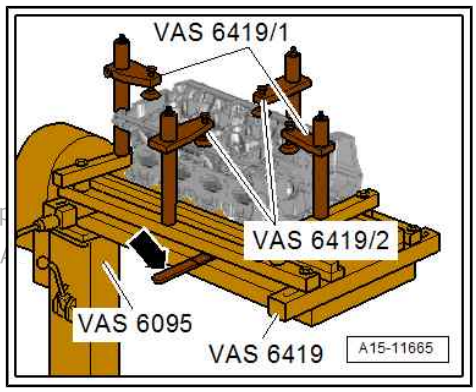

Machining guide plate:

– Check whether there is a recess -arrow-.

– If necessary, machine guide plate for 2.0 ltr. and 3.0 ltr. FSI engine - VAS 5161/19C- -arrow- so that guide plate rests on cylinder head and guide pin -1- does not make contact.

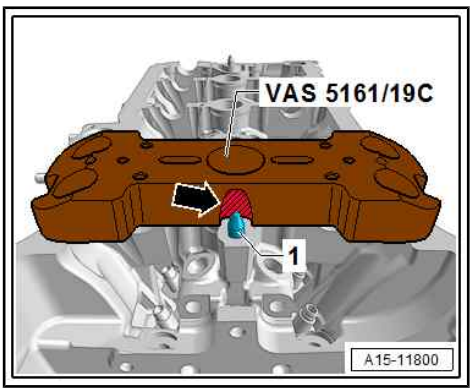

Continued:

– Secure guide plate for 2.0 ltr. and 3.0 ltr. FSI engine - VAS 5161/19C- to cylinder head with knurled screws - VAS 5161/12- as shown.

– Insert drift -VAS 5161/3- into guide plate and use plastic-headed hammer to release sticking valve cotters.

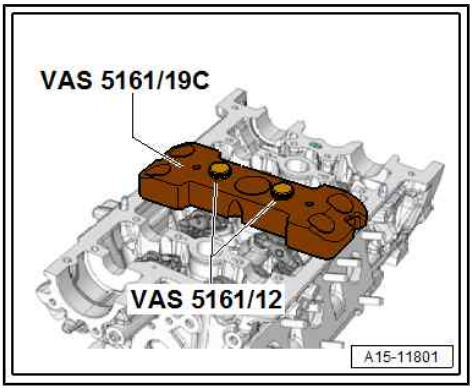

Inlet side:

– Screw snap-in device - VAS 5161/6- with engaging fork - VAS 5161/5- into centre thread on guide plate for 2.0 ltr. and 3.0 ltr. FSI engine - VAS 5161/19C- .

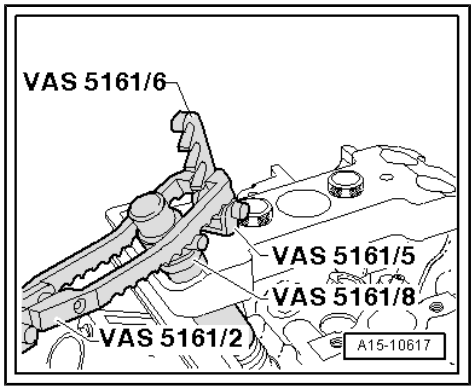

Exhaust side:

– Screw snap-in device - VAS 5161/6- with engaging fork - VAS 5161/5- into outer thread on guide plate for 2.0 ltr. and 3.0 ltr. FSI engine - VAS 5161/19C- .

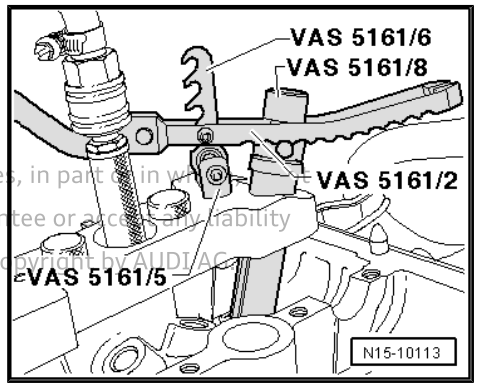

Continued:

Protected by copyright. Copying for private or commercial purposes, in part or in whole, is not permitted unless authorised by AUDI AG. AUDI AG does not guarantee or accept any liability with respect to the correctness of information in this document. Copyright by AUDI AG.

– Insert assembly cartridge - VAS 5161/8- into guide plate for 2.0 ltr. and 3.0 ltr. FSI engine - VAS 5161/19C- .
– Engage pressure fork - VAS 5161/2- on snap-in device - VAS 5161/6- .
– Press down assembly cartridge - VAS 5161/8- and at the same time, turn knurled screw of assembly cartridge - VAS 5161/8- clockwise until tips engage in valve cotters.
– Move knurled screw back and forth slightly; the valve cotters are thus forced apart and taken up by the assembly cartridge.
– Release pressure fork - VAS 5161/2- .
– Take out assembly cartridge - VAS 5161/8- .

– Pull off valve stem oil seal with valve stem seal puller - 3364- .

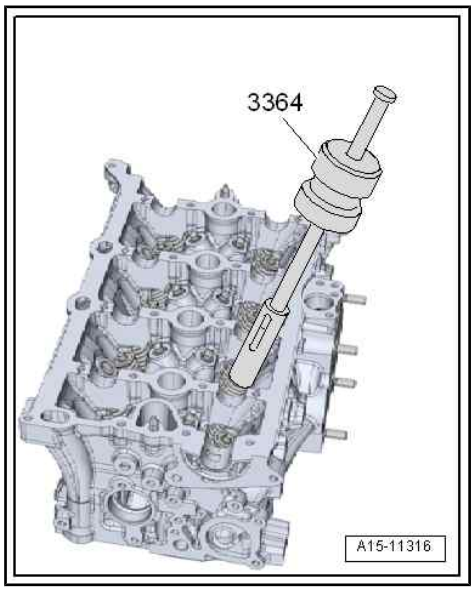

- To avoid damaging the new valve stem oil seal -4- during installation, fit the assembly sleeve -3- onto the valve stem -2-.

– Lightly oil sealing lip of valve stem oil seal.

– Insert valve stem oil seal into valve stem oil seal fitting tool -5- and use assembly sleeve to press it carefully onto valve guide -1- as far as stop.

– Remove assembly sleeve .

– Insert valve spring and valve spring plate.

– Set up removal and installation device for valve cotters - VAS 5161 A- as shown.

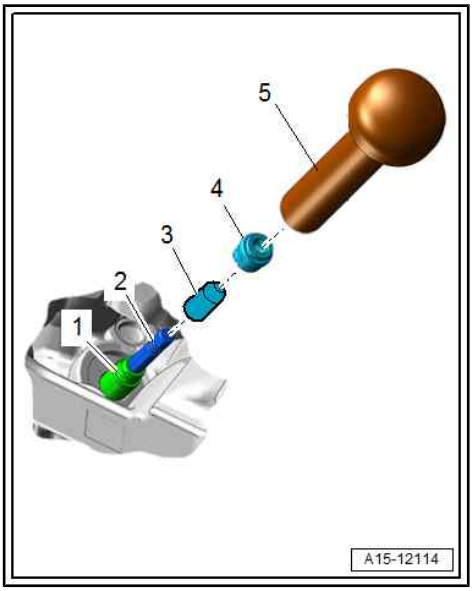

Inlet side:

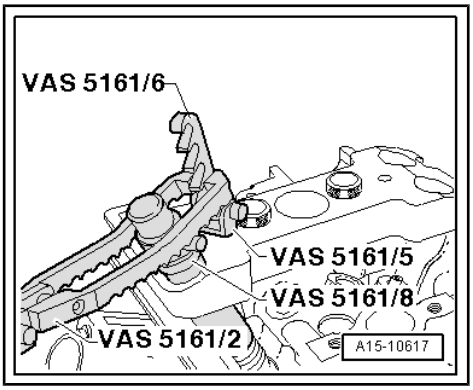

Exhaust side:

Protected by copyright. Copying for private or commercial purposes, in part or in whole, is not permitted unless authorised by AUDI AG. AUDI AG does not guarantee or accept any liability with respect to the correctness of information in this document. Copyright by AUDI AG.

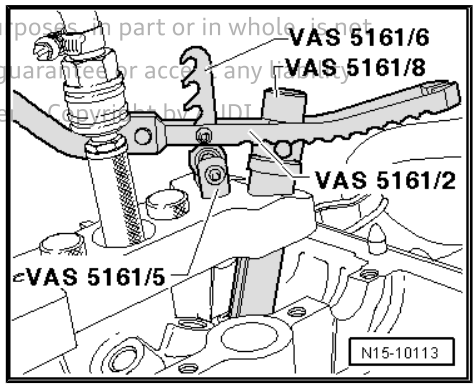

Protected by copyright. Copying for private or commercial purposes, in part or in whole, is not permitted unless authorised by AUDI AG. AUDI AG does not guarantee or assume any liability with respect to the correctness of information in this document.

Continued:

- If valve cotters have been removed from assembly cartridge, they need to be put into insertion device - VAS 5161/18- first.

– Use pressure fork - VAS 5161/8- to press down assembly cartridge - VAS 5161/2- , then turn knurled screw of assembly cartridge back and forth while pulling upwards.

– Release pressure fork - VAS 5161/2- with knurled screw in pulled position.

– Detach removal and installation device for valve cotters - VAS 5161- .

– Repeat procedure for each valve.

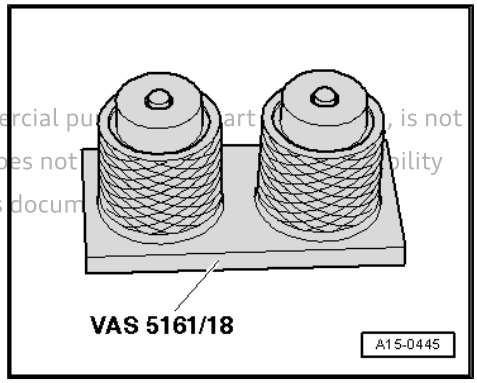

Assembling

– Install fuel rail ⇒ page 253 .

5 Inlet and exhaust valves

⇒ “5.1 Checking valve guides”, page 195
⇒ “5.2 Checking valves”, page 195
⇒ “5.3 Valve dimensions”, page 196

5.1 Checking valve guides

Special tools and workshop equipment required

- Universal dial gauge bracket - VW 387-

Protected by copyright. Copying for private or commercial purposes, in part or whole, is not permitted unless authorised by AUDI AG. AUDI AG does not guarantee or accept any liability with respect to the correctness of information in this document. Copyright by AUDI AG.

- Dial gauge - VAS 6079-

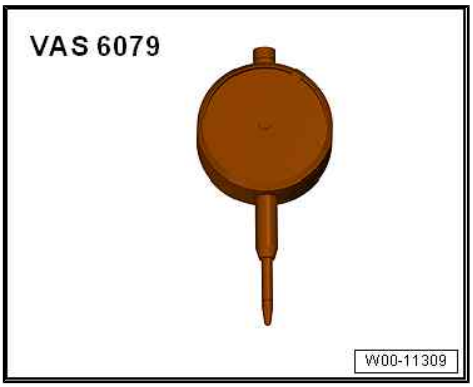

Test sequence

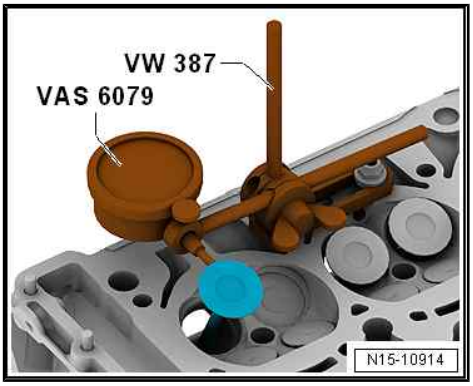

- If the valve has to be renewed as part of a repair, use a new valve for the measurement.
- Only insert inlet valve into inlet valve guide and exhaust valve into exhaust valve guide, as the stem diameters are different.

– Insert valve into guide.

- End of valve stem must be flush with valve guide.

– Measure the amount of sideways play.

- Wear limit: 0.6 mm.

– If the wear limit is exceeded, repeat the measurement with new valves.

– Renew cylinder head if wear limit is still exceeded. Valve guides cannot be renewed.

5.2 Checking valves

– Visually inspect for scoring on valve stems and valve seat surfaces.

– Renew valve if scoring is clearly visible.

5.3 Valve dimensions

- Inlet and exhaust valves must not be machined. Only grinding-in is permitted.

Dimension		Inlet valve	Exhaust valve
∅ a	mm	33.85 ± 0.10	28.0 ± 0.1
∅ b	mm	5.92 ± 0.02	5.92 ± 0.02
c	mm	103.97	101.87
α	∠°	45	45

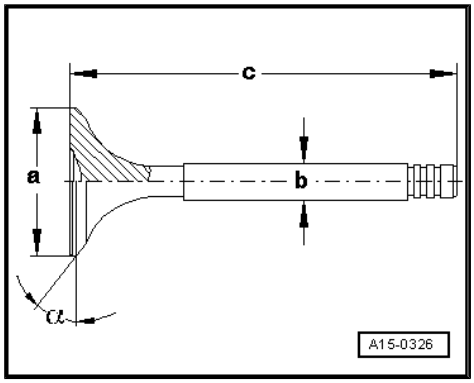

Protected by copyright. Copying for private or commercial purposes, in part or in whole, is not permitted unless authorised by AUDI AG. AUDI AG does not guarantee or accept any liability with respect to the correctness of information in this document. Copyright by AUDI AG.

17 – Lubrication

1 Sump/oil pump

⇒ "1.1 Exploded view - sump/oil pump", page 197

⇒ "1.2 Engine oil", page 200

⇒ "1.3 Removing and installing sump (bottom section)", page 200

⇒ "1.4 Removing and installing oil pump", page 202

⇒ "1.5 Removing and installing sump (top section)", page 204

⇒ "1.6 Removing and installing oil level and oil temperature sender G266 ", page 207

1.1 Exploded view - sump/oil pump

- If large quantities of metal shavings or particles are found in the engine oil when repairing the engine, the oil passages must be cleaned carefully in order to prevent further damage occurring later. In addition, renew oil spray jets, engine oil cooler and oil filter.

1 - Nut

- ❑ 9 Nm

2 - Oil level and oil temperature sender - G266-

- ❑ Removing and installing ⇒ page 207

3 - Seal

- ❑ Renew after removing
- ❑ If seal is not available to order separately in ET-KA, oil level and oil temperature sender - G266- must be renewed

4 - Oil drain plug or sealing plug

- ❑ Oil drain plug for sheet-metal version of sump (bottom section)
- ❑ Oil drain plug: 30 Nm
- ❑ Sealing plug for plastic version of sump (bottom section)
- ❑ Turn sealing plug as far as stop using a flat-bladed screwdriver or a coin

5 - Seal/O-ring

- ❑ Allocation ⇒ Electronic parts catalogue
- ❑ Renew after removing

6 - Gasket/sealing fluid

- ❑ Allocation ⇒ Electronic parts catalogue

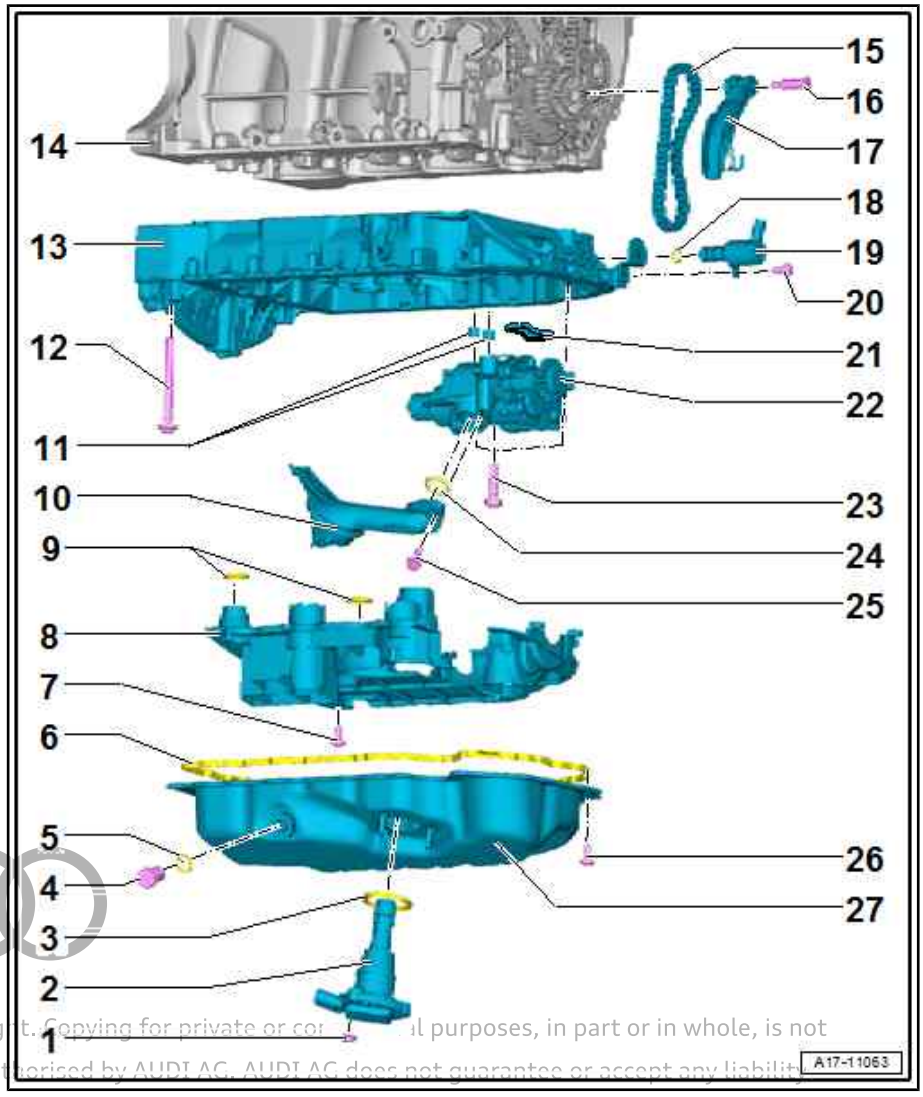

Protected by copyright. Copying for private or commercial purposes, in part or in whole, is not permitted unless authorised by AUDI AG. AUDI AG does not guarantee or accept any liability with respect to the correctness of information in this document. Copyright by AUDI AG.

- ❑ Renew gasket after removing

7 - Bolt
- ❑ Renew after removing
- ❑ 4 Nm +45°

8 - Baffle plate
- ❑ Renew after removing

9 - O-rings
- ❑ Renew after removing
- ❑ Lubricate lightly with engine oil

10 - Suction pipe
- ❑ Clean strainer if dirty

11 - Centring sleeve
- ❑ 2x
- ❑ For oil pump

12 - Bolt
- ❑ Renew after removing
- ❑ Tightening sequence ⇒ page 200

13 - Sump (top section)
- ❑ Removing and installing ⇒ page 204

14 - Cylinder block

15 - Drive chain for oil pump
- ❑ Mark direction of rotation before removing

16 - Bolt
- ❑ 9 Nm

17 - Chain tensioner

18 - O-ring
- ❑ Renew after removing
- ❑ Lubricate lightly with engine oil

19 - Valve for oil pressure control - N428-
- ❑ Removing and installing ⇒ page 218

Protected by copyright. Copying for private or commercial purposes, in part or in whole, is not permitted unless authorised by AUDI AG. AUDI AG does not guarantee or accept any liability with respect to the correctness of information in this document. Copyright by AUDI AG.

20 - Bolt
- ❑ Renew after removing
- ❑ Tightening torque ⇒ Item 1 (page 215)

21 - Oil strainer

22 - Oil pump
- ❑ Removing and installing ⇒ page 202

23 - Bolt
- ❑ Renew after removing
- ❑ 8 Nm +90°

24 - O-ring
- ❑ Renew after removing
- ❑ Lubricate lightly with engine oil

25 - Bolt
- ❑ Renew after removing
- ❑ 4 Nm +45°

26 - Bolt

- ❑ Renew after removing
- ❑ Tightening sequence for sump (bottom section), plastic version ⇒ page 199
- ❑ Tightening sequence for sump (bottom section), sheet-metal version ⇒ page 199

27 - Sump (bottom section)

- ❑ Removing and installing ⇒ page 200

Protected by copyright. Copying for private or commercial purposes, in part or in whole, is not permitted unless authorised by AUDI AG. AUDI AG does not guarantee or accept any liability with respect to the correctness of information in this document. Copyright by AUDI AG.

Plastic sump (bottom section) - tightening torques and sequence

- After removing, renew bolts tightened with specified tightening angle.

– Tighten bolts in stages in the sequence shown:

Stage	Bolts	Tightening torques/angle specification
1.	-1 … 20-	Screw in by hand until contact is made
2.	-1 … 20-	8 Nm
3.	-1 … 20-	Turn 90° further

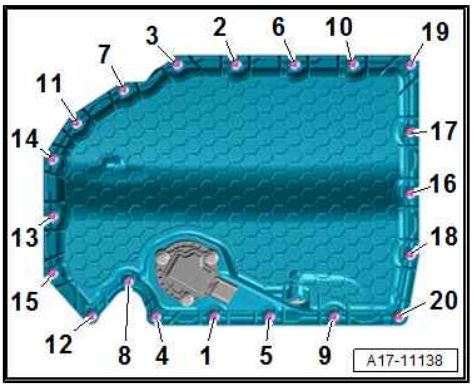

Metal sump (bottom section) - tightening torques and sequence

- After removing, renew bolts tightened with specified tightening angle.

– Tighten bolts in stages in the sequence shown:

Stage	Bolts	Tightening torques/angle specification
1.	-1 … 20-	Screw in by hand until contact is made
2.	-1 … 20-	8 Nm
3.	-1 … 20-	Turn 45° further

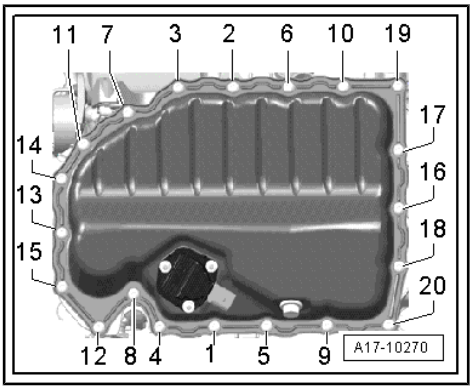

Sump (top section) - tightening torques and sequence

- After removing, renew bolts tightened with specified tightening angle.
- 18 bolts must be fitted during installation, even if only 14 bolts were fitted when part was removed.

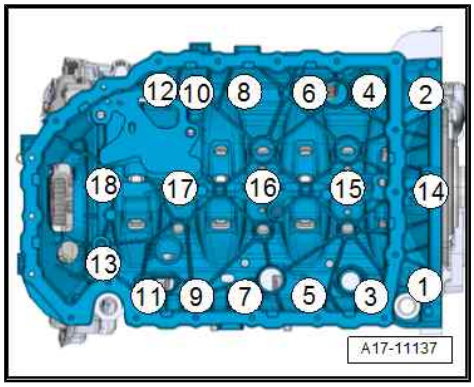

Aluminium or steel bolts may be installed, depending on version.

A - aluminium bolts:

– Tighten bolts in stages in the sequence shown:

Stage	Bolts	Tightening torques/angle specification
1.	-1 … 18-	8 Nm
2.	-1, 2-	Turn 180° further
3.	-3 … 13-	Turn 45° further
4.	-14 … 18-	Turn 90° further

B - steel and aluminium bolts:

– In this case, bolts 1 ... 13 are steel bolts and 14 ... 18 are aluminium bolts.

– Tighten bolts in stages in the sequence shown:

Stage	Bolts	Tightening torques/angle specification
1.	-1 … 13-	15 Nm
2.	-14 … 18-	8 Nm
3.	-1 … 18-	Turn 90° further

1.2 Engine oil

Draining and filling up engine oil, checking oil level, removing and installing oil filter:

- ♦ A1 2011 ► ⇒ Maintenance ; Booklet 819 ; Maintenance
- ♦ A3 2013 ► ⇒ Maintenance ; Booklet 821 ; Maintenance
- ♦ TT 2015 ► ⇒ Maintenance ; Booklet 826 ; Maintenance
- ♦ Q2 2016 ► ⇒ Maintenance ; Booklet 840 ; Maintenance
- ♦ A1 2018 ► ⇒ Maintenance ; Booklet 503 ; Maintenance
- ♦ Q3 2019 ► ⇒ Maintenance ; Booklet 502 ; Maintenance

Oil capacities, oil specifications and viscosity grades ⇒ Maintenance tables .

Protected by copyright. Copying for private or commercial purposes, in part or in whole, is not permitted unless authorised by AUDI AG. AUDI AG does not guarantee or accept any liability with respect to the correctness of information in this document. Copyright by AUDI AG.

1.3 Removing and installing sump (bottom section)

Note

The plastic fins on the baffle plate are deformed permanently during tightening. The plastic fins make sure that the baffle plate rests on the contact surface without play and does not cause rattling noises. The baffle plate must therefore always be renewed.

Removing

- Engine oil drained ⇒ page 200 .

– Unplug electrical connector -1- for oil level and oil temperature sender - G266- .

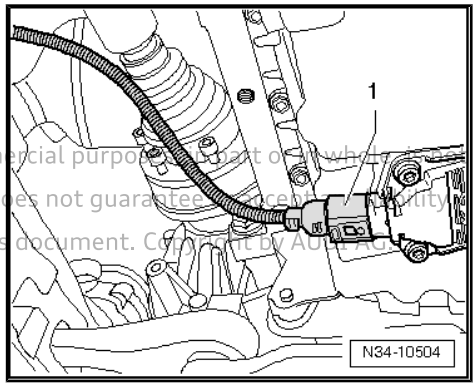

Protected by copyright. Copying for private or commercial purposes, in part or in whole, is not permitted unless authorised by AUDI AG. AUDI AG does not guarantee or accept any liability with respect to the correctness of information in this document. Copyright by AUDI AG.

Vehicles with plastic version of sump (bottom section):

– Remove bolts -1 ... 20-.

– Detach sump (bottom section).

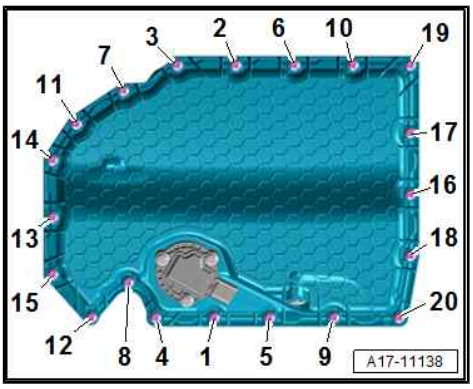

Vehicles with sheet-metal version of sump (bottom section):

– Remove bolts -1 ... 20-.

– Carefully release sump (bottom section) from bonded joint.

Continued:

– If renewing sump (bottom section), remove oil level and oil temperature sender - G266- ⇒ page 207 .

Installing

• After removing, renew bolts tightened with specified tightening angle.

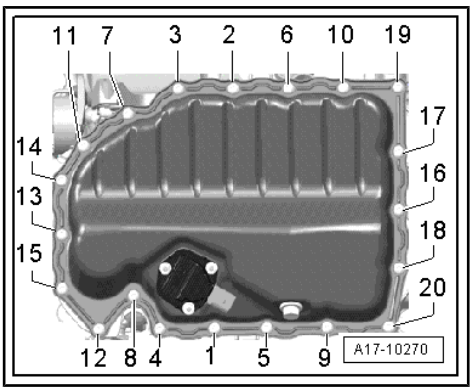

Vehicles with sheet-metal version of sump (bottom section):

Special tools and workshop equipment required

♦ Electric drill with plastic brush attachment

♦ Safety goggles

♦ Sealant ⇒ Electronic parts catalogue

– Spray sealing surface with sealant remover and wait for it to take effect.

– Remove sealant remaining on sump (top section) with flat scraper.

⚠ CAUTION

Risk of eye injury due to sealant residue.

– Put on safety goggles.

– Remove sealant residue on sump (bottom section) -1- using rotating plastic brush or similar.
– Clean sealing surfaces; they must be free of oil and grease.

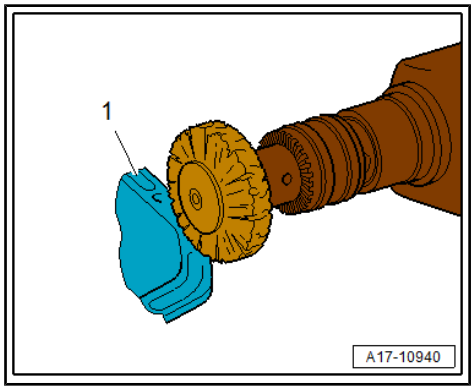

Note:

Note expiry date of sealant.

– Cut off nozzle of tube at front marking (nozzle ∅ approx. 3 mm).

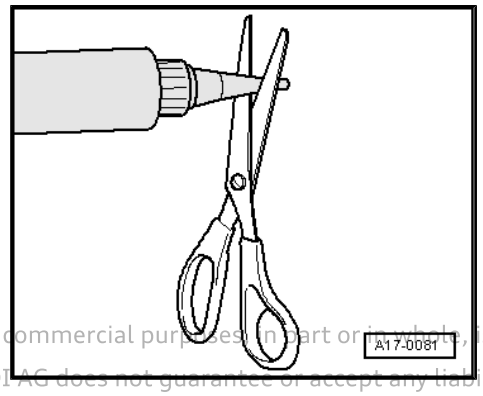

Protected by copyright. Copying for private or commercial purposes, in part or in whole, is not permitted unless authorised by AUDI AG. AUDI AG does not guarantee or accept any liability with respect to the correctness of information in this document. Copyright by AUDI AG.

– Apply sealant onto clean sealing surface of sump (bottom section) as illustrated -arrow-.

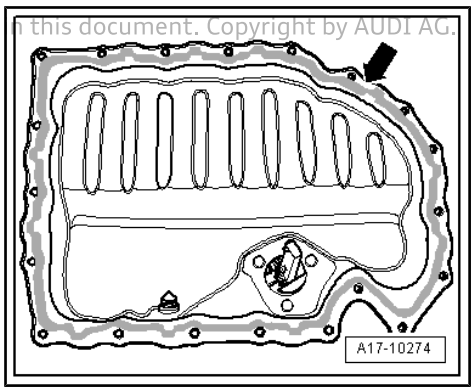

- Thickness of sealant bead: 2 ... 3 mm
- The bead of sealant must not be thicker than specified, otherwise excess sealant can enter the sump and obstruct the strainer in the oil intake pipe.
- The sump must be installed within 5 minutes after applying sealant.
- After fitting cover, the sealant must dry for approx. 30 minutes. Then (and only then) fill the engine with engine oil.

– Fit sump (bottom section) immediately and tighten bolts ⇒ page 199 .

Vehicles with plastic version of sump (bottom section):

– Fit sump (bottom section) with new gasket and tighten bolts ⇒ page 199 .

All vehicles (continued):

– Fill with engine oil and check oil level ⇒ page 200 .

Tightening torques

♦ ⇒ Fig. ""Metal sump (bottom section) - tightening torques and sequence"" , page 199

♦ ⇒ Fig. ""Plastic sump (bottom section) - tightening torques and sequence"" , page 199

1.4 Removing and installing oil pump

Special tools and workshop equipment required

- Assembly tool - T10118-

Protected by copyright. Copying for private or commercial purposes, in part or in whole, is not permitted unless authorised by AUDI AG. AUDI AG does not guarantee or accept any liability with respect to the correctness of information in this document. Copyright by AUDI AG.

- Locking tool - T40265-

Removing

– Remove sump (bottom section) ⇒ page 200 .

– Unscrew bolt -arrow- and detach baffle plate.

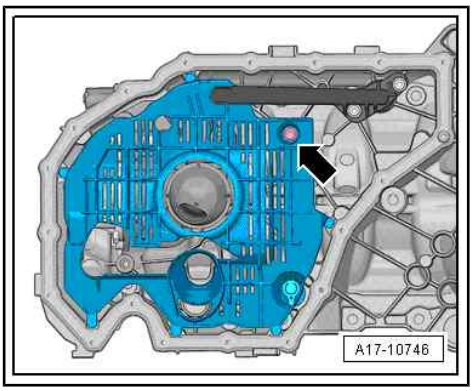

– Using assembly tool - T10118- , pull support wire of spring for chain tensioner in direction of -arrow- and secure in place with locking tool - T40265- .

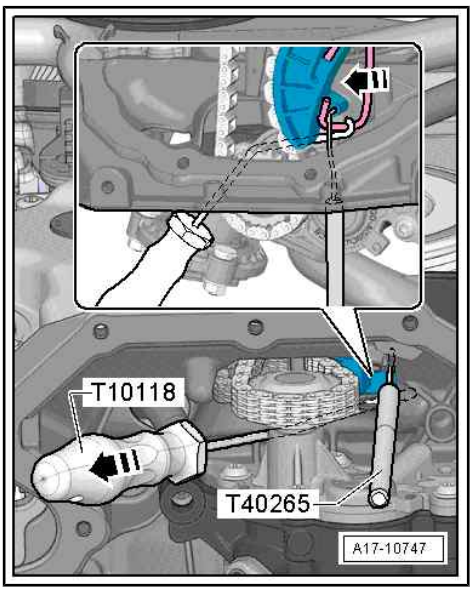

– Remove bolts -arrows- and detach oil pump.

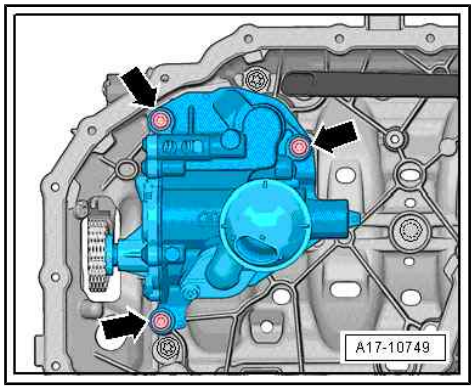

Installing

Installation is carried out in reverse order; note the following:

- Renew baffle plate after removing.
- Renew bolts tightened with specified tightening angle.

– Check that both centring sleeves are fitted in oil pump.

– Before installing, check passages in sump (top section) and strainer ⇒ Item 21 (page 198) in oil pump for dirt.

– Guide oil pump sprocket into drive chain and install oil pump.

NOTICE

Irreparable engine damage can be caused if chain tensioner is installed incorrectly.

– **Make sure that tensioning spring on chain tensioner is fitted in the correct position.**

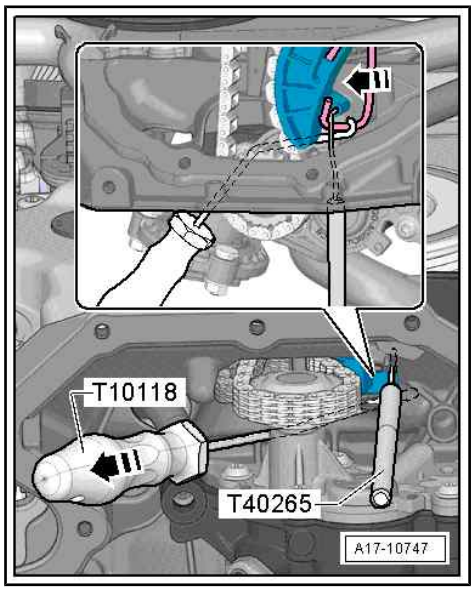

– Using assembly tool - T10118- , pull support wire of spring for chain tensioner in direction of -arrow- and remove locking tool - T40265- .

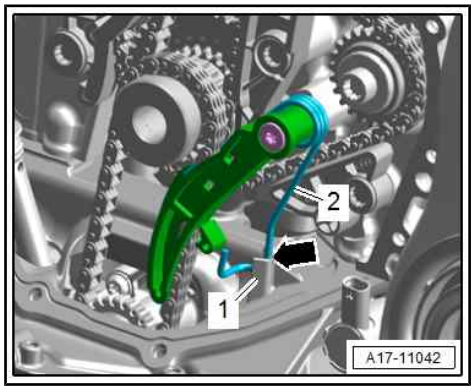

– Check position of support wire for spring on chain tensioner.

- The support wire -2- must rest on cast projection -1- on sump (top section), as shown -arrow-. (Shown with timing chain cover (bottom) removed.)

– Fit and secure baffle plate ⇒ Item 8 (page 198) .

– Install sump (bottom section) ⇒ page 200 .

Tightening torques

♦ ⇒ “1.1 Exploded view - sump/oil pump”, page 197

1.5 Removing and installing sump (top section)

Special tools and workshop equipment required

♦ Electric drill with plastic brush

♦ Safety goggles

♦ Sealant ⇒ Electronic parts catalogue

Protected by copyright. Copying for private or commercial purposes, in part or in whole, is not permitted unless authorised by AUDI AG. AUDI AG does not guarantee or accept any liability with respect to the correctness of information in this document. Copyright by AUDI AG.

Removing

- Gearbox removed ⇒ Gearbox; Rep. gr. 34 ; Removing and installing gearbox; Removing gearbox .

Preparatory work may be necessary depending on model ⇒ 4-cylinder direct injection engine (1.8, 2.0 ltr. 4-valve TFSI); Rep.

gr. 17 ; Sump/oil pump; Removing and installing sump (top section) .

– Remove sealing flange (gearbox end) ⇒ page 33 .

– Remove oil pump ⇒ page 202 .

– Unplug electrical connector -1- for valve for oil pressure control - N428- .

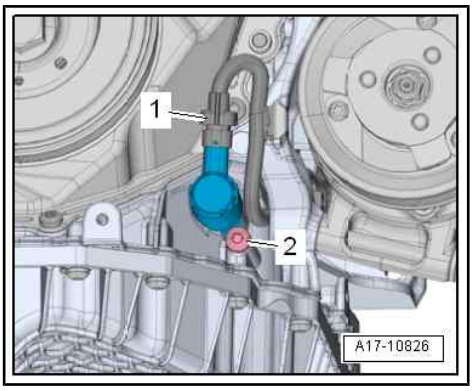

– Remove bolts -arrows-.

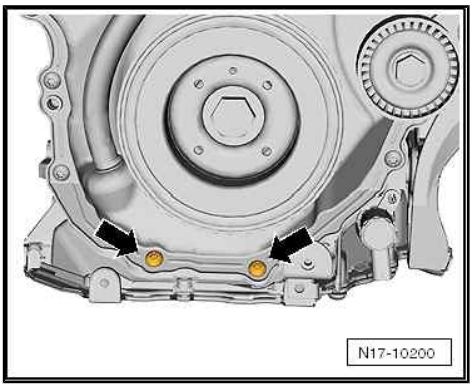

Protected by copyright. Copying for private or commercial purposes, in part or in whole, is not permitted unless authorised by AUDI AG. AUDI AG does not guarantee or accept any liability with respect to the correctness of information in this document. Co

Version 1

– Remove bolts -1 ... 14- and release sump (top section) from bonded joint.

• Lever off sump (top section) at gearbox end first. When doing so, take care not to damage timing chain cover.

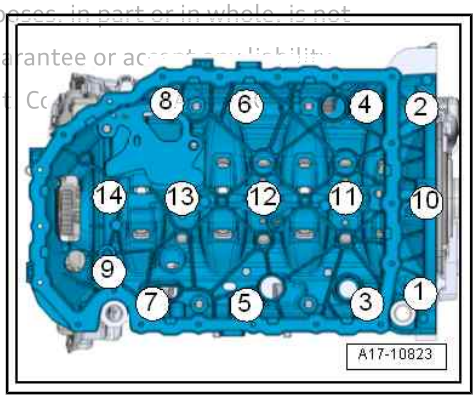

Version 2

– Remove bolts -1 ... 18- and release sump (top section) from bonded joint.

• Lever off sump (top section) at gearbox end first. When doing so, take care not to damage timing chain cover.

Installing

• After removing, renew bolts that were tightened with specified tightening angle.

• Renew baffle plate after removing.

– Remove sealant remaining on cylinder block with flat scraper.

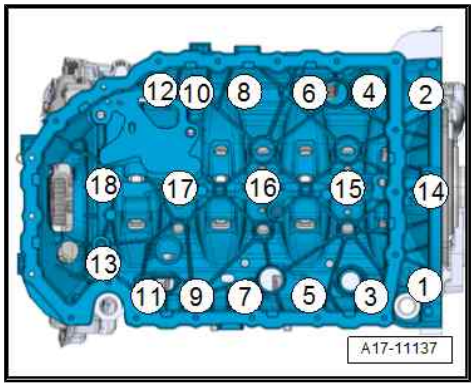

⚠ CAUTION

Risk of eye injury due to sealant residue.

– Put on safety goggles.

– Remove residual sealant on sump (top section) and timing chain cover (bottom) -1- using rotating plastic brush or similar.

• Check whether timing chain cover is deformed. For this purpose, first fit sump (top section) without sealant and determine gap between cover and sump (top section). If the cover is deformed and cannot be straightened, renew cover after installing sump (top section).

– Clean sealing surfaces; they must be free of oil and grease.

– Check oil passages in sump (top section) and in crankcase for dirt.

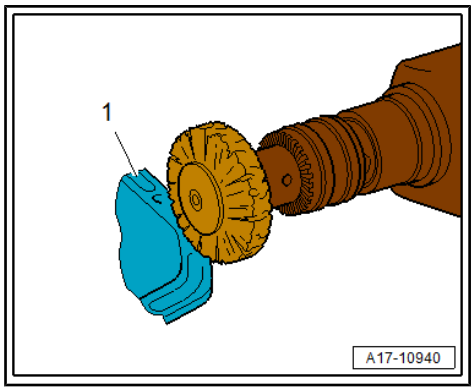

Note:

Note expiry date of sealant.

– Cut off nozzle of tube at front marking (nozzle ∅ approx. 2 mm).

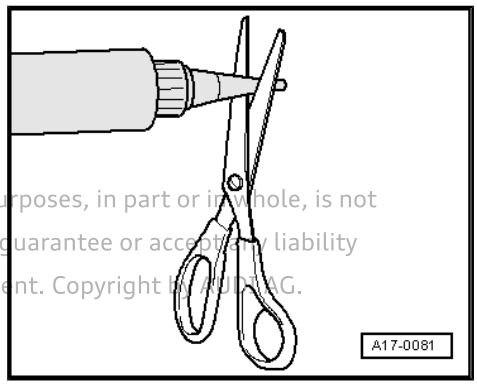

Protected by copyright. Copying for private or commercial purposes, in part or in whole, is not permitted unless authorised by AUDI AG. AUDI AG does not guarantee or accept any liability with respect to the correctness of information in this document. Copyright by AUDI AG.

◆ Thickness of sealant bead: 2 ... 3 mm

◆ The bead of sealant must not be thicker than specified, otherwise excess sealant can enter the sump and obstruct the strainer in the oil intake pipe.

– Apply sealant as shown -arrow- onto clean sealing surface of sump (top section).

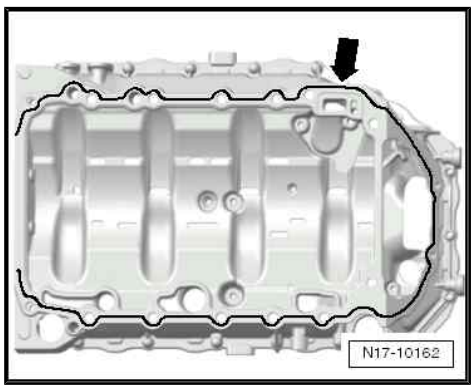

– Apply sealant between cylinder block and timing chain cover (bottom) -arrows-.

• The sump (top section) must be installed within 5 minutes after applying sealant.

• Sump (top section) and cylinder block must be flush at gearbox end.

– Immediately fit sump (top section) and tighten bolts.

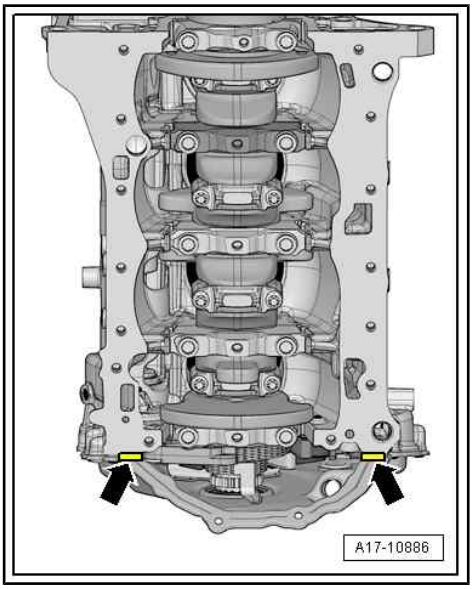

– Fit bolts -arrows-. Tightening torques ⇒ Item 18 (page 62)

Remaining installation steps are carried out in reverse sequence; note the following:

– Install sealing flange (gearbox end) ⇒ page 33 .

– Install oil pump ⇒ page 202 .

Additional work depending on model ⇒ 4-cylinder direct injection engine (1.8, 2.0 ltr. 4-valve TFSI); Rep. gr. 17 ; Sump/oil pump; Removing and installing sump (top section)

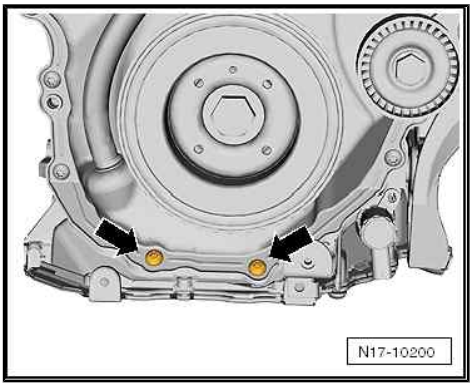

Tightening torques

♦ ⇒ Fig. ""Sump (top section) - tightening torques and sequence"" , page 200

♦ ⇒ Item 18 (page 62)

1.6 Removing and installing oil level and oil temperature sender - G266-

Removing

• Engine oil drained ⇒ page 200 .

Protected by copyright. Copying for private or commercial purposes, in part or in whole, is not permitted unless authorised by AUDI AG. AUDI AG does not guarantee or accept any liability with respect to the correctness of information in this document. Copyright by AUDI AG.

– Unplug electrical connector -2-.

– Remove nuts -1- and detach oil level and oil temperature sender - G266- -item 3-.

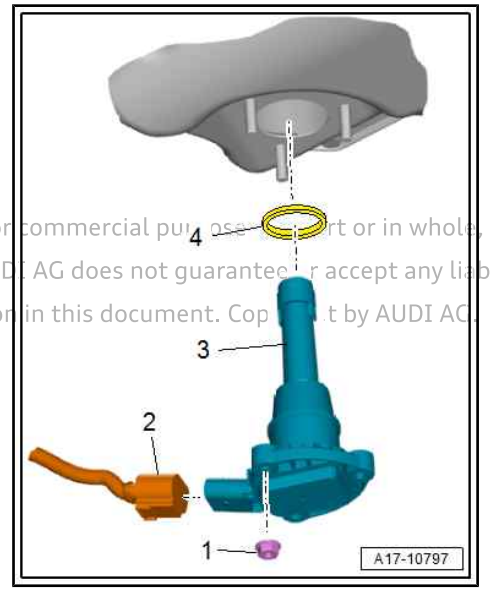

Installing

Installation is carried out in reverse order; note the following:

- Renew seal -4- after removing.

– Fill with engine oil and check oil level ⇒ page 200.

Protected by copyright. Copying for private or commercial purposes, in part or in whole, is not permitted unless authorised by AUDI AG. AUDI AG does not guarantee or accept any liability with respect to the correctness of information in this document. Copyright by AUDI AG.

Tightening torques

◆ ⇒ “1.1 Exploded view - sump/oil pump”, page 197

2 Engine oil cooler

⇒ "2.1 Exploded view - engine oil cooler", page 209

⇒ "2.2 Removing and installing engine oil cooler", page 209

⇒ "2.3 Removing and installing mechanical switching valve", page 210

2.1 Exploded view - engine oil cooler

1 - Bracket for ancillaries
- ❑ Removing and installing ⇒ page 26

2 - Gasket
- ❑ Renew after removing

3 - O-rings
- ❑ Renew after removing
- ❑ Lubricate lightly with engine oil

4 - Mechanical switching valve
- ❑ Removing and installing ⇒ page 210

5 - Engine oil cooler
- ❑ See note ⇒ page 197
- ❑ Removing and installing ⇒ page 209

6 - O-ring
- ❑ 2x
- ❑ Renew after removing
- ❑ Lubricate with coolant

7 - Connection

8 - Bolt
- ❑ Renew after removing
- ❑ 8 Nm +45°

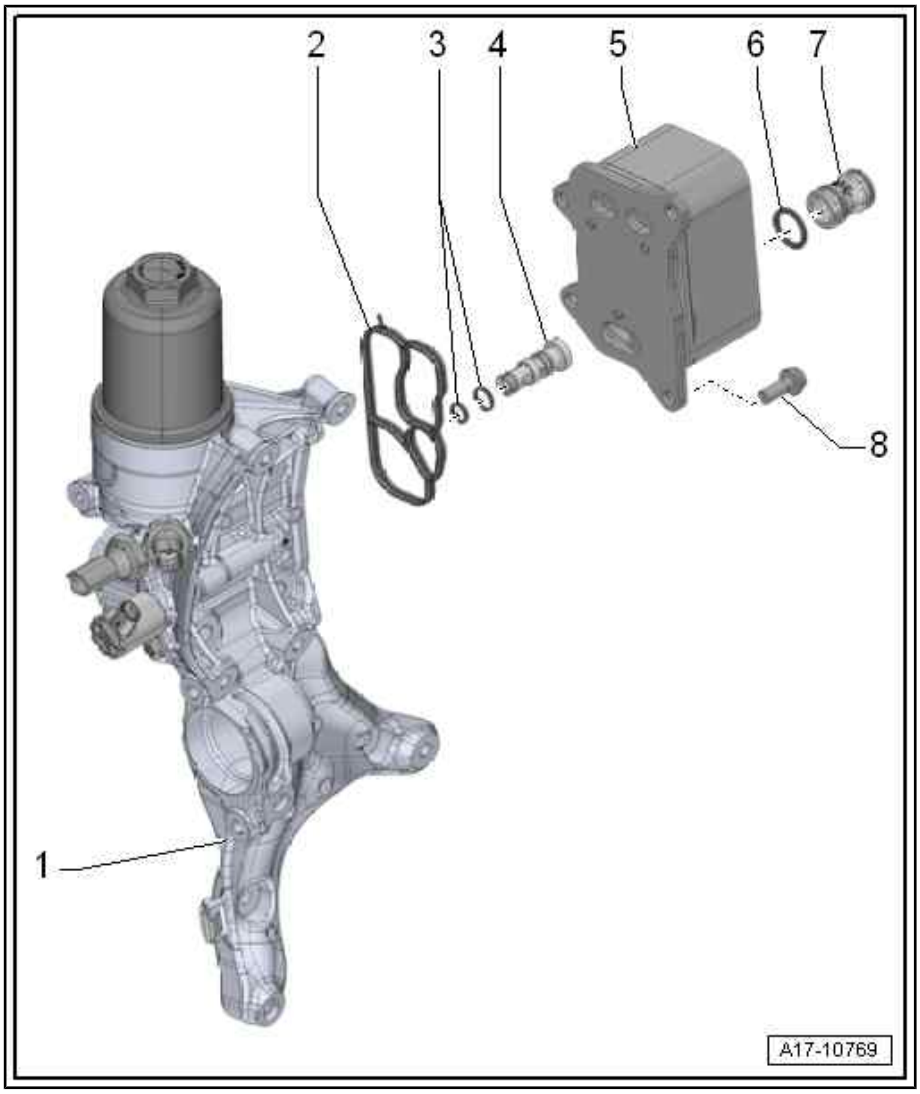

2.2 Removing and installing engine oil cooler

Protected by copyright. Copying for private or commercial purposes, in part or in whole, is not permitted unless authorised by AUDI AG. AUDI AG does not guarantee or accept any liability with respect to the correctness of information in this document. Copyright by AUDI AG.

Removing

– Remove bracket for ancillaries ⇒ page 26.

– Unscrew bolts -4, 5- and detach engine oil cooler -3- with gasket -2- from bracket for ancillaries -1-.

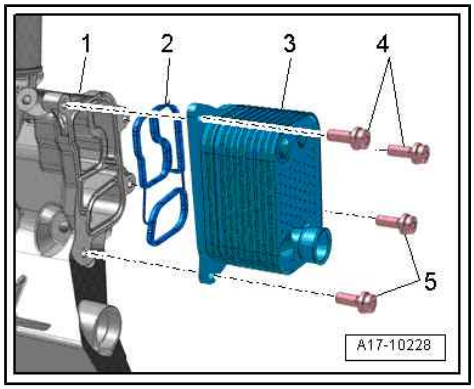

Installing

Installation is carried out in reverse order; note the following:

- Renew gasket after removing.

– Install bracket for ancillaries ⇒ page 26 .

Tightening torques

◆ ⇒ “2.1 Exploded view - engine oil cooler”, page 209

2.3 Removing and installing mechanical switching valve

Removing

– Remove engine oil cooler ⇒ page 209 .

– Take mechanical switching valve -1- out of bracket for ancillaries -arrow-.

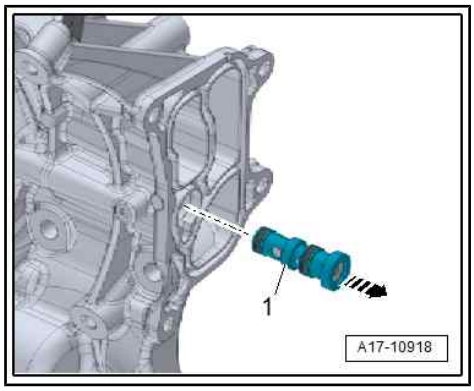

Installing

Installation is carried out in reverse order; note the following:

- Renew O-rings after removing.

– Lightly lubricate O-rings of mechanical switching valve with engine oil and install.

– Install engine oil cooler ⇒ page 209 .

Protected by copyright. Copying for private or commercial purposes, in part or in whole, is not permitted unless authorised by AUDI AG. AUDI AG does not guarantee or accept any liability with respect to the correctness of information in this document. Copyright by AUDI AG.

3 Crankcase breather

⇒ "3.1 Exploded view - crankcase breather system", page 211

⇒ "3.2 Removing and installing oil separator", page 212

3.1 Exploded view - crankcase breather system

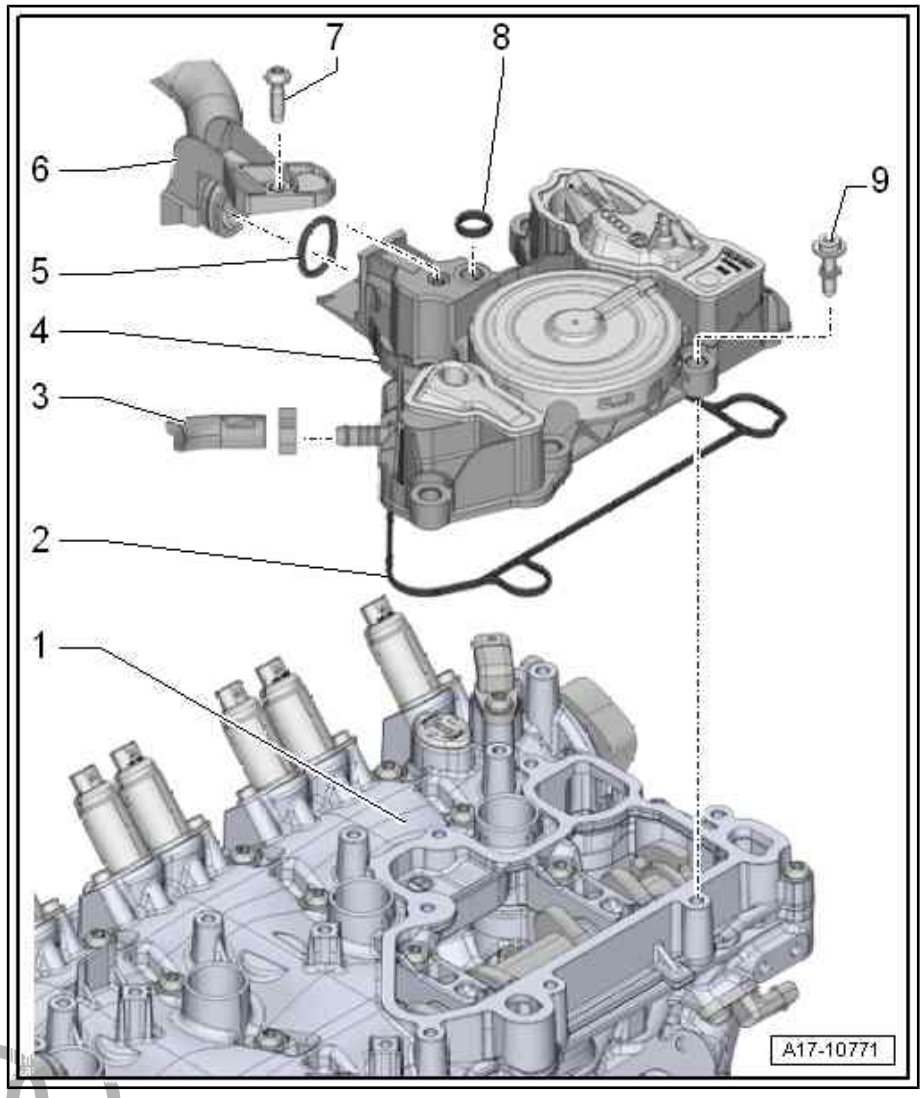

1 - Cylinder head cover

2 - Gasket

- ❑ Renew after removing

3 - Hose

- ❑ To activated charcoal filter solenoid valve 1 - N80-

4 - Oil separator

- ❑ Removing and installing ⇒ page 212

5 - Seal

- ❑ Renew after removing

6 - Hose

- ❑ For crankcase breather
- ❑ To turbocharger

7 - Bolt

- ❑ Thread-forming
- ❑ Fit and screw in bolt by hand so that it is screwed into old thread. Then tighten bolt to torque
- ❑ 4 Nm

8 - Seal

- ❑ Renew after removing

9 - Bolt

- ❑ Thread-forming
- ❑ Fit and screw in bolt by hand so that it is screwed into old thread. Then tighten bolt to torque
- ❑ Tightening torques and sequence

- ♦ Rest-of-world vehicles ⇒ page 212
- ♦ China version ⇒ page 212

Protected by copyright. Copying for private or commercial purposes, in part or in whole, is not permitted unless authorised by AUDI AG. AUDI AG does not guarantee or accept any liability with respect to the correctness of information in this document. Copyright by AUDI AG.

Oil separator - tightening torques and sequence (rest-of-world vehicles)

– Tighten bolts in the sequence -1 ... 7- to 9 Nm.

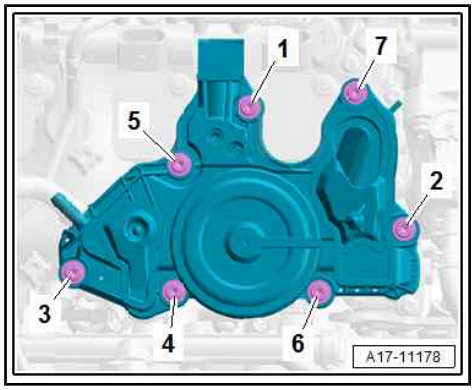

Oil separator - tightening torques and sequence (China version)

– Tighten bolts in the sequence -1 ... 7- to 9 Nm.

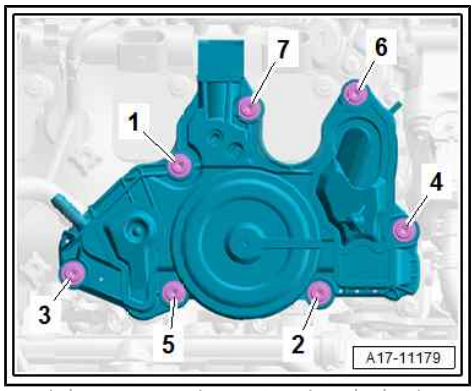

Protected by copyright. Copying for private or commercial purposes, in part or in whole, is not permitted unless authorised by AUDI AG. AUDI AG does not guarantee or accept any liability with respect to the correctness of information in this document. Copyright by AUDI AG.

3.2 Removing and installing oil separator

Special tools and workshop equipment required

♦ Hose clip pliers - VAS 6362-

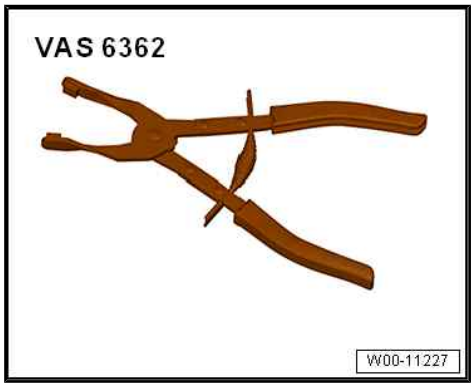

Removing

– Remove ignition coils for cylinders 3 and 4 ⇒ page 296 .

– Release fasteners -arrow-, remove bolt -2-, disconnect crank-case breather hose -1- and move it clear.

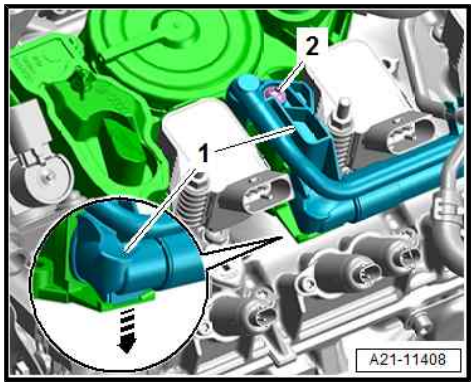

– Release hose clip -1- and detach hose from activated charcoal filter solenoid valve 1 - N80- .

– Remove bolts -arrows- and detach oil separator.

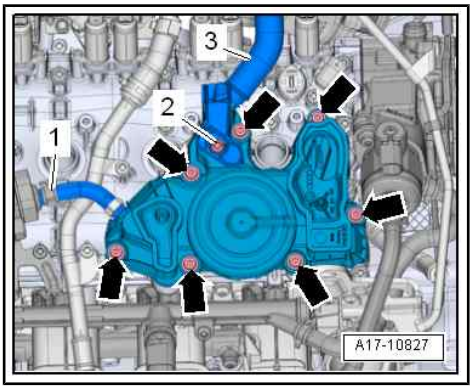

Installing

Installation is carried out in reverse order; note the following:

- Renew gasket and seals after removing.
- Secure all hose connections with correct type of hose clips (as original equipment) ⇒ Electronic parts catalogue .

– Install ignition coils ⇒ page 296 .

Tightening torques

◆ ⇒ Fig. ""Oil separator - tightening torques and sequence (rest-of-world vehicles)"" , page 212

◆ ⇒ "3.1 Exploded view - cylinder head", page 126

Protected by copyright. Copying for private or commercial purposes, in part or in whole, is not permitted unless authorised by AUDI AG. AUDI AG does not guarantee or accept any liability with respect to the correctness of information in this document. Copyright by AUDI AG.

4 Oil filter/oil pressure switches

⇒ “4.1 Exploded view - oil filter”, page 214

⇒ “4.2 Exploded view - oil pressure switches/oil pressure control”, page 215

⇒ “4.3 Removing and installing oil pressure switch F22 ”, page 216

⇒ “4.4 Removing and installing oil pressure switch for reduced oil pressure F378 ”, page 216

⇒ “4.5 Removing and installing stage 3 oil pressure switch F447 ”, page 217

⇒ “4.6 Removing and installing valve for oil pressure control N428 ”, page 218

⇒ “4.7 Removing and installing piston cooling jet control valve N522 ”, page 219

⇒ “4.8 Checking oil pressure”, page 219

Protected by copyright. Copying for private or commercial purposes, in part or in whole, is not permitted unless authorised by AUDI AG. AUDI AG does not guarantee or accept any liability with respect to the correctness of information, data or programs. Copyright by AUDI AG.

4.1 Exploded view - oil filter

1 - Bracket for ancillaries
- ❑ Removing and installing ⇒ page 26

2 - Gasket
- ❑ Renew after removing

3 - Oil filter element
- ❑ Removing and installing ⇒ page 200
- ❑ See note ⇒ page 197

4 - O-ring
- ❑ Renew after removing
- ❑ Lubricate lightly with engine oil

5 - Oil filter housing
- ❑ 25 Nm

6 - Oil drain connection

7 - O-rings
- ❑ Not available as replacement part, supplied together with ⇒ Item 6 (page 214)

8 - Bolt
- ❑ Tightening torques and sequence ⇒ page 18

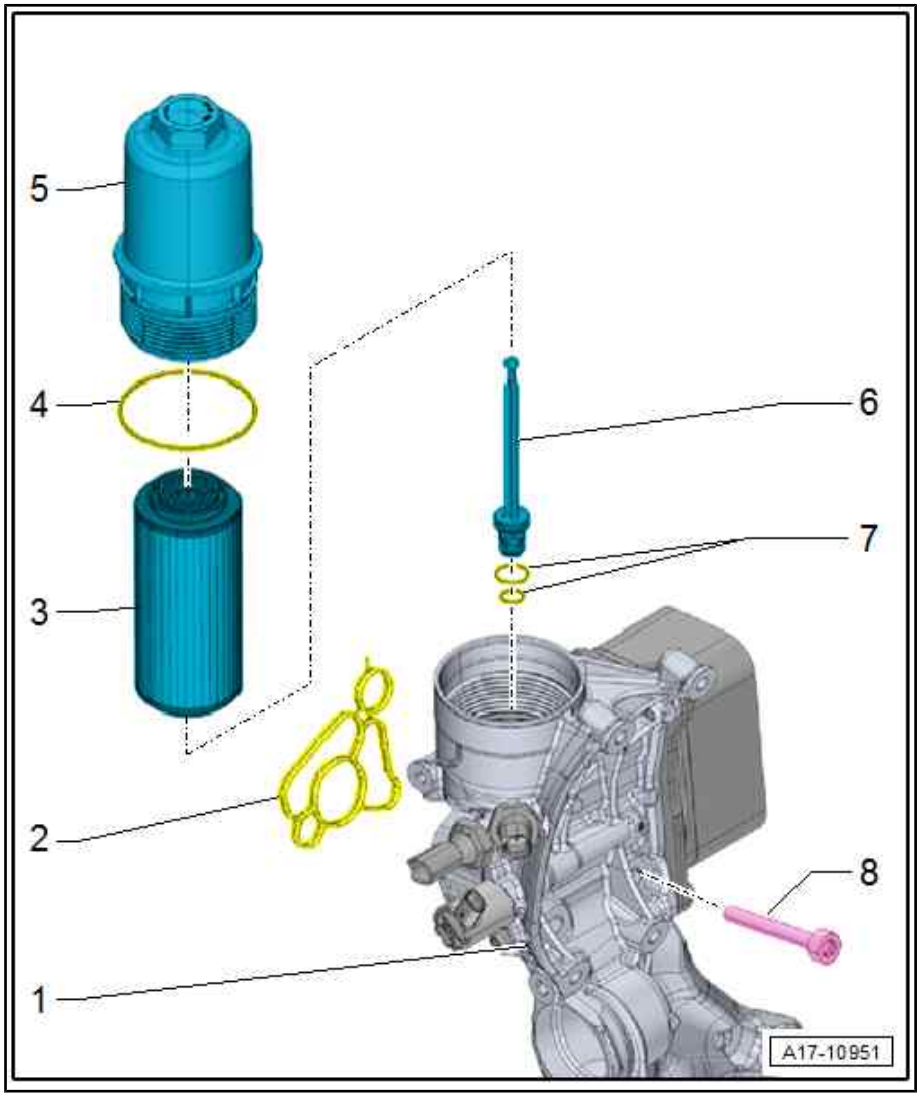

4.2 Exploded view - oil pressure switches/oil pressure control

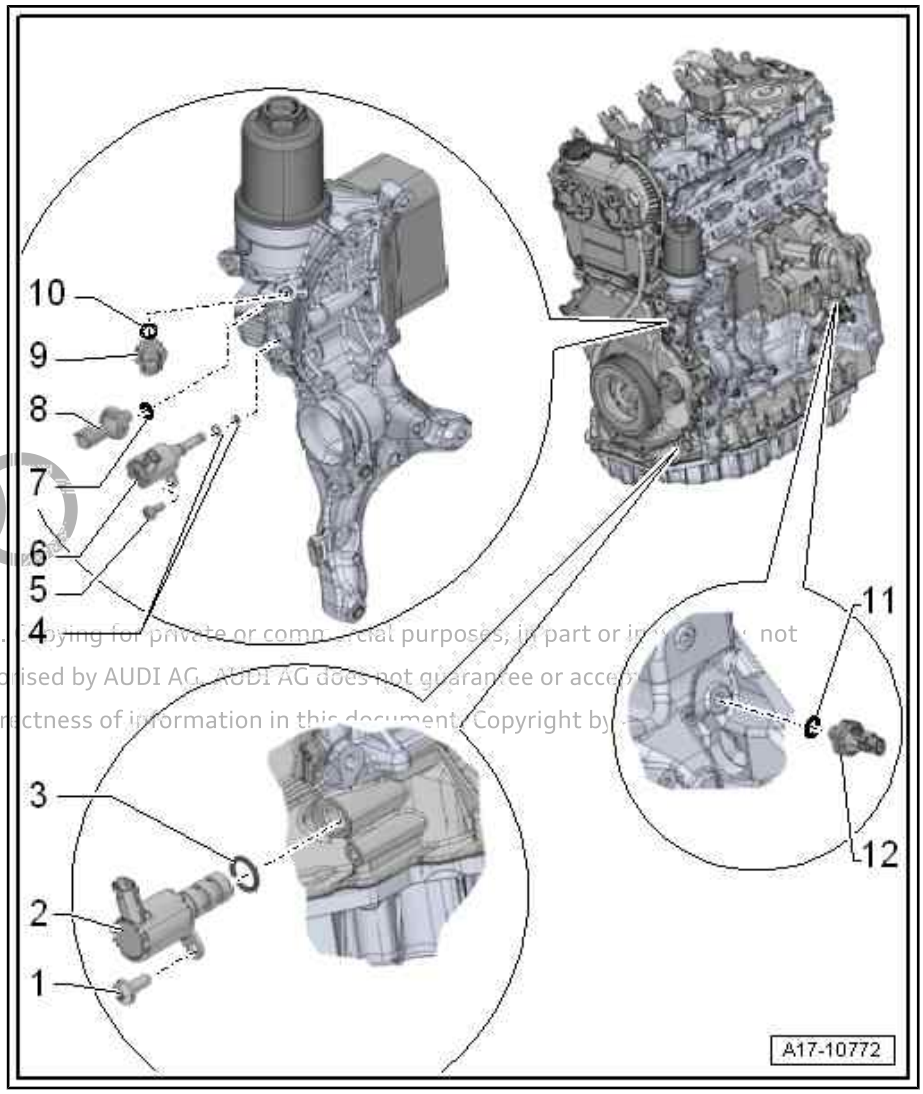

1 - Bolt

- ❑ Renew after removing
- ❑ 4 Nm +90°

2 - Valve for oil pressure control - N428-

- ❑ Checking ⇒ Vehicle diagnostic tester
- ❑ Removing and installing ⇒ page 218

3 - O-ring

- ❑ Renew after removing
- ❑ Lubricate lightly with engine oil

4 - O-rings

- ❑ Renew after removing
- ❑ Lubricate lightly with engine oil

5 - Bolt

- ❑ Renew aluminium bolt after removal
- ❑ Tightening torques:

- ♦ Steel bolt: 9 Nm
- ♦ Aluminium bolt: 4 Nm +45°

6 - Piston cooling jet control valve - N522-

- ❑ Removing and installing ⇒ page 219

7 - Seal

- ❑ Renew (cut seal open to do so)
- ❑ If seal is not available separately, refer to ⇒ Electronic parts catalogue ; renew oil pressure switch after removal

8 - Oil pressure switch - F22-

- ❑ Blue insulation
- ❑ Checking ⇒ Vehicle diagnostic tester
- ❑ Removing and installing ⇒ page 216
- ❑ 20 Nm

9 - Oil pressure switch for reduced oil pressure - F378-

- ❑ Brown insulation
- ❑ Checking ⇒ Vehicle diagnostic tester
- ❑ Removing and installing ⇒ page 216
- ❑ 20 Nm

10 - Seal

- ❑ Renew (cut seal open to do so)
- ❑ If seal is not available separately, refer to ⇒ Electronic parts catalogue ; renew oil pressure switch after removal

11 - Seal

- ❑ Renew (cut seal open to do so)

Protected by copyright. Copying for private or commercial purposes, in part or in whole, is not permitted unless authorised by AUDI AG. AUDI AG does not guarantee or accept any liability with respect to the correctness of information in this document. Copyright by AUDI AG.

- ❑ If seal is not available separately, refer to ⇒ Electronic parts catalogue ; renew oil pressure switch after removal

12 - Stage 3 oil pressure switch - F447-

- ❑ Green insulation
- ❑ Checking ⇒ Vehicle diagnostic tester
- ❑ Removing and installing ⇒ page 217
- ❑ 20 Nm

4.3 Removing and installing oil pressure switch - F22-

Procedure

Preparatory work may be necessary depending on model ⇒ 4-cylinder direct injection engine (1.8, 2.0 ltr. 4-valve TFSI); Rep. gr. 17 ; Oil filter/oil pressure switches; Removing and installing oil pressure switch - F22- .

– Unplug electrical connector -1-.

– Place a cloth underneath bracket for ancillaries to catch any escaping oil.

– Remove oil pressure switch - F22- -item 2-.

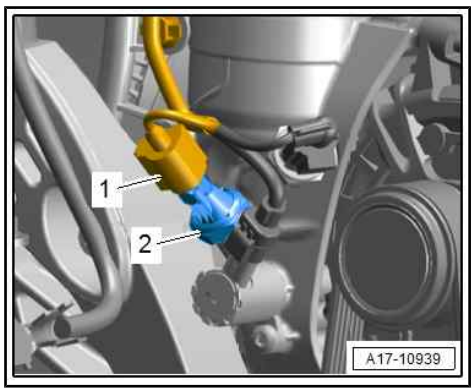

Note

- ♦ *Place a cloth underneath bracket for ancillaries to catch any escaping oil.*
- ♦ *If re-using old oil pressure switch - F22- , check availability of seal in ⇒ Electronic parts catalogue (ETKA). If it is not available, renew oil pressure switch - F22- .*
- ♦ *Cut seal open to renew.*

– Fit oil pressure switch immediately so that as little oil as possible is lost.

– Check oil level ⇒ page 200 .

Additional work depending on model ⇒ 4-cylinder direct injection engine (1.8, 2.0 ltr. 4-valve TFSI); Rep. gr. 17 ; Oil filter/oil pressure switches; Removing and installing oil pressure switch - F22-

Tightening torques

- ♦ ⇒ “4.1 Exploded view - oil filter”, page 214

4.4 Removing and installing oil pressure switch for reduced oil pressure - F378-

Procedure

Preparatory work may be necessary depending on model ⇒ 4-cylinder direct injection engine (1.8, 2.0 ltr. 4-valve TFSI); Rep. gr. 17 ; Oil filter/oil pressure switches; Removing and installing oil pressure switch for reduced oil pressure - F378- .

Protected by copyright. Copying for private or commercial purposes, in part or in whole, is not permitted unless authorised by AUDI AG. AUDI AG does not guarantee or accept any liability with respect to the correctness of information in this document. Copyright by AUDI AG.

– Unplug electrical connector -2-.

– Place a cloth underneath bracket for ancillaries to catch any escaping oil.

– Unscrew oil pressure switch for reduced oil pressure - F378- -item 1-.

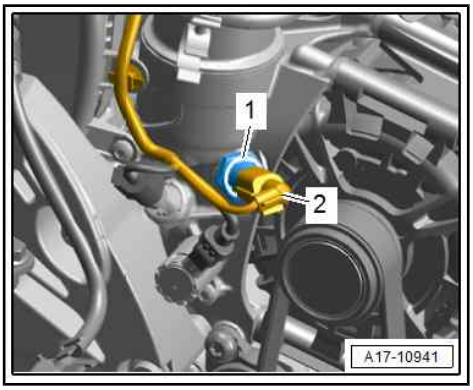

Note

- *Place a cloth underneath bracket for ancillaries to catch any escaping oil.*
- *If re-using old oil pressure switch for reduced oil pressure - F378- , check availability of seal in ⇒ Electronic parts catalogue (ETKA). If it is not available, renew oil pressure switch for reduced oil pressure - F378- .*
- *Cut seal open to renew.*

– Fit oil pressure switch immediately so that as little oil as possible is lost.

– Check oil level ⇒ page 200 .

Additional work depending on model ⇒ 4-cylinder direct injection engine (1.8, 2.0 ltr. 4-valve TFSI); Rep. gr. 17 ; Oil filter/oil pressure switches; Removing and installing oil pressure switch for reduced oil pressure switch - F378-

Tightening torques

- ⇒ “4.1 Exploded view - oil filter”, page 214

Protected by copyright. Copying for private or commercial purposes, in part or in whole, is not permitted unless authorised by AUDI AG. AUDI AG does not guarantee or accept any liability with respect to the correctness of information in this document. Copyright by AUDI AG.

4.5 Removing and installing stage 3 oil pressure switch - F447-

Special tools and workshop equipment required

- Articulated wrench, 24 mm - T40175-

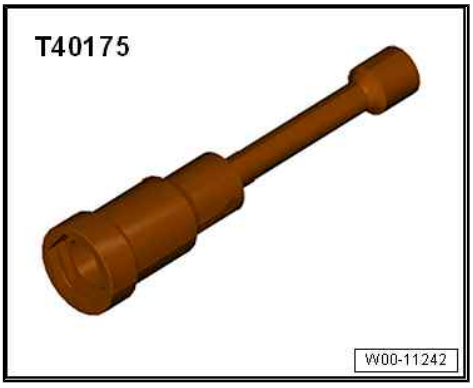

Procedure

Preparatory work may be necessary depending on model ⇒ 4-cylinder direct injection engine (1.8, 2.0 ltr. 4-valve TFSI); Rep. gr. 17 ; Oil filter/oil pressure switches; Removing and installing ; stage 3 oil pressure switch - F447- .

– Unplug electrical connector -1-.
– Remove bolts -arrows- and detach toothed belt cover.
– Lay a cloth under the oil pressure switch to catch escaping engine oil.
– Use articulated wrench, 24 mm - T40175- to unscrew stage 3 oil pressure switch - F447- -item 2-.

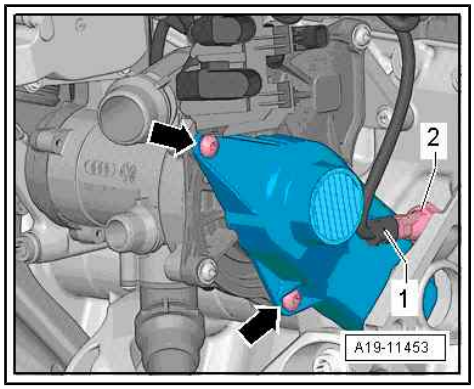

Note

- *Lay a cloth under the oil pressure switch to catch escaping engine oil.*
- *If re-using old stage 3 oil pressure switch - F447- , check availability of seal in ⇒ Electronic parts catalogue (ETKA). If it is not available, renew stage 3 oil pressure switch - F447- .*
- *Cut seal open to renew.*

– Fit oil pressure switch immediately so that as little oil as possible is lost.
– Check oil level ⇒ page 200 .

Additional work depending on model ⇒ 4-cylinder direct injection engine (1.8, 2.0 ltr. 4-valve TFSI); Rep. gr. 17 ; Oil filter/oil pressure switches ; Removing and installing stage 3 oil pressure switch - F447-

Protected by copyright. Copyright for private or commercial purposes, in part or in whole, is not permitted without the consent of AUDI AG. AUDI AG does not guarantee or accept any liability with respect to the correctness of information in this document. Copyright by AUDI AG.

Tightening torques

- ⇒ “4.2 Exploded view - oil pressure switches/oil pressure control”, page 215
- ⇒ “2.1 Exploded view - coolant pump/thermostat”, page 227

4.6 Removing and installing valve for oil pressure control - N428-

Special tools and workshop equipment required

- Used oil collection and extraction unit - VAS 6622A-

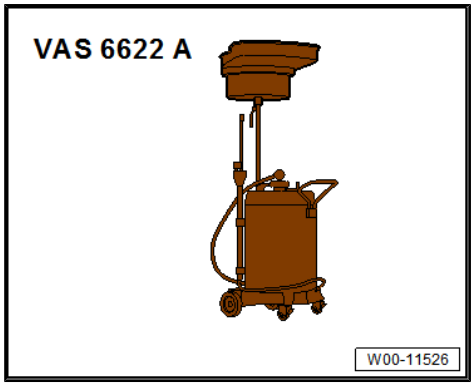

Removing

Preparatory work may be necessary depending on model ⇒ 4-cylinder direct injection engine (2.0 ltr. 4-valve TFSI); Rep. gr. 17 ; Oil filter/oil pressure switches; Removing and installing valve for oil pressure control - N428- .

– If not already removed, remove noise insulation ⇒ General body repairs, exterior; Rep. gr. 66 ; Noise insulation; Exploded view - noise insulation .

– Unplug electrical connector -1-.

– Place used oil collection and extraction unit - VAS 6622A- underneath.

– Remove bolt -2- and detach valve for oil pressure control - N428- (pull poly V-belt slightly downwards).

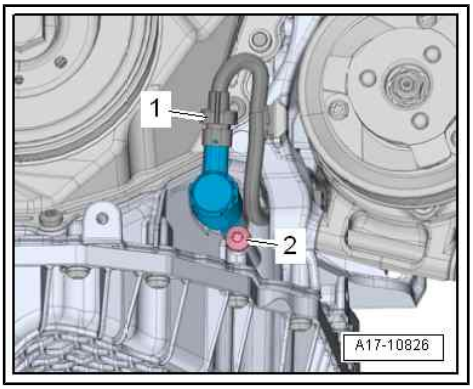

Installing

Installation is carried out in reverse order; note the following:

- Renew O-ring after removal.

Additional work depending on model ⇒ 4-cylinder direct injection engine (2.0 ltr. 4-valve TFSI); Rep. gr. 17 ; Oil filter/oil pressure switches; Removing and installing valve for oil pressure control - N428-

Tightening torques

◆ ⇒ “4.2 Exploded view - oil pressure switches/oil pressure control”, page 215

◆ ⇒ General body repairs, exterior; Rep. gr. 66 ; Noise insulation; Exploded view - noise insulation

4.7 Removing and installing piston cooling jet control valve - N522-

Procedure

Preparatory work may be necessary depending on model ⇒ 4-cylinder direct injection engine (1.8, 2.0 ltr. 4-valve TFSI); Rep. gr. 17 ; Oil filter/oil pressure switches; Removing and installing piston cooling jet control valve - N522- .

Copyright by AUDI AG. Reproduction and distribution, even of extracts, for commercial purposes, in part or in whole, is not permitted without the prior consent of AUDI AG. AUDI AG does not guarantee or accept any liability with respect to the correctness of information in this document. Copyright by AUDI AG.

– Unplug electrical connector -2-.

– Place a cloth underneath bracket for ancillaries to catch any escaping oil.

– Remove bolt -3- and detach piston cooling jet control valve - N522- -item 1-.

- Renew O-rings after removing.

– Fit new piston cooling jet control valve - N522- immediately so that as little oil as possible is lost.

– Check oil level ⇒ page 200 .

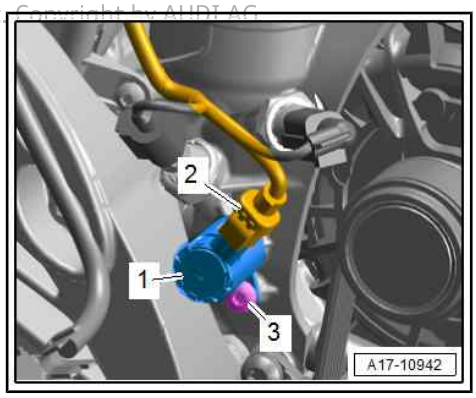

Additional work depending on model ⇒ 4-cylinder direct injection engine (1.8, 2.0 ltr. 4-valve TFSI); Rep. gr. 17 ; Oil filter/oil pressure switches ; Removing and installing piston cooling jet control valve - N522-

Tightening torques

◆ ⇒ “4.2 Exploded view - oil pressure switches/oil pressure control”, page 215

4.8 Checking oil pressure

⇒ “4.8.1 Checking engine oil pressure”, page 219

⇒ “4.8.2 Checking oil pressure for piston cavity oil jets”, page 221

4.8.1 Checking engine oil pressure

Special tools and workshop equipment required

- Oil pressure tester - V.A.G 1342-

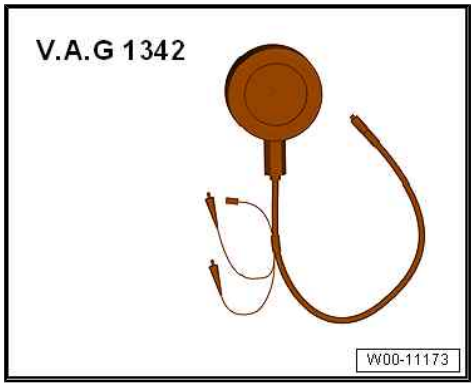

- Vehicle diagnostic tester

Test requirements

- Oil level OK
- Engine oil temperature at least 80 °C (radiator fan must have run once).
- The oil pump is regulated and has two pressure stages. The pressure stages are tested one after the other.
- During the running-in period or when the engine is in emergency running mode, the oil pump only operates in the higher pressure stage.
- The oil pressure is dependent on the engine oil temperature. The mean value should be reached at an engine oil temperature of around 80 °C.

Protected by copyright. Copying for private or commercial purposes, in part or in whole, is not permitted unless authorised by AUDI AG. AUDI AG does not guarantee or accept any liability with respect to the correctness of information in this document. Copyright by AUDI AG.

Test sequence

– Remove oil pressure switch for reduced oil pressure - F378- ⇒ page 216 .

– Screw oil pressure tester - V.A.G 1342- into oil filter bracket in place of oil pressure switch.

– Screw oil pressure switch for reduced oil pressure - F378- into oil pressure tester - V.A.G 1342- and plug in electrical connector.

– Connect oil pressure tester to earth.

– Start engine.

Engine with two camshaft adjusters
⇒ “1.2.1 Camshaft adjuster”, page 1

- Oil pressure at idling speed: 0.85 ... 1.6 bar
- Oil pressure at 2000 rpm: 1.2 ... 1.6 bar
- Oil pressure at 3700 rpm: 3.0 ... 4.0 bar (second pressure stage active, valve for oil pressure control - N428- OK)

Engine with one camshaft adjuster
⇒ “1.2.1 Camshaft adjuster”, page 1

- Oil pressure at idling speed: 0.85 ... 2.3 bar
- Oil pressure at 2000 rpm: 2.0 ... 2.5 bar
- Oil pressure at 3700 rpm: 2.0 ... 2.5 bar

Continued:

– Switch off engine.

– Remove noise insulation ⇒ General body repairs, exterior; Rep. gr. 66 ; Noise insulation; Exploded view - noise insulation .

– Unplug electrical connector -1- for valve for oil pressure control - N428- . Unclip electrical wire and route downwards so that it does not come into contact with belt drive.

• When connector is unplugged, oil pump operates in the higher pressure stage.

– Start engine and check oil pressure at specified engine speeds.

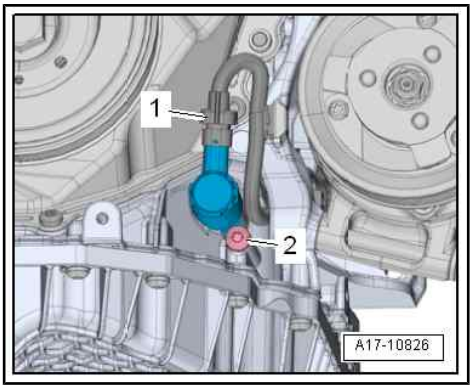

Engine with two camshaft adjusters
⇒ "1.2.1 Camshaft adjuster", page 1

• Oil pressure at idling speed: 0.85 ... 4.0 bar

• Oil pressure at 2000 rpm: 2.0 ... 4.0 bar

• Oil pressure at 3700 rpm: 3.0 ... 4.0 bar

Engine with one camshaft adjuster
⇒ "1.2.1 Camshaft adjuster", page 1

• Oil pressure at idling speed: 0.85 ... 4.3 bar

• Oil pressure at 2000 rpm: 3.0 ... 4.3 bar

• Oil pressure at 3700 rpm: 3.8 ... 4.3 bar

Assembling

– Install oil pressure switch for reduced oil pressure - F378- ⇒ page 216 and route electrical wiring carefully.

– Erase any entries in engine control unit event memory resulting from testing ⇒ Vehicle diagnostic tester.

Tightening torques

♦ ⇒ General body repairs, exterior; Rep. gr. 66 ; Noise insulation; Exploded view - noise insulation

4.8.2 Checking oil pressure for piston cavity oil jets

Special tools and workshop equipment required

♦ Oil pressure tester - V.A.G 1342-

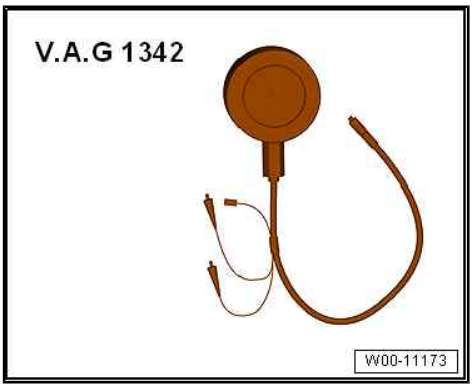

Protected by copyright. Copying for private or commercial purposes, in part or in whole, is not permitted unless authorised by AUDI AG. AUDI AG does not guarantee or accept any liability with respect to the correctness of information in this document. Copyright by AUDI AG.

♦ Test instrument adapter - VAS 5571-

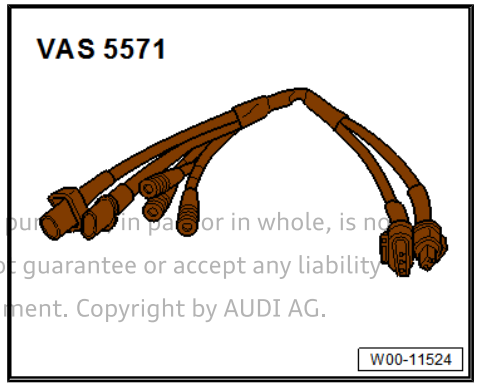

Protected by copyright. Copying for private or commercial purposes, in part or in whole, is not permitted unless authorised by AUDI AG. AUDI AG does not guarantee or accept any liability with respect to the correctness of information in this document. Copyright by AUDI AG.

Test requirements

- Oil level OK
- Engine oil temperature at least 80 °C (radiator fan must have run once).

Test sequence

– Remove stage 3 oil pressure switch - F447- ⇒ page 217 .

– Screw oil pressure switch into oil pressure tester - V.A.G 1342- .

– Screw in oil pressure tester - V.A.G 1342- in place of oil pressure switch.

– Connect test instrument adapter/DSO (2-pin) - VAS 5571- to oil pressure switch.

– Plug electrical connector for stage 3 oil pressure switch - F447- into test instrument adapter/DSO (2-pin) - VAS 5571- .

– Check oil pressure ⇒ Vehicle diagnostic tester, `Stage 3 oil pressure switch F447`.

Assembling

– Install stage 3 oil pressure switch - F447- ⇒ page 217 .

19 – Cooling

1 Cooling system/coolant

⇒ “1.1 Connection diagram - coolant hoses”, page 223

⇒ “1.2 Checking cooling system for leaks”, page 223

⇒ “1.3 Draining and filling cooling system”, page 226

1.1 Connection diagram - coolant hoses

All components are described in ⇒ 4-cylinder direct injection engine (1.8, 2.0 ltr. 4-valve TFSI); Rep. gr. 19 ; Cooling system/ coolant; Connection diagram - coolant hoses .

1.2 Checking cooling system for leaks

Special tools and workshop equipment required

- Cooling system tester - V.A.G 1274 B-

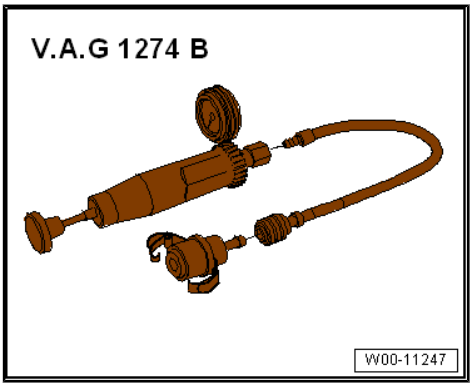

- Adapter for cooling system tester - V.A.G 1274/8-

Copyright by AUDI AG. Copying for private or commercial purposes, in part or in whole, is not permitted unless authorised by AUDI AG. AUDI AG does not guarantee or accept any liability with respect to the correctness of information in this document. Copyright

- Adapter for cooling system tester - V.A.G 1274/9-

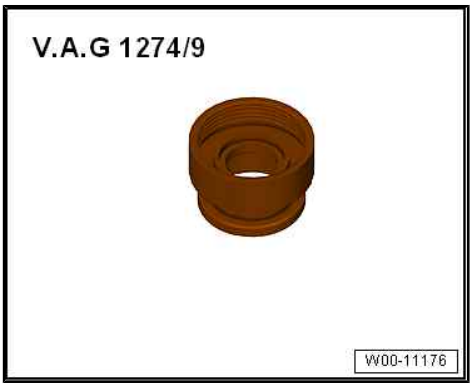

♦ Adapter for cooling system tester - V.A.G 1274B/15-

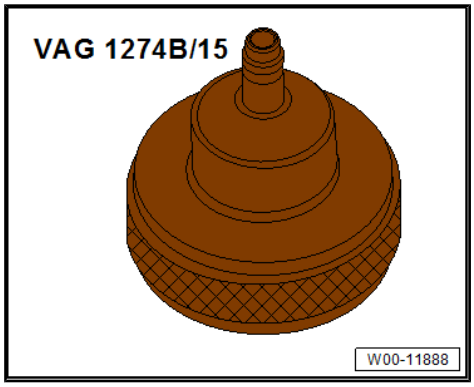

Procedure

- Engine must be warm.
- Ignition switched off.

CAUTION

The cooling system is under pressure when the power unit is hot. Risk of scalding due to hot steam and hot coolant.

Danger of scalding skin and other parts of the body.

– Put on protective gloves.
– Put on safety goggles.
– Cover filler cap on expansion tank with a cloth and open carefully to release pressure.

– Open filler cap on coolant expansion tank.
– Fit cooling system tester - V.A.G 1274 B- with adapter - V.A.G 1274/8- onto coolant expansion tank.
– Using hand pump on cooling system tester, build up a pressure of approx. 1.0 bar.
– If this pressure is not maintained, locate and rectify leaks.

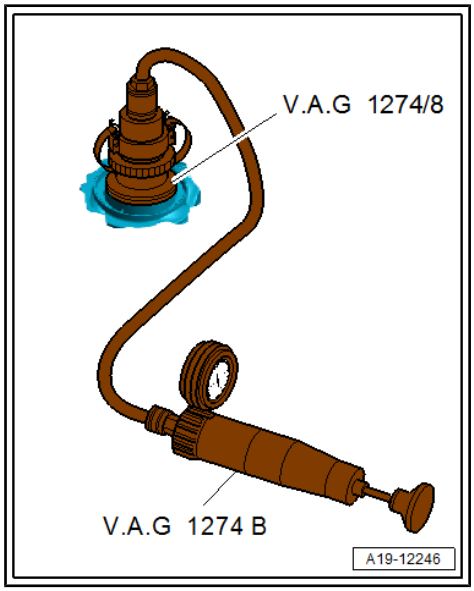

CAUTION

Risk of scalding due to hot steam and hot coolant.

Danger of scalding skin and other parts of the body.

– To release pressure, press pressure relief valve on cooling system tester until reading on pressure gauge is 0.

Checking pressure relief valve in filler cap

Protected by copyright. Copying for private or commercial purposes, in part or in whole, is not permitted unless authorised by AUDI AG. AUDI AG does not guarantee or accept any liability with respect to the correctness of information in this document. Copyright by AUDI AG.

Filler cap (version 1):

– Fit cooling system tester - V.A.G 1274 B- with adapter - V.A.G 1274 B/15- onto filler cap.

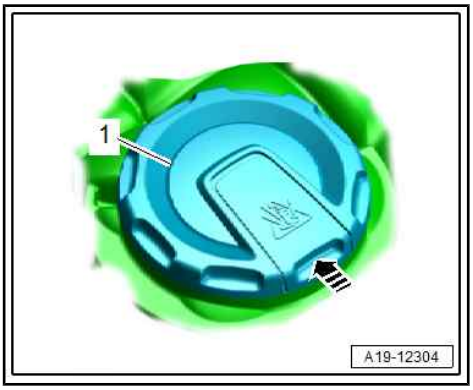

Protected by copyright. Copying for private or commercial purposes, in part or in whole, is not permitted unless authorised by AUDI AG. AUDI AG does not guarantee or accept any liability with respect to the correctness of information in this document. Copyright by AUDI AG.

– Using hand pump on cooling system tester, build up a pressure of approx. 2 bar.

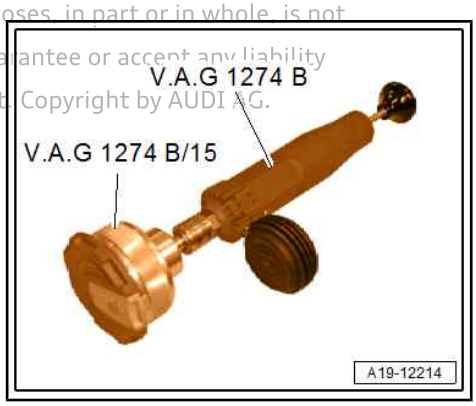

Blue filler cap

- The pressure must be reduced to 1.6 ... 1.4 bar and kept at this level.

– Renew filler cap if pressure relief valve does not react as described.

Black filler cap

- The pressure must be reduced to 1.8 ... 1.6 bar and kept at this level.

– Renew filler cap if pressure relief valve does not react as described.

Filler cap (version 2):

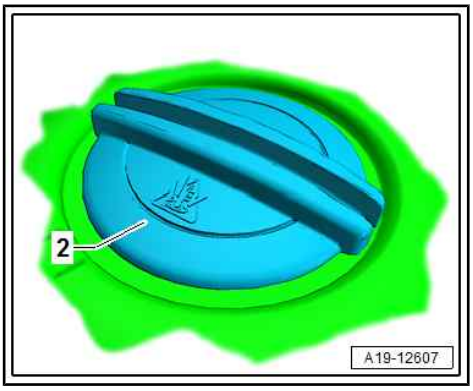

– Fit cooling system tester - V.A.G 1274 B- with adapter - V.A.G 1274/9- onto filler cap.

– Build up pressure with hand pump on cooling system tester.

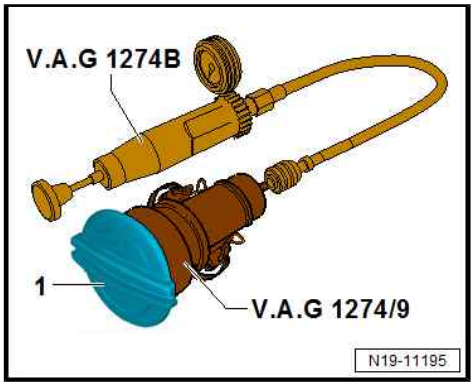

Blue filler cap

♦ The pressure relief valve should open at a pressure of 1.4 ... 1.6 bar.

– Renew filler cap if pressure relief valve does not open as described.

Black filler cap

♦ The pressure relief valve should open at a pressure of 1.6 ... 1.8 bar.

– Renew filler cap if pressure relief valve does not open as described.

1.3 Draining and filling cooling system

Coolant specifications

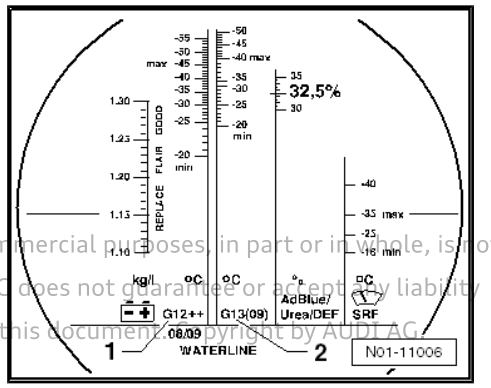

- The effectiveness of the coolant is greatly influenced by the quality of the water with which it is mixed. Because water may contain different substances depending on the country or even the region, the water quality to be used for cooling systems has been specified. Distilled water meets all the requirements and is therefore recommended for use when topping up or filling up with coolant.
- Use only coolant additives listed in the ⇒ Electronic parts catalogue (ETKA) . If you use other coolant additives, this can significantly impair in particular the corrosion protection effect. The resulting damage could lead to loss of coolant and consequently to serious engine damage.
- Coolant with the recommended mixture ratio prevents frost and corrosion damage and stops scaling. At the same time it raises the boiling point of the fluid in the system. For this reason the cooling system must be filled all year round with the correct coolant additive.
- Because of its high boiling point, the coolant improves engine reliability under heavy loads, particularly in countries with tropical climates.
- The refractometer - T10007A- MUST be used to determine the current level of frost protection.
- The mixture must guarantee frost protection down to at least -25 °C (in countries with arctic climate: down to -36 °C). The amount of antifreeze should only be increased if greater frost protection is required in very cold climates. This must only be down to -48 °C, however, as otherwise the cooling efficiency of the coolant is impaired.
- The coolant concentration must not be reduced by adding water even in warmer seasons and in warmer countries. Frost protection must be provided to at least -25 °C.
- Read off the level of frost protection on the scale for the relevant coolant additive.
- The temperature indicated on the refractometer - T10007A- corresponds to the temperature at which the first ice crystals can form in the coolant.
- Do not reuse coolant.
- Only use water/coolant additive as a lubricant for coolant hoses.

Draining and filling cooling system

– All procedures are described in ⇒ 4-cylinder direct injection engine (1.8, 2.0 ltr. 4-valve TFSI); Rep. gr. 19 ; Cooling system/coolant; Draining and filling cooling system .

Protected by copyright. Copying for private or commercial purposes, in part or in whole, is not permitted unless authorised by AUDI AG. AUDI AG does not guarantee or accept any liability with respect to the correctness of information in this document. Copyright by AUDI AG.

2 Coolant pump/thermostat assembly

⇒ “2.1 Exploded view - coolant pump/thermostat”, page 227

⇒ “2.2 Exploded view - electric coolant pump”, page 229

⇒ “2.3 Exploded view - coolant valves”, page 229

⇒ “2.4 Exploded view - coolant temperature senders”, page 229

⇒ “2.5 Removing and installing electric coolant pump”, page 230

⇒ “2.6 Removing and installing coolant pump”, page 230

⇒ “2.7 Removing and installing toothed belt for coolant pump”, page 231

⇒ “2.8 Removing and installing actuator for engine temperature regulation N493 ”, page 232

⇒ “2.9 Removing and installing coolant temperature sender G62 ”, page 234

⇒ “2.10 Removing and installing radiator outlet coolant temperature sender G83 ”, page 235

⇒ “2.11 Removing and installing coolant valves”, page 235

2.1 Exploded view - coolant pump/thermostat

⇒ “2.1.1 Exploded view - coolant pump/thermostat, engine with actuator for engine temperature regulation N493 ”, page 227

⇒ “2.1.2 Exploded view - coolant pump/thermostat, engine with mechanical thermostat”, page 229

Protected by copyright. Copying for private or commercial purposes, in part or in whole, is not permitted unless authorised by AUDI AG. AUDI AG does not guarantee or accept any liability with respect to the correctness of information in this document. Copyright by AUDI AG.

2.1.1 Exploded view - coolant pump/thermostat, engine with actuator for engine temperature regulation - N493-

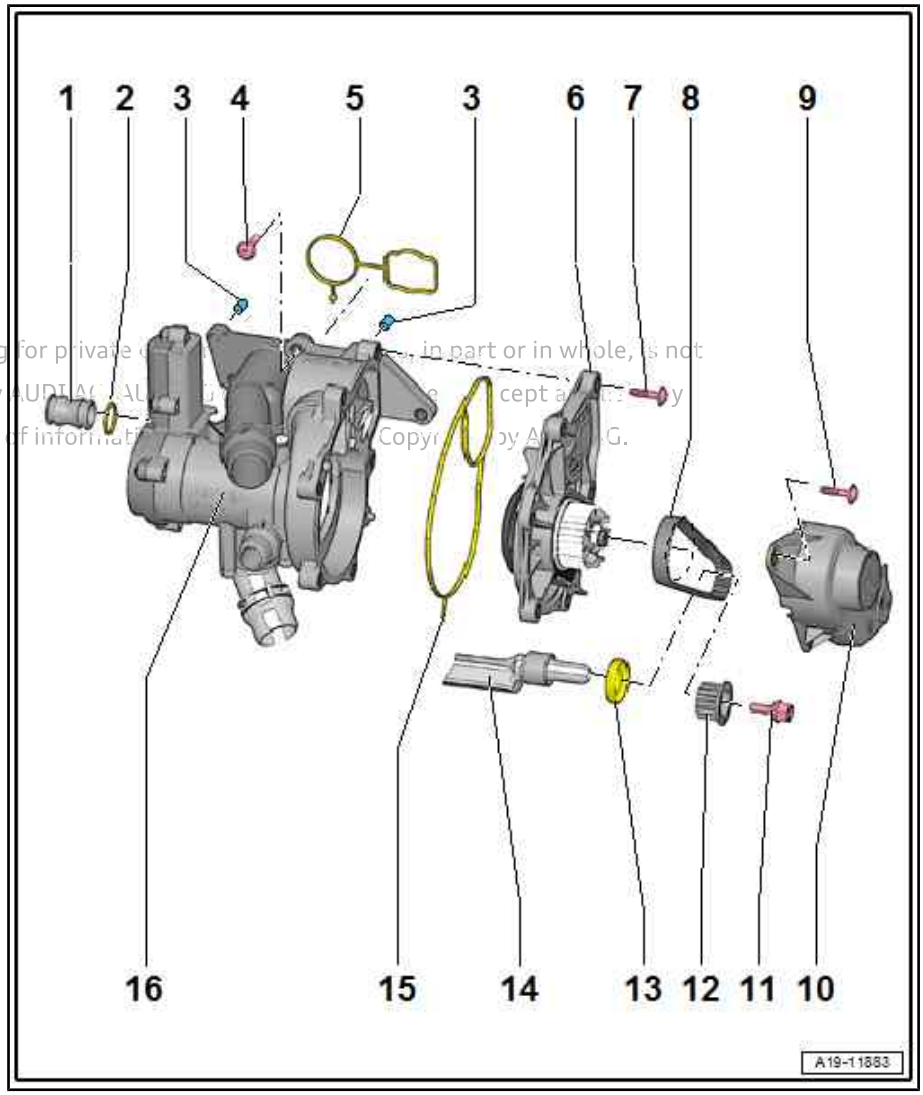

1 - Connection

2 - O-ring

- ❑ 2x
- ❑ Renew after removing
- ❑ Lubricate with coolant

3 - Centring pin

4 - Bolt

- ❑ Tightening torques and sequence ⇒ page 229

Protected by copyright. Copying for private or commercial purposes, in part or in whole, is not permitted unless authorised by AUDI AG. AUDI AG does not guarantee or accept any liability with respect to the correctness of information. Copyright by AUDI AG.

5 - Gasket

- ❑ Renew after removing

6 - Coolant pump

- ❑ Removing and installing ⇒ “2.6 Removing and installing coolant pump”, page 230
- ❑ New coolant pump: remove protective cap

7 - Bolt

- ❑ Tightening torque and sequence ⇒ page 229

8 - Toothed belt

- ❑ For coolant pump
- ❑ Removing and installing ⇒ “2.7 Removing and installing toothed belt for coolant pump”, page 231

9 - Bolt

- ❑ 9 Nm

10 - Toothed belt cover

11 - Bolt

- ❑ Left-hand thread
- ❑ Renew after removing
- ❑ 10 Nm +90°

12 - Toothed belt drive sprocket

- ❑ Note installation position

13 - Oil seal

- ❑ For balance shaft (inlet side)
- ❑ Renewing ⇒ page 50

14 - Balance shaft (inlet side)

15 - Gasket

- ❑ Renew after removing

16 - Actuator for engine temperature regulation - N493-

- ❑ Removing and installing ⇒ page 232
- ❑ After renewing, perform adaption ⇒ Vehicle diagnostic tester

Actuator for engine temperature regulation - N493- - tightening torque and sequence

– Tighten bolts in the sequence -1 ... 5- to 9 Nm.

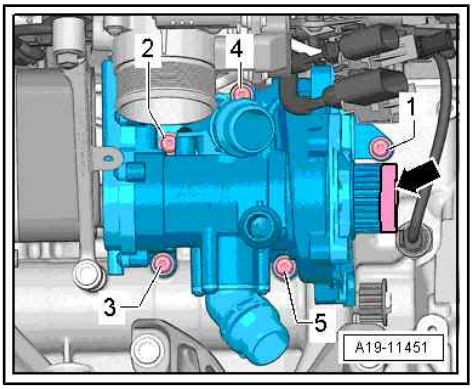

Coolant pump - tightening torque and sequence

– Tighten bolts for coolant pump in the sequence -1 ... 4- to 9 Nm.

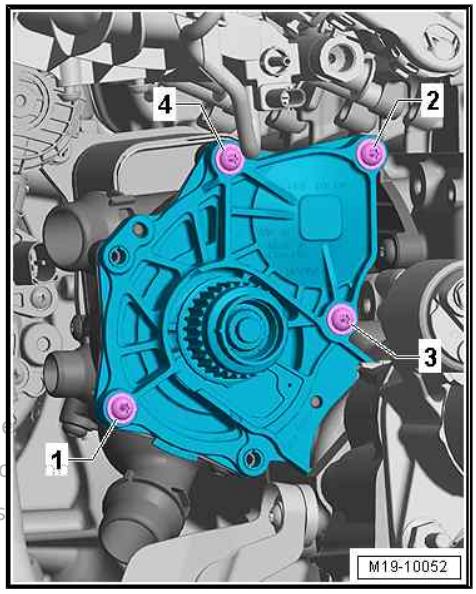

Protected by copyright. Copying for private or comme
permitted unless authorised by AUDI AG. AUDI AG do
with respect to the correctness of information in this

2.1.2 Exploded view - coolant pump/thermostat, engine with mechanical thermostat

A mechanical thermostat may have been fitted on some engines. All components are described in ⇒ 4-cylinder direct injection engine (1.8, 2.0 ltr. 4-valve TFSI); Rep. gr. 19 ; Coolant pump/ thermostat assembly; Exploded view - coolant pump/thermostat .

2.2 Exploded view - electric coolant pump

All components are described in ⇒ 4-cylinder direct injection engine (1.8, 2.0 ltr. 4-valve TFSI); Rep. gr. 19 ; Coolant pump/ thermostat assembly; Exploded view - electric coolant pump .

2.3 Exploded view - coolant valves

All components are described in ⇒ 4-cylinder direct injection engine (1.8, 2.0 ltr. 4-valve TFSI); Rep. gr. 19 ; Coolant pump/ thermostat assembly ; Exploded view - coolant valves, or ⇒ 4-cylinder direct injection engine (1.8, 2.0 ltr. 4-valve TFSI); Rep. gr. 19 ; Coolant pump/thermostat assembly; Exploded view - electric coolant pump .

2.4 Exploded view - coolant temperature senders

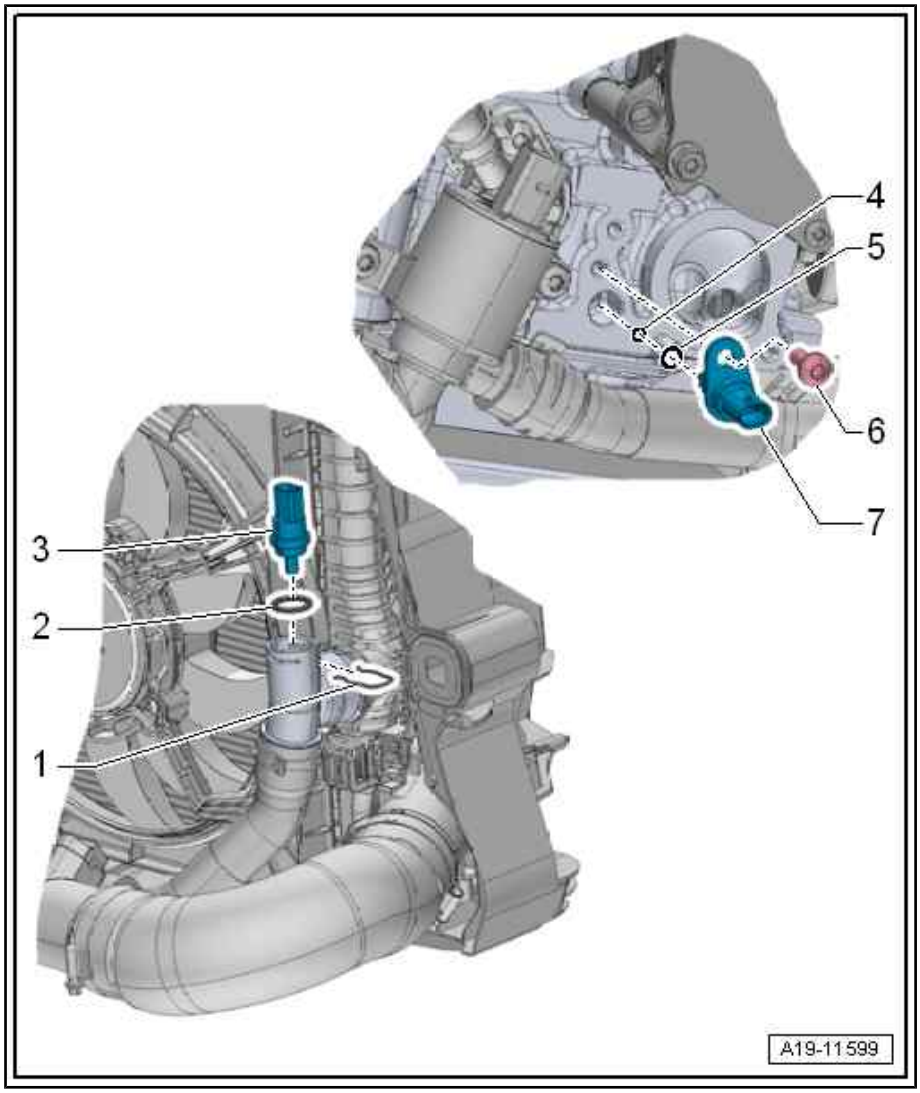

1 - Retaining clip

- ❑ Installation instructions ⇒ 4-cylinder direct injection engine (1.8, 2.0 ltr. 4-valve TFSI); Rep. gr. 19 ; Coolant pump/ thermostat assembly; Exploded view - coolant temperature senders

2 - O-ring

- ❑ Installation instructions ⇒ 4-cylinder direct injection engine (1.8, 2.0 ltr. 4-valve TFSI); Rep. gr. 19 ; Coolant pump/ thermostat assembly; Exploded view - coolant temperature senders

3 - Radiator outlet coolant temperature sender - G83-

- ❑ Different fitting locations depending on model
- ❑ Removing and installing ⇒ 4-cylinder direct injection engine, (1.8, 2.0 ltr. 4-valve TFSI); Rep. gr. 19 ; Coolant pump/ thermostat assembly; Removing and installing radiator outlet coolant temperature sender - G83-

4 - O-ring

- ❑ Renew after removing
- ❑ Lubricate with coolant

5 - O-ring

- ❑ Renew after removing
- ❑ Lubricate with coolant

6 - Bolt

- ❑ Renew after removing
- ❑ 4 Nm +45°

7 - Coolant temperature sender - G62-

- ❑ On cylinder head (gearbox end)
- ❑ Removing and installing ⇒ page 234

Protected by copyright. Copying for private or commercial purposes, in part or in whole, is not permitted unless authorised by AUDI AG. AUDI AG does not guarantee or accept any liability with respect to the correctness of information in this document. Copyright by AUDI AG.

2.5 Removing and installing electric coolant pump

All procedures are described in ⇒ 4-cylinder direct injection engine (1.8, 2.0 ltr. 4-valve TFSI); Rep. gr. 19 ; Coolant pump/ thermostat assembly; Removing and installing electric coolant pump .

2.6 Removing and installing coolant pump

Removing

Preparatory work may be necessary depending on model ⇒ 4-cylinder direct injection engine (1.8, 2.0 ltr. 4-valve TFSI); Rep.

gr. 19 ; Coolant pump/thermostat assembly; Removing and installing coolant pump .

– Loosen bolts -1 … 4- and detach coolant pump from actuator for engine temperature regulation - N493- .

– Detach toothed belt from coolant pump.

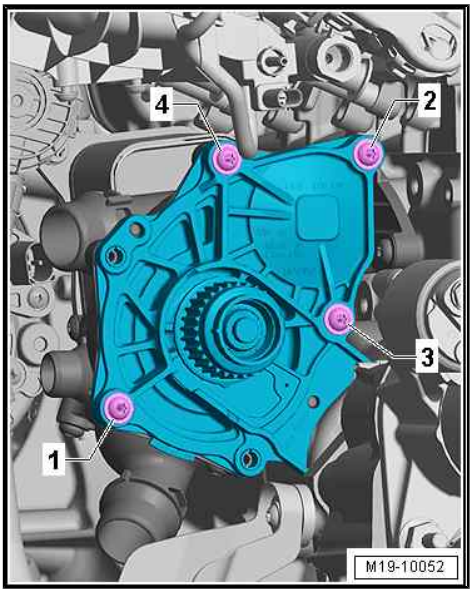

Note

If the coolant pump cannot be removed as described, remove the throttle valve module - GX3- ⇒ page 247 .

Installing

Installation is carried out in reverse order; note the following:

- Renew gasket after removing.

– Fit coolant pump -1- and toothed belt.

– Check that centring elements -arrows- and gasket -3- are seated correctly.

– Tighten coolant pump bolts ⇒ page 229 .

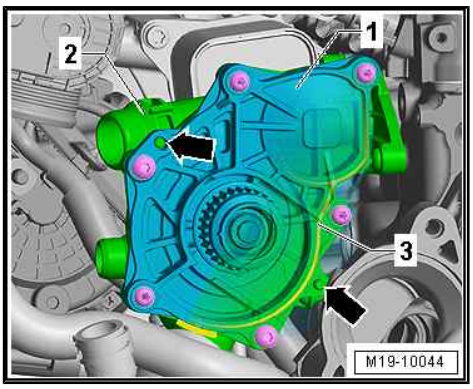

– After fitting new coolant pump -2-, remove protective cap -1- from drive sprocket.

Additional work depending on model ⇒ 4-cylinder direct injection engine (1.8, 2.0 ltr. 4-valve TFSI); Rep. gr. 19 ; Coolant pump/ thermostat assembly; Removing and installing coolant pump

Tightening torques

♦ ⇒ “2.1 Exploded view - coolant pump/thermostat”, page 227

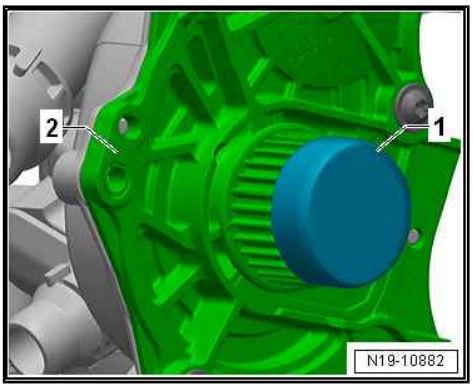

2.7 Removing and installing toothed belt for coolant pump

Special tools and workshop equipment required

Protected by copyright. Copying for private or commercial purposes, in part or in whole, is not permitted unless authorised by AUDI AG. AUDI AG does not guarantee or accept any liability with respect to the correctness of information in this document. Copyright by AUDI AG.

♦ Tool insert - T10360-

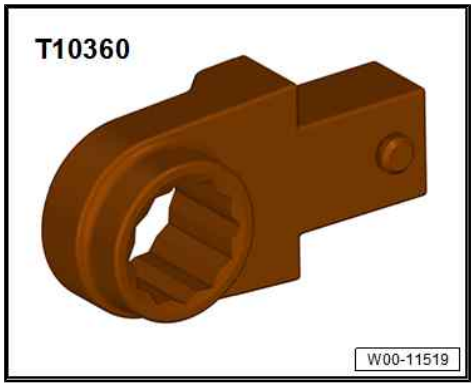

Removing

Preparatory work may be necessary depending on model ⇒ 4-cylinder direct injection engine (1.8, 2.0 ltr. 4-valve TFSI); Rep. gr. 19 ; Coolant pump/thermostat assembly; Removing and installing toothed belt for coolant pump .

Protected by copyright. Copying for private or commercial purposes, in part or in whole, is not permitted unless authorised by AUDI AG. AUDI AG does not guarantee or accept any liability with respect to the correctness of information in

– Remove stage 3 oil pressure switch - F447- ⇒ page 217 .

• Please note that the drive sprocket bolt has a left-hand thread and will be damaged if turned in the wrong direction.

– Use torque wrench - V.A.G 1410- and insert tool - T10360- to loosen bolt on coolant pump drive sprocket -1- and unscrew three turns -arrow-.

– Remove toothed belt -2-.

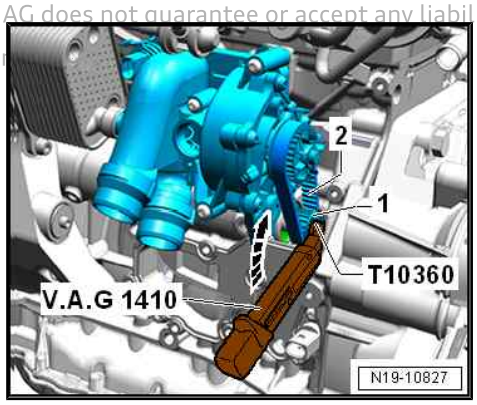

Installing

Installation is carried out in reverse order; note the following:

• Note installation position of toothed belt sprocket ⇒ Item 12 (page 228) .

• After removing, renew bolts tightened with specified tightening angle.

– Install stage 3 oil pressure switch - F447- ⇒ page 217 .

Additional work depending on model ⇒ 4-cylinder direct injection engine (1.8, 2.0 ltr. 4-valve TFSI); Rep. gr. 19 ; Coolant pump/ thermostat assembly; Removing and installing toothed belt for coolant pump

Tightening torques

♦ ⇒ “2.1 Exploded view - coolant pump/thermostat”, page 227

2.8 Removing and installing actuator for engine temperature regulation - N493-

Removing

Preparatory work may be necessary depending on model ⇒ 4-cylinder direct injection engine (1.8, 2.0 ltr. 4-valve TFSI); Rep. gr. 19 ; Coolant pump/thermostat assembly; Removing and installing actuator for engine temperature regulation - N493- .

– Remove throttle valve module - GX3- ⇒ page 247 .

– Remove coolant pump ⇒ page 230 .

– Lift retaining clips -1- and disconnect coolant hoses (if still connected).

Protected by copyright. Copying for private or commercial p
permitted unless authorised by AUDI AG. AUDI AG does not
with respect to the correctness of information in this docum

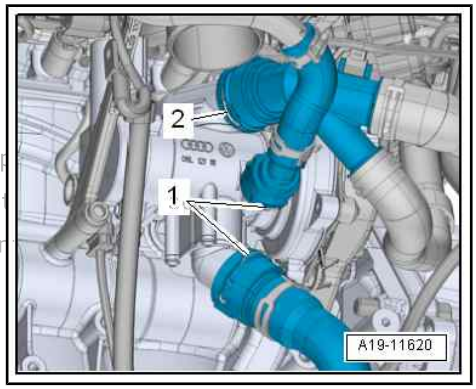

– Unplug electrical connector -1- for actuator for engine temperature regulation - N493- .

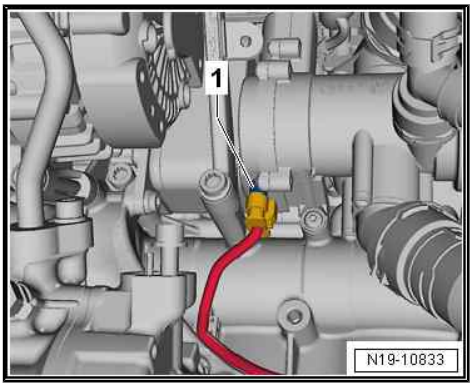

– Remove bolts -1 ... 5-.
– Detach actuator for engine temperature regulation - N493- from centring pins and pull actuator off engine oil cooler.

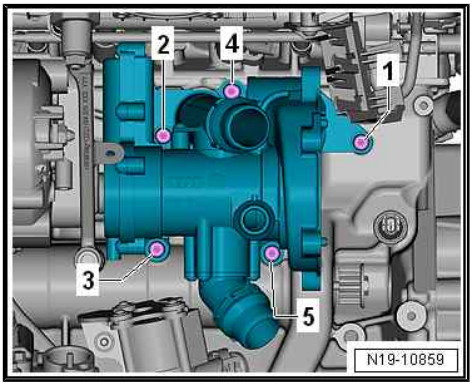

Installing

Installation is carried out in reverse order; note the following:

- Renew gaskets and O-rings after removal.

– Moisten new O-rings -4- with coolant.

– Check whether the two centring pins are fitted in the cylinder block; install if necessary.

– Fit connecting piece -2- into engine oil cooler -1-.

– Push actuator for engine temperature regulation - N493- -item 3- onto connecting piece and centring pins in cylinder block.

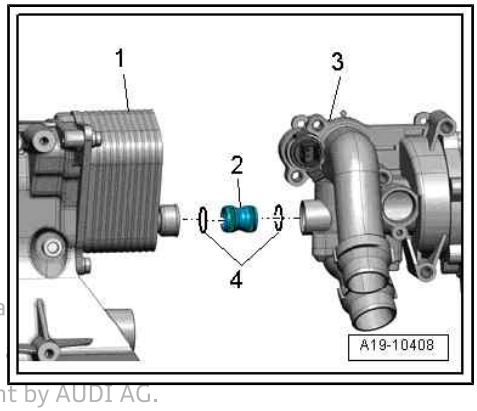

Protected by copyright. Copying for private or commercial purposes, in part permitted unless authorised by AUDI AG. AUDI AG does not guarantee or warrant with respect to the correctness of information in this document. Copyright by AUDI AG.

– Install coolant pump ⇒ page 230 .

– Install throttle valve module - GX3- ⇒ page 247 .

Additional work depending on model ⇒ 4-cylinder direct injection engine (1.8, 2.0 ltr. 4-valve TFSI); Rep. gr. 19 ; Coolant pump/ thermostat assembly ; Removing and installing actuator for engine temperature regulation - N493-

– After renewing, perform adaption ⇒ Vehicle diagnostic tester

Tightening torques

♦ ⇒ Fig. “" Actuator for engine temperature regulation -N493- - tightening torque and sequence"“ , page 229

2.9 Removing and installing coolant temperature sender - G62-

Procedure

- Engine cold.

Preparatory work may be necessary depending on model ⇒ 4-cylinder direct injection engine (1.8, 2.0 ltr. 4-valve TFSI); Rep. gr. 19 ; Coolant pump/thermostat assembly; Removing and installing coolant temperature sender - G62- .

– To relieve residual pressure in cooling system, open filler cap on coolant expansion tank briefly and then close cap again (it should click into place).

Version with secondary air system (different installation position):

– Unplug electrical connector -1-.

– Press release tabs on both sides and disconnect secondary air hose -2-.

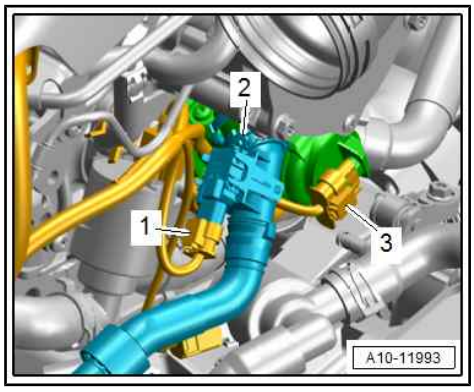

All vehicles (continued):

– Unplug electrical connector -1-.

– Place a cloth underneath to catch escaping coolant.

– Remove bolt -2- and detach coolant temperature sender - G62- -item 3-.

• Renew O-rings after removing.

– Fit new coolant temperature sender immediately so that as little coolant as possible is lost.

– Fill up with coolant ⇒ page 226 .

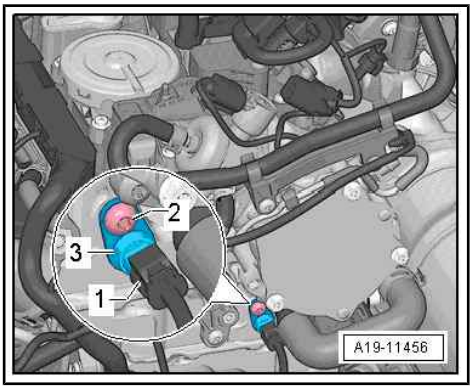

Additional work depending on model ⇒ 4-cylinder direct injection engine (1.8, 2.0 ltr. 4-valve TFSI); Rep. gr. 19 ; Coolant pump/ thermostat assembly; Removing and installing coolant temperature sender - G62-

Tightening torques

♦ ⇒ “2.4 Exploded view - coolant temperature senders”, page 229

2.10 Removing and installing radiator outlet coolant temperature sender - G83-

All procedures are described in ⇒ 4-cylinder direct injection engine (1.8, 2.0 ltr. 4-valve TFSI); Rep. gr. 19 ; Coolant pump/ thermostat assembly; Removing and installing radiator outlet coolant temperature sender - G83- .

2.11 Removing and installing coolant valves

All procedures are described in ⇒ 4-cylinder direct injection engine (1.8, 2.0 ltr. 4-valve TFSI); Rep. gr. 19 ; Coolant pump/ thermostat assembly; Removing and installing coolant valves .

Protected by copyright. Copying for private or commercial purposes, in part or in whole, is not permitted unless authorised by AUDI AG. AUDI AG does not guarantee or accept any liability with respect to the correctness of information in this document. Copyright by AUDI AG.

3 Coolant pipes

All procedures and components are described in ⇒ 4-cylinder direct injection engine (1.8, 2.0 ltr. 4-valve TFSI); Rep. gr. 19 ; Coolant pipes .

Protected by copyright. Copying for private or commercial purposes, in part or in whole, is not permitted unless authorised by AUDI AG. AUDI AG does not guarantee or accept any liability with respect to the correctness of information in this document. Copyright by AUDI AG.

4 Radiator/radiator fans

All procedures and components are described in ⇒ 4-cylinder direct injection engine (1.8, 2.0 ltr. 4-valve TFSI); Rep. gr. 19 ; Radiator/radiator fans .

Protected by copyright. Copying for private or commercial purposes, in part or in whole, is not permitted unless authorised by AUDI AG. AUDI AG does not guarantee or accept any liability with respect to the correctness of information in this document. Copyright by AUDI AG.

21 – Turbocharging/supercharging

1 Turbocharger

All procedures and components are described in ⇒ 4-cylinder direct injection engine (1.8, 2.0 ltr. 4-valve TFSI); Rep. gr. 21 ; Turbocharger .

Protected by copyright. Copying for private or commercial purposes, in part or in whole, is not permitted unless authorised by AUDI AG. AUDI AG does not guarantee or accept any liability with respect to the correctness of information in this document. Copyright by AUDI AG.

2 Charge air system

⇒ “2.1 Exploded view - charge air system”, page 239

⇒ “2.2 Exploded view - hose connections for charge air system”, page 239

⇒ “2.3 Removing and installing charge air cooler”, page 239

⇒ “2.4 Removing and installing charge pressure sender G31 ”, page 239

⇒ “2.5 Checking charge air system for leaks”, page 239

2.1 Exploded view - charge air system

Protected by copyright. Copying for private or commercial purposes, in part or in whole, is not permitted unless authorised by AUDI AG. AUDI AG does not guarantee or accept any liability whatsoever with respect to the contents of information in this document. Copyright by AUDI AG.

All components are described in ⇒ 4-cylinder direct injection engine (1.8, 2.0 ltr. 4-valve TFSI); Rep. gr. 21 ; Charge air system; Exploded view - charge air system .

2.2 Exploded view - hose connections for charge air system

- Hose connections and air pipes/hoses must be free of oil and grease prior to fitting.
- Secure all hose connections with correct type of hose clips (as original equipment) ⇒ Electronic parts catalogue .
- If using used hose clips to secure the air hoses at their connections, spray rust remover onto the worm threads before installing.

Tightening torque for

1 - Hose clip with width -a- = 12 mm: 5.5 Nm

2 - Hose clip with width -b- = 9 mm: 3.4 Nm

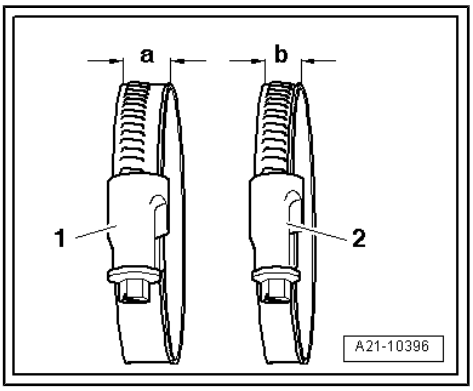

2.3 Removing and installing charge air cooler

All procedures are described in ⇒ 4-cylinder direct injection engine (1.8, 2.0 ltr. 4-valve TFSI); Rep. gr. 21 ; Charge air system; Removing and installing charge air cooler .

2.4 Removing and installing charge pressure sender - G31-

All procedures are described in ⇒ 4-cylinder direct injection engine (1.8, 2.0 ltr. 4-valve TFSI); Rep. gr. 21 ; Charge air system; Removing and installing charge pressure sender - G31- .

2.5 Checking charge air system for leaks

Procedure

Preparatory work may be necessary depending on model ⇒ 4-cylinder direct injection engine (1.8, 2.0 ltr. 4-valve TFSI); Rep. gr. 21 ; Charge air system; Checking charge air system for leaks .

Prepare charge air system tester - V.A.G 1687- as follows:

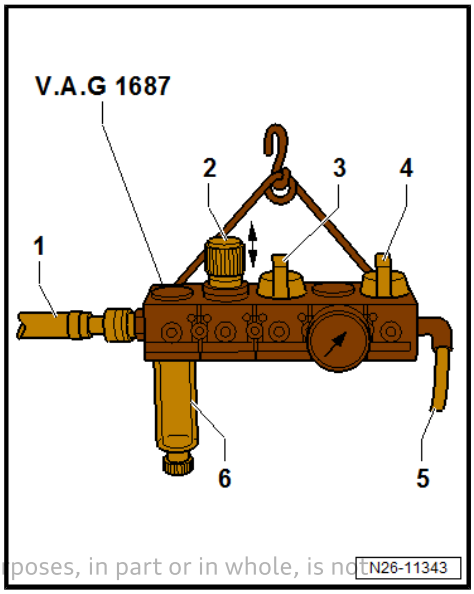

– Unscrew pressure control valve -2- completely and close valves -3- and -4-.

• Make sure knob is pulled out before turning pressure control valve -2-.

– Using a commercially available connection piece, connect charge air system tester - V.A.G 1687- to compressed air -1-.

– If there is water in sight glass, remove drain plug -6- and drain water.

– Open valve -3-.

– Adjust pressure to 0.2 bar via pressure control valve -2-.

• The pressure must not exceed 0.2 bar.

– Open valve -4- and wait until test system is pressurised. If necessary, adjust pressure to 0.2 bar again.

– Check charge air system for audible leaks or leaks that can be felt with the hand; apply commercially available leak detecting spray or use ultrasonic tester - V.A.G 1842- . (Refer to ⇒ operating instructions .)

Protected by copyright. Copying for private or commercial purposes, in part or in whole, is not permitted unless authorised by AUDI AG. AUDI AG does not guarantee or accept any liability with respect to the correctness of information in this document. Copyright by AUDI AG.

Note:

A small amount of air escapes through the valves and enters the engine. Therefore it is not possible to perform a pressure retention test.

• Release pressure in test circuit by detaching coupling from adapter before removing adapter.

• Secure all hose connections with correct type of hose clips (as original equipment) ⇒ Electronic parts catalogue .

Assembling

Assemble in reverse order.

Additional work depending on model ⇒ 4-cylinder direct injection engine (1.8, 2.0 ltr. 4-valve TFSI); Rep. gr. 21 ; Charge air system; Checking charge air system for leaks

Tightening torques

♦ ⇒ “2.2 Exploded view - hose connections for charge air system”, page 239

24 – Mixture preparation - injection

1 Injection system

All components are described in ⇒ 4-cylinder direct injection engine (1.8, 2.0 ltr. 4-valve TFSI); Rep. gr. 24 ; Injection system .

Protected by copyright. Copying for private or commercial purposes, in part or in whole, is not permitted unless authorised by AUDI AG. AUDI AG does not guarantee or accept any liability with respect to the correctness of information in this document. Copyright by AUDI AG.

2 Air cleaner

All procedures and components are described in ⇒ 4-cylinder direct injection engine (1.8, 2.0 ltr. 4-valve TFSI); Rep. gr. 24 ; Air cleaner .

Protected by copyright. Copying for private or commercial purposes, in part or in whole, is not permitted unless authorised by AUDI AG. AUDI AG does not guarantee or accept any liability with respect to the correctness of information in this document. Copyright by AUDI AG.

3 Intake manifold

⇒ “3.1 Exploded view - intake manifold”, page 243

⇒ “3.2 Removing and installing intake manifold”, page 244

⇒ “3.3 Removing and installing throttle valve module GX3 ”, page 247

⇒ “3.4 Cleaning throttle valve module”, page 248

⇒ “3.5 Checking intake manifold change-over function”, page 249

3.1 Exploded view - intake manifold

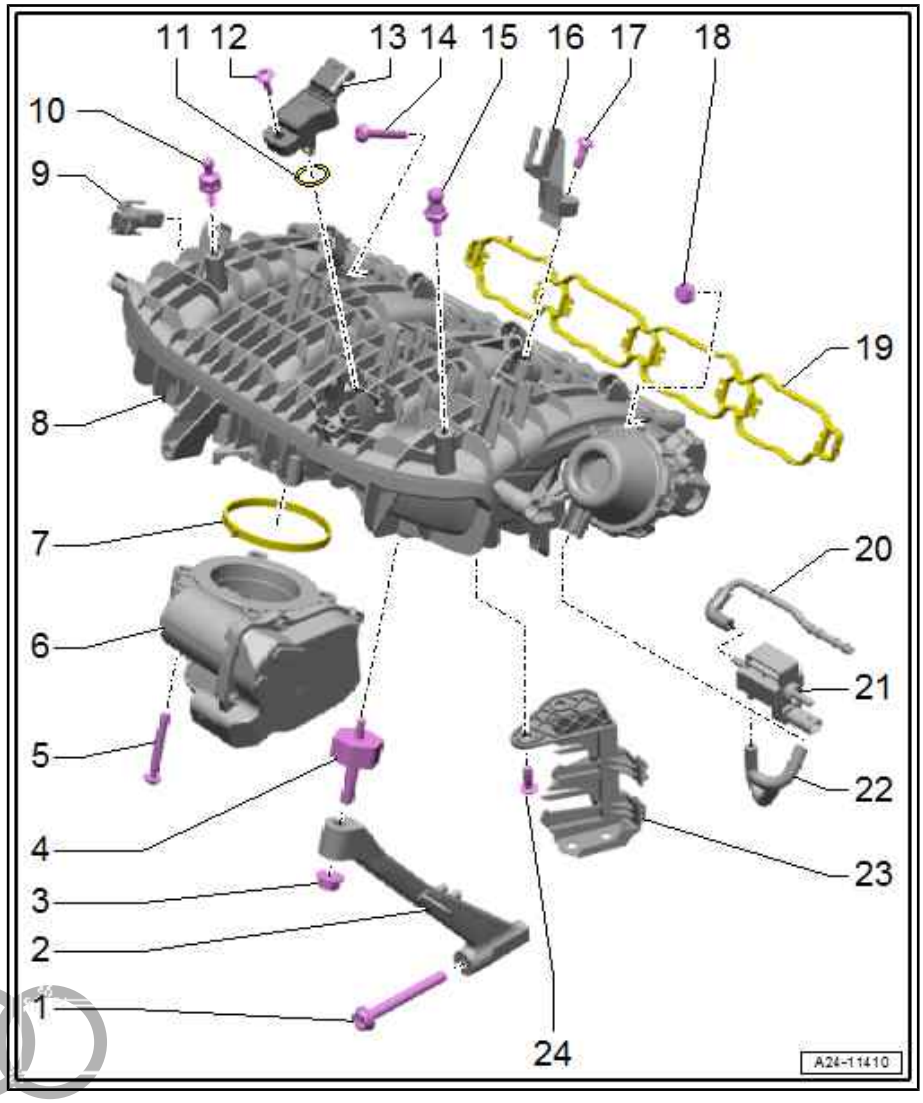

1 - Bolt
- ❑ 20 Nm

2 - Support for intake manifold

3 - Nut
- ❑ 10 Nm

4 - Bonded rubber bush
- ❑ 5 Nm

5 - Bolt
- ❑ 7 Nm

6 - Throttle valve module - J338- / throttle valve module - GX3-
- ❑ Designation on current flow diagram depends on model
- ❑ Including throttle valve drive for electric throttle - G186- , throttle valve drive angle sender 1 for electric throttle - G187- and throttle valve drive angle sender 2 for electric throttle - G188-
- ❑ Removing and installing ⇒ page 247
- ❑ After installing, perform adaption ⇒ Vehicle diagnostic tester
- ❑ Cleaning ⇒ page 248

7 - Seal
- ❑ Renew after removing

8 - Intake manifold
- ❑ Removing and installing ⇒ page 244

9 - Intake manifold flap potentiometer - G336-

10 - Ball stud
- ❑ For engine cover panel
- ❑ 5 Nm

11 - O-ring
- ❑ Renew if damaged

Copyright by AUDI AG. Any use for private or commercial purposes, in part or in whole, is not permitted unless authorised by AUDI AG. AUDI AG does not guarantee or accept any liability with respect to the correctness of information in this document. Copyright by AUDI AG.

Protected by copyright. Copying for private or commercial purposes, in part or in whole, is not
with respect to the correctness of information in this document. Copyright by AUDI AG.

12 - Bolt

- ❑ 1.5 Nm

13 - Intake air temperature sender - G42- / intake manifold pressure sender - G71- / intake manifold sender - GX9-

- ❑ Designation on current flow diagram depends on model
- ❑ Removing and installing ⇒ page 263

14 - Bolt

- ❑ Tighten in several stages and in diagonal sequence
- ❑ 9 Nm

15 - Ball stud

- ❑ For engine cover panel
- ❑ 5 Nm

16 - Bracket

- ❑ For electrical connector
- ❑ For vehicles with MPI engine

17 - Bolt

- ❑ 5 Nm

18 - Bolt

- ❑ Tighten in several stages and in diagonal sequence
- ❑ 9 Nm

19 - Gasket

- ❑ Renew after removing

20 - Vacuum hose

- ❑ Leading from vacuum pump

21 - Intake manifold flap valve - N316-

22 - Vacuum hose

23 - Bracket

- ❑ For electrical connectors

24 - Bolt

- ❑ 5 Nm

3.2 Removing and installing intake manifold

Special tools and workshop equipment required

- ♦ Engine bung set - VAS 6122-

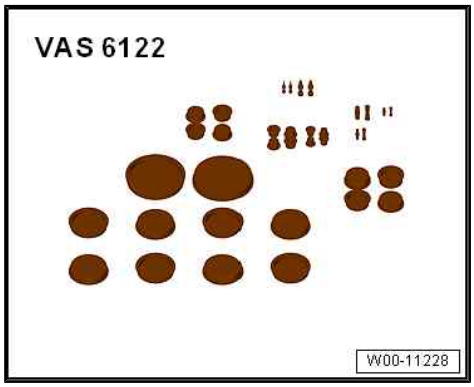

- Hose clip pliers - VAS 6362-

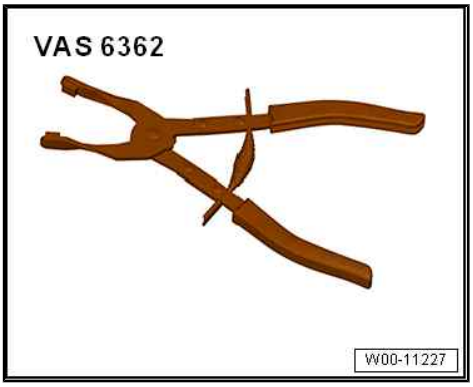

- Assembly tool - T10118-

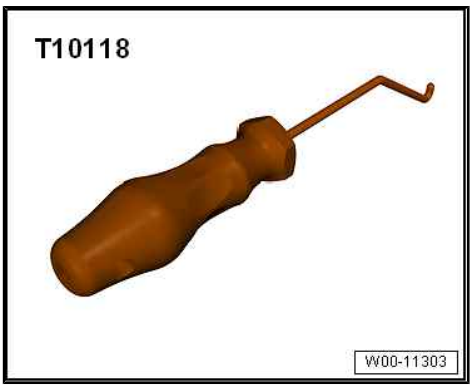

- Safety goggles
- Protective gloves

Removing

Preparatory work may be necessary depending on model ⇒ 4-cylinder direct injection engine (1.8, 2.0 ltr. 4-valve TFSI); Rep. gr. 24 ; Intake manifold; Removing and installing intake manifold .

– Move electrical wiring harness clear.

– Unscrew nut -3- and bolt -1- and remove support -2- for intake manifold.

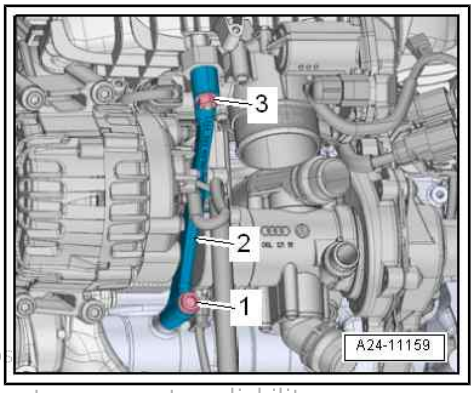

Protected by copyright. Copying for private or commercial purpo
permitted unless authorised by AUDI AG. AUDI AG does not guarantee or accept any liability
with respect to the correctness of information in this document.

– Unplug electrical connectors and move electrical wiring clear:

1 - For intake manifold flap potentiometer - G336-

2 - Vehicles with MPI engine: for fuel pressure sender for low pressure - G410-

3 - Vehicles with MPI engine: Main connector for MPI injectors

4 - For intake air temperature sender - G42-

5 - For Hall sender - G40-

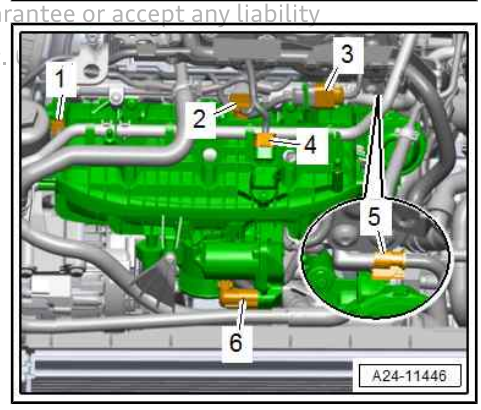

– Unplug electrical connector -1- at intake manifold flap valve - N316- .
– Disconnect vacuum hose -2-.

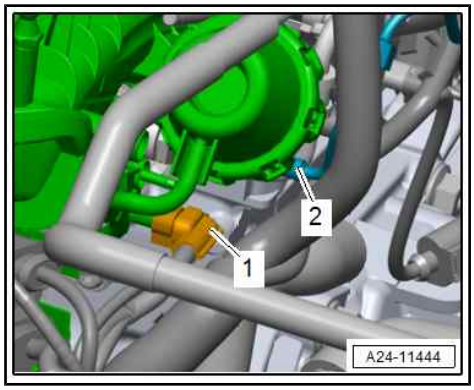

– Move fuel hose -1- clear at intake manifold.

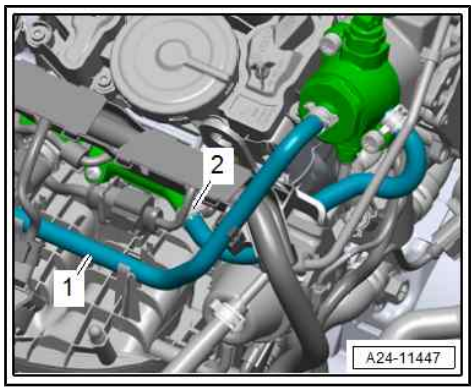

Note

Lay a cloth under the connection to catch escaping fuel.

– Vehicles with MPI engine: Release hose clip -2- and detach fuel hose.

CAUTION

The fuel system is pressurised.
Risk of injury as fuel may spray out.
- **Put on safety goggles.**
- **Put on protective gloves.**
- **Release pressure (wrap a clean cloth around connection and open connection carefully).**

Copyright. Copying for private or commercial purp
permitted unless authorised by AUDI AG. AUDI AG does not gua
with respect to the correctness of information in this document

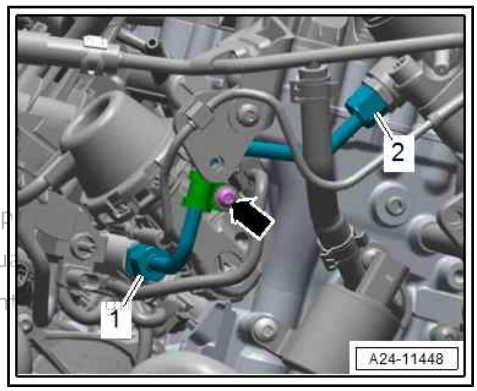

– Remove bolt -arrow-.
– Unscrew union nuts -1, 2-; to do so, counterhold hexagon flats of connection with an open-end spanner.
– Detach high-pressure pipe.
– Seal off open lines and connections with plugs (thoroughly cleaned) from engine bung set - VAS 6122- .

– Remove bolts -arrows-.

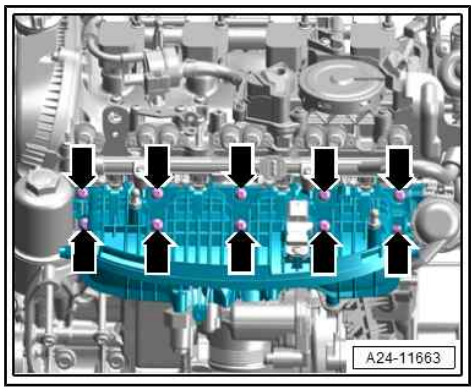

– Detach electrical connectors -1, 4- from bracket.

– Detach intake manifold and unclip electrical connector -2- from bracket. If necessary, unplug electrical connector.

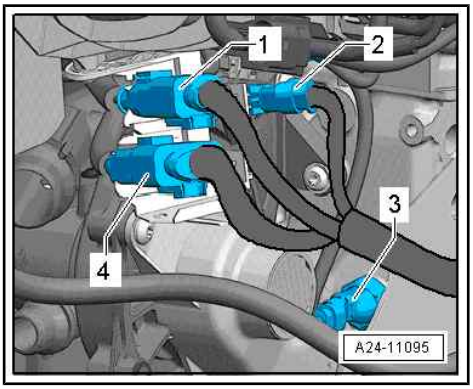

– If intake manifold cannot be removed as described, unscrew bolts -1-.

– Seal off all open passages in the intake system with clean cloths or plugs (thoroughly cleaned) from engine bung set - VAS 6122- .

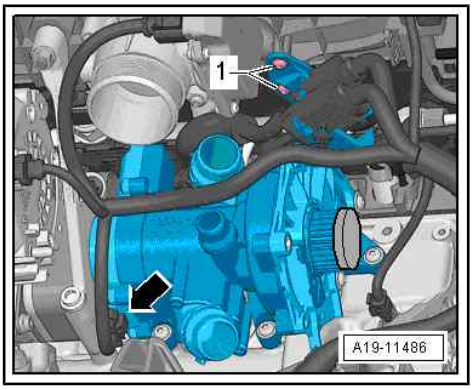

Installing

Installation is carried out in reverse order; note the following:

- Renew gaskets and spring-type clip for fuel hose after removing.
- Secure all hose connections with correct type of hose clips (as original equipment) ⇒ Electronic parts catalogue .

– Push intake manifold onto studs and onto cylinder head.

– Install high-pressure pipe ⇒ page 275 .

Additional work depending on model ⇒ 4-cylinder direct injection engine (1.8, 2.0 ltr. 4-valve TFSI); Rep. gr. 24 ; Intake manifold; Removing and installing intake manifold

Tightening torques

♦ ⇒ “3.1 Exploded view - intake manifold”, page 243

3.3 Removing and installing throttle valve module - GX3-

Designation in current flow diagram depends on model: throttle valve module - J338- or throttle valve module - GX3-

Removing

Preparatory work may be necessary depending on model ⇒ 4-cylinder direct injection engine (1.8, 2.0 ltr. 4-valve TFSI); Rep. gr. 24 ; Intake manifold; Removing and installing throttle valve module - GX3- .

– Remove engine cover panel ⇒ page 15 .

Protected by copyright. Copying for private or commercial purposes, in part or in whole, is not permitted unless authorised by AUDI AG. AUDI AG does not guarantee or accept any liability with respect to the correctness of information in this document. Copyright by AUDI AG.

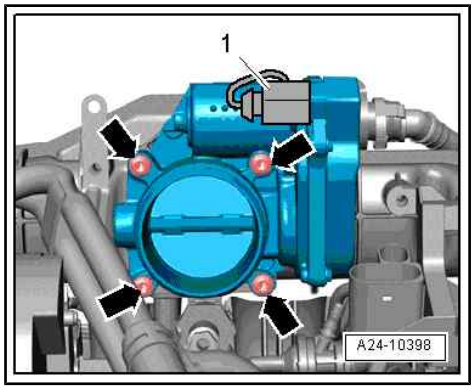

– Unplug electrical connector -1-.

– Remove bolts -arrows- from below and detach throttle valve module - GX3- .

Installing

– Installation is carried out in reverse order; note the following:

• Renew seal after removing.

• Secure all hose connections with correct type of hose clips (as original equipment) ⇒ Electronic parts catalogue .

– Clean sealing surface for seal.

– Install engine cover panel ⇒ page 15 .

Additional work depending on model ⇒ 4-cylinder direct injection engine (1.8, 2.0 ltr. 4-valve TFSI); Rep. gr. 24 ; Intake manifold; Removing and installing throttle valve module - GX3-

Learnt values must be re-adapted after removing or renewing throttle valve module.

– Connect ⇒ Vehicle diagnostic tester.

– Select `Diagnosis` mode and then `Start diagnosis`.

– Choose `Select own test` tab and select following options one after the other:

♦ `Drive train`

♦ `Select engine code and engine`

♦ `01 - Self-diagnosis compatible systems`

♦ `01 - Engine electronics`

♦ `01 - Engine electronics, functions`

♦ `01 - Adapt learnt values - after component replacement`

Protected by copyright. Copying for private or commercial purposes, in part or in whole, is not permitted unless authorised by AUDI AG. AUDI AG does not guarantee or accept any liability with respect to the correctness of information in this document. Copyright by AUDI AG.

Tightening torques

♦ ⇒ “3.1 Exploded view - intake manifold”, page 243

3.4 Cleaning throttle valve module

♦ Carbon deposits and dirt in the limit stop can lead to incorrect adaption values.

♦ Take care not to scratch the throttle valve housing when cleaning it.

Special tools and workshop equipment required

♦ Acetone (commercially available)

♦ Brush

♦ Safety goggles

♦ Protective gloves

Procedure

– Observe rules for cleanliness ⇒ page 9 .

– Remove throttle valve module - J338- ⇒ page 247 .

– Open throttle valve by hand and lock it in open position with a wedge (plastic or wood) -arrow-.

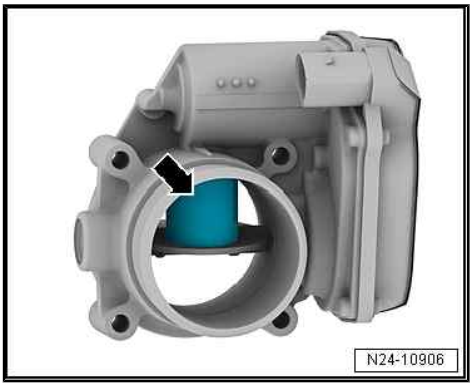

CAUTION

Risk of injury caused by acetone. Acetone is highly flammable and can cause irritation to the eyes and skin.

- **Put on safety goggles.**
- **Put on protective gloves.**

– Clean throttle valve housing thoroughly, especially around the points -arrows- where the throttle valve closes, using commercially available acetone and a small brush.

– Wipe out throttle valve housing with a lint-free cloth.

– Allow acetone to flash off completely.

– Install throttle valve module - J338- ⇒ page 247 .

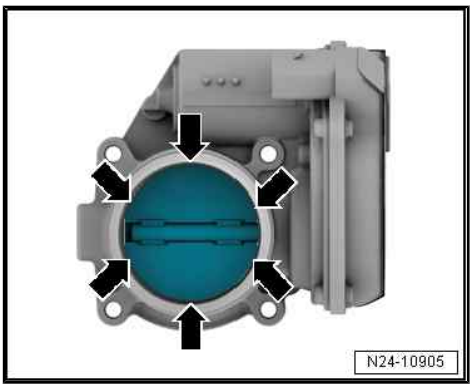

3.5 Checking intake manifold change-over function

Only perform this test if there is a loss of engine torque (poor flexibility or lack of pulling power).

Special tools and workshop equipment required

♦ Hand vacuum pump - VAS 6213-

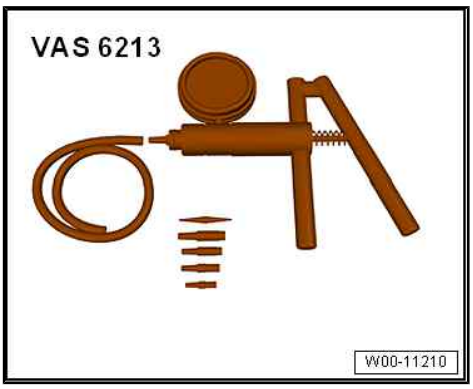

Test condition

Protected by copyright. Copying for private or commercial purposes, in part or in whole, is not permitted unless authorised by AUDI AG. AUDI AG does not guarantee or accept any liability with respect to the correctness of information in this document. Copyright by AUDI AG.

♦ Intake manifold flap valve - N316- has been checked with a vehicle diagnostic tester.

Perform the following steps if the intake manifold flap valve - N316- is OK.

– Remove engine cover panel ⇒ page 15 .

– Start engine and run at idling speed.

– Have a second person rev up engine quickly (short burst of throttle) and observe vacuum unit for intake manifold change-over.

- The linkage -1- of the vacuum unit for intake manifold flap should pick up -arrow-.

If the change-over does not operate as described:

– Check vacuum system for leaks.

– Check that vacuum lines are connected correctly.

– Check vacuum hoses for porosity.

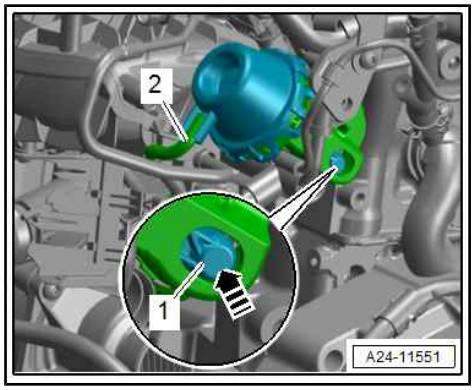

– Move adjuster ring -1- on hand vacuum pump - VAS 6213- to position -A- to select "vacuum".

Protected by copyright. Copying for private or commercial purposes, in part or in whole, is not permitted unless authorised by AUDI AG. AUDI AG does not guarantee or accept any liability with respect to the correctness of information in this document. Copyright by AUDI AG.

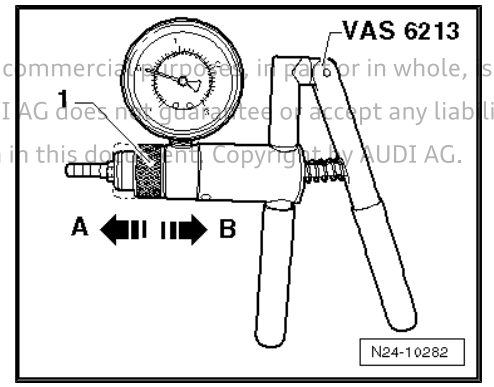

– Connect hand vacuum pump - VAS 6213- to vacuum unit for intake manifold flap.

– Operate hand vacuum pump - VAS 6213- several times.

- The linkage -1- of the vacuum unit for intake manifold flap should pick up.

– Vent vacuum.

- The linkage should return to the initial position.
- The linkage should move in both directions -arrows-.

– Renew intake manifold if linkage does not move.

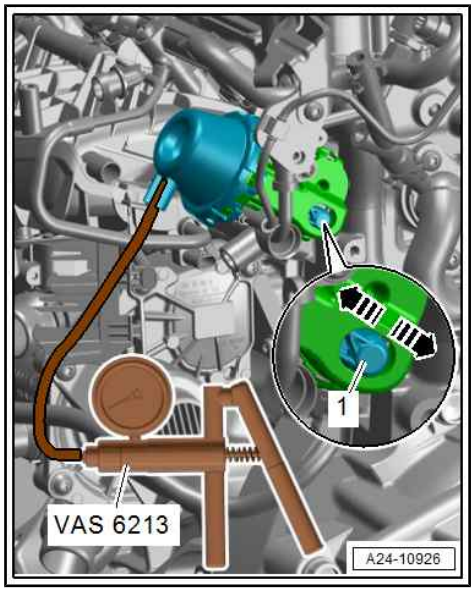

4 Injectors

⇒ "4.1 Exploded view - fuel rail with injectors", page 251

⇒ "4.2 Removing and installing fuel rail", page 253

⇒ "4.3 Removing and installing injectors", page 254

⇒ "4.4 Cleaning injectors", page 261

4.1 Exploded view - fuel rail with injectors

⇒ "4.1.1 Exploded view - fuel rail with injectors, vehicles with FSI engine", page 251

⇒ "4.1.2 Exploded view - fuel rail with injectors, vehicles with MPI engine", page 253

4.1.1 Exploded view - fuel rail with injectors, vehicles with FSI engine

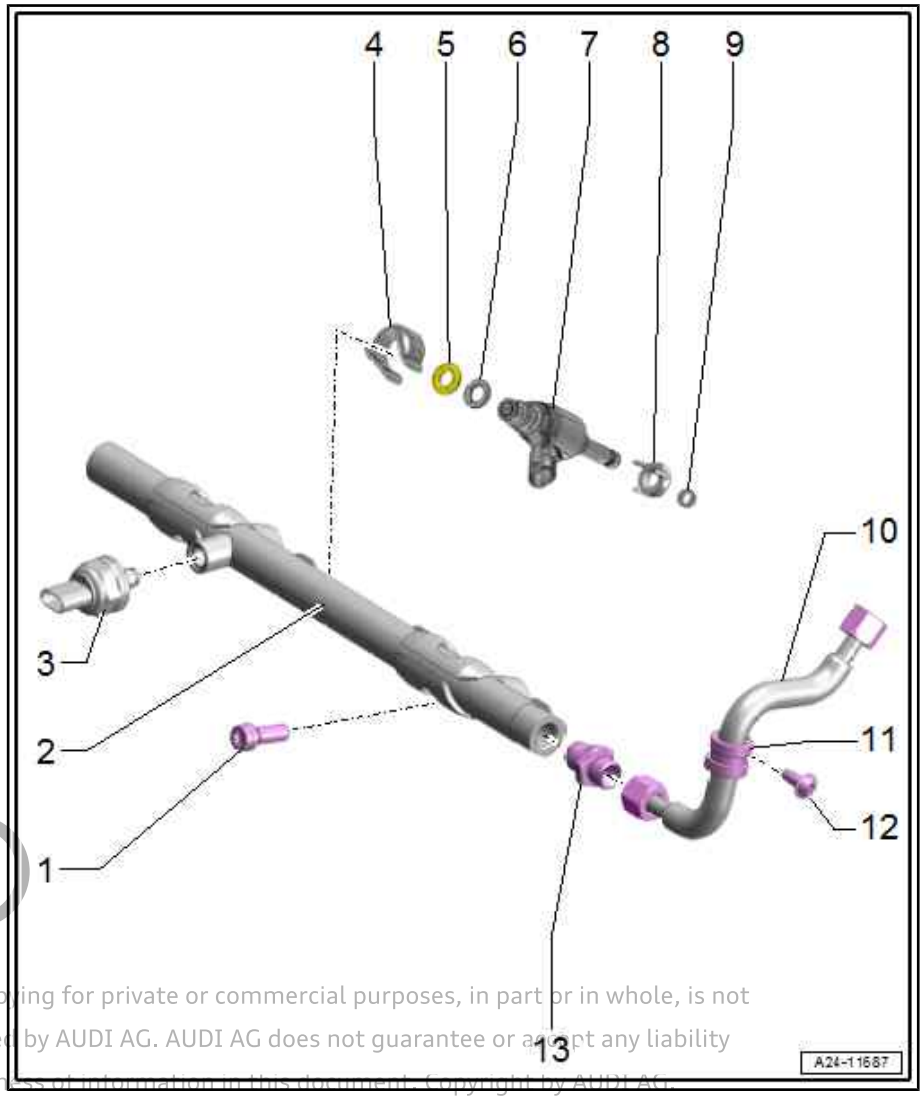

1 - Bolt

- ❑ M6: 9 Nm
- ❑ Renew M8 bolt after removing
- ❑ M8: 20 Nm +90°

2 - Fuel rail for FSI injectors

- ❑ Removing and installing ⇒ page 253

3 - Fuel pressure sender - G247-

- ❑ Lubricate taper lightly with clean engine oil; do not lubricate thread
- ❑ Removing and installing ⇒ page 264
- ❑ 27 Nm

4 - Support ring

- ❑ Renew after removing

5 - O-ring

- ❑ Renew after removing

6 - Spacer ring

- ❑ Renew after removing

7 - Injector

- ❑ Different versions available ⇒ page 252 ; for allocation refer to ⇒ Electronic parts catalogue
- ❑ Ensure correct installation position.
- ❑ Removing and installing ⇒ page 254
- ❑ Cleaning ⇒ page 261

8 - Sealing washer

9 - Combustion chamber ring seal

- ❑ Renewing after injector has been removed ⇒ page 254

Protected by copyright. Copying for private or commercial purposes, in part or in whole, is not permitted unless authorised by AUDI AG. AUDI AG does not guarantee or assume any liability with respect to the correctness of information in this document. Copyright by AUDI AG.

10 - High-pressure pipe

- ❑ From high-pressure pump
- ❑ Lightly lubricate ball of fuel supply line with engine oil
- ❑ Install so that parts are free of tension
- ❑ Union nut, 27 Nm

11 - Retaining clamp

12 - Bolt

- ❑ 9 Nm

13 - Connection

- ❑ Must always be renewed once loosened
- ❑ Lubricate threads lightly with clean engine oil
- ❑ 40 Nm

Different injectors

A - Version without ridge

- ♦ Removing ⇒ page 255

B - Version with ridge -arrow-

- ♦ Removing ⇒ page 256

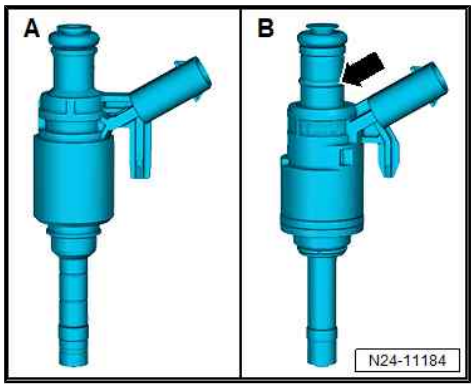

Protected by copyright. Copying for private or commercial purposes, in part or in whole, is not permitted unless authorised by AUDI AG. AUDI AG does not guarantee or accept any liability with respect to the correctness of information in this document. Copyright by AUDI AG.

4.1.2 Exploded view - fuel rail with injectors, vehicles with MPI engine

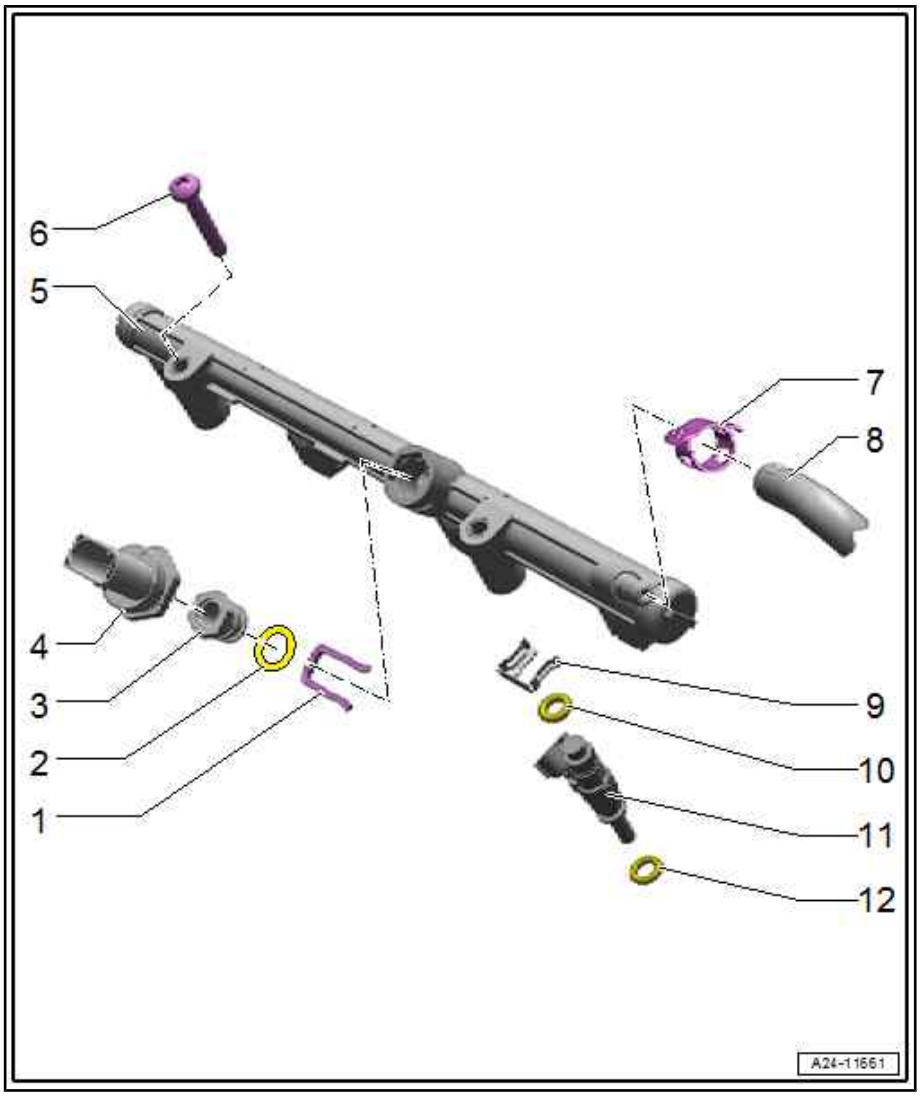

1 - Retaining clip

- ❑ For fuel pressure sender for low pressure - G410-

2 - O-ring

- ❑ Renew after removing

3 - Adapter

- ❑ Attach to fuel pressure sender for low pressure - G410- ⇒ Item 4 (page 253)
- ❑ 27 Nm

4 - Fuel pressure sender for low pressure - G410-

- ❑ Attach to adapter ⇒ Item 3 (page 253)
- ❑ Removing and installing ⇒ page 267
- ❑ 27 Nm

5 - Fuel rail for MPI injectors

6 - Bolt

- ❑ 9 Nm

7 - Spring-type clip

- ❑ Renew after removing

8 - Fuel supply line

- ❑ To fuel rail for MPI injectors
- ❑ Install so that parts are free of tension

9 - Retaining clip

10 - O-ring

- ❑ Renew after removing

11 - Injector

- ❑ Ensure correct installation position.
- ❑ Removing and installing ⇒ page 259

12 - O-ring

- ❑ Renew after removing

4.2 Removing and installing fuel rail

Protected by copyright. Copying for private or commercial purposes, in part or in whole, is not permitted unless authorised by AUDI AG. AUDI AG does not guarantee or accept any liability with respect to the correctness of information in this document. Copyright by AUDI AG.

The following procedure applies to the fuel rail for FSI injectors.

Removing

- Re-install all cable ties in original positions.

– Remove intake manifold ⇒ page 244 .

– Unplug electrical connector -1- at fuel pressure sender - G247- .

– Remove bolts -arrows-.

– Move wiring duct -2- clear of fuel rail and detach fuel rail from injectors.

Protected by copyright. Copying for private or commercial pu
permitted unless authorised by AUDI AG. AUDI AG does not g
with respect to the correctness of information in this docum

• Unplug electrical connectors of any injectors that remained lodged in fuel rail.

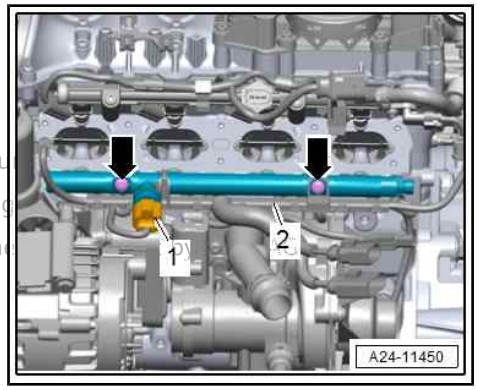

Installing

Installation is carried out in reverse order; note the following:

• Renew support rings for injectors after removing.

• If any injectors remain lodged in the cylinder head when the fuel rail is detached, it is only necessary to install the O-rings and spacers from the repair set.

• If the injectors are pulled out along with the fuel rail, install all the components of the repair set with a combustion chamber ring seal ⇒ page 254 .

– Install intake manifold ⇒ page 244 .

Tightening torques

♦ ⇒ “4.1.1 Exploded view - fuel rail with injectors, vehicles with FSI engine”, page 251

4.3 Removing and installing injectors

⇒ “4.3.1 Removing and installing injectors - vehicles with FSI engine”, page 254

⇒ “4.3.2 Removing and installing injectors - vehicles with MPI engine”, page 259

4.3.1 Removing and installing injectors - vehicles with FSI engine

• Injectors must only be installed when engine is cold.

Special tools and workshop equipment required

♦ Tool set for FSI engines - T10133 C-

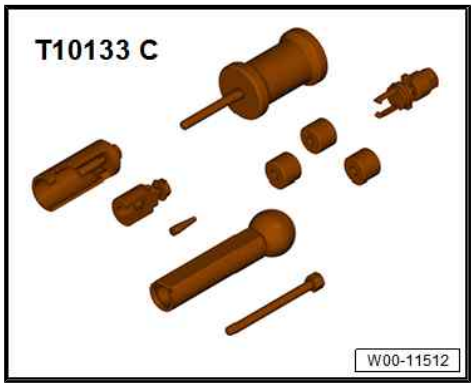

♦ M8 washer (for injector version B)

Removing

– Observe rules for cleanliness ⇒ page 9 .

– Remove fuel rail ⇒ page 253 .

– Carefully pull out any injectors that remain lodged in the fuel rail.

– Remove the injectors if they remain lodged in the cylinder head.
– Cover open inlet ports with a clean cloth.
– Detach support ring -4- from injector -1-.

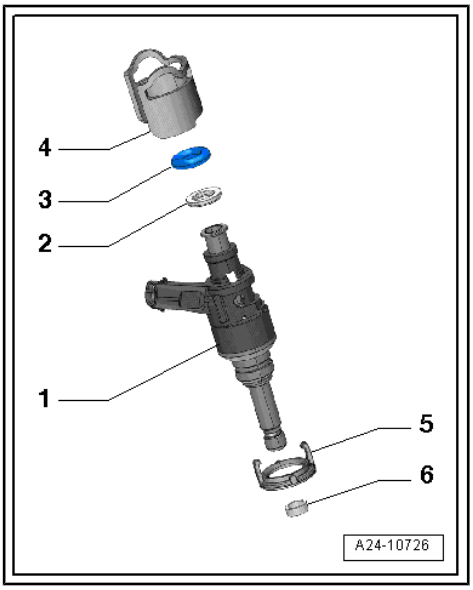

Removing injector version A ⇒ page 252

– Slide sleeve -T10133/18- over injector.
– Carefully knock against stop sleeve several times with a plastic hammer -1- to loosen injector.
• Use a torque wrench to pull out injector.
• Set torque wrench to 5 Nm.

Protected by copyright. Copying for private or commercial
permitted unless authorised by AUDI AG. AUDI AG does no
with respect to the correctness of information in this docu

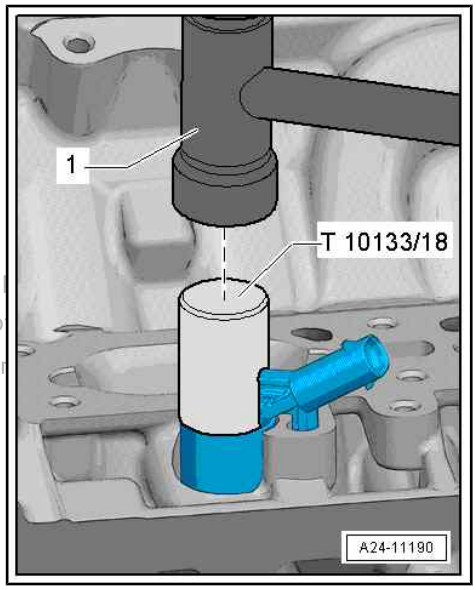

– Fit puller -T10133/2A- to groove on injector.
– Attach puller -T10133/16A- .
– Pull out injector by turning bolt -T10133/16A- with torque wrench -1-.
• The torque must not exceed 5 Nm to avoid irreparable damage to the injector.
– If injector does not come loose after 5 Nm is reached, remove puller and repeat procedure using stop sleeve to loosen injector.
– Repeat procedure for each injector.

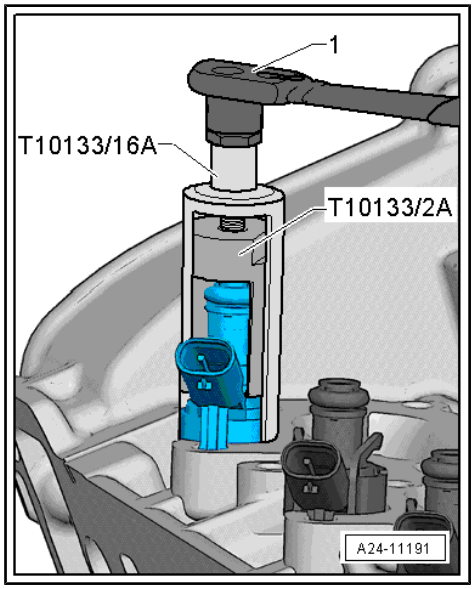

Removing injector version B ⇒ page 252

– Screw puller -T10133/20- -item A- onto striker -T10133/3- -item B-.
– Position puller behind ridge -arrow- on injector -1-.
– Pull injector out by striking it gently.

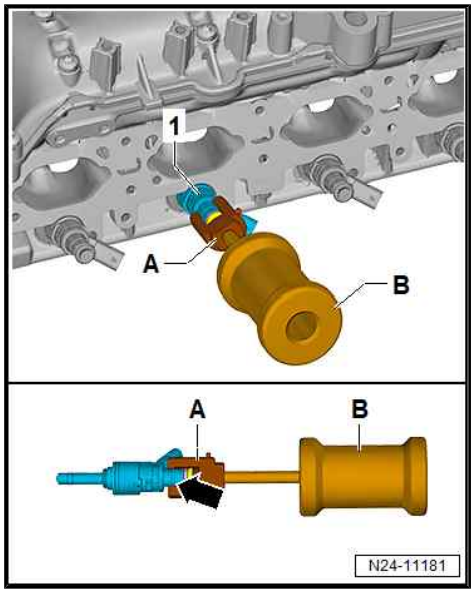

Dismantling injector

– Pull O-ring -3- and spacer ring -2- off injector -1-.
– Unclip sealing element -5-.
– Carefully remove old combustion chamber ring seal -6-. To do so, cut open combustion chamber ring seal using knife or prise open with small screwdriver and then pull off forwards.

4 - Support ring

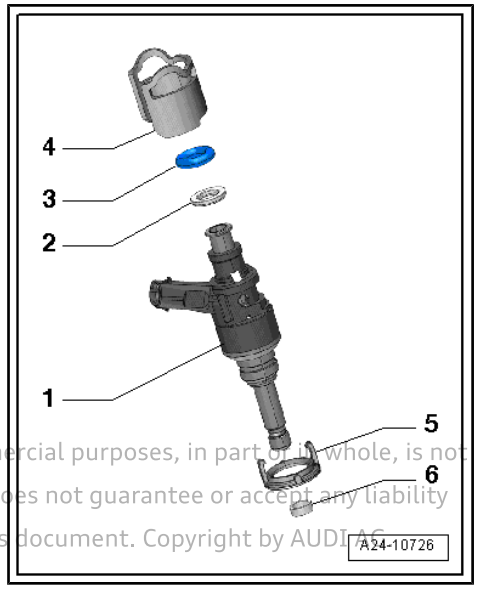

Protected by copyright. Copying for private or commercial purposes, in part or in whole, is not permitted unless authorised by AUDI AG. AUDI AG does not guarantee or accept any liability with respect to the correctness of information in this document. Copyright by AUDI AG.

– Clean ring groove in area of seal -arrow-. Remove carbon deposits with a brass wire brush.

• Take care not to damage the groove on the injector.

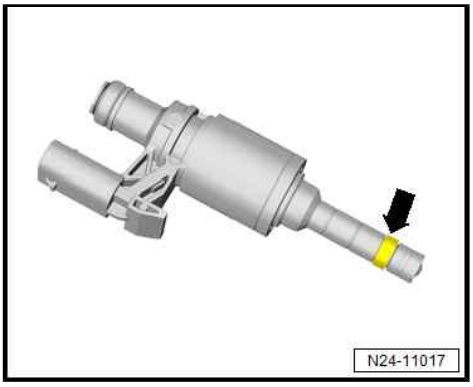

Installing

• Use complete repair set when installing.

• Renew support ring after removing.

• Renew combustion chamber ring seal before re-installing injector.

• Lightly lubricate O-rings for injectors with clean engine oil.

– Clean bore in cylinder head with nylon cylinder brush - T10133/4- -item A-.

– When re-installing an injector, clean any combustion residue off groove for combustion chamber ring seal and injector stem with a clean cloth.

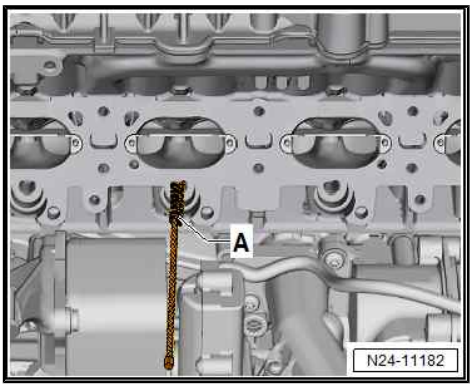

– Fit assembly cone -T10133/5- with new combustion chamber ring seal -1- onto injector -2-.

Protected by copyright. Copying for private or commercial purposes, in part or in whole, is not permitted unless authorised by AUDI AG. AUDI AG does not guarantee or accept any liability with respect to the correctness of information in this document. Copyright by AUDI AG.

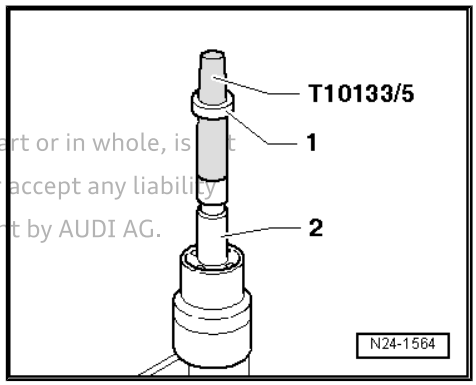

– Using assembly sleeve -T10133/6- , push new combustion chamber ring seal -1- onto assembly cone -T10133/5- as far as it will go. (Knurled side of assembly sleeve faces towards combustion chamber ring seal.)

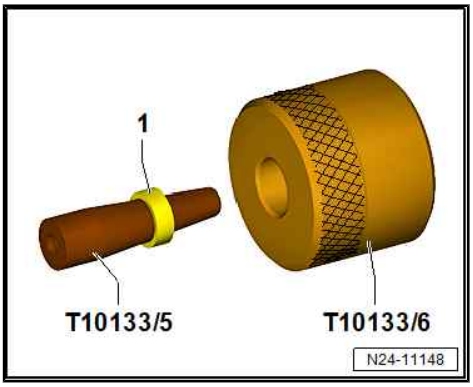

– Turn round assembly sleeve -T10133/6- and push combustion chamber ring seal up to end of assembly cone -T10133/5- . (Smooth side of assembly sleeve faces towards combustion chamber ring seal.)

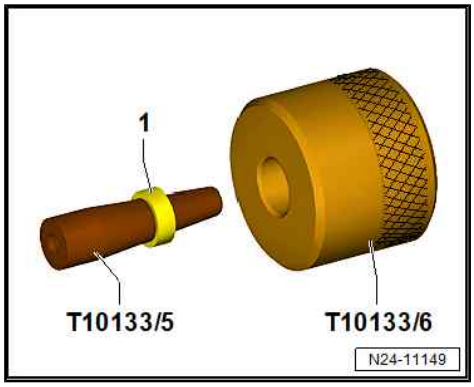

– Injector version B ⇒ page 252 : Place an M8 washer -item A- on injector.

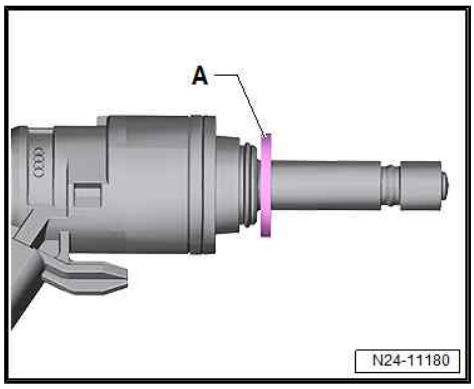

– Place assembly cone -T10133/5- with combustion chamber ring seal on injector.

– Slide combustion chamber ring seal onto injector with assembly sleeve -T10133/6- .

– Remove assembly cone -T10133/5- and push combustion chamber ring seal into sealing ring groove using assembly sleeve -T10133/6- -arrow-.

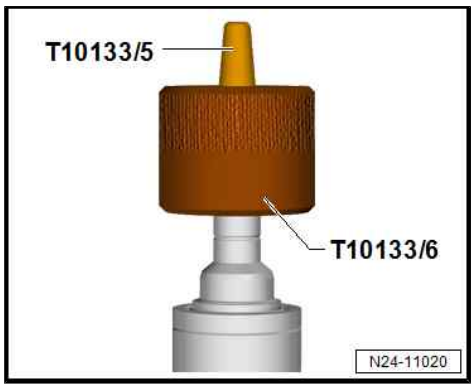

Note:

The combustion chamber ring seal is widened when it is pushed onto the injector. After pushing it on, it therefore has to be compressed again. This is done in two stages, as described below.

Protected by copyright. Copying for private or commercial purposes, in part or in whole, is not permitted unless authorised by AUDI AG. AUDI AG does not guarantee or accept any liability with respect to the correctness of information in this document. Copyright by AUDI AG.

– Push calibration sleeve -T10133/7- onto injector as far as stop or up to washer -A- and simultaneously turn it slightly (approx. 180°).

– Pull calibration sleeve -T10133/7- off again by turning it in the opposite direction.

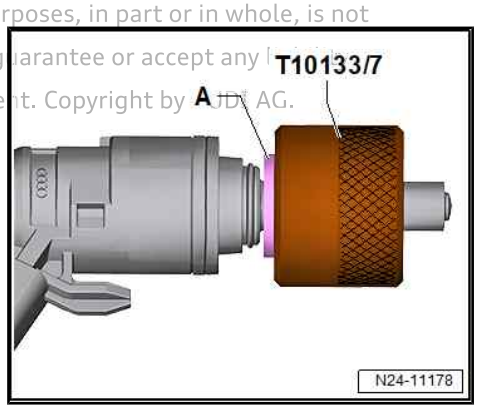

– Push calibration sleeve -T10133/8- onto injector as far as stop or up to washer -A- and simultaneously turn it slightly (approx. 180°).

– Pull calibration sleeve -T10133/8- off again by turning it in the opposite direction.

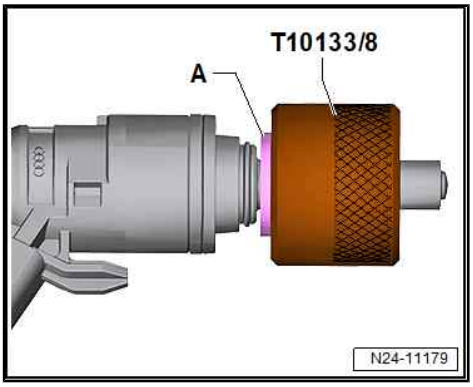

– Before installing new injector -1-, lubricate new O-ring -3- lightly with clean engine oil.

• The combustion chamber ring seal -6- must not be lubricated.

Protected by copyright. Copying for private or commercial purposes, in part or in whole, is not permitted unless authorised by AUDI AG. AUDI AG does not guarantee or accept any liability with respect to the correctness of information in this document. Copyright by AUDI AG.

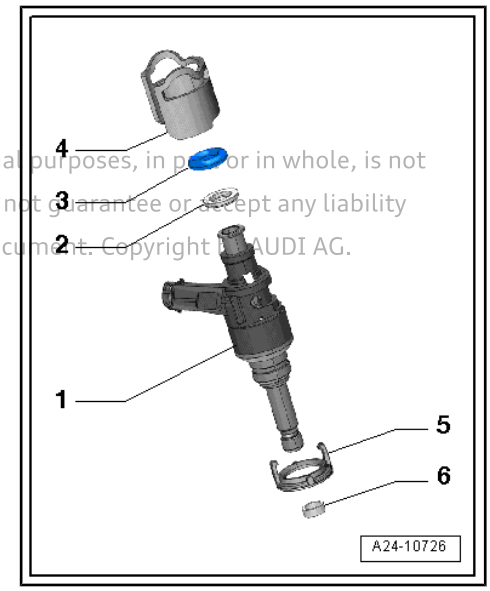

– Press injector by hand as far as it will go into aperture in cylinder head (aperture must be free of oil and grease). Ensure that the injector is properly seated -arrow- in the cylinder head.

• Lug -1- and hole -arrow- in cylinder head must face each other.

• It should be possible to insert the injector easily. If necessary wait until the combustion chamber ring seal has contracted sufficiently.

– Fit support ring onto injector.

– Install fuel rail ⇒ page 253 .

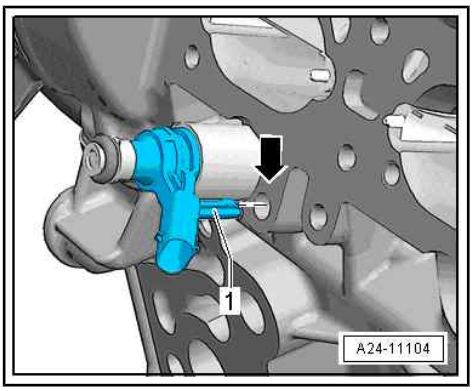

4.3.2 Removing and installing injectors - vehicles with MPI engine

Special tools and workshop equipment required

♦ Socket - T10405-

Removing

– Observe rules for cleanliness ⇒ page 9 .

Preparatory work may be necessary depending on model ⇒ 4-cylinder direct injection engine (1.8, 2.0 ltr. 4-valve TFSI); Rep. gr. 24 ; Injectors; Removing and installing injectors .

– Unplug electrical connectors and move electrical wiring clear:

2 - For fuel pressure sender for low pressure - G410-

3 - For intake air temperature sender - G42-

4 - Intermediate connector for MPI injectors

– Move electrical wiring harness -1- clear at engine lifting eye.

– Remove bolts -arrows- from MPI fuel rail.

– Remove bolt -5- on bracket for electrical connector.

– Carefully lift out fuel rail with injectors.

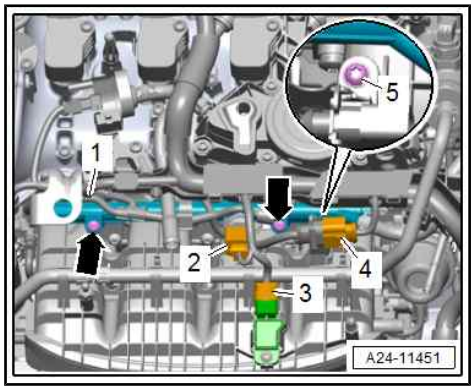

– Unplug electrical connector -4-.

– Release retaining clip -2- and detach injector -3- from fuel rail -1-.

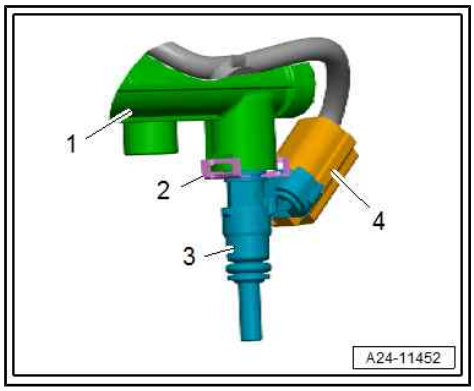

Protected by copyright. Copying for private or commercial purposes, in part or in whole, is not permitted unless authorised by AUDI AG. AUDI AG does not guarantee or accept any liability with respect to the correctness of information in this document. Copyright by AUDI AG.

Dismantling injector

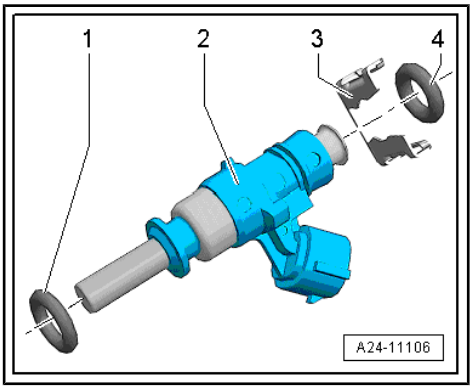

1 - O-ring; renew after removal

2 - Injector

3 - Retaining clip

4 - O-ring; renew after removal

Installing

Installation is carried out in reverse order; note the following:

- Renew O-rings after removing.
- Lubricate O-rings with clean engine oil prior to installation.
- Press fuel rail with injectors by hand as far as it will go into aperture of intake manifold (injectors must be free of oil and grease).

Additional work depending on model ⇒ 4-cylinder direct injection engine (1.8, 2.0 ltr. 4-valve TFSI); Rep. gr. 24 ; Injectors; Removing and installing injectors

Tightening torques

- ⇒ “4.1.2 Exploded view - fuel rail with injectors, vehicles with MPI engine”, page 253

4.4 Cleaning injectors

The following procedure applies to FSI injectors.

Special tools and workshop equipment required

- Ultrasonic cleaning unit - VAS 6418-
- Mounting plate for injectors - VAS 6418/1-
- Cleaning fluid - VAS 6418/2-

Cleaning

Protected by copyright. Copying for private or commercial purposes, in part or in whole, is not permitted without the consent of AUDI AG. AUDI AG does not guarantee or accept any liability with respect to the correctness of information in this document. Copyright by AUDI AG.

- Observe rules for cleanliness ⇒ page 9 .
- Close drain tap -arrow- on ultrasonic cleaning unit - VAS 6418- (located on right side of housing).
- Fill up ultrasonic unit.
  - Ratio of cleaning fluid: 2,100 ml of tap water which has been allowed to settle for a few minutes and 20 ml of cleaning fluid - VAS 6418/2-
  - The ideal fluid level is approx. 1 ... 4 mm above the base of the mounting plate. The ultrasonic cleaning unit - VAS 6418- can be damaged if the fluid level is too low.
- Remove injectors ⇒ page 254 .

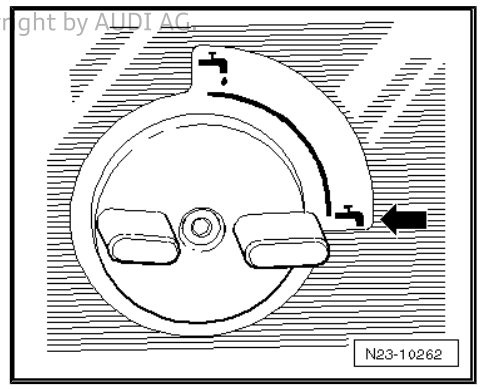

– Place mounting plate for injectors - VAS 6418/1- on top of cleaning unit.

• It is important to read the safety notes in the operating instructions before switching on the ultrasonic cleaning unit - VAS 6418- .

– Insert FSI injectors all the way into guides of mounting plate for injectors - VAS 6418/1- .

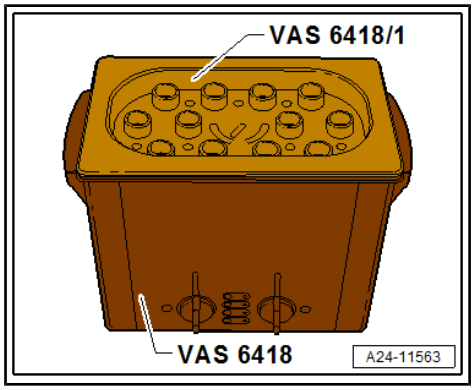

– Switch on cleaning unit by pressing on/off button -C-.

– Select a cleaning time of 30 minutes with rotary control -A-.

– Set rotary control -B- to a temperature of 50°C.

– Press ▶ button -D- to start cleaning procedure.

• The actual cleaning process commences when the temperature reaches at least 50 °C and must last for at least 30 minutes.

– Install injectors with new combustion chamber seal ⇒ page 254 .

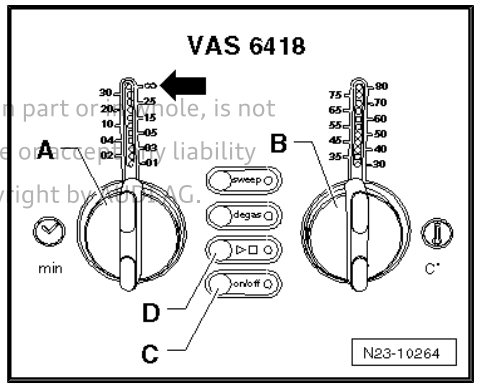

Protected by copyright. Copying for private or commercial purposes, in part or in whole, is not permitted unless authorised by AUDI AG. AUDI AG does not guarantee or accept any liability with respect to the correctness of information in this document. Copyright by AUDI AG.

5 Senders and sensors

⇒ “5.1 Exploded view - actuator for structure-borne sound and control unit for structure-borne sound”, page 263

⇒ “5.2 Removing and installing actuator for structure-borne sound R214 ”, page 263

⇒ “5.3 Removing and installing control unit for structure-borne sound J869 ”, page 263

⇒ “5.4 Removing and installing intake air temperature sender G42 / intake manifold pressure sender G71 ”, page 263

⇒ “5.5 Removing and installing fuel pressure sender G247 ”, page 264

⇒ “5.6 Checking fuel pressure sender G247 ”, page 265

⇒ “5.7 Removing and installing fuel pressure sender for low pressure G410 ”, page 267

⇒ “5.8 Removing and installing pressure differential sender for particulate filter G1037 ”, page 268

Reproduction or distribution, as well as the utilization and communication of this document for competitive purposes, in part or in whole, is not permitted without the express consent of AUDI AG. AUDI AG does not guarantee or accept any liability with respect to the correctness of information in this document. Copyright by AUDI AG.

5.1 Exploded view - actuator for structure-borne sound and control unit for structure-borne sound

An actuator for structure-borne sound and control unit for structure-borne sound are fitted on some models. All components are described in ⇒ 4-cylinder direct injection engine (1.8, 2.0 ltr. 4-valve TFSI); Rep. gr. 24 ; Senders and sensors; Exploded view - actuator for structure-borne sound and control unit for structure-borne sound .

5.2 Removing and installing actuator for structure-borne sound - R214-

An actuator for structure-borne sound is fitted on some models. All procedures are described in ⇒ 4-cylinder direct injection engine (1.8, 2.0 ltr. 4-valve TFSI); Rep. gr. 24 ; Senders and sensors ; Removing and installing actuator for structure-borne sound - R214- .

5.3 Removing and installing control unit for structure-borne sound - J869-

A control unit for structure-borne sound is fitted on some models. All procedures are described in ⇒ 4-cylinder direct injection engine (1.8, 2.0 ltr. 4-valve TFSI); Rep. gr. 24 ; Senders and sensors ; Removing and installing control unit for structure-borne sound - J869- .

5.4 Removing and installing intake air temperature sender - G42- / intake manifold pressure sender - G71-

Designation in current flow diagram depends on model: intake air temperature sender - G42- / intake manifold pressure sender - G71- / intake manifold sender - GX9-

Removing

– Remove engine cover panel ⇒ page 15 .

– Unplug electrical connector -2-.

– Remove bolt -1-.

– Release catches -arrows- and detach intake air temperature sender - G42- / intake manifold pressure sender - G71- from intake manifold.

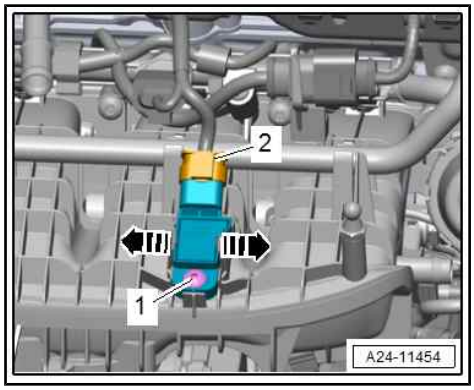

Installing

– Installation is carried out in reverse order; note the following:

• Renew O-ring after removal.

– Install engine cover panel ⇒ page 15 .

Tightening torques

♦ ⇒ “3.1 Exploded view - intake manifold”, page 243

5.5 Removing and installing fuel pressure sender - G247-

Special tools and workshop equipment required

♦ Assembly tool - T10118-

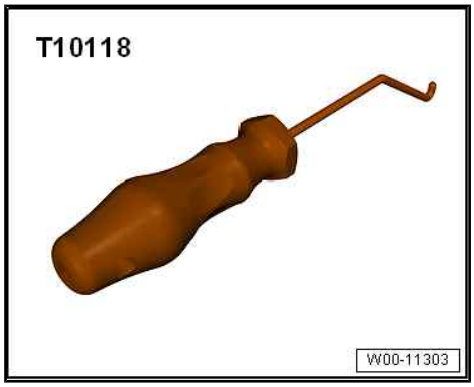

♦ Socket (27 mm) - T40218- or commercially available socket (27 mm) for fuel pressure sender - G247- , version 1

Protected by copyright. Copying for private or commercial pu[illegible]art or in whole, is not permitted unless authorised by AUDI AG. AUDI AG does not guarantee or accept any liability with respect to the correctness of information in this document. Copyright by AUDI

♦ Socket (24 mm) - T40363- (not illustrated) for fuel pressure sender - G247- , version 2

♦ Safety goggles

♦ Protective gloves

Removing

Preparatory work may be necessary depending on model ⇒ 4-cylinder direct injection engine (1.8, 2.0 ltr. 4-valve TFSI); Rep. gr. 24 ; Senders and sensors; Removing and installing fuel pressure sender - G247- .

– Remove engine cover panel ⇒ page 15 .

– Move electrical wiring harness clear.
– Unscrew nut -2- and bolt -3- and remove support for intake manifold.
– Remove rubber bush -1- for intake manifold support.

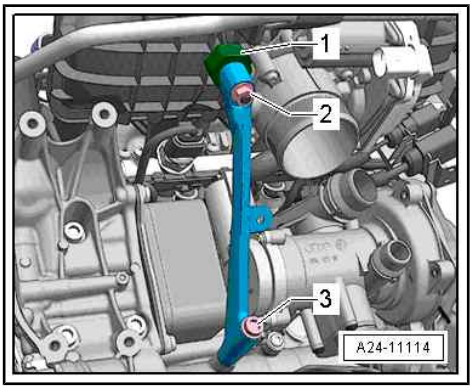

– Use assembly tool - T10118- to release electrical connector -1-.

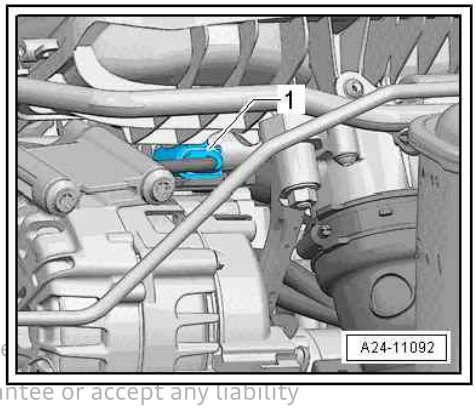

CAUTION

The fuel system is pressurised.
Risk of injury as fuel may spray out.
- **Put on safety goggles.**
- **Put on protective gloves.**
- **Release pressure (wrap a clean cloth around connection and open connection carefully).**

Protected by copyright. Copying for private or commercial purposes, in part, is not permitted unless authorised by AUDI AG. AUDI AG does not guarantee or accept any liability with respect to the correctness of information in this document. Copyright by AUDI AG.

– Unscrew fuel pressure sender - G247- .

Installing

Installation is carried out in reverse order; note the following:

– Install engine cover panel ⇒ page 15 .

Additional work depending on model ⇒ 4-cylinder direct injection engine (1.8, 2.0 ltr. 4-valve TFSI); Rep. gr. 24 ; Senders and sensors; Removing and installing fuel pressure sender - G247-

Tightening torques

♦ ⇒ “4.1 Exploded view - fuel rail with injectors”, page 251
♦ ⇒ “3.1 Exploded view - intake manifold”, page 243

5.6 Checking fuel pressure sender - G247-

Special tools and workshop equipment required

♦ Vehicle diagnostic tester
♦ Test instrument adapter - VAS 5570-

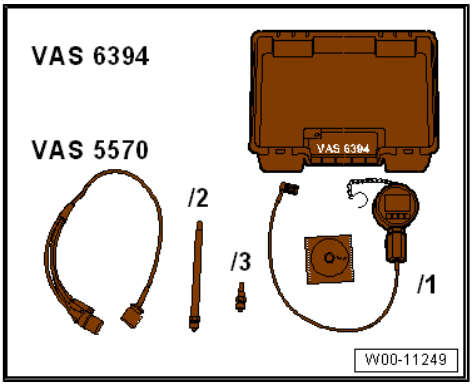

♦ Pressure sensor tester - VAS 6394-
♦ Safety goggles

♦ Protective gloves

Procedure

– Observe rules for cleanliness ⇒ page 9 .

– Remove fuel pressure sender - G247- ⇒ page 264 .

– Screw in adapter - VAS 6394/2- in place of fuel pressure sender - G247- and tighten adapter with same torque as specified for -G247- .

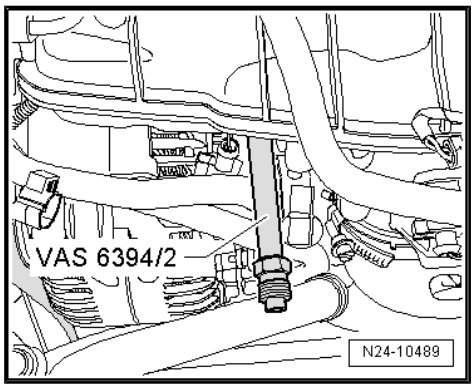

– Unscrew plug -2- on digital pressure gauge - VAS 6394/1- and screw in fuel pressure sender - G247- in its place (tighten to specified torque).

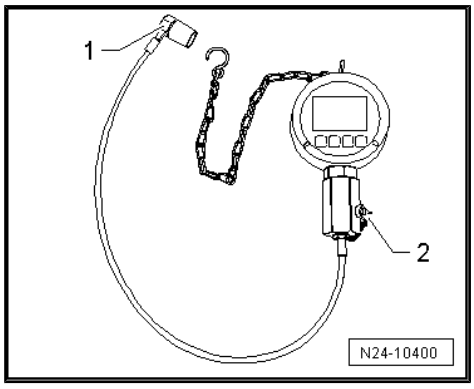

– Install air pipe (right-side).

– Use test instrument adapter - VAS 5570- to make electrical connection between vehicle and fuel pressure sender - G247- .

– Connect vehicle diagnostic tester .

– Switch on ignition.

– Select “Engine electronics” in vehicle self-diagnosis.

– Select “Measured values”.

– Select “Fuel pressure” from list.

• The display zone shows the actual pressure value being transmitted to the engine control unit by the fuel pressure sender - G247- .

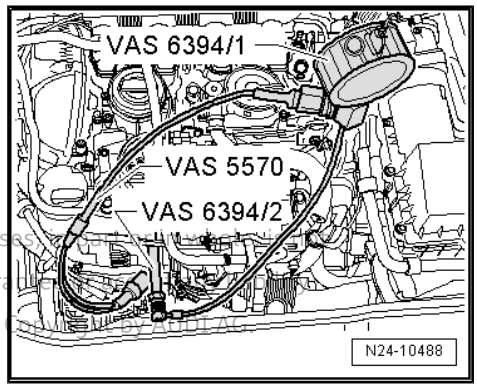

Protected by copyright. Copying for private or commercial purposes, in part or in whole, is not permitted unless authorised by AUDI AG. AUDI AG does not guarantee or assume any liability with respect to the correctness of information in this document. Copyright by AUDI AG.

– Switch on pressure gauge - VAS 6394/1- by pressing button -A- once briefly.

• The digital pressure gauge - VAS 6394/1- should indicate 0 bar.

– If different value is shown, zero the tester by pressing button -C- briefly.

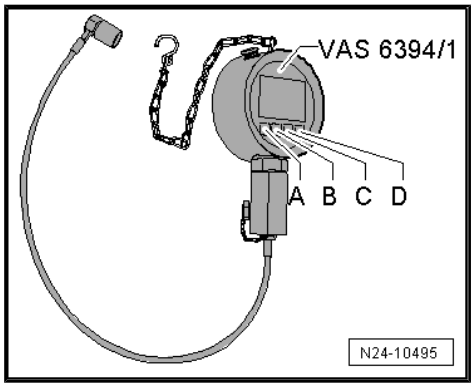

– Connect pressure gauge - VAS 6394/1- to adapter - VAS 6394/2- .

– Start engine.

– Compare pressure indicated by pressure gauge - VAS 6394/1- with actual pressure value on vehicle diagnostic tester .

• The pressure readings must not deviate by more than 5 bar.

– If the deviation is more than 5 bar, fit a new fuel pressure sender - G247- to test it.

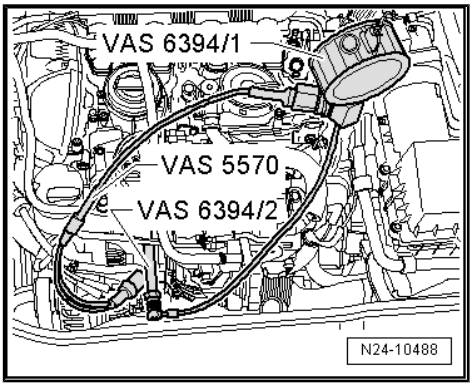

CAUTION

The fuel system is pressurised.

Risk of injury as fuel may spray out.

– **Put on safety goggles.**

– **Put on protective gloves.**

– **Release pressure (wrap a clean cloth around connection and open connection carefully).**

– Screw a new fuel pressure sender - G247- into pressure gauge - VAS 6394/1- .

– Repeat the test with the new fuel pressure sender - G247- and compare the two pressure values.

– If measured values are still not the same, check electrical connection between fuel pressure sender - G247- and engine control unit ⇒ Current flow diagrams, Electrical fault finding and Fitting locations.

– If measured values are now the same, install new fuel pressure sender - G247- ⇒ page 264 .

Tightening torques

◆ ⇒ "4.1.1 Exploded view - fuel rail with injectors, vehicles with FSI engine", page 251

Protected by copyright. Copying for private or commercial purposes, in part or in whole, is not permitted unless authorised by AUDI AG. AUDI AG does not guarantee or accept any liability with respect to the correctness of information in this document. Copyright by AUDI AG.

5.7 Removing and installing fuel pressure sender for low pressure - G410-

The following procedure applies to MPI engines.

Removing

– Remove engine cover panel ⇒ page 15 .

– Unplug electrical connector -3-.

– Pull off retaining clip -1-.

– Pull fuel pressure sender for low pressure - G410- -item 2- out of fuel rail.

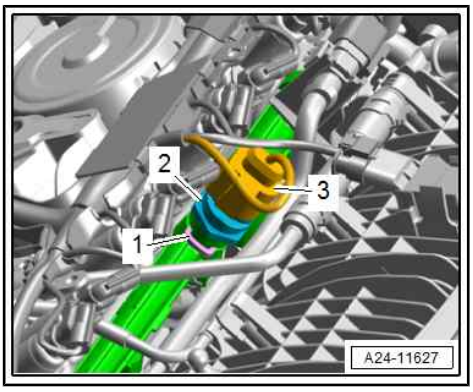

– If necessary, unscrew fuel pressure sender for low pressure -1- from adapter -2-.

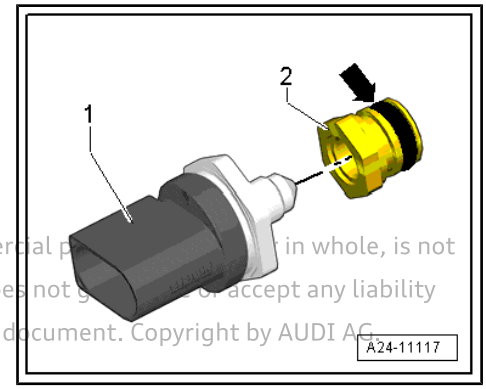

Installing

Installation is carried out in reverse order; note the following:

- Renew O-ring -arrow- after removal.

– Install engine cover panel ⇒ page 15 .

Protected by copyright. Copying for private or commercial p in whole, is not permitted unless authorised by AUDI AG. AUDI AG does not g or accept any liability with respect to the correctness of information in this document. Copyright by AUDI AG.

Tightening torques

♦ ⇒ “4.1.2 Exploded view - fuel rail with injectors, vehicles with MPI engine”, page 253

5.8 Removing and installing pressure differential sender for particulate filter - G1037-

Special tools and workshop equipment required

♦ Vehicle diagnostic tester

♦ Silicone-free lubricant

Removing

– Remove engine cover panel ⇒ page 15 .

– Unplug electrical connector -2-.

– Remove bolt -arrow-.

– Push pressure differential sender for particulate filter - G1037- slightly to one side.

– Spray hoses -1- at pressure differential sender for particulate filter - G1037- with silicone-free lubricant.

– To prevent hose connections from breaking off, carefully disconnect hoses and keep them straight when pulling them off.

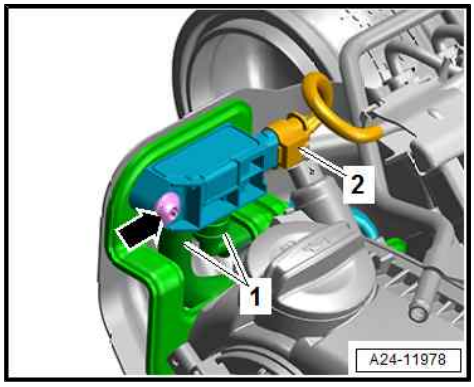

Installing

Installation is carried out in reverse order; note the following:

Note

♦ *Before installing, blow out control lines from pressure differential sender for particulate filter - G1037- to emission control module towards emission control module with compressed air (pipes can become obstructed or may ice up due to condensation).*

♦ *Make sure that hose is securely fitted and that there are no leaks.*

– Install engine cover panel ⇒ page 15 .

– Reset learnt values after renewing pressure differential sender for particulate filter - G1037- ⇒ Vehicle diagnostic tester, `Guided Functions`, `01 - Reset learnt values`.

Tightening torques

♦ ⇒ “7.1 Exploded view - Lambda probe”, page 278

6 High-pressure pump

⇒ "6.1 Exploded view - high-pressure pump", page 269

⇒ "6.2 Removing and installing high-pressure pump", page 272

⇒ "6.3 Removing and installing high-pressure pipe", page 275

6.1 Exploded view - high-pressure pump

⇒ "6.1.1 Exploded view - high-pressure pump, version 1", page 269

⇒ "6.1.2 Exploded view - high-pressure pump, version 2", page 271

6.1.1 Exploded view - high-pressure pump, version 1

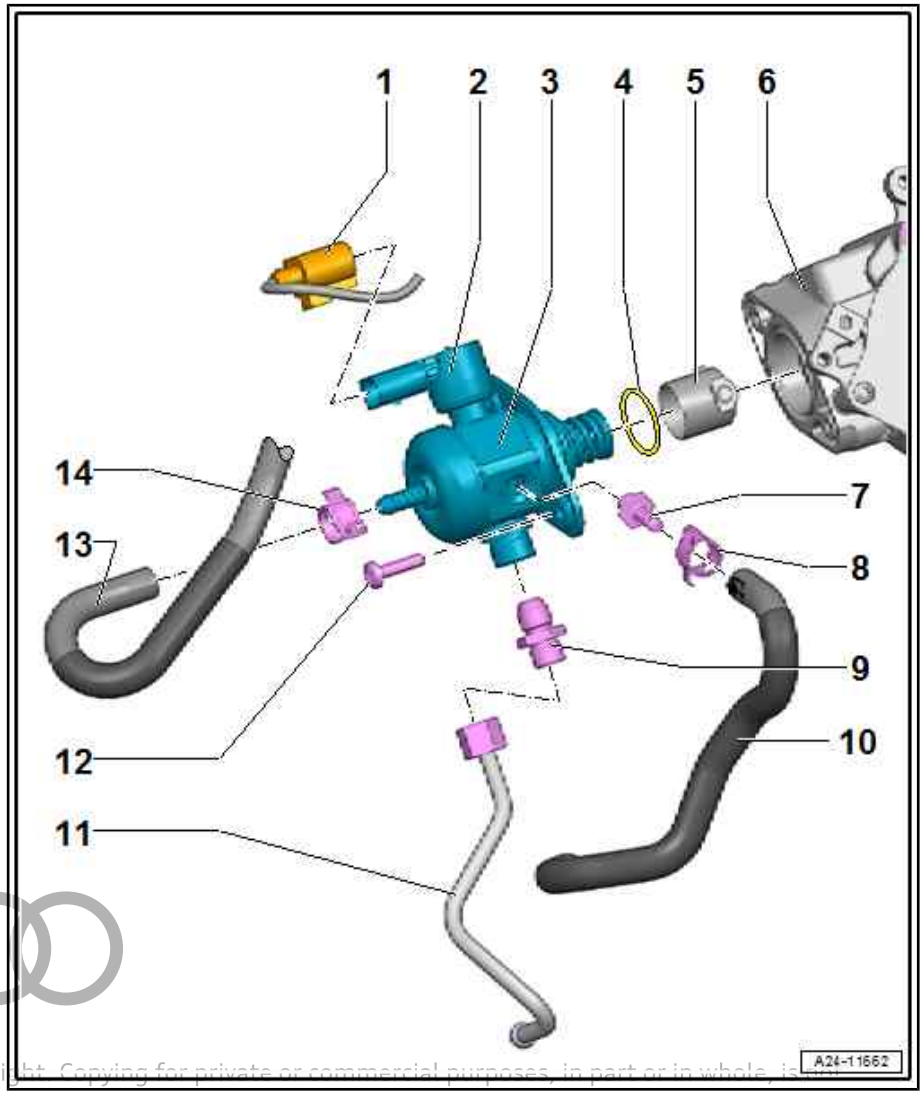

1 - Electrical connector

2 - Fuel pressure regulating valve or fuel metering valve
- ❑ Different versions
- ❑ Depending on version of high-pressure pump:
- ♦ Fuel pressure regulating valve - N276- or
- ♦ Fuel metering valve - N290-
  - ❑ Integrated in high-pressure pump; cannot be renewed separately

3 - High-pressure pump
- ❑ Depending on version of high-pressure pump:
- ♦ Fuel pressure regulating valve - N276- or
- ♦ Fuel metering valve - N290-
  - ❑ Integrated in high-pressure pump; cannot be renewed separately
  - ❑ Removing and installing ⇒ page 272
  - ❑ Take care not to tilt when installing

4 - O-ring
- ❑ Renew after removing
- ❑ Lubricate lightly with engine oil

5 - Roller tappet
- ❑ May remain lodged in vacuum pump when high-pressure pump is removed

6 - Vacuum pump

7 - Connection/plug
- ❑ For fuel supply hose
- ❑ Connection for vehicles with MPI engine
- ❑ Plug for vehicles without MPI engine

Protected by copyright. Copying for private or commercial purposes, in part or in whole, is not permitted unless authorised by AUDI AG. AUDI AG does not guarantee or accept any liability with respect to the correctness of information in this document. Copyright by AUDI AG.

- ❑ Connection must always be renewed once loosened
- ❑ M10: 15 Nm
- ❑ M12: 20 Nm

8 - Spring-type clip

- ❑ For vehicles with MPI engine
- ❑ Renew after removing

9 - Connection

- ❑ To unscrew union nut on high-pressure pipe, counterhold at hexagon flats of connecting piece using an open-end spanner
- ❑ Must always be renewed once loosened
- ❑ 40 Nm

10 - Fuel supply hose

- ❑ For vehicles with MPI engine
- ❑ To fuel rail for MPI injectors

11 - High-pressure pipe

- ❑ To unscrew union nut, counterhold at hexagon flats of connecting piece using an open-end spanner
- ❑ Do not alter shape
- ❑ Install so that parts are free of tension
- ❑ Lubricate thread of union nut with clean engine oil
- ❑ Tighten union nut to 27 Nm
- ❑ Removing and installing ⇒ page 275

12 - Bolt

- ❑ Tightening torque and sequence ⇒ page 270

13 - Fuel supply hose

- ❑ From fuel tank

14 - Spring-type clip

- ❑ Renew after removing

High-pressure pump (version 1) - tightening torque and sequence

To prevent flange of high-pressure pump from being deformed during installation, fit high-pressure pump as follows:

– Tighten bolts in stages as follows:

Stage	Bolts	Tightening torque/angle specification
1.	-Arrows-	Screw in by hand until contact is made
2.	-Arrows-	Tighten one turn alternately until flange of high-pressure pump makes contact with vacuum pump
3.	-Arrows-	M6 bolt: 8 Nm + 90°; renew bolts after removal M8 bolt: 20 Nm

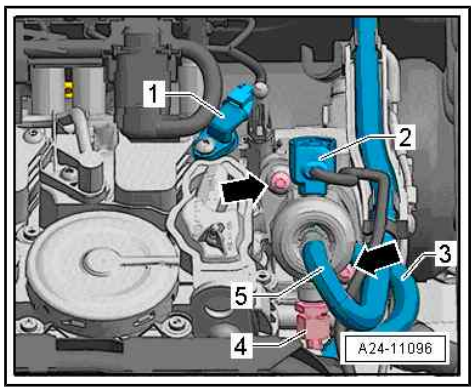

Protected by copyright. Copying for private or commercial purposes, in part or in whole, is not permitted unless authorised by AUDI AG. AUDI AG does not guarantee or accept any liability with respect to the correctness of information in this document. Copyright by AUDI AG.

6.1.2 Exploded view - high-pressure pump, version 2

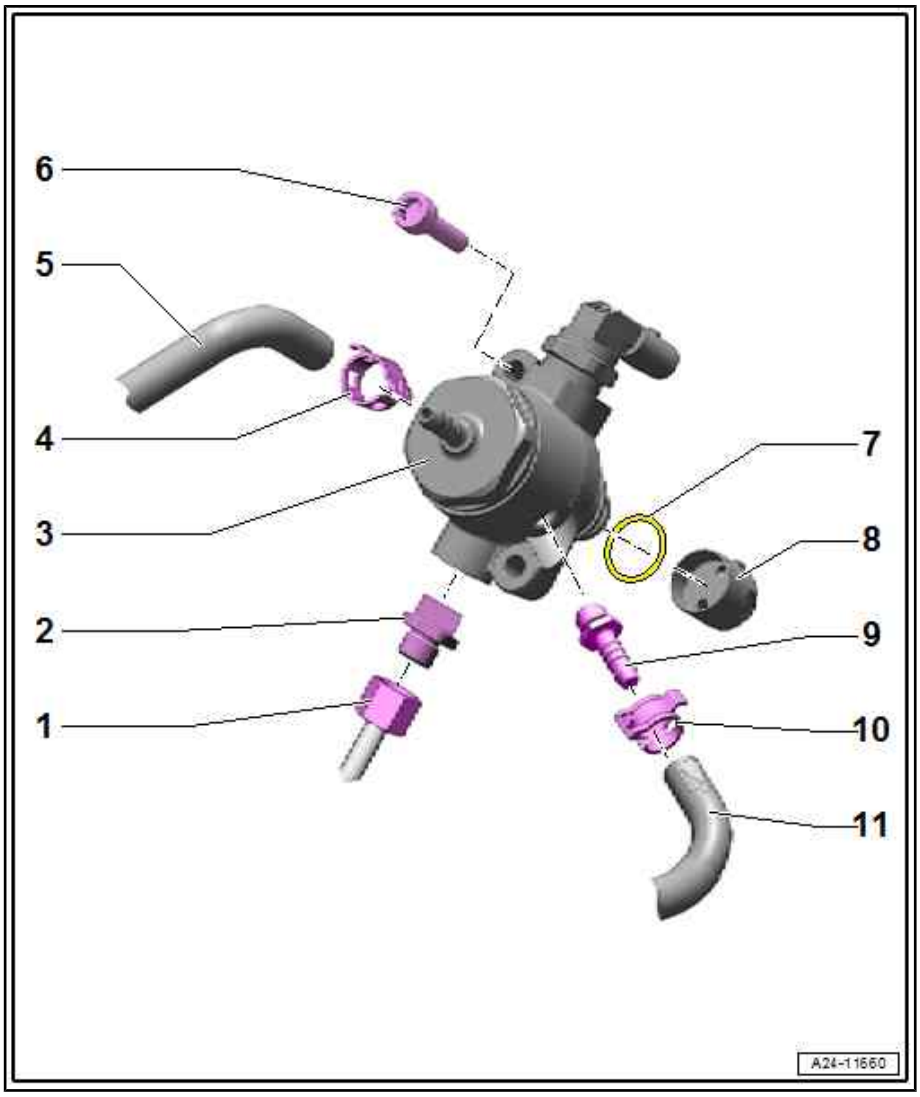

1 - High-pressure pipe

- ❑ To unscrew union nut, counterhold at hexagon flats of connecting piece using an open-end spanner
- ❑ Do not alter shape
- ❑ Install so that parts are free of tension
- ❑ Lubricate thread of union nut with clean engine oil
- ❑ Tighten union nut to 27 Nm
- ❑ Removing and installing ⇒ page 275

2 - Connection

- ❑ For high-pressure pipe
- ❑ To unscrew union nut on high-pressure pipe, counterhold at hexagon flats of connecting piece using an open-end spanner
- ❑ Must always be renewed once loosened
- ❑ 40 Nm

3 - High-pressure pump

- ❑ Depending on version of high-pressure pump:

♦ Fuel pressure regulating valve - N276- or

♦ Fuel metering valve - N290-

- ❑ Integrated in high-pressure pump; cannot be renewed separately
- ❑ Removing and installing ⇒ page 272
- ❑ Take care not to tilt when installing

4 - Spring-type clip

- ❑ Renew after removing

5 - Fuel supply hose

- ❑ From fuel tank

6 - Bolt

- ❑ M6; renew after removing
- ❑ Tightening torque and sequence ⇒ page 272

7 - O-ring

- ❑ Renew after removing
- ❑ Lubricate lightly with engine oil

8 - Roller tappet

- ❑ May remain lodged in vacuum pump when high-pressure pump is removed

Protected by copyright. Copying for private or commercial purposes, in part or in whole, is not permitted unless authorised by AUDI AG. AUDI AG does not guarantee or accept any liability with respect to the correctness of information in this document. Copyright by AUDI AG.

9 - Connection

- ❑ For fuel supply hose
- ❑ For vehicles with MPI engine
- ❑ Must always be renewed once loosened
- ❑ M10: 15 Nm
- ❑ M12: 20 Nm

10 - Spring-type clip

- ❑ For vehicles with MPI engine
- ❑ Renew after removing

11 - Fuel supply hose

- ❑ To fuel rail for MPI injectors

High-pressure pump (version 2) - tightening torque and sequence

To prevent flange of high-pressure pump from being deformed during installation, fit high-pressure pump as follows:

– Tighten bolts in stages as follows:

Stage	Bolts	Tightening torque/angle specification
1.	-Arrows-	Screw in by hand until contact is made
2.	-Arrows-	Tighten one turn alternately until flange of high-pressure pump makes contact with vacuum pump
3.	-Arrows-	M6 bolt: 8 Nm + 90°; renew bolts after removal M8 bolt: 20 Nm

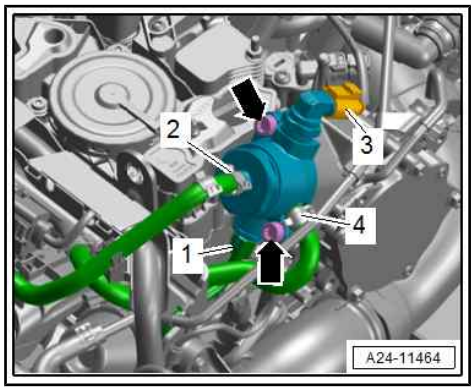

6.2 Removing and installing high-pressure pump

- Remove the high-pressure pump only when the engine is cold.

Special tools and workshop equipment required

- ♦ Socket - T10405-

Protected by copyright. Copying for private or commercial purposes, in part or in whole, is not permitted unless authorised by AUDI AG. AUDI AG does not guarantee or assume any liability with respect to the correctness of information in this document. Copyright by AUDI AG.

- Ratchet wrench (21 mm) - T40263-

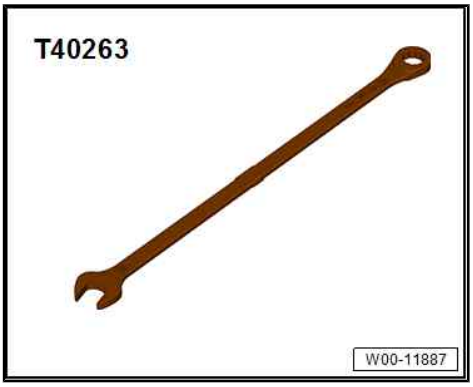

- Adapter - T40314-

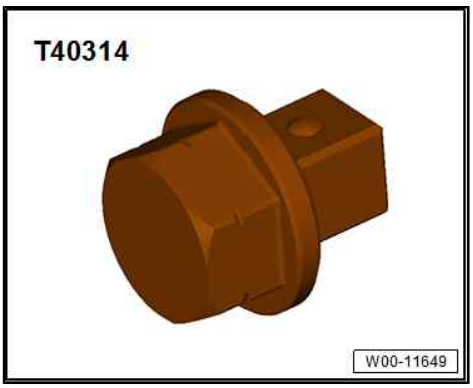

Protected by copyright. Copying for private or commercial purposes, in part or in whole, is not permitted unless authorised by AUDI AG. AUDI AG does not guarantee or accept any liability with respect to the correctness of information in this document. Copyright by AUDI AG.

- Safety goggles
- Protective gloves

Removing

- Remove the high-pressure pump only when the engine is cold.

– Observe rules for cleanliness ⇒ page 9 .

Preparatory work may be necessary depending on model ⇒ 4-cylinder direct injection engine (1.8, 2.0 ltr. 4-valve TFSI); Rep. gr. 24 ; High-pressure pump; Removing and installing high-pressure pump .

– Remove bolt -arrow- for retaining clip using socket - T10405- .

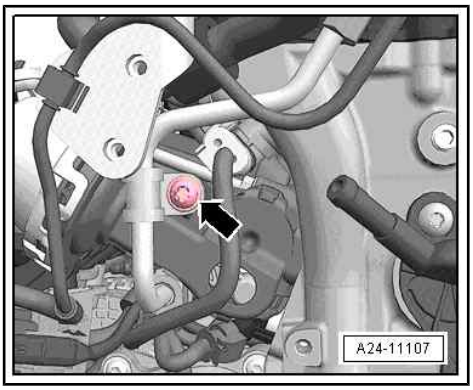

Protected by copyright. Copying for private or commercial pu
permitted unless authorised by AUDI AG. AUDI AG does not g
with respect to the correctness of information in this docume

– Unplug electrical connector -3- on fuel pressure regulating valve - N276- / fuel metering valve - N290- .

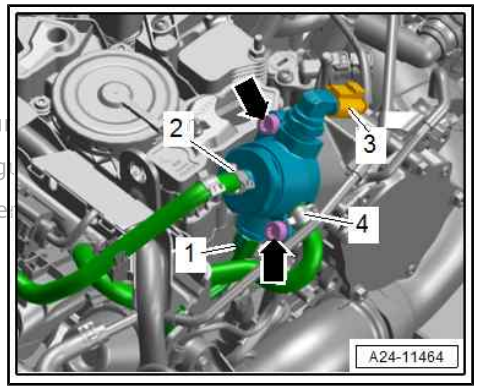

CAUTION

The fuel system is pressurised.
Risk of injury as fuel may spray out.
- **Put on safety goggles.**
- **Put on protective gloves.**
- **Release pressure (wrap a clean cloth around connection and open connection carefully).**

– Release hose clip -2- and detach fuel hose.

– Depending on version: Release hose clip -4- and detach fuel hose.

– Unscrew union nut -1-; to do so, counterhold hexagon flats of connection with an open-end spanner.

– Remove bolts -arrows-.

– Carefully pull out high-pressure pump. It is possible that the roller tappet may remain lodged in the vacuum pump.

Installing

- Renew spring-type clips and O-ring after removal.
- Renew connecting piece of high-pressure pump every time it is unscrewed.
- After removing, renew bolts tightened with specified tightening angle.
- Secure all hose connections with correct type of hose clips (as original equipment) ⇒ Electronic parts catalogue .
- Lubricate roller tappet and O-ring with clean engine oil for installation.

– Check roller tappet -1- for damage and renew if necessary.

– Lightly lubricate roller tappet with oil and insert it so that lug -arrow A- slides into guide notch -arrow B-.

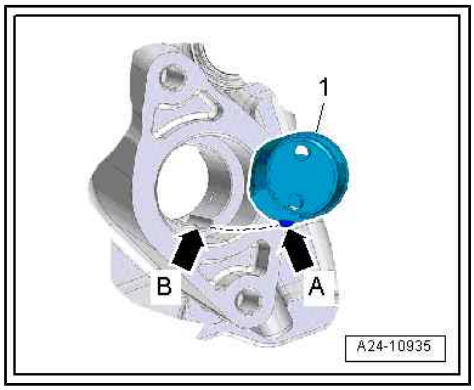

- A second mechanic is required for the following step.

NOTICE

Risk of engine damage if valve gear drive slips

– Only turn engine in normal direction of rotation.

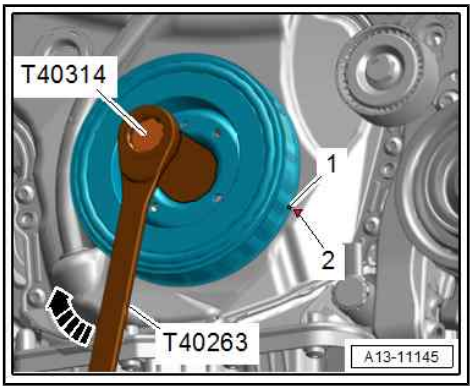

– Have a second mechanic turn crankshaft with ratchet wrench (21 mm) - T40263- and adapter - T40314- in direction of normal engine rotation -arrow- until roller tappet reaches its lowest point.

– Insert high-pressure pump with O-ring into vacuum pump and tighten bolts in stages.

– Secure fuel hoses with spring-type clips.

– Tighten union nut on high-pressure pipe hand-tight, align pipe so that it is free of stress and tighten nut to specified torque.

– Check fuel system for leaks.

– Install air cleaner housing ⇒ 4-cylinder direct injection engine (1.8, 2.0 ltr. 4-valve TFSI); Rep. gr. 24 ; Air cleaner; Removing and installing air cleaner housing .

– Install engine cover panel ⇒ page 15

Additional work depending on model ⇒ 4-cylinder direct injection engine (1.8, 2.0 ltr. 4-valve TFSI); Rep. gr. 24 ; High-pressure pump; Removing and installing high-pressure pump

Tightening torques

Protected by copyright. Copying for private or commercial purposes, in part or in whole, is not permitted unless authorised by AUDI AG. AUDI AG does not guarantee or accept any liability with respect to the correctness of information in this document. Copyright by AUDI AG.

- ⇒ Fig. ""High-pressure pump (version 1) - tightening torque and sequence"" , page 270
- ⇒ Fig. ""High-pressure pump (version 2) - tightening torque and sequence"" , page 272
- ⇒ "6.1 Exploded view - high-pressure pump", page 269
- ⇒ "4.1.1 Exploded view - fuel rail with injectors, vehicles with FSI engine", page 251

6.3 Removing and installing high-pressure pipe

Special tools and workshop equipment required

- Engine bung set - VAS 6122-

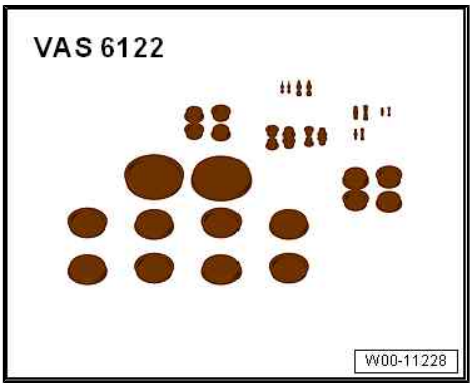

- Socket - T40055-

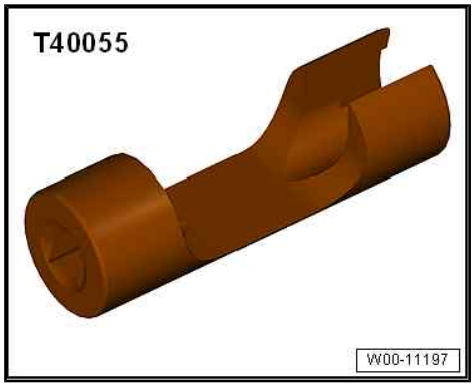

- Safety goggles
- Protective gloves

Removing

– Observe rules for cleanliness ⇒ page 9 .

– Remove engine cover panel ⇒ page 15 .

– Remove air cleaner housing ⇒ 4-cylinder direct injection engine (1.8, 2.0 ltr. 4-valve TFSI); Rep. gr. 24 ; Air cleaner; Removing and installing air cleaner housing .

Protected by copyright. Copying for private or commercial purposes, in part or in whole, is not permitted unless authorised by AUDI AG. AUDI AG does not guarantee or accept any liability with respect to the correctness of information in this document.

Vehicles with gearbox breather:

– Detach gearbox breather -1- from battery tray and place to one side; to do so, release catch -2- and pull off gearbox breather upwards -arrow-.

– Place gearbox breather to one side.

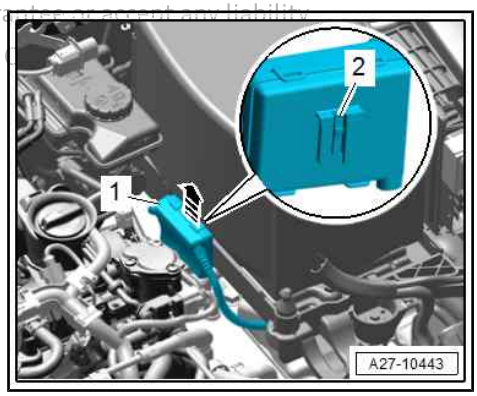

All vehicles (continued):

– Release hose clip -2-.

– Remove bolt -1- and press air pipe (left-side) towards left slightly.

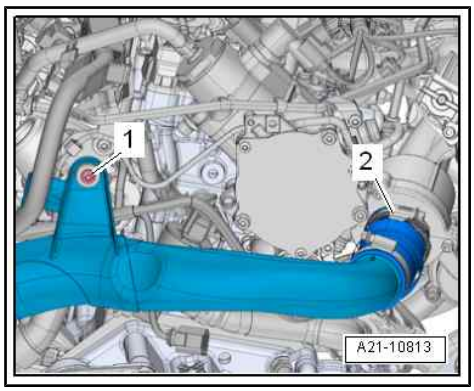

CAUTION

The fuel system is pressurised.

Risk of injury as fuel may spray out.

- **Put on safety goggles.**
- **Put on protective gloves.**
- **Release pressure (wrap a clean cloth around connection and open connection carefully).**

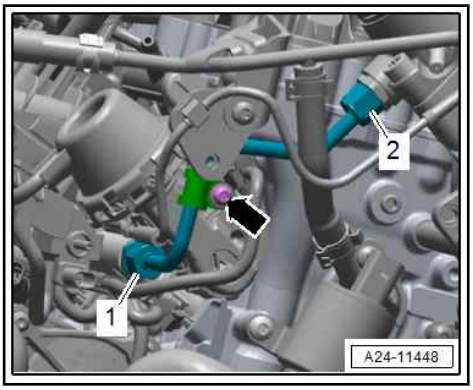

- Remove bolt -arrow-.
- Unscrew union nuts -1, 2-; to do so, counterhold hexagon flats of connection with an open-end spanner.
- Detach high-pressure pipe.
- Seal off open lines and connections with plugs (thoroughly cleaned) from engine bung set - VAS 6122- .

Installing

- The connections of the high-pressure pipe must not be damaged.
- Do not attempt to bend high-pressure pipe to a different shape.
- Lubricate threads of union nuts with clean engine oil.
- First tighten union nut by hand until it makes contact, making sure that high-pressure pipe is not under tension.
- Pre-tighten union nut to 5 Nm.
- Tighten union nut to final tightening torque; to do so, counterhold hexagon flats of each connecting piece with an open-end spanner.

Remaining installation steps are carried out in reverse sequence; note the following:

- Install air cleaner housing ⇒ 4-cylinder direct injection engine (1.8, 2.0 ltr. 4-valve TFSI); Rep. gr. 24 ; Air cleaner; Removing and installing air cleaner housing .
- Install engine cover panel ⇒ page 15 .

Tightening torques

- ⇒ “6.1 Exploded view - high-pressure pump”, page 269
- ⇒ “2.2 Exploded view - hose connections for charge air system”, page 239

Protected by copyright. Copying for private or commercial purposes, in part or in whole, is not permitted unless authorised by AUDI AG. AUDI AG does not guarantee or accept any liability with respect to the correctness of information in this document. Copyright by AUDI AG.

7 Lambda probe

⇒ “7.1 Exploded view - Lambda probe”, page 278

⇒ “7.2 Removing and installing Lambda probe”, page 280

7.1 Exploded view - Lambda probe

⇒ “7.1.1 Exploded view - Lambda probe, vehicles without particulate filter”, page 278

⇒ “7.1.2 Exploded view - Lambda probe, vehicles with particulate filter”, page 279

7.1.1 Exploded view - Lambda probe, vehicles without particulate filter

1 - Lambda probe after catalytic converter - G130- and Lambda probe heater 1 after catalytic converter - Z29-

- ❑ Removing and installing ⇒ page 280
- ❑ Fitting instructions ⇒ page 280
- ❑ 60 Nm

2 - Lambda probe - G39- and Lambda probe heater - Z19-

- ❑ Removing and installing ⇒ page 280
- ❑ Fitting instructions ⇒ page 280
- ❑ 60 Nm

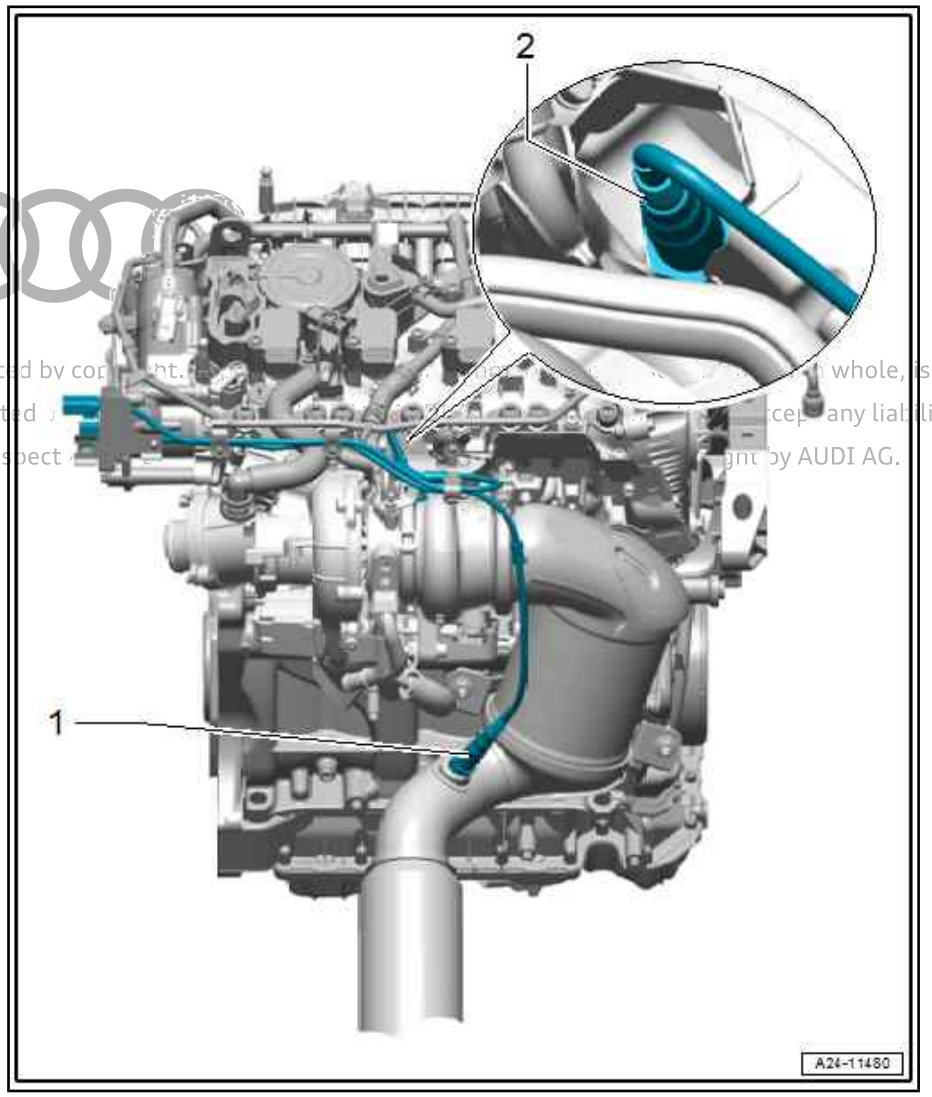

Protected by copyright. Copying for private or commercial purposes, in part or in whole, is not permitted unless authorised by AUDI AG. AUDI AG does not accept any liability with respect to the correctness of information in this document. Copyright by AUDI AG.

7.1.2 Exploded view - Lambda probe, vehicles with particulate filter

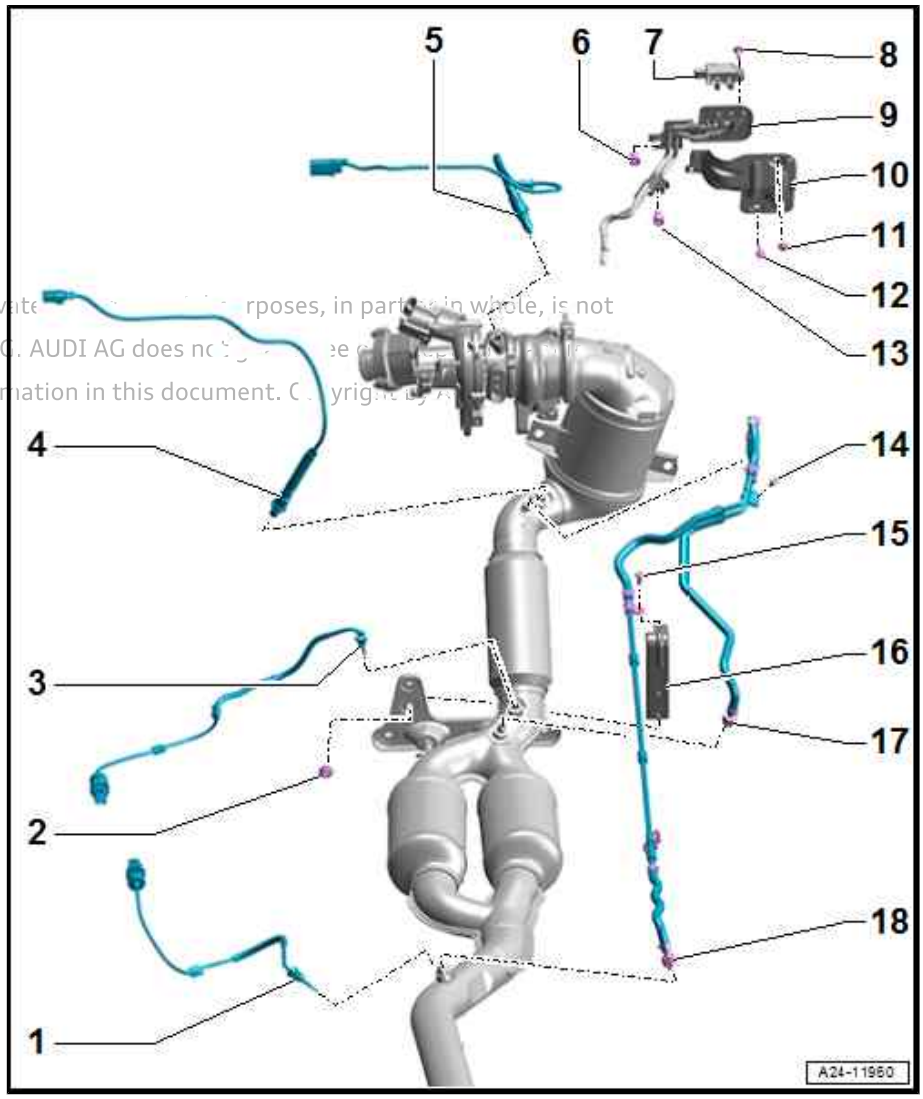

1 - Temperature sender after particulate filter - G527- / exhaust gas temperature sender 4 - G648-

- ❑ Designation on current flow diagram depends on model
- ❑ Removing and installing ⇒ Item 1 (page 284)

2 - Nut

- ❑ Tightening torque ⇒ Item 2 (page 284)

Protected by copyright. Copying for private [illegible] rposes, in part [illegible] in whole, is not permitted unle[illegible] AUDI AG. AUDI AG does no[illegible] ee [illegible] with respect to the correctness of information in this document. C[illegible]yrig[illegible]

3 - Temperature sender before particulate filter - G506- / exhaust gas temperature sender 3 - G495-

- ❑ Designation on current flow diagram depends on model
- ❑ Removing and installing ⇒ Item 3 (page 284)

4 - Lambda probe after catalytic converter - G130- with Lambda probe 1 heater after catalytic converter - Z29- / Lambda probe 1 after catalytic converter - GX7-

- ❑ Designation on current flow diagram depends on model
- ❑ Removing ⇒ 4-cylinder direct injection engine (1.8, 2.0 ltr. 4-valve TFSI); Rep. gr. 24 ; Lambda probe; Removing and installing Lambda probe
- ❑ Fitting instructions ⇒ page 280
- ❑ 60 Nm

5 - Lambda probe - G39- with Lambda probe heater - Z19- / Lambda probe 1 before catalytic converter - GX10-

- ❑ Designation on current flow diagram depends on model
- ❑ Removing ⇒ 4-cylinder direct injection engine (1.8, 2.0 ltr. 4-valve TFSI); Rep. gr. 24 ; Lambda probe; Removing and installing Lambda probe
- ❑ Fitting instructions ⇒ page 280
- ❑ 60 Nm

6 - Bolt

- ❑ 20 Nm

7 - Pressure differential sender for particulate filter - G1037-

Removing and installing ⇒ page 268

8 - Bolt

- ❑ 8 Nm

9 - Pressure pipes

10 - Heat shield

11 - Nut

- ❑ 8 Nm

12 - Bolt

- ❑ 9 Nm

13 - Bolt

- ❑ 20 Nm

14 - Bolt

- ❑ 9 Nm

15 - Bolt

- ❑ 9 Nm

16 - Bracket

- ❑ For pressure line

17 - Union nut

- ❑ For pressure line
- ❑ 45 Nm

18 - Union nut

- ❑ For pressure line
- ❑ 45 Nm

7.2 Removing and installing Lambda probe

Removing

All procedures are described in ⇒ 4-cylinder direct injection engine (1.8, 2.0 ltr. 4-valve TFSI); Rep. gr. 24 ; Lambda probe; Removing and installing Lambda probe .

Installing

Protected by copyright. Copying for private or commercial purposes, in part or in whole, is not permitted unless authorised by AUDI AG. AUDI AG does not guarantee or accept any liability with respect to the correctness of information in this document. Copyright by AUDI AG.

Installation is carried out in reverse order; note the following:

- The screw threads on the new Lambda probes are coated with a special assembly paste.
- If re-installing old Lambda probe, coat thread with high-temperature paste: Refer to ⇒ Electronic parts catalogue for high-temperature paste.
- The assembly paste/high-temperature paste must not get into the slots on the Lambda probe body.
- The electrical wiring of the lambda probe must be secured at the original locations when installing. The wiring must NOT come into contact with the exhaust pipe.

– Install engine cover panel ⇒ page 15 .

Tightening torques

◆ ⇒ “7.1 Exploded view - Lambda probe”, page 278

8 Engine control unit

All procedures and components are described in ⇒ 4-cylinder direct injection engine (1.8, 2.0 ltr. 4-valve TFSI); Rep. gr. 24 ; Engine control unit .

Protected by copyright. Copying for private or commercial purposes, in part or in whole, is not permitted unless authorised by AUDI AG. AUDI AG does not guarantee or accept any liability with respect to the correctness of information in this document. Copyright by AUDI AG.

26 – Exhaust system

1 Exhaust pipes/silencers

⇒ “1.1 Exploded view - silencers”, page 282

⇒ “1.2 Separating exhaust pipes/silencers”, page 282

⇒ “1.3 Removing and installing front silencers”, page 282

⇒ “1.4 Stress-free alignment of exhaust system”, page 282

⇒ “1.5 Checking exhaust system for leaks”, page 282

1.1 Exploded view - silencers

All components are described in ⇒ 4-cylinder direct injection engine (1.8, 2.0 ltr. 4-valve TFSI); Rep. gr. 26 ; Exhaust pipes/ silencers; Exploded view - silencers .

1.2 Separating exhaust pipes/silencers

All procedures are described in ⇒ 4-cylinder direct injection engine (1.8, 2.0 ltr. 4-valve TFSI); Rep. gr. 26 ; Exhaust pipes/ silencers; Separating exhaust pipes/silencers .

1.3 Removing and installing front silencers

All procedures are described in ⇒ 4-cylinder direct injection engine (1.8, 2.0 ltr. 4-valve TFSI); Rep. gr. 26 ; Exhaust pipes/ silencers; Removing and installing front silencer .

Protected by copyright. Copying for private or commercial purposes, in part or in whole, is not permitted unless authorised by AUDI AG. AUDI AG does not guarantee or accept any liability with respect to the correctness of information in this document. Copyright by AUDI AG.

1.4 Stress-free alignment of exhaust system

All procedures are described in ⇒ 4-cylinder direct injection engine (1.8, 2.0 ltr. 4-valve TFSI); Rep. gr. 26 ; Exhaust pipes/ silencers; Stress-free alignment of exhaust system .

1.5 Checking exhaust system for leaks

- Start engine and run at idling speed.
- Plug tailpipes (e. g. with rags or stopper) and leave plugged until the check is complete.
- Listen for noise at connection points (cylinder head/turbocharger, turbocharger/front exhaust pipe etc.) to locate any leaks.
- Rectify any leaks that are found.

2 Emission control system

All procedures and components are described in ⇒ 4-cylinder direct injection engine (1.8, 2.0 ltr. 4-valve TFSI); Rep. gr. 26 ; Emission control system .

Protected by copyright. Copying for private or commercial purposes, in part or in whole, is not permitted unless authorised by AUDI AG. AUDI AG does not guarantee or accept any liability with respect to the correctness of information in this document. Copyright by AUDI AG.

3 Exhaust gas temperature control

⇒ “3.1 Exploded view - exhaust gas temperature control”, page 284

⇒ “3.2 Removing and installing parts of exhaust gas temperature control”, page 285

Protected by copyright. Copying for private or commercial purposes, in part or in whole, is not permitted unless authorized by AUDI AG. AUDI AG does not guarantee or accept any liability with respect to the correctness of information in this document. Copyright by AUDI AG.

3.1 Exploded view - exhaust gas temperature control

Vehicles with particulate filter (exhaust system version)
⇒ “1.2.5 Vehicles with particulate filter (exhaust system version)”, page 3

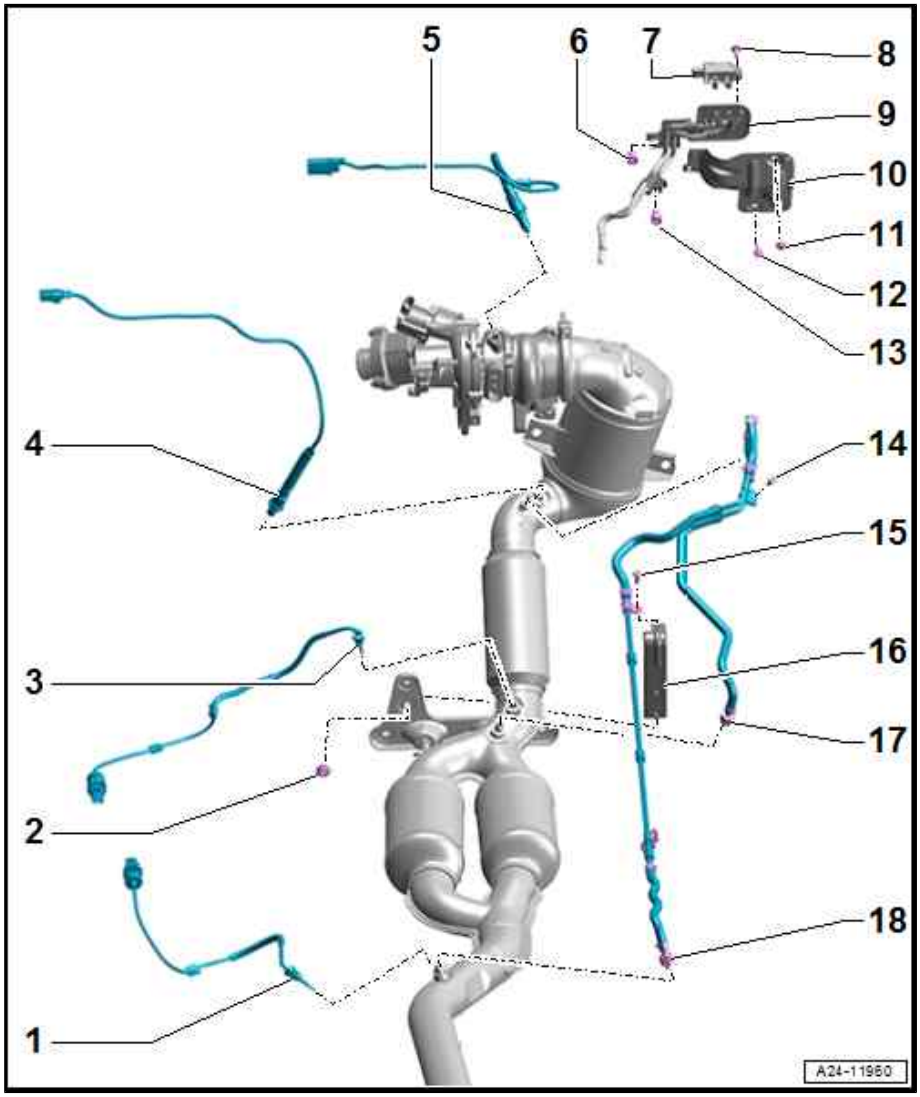

1 - Temperature sender after particulate filter - G527- / exhaust gas temperature sender 4 - G648-

- ❑ Designation on current flow diagram depends on model
- ❑ Removing and installing ⇒ page 285
- ❑ 45 Nm

2 - Nut

- ❑ 9 Nm

3 - Temperature sender before particulate filter - G506- / exhaust gas temperature sender 3 - G495-

- ❑ Designation on current flow diagram depends on model
- ❑ Removing and installing ⇒ page 285
- ❑ 45 Nm

4 - Lambda probe after catalytic converter - G130- with Lambda probe 1 heater after catalytic converter - Z29- / Lambda probe 1 after catalytic converter - GX7-

- ❑ Designation on current flow diagram depends on model
- ❑ Removing and installing ⇒ Item 4 (page 279)

5 - Lambda probe - G39- with Lambda probe heater - Z19- / Lambda probe 1 before catalytic converter - GX10-

- ❑ Designation on current flow diagram depends on model
- ❑ Removing and installing ⇒ Item 5 (page 279)

6 - Bolt

- ❑ Tightening torque ⇒ Item 6 (page 279)

7 - Pressure differential sender for particulate filter - G1037-

- ❑ Removing and installing ⇒ Item 7 (page 279)

8 - Bolt

- ❑ ⇒ Item 8 (page 279)

9 - Pressure pipes

10 - Heat shield

11 - Nut

- ❑ Tightening torque ⇒ Item 11 (page 280)

12 - Bolt

- ❑ Tightening torque ⇒ Item 12 (page 280)

13 - Bolt

- ❑ Tightening torque ⇒ Item 13 (page 280)

14 - Bolt

- ❑ Tightening torque ⇒ Item 14 (page 280)

15 - Bolt

- ❑ Tightening torque ⇒ Item 15 (page 280)

16 - Bracket

- ❑ For pressure line

17 - Union nut

- ❑ Tightening torque ⇒ Item 17 (page 280)

18 - Union nut

- ❑ Tightening torque ⇒ Item 18 (page 280)

3.2 Removing and installing parts of exhaust gas temperature control

⇒ “3.2.1 Removing and installing exhaust gas temperature senders - vehicles with front-wheel drive”, page 285

⇒ “3.2.2 Removing and installing exhaust gas temperature senders - vehicles with four-wheel drive”, page 287

3.2.1 Removing and installing exhaust gas temperature senders - vehicles with front-wheel drive

Designation on current flow diagram depends on model

- Temperature sender before particulate filter - G506- / exhaust gas temperature sender 3 - G495-
- Temperature sender after particulate filter - G527- / exhaust gas temperature sender 4 - G648-

Special tools and workshop equipment required

Protected by copyright. Copying for private or commercial purposes, in part or in whole, is not permitted unless authorised by AUDI AG. AUDI AG does not guarantee or accept any liability with respect to the correctness of information in this document. Copyright by AUDI AG.

- Tool set - T10395A- with suitable tool insert

Protected by copyright. Copying for private or commercial purposes, in part or in whole, is permitted unless authorised by AUDI AG. AUDI AG does not guarantee or accept any liability with respect to the correctness of information in this document. Copyright by AUDI AG.

Removing

- Observe safety precautions when working on the exhaust system ⇒ page 6 .

– Unfasten underbody trim (centre left) in direction of exhaust system and press downwards slightly ⇒ General body repairs, exterior; Rep. gr. 66 ; Underbody trim; Exploded view - underbody trim .

– Detach electrical connectors -1 and 2- from bracket, unplug and move electrical wiring clear.

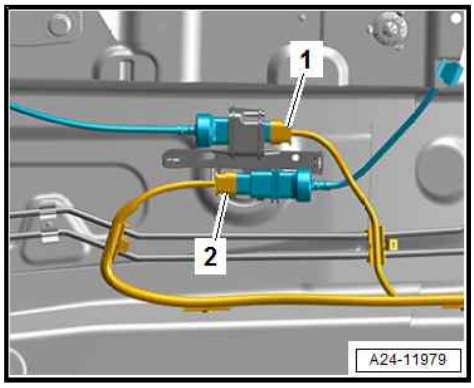

– Unscrew temperature sender before particulate filter -arrow-.

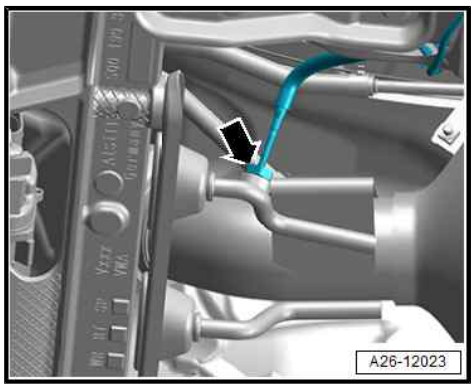

– Unscrew temperature sender after particulate filter -arrow-.

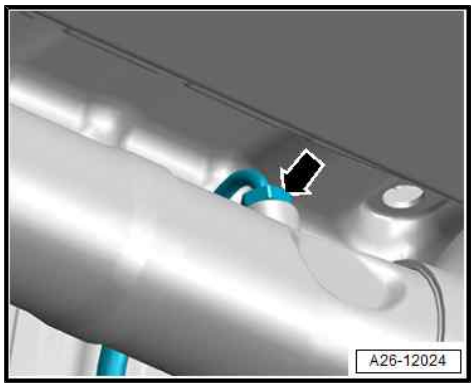

Installing

Installation is carried out in reverse order; note the following:

- Take care to protect exhaust gas temperature sender from knocks and impact; if dropped, the exhaust gas temperature sender can no longer be used.

– Move temperature sender after particulate filter into installation position:

• Angle -α- = max. 15°

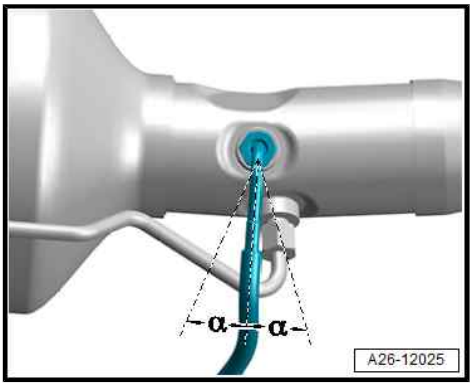

Tightening torques

♦ ⇒ “3.1 Exploded view - exhaust gas temperature control”, page 284

♦ ⇒ General body repairs, exterior; Rep. gr. 66 ; Underbody trim; Exploded view - underbody trim

3.2.2 Removing and installing exhaust gas temperature senders - vehicles with four-wheel drive

Designation on current flow diagram depends on model

♦ Temperature sender before particulate filter - G506- / exhaust gas temperature sender 3 - G495-

♦ Temperature sender after particulate filter - G527- / exhaust gas temperature sender 4 - G648-

Special tools and workshop equipment required

♦ Tool set - T10395A- with suitable tool insert

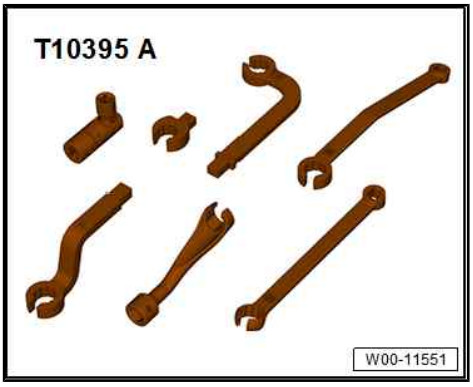

Removing

• Observe safety precautions when working on the exhaust system ⇒ page 6 .

Preparatory work may be necessary depending on model ⇒ 4-cylinder direct injection engine (2.0 ltr. 4-valve TFSI); Rep. gr. 26 ; Exhaust gas temperature control; Removing and installing parts of exhaust gas temperature control .

– Unfasten underbody trim (centre left) in direction of exhaust system and press downwards slightly ⇒ General body repairs, exterior; Rep. gr. 66 ; Underbody trim; Exploded view - underbody trim .

Protected by copyright. Copying for private or commercial purposes, in part or in whole, is not permitted unless authorised by AUDI AG. AUDI AG does not guarantee or accept any liability with respect to the correctness of information in this document. Copyright by AUDI AG.

Version 1:

– Detach electrical connectors -1 and 2- from bracket, unplug and move electrical wiring clear.

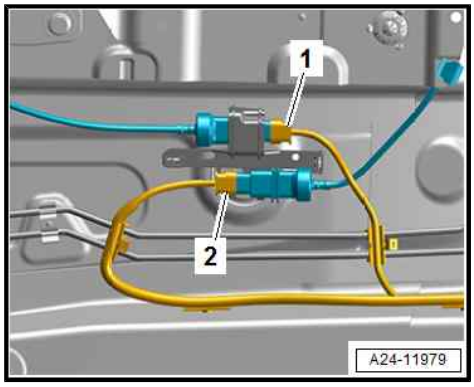

Version 2:

– Detach electrical connectors -1, 2- from bracket and unplug.

– Release fastener -arrow- and move electrical wiring clear.

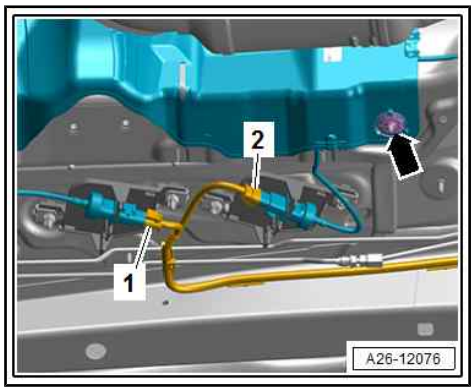

All versions (continued):

– Unscrew temperature sender before particulate filter -arrow-.

Protected by copyright. Copying for private or c s not permitted unless authorised by AUDI AG. AUDI lity with respect to the correctness of information i

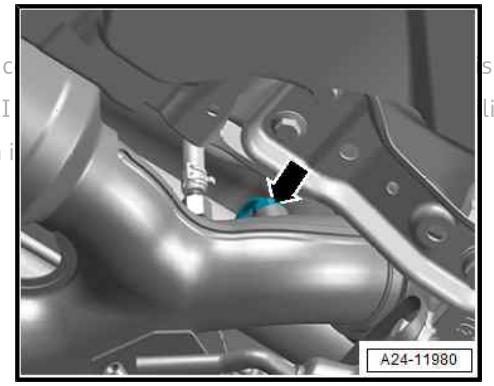

– Unscrew temperature sender after particulate filter -arrow-.

Installing

Installation is carried out in reverse order; note the following:

- Take care to protect exhaust gas temperature sender from knocks and impact; if dropped, the exhaust gas temperature sender can no longer be used.

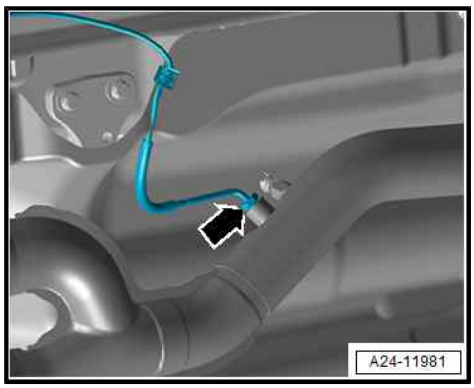

– Move temperature sender before particulate filter into installation position:

• Angle -α- = max. 15°

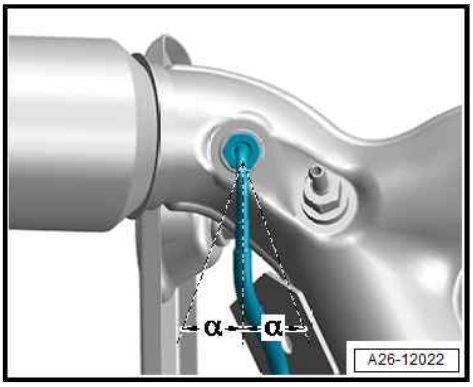

– Move angled version of temperature sender after particulate filter into installation position:

• Angle -α- = max. 15°

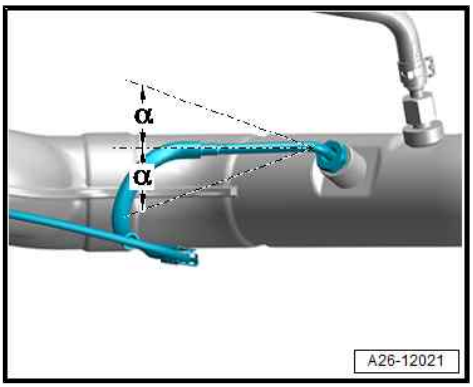

Additional work depending on model ⇒ 4-cylinder direct injection engine (2.0 ltr. 4-valve TFSI); Rep. gr. 26 ; Exhaust gas temperature control; Removing and installing parts of exhaust gas temperature control

Tightening torques

♦ ⇒ “3.1 Exploded view - exhaust gas temperature control”, page 284

♦ ⇒ General body repairs, exterior; Rep. gr. 66 ; Underbody trim; Exploded view - underbody trim

Protected by copyright. Copying for private or commercial purposes, in part or in whole, is not permitted unless authorised by AUDI AG. AUDI AG does not guarantee or accept any liability with respect to the correctness of information in this document. Copyright by AUDI AG.

4 Secondary air system

⇒ "4.1 Exploded view - secondary air system", page 290

⇒ "4.2 Removing and installing secondary air pump motor V101 ", page 292

⇒ "4.3 Removing and installing secondary air inlet valve N112 ", page 293

⇒ "4.4 Removing and installing sender 1 for secondary air pressure G609 ", page 293

4.1 Exploded view - secondary air system

Protected by copyright. Copying for private or commercial purposes, in part or in whole, is not permitted unless authorised by AUDI AG. AUDI AG does not guarantee or accept any liability with respect to the correctness of information in this document. Copyright by AUDI AG.

Engine with secondary air system (country-specific version)

⇒ "1.2.4 Engine with secondary air system (country-specific version)", page 3

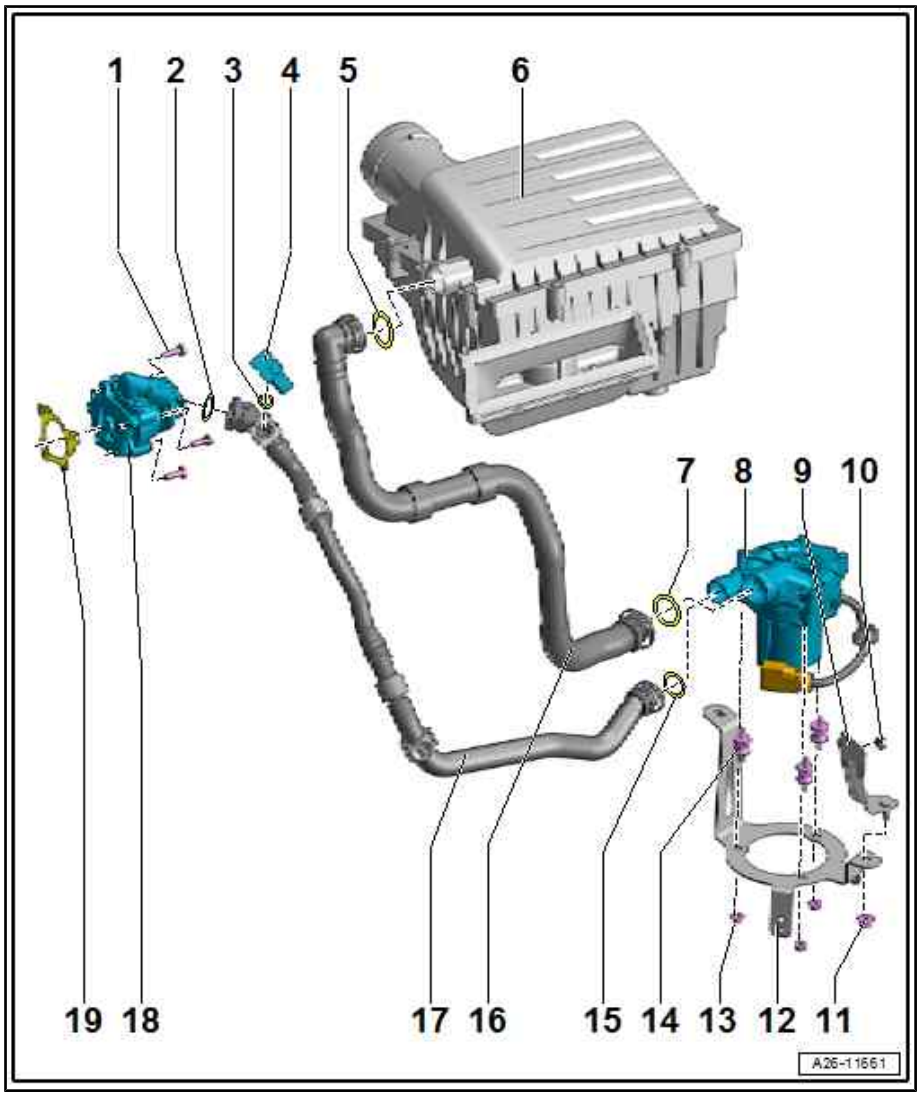

1 - Bolt

- ❑ 9 Nm

2 - O-ring

- ❑ Check for damage
- ❑ Not available separately; supplied with -item 17-
- ❑ Lubricate lightly with engine oil

3 - O-ring

- ❑ Check for damage
- ❑ Not available separately; supplied with -item 4-
- ❑ Lubricate lightly with engine oil

4 - Sender 1 for secondary air pressure - G609-

- ❑ Removing and installing ⇒ page 293

5 - O-ring

- ❑ Check for damage
- ❑ Not available separately; supplied with -item 16-
- ❑ Lubricate lightly with engine oil

6 - Air cleaner housing

- ❑ Exploded view ⇒ 4-cylinder direct injection engine (1.8, 2.0 ltr. 4-valve TFSI); Rep. gr. 24 ; Air cleaner; Exploded view - air cleaner housing

7 - O-ring

- ❑ Check for damage
- ❑ Not available separately; supplied with -item 16-
- ❑ Lubricate lightly with engine oil

8 - Secondary air pump motor - V101-

- ❑ Different versions available ⇒ Electronic parts catalogue
- ❑ Removing and installing ⇒ page 292

9 - Bracket

- ❑ To body
- ❑ Different versions available ⇒ Electronic parts catalogue

10 - Nut

- ❑ 8 Nm

11 - Nut

- ❑ 8 Nm

12 - Bracket

- ❑ For secondary air pump motor - V101-
- ❑ Different versions available ⇒ Electronic parts catalogue

13 - Nut

- ❑ 8 Nm

14 - Rubber mounting

15 - O-ring

- ❑ Check for damage
- ❑ Not available separately; supplied with -item 17-
- ❑ Lubricate lightly with engine oil

16 - Suction pipe

- ❑ From air cleaner housing to secondary air pump motor - V101-
- ❑ Different versions available ⇒ Electronic parts catalogue

17 - Pressure line

- ❑ From secondary air inlet valve - N112- to secondary air pump motor - V101-
- ❑ Different versions available ⇒ Electronic parts catalogue

Protected by copyright. Copying for private or commercial purposes, in part or in whole, is not permitted unless authorised by AUDI AG. AUDI AG does not guarantee or accept any liability with respect to the correctness of information in this document. Copyright by AUDI AG.

18 - Secondary air inlet valve - N112-

- ❑ Do not detach from flange
- ❑ Only renew together with flange
- ❑ Removing and installing ⇒ page 293

19 - Gasket

- ❑ Renew after removing

4.2 Removing and installing secondary air pump motor - V101-

Protected by copyright. Copying for private or commercial purposes, in part or in whole, is not permitted unless authorised by AUDI AG. AUDI AG does not guarantee or accept any liability with respect to the correctness of information in this document. Copyright by AUDI AG.

⇒ "4.2.1 Removing and installing secondary air pump motor V101 - version 1", page 292

⇒ "4.2.2 Removing and installing secondary air pump motor V101 - version 2", page 292

4.2.1 Removing and installing secondary air pump motor - V101- - version 1

Engine with secondary air system (country-specific version)
⇒ "1.2.4 Engine with secondary air system (country-specific version)", page 3

Removing

– Remove noise insulation ⇒ General body repairs, exterior; Rep. gr. 66 ; Noise insulation; Exploded view - noise insulation .

– Unplug electrical connector -1-.

– Press release tabs -2, 3- on both sides and detach lines from secondary air pump motor - V101- .

– Remove nuts -arrows- and detach secondary air pump motor - V101- together with bracket.

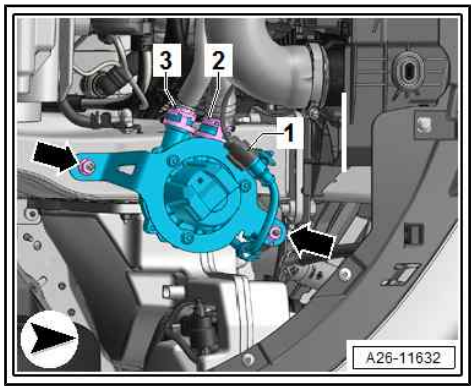

Installing

Installation is carried out in reverse sequence.

Tightening torques

♦ ⇒ "4.1 Exploded view - secondary air system", page 290

♦ ⇒ General body repairs, exterior; Rep. gr. 66 ; Noise insulation; Exploded view - noise insulation

4.2.2 Removing and installing secondary air pump motor - V101- - version 2

Engine with secondary air system (country-specific version)
⇒ "1.2.4 Engine with secondary air system (country-specific version)", page 3

Removing

– Remove wheel housing liner (front left) ⇒ General body repairs, exterior; Rep. gr. 66 ; Wheel housing liners; Exploded view - wheel housing liner (front) .

– Take electrical connector -2- out of bracket, unplug it and move electrical wiring clear.

– Press release tabs on both sides and disconnect lines -1- from secondary air pump motor - V101- .

– Remove nuts -arrows- and detach secondary air pump motor - V101- -item 3-.

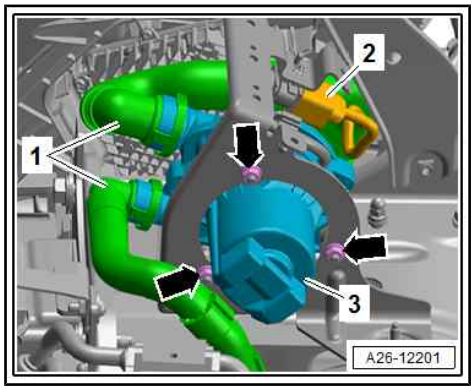

Installing

Installation is carried out in reverse sequence.

Tightening torques

♦ ⇒ "4.1 Exploded view - secondary air system", page 290

♦ ⇒ General body repairs, exterior; Rep. gr. 66 ; Wheel housing liners; Exploded view - wheel housing liner (front)

4.3 Removing and installing secondary air inlet valve - N112-

Engine with secondary air system (country-specific version)
⇒ "1.2.4 Engine with secondary air system (country-specific version)", page 3

Removing

– Remove air cleaner housing ⇒ 4-cylinder direct injection engine (1.8, 2.0 ltr. 4-valve TFSI); Rep. gr. 24 ; Air cleaner; Removing and installing air cleaner housing .

– Release hose clip -2-.

– Remove bolt -1- and press air pipe (left-side) towards left slightly.

Protected by copyright. Copying for private or commercial purposes, in part o
permitted unless authorised by AUDI AG. AUDI AG does not guarantee or acce
with respect to the correctness of information in this document. Copyright by

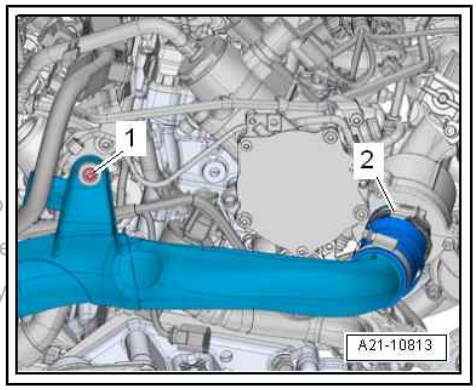

– Unplug electrical connector -1-.

– Press locking ring in on both sides and detach connecting pipe -2-.

– Unscrew bolts -arrows- and detach secondary air inlet valve -3-.

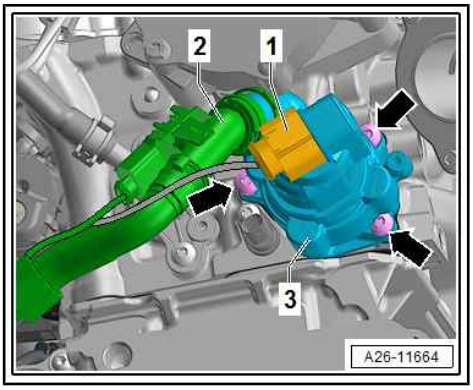

Installing

Installation is carried out in reverse order; note the following:

• Renew gasket after removing.

– Install air cleaner housing ⇒ 4-cylinder direct injection engine (1.8, 2.0 ltr. 4-valve TFSI); Rep. gr. 24 ; Air cleaner; Removing and installing air cleaner housing .

Tightening torques

♦ ⇒ "4.1 Exploded view - secondary air system", page 290

♦ ⇒ 4-cylinder direct injection engine (1.8, 2.0 ltr. 4-valve TFSI); Rep. gr. 21 ; Charge air system; Exploded view - charge air system

♦ ⇒ "2.2 Exploded view - hose connections for charge air system", page 239

4.4 Removing and installing sender 1 for secondary air pressure - G609-

Engine with secondary air system (country-specific version)
⇒ "1.2.4 Engine with secondary air system (country-specific version)", page 3

Removing

– Remove air cleaner housing ⇒ 4-cylinder direct injection engine (1.8, 2.0 ltr. 4-valve TFSI); Rep. gr. 24 ; Air cleaner; Removing and installing air cleaner housing .

– Move electrical wiring harness clear and press slightly to one side.

– Unplug electrical connector -1-.

– Release catches and detach sender -2- for secondary air pressure.

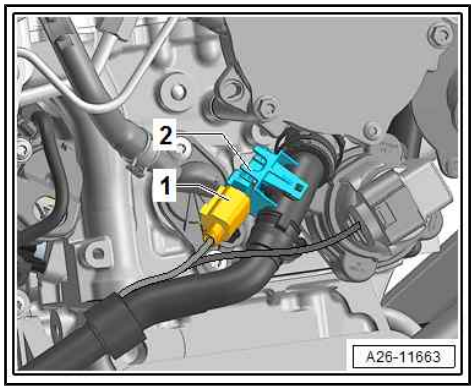

Installing

Installation is carried out in reverse order; note the following:

- Renew O-ring after removal.

– Install air cleaner housing ⇒ 4-cylinder direct injection engine (1.8, 2.0 ltr. 4-valve TFSI); Rep. gr. 24 ; Air cleaner; Removing and installing air cleaner housing .

Tightening torques

♦ ⇒ “4.1 Exploded view - secondary air system”, page 290

Protected by copyright. Copying for private or commercial purposes, in part or in whole, is not permitted unless authorised by AUDI AG. AUDI AG does not guarantee or accept any liability with respect to the correctness of information in this document. Copyright by AUDI AG.

28 – Ignition system

1 Ignition system

⇒ "1.1 Exploded view - ignition system", page 295

⇒ "1.2 Removing and installing ignition coils", page 296

⇒ "1.3 Removing and installing knock sensor 1 G61 ", page 298

⇒ "1.4 Removing and installing Hall senders", page 299

⇒ "1.5 Removing and installing engine speed sender G28 ", page 301

1.1 Exploded view - ignition system

Protected by copyright. Copying for private or commercial purposes, in part or in whole, is not permitted unless authorised by AUDI AG. AUDI AG does not guarantee or accept any liability with respect to the correctness of information in this document. Copy

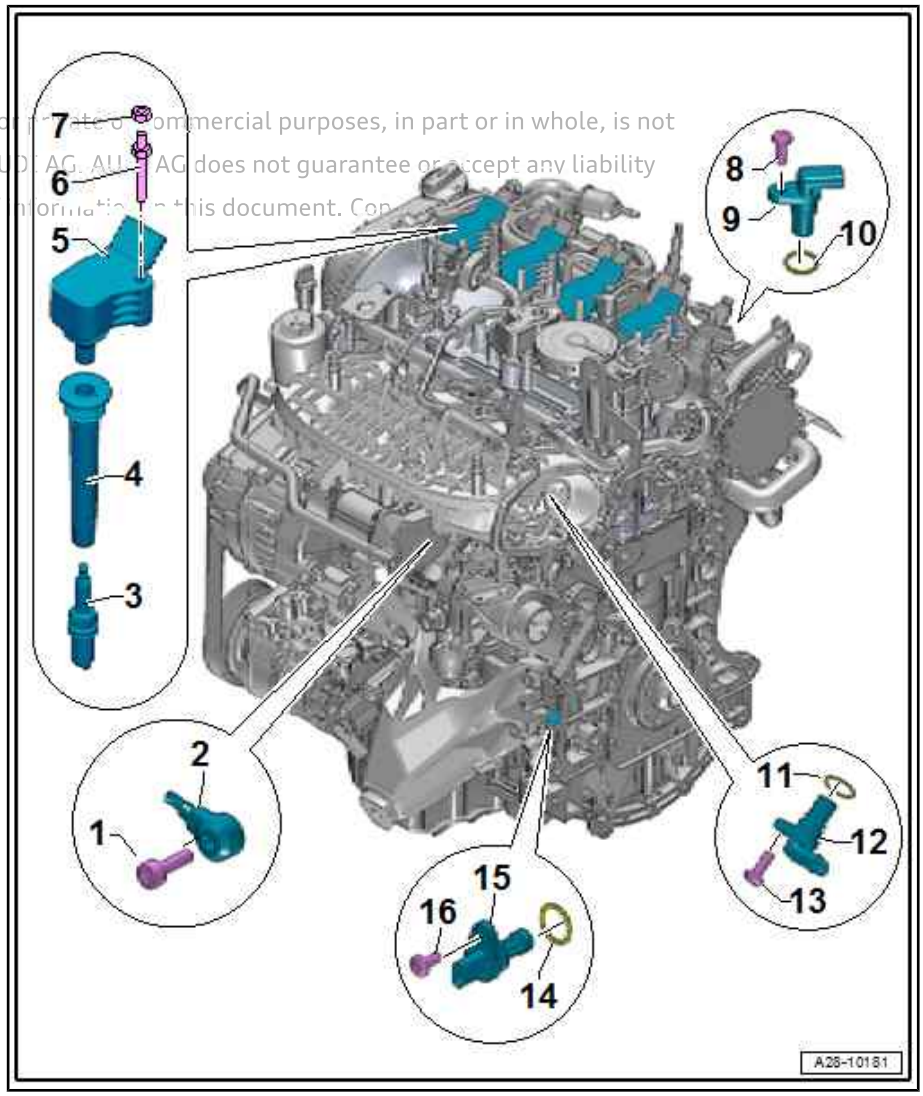

1 - Bolt

- ❑ Renew after removing
- ❑ Tightening torque influences the function of the knock sensor
- ❑ 8 Nm +90°

2 - Knock sensor 1 - G61-

- ❑ Removing and installing ⇒ page 298

3 - Spark plug

- ❑ 30 Nm

4 - Spark plug connectors

- ❑ Installation position ⇒ page 296

5 - Ignition coil

- ♦ Ignition coil 1 with output stage - N70-
- ♦ Ignition coil 2 with output stage - N127-
- ♦ Ignition coil 3 with output stage - N291-
- ♦ Ignition coil 4 with output stage - N292-
- ❑ Removing and installing ⇒ page 296

6 - Bolt

- ❑ 10 Nm

7 - Nut

- ❑ 9 Nm

8 - Bolt

- ❑ 9 Nm

9 - Hall sender 3 - G300-

- ❑ Check O-ring for damage
- ❑ Removing and installing ⇒ page 301

- ❑ After removal or renewal, perform adaption ⇒ Vehicle diagnostic tester `01 - Engine electronics, functions`, `01 - Chain elongation adaption diagnosis`

10 - O-ring

- ❑ Check for damage
- ❑ Not available separately; supplied with ⇒ Item 9 (page 295)

11 - O-ring

- ❑ Check for damage
- ❑ Not available separately; supplied with ⇒ Item 12 (page 296)

12 - Hall sender - G40-

- ❑ Removing and installing ⇒ page 299
- ❑ Check O-ring for damage
- ❑ After removal or renewal, perform adaption ⇒ Vehicle diagnostic tester `01 - Engine electronics, functions`, `01 - Chain elongation adaption diagnosis`

13 - Bolt

- ❑ 9 Nm

14 - O-ring

- ❑ Check for damage
- ❑ Not available separately; supplied with ⇒ Item 15 (page 296)

15 - Engine speed sender - G28-

- ❑ Removing and installing ⇒ page 301
- ❑ Check O-ring for damage
- ❑ After removal or renewal, perform adaption ⇒ Vehicle diagnostic tester `01 - Engine electronics, functions`, `01 - Chain elongation adaption diagnosis`

16 - Bolt

- ❑ Renew after removing
- ❑ 4 Nm +45°

1.2 Removing and installing ignition coils

The ignition coils are easier to remove when the engine is warm. The grease used at the factory facilitates removal of the ignition coils and spark plug connectors when the engine is warm.

Special tools and workshop equipment required

Copyright by AUDI AG. Copyright private or commercial purposes, in part or in whole, is not permitted unless authorised by AUDI AG. AUDI AG does not guarantee or accept any liability with respect to the correctness of information in this document. Copyright by AUDI AG.

- ♦ Puller - T10530-

- ♦ For silicone paste, refer to ⇒ Electronic parts catalogue .

Removing

– Remove engine cover panel ⇒ page 15 .

– Remove nut -2- and move earth wire -1- clear.

– Release electrical connectors and detach simultaneously from ignition coils in direction of -arrows-.

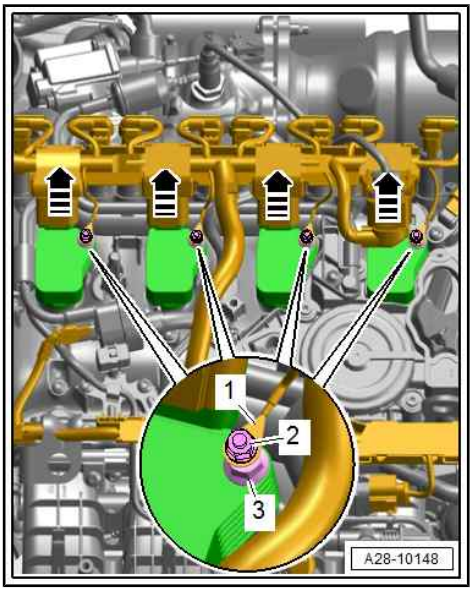

– Insert puller - T10530- into hole -1- in ignition coil.

– Turn knurled nut -2- clockwise -arrow- until puller is secured in place.

Protected by copyright. Copying for private or commercial purp
permitted unless authorised by AUDI AG. AUDI AG does not gua
with respect to the correctness of information in this document

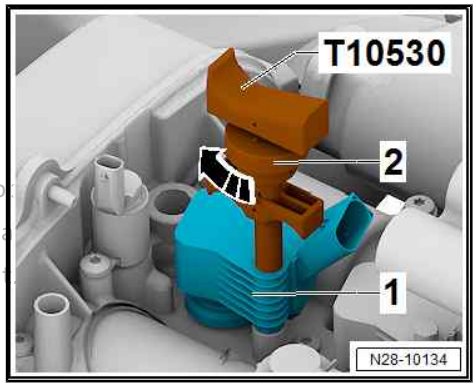

– Carefully pull ignition coil out vertically -arrow- with puller - T10530- .

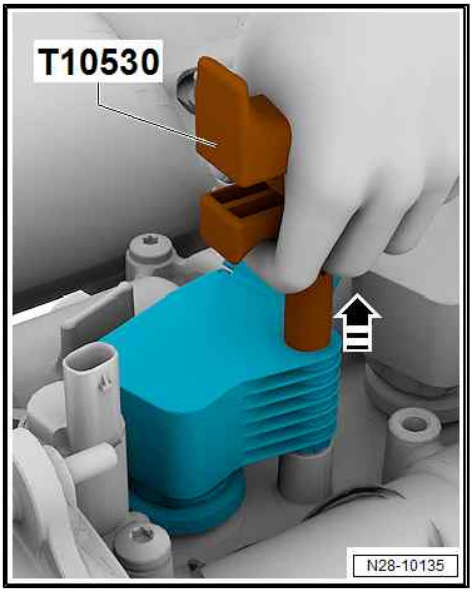

Installing

Installation is carried out in the reverse order; note the following:

– Apply a thin bead of silicone paste all around end of sealing hose of ignition coil with output stage -arrow-.

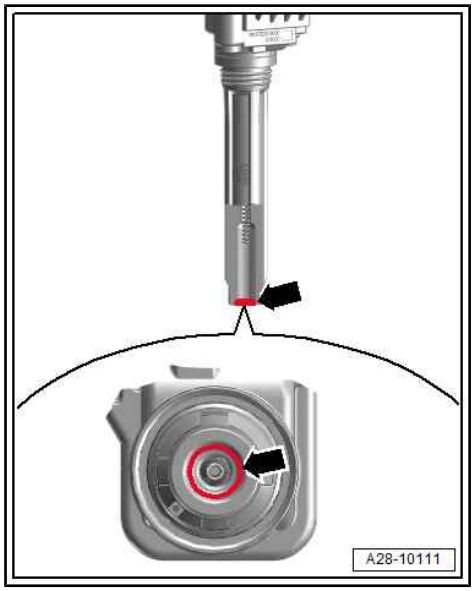

Note

- *Use only the silicone paste approved for this purpose ⇒ ET-KA .*
- *Using any other paste could damage the ignition coil irreparably.*

– Press ignition coils onto spark plugs by hand evenly (do not use tools).

– Install engine cover panel ⇒ page 15 .

Tightening torques

- ⇒ “1.1 Exploded view - ignition system”, page 295

1.3 Removing and installing knock sensor 1 - G61-

Fitting location: below intake manifold behind actuator for engine temperature regulation - N493-

Removing

– Remove actuator for engine temperature regulation - N493- ⇒ page 232 .

– Unplug electrical connector -3-.

– Release fastener -arrow-, detach electrical wire -1- for knock sensor 1 - G61- from bracket -2- and move wire clear.

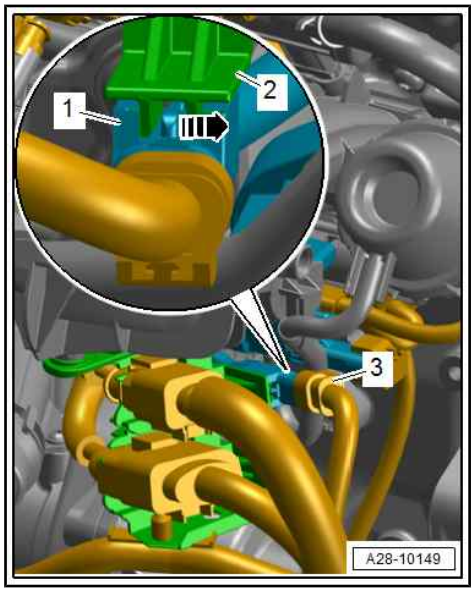

Protected by copyright. Copying for private or commercial purposes, in part or in whole, is not permitted unless authorised by AUDI AG. AUDI AG does not guarantee or accept any liability with respect to the correctness of information in this document. Copyright by AUDI AG.

– Unscrew bolt -arrow- and remove knock sensor 1 - G61- .

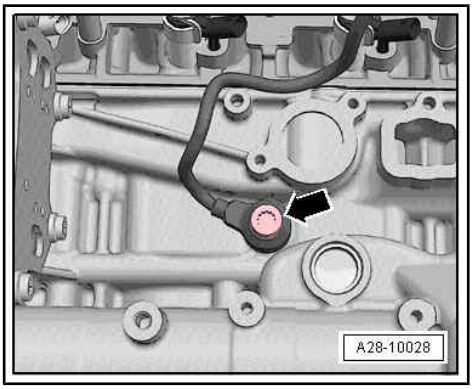

Installing

Installation is carried out in reverse order; note the following:

- Observe correct installation position.

– Install actuator for engine temperature regulation - N493- ⇒ page 232 .

Tightening torques

◆ ⇒ “1.1 Exploded view - ignition system”, page 295

Protected by copyright. Copying for private or commercial purposes, in part or in whole, is not permitted unless authorised by AUDI AG. AUDI AG does not guarantee or accept any liability with respect to the correctness of information in this document. Copyright by AUDI AG.

1.4 Removing and installing Hall senders

⇒ “1.4.1 Removing and installing Hall sender G40 ”, page 299

⇒ “1.4.2 Removing and installing Hall sender 3 G300 ”, page 301

1.4.1 Removing and installing Hall sender - G40-

Special tools and workshop equipment required

◆ Bit - T10573-

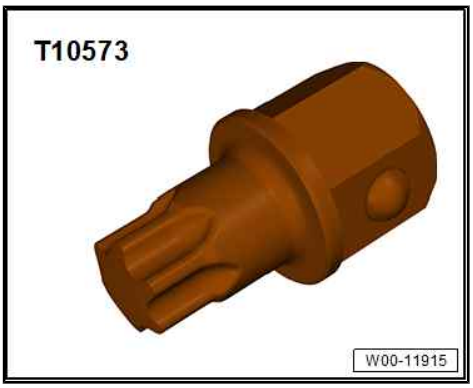

Removing

– Remove engine cover panel ⇒ page 15 .

– Depending on version: Detach MPI injectors with fuel rail and move to one side ⇒ page 259 .

– Unplug electrical connector -3-.

– Unscrew bolt -1- and remove Hall sender - G40- -item 2-.

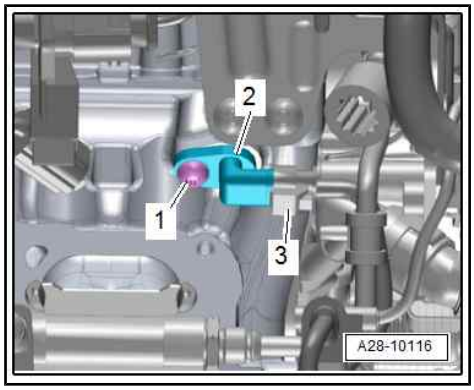

Installing

Installation is carried out in reverse order; note the following:

- Check O-ring for damage.

– Install MPI injectors with fuel rail ⇒ page 259 .

– Install engine cover panel ⇒ page 15 .

Learnt values for chain elongation must be re-adapted after removing or renewing Hall senders.

– Connect ⇒ Vehicle diagnostic tester.

– Select `Diagnosis` mode and then `Start diagnosis`.

– Choose `Select own test` tab and select following options one after the other:

◆ `Drive train`

◆ `Select engine code and engine`

◆ `01 - Self-diagnosis compatible systems`

◆ `01 - Engine electronics`

◆ `01 - Engine electronics, functions`

◆ `01 - Chain elongation adaption diagnosis`

Tightening torques

◆ ⇒ “1.1 Exploded view - ignition system”, page 295

Protected by copyright. Copying for private or commercial purposes, in part or in whole, is not permitted unless authorised by AUDI AG. AUDI AG does not guarantee or accept any liability with respect to the correctness of information in this document. Copyright by AUDI AG.

1.4.2 Removing and installing Hall sender 3 - G300-

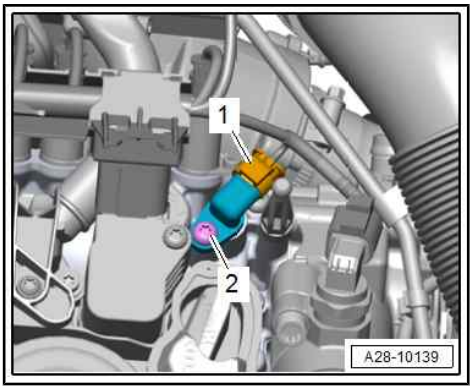

Removing

– Remove engine cover panel ⇒ page 15 .

– Unplug electrical connector -1-.

– Unscrew bolt -2- and remove Hall sender 3 - G300- .

Installing

Installation is carried out in reverse order; note the following:

• Check O-ring for damage.

– Install engine cover panel ⇒ page 15 .

Learnt values for chain elongation must be re-adapted after removing or renewing Hall senders.

– Connect ⇒ Vehicle diagnostic tester.

– Select `Diagnosis` mode and then `Start diagnosis`.

– Choose `Select own test` tab and select following options one after the other:

♦ `Drive train`

♦ `Select engine code and engine`

♦ `01 - Self-diagnosis compatible systems`

♦ `01 - Engine electronics`

♦ `01 - Engine electronics, functions`

♦ `01 - Chain elongation adaption diagnosis`

Protected by copyright. Copying for private or commercial purposes, in part or in whole, is not permitted unless authorised by AUDI AG. AUDI AG does not guarantee or accept any liability with respect to the correctness of information in this document. Copyright by AUDI AG.

Tightening torques

♦ ⇒ “1.1 Exploded view - ignition system”, page 295

1.5 Removing and installing engine speed sender - G28-

Removing

– Remove noise insulation (front) ⇒ General body repairs, exterior; Rep. gr. 66 ; Noise insulation; Exploded view - noise insulation .

– Open retaining clip -2-, move coolant hose -1- clear and push to one side.

– Pull retaining clip upwards off air pipe.

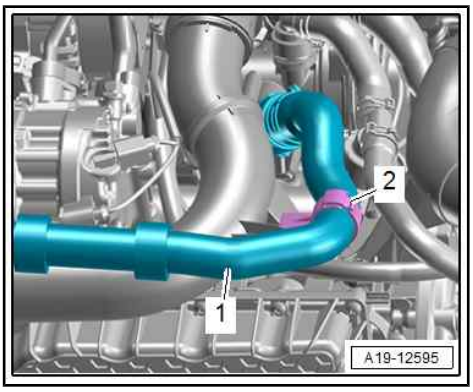

Vehicles with coolant valve

– Unplug electrical connector -1-.

– Remove nuts -arrows- and move coolant valve for gearbox - N488- clear to one side.

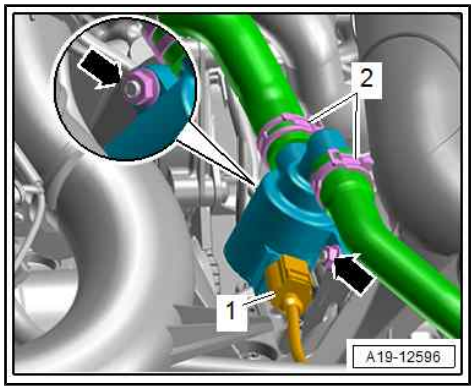

All vehicles

– Unplug electrical connector -1-.

– Remove bolt -arrow- and detach engine speed sender - G28- .

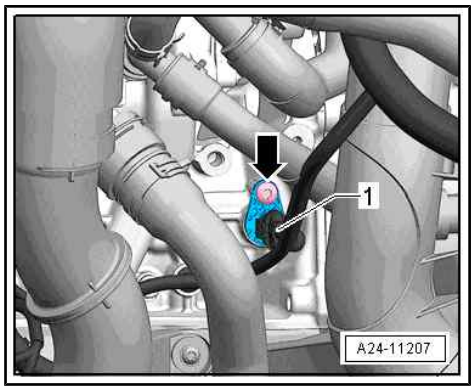

Installing

Installation is carried out in reverse order; note the following:

- Check O-ring for damage.

Learnt values for chain elongation must be re-adapted after removing or renewing engine speed sender.

– Connect ⇒ Vehicle diagnostic tester.

– Select `Diagnosis` mode and then `Start diagnosis`.

– Choose `Select own test` tab and select following options one after the other:

♦ `Drive train`

♦ `Select engine code and engine`

♦ `01 - Self-diagnosis compatible systems`

♦ `01 - Engine electronics`

♦ `01 - Engine electronics, functions`

♦ `01 - Chain elongation adaption diagnosis`

Tightening torques

♦ ⇒ “1.1 Exploded view - ignition system”, page 295

♦ ⇒ 4-cylinder direct injection engine (1.8, 2.0 ltr. 4-valve TFSI); Rep. gr. 19 ; Coolant pump/thermostat assembly; Exploded view - coolant valves

♦ ⇒ General body repairs, exterior; Rep. gr. 66 ; Noise insulation; Exploded view - noise insulation

Protected by copyright. Copying for private or commercial purposes, in part or in whole, is not permitted unless authorised by AUDI AG. AUDI AG does not guarantee or accept any liability with respect to the correctness of information in this document. Copyright by AUDI AG.