ENGINE
4M41

CONTENTS

GENERAL INFORMATION 11B-0-3
1. SPECIFICATIONS 11B-1-1
SERVICE SPECIFICATIONS 11B-1-1
TORQUE SPECIFICATIONS 11B-1-4
SEALANT 11B-1-8
2. SPECIAL TOOLS 11B-2-1
3. GENERATOR ASSEMBLY 11B-3-1
4. GLOW PLUG 11B-4-1
5. COOLING FAN, V-BELT AND WATER PUMP 11B-5-1
6. WATER HOSES AND PIPES 11B-6-1
7. THERMOSTAT 11B-7-1
8. EGR VALVE ASSEMBLY 11B-8-1
9. INTAKE MANIFOLD 11B-9-1
10. TURBOCHARGER ASSEMBLY 11B-10-1
11. EXHAUST MANIFOLD 11B-11-1
12. INJECTION PUMP ASSEMBLY 11B-12-1
13. INJECTION PUMP GEAR 11B-13-1
14. ROCKER COVER, CAMSHAFT HOLDER ASSEMBLY AND CAMSHAFT 11B-14-1
15. INJECTION NOZZLE 11B-15-1
16. CYLINDER HEAD AND VALVE MECHANISM 11B-16-1
17. VACUUM PUMP 11B-17-1
18. TIMING GEAR CASE 11B-18-1
19. TIMING GEAR AND BALANCE SHAFT 11B-19-1
20. OIL PUMP 11B-20-1
21. OIL COOLER AND OIL FILTER 11B-21-1
22. OIL PAN, OIL STRAINER AND OIL JET 11B-22-1
23. PISTON AND CONNECTING ROD 11B-23-1
24. DRIVE PLATE 11B-24-1
25. CRANK SHAFT AND CRANK CASE 11B-25-1
26. BALANCE SHAFT BUSH 11B-26-1

NOTES

GENERAL INFORMATION

Descriptions	Specifications
Total displacement dm^3	3200
No. and arrangement of cylinders	4 in-line
Combustion chamber	Direct injection
No. of intake/exhaust valves (per cylinder)	2 each
Valve mechanism	Double overhead camshaft, 4-valve
Cylinder bore x stroke mm	98.5 x 105
Compression ratio	17
Supercharger	Turbo-charging type
Intercooler	Air-cooling type
Fuel supply	Distributor type electronically controlled fuel injection pump

1. SPECIFICATIONS

SERVICE SPECIFICATIONS

Unit: mm

Descriptions				Standard	Limit
Glow plug					
Glow plug	Resistance Ω			1.1	–
Intake manifold					
Throttle body	Resistance Ω	Throttle body temperature –10 – 50°C		12 – 20	–
		Throttle body temperature 50 – 100°C		15 – 23	–
Turbocharger assembly					
Turbocharger	Actuator operating pressure (when operating 1 mm) kPa			161	–
Rocker cover, camshaft holder assembly, camshaft assembly					
Camshaft	End play			0.10 – 0.18	0.3
	Cam lobe lift	Intake	Front	6.16	6.11
			Rear	6.10	6.05
		Exhaust	Front	5.91	5.86
			Rear	6.16	6.11
	Bend			Less than 0.015	0.03
	Journal oil clearance			0.05 – 0.09	0.15
Rocker	Rocker roller radial play			0.03 – 0.07	–
Injection nozzle					
Injection nozzle	Injection pressure (valve opening pressure)	No. 1 valve opening pressure MPa		17.60 – 18.58	–
		No. 2 valve opening pressure MPa		22.6 – 23.6	–
	Pre-lift			0.05 – 0.07	–
	Needle valve lift			0.23 – 0.28	–
Cylinder head and valve mechanism					
Valve spring	Free height			51.3	–
	Load (installed height: 39.5) N			255	–
	Out-of-squareness			2°	4°

Descriptions				Standard	Limit
Valve	Intake	Stem diameter		6.560 – 6.575	6.45
		Sinkage from cylinder head bottom		0.05 – 0.55	0.8
		Margin		1.0	0.8
		Valve seat angle		45° ± 15’	–
	Exhaust	Stem diameter		6.53 – 6.55	6.45
		Sinkage from cylinder head bottom		0.05 – 0.55	0.8
		Margin		1.0	0.8
		Valve seat angle		45° ± 15’	–
Valve guide	Stem-to-guide clearance		Intake	0.02 – 0.06	0.10
			Exhaust	0.05 – 0.09	0.15
Valve seat	Seat width			1.8 – 2.2	2.8
Cylinder head	Bottom surface distortion			Less than 0.05	0.2
Vacuum pump					
Vacuum pump	Performance	Attained degree of vacuum		93 kPa or more	–
		Pump speed		1500 r/min	–
Timing gears and balance shafts					
Backlash between gears	Balance shaft gear RH and oil pump gear			0.04 – 0.19	0.3
	Oil pump gear and crankshaft gear			0.04 – 0.18	0.3
	Crankshaft gear and idler gear			0.04 – 0.18	0.3
	Idler gear and idler gear LH			0.04 – 0.19	0.3
	Idler gear LH and balance shaft gear LH			0.04 – 0.22	0.4
	Idler gear and injection pump gear			0.04 – 0.21	0.4
End play	Balance shaft LH, RH			0.09 – 0.24	0.3
	Idler gear/sprocket assembly			0.05 – 0.20	0.3
	Idler gear LH assembly			0.05 – 0.20	0.3
Timing chain elongation (minimum distance between chain spans facing each other when pressing on tensioner lever)				16.5	9
Tension lever-to-tension lever shaft clearance				0.06 – 0.18	0.3
Idler gear bush LH-to-idler shaft clearance				0.02 – 0.05	0.1
Idler sprocket bush-to-idler shaft clearance				0.02 – 0.06	0.1
Oil pump					
Oil pump	Driven gear shaft-to-oil pump case and cover clearance			0.03 – 0.05	0.15
	Side clearance			0.05 – 0.10	0.15
	Tip clearance			0.15 – 0.26	0.27
Oil cooler and oil filter					
Bypass valve spring	Valve opening pressure	kPa		490 ± 30	–
Regulator valve spring	Valve opening pressure	kPa		620 ± 30	–

Descriptions			Standard	Limit
Piston and connecting rod assembly				
Piston	Protrusion		–0.03 – –0.209	–
Piston pin	Piston pin-to-connecting rod bush clearance		0.03 – 0.05	0.1
	Piston pin-to-piston clearance		0.007 – 0.021	0.05
Piston ring	Ring-to-ring groove clearance	No.1 compression ring	0.03 – 0.08	0.15
		No.2 compression ring	0.07 – 0.10	0.15
		Oil ring	0.03 – 0.06	0.15
	End gap	No.1 compression ring	0.3 – 0.45	0.8
		No.2 compression ring	0.4 – 0.55	0.8
		Oil ring	0.3 – 0.5	0.8
Connecting rod	End play		0.15 – 0.45	0.6
	Bend		–	0.05
	Twist		–	0.1
Connecting rod bearing	Oil clearance		0.03 – 0.05	0.1
	Free span		–	58.8 max.
Crankshaft and crankcase				
Crankshaft	End play		0.10 – 0.28	0.4
	Bend		Less than 0.02	0.05
	Pin and journal	Out-of-roundness	Less than 0.01	–
		Conicity	Less than 0.006	–
Main bearing	Main bearing-to-crankshaft clearance	No.1, 2, 4 and 5 journal	0.04 – 0.06	0.1
		No.3 journal	0.06 – 0.08	0.1
	Free span		–	73.16 max.
Upper crankcase	Upper surface distortion		Less than 0.05	0.1
	Cylinder I.D.		98.5 – 98.53	98.75
	Piston and connecting rod assembly-to-upper crankcase cylinder clearance		0.04 – 0.05	–
Balance shaft bush				
Balance shaft	Clearance between balance shaft and balance shaft bush		0.06 – 0.11	0.16

TORQUE SPECIFICATIONS

Items		Torque Nm
Glow plug		
Connection plate		1.3 ± 1
Glow plug		18 ± 1
Cooling fan V-belt and water pump		
Cooling fan bolt		10 ± 1
Auto-cooling fan coupling nut		24 ± 2
Water pump bolt		24 ± 2
Water hoses and pipes		
Eyebolt		25 ± 2
Coolant temperature sensor		9 ± 1
Intake manifold		
Boost air temperature sensor		15 ± 1
Gas filter assembly		19.6 ± 1
Turbocharger assembly		
Eye bolt (for oil pipe)		20 ± 2
Eye bolt (for water pipe)		25 ± 2
Coupler nut		49 ± 4
Turbocharger nut		49 ± 4
Turbocharger bolt		54 ± 5
Exhaust manifold		
Exhaust manifold nut		30 ± 3
Injection pump assembly		
Injection pipe		25 ± 2
Pump stay mounting bolt		18 ± 2
Injection pump		
Injection pump gear mounting nut		180 ± 10
Sensor plate mounting bolt		5 ± 1
Flange plate mounting nut		38 ± 2
Engine speed sensor mounting bolt		5 ± 1
Rocker cover, camshaft holder assembly, camshaft assembly		
Rocker cover mounting bolt		3.0 ± 0.3
Fuel leak-off pipe eyebolt	Injection nozzle side	13 ± 2
	Cylinder head side	11 ± 1
Cam sprocket mounting bolt		88 ± 10
Camshaft cap mounting bolt		20 ± 1
Adjust screw locknut		9.5 ± 0.5
Pivot bolt		38 ± 8

Items	Torque Nm
Injection nozzle	
Injection pipe	33 ± 3
Return pipe eyebolt	11 ± 1
Injection nozzle assembly eyebolt	13 ± 2
Leak-off pipe eye bolt	11 ± 1
Injection nozzle assembly mounting bolt	21 ± 2
Retaining nut	34 ± 5
Cylinder head and valve mechanism	
Injection nozzle mounting bolt	21 ± 2
Connecting plate mounting nut	1.3 ± 1.0
Glow plug	18 ± 2
Bolt (M10)	58 ± 6
Cylinder head bolt (M12: long)	49 ± 5 + 90° + 90°
Cylinder head bolt (M12: short)	49 ± 5 + 90° + 90°
Water joint	47 ± 5
Vacuum pump	
Eyebolt	20 ± 2
Cover and body assembly mounting bolt	5.4 ± 0.5
Timing gear case	
Crankshaft pulley mounting bolt	323 ± 32
Cap nut	23 ± 2
Timing gear and balance shaft	
Tension lever shaft mounting bolt	40 ± 4
Guide plate mounting bolt	33 ± 3
Balance shaft gear RH mounting bolt	36 ± 4
Thrust plate mounting bolt	12 ± 1
Balance shaft gear LH mounting bolt	36 ± 4
Oil Pump	
Balance shaft RH bolt	36 ± 3
Plug	44 ± 4
Oil pump cover screw	10 ± 1
Oil cooler and oil filter	
Oil cooler element nut	20 ± 2
Bypass plug	44 ± 4
Regulator plug	44 ± 4
Water drain plug	30 ± 3

Items	Torque Nm
Oil pan, oil strainer and oil jet	
Drain plug	39 ± 3
Oil jet	32 ± 3
Piston and connecting rod	
Connecting rod cap mounting nut	29 ± 3 + 49 ± 5 + 45° + 45°
Drive plate	
Drive plate assembly and crankshaft mounting bolt	123 ± 12
Crankshaft and crankcase	
Dust cover mounting bolt	47 ± 5
Lower crankcase mounting bolt	25 ± 3
Main bearing cap bolt	20 ± 2 + 90° + 90°
Check valve	32 ± 3

STANDARD BOLT AND NUT TIGHTENING TORQUE TABLE

1. Fasten the parts and equipment of vehicle using the specified standard bolts and nuts. Tighten these bolts and nuts to the torques indicated below, unless otherwise specified.
2. Threads and bearing surfaces must be dry.
3. In case nut and bolt (or stud bolt) differ in strength, tighten them to the torque specified for the bolt.

Hexagon head bolts and stud bolts

Unit: Nm

Strength Code	4T		7T		8T	
Head Mark	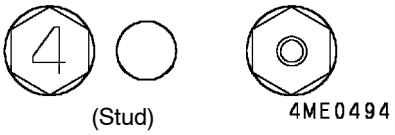		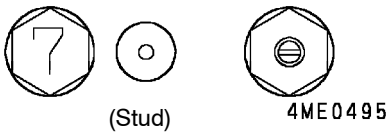		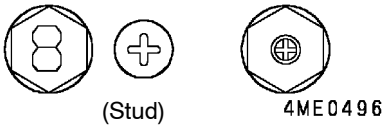	
Nominal Diameter mm						
M5	2.5 ± 0.5	-	5 ± 1	-	6 ± 1	-
M6	5 ± 1	-	9 ± 2	-	10 ± 2	-
M8	11.5 ± 2.5	-	21 ± 4	-	25 ± 4	-
M10	23 ± 4	22 ± 4	44 ± 10	41 ± 8	52 ± 7	55 ± 13
M12	41 ± 8	38 ± 8	81 ± 12	74 ± 9	96 ± 12	86 ± 12

Hexagon flange bolts

Unit: Nm

Strength Code	4T		7T		8T	
Head Mark / Nominal Diameter mm		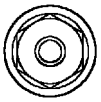 4ME0497		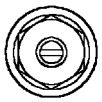 4ME0498		4ME0499
M6	5 ± 1	-	10 ± 2	-	12 ± 2	-
M8	13 ± 2	-	23 ± 4	-	27 ± 5	-
M10	26 ± 4	22 ± 4	49 ± 10	44 ± 9	57 ± 7	54 ± 10
M12	46 ± 8	42 ± 9	93 ± 15	81 ± 12	103 ± 15	96 ± 12

Hexagon nuts

Unit: Nm

Strength Code	4T		6T	
Head Mark	4ME0500		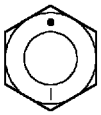 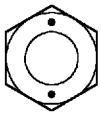 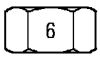 4ME0501	
Nominal Diameter mm	Standard Thread	Coarse Thread	Standard Thread	Coarse Thread
M5	2.5 ± 0.5	-	5 ± 1	-
M6	5 ± 1	-	9 ± 2	-
M8	12 ± 2	-	21 ± 4	-
M10	23 ± 4	22 ± 4	44 ± 10	41 ± 8
M12	41 ± 8	38 ± 8	81 ± 12	73 ± 10

Hexagon flange nuts

Unit: Nm

Strength Code	4T	
Head Mark	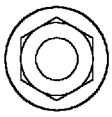 4ME0502	
Nominal Diameter mm	Standard Thread	Coarse Thread
M6	5 ± 1	-
M8	13 ± 2	-
M10	26 ± 4	24 ± 4
M12	41 ± 8	42 ± 9

SEALANT

Location	Specified sealant
Mating surface of front plate to cylinder head gasket	3M ATD Part No.8660 or equivalent
Inner surface of sealing cap press-fitting hole	THREEBOND TB1386, LOCTITE 962T or equivalent
Mating surface of timing gear case to front plate*	Mitsubishi Genuine Part No. MD970389 or equivalent
Upper crankcase assembly-to-lower crankcase assembly mounting surface*	
Rear oil seal case-to-upper or lower crankcase assembly mounting surface*	
Upper or lower crankcase assembly-to-front plate mounting surface*	

*: FIPG to be applied

FORM-IN-PLACE GASKET

The engine has several areas where the form-in-place gasket (FIPG) is in use. To ensure that the gasket fully serves its purpose, it is necessary to observe some precautions when applying the gasket. Bead size, continuity and location are of paramount importance.
Too thin a bead could cause leaks. Too thick a bead, on the other hand, could be squeezed out of location, causing blocking or narrowing of the fluid feed line. To eliminate the possibility of leaks from a joint, therefore, it is absolutely necessary to apply the gasket evenly without a break, while observing the correct bead size.
Since the FIPG used in the engine hardens as it reacts with the moisture in the atmospheric air, it is normally used in the metallic flange areas.

Disassembly

The parts assembled with the FIPG can be easily disassembled without use of a special method. In some cases, however, the sealant between the joined surfaces may have to be broken by lightly striking with a mallet or similar tool. A flat gasket scraper may be lightly hammered in between the joined surfaces. In this case, however, care must be taken to prevent damage to the joined surfaces.

Surface Preparation

Thoroughly remove all substances deposited on the gasket application surfaces, using a gasket scraper or wire brush. Check to ensure that the surfaces to which the FIPG is to be applied is flat. Make sure that there are no oils, greases and foreign substances deposited on the application surfaces. Do not forget to remove the old sealant remaining in the bolt holes.

Form-In-Place Gasket Application

Applied FIPG bead should be of the specified size and without breaks. Also be sure to encircle the bolt hole circumference with a completely continuous bead. The FIPG can be wiped away unless it is hardened. While the FIPG is still moist (in less than 15 minutes), mount the parts in position. When the parts are mounted, make sure that the gasket is applied to the required area only. In addition, do not apply any oil or water to the sealing locations or start the engine until a sufficient amount of time (about one hour) has passed after installation is completed.
The FIPG application procedure may vary on different areas. Observe the procedure described in the text when applying the FIPG.

2. SPECIAL TOOLS

Tool	Number	Name	Use
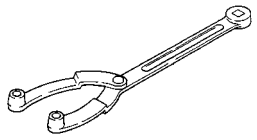	MB990767	Front hub and flange yoke holder	• Removal of crankshaft puley • Installation of injection pump assembly
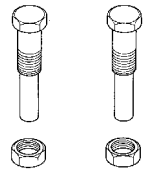	MD998754	Crankshaft pulley holder pin	
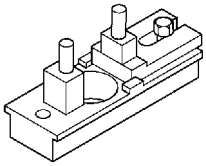	157944-9520 (Zexel)	Plate	Removal and installation of retaining nut
	105789-0010 (Zexel)	Nozzle cleaning tool	Cleaning of nozzle and needle valve
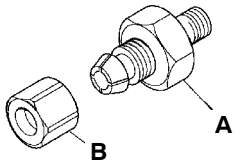	157892-4420	Adjusting device	• Adjustment of valve opening pressure • Checking needle valve maximum lift • Checking injection nozzle assembly
	157892-4400: A	Holder	
	157892-1000: B	Nut	
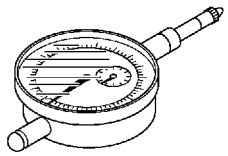	157954-3801	Dial gauge	
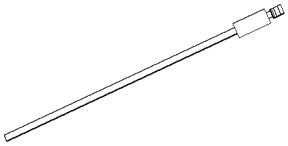	157892-7200	Pin	
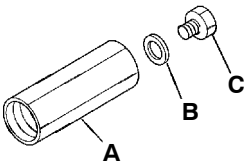	157892-5120	Retaining nut	
	157892-5100: A	Retaining nut	
	026508-1140: B	Gasket	
	157892-1600: C	Plug	
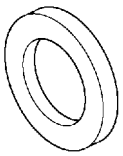	157892-3200	Gasket	

Tool	Number	Name	Use
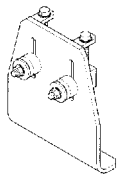	MH063490	Cam sprocket holder kit	Holding cam sprocket
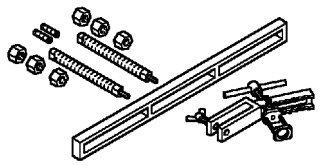	MD998772	Valve spring compressor	Removal and installation of valve cotter
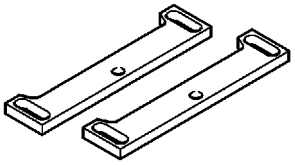	MD998784	Valve spring compressor adaptor plate	
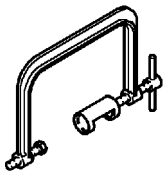	MD999597	Valve spring compressor	
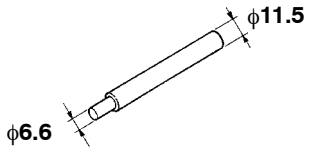	MD998665	Valve guide remover	Removal of valve guide
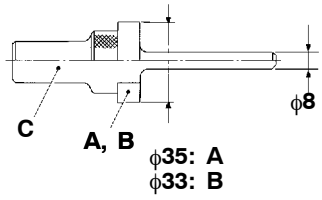	MH063611: A	Calking ring inlet	Installation of valve seat
	MH063612: B	Calking ring exhaust	
	MH063613: C	Calking tool body	
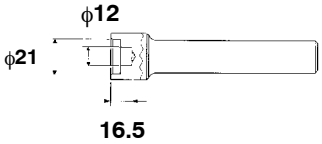	MH063610	Valve guide installer	Installation of valve guide

Tool	Number	Name	Use
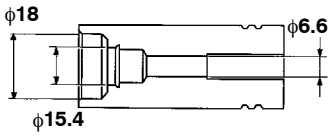	MH063609	Valve stem seal installer	Installation of valve stem seal
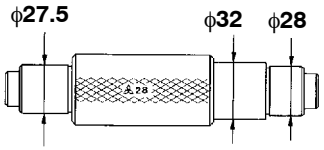	MH062463	Idler gear bush puller	Removal and installation of idler gear bush
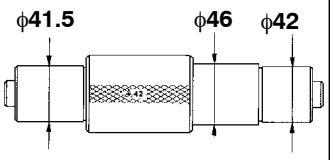	MH062462	Idler sprocket bush puller	Removal and installation of idler sprocket bush
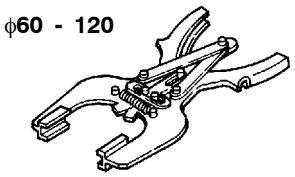	MH060014	Piston ring tool	Removal and installation of piston rings
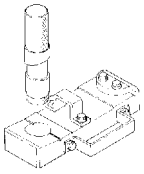	MH062574	Connecting rod bush puller kit	Removal of connecting rod bush
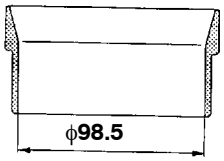	MH063484	Piston guide	Installation of piston
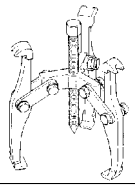	MH062469	Gear puller	Removal of crankshaft gear
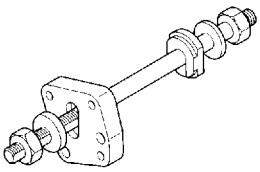	MH062490	Balance shaft bush remover	Removal of balance shaft bush
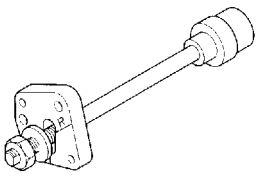	MH062717	Balance shaft bush installer	

Tool	Number	Name	Use
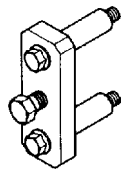	MH062567	Gear puller	Removal of injection pump gear
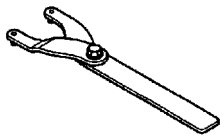	MH063473	Pin wrench arm assembly	Assembling of injection pump gear

3. GENERATOR ASSEMBLY

REMOVAL AND INSTALLATION

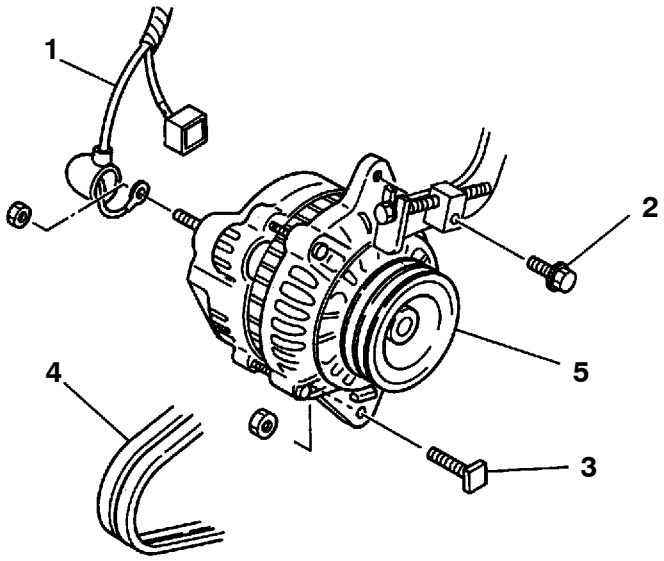

4ME0549

Removal steps

1. Wiring harness
2. Adjusting bolt
3. Bolt
4. V-belt (Refer to page 11B-5-1.)

▶A◀ 5. Generator

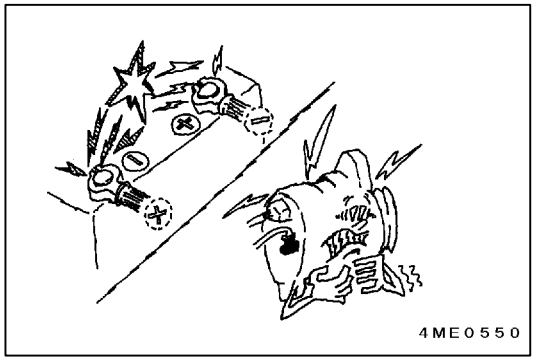

REMOVAL SERVICE POINT

▶A◀ GENERATOR INSPECTION

Caution in Handling Generator

The following caution should be taken when servicing the generator **5**.

Be sure to connect the generator **5** to the battery correctly. Reversed polarity causes an excessive current to flow from the battery to the generator **5**, damaging the diodes and voltage regulator.

4. GLOW PLUG

REMOVAL AND INSTALLATION

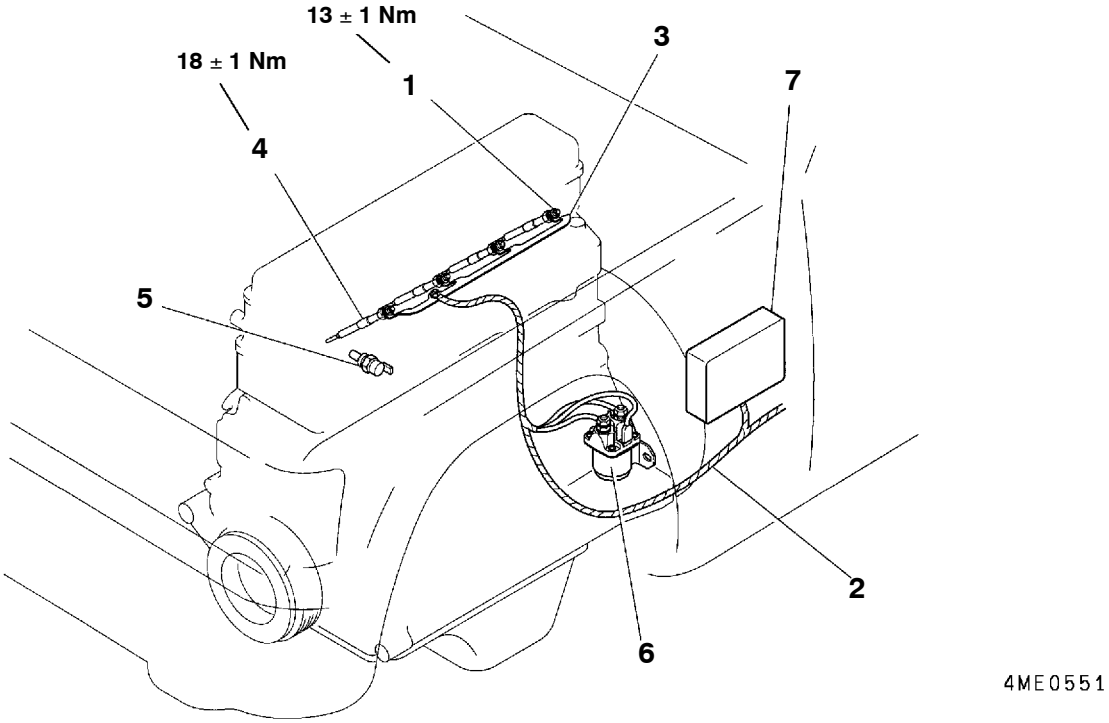

Removal steps

1. Nut
2. Glow plug wiring harness
3. Connection plate
4. Glow plug
5. Coolant temperature sensor (For engine control)
6. Glow relay
7. Engine ECU

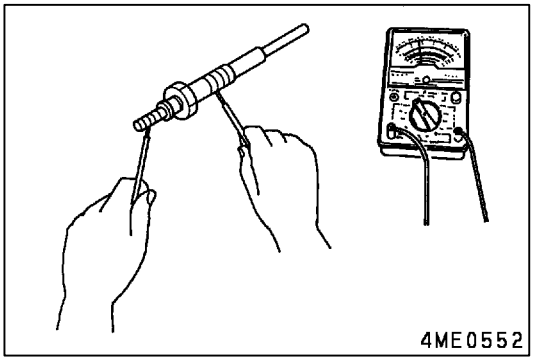

INSPECTION

GLOW PLUG

Measure resistance of the glow plug **4**. Replace the glow plug if the reading deviates from the specified standard value.

Standard value: 1.1 Ω

5. COOLING FAN, V-BELT AND WATER PUMP

REMOVAL AND INSTALLATION

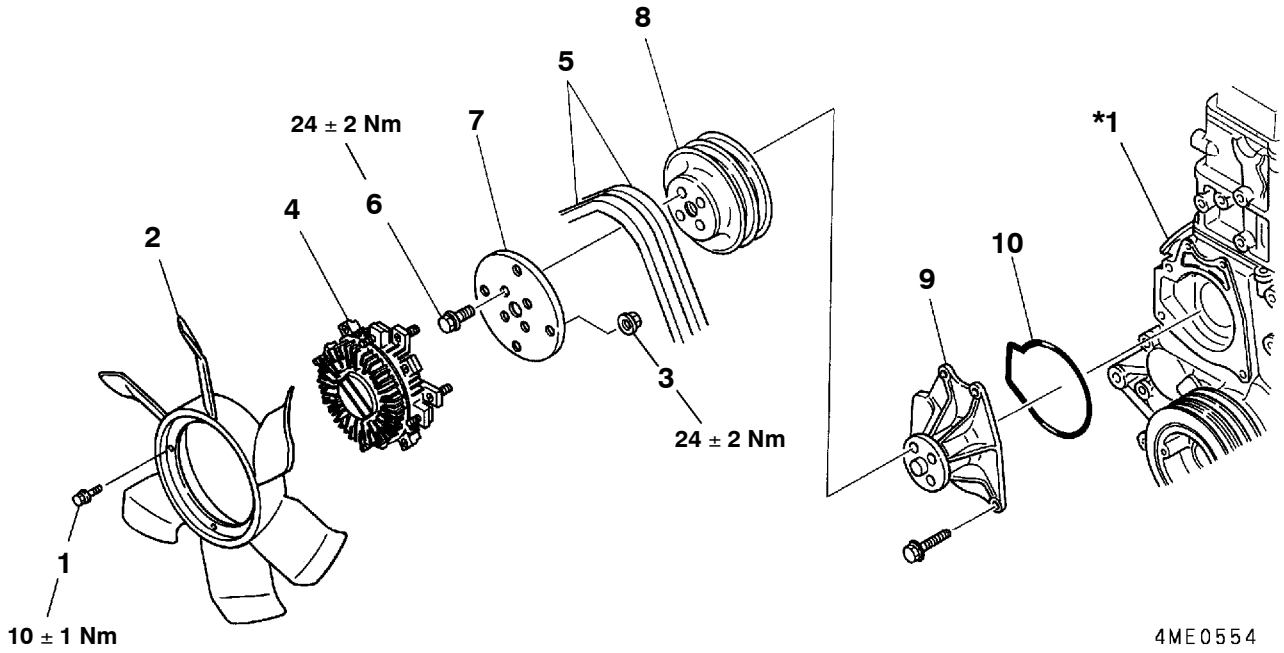

Removal steps

1. Bolt
2. Cooling fan
3. Nut
4. Auto-cooling fan coupling
5. V-belt
6. Bolt
7. Coupling plate
8. Water pump pulley
9. Water pump assembly
10. O-ring

*1: Timing gear case

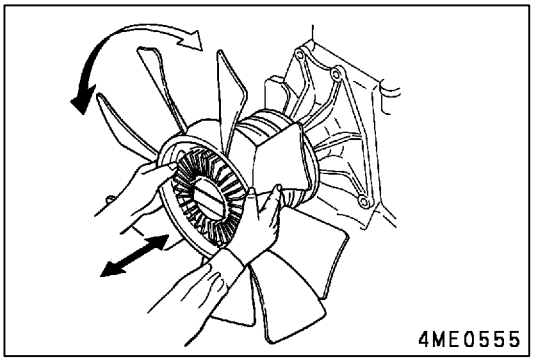

INSPECTION

1. AUTO-COOLING FAN COUPLING

Check the auto-cooling fan coupling **4**, and replace if any of the following conditions exists:

(1) Hydraulic fluid is leaking from the hermetically sealed housing.
(2) The coupling turns irregularly or produces an abnormal sound when rotated by hand due to defective inside bearing.
(3) The coupling has an excessive axial play when moved with the engine in a cold state.

2. V-BELT

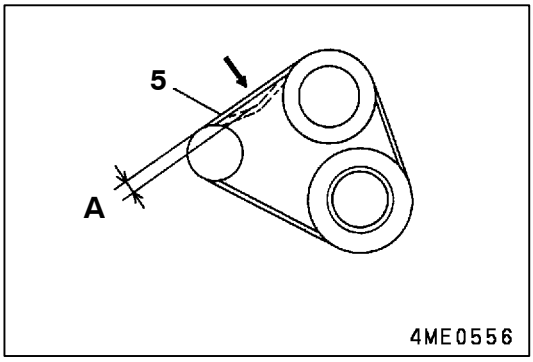

(1) Push the V-belt **5** at its midpoint with a force of approximately 98 N as shown and read the amount of deflection **A**.
(2) If the reading deviates from the specified standard value, accomplish the following adjustment.

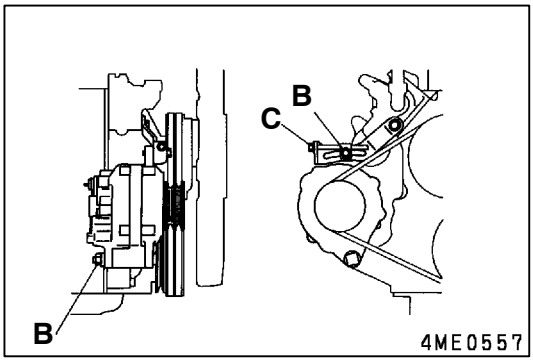

(3) Loosen the bolt and nut **B** holding the generator, and adjust the tension of the V-belt **5** using the adjusting bolt **C**.

Caution

1. **Be sure to retighten the bolt and nut securely after the adjustment.**
2. **Excessive tension damages not only the V-belt 5 itself but bearings elsewhere.**
3. **Be sure to replace the V-belt 5, when necessary, in pairs and keep it slush-free.**

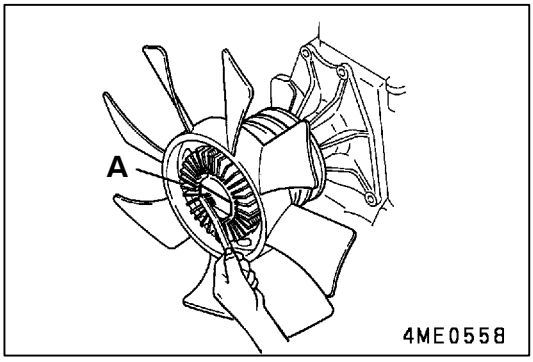

CLEANING

Remove foreign matters, if any, from the bimetal **A** using care not to apply unnecessary force to it.

6. WATER HOSES AND PIPES

REMOVAL AND INSTALLATION

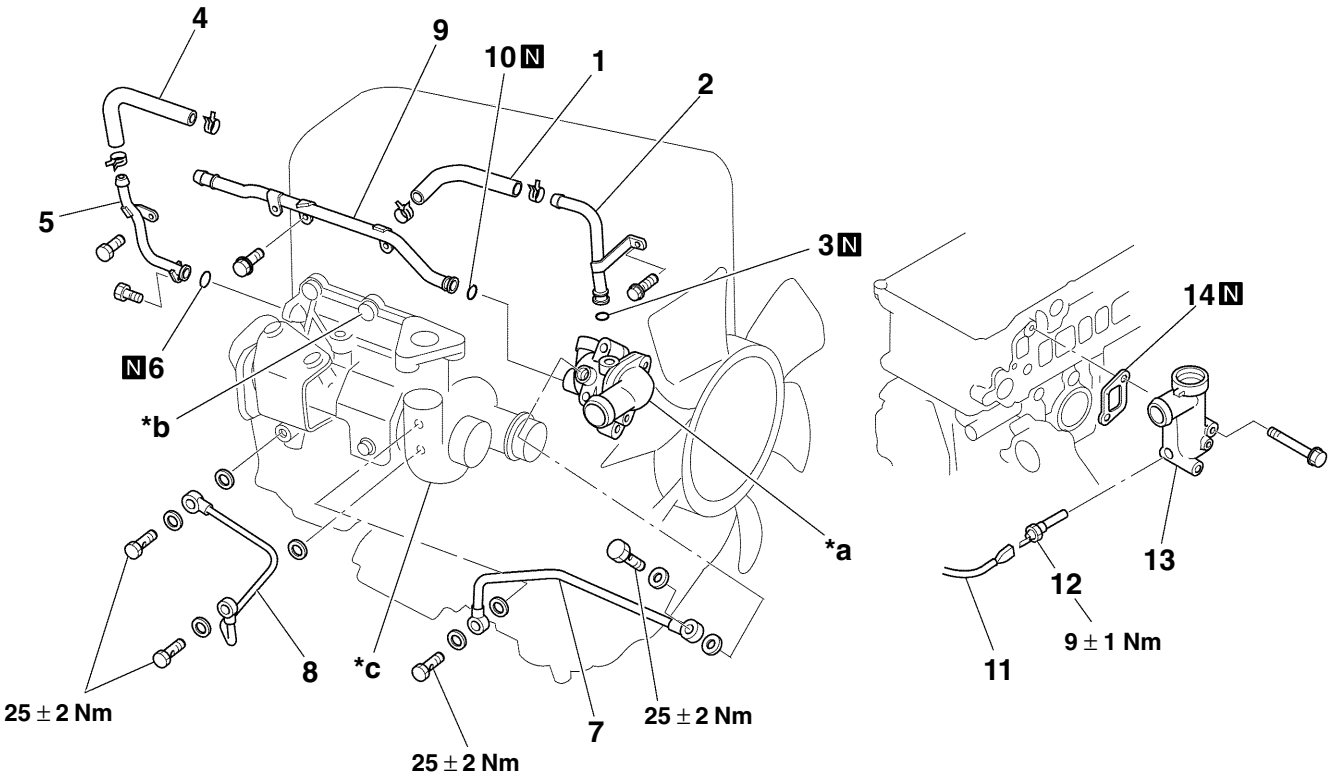

Removal steps

1. Water hose
2. EGR water outlet pipe
3. O-ring
4. Water hose
5. EGR water inlet pipe
6. O-ring

(1–6: 2002 model PAJERO for Europe)

7. Turbocharger water outlet pipe
8. Turbocharger water inlet pipe
9. Heater return pipe
10. ▶A◀ O-ring
11. Harness
12. Coolant temperature sensor (For water temperature gauge)
13. Water outlet pipe
14. Gasket

*a: Thermostat case
*b: Oil cooler assembly
*c: Turbocharger assembly

INSTALLATION SERVICE POINTS

▶A◀ O-RING INSTALLATION

Caution
Engine oil swells O-rings. When installing the O-rings 4, be sure that they are free of engine oil.

7. THERMOSTAT

REMOVAL AND INSTALLATION

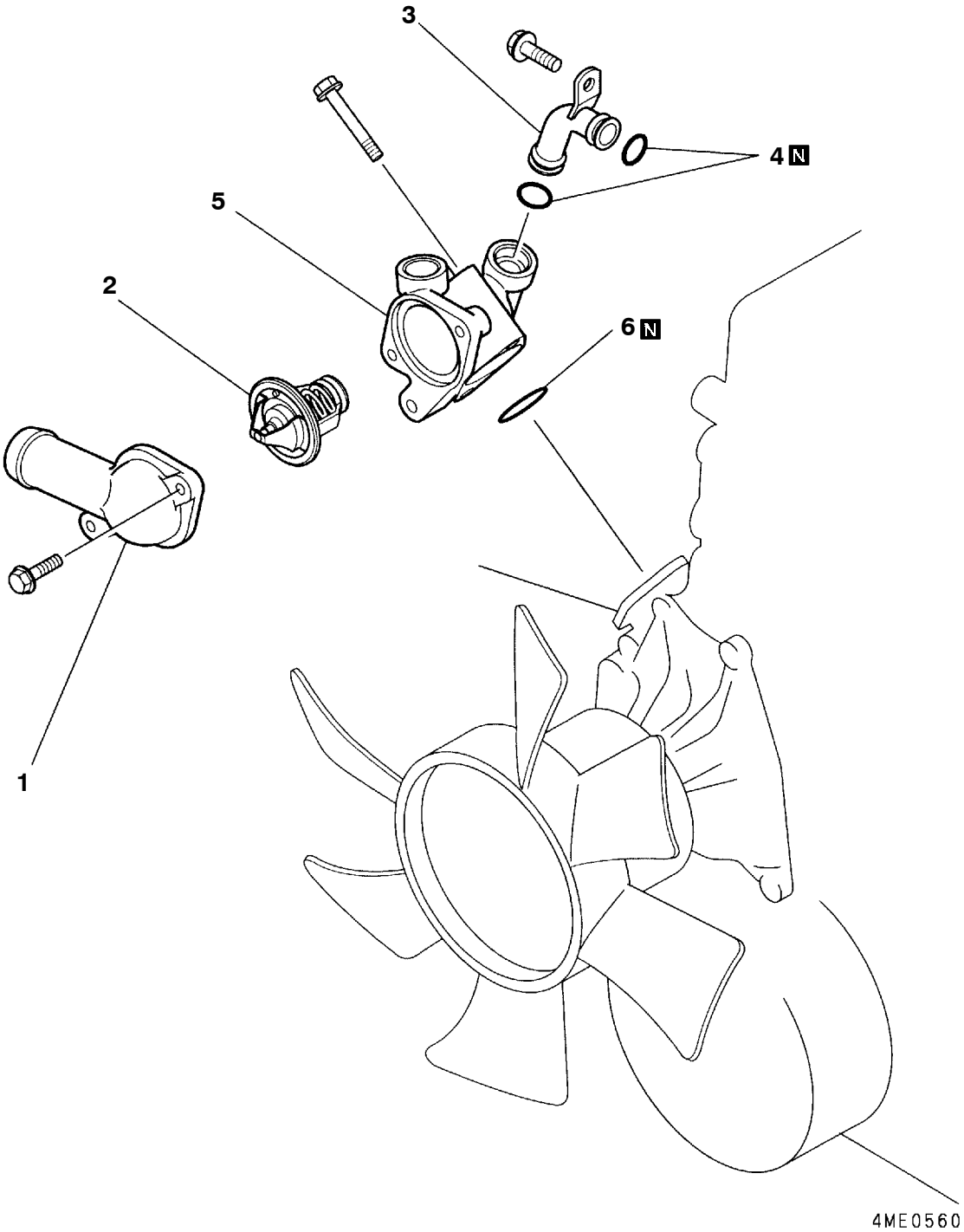

Removal steps

1. Thermostat cover
▶B◀ 2. Thermostat
3. Bypass pipe
▶A◀ 4. O-ring
5. Thermostat case
▶A◀ 6. O-ring

INSTALLATION SERVICE POINTS

▶A◀ O-RING INSTALLATION

Caution
Engine oil swells O-rings. When installing the O-rings 4 and 6, be sure that they are free of engine oil.

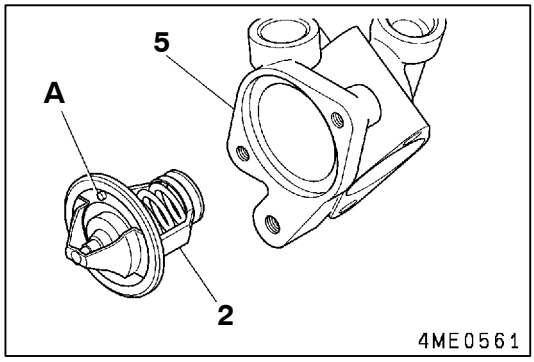

▶B◀ THERMOSTAT INSTALLATION

Install the thermostat **2** with its jiggle valve **A** located at the uppermost position.

8. EGR VALVE ASSEMBLY

REMOVAL AND INSTALLATION
<EXCEPT 2002 MODEL PAJERO FOR EUROPE>

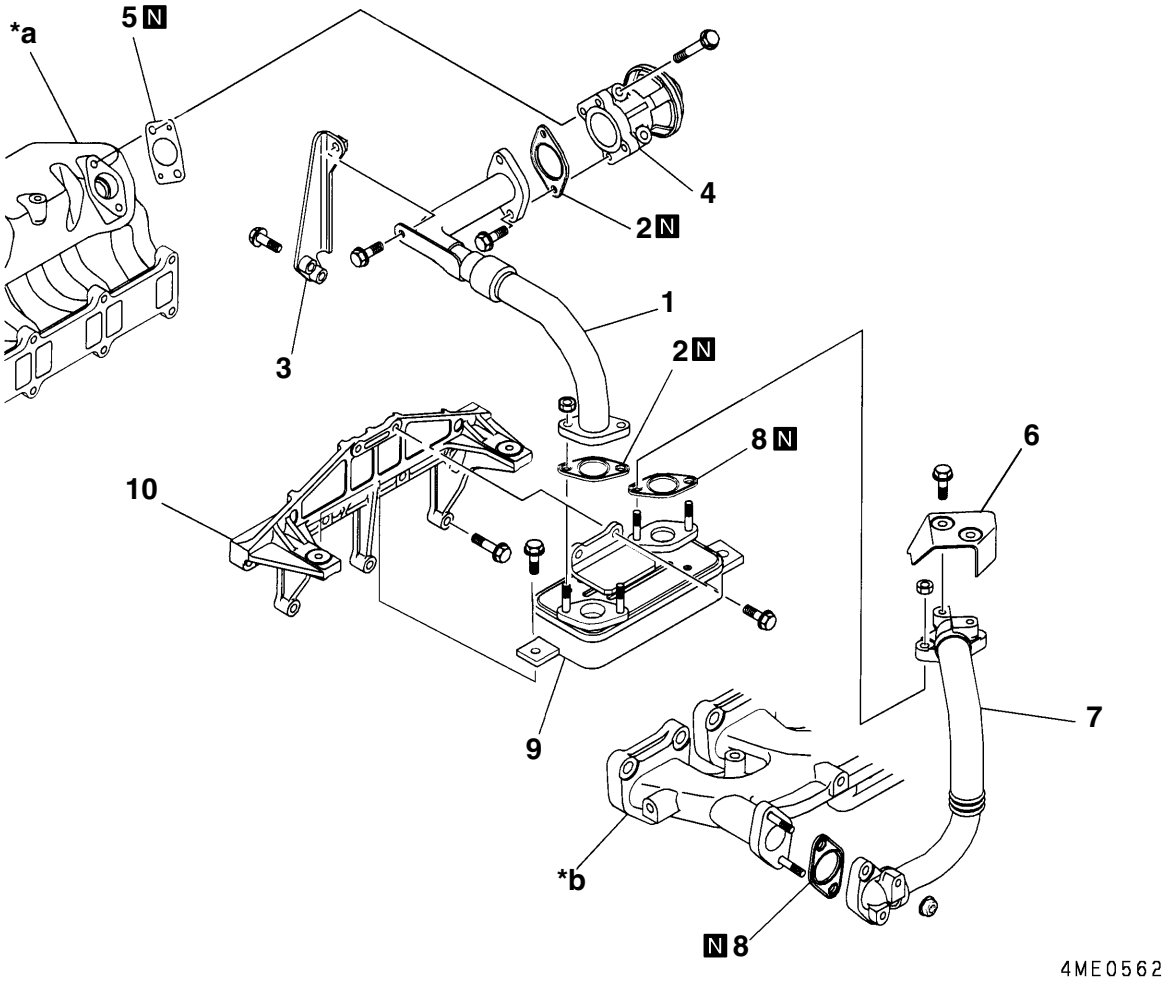

Removal steps

1. EGR pipe
2. Gasket
3. EGR pipe stay
4. EGR valve
5. Gasket
6. Insulator
7. EGR pipe
8. Gasket
9. Air intake box
10. Air intake box bracket

*a: Intake manifold
*b: Exhaust manifold

REMOVAL AND INSTALLATION
<2002 MODEL PAJERO FOR EUROPE>

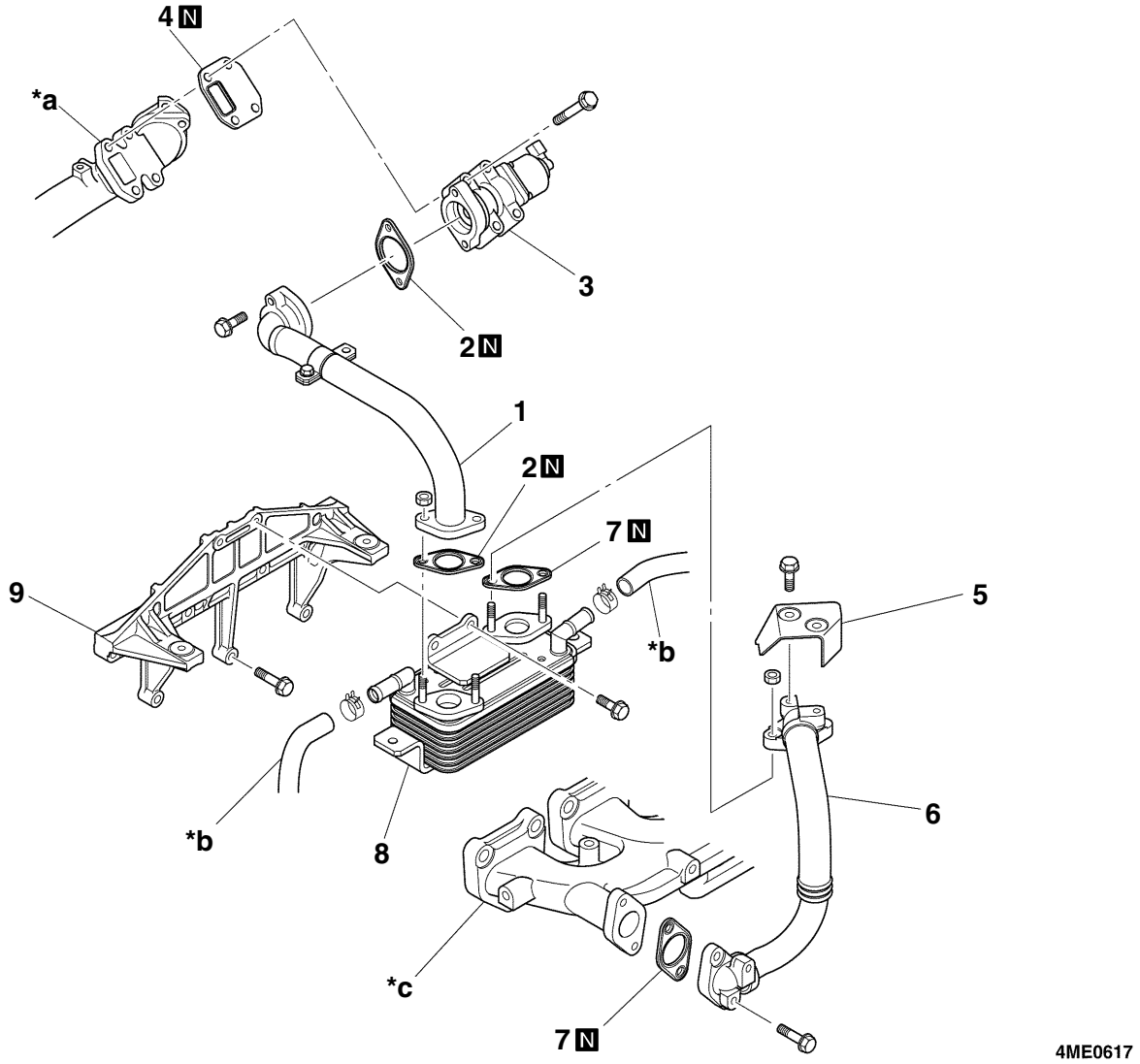

Removal steps

1. EGR pipe
2. Gasket
3. EGR valve
4. Gasket
5. Insulator
6. EGR pipe
7. Gasket
8. EGR cooler
9. EGR cooler bracket

*a: Air intake pipe
*b: Water hose
*c: Exhaust manifold

CLEANING

(1) Check the EGR valve **3** for carbon or sludge deposits. If present, remove the carbon or sludge using a wire brush.
(2) Check the exhaust gas passage in the EGR cooler **8** for carbon or sludge deposits. If present, remove the carbon or sludge using a cleaning solvent.
(3) If there are many deposits in the coolant passage of the EGR cooler **8**, wash them off throughly.

Caution
Do not use solvent or detergent to clean the EGR valve 3. The solvent or detergent penetrating into the motor assembly could cause it to malfunction.

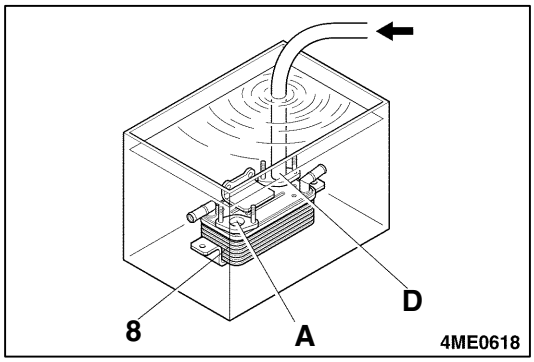

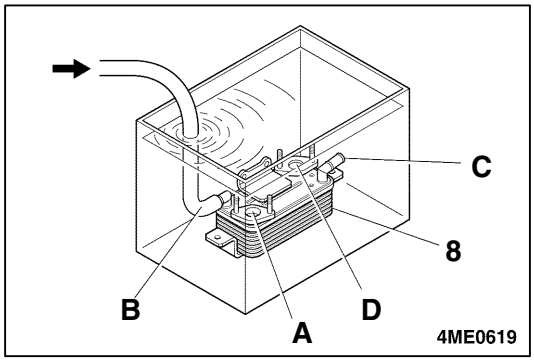

INSPECTION

EGR cooler

(Exhaust gas passage)
(1) Fit a cap on the exhaust gas outlet **A** and connect a hose to the exhaust gas inlet **D** of the EGR cooler **8**. Then place the EGR cooler **8** in a container of water. The cooler's coolant passage should be filled with coolant.
(2) Apply an air pressure of 294 kPa to the hose and check that there is no air leakage anywhere in the EGR cooler **8**.
(3) If there is air leakage, replace the EGR cooler **8**.

(Coolant passage)
(1) Fit caps on the exhaust gas inlet **D**, exhaust gas outlet **A** and coolant outlet **C**, and connect a hose to the coolant inlet **B** of the EGR cooler **8**. Then place the EGR cooler **8** in a container of water.
(2) Apply an air pressure of 196 kPa to the hose and check that there is no air leakage anywhere in the EGR cooler **8**.
(3) If there is air leakage, replace the EGR cooler **8**.

9. INTAKE MANIFOLD

REMOVAL AND INSTALLATION
<EXCEPT 2002 MODEL PAJERO FOR EUROPE>

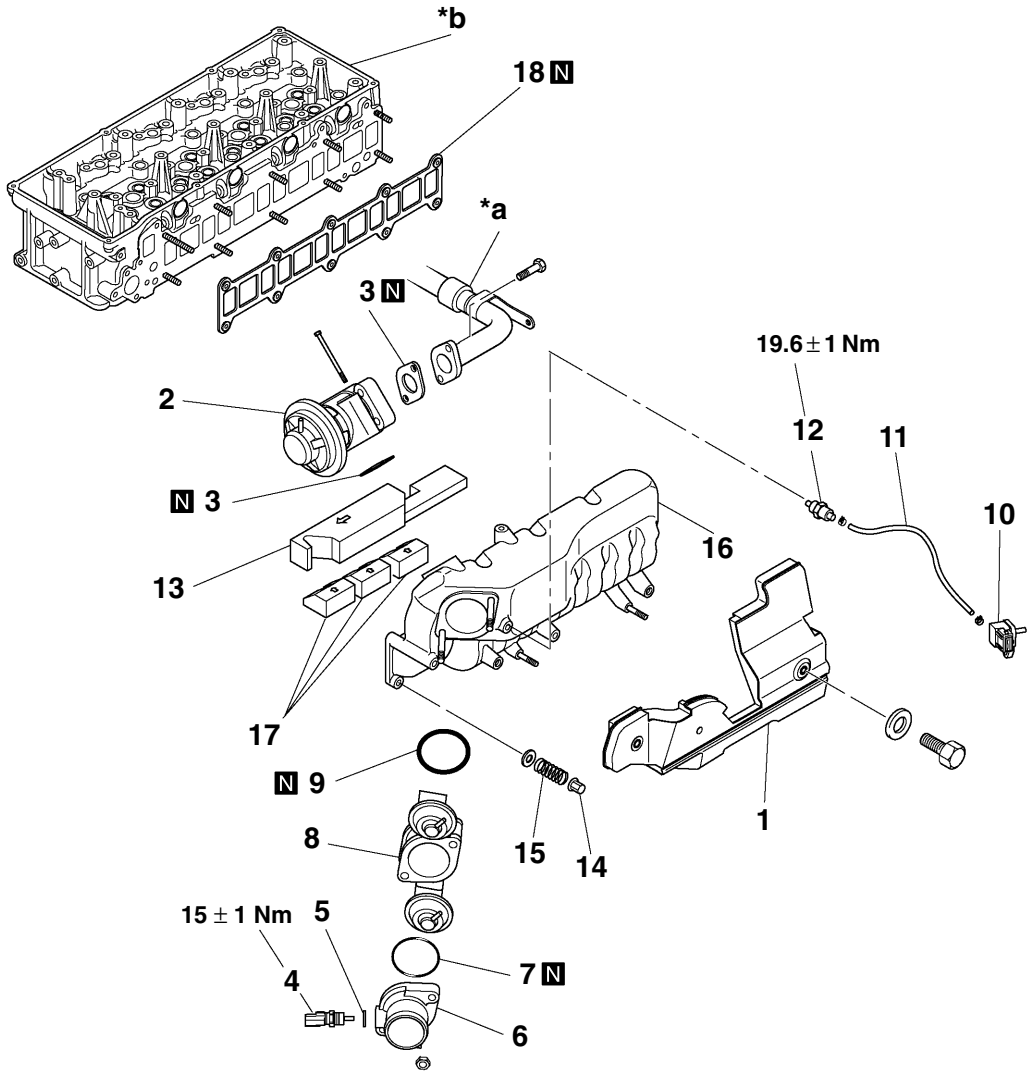

Removal steps

1. Side cover
2. EGR valve
3. Gasket
4. Boost air temperature sensor
5. Gasket
6. Air inlet fitting
7. O-ring
8. Throttle body assembly
9. O-ring
10. Boost pressure sensor
11. Boost hose
12. Gas filter assembly
13. Rubber spacer A
14. Nut
15. Spring
16. Intake manifold
17. Rubber spacer B

▶A◀ 18. Gasket

*a: EGR pipe
*b: Cylinder head

REMOVAL AND INSTALLATION
<2002 MODEL PAJERO FOR EUROPE>

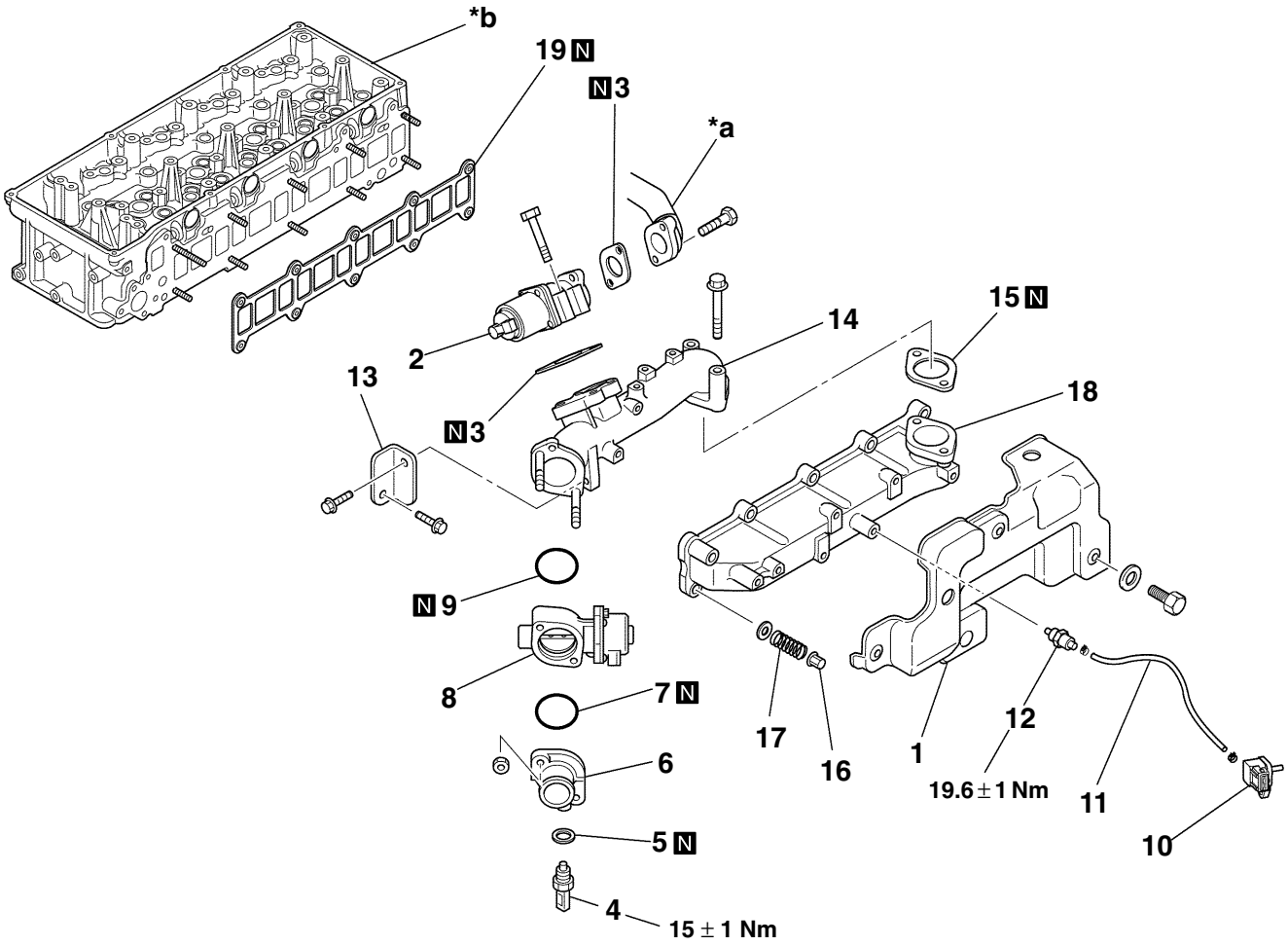

Removal steps

1. Side cover
2. EGR valve
3. Gasket
4. Boost air temperature sensor
5. Gasket
6. Air inlet fitting
7. O-ring
8. Throttle body assembly
9. O-ring
10. Boost pressure sensor
11. Boost hose
12. Gas filter assembly
13. Bracket
14. Air intake pipe
15. Gasket
16. Nut
17. Spring
18. Intake manifold

▶A◀ 19. Gasket

*a: EGR pipe
*b: Cylinder head

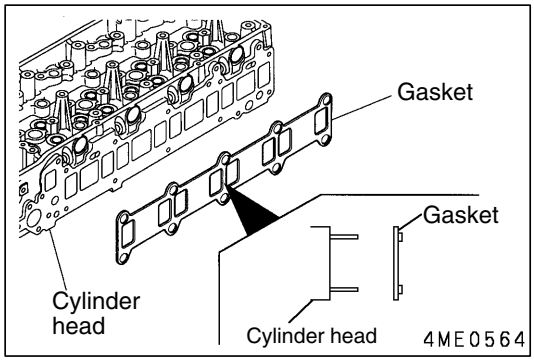

INSTALLATION SERVICE POINT

▶A◀ GASKET INSTALLATION

Fit the gasket to the cylinder head in the direction shown in the illustration.

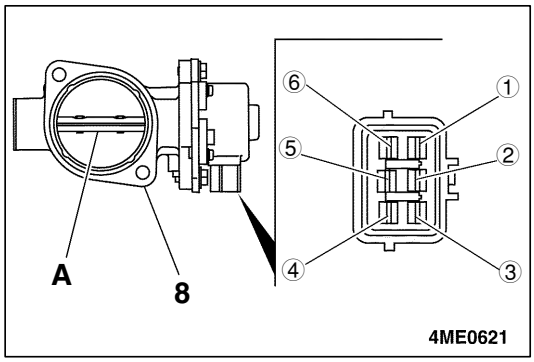

INSPECTION

THROTTLE BODY ASSEMBLY

(1) Move the throttle valve **A** by hand to check that it can be moved smoothly without getting stuck at any intermediate point.
(2) If the throttle valve **A** does not move smoothly, replace the throttle body assembly **8**.
(3) Check the throttle valve **A** for damage or deformation.
(4) If the throttle valve **A** is damaged and/or deformed, replace the throttle body assembly **8**.
(5) Measure the inter-terminal resistances ①–②, ②–③, ④–⑤ and ⑤–⑥ for the throttle body temperature ranges shown below.
(6) If any of the measurements is not within the standard value ranges, replace the throttle body assembly **8**.

		Standard value Ω
Throttle body temperature °C	10 – 50	12 – 20
	50 – 100	15 – 23

10. TURBOCHARGER ASSEMBLY

REMOVAL AND INSTALLATION

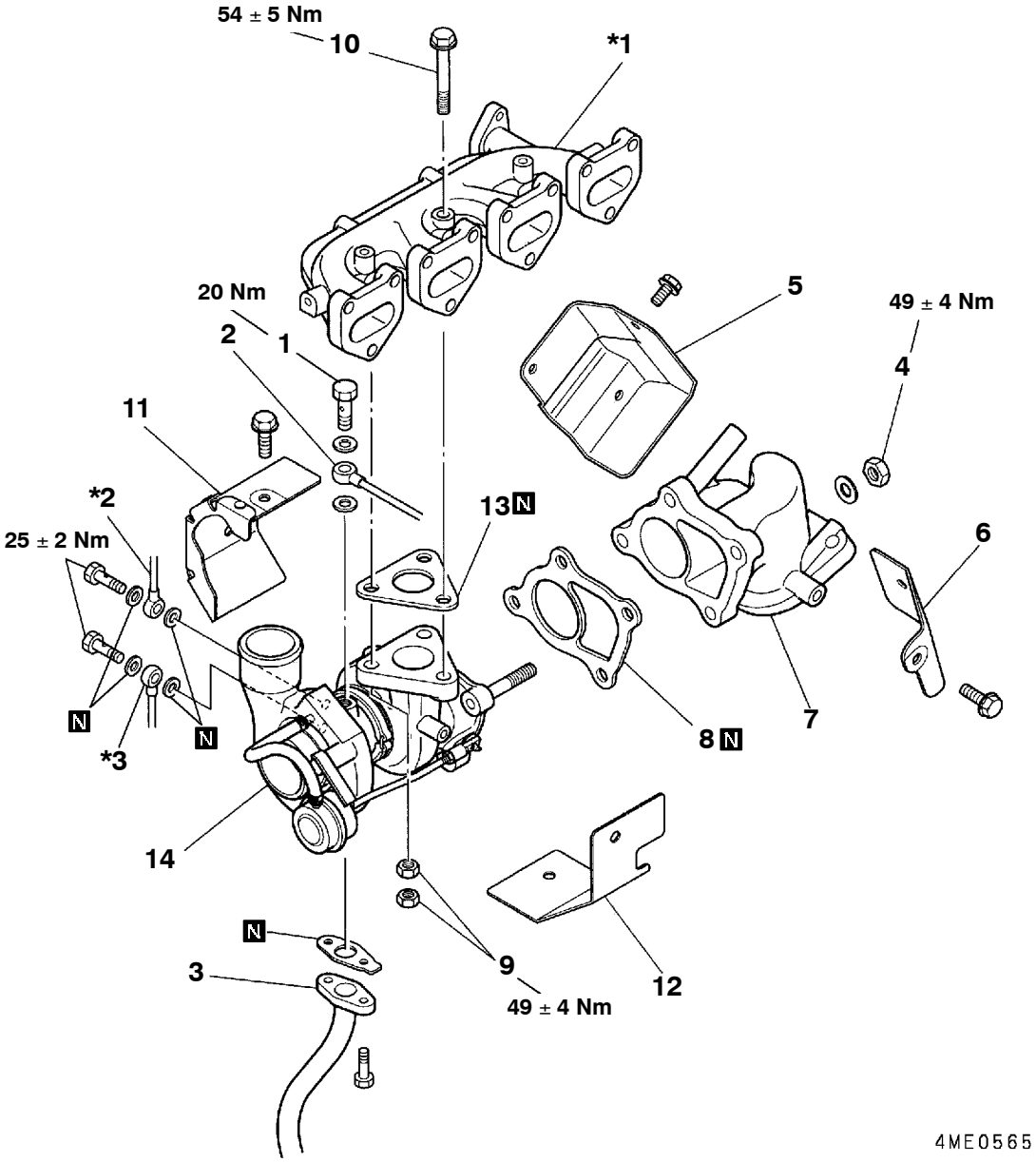

Removal steps

1. Eyebolt
2. Oil feed pipe
3. Oil return pipe
4. Nut
5. Coupler insulator
6. Insulator
7. Coupler
8. Gasket
9. Nut
10. Bolt
11. Insulator B
12. Insulator A
13. Gasket

▶A◀ 14. Turbocharger assembly

*1: Exhaust manifold
*2: Turbocharger water outlet pipe (Refer to page 11B-6-1.)
*3: Turbocharger water inlet pipe (Refer to page 11B-6-1.)

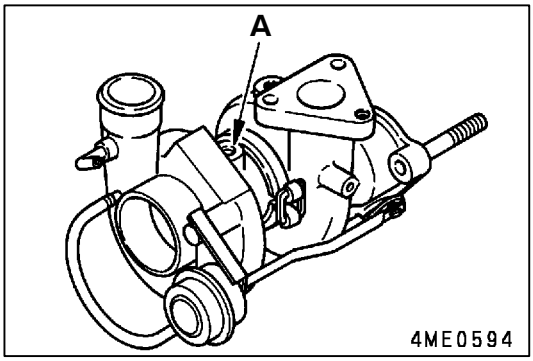

INSTALLATION SERVICE POINT

▶A◀ TURBOCHARGER ASSEMBLY INSTALLATION

(1) Prior to installing the turbocharger assembly **14**, pour engine oil into it through the oil inlet hole **A** to lubricate its component parts for smooth movement.

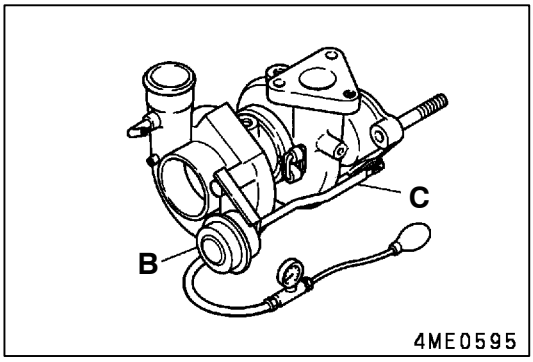

(2) Using a tester, apply pressure to the actuator **B** and read the pressure at which the rod **C** begins to move (approximately 1 mm).
If the reading deviates from the specified standard value, replace the actuator.

Standard value: 161 kPa

Caution
Do not load the actuator B with any more pressure than 181 kPa nor carry the turbocharger by holding the rod C, or the diaphragm may be damaged.

11. EXHAUST MANIFOLD

REMOVAL AND INSTALLATION

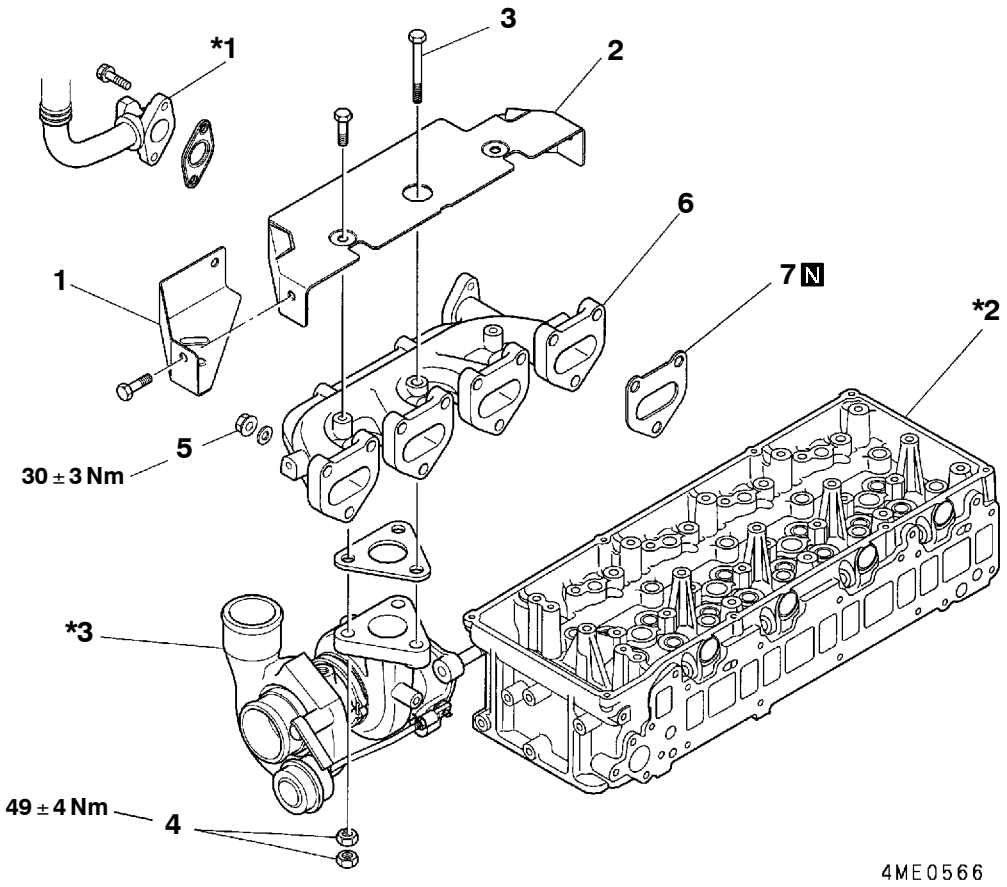

Removal steps

1. Insulator
2. Insulator
3. Bolt
4. Nut
5. Nut
6. Exhaust manifold
7. Gasket

*1: EGR pipe
*2: Cylinder head
*3: Turbocharger

12. INJECTION PUMP ASSEMBLY

REMOVAL AND INSTALLATION

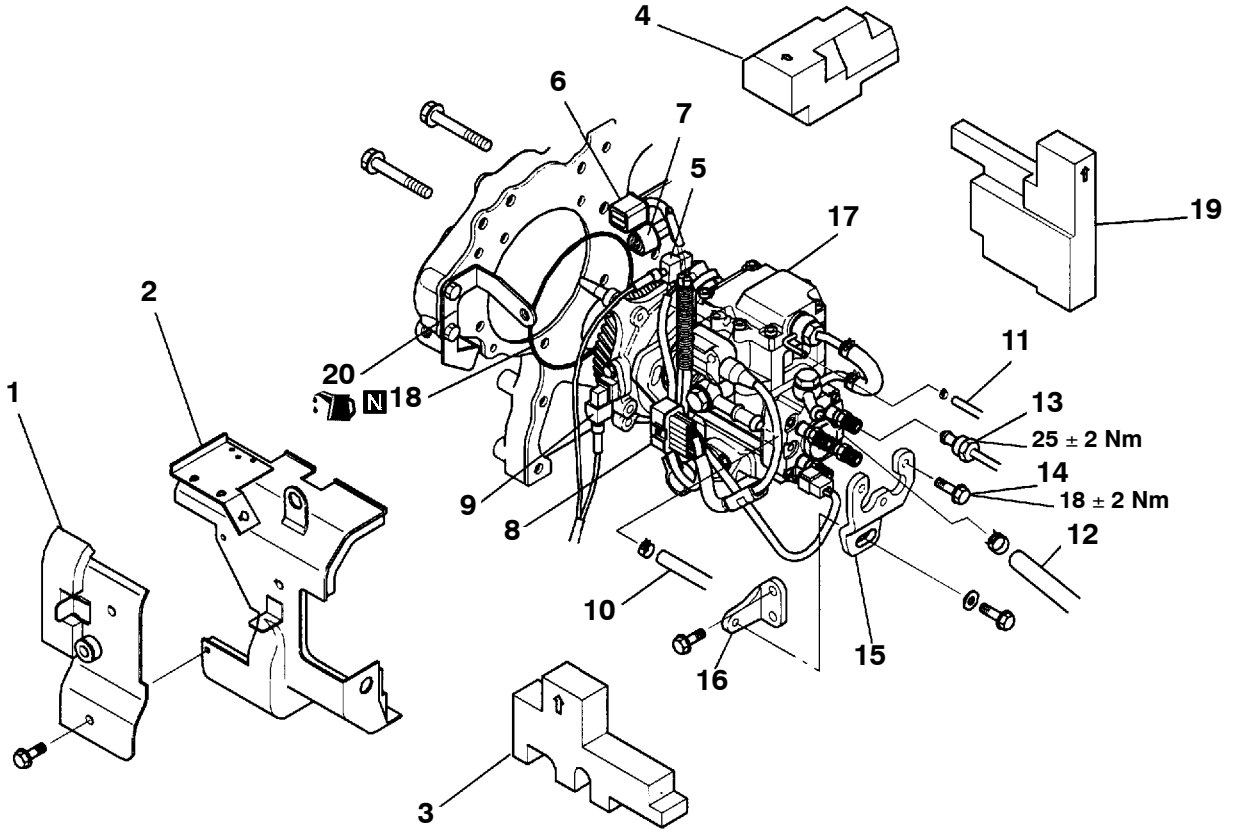

Removal steps

1. Injection pump cover B
2. Injection pump cover A
3. Rubber spacer
4. Rubber spacer
5. Harness
6. Harness
7. Harness
8. Harness
9. Harness
10. Fuel return hose
11. Fuel leak-off hose
12. Fuel suction hose
◀A▶ ▶B◀ 13. Injection pipe
14. Bolt
15. Pump stay
16. Pump stay
▶A◀ 17. Injection pump assembly
18. O-ring
19. Rubber spacer
20. Stay

Caution

1. **Fuel is highly flammable. Keep it away from flames and sources of heat.**
2. **Be sure to wipe up spilt fuel completely. It could catch fire.**
3. **Have the injection pump assembly 17 serviced at an appropriate Zexel service station.**
4. **Dust particles entering the injection pump assembly 17 can seriously affect the engine performance. To prevent it, fully cover the openings left after the removal of parts such as pipes and hoses.**
5. **Before installing the injection pipe 13, check to ensure that the pipe seating surface is free from any damage and unevenness.**

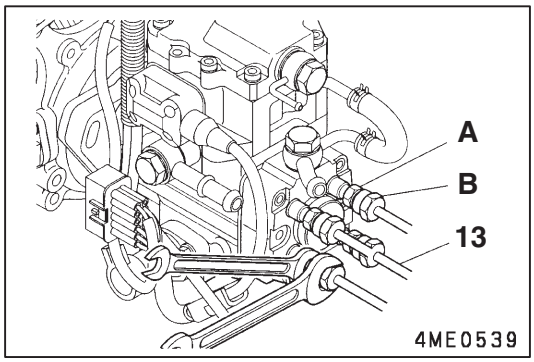

REMOVAL SERVICE POINT

◀A▶ INJECTION PIPE REMOVAL

Loosen the union nut **B** of the fuel injection pipe **13** while locking the delivery valve holder **A** to prevent it from rotating together.

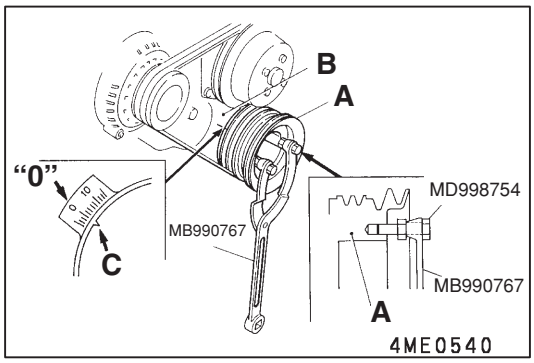

INSTALLATION SERVICE POINTS

▶A◀ INJECTION PUMP ASSEMBLY INSTALLATION

(1) Turn the crankshaft pulley **A** clockwise with the specified special tool to place the No.1 piston at the TDC on the compression stroke. Align the notch **C** in the crankshaft pulley with the timing mark "**0**" on the timing gear case **B**.

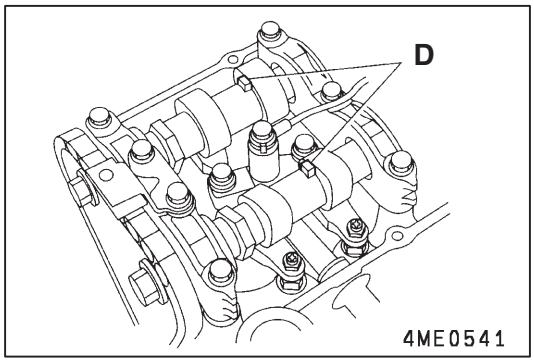

Caution

1. **If the dent D on the camshaft faces upward, the No.1 piston is at the TDC on the compression stroke. If not, rotate the crankshaft pulley A one more turn in normal direction.**
2. **Never rotate the crankshaft pulley A in reverse direction (counterclockwise). It may cause damage to the timing chain tensioner.**
   If the crankshaft is accidentally rotated in reverse direction, remove and reinstall the tensioner according to the correct installation procedure.

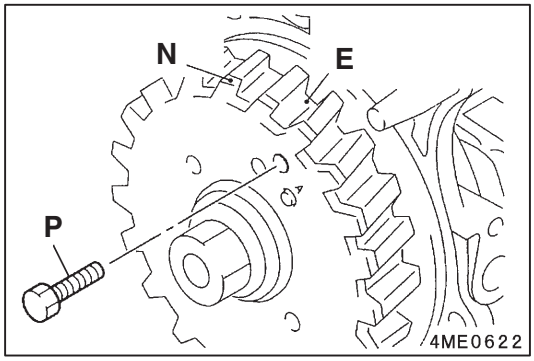

(2) Install bolt **P** (M 6 X 16) as shown in the illustration to prevent displacement of the injection pump gear **E** and injection pump sub gear **N** from each other.

NOTE
This step does not need to be carried out when the injection pump assembly **13** or injection pump gear assembly is replaced with a new one, as the new assemblies come with a bolt already installed.

(3) Check that the No. 1 cylinder piston is at the top dead center.

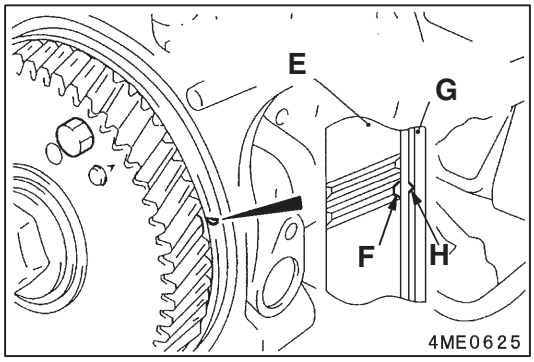

(4) Align the notch **F** on the injection pump gear assembly **E** with the mating mark **H** on the flange plate **G**.

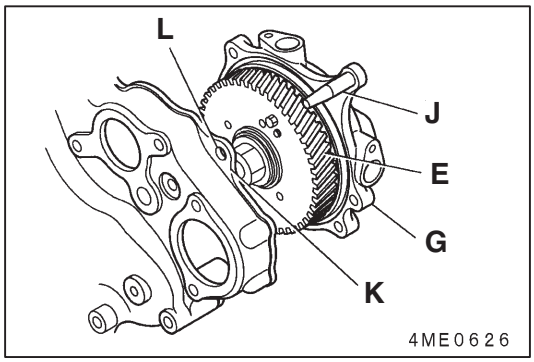

(5) Insert the guide bar **J** on the flange plate **G** into the guide hole **L** in the front plate **K**, and push the flange plate inward until the injection pump gear **E** is about to engage with the idler gear.

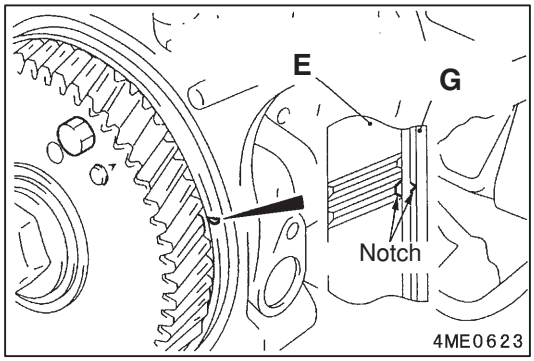

(6) Check that the notch on the flange plate **G** and the notch on the injection pump gear **E** are aligned, then push the injection pump assembly **13** inward.

NOTE
After the injection pump assembly **13** is installed, the notch on the injection pump gear **E** will become misaligned from the notch on the flange plate **G** by an amount equivalent to one gear tooth owing to the characteristics of the gear.

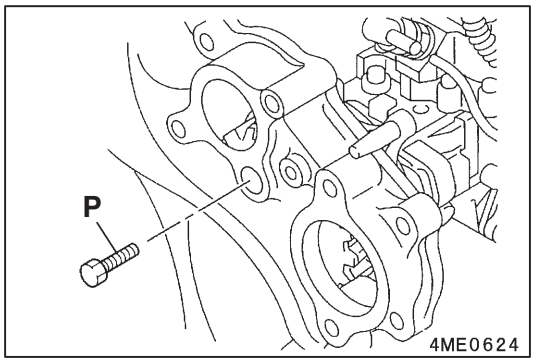

(7) Remove the bolt **P** that was installed in step 2.

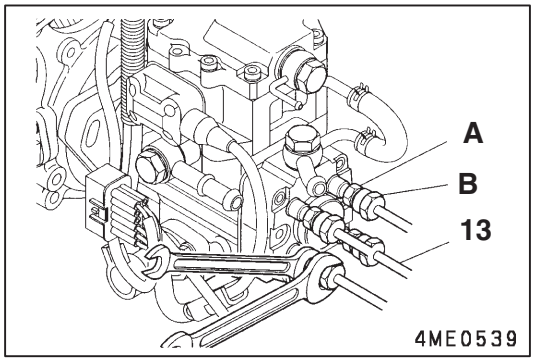

▶B◀ INJECTION PIPE INSTALLATION

Tighten the union nut **B** of the fuel injection pipe **13** while locking the delivery valve holder **A** to prevent it from rotating together.

13. INJECTION PUMP GEAR

REMOVAL AND INSTALLATION

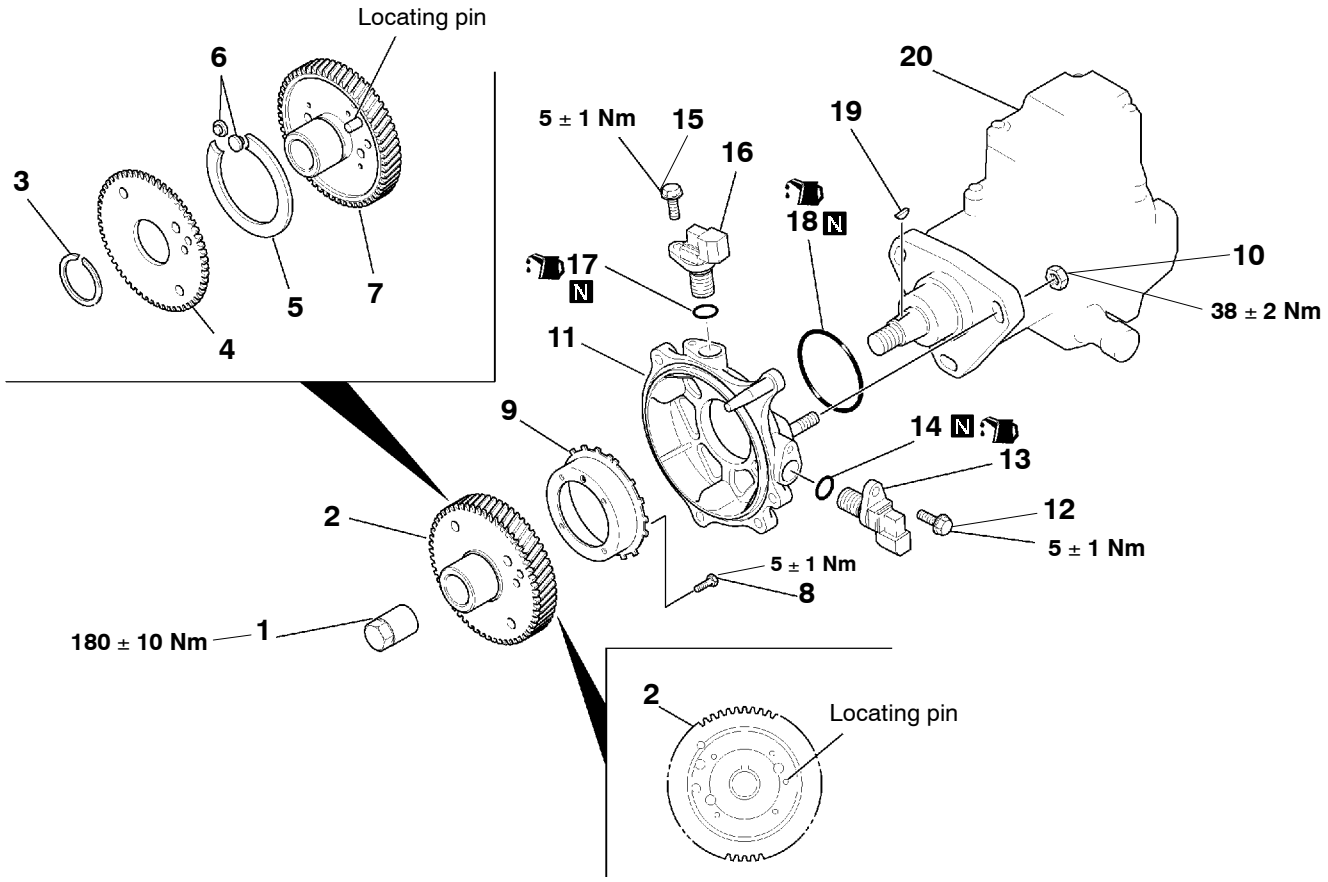

4ME0568

Removal steps

1. Nut
▶B◀ 2. Injection pump gear assembly
3. Snap ring
4. Injection pump sub gear
5. Spring
6. Pin
◀A▶ 7. Injection pump gear
8. Bolt
9. Sensor plate
10. Nut
▶A◀ 11. Flange plate
12. Bolt
13. Engine speed sensor II (Backup)
14. O-ring
15. Bolt
16. Engine speed sensor I (Main)
17. O-ring
18. O-ring
19. Key
20. Injection pump

Caution
Have the injection pump 20 serviced at an appropriate Zexel service station.

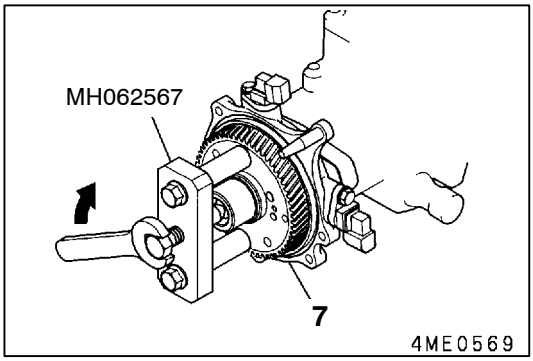

REMOVAL SERVICE POINT

◀A▶ INJECTION PUMP GEAR REMOVAL

Using the special tool, remove the injection pump gear **7**.

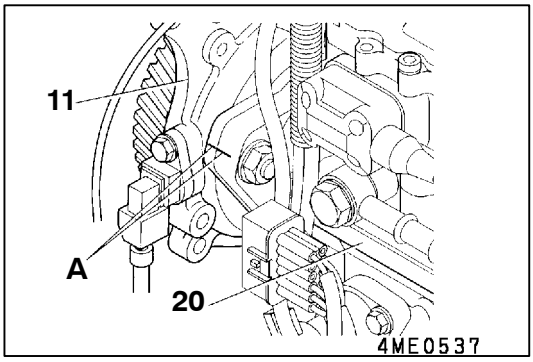

INSTALLATION SERVICE POINTS

▶A◀ FLANGE PLATE INSTALLATION

Install the flange plate **11** while aligning the mating marks **A** on the flange plate and the injection pump **20**.

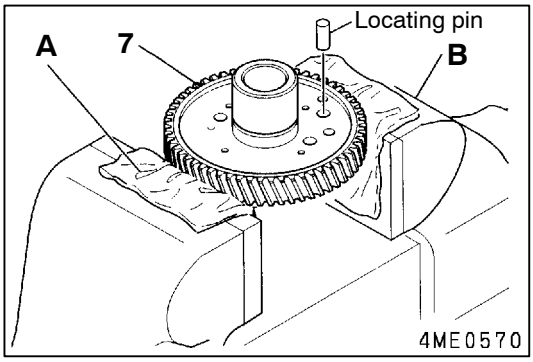

▶B◀ INJECTION PUMP GEAR ASSEMBLY INSTALLATION

(1) Clamp the injection pump gear **7** in a vice **B**. Protect the gear teeth with pieces of waste cloth **A** or the like as shown.
(2) Remove the locating pin from the pump gear **7**.

Caution
1. **Check the removed locating pin for deformation or damage before using it again.**
2. **Replace the locating pin if deformed or damaged.**

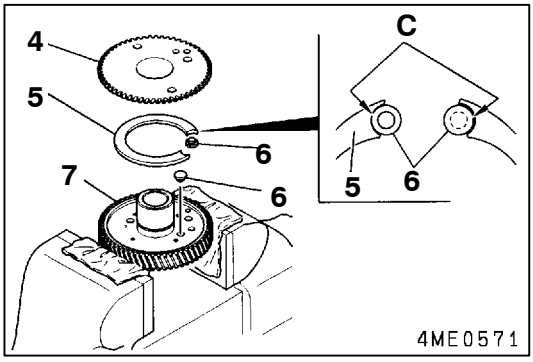

(3) Install the injection pump sub gear **4**, spring **5** and pins **6** onto the injection pump gear **7** as shown.
(4) Hook each pin **6** on the spring **5** at **C**.

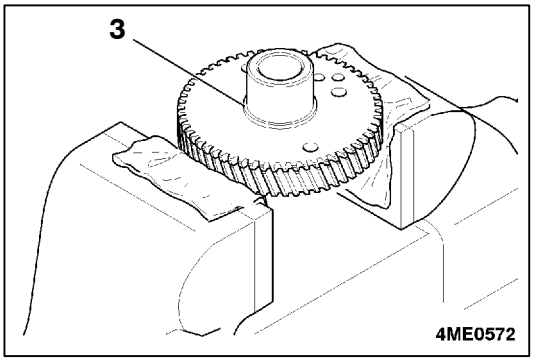

(5) Fit the snap ring **3** onto the injection pump gear.

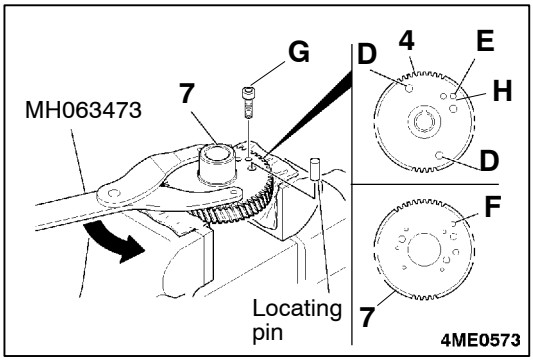

(6) Fit the special tool in the hole **D** in the sub gear **4**. Turning the sub gear with the special tool counter-clockwise, align the hole **E** in the sub gear **4** with the hole **F** in the pump gear **7**, then install the bolt **G**.
(7) In that state, strike the locating pin into the hole **H** in the sub gear **4**, then remove the bolt **G**.

14. ROCKER COVER, CAMSHAFT HOLDER ASSEMBLY AND CAMSHAFT

REMOVAL AND INSTALLATION

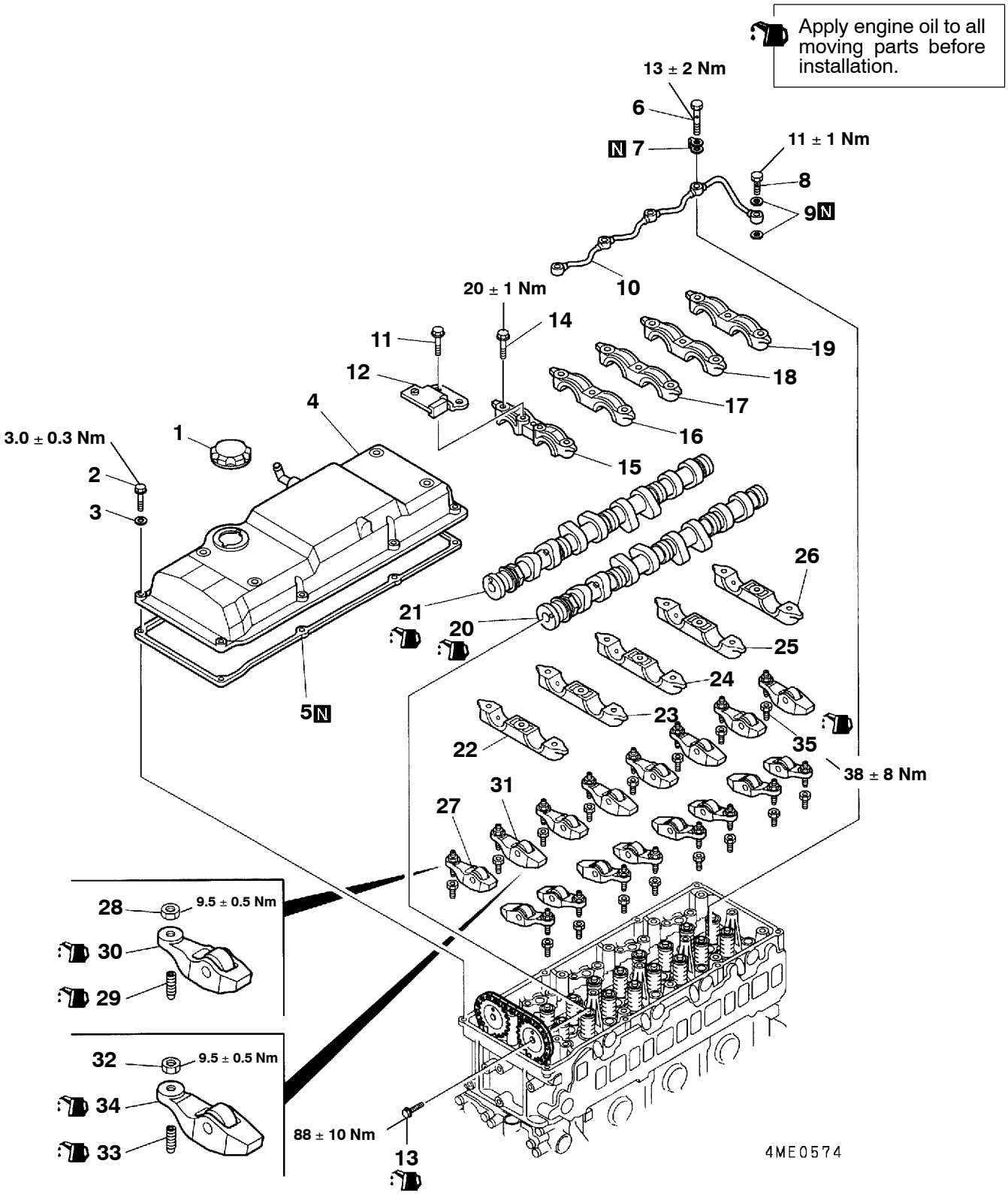

Removal steps

1. Oil filler cap
2. Bolt
3. Washer
4. ▶B◀ Rocker cover assembly
5. ▶B◀ Rocker cover gasket
6. Eyebolt
7. Gasket
8. Eyebolt
9. Gasket
10. Fuel leak-off pipe
11. Bolt
12. Upper guide plate
13. ◀A▶ ▶A◀ Bolt
14. Bolt
15. No.1 camshaft cap
16. No.2 camshaft cap
17. No.3 camshaft cap
18. No.4 camshaft cap
19. No.5 camshaft cap
20. Intake camshaft
21. Exhaust camshaft
22. No.1 camshaft holder
23. No.2 camshaft holder
24. No.3 camshaft holder
25. No.4 camshaft holder
26. No.5 camshaft holder
27. Rocker assembly (short)
28. Lock nut
29. Adjusting screw
30. Rocker (short)
31. Rocker assembly (long)
32. Lock nut
33. Adjustng screw
34. Rocker (long)
35. Pivot bolt

Caution
Since the camshaft caps 15 through 19 and camshaft holders 22 through 26 have been machined in pairs, replacement of either one of the pair is not allowed. Also, never alter their original combination.

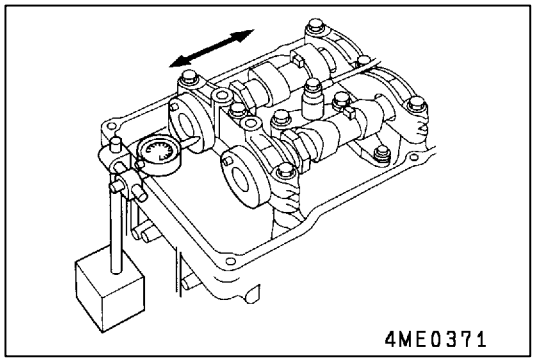

PRE-REMOVAL INSPECTION

CAMSHAFT END PLAY

Measure the end play, and if the reading deviates from the specified value, replace the defective part.

Standard value: 0.10 - 0.18 mm

Limit: 0.3 mm

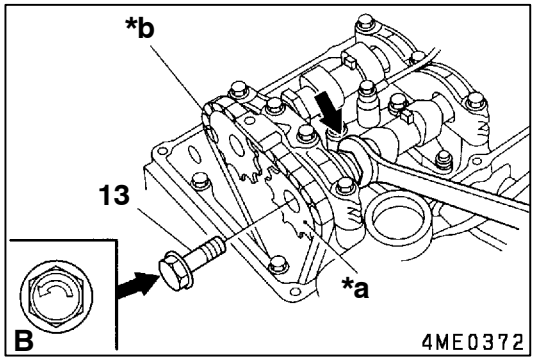

REMOVAL SERVICE POINT

◀A▶ BOLT REMOVAL

Caution

1. **When removing the bolt 13, be sure to lock the camshaft 20, 21 by holding the hexagonal part A with a proper wrench. Do not use the timing chain *b for the locking.**
2. **The bolt 13 is inversely threaded. The arrow mark on its head B indicates its turning direction when tightened. To remove, turn the bolt in the reverse direction.**
3. **The camshaft sprockets *a and timing chain *b must be meshed in a fixed position. Do not remove the timing chain from the camshaft sprockets unless absolutely necessary.**

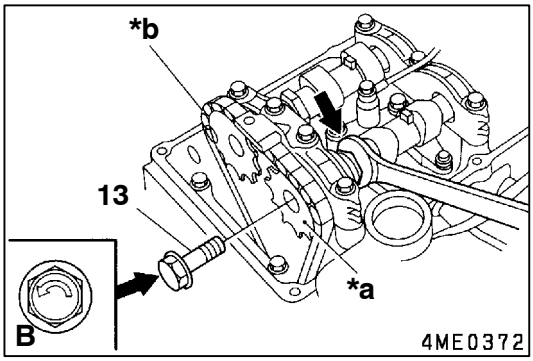

INSTALLATION SERVICE POINTS

▶A◀ BOLT INSTALLATION

Caution
The bolt 13 is inversely threaded. The arrow mark on its head B indicates its turning direction when tightened.

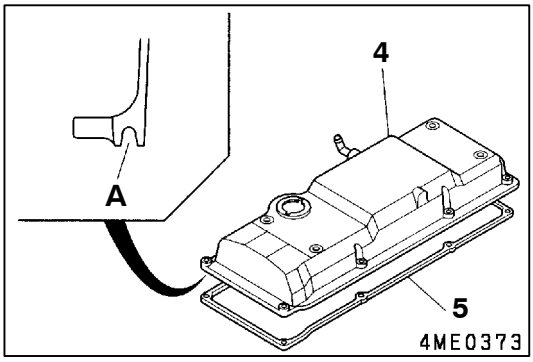

▶B◀ ROCKER COVER GASKET / ROCKET COVER ASSEMBLY INSTALLATION

Before installing the rocker cover **4**, remove all deposites, especially oil in the gasket groove **A**.

Caution
Install the rocker cover gasket 5 using care so that it is not distorted.

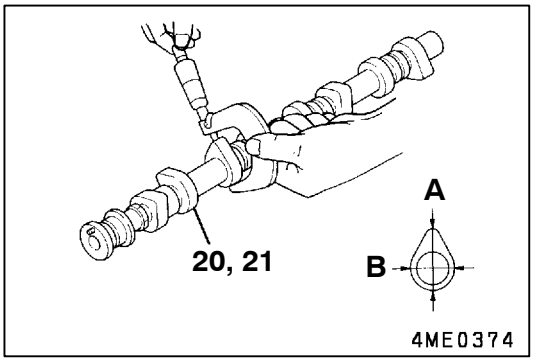

INSPECTION

1. CAMSHAFT

(1) Cam Lobe Lift (Difference between Cam Height and Base Circle Diameter)
If the specified service limit is exceeded, replace the camshaft **20**, **21**.

A: Cam height
B: Base circle diameter

Standard value:
Intake
Front 6.16 mm
Rear 6.10 mm
Exhaust
Front 5.91 mm
Rear 6.16 mm
Limit:
Intake
Front 6.11 mm
Rear 6.05 mm
Exhaust
Front 5.86 mm
Rear 6.11 mm

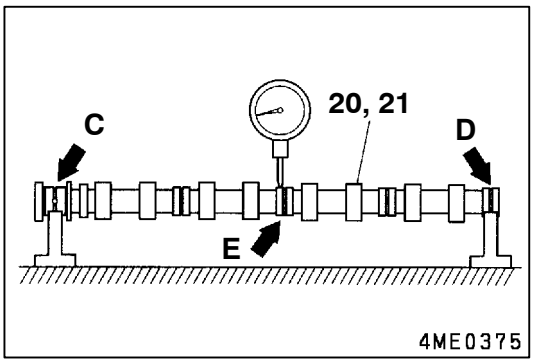

(2) Bend
With the camshaft **20, 21** supported at No.1 journal **C** and No.5 journal **D**, measure the bend at No.3 journal **E**. If the reading exceeds the specified service limit, replace the camshaft **20, 21**.

Standard value: 0.015 mm or less

Limit: 0.03 mm

NOTE
The actual shaft bend is a half of what the dial gauge reads when the camshaft **20, 21** is given one turn.

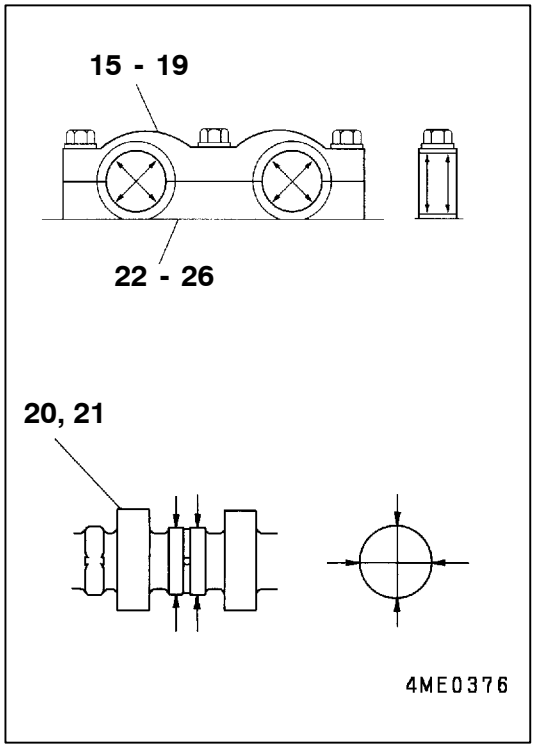

(3) Oil Clearance at Journals
Measure the oil clearance at each journal. If the reading exceeds the specified limit, replace the defective part.

Standard value: 0.05 - 0.09 mm

Limit: 0.15 mm

Caution
Be sure to replace the camshaft 15 through 19 together with the camshaft holder 22 through 26.

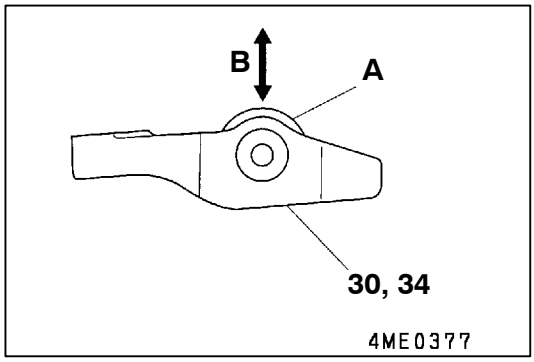

2. ROCKER

If radial play **B** at the roller **A** of the rocker **30**, **34** exceeds the specified standard value, replace the defective part.

Standard value: 0.03 - 0.07 mm

15. INJECTION NOZZLE

REMOVAL AND INSTALLATION

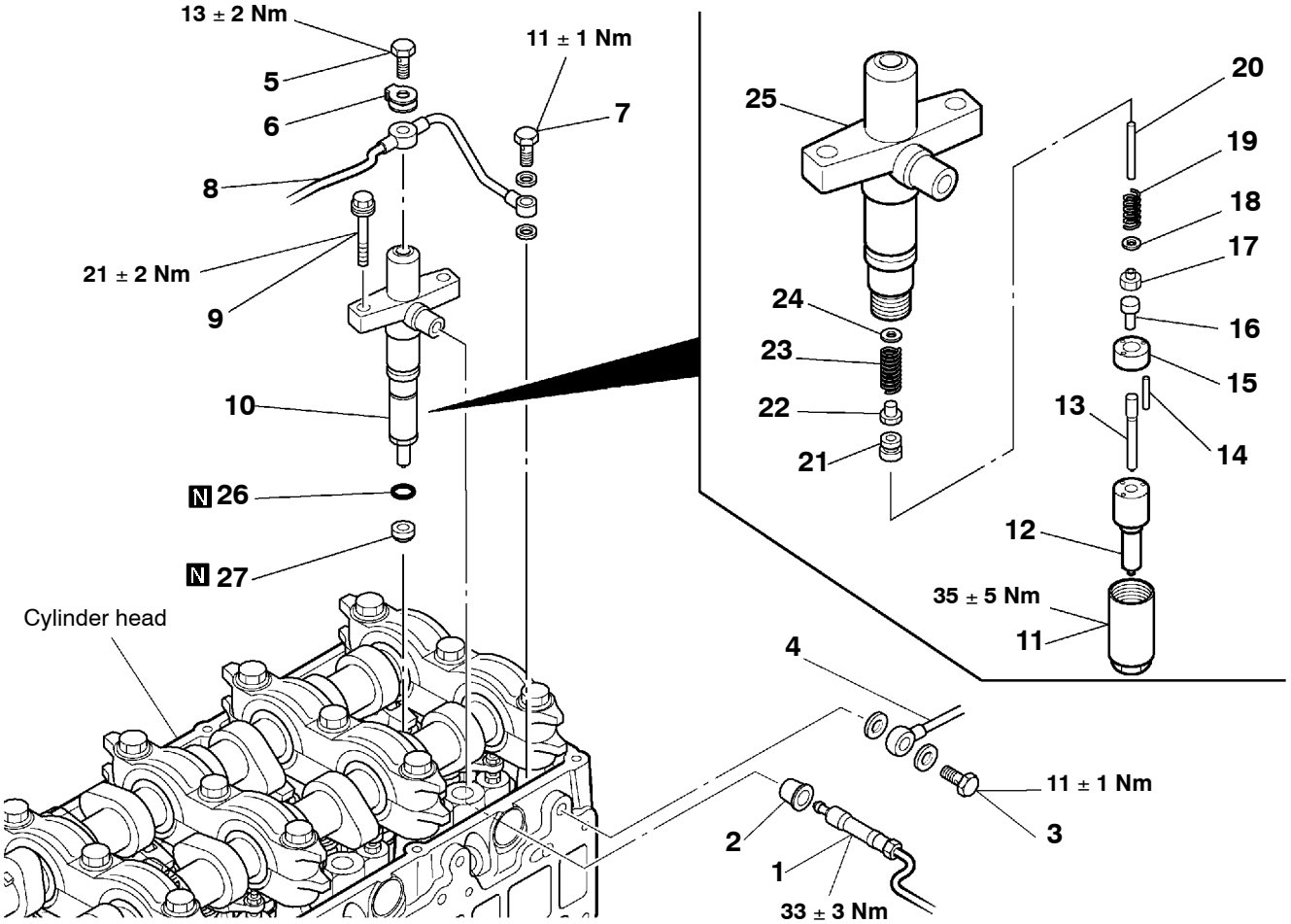

4ME0506

Removal steps

1. Injection pipe
2. Injection pipe seal
3. Eyebolt
4. Return pipe
5. Eyebolt
6. Gasket
7. Eyebolt
8. Leak-off pipe
9. Bolt
10. Injection nozzle assembly
◀A▶ ▶A◀ 11. Retaining nut
12. Nozzle tip
13. Needle valve
14. Pin
15. Spacer
16. Llift piece
17. Spring seat
18. Shim
19. No.2 spring
20. Push rod
21. Collar
22. Spring seat
23. No.1 spring
24. Shim
25. Nozzle holder
26. O-ring
27. Nozzle gasket

Caution

1. **Fuel is highly flammable. Keep it away from flames and sources of heat.**
2. **Wipe up spilt fuel completely. It could catch fire.**
3. **Remove all deposited carbon from the injection nozzle assembly 10 before disassembling, reassembling and adjusting it. Prior to intended disassembly, check the injection nozzle 10 for abnormal injection pressure, abnormal spray pattern and fuel leaks. If it is in order, the disassembly is not needed.**
4. **Never change the original combination of needle valve 13 and nozzle tip 12 when reassembling each injection nozzle assembly 10.**
5. **Dust particles can seriously affect the engine performance. To prevent the ingress of dust, fully cover and close up the opening left after removal of each injection nozzle assembly 10.**

PRE-REMOVAL INSPECTION

Install the nozzle tester **A** to the injection nozzle assembly **10** and perform the following checks:

Caution

Prior to proceeding with the checks, bleed air from the fuel injection nozzle by pumping the nozzle tester lever two or three times.

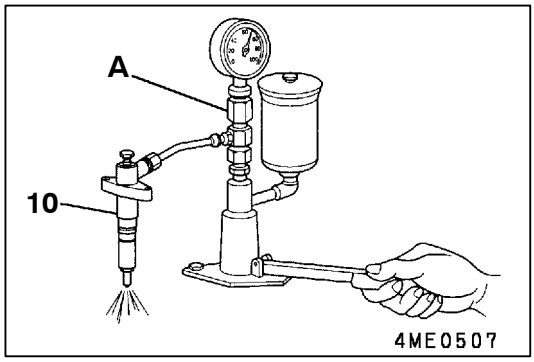

1. VALVE OPENING PRESSURE CHECK

(1) Operate the nozzle tester **A** lever at 1 to 2 seconds per stroke. Read the pressure when, after a gradual increase, the pointer deflects rapidly.

(2) If the reading deviates from the specified standard value, disassemble the fuel injection nozzle, clean and reassemble. Then, make necessary pressure adjustment using adjusting shims **18, 24**.

(3) If the reading still deviates after the adjustment, replace the fuel injection nozzle assembly **10**.

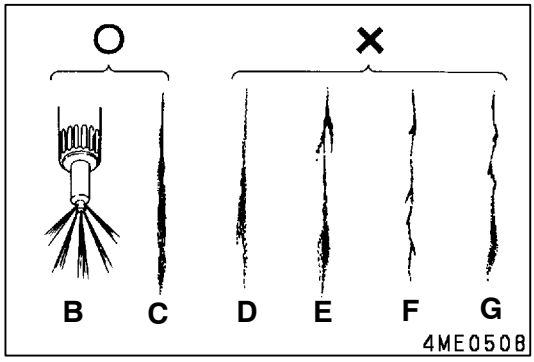

2. SPRAY PATTERN CHECK

(1) Inject fuel continuously by pumping the nozzle tester **A** lever quickly (1 to 2 seconds per stroke).

B: Even spray from all five injection orifices (Good)
C: Even and symmetrical spray (Good)
D: Asymmetrical spray (Bad)
E: Branched spray (Bad)
F: Thin spray (Bad)
G: Irregular spray (Bad)

(2) Disassemble, clean and recheck the fuel injection nozzle assembly **10** if necessary. If the problem still remains after another check, replace the fuel injection nozzle assembly.

(3) Check that the fuel injection nozzle does not dribble after injection.

Caution

Do not touch the spray that comes out of the nozzle.

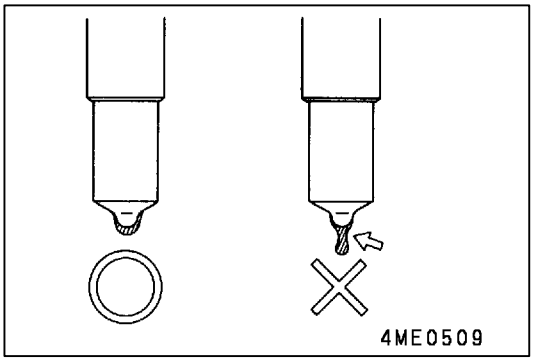

3. OIL TIGHTNESS CHECK

(1) Slowly increase the nozzle internal pressure and maintain it at a pressure 1960 kPa lower than the specified 1st valve opening pressure. In this condition, check that the fuel injection nozzle does not start dribbling within10 seconds.

(2) If the dribbling begins in less than 10 seconds, disassemble, clean and recheck the fuel injection nozzle assembly **10**. If the problem still remains after another check, replace the fuel injection nozzle assembly.

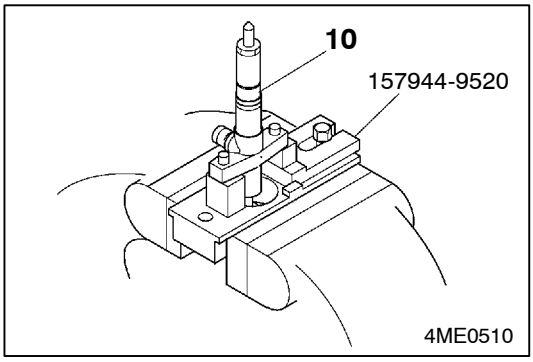

REMOVAL SERVICE POINTS

◀A▶ RETAINING NUT REMOVAL

Using the special tool, remove the retaining nut.

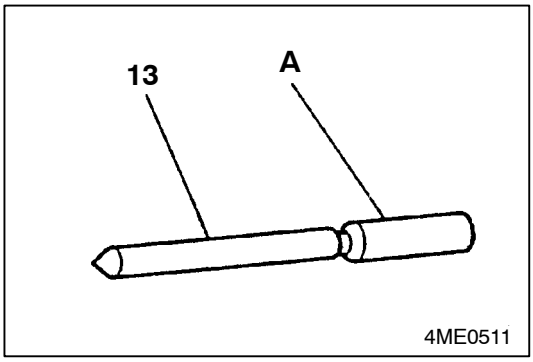

Caution

1. **Be sure not to touch the sliding surface A of the needle valve 13 with dirty hands.**
2. **Be sure not to change the original combination of the needle valve 13 and nozzle tip 12 removed.**

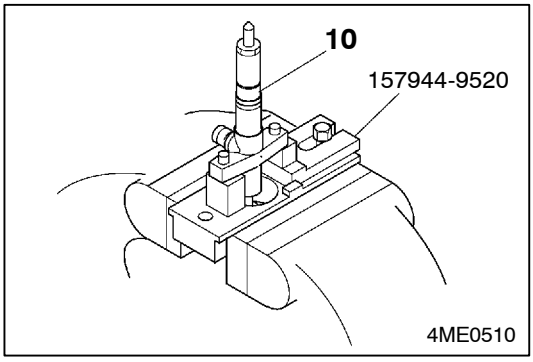

INSTALLATION SERVICE POINT

▶A◀ RETAINING NUT INSTALLATION

Using the special tool, install the retaining nut.

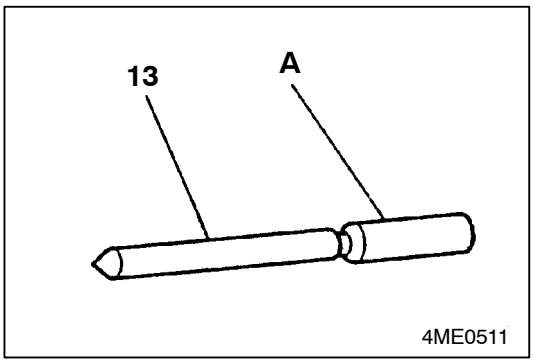

Caution

1. **Be sure not to touch the sliding surface A of the needle valve 13 with dirty hands.**
2. **Be sure not to change the original combination of the needle valve 13 and nozzle tip 12 removed.**

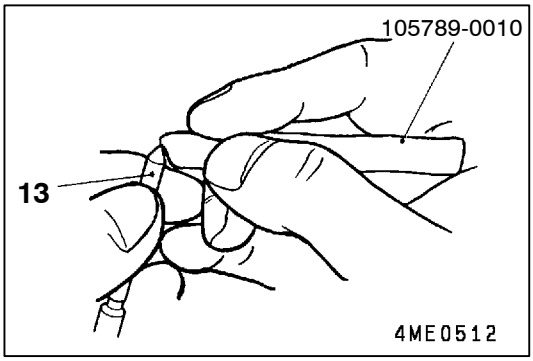

NOZZLE TIP, NEEDLE VALVE CLEANING

Wash the needle valve **13** and nozzle tip **12** removed in clean kerosene (cleaning oil) and remove deposited carbon from them in the following manners using the specified special tools.

(1) Remove carbon deposited on the tip of the needle valve **13** using the special tool Cleaning Bar.

Caution
For cleaning, never use a wire brush or any other hard metal tool.

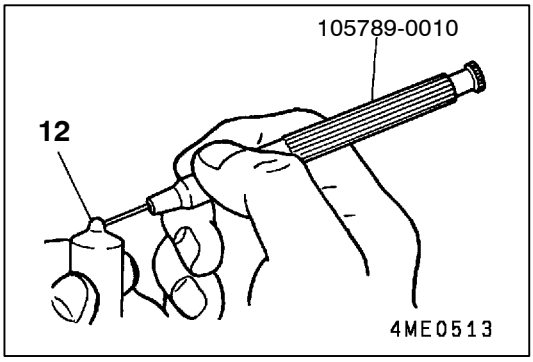

(2) Remove carbon deposited in the nozzle hole area of the nozzle tip **12** by turning the special tool Needle Cleaner that runs through the nozzle hole.

Cleaning needle diameter: Less than ϕ0.21 mm

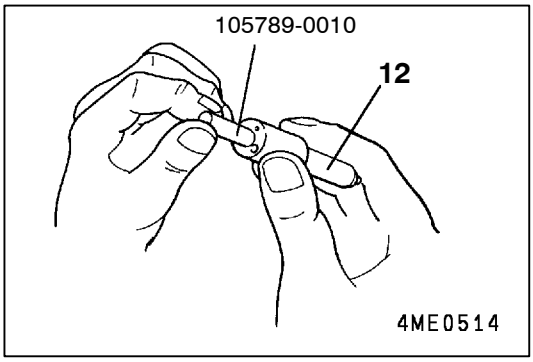

(3) Clean the seat of the nozzle tip **12** using the special tool Cleaning Scraper.
(4) To remove baked carbon, use the Fuso Carbon Remover.

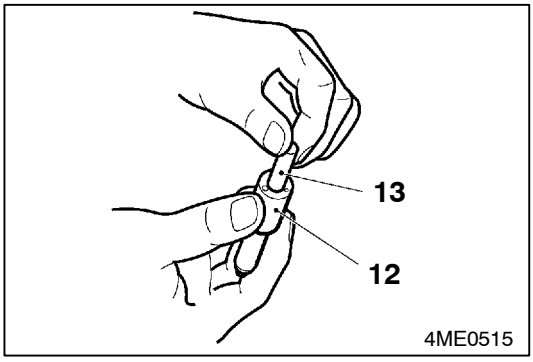

NOZZLE TIP, NEEDLE VALVE INSPECTION

(1) Wash the needle valve **13** and nozzle tip **12** clean in clean kerosene (cleaning oil) prior to reassembly.
(2) Pull out the needle valve **13** to approximately one third of its length, let go of it and see if it slides down by gravity. (Repeat this procedure a few times after turning the needle valve each time.)
(3) If the needle valve **13** fails to slide down by itself, wash it again and give it another check. Replace the needle valve **13** and nozzle tip **12** as a set.

Caution
1. **If a nozzle tip 12 is to be replaced, use a Nozzle Service Kit to replace the needle valve 13, pin 14, lift piece 16 and spacer 15 at the same time.**
2. **After replacing the nozzle tip 12, be sure to readjust the prelift to bring the valve opening pressure to the specified standard value.**

Standard value: 0.05 - 0.07 mm

INJECTION NOZZLE ASSEMBLY ADJUSTMENT

While reassembling parts, adjust and check the injection nozzle assembly in the sequence shown below.

Caution

1. **Before starting adjustments and checks, wash all parts clean in clean kerosene (cleaning oil) to ensure that they are entirely free of dirt and other foreign matters.**
2. **Never touch the sliding contact surface of the needle valve 13.**

Adjusting 1st valve opening pressure
↓
Checking full lift of needle valve
↓
Checking prelift
↓
Adjusting 2nd valve opening pressure
↓
Checking nozzle tip and needle valve

ADJUSTING 1ST VALVE OPENING PRESSURE

(1) Fit parts **12** through **24** to the nozzle holder **25**.

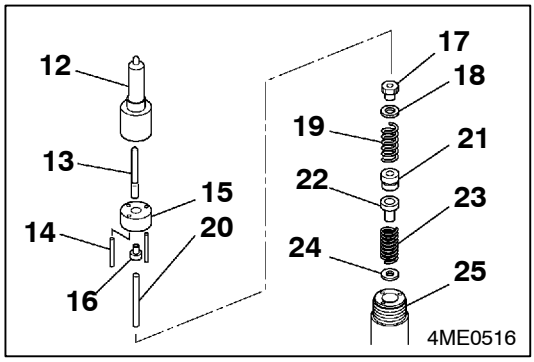

(2) Fit the lift piece **16** in the illustrated direction.

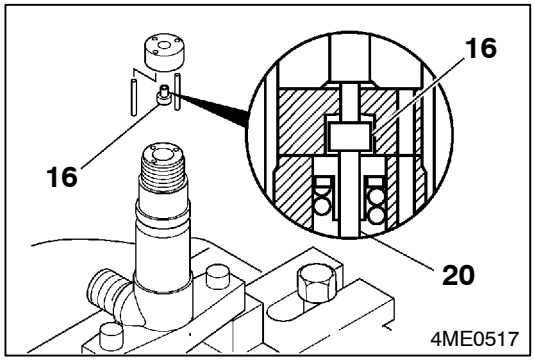

(3) Fit the special tool Gasket onto the nozzle tip **12**, then secure the nozzle tip to the nozzle holder **25** with the special tool Retaining Nut (for adjustment).
Turn the special tool Retaining Nut (for adjustment) handtight, then tighten it to the specified torque (34 ± 5 Nm).

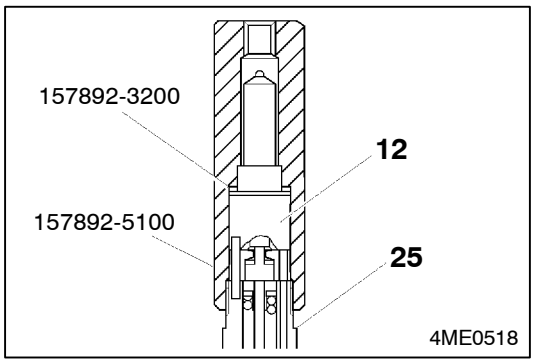

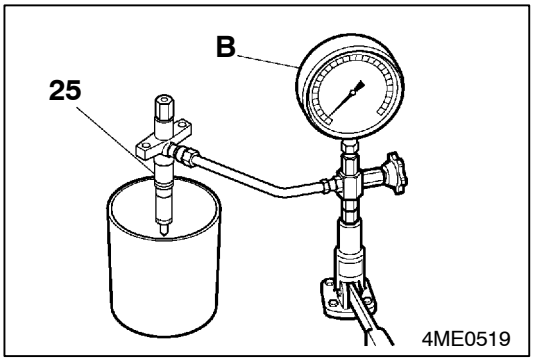

(4) Attach the nozzle holder **25** to the nozzle tester **A**.
(5) Pumping the nozzle tester **B**, measure the 1st valve opening pressure.

Standard value: 17.60 - 18.58 MPa

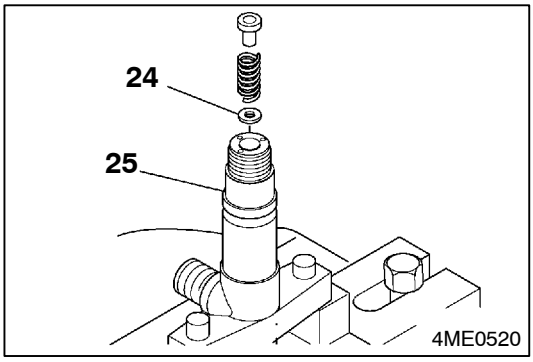

(6) If the reading deviates from the specified standard value, disassemble the nozzle holder **25** and make pressure adjustment by changing the existing shim **24** for a shim with appropriate thickness.

Thicknesses of available shims (outside diameter: ϕ6.2 mm) for 1st valve opening pressure adjustment: 0.40, 0.50, 0.52, 0.54, 0.56, 0.58, 0.60, 0.70 mm

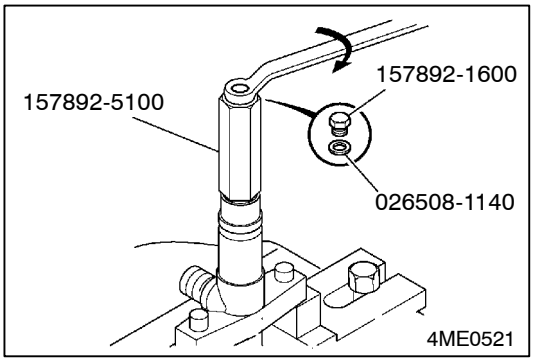

CHECKING FULL LIFT OF NEEDLE VALVE

The full lift check is performed to determine if the seat of the nozzle tip **12** is abnormally worn and if the injection nozzle assembly **10** is in order as well.

(1) Fit the special tool Gasket and the special tool Plug onto the special tool Retaining Nut (for adjustment).

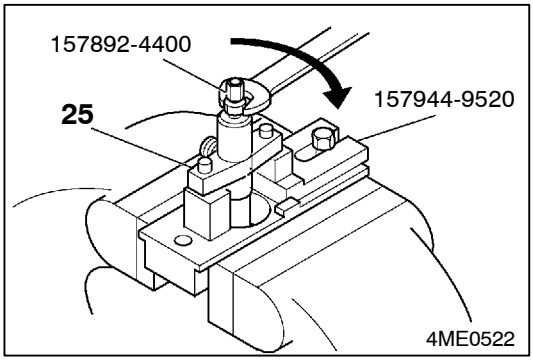

(2) Fit the nozzle holder **25** to the special tool Plate with its nozzle tip side down.
(3) Fit the special tool Holder to the nozzle holder **25**.

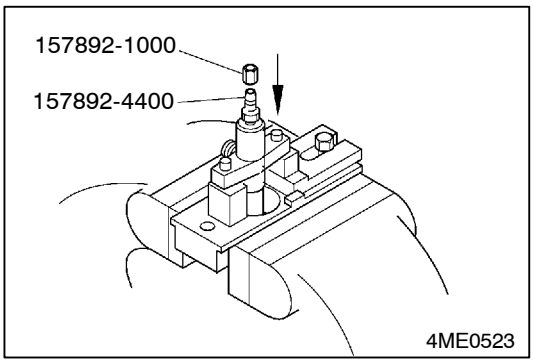

(4) Mount the special tool Nut on the special tool Holder.

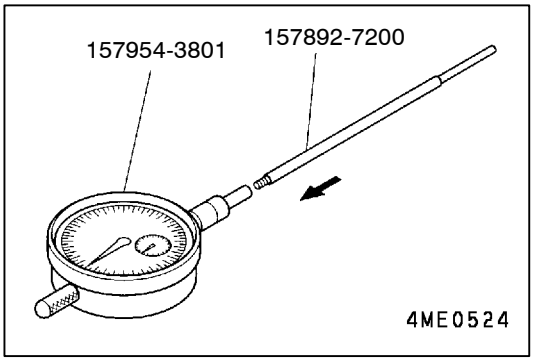

(5) Connect the special tool Pin to the special tool Dial Gauge.

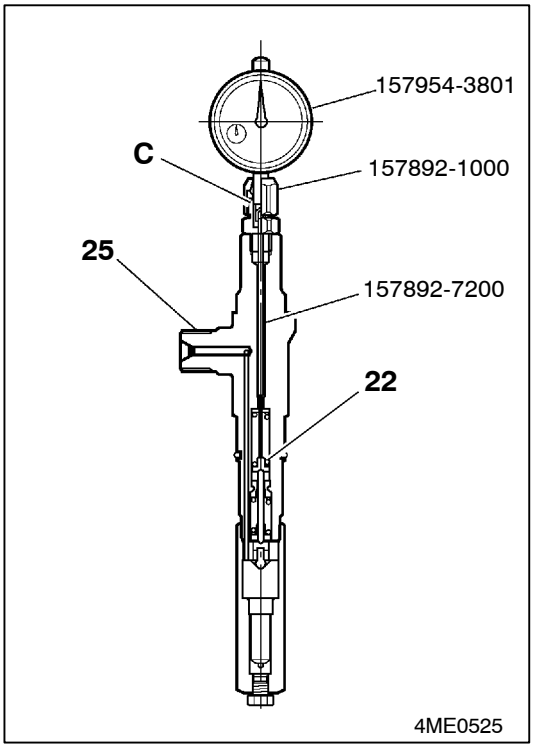

(6) Fit the special tool Dial Gauge onto the nozzle holder **25** and secure it with the special tool Nut in such a manner that the special tool Pin contacts the upper end of the spring seat **22**.

Caution
1. **Secure the special tool Dial Gauge so that a stroke of 2 mm or so can be measured.**
2. **Do not overtighten the special tool Nut. If it is too tight, the shaft C of the special tool Dial Gauge may be stuck.**

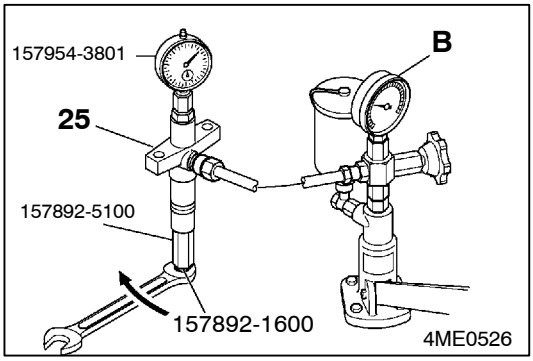

(7) Attach the nozzle holder **25** to the nozzle tester **B**, then zero the special tool Dial Gauge.
(8) Loosen the special tool Plug, then operate the nozzle tester **B** to bleed all air out of the special tool Retaining Nut (for adjustment). Check for fuel leakage at the same time.

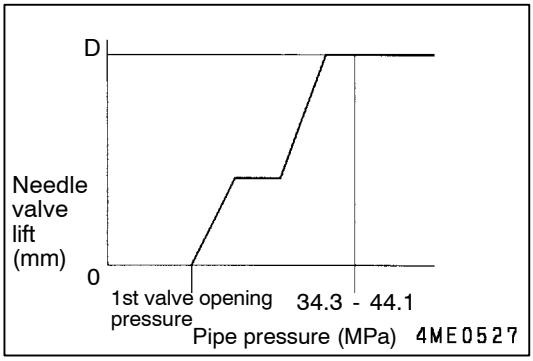

(9) Using the nozzle tester, increase the pipe pressure up to somewhere between 34.3 and 44.1 MPa to make the needle valve **13** lift to the full level. Record the dial gauge reading **D** of full lift.

Standard value: 0.23 - 0.27 mm

Caution
This check is necessary to determine if the seat of the nozzle tip 12 is abnormally worn.

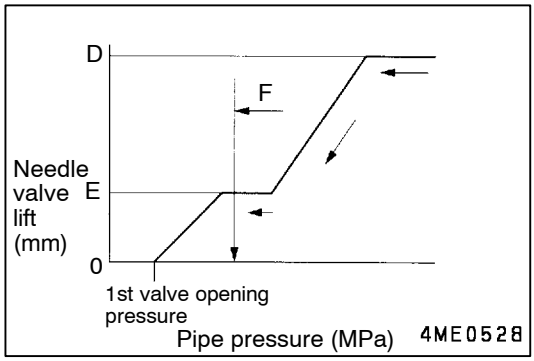

CHECKING PRELIFT

(1) With the needle valve **13** fully lifted, release the handle of the nozzle tester **B**. This causes the pipe pressure to decrease with a concomitant drop in dial gauge reading (needle valve lift).

D: Amount of needle valve full lift

(2) Read the dial gauge when the 2nd spring **19** has stopped acting, or when the needle valve **13** has stopped lowering (at prelift level **E**), and ascertain that the reading is within the specified limits of standard value.

Standard value: 0.05 - 0.07 mm

(3) Read the dial gauge with the needle valve **13** at the prelift measuring point **F** (1st valve opening pressure + approx. 1 MPa). (Observe the dial gauge while lowering the pressure.)

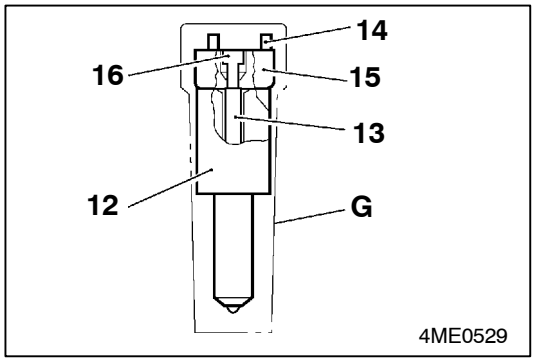

(4) If the dial gauge reading deviates from the specified limits of standard value, replace the pin **14**, lift piece **16**, spacer **15**, nozzle tip **12** and needle valve **13** with a Nozzle Service Kit.

G: Capsule (Zexel part No. 105019-1240)

Standard value: 0.05 - 0.07 mm

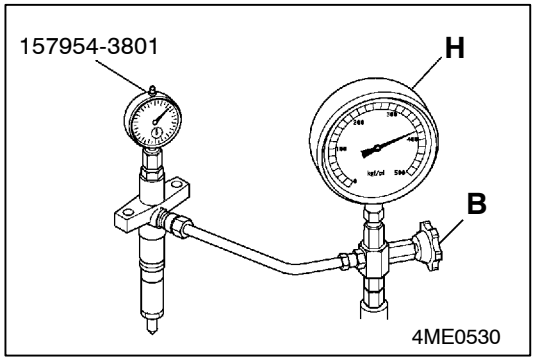

ADJUSTING 2ND VALVE OPENING PRESSURE

(1) After checking the prelift, operate the nozzle tester **B** and increase the pipe pressure to 34.3 - 44.1 MPa so that the needle valve lifts fully.

(2) Release the handle of the nozzle tester **B**. The pipe pressure will lower with a concomitant drop in dial gauge reading (needle valve lift).

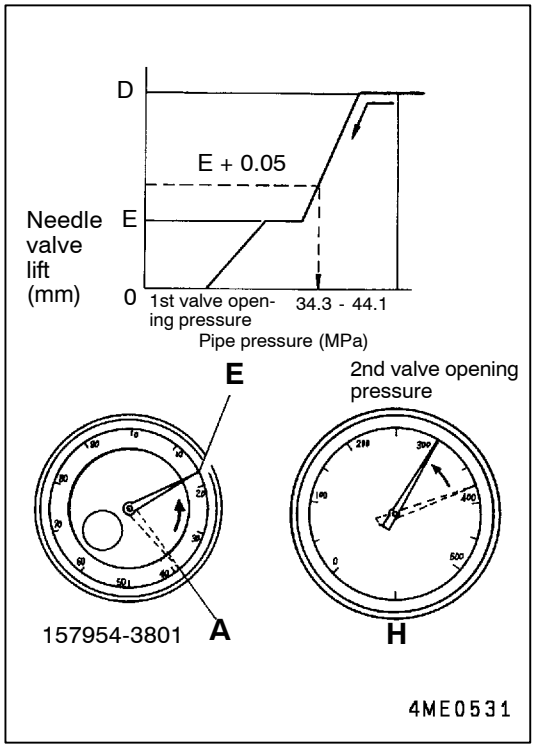

(3) Note the value indicated by the pressure gauge **H** the moment the dial gauge indicates the specified amount of needle valve lift (normally prelift **E** + 0.05 mm).

D: Needle valve full lift

Standard value: 22.6 - 23.6 MPa

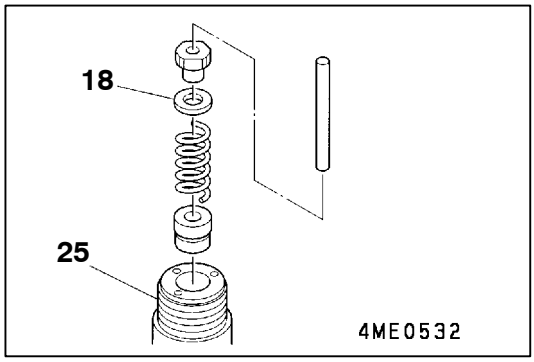

(4) If the dial gauge reading deviates from the specified limits of standard value, disassemble the nozzle holder **25** and make pressure adjustment by changing the existing shim **18** for a shim with appropriate thickness.

Thicknesses of available 2nd valve opening pressure adjusting shims (outside diameter: ϕ7.2 mm):
0.10, 0.20, 0.30, 0.40, 0.50, 0.51, 0.52, 0.53, 0.54, 0.55, 0.56, 0.57, 0.58, 0.59 mm

Caution
Adjusting the 1st valve opening pressure changes the 2nd valve opening pressure. After the lst valve opening pressure is altered, therefore, be sure to check and readjust the 2nd valve opening pressure.

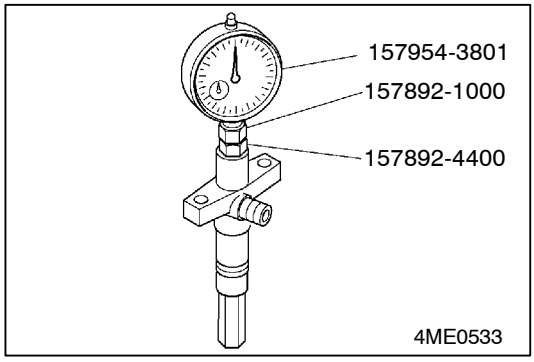

CHECKING INJECTION NOZZLE ASSEMBLY

Upon completion of all necessary adjustments, perform a final check on the injection nozzle assembly by the following procedure.

(1) Remove the special tools Dial Gauge, Nut and Holder.

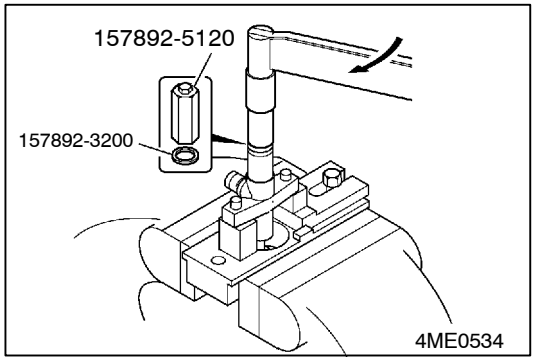

(2) Remove the special tools Retaining Nut (for adjustment) and Gasket.
(3) Check that the pin **14** is secured in position. Install the regular retaining nut **11** handtight. then tighten it to the specified torque.
(4) Attach the nozzle holder **25** to the nozzle tester **B**. Using the nozzle tester **B**, check the 1st valve opening pressure, spray form and seat oiltightness. Check that all parts are leak-free at the same time.

16. CYLINDER HEAD AND VALVE MECHANISM

REMOVAL AND INSTALLATION

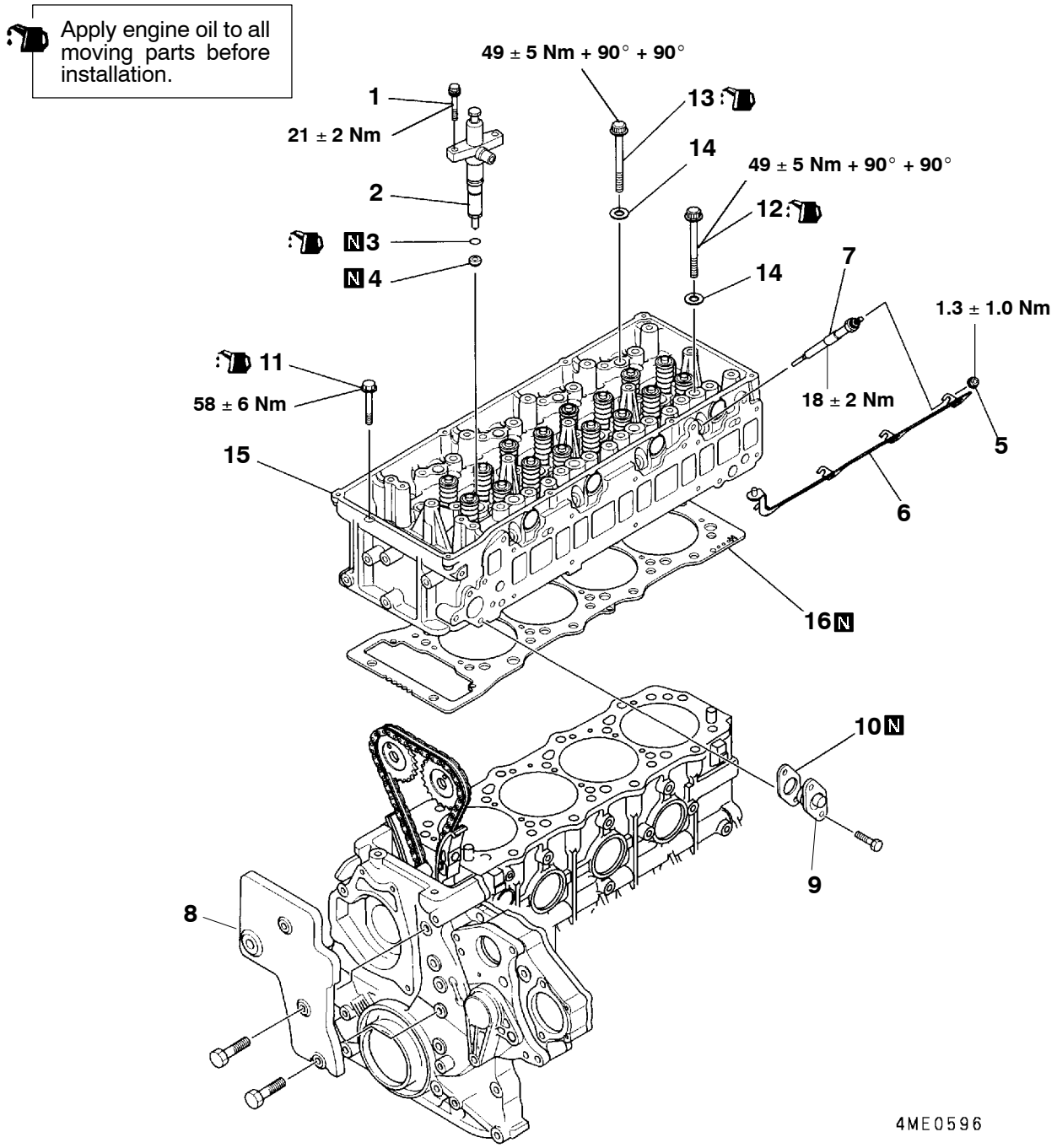

Removal steps

1. Bolt
2. Injection nozzle
3. O-ring
4. Nozzle gasket
5. Nut
6. Connecting plate
7. Glow plug
8. Timing gear upper cover
9. ▶H◀ Tensioner
10. ▶H◀ Gasket
11. Bolt (M10)
12. Cylinder head bolt (M12: long)
13. Cylinder head bolt (M12: short)
14. Washer
15. ◀A▶ ▶G◀ Cylinder head assembly
16. ◀A▶ ▶F◀ Cylinder head gasket

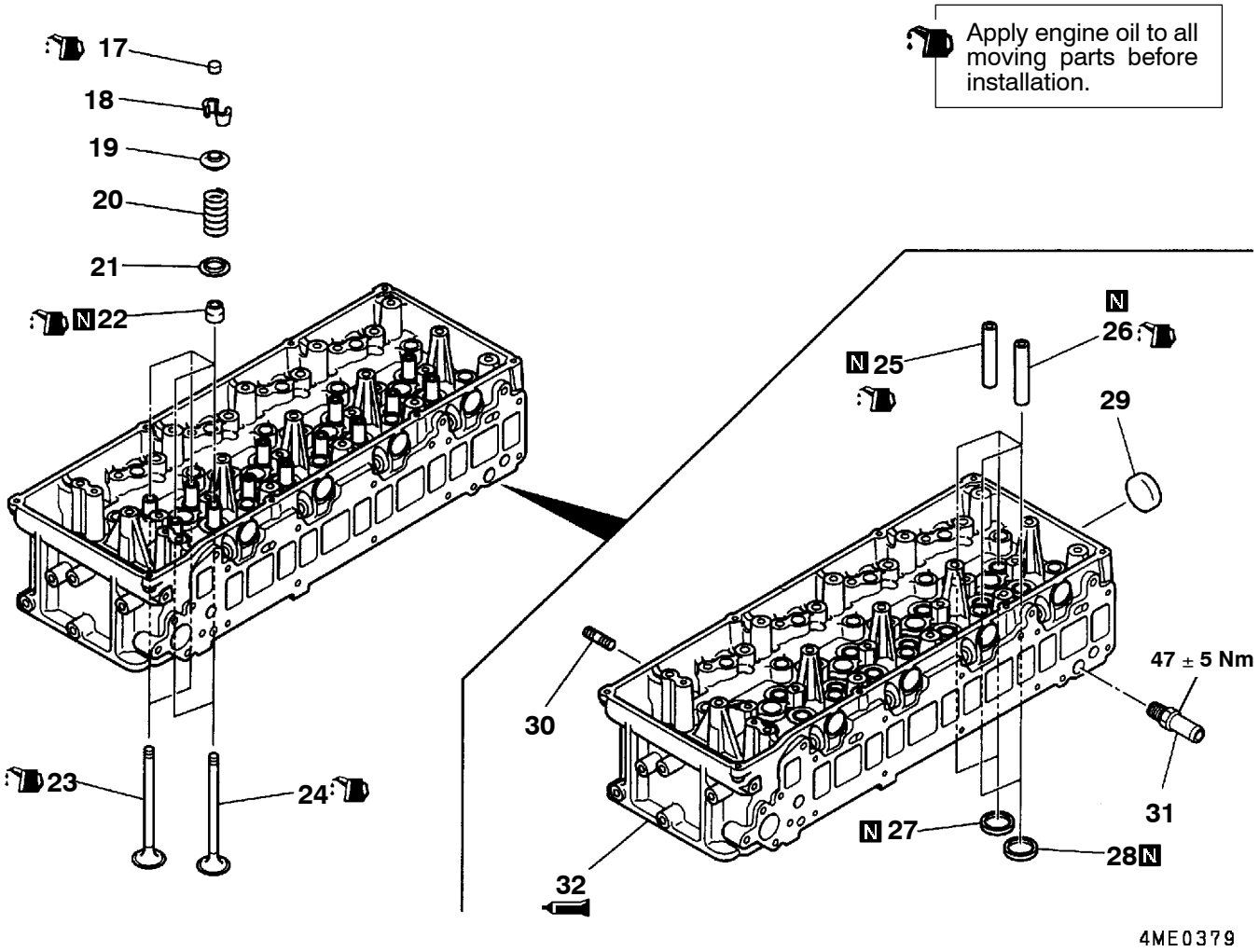

Removal steps

- 17. Valve cap
- ◀B▶ ▶E◀ 18. Valve cotter
- 19. Valve spring retainer
- ▶D◀ 20. Valve spring
- 21. Valve spring seat
- ▶C◀ 22. Valve stem seal
- 23. Exhaust valve
- 24. Intake valve
- ◀C▶ ▶B◀ 25. Exhaust valve guide
- ◀C▶ ▶B◀ 26. Intake valve guide
- ◀D▶ ▶A◀ 27. Exhaust valve seat
- ◀D▶ ▶A◀ 28. Intake valve seat
- 29. Sealing cap (ϕ35 mm)
- 30. Stud
- 31. Water joint
- 32. Cylinder head

Caution

1. **The cylinder head bolt 12, 13 is tightened to the plastic area. If the bolt shows the evidence of having been tightened three times, replace it with a new ones.**
2. **The timing chain slips out of place if the camshaft sprocket is removed from it. If the chain comes off, remove the timing gear case assembly and put the chain back in position.**
3. **Replace the valve stem seal 22 with a new one once the exhaust valve 23 or intake valve 24 is removed.**

REMOVAL SERVICE POINTS

◀A▶ CYLINDER HEAD ASSEMBLY / CYLINDER HEAD GASKET REMOVAL

Caution
When removing the cylinder head gasket 16, use care not to scratch the cylinder head assembly 15, crankcase assembly and timing gear case assembly.

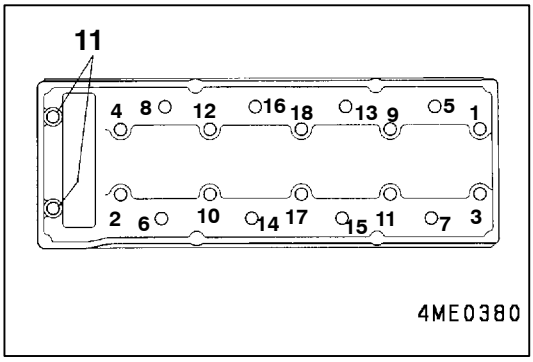

(1) Loosen the cylinder head bolts stepwise in the sequence of the numbers shown, then remove them.

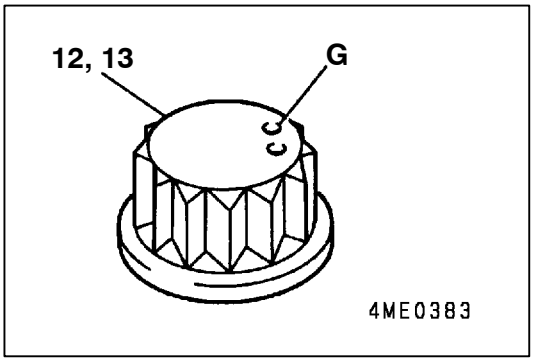

Caution
Provide one punch mark G on the head of the cylinder head bolt 12, 13 each time the bolt is tightened. Replace the bolt that already has three punch marks (the evidence of having been tightened three times).

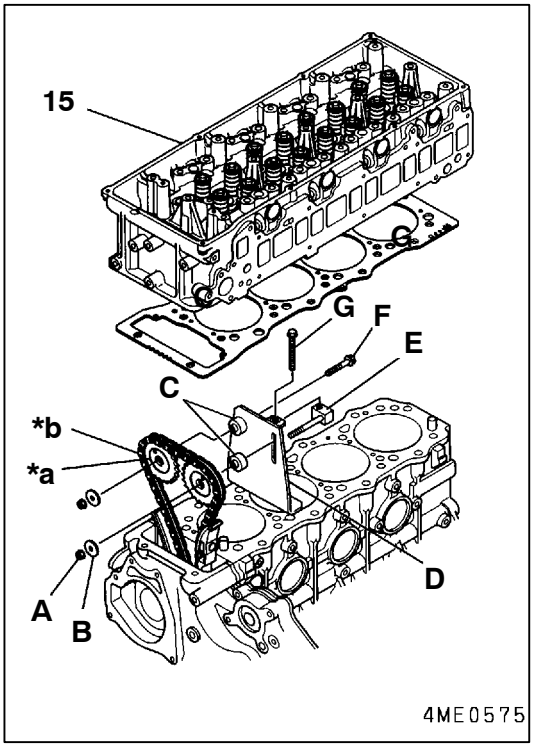

(2) Lift up the cylinder head assembly straight and remove, while keeping the camshaft sprockets ***a** in engagement with the timing chain ***b**.
(3) After the cylinder head assembly is removed, hold the camshaft sprockets ***a** with the special tool to keep the timing chain ***b** on it.

Component Parts of the Special Tool MH063490 - Cam Sprocket Holder Kit
A: Nut
B: Washer
C: Spacer
D: Adjusting plate
E: Nut
F: Bolt
G: Bolt

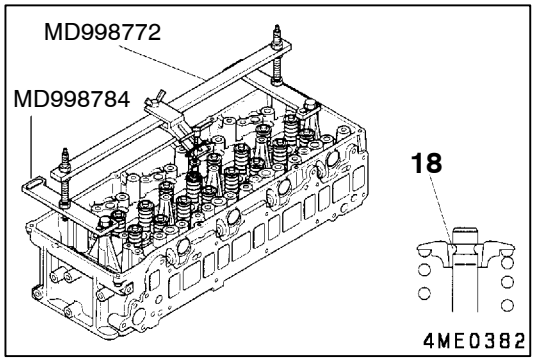

◀B▶ VALVE COTTER REMOVAL

<Method 1>
Using the special tools, remove the valve cotters **18** as follows.

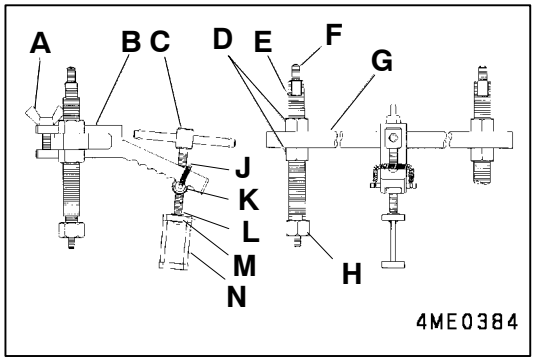

Component parts of special tool MD998772 Valve Spring Compressor
A: Wing bolt
B: Retainer
C: Handle
D: Nut
E: Bolt
F: Slotted screw
G: Stay
H: Lock nut
J: Tension spring
K: Mobile nut
L: Washer
M: Snap ring
N: Retainer holder

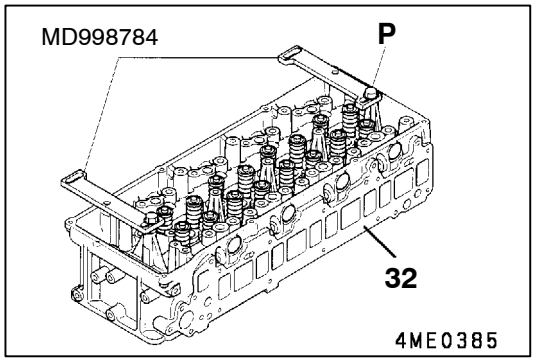

(1) Install the special tools on the cylinder head **32** as shown in the illustration.

P: Bolt (M8 x 12.5 mm)

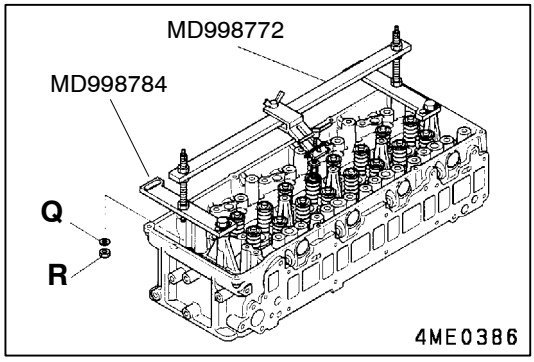

(2) Install the special tool MD998772 on the special tools MD998784.

Q: Washer
R: Nut (M6 x 1 mm)

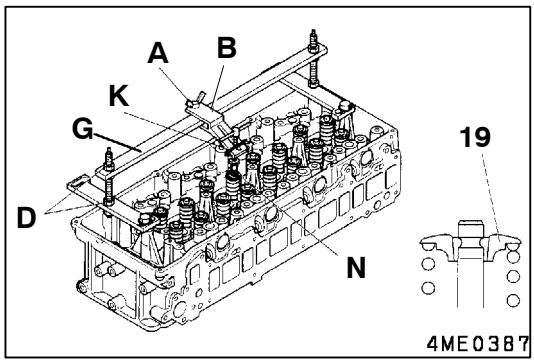

(3) Move the retainer **B** and mobile nut **K** into a position where the retainer holder **N** presses the valve spring retainer **19** from right above, then secure them with the wing bolt **A**.
Use the nuts **D** to adjust the vertical position of the stay **G**.

NOTE
Set the stay **G** level.

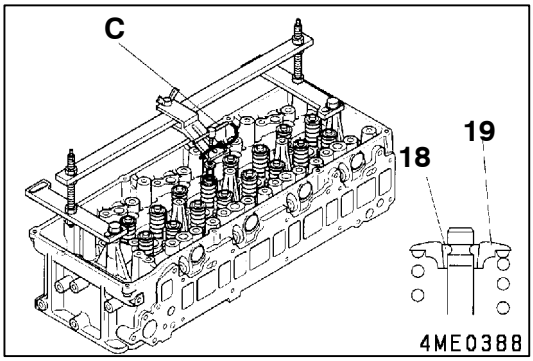

(4) Turning the handle **C** clockwise to depress the valve spring retainer **19**, remove the valve cotters **18**.

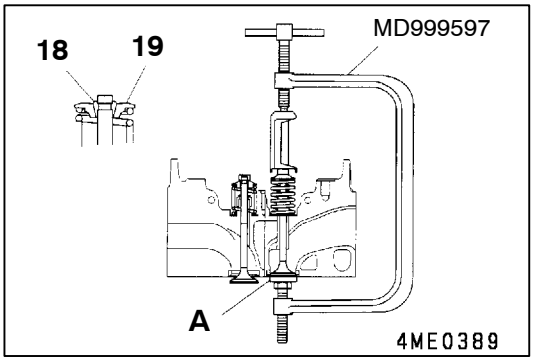

<Method 2>
Using the special tool, compress the valve spring **20** to remove the valve cotters **18**.

A: Protector

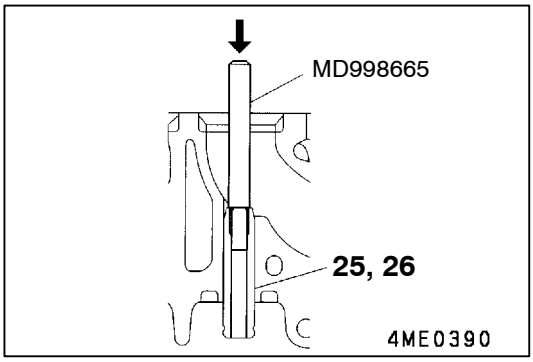

◀C▶ EXHAUST VALVE GUIDE / INTAKE VALVE GUIDE REMOVAL

Remove the valve guide **25**, **26** using the special tool.

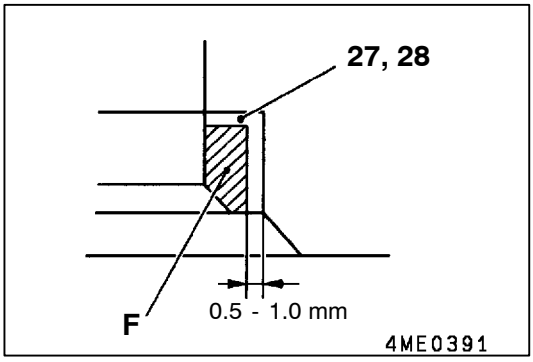

◀D▶ EXHAUST VALVE SEAT / INTAKE VALVE SEAT REMOVAL

The valve seat **27**, **28** is shrink-fitted. To remove it, grind its inside surface to reduce its thickness, then pull it out at room temperature.

F: Material to be removed by grinding

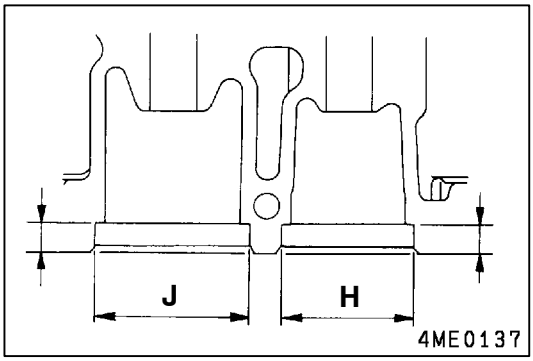

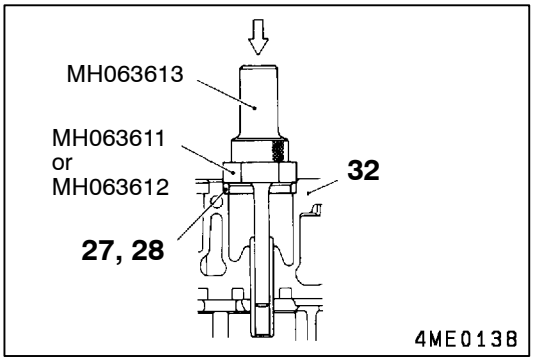

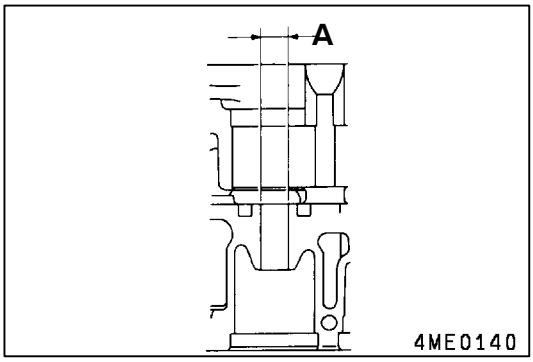

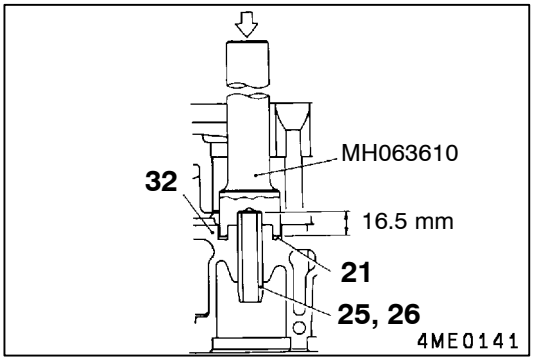

INSTALLATION SERVICE POINTS

▶A◀ INTAKE VALVE SEAT / EXHAUST VALVE SEAT INSTALLATION

(1) Measure a diameter of the valve seat hole **J**, **H** in the cylinder head **32** and select an oversize valve seat which can provide proper amount of cylinder head-to-valve seat interference.

(2) Rebore the valve seat hole **J**, **H** to the diameter appropriate to the selected oversize valve seat.

Unit: mm

Oversize valve seat used	0.30	0.60
J: Intake valve seat hole inside diameter	35.3 - 35.325	35.6 - 35.625
H: Exhaust valve seat hole inside diameter	33.3 - 33.325	33.6 - 33.625

(3) Immerse the valve seat **27**, **28** in liquid nitrogen to cool enough.

(4) Using the special tools MH063613, MH063611 and MH063612, press the valve seat **27**, **28** in the cylinder head **32** until it bottoms.

(5) After installing the valve seat **27**, **28**, lap it and the valve for proper fit.

▶B◀ INTAKE VALVE GUIDE / EXHAUST VALVE GUIDE INSTALLATION

(1) Measure a diameter of the valve guide **25**, **26** hole in the cylinder head **32** and select an oversize valve guide which can provide proper amount of cylinder head-to-valve guide interference.

(2) Rebore the valve guide hole **A** to the diameter appropriate to the selected oversize valve guide.

Caution
Do not install a valve guide of the same size as removed.

Unit: mm

Oversize valve guide used	0.05	0.25	0.50
Valve guide hole inside diameter	12.05 - 12.068	12.25 - 12.268	12.50 - 12.518

(3) Install the valve spring seat **21** in the cylinder head **32**, then install the valve guide by striking the special tool until it comes into full contact with the valve spring seat **21**.

Caution
The installed depth of the valve guide shall be as specified. Be sure to use the special tool for installation.

(4) The intake valve guide **26** is longer than the exhaust valve guide **25**. Be sure to install right valve guide in right place.

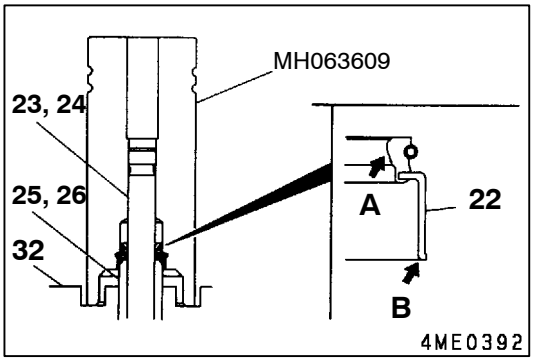

▶C◀ VALVE STEM SEAL INSTALLATION

(1) Apply a thin coat of engine oil to the lip **A** of the valve stem seal **22**, then press in the valve stem seal **22** by hand until its lower end **B** contacts the top of the valve guide **25**, **26**.
(2) Install the valve stem seal **22** in position by carefully striking the special tool vertically until it comes into full to fully contact with the valve spring seat surface in the cylinder head **32**.

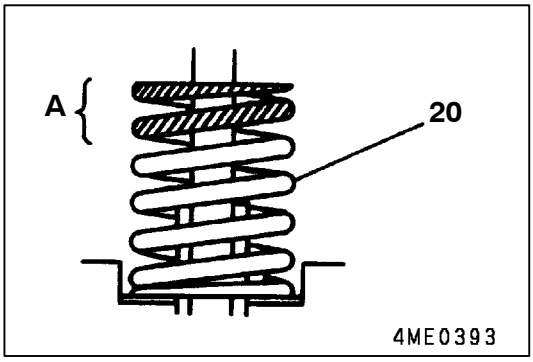

▶D◀ VALVE SPRING INSTALLATION

Install the valve spring **20** with the blue painted end **A** upward.

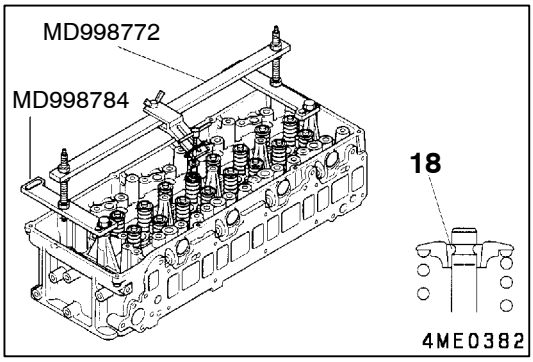

▶E◀ VALVE COTTER INSTALLATION

<Method 1>
Using the special tools, install the valve cotters **18** as follows.

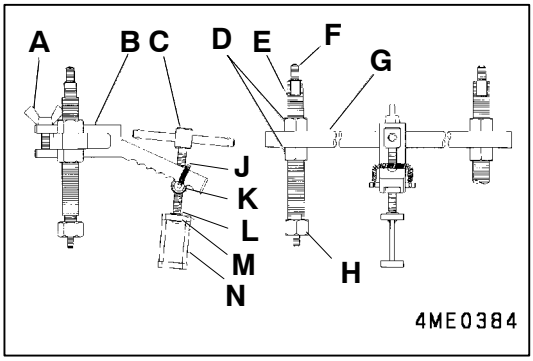

Component parts of special tool MD998772 Valve Spring Compressor
A: Wing bolt
B: Retainer
C: Handle
D: Nut
E: Bolt
F: Slotted screw
G: Stay
H: Lock nut
J: Tension spring
K: Mobile nut
L: Washer
M: Snap ring
N: Retainer holder

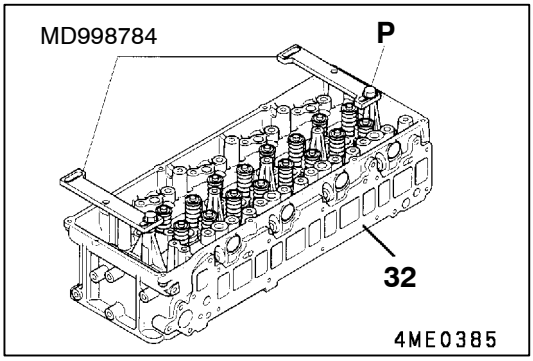

(1) Install the special tools on the cylinder head **32** as shown in the illustration.

P: Bolt (M8 x 12.5 mm)

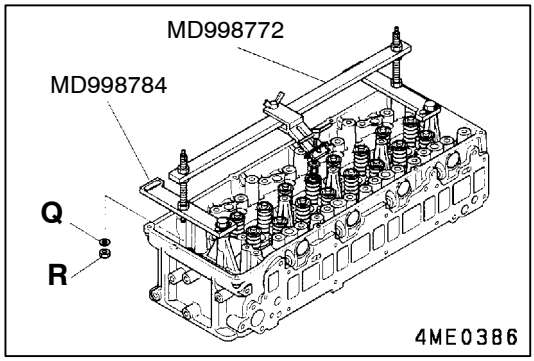

(2) Install the special tool MD998772 on the special tools MD998784.

Q: Washer
R: Nut (M6 x 1 mm)

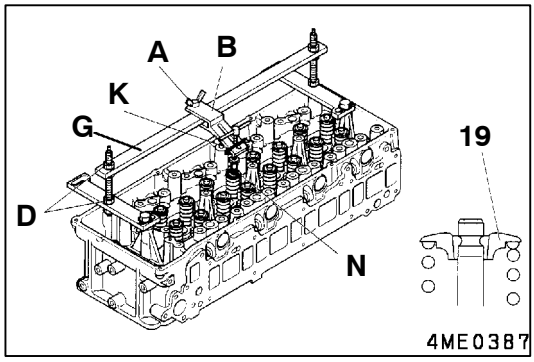

(3) Move the retainer **B** and mobile nut **K** into a position where the retainer holder **N** presses the valve spring retainer **19** from right above, then secure them with the wing bolt **A**.
Use the nuts **D** to adjust the vertical position of the stay **G**.

NOTE
Set the stay **G** level.

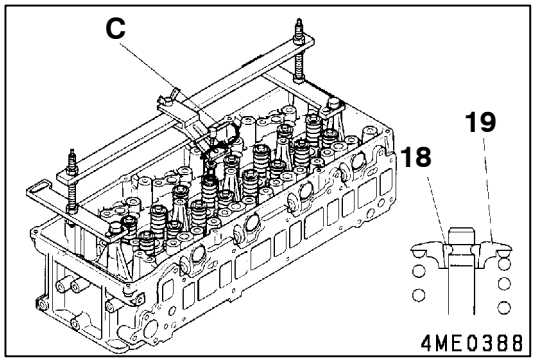

(4) Turning the handle **C** clockwise to depress the valve spring retainer **19**, install the valve cotters **18**.

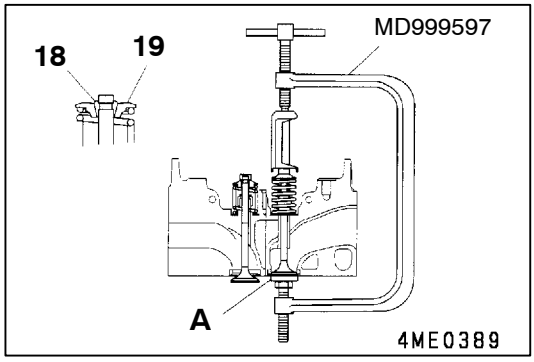

<Method 2>
Using the special tool, compress the valve spring **20** to install the valve cotters **18**.

A: Protector

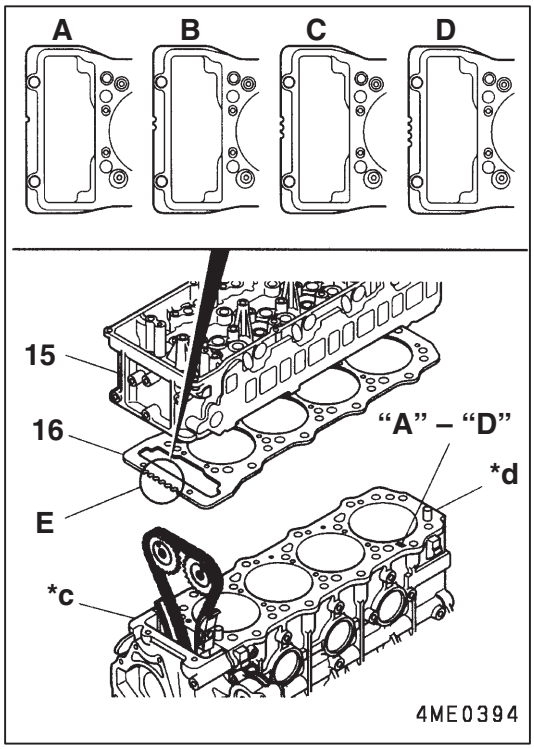

▶F◀ CYLINDER HEAD GASKET INSTALLATION

The cylinder head gasket **16** is a part that needs to be selected for use. Select the appropriate gasket in the following manner.

(1) When replacing the cylinder head gasket alone-Identify; the crankcase assembly ***d** by the crankcase identification mark **"A"**, **"B"**, **"C"** or **"D"** stamped on its top surface and select a gasket of the size corresponding to the mark.

(2) When replacing the piston and connecting rod as well;
   1) Measure the piston protrusion from each cylinder.
   2) Select the gasket **16** corresponding in thickness to the largest of the measured piston protrusions.

NOTE
The gasket varies in type according to the number of notches in its notched end **E**.

Unit: mm

Piston projection		Cylinder head gasket	
Maximum piston projection	Crankcase identification mark	Type by size	Tightened thickness
–0.165 – –0.209	A	A (1 notch)	0.66 – 0.74
–0.120 – –0.164	B	B (2 notches)	0.71 – 0.79
–0.75 – –0.119	C	C (3 notches)	0.76 – 0.84
–0.30 – –0.074	D	D (4 notches)	0.81 – 0.89

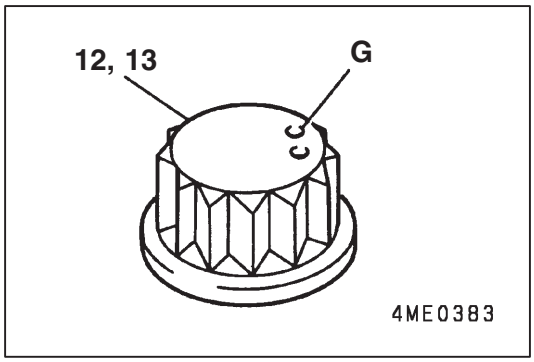

▶G◀ CYLINDER HEAD ASSEMBLY INSTALLATION

Caution
Before installing the cylinder head bolt 12, 13, check the number of punch marks G on its head. (The bolt is reusable if it is two or less.) The number of punch marks corresponds to that of times the bolt has been tightened to the plastic area. If the bolt has three punch marks, replace it.

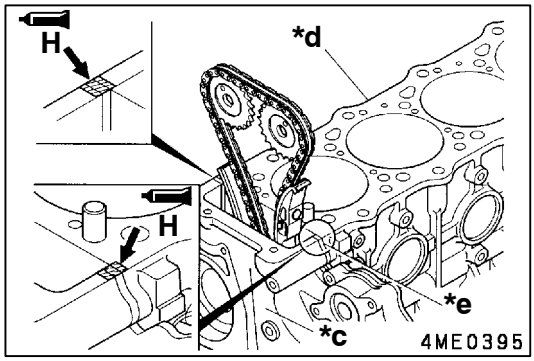

(1) Apply a coat of specified sealant to the upper surface **H** of the front plate ***c** that joins the cylinder head gasket **16**.

Specified sealant:
ThreeBond 1211 or equivalent

(2) Within 3 minutes after the sealant application, install the cylinder head assembly **15** to the crankcase assembly ***d** together with the cylinder head gasket **16**.

Caution
1. **Check to ensure that the surface H is clean and free of oil and other foreign matters before sealant application.**
2. **During installation of the cylinder head assembly, use care that the sealant is kept in place.**
3. **Do not start the engine for at least 1 hour after the cylinder head assembly is installed.**
4. **Whenever the cylinder head bolt 11, 12, 13 is loosened or removed after the cylinder head assembly has been installed, always apply a fresh coat of specified sealant.**

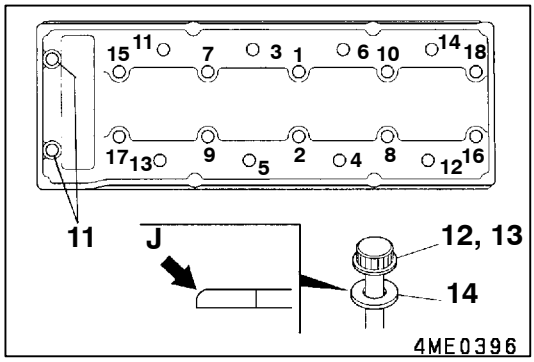

(3) Tighten the M12 cylinder head bolts **12** and **13** (1 through 18) at M10 bolts **11** in the following manner.
1) Fit the washer **14** onto the cylinder head bolt **12**, **13**, with its shear-droop side **J** facing in the direction shown.
2) Apply a thin coat of engine oil to the threaded part and seating surface of each cylinder head bolt **12**, **13**, then tighten the bolts to a torque of 98 ± 10 Nm in the sequence of the numbers shown.
3) Loosen the tightened bolts in the reverse order of the numbers shown and retighten them to a torque of 49 ± 5 Nm in the order of the numbers shown.
4) After tightening, give the bolts an additional 90 degree turn in the sequence of the numbers shown.
5) Then, give the bolts another 90 degree turn to tighten them completely.
6) After tightening the cylinder head bolt **12**, **13**, tighten the bolt **11** to the specified torque.

Caution
The cylinder head bolt 12, 13 has been tightened up to the plastic area by the above procedure. Once tightened completely, do not attempt to retighten the bolt.

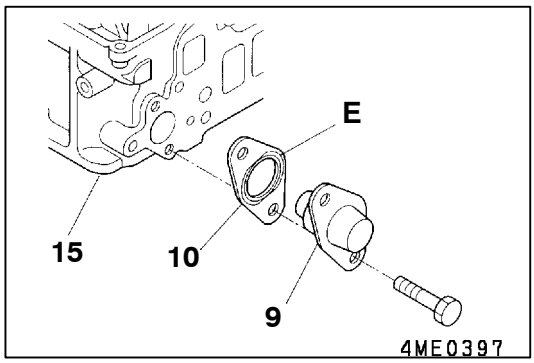

▶H◀ GASKET / TENSIONER INSTALLATION

(1) Fit the gasket **10** to the cylinder head assembly **15** in the direction shown in the illustration.

E: Sealant coated surface

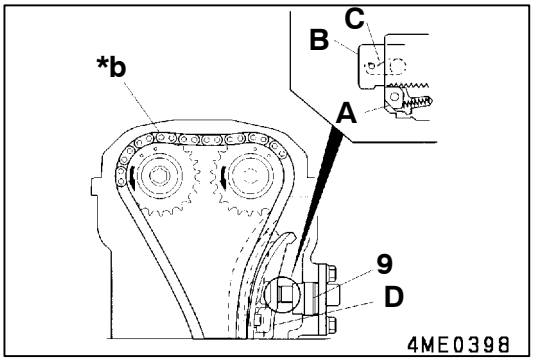

(2) Turn the cam **A** of the tensioner **9** to thrust the plunger **B** in and lock the plunger with the hook **C**. Then, install the tensioner in that state.
(3) Crank the engine in the normal direction (clockwise).

Caution
1. **If the tensioner 9 is installed without thrusting the plunger B in, the timing chain *b may be damaged by excessive tension.**
2. **The tensioner 9 stretches the timing chain *b to optimum tension by means of the internal ratchet mechanism. If the engine is cranked counter-clockwise (as viewed from the front) after the tensioner 9 is installed, an excessive thrust is exerted to the plunger B and the cam A may be damaged as a result. Should the engine be cranked counter-clockwise, remove the tensioner and re-install it in the sequence described above.**

NOTE
If the engine is cranked in the normal direction (clockwise) after the tensioner has been installed, the hook **C** will be released automatically, the timing chain being adjusted to optimum tension by means of the internal ratchet mechanism.

INSPECTION

1. INTAKE AND EXHAUST VALVES

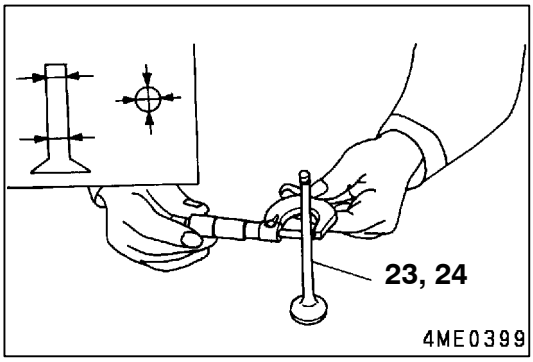

(1) Checking Stem for Wear
Replace the valve **23**, **24** if the diameter is below the specified service limit or uneven wear is recognized.

Standard value:

Intake	**6.560 - 6.575 mm**
Exhaust	**6.53 - 6.55 mm**

Limit: 6.45 mm

Caution
If the valve 23, 24 is new, be sure to lap it and the valve seat 27, 28 for proper seating.

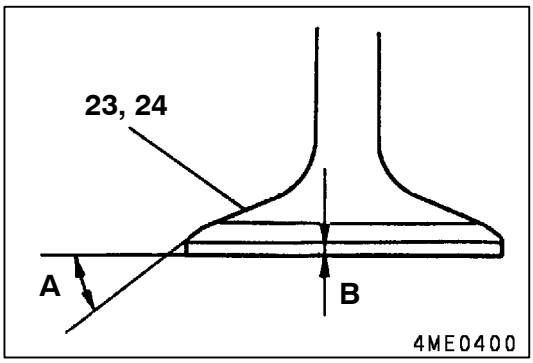

(2) Valve Seat Angle and Valve Margin
Correct or replace the valve **23**, **24** if the specified service limit is exceeded.

Standard value:

Valve seat angle	**45° ± 15'**
Valve margine	**1.0 mm**

Limit:

Valve margine	**0.8 mm**

A: Valve seat angle
B: Valve margin

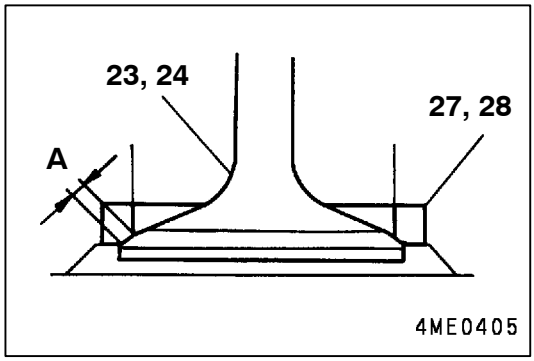

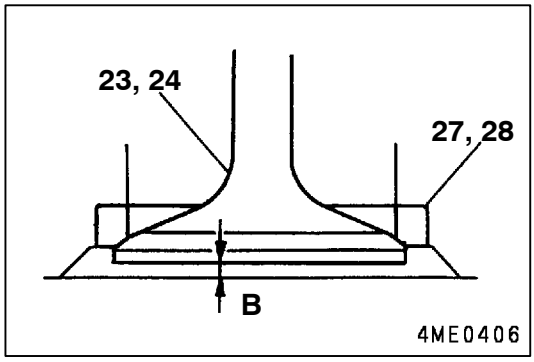

2. VALVE SEAT

(1) Valve Seat Width
Replace the valve seat **27**, **28** if the specified service limit is exceeded.

A: Valve seat width

Standard value: 1.8 - 2.2 mm

Limit: 2.8 mm

Caution
When the valve seat 27, 28 has been corrected or replaced, lap it and the valve 23, 24 for proper seating.

(2) Valve Sinkage from Cylinder Head Bottom
If the specified service limit is exceeded, correct or replace the defective part.

B: Valve sinkage

Standard value: 0.05 - 0.55 mm

Limit: 0.8 mm

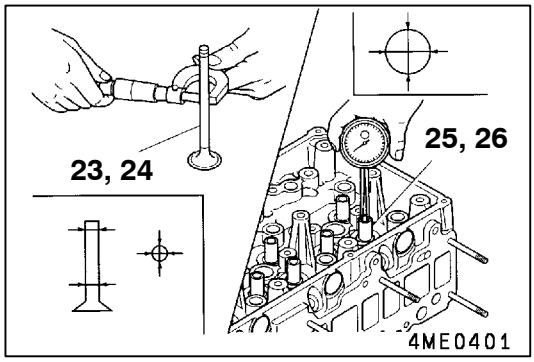

3. VALVE AND VALVE GUIDE

If the clearance exceeds the specified service limit, replace the defective part.

Standard value:

Intake	**0.02 - 0.06 mm**
Exhaust	**0.05 - 0.09 mm**

Limit:

Intake	**0.10 mm**
Exhaust	**0.15 mm**

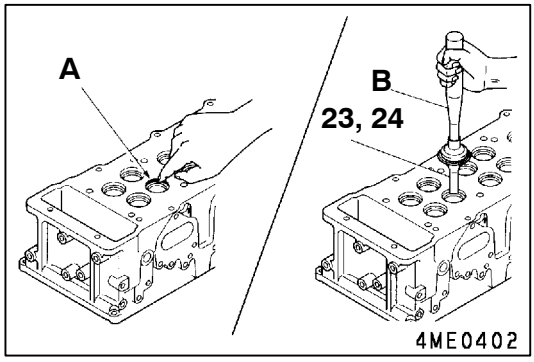

4. VALVE AND VALVE SEAT

(1) Apply an even coat of minium to the valve seating surface **A** of the valve seat **27**, **28**.

(2) Strike the valve **23**, **24** against the valve seat **27**, **28** once while taking care that the valve is not rotated.

B: Valve Lapper

Caution
Before proceeding with the contact check, examine the valve 23, 24 and valve guide 27, 28 in detail to see if they are in normal condition.

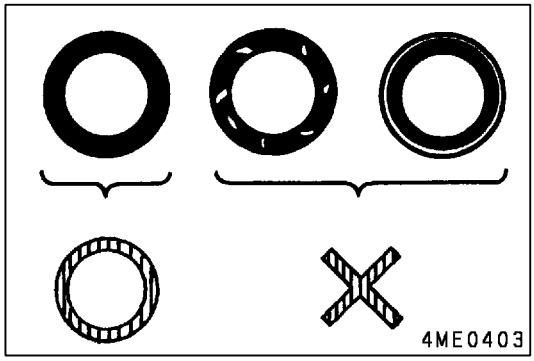

(3) Determine the valve seating condition from minium pattern printed on the valve **23**, **24**. If any abnormal contact is found, take the following corrective action.

Condition	Corrective action
Minor defect	Lap valve for better seating.
Major defect	Correct or replace valve and valve seat.

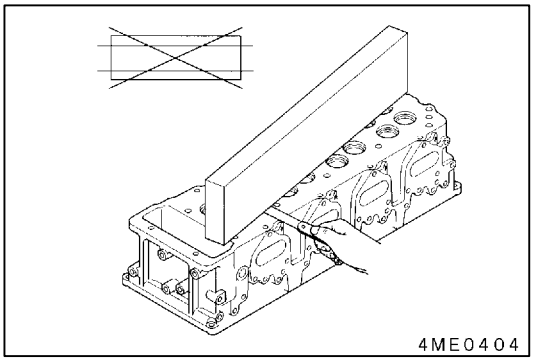

5. CYLINDER HEAD ASSEMBLY

Measure the distortion of the bottom surface of the cylinder head **31**. If the measured value exceeds the limit, replace the cylinder head.

Standard value: 0.05 mm or less

Limit: 0.2 mm

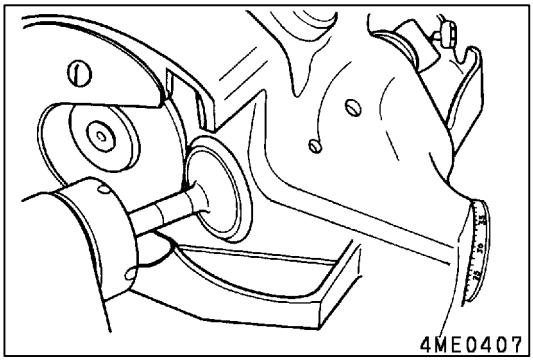

CORRECTION

1. INTAKE VALVE AND EXHAUST VALVE

Caution

1. **The grinding should be minimum.**
2. **If the valve margin deviates from the specified service limit after grinding, replace the valve 23, 24.**
3. **After grinding, lap the valve 23, 24 and valve seat 27, 28 for proper seating.**

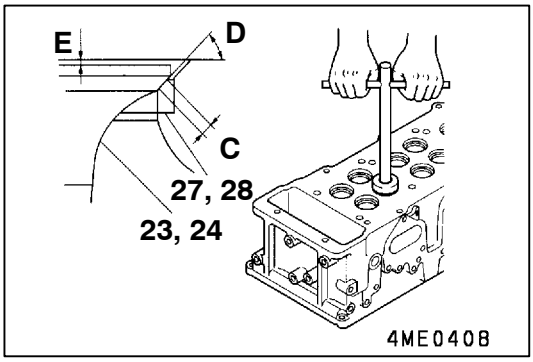

2. VALVE SEAT

(1) Grind the valve seat **27**, **28** using a valve seat cutter or a valve seat grinder.
(2) Polish the ground surface lightly using a #400 sandpaper held between the cutter and valve seat.
(3) Correct the seat width **C** of the valve **23**, **24** to the specified value using a 15° or 75° cutter.

D: Valve seat angle

Standard value: 45° ± 15'

Caution

1. **Be sure that the sinkage E of the valve 16, 17 does not exceed the specified service limit as a result of the correction.**

   Limit: 0.8 mm

2. **After the correction, lap the valve 23, 24 and valve seat 27, 28 for proper seating.**

3. VALVE AND VALVE SEAT

Lap the valve and valve seat as follows:

(1) Apply a thin coat of lapping compound evenly to the valve seating surface **A** of the valve seat **27**, **28**.

Caution

1. **Keep the stem C of the valve 23, 24 free from the lapping compound.**
2. **Use an intermediate-mesh compound (120 - 150 meshes) first, then a fine-mesh compound (over 200 meshes).**
3. **To achieve even application of the lapping compound, a mix with a small quantity of engine oil is recommended.**

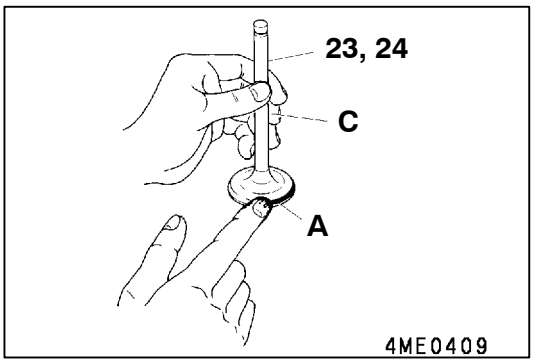

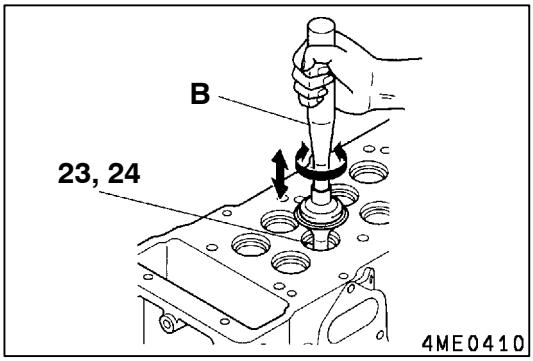

(2) Using Valve Lapper, strike the valve **23**, **24** against the valve seat **27**, **28** a few times while turning little by little.

B: Valve Lapper

(3) Wash off the lapping compound in kerosene.
(4) Apply a thin coat of engine oil to the seating surface of the valve seat **27**, **28** and oil lap.
(5) Check the seat contact between the valve **23**, **24** and valve seat **27**, **28**.
(6) Replace the valve seat **27**, **28** if necessary.

17. VACUUM PUMP

REMOVAL AND INSTALLATION

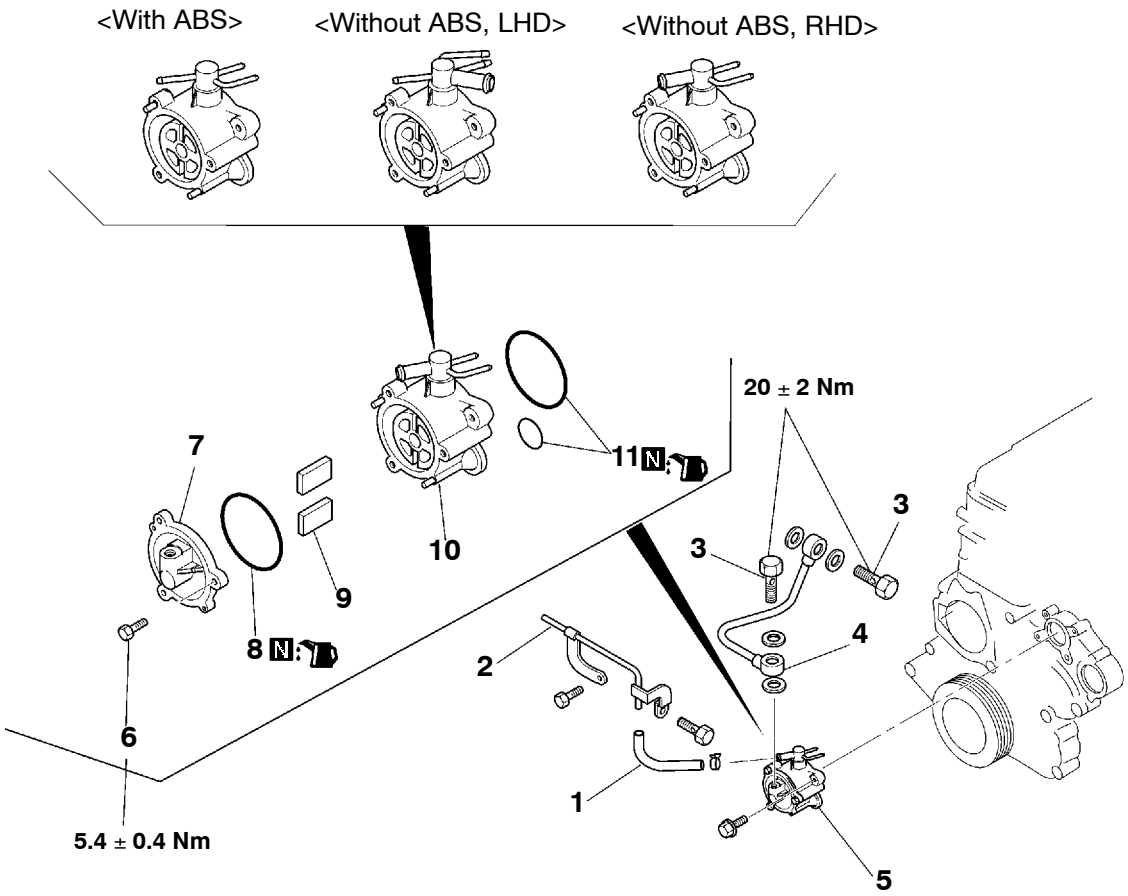

4ME0578

Removal steps

1. Vacuum hose
2. Vacuum pipe
3. Eyebolt
4. Oil pipe
5. Vacuum pump assembly
6. Bolt
7. Cover
8. O-ring
9. Vane
10. Body assembly
11. O-ring

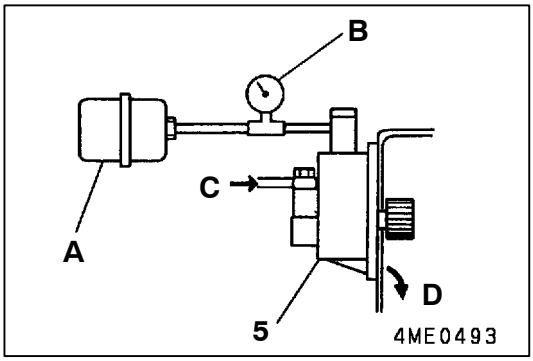

INSPECTION

VACUUM PUMP ASSEMBLY

(1) Connect a vacuum tank (capacity: 10 liters) to the vacuum pump assembly **5** through a vacuum gauge **A**.

B: Engine oil inlet
C: Engine oil outlet (to oil pan)

(2) With the engine running, read the engine speed when the vacuum builds up to the standard value.

Standard value:
Degree of vacuum: 93 kPa or more
Pump speed: 1500 r/min

(3) If the reading deviates from the specified standard value, replace the vacuum pump.

18. TIMING GEAR CASE

REMOVAL AND INSTALLATION

Apply engine oil to all moving parts before installation.

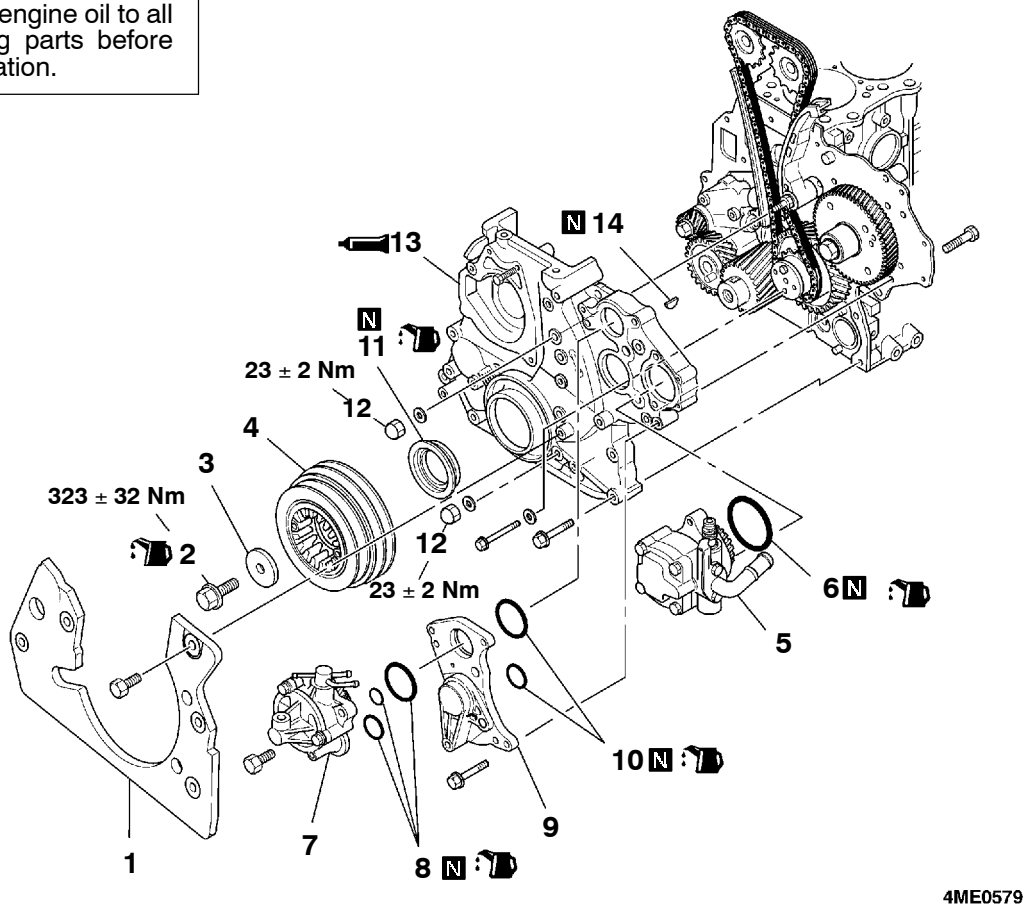

Removal steps

1. Timing gear lower cover
2. Bolt
3. Washer
◀A▶ 4. Crankshaft pulley
5. Power steering pump assembly
6. O-ring
7. Vacuum pump assembly
8. O-ring
9. Bearing block
10. O-ring
▶B◀ 11. Front oil seal
12. Cap nut
▶A◀ 13. Timing gear case
14. Key

Caution
Do not remove the front oil seal unless absolutely necessary.

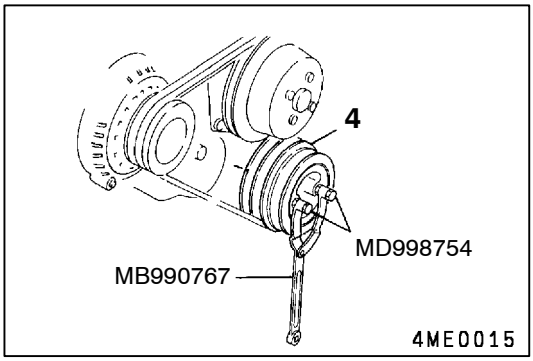

REMOVAL SERVICE POINT

◀A▶ CRANKSHAFT PULLY REMOVAL

Holding the crankshaft pulley **4** with the special tool, remove the bolt **2**.

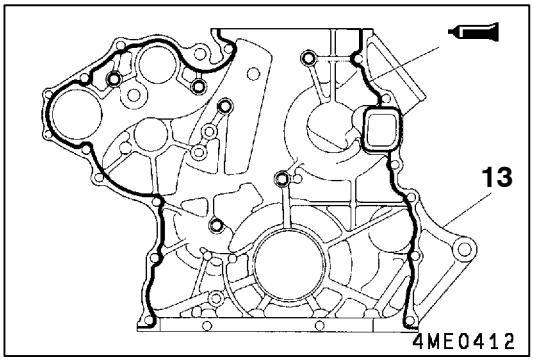

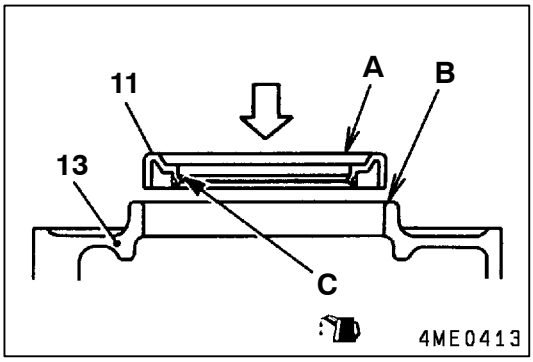

INSTALLATION SERVICE POINTS

▶A◀ TIMING GEAR CASE INSTALLATION

Apply an even bead of sealant to the entire joint surface of the timing gear case **13** as shown. Bead diameter: 3.5 mm.

Specified sealant:
Mitsubishi Genuine Part No. MD970389 or equivalent

Caution
Squeeze out the sealant uniformly without excess and discontinuity.

▶B◀ FRONT OIL SEAL INSTALLATION

Apply a thin coat of engine oil to the lip **C**, and install the front oil seal **11** in the timing gear case **13** with the lip directed as shown until its end surface **A** becomes flush with the end surface **B** of the case.

A: End surface (front oil seal)
B: End surface (timing gear case)
C: Lip

19. TIMING GEAR AND BALANCE SHAFT

REMOVAL AND INSTALLATION

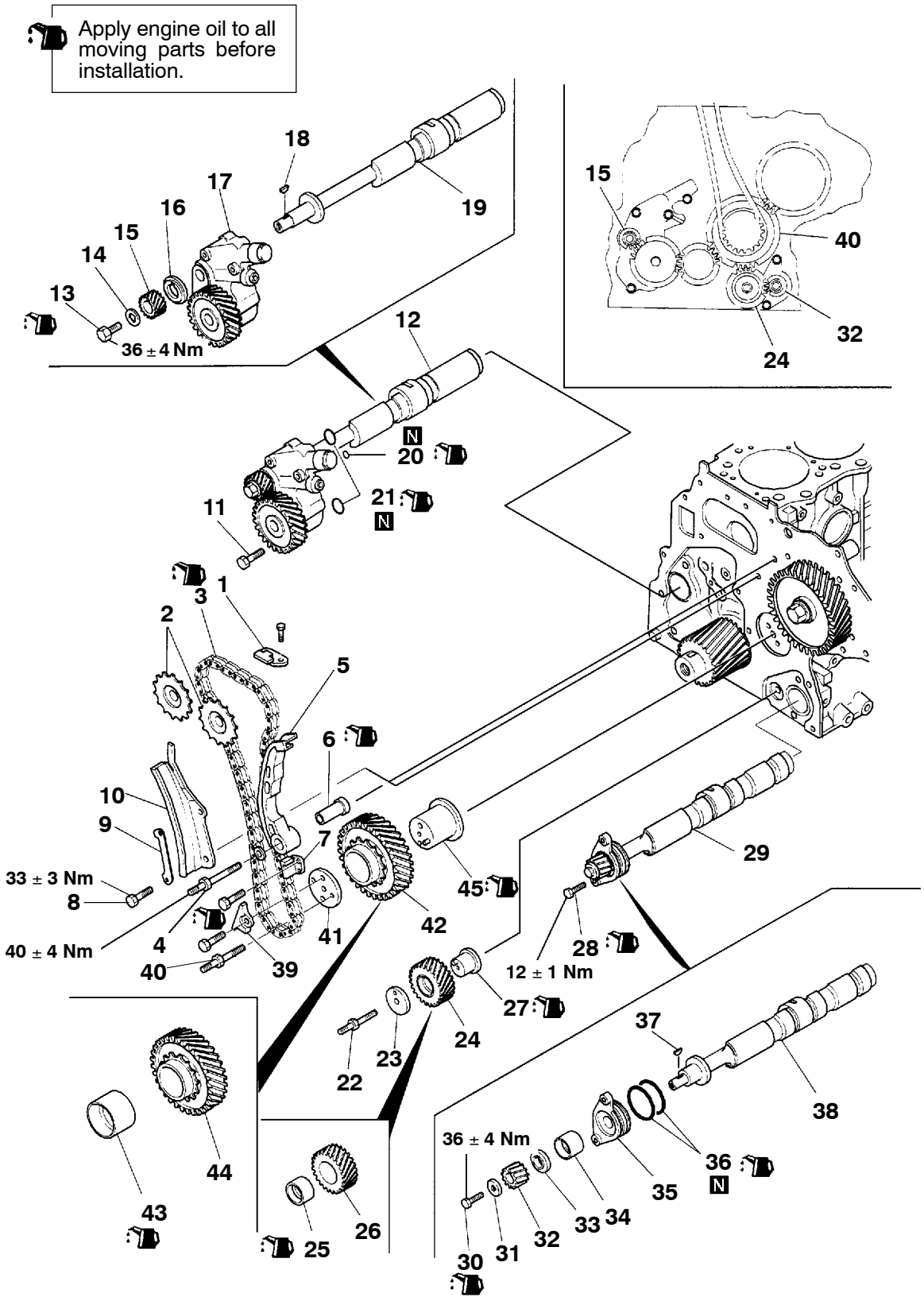

Removal steps

1. Upper guide plate
2. Cam sprocket
3. ▶G◀ Timing chain
4. Bolt
5. Tension lever
6. Tension lever shaft
7. Lower guide plate
8. Bolt
9. Guide plate washer
10. Guide plate
11. Bolt
12. ▶F◀ Balance shaft assembly RH
13. Bolt
14. Washer
15. Balance shaft gear RH
16. Thrust spacer
17. Oil pump assembly
18. Key
19. Balance shaft RH
20. O-ring
21. O-ring
22. Bolt
23. Idler washer
24. ▶E◀ Idler gear assembly LH
25. ◀A▶ ▶D◀ Idler gear bush LH
26. Idler gear LH
27. Idler shaft
28. Bolt
29. ▶C◀ Balance shaft assembly LH
30. Bolt
31. Washer
32. Balance shaft gear LH
33. Thrust spacer
34. Bush
35. Thrust plate
36. O-ring
37. Key
38. Balance shaft LH
39. Oil jet assembly
40. Bolt
41. Idler washer
42. ▶B◀ Idler gear and sprocket assembly
43. ◀B▶ ▶A◀ Idler sprocket bush
44. Idler gear and sprocket
45. Idler shaft

Caution
After installing the bolt 4, check that the tension lever 5 moves smoothly.

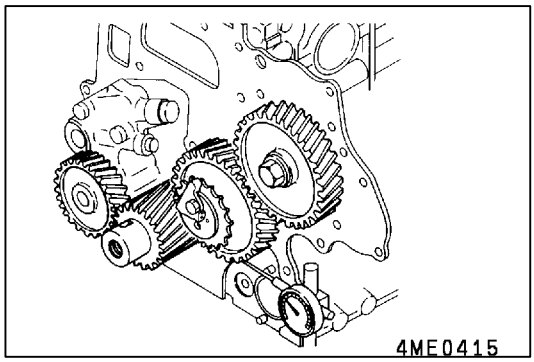

PRE-REMOVAL INSPECTION

1. BACKLASH

Measure backlash between gears, pair by pair, at three or more points. If the reading exceeds the specified service limit, replace defective part.

Standard value:

Balance shaft gear RH and oil pump gear	**0.04 - 0.19 mm**
Oil pump gear and crankshaft gear	**0.04 - 0.18 mm**
Crankshaft gear and idler gear	**0.04 - 0.18 mm**
Idler gear and idler gear LH	**0.04 - 0.19 mm**
Idler gear LH and balance shaft gear LH	**0.04 - 0.22 mm**
Idler gear and injection pump gear	**0.04 - 0.21 mm**

Limit:

Balance shaft gear RH and oil pump gear	**0.3 mm**
Oil pump gear and crankshaft gear	**0.3 mm**
Crankshaft gear and idler gear	**0.3 mm**
Idler gear and idler gear LH	**0.3 mm**
Idler gear LH and balance shaft gear LH	**0.4 mm**
Idler gear and injection pump gear	**0.4 mm**

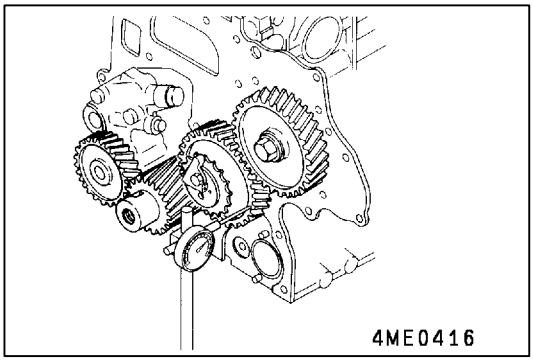

2. END PLAY

If the reading exceeds the specified service limit, replace defective part.

Standard value:

Balance shaft LH, RH	**0.09 - 0.24 mm**
Idler gear and sprocket assembly	**0.05 - 0.20 mm**
Idler gear LH assembly	**0.05 - 0.20 mm**

Limit:

Balance shaft LH, RH	**0.3 mm**
Idler gear and sprocket assembly	**0.3 mm**
Idler gear LH assembly	**0.3 mm**

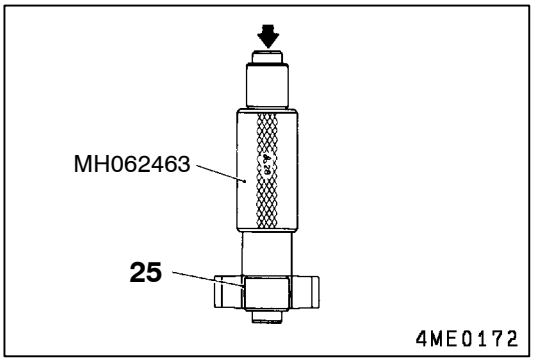

REMOVAL SERVICE POINTS

◀A▶ IDLER GEAR BUSH LH REMOVAL

Using the special tool, remove the idler gear bush **25**.

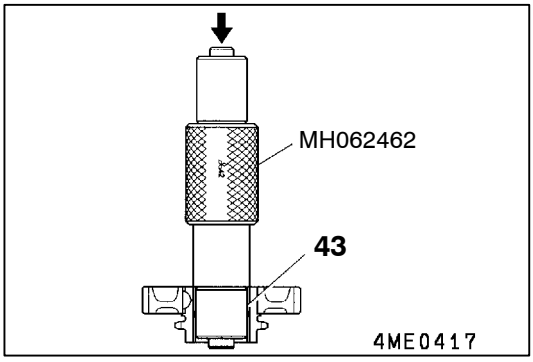

◀B▶ IDLER SPROCKET BUSH REMOVAL

Using the special tool, remove the idler sprocket bush **43**.

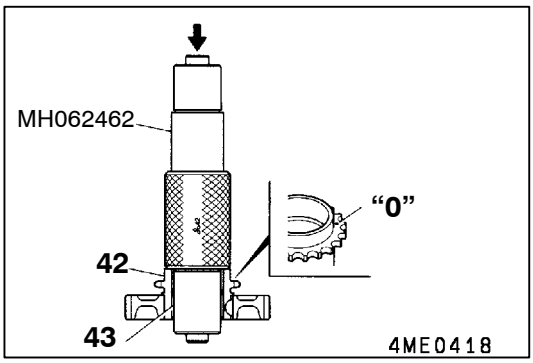

INSTALLATION SERVICE POINTS

▶A◀ IDLER SPROCKET BUSH INSTALLATION

Using the special tool, press-fit the idler sprocket bush **43** into the idler gear and sprocket **42** from the side showing the match mark **"0"**.

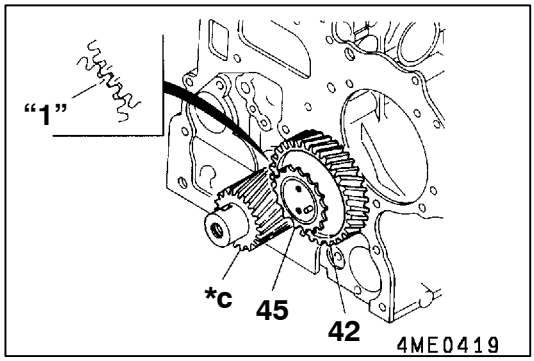

▶B◀ IDLER GEAR AND SPROCKET ASSEMBLY INSTALLATION

Install the idler gear and sprocket assembly **42** onto the idler shaft **45** while aligning the mark "**1**" with that on the crankshaft gear ***c**.

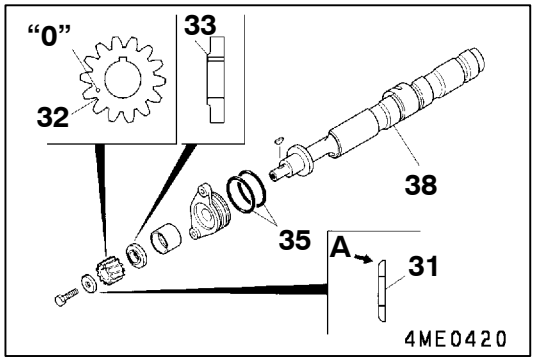

▶C◀ BALANCE SHAFT LH ASSEMBLY INSTALLATION

(1) Assemble the parts shown in the illustration to the balance shaft LH **38.**
Be sure that the washer **31** and thrust spacer **33** face in correct direction as shown. Install the balance shaft gear LH **32** with the side showing the match mark **"0"** outward.

A: Shear droop side

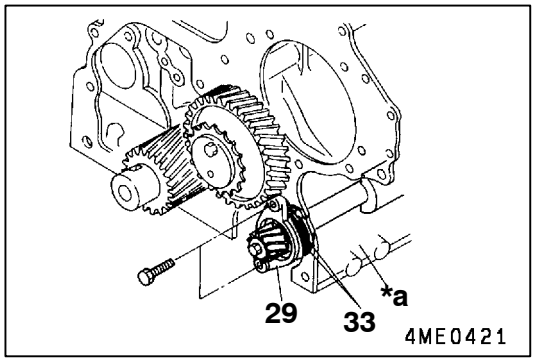

(2) Insert the completed balance shaft LH assembly **29** into the crankcase assembly ***a** and set it in position with the dowel pin on the crankcase assembly.

Caution

1. **Do not rotate the balance shaft LH assembly 29 during insertion into the crankcase assembly *a. This may cause the O-ring 35 to be slipped out of place.**
2. **Insert the balance shaft LH assembly 29 using care not to damage the inner surface of the balance shaft bush in the crankcase.**

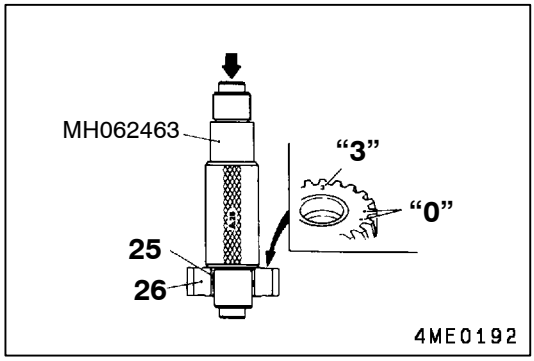

▶D◀ IDLER GEAR BUSH LH INSTALLATION

Using the special tool, press-fit the idler gear bush LH **25** into the idler gear LH **26** from the side showing the match marks "**3**" and **"0"**.

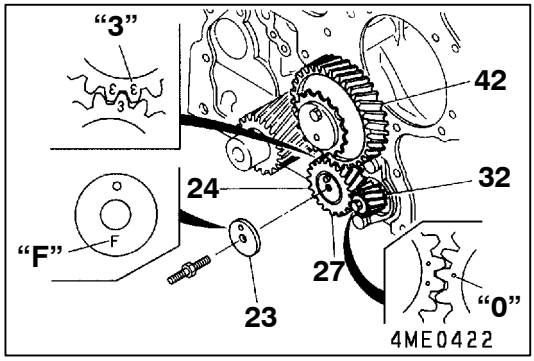

▶E◀ IDLER GEAR LH ASSEMBLY INSTALLATION

(1) Install the idler gear LH assembly **24** onto the idler shaft **27**. At this time, be sure to align the match marks "**3**" and **"0"** on the idler gear with the corresponding match marks on the idler gear and sprocket assembly **42** and the balance shaft gear LH **32**.
(2) Then, install the idler washer **23** to the idler gear LH assembly with its front mark "**F**" facing outward.

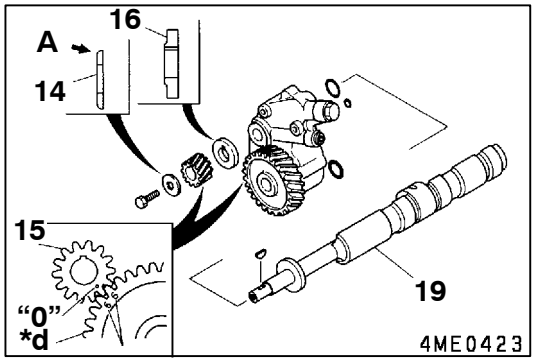

▶F◀ BALANCE SHAFT RH ASSEMBLY INSTALLATION

(1) Assemble the parts shown in the illustration to the balance shaft RH **19.**
Be sure to install the washer **14** and thrust spacer **16** in the direction shown in the illustration, and install the balance shaft gear RH **15** with its mating mark **"0"** aligned with the mating mark "**6**" on the oil pump gear ***d**.

A: Shear droop side

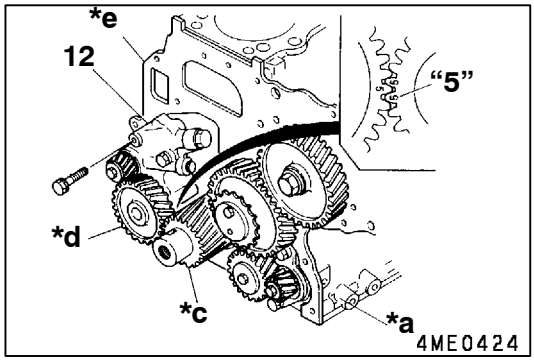

(2) Insert the completed balance shaft RH assembly **12** into the crankcase assembly while aligning the mating marks "**5**" on the oil pump gear ***d** and the crankshaft gear ***c**, and set the shaft assembly in position with the dowel pin on the crankcase assembly ***a.**

Caution
Insert the balance shaft RH assembly using care not to damage the inner surface of the balance shaft bush in the crankcase.

(3) After the timing gears are installed in position, check that all the rotary parts smoothly rotate.

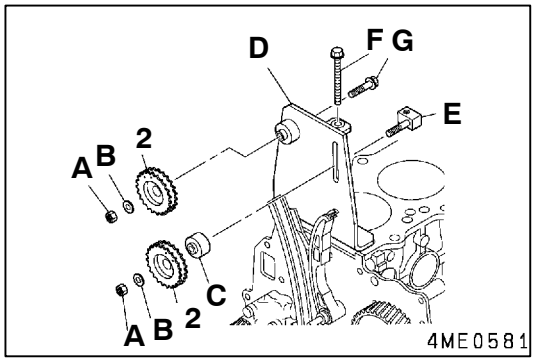

▶G◀ TIMING CHAIN INSTALLATION

(1) Hold the camshaft sprocket **2** using the special tool.

Component Parts of Special Tool MH063490 - Cam Sprocket Holder Kit
A: Nut
B: Washer
C: Spacer
D: Adjusting plate
E: Nut
G: Bolt

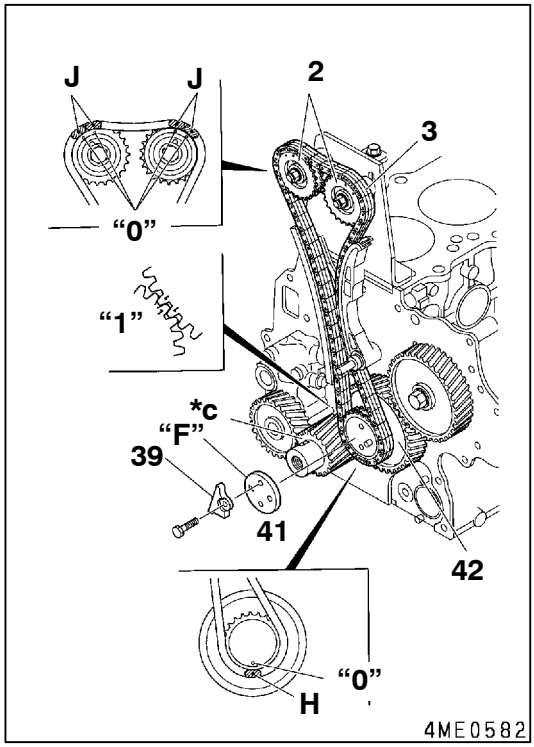

(2) Check that the match mark "**1**" on the idler gear and sprocket assembly **42** is in alignment with that on the crankshaft gear ***c**.

(3) Align the match mark **"0"** on the idler gear and sprocket assembly **42** with the mark link plate **H** of the timing chain **3**.

Caution
The timing chain 3 has the match mark provided at two places: one bright white link plate H at one place and a pair of bright white link plates J at the other.

(4) Place the timing chain **3** around the camshaft sprockets **2** while aligning the timing mark **"0"** on the camshaft sprockets with the mark link plate **J** on the timing chain.

(5) After installing the timing chain **3**, attach the idler washer **41** with the front mark "**F**" facing outward.

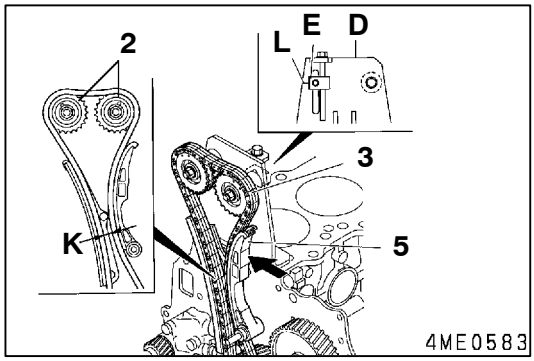

INSPECTION

1. TIMING CHAIN

(1) Aligning the stamped lines **L** on the adjusting plate **D** and nut **E**, set the camshaft sprocket **2** in position.

(2) Push the tension lever **5** by hand to take up the slack of the timing chain **3**. Measure the minimum clearance **K** between the chain spans facing each other. If the reading deviates from the specified limit, replace the timing chain.

Standard value: 16.5 mm

Limit: 9 mm

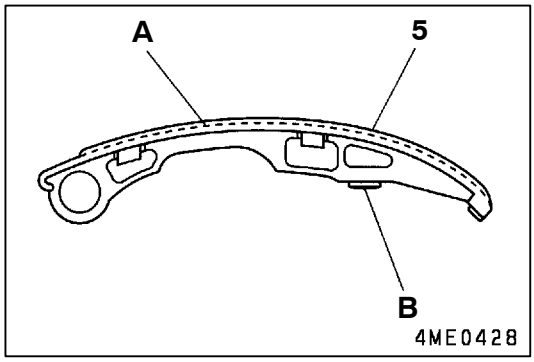

2. TENSION LEVER AND TENSION LEVER SHAFT

(1) Replace the tensioner lever **5** if it shows any cracks or flakes on the surface **A** that makes sliding contact with the timing chain and the tensioner contact surface **B**.

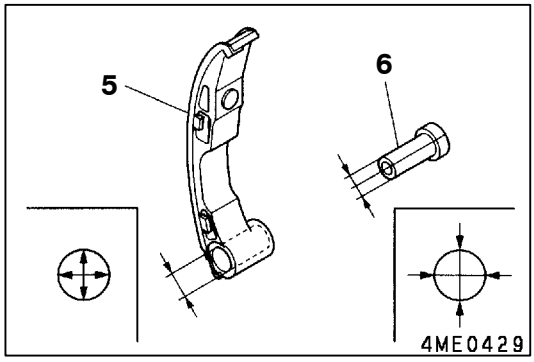

(2) If the tensioner lever **5** to tension lever shaft **6** clearance exceeds the specified limit, replace the defective part.

Standard value: 0.06 - 0.18 mm

Limit: 0.3 mm

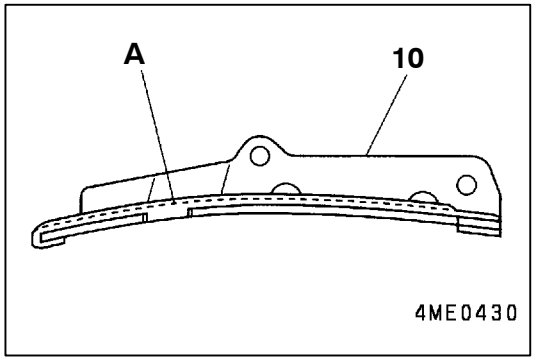

3. GUIDE PLATE

Replace the guide plate **10** if it shows any cracks or flakes on the surface **A** that makes sliding contact with the timing chain.

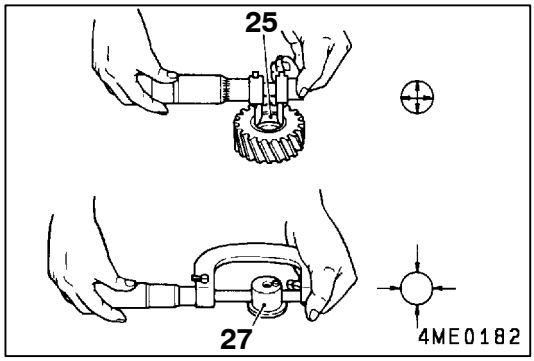

4. IDLER GEAR BUSH LH AND IDLER SHAFT

If the idler gear bush **25** to idler shaft **27** clearance exceeds the specified limit, replace the defective part.

Standard value: 0.02 - 0.05 mm

Limit: 0.1 mm

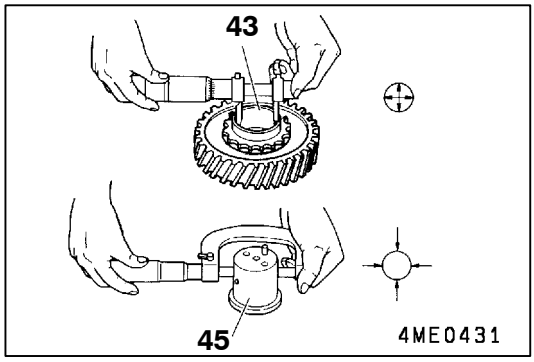

5. IDLER SPROCKET BUSH AND IDLER SHAFT

If the idler sprocket bush **43** to idler shaft **45** clearance exceeds the specified limit, replace the defective parts.

Standard value: 0.02 - 0.06 mm

Limit: 0.1 mm

20. OIL PUMP

REMOVAL AND INSTALLATION

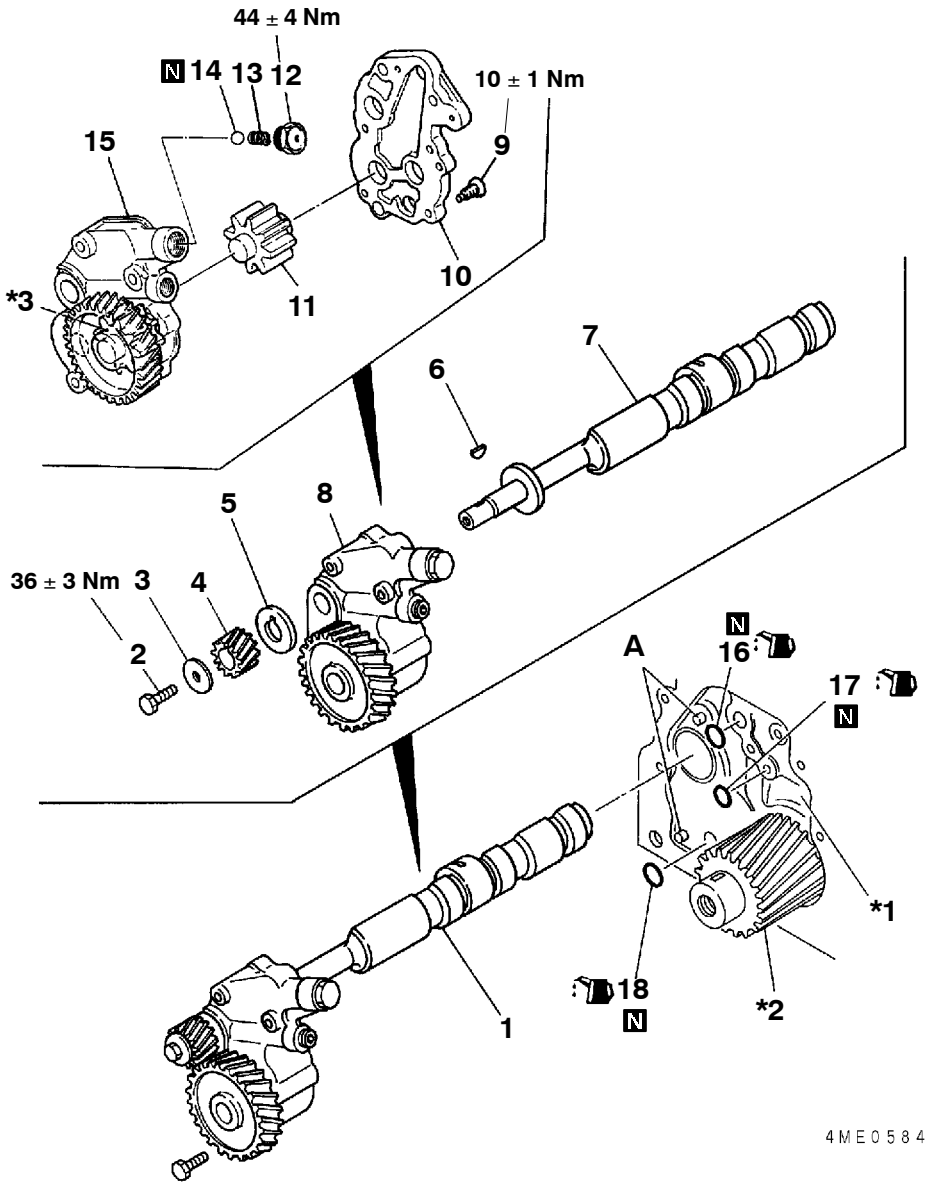

Removal steps

1. Balance shaft RH assembly
2. Bolt
3. Washer
4. Balance shaft gear RH
5. Thrust spacer
6. Key
7. Balance shaft RH
8. Oil pump assembly
9. Screw
10. Oil pump cover
11. Driven gear assembly
12. Plug
13. Relief valve spring
14. Steel ball
15. Gear and body assembly
16. O-ring
17. O-ring
18. O-ring

*1: Crankcase
(Refer to page 11B-25-1.)
*2: Crankshaft gear
*3: Drive gear
A: Locating pin

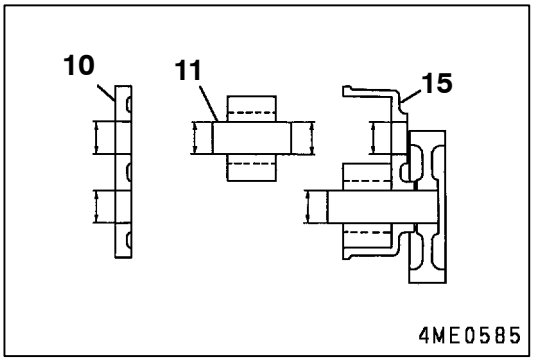

INSPECTION

OIL PUMP

(1) Shaft to Oil Pump Case and Cover Clearances
In either case, if the measurement exceeds the specified service limit, replace oil pump assembly.

Standard value: 0.03 - 0.05 mm

Limit: 0.15 mm

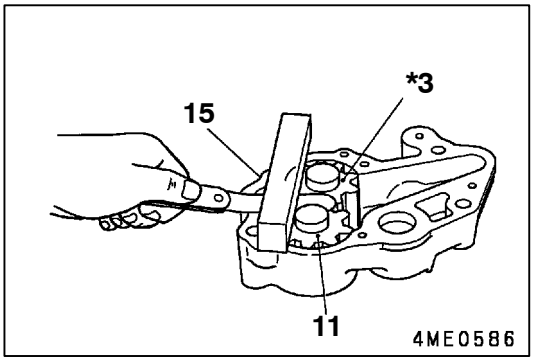

(2) Difference between Gear Height and Oil Pump Case Depth
If the difference exceeds the specified service limit, replace defective part.

Standard value: 0.05 - 0.10 mm

Limit: 0.15 mm

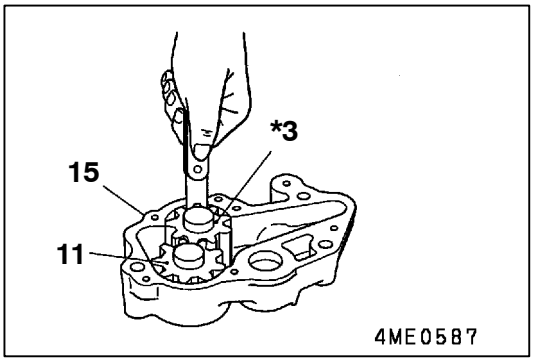

(3) Gear Tooth Crest-to-Oil Case Clearance
If the clearance exceeds the specified service limit, replace defective part.

Standard value: 0.15 - 0.26 mm

Limit: 0.27 mm

21. OIL COOLER AND OIL FILTER

REMOVAL AND INSTALLATION

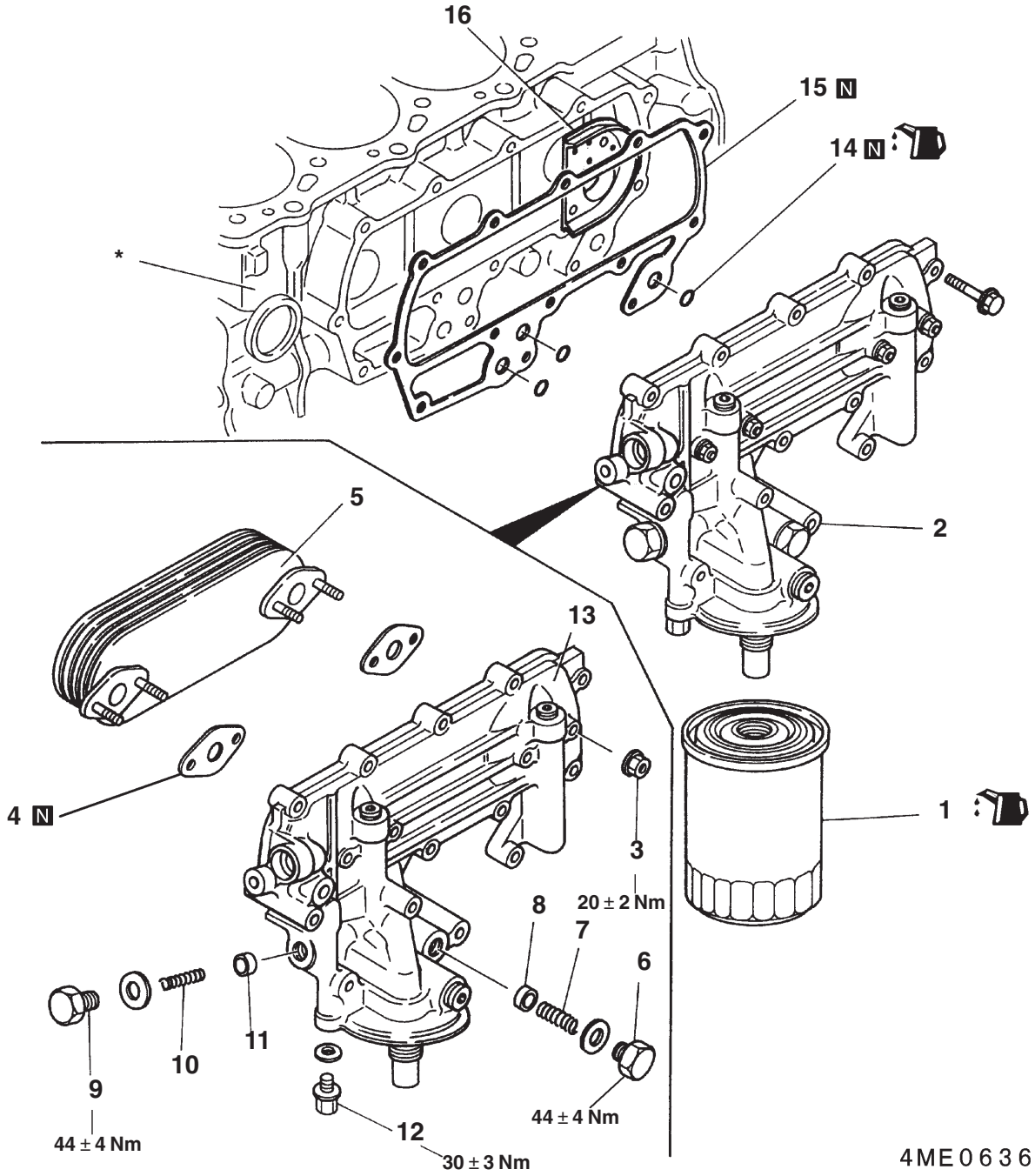

Removal steps

▶A◀ 1. Oil filter
2. Oil cooler assembly
3. Nut
4. Gasket
5. Oil cooler element
6. Plug
7. Bypass valve spring
8. Plunger
9. Plug
10. Regulator valve spring
11. Plunger
12. Water drain plug
13. Oil cooler body
14. O-ring
15. Gasket
16. Water separate lip

*: Crankcase assembly

CLEANING

(1) Check the oil cooler element **5** for deposited carbon and sludge in oil passage and bypass, and wash it clean in cleaning oil, if necessary.
(2) Wash the oil cooler element **5** and the oil cooler body **13** if they are much contaminated with scale.

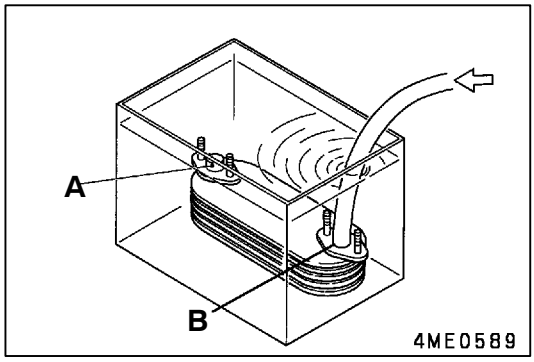

INSPECTION

OIL COOLER ELEMENT

(1) Immerse the oil cooler element **5** in a water tank, with the oil outlet **A** closed. Connect a hose to the engine oil inlet **B**.
(2) Apply an air pressure of 1470 kPa into the oil cooler element **5** through the connected hose, and check for air leaks.
(3) Replace the oil cooler element **5** if it leaks.

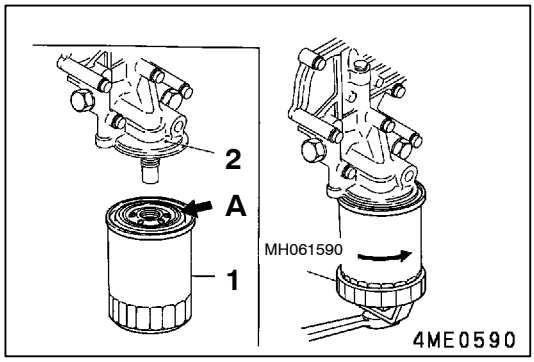

INSTALLATION SERVICE POINT

▶A◀ OIL FILTER INSTALLATION

(1) Clean the surface of the oil cooler assembly **2** which contacts the oil filter **1**.
(2) Apply a thin coat of engine oil to the gasket **A** on the oil filter **1**.
(3) Holding the gasket **A** in contact with the oil cooler assembly **2**, tighten the cover 5/8 turn.

22. OIL PAN, OIL STRAINER AND OIL JET

REMOVAL AND INSTALLATION

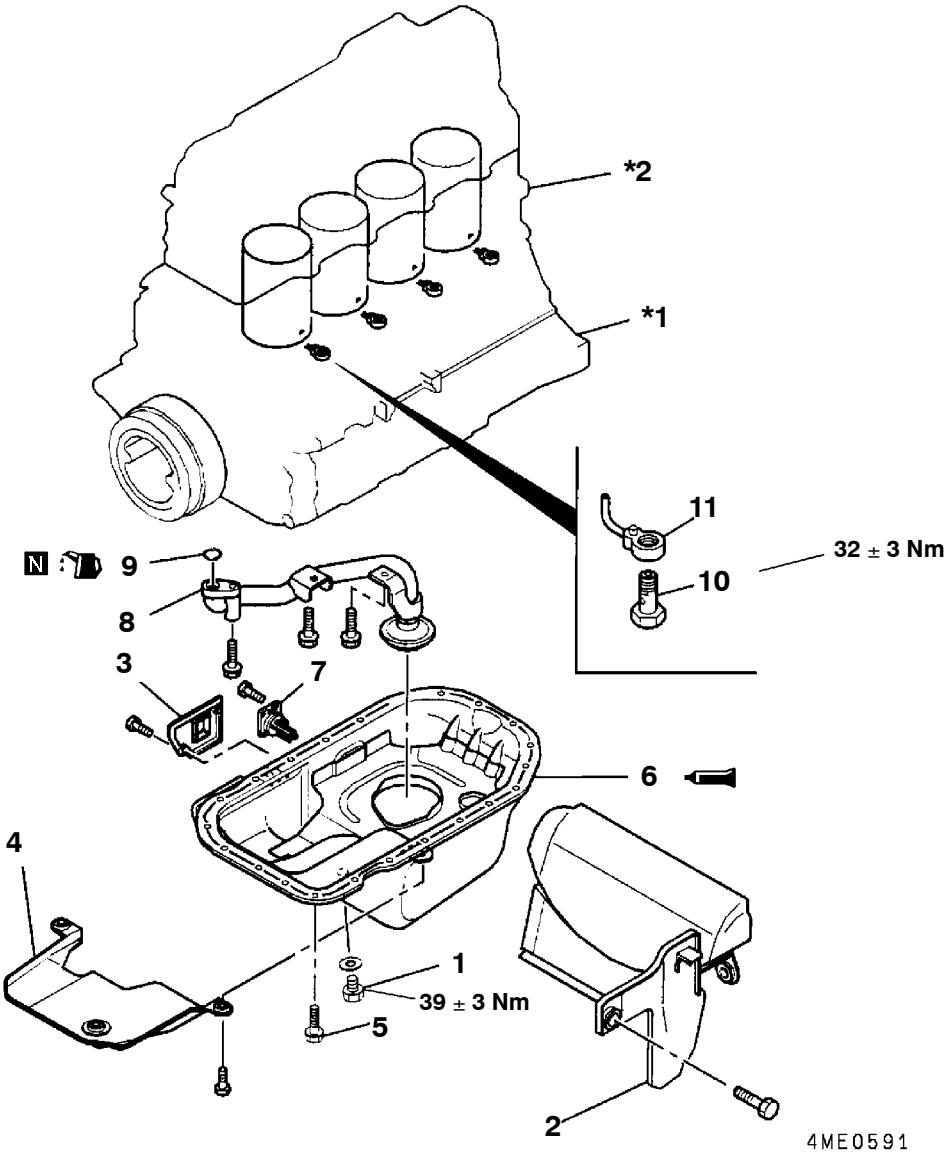

Removal steps

1. Drain plug
2. Oil pan cover LH
3. Oil pan cover RH
4. Oil pan cover
5. Bolt
▶A◀ 6. Oil pan
7. Oil level sensor
8. Oil strainer
9. O-ring
10. Check valve (Refer to page 11B-25-1.)
11. Oil jet (Refer to page 11B-25-1.)

*1: Lower crankcase (Refer to page 11B-25-1.)
*2: Upper crankcase (Refer to page 11B-25-1.)

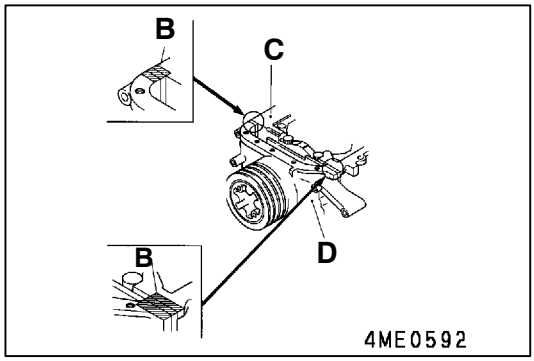

INSTALLATION SERVICE POINT

▶A◀ OIL PAN INSTALLATION

(1) Apply sealant at the bottom **B** of the mating surface of lower crankcase **C** and timing gear case **D**.

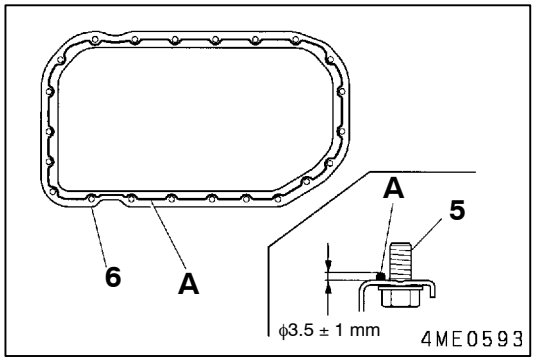

(2) Apply even beads of sealant **A** without skips to the circumferential mating surface of the oil pan **6** as shown.

Bead diameter: ϕ3.5 ± 1 mm

Specified sealant:
Mitsubishi Genuine Part No. MD970389 or equivalent.

(3) Install the oil pan **6** to the lower crankcase within 15 minutes after the application of sealant **A**.

Caution

1. **The surface to be coated with sealant A must be clean and free of slush and other foreign matters.**
2. **When installing, take care that sealant A does not smear other places.**
3. **After the oil pan 6 is installed, wait for at least one hour before starting the engine.**
4. **Remove and reinstall the oil pan 6 with fresh beads of sealant A whenever the bolts 5 (holding the oil pan) were loosened or removed after the installation.**

23. PISTON AND CONNECTING ROD

REMOVAL AND INSTALLATION

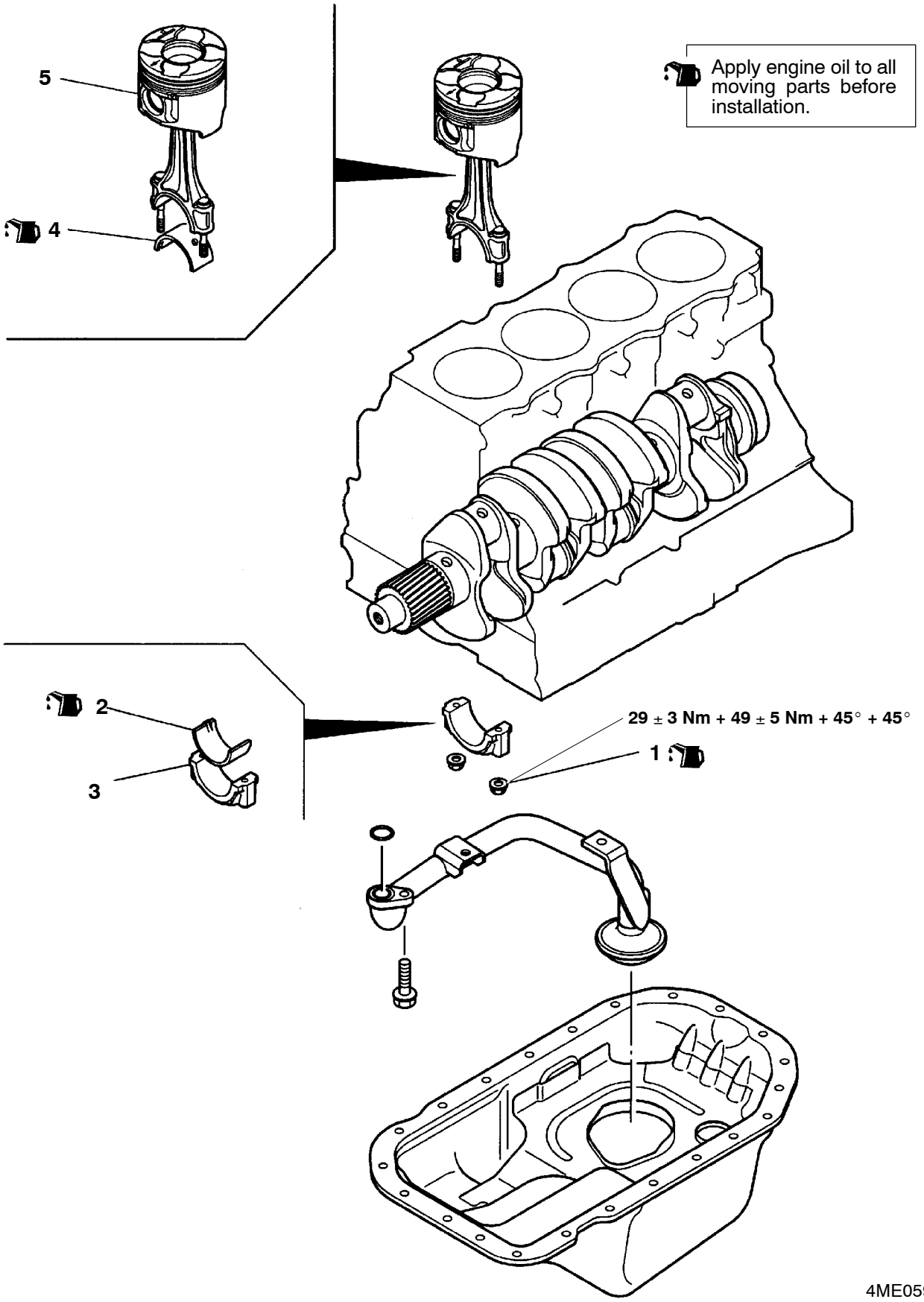

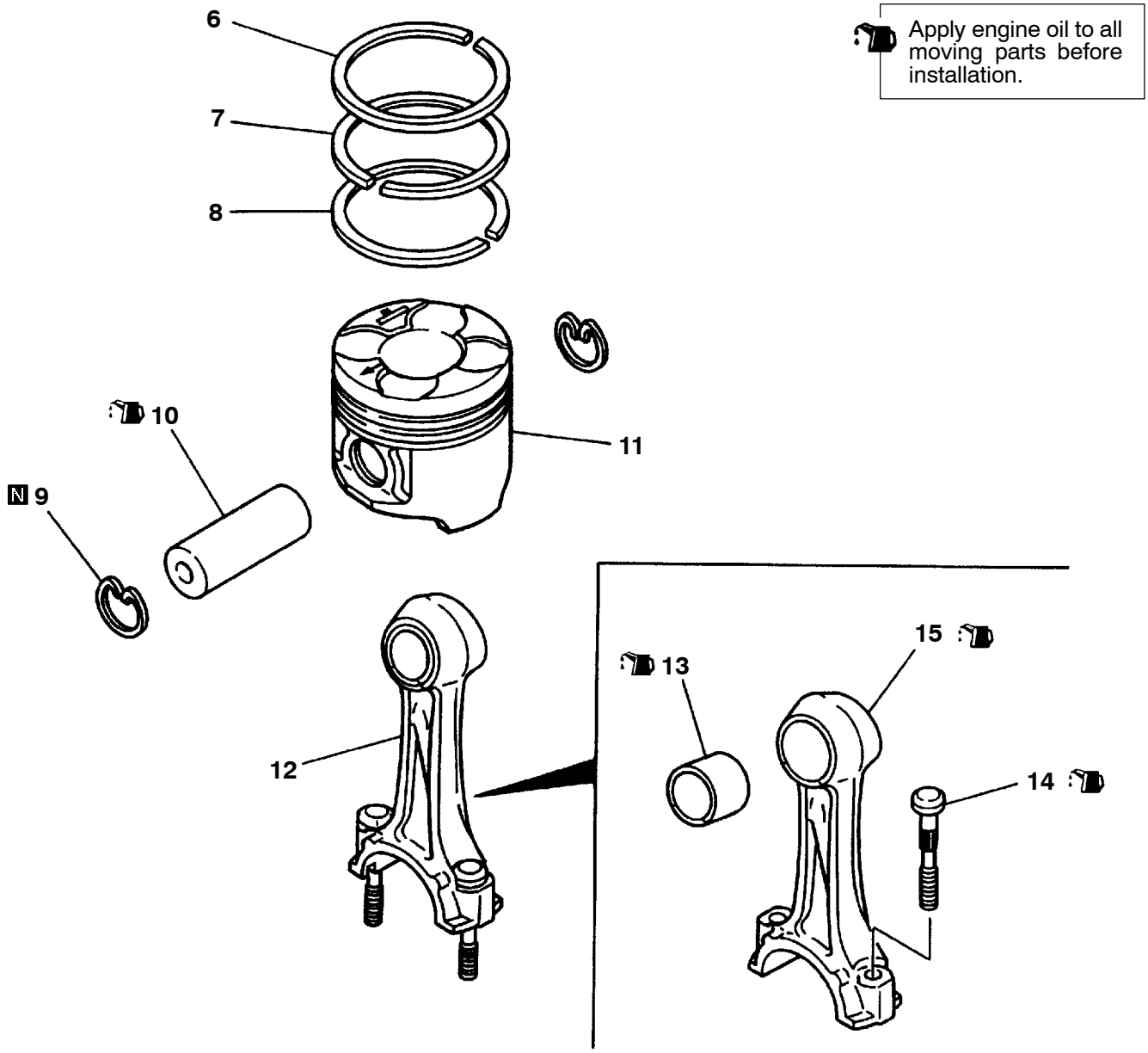

Removal steps

◀A▶ 1. Nut
▶F◀ 2. Lower connecting rod bearing
3. Connecting rod cap
▶F◀ 4. Upper connecting rod bearing
▶E◀ 5. Piston and connecting rod assembly
◀B▶ ▶D◀ 6. 1st compression ring
◀B▶ ▶D◀ 7. 2nd compression ring
◀B▶ ▶D◀ 8. Oil ring
9. Snap ring
◀C▶ ▶C◀ 10. Piston pin
◀C▶ ▶C◀ 11. Piston
◀C▶ ▶C◀ 12. Connection rod assembly
◀D▶ ▶B◀ 13. Connecting rod bush
▶A◀ 14. Connecting rod bolt
15. Connecting rod

Caution

1. **Do not remove the connecting rod bolt 14 unless absolutely necessary.**
2. **The nut 1 and connecting rod bolt 14 are tightened to the plastic area. If the nut 1 has three punch marks indicating that they have been tightened three items, replace both the nut 1 and the connecting rod bolt 14.**

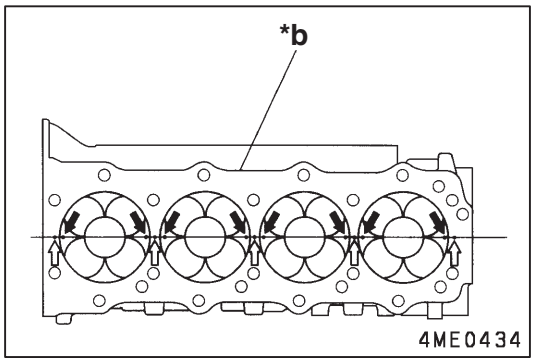

PRE-REMOVAL INSPECTION

1. PISTON PROTRUSION FROM CRANKCASE TOP

Caution
Do not fail to check piston protrusions. The engine performance are directly influenced by them.

(1) Position each piston at the TDC.
(2) There are five reference points A on the upper crankcase ***b** that serve as a zero level each. Check piston protrusions with respect to these reference points. (Piston protrusion = Measuring point B – Reference point A)
(3) Measure piston protrusions at two points per cylinder (8 in total) using the closest reference point, and average the readings.
(4) If the average deviates from the specified standard value, check clearances at necessary points.

Standard value: –0.03 – –0.209 mm

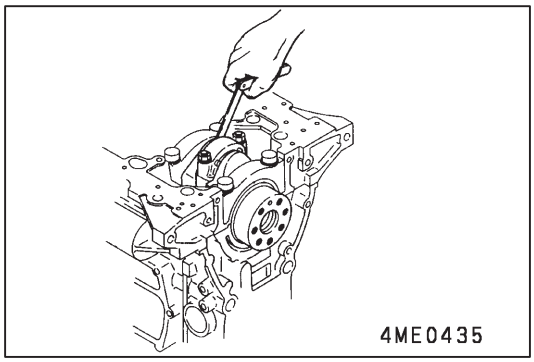

2. CONNECTING ROD END PLAY

(1) Measure end play of each connecting rod.
(2) If the measurement exceeds the specified service limit, replace defective part.

Standard value: 0.15 – 0.45 mm

Limit: 0.6 mm

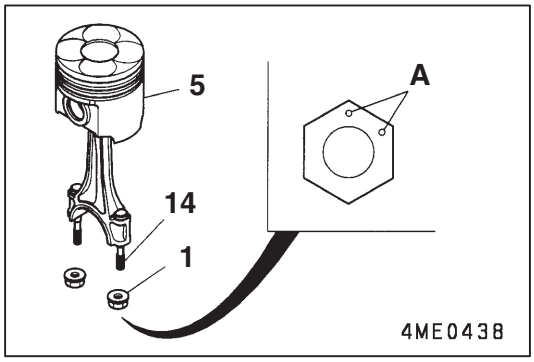

REMOVAL SERVICE POINTS

◀A▶ NUT REMOVAL

Caution
Provide one punch mark A on the head of the nut 1 each time it is used to tighten the connecting rod bolt 14. If it has three punch marks (the evidence of having been tightened 3 times), replace both the nut 1 and the connecting rod bolt 14.

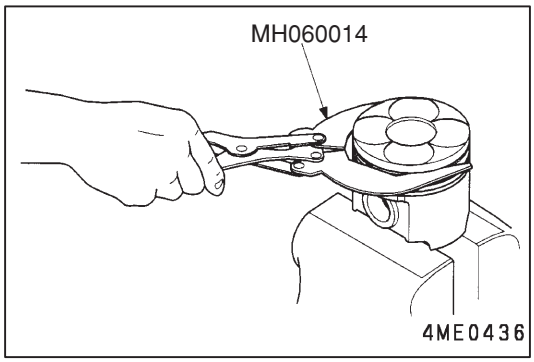

◀B▶ PISTON RING REMOVAL

Using the special tool, remove each piston ring.

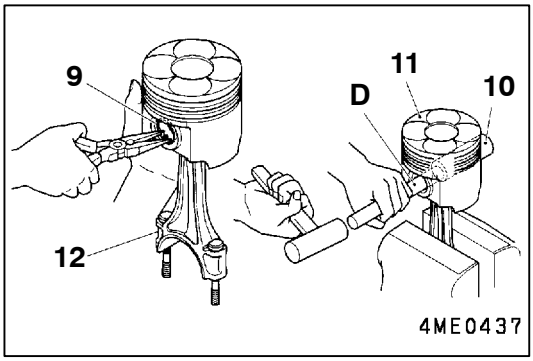

◀C▶ PISTON PIN / PISTON / CONNECTING ROD ASSEMBLY REMOVAL

Remove the piston pin **10** using an appropriate push-out bar **D** as shown.

NOTE
To make the piston pin **10** easy to remove, warm the piston **11** over an appropriate heater or in hot water if necessary.

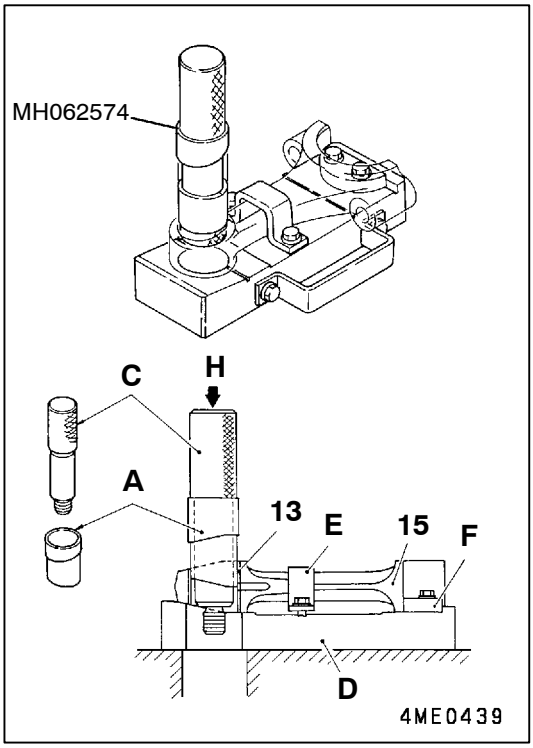

◀D▶ CONNECTING ROD BUSH REMOVAL

Use the special tool to remove the connecting rod bush **13**.

Component Parts of Special Tool MH062574 - Connecting Rod Bush Puller Kit
A: Collar
B: Collar
C: Puller
D: Base
E: Bracket
F: Plate
G: Nut

1. Secure the connecting rod **15** to the base **D** with the bracket **E** and plate **F**.
2. Attach the collar **A** onto the puller **C** as shown, and remove the connecting rod bush **13** slowly under a press ram load **H** of approximately 49,035 N.

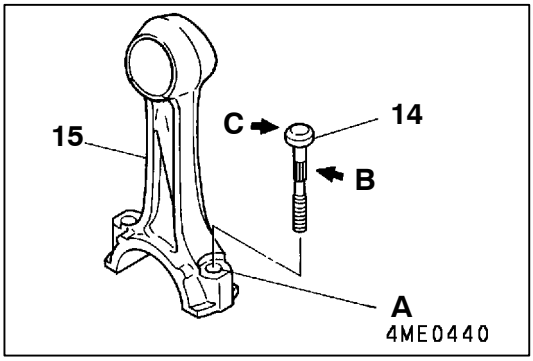

INSTALLATION SERVICE POINTS

▶A◀ CONNECTING ROD BOLT INSTALLATION

(1) Check that the bolt hole **A** in the connecting rod **15** is free of damage, burrs, etc.
(2) Apply a thin coat of engine oil to the knurled portion **B** of the connecting bolt **14**. Then, fit it in the connecting rod with the notch **C** in the head inward under a press ram load of less than 4,903 N.

C: Notch in bolt head

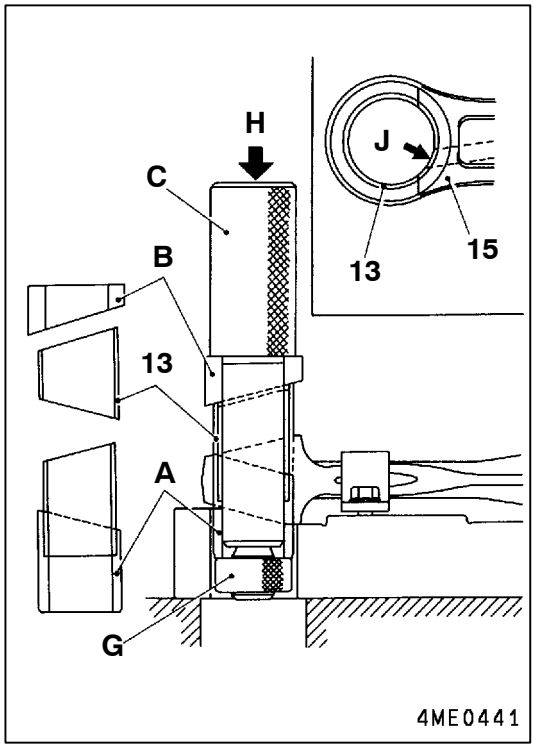

▶B◀ CONNECTING ROD BUSH INSTALLATION

Use the special tool to install the connecting rod bush **13**.

Component Parts of Special Tool MH062574 - Connecting Rod Bush Puller Kit
A: Collar
B: Collar
C: Puller
D: Base
E: Bracket
F: Plate
G: Nut

(1) Apply a thin coat of engine oil to the outside surface of the connecting rod bush **13** and the bush fitting hole in the connecting rod **15**.
(2) Set the collar **B**, connecting rod bush **13** and collar **A** on the puller **C** as shown and secure them with the nut **G**.
(3) Aligning the oil holes **J**, press-fit the connecting rod bush **13** into the connecting rod **15** slowly under a press ram load **H** of approximately 49,035 N.
(4) After press-fitting, ream the connecting rod bush **13** for the specified push-to-piston pin clearance.

Standard value: 0.03 - 0.05 mm

Limit: 0.1 mm

Caution
After reaming, insert the piston pin 10 into the connecting rod bush 13 to ensure that it smoothly moves with little play.

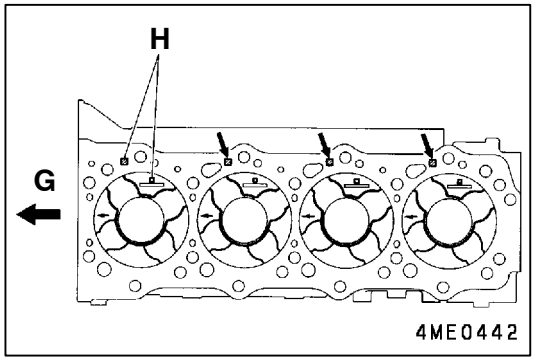

▶C◀ PISTON / PISTON PIN / CONNECTING ROD ASSEMBLY INSTALLATION

(1) Use a piston **11** having the same size mark **"A"**, **"B"**, or **"C"** as that stamped beside each cylinder on the upper crankcase. (The marks are found in the order of the cylinders No. 1, 2, 3 and 4 starting from the engine front **G**.)

H: Location of stamped size mark

Caution
A mismatch of size marks can result in the piston 11 being seized while in motion.

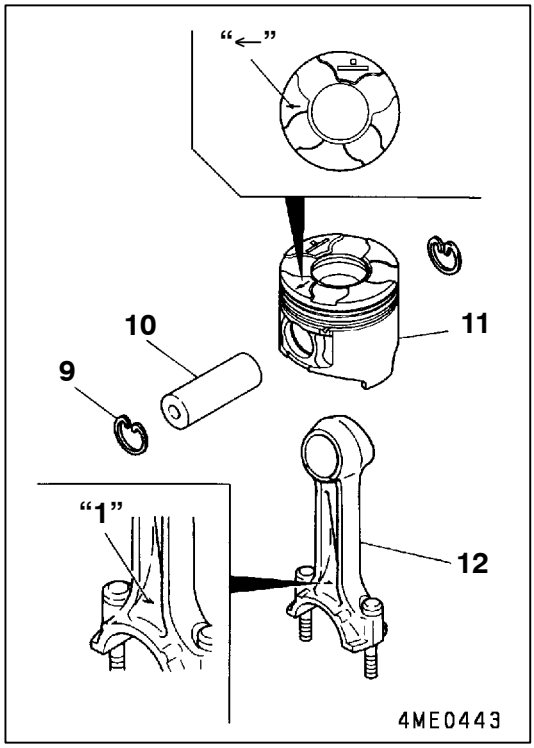

(2) Apply a thin coat of engine oil to the piston pin **10** prior to insertion. Assemble the connecting rod **12** and piston **11** facing in the directions shown.

"**1**": Connecting rod identification mark
"←": Front mark

NOTE
To make the piston pin **10** easy to install, warm the piston **11** over an appropriate heater or in hot water if necessary.

Caution
After inserting the piston pin 10, check to ensure that the piston moves smoothly with little play.

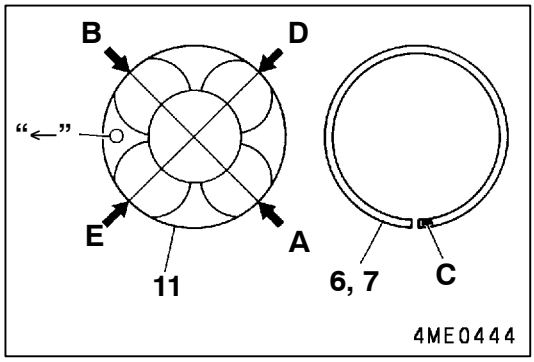

▶D◀ PISTON RING INSTALLATION

(1) Install the oil ring **8** onto the piston **11** with its end gap positioned at **A** and the abutting end of the expander spring at **B** as shown.
(2) Install the compression rings **6**, **7** onto the piston **11**, with their manufacturer's mark **C** (stamped near the end gap) facing upward and their end gap **D**, **E** positioned as shown.

D: End gap of 1st compression ring
E: End gap of 2nd compression ring
"←": Front mark

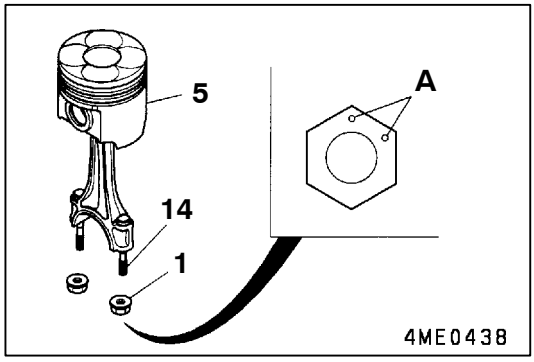

▶E◀ PISTON AND CONNECTING ROD ASSEMBLY INSTALLATION

Caution
Before installing the piston and connecting rod assembly 5, check the head of the nut 1 for punch marks. The number of punch marks corresponds to the number of times the mating connecting rod bolt has been tightened to the plastic area (bolts with two punch marks or less are reusable). If there are three (the evidence of having been tightened 3 times), replace both the nut 1 and the connecting rod bolt B.

(1) Check that the end gaps of the piston rings **C** are in position.
(2) Check that the size marks **D** on the pistons are the same as the respective marks on the upper crankcase.
(3) Sheathe the connecting rod bolt **B** with a vinyl hose **E** so as not to damage the cylinder inside surface of the upper crankcase ***b** and the pin of the crankshaft assembly ***a**.

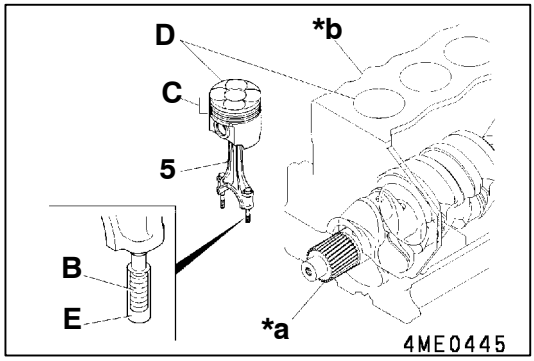

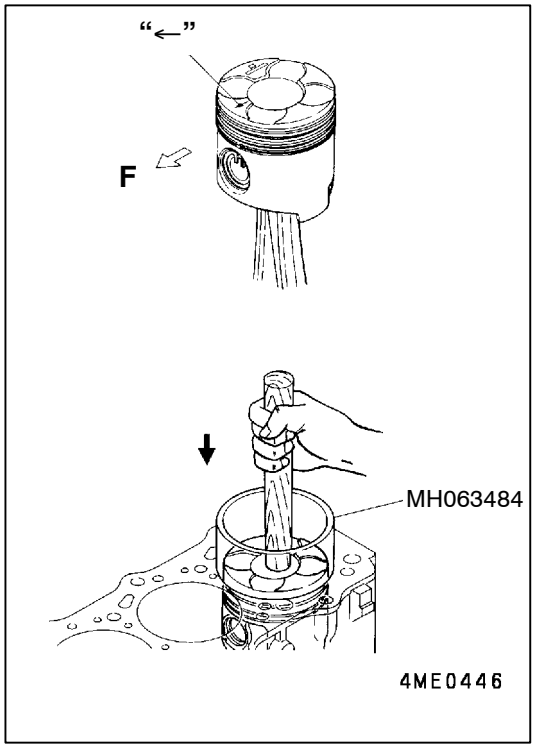

(4) Using the special tool, install the piston and connecting rod assembly in position, with the front mark "←" on the piston crown facing toward the engine front **F**.

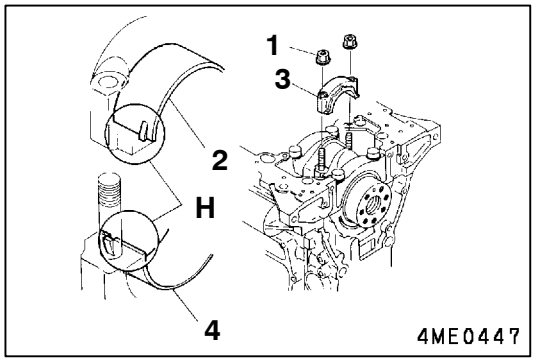

(5) Press the piston down. Apply a thin coat of engine oil to the threaded part of the connecting rod bolt, then install the connecting rod cap **3** while aligning the lugs **H** of the upper connecting rod bearing shell **4** and lower connecting rod bearing shell **2**.

(6) Tighten the nuts **1** alternately in the following manner.
1) Tighten the nut **1** to a torque of 29 ± 3 Nm.
2) Tighten further to a torque of 49 ± 5 Nm.
3) Give a 45° ± 5° turn.
4) Give another 45° ± 5° turn to complete the tightening.

Caution
The nut is tightened to a point where the bolt is plastically deformed. Do not tighten it any more than the final turn.

(7) After the connecting rod cap **3** is secured, check the following.
1) Connecting rod end play
2) Piston protrusion

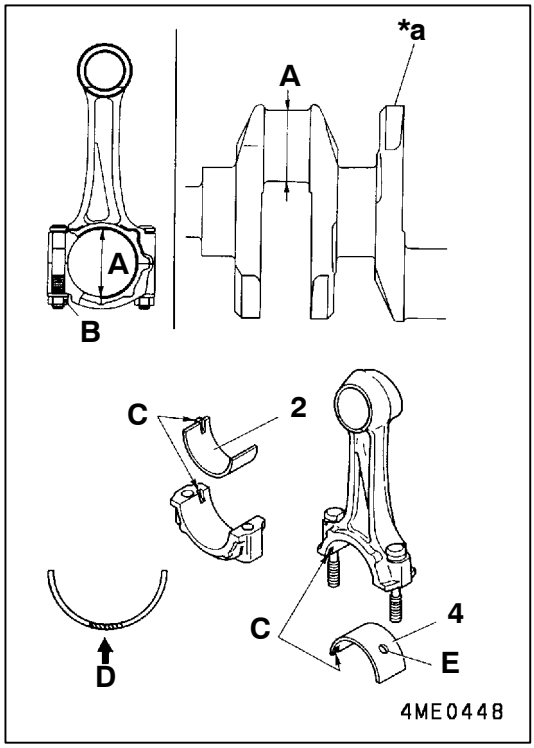

▶F◀ CONNECTING ROD BEARING INSTALLATION

The connecting rod bearing **2**, **4** to be used must have an appropriate thickness that matches the big end I.D. of the connecting rod and the pin O.D. of the crankshaft assembly. There are two methods available for selecting an appropriate bearing.

<Selection by measurement>

(1) Measure the big end I.D. of the connecting rod (with connecting rod bearing **2**,**4** removed) and the pin O.D. of the crankshaft assembly.

A: Measuring point
Connecting rod: 1 point in vertical direction
Crankshaft: 1 point in any direction

Caution
Before measuring the big end O.D. of the connecting rod, tighten the nut B to a torque of 49 ± 5 Nm.

(2) Select connecting rod bearing shells **2**, **4** having the thickness that matches the respective measured values from the table below. Install the selected connecting rod bearing shells with their lug **C** fitted in the mating groove of the connecting rod.

D: Location of connecting rod bearing identification color (side)

Caution
The upper connecting rod bearing shell 4 has an oil hole E, while the lower connecting rod bearing shell 2 has no oil hole. Be careful not to install them in wrong place.

Crankshaft pin O.D.	Connecting rod big end I.D.	Compatible connecting rod bearing identification color (Figures in brackets are sheet thicknesses)
53.980 - 53.988	58.010 - 58.019 mm	None (1.992 - 1.996 mm)
	58.000 - 58.010 mm	Blue (1.988 - 1.992 mm)
53.971 - 53.980	58.010 - 58.019 mm	Yellow (1.996 - 2.000 mm)
	58.000 - 58.010 mm	None (1.992 - 1.996 mm)

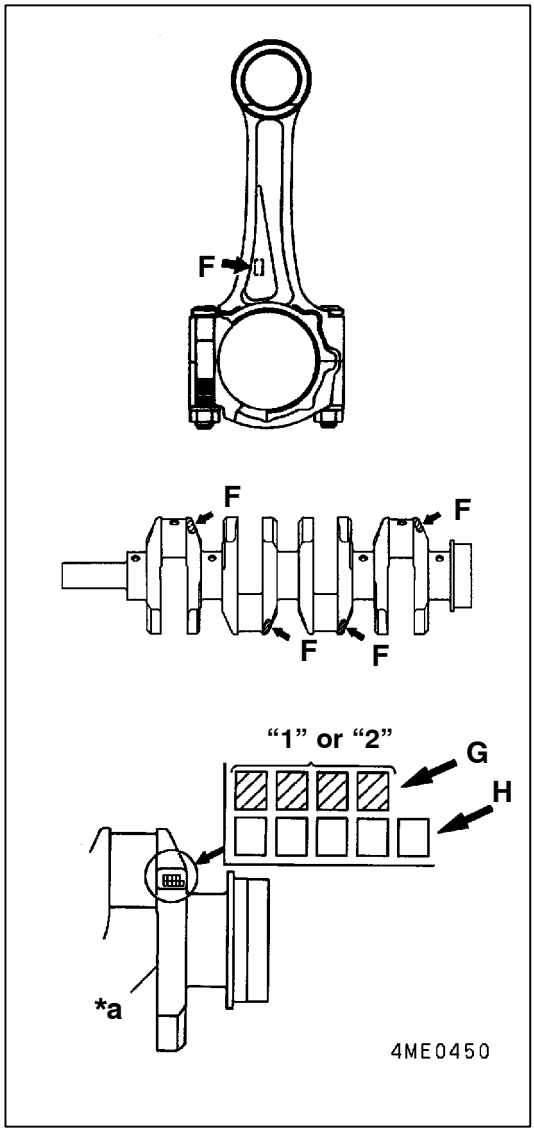

<Selection by identification color>
Select appropriate connecting rod bearings through the combination of the big end I.D. identification color marked on each connecting rod and the appropriate pin O.D. identification color on the crankshaft assembly ***a** as shown in the table below.

F: Location of identification color

Identification color on crankshaft (Shown in brackets is identification mark)	Identification color on connecting rod	Compatible connecting rod bearing identification color
None (1)	None	Blue
	Blue	None
Blue (2)	None	None
	Blue	Blue

The crankshaft assembly has additional pin O.D. identification marks (**"1"** or **"2"**) stamped at **G** as shown. The 4 marks apply to No. 1 pin, No. 2 pin and so forth sequentially from the engine front to rear.

H: Location of crankshaft journal O.D. identification mark

INSPECTION

1. CONNECTING ROD BEARING

Caution
1. **Do not use connecting rod bearings 2, 4 expanded with force.**
2. **Replace the connecting rod bearing 2, 4 as a set of upper and lower shells.**

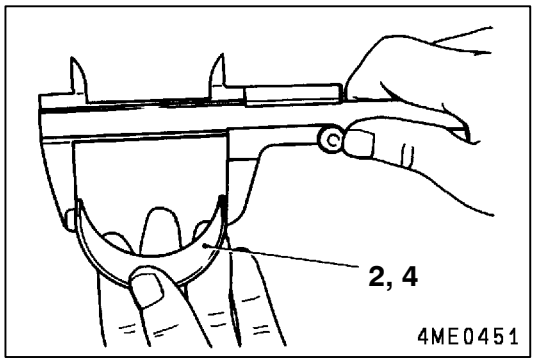

(1) Free Span
If the reading is less than the specified limit, replace the connecting rod bearing **2**, **4**.

Limit: Less than 58.8 mm

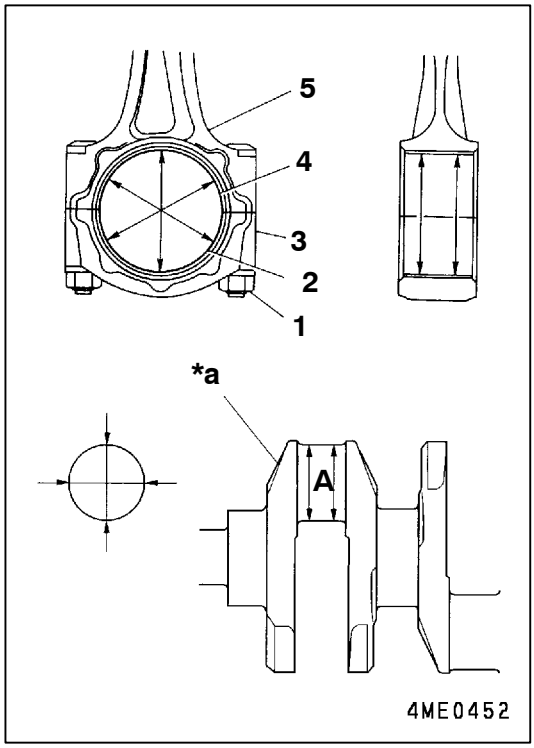

(2) Connecting Rod Bearing-to-Crankshaft Clearance (Oil clearance)

1) Fit the lower connecting rod bearing shell **2** and upper connecting rod bearing shell **4** in the connecting rod cap **3** and the piston and connecting rod assembly **5**, respectively. Tighten the nuts **1** to a torque of 49 ± 5 Nm.
2) Measure the I.D. of the connecting rod bearing **2**, **4** and the pin O. D. at **A** of the crankshaft ***a**. If the readings exceed the specified limit, replace the defective part(s).

   Standard value: 0.03 - 0.05 mm

   Limit: 0.1 mm
3) When the connecting rod bearing **2**, **4** is replaced with an undersize bearing, adjust the pin O.D. of the crankshaft ***a** to the specified undersize dimension.

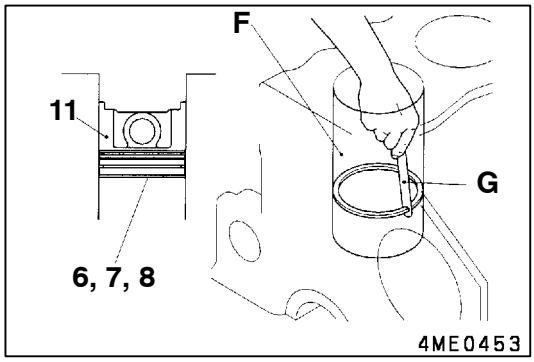

2. PISTON RING

(1) Piston Ring End Gap

1) Place the piston ring **6**, **7**, **8** level in the cylinder **F** of the upper crankcase using the crown of the piston **11**.
2) Holding the piston ring **6**, **7**, **8** in place, measure its end gap with a feeler gauge **G**. If the reading exceeds the specified limit, replace the piston ring.

   Standard value:

1st compression ring	**0.3 - 0.45 mm**
2nd compression ring	**0.4 - 0.55 mm**
Oil ring	**0.3 - 0.5 mm**

   Limit: 0.8 mm

   Caution

   1. To place the piston ring 6, 7, 8 level in the cylinder F, be sure to use the piston 11.
   2. Place the piston ring 6, 7, 8 at the lower part of the cylinder F where the cylinder wall wears less than elsewhere.
   3. When it becomes necessary to replace any of the piston rings 6, 7 and 8, replace all of them as a set.

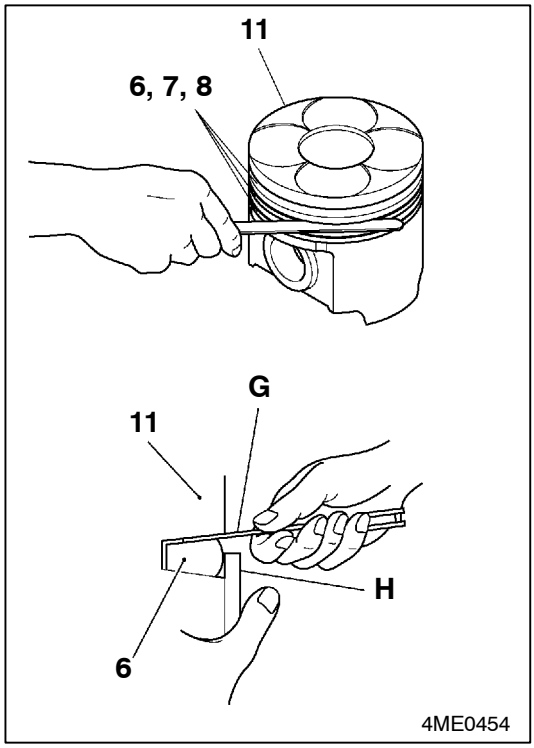

(2) Piston Ring-to-Piston Ring Groove Clearance
1) If the measured clearance exceeds the specified limit, replace the defective part.

Standard value:

1st compression ring	**0.03 - 0.08 mm**
2nd compression ring	**0.07 - 0.10 mm**
Oil ring	**0.03 - 0.06 mm**

Limit: 0.15 mm

NOTE
The 1st compression ring **6** is of full keystone type. Measure the clearance with a feeler gauge **G** while pressing the ring against the piston pin groove bottom with a straight edge **H**.

Caution
1. **Clear all carbon deposits from the ring groove of the piston 11 and measure the clearance all around the ring groove.**
2. **When it becomes necessary to replace any of the rings 6, 7 and 8, replace all of them as a set.**

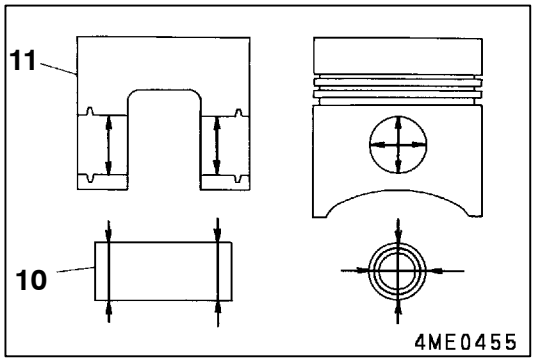

3. PISTON PIN

(1) Measure the clearance between piston pin **10** and piston **11**. If the reading exceeds the specified limit, replace the defective part.

Standard value: 0.007 - 0.021 mm

Limit: 0.05 mm

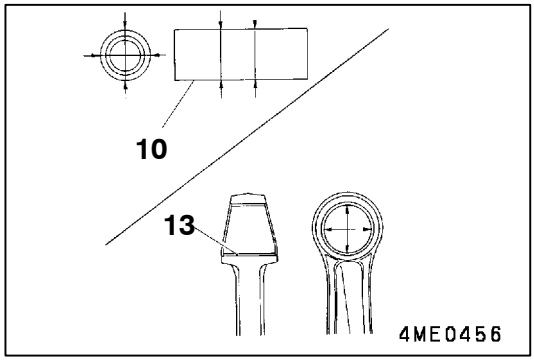

(2) Measure the clearance between piston pin **10** and connecting rod bush **13**. If the reading exceeds the limit, replace the defective part.

Standard value: 0.03 - 0.05 mm

Limit: 0.1 mm

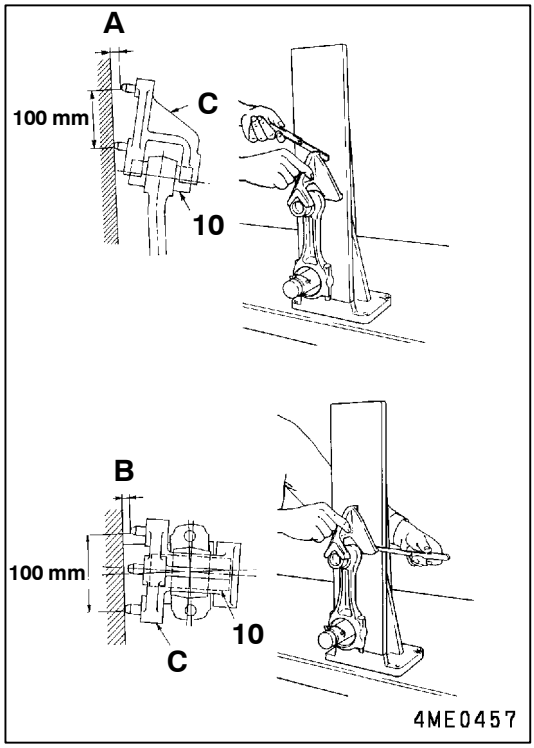

4. CONNECTING ROD

(1) Fit the connecting rod bush **13** and piston pin **10** in the connecting rod **15**.

(2) Measure the bend **A** and twist **B** of the connecting rod **15**. If either reading exceeds the specified limit, replace the connecting rod.

C: Connecting rod aligner (measuring device)

Limits:
Bend 0.05 mm
Twist 0.1 mm

Caution
1. **Attach the connecting rod 15 to the connecting rod aligner C with the upper and lower connecting rod bearing shells installed in place.**
2. **Tighten the connecting rod cap nut to a torque of 49 ± 5 Nm.**

24. DRIVE PLATE

REMOVAL AND INSTALLATION

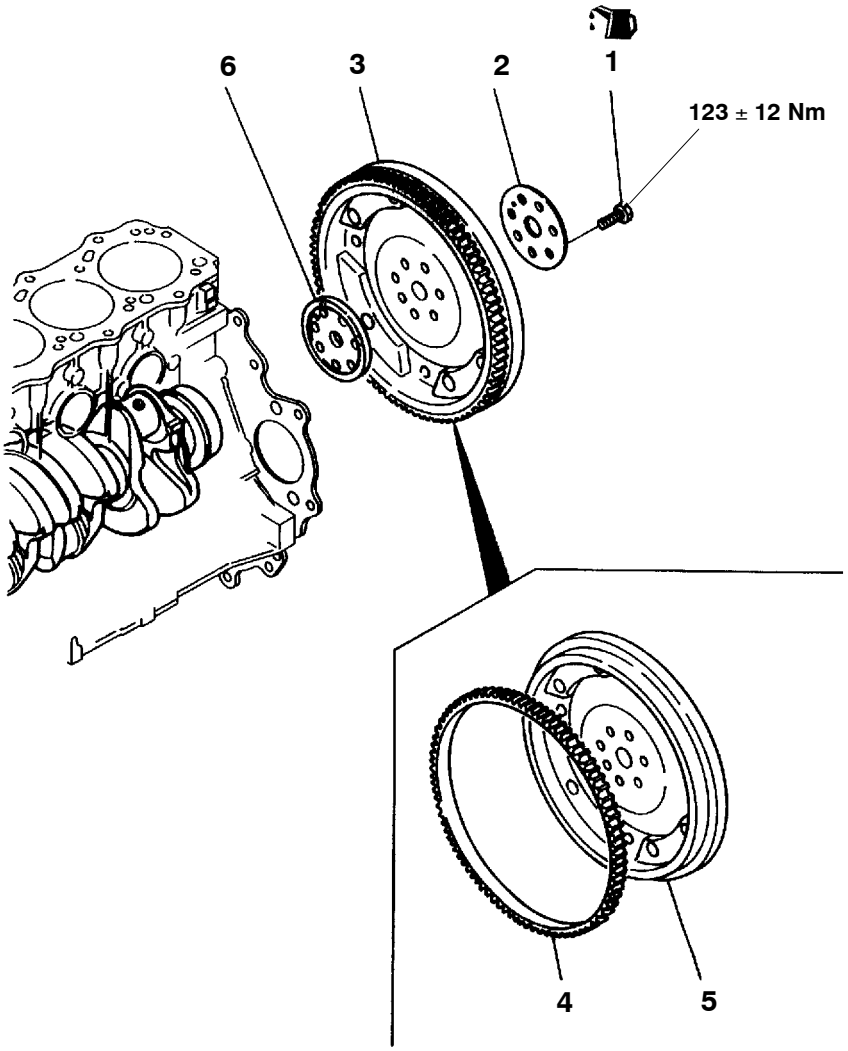

4ME0598

Removal steps

1. Bolt
▶A◀ 2. Adaptor plate
3. Drive plate assembly
◀A▶ ▶B◀ 4. Ring gear
5. Drive plate
▶A◀ 6. Crankshaft adaptor

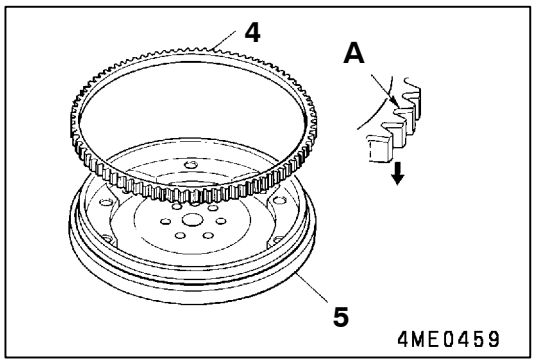

REMOVAL SERVICE POINT

◀A▶ RING GEAR REMOVAL

(1) Heat the ring gear **4** evenly using an acetylene torch or any other suitable heat source.

Caution
Use care not to be burned.

(2) Remove the ring gear **4** by tapping it evenly all around.

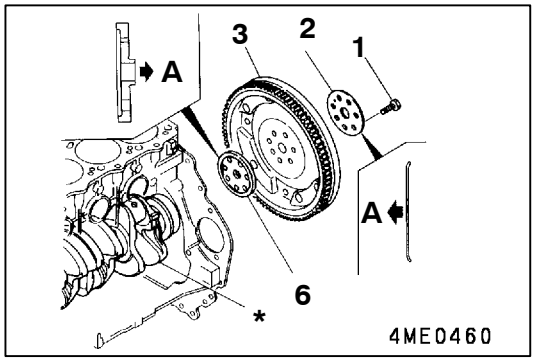

INSTALLATION SERVICE POINTS

▶A◀ CRANKSHAFT ADAPTOR / ADAPTOR PLATE INSTALLATION

Attach the adaptor plate **2** and the crankshaft adaptor **6** to the drive plate assembly, facing in the directions **A** shown.

A: Drive plate side

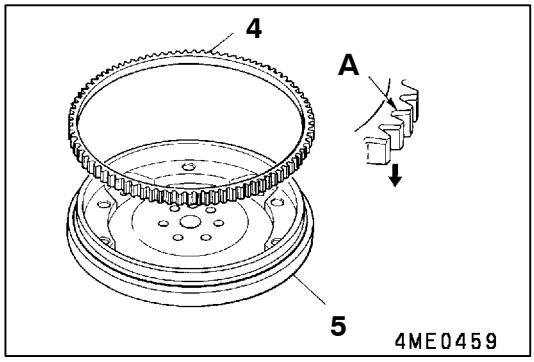

▶B◀ RING GEAR INSTALLATION

(1) Heat the ring gear **4** with an acetylene torch or any other suitable heat source for 3 minutes. (Approx. 100°C)

Caution
Use care not to be burned.

(2) Fit the ring gear **4** onto the drive plate **5** with the non-chamfered teeth side toward the drive plate.

A: Chamfered side of ring gear **4**

INSPECTION

RING GEAR

Check the ring gear **4** for damage and abnormal wear. Replace the ring gear **4** if necessary.

25. CRANK SHAFT AND CRANK CASE

REMOVAL AND INSTALLATION

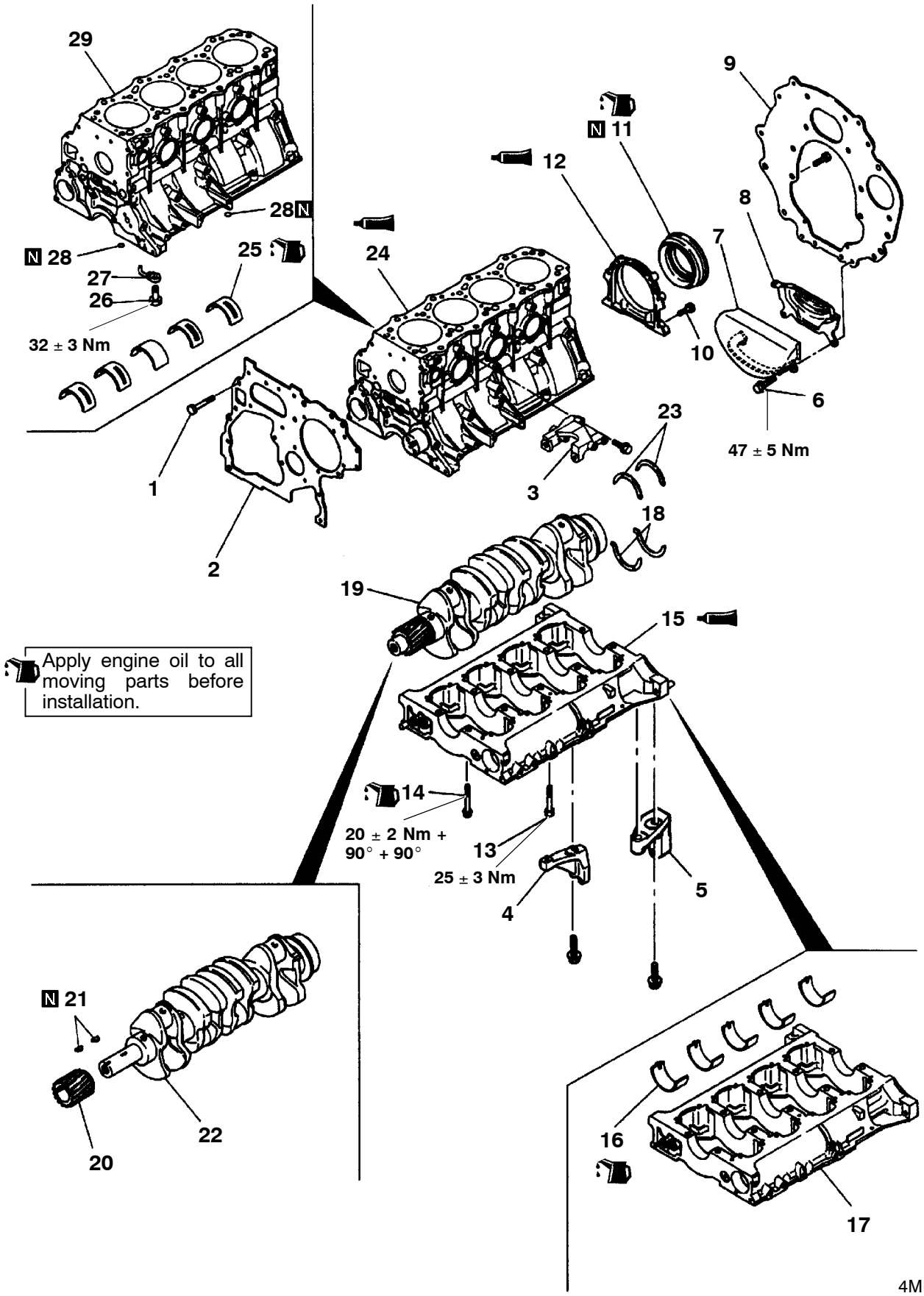

Removal steps

1. Bolt
▶F◀ 2. Front plate
3. Stiffener
4. Stiffener RH
5. Stiffener LH
6. Bolt
7. Rubber spacer
8. Dust cover
9. Rear plate
10. Bolt
▶E◀ 11. Rear oil seal
▶E◀ 12. Rear oil seal case
13. Bolt
14. Main cap bolt
◀A▶ ▶D◀ 15. Lower crankcase assembly
▶A◀ 16. Lower main bearing
17. Lower crankcase
▶B◀ 18. Lower thrust plate
19. Crankshaft assembly
◀B▶ ▶C◀ 20. Crankshaft gear
21. Key
22. Crankshaft
▶B◀ 23. Upper thrust plate
24. Upper crankcase assembly
▶A◀ 25. Upper main bearing
26. Check valve
27. Oil jet
28. O-ring
29. Upper crankcase

Caution

1. **The lower crankcase 17 and upper crankcase 29 have been machined in a pair. Therefore, replacing either one of the pair is not allowed.**
2. **The front plate 2 is held in position with the idler shaft, in addition to locating pin.**
3. **The main cap bolt 14 is tightened to a plastically deformed point. If it shows the evidence of having been tightened three times, replace it.**
4. **Do not remove the crankshaft gear 20 unless absolutely necessary.**

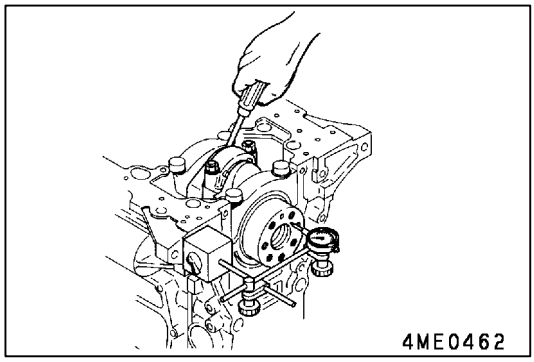

PRE-REMOVAL INSPECTION

CRANKSHAFT

Before removing the lower crankcase assembly **15**, measure the end play of the crankshaft assembly **19**. If the reading exceeds the specified limit, replace the thrust plate **18**, **23** with an oversize one.

Standard value: 0.10 - 0.28 mm

Limit: 0.4 mm

<Available oversize thrust plates>
+0.15 mm, +0.30 mm, +0.45 mm

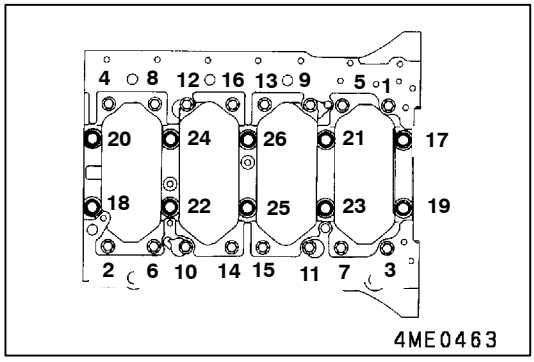

REMOVAL SERVICE POINTS

◀A▶ LOWER CRANKCASE ASSEMBLY CREMOVAL

(1) Gradually loosen the bolts **13** in the sequence of numbers 1 - 16 shown in the illustration.
(2) Then, gradually loosen the main bearing cap bolts **14** in the sequence of numbers 17 - 26 shown, and remove.

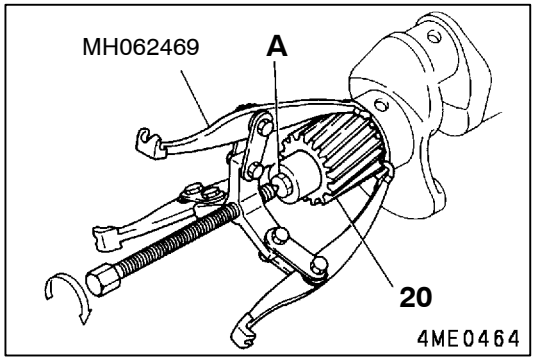

◀B▶ CRANKSHAFT GEAR REMOVAL

Using the special tool, remove the crankshaft gear **20**.

Caution

1. **Before attaching the special tool, install a protective bolt A (M16 x 1.5 mm ; 30 mm long) to the crankshaft end so that the crankshaft will not be damaged by the special tool.**
2. **Do not tap on the crankshaft gear 20 to remove it.**

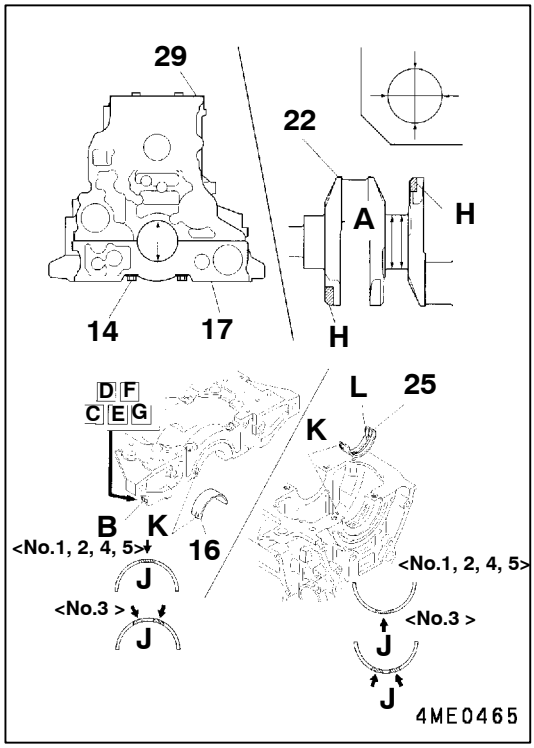

INSTALLATION SERVICE POINTS

▶A◀ MAIN BEARING INSTALLATION

The main bearings **16** and **25** must have a proper plate thickness that matches the difference between the bearing mounting hole I.D. of the crankcase assembly **17, 29** and the journal O.D. of the crankshaft **22**.

(1) Measure the bearing mounting hole I.D. of the crankcase assembly **17, 29** and the journal O.D. of the crankshaft **22**.

A: Measuring point (One point in vertical direction for crankcase)

Caution
Tighten the main bearing cap bolts 14 by specified procedure before measuring the bearing mounting hole I.D. of the crankcase assembly 17, 29.

NOTE
(1) The bearing mounting hole I.D. of the crankcase **17**, **19** can be known by the identification mark **B** on the right side of the crankcase rear end.
C: No. 1 journal, **D**: No. 2 journal
E: No. 3 journal, **F**: No. 4 journal
G: No. 5 journal
(2) The journal O.D. of the crankshaft **22** can be identified by the identification color on the crankshaft.
H: Identification color position

(2) Select appropriate thickness main bearings **16, 25** from the following table.

J: Identification color position
K: Lug
L: Oil hole

Caution
The main bearing shells 16 and 25 must be installed in the specified direction. The main bearing shells for No. 3 journal are different in thickness from the others. The upper main bearing shell for No. 3 journal is different also in shape from the others.

Unit: mm

Crankshaft		Crankcase		Main bearing			
Identification color	Journal O.D.	Size mark	Bearing mounting hole I.D.	Identification color (L/U)	Journal No.	Plate Thickness	Oil Clearance
None	67.970 - 67.798	A	72.010 - 72.019	Black/Black	No.1, 2, 4, 5	1.992 - 1.996	0.040 - 0.065
					No.3	1.982 - 1.986	0.060 - 0.085
		B	72.000 - 72.010	Blue/Blue	No.1, 2, 4, 5	1.988 - 1.992	0.038 - 0.064
					No.3	1.978 - 1.982	0.058 - 0.084
Blue	67.961 - 67.970	A	72.010 - 72.019	Yellow/Yellow	No.1, 2, 4, 5	1.996 - 2.000	0.040 - 0.066
					No. 3	1.986 - 1.990	0.060 - 0.086
		B	72.010 - 72.019	Black/Black	No.1, 2, 4, 5	1.992 - 1.996	0.038 - 0.065
					No.3	1.982 - 1.986	0.058 - 0.085

L: Lower main bearing shell U: Upper main bearing shell

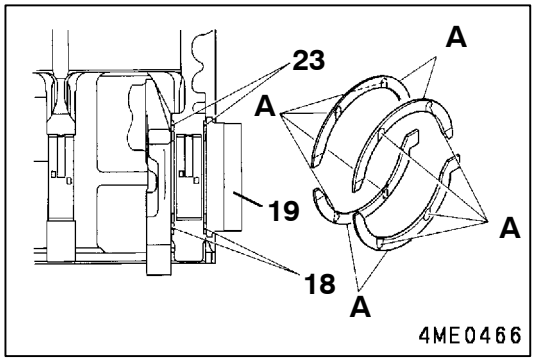

▶B◀ THRUST PLATE INSTALLATION

Install the thrust plates **18** and **23** to the crankshaft assembly **19** at No.5 journal only. Install all halves of the thrust plates with the oil groove **A** oriented outward.

Caution
If any oversize thrust plates are to be used, be sure to use an upper thrust plate 23 and lower thrust plate 18 of the same size at one side. However, using the same size upper (or lower) thrust bearings on both sides is not necessary.

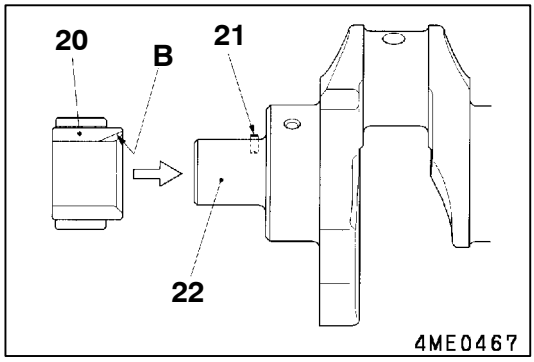

▶C◀ CRANKSHAFT GEAR INSTALLATION

(1) Before installing, heat the crankshaft gear **20** to approximately 100°C with a piston heater or the like.

Caution
Use care not to be burned.

(2) Align the notch **B** in the crankshaft gear **20** with the key **21** of the crankshaft **22**, then install the crankshaft gear **20** onto the crankshaft by tapping on the end face lightly with a plastic hammer.

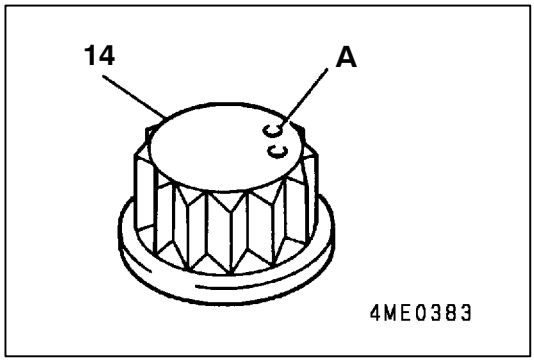

▶D◀ LOWER CRANKCASE ASSEMBLY INSTALLATION

Caution
Before installing the lower crankcase assembly 15, check the head of the main cap bolt 14 for punch marks A. The number of punch marks corresponds to the number of times the bolt has been tightened to the plastic area (bolts with two or less punch marks are reusable). If there are three, replace the main cap bolt 14.

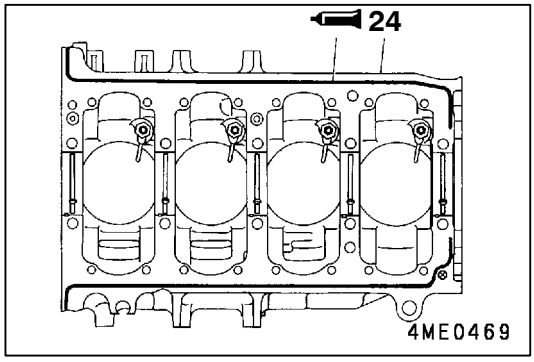

(1) Apply a 2 mm thick bead of specified sealant to the fitting surface of the upper crankcase assembly **24** as shown.

Specified sealant:
Mitsubishi Genuine Part No. MD970389 or equivalent

Caution
1. **Apply sealant evenly, not broken or oversupplied.**
2. **Use care not to let the applied sealant slip out of place during installation.**

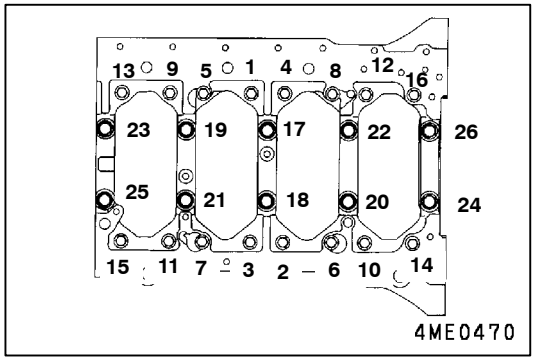

(2) Apply a thin coat of engine oil to the threaded part and seating surface of each main cap bolt **14**, then tighten the bolts to a torque of 20 ± 2 Nm in the sequence of the numbers shown (17 - 26).
(3) After tightening, give the bolts an additional 90° turn.
(4) Then, give the bolts another 90° turn to tighten them completely.
(5) Following the main cap bolts **14**, tighten the bolts **13** to the specified torque in the sequence of the numbers shown (1 - 16).
(6) After installing the lower crankcase assembly **15**, check the following:
  1) Smooth rotation of crankshaft assembly **19**
  2) End play of the crankshaft assembly **19**

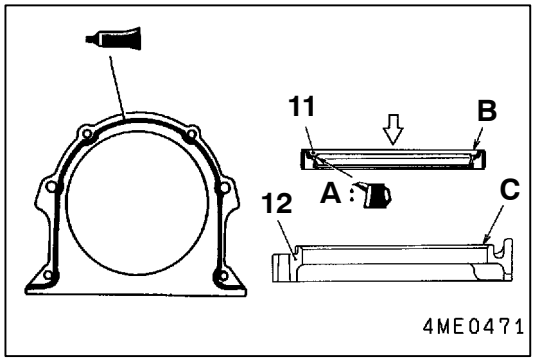

▶E◀ REAR OIL SEAL / REAR OIL SEAL CASE INSTALLATION

(1) Apply a thin coat of engine oil to the lip **A** of the rear oil seal **11**. Press the rear oil seal all the way into the rear oil seal case **12** in the direction shown. Be sure that the end face **B** of the rear oil seal is flush with the end face **C** of rear oil seal case.

(2) Apply a 3 mm thick bead of the specified sealant to the fitting surface of the rear oil seal case **12**.

Specified sealant:
Mitsubishi Genuine Part No. MD970389 or equivalent

Caution
1. **Apply the sealant evenly, not broken or oversupplied.**
2. **Use care not to let the applied sealant slip out of place during installation.**

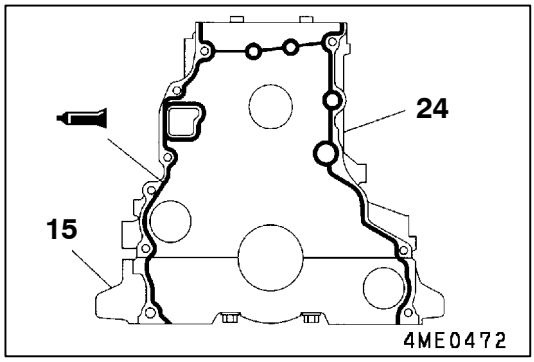

▶F◀ FRONT PLATE INSTALLATION

Apply a 2 mm thick bead of the specified sealant to the lower crankcase assembly **15** and upper crankcase assembly **24** where indicated in the illustration.

Specified sealant:
Mitsubishi Genuine Part No. MD970389 or equivalent

Caution
1. **Apply the sealant evenly, not broken or oversupplied.**
2. **Use care not to let the applied sealant slip out of place during installation.**
3. **The bolt 1 that holds the front plate 2 is also used to secure the timing gear case. Attach the front plate with a temporary bolt until the timing gear case is installed.**

INSPECTION

1. MAIN BEARINGS

Caution
1. **Be sure not to use the main bearings 16 and 25 expanded forcedly.**
2. **When either the main bearing 16 or 25 is defective, replace them in pairs.**

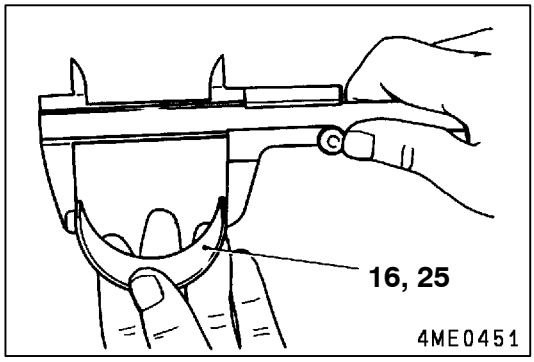

(1) Free Span
If the reading for either main bearing shell **16**, **25** exceeds the specified service limit, replace them in pairs.

Limit: Less than 73.16 mm

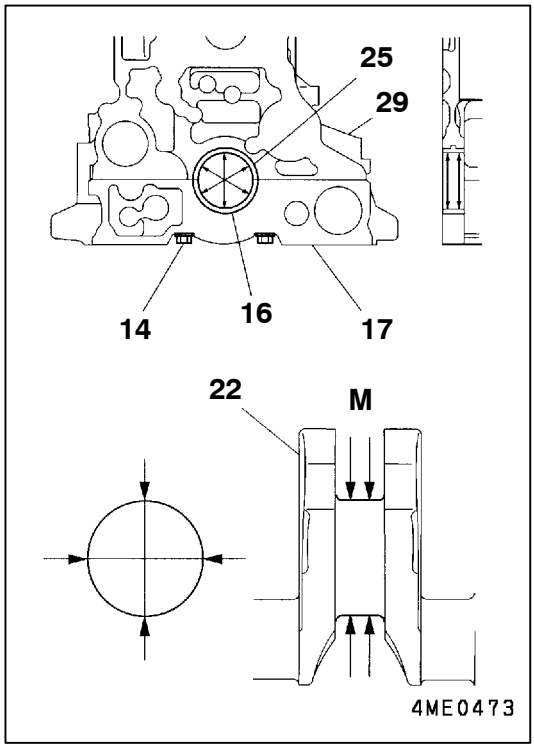

(2) Main Bearing-to-Crankshaft Clearance
1) Fit the upper main bearing shells **25** and lower main bearing shells **16** into the upper crankcase **29** and lower crankcase **17** respectively, then tighten main cap bolts **14** to a torque of 20 ± 2 Nm.
2) Measure the I.D. of the main bearings **16**, **25** and the journal O.D. at **M** of the crankshaft **22**. If the measurements exceed the specified limits, replace the defective part(s).

Standard value:

No. 1, 2, 4, 5 journal	**0.04 - 0.06 mm**
No. 3 journal	**0.06 - 0.08 mm**

Limit: 0.1 mm

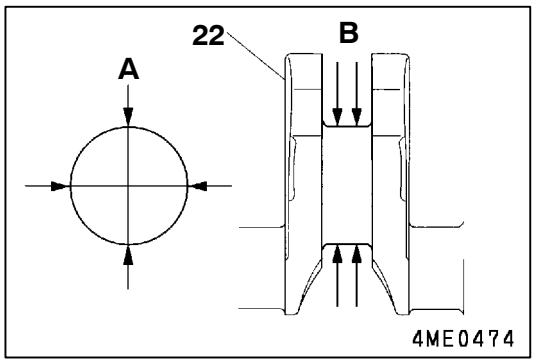

2. CRANKSHAFT

(1) Out-of-Roundness and Conicity of Crankshaft Journal and Pin
If the measured value exceeds the limit, replace the crankshaft **22**.

A: Out-of-Roundness
B: Conicity

Standard value:

Out-of-Roundness	**0.01 mm or less**
Conicity	**0.006 mm or less**

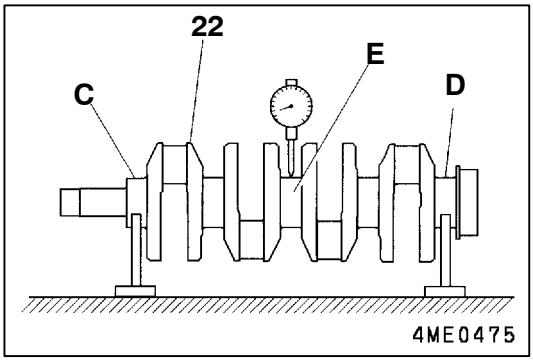

(2) Bend
1) To measure the bend of the crankshaft **22**, support it at No. 1 journal **C** and No. 5 journal **D** and read the runout at No. 3 journal **E**.
2) If the reading exceeds the specified service limit, replace the crankshaft **22**.

Standard value: 0.02 mm or less

Limit: 0.05 mm

NOTE
The bend of the crankshaft **22** is a half of the dial gauge reading obtained when the crankshaft is rotated one turn.

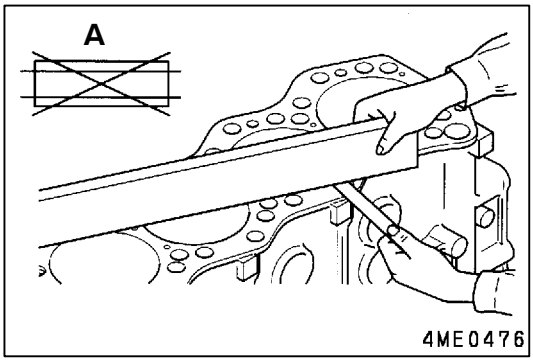

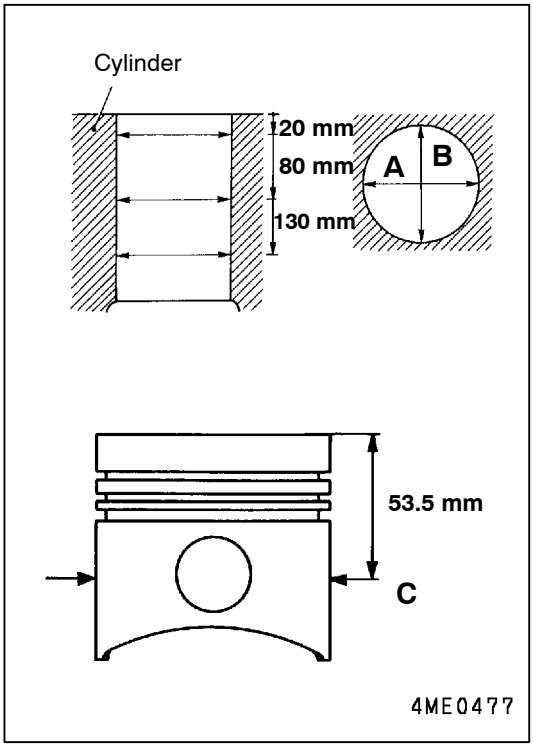

3. UPPER CRANKCASE

(1) Top Surface Distortion
If the reading exceeds the specified limit, eliminate distortion using a surface grinder.

A: Measuring direction

Standard value: 0.05 mm or less

Limit: 0.1 mm

Caution
The surface grinding of the upper crankcase 29 should be limited to such an extent that piston protrusions do not deviate from specified standard value.

(2) Cylinder Inside Diameter
If the cylinder inside diameter exceeds the specified limit, bore the cylinder to the next oversize.

Standard value: 98.5 - 98.53 mm

Limit: 98.75 mm

A: Measuring direction in cylinder (axial direction of crankshaft)
B: Measuring direction in cylinder (right angled to crankshaft)
C: Measuring direction on piston (right angled to piston pin hole)

Caution
1. **If any of the cylinders exceeds the limit, bore all the cylinders to the next oversize.**
2. **Irrespective of the cylinder I.D. being within the specified limit, replace the piston and piston rings if the cylinder-to-piston clearance deviates from the standard value.**

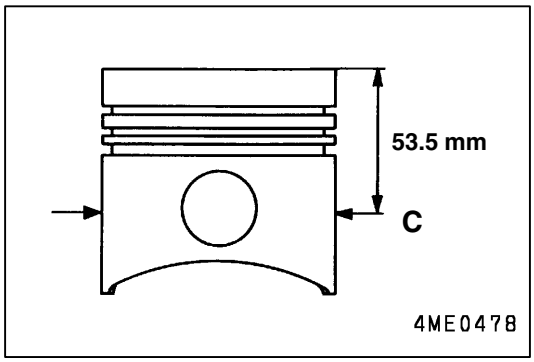

4. CYLINDER BORING

(1) Determine the oversize piston to be used based on the largest cylinder inside diameter.

(2) There are two types of oversize pistons available (+0.50 mm). Bore the cylinders so that the clearance between the cylinder and the piston installed meets the specified standard value. The reference point for piston O.D. measurement is as shown.

Standard value: 0.04 – 0.05 mm

(3) Based on the measured piston outside diameter, calculate the necessary boring dimension as follows.
- Boring dimension = Piston O.D. + 0.04 to 0.05 mm (piston-to-cylinder clearance) – 0.05 mm (honing allowance)

(4) Grind each cylinder to the calculated boring dimension.

Caution
1. **Because of the hardened cylinder layer, the use of a BORAZON TIP is recommended.**
2. **To avoid thermal distortion, bore the cylinders in the order of No. 2, No. 4, No. 1 and No. 3.**

(5) Hone each cylinder to the final bore (piston O.D. + piston-to-cylinder clearance).

NOTE
(1) Honed surface roughness: 2 to 4 μm
(2) Honing crosshatch angle: 15 to 25° (half angle)
(3) Cylinder bore out-of-squareness: 0.05 mm

(6) Check that the piston-to-cylinder clearance is within the specified standard value range.

Standard value: 0.04 – 0.05 mm

26. BALANCE SHAFT BUSH

REMOVAL AND INSTALLATION

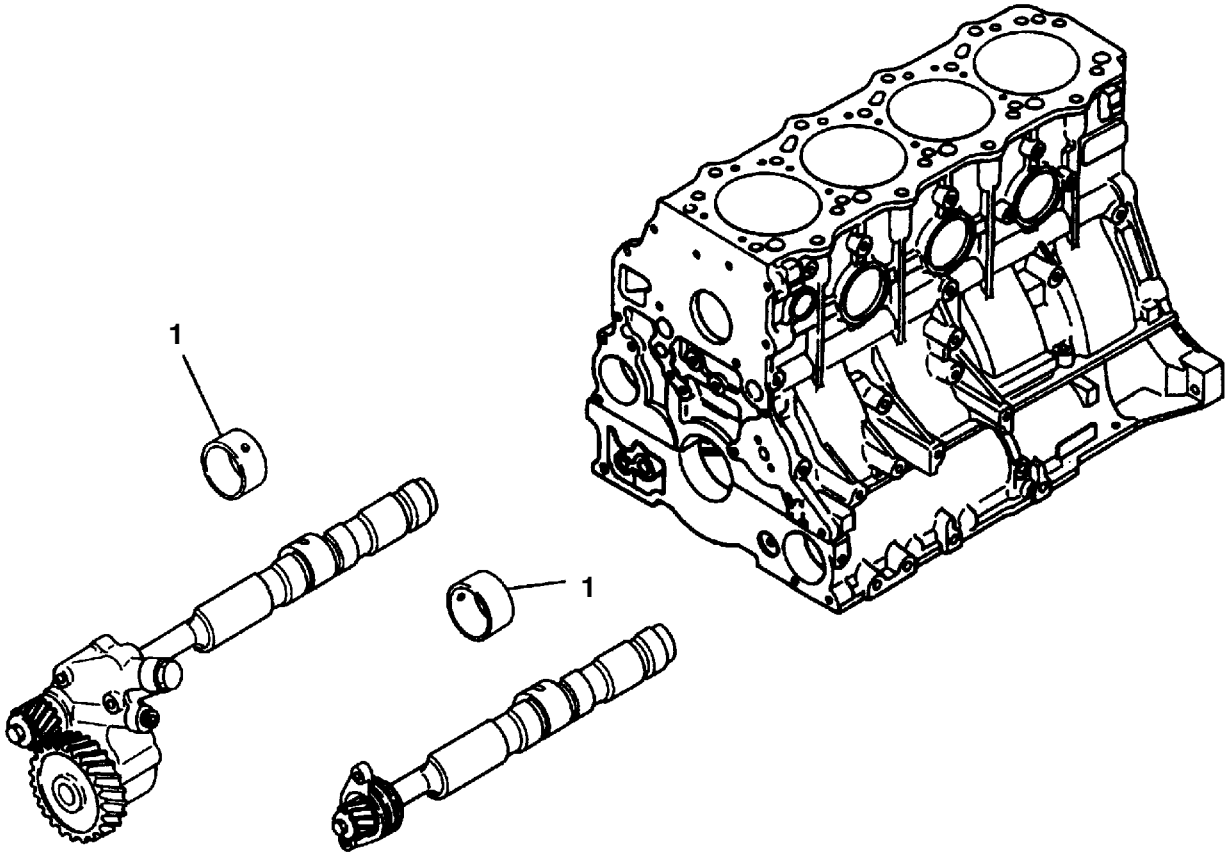

Removal steps

◀A▶ ▶A◀ 1. Balance shaft bush

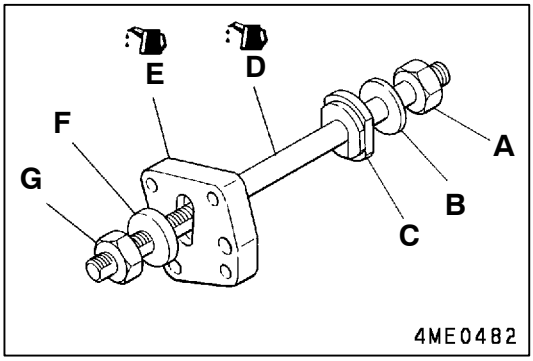

REMOVAL SERVICE POINT

◀A▶ BALANCE SHAFT BUSH REMOVAL

Using the special tool, remove the balance shaft bush **1** in the following manner:

Component Parts of Special Tool MH062490 - Balance Shaft Bush Remover
A: Nut
B: Washer
C: Remover
D: Puller
E: Plate
F: Washer
G: Nut

Caution
Apply engine oil to the sliding surface of plate E and puller D.

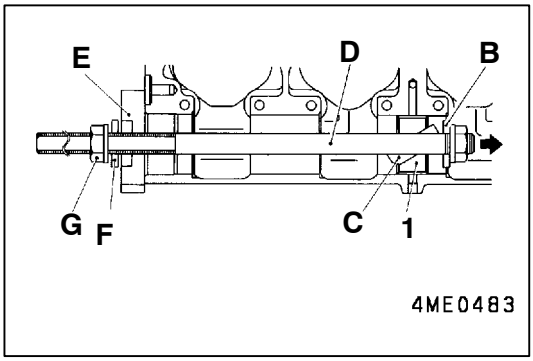

(1) Set the tools as shown by passing the remover **C**, through the balance shaft bush **1** while tilting it as shown.
(2) Pull the puller **D** to bring the washer **B** into contact with the remover **C**. Then, turn in the nut **G** until the plate **B** is lightly pressed by it.

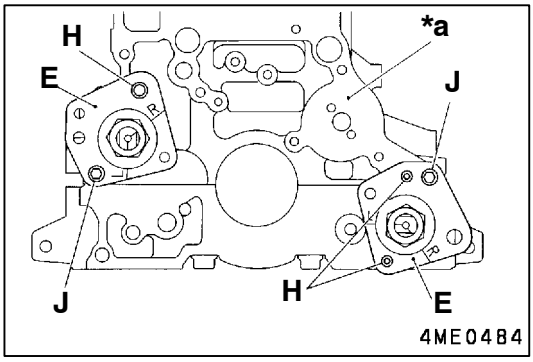

(3) Secure the plate **E** to the crankcase using bolt **J**.

H: Dowel pin
J: Bolt (M8 x 1.25 mm)

Caution
The securing position of the plate E is different between when removing the left-hand and right-hand balance shaft bushes 1. Be sure to secure it in right places.

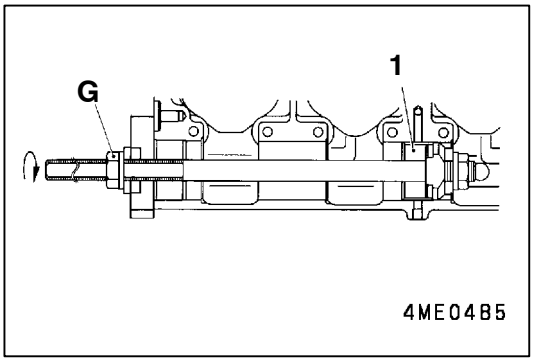

(4) Tighten the nut **G** further to remove the balance shaft bush **1**.

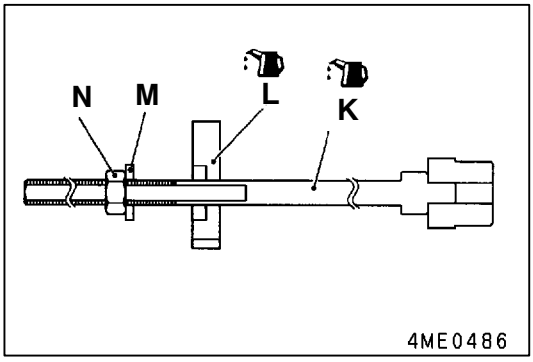

INSTALLATION SERVICE POINT

▶A◀ BALANCE SHAFT BUSH INSTALLATION

Using the special tool, install the balance shaft bushes **1** in the following manner:

Component Parts of Special Tool MH062717 - Balance Shaft Bush Installer
K: Installer
L: Plate
M: Washer
N: Nut

Caution
Apply engine oil to the sliding surfaces of the installer K and plate L.

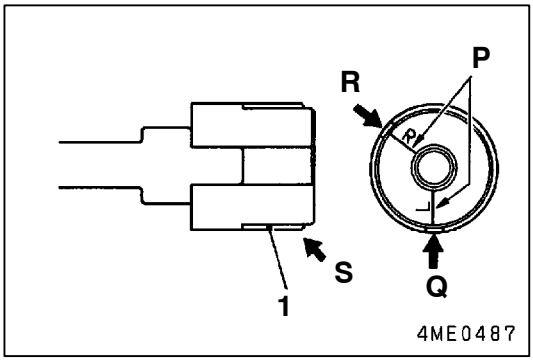

(1) Fit the balance shaft bush **1** onto the installer **K** from the non-chamfered side. At this time, align the oil hole with the alignment mark **P** "-" on the installer.
Align the oil hole **Q** of the left-hand bush with the **"L"**-line of the installer and the oil hole **R** of the right-hand bush with the **"R"**-line.

P: Alignment mark **P** "-" (installer)
Q: Oil hole (left-hand bush)
R: Oil hole (right-hand bush)
S: Chamfered side

Caution
Before installing the balance shaft bush 1 onto the installer K, apply chassis grease to the inside surface of the bush so that the oil hole Q, R does not slip out of position.

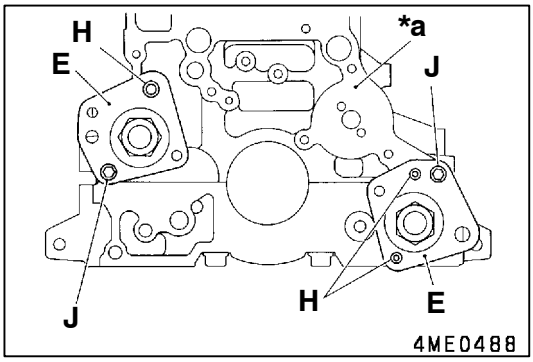

(2) Secure the plate **E** to the crankcase using bolt **J** as shown.

Caution
1. **Note that the securing position of the plate N is different between the left-hand balance shaft bush and the right-hand bush.**
2. **Prior to securing the plate E, check that the installer K is correctly positioned with respect to the balance shaft bush 1.**

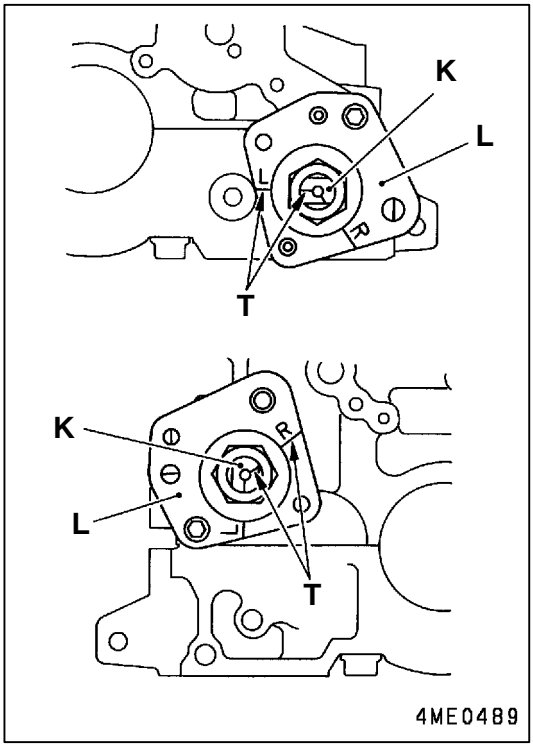

(3) Line up the alignment mark **P** "-" on the installer **K** and the alignment mark **T** "-" on the algnment mark plate **L**.

T: Alignment mark "-" (plate)

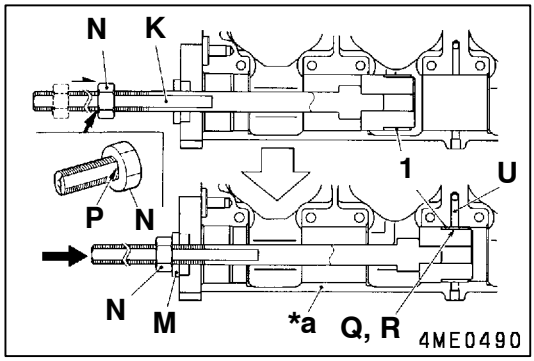

(4) Screw the nut **N** onto the installer **K** up to its alignment mark **P** "-" to predetermine the press-fitting depth of the balance shaft bush **1**.
(5) Strike on the installer **K** until the nut **N** positively contacts the washer **M** to press-fit the balance shaft bush **1** into the crankcase.
(6) Check that the oil hole **Q**, **R** of the balance shaft bush **1** is in alignment with the oil hole **U** in the crankcase.

U: Oil hole (crankcase)

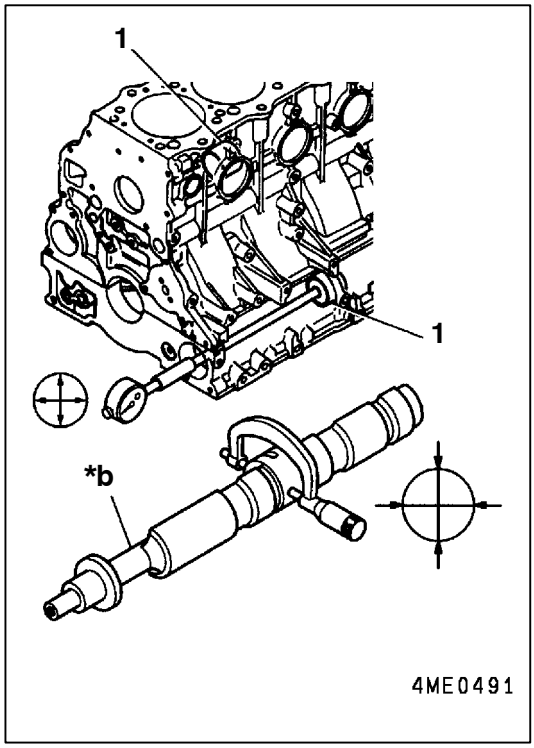

INSPECTION

BALANCE SHAFT BUSH

Measure the clearance between balance shaft bush **1** and balance shaft ***b**. If the reading exceeds the specified limit, replace the defective part(s).

Standard value: 0.06 - 0.11 mm

Limit: 0.16 mm