2002 ACCESSORIES & EQUIPMENT

Roof - Corvette

SPECIFICATIONS

FASTENER TIGHTENING SPECIFICATIONS

Application	Specification	
	Metric	English
Center Rail to Balance Link Bolt	23 N·m	17 lb ft
Center Rail to Rear Side Rail Screw	19 N·m	14 lb ft
Clock Spring Nut	4 N·m	35 lb in
Control Link Bracket Screws	13 N·m	10 lb ft
Elastic Strap Attaching Screws	2 N·m	18 lb in
Folding Top Mounting Bolts	25 N·m	18 lb ft
Folding Top Stowage Lid Hinge to Body Nuts	32 N·m	24 lb ft
Folding Top Stowage Lid Hinge to Lid Bolts	25 N·m	18 lb ft
Folding Top Stowage Lid Latch Bolts	10 N·m	89 lb in
Folding Top Stowage Lid Striker Bolts	10 N·m	89 lb in
Glare Cover Screws	2 N·m	18 lb in
Headliner Attaching Screws	2 N·m	18 lb in
Latch Handle Inboard Bolt	18 N·m	13 lb ft
Latch Handle Outboard Bolt	18 N·m	13 lb ft
Main Control Link Bracket to Roof Bow Screws	13 N·m	10 lb ft
Main Control Link Rod End Screw	15 N·m	11 lb ft
Main Control Link to Center Rail Bolt	20 N·m	15 lb ft
Main Control Link to Side Rail Bolt	20 N·m	15 lb ft
Number Five Bow Weatherstrip Nuts	4 N·m	35 lb in
Number One Bow to Front Rail Nuts	14 N·m	10 lb in
Number One Bow to Side Rail Nuts	14 N·m	10 lb in
Rear Side Rail Retainer Screws	4 N·m	35 lb in
Rear Side Rail to Number Five Bow Bracket Screws	4 N·m	35 lb in
Rod End to Number Five Bow	15 N·m	11 lb ft
Roof Bow to Main Control Link Bracket Screws	13 N·m	10 lb ft
Roof Front Latch Handle Bolts	13 N·m	10 lb ft
Roof Front Latch Handle Striker Bolts	10 N·m	89 lb in
Roof Rear Latch Bolts	10 N·m	89 lb in
Roof Rear Latch Cover Screws	3 N·m	27 lb in
Roof Rear Locator Bracket Bolts	50 N·m	37 lb ft
Roof Rear Locator Pins	25 N·m	18 lb ft
Roof Rear Locator to Locator Bracket Bolts	10 N·m	89 lb in
Roof Rear Striker Bolts	10 N·m	89 lb in
Roof Side Rail Weatherstrip Retainer Screws	4 N·m	35 lb in

G01733893

Fig. 1: Fastener Tightening Specifications (1 Of 2)

Courtesy of GENERAL MOTORS CORP.

Application	Specification	
	Metric	English
Roof Side Weatherstrip Screws	4 N·m	35 lb in
Seal Compression Panel Screws	3 N·m	27 lb in
Seat Belt Upper Guide Bolt	41 N·m	30 lb ft
Seat Belt Upper Guide Nut	42 N·m	31 lb ft
Side Rail Weatherstrip Retainer Screw	4 N·m	35 lb in
Side Rail Weatherstrip Screw	4 N·m	35 lb in
Side Weatherstrip Retainer Screw	4 N·m	35 lb in
Side Weatherstrip Screw	4 N·m	35 lb in
Stowage Lid Extension Bolts	4 N·m	35 lb in
Stowage Lid Hinge Bolts	25 N·m	18 lb ft
Stowage Lid Latch Bolts	10 N·m	89 lb in
Stowage Lid Striker Bolts	10 N·m	89 lb in
Sunshade Retainer Screw	2 N·m	18 lb in
Window Support Strap Screws	2 N·m	18 lb in

G01733894

Fig. 2: Fastener Tightening Specifications (2 Of 2)
Courtesy of GENERAL MOTORS CORP.

REPAIR INSTRUCTIONS

FOLDING TOP LATCH ADJUSTMENT

1. Adjust the latch handle (1) for proper fit, by raising or lowering the striker (3).

   Important: You should not have to loosen the striker screws.

2. Use a nylon mallet and a drift to punch the striker (3). Punch upward to loosen the striker or punch downward to tighten the striker.

   CAUTION: Refer to FASTENER NOTICE .

3. Inspect the striker screws for proper torque.

   Tighten

   Tighten the striker screws 10 N.m (89 lb in).

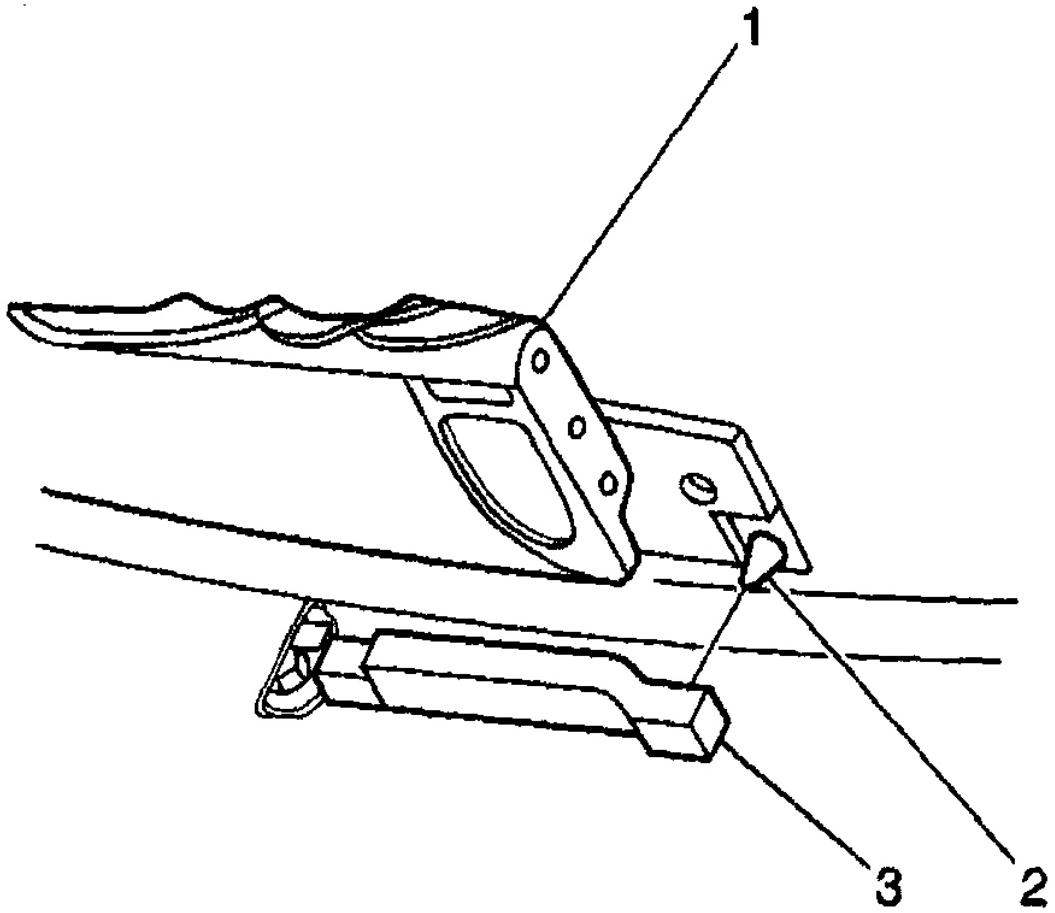

G01733895

Fig. 3: Aligning Latch Handle Striker
Courtesy of GENERAL MOTORS CORP.

4. Loosen the latch handle bolts.

   Important: Assure that the latch handle base is parallel to the striker.

5. Reposition the latch handle forward or rearward. To avoid squeaks and rattles maintain a minimum of 2 mm (0.08 in) clearance between latch handle and the latch striker.
6. Tighten the latch handle bolts.

   Tighten

Tighten the bolts to 13 N.m (10 lb ft).

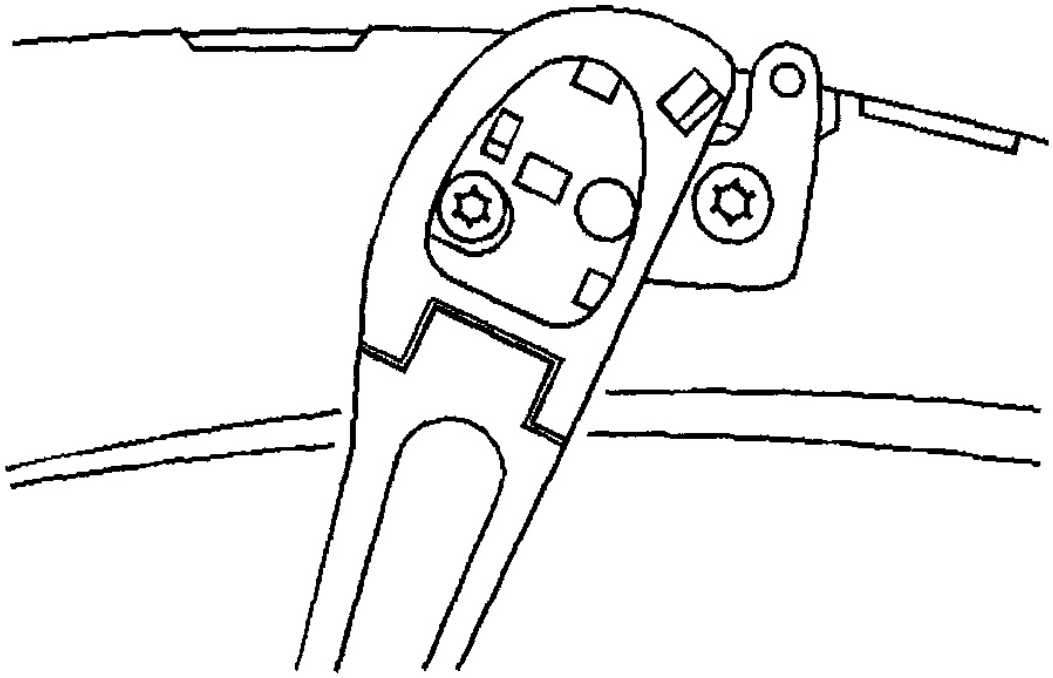

Fig. 4: Identifying Latch Handle Bolts
Courtesy of GENERAL MOTORS CORP.

FOLDING TOP LATCH LEVER REPLACEMENT

Removal Procedure

1. Position the folding top with the #1 bow and the #5 bow up.

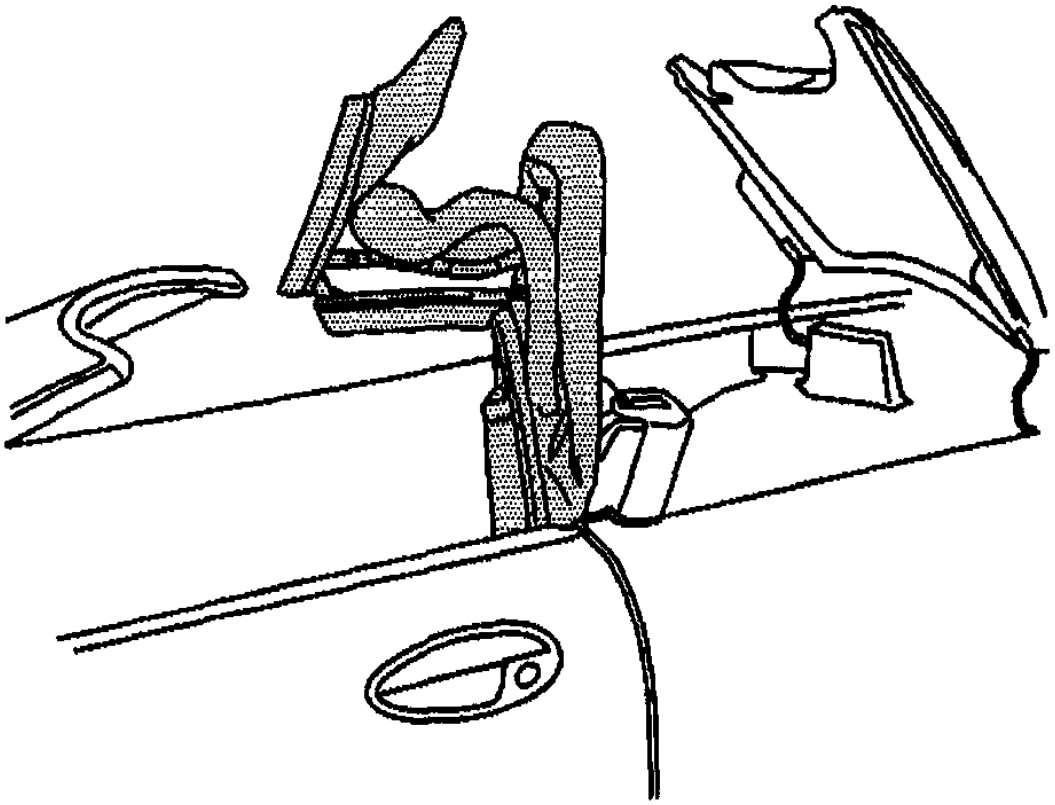

Fig. 5: Aligning Folding Top
Courtesy of GENERAL MOTORS CORP.

2. Use a grease pencil to mark the location of the latch to be removed.
3. Remove the trim cover from the latch.

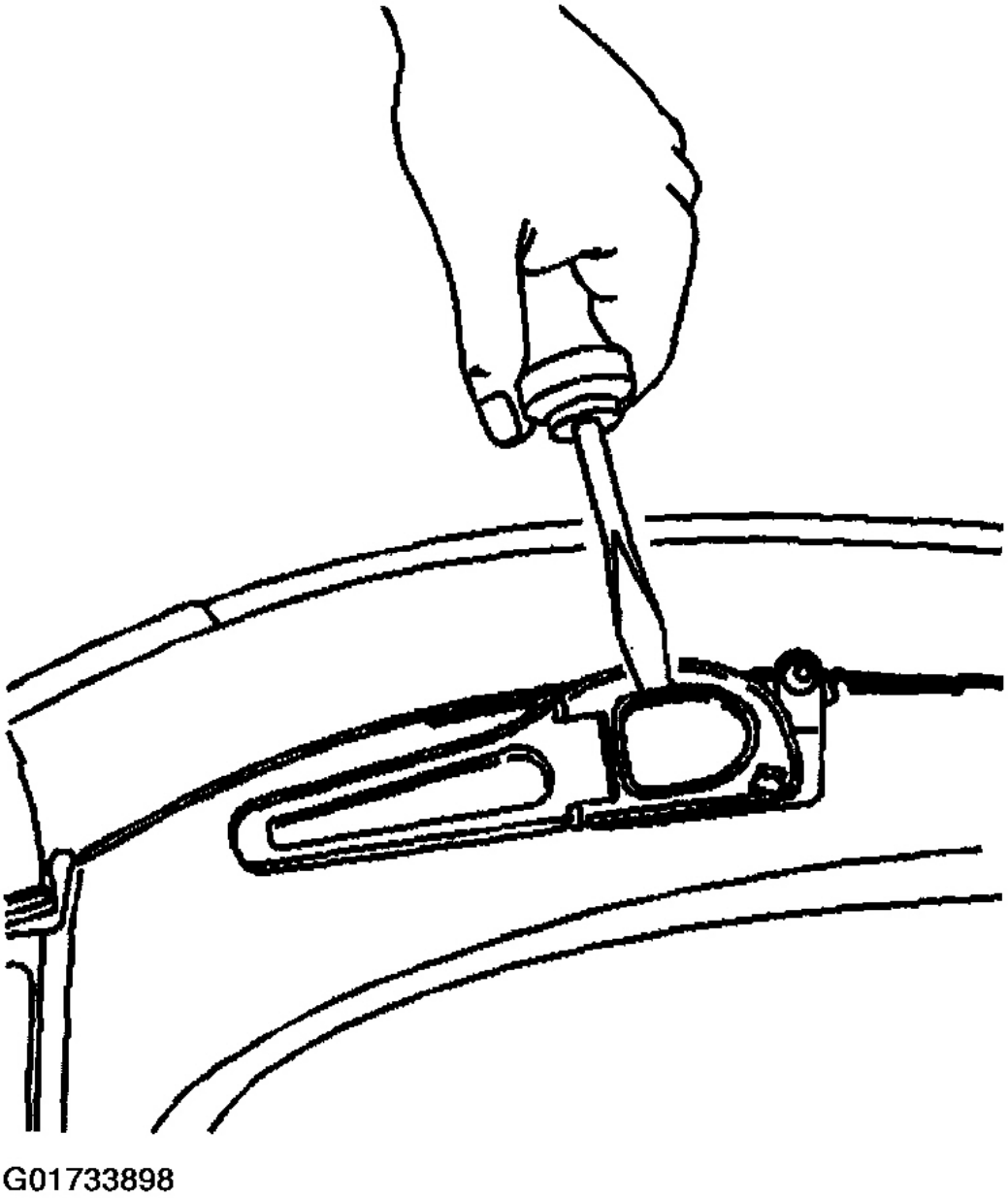

Fig. 6: Removing Latch Trim
Courtesy of GENERAL MOTORS CORP.

4. Rotate the handle to align the hole with the bolt.

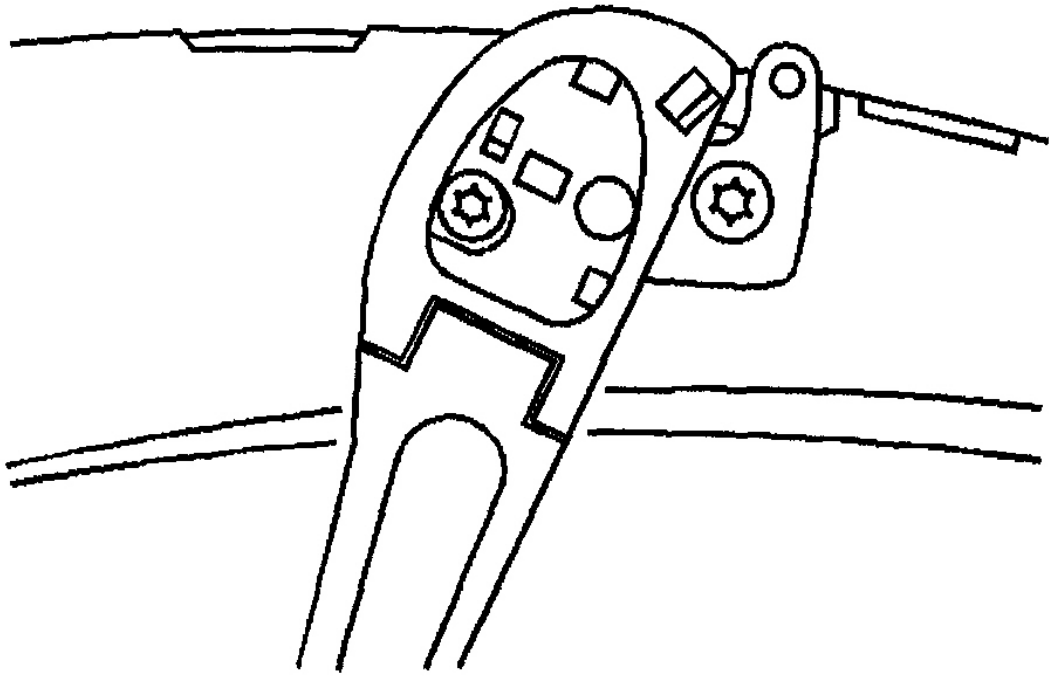

G01733899

Fig. 7: Identifying Latch Handle Bolts
Courtesy of GENERAL MOTORS CORP.

Important: Do NOT allow the right anchor plate to drop inside the top.

5. Remove the bolts and the latch handle assembly. Before removing the second bolt on the right side, pivot the handle to expose the bolt hole. Loosely replace the bolt to hold the anchor plate in position.

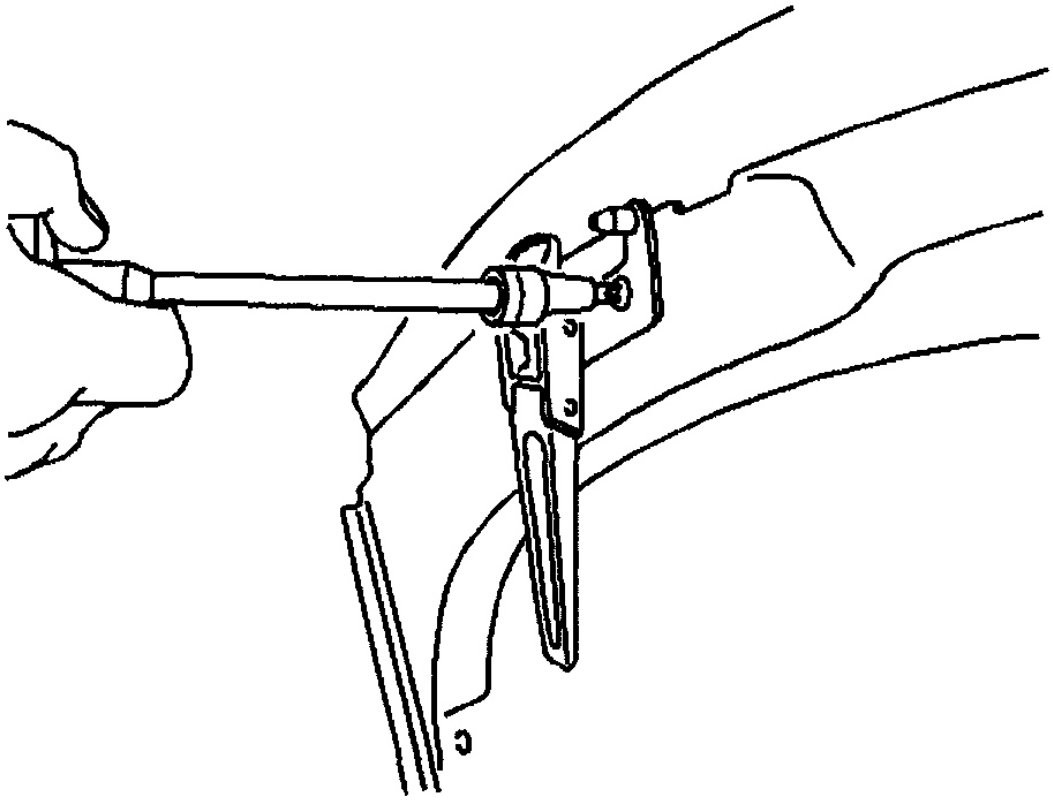

G01733900

Fig. 8: Removing Latch Handle Bolts
Courtesy of GENERAL MOTORS CORP.

Installation Procedure

Important: When you install a new latch, leave the spacing collar on the latch handle to achieve a minimum of 2 mm (0.08 in) clearance to the striker.

1. Remove the latch handle trim cover, if installed.
2. Align the latch to the marks on the roof.
3. Loosely install the latch handle to the roof.
4. Rotate the handle to access the inboard mounting bolt.
    - When installing a latch handle with a spacing collar installed, apply forward pressure to the handle while tightening the mounting bolts.
    - If the spacing collar is not available, position the latch handle with a minimum of 2

mm (0.08 in) clearance to the latch.

CAUTION: Refer to FASTENER NOTICE .

5. Install the inboard bolt.

   Tighten

   Tighten the bolt to 18 N.m (13 lb ft).

6. Rotate the handle.
7. Install the outboard bolt.

   Tighten

   Tighten the bolt to 18 N.m (13 lb ft).

8. Remove the spacing collar.
9. Completely engage the latch handle.
10. Position the trim cover to the latch handle and press the trim cover into place until fully seated.
11. Inspect the top latches for proper operation.
12. Position top to original position.

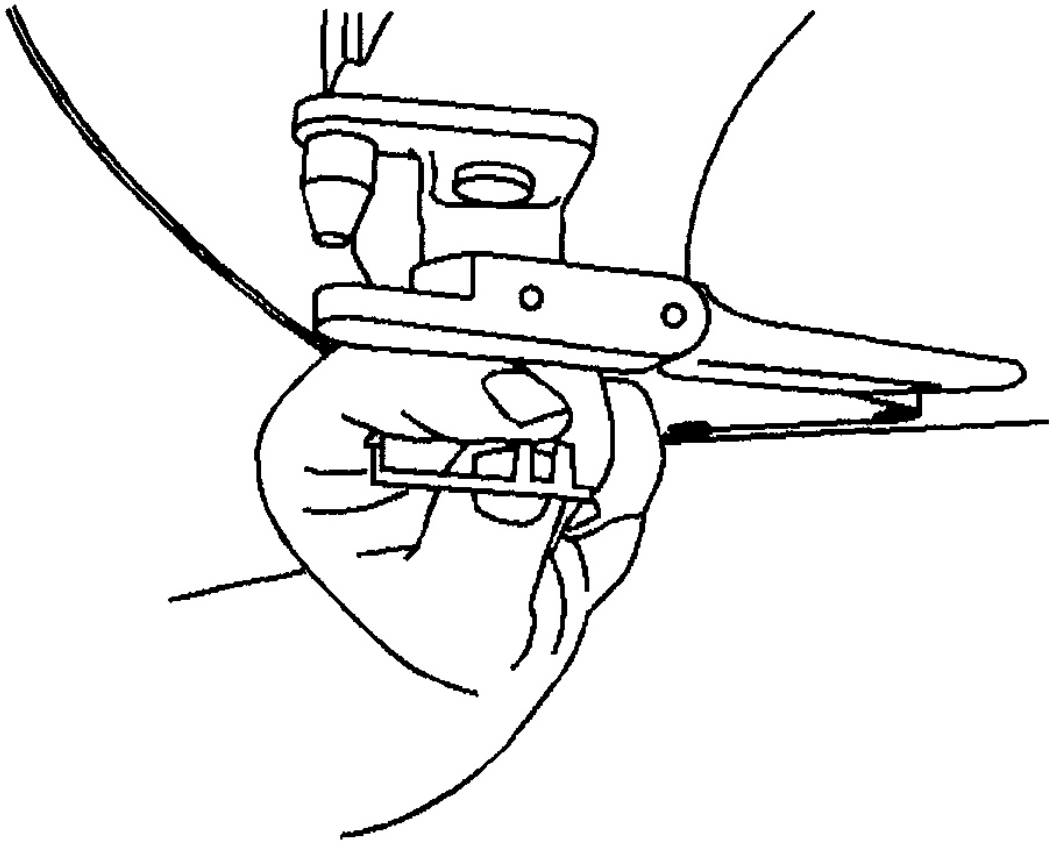

G01733901

Fig. 9: Installing Trim Cover
Courtesy of GENERAL MOTORS CORP.

FOLDING TOP STOWAGE COMPARTMENT LID SWITCH REPLACE

Removal Procedure

1. Position the folding top with the #1 bow and the #5 bow up.
2. Open the folding top stowage lid.

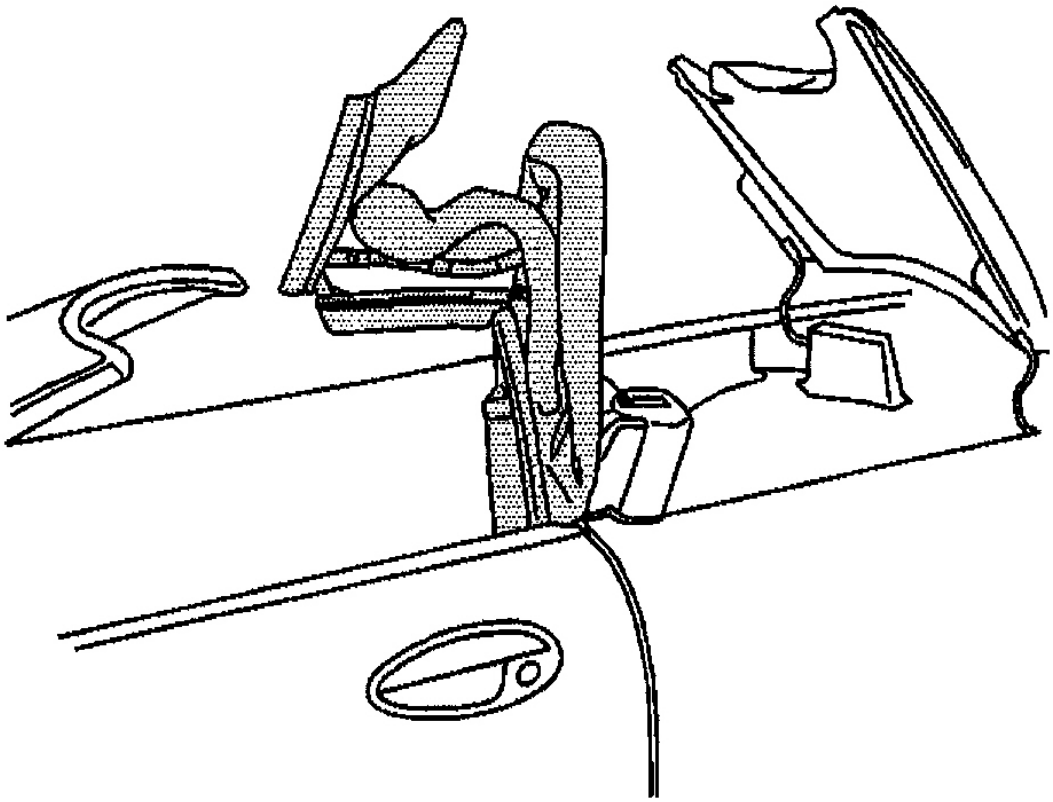

G01733902

Fig. 10: Aligning Folding Top
Courtesy of GENERAL MOTORS CORP.

If necessary, you can open the stowage lid manually by pulling on the manual release cable.

3. Remove the lid release switch (1) with a flat-bladed tool.
4. Disconnect the harness (2) from the switch.

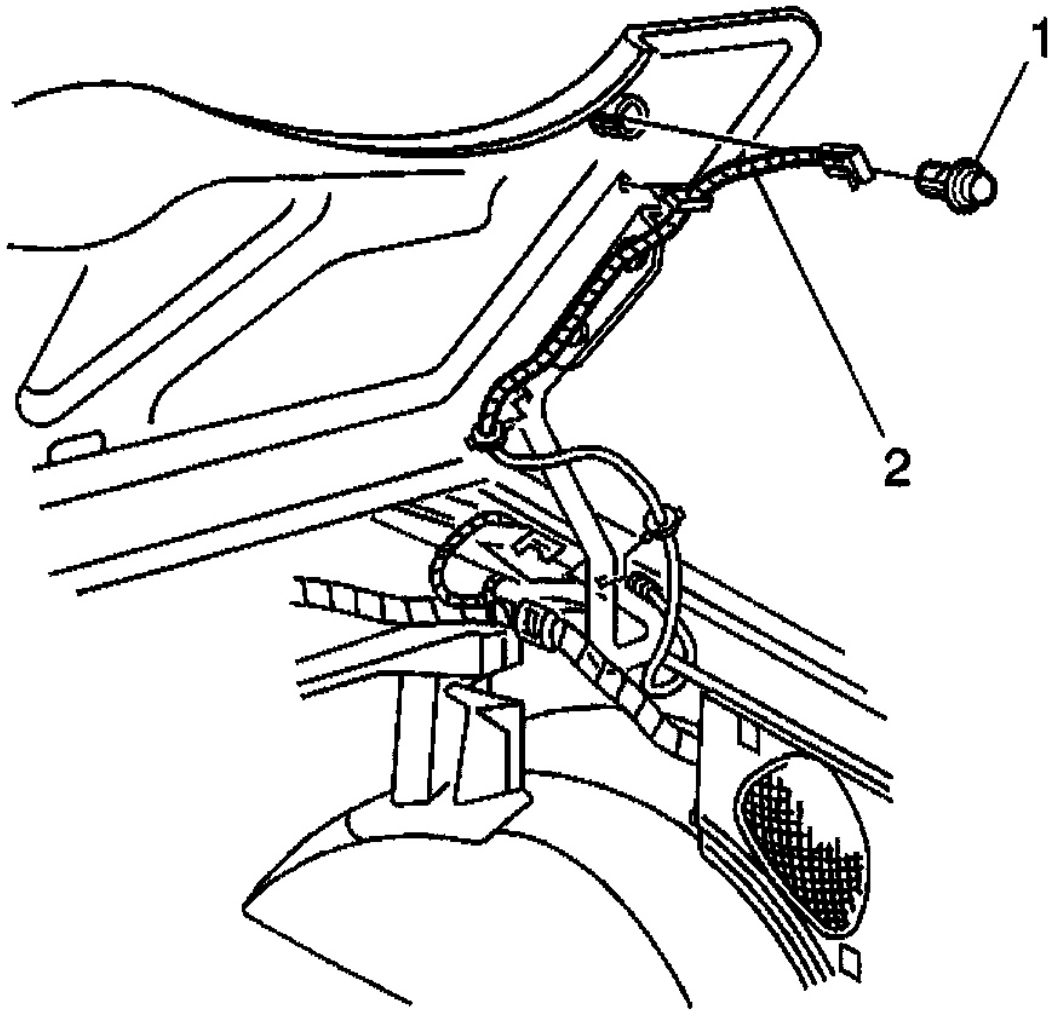

Fig. 11: Removing Lid Release Switch & Harness
Courtesy of GENERAL MOTORS CORP.

Installation Procedure

1. Connect the harness (2) to the lid release switch.
2. Align the electrical harness to the slot in the rear compartment lid.
3. Install the lid release switch to the rear compartment lid, pressing until fully seated.
4. Check for the proper operation of the lid switch.
5. Position the folding top to the original position.

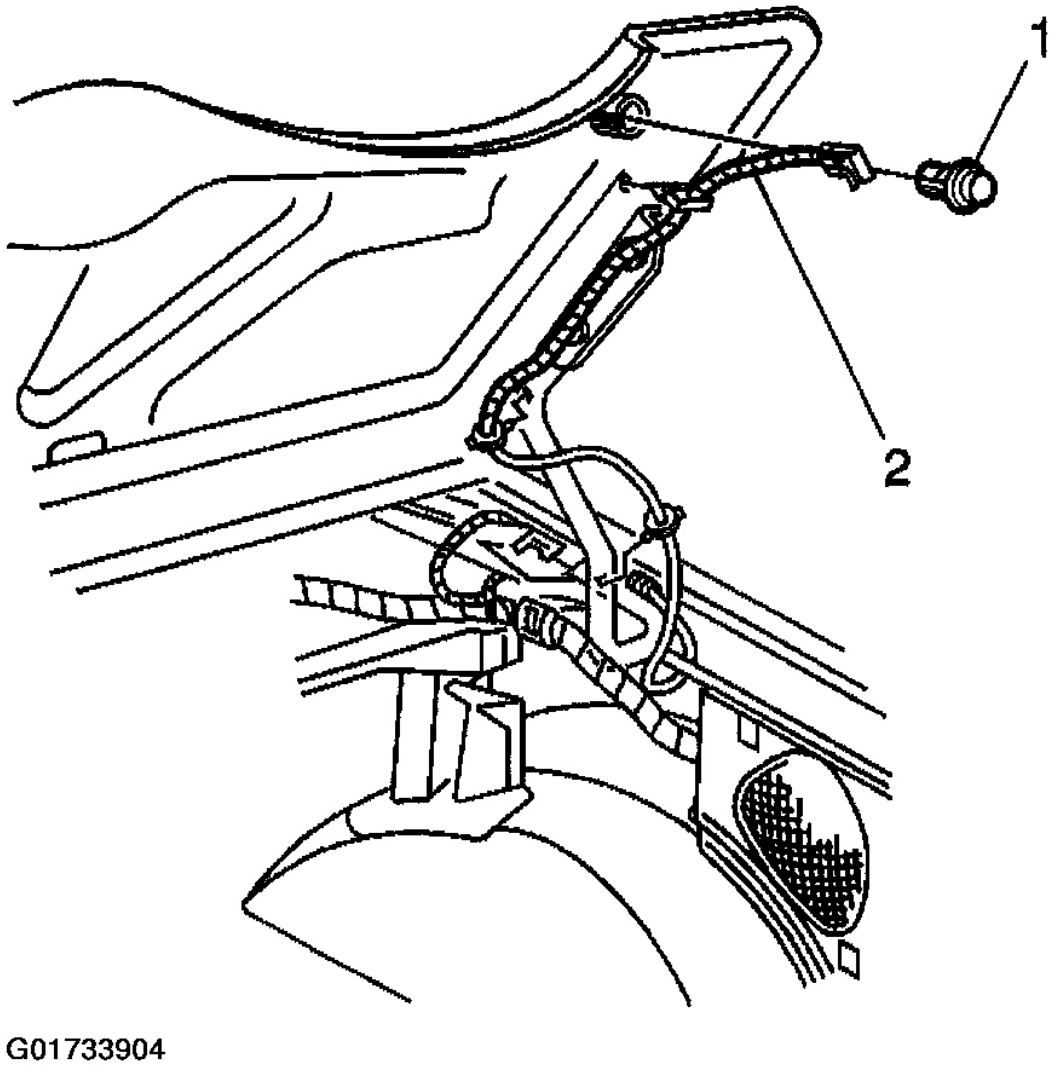

Fig. 12: Installing Lid Release Switch & Harness
Courtesy of GENERAL MOTORS CORP.

FOLDING TOP STOWAGE COMPARTMENT LID LATCH REPLACE

Removal Procedure

1. Position the top with the #1 bow and the #5 bow up.
2. Refer to **COMPARTMENT LID EXTENSION - FOLDING TOP STOWAGE** .
3. Disconnect the electrical connector from the latch.

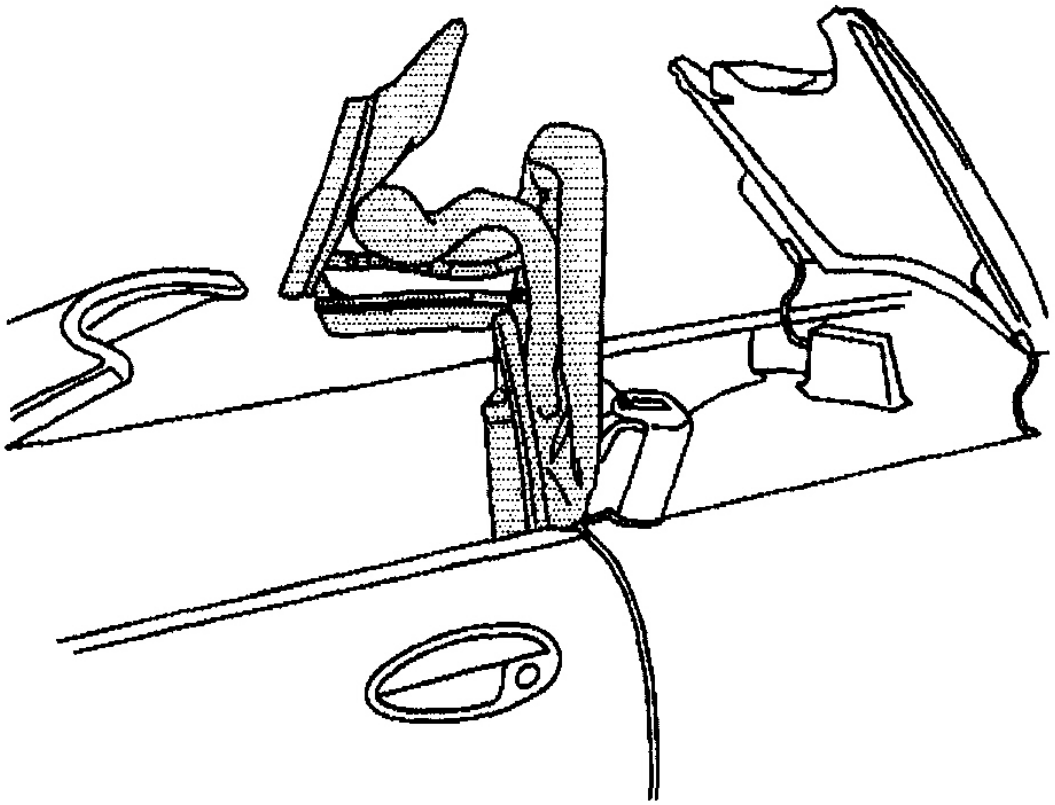

Fig. 13: Aligning Folding Top
Courtesy of GENERAL MOTORS CORP.

4. Remove the latch bolts from the latch retainer.
5. Remove the latch.

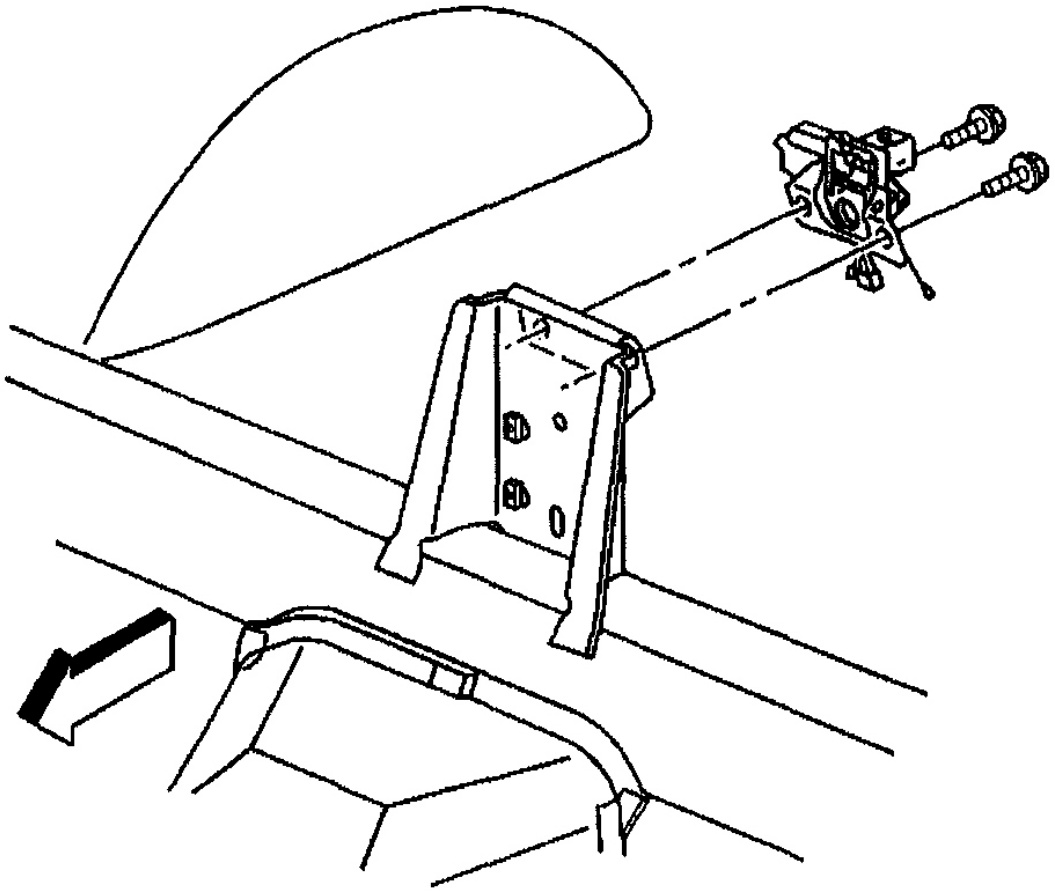

Fig. 14: Removing Stowage Compartment Lid Latch Bolts
Courtesy of GENERAL MOTORS CORP.

Installation Procedure

1. Position the latch to the retainer and finger-tighten the bolts.
2. Adjust the latch using the following procedures:
   - Adjust the latch up or down to make the lid flush.
   - Adjust the latch side to side gap from the lid to the quarter panels.

CAUTION: Refer to FASTENER NOTICE .

3. Tighten the latch bolts.

   Tighten

   Tighten the bolts to 10 N.m (89 lb in).

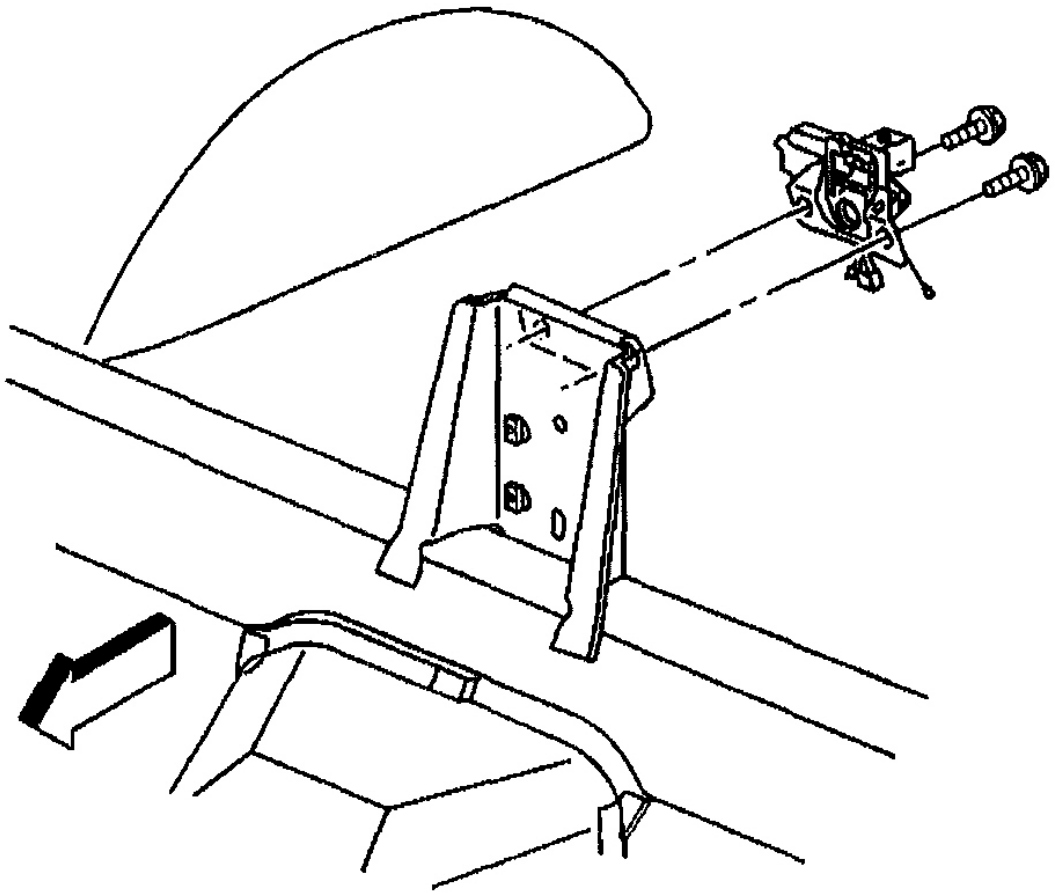

Fig. 15: Installing Stowage Compartment Lid Latch Bolts
Courtesy of GENERAL MOTORS CORP.

4. Connect the electrical connector to the latch.
5. Route the manual release cable down over the intermediate carpet. Position the end of the cable on the rear floor carpet.
6. Refer to **COMPARTMENT LID EXTENSION - FOLDING TOP STOWAGE** .

7. Close the lid and position the folding top to the original position.

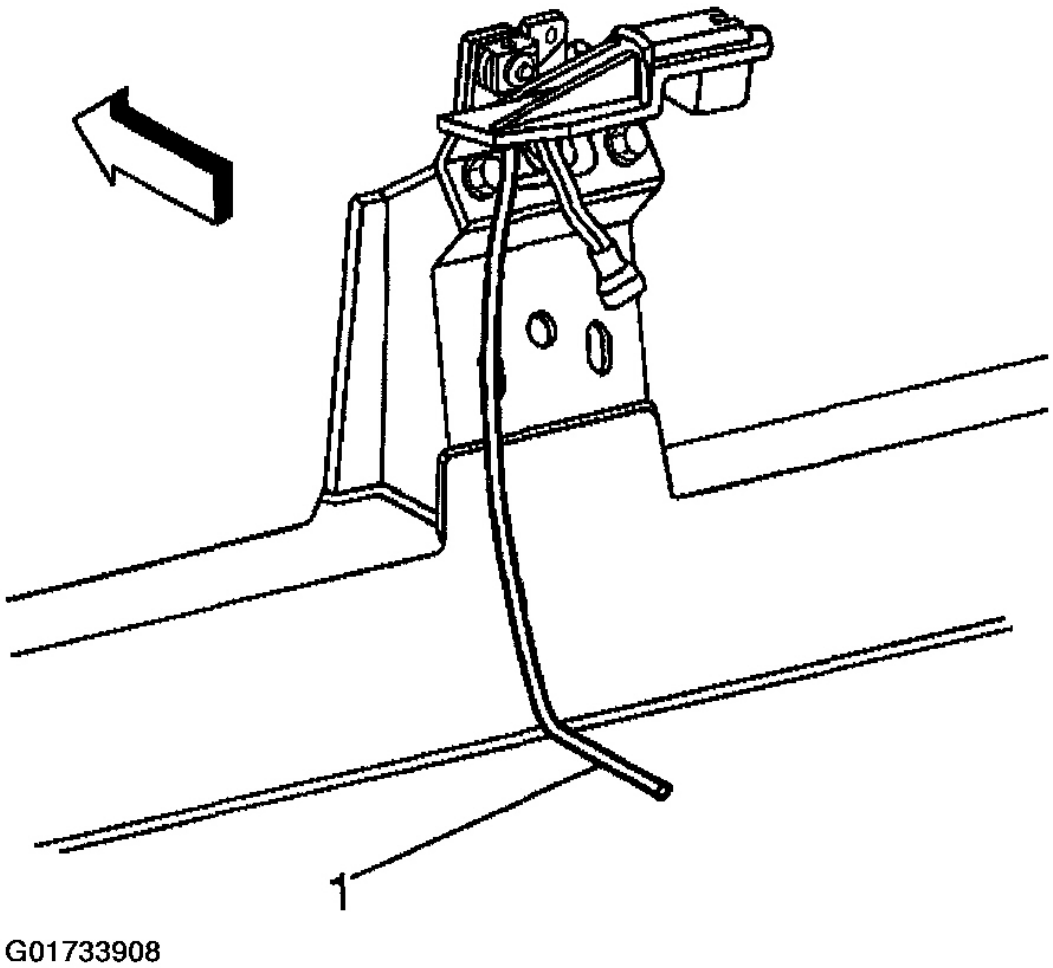

Fig. 16: Aligning Manual Release Cable
Courtesy of GENERAL MOTORS CORP.

FOLDING TOP STOWAGE COMPARTMENT LID STRIKER

Removal Procedure

1. Open the folding top stowage compartment lid.
2. Remove the bolts attaching the striker to the lid.
3. Remove the striker and the shims.

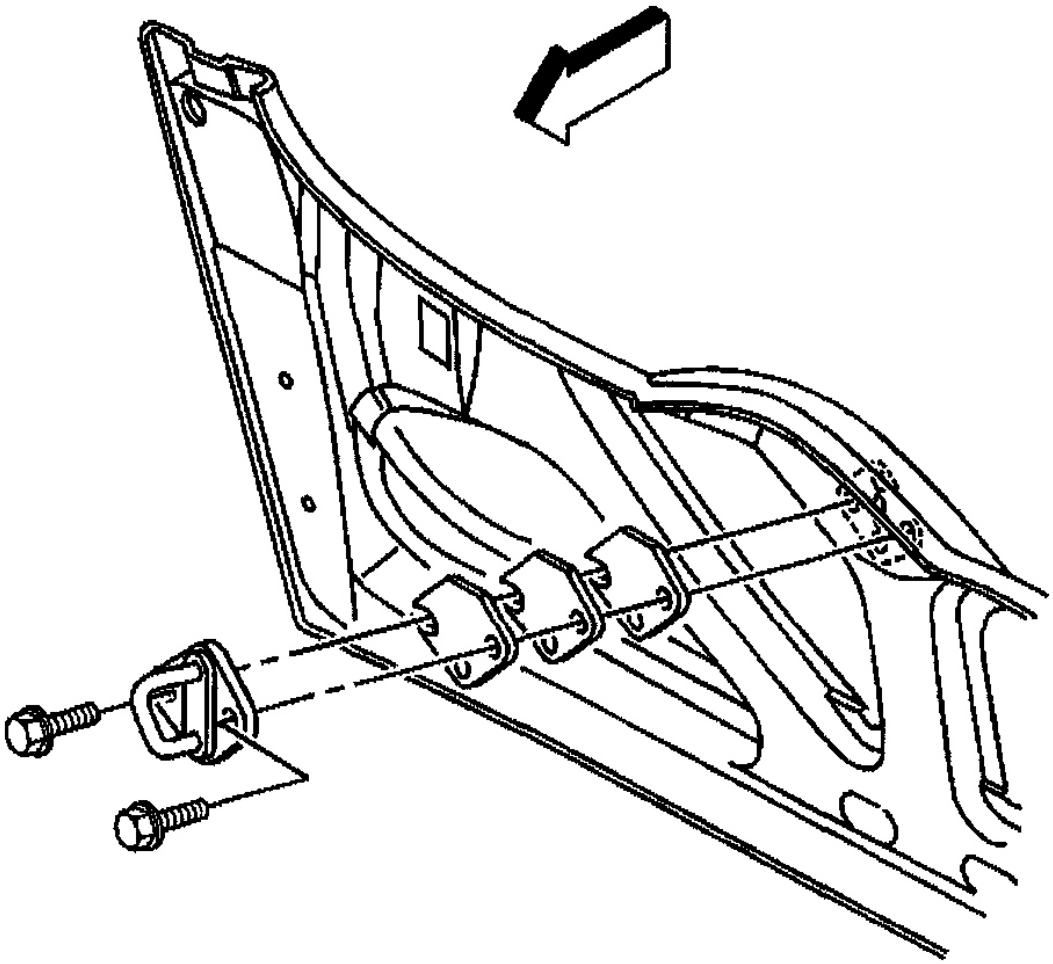

Fig. 17: Removing Striker Retaining Bolts
Courtesy of GENERAL MOTORS CORP.

Installation Procedure

1. Position the striker and the shims to the lid with the arrow on the striker pointed downward.

   CAUTION: Refer to FASTENER NOTICE .

2. Install the bolts attaching the striker, beginning with the driver side bolt.

Tighten

Tighten the bolts to 10 N.m (89 lb in).

3. Inspect the operation of the compartment lid.
4. Close the compartment lid.

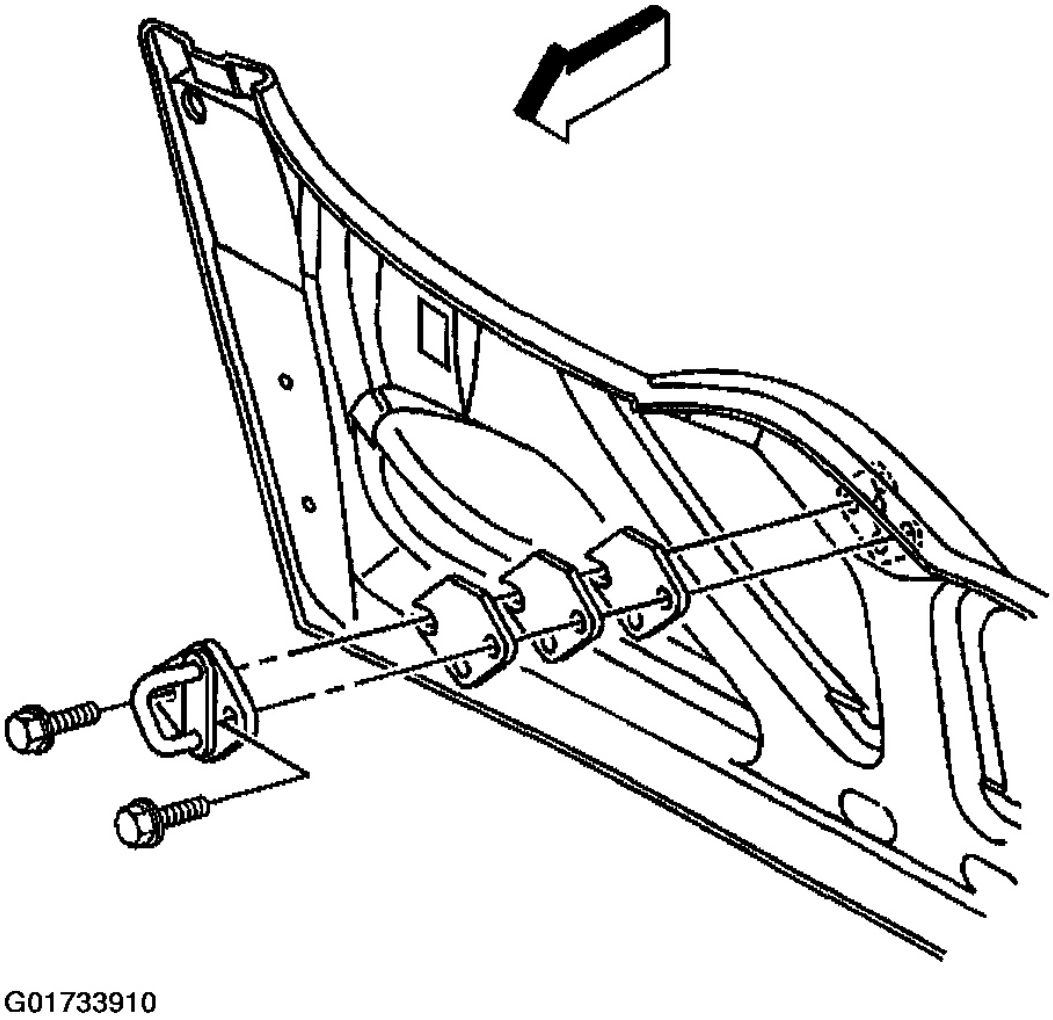

Fig. 18: Installing Striker Retaining Bolts
Courtesy of GENERAL MOTORS CORP.

FOLDING TOP COVER RETAINER REPLACEMENT NUMBER ONE BOW

Removal Procedure

1. Position the folding top with the #1 and #5 bow up.

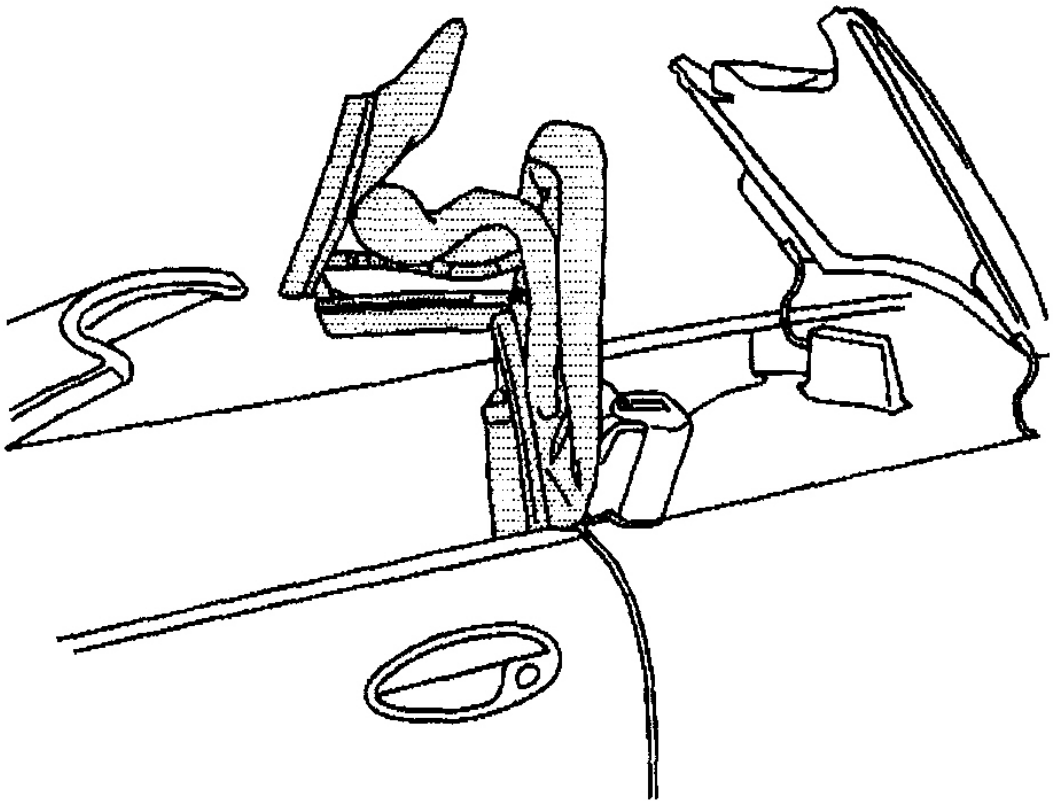

Fig. 19: Aligning Folding Top
Courtesy of GENERAL MOTORS CORP.

2. Remove the seal compression panel. Refer to **Folding Top Seal Compression Panel Replacement** .
3. Use a pair of needle nose pliers to remove the top cover staples from the bow.

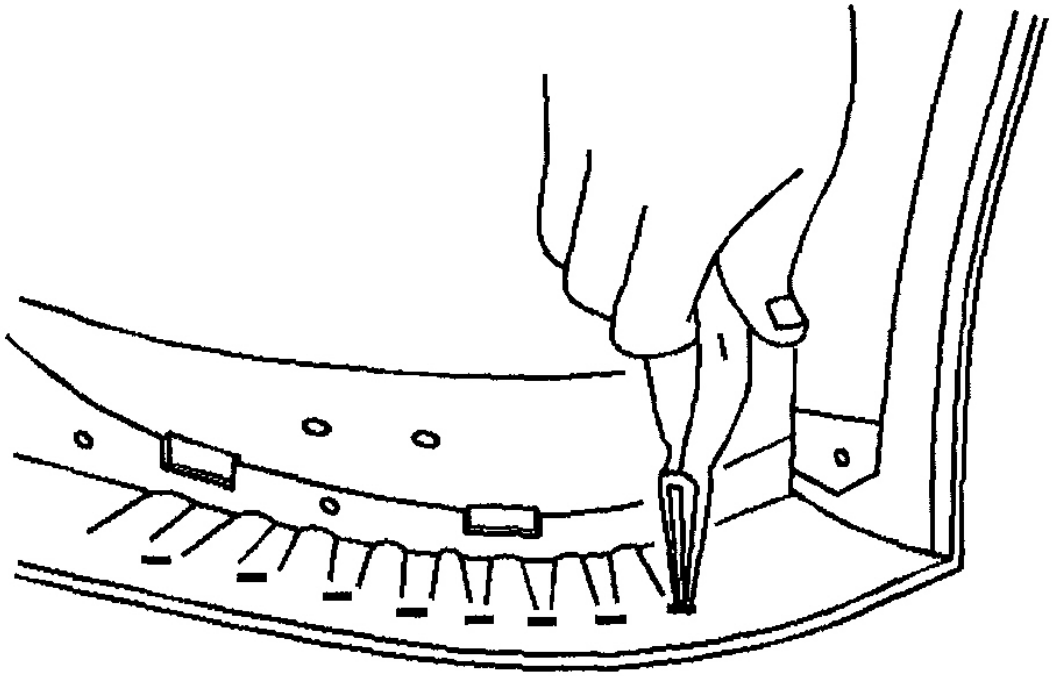

Fig. 20: Removing #1 Bow Top Cover Staples
Courtesy of GENERAL MOTORS CORP.

4. Use a pair of needle nose pliers to remove the headliner staples from the bow.

WARNING: Refer to SAFETY GLASSES CAUTION .

5. From the top of the bow, drill out the rivets from the top cover retainer.
6. Remove the top cover retainer.

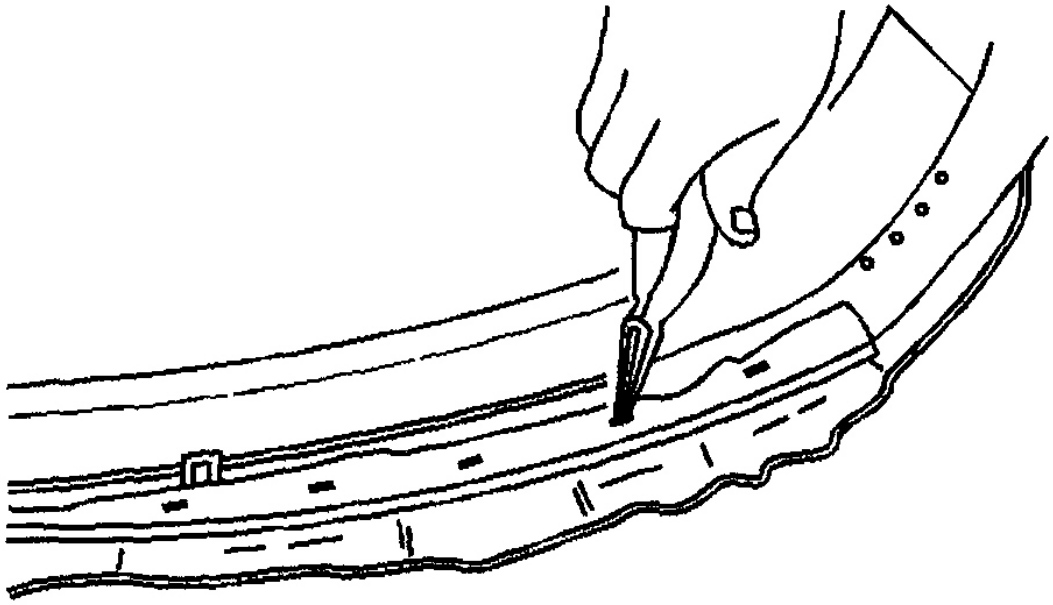

G01733913

Fig. 21: Removing #1 Bow Headliner Staples
Courtesy of GENERAL MOTORS CORP.

Installation Procedure

1. Install the top cover retainer to the #1 bow.
2. Using the rivets provided, push the shank of the rivet through the retainer. With an assistant install the rivet into the bow using a large tapered punch, hammer until the rivet is flush.
3. Staple the headliner to the bow.
4. Before stapling the top cover to the #1 bow, refer to **Folding Top Cover Tension Adjustment - Front** .
5. Return the folding top to the original position.

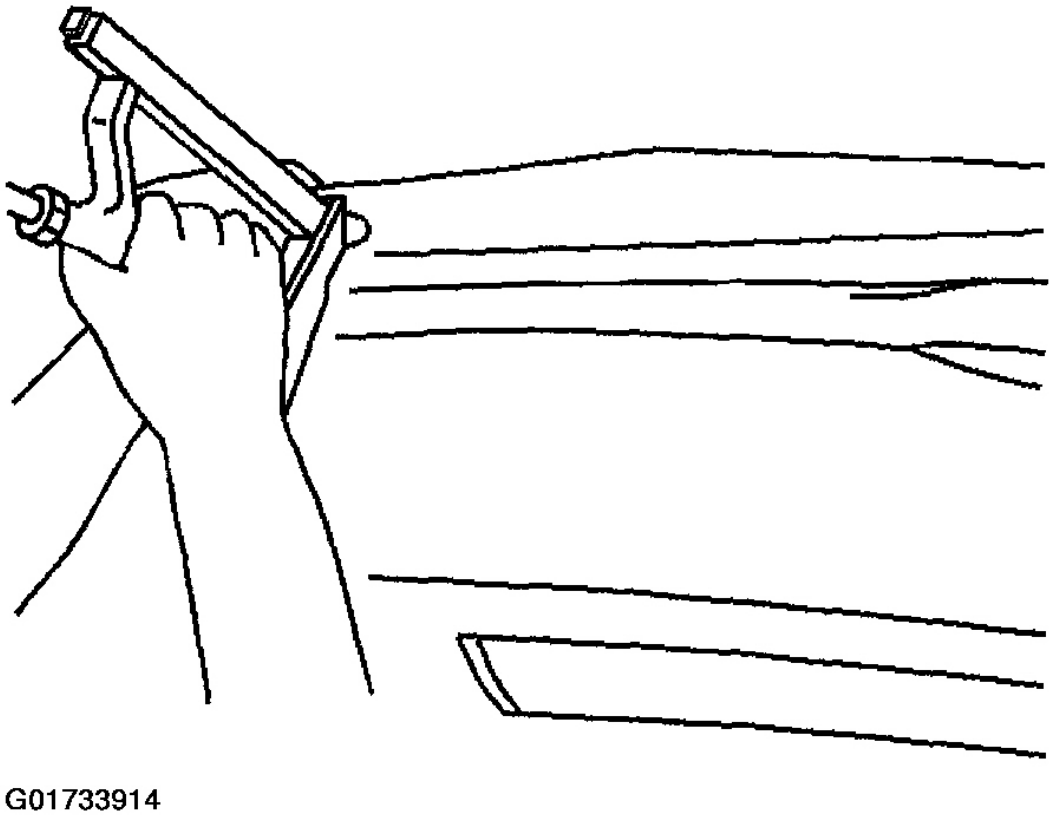

Fig. 22: Installing #1 Bow Headliner Staples
Courtesy of GENERAL MOTORS CORP.

FOLDING TOP COVER RETAINER REPLACEMENT NUMBER FIVE BOW

Removal Procedure

1. Position the folding top with the #1 and #5 bow up.
2. Remove the #5 bow weatherstrip. Refer to **Weatherstrip Replacement - Folding Top (Front and Center Side Rails)** or **Weatherstrip Replacement - Folding Top (Rear Side Rail)** or **Weatherstrip Replacement - Folding Top (Number Five Bow)** .

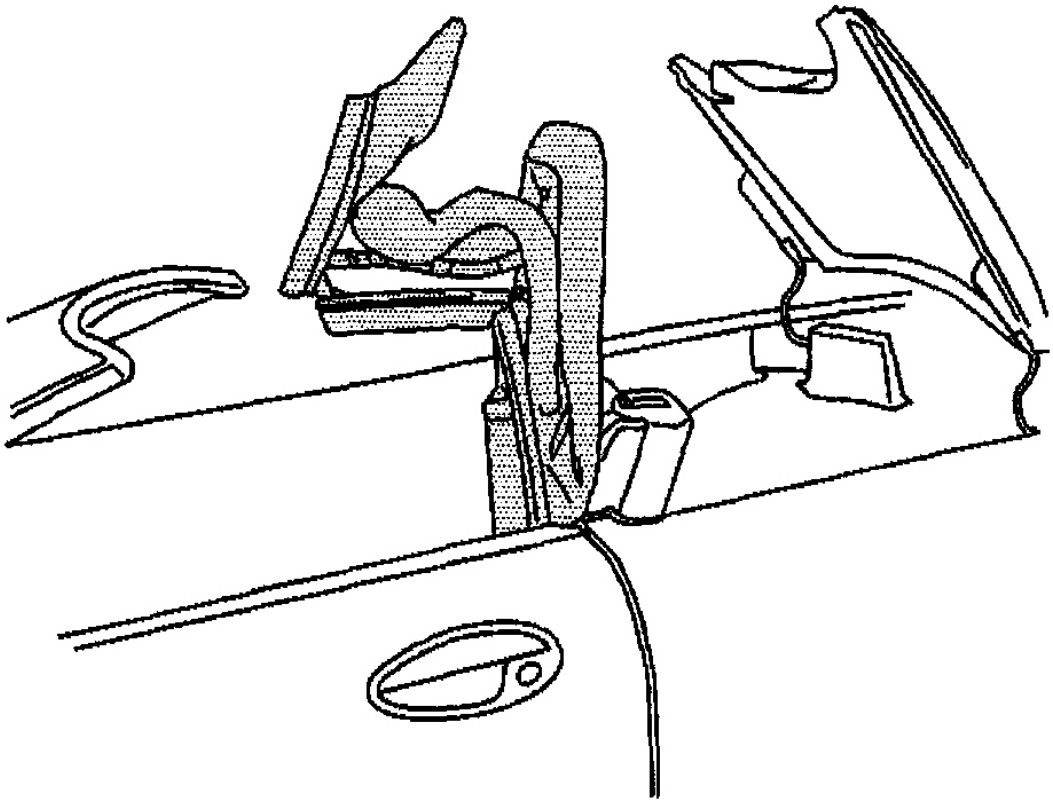

Fig. 23: Aligning Folding Top
Courtesy of GENERAL MOTORS CORP.

3. Use a pair of needle nose pliers to remove the top cover staples to the bow.

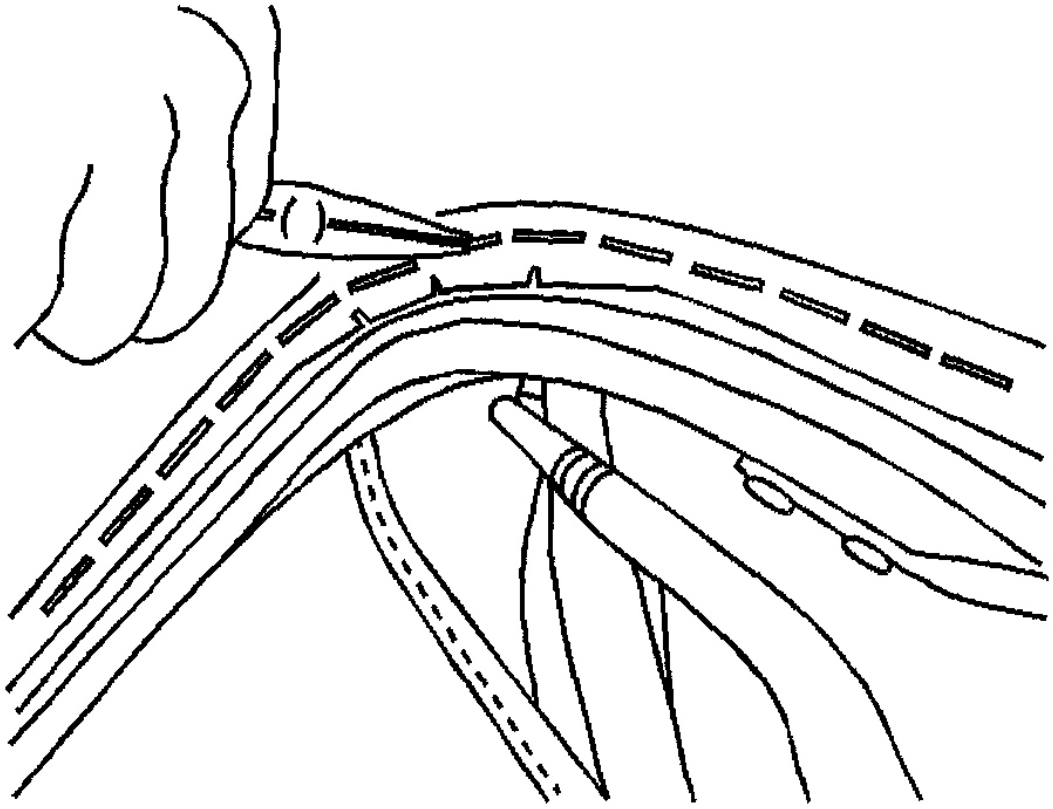

G01733916

Fig. 24: Removing #5 Bow Top Cover Staples
Courtesy of GENERAL MOTORS CORP.

4. Pull top cover away from the bow.
5. Use a pair of needle nose pliers to remove the stay pad staples from the bow.

WARNING: Refer to SAFETY GLASSES CAUTION .

6. From the top of the bow, drill out the rivets from the top cover retainers.
7. Remove the top cover retainers.

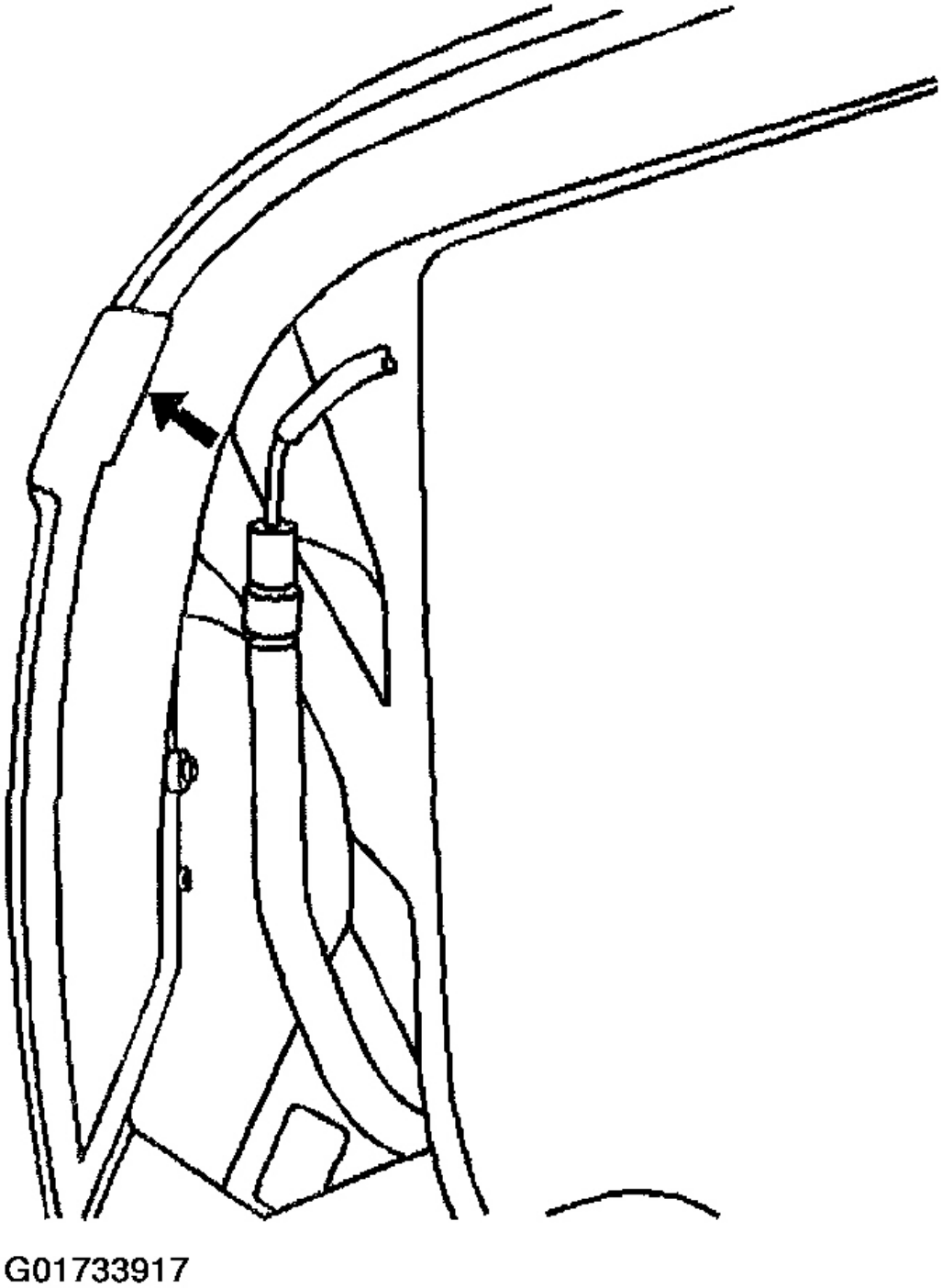

Fig. 25: Identifying #5 Bow Stay Pad Staples

Courtesy of GENERAL MOTORS CORP.

Installation Procedure

1. Install the top cover retainers to the #5 bow.
2. Using the rivets provided, push the shank of the rivet through the retainer. With an assistant install the rivet into the bow using a large tapered punch, hammer until the rivet is flush.
3. Staple the stay pad to the #5 bow.
4. Before stapling the top cover to the #5 bow, refer to **Folding Top Cover Tension Adjustment - Rear** .
5. Return the folding top to the original position.

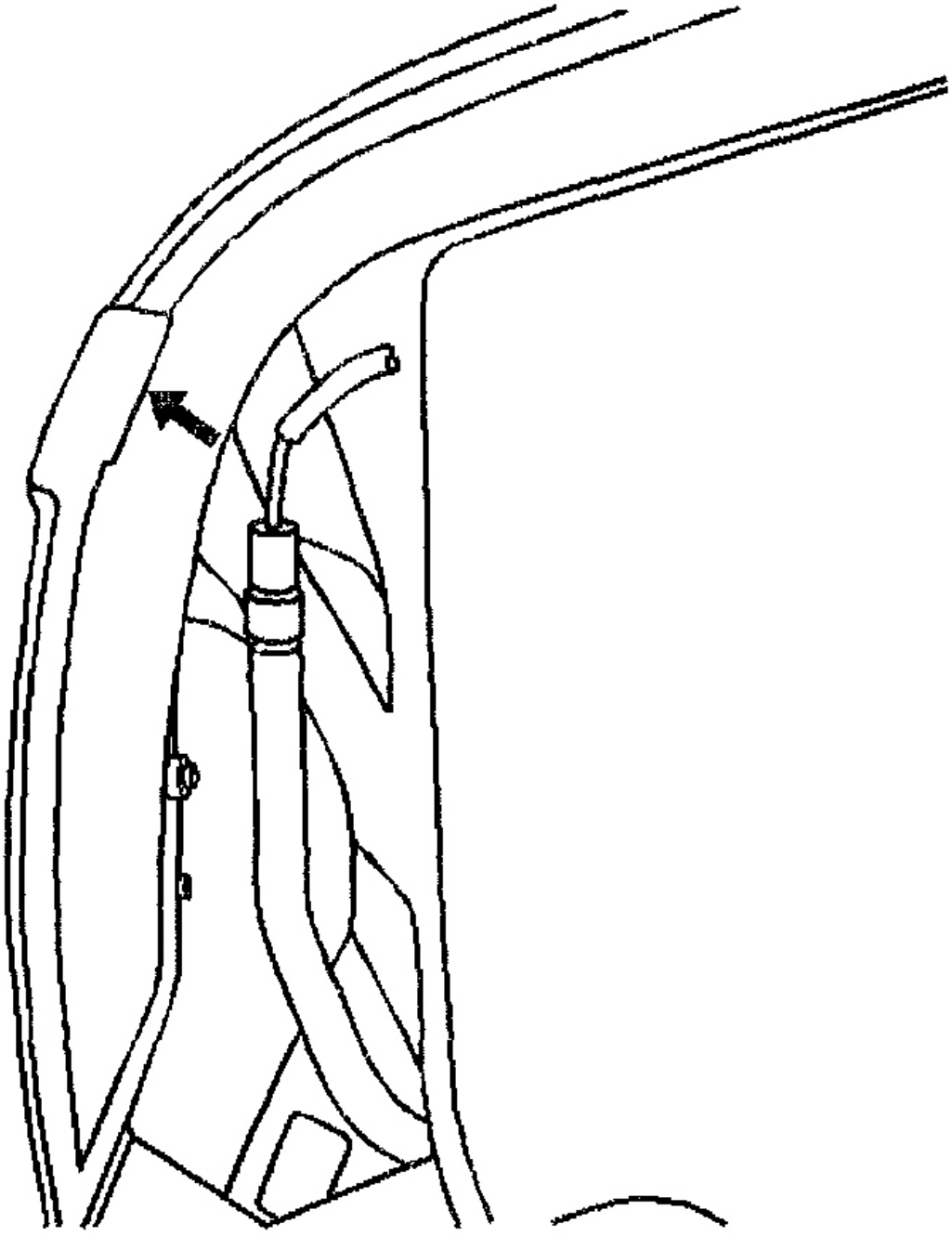

Fig. 26: Identifying #5 Bow Stay Pad Staples
Courtesy of GENERAL MOTORS CORP.

FOLDING TOP ADJUSTMENT

Pressure Link - Five Bow Pressure on Stowage Lid

Adjust the lower pressure link to change the #5 bow pressure to the stowage compartment lid.

- Decrease the pressure if the top material is contacting and marring the lid.
- Increase the pressure if water is leaking between the top and the lid.

1. Position the folding top with the #1 bow and the #5 bow up.

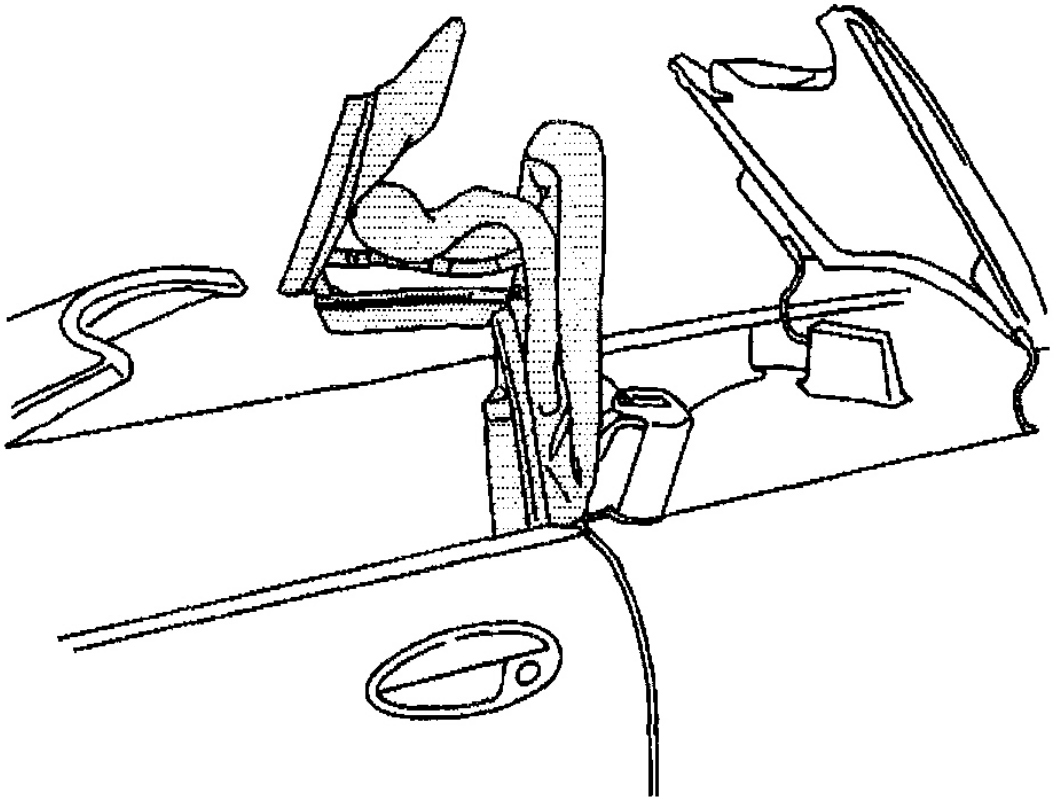

Fig. 27: Aligning Folding Top
Courtesy of GENERAL MOTORS CORP.

Important The jam nuts are left handed thread.

2. Loosen the jam nut (1) on the pressure link where the adjuster attaches to the #5 bow.

3. Mark the pressure link large adjustment nut (2) to aid in determining the amount of adjustment.
4. Adjust the pressure link by rotating the large adjustment nut one turn at a time.

   Rotate the nut clockwise to increase the downward pressure of the #5 bow on the stowage lid. Turn the nut counter clockwise to decrease the downward pressure.

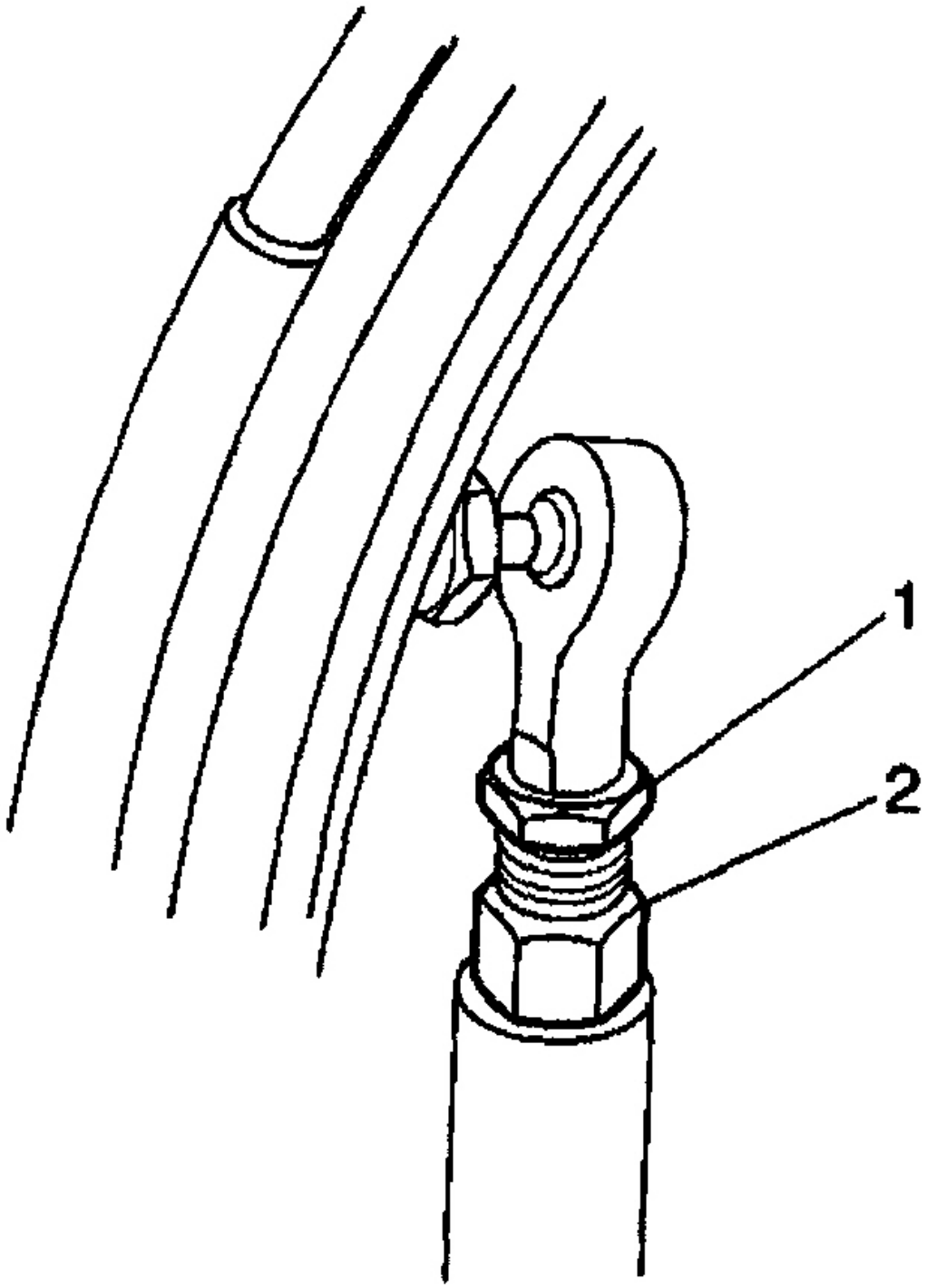

G01733920

Fig. 28: Identifying Pressure Link Adjustment Nuts
Courtesy of GENERAL MOTORS CORP.

5. Raise the top.
6. Check the gap between the lid (2) and the #5 bow top cover material (1).

   The gap between the lid and the top material should be 2-3 mm (0.08-0.12 in).

   The gap between the five bow top material and the lid should be the same all the way across.

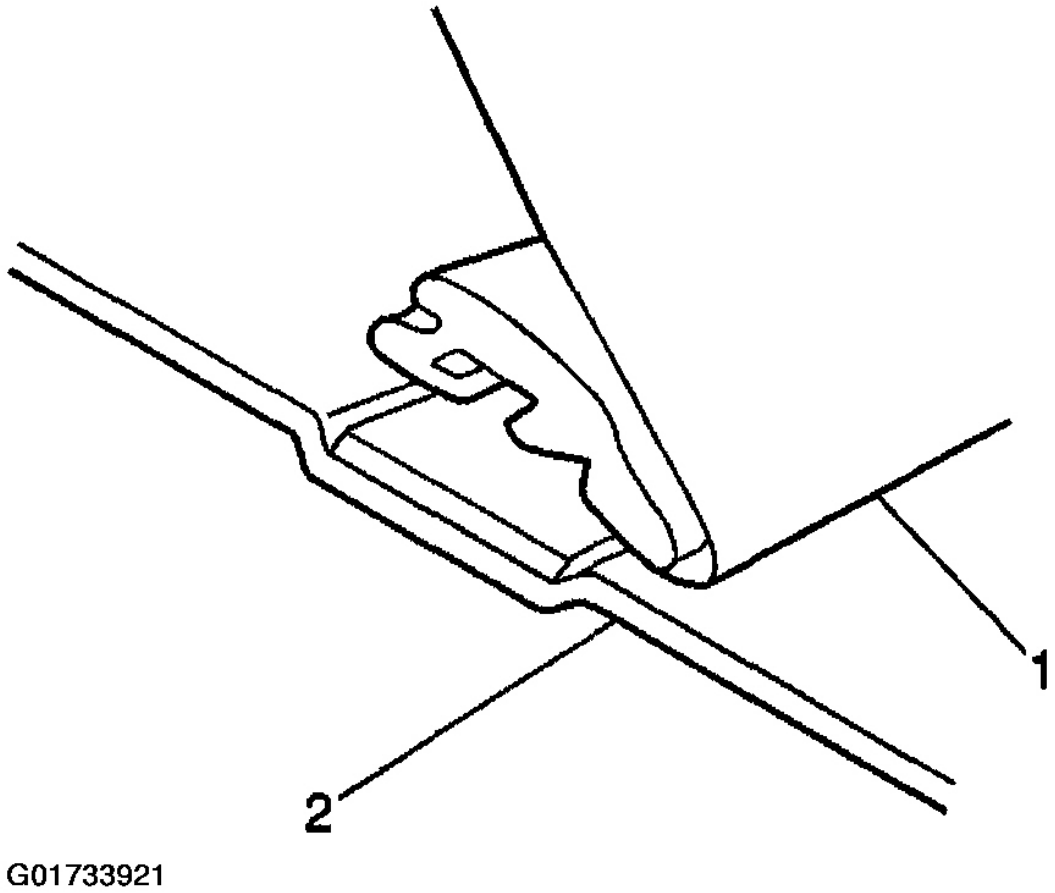

Fig. 29: Checking Lid & Top Cover Gap
Courtesy of GENERAL MOTORS CORP.

7. Check the alignment of the front latch pins (2) with their receivers (3).

The front latch pins should be aligned so that when the top is raised the pins drop into the receivers.

8. Lower the top and re-adjust the pressure link as necessary.

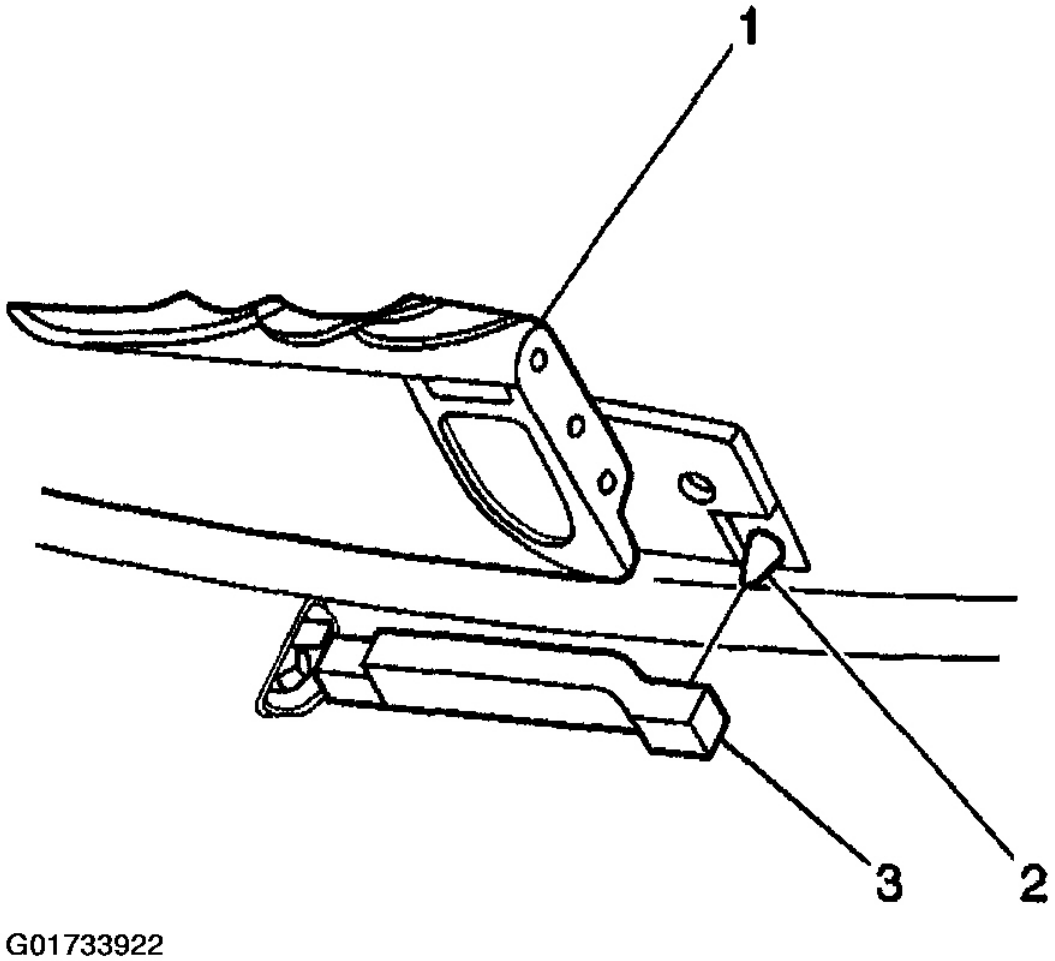

Fig. 30: Checking Front Latch Pin Alignment
Courtesy of GENERAL MOTORS CORP.

9. Position the folding top with the #1 bow and the #5 bow up.

CAUTION: Refer to FASTENER NOTICE .

10. Tighten the jam nut.

    Tighten

    Tighten the nut to 50 N.m (37 lb ft).

11. Raise and close the folding top.
12. Water test the folding top.
13. Re-adjust the pressure link if necessary.

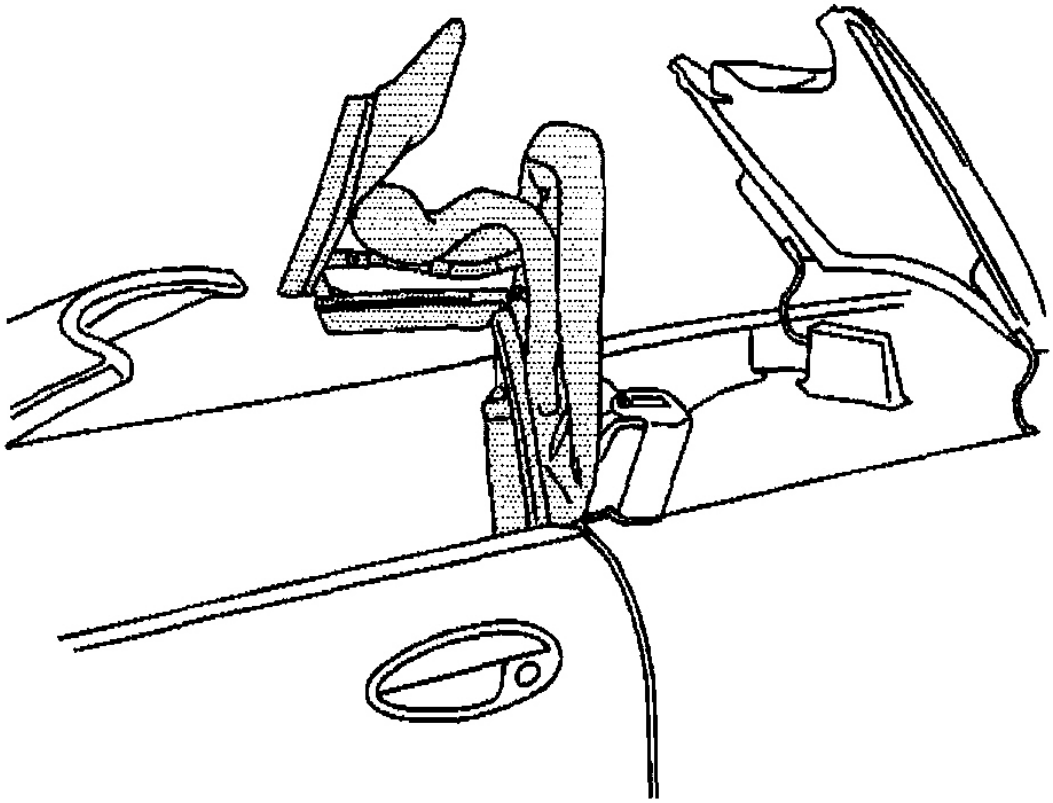

G01733923

Fig. 31: Aligning Folding Top
Courtesy of GENERAL MOTORS CORP.

Side Rail - Top of Door Window Contacting Top Fabric

To eliminate the top center of the window from hooking under the roof material adjust the

knurled nut between the front and center side rails to increase the amount of bow in the side of the top.

1. Position the top with the #1 and #5 bow up.

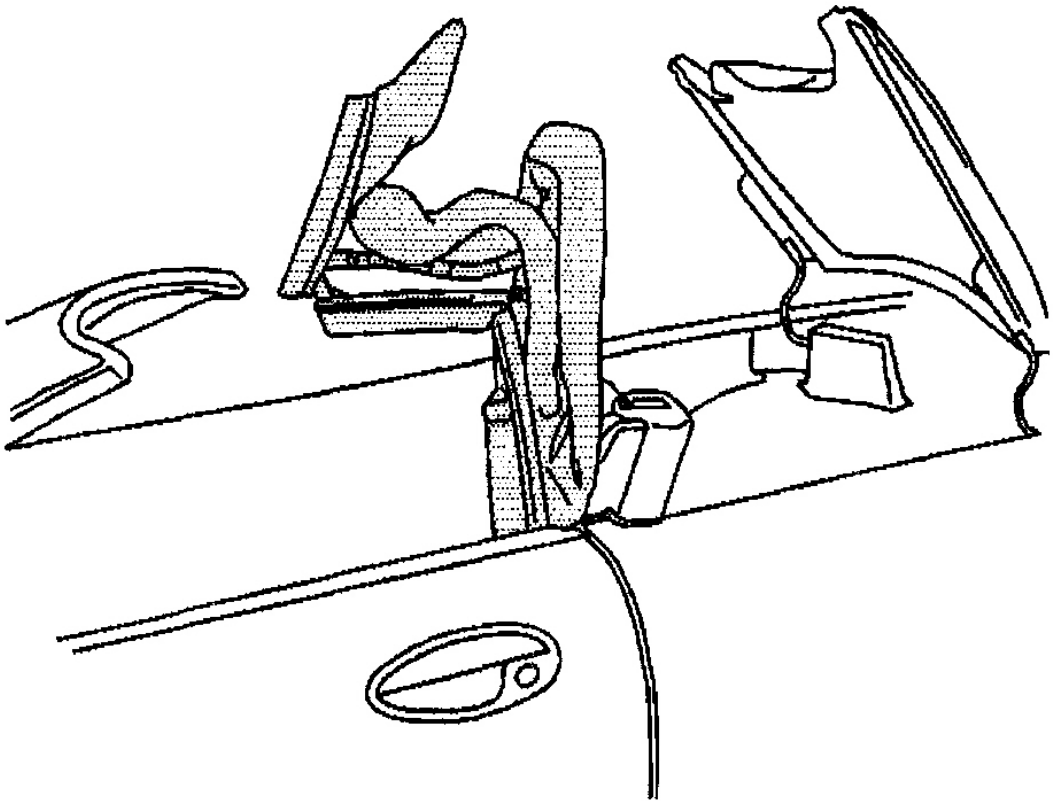

Fig. 32: Aligning Folding Top
Courtesy of GENERAL MOTORS CORP.

2. Adjust the knurled nut outward to increase the bow in the roof.
3. Raise the top and check the window clearance.

   The window, in a full up position, should not contact the top material when opening and closing the door.

4. Lower and re-adjust the top using the knurled nut as necessary.
5. Raise and close the folding top.

6. Water test the folding top.
7. Adjust the window if necessary. Refer to **WINDOW TIP-IN ADJUSTMENT - DOOR** .

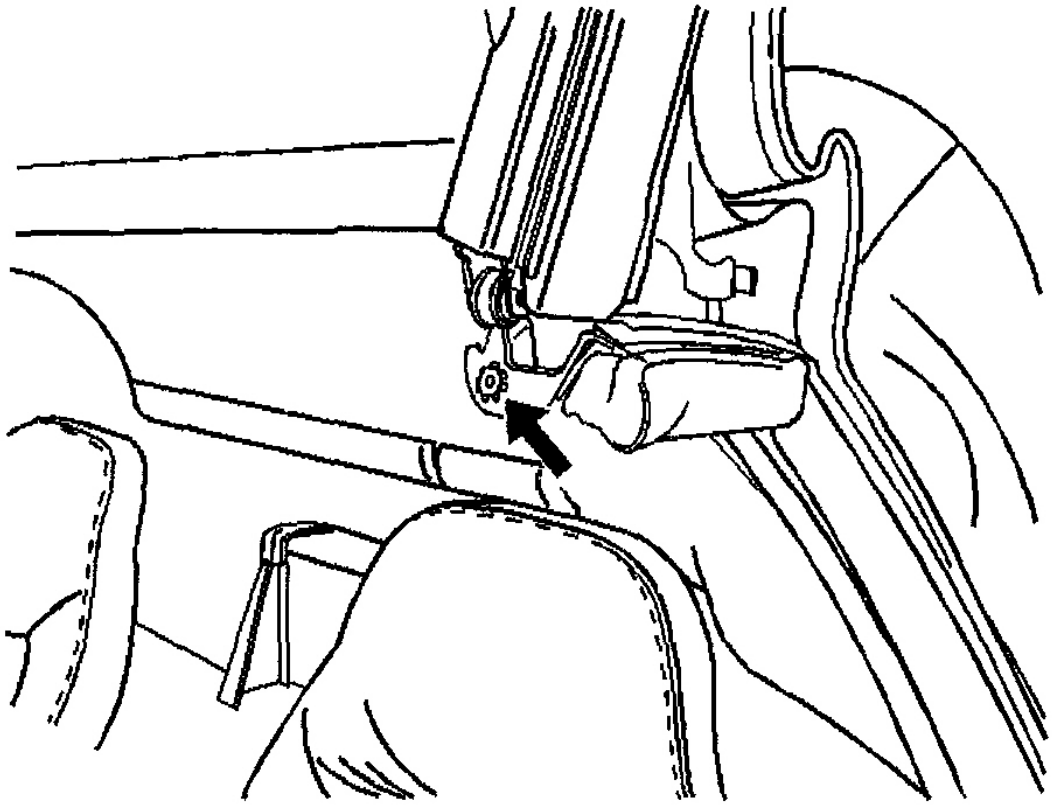

Fig. 33: Locating Knurled Nut
Courtesy of GENERAL MOTORS CORP.

Rear Side Rail - Loose Fabric

To tighten the roof material, adjust the rear side rail rearward.

1. Lower the folding top.
2. Open the small cover/door on top of the lock pillar to access the adjuster.
3. Loosen the adjuster jam nut.
4. Mark the adjuster nut to aid in determining the amount of adjustment.
5. Loosen the adjuster nut one turn at a time.

6. Raise the top and check the top material for tightness.

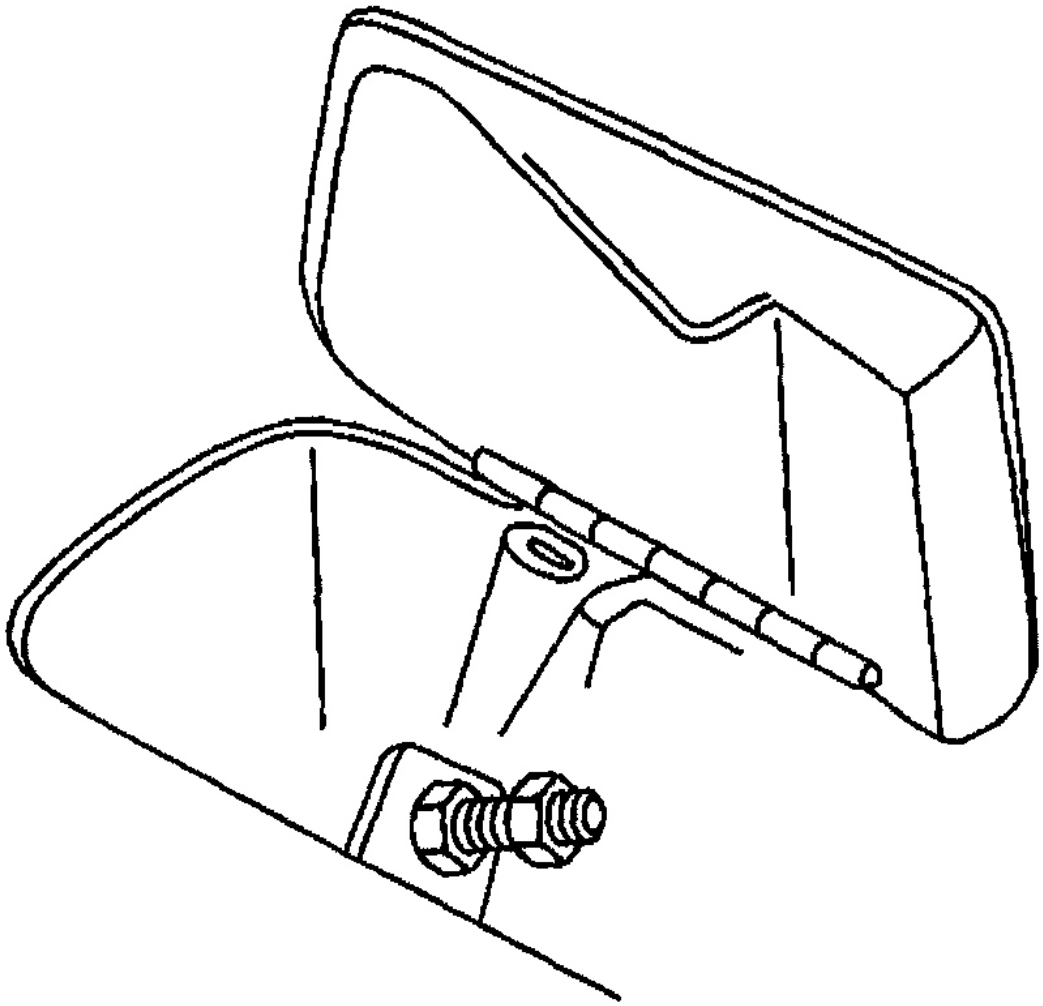

Fig. 34: Identifying Rear Side Rail Adjuster Nut
Courtesy of GENERAL MOTORS CORP.

7. Check the alignment of the front latch pins (2) with their receivers. The front latch pins should be aligned so that when the top is raised the pins drop into the receivers.

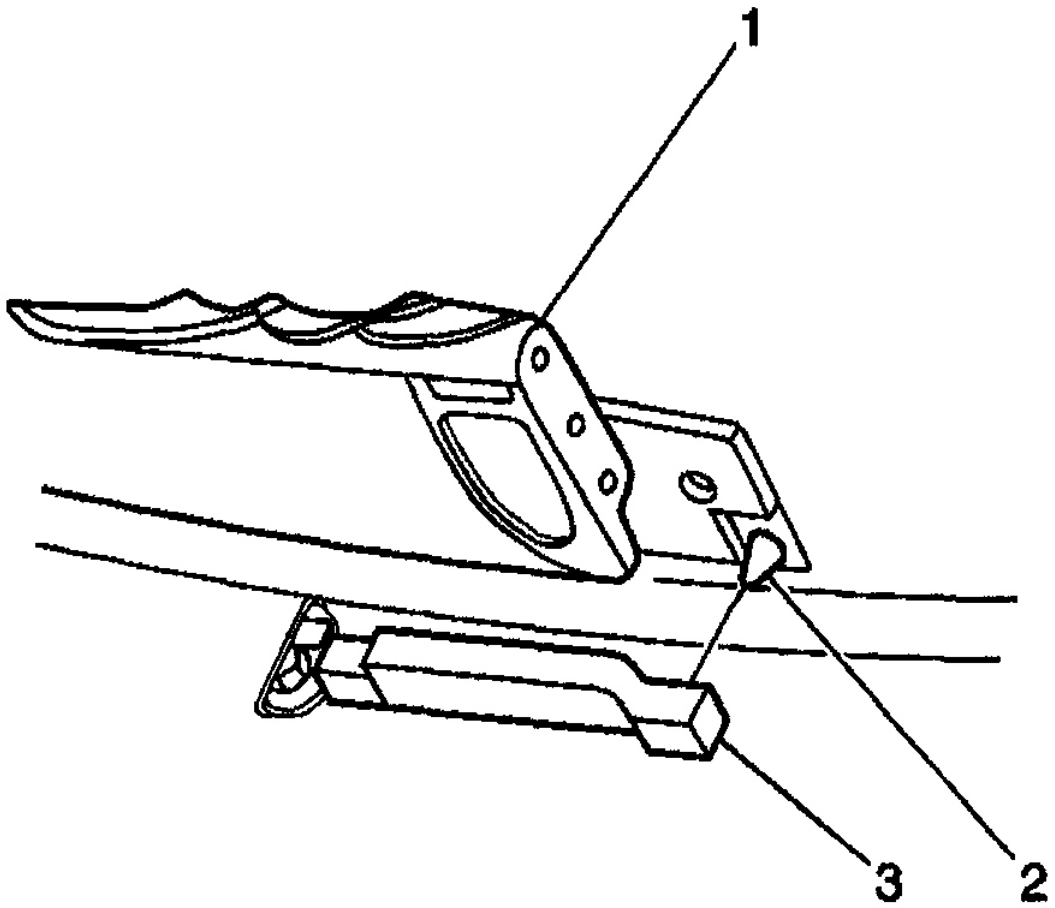

Fig. 35: Checking Front Latch Pin Alignment
Courtesy of GENERAL MOTORS CORP.

8. Lower and re-adjust the top using the adjuster as necessary.

CAUTION: Refer to FASTENER NOTICE .

9. Tighten the jam nut.

Tighten

Tighten the nut to 50 N.m (37 lb ft).

10. Water test the folding top.

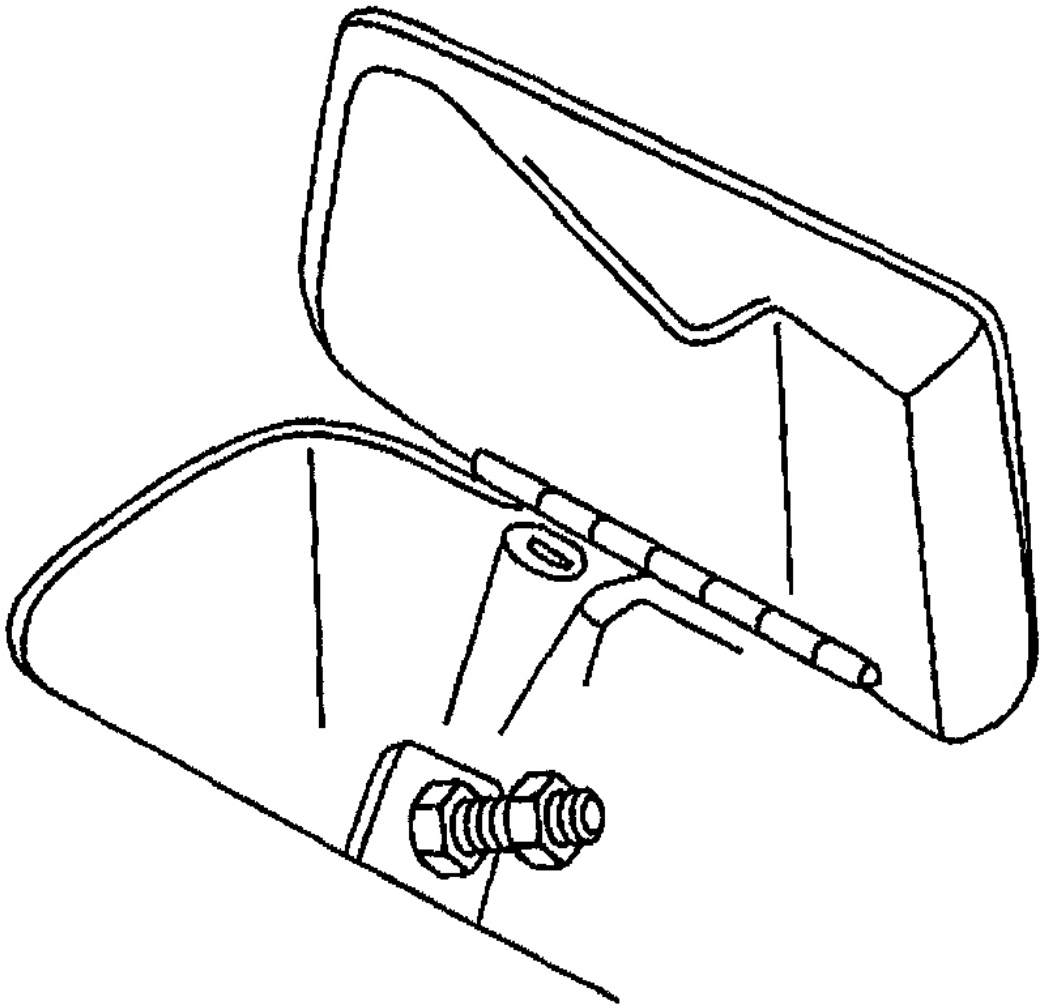

Fig. 36: Identifying Rear Side Rail Adjuster Nut
Courtesy of GENERAL MOTORS CORP.

FOLDING TOP COVER TENSION ADJUSTMENT - FRONT

1. Close the convertible top.

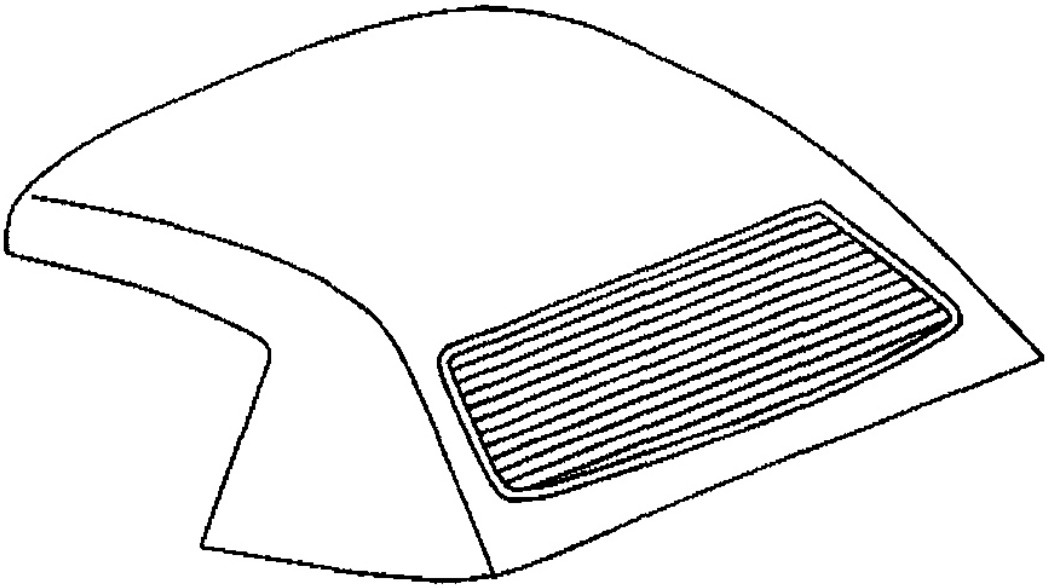

G01733929

Fig. 37: Identifying Closed Convertible Top
Courtesy of GENERAL MOTORS CORP.

2. Verify the tension in the folding top cover by setting a 1 M (3.28 ft) straight edge on the top cover between the #1 and the #2 bows.

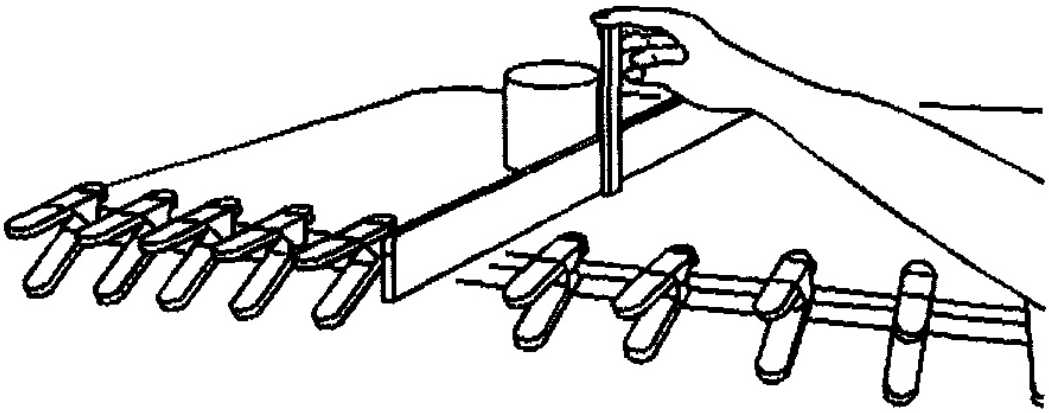

G01733930

Fig. 38: Checking Folding Top Tension
Courtesy of GENERAL MOTORS CORP.

3. Set a 4.5 kg (10 lb) weight next to the straight edge in the center of the top.
4. Using a ruler, measure the sag distance between the bottom of the straight edge and the top cover:
   - Cloth: 13-15 mm (0.51-0.60 in)
   - Vinyl: 17-20 mm (0.67-0.79 in)
5. If the tension does not meet these specifications, modify the tension by continuing with the following steps.
6. To modify the tension in the folding top cover, remove the folding top. Refer to **Folding Top Replacement** .
7. At the #1 bow, remove the weatherstrip screws from the right and from the left front side rail.

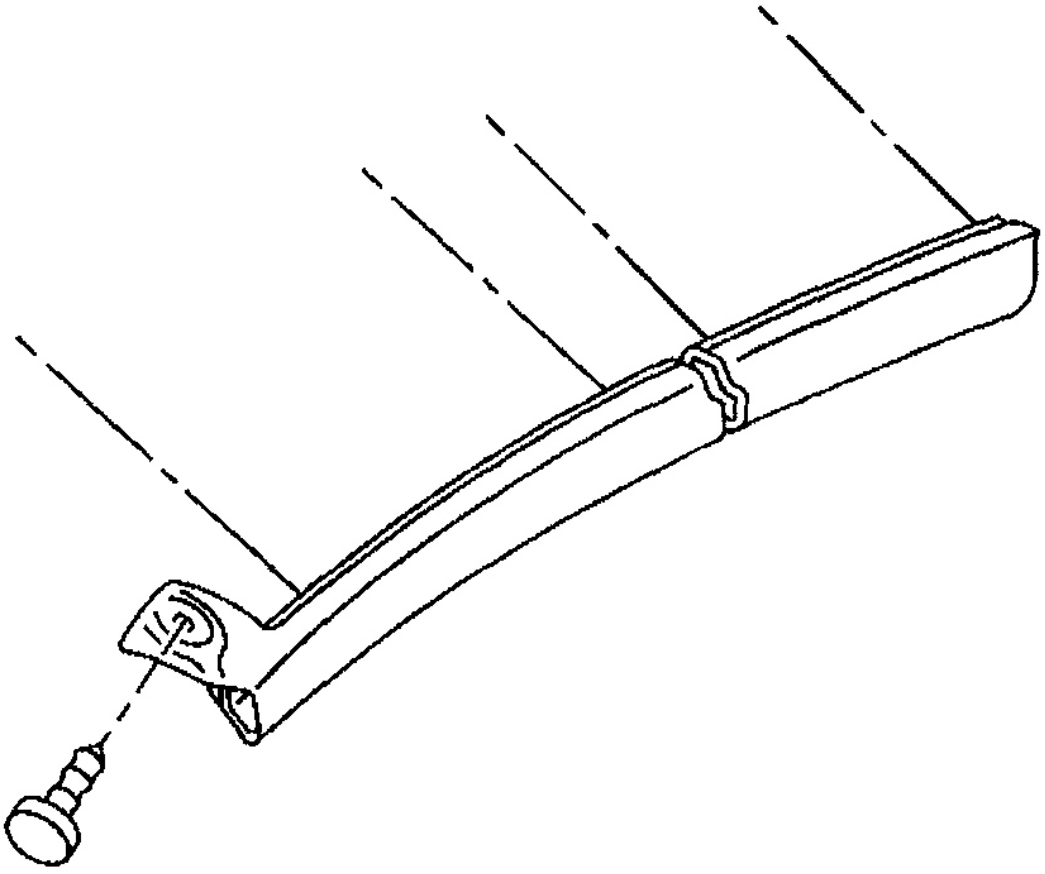

Fig. 39: Removing #1 Bow Front Side Rail Weatherstrip Screws
Courtesy of GENERAL MOTORS CORP.

8. Remove the screws from the seal compression panel.
9. Remove the seal compression panel.

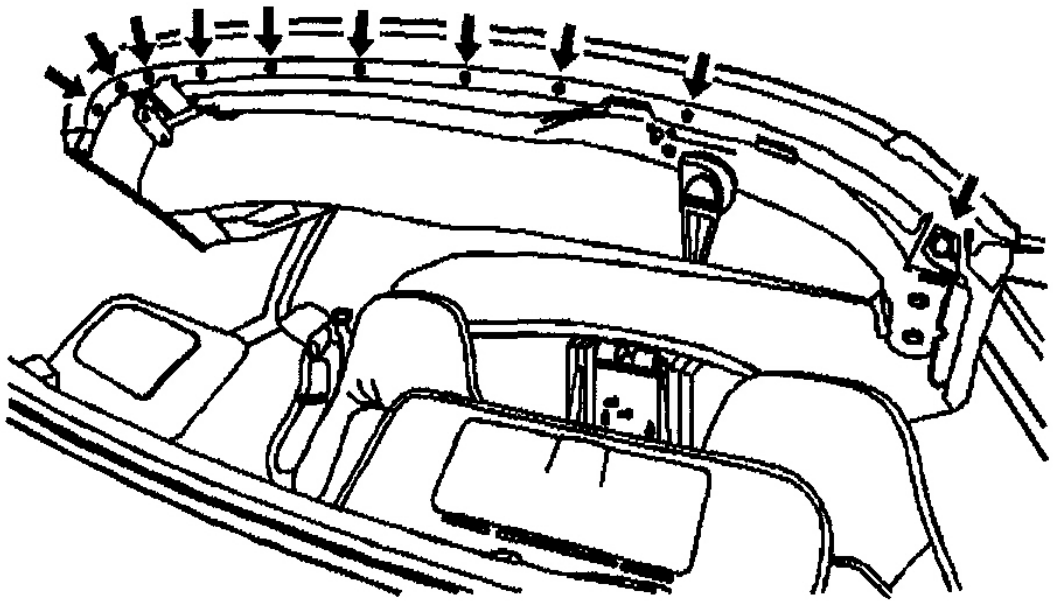

G01733932

Fig. 40: Removing Seal Compression Panel Screws
Courtesy of GENERAL MOTORS CORP.

10. Using a pair of needle nose pliers remove the top cover staples.
11. Pull the top cover forward to increase the tension.

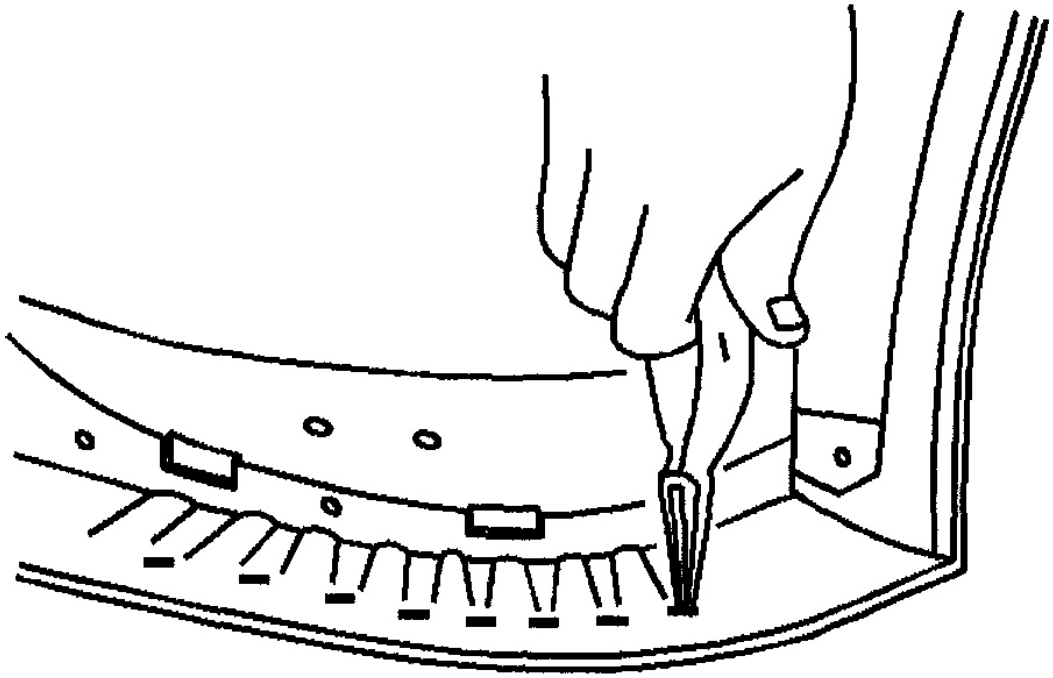

G01733933

Fig. 41: Removing #1 Bow Top Cover Staples
Courtesy of GENERAL MOTORS CORP.

12. Fold the top cover over the #1 bow and secure with 5 cm (2 in) pinch clamps. Place the clamps directly over the steel rivets within the bow.

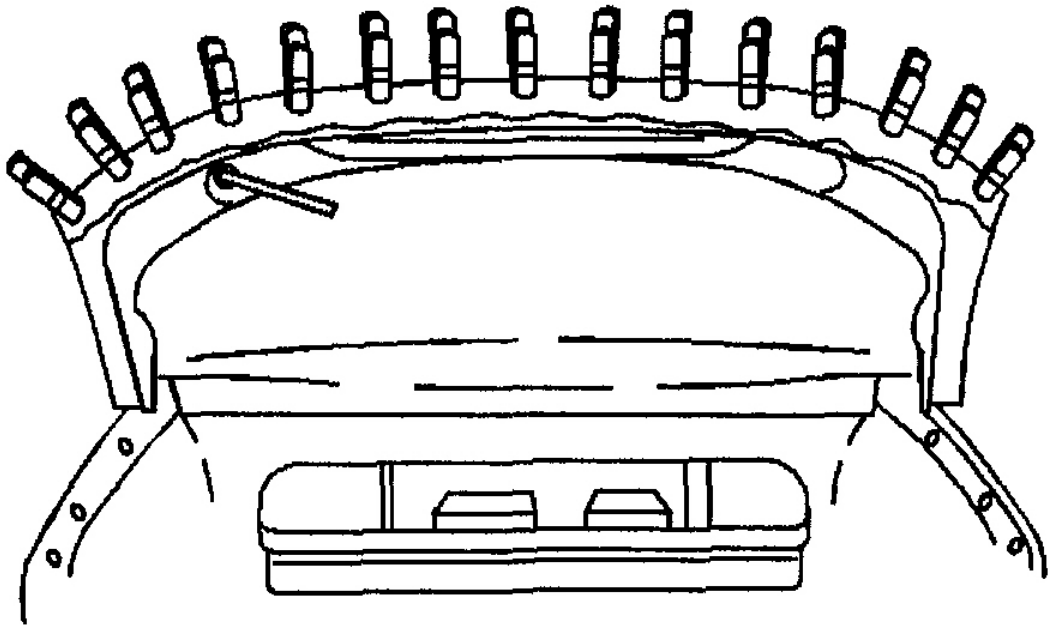

G01733934

Fig. 42: Aligning Pinch Clamps
Courtesy of GENERAL MOTORS CORP.

13. Using a ruler as before, verify the tension again and adjust the tension as necessary.

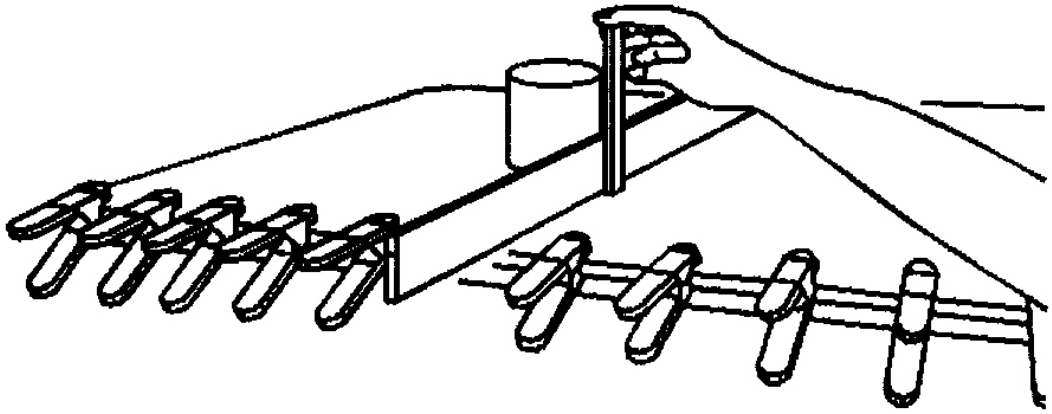

G01733935

Fig. 43: Checking Folding Top Tension
Courtesy of GENERAL MOTORS CORP.

14. If the tension is correct, staple the top cover to the bow.

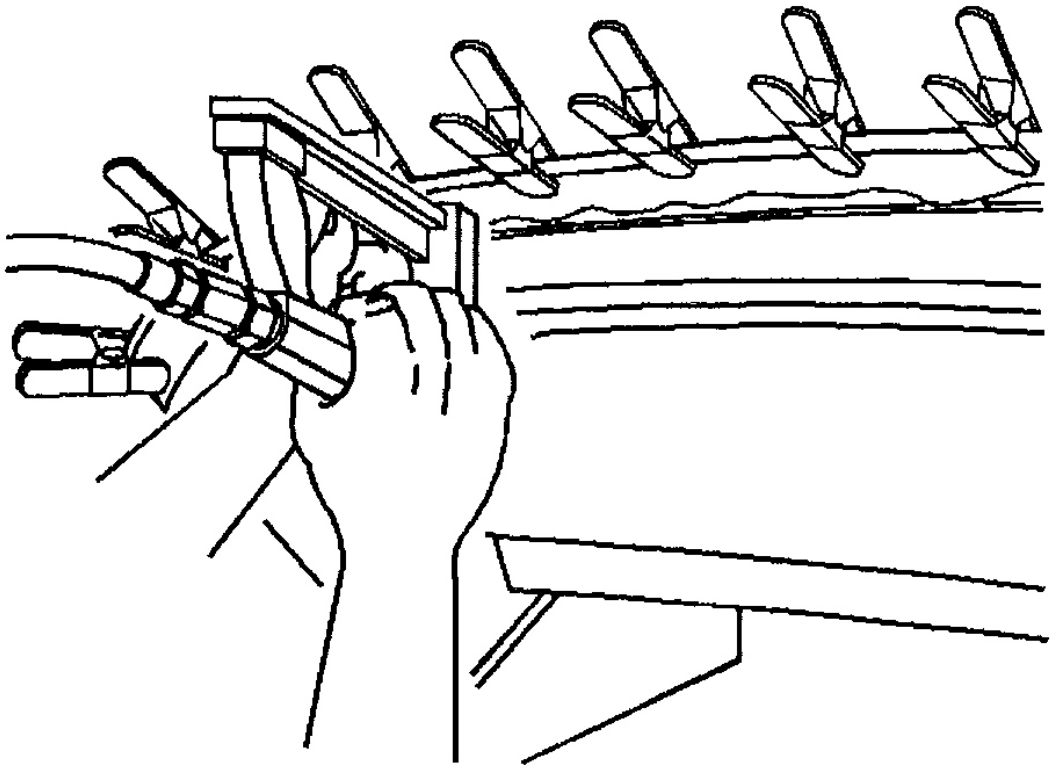

G01733936

Fig. 44: Stapling #1 Bow Top Cover
Courtesy of GENERAL MOTORS CORP.

15. Position the seal compression panel to the bow.

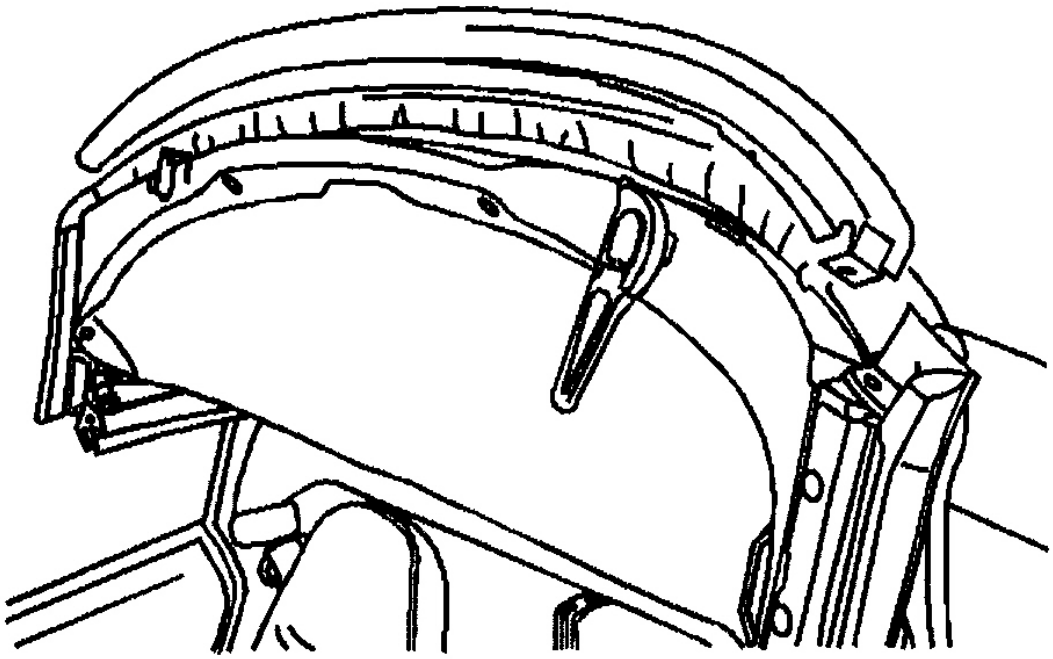

G01733937

Fig. 45: Aligning Seal Compression Panel
Courtesy of GENERAL MOTORS CORP.

CAUTION: Refer to FASTENER NOTICE .

16. Install the seal compression panel screws.

Tighten

Tighten the screws to 3 N.m (26 lb in).

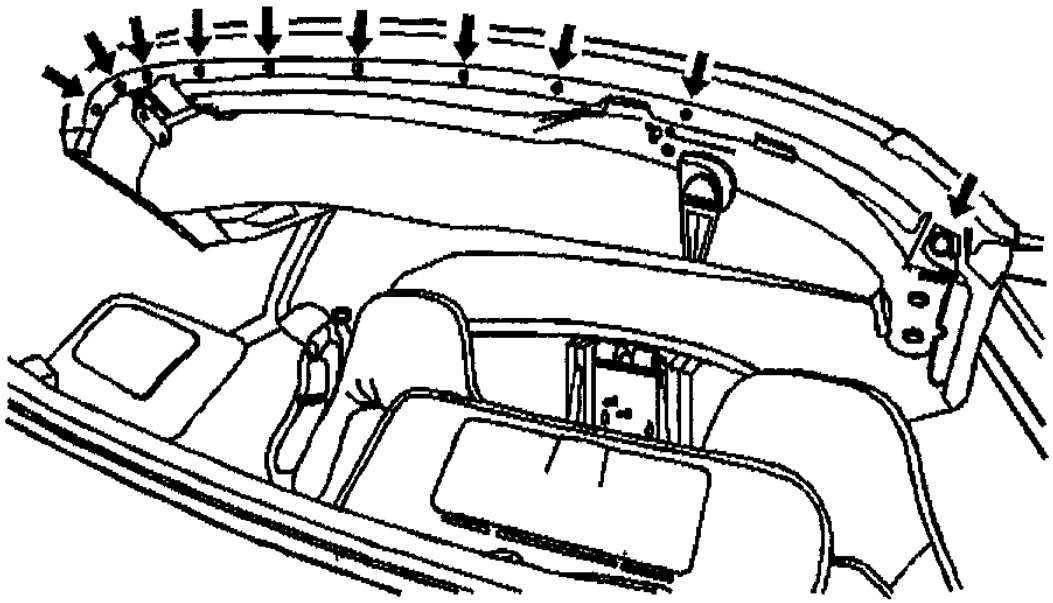

G01733938

Fig. 46: Installing Seal Compression Panel Screws
Courtesy of GENERAL MOTORS CORP.

17. Install the front side rail seal screws.

    Tighten

    Tighten the screws to 2 N.m (18 lb in).

18. Reposition the top to the original position.

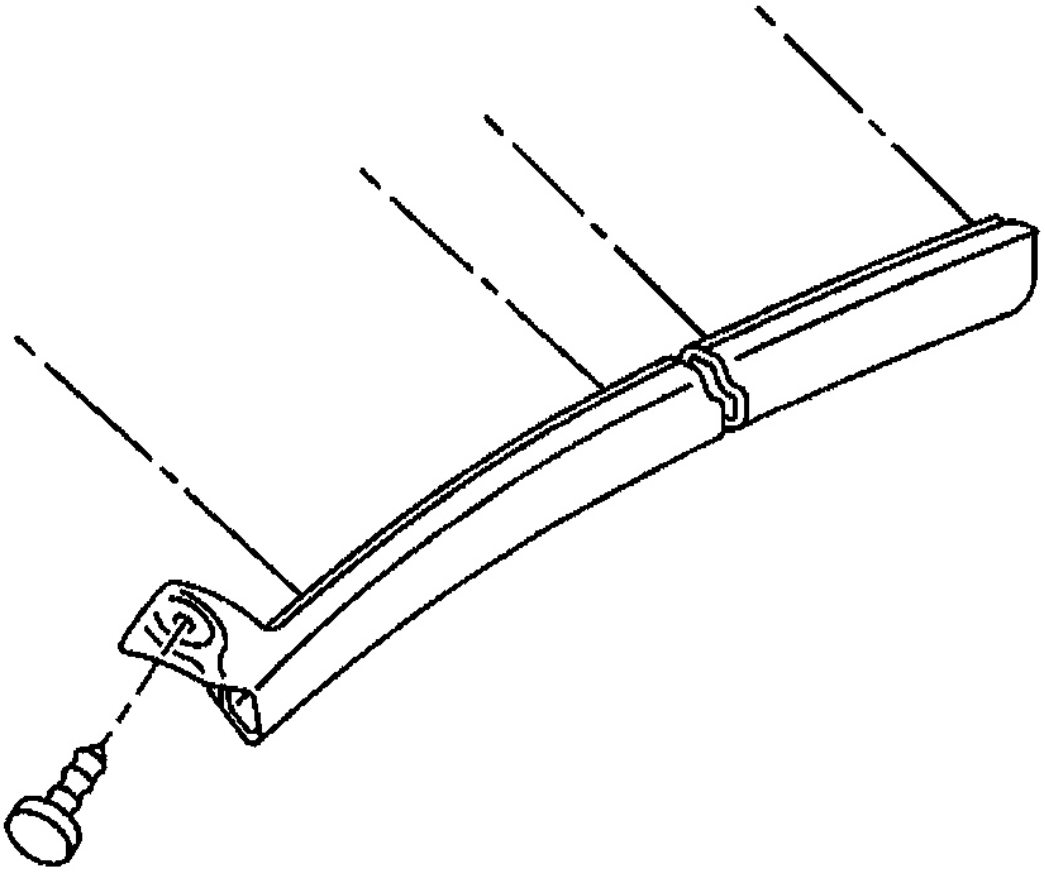

Fig. 47: Installing Front Side Rail Seal Screws
Courtesy of GENERAL MOTORS CORP.

FOLDING TOP COVER TENSION ADJUSTMENT - REAR

1. Close the convertible top.

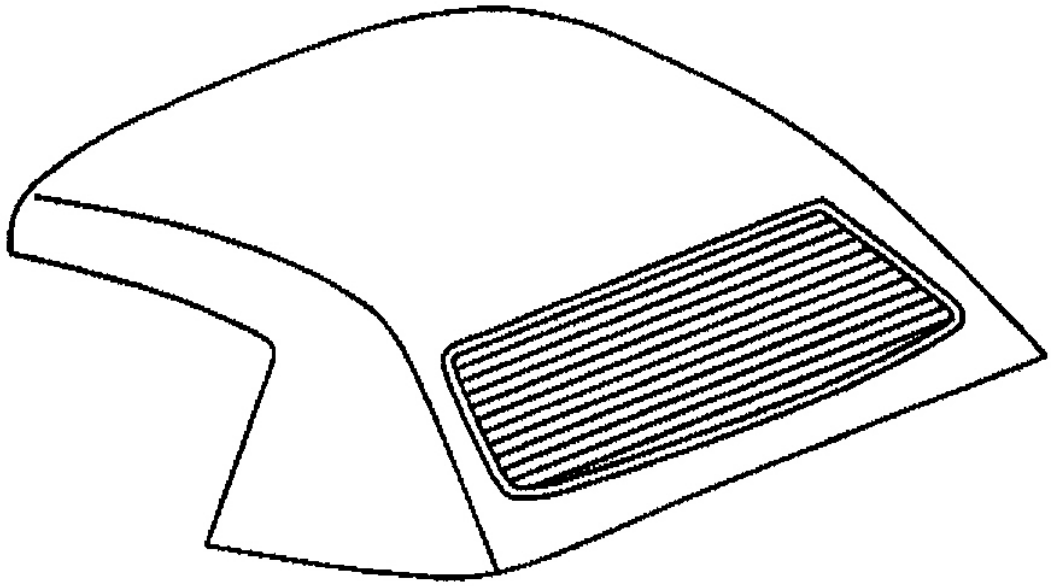

Fig. 48: Identifying Closed Convertible Top
Courtesy of GENERAL MOTORS CORP.

2. Verify the tension in the folding top cover by setting a 1 m (3.28 ft) straight edge on the top cover between the #4 and the #5 bows.

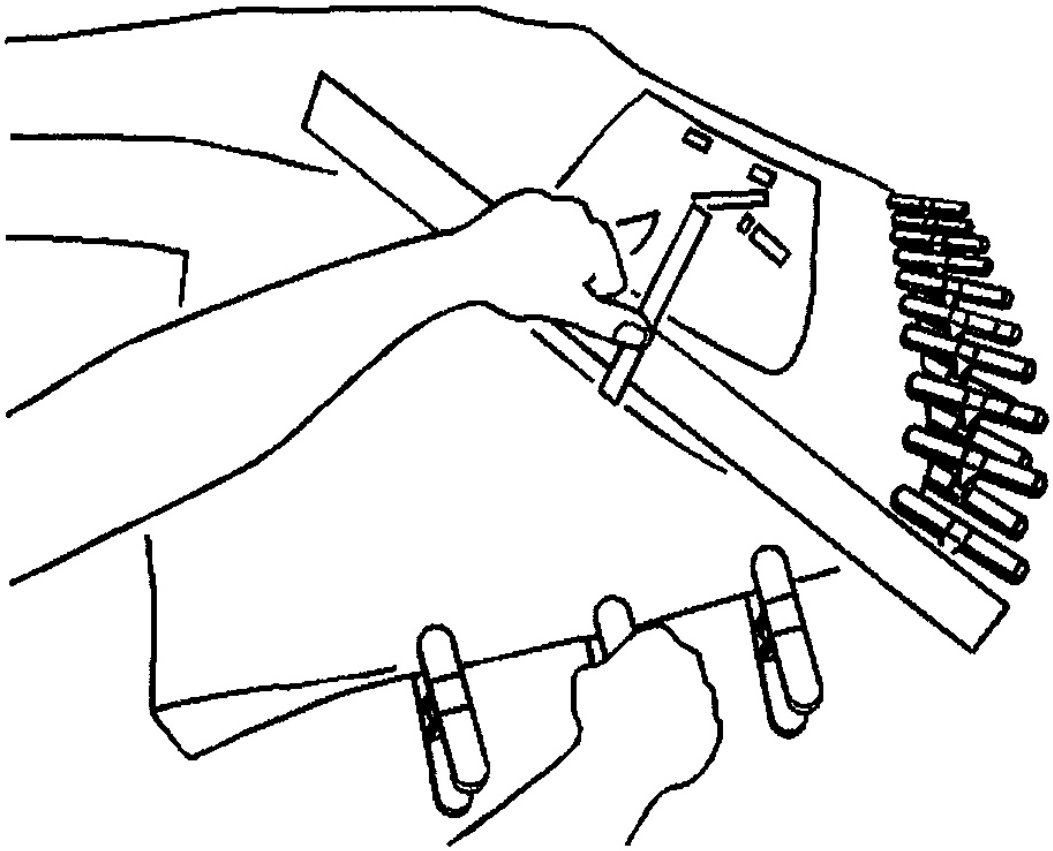

G01733941

Fig. 49: Checking Folding Top Tension
Courtesy of GENERAL MOTORS CORP.

3. With a ruler, measure the sag distance between the bottom of the straight edge and the top cover:
   - Cloth: 15-20 mm (0.60-0.79 in), normally set at 18 mm (0.70 in)
   - Vinyl: 15-20 mm (0.60-0.79 in), normally set at 15 mm (0.60 in)
4. If the tension does not meet these specifications, modify the tension by continuing with the following steps.
5. To modify the tension, remove the folding top. Refer to **Folding Top Replacement** .
6. Remove the #5 bow weatherstrip. Refer to **Weatherstrip Replacement - Folding Top (Front and Center Side Rails)** or **Weatherstrip Replacement - Folding Top (Rear Side Rail)** or **Weatherstrip Replacement - Folding Top (Number Five Bow)** .

7. Using a pair of needle-nose pliers remove the top cover staples.
8. Pull the top cover downward to increase the tension.

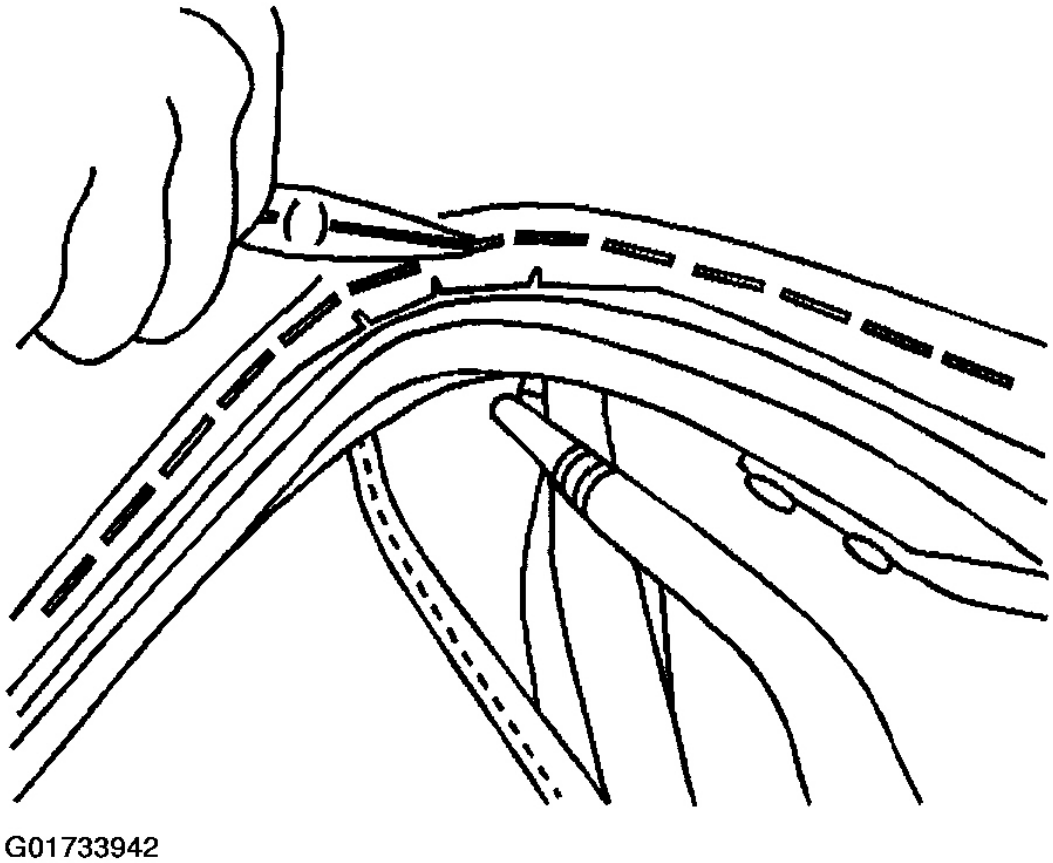

Fig. 50: Removing #5 Bow Top Cover Staples
Courtesy of GENERAL MOTORS CORP.

9. Fold the top cover over the #5 bow and secure with 5 cm (2 in) pinch clamps. Place the clamps directly over the steel rivets within the bow.

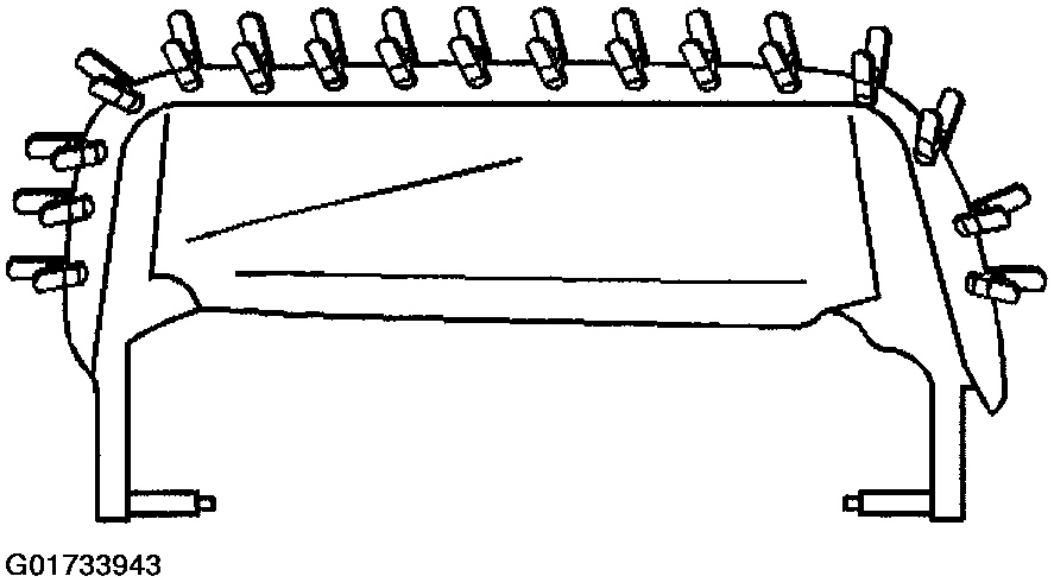

Fig. 51: Aligning Pinch Clamps
Courtesy of GENERAL MOTORS CORP.

10. Using a ruler as before, verify the tension again and adjust the tension as necessary.
11. Staple the top cover to the bow.
12. Install the #5 bow weatherstrip. Refer to **Weatherstrip Replacement - Folding Top (Front and Center Side Rails)** or **Weatherstrip Replacement - Folding Top (Rear Side Rail)** or **Weatherstrip Replacement - Folding Top (Number Five Bow)**
13. Reposition the top to the original position.

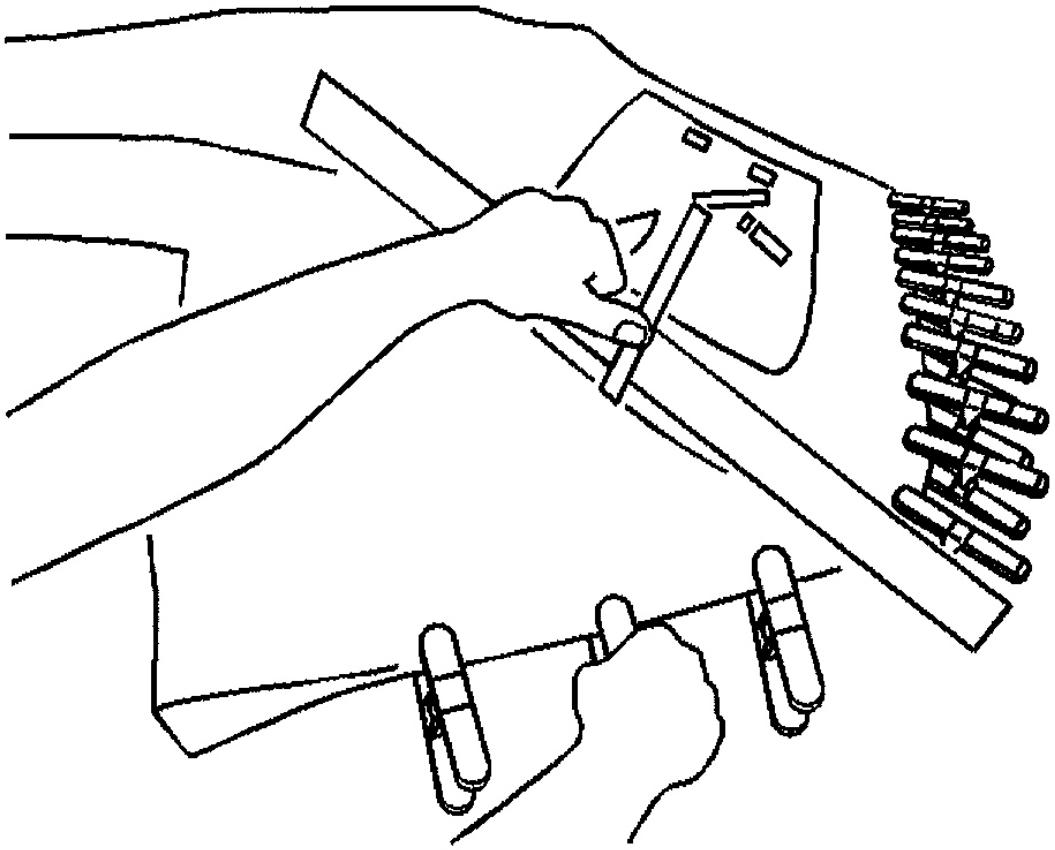

G01733944

Fig. 52: Checking Folding Top Tension
Courtesy of GENERAL MOTORS CORP.

FOLDING TOP REPLACEMENT

Removal Procedure

1. Remove the lock pillar upper trim panel. Refer to **TRIM REPLACEMENT - LOCK PILLAR (UPPER CONVERTIBLE)** or **TRIM REPLACEMENT - LOCK PILLAR (COUPE)** or **TRIM REPLACEMENT - LOCK PILLAR (LOWER CONVERTIBLE)** .
2. Position the #1 bow and the #5 bow in an up position.
3. Disconnect the rear defogger electrical connections.
4. Using a grease pencil mark the folding top mounting on both sides.

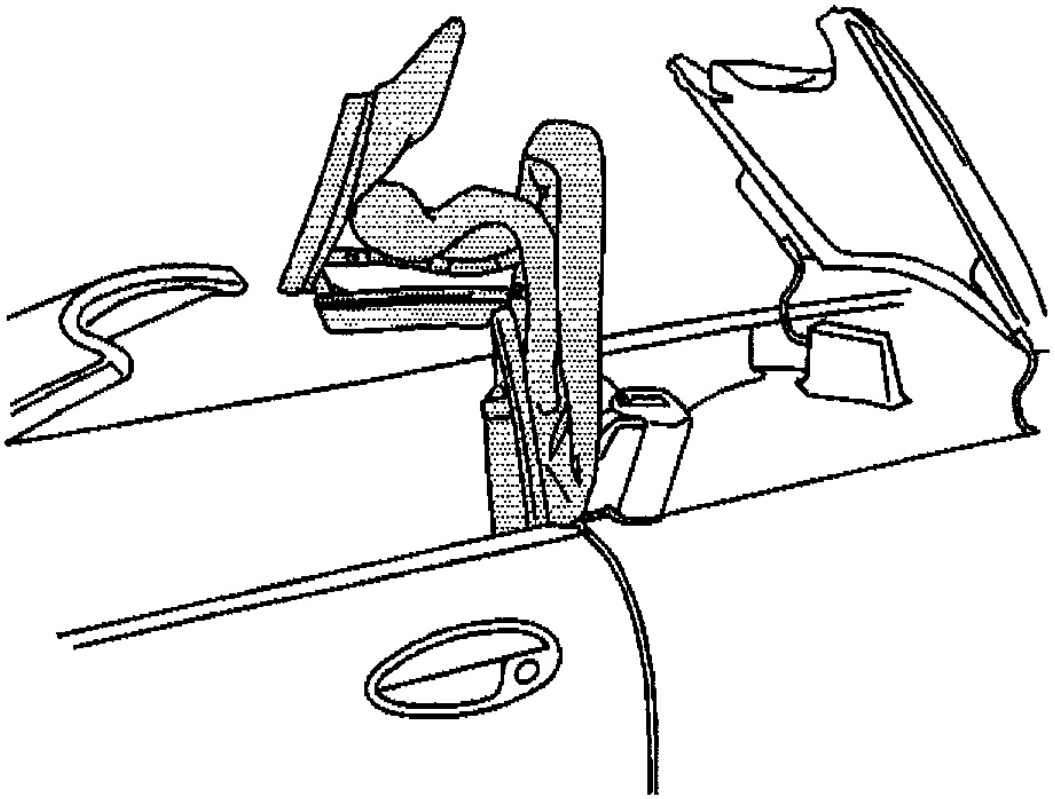

Fig. 53: Aligning Top Cover
Courtesy of GENERAL MOTORS CORP.

5. Remove the folding top pillar bracket bolts with an assistant.
6. With an assistant, slide the top slightly up and then rearward and out of the pillar bracket.

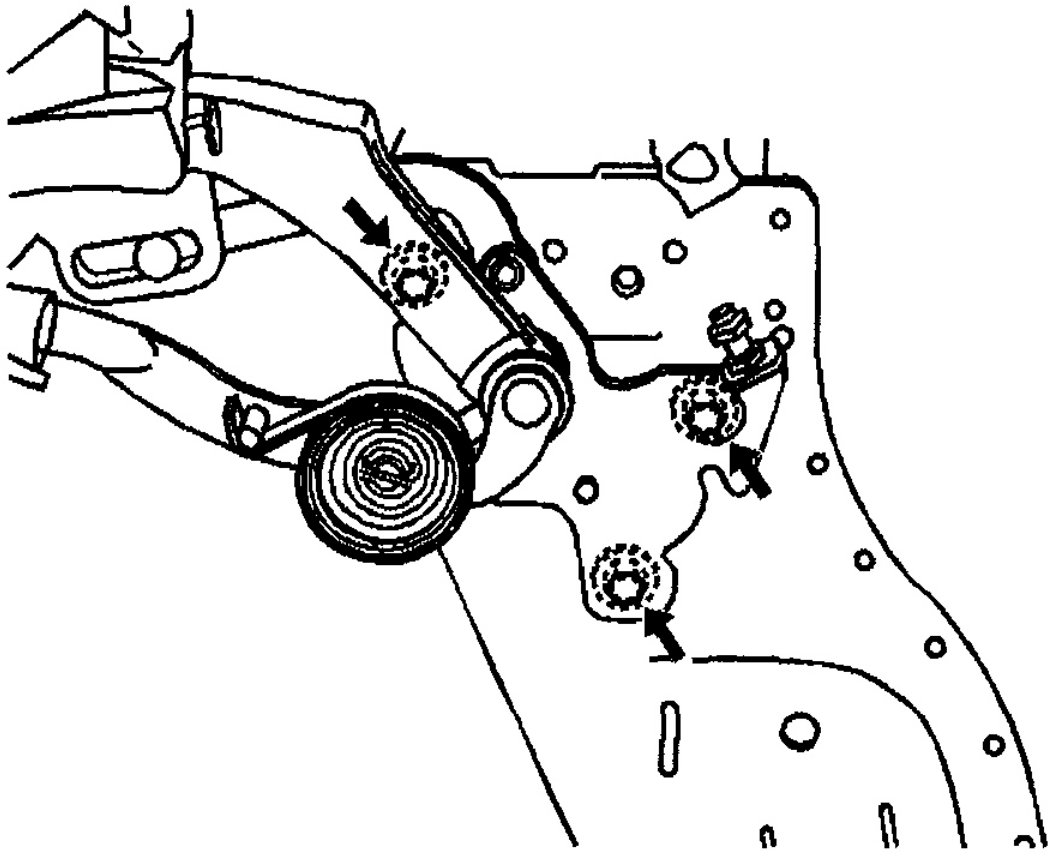

G01733946

Fig. 54: Locating Folding Top Pillar Bracket Bolts
Courtesy of GENERAL MOTORS CORP.

Installation Procedure

1. With an assistant, position the folded top to the vehicle with the top resting on the pillar bracket pin.
2. Align the folding top to the marks made upon removal.

CAUTION: Refer to FASTENER NOTICE .

3. Install the folding top bolts to the body.

Tighten

Tighten the bolts to 25 N.m (18 lb ft).

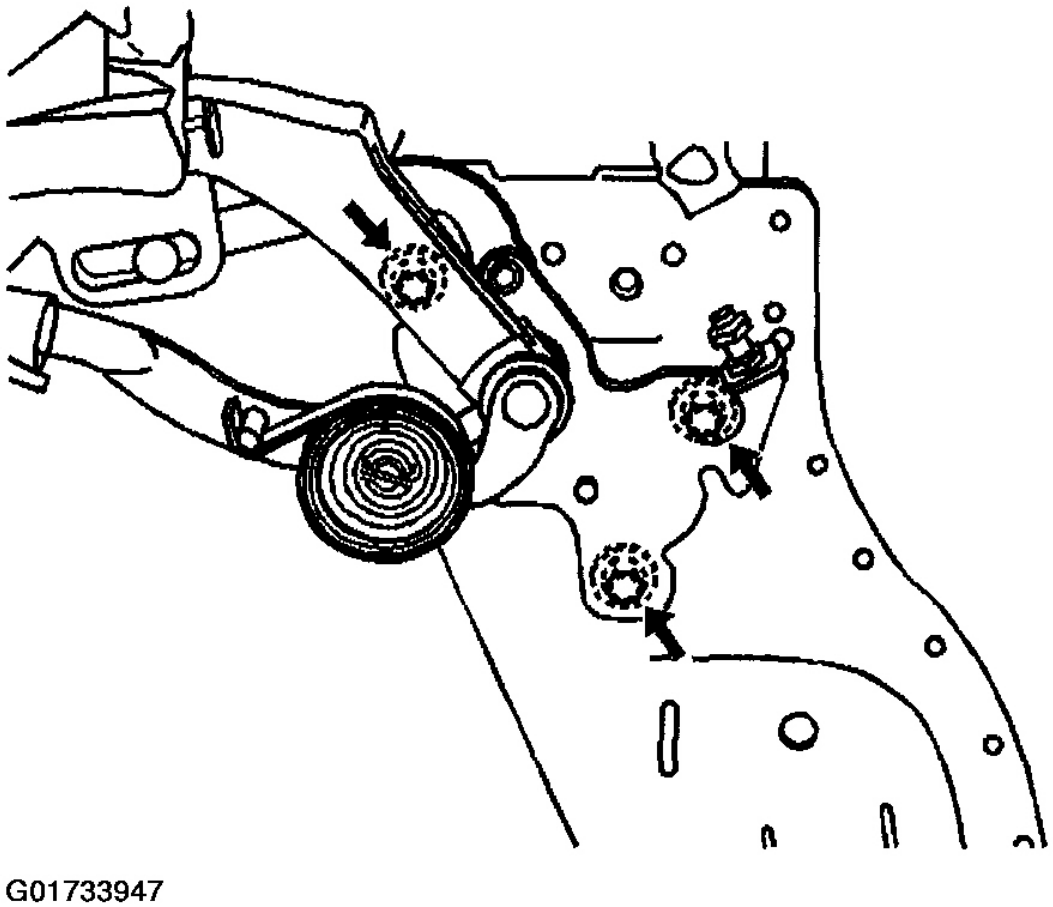

Fig. 55: Locating Folding Top Pillar Bracket Bolts
Courtesy of GENERAL MOTORS CORP.

4. Close and latch the top.
5. Connect the rear defogger electrical connections.
6. Install the lock pillar trim panel. Refer to **TRIM REPLACEMENT - LOCK PILLAR (UPPER CONVERTIBLE)** or **TRIM REPLACEMENT - LOCK PILLAR (COUPE)** or **TRIM REPLACEMENT - LOCK PILLAR (LOWER CONVERTIBLE)** .
7. Check top for proper operation.
8. Water test the folding top.

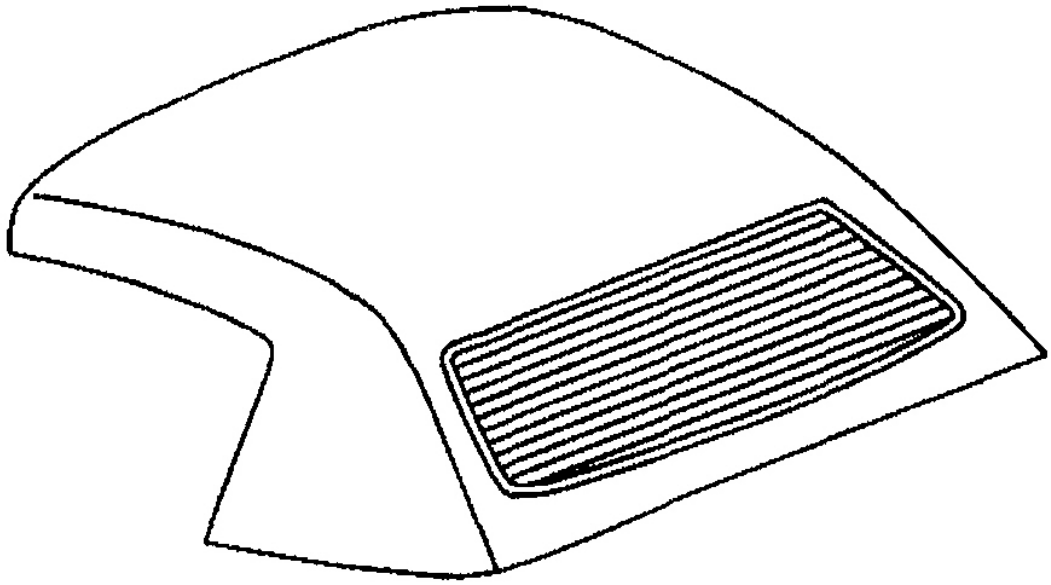

Fig. 56: Identifying Closed Convertible Top
Courtesy of GENERAL MOTORS CORP.

WEATHERSTRIP REPLACEMENT - FOLDING TOP (FRONT AND CENTER SIDE RAILS)

Removal Procedure

Important: You can remove the front side rail and the center side rail weatherstrips separately.

1. Remove the screw from the front side rail weatherstrip.
2. Remove the front side rail weatherstrip. If required remove the center side rail weatherstrip.
3. Clean the adhesive from the mounting surface using 3M(tm) P/N 8984 or equivalent.

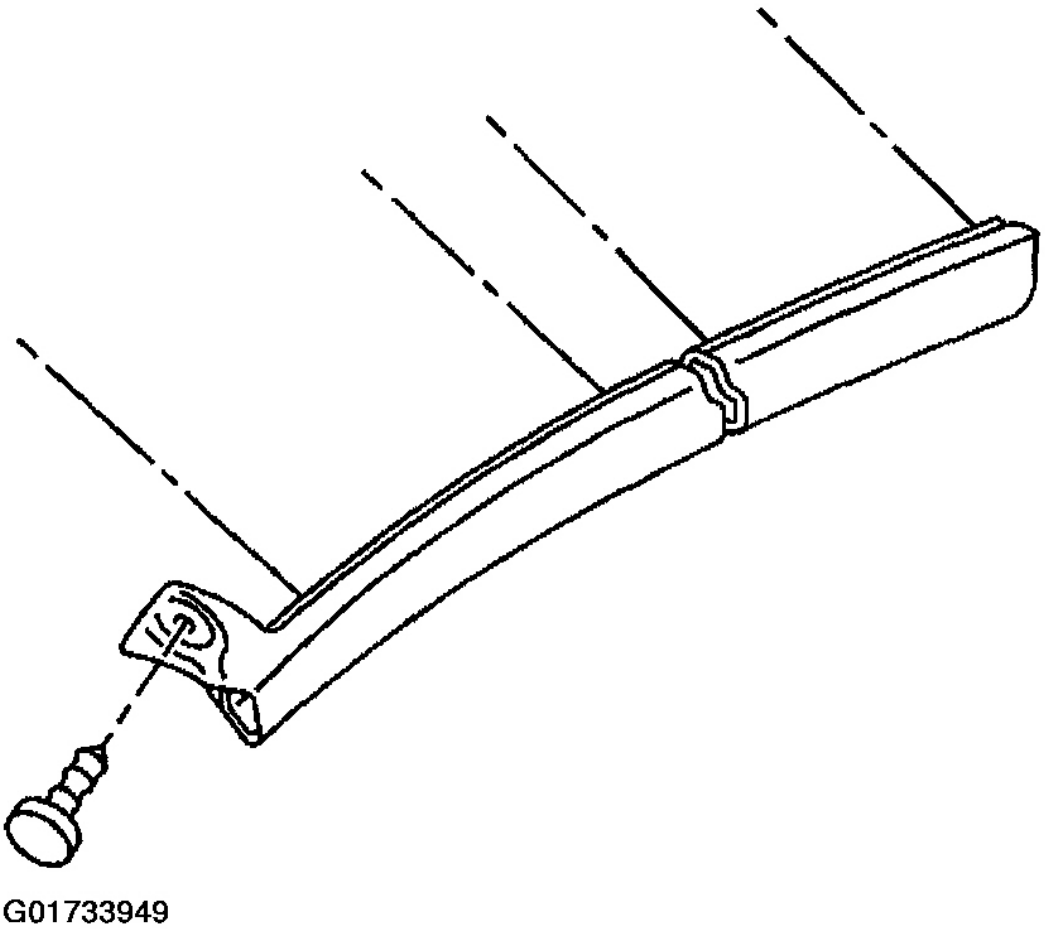

Fig. 57: Removing Front Side Rail Weatherstrip Screw
Courtesy of GENERAL MOTORS CORP.

Installation Procedure

1. Apply sealer GM P/N 12345739 (Canadian P/N 10953472), or equivalent to the forward end of the front side weatherstrip retainer (1).

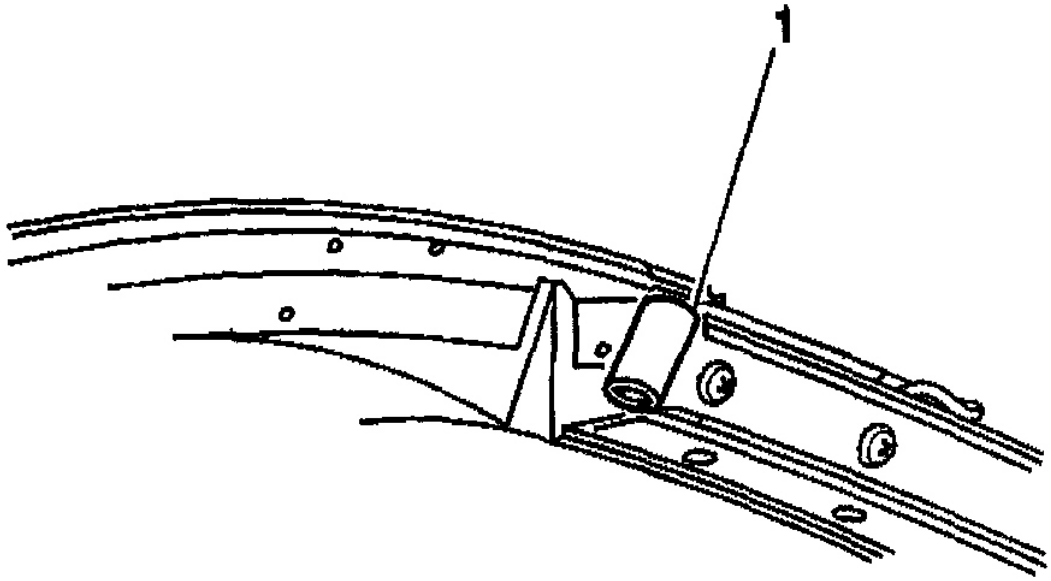

Fig. 58: Identifying Front Side Weatherstrip Retainer
Courtesy of GENERAL MOTORS CORP.

2. Apply a bead of sealer GM P/N 12345739 (Canadian P/N 10953472), or equivalent 6 mm (2.4 in) high around the front side retainer (1) in the following places:

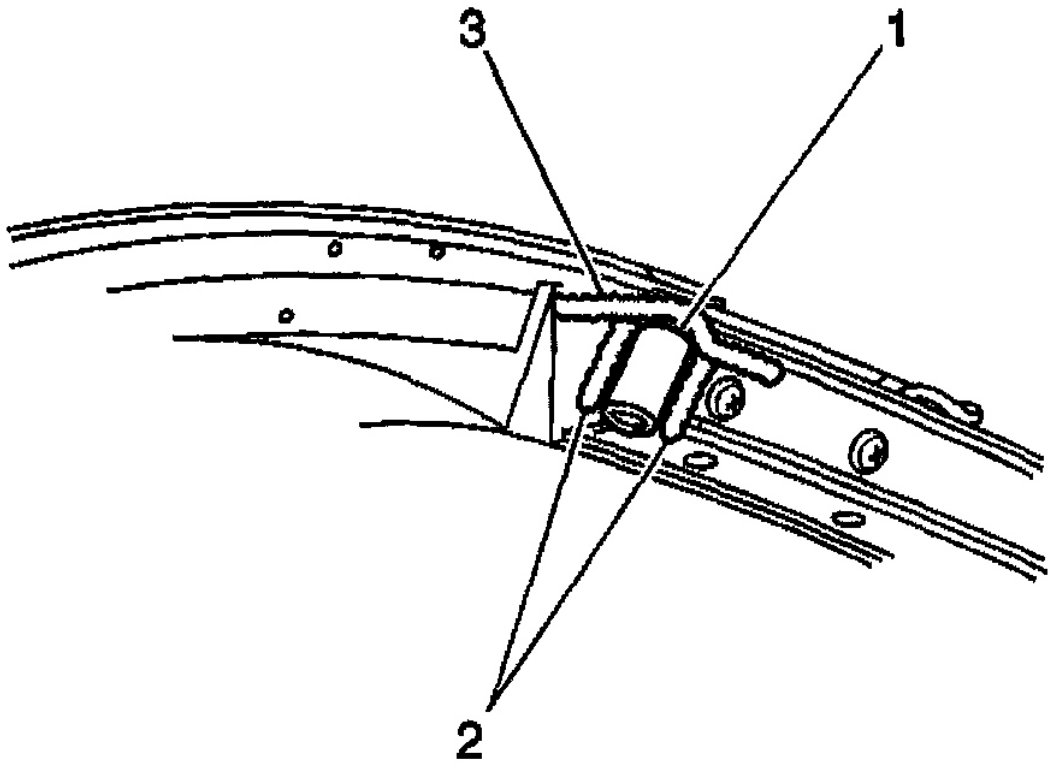

G01733951

Fig. 59: Applying Front Side Weatherstrip Retainer Sealant
Courtesy of GENERAL MOTORS CORP.

- At the front upper corner (3)
- On both sides (2)

3. Apply a drop of sealer GM P/N 12345739 (Canadian P/N 10953472), or equivalent (3) 12 mm (0.5 in) in diameter to the screw heads of the center side retainer.
4. Remove the protective film from the adhesive on the weatherstrip.

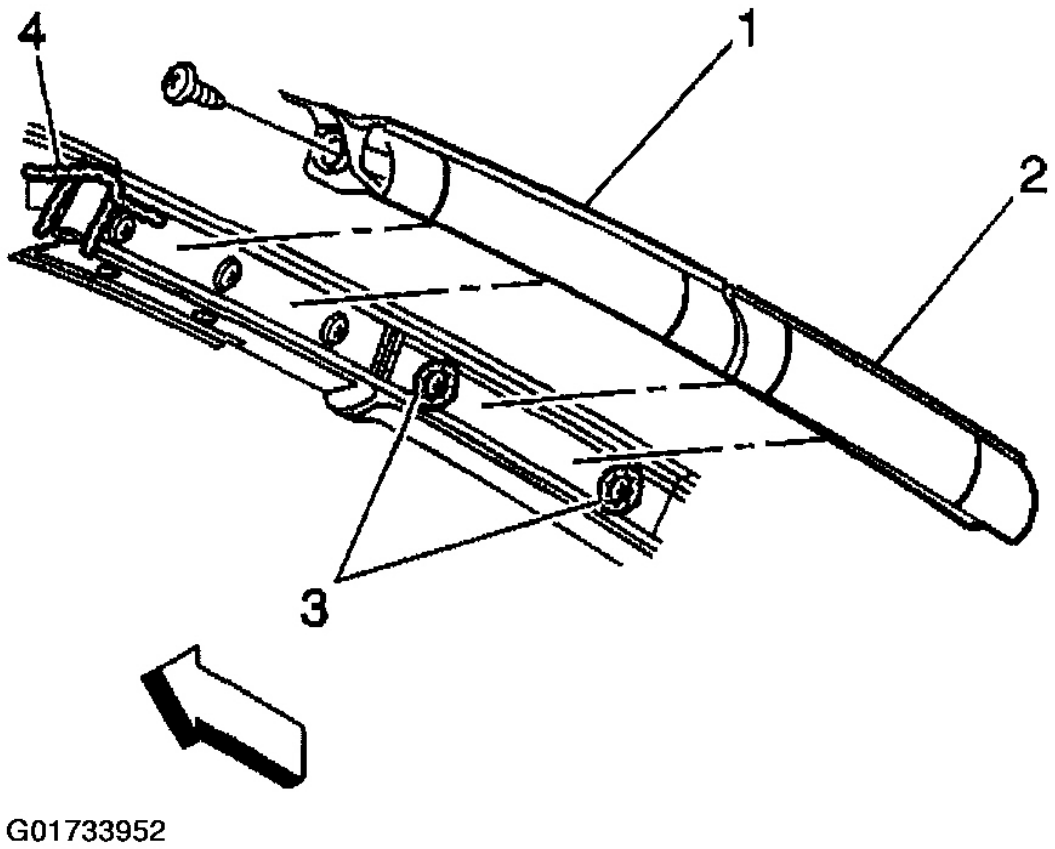

Fig. 60: Applying Center Side Retainer Screw Sealant
Courtesy of GENERAL MOTORS CORP.

5. Install the side rail weatherstrip, as necessary.

CAUTION: Refer to FASTENER NOTICE .

6. Install the screw to the front side rail weatherstrip.

Tighten

Tighten the screw to 4 N.m (35 lb in).

7. Reposition the top to the original position.

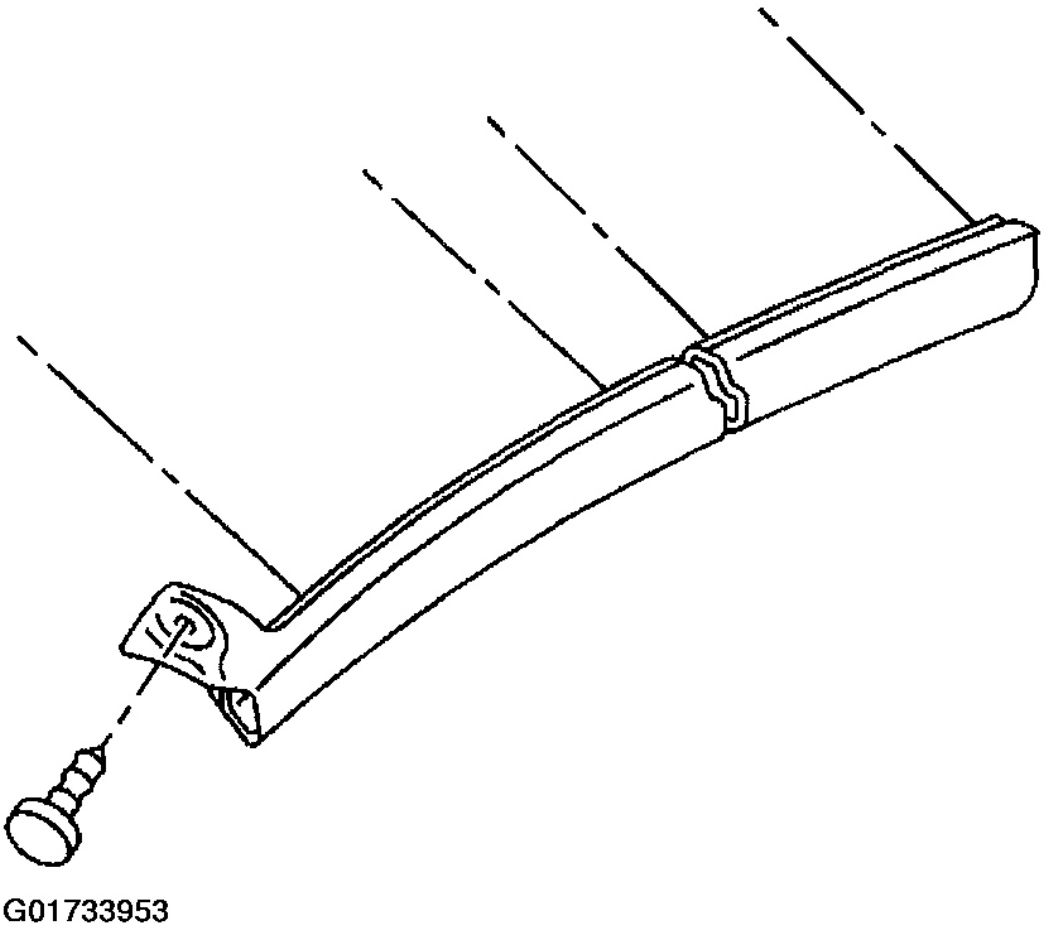

Fig. 61: Installing Front Side Rail Weatherstrip Screw
Courtesy of GENERAL MOTORS CORP.

WEATHERSTRIP REPLACEMENT - FOLDING TOP (REAR SIDE RAIL)

Removal Procedure

1. Position the #1 bow and the #5 bow up.

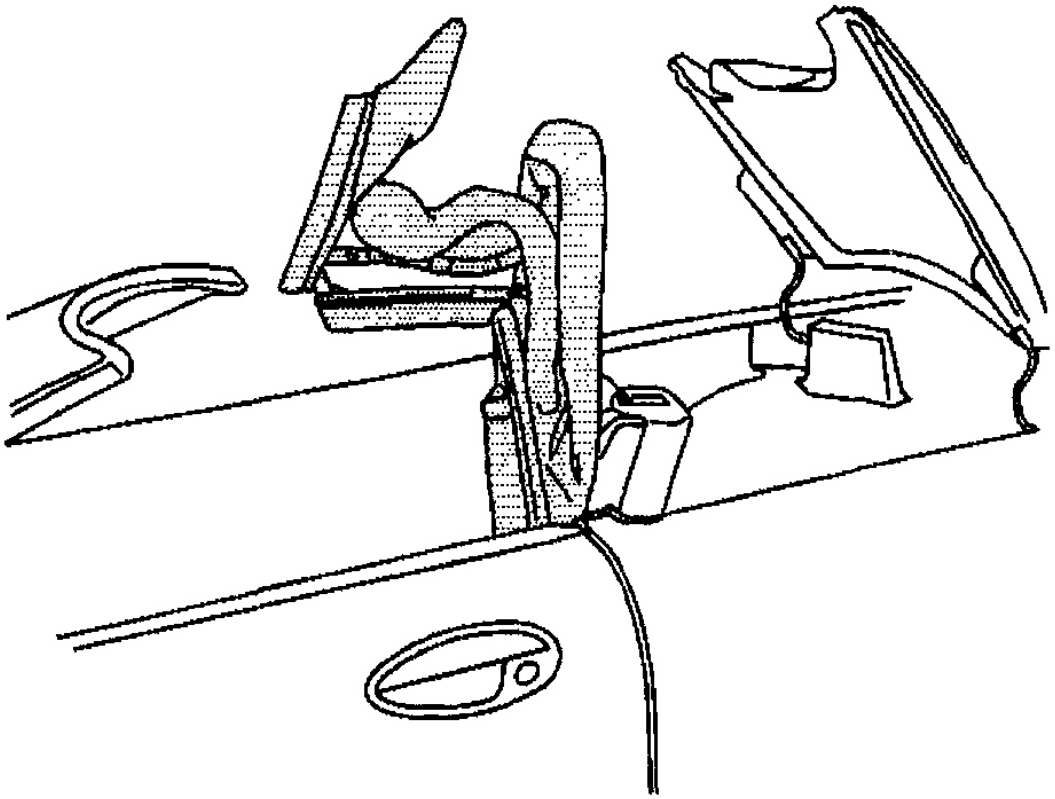

Fig. 62: Aligning Folding Top
Courtesy of GENERAL MOTORS CORP.

2. Remove the push-in retainers from the bottom of the rear side rail weatherstrip.
3. Remove the weatherstrip.
4. Clean the adhesive from the mounting surface using 3M(tm) P/N 8984 or equivalent.

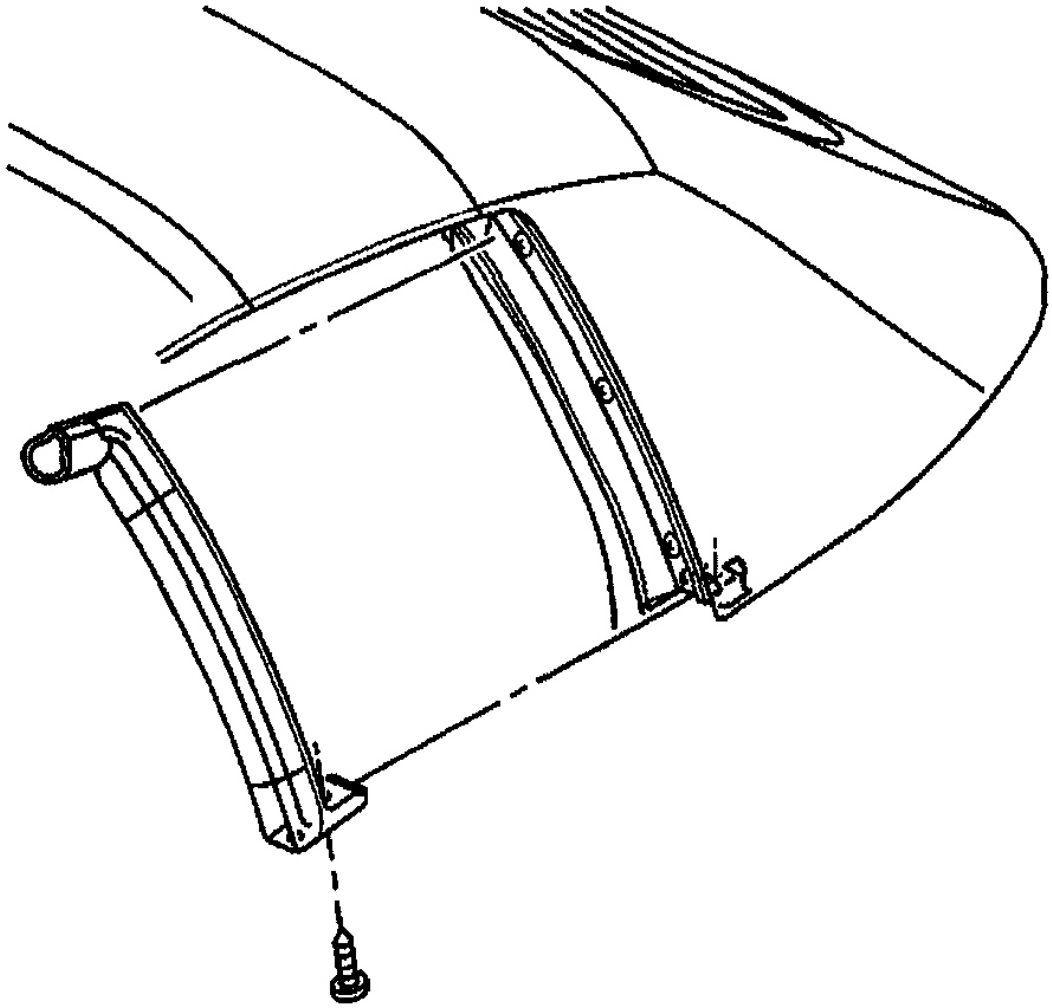

Fig. 63: Removing Rear Side Rail Weatherstrip Retainers
Courtesy of GENERAL MOTORS CORP.

Installation Procedure

1. Apply a bead of sealer GM P/N 12345739 (Canadian P/N 10953472), to the upper and lower corners of the weatherstrip retainer.

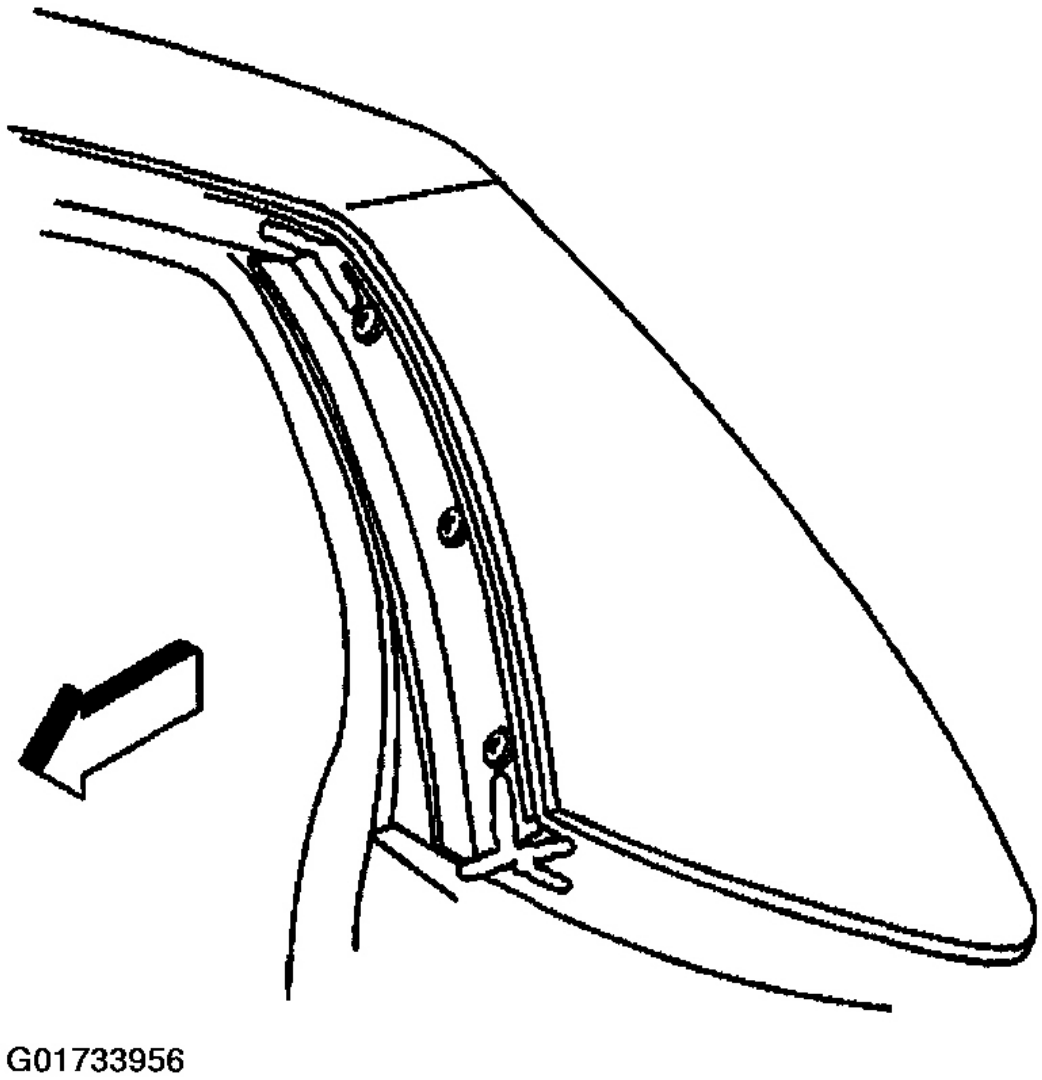

Fig. 64: Applying Rear Side Rail Weatherstrip Sealant
Courtesy of GENERAL MOTORS CORP.

2. Remove the protective film from the adhesive on the back of the weatherstrip.
3. Install the weatherstrip to the rear side rail retainer.
4. Install the rear weatherstrip into the end of the center rail side weatherstrip.
5. Install the push-in retainer to the bottom of the weatherstrip.
6. Reposition the folding top to the original position.

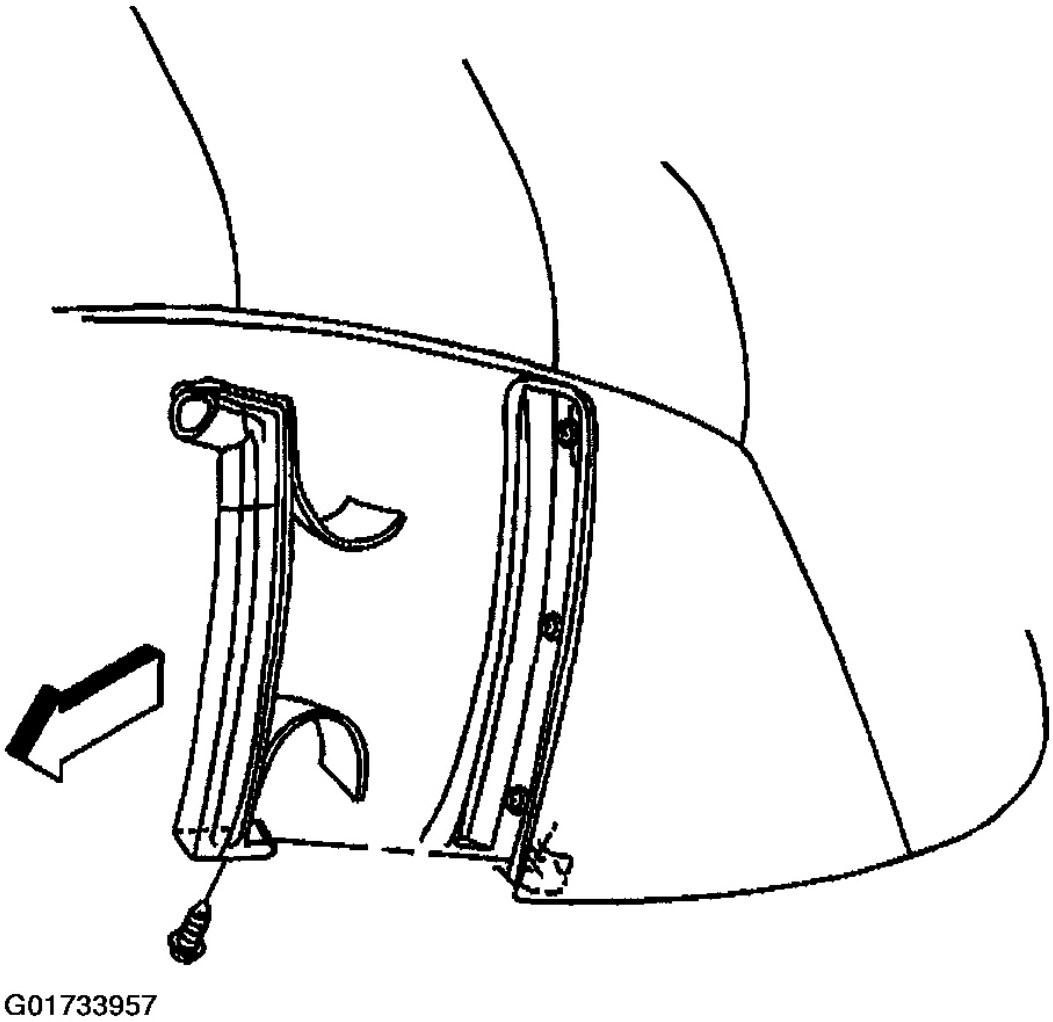

Fig. 65: Installing Rear Side Rail Weatherstrip Retainers
Courtesy of GENERAL MOTORS CORP.

WEATHERSTRIP REPLACEMENT - FOLDING TOP (NUMBER FIVE BOW)

Removal Procedure

1. Position the top closed.
2. Remove the protective pads from the ends of the #5 bow covering the nuts to the #5 bow.

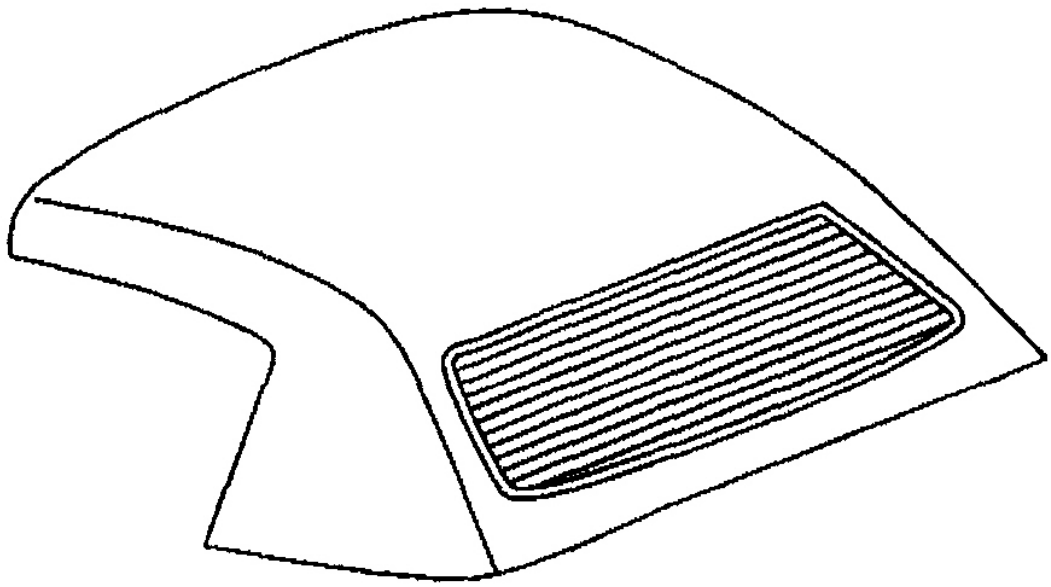

Fig. 66: Identifying Closed Convertible Top
Courtesy of GENERAL MOTORS CORP.

3. Remove the nuts attaching the ends of the weatherstrip to the #5 bow.

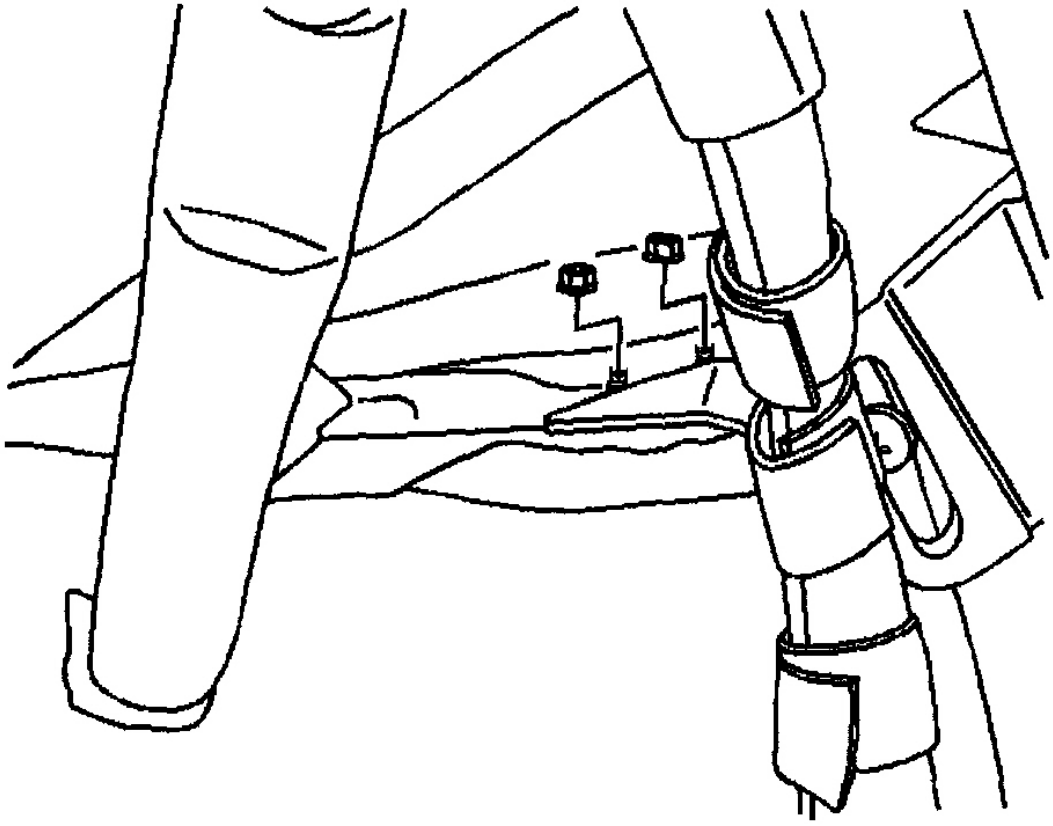

G01733959

Fig. 67: Removing #5 Bow Weatherstrip Nuts
Courtesy of GENERAL MOTORS CORP.

4. Remove the weatherstrip.

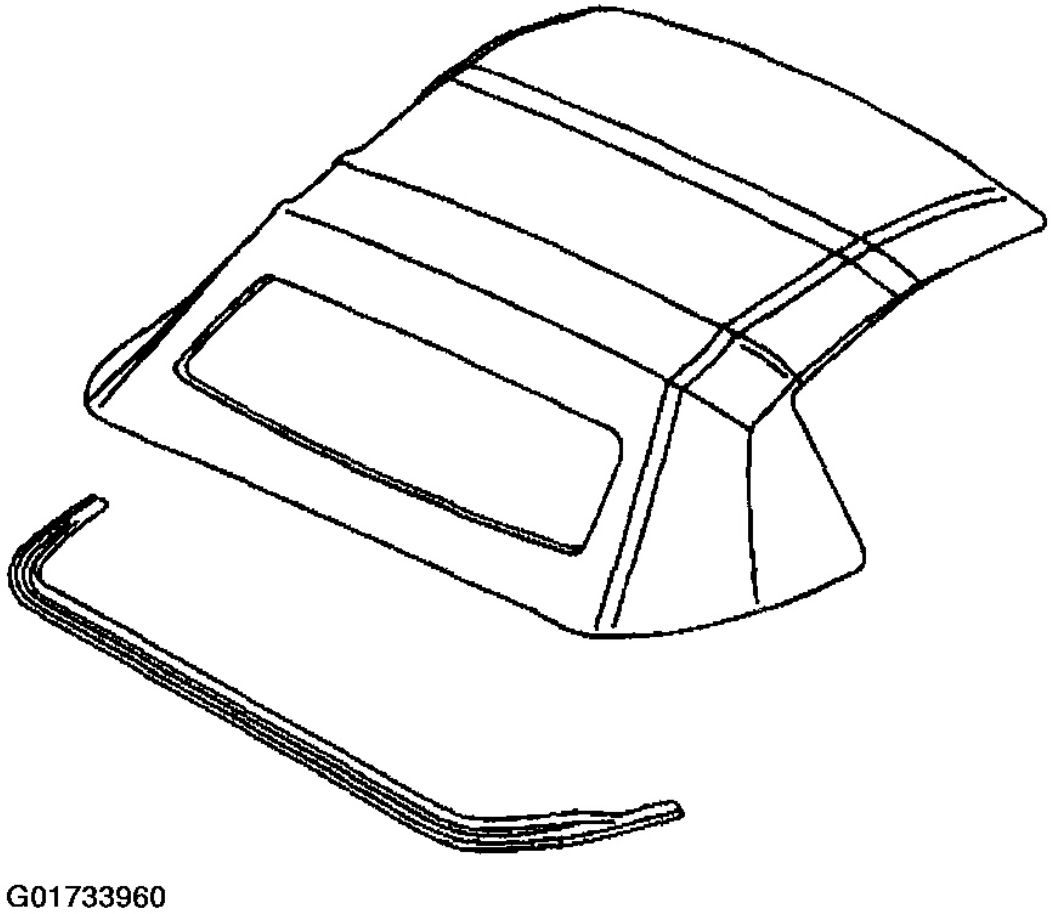

Fig. 68: Removing #5 Bow Weatherstrip
Courtesy of GENERAL MOTORS CORP.

Installation Procedure

1. Install the #5 bow weatherstrip.

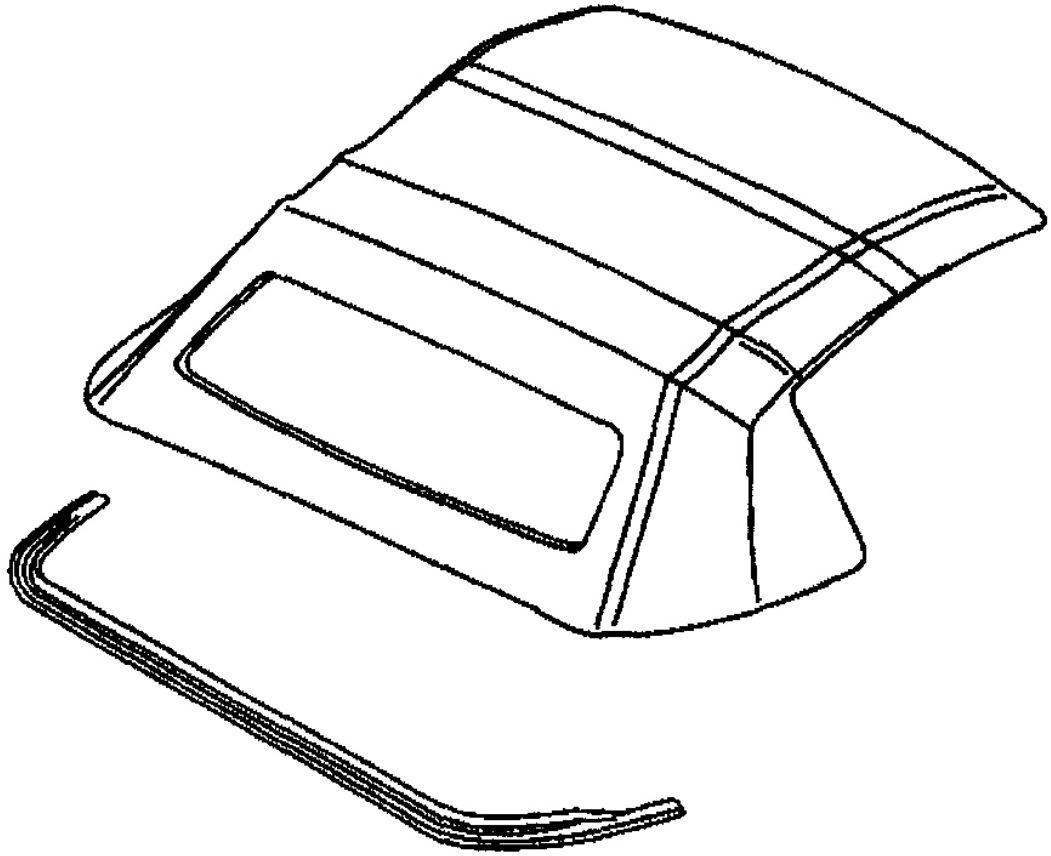

Fig. 69: Installing #5 Bow Weatherstrip
Courtesy of GENERAL MOTORS CORP.

NOTE: Refer to FASTENER NOTICE .

2. Install the nuts to the ends of the weatherstrip.

   Tighten

   Tighten the nuts to 4 N.m (35 lb in).

3. Install the protective pads to the weatherstrip nuts.
4. Install the protective pads to the ends of the bow.
5. Reposition the folding top to the original position.

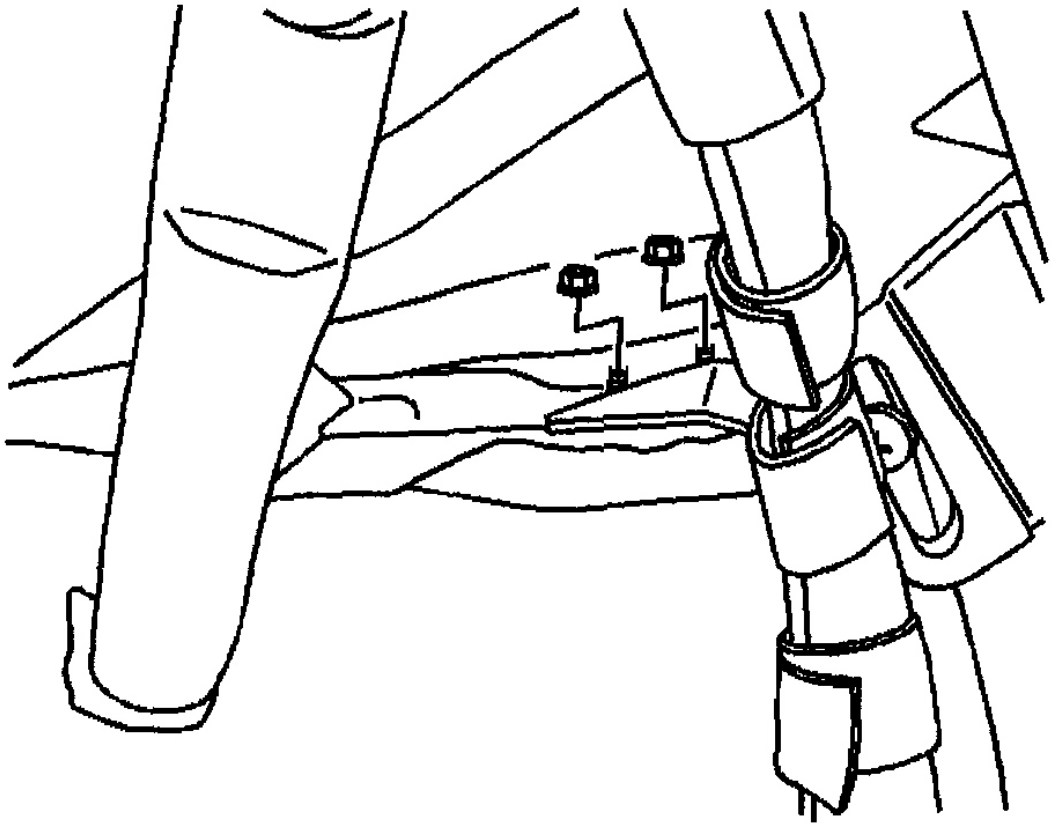

G01733962

Fig. 70: Installing #5 Bow Weatherstrip Nuts
Courtesy of GENERAL MOTORS CORP.

WEATHERSTRIP RETAINER REPLACEMENT - FOLDING TOP (FRONT AND CENTER SIDE RAIL)

Removal Procedure

1. Remove the front and center side weatherstrip from the retainer. Refer to **Weatherstrip Replacement - Folding Top (Front and Center Side Rails)** or **Weatherstrip Replacement - Folding Top (Rear Side Rail)** or **Weatherstrip Replacement - Folding Top (Number Five Bow)** .
2. Remove the screws from the side weatherstrip retainer.
3. Remove the retainer.
4. Pull the window blowout clip from the front side retainer.

5. Clean the adhesive from the blowout clip using 3M(tm) P/N 8984 or equivalent.

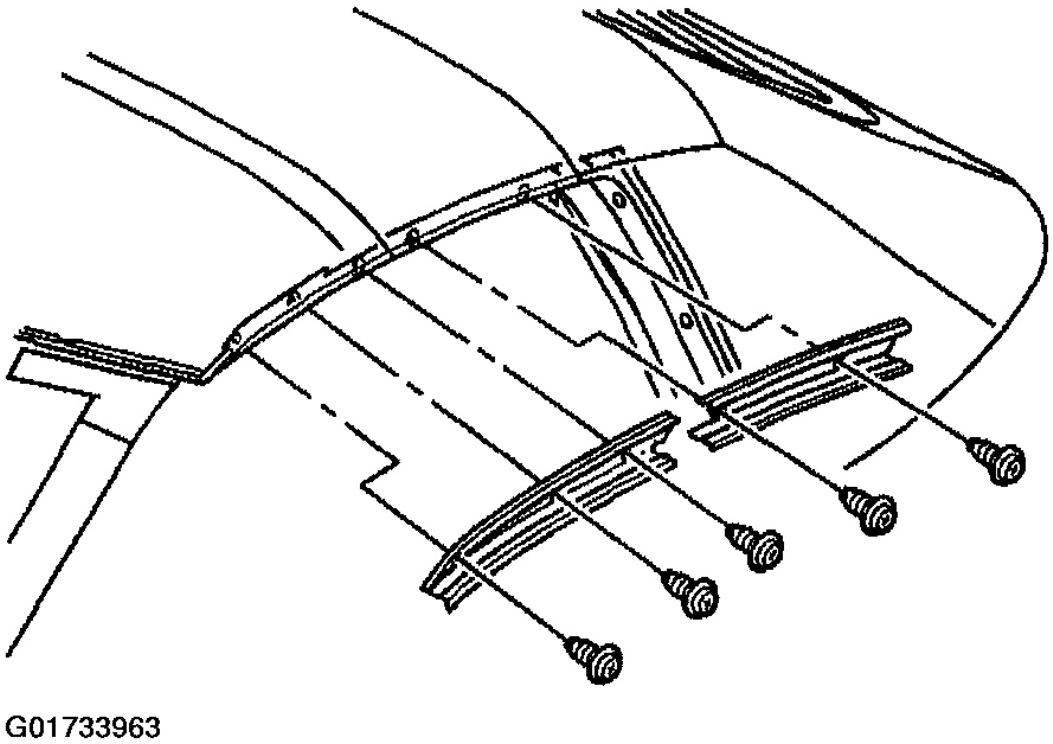

Fig. 71: Removing Side Weatherstrip Retainer Screws
Courtesy of GENERAL MOTORS CORP.

Installation Procedure

1. Apply sealer, GM P/N 12345739 (Canadian P/N 10953472), or equivalent to the front side of the blowout clip on the front side retainer.
2. Align and install the clip to the middle screw hole of the front side retainer.

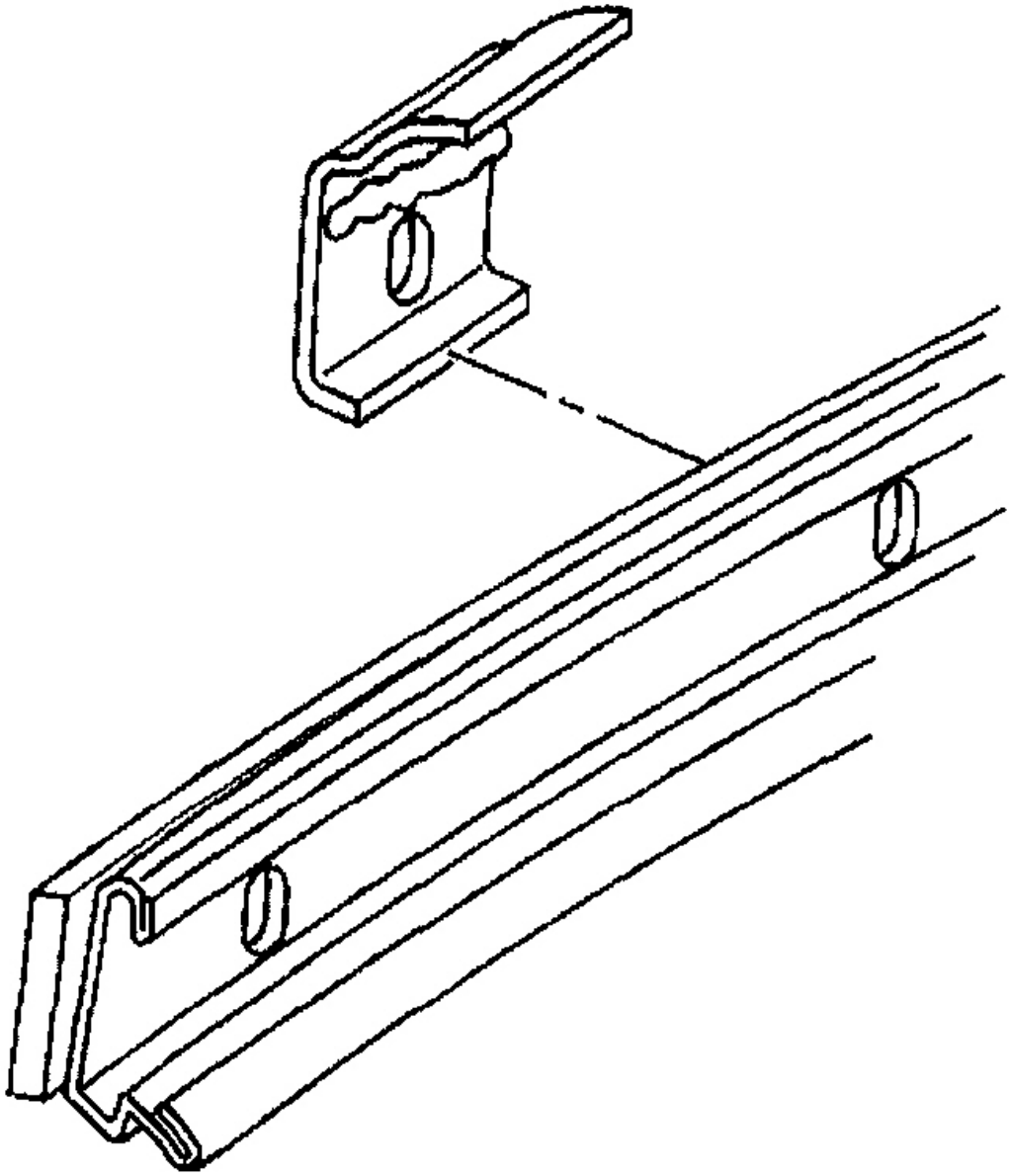

Fig. 72: Installing Front Side Retainer Blowout Clip
Courtesy of GENERAL MOTORS CORP.

3. Apply sealer, GM P/N 12345739 (Canadian P/N 10953472), or equivalent to the rear of the blowout clip and the adjacent area of the front side retainer.

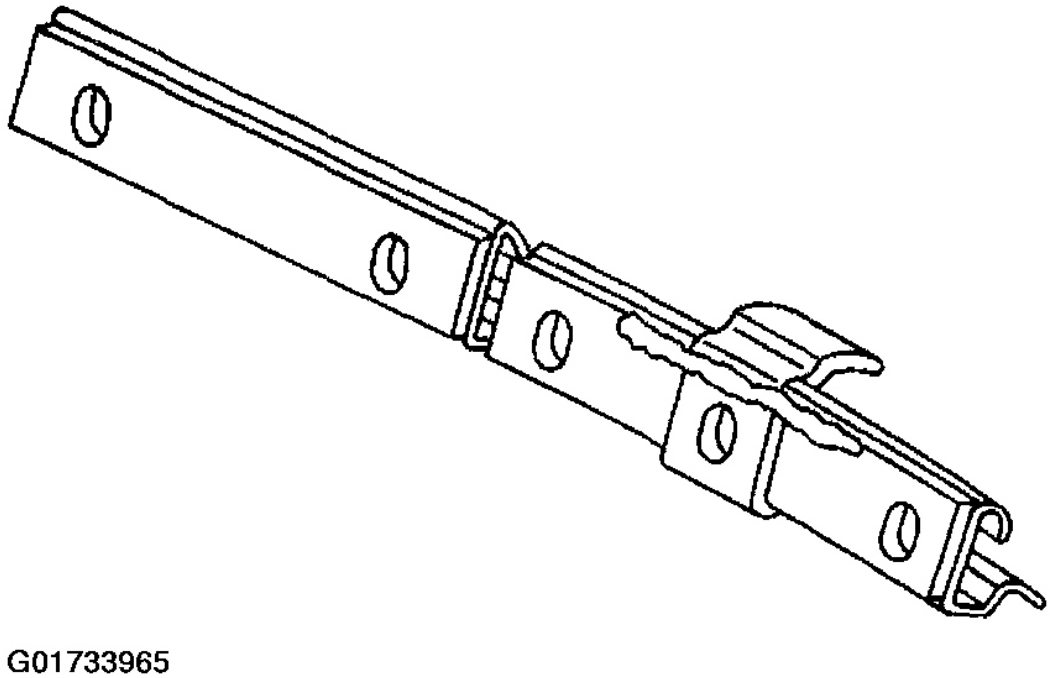

Fig. 73: Applying Front Side Retainer Blowout Clip Sealant
Courtesy of GENERAL MOTORS CORP.

4. Apply a bead of sealer, GM P/N 12345739 (Canadian P/N 10953472), or equivalent to the upper edge of the front section of the roof main control link on the front side retainer (3)

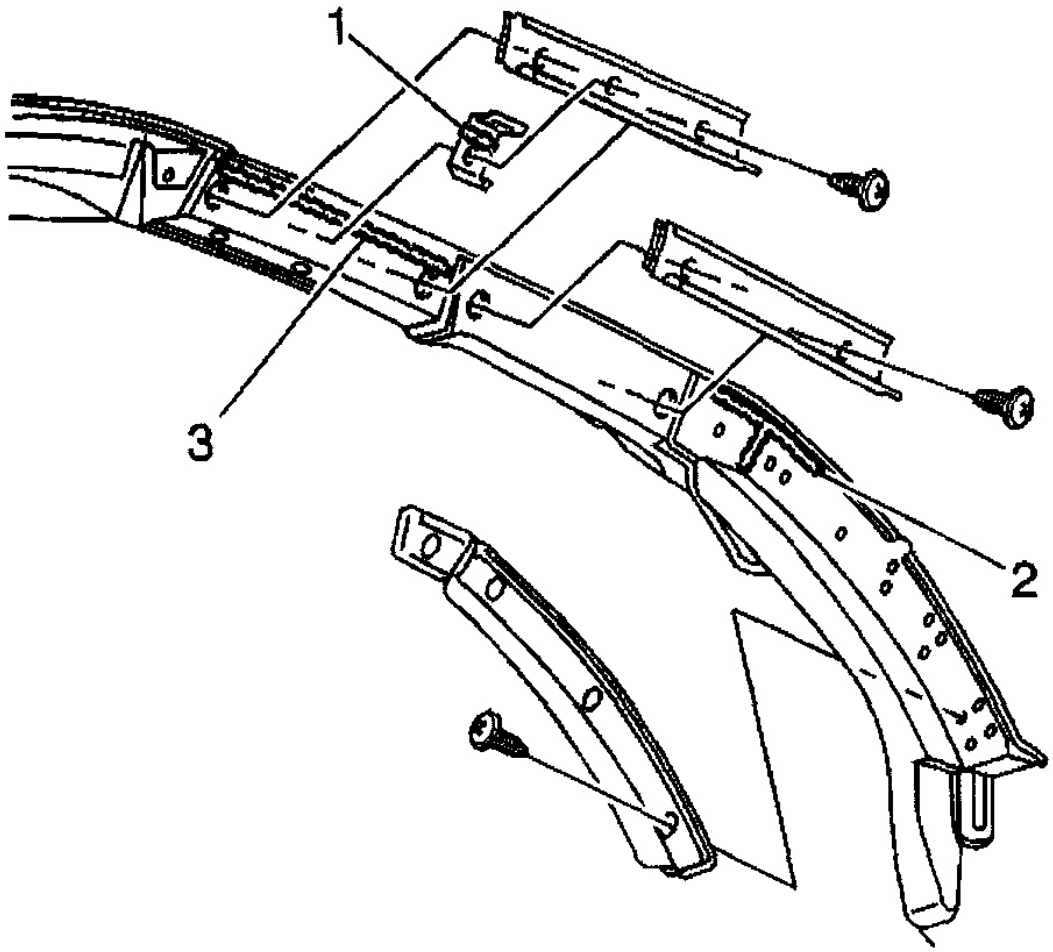

Fig. 74: Applying Front Roof Main Control Link Sealant
Courtesy of GENERAL MOTORS CORP.

5. Position the retainer to the side rail.

CAUTION: Refer to FASTENER NOTICE .

6. Loosely install the front screw attaching the retainer.
7. Install the remaining screws.

Tighten

Tighten the screws to 4 N.m (35 lb in).

8. Apply sealer GM P/N 12345739 (Canadian P/N 10953472), to the retainer (3, 4) and install the weatherstrip. Refer to **Weatherstrip Replacement - Folding Top (Front and Center Side Rails)** or **Weatherstrip Replacement - Folding Top (Rear Side Rail)** or **Weatherstrip Replacement - Folding Top (Number Five Bow)** .

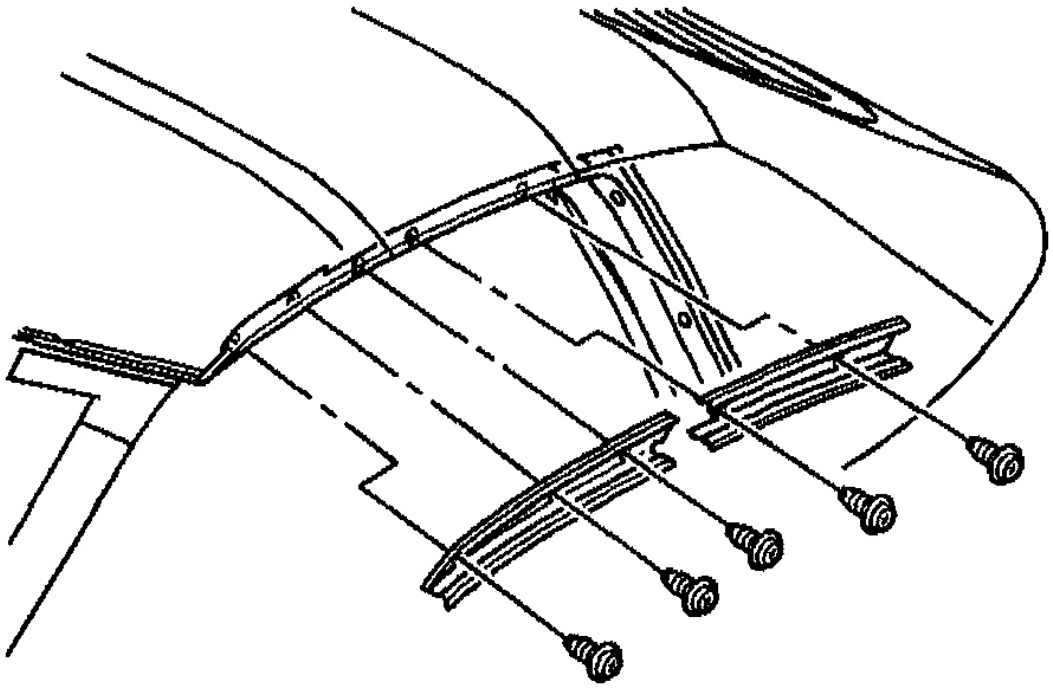

Fig. 75: Installing Side Weatherstrip Screws
Courtesy of GENERAL MOTORS CORP.

WEATHERSTRIP RETAINER REPLACEMENT - FOLDING TOP (REAR SIDE RAIL)

Removal Procedure

1. Remove the rear side rail weatherstrip. Refer to **Weatherstrip Replacement - Folding Top (Front and Center Side Rails)** or **Weatherstrip Replacement - Folding Top (Rear Side Rail)** or **Weatherstrip Replacement - Folding Top (Number Five Bow)** .
2. Remove the screws attaching the retainer to the side rail weatherstrip.
3. Remove the retainer.

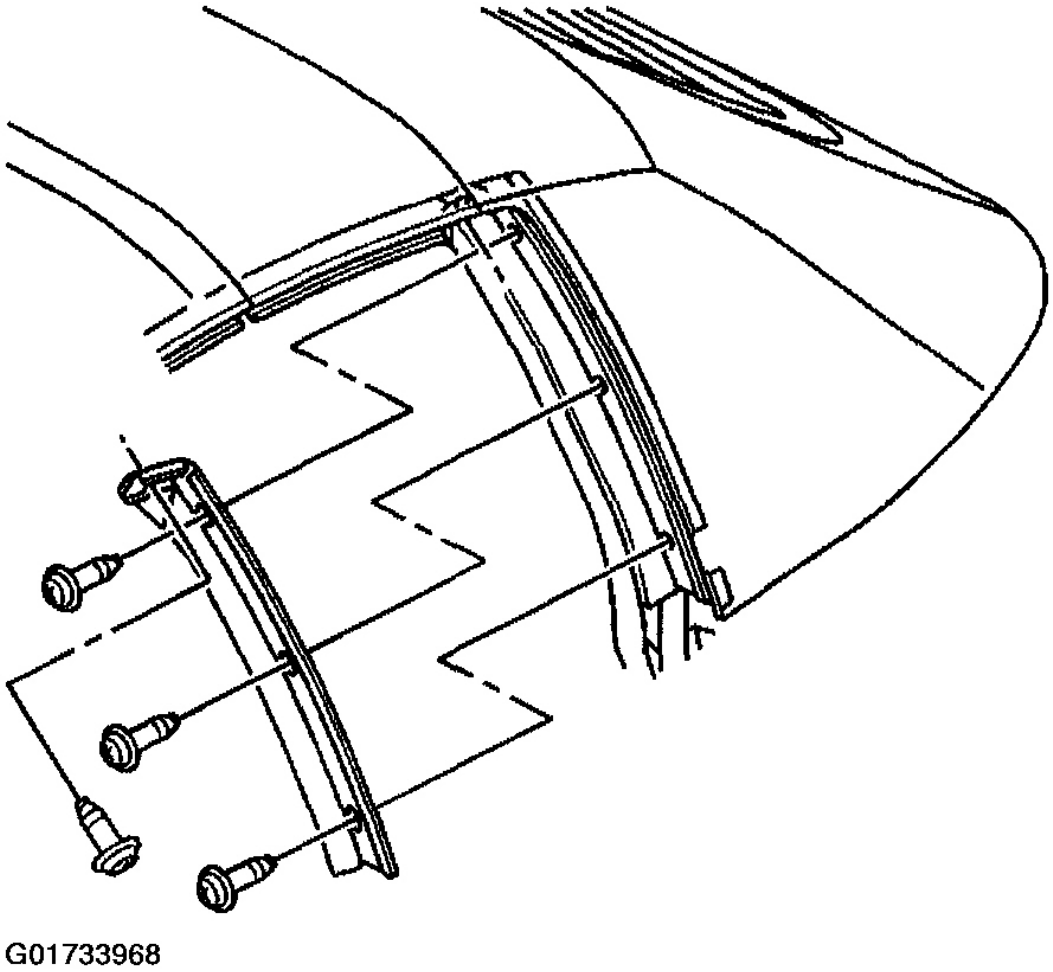

Fig. 76: Removing Side Rail Weatherstrip Retainer Screws
Courtesy of GENERAL MOTORS CORP.

Installation Procedure

1. Apply sealer, GM P/N 12345739 (Canadian P/N 10953472), or equivalent to the upper corner of the roof side rail and to the rear of the main control link (2).

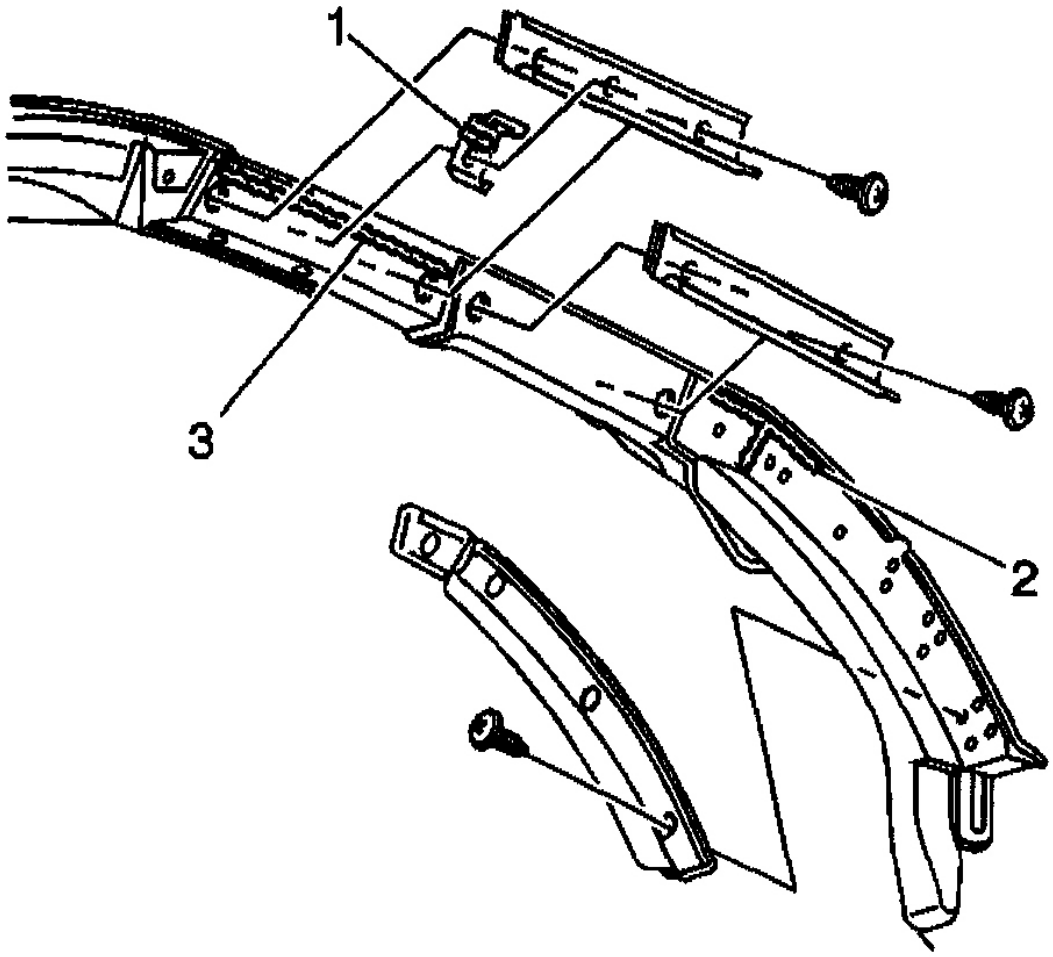

Fig. 77: Applying Rear Side Rail & Main Control Link Sealant
Courtesy of GENERAL MOTORS CORP.

2. Position the retainer to the rear side rail.

CAUTION: Refer to FASTENER NOTICE .

3. Install the screws attaching the retainer to the rear side rail.

Tighten

Tighten the screws to 4 N.m (35 lb in).

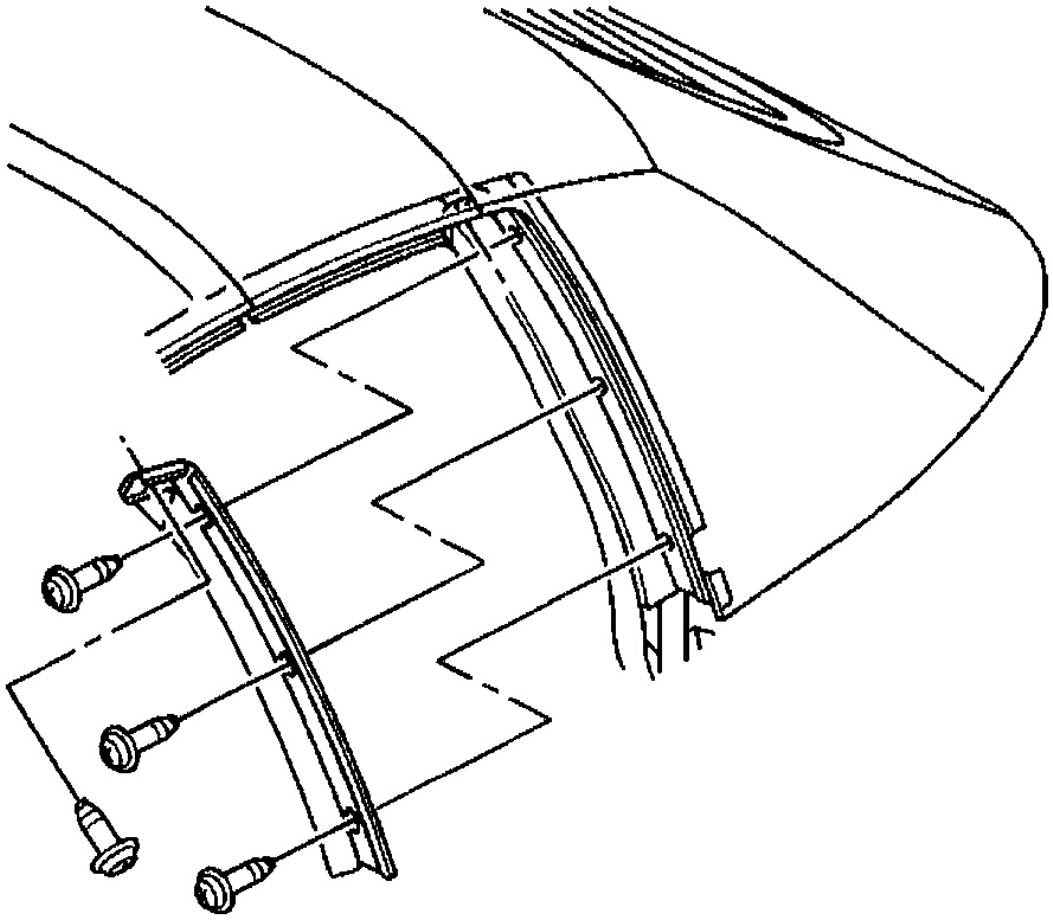

Fig. 78: Installing Side Rail Weatherstrip Retainer Screws
Courtesy of GENERAL MOTORS CORP.

4. Apply a bead of sealer, GM P/N 12345739 (Canadian P/N 10953472), or equivalent to the upper and the lower corners of the side rail retainer.
5. Install the rear side rail weatherstrip. Refer to **Weatherstrip Replacement - Folding Top (Front and Center Side Rails)** or **Weatherstrip Replacement - Folding Top (Rear Side Rail)** or **Weatherstrip Replacement - Folding Top (Number Five Bow)**
6. Reposition the folding top to the original position.

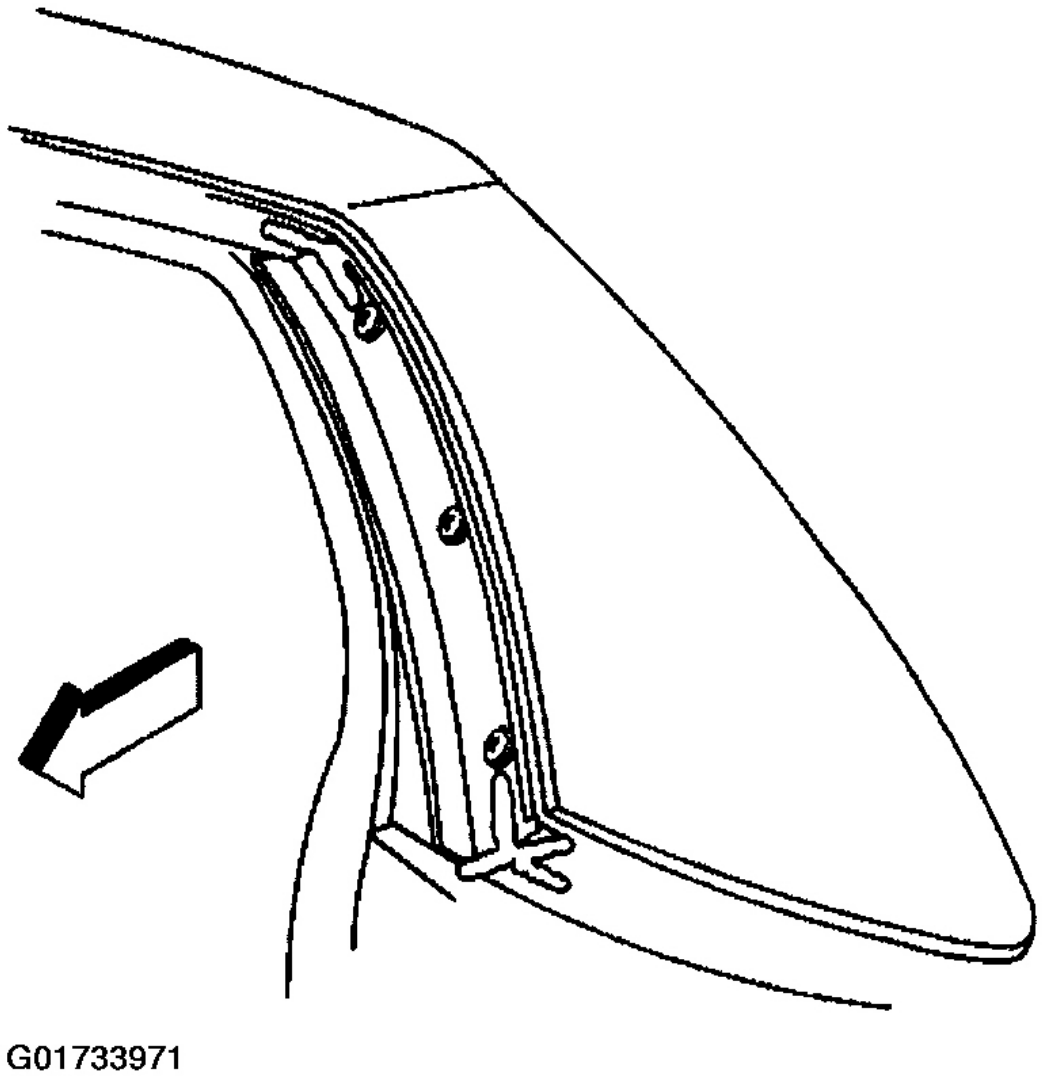

Fig. 79: Applying Side Rail Retainer Sealant
Courtesy of GENERAL MOTORS CORP.

WEATHERSTRIP - FOLDING TOP STOWAGE COMPARTMENT LID

Removal Procedure

1. Position the #1 bow and the #5 bow up.
2. Open the folding top stowage compartment lid.
3. Remove the retainer from the lock pillar end of the seal.

4. Pull the molded end of the seal from the lock pillar.

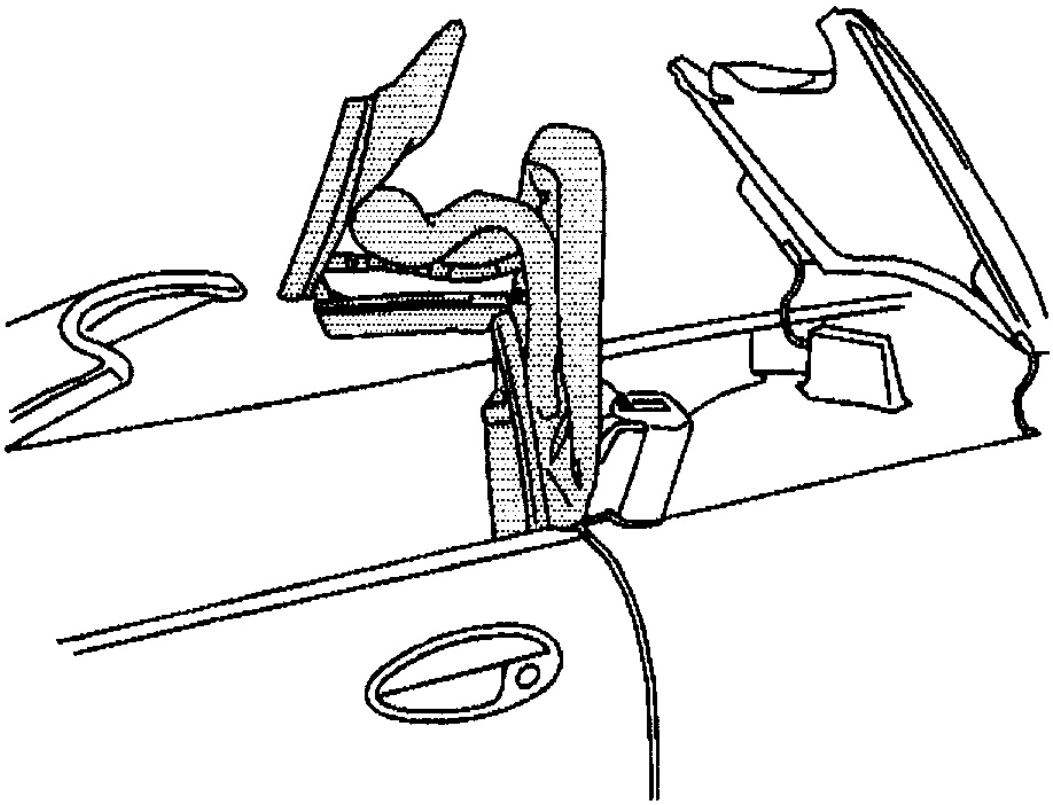

Fig. 80: Aligning Folding Top
Courtesy of GENERAL MOTORS CORP.

5. Pull the weatherstrip from the stowage compartment flange.

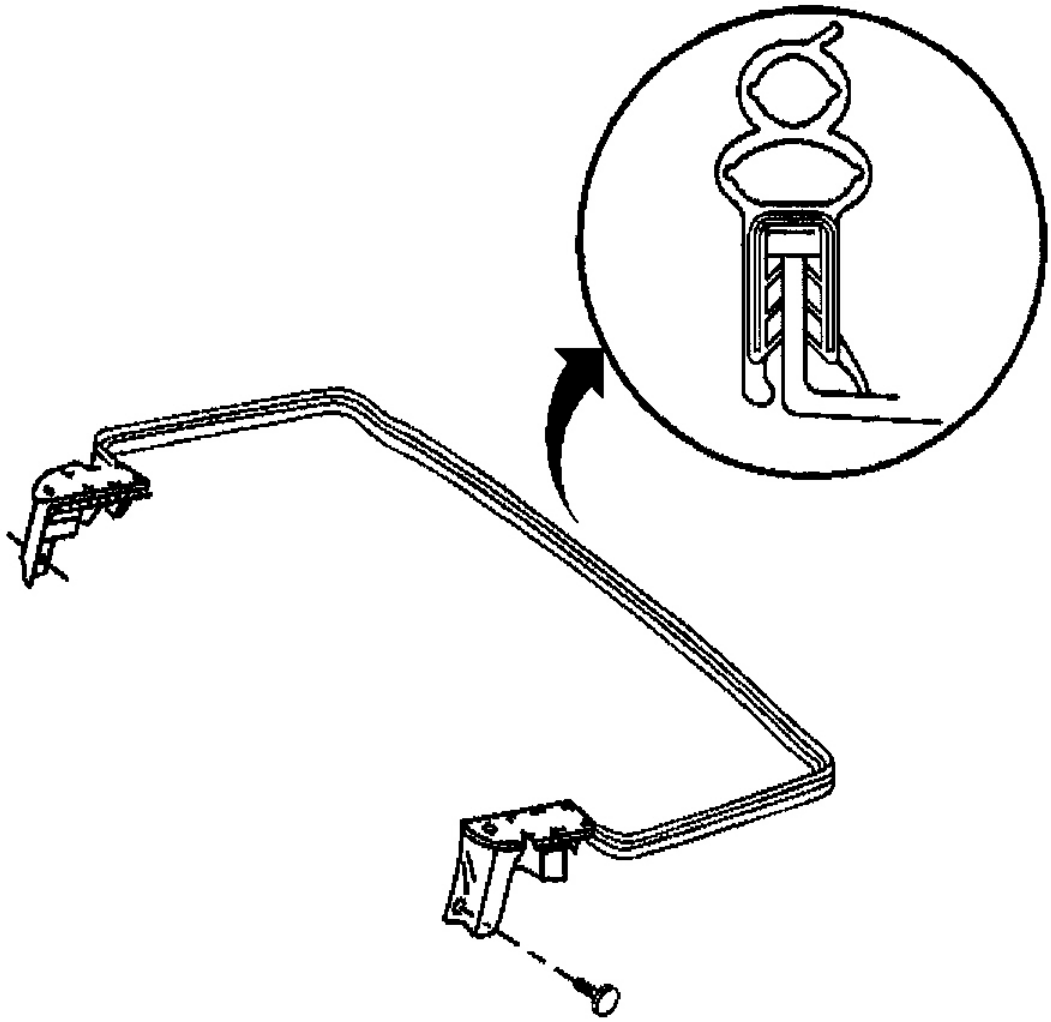

Fig. 81: Identifying Stowage Compartment Flange Weatherstrip
Courtesy of GENERAL MOTORS CORP.

Installation Procedure

1. Apply a bead of sealer, GM P/N 12345739 (Canadian P/N 10953472) or equivalent to the front seal surface of the lock pillar stowage compartment and to the surround flange.
2. Remove the paper backing from the adhesive on the bottom of the molded ends of the weatherstrip.
3. Position the molded ends of the weatherstrip to the lock pillars.

4. Tuck the outboard lip of the seal underneath the flange of the quarter panels.
5. Secure the molded ends of the weatherstrip with the retainers.

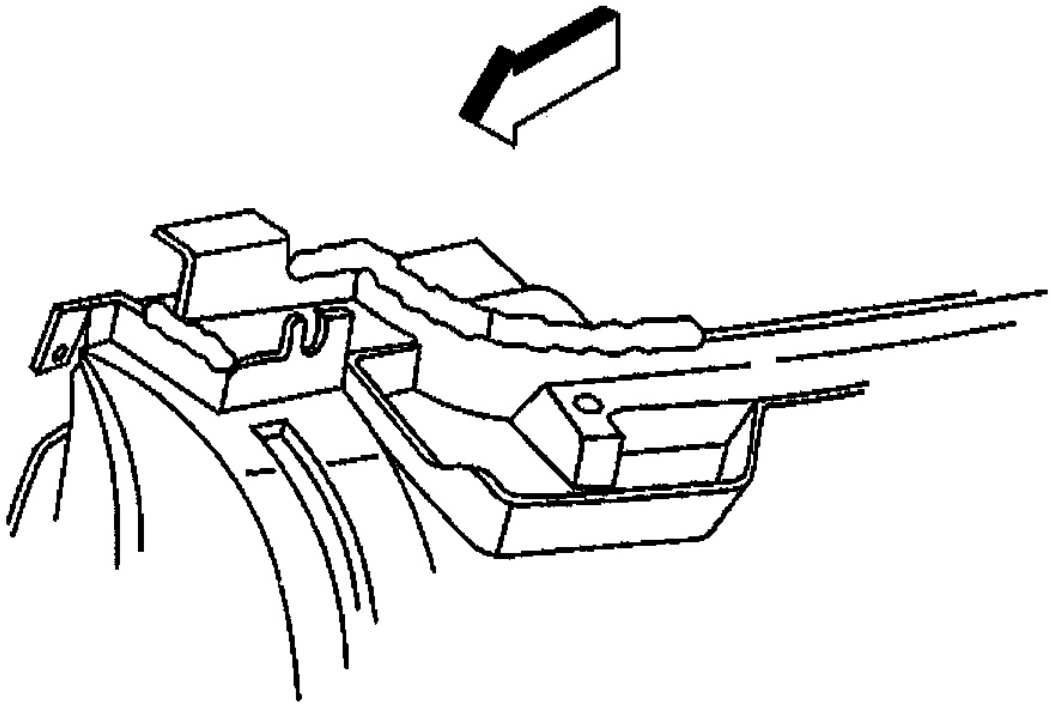

Fig. 82: Applying Lock Pillar Stowage Compartment Sealant
Courtesy of GENERAL MOTORS CORP.

6. Firmly secure the weatherstrip to the stowage compartment flange.
7. Close the folding top stowage compartment.
8. Reposition the folding top to the original position.

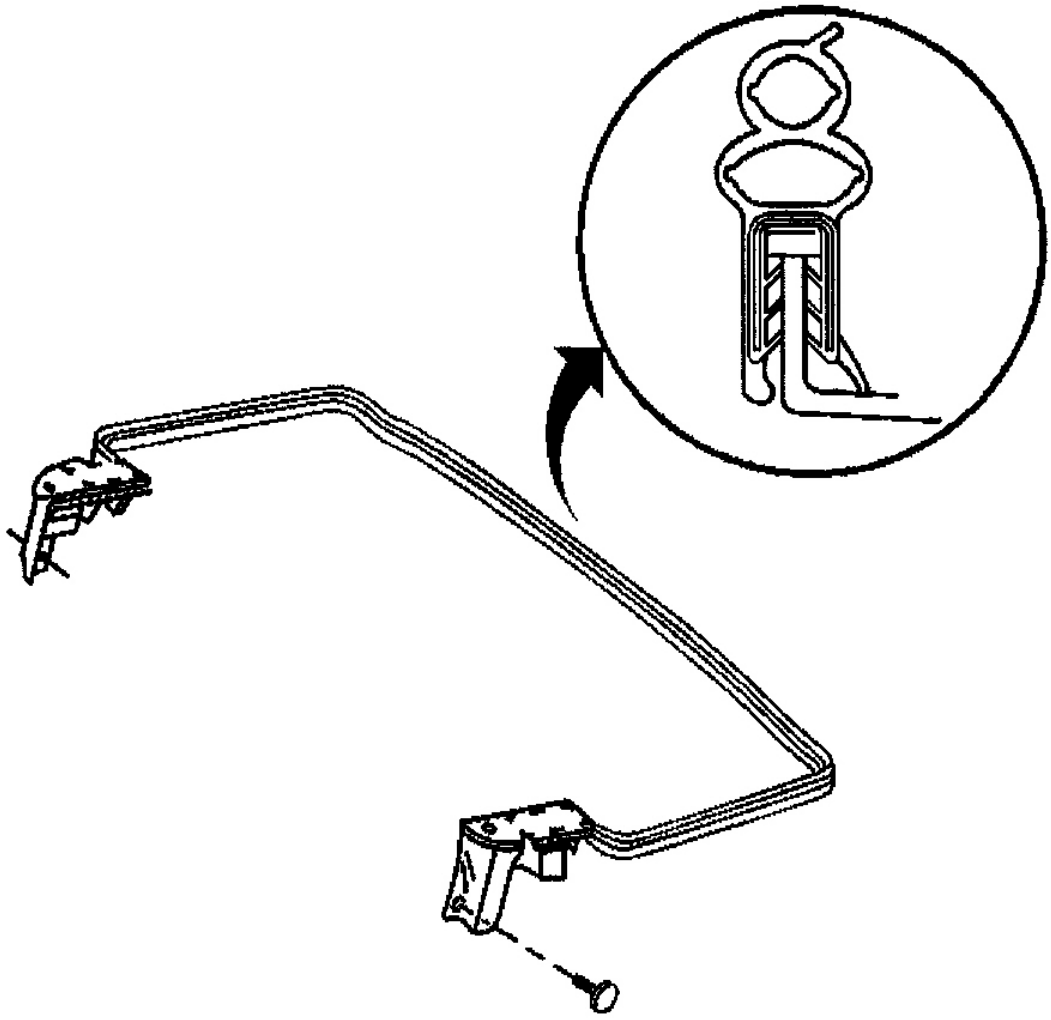

Fig. 83: Identifying Stowage Compartment Flange Weatherstrip
Courtesy of GENERAL MOTORS CORP.

FOLDING TOP SIDE RAIL REPLACEMENT

Removal Procedure

1. Remove the folding top and place the top on a clean flat surface. Refer to **Folding Top Replacement** .
2. Remove the following components from the rear side rail:
   - **2.1.** The headliner screws

2.2. The headliner elastic strap screws

2.3. The glare cover elastic strap screws

2.4. The defogger wire

3. Remove the weatherstrip and retainer from the rear side rail. Refer to **Weatherstrip Replacement - Folding Top (Front and Center Side Rails)** or **Weatherstrip Replacement - Folding Top (Rear Side Rail)** or **Weatherstrip Replacement - Folding Top (Number Five Bow)** .

WARNING: Refer to SAFETY GLASSES CAUTION .

4. Drill out the rivets to the top cover side flap from the rear side rail.
5. Lift the flap and drill out the rivet attaching the tension cable flag.
6. Drill out the top cover rivet to the bottom of the rear side rail.

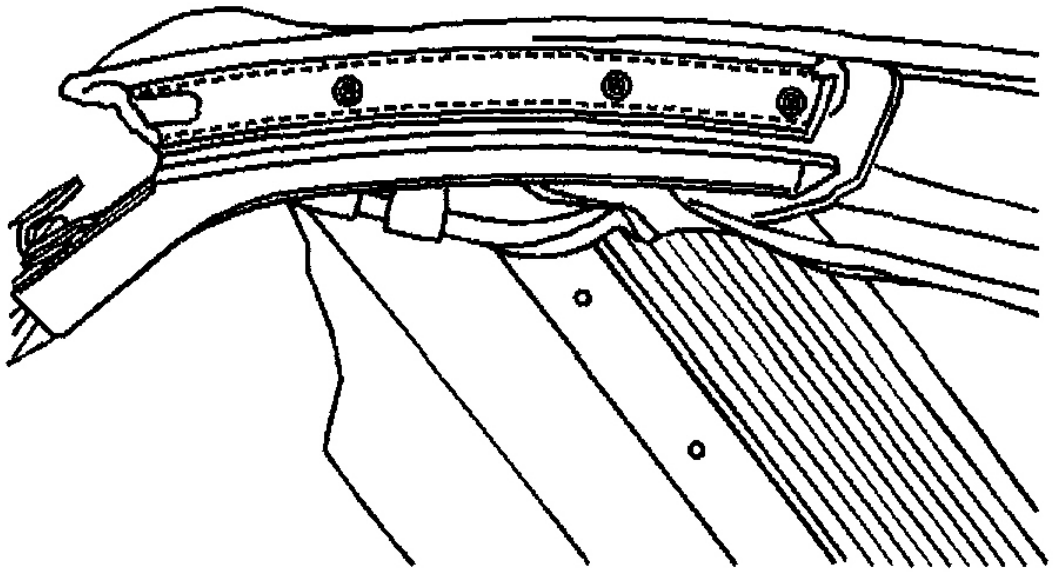

G01733976

Fig. 84: Identifying Side Rail Rivets
Courtesy of GENERAL MOTORS CORP.

7. Remove the protective pad from the weatherstrip attaching nuts on the #5 bow.

8. Remove the weatherstrip attaching nuts from the #5 bow.

   Important: You are not required to completely remove the weatherstrip.

9. Remove the weatherstrip from the bottom of the rear side rail and from the end of the #5 bow. You are not required to completely remove the weatherstrip.
10. Remove the top cover and the protective cover from the bottom of the rear side rail and from the front edge of the #5 bow.
11. Drill out the rivets from the protective cover elastic strap on the rear side rail.
12. Drill out the extension bracket rivet from the #5 bow on the rear side rail.
13. Remove the extension bracket screws from the rear side rail on the #5 bow.
14. Remove the rear side rail screws from the center side rail.

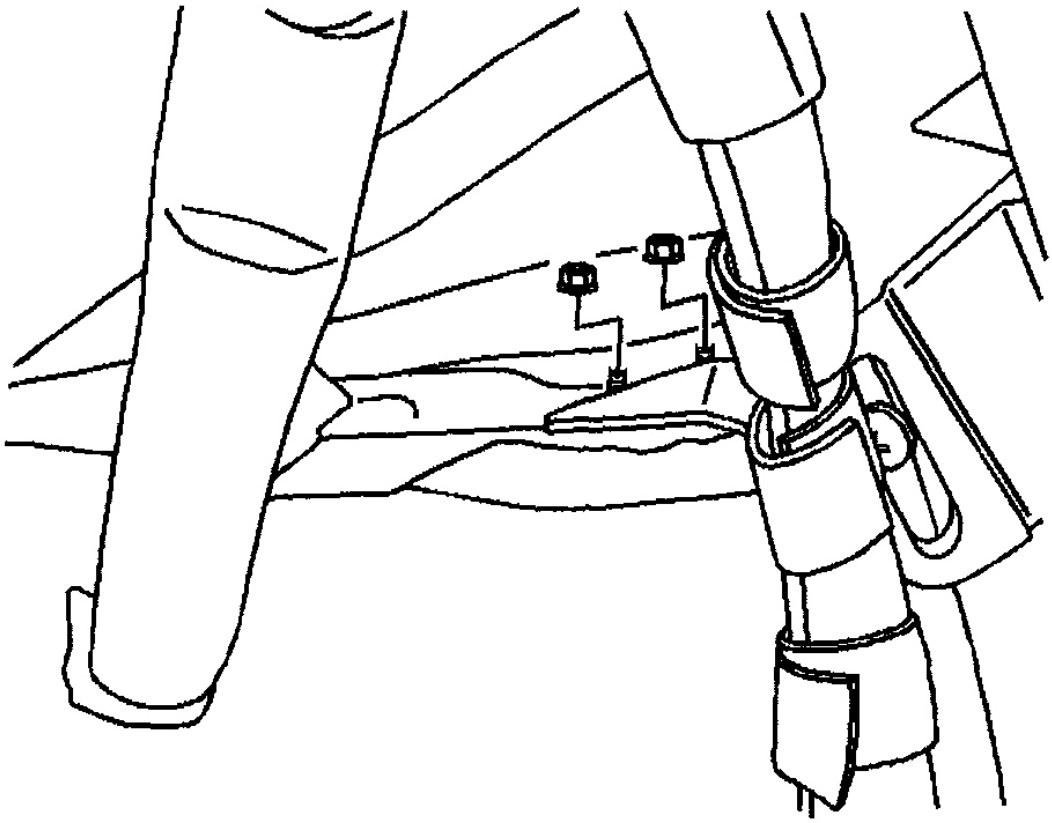

G01733977

Fig. 85: Removing #5 Bow Weatherstrip Nuts

Courtesy of GENERAL MOTORS CORP.

15. Remove the rear side rail.

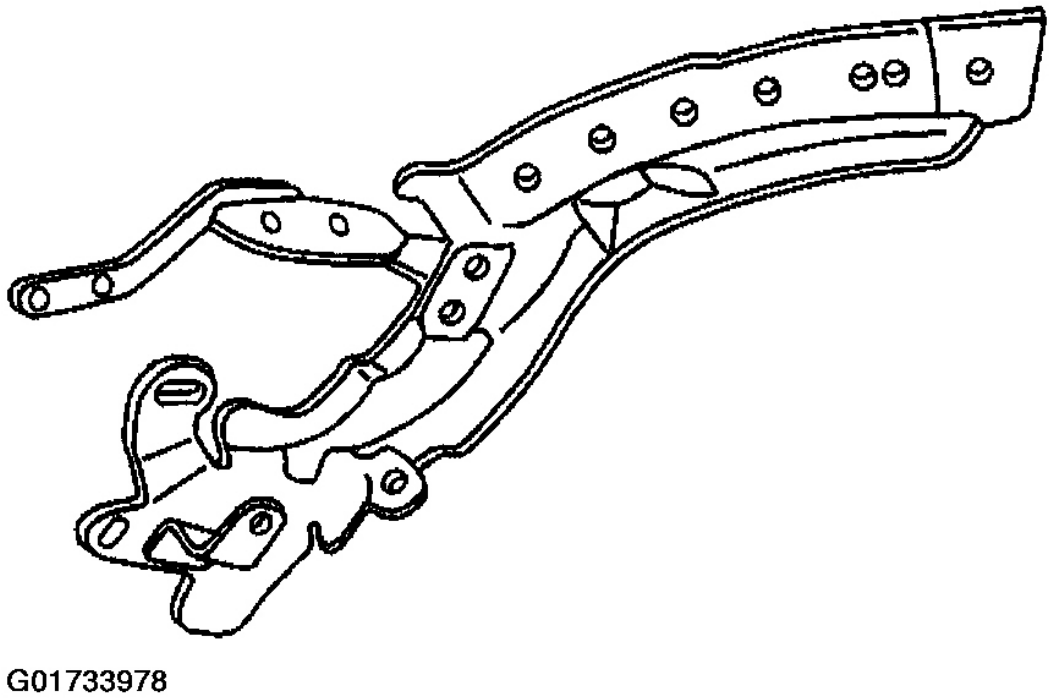

Fig. 86: Identifying Rear Side Rail
Courtesy of GENERAL MOTORS CORP.

Installation Procedure

1. Install the rear side rail.

CAUTION: Refer to FASTENER NOTICE .

2. Install the center side rail screws to the rear side rail.

Tighten

Tighten the screws to 19 N.m (14 lb ft).

3. Install the extension bracket screws to the #5 bow.

   Tighten

   Tighten the screws to 13 N.m (10 lb ft).

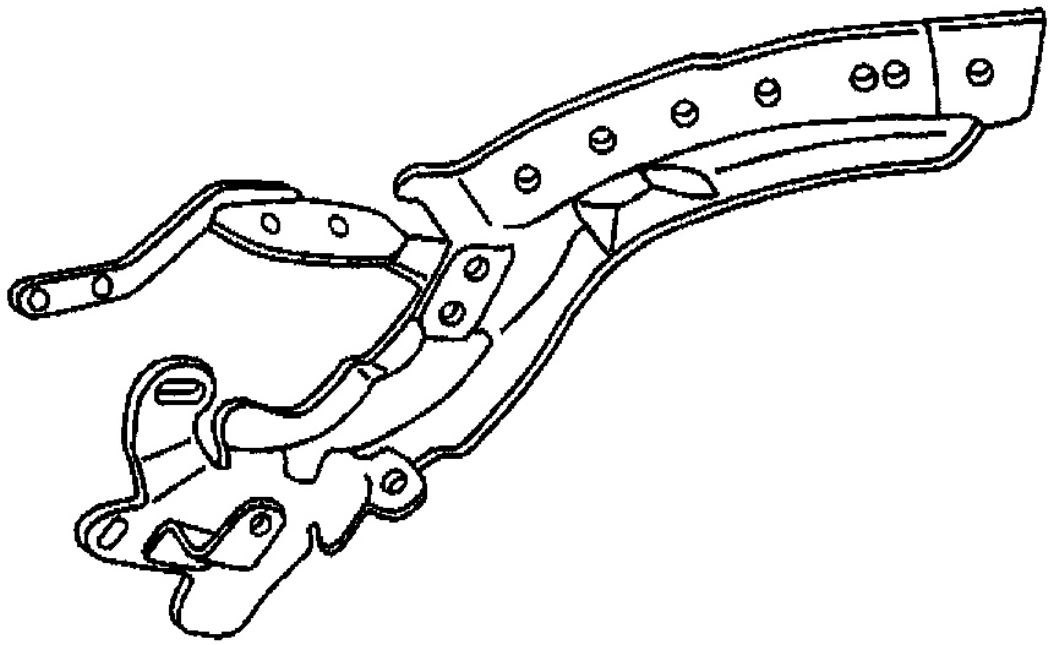

Fig. 87: Identifying Rear Side Rail
Courtesy of GENERAL MOTORS CORP.

4. Rivet the #5 bow to the extension bracket on the rear side rail. Verify that both sides of the rivet are flat.
5. Rivet the protector elastic strap to the rear side rail.
6. Rivet the tension cable flag to the rear side rail. The rolled side of the flag must face forward.
7. Rivet the top cover to the bottom of the rear side rail.
8. Rivet the top flap to the rear side rail.
9. Install the retainer and the seal to the rear side rail. Refer to **Weatherstrip Retainer Replacement - Folding Top (Front and Center Side Rail)** **Weatherstrip Retainer**

Replacement - Folding Top (Rear Side Rail) .

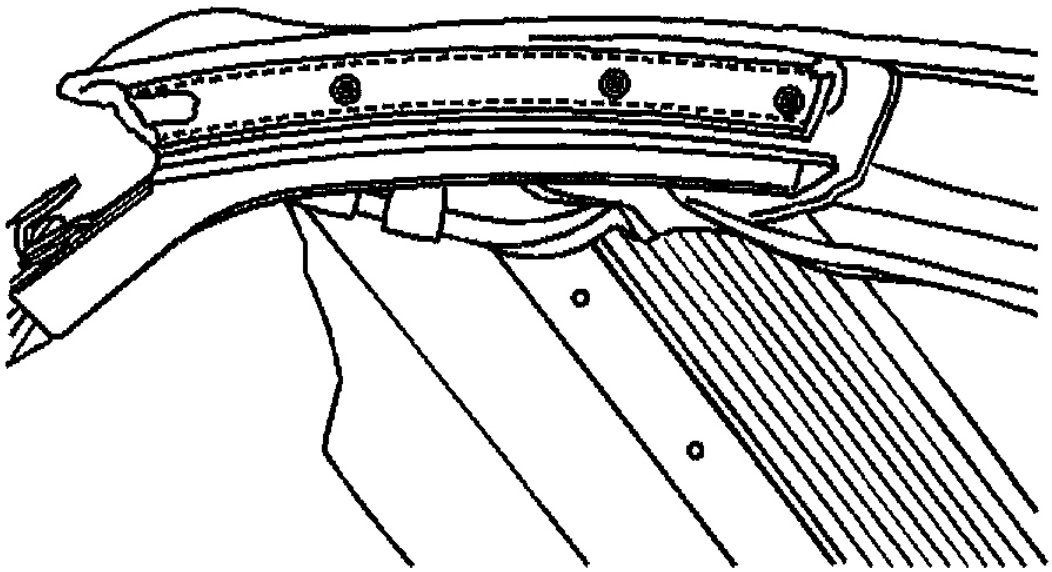

G01733980

Fig. 88: Identifying Side Rail Rivets
Courtesy of GENERAL MOTORS CORP.

10. Install the screws attaching the headliner elastic strap to the rear side rail.

    Tighten

    Tighten the screws to 2 N.m (18 lb in).

11. Install the headliner screws to the rear side rail.

    Tighten

    Tighten the screws to 2 N.m (18 lb in).

12. Connect the defogger wire to the rear side rail.
13. Install the folding top to the vehicle. Refer to **Folding Top Replacement** .
14. Position the folding top to the original position.

FOLDING TOP COVER REPLACEMENT

Removal Procedure

1. Remove the convertible top and place the top on a clean flat surface. Refer to **Folding Top Replacement.**
2. Remove the seal compression panel from the #1 bow. Refer to **Folding Top Seal Compression Panel Replacement** .
3. Using a pair of needle-nosed pliers remove the staples that secure the top cover to the bow.
4. Fold the top material back.

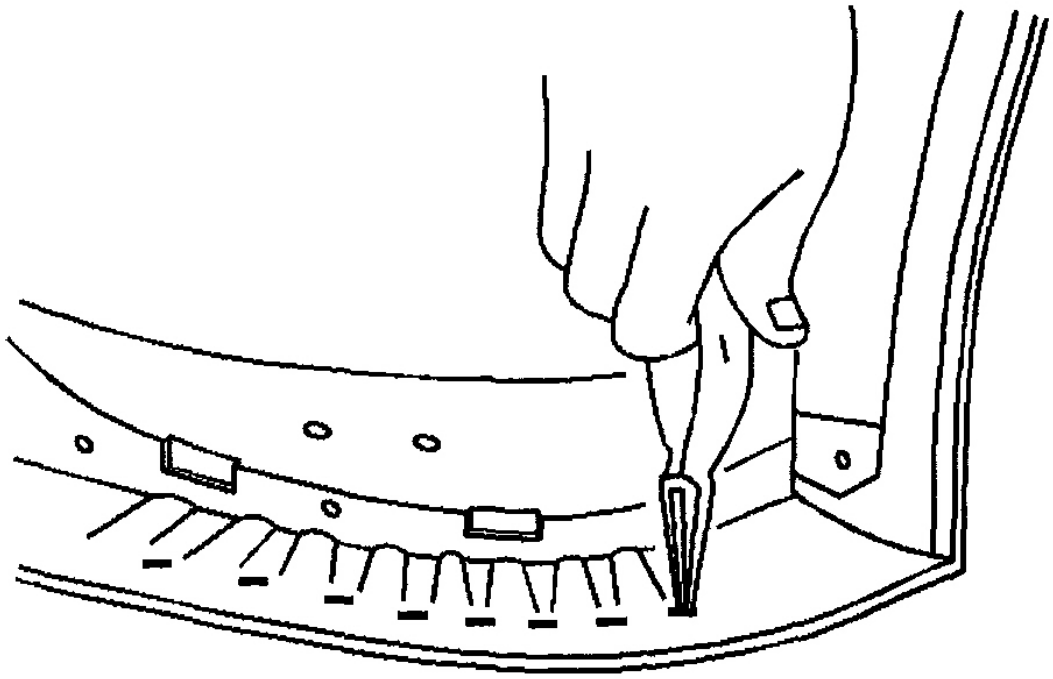

Fig. 89: Removing #1 Bow Top Cover Staples
Courtesy of GENERAL MOTORS CORP.

5. Remove the tension cable screw and feed the cable out between the side rail and the roof bow.
6. Remove the fourth right and the left screws attaching the top material to the #2 bow.
7. Remove the #5 bow weatherstrip. Refer to **Weatherstrip Replacement - Folding Top (Front and Center Side Rails)** or **Weatherstrip Replacement - Folding Top (Rear Side Rail)** or **Weatherstrip Replacement - Folding Top (Number Five Bow)** .

8. If you are going to reuse the top material mark the location of the material on the #5 bow as a guide for reassembly.

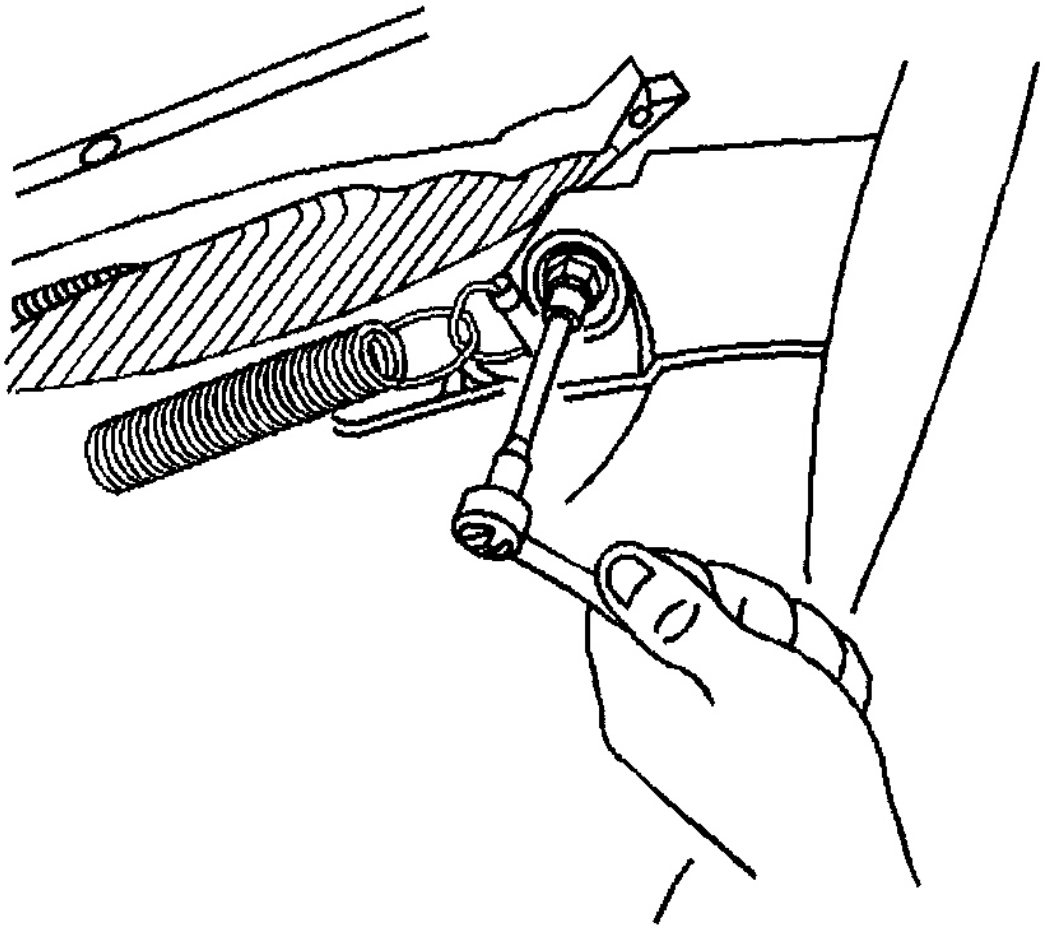

G01733982

Fig. 90: Removing Tension Cable Screw
Courtesy of GENERAL MOTORS CORP.

9. Using a pair of needle-nosed pliers remove the staples which secure the top cover to the bow.

WARNING: Refer to SAFETY GLASSES CAUTION .

10. Drill out the rivets attaching the top material to the bottom of the rear side rails.
11. Remove the top material from the #5 bow.
12. Pull the top material from the rear side rail and from the front of the #5 bow.
13. Remove the rear side rail weatherstrip and retainer. Refer to **Weatherstrip Retainer Replacement - Folding Top (Front and Center Side Rail)** **Weatherstrip Retainer Replacement - Folding Top (Rear Side Rail)** .

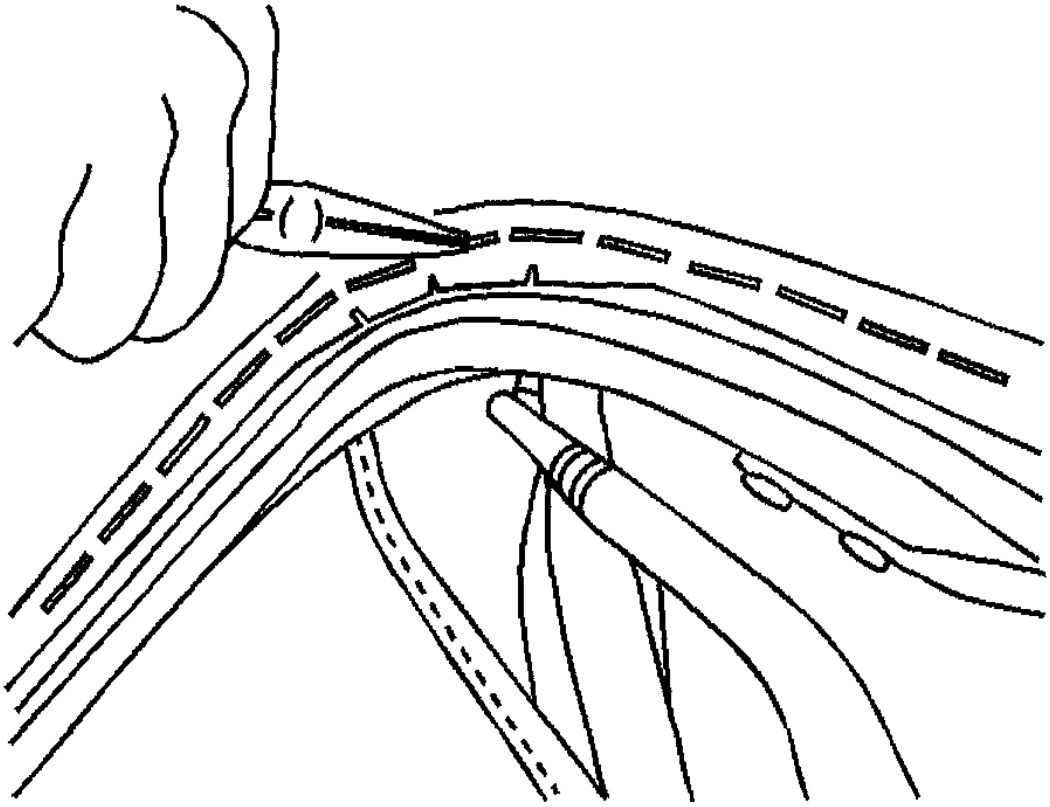

G01733983

Fig. 91: Removing #1 Bow Top Cover Staples
Courtesy of GENERAL MOTORS CORP.

14. Drill out the rivets that secure the top cover flaps to the rear side rail.
15. Drill out the rivets that secure the tension cable flag to the rear side rail.

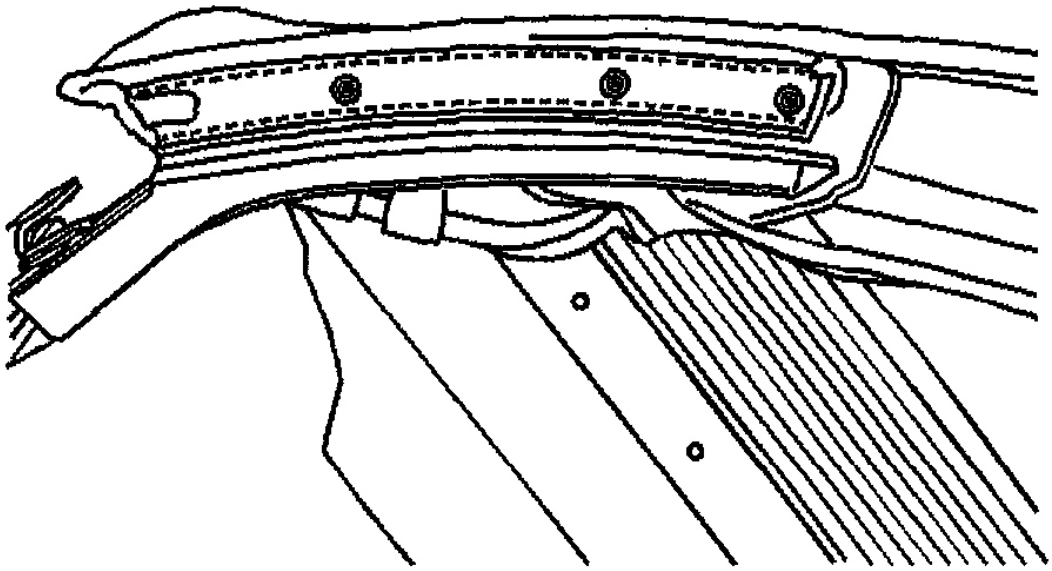

G01733984

Fig. 92: Identifying Rear Side Rail Rivets
Courtesy of GENERAL MOTORS CORP.

16. Remove the screws attaching the rear window support straps to the #4 bow.
17. Remove the top material.

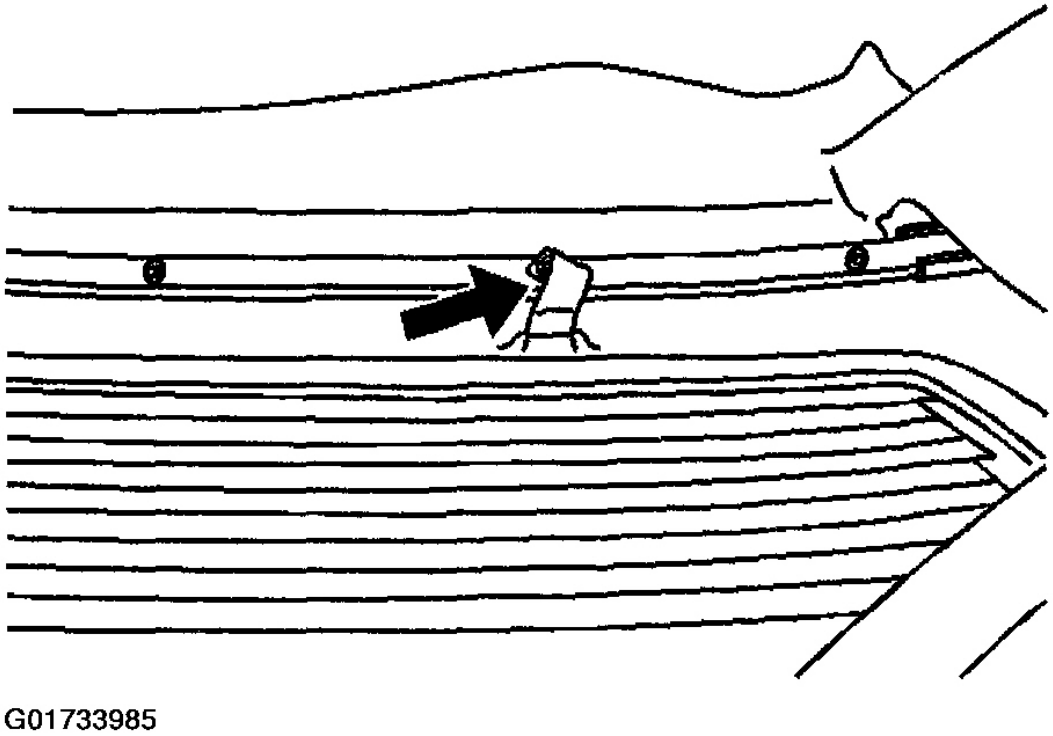

Fig. 93: Identifying #4 Rear Window Support Straps
Courtesy of GENERAL MOTORS CORP.

Installation Procedure

1. Position the top cover over the roof bows.

   CAUTION: Refer to FASTENER NOTICE .

2. Attach the top cover to the #2 bow with screws.

   Tighten

   Tighten the screws to 2 N.m (18 lb in).

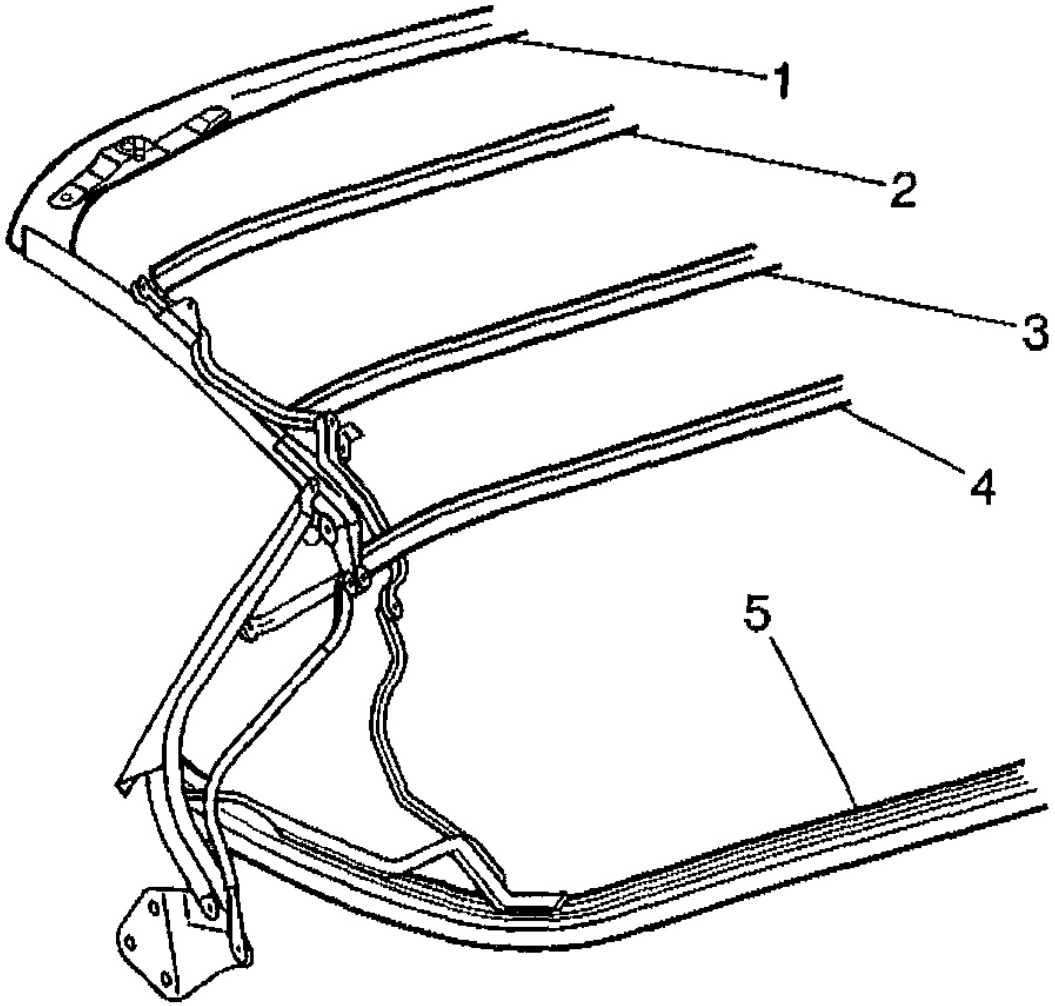

Fig. 94: Identifying Roof Bows
Courtesy of GENERAL MOTORS CORP.

3. Attach the rear window support straps to the #4 bow.

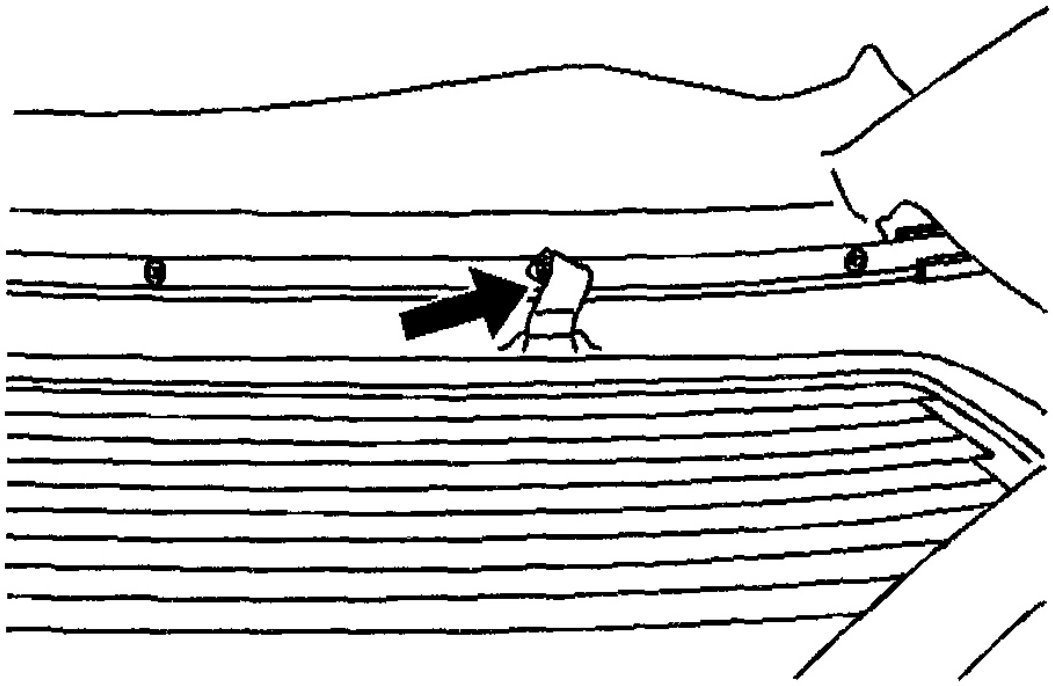

G01733987

Fig. 95: Identifying #4 Rear Window Support Straps
Courtesy of GENERAL MOTORS CORP.

Tighten

Tighten the screws to 2 N.m (18 lb in).

4. Rivet the flag end of the tension cable to the back side of the rear side rail.
5. Route the tension cables and install the cables to the #1 bow.

Tighten

Tighten the screw to 2 N.m (18 lb in).

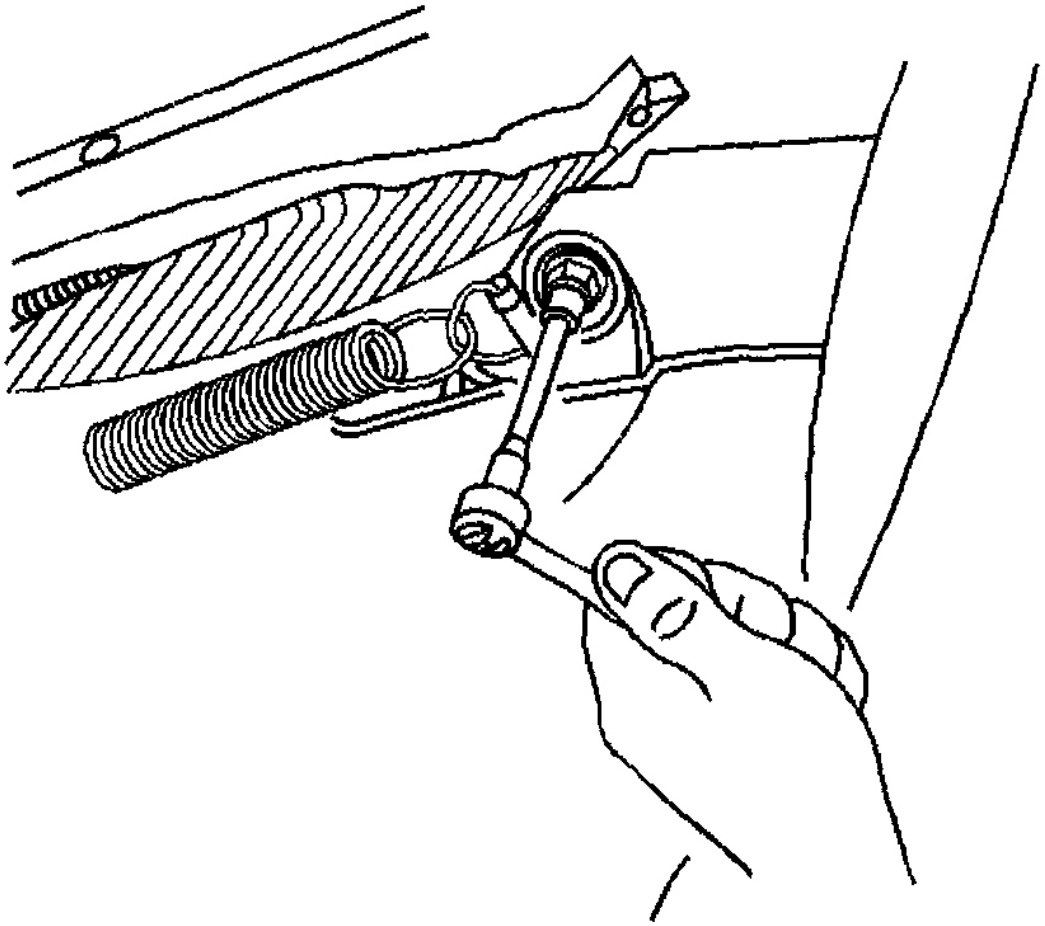

Fig. 96: Installing Tension Cable Screw
Courtesy of GENERAL MOTORS CORP.

6. Rivet the top cover flags to the side rails.
7. Rivet the top cover to the bottom of the rear side rail.
8. Assure that both sides of the rivet are flat so the rivet will not cut the top material or interfere with the seating of the retainer to the rear side rail weatherstrip. Before stapling the top cover to the #5 bow, refer to **Folding Top Cover Tension Adjustment - Rear** .
9. Before stapling the top cover to the #1 bow, refer to **Folding Top Cover Tension Adjustment - Front** .
10. Install the weatherstrips and the weatherstrip retainers to the rear side rails. Refer to

Weatherstrip Retainer Replacement - Folding Top (Front and Center Side Rail)
Weatherstrip Retainer Replacement - Folding Top (Rear Side Rail) .

11. Install the folding top. Refer to **Folding Top Replacement** .
12. Position the folding top to the original position.

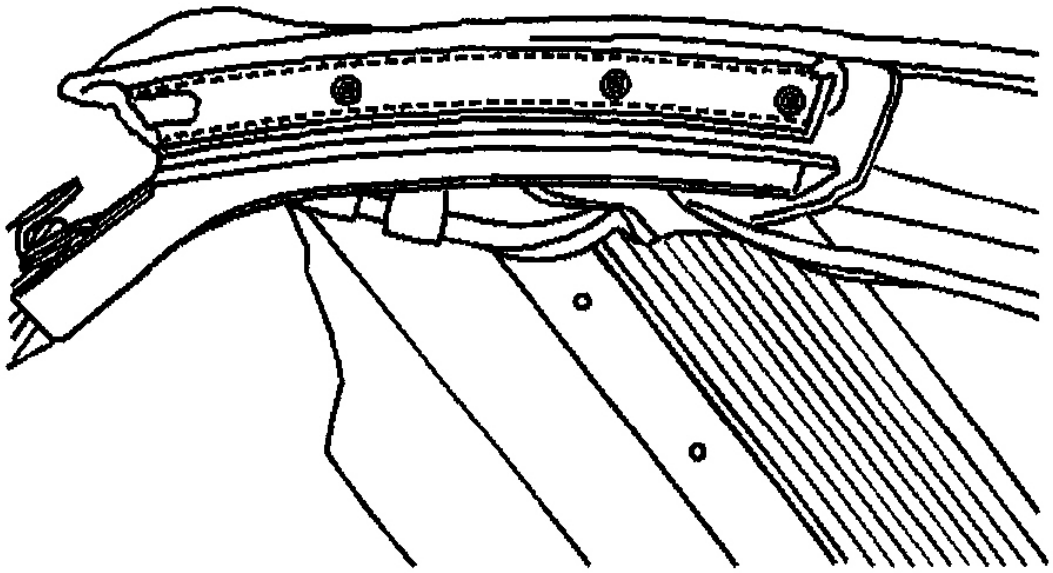

G01733989

Fig. 97: Identifying Rear Side Rail Rivets
Courtesy of GENERAL MOTORS CORP.

FOLDING TOP ROOF BOW REPLACEMENT (NUMBER 1 BOW)

Removal Procedure

1. Position the top with the #1 bow up.
2. Remove the seal compression panel. Refer to **Folding Top Seal Compression Panel Replacement** .
3. Using a grease pencil mark the location of the top material where it wraps over the #1 bow to aid in installation.

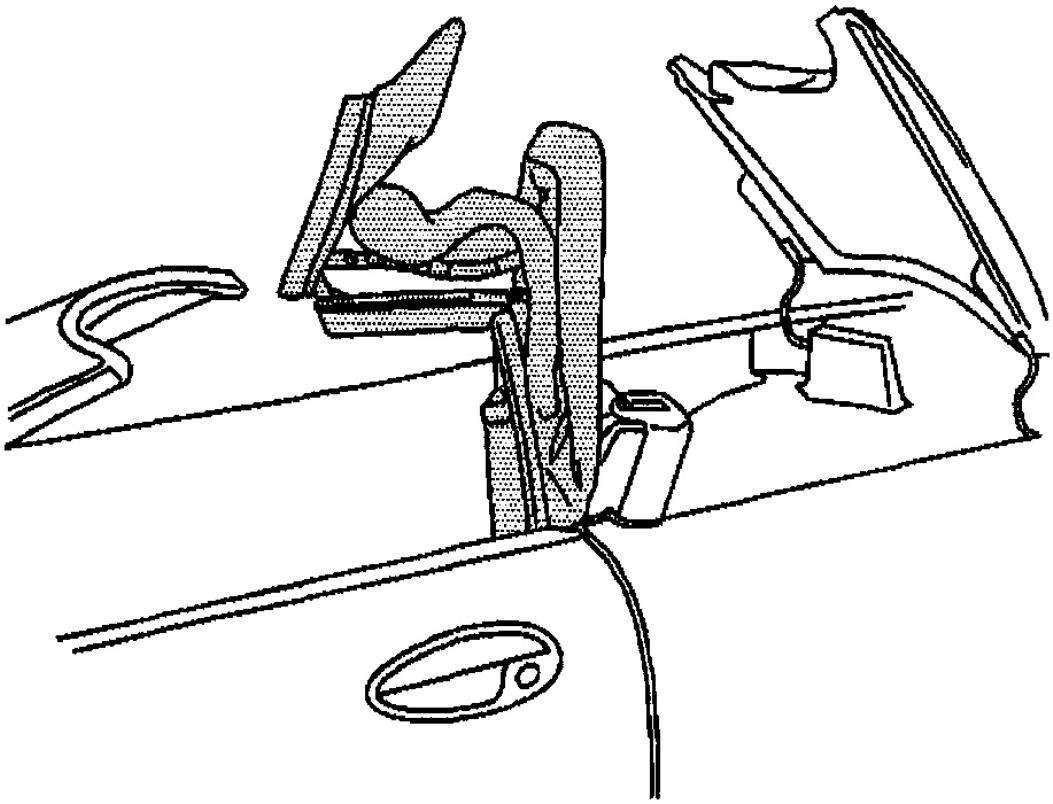

G01733990

Fig. 98: Aligning Folding Top
Courtesy of GENERAL MOTORS CORP.

4. Using a pair of needle nose pliers remove the top cover staples from the #1 bow.

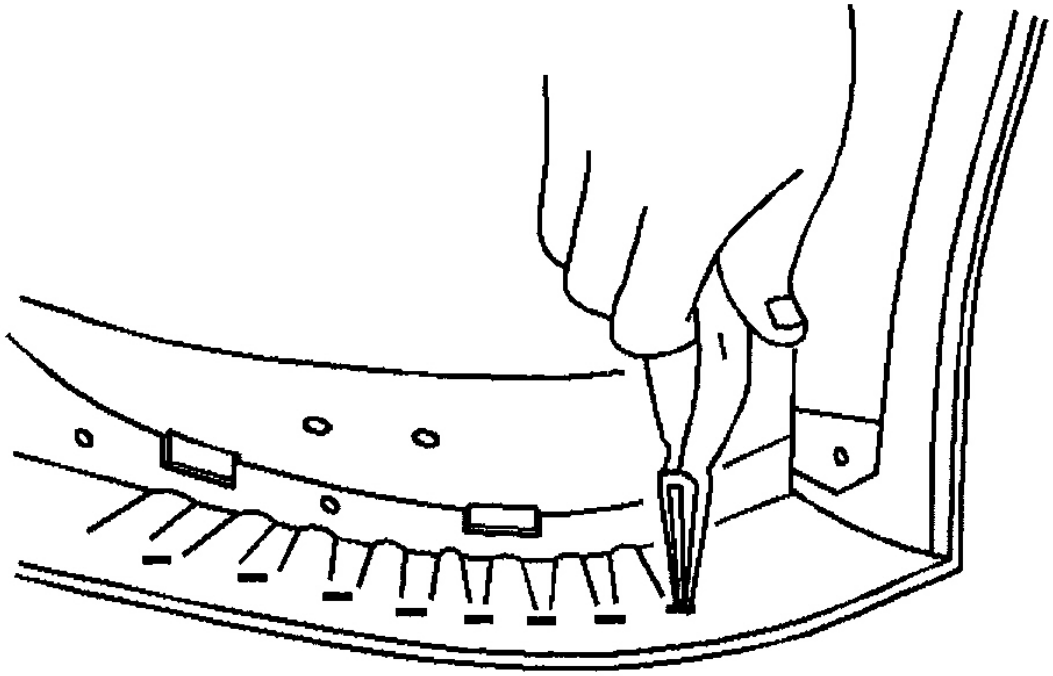

G01733991

Fig. 99: Removing #1 Bow Top Cover Staples
Courtesy of GENERAL MOTORS CORP.

5. Remove the headliner staples from the #1 bow.

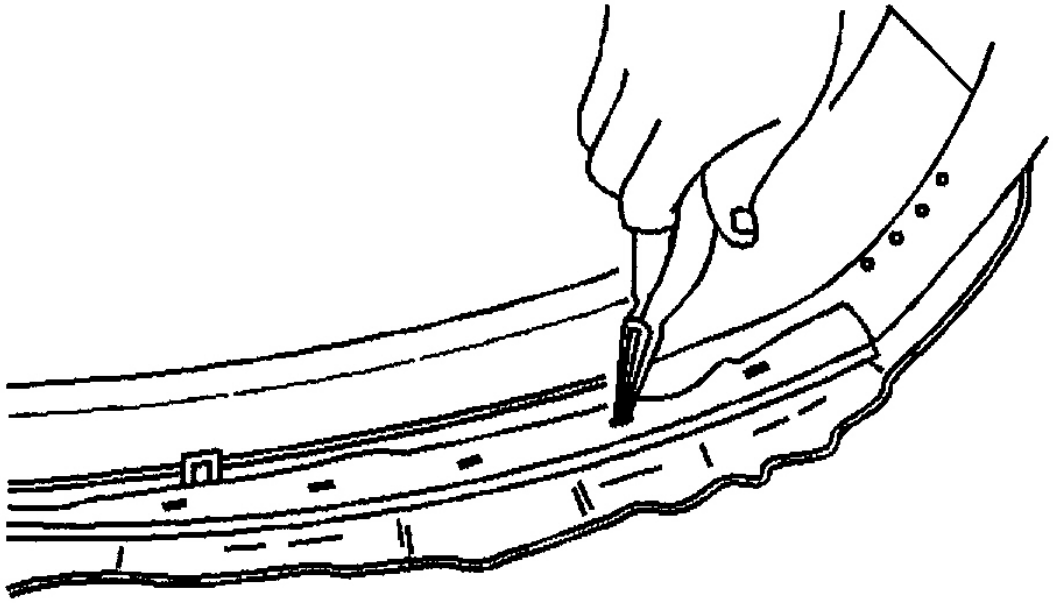

Fig. 100: Removing #1 Bow Headliner Staples
Courtesy of GENERAL MOTORS CORP.

WARNING: Refer to SAFETY GLASSES CAUTION .

6. Drill out the stay pad rivets from the #1 bow.
7. Remove the headliner screws from the #1 bow.

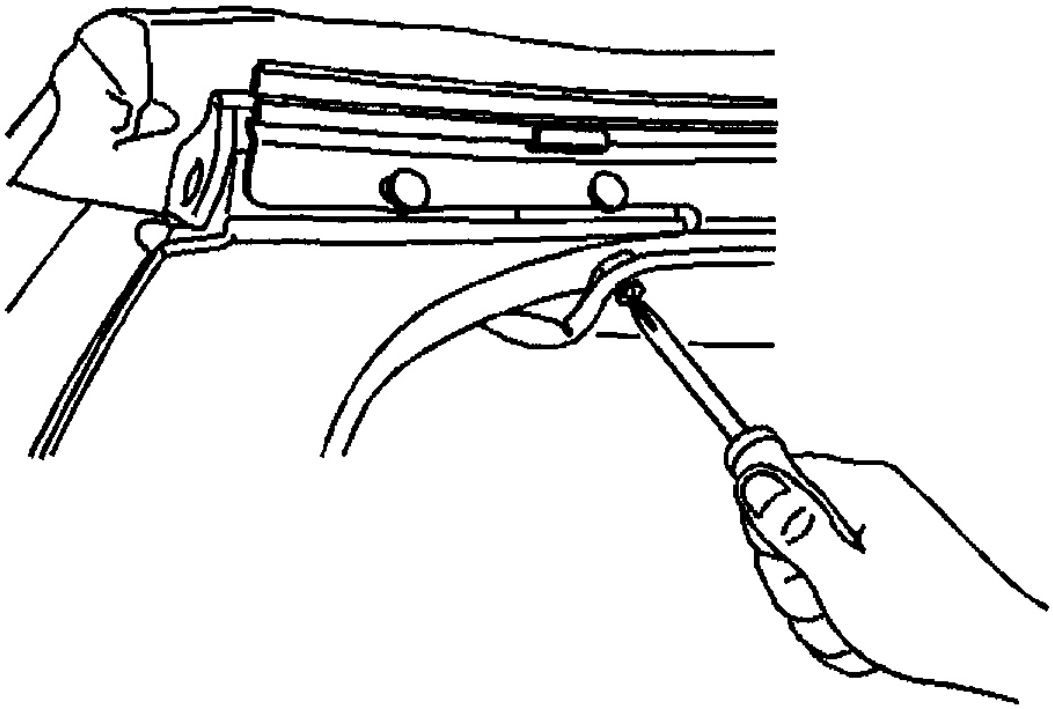

G01733993

Fig. 101: Removing #1 Bow Headliner Screws
Courtesy of GENERAL MOTORS CORP.

8. Remove the headliner push-on retainers from the #1 bow.

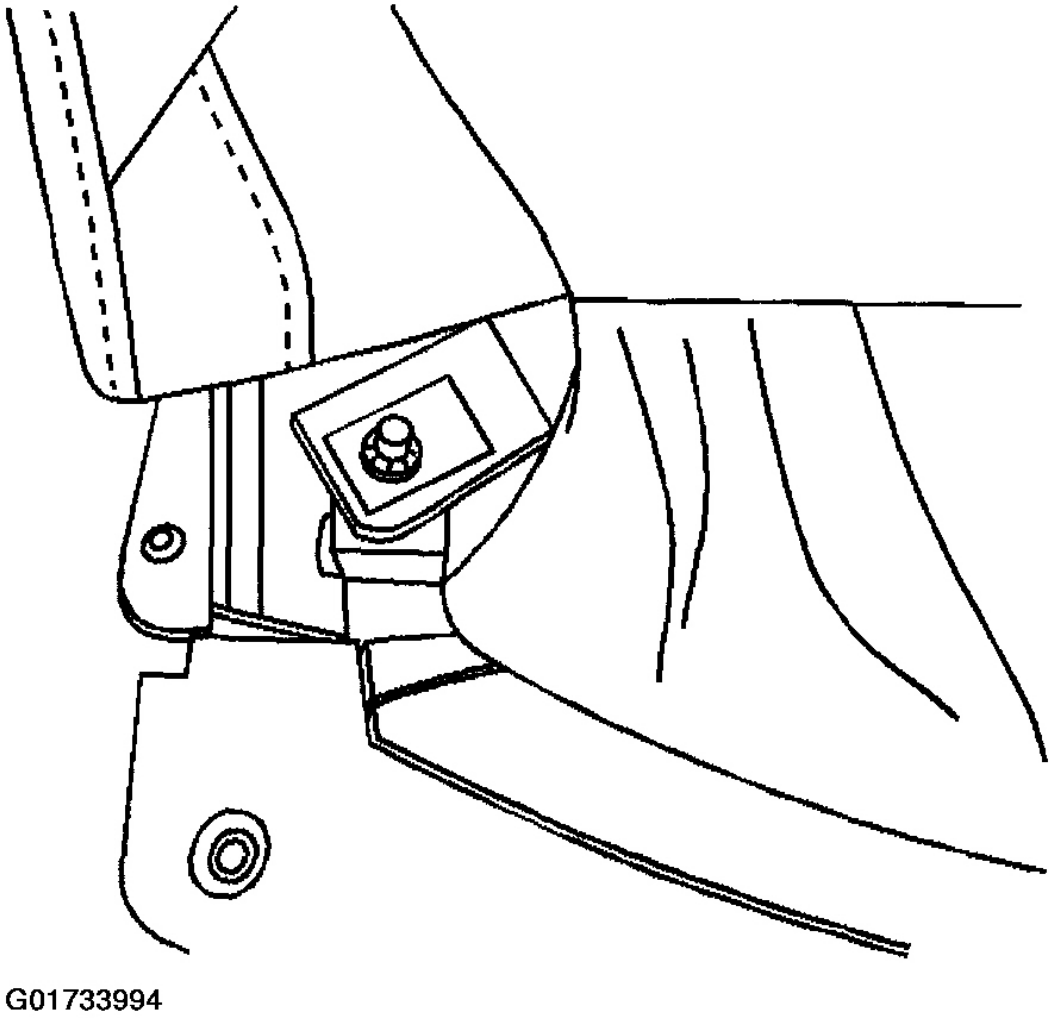

Fig. 102: Identifying #1 Bow Headliner Push-On Retainers
Courtesy of GENERAL MOTORS CORP.

9. Remove the tension cable screws from the #1 bow.

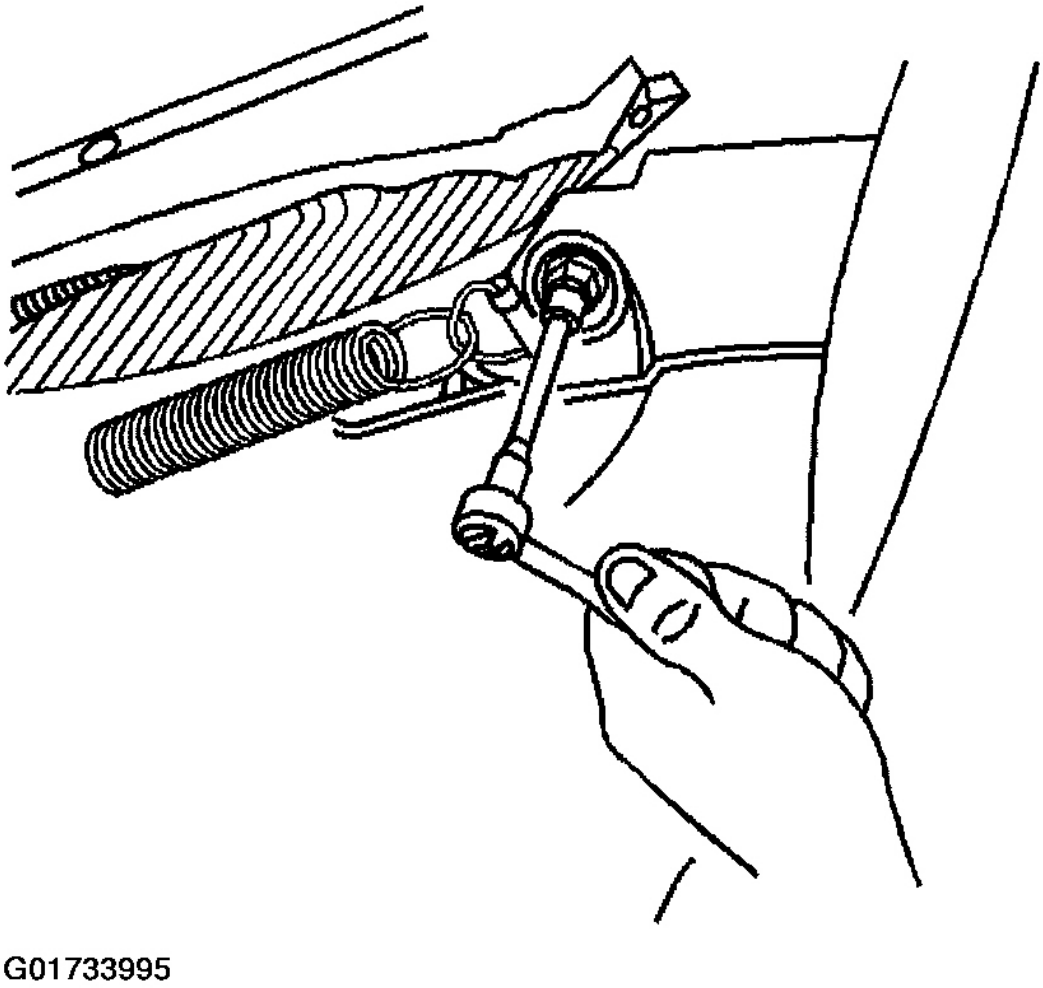

Fig. 103: Removing Tension Cable Screws
Courtesy of GENERAL MOTORS CORP.

10. Using a grease pencil mark the location of the #1 bow to the front side rails.
11. Remove the #1 bow nuts from the front side rails.

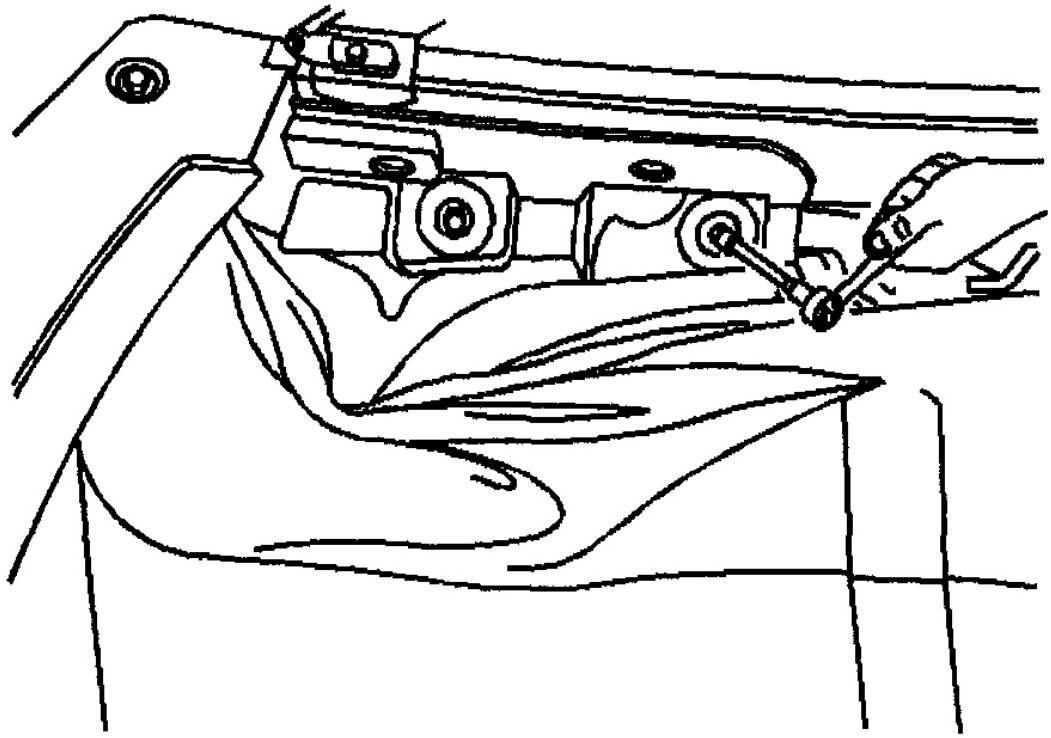

G01733996

Fig. 104: Removing #1 Bow Nuts
Courtesy of GENERAL MOTORS CORP.

12. Remove the #1 bow.

Installation Procedure

1. Position the #1 bow to the marks on the front side rails with the tension cables through the corner slots.

CAUTION: Refer to FASTENER NOTICE .

2. Install the #1 bow (1) nuts to the front side rails.

Tighten

Tighten the nuts to 14 N.m (10 lb ft).

3. Rivet the stay pad to the #1 bow.

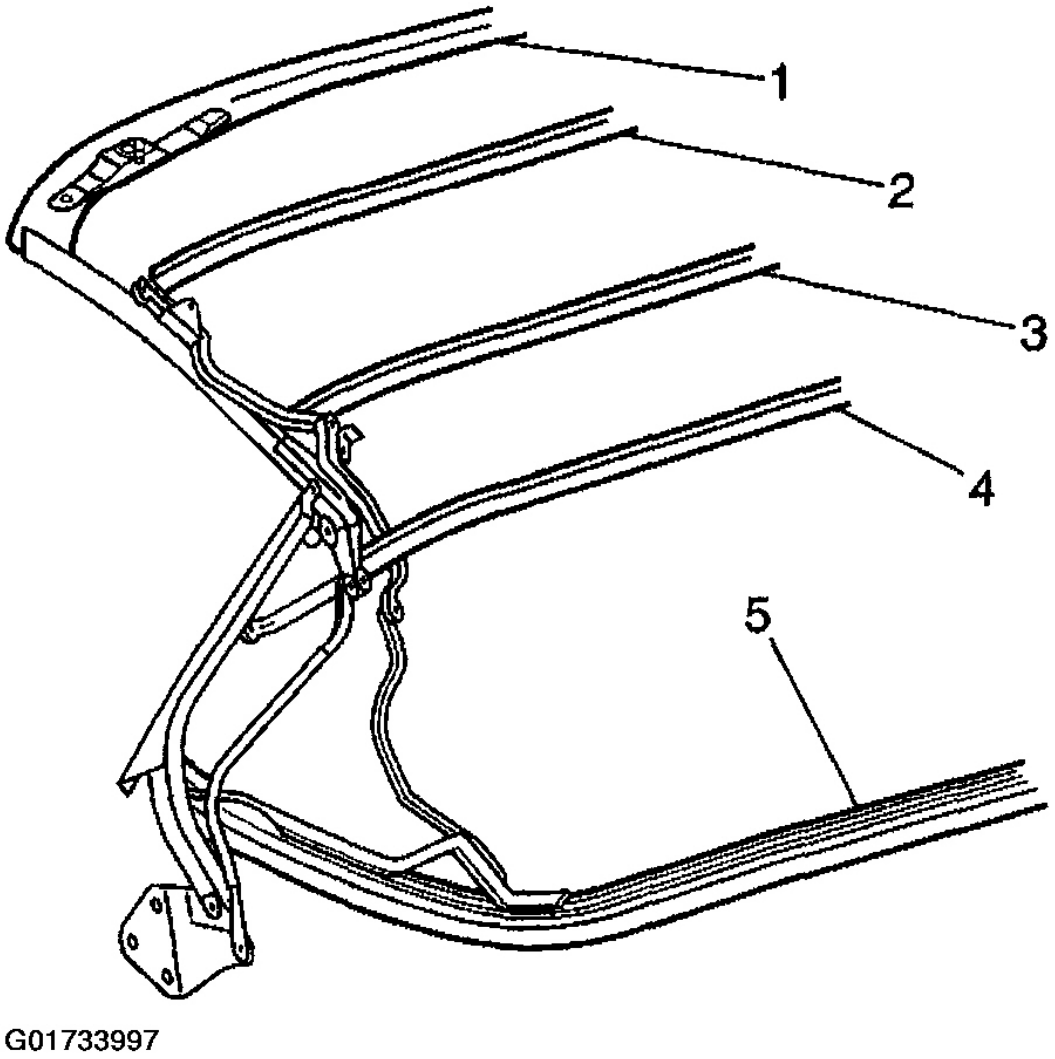

Fig. 105: Identifying Roof Bows
Courtesy of GENERAL MOTORS CORP.

4. Install the tension cable screws.

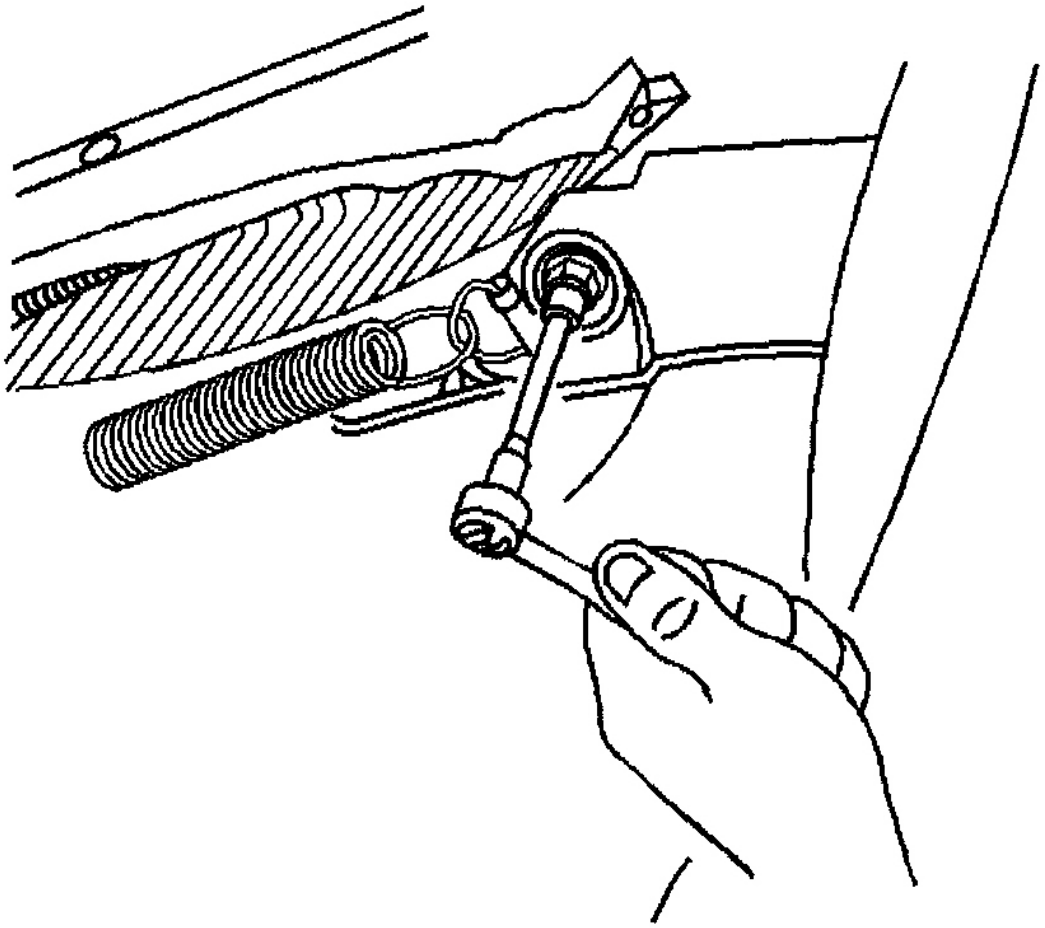

Fig. 106: Installing Tension Cable Screws
Courtesy of GENERAL MOTORS CORP.

Tighten

Tighten the screws to 2 N.m (18 lb in).

5. Attach the headliner push-on retainers to the #1 bow.

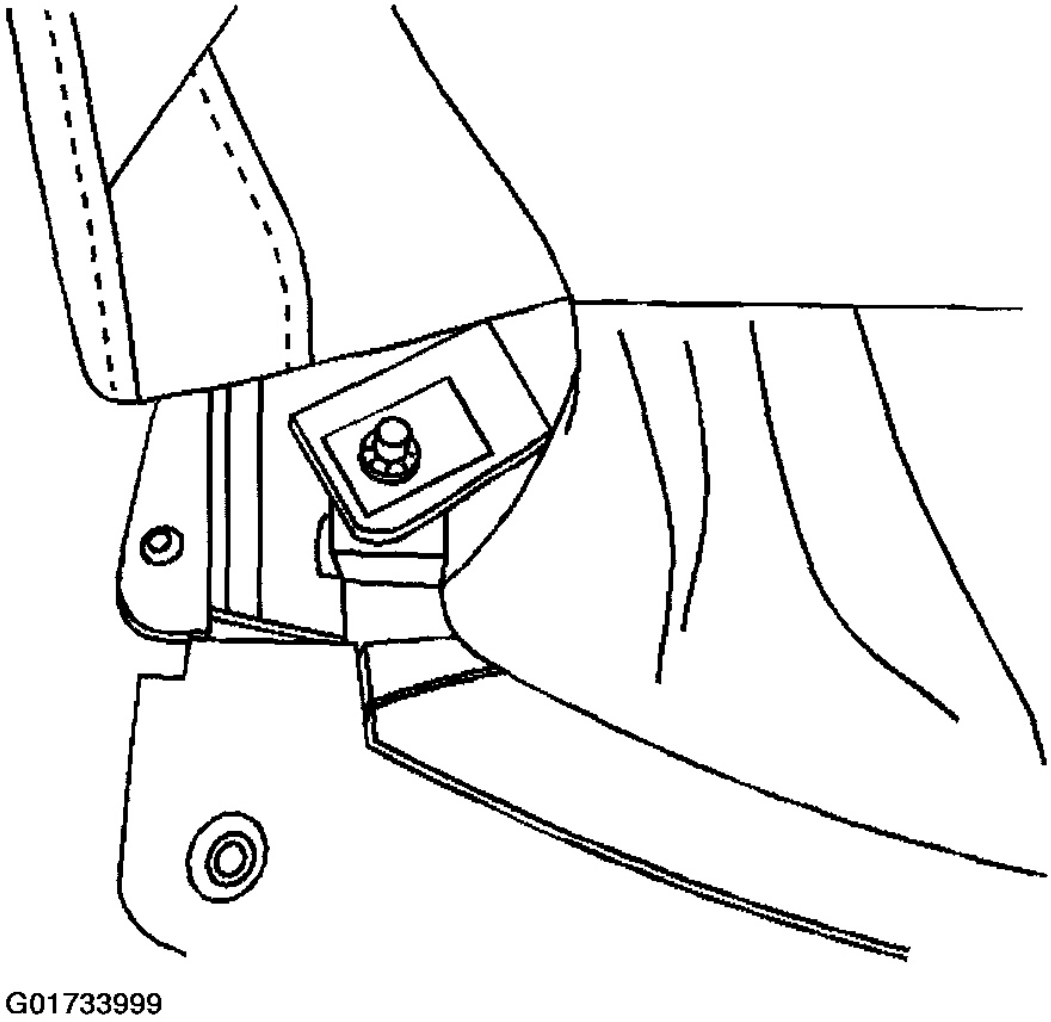

Fig. 107: Identifying #1 Bow Headliner Push-On Retainers
Courtesy of GENERAL MOTORS CORP.

6. Install the headliner screws to the bow.

   Tighten

   Tighten headliner attaching screws to 2 N.m (18 lb in).

7. Rivet the stay pads to the bow.

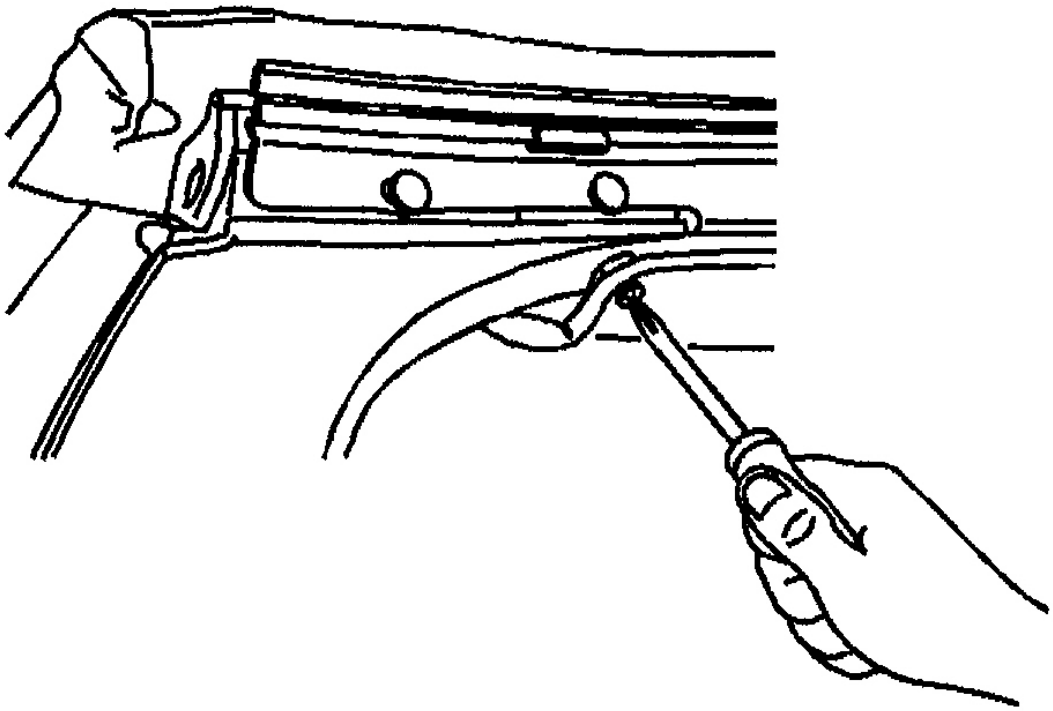

G01734000

Fig. 108: Installing #1 Bow Headliner Screws
Courtesy of GENERAL MOTORS CORP.

8. Pull the headliner over the #1 bow and staple the headliner to the bow.
9. Before stapling the top cover, Refer to **Folding Top Cover Tension Adjustment - Front** .
10. Reposition the folding top to the original position.

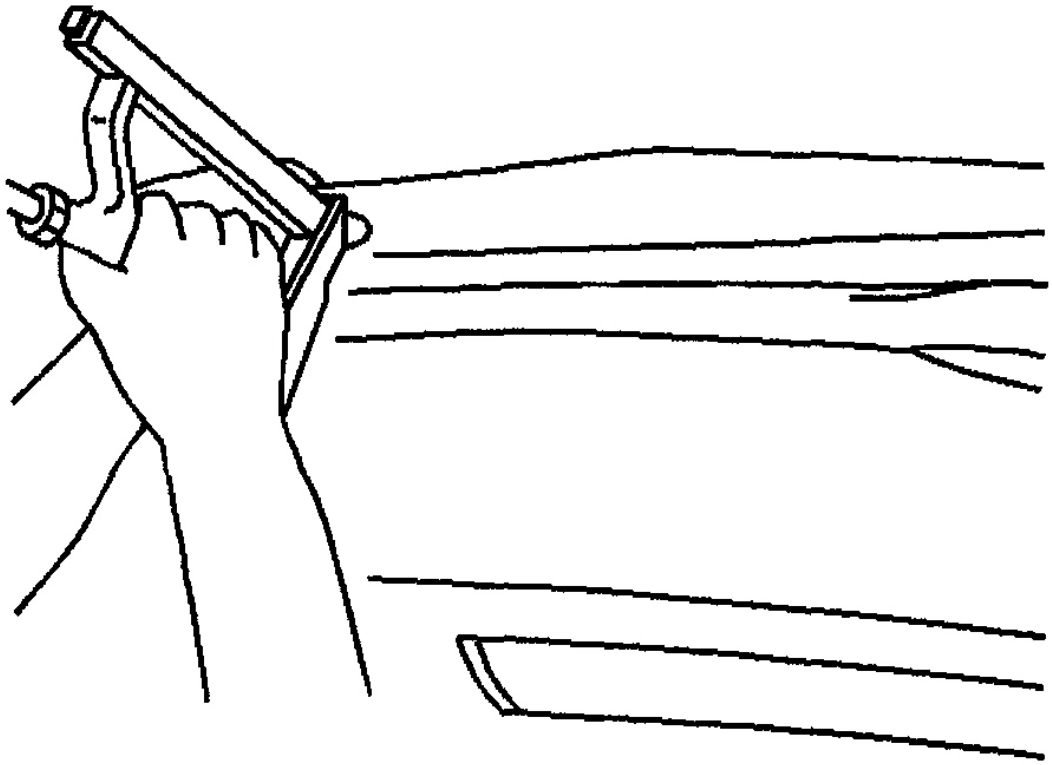

Fig. 109: Installing #1 Bow Headliner
Courtesy of GENERAL MOTORS CORP.

FOLDING TOP ROOF BOW REPLACEMENT (NUMBER 2 BOW)

Removal Procedure

1. Position the top with the #1 bow up.
2. Remove the seal compression panel. Refer To **Folding Top Seal Compression Panel Replacement** .
3. Using a grease pencil mark the location of the top cover where it wraps over the #1 bow to aid in installation.

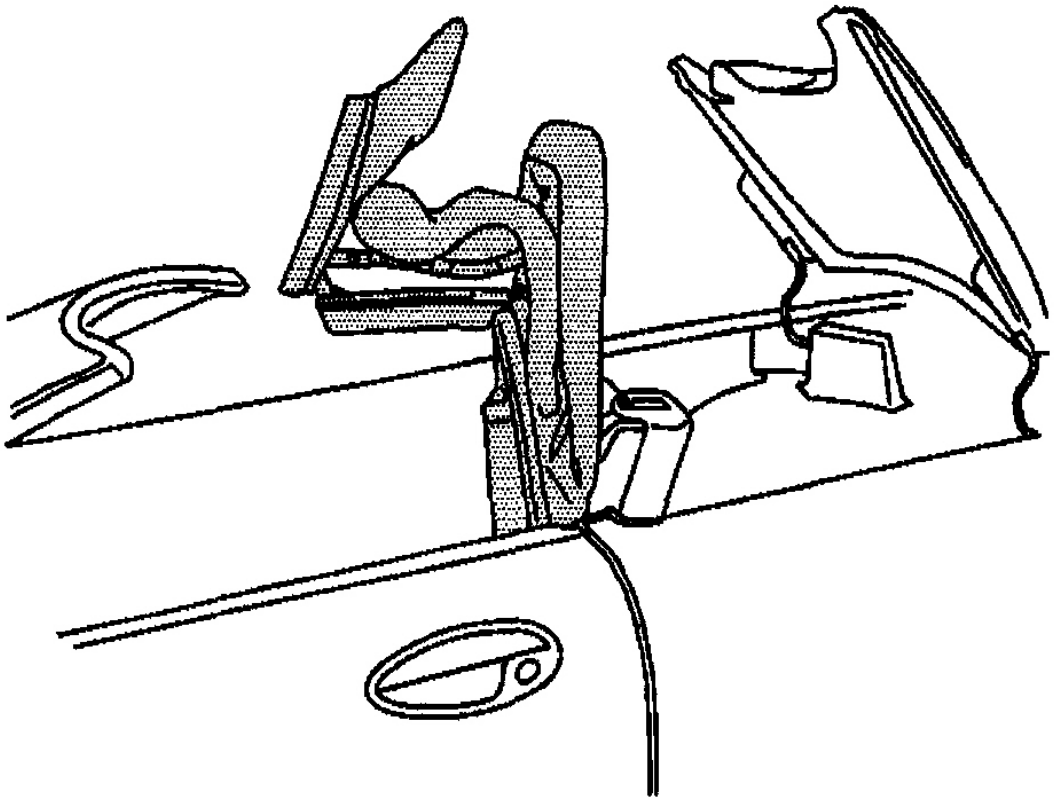

G01734002

Fig. 110: Aligning Folding Top
Courtesy of GENERAL MOTORS CORP.

4. Using a pair of needle nose pliers remove the top cover staples from the #1 bow.

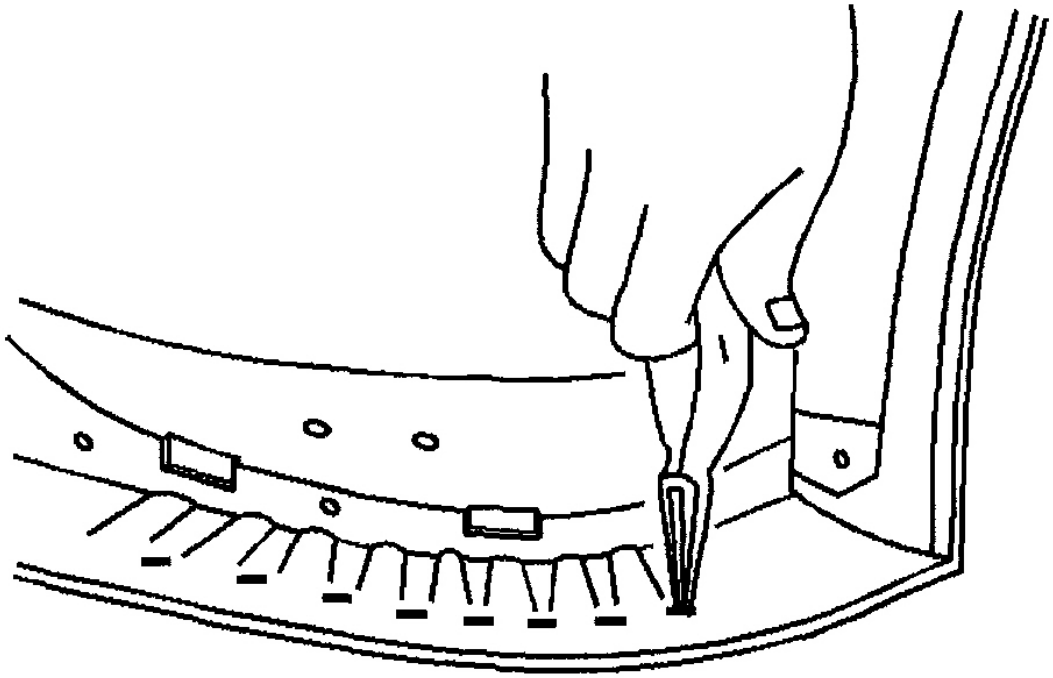

Fig. 111: Removing #1 Bow Top Cover Staples
Courtesy of GENERAL MOTORS CORP.

5. Using a pair of needle nose pliers remove the headliner staples from the #1 bow

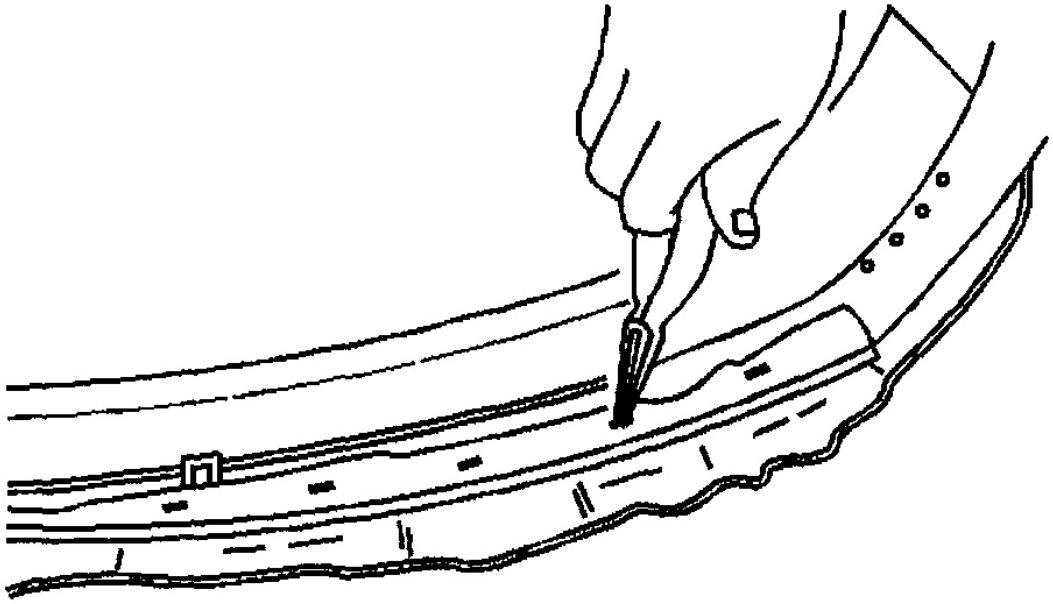

Fig. 112: Removing #1 Bow Headliner Staples
Courtesy of GENERAL MOTORS CORP.

6. Remove the tension cable screws from the #1 bow.

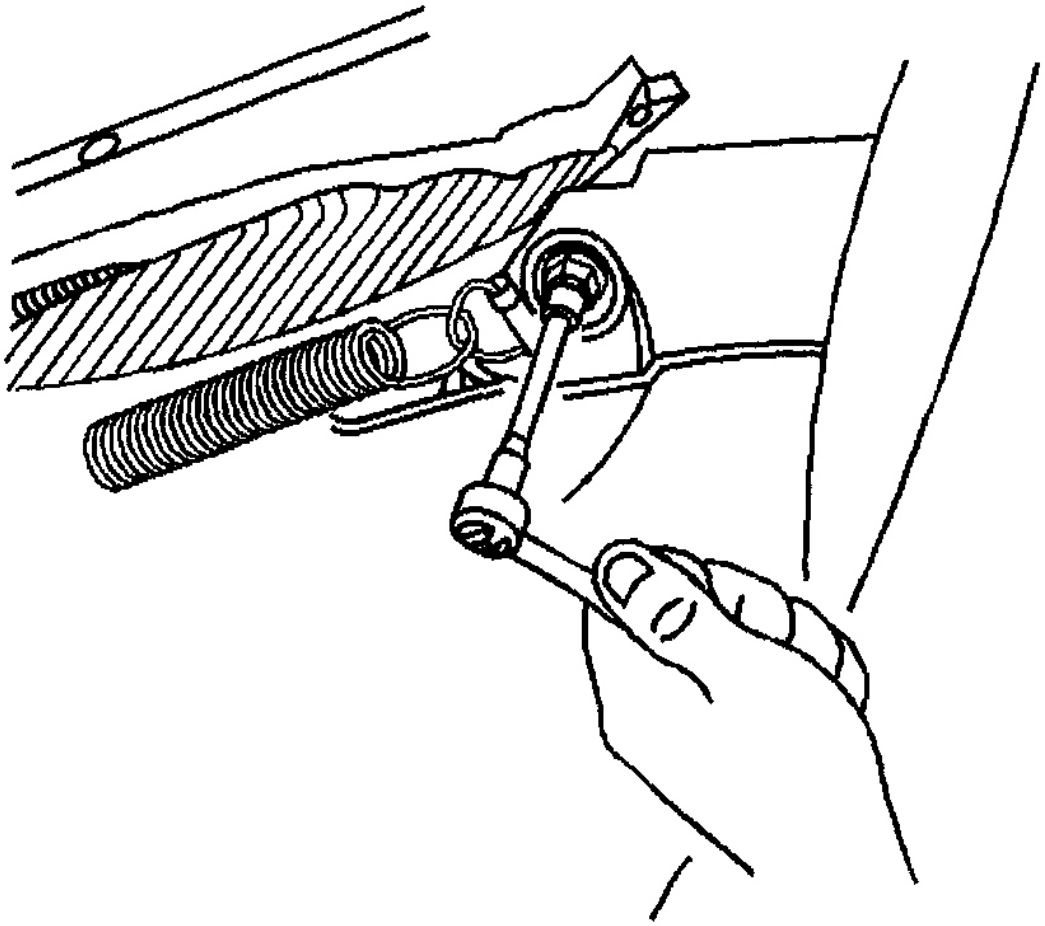

Fig. 113: Removing #1 Bow Tension Cable Screws
Courtesy of GENERAL MOTORS CORP.

7. Remove the headliner screws from the #1 bow.

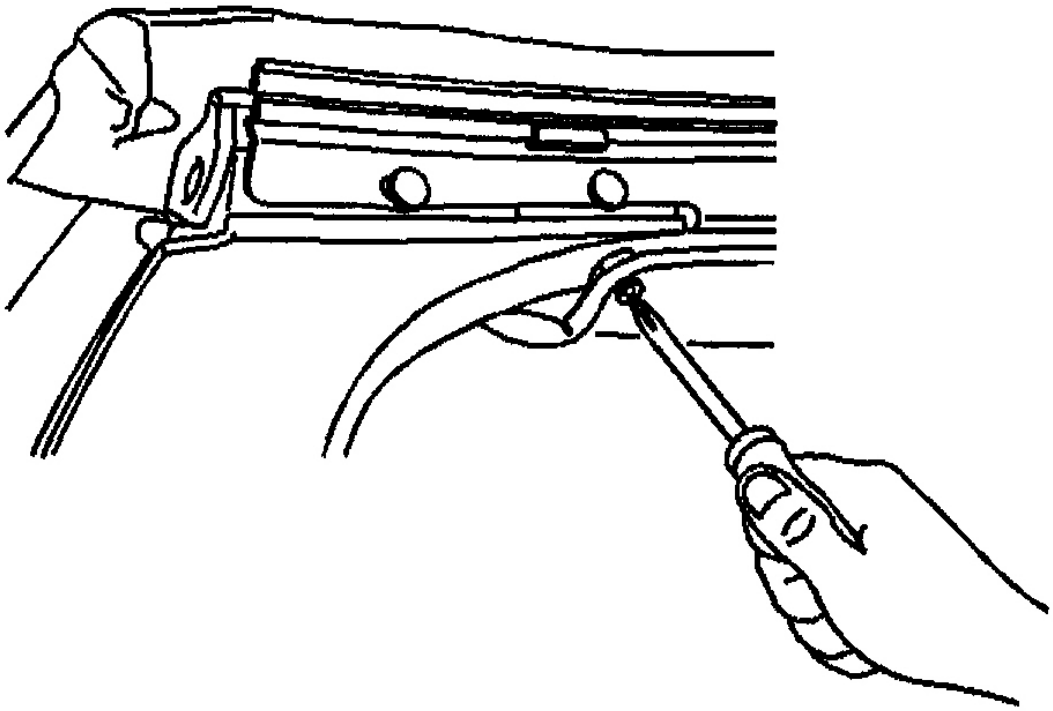

G01734006

Fig. 114: Removing #1 Bow Headliner Screws
Courtesy of GENERAL MOTORS CORP.

8. Remove the headliner push on retainers from the #1 bow.
9. Fold the top cover back over the #2 bow.

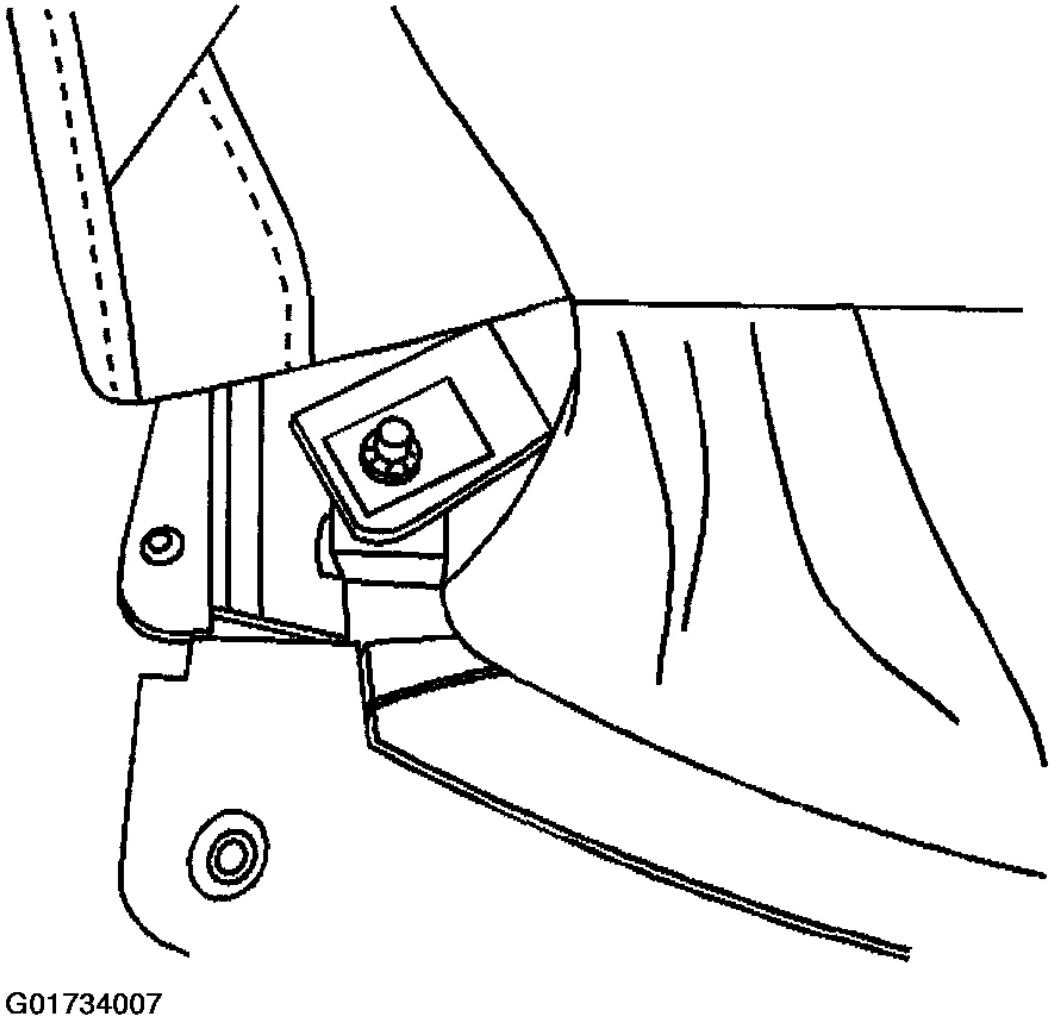

Fig. 115: Identifying #1 Bow Headliner Push-On Retainers
Courtesy of GENERAL MOTORS CORP.

10. Using a pair of needle nose pliers remove the stay pad staples from the #2 bow.

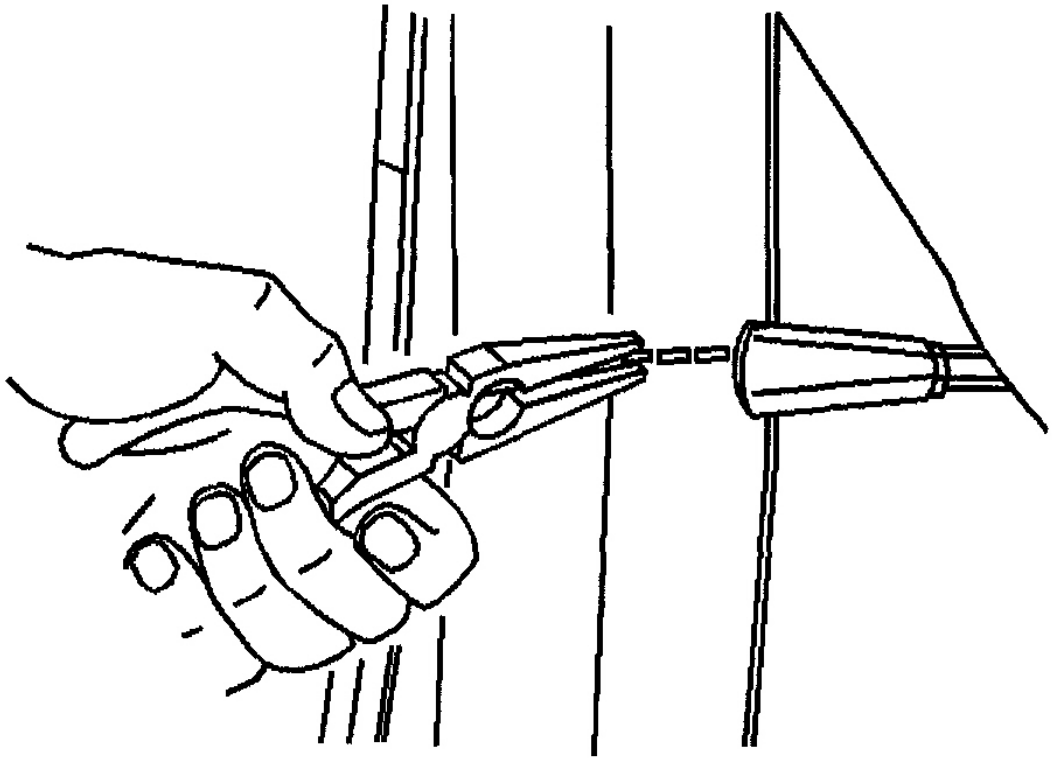

G01734008

Fig. 116: Removing #2 Bow Stay Pad Staples
Courtesy of GENERAL MOTORS CORP.

11. Remove the headliner screws from the #2 bow.

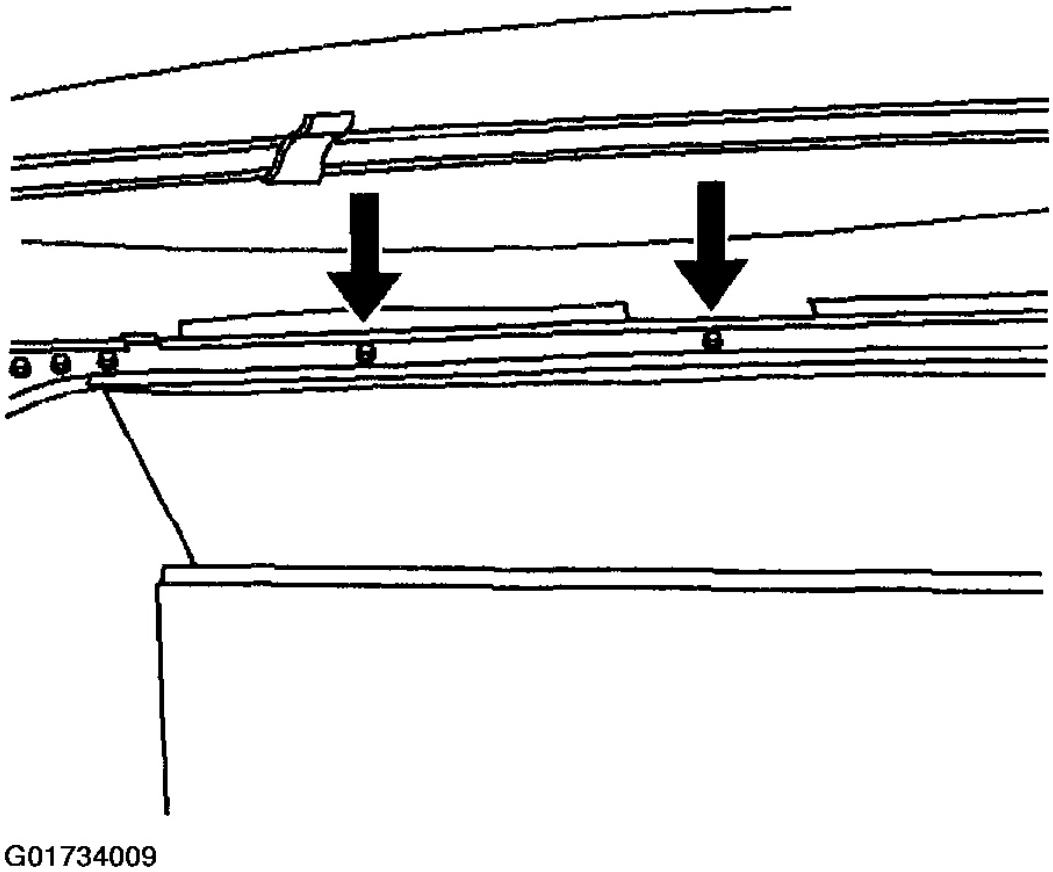

Fig. 117: Identifying #2 Bow Headliner Screws
Courtesy of GENERAL MOTORS CORP.

12. Remove the #2 bow screws from the main control link bracket.
13. Remove the #2 bow.

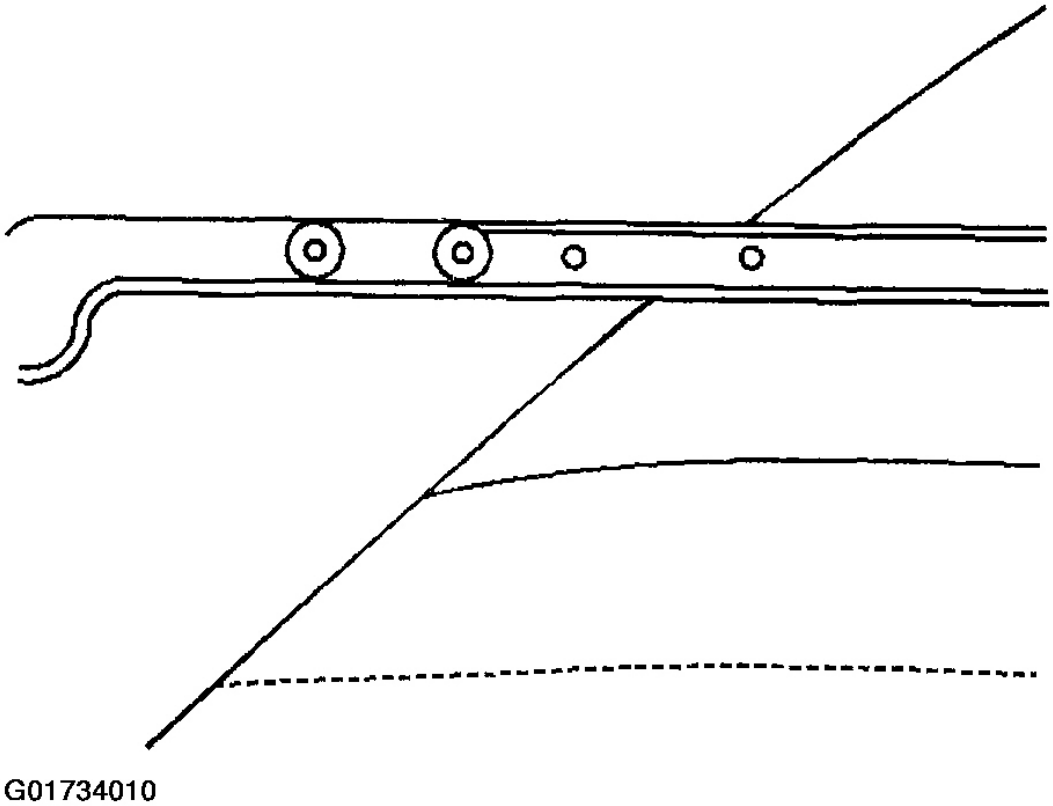

Fig. 118: Identifying #2 Bow Screws
Courtesy of GENERAL MOTORS CORP.

Installation Procedure

1. Install the #2 bow to the main control link bracket.

   CAUTION: Refer to FASTENER NOTICE .

2. Install the #2 bow screws to the main control link bracket (2).

   Tighten

   Tighten the screws to 13 N.m (10 lb in).

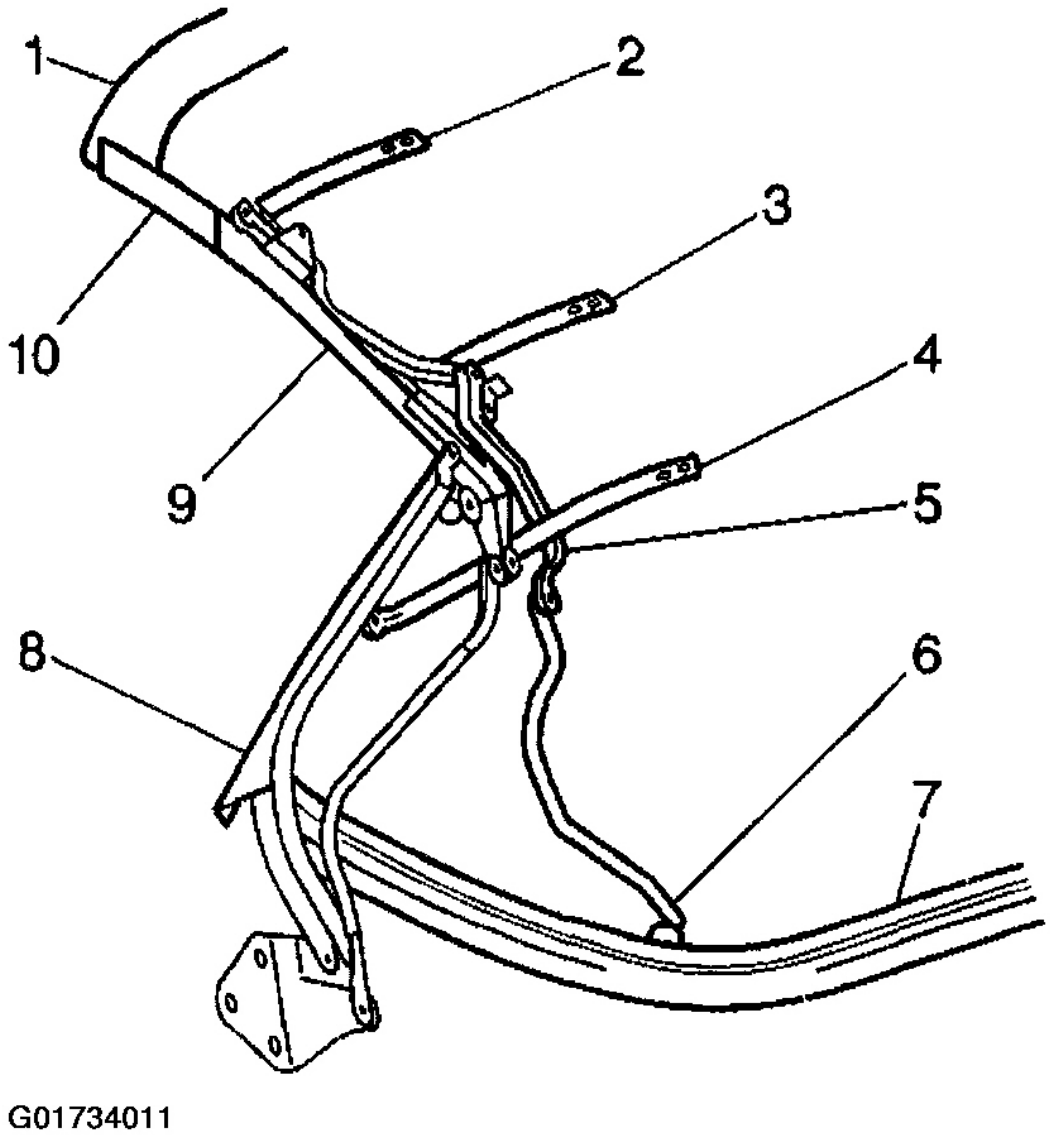

Fig. 119: Identifying Main Control Link Bracket
Courtesy of GENERAL MOTORS CORP.

3. Close and latch the convertible top.
4. Staple the stay pad to the #2 bow.
5. Open the convertible top and position the #1 and #5 bows up.

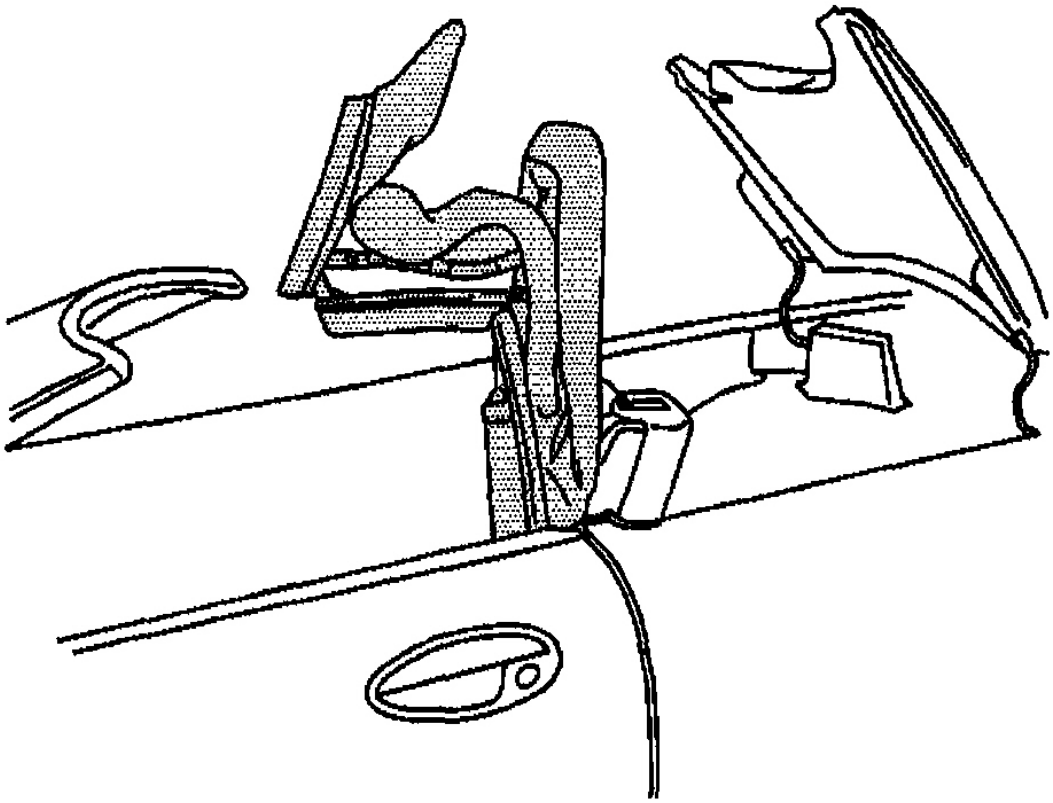

Fig. 120: Aligning Folding Top
Courtesy of GENERAL MOTORS CORP.

6. Install the headliner screws to the #2 bow.

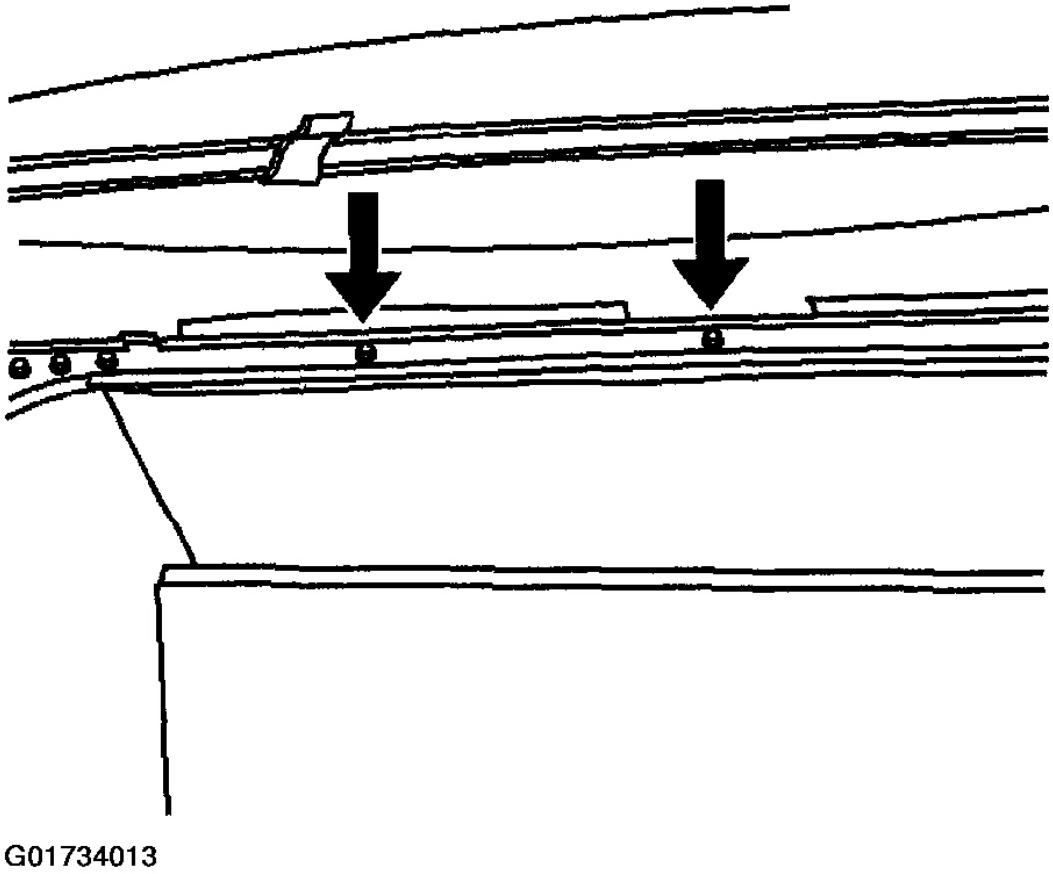

Fig. 121: Identifying #2 Bow Headliner Screws
Courtesy of GENERAL MOTORS CORP.

Tighten

Tighten the screws to 2 N.m (18 lb in).

7. Install the tension cable screws to the #1 bow.

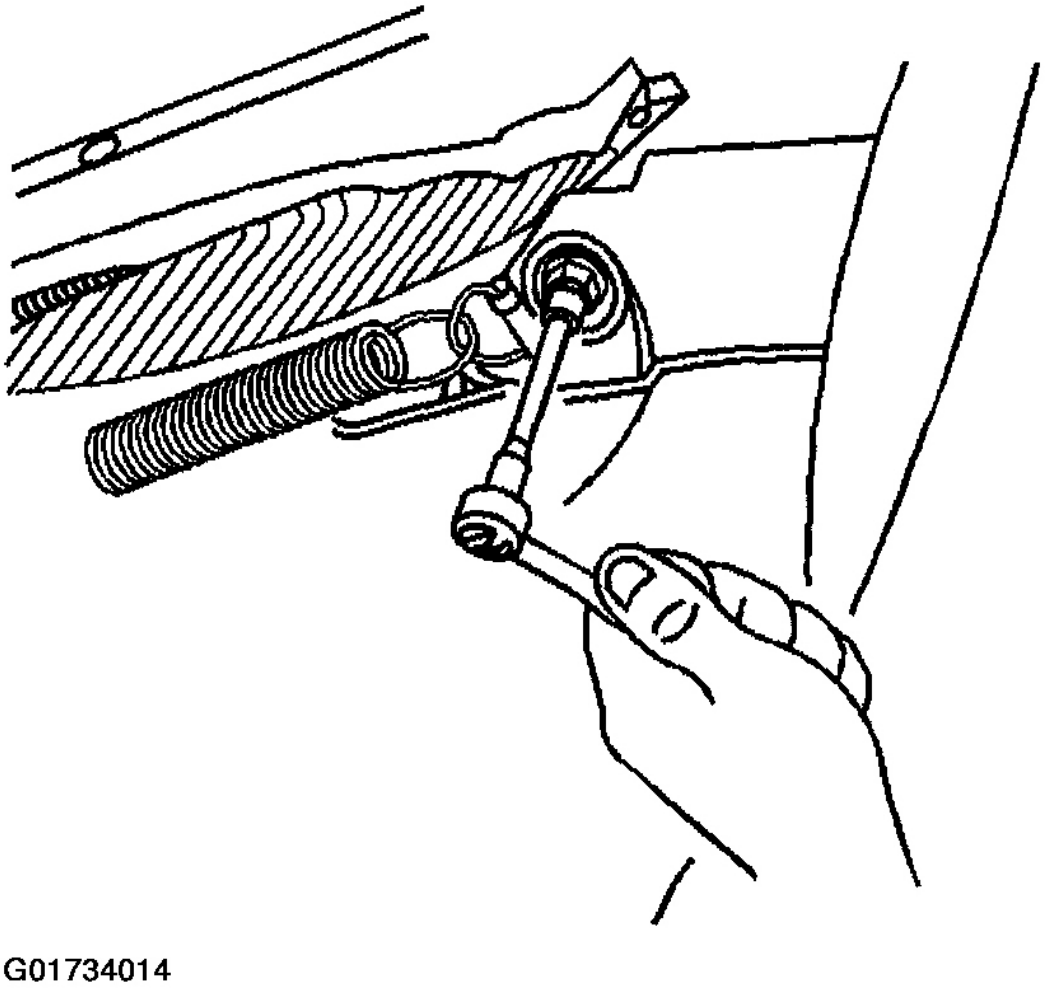

Fig. 122: Installing #1 Bow Tension Cable Screws
Courtesy of GENERAL MOTORS CORP.

Tighten

Tighten the screws to 2 N.m (18 lb in).

8. Attach the headliner push-on retainers to the #1 bow.

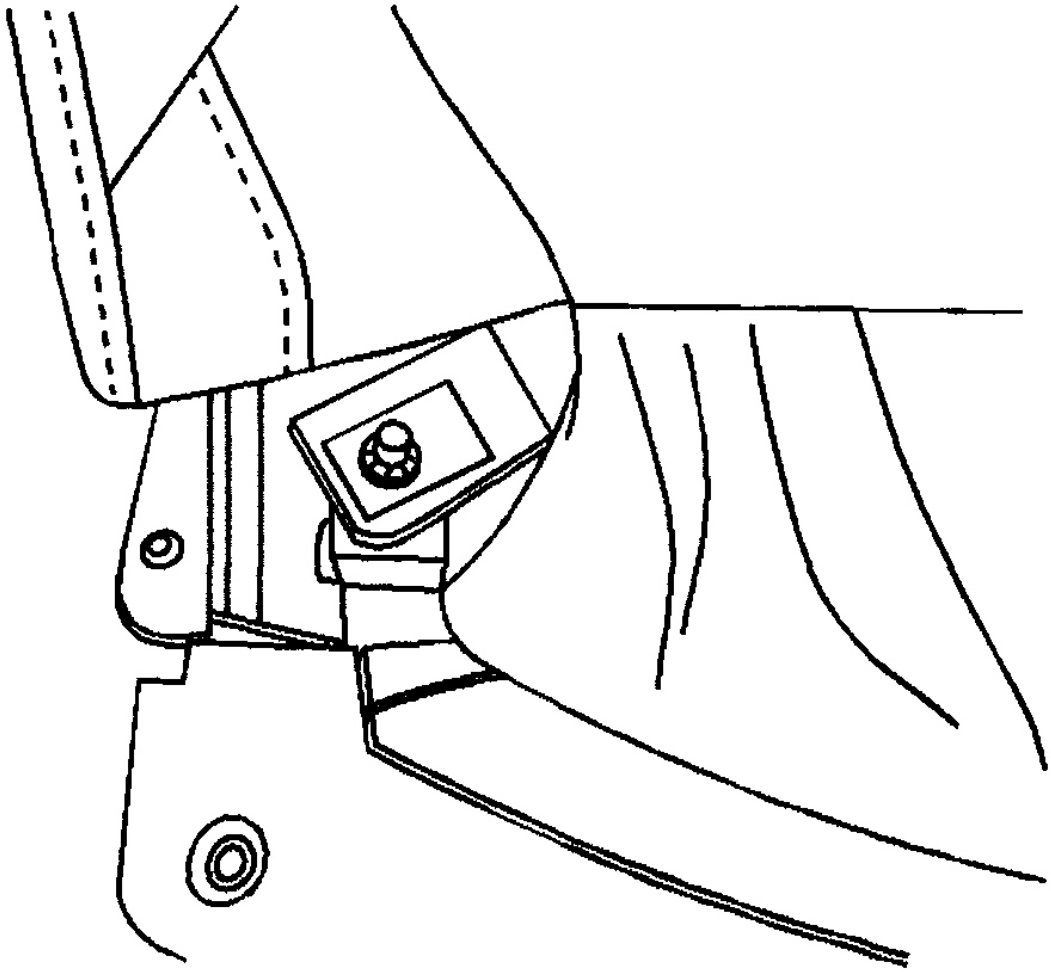

Fig. 123: Identifying #1 Bow Headliner Push-On Retainers
Courtesy of GENERAL MOTORS CORP.

9. Install the headliner screws to the #1 bow.

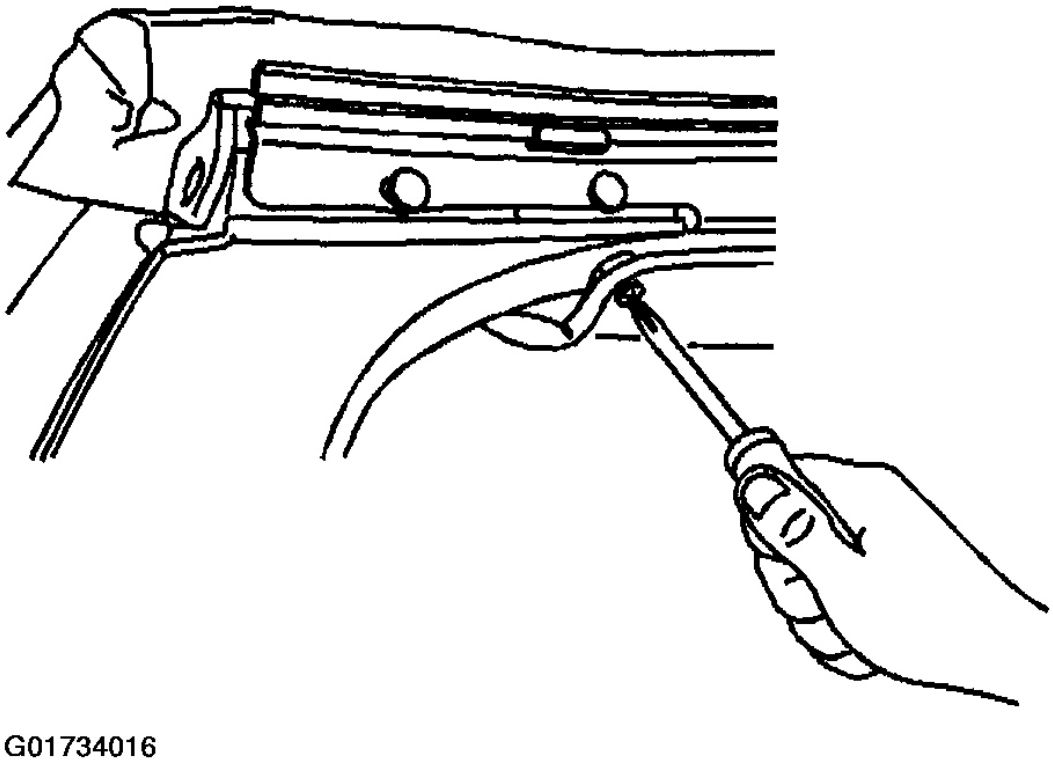

Fig. 124: Installing #1 Bow Headliner Screws
Courtesy of GENERAL MOTORS CORP.

Tighten

Tighten the screws to 2 N.m (18 lb in).

10. Fold the top cover over the #1 bow and staple into place.
11. Refer to **Folding Top Cover Tension Adjustment - Front** .
12. Reposition the folding top to the original position.

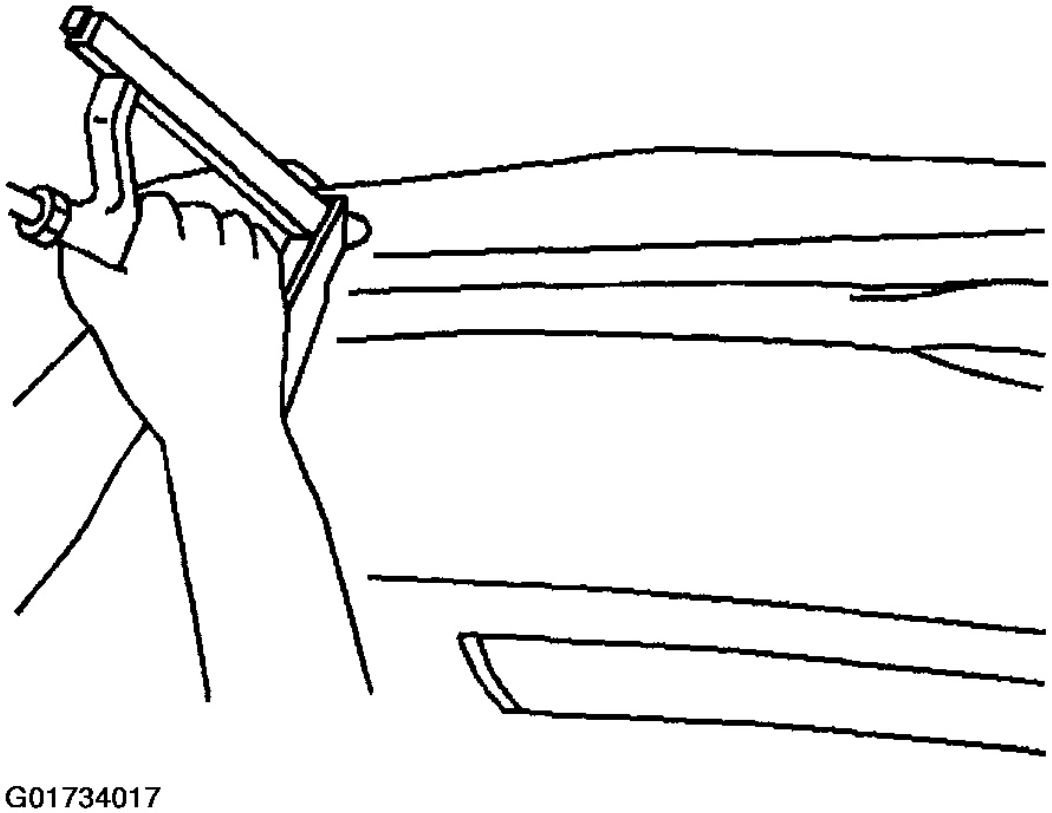

Fig. 125: Stapling #1 Bow Top Cover
Courtesy of GENERAL MOTORS CORP.

FOLDING TOP ROOF BOW REPLACEMENT (NUMBER 3 BOW)

Removal Procedure

Start at the front of the folding top and work your way rearward.

1. Perform all steps necessary to remove the #2 bow. Refer to **Folding Top Roof Bow Replacement (Number 1 Bow)** -**Folding Top Roof Bow Replacement (Number 5 Bow)** .
2. Remove the headliner screws from the #3 bow.

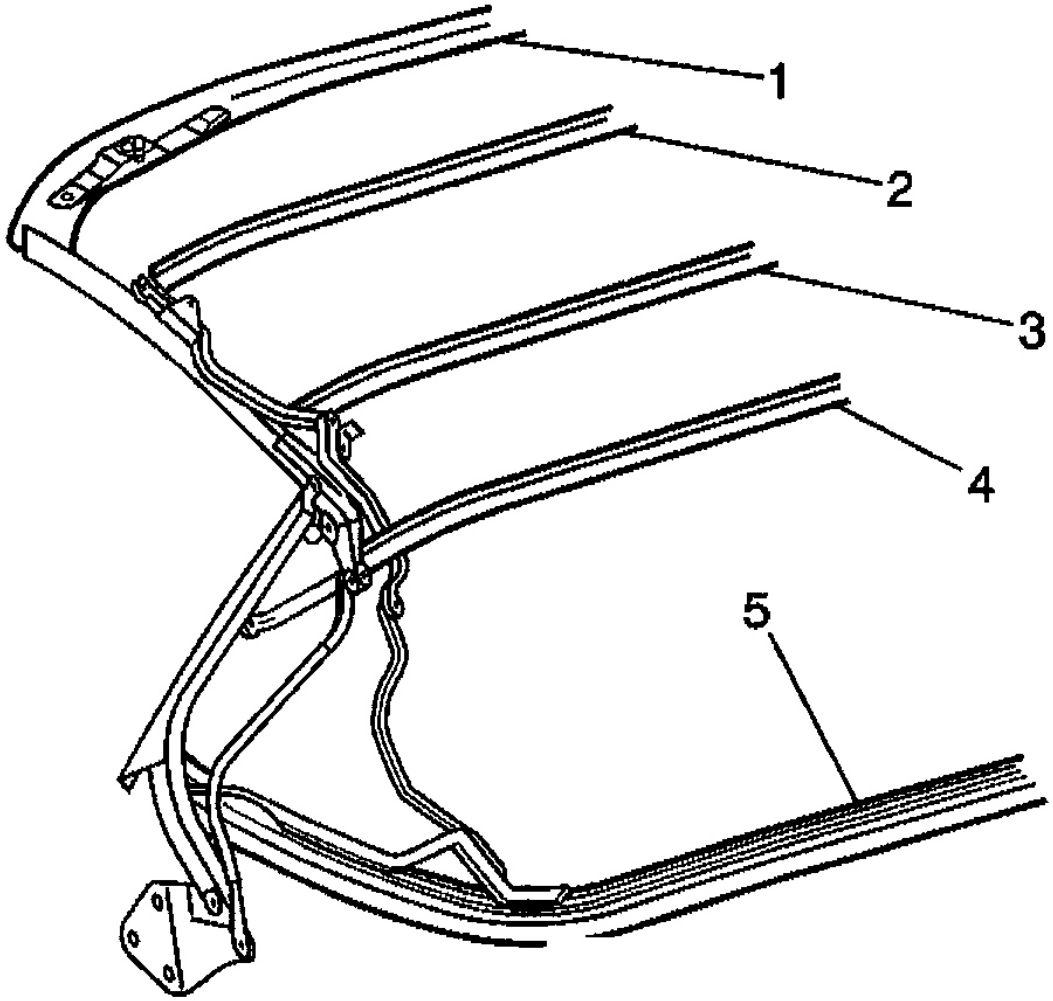

Fig. 126: Identifying Roof Bows
Courtesy of GENERAL MOTORS CORP.

3. Using a pair of needle nose pliers remove the stay pad staples from the #3 bow.

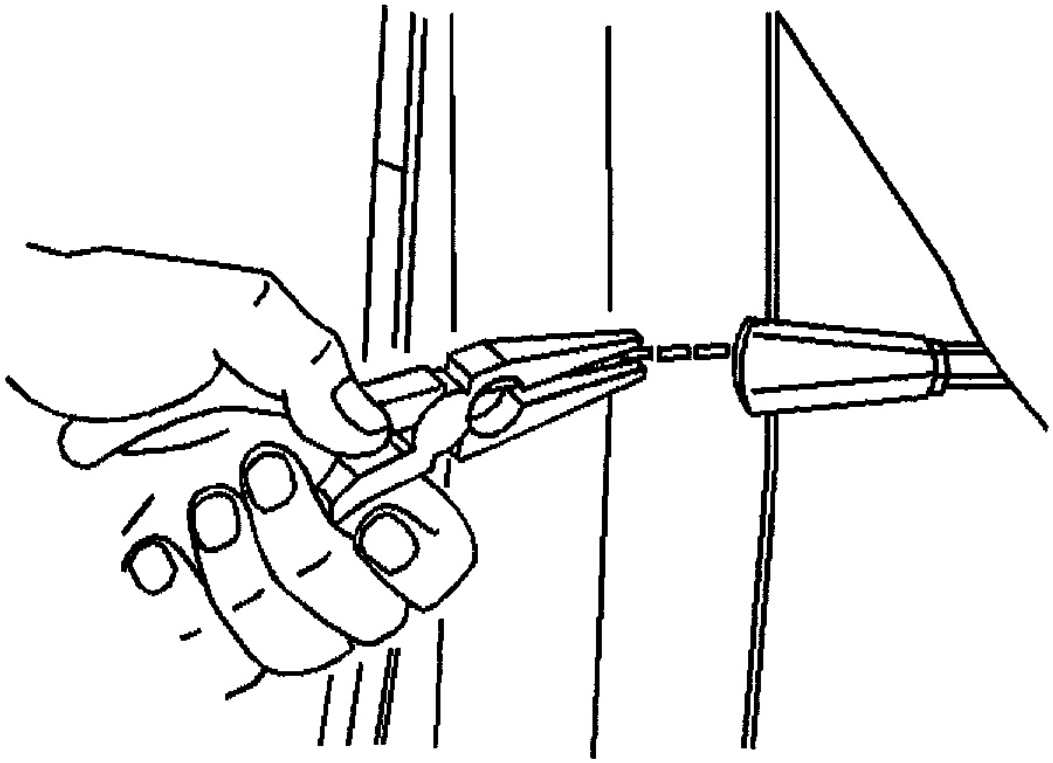

Fig. 127: Removing #3 Bow Stay Pad Staples
Courtesy of GENERAL MOTORS CORP.

4. Remove the #3 bow screws from the main control link bracket.
5. Remove the headliner screws to the #3 bow.
6. Remove the #3 bow.

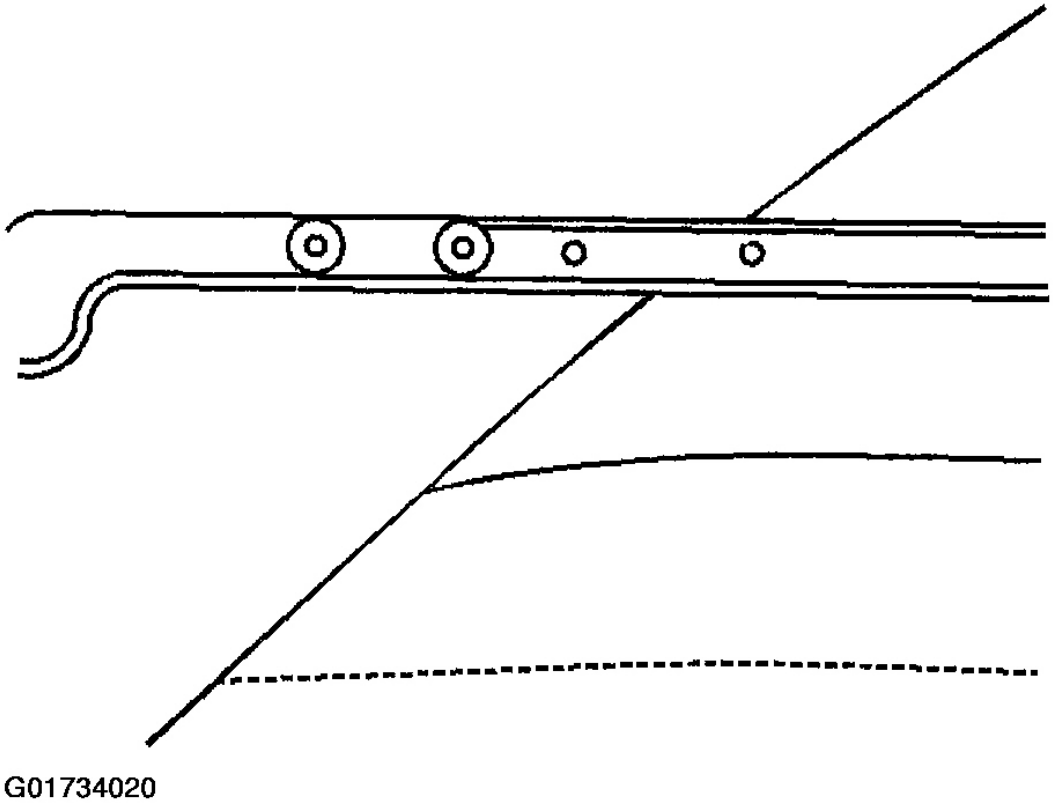

Fig. 128: Locating #3 Bow Headliner Screws
Courtesy of GENERAL MOTORS CORP.

Installation Procedure

1. Install the #3 bow to the main control link bracket.

   CAUTION: Refer to FASTENER NOTICE .

2. Install the #3 bow screws to the main control link bracket (3).

   Tighten

   Tighten roof bow to the main control link bracket screws to 13 N.m (10 lb ft).

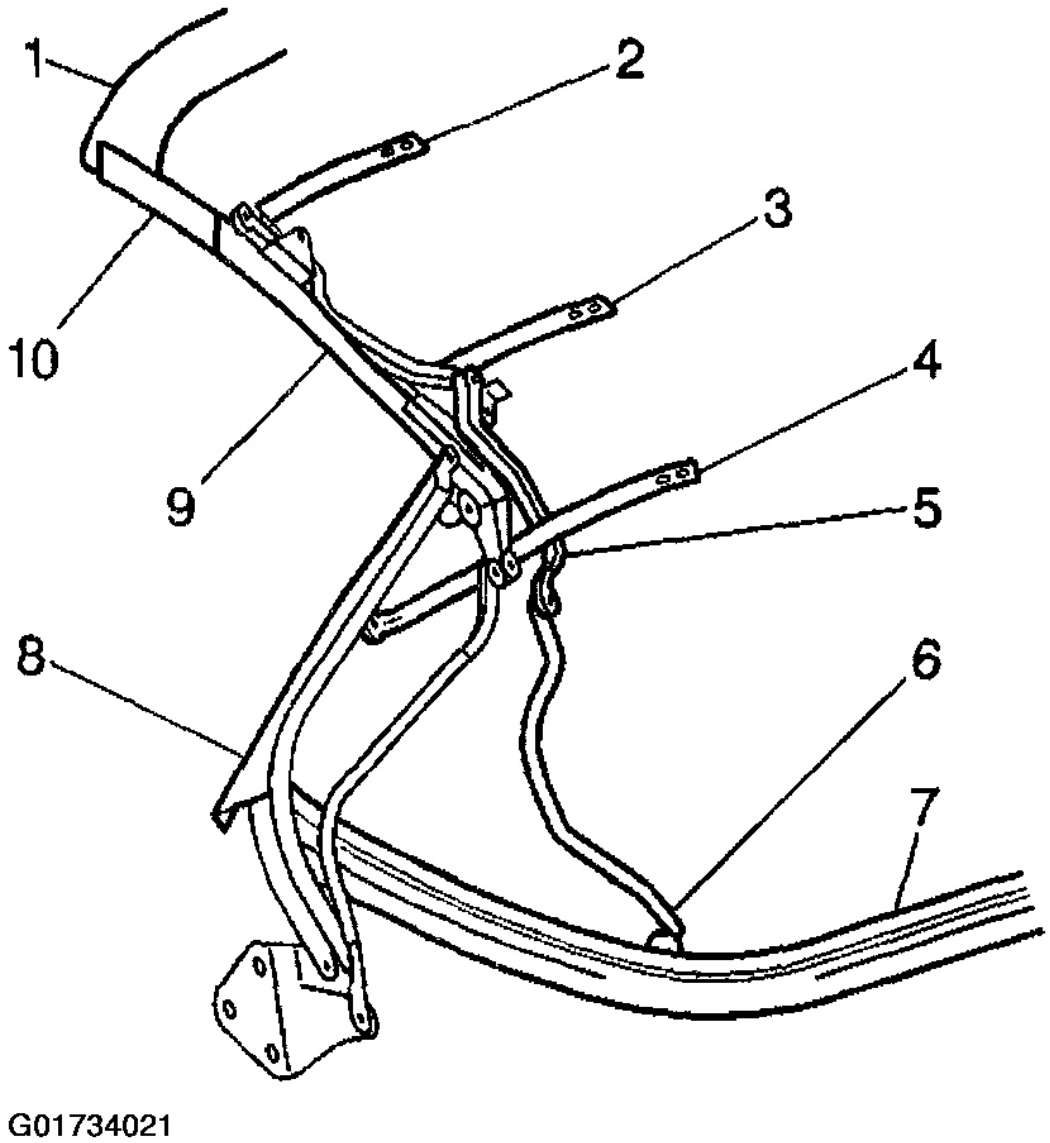

Fig. 129: Identifying Main Control Link Bracket
Courtesy of GENERAL MOTORS CORP.

3. Staple the stay pad to the #3 bow (3).

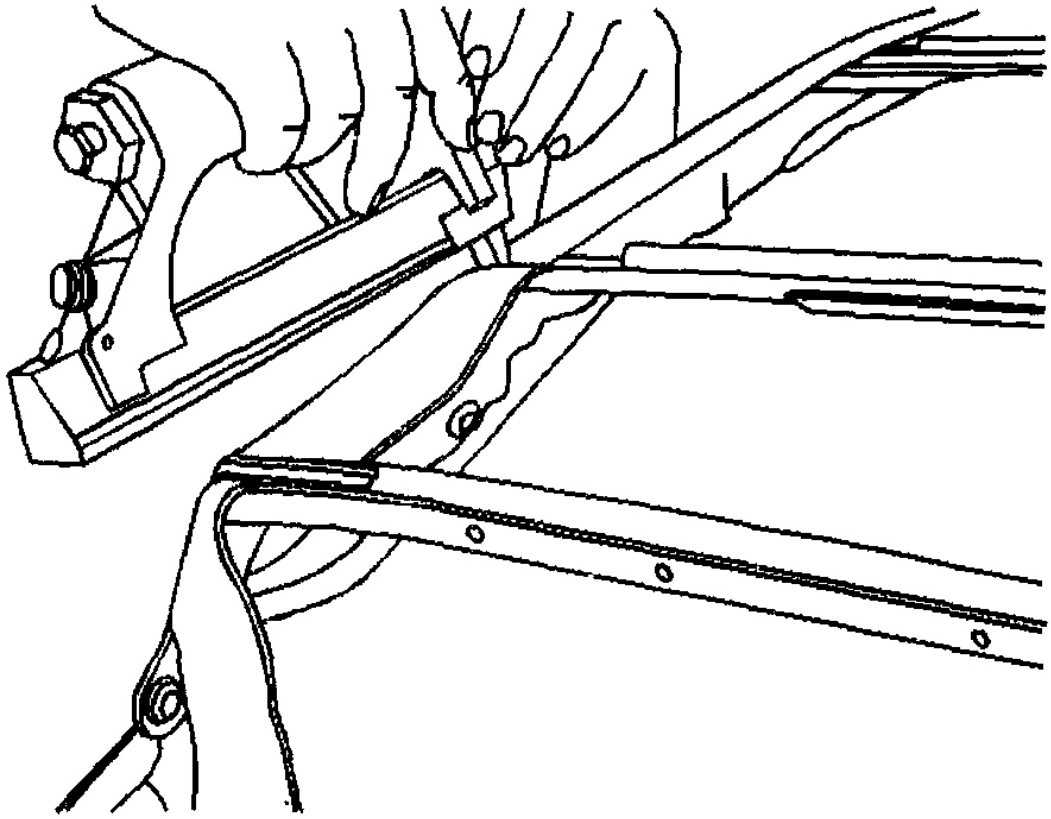

Fig. 130: Installing #3 Bow Stay Pad
Courtesy of GENERAL MOTORS CORP.

4. Install the headliner screws to the #3 bow.

   Tighten

   Tighten the headliner screws to 2 N.m (18 lb in).

5. Refer to **Folding Top Roof Bow Replacement (Number 1 Bow)** -**Folding Top Roof Bow Replacement (Number 5 Bow)** .

FOLDING TOP ROOF BOW REPLACEMENT (NUMBER 4 BOW)

Removal Procedure

1. Remove the folding top and place the top on a clean flat surface. Refer to **Folding Top Replacement** .
2. Remove the #5 bow weatherstrip. Refer to **Weatherstrip Replacement - Folding Top (Front and Center Side Rails)** or **Weatherstrip Replacement - Folding Top (Rear Side Rail)** or **Weatherstrip Replacement - Folding Top (Number Five Bow)** .

WARNING: Refer to SAFETY GLASSES CAUTION .

3. Drill out the top cover rivets to the bottom of the right and the left rear side rails.
4. Pull the top cover from the bottom of the rear side rails and from the ends of the #5 bow.
5. Using a grease pencil mark the position of the top cover along the edge where it wraps over the #5 bow to aid in installation.
6. Using a pair of needle nose pliers remove the top cover staples from the #5 bow.

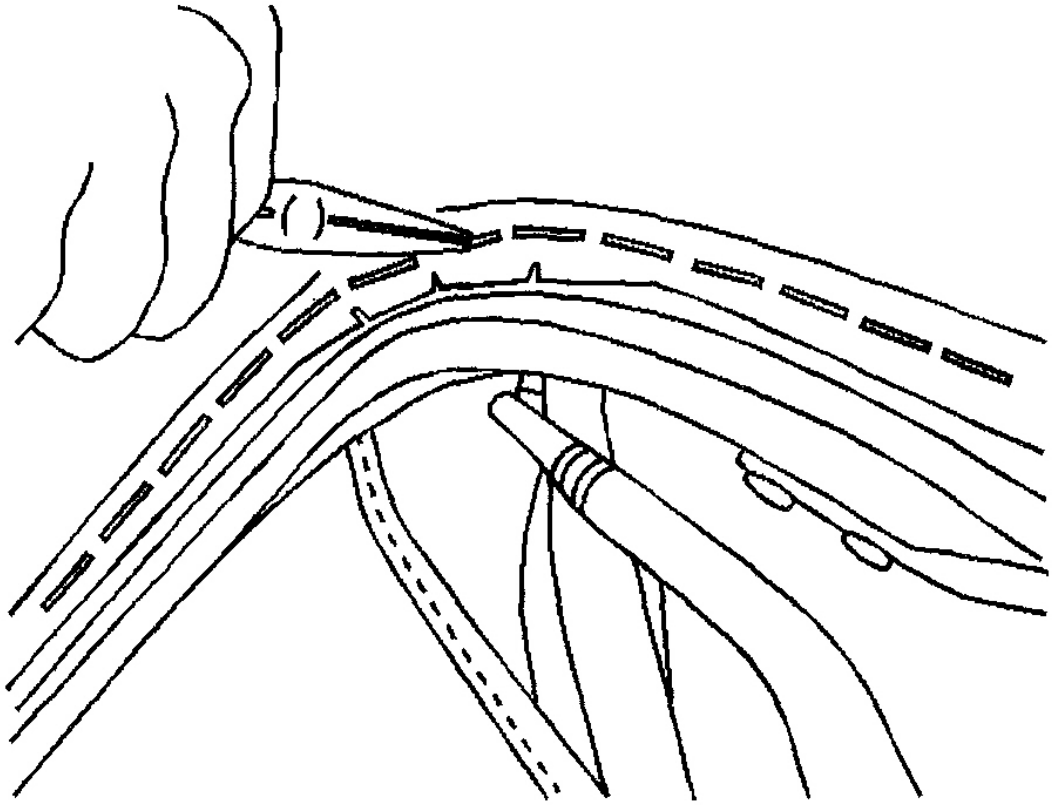

G01734023

Fig. 131: Removing #5 Bow Top Cover Staples
Courtesy of GENERAL MOTORS CORP.

7. Fold the top cover forward over the #3 bow.
8. Remove the headliner screws from the #4 bow.

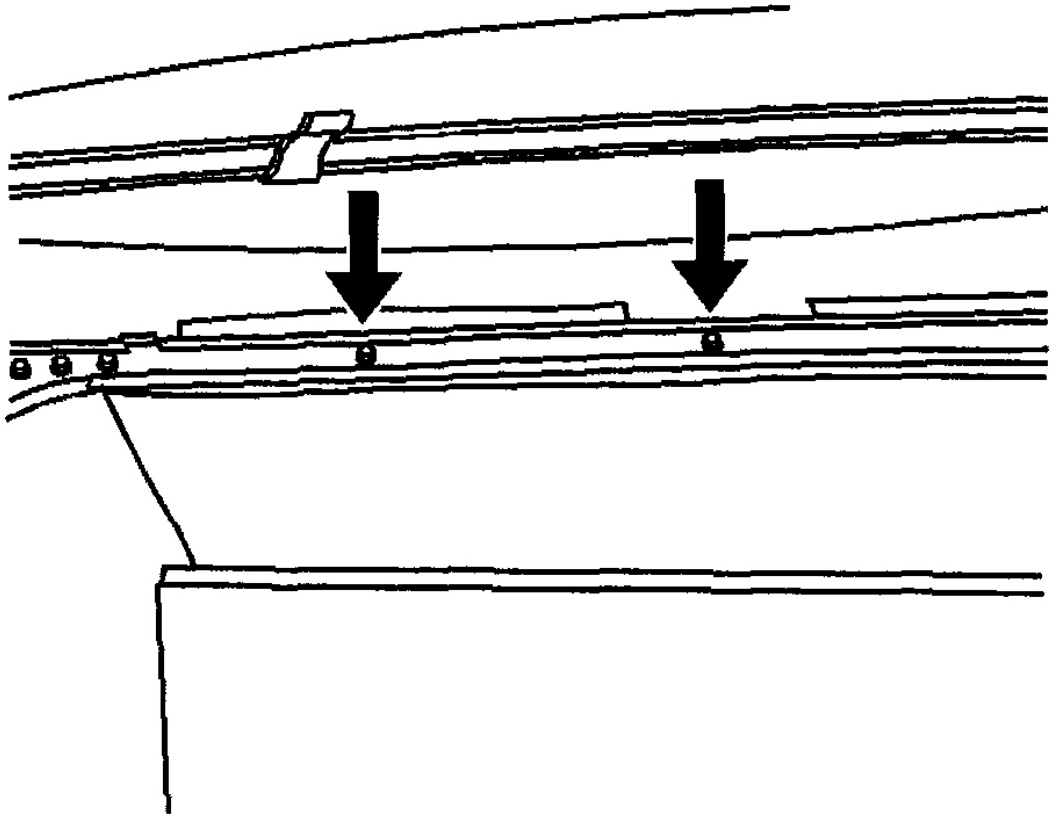

Fig. 132: Locating #4 Bow Headliner Screws
Courtesy of GENERAL MOTORS CORP.

9. Using a pair of needle nose pliers remove the stay pad staples from the #4 bow.

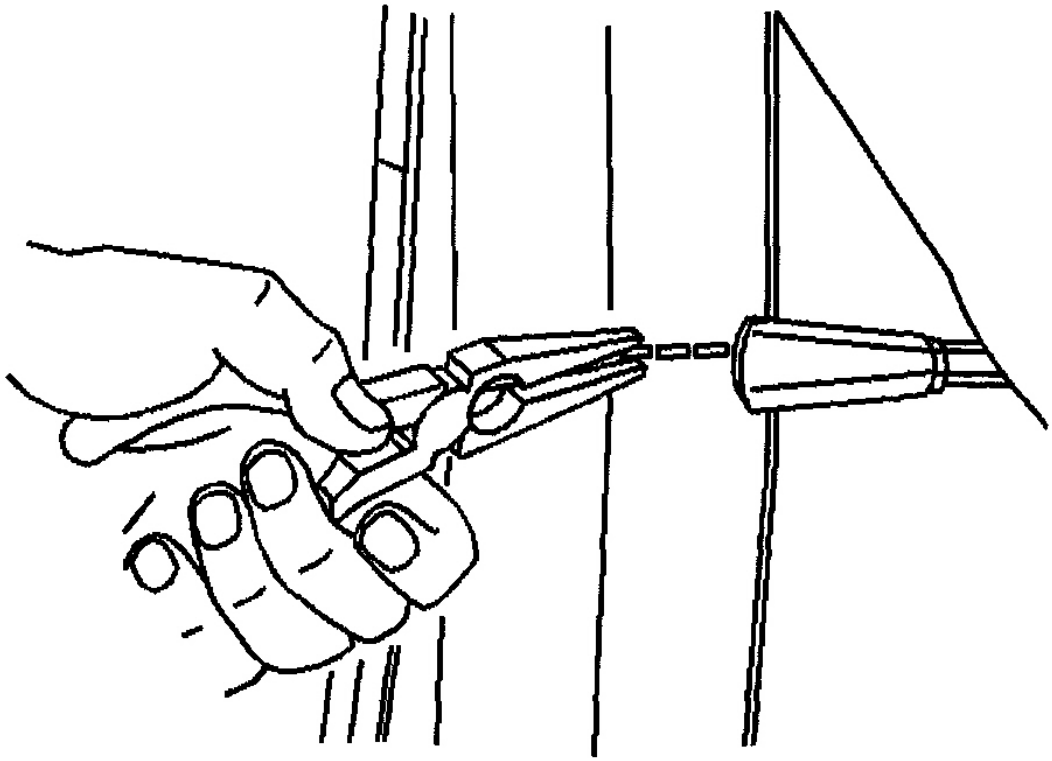

Fig. 133: Removing #4 Bow Stay Pad Staples
Courtesy of GENERAL MOTORS CORP.

10. Turn the top over.
11. Remove the glare cover elastic straps screws from the #5 bow.
12. Remove the headliner elastic straps screws from the #5 bow.
13. Remove the headliner elastic straps screws from the rear side rails.
14. Remove the headliner screws from the rear side rails.
15. Remove the rear window support elastic strap screws from the #4 bow.

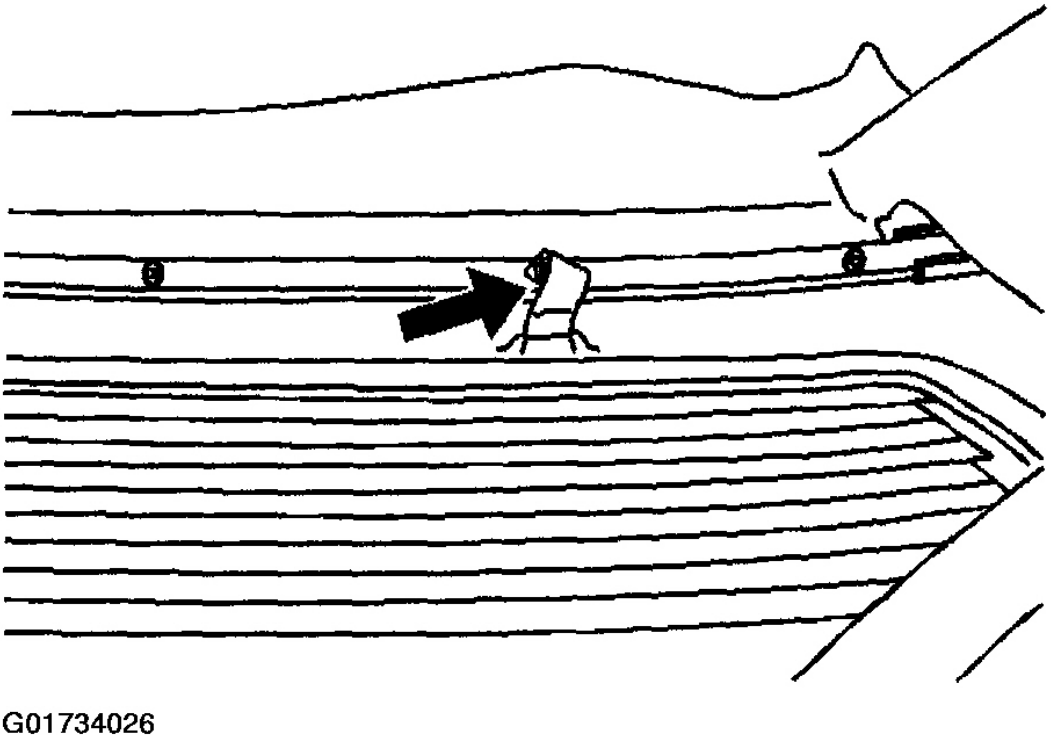

Fig. 134: Identifying #4 Bow Rear Window Support Straps
Courtesy of GENERAL MOTORS CORP.

16. Remove the #4 bow screws from the main control link bracket.
17. Remove the #4 bow.

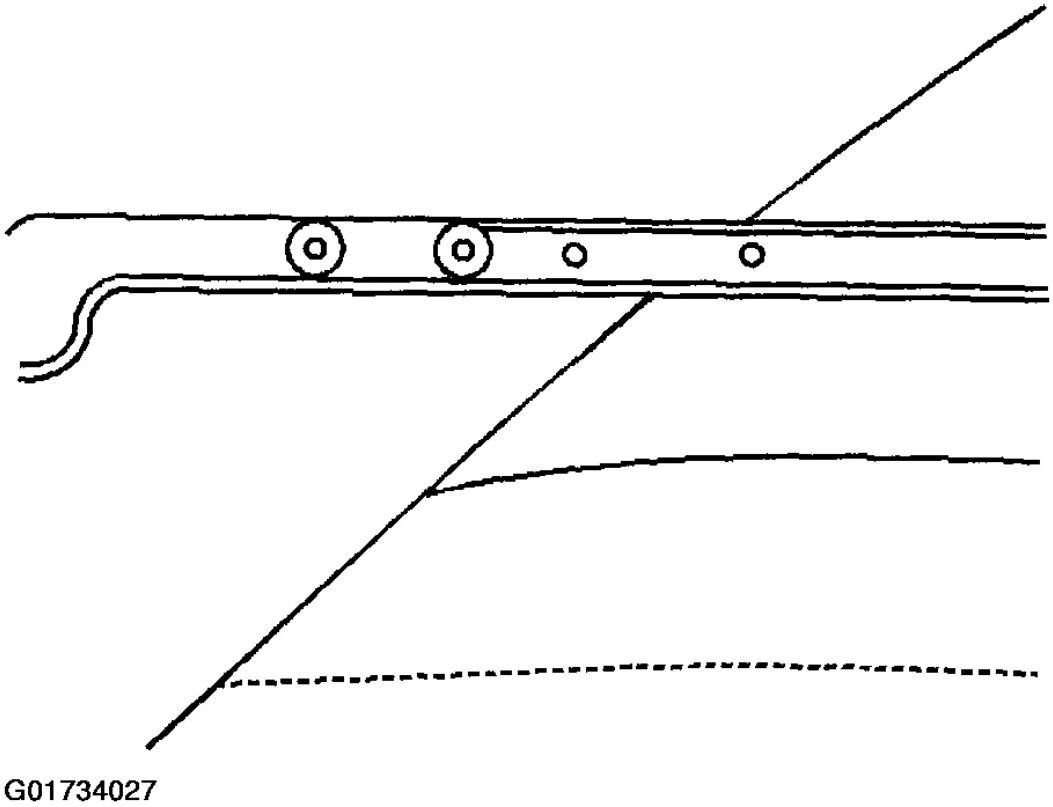

Fig. 135: Identifying #4 Bow Screws
Courtesy of GENERAL MOTORS CORP.

Installation Procedure

1. Install the #4 bow to the main control link bracket.

   CAUTION: Refer to FASTENER NOTICE .

2. Install the #4 bow screws to the main control link bracket.

   Tighten

   Tighten the screws to 13 N.m (10 lb ft).

3. Position the top right side up and in a fully raised position.

4. Staple the stay pad to the #4 bow.
5. Install the headliner screws to the #4 bow.

Tighten

Tighten the screws to 2 N.m (18 lb in).

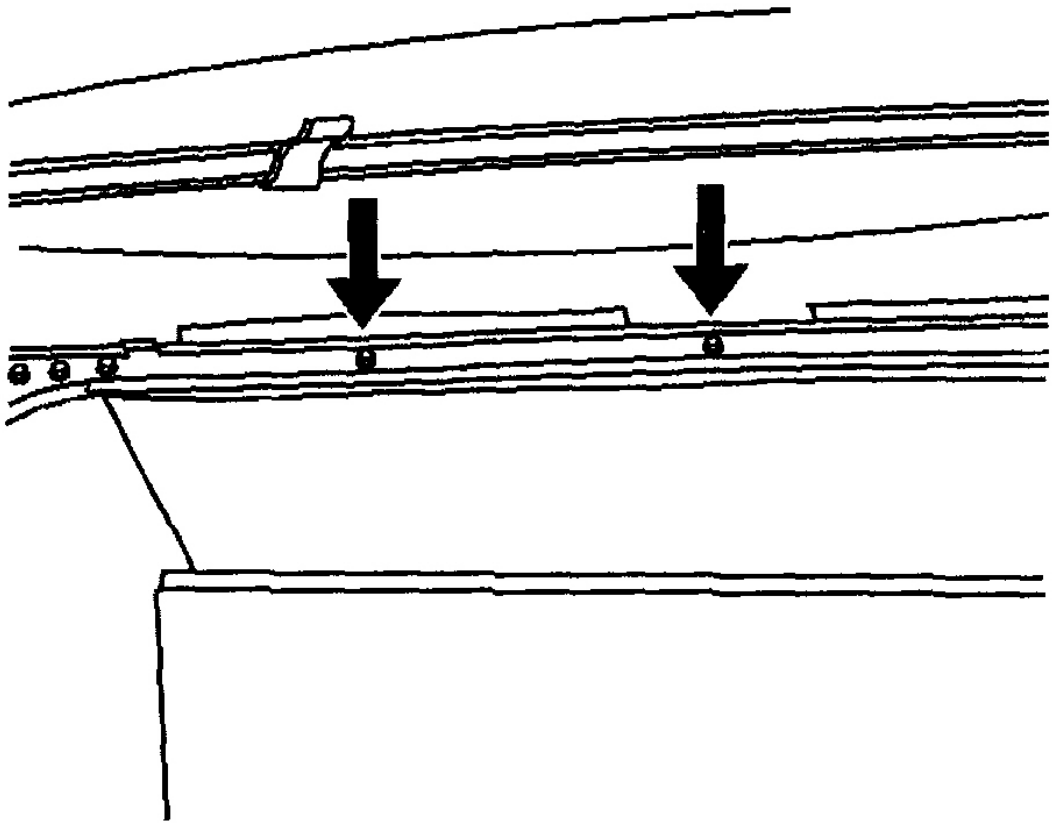

Fig. 136: Locating #4 Bow Headliner Screws
Courtesy of GENERAL MOTORS CORP.

6. Turn the top over.
7. Install the rear window support elastic strap screws to the #4 bow.

Tighten

Tighten the screws to 2 N.m 18 lb in).

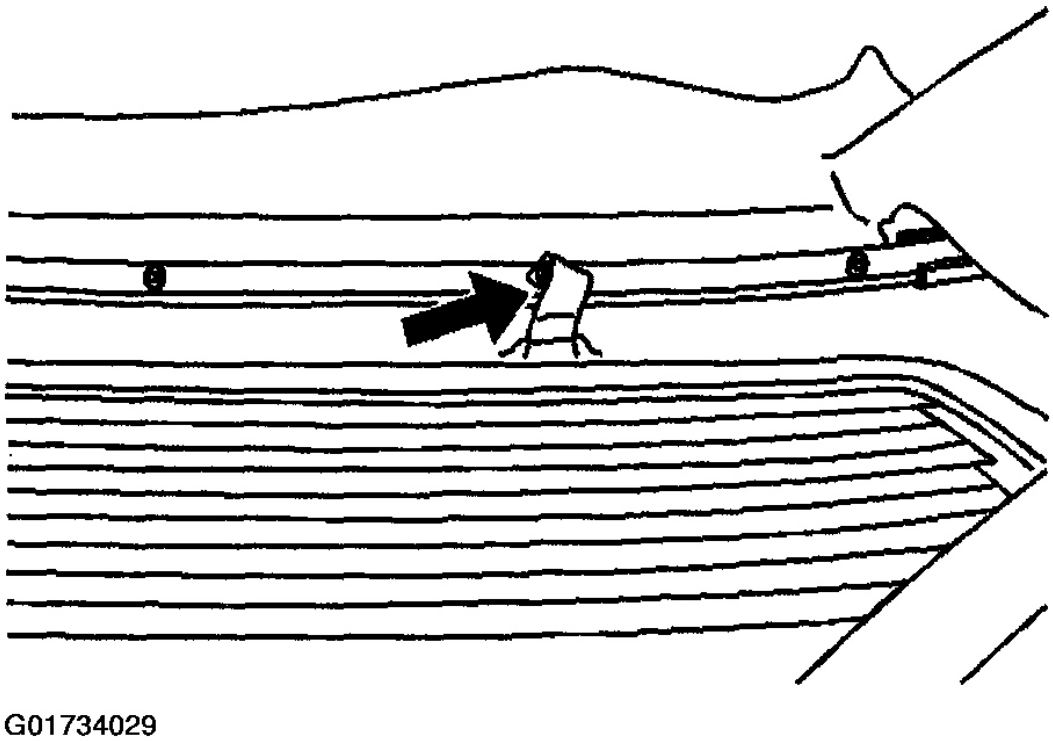

Fig. 137: Identifying #4 Bow Rear Window Support Screws
Courtesy of GENERAL MOTORS CORP.

8. Install the headliner elastic strap screws to the #5 bow

   Tighten

   Tighten the screws to 2 N.m (18 lb in).

9. Install the headliner screws to the rear side rails.

   Tighten

   Tighten the screws to 2 N.m (18 lb in).

10. Install the glare cover end screws to the #5 bow.

Tighten

Tighten the screws to 2 N.m (18 lb in).

11. Before stapling the top cover to the #5 bow, Refer to **Folding Top Cover Tension Adjustment - Rear** .
12. Install the folding top. Refer to **Folding Top Replacement** .
13. Reposition the folding top to the original position.

FOLDING TOP ROOF BOW REPLACEMENT (NUMBER 5 BOW)

Removal Procedure

1. Remove the folding top and place the top on a clean flat surface. Refer to **Folding Top Replacement** .
2. Remove the #5 bow weatherstrip. Refer to **Weatherstrip Replacement - Folding Top (Front and Center Side Rails)** or **Weatherstrip Replacement - Folding Top (Rear Side Rail)** or **Weatherstrip Replacement - Folding Top (Number Five Bow)** .
3. Remove the rear side rail seal and retainer. Refer to **Weatherstrip Retainer Replacement - Folding Top (Front and Center Side Rail)** **Weatherstrip Retainer Replacement - Folding Top (Rear Side Rail)** .

WARNING: Refer to SAFETY GLASSES CAUTION .

4. Drill out the top cover flap rivets from the rear side rails.
5. Pull the top material from the rear side rails.
6. Drill out the elastic strap rivets from the #5 bow.
7. Drill out the top cover rivets from the bottom of the rear side rails.

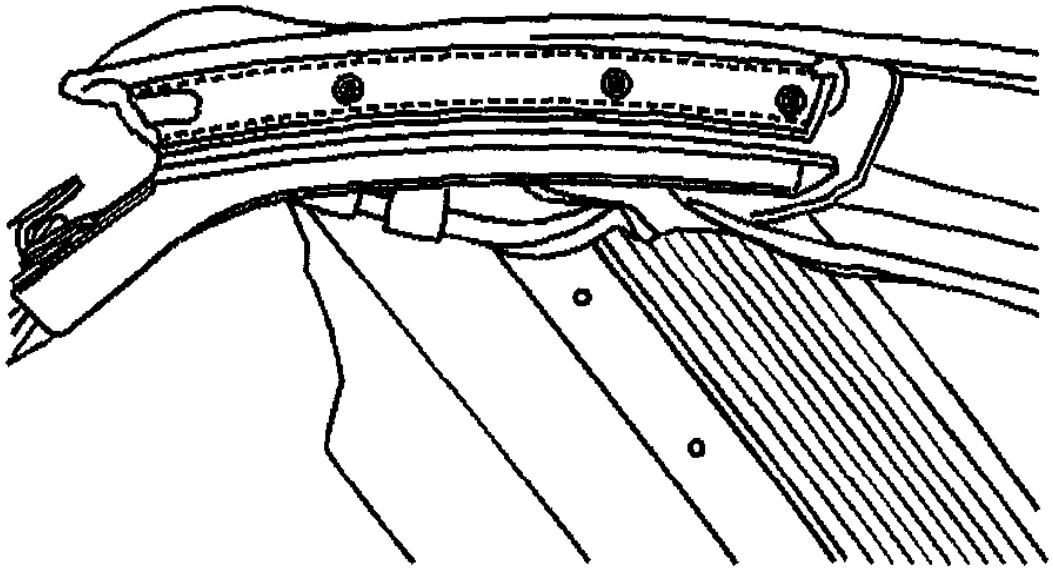

G01734030

Fig. 138: Identifying Rear Side Rail Rivets
Courtesy of GENERAL MOTORS CORP.

8. Pull the top cover from the bottom of the rear side rail and from the front of the #5 bow (5).
9. Using a grease pencil mark the position of the top cover along the edge where it wraps over the #5 bow to aid in installation.

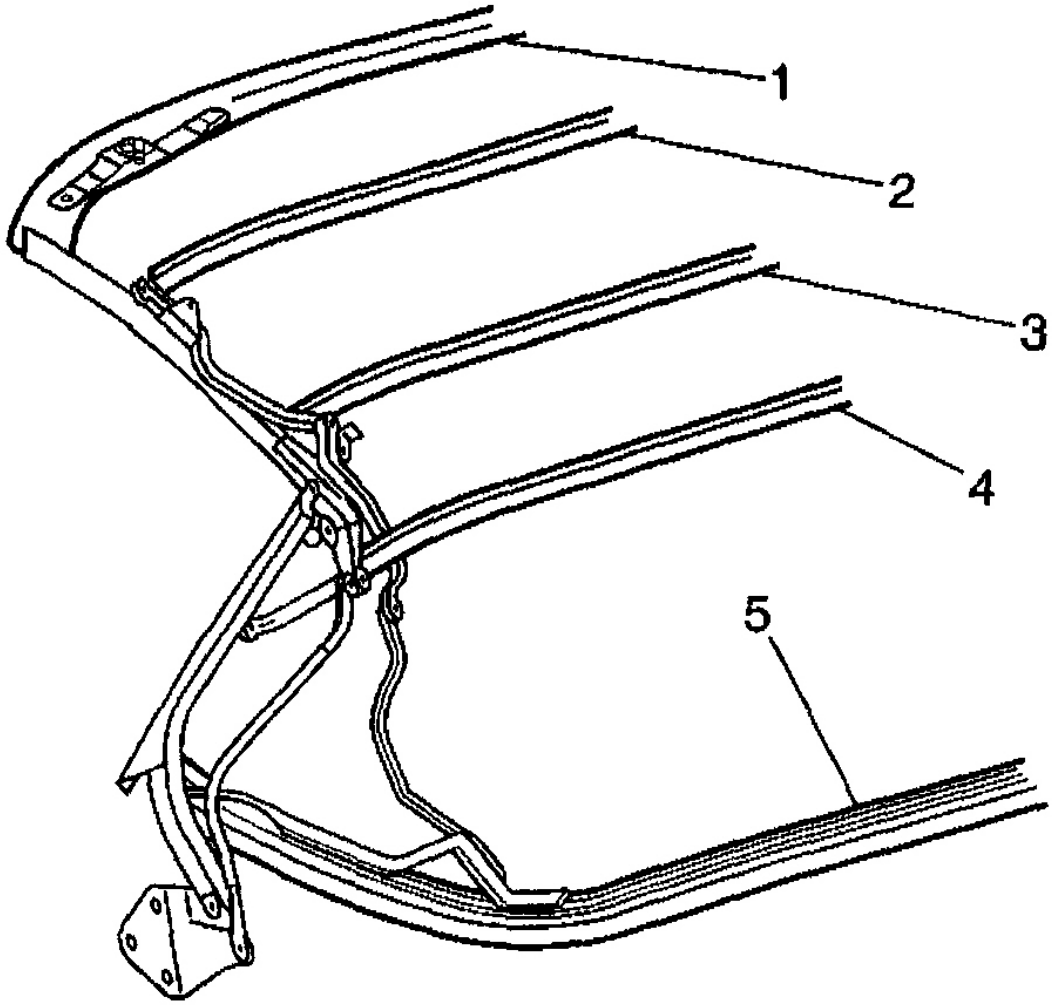

Fig. 139: Identifying Roof Bows
Courtesy of GENERAL MOTORS CORP.

10. Using a pair of needle nose pliers remove the top cover staples from the #5 bow.
11. Mark the edge of the stay pad where it wraps over the #5 bow to aid in installation.

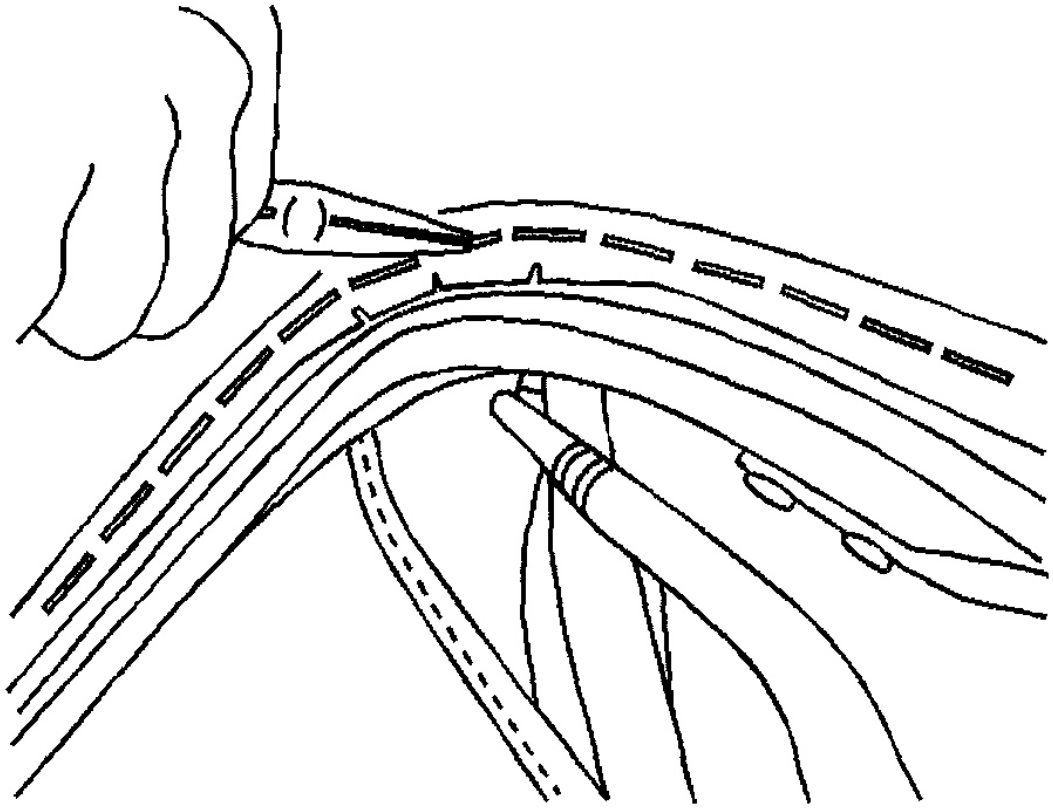

G01734032

Fig. 140: Removing #5 Bow Top Cover Staples
Courtesy of GENERAL MOTORS CORP.

12. Using a pair of needle nose pliers remove the stay pad staples from the #5 bow.

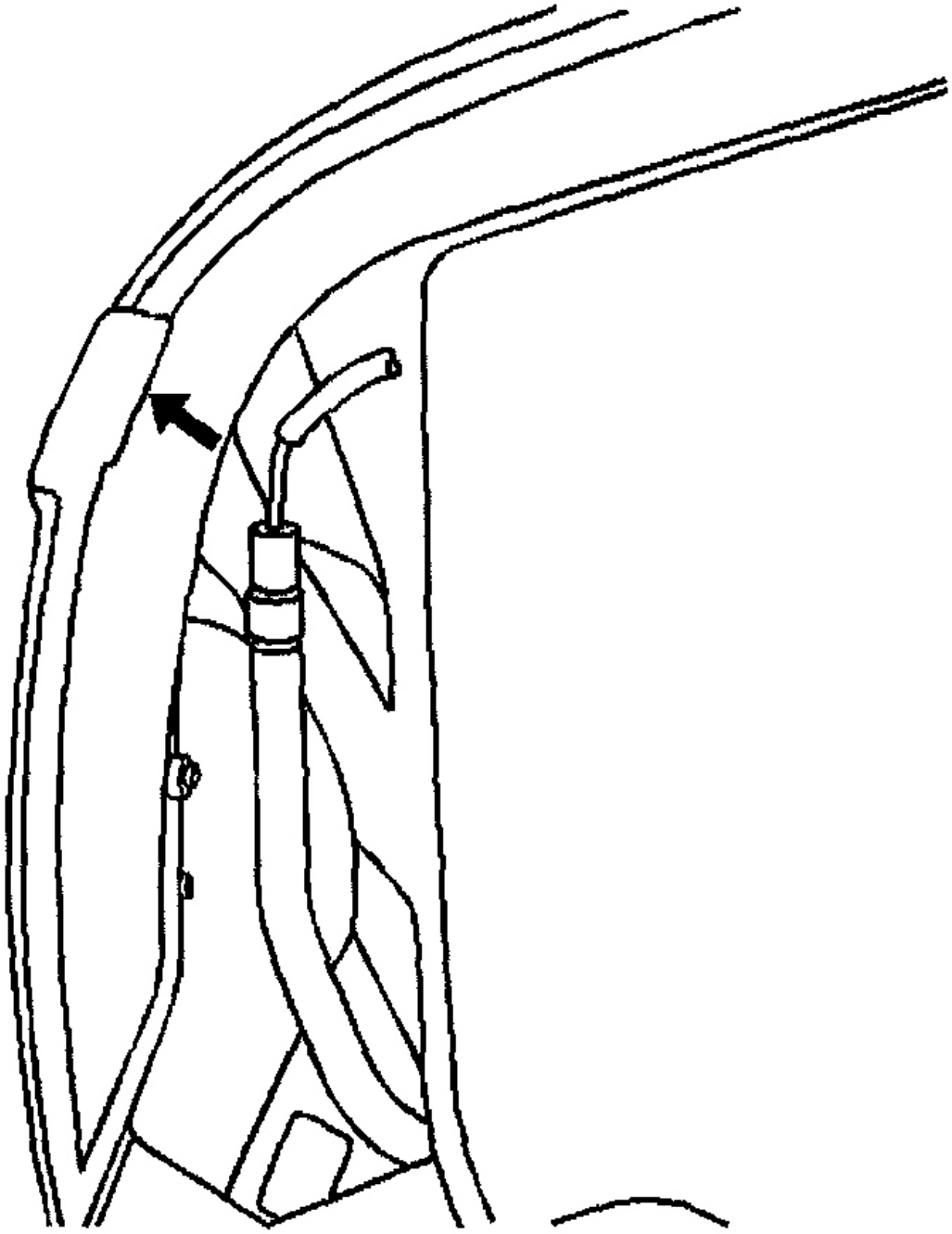

Fig. 141: Identifying #5 Bow Stay Pad Staples

Courtesy of GENERAL MOTORS CORP.

13. Remove the glare cover screws from the #5 bow.
14. Drill out the glare cover rivets to the 5 bow.

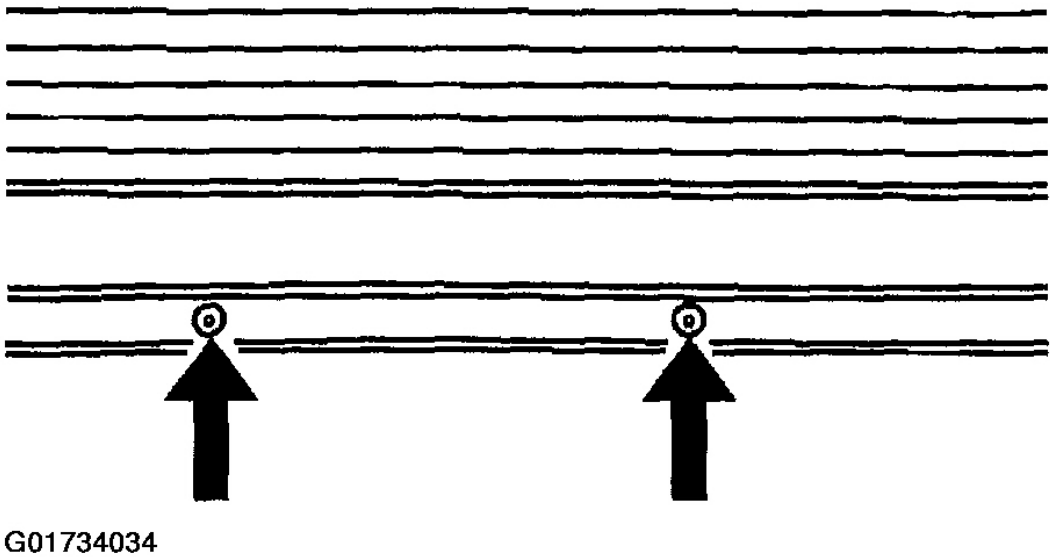

Fig. 142: Identifying #5 Bow Glare Cover Rivets
Courtesy of GENERAL MOTORS CORP.

15. Remove the right and left main control link rod end screws (6) from the #5 bow (7).
16. Remove the protector from the right and left outer ends of the #5 bow and the bottom of the rear side rails to expose the rivet.
17. Drill out the right and the left rear side rail extension brackets rivets from the 5 bow.
18. Remove the rear side rail extension bracket screws from the 5 bow.
19. Remove the 5 bow.

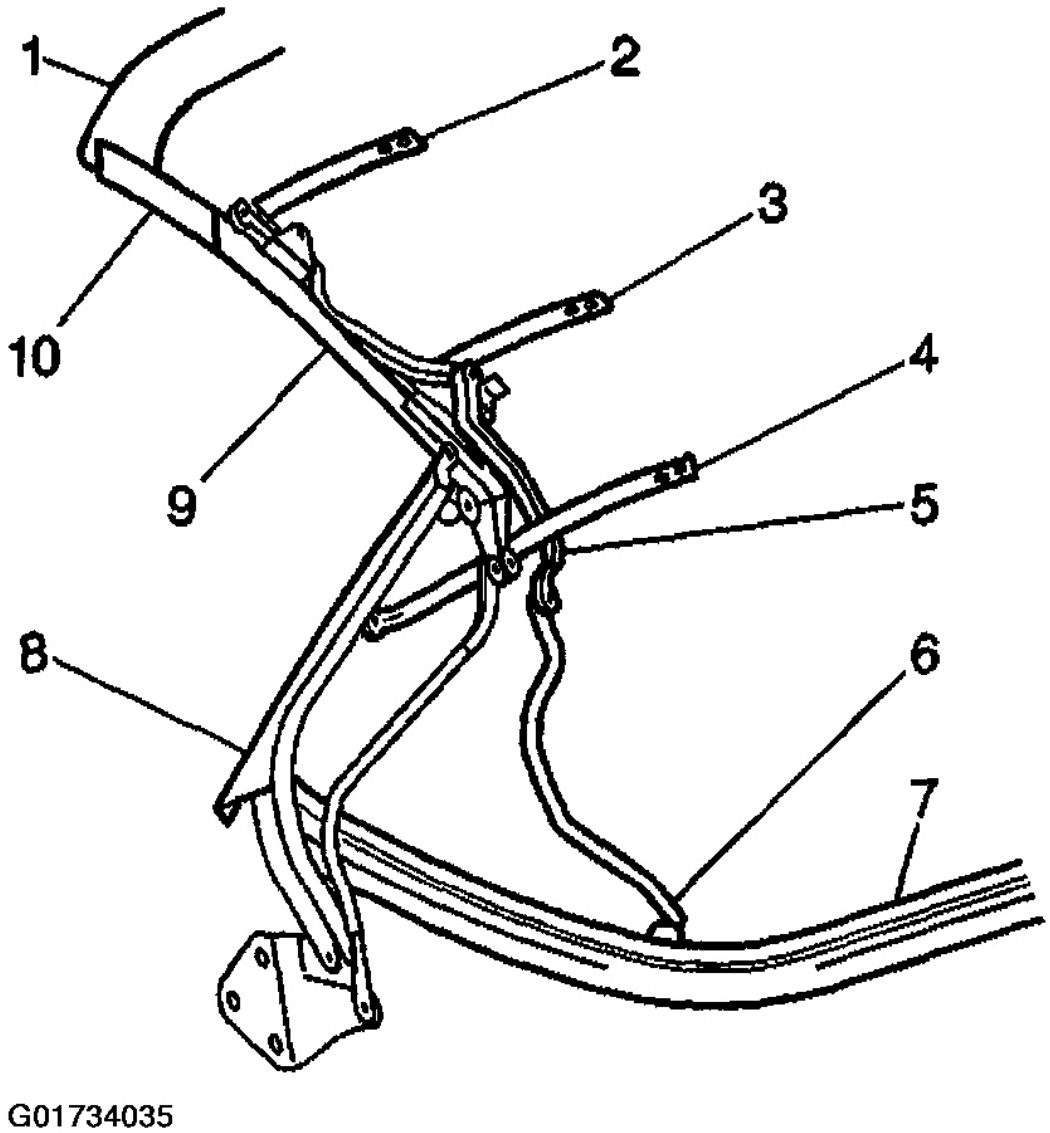

Fig. 143: Identifying Main Control Link Bracket
Courtesy of GENERAL MOTORS CORP.

Installation Procedure

1. Install the #5 bow.

CAUTION: Refer to FASTENER NOTICE .

2. Install the screws attaching the rear side rail (8) extension brackets to the #5 bow (7).

   Tighten

   Tighten the rear side rail to the #5 bow bracket screws to 4 N.m (35 lb in).

3. Install the right and left main control link rod end screws (6) to the #5 bow (7).

   Tighten

   Tighten the main control link rod end screws to #5 bow to 15 N.m (11 lb ft).

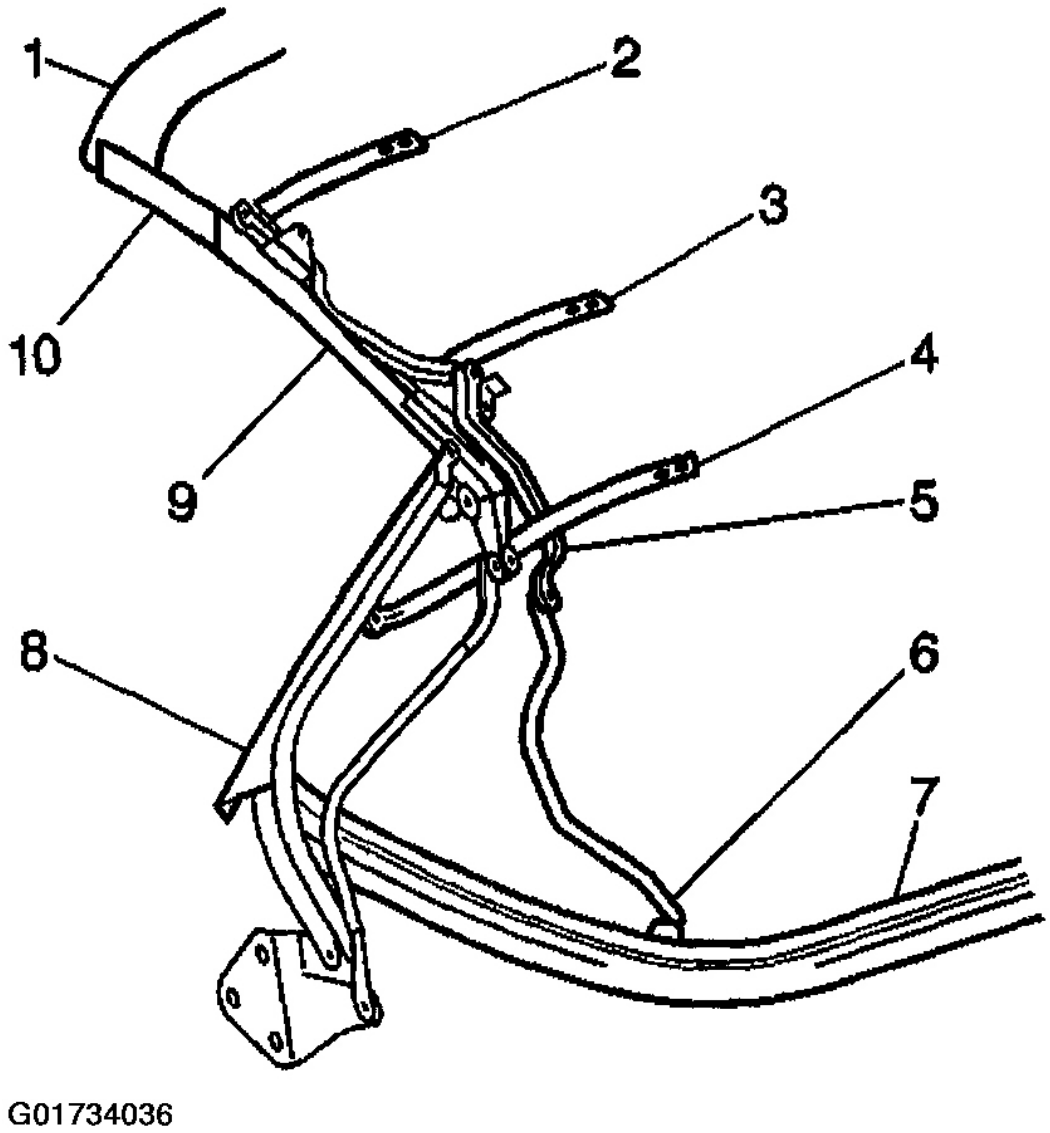

Fig. 144: Identifying Main Control Link Bracket
Courtesy of GENERAL MOTORS CORP.

4. Install the rear side rail bracket rivets to the #5 bow (5).
5. Make sure both sides of the rivet are flat.

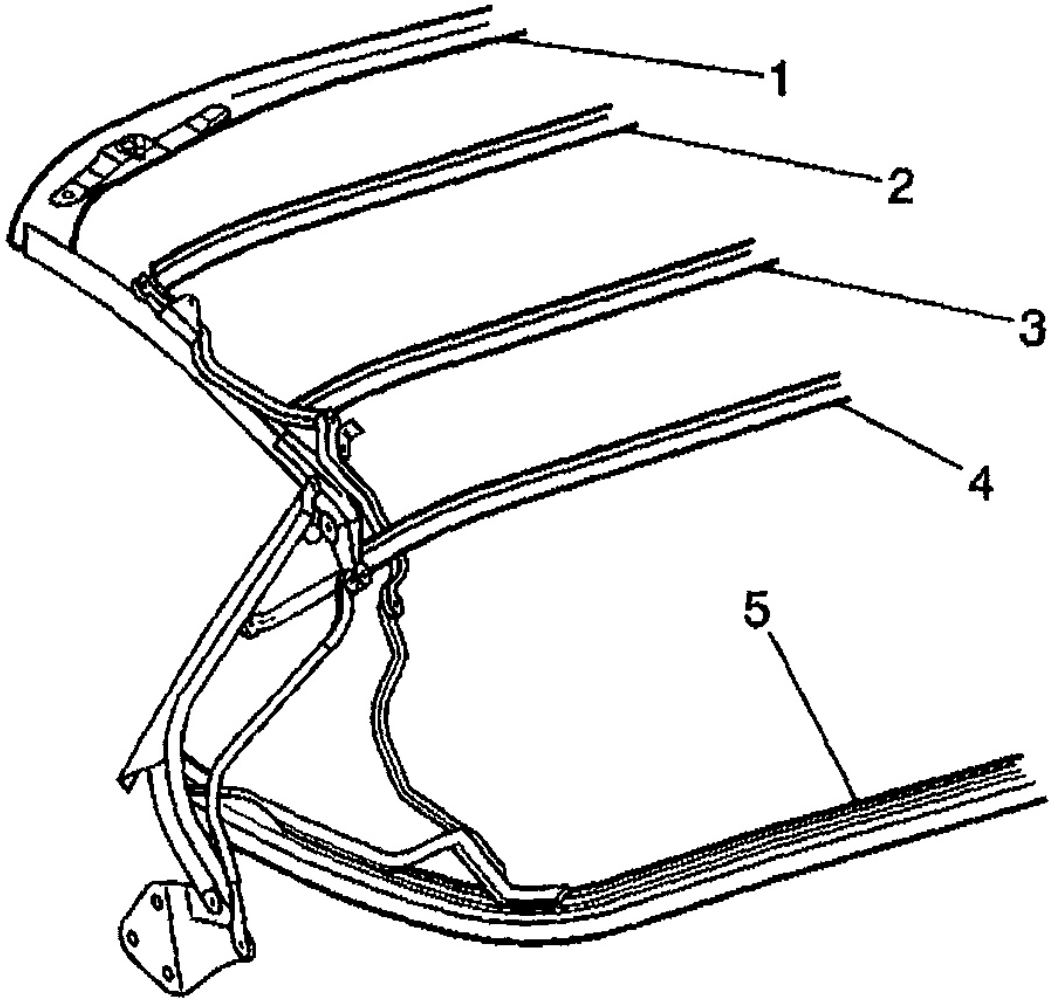

G01734037

Fig. 145: Identifying Roof Bows
Courtesy of GENERAL MOTORS CORP.

6. Install the glare cover rivets to the #5 bow.
7. Install the glare cover screws to the #5 bow.

Tighten

Tighten the screws to 2 N.m (18 lb in).

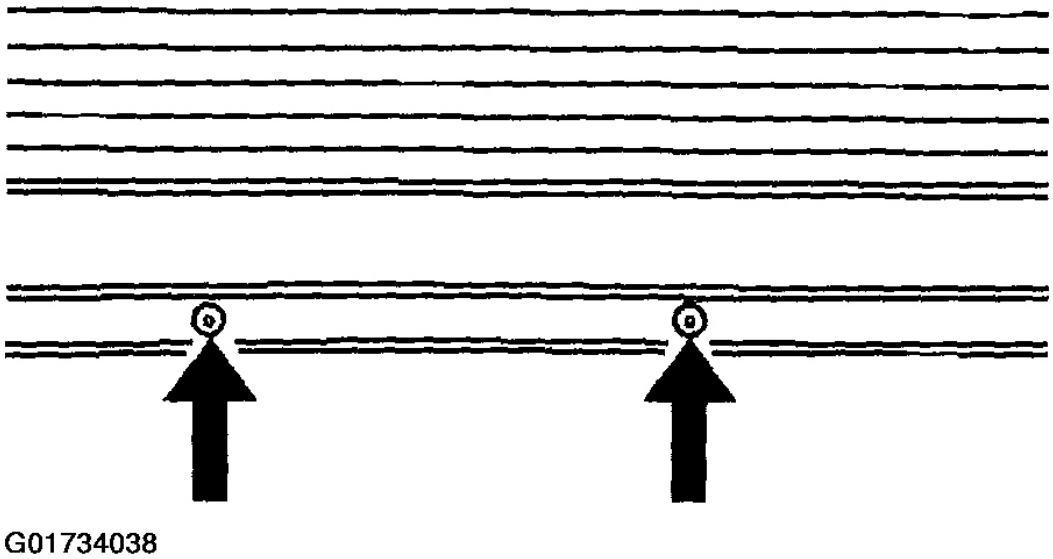

Fig. 146: Identifying #5 Bow Glare Cover Screws
Courtesy of GENERAL MOTORS CORP.

8. Staple the stay pad to the #5 bow.
9. Install the top cover rivets to the bottom of the rear side rail.
10. Install the #5 bow protector elastic strap rivets to the rear side rails.

    Make sure both sides of the rivets are flat.

11. Fold the top flap over the rear side rail and rivet the top flap to the rail.
12. Install the rear side rail seal retainer and the seal. Refer to **Weatherstrip Retainer Replacement - Folding Top (Front and Center Side Rail)** **Weatherstrip Retainer Replacement - Folding Top (Rear Side Rail)** .
13. Install the folding top. Refer to **Folding Top Replacement** .
14. Reposition the folding top to the original position.

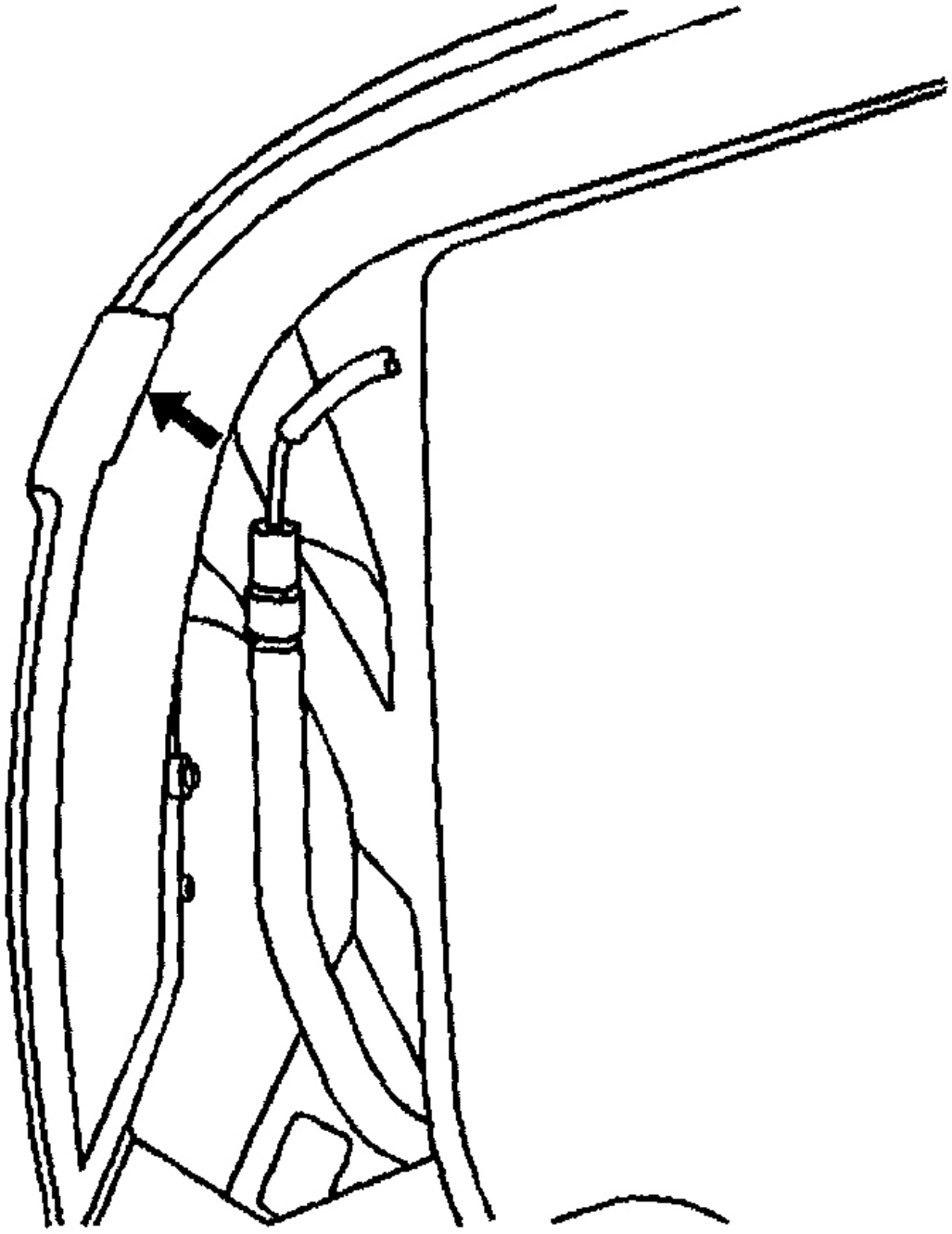

Fig. 147: Identifying #5 Bow Stay Pad Staples
Courtesy of GENERAL MOTORS CORP.

FOLDING TOP STAY PAD REPLACEMENT

Installation Procedure

1. Remove the folding top cover. Refer to **Folding Top Replacement** .
2. Using a pair of needle-nosed pliers, remove the stay pad staples from the #5 bow.
3. Cover the stowage compartment lid to protect the lid from damage.
4. Latch the top.

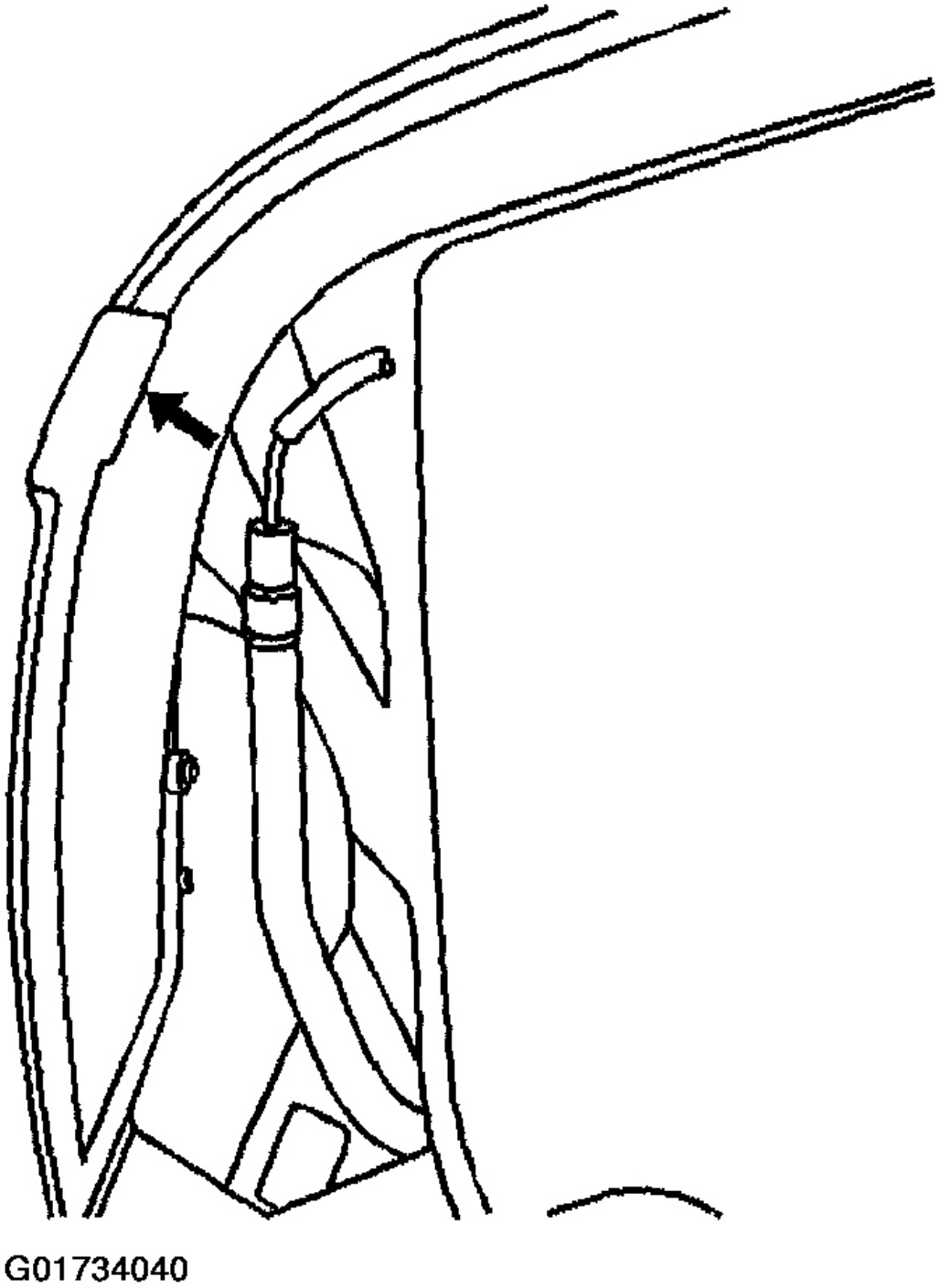

Fig. 148: Identifying #5 Bow Stay Pad Staples

Courtesy of GENERAL MOTORS CORP.

5. Using a pair of needle-nosed pliers, remove the stay pad staples to the #4, 3, and 2 bows.
6. Drill out the stay pad rivets to the #1 bow.
7. Remove the stay pad.

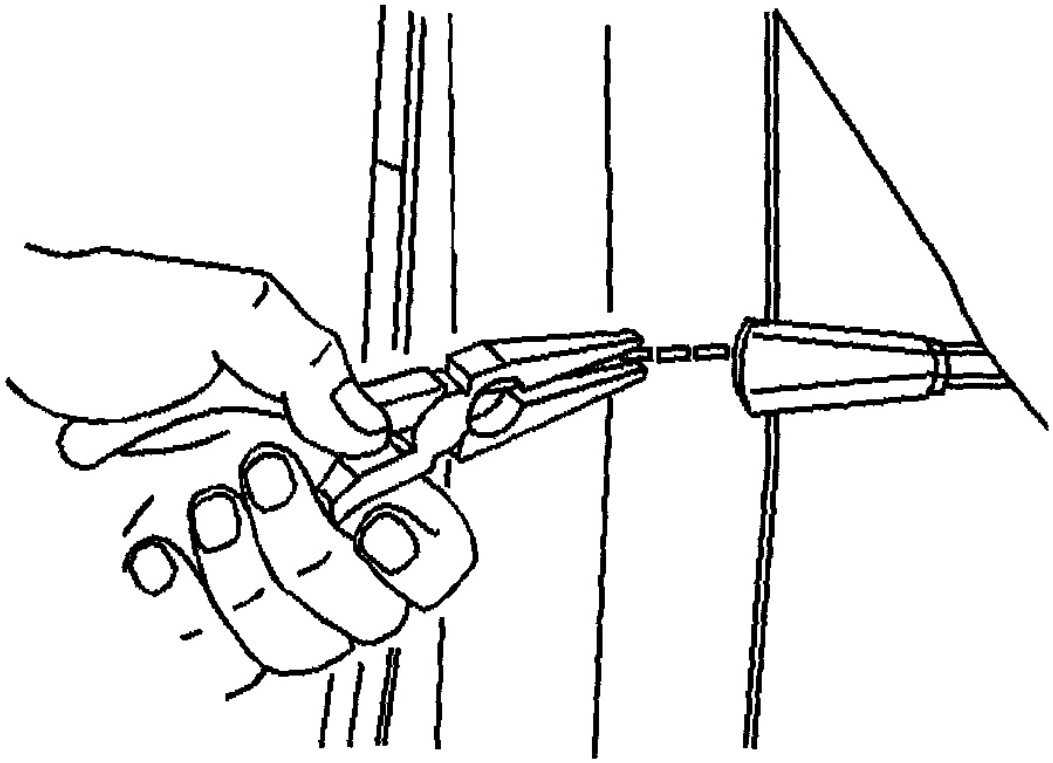

Fig. 149: Removing #4, #3, #2 Bow Stay Pad Staples
Courtesy of GENERAL MOTORS CORP.

Removal Procedure

1. Rivet the stay pad to the #1 bow.
2. Staple the stay pad to the #4 bow.
3. Staple the stay pad to the #2 and 3 bows.

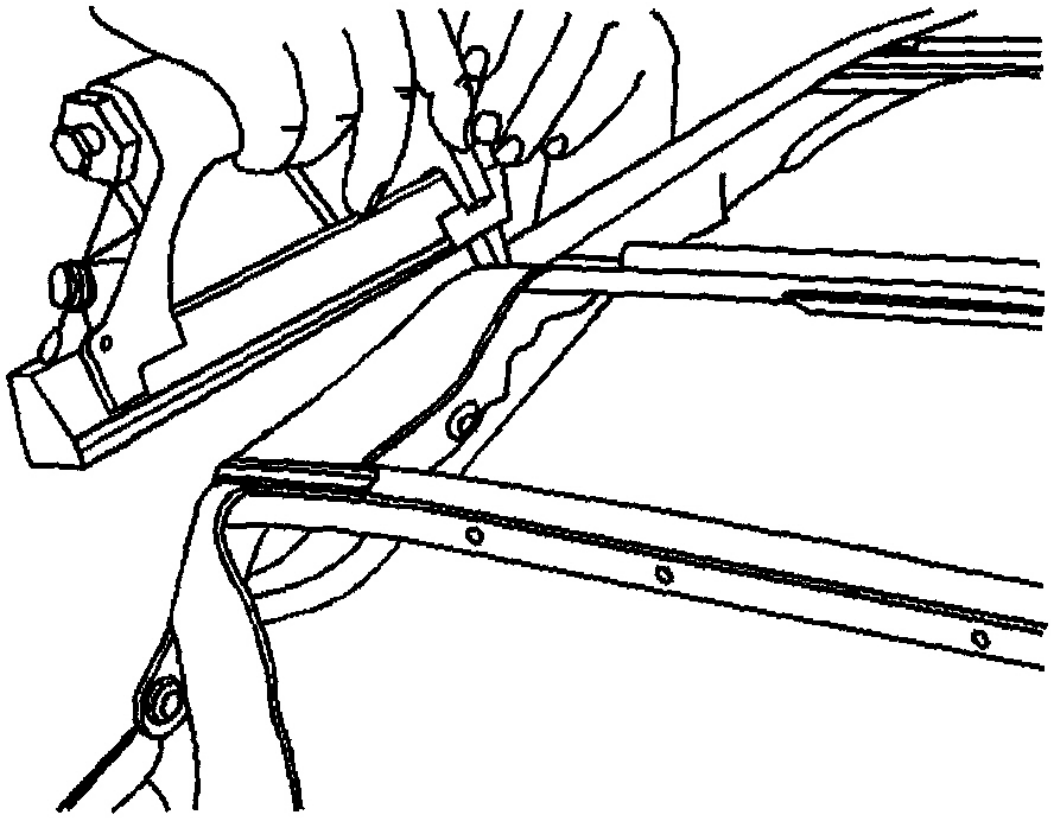

G01734042

Fig. 150: Installing #4, #3, #2 Bow Stay Pad Staples
Courtesy of GENERAL MOTORS CORP.

4. Position the #5 bow in the up position.

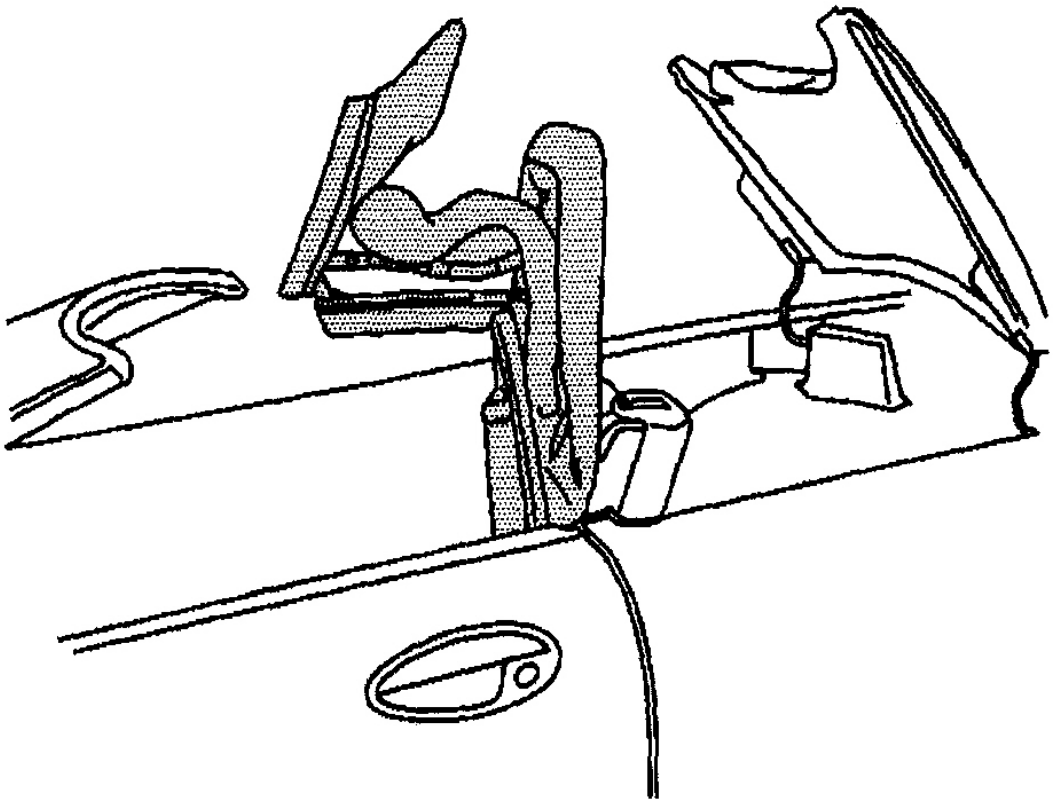

Fig. 151: Aligning Folding Top
Courtesy of GENERAL MOTORS CORP.

5. Staple the stay pad to the #5 bow.
6. Install the folding top cover. Refer to **Folding Top Replacement** .
7. Remove the protective cover from the stowage compartment lid.

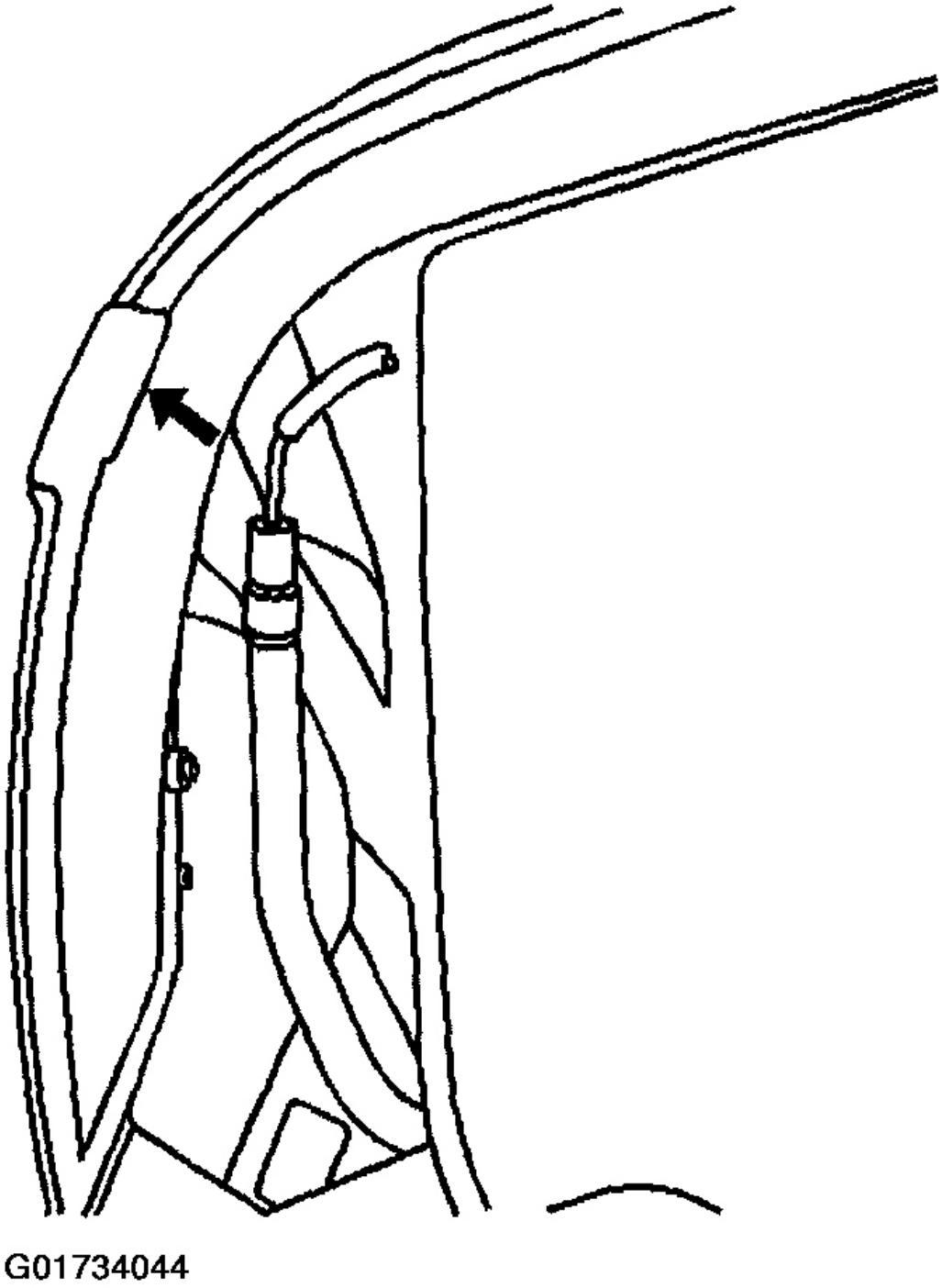

Fig. 152: Installing #5 Bow Stay Pad Staples

Courtesy of GENERAL MOTORS CORP.

FOLDING TOP SEAL COMPRESSION PANEL REPLACEMENT

Removal Procedure

1. Remove the screws from the front side rail seal on the #1 bow.

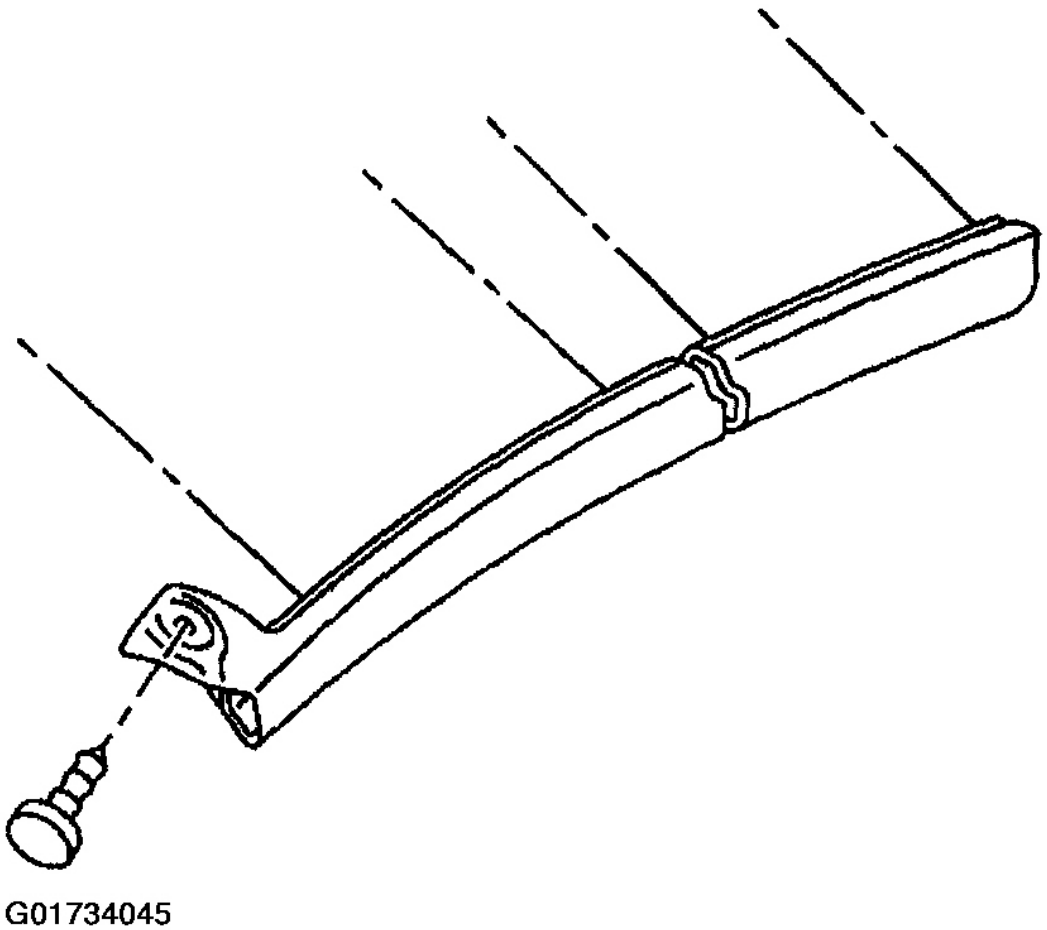

Fig. 153: Removing #1 Bow Front Side Rail Seal Screws
Courtesy of GENERAL MOTORS CORP.

2. Remove the screws from the seal compression panel on the #1 bow.

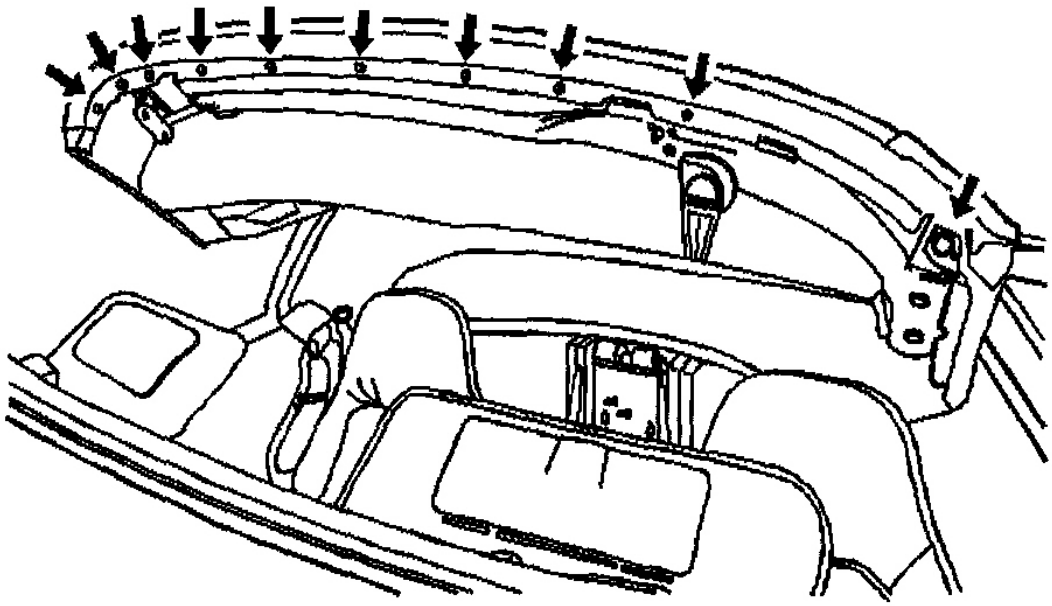

Fig. 154: Removing #1 Bow Seal Compression Panel Screws
Courtesy of GENERAL MOTORS CORP.

3. Remove the panel.

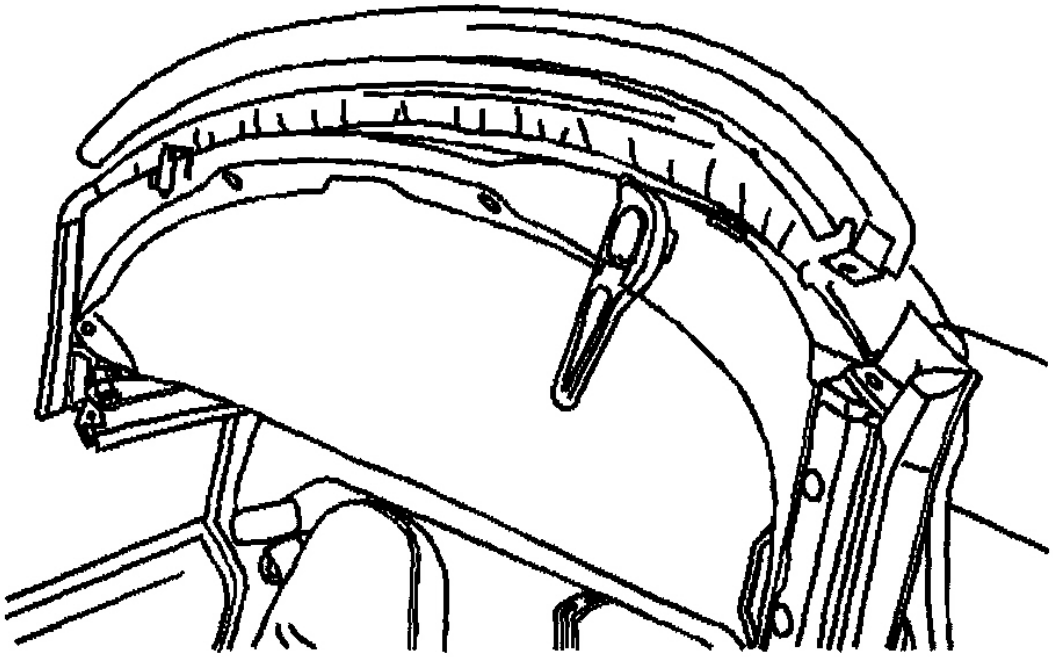

G01734047

Fig. 155: Removing Seal Compression Panel
Courtesy of GENERAL MOTORS CORP.

Installation Procedure

1. Position the seal compression panel to the #1 bow.

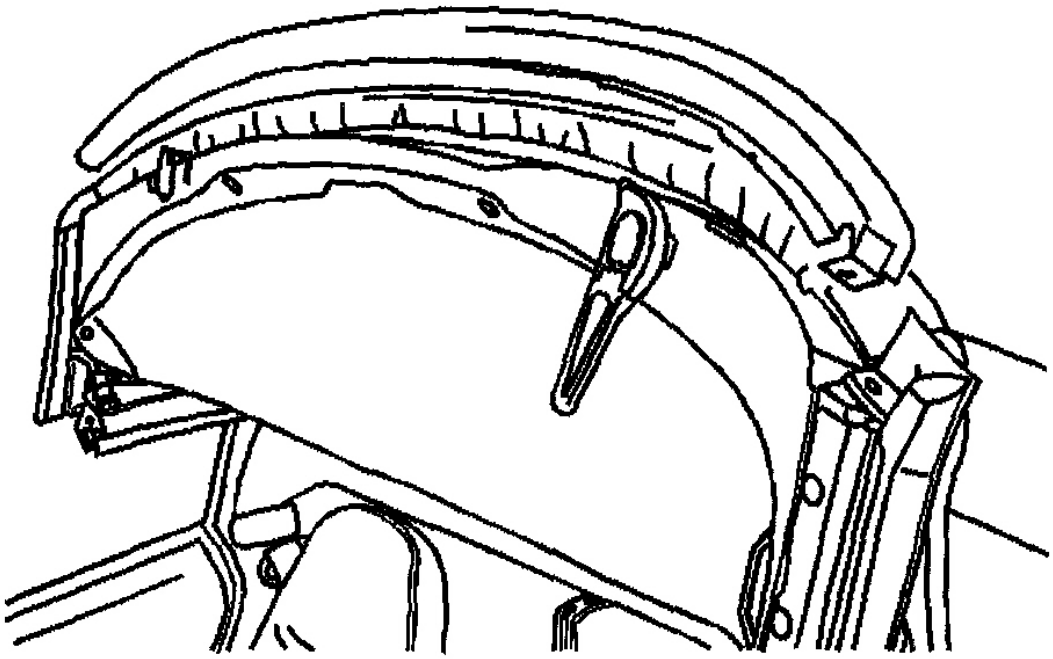

G01734048

Fig. 156: Aligning Seal Compression Panel
Courtesy of GENERAL MOTORS CORP.

CAUTION: Refer to FASTENER NOTICE .

2. Install the screws to the seal compression panel on the #1 bow.

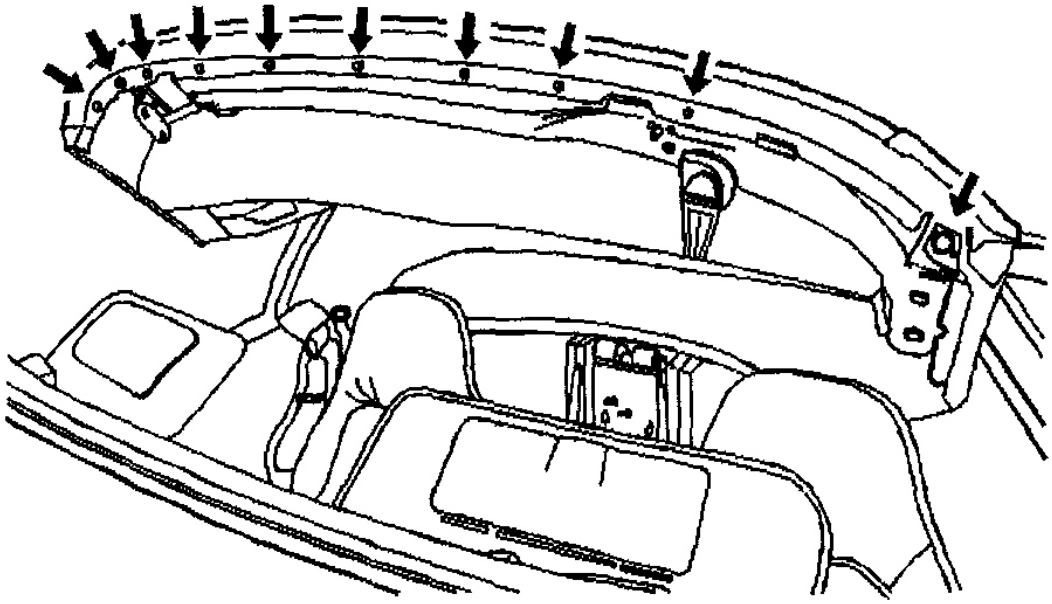

G01734049

Fig. 157: Installing #1 Bow Seal Compression Panel Screws
Courtesy of GENERAL MOTORS CORP.

Tighten

Tighten the screws to 3 N.m (26 lb in).

3. Install the screw to the front side rail seal on the #1 bow.

Tighten

Tighten the screw to 2 N.m (18 lb in).

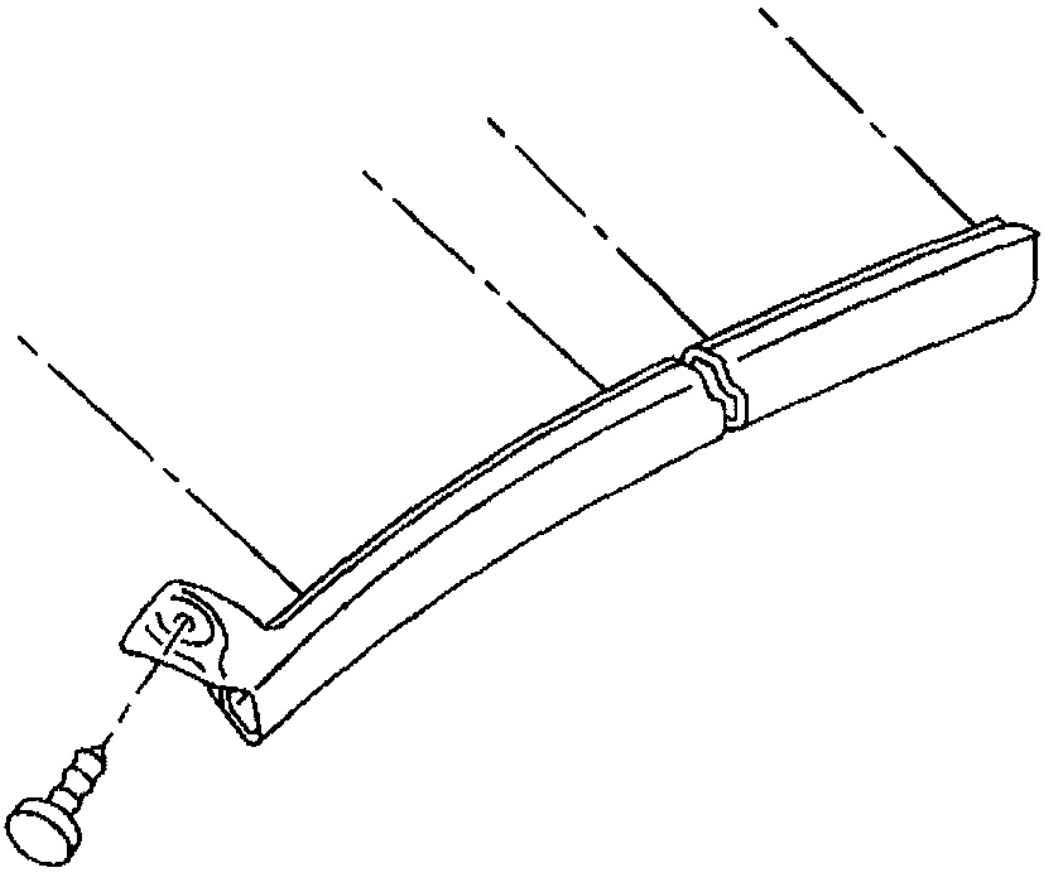

Fig. 158: Installing #1 Bow Front Side Rail Seal Screws
Courtesy of GENERAL MOTORS CORP.

FOLDING TOP TENSION CABLE REPLACEMENT

Removal Procedure

1. Remove the folding top from the vehicle. Refer to **Folding Top Replacement**
2. Remove the weatherstrip and the retainer from the rear side rail. Refer to **Weatherstrip Retainer Replacement - Folding Top (Front and Center Side Rail)** **Weatherstrip Retainer Replacement - Folding Top (Rear Side Rail)** .
3. Drill out the top cover flap rivets from the rear side rail.
4. Raise the top cover flap and drill out the tension cable rivet from the rear side rail.

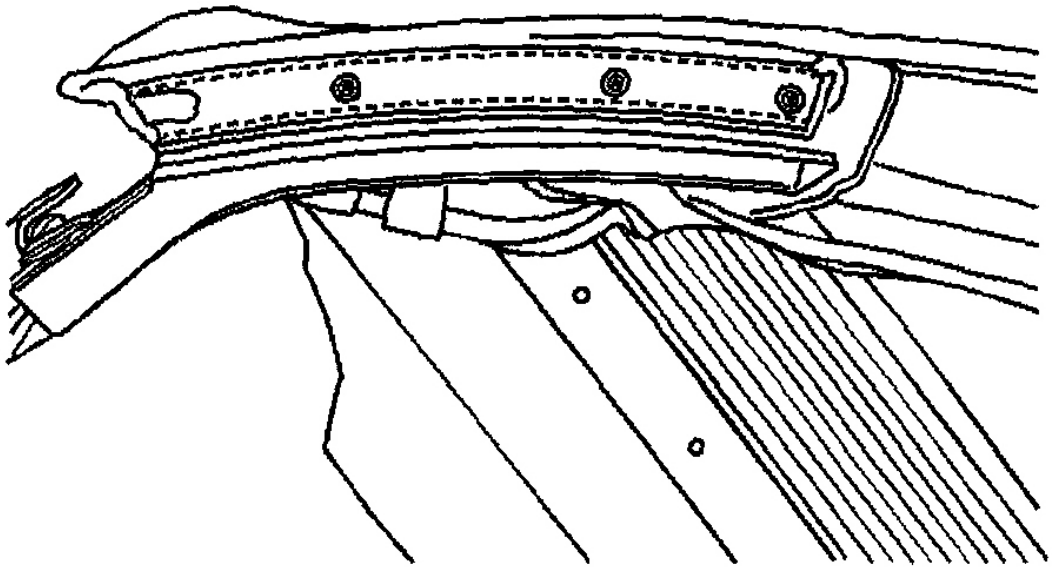

G01734051

Fig. 159: Identifying Rear Side Rail Rivets
Courtesy of GENERAL MOTORS CORP.

5. Position the top with the #1 bow and the #5 bow up.

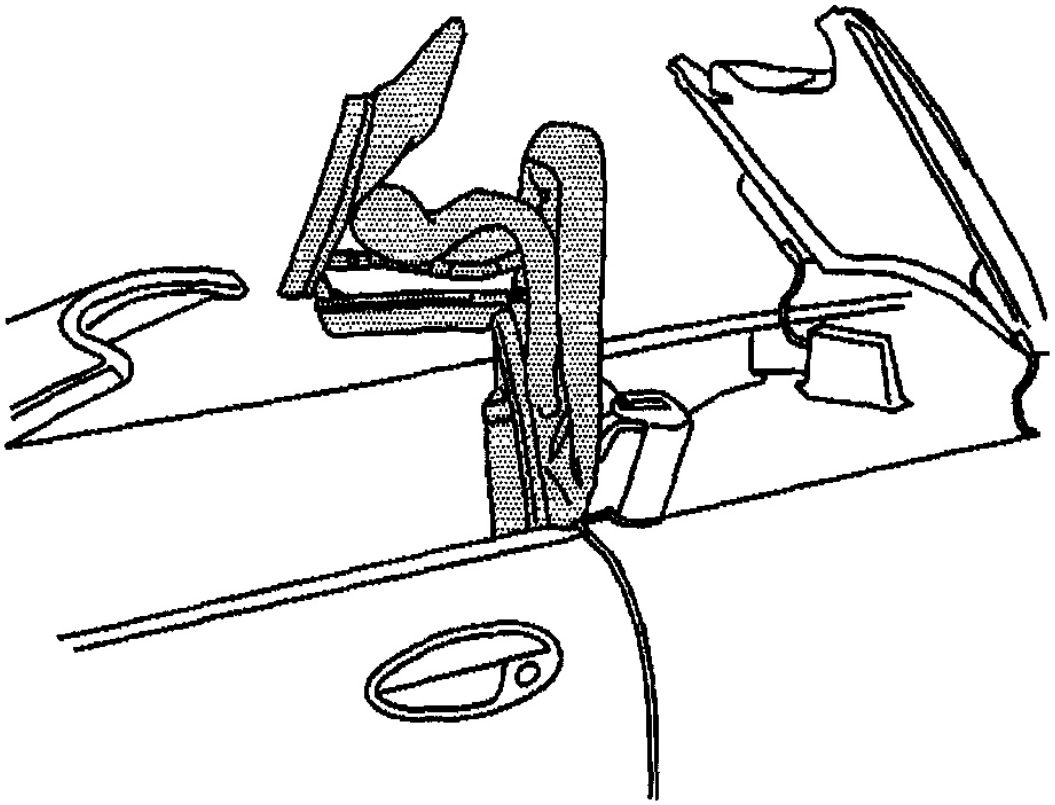

Fig. 160: Aligning Folding Top
Courtesy of GENERAL MOTORS CORP.

6. Remove the headliner screw from the #1 bow.

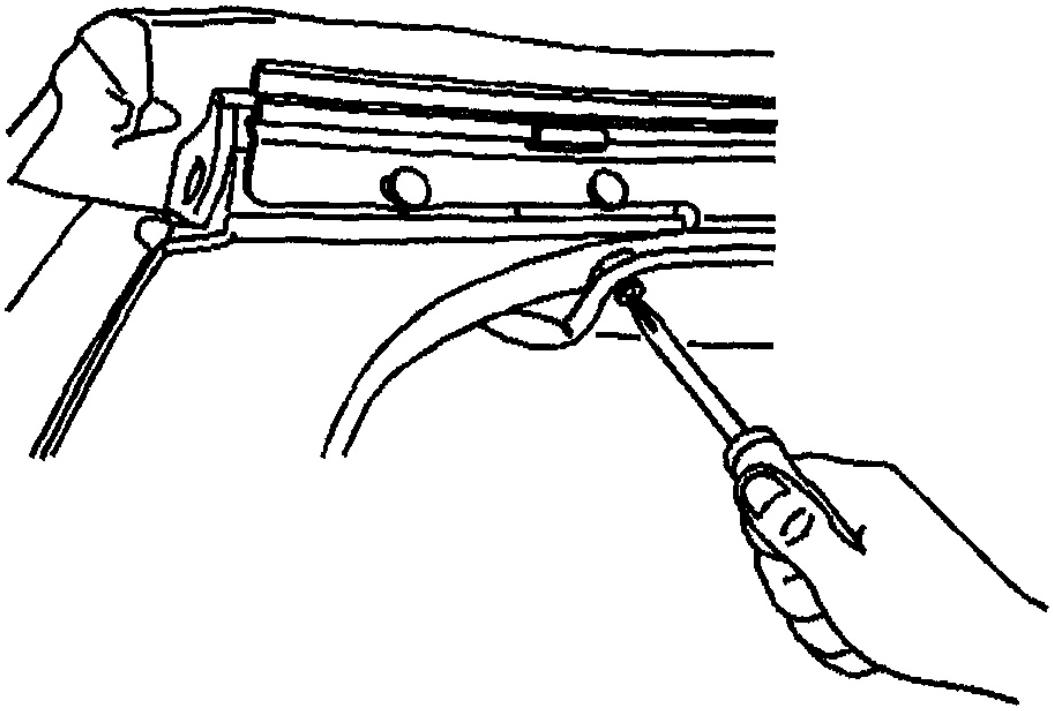

G01734053

Fig. 161: Removing #1 Bow Headliner Screw
Courtesy of GENERAL MOTORS CORP.

7. Remove the screw from the tension cable spring end on the #1 bow.

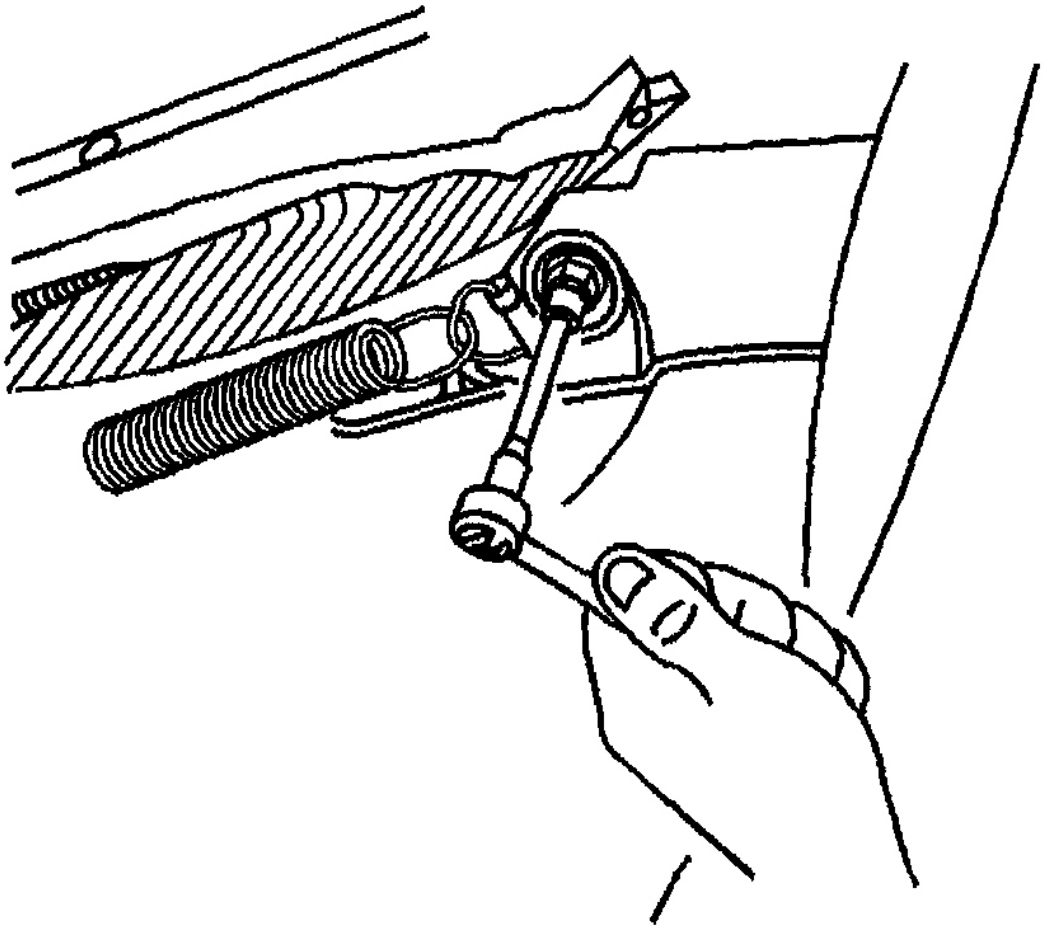

Fig. 162: Removing #1 Bow Tension Cable Spring End Screw
Courtesy of GENERAL MOTORS CORP.

8. Remove the spring from the end of the tension cable and attach approximately five feet of 16 gauge wire to aid in the installation.
9. From the rear of the top remove the tension cable, leaving the wire in the top pocket.

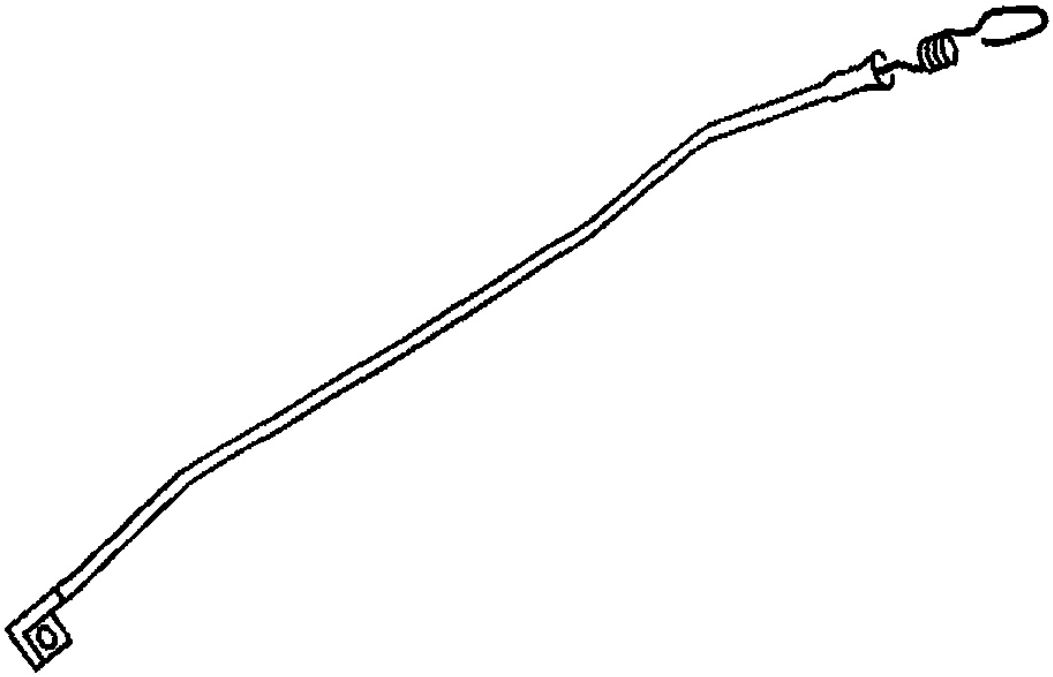

Fig. 163: Identifying Top Tension Cable
Courtesy of GENERAL MOTORS CORP.

10. Disconnect the tension cable from the wire.

Installation Procedure

1. Remove the spring, attaching the rear of the wire to the spring end of the cable.
2. Pull the wire forward until the cable is in the proper position. Remove the wire and reinstall the spring.

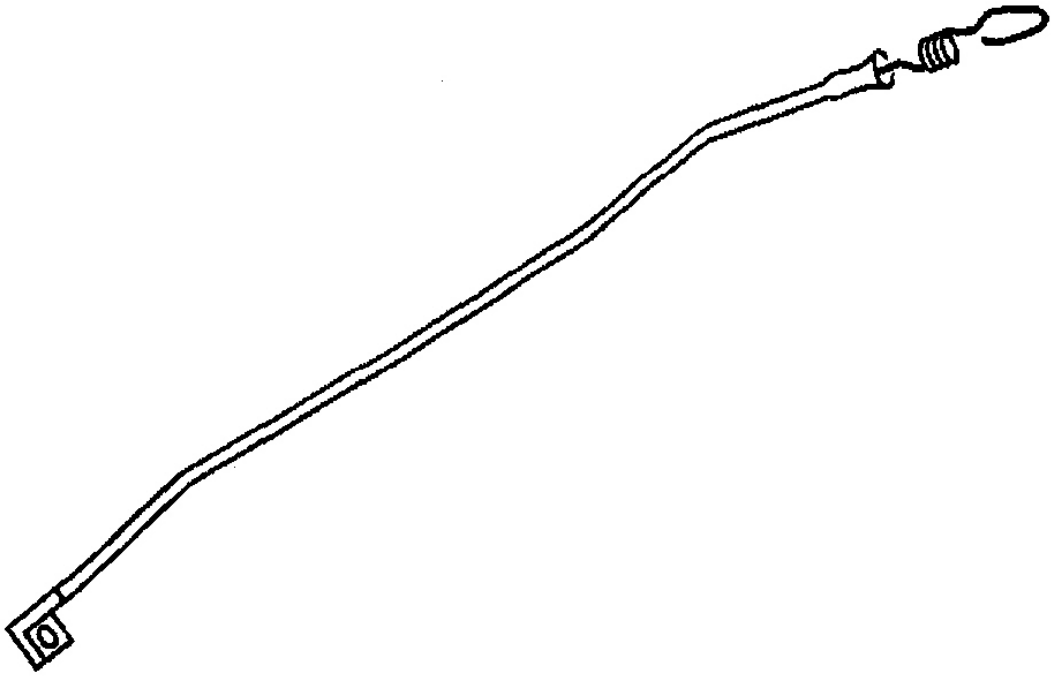

Fig. 164: Identifying Top Tension Cable
Courtesy of GENERAL MOTORS CORP.

CAUTION: Refer to Refer to FASTENER NOTICE .

3. Install the screw to the tension cable spring end on the #1 bow.

Tighten

Tighten the screws to 2 N.m (18 lb in).

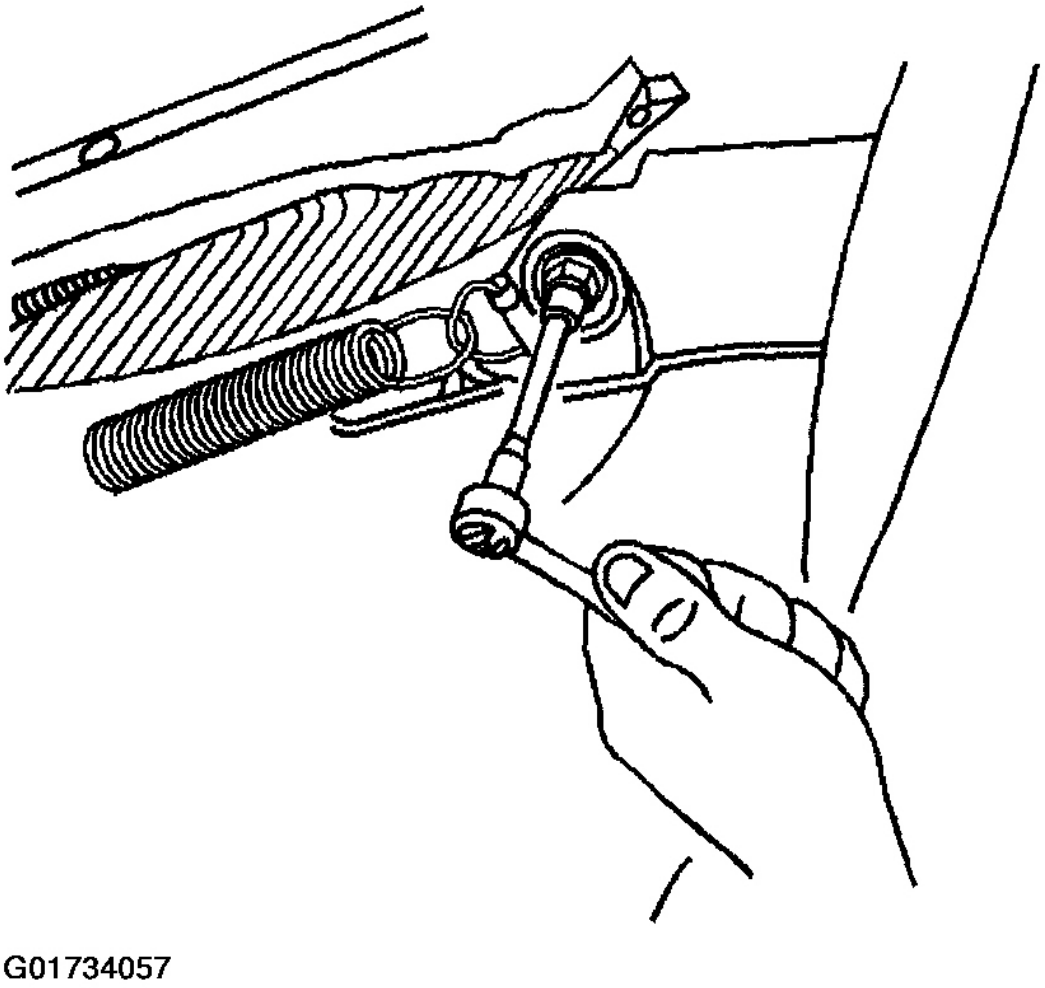

Fig. 165: Installing #1 Bow Tension Cable Spring End Screw
Courtesy of GENERAL MOTORS CORP.

4. Install the headliner screw to the #1 bow

   Tighten

   Tighten the screws to 2 N.m (18 lb in).

5. Rivet the flag end of the tension cable to the back side of the rear side rail.
   - **5.1.** Position the flag roll forward.
   - **5.2.** Use a C rivet or a stainless steel pop rivet.

5.3. With a ball peen hammer, tap the rivet head flush with the retainer.

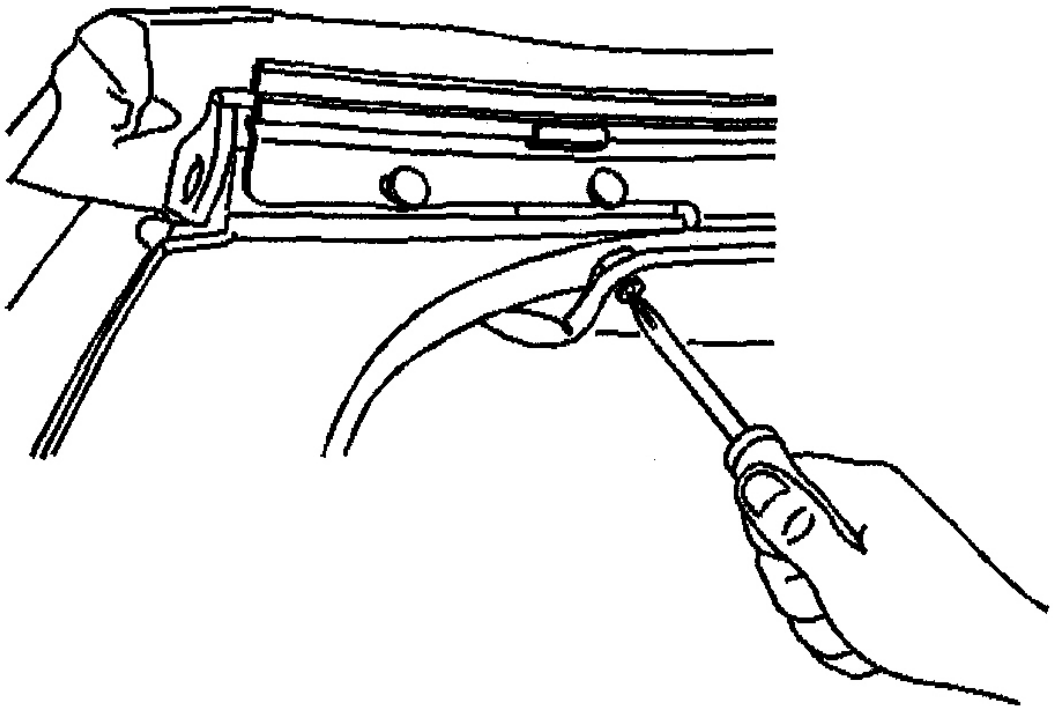

Fig. 166: Installing #1 Bow Headliner Screw
Courtesy of GENERAL MOTORS CORP.

6. Fold the top cover flap over the rear side rail and rivet place.
7. Install the rear side weatherstrip retainer and the weatherstrip to the rear side rail. Refer to **Weatherstrip Retainer Replacement - Folding Top (Front and Center Side Rail)** **Weatherstrip Retainer Replacement - Folding Top (Rear Side Rail)** .
8. Install the folding top to the vehicle. Refer to **Folding Top Replacement** .

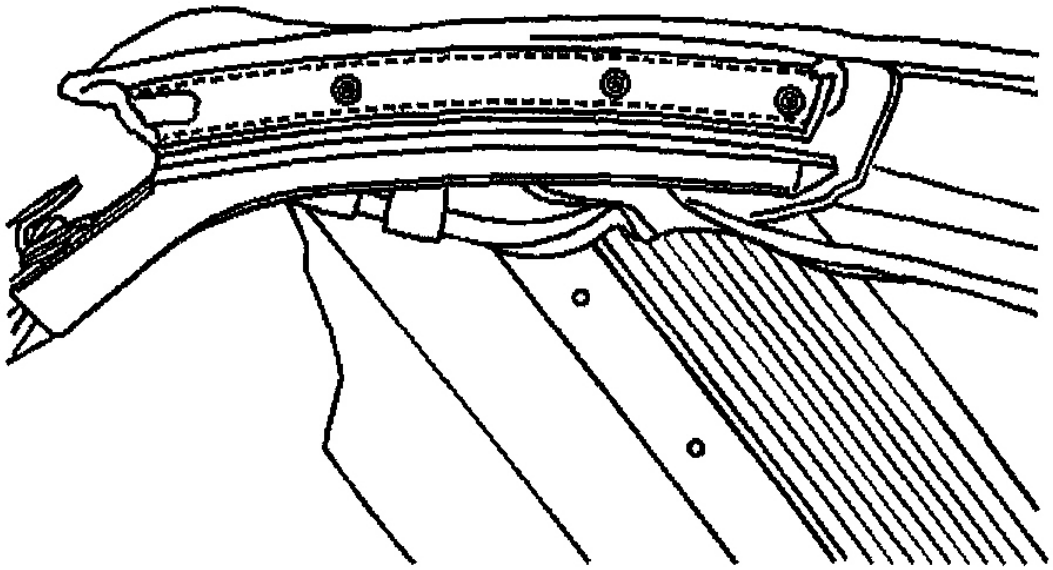

G01734059

Fig. 167: Identifying Rear Side Rail Rivets
Courtesy of GENERAL MOTORS CORP.

FOLDING TOP CLOCK SPRING REPLACEMENT

Removal Procedure

1. Position the top with the #1 bow and the #5 bow up, and open the stowage compartment.

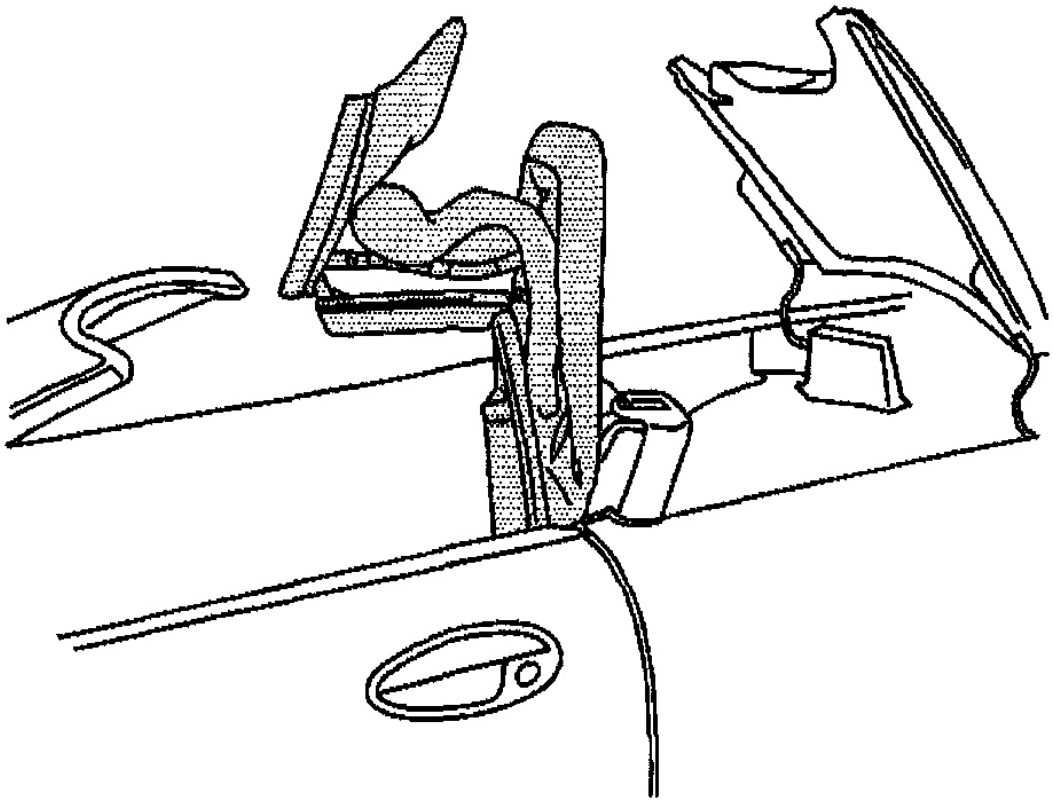

Fig. 168: Aligning Folding Top
Courtesy of GENERAL MOTORS CORP.

2. Grasp the clock spring with vice grips or pliers, and remove the spring end from the roof link pin.
3. Remove the nut.
4. Remove the clock spring and the pin.

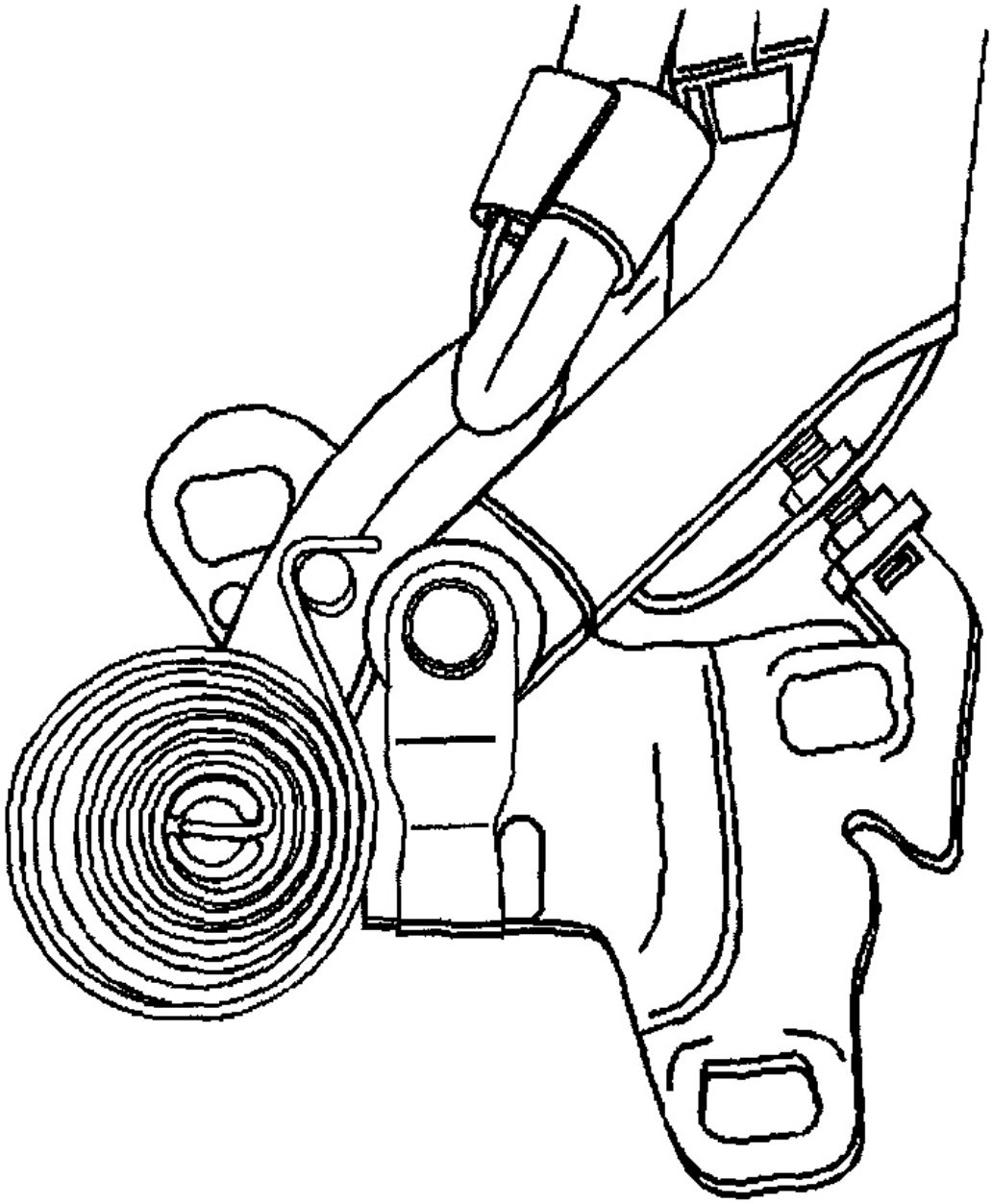

Fig. 169: Identifying Clock Spring
Courtesy of GENERAL MOTORS CORP.

Installation Procedure

1. Install the flat washer, the bushing, and the gripper washer to the clock spring pin.
2. Install the clock spring with pin to the arm.

CAUTION: Refer to FASTENER NOTICE .

3. Install the clock spring nut.

   Tighten

   Tighten the nut to 4 N.m (35 lb in).

4. Grasp the end of the clock spring with vice grips or pliers.
5. Wind the clock spring and insert the end of the spring into the roof link pin.
6. Reposition the folding top to the original position.

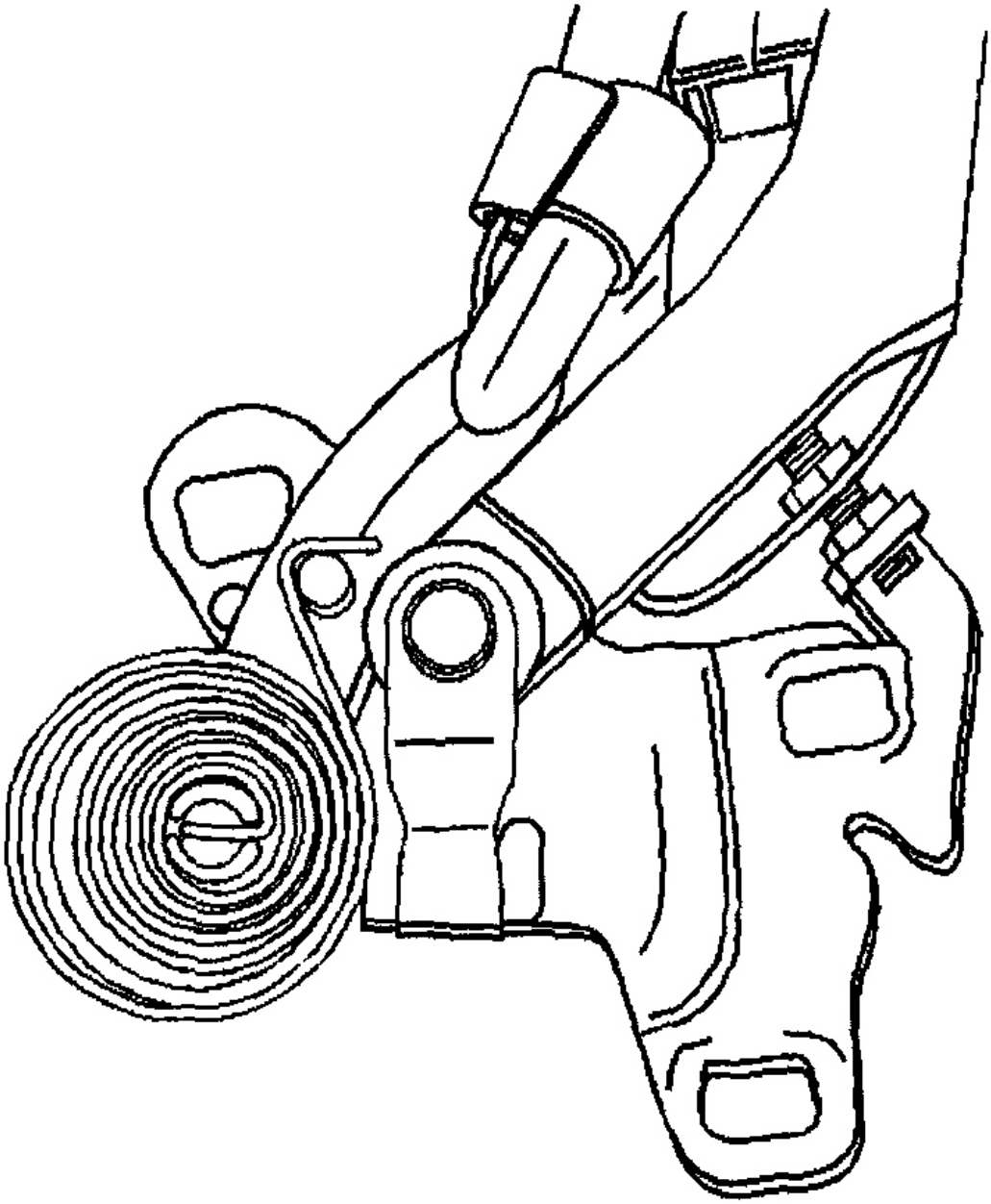

G01734062

Fig. 170: Identifying Clock Spring
Courtesy of GENERAL MOTORS CORP.

FOLDING TOP GLARE COVER REPLACEMENT

Removal Procedure

1. Position the folding top with the #1 bow and the #5 bow up, and open the stowage compartment.

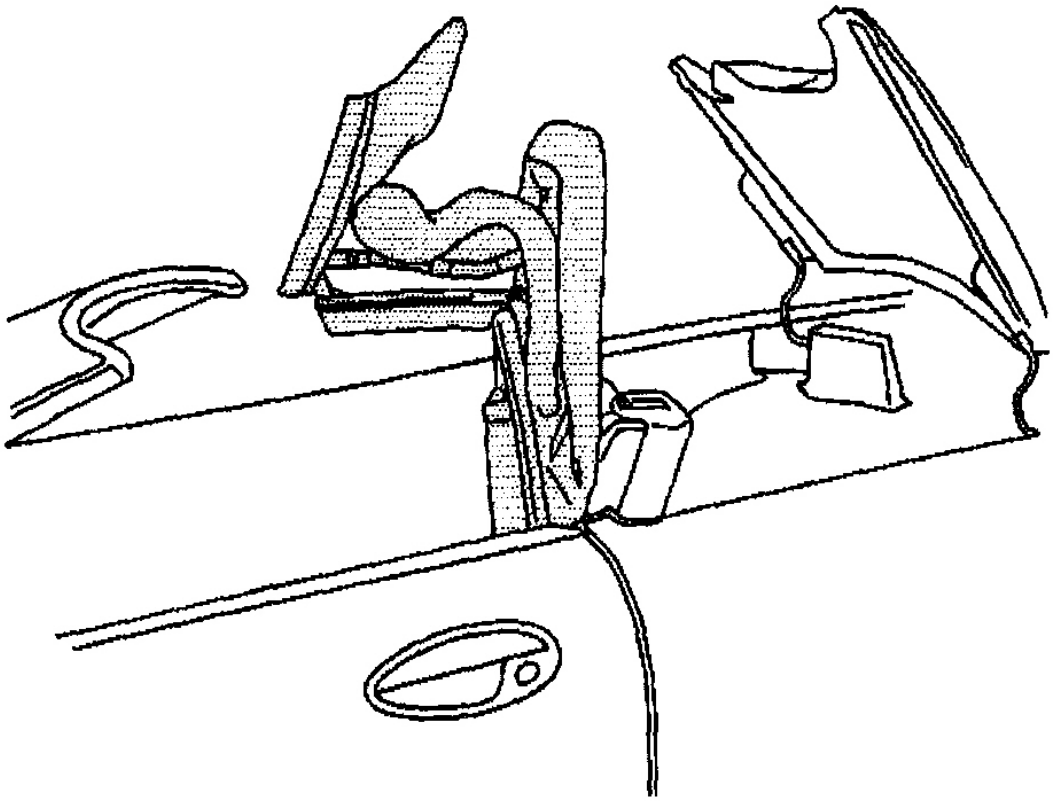

Fig. 171: Aligning Folding Top
Courtesy of GENERAL MOTORS CORP.

2. Remove the glare cover screws at each end of the #5 bow (5).

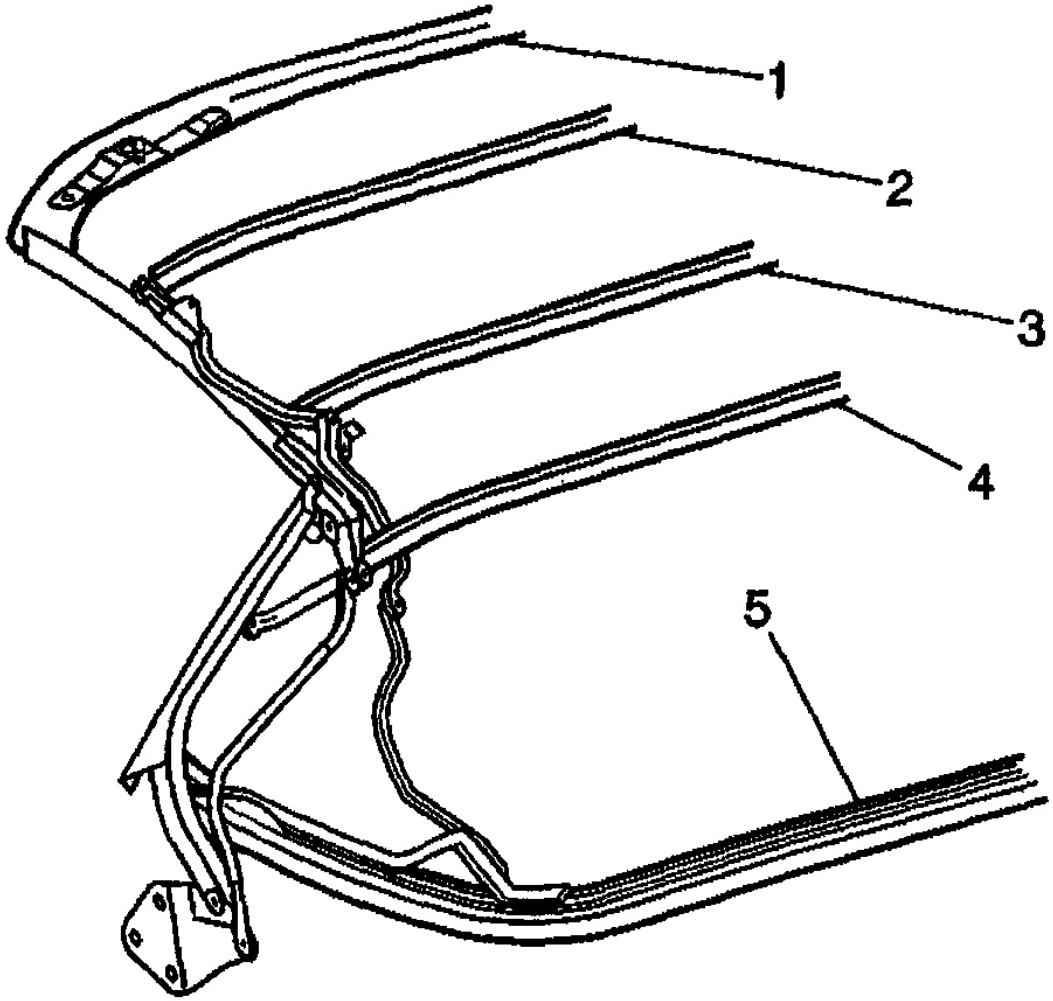

Fig. 172: Identifying Roof Bows
Courtesy of GENERAL MOTORS CORP.

3. Remove the elastic strap screws from the #5 bow.
4. Drill out the glare cover rivets from the #5 bow.

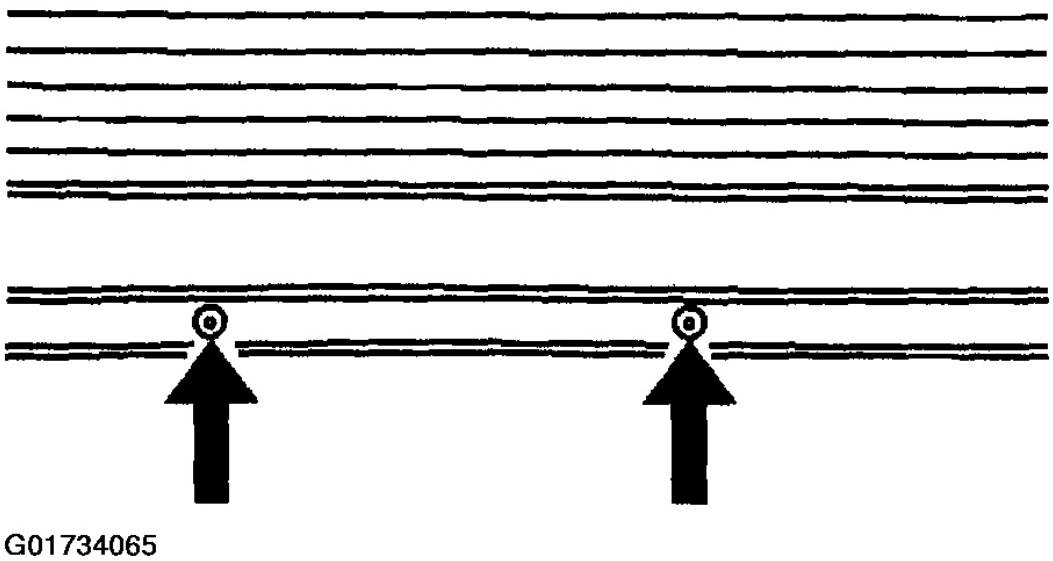

Fig. 173: Identifying #5 Bow Glare Cover Rivets
Courtesy of GENERAL MOTORS CORP.

Installation Procedure

1. Rivet the glare cover to the #5 bow.

   CAUTION: Refer to FASTENER NOTICE .

2. Install the glare cover screws to the #5 bow.

   Tighten

   Tighten the screws to 2 N.m (18 lb in).

3. Install the screws attaching the elastic straps to the #5 bow.

   Tighten

   Tighten the screws to 2 N.m (18 lb in).

4. Close the stowage lid and latch the top.

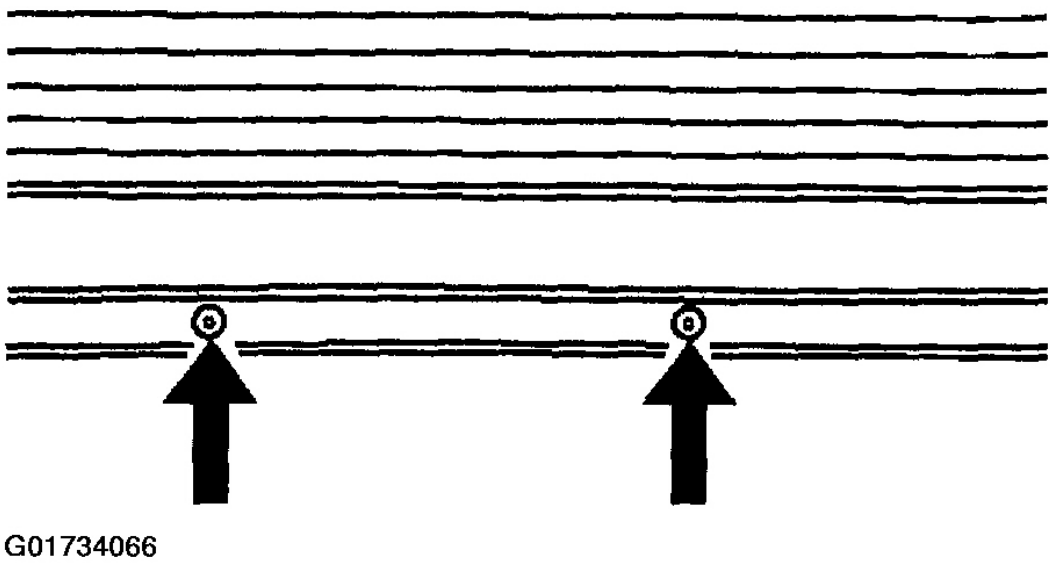

Fig. 174: Identifying #5 Bow Glare Cover Rivets
Courtesy of GENERAL MOTORS CORP.

FOLDING TOP FRONT AND CENTER RAIL REPLACEMENT

Removal Procedure

1. Remove the folding top and place the top upside down on a clean flat surface. Refer to **Folding Top Replacement**
2. Remove the headliner screws from the rear side rail.
3. Remove the folding top front and center side rail retainers. Refer to **Weatherstrip Retainer Replacement - Folding Top (Front and Center Side Rail)** **Weatherstrip Retainer Replacement - Folding Top (Rear Side Rail)** .
4. Remove the seal compression panel from the #1 bow. Refer to **Folding Top Seal Compression Panel Replacement**
5. Using a pair of needle-nosed pliers, remove the top cover staples from the #1 bow.

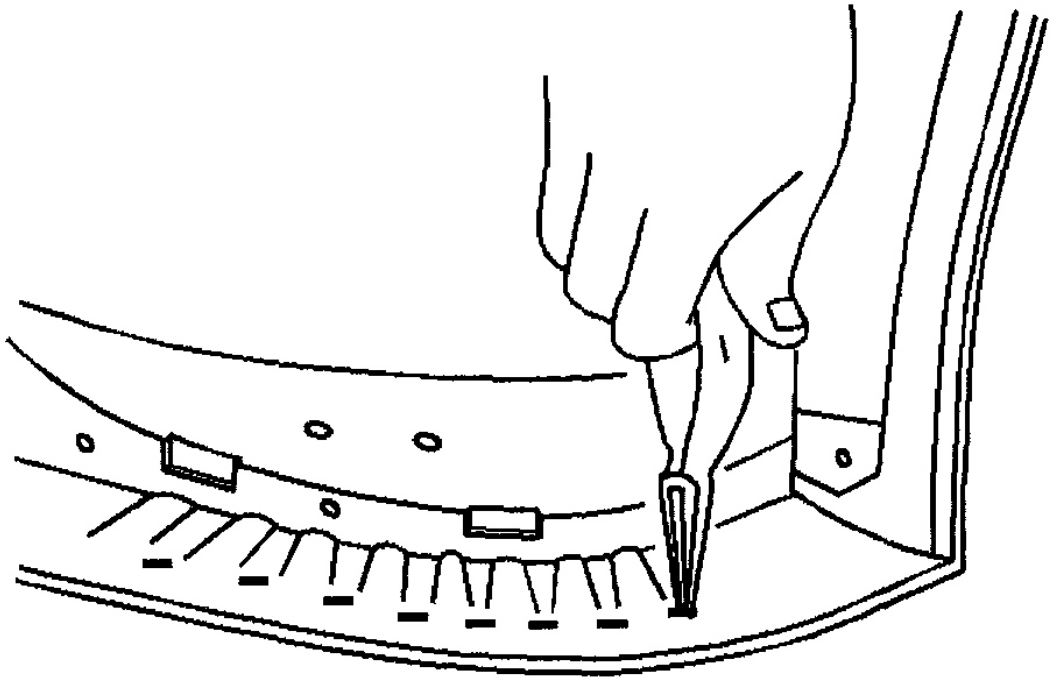

Fig. 175: Removing #1 Bow Top Cover Staples
Courtesy of GENERAL MOTORS CORP.

6. Peel back the top cover to expose the fabric flap on the tension cable bracket.
7. Remove the headliner screws from the #1 bow.

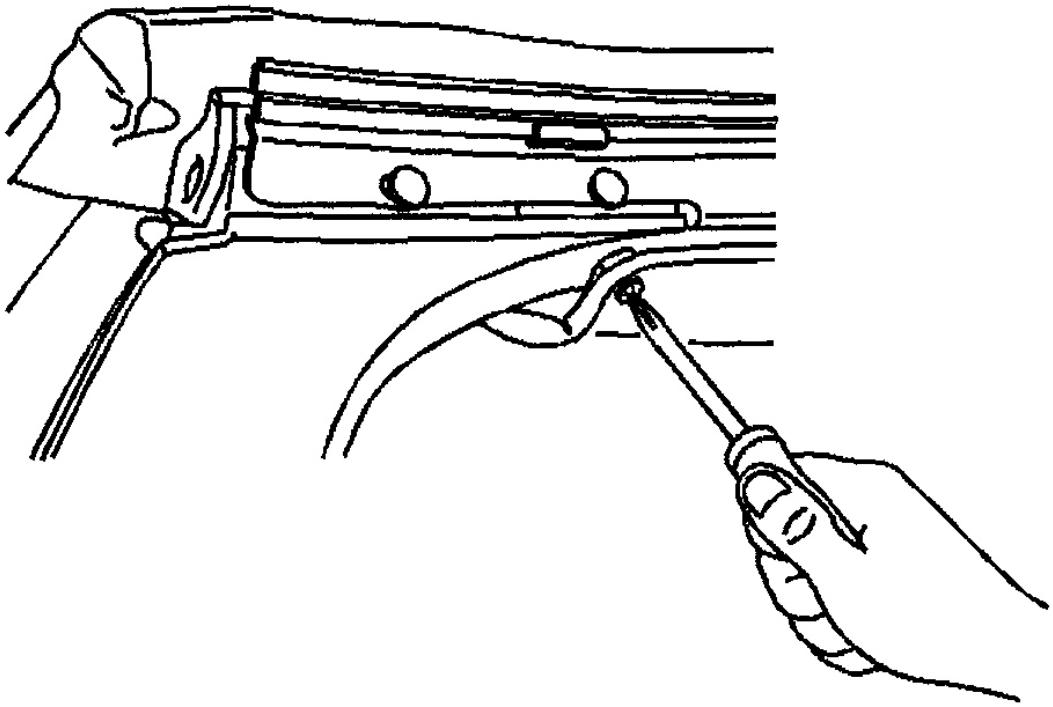

G01734068

Fig. 176: Removing #1 Bow Headliner Screws
Courtesy of GENERAL MOTORS CORP.

8. Remove the headliner push-on retainer from the #1 bow.

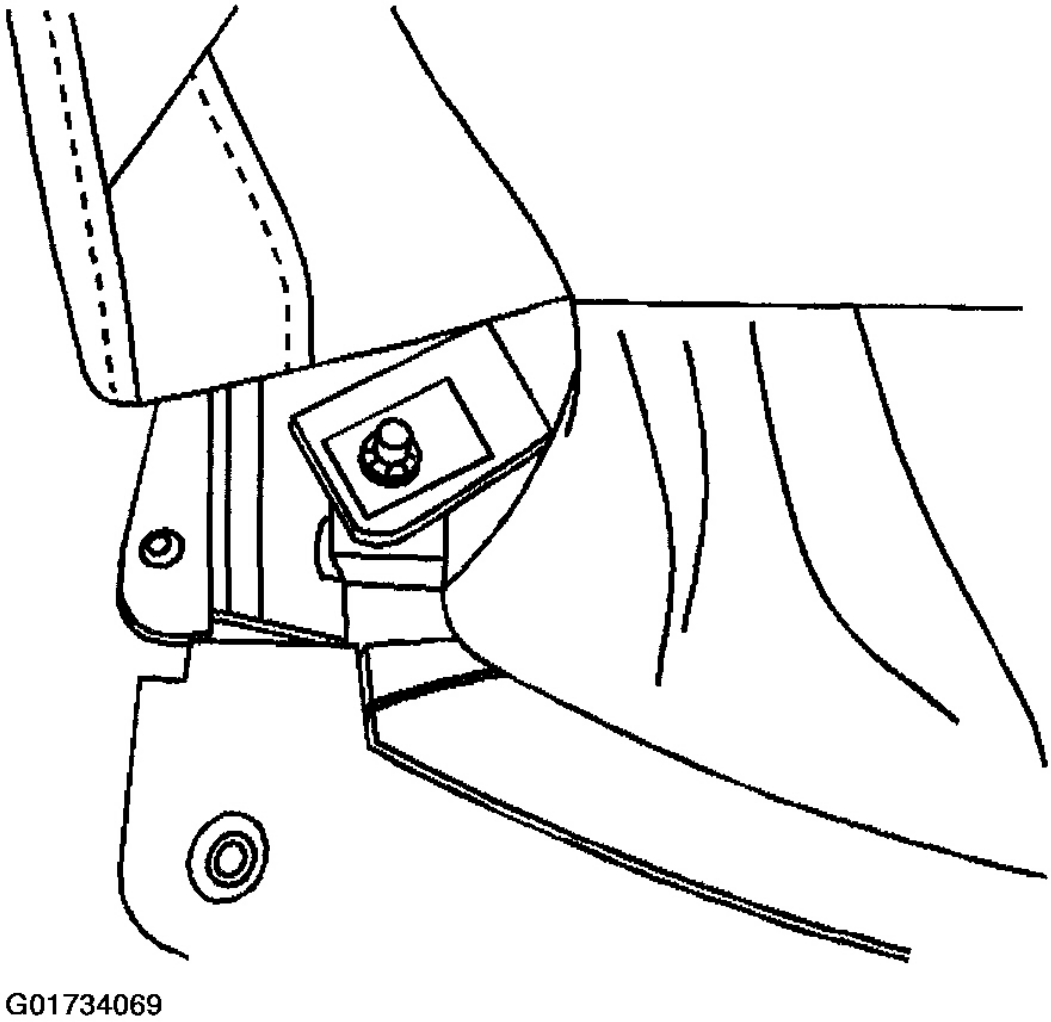

Fig. 177: Identifying #1 Bow Headliner Push-On Retainers
Courtesy of GENERAL MOTORS CORP.

9. Remove the nuts attaching the #1 bow to the front side rail.

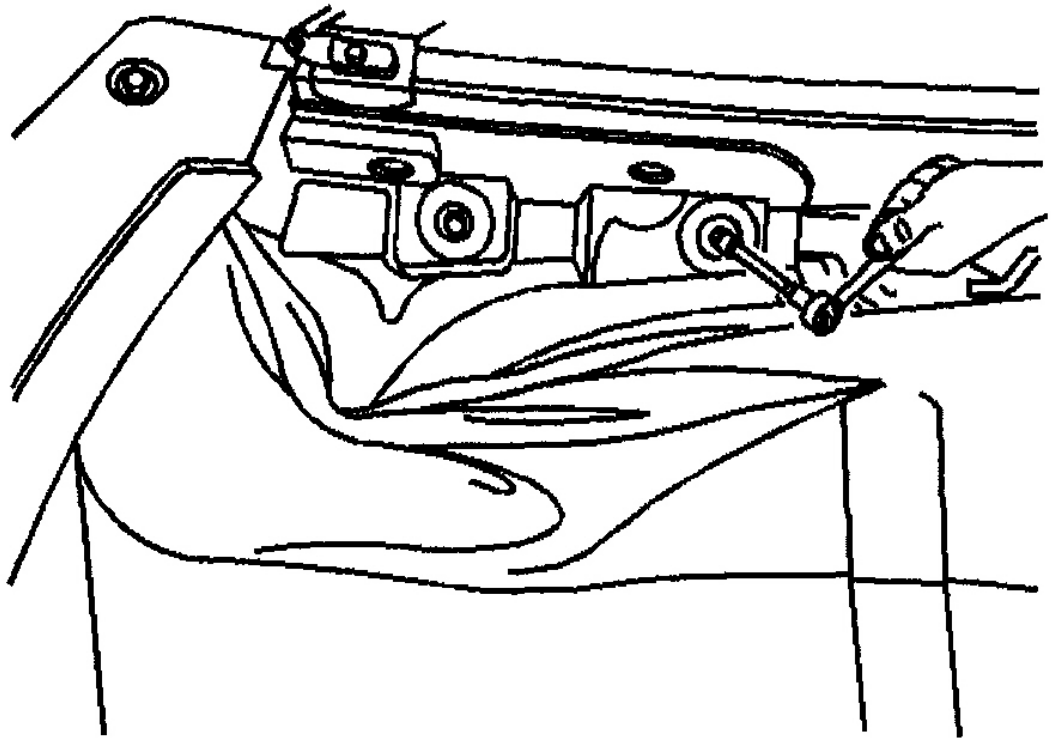

G01734070

Fig. 178: Removing #1 Bow Front Side Rail Nuts
Courtesy of GENERAL MOTORS CORP.

10. Remove the main control link screw from the front side rail.
11. Remove the main control link screw from the center side rail.
12. Remove the center rail screw from the rear side rail.
13. Remove the center rail screw from the balance link.
14. Remove the front and center rail assembly.

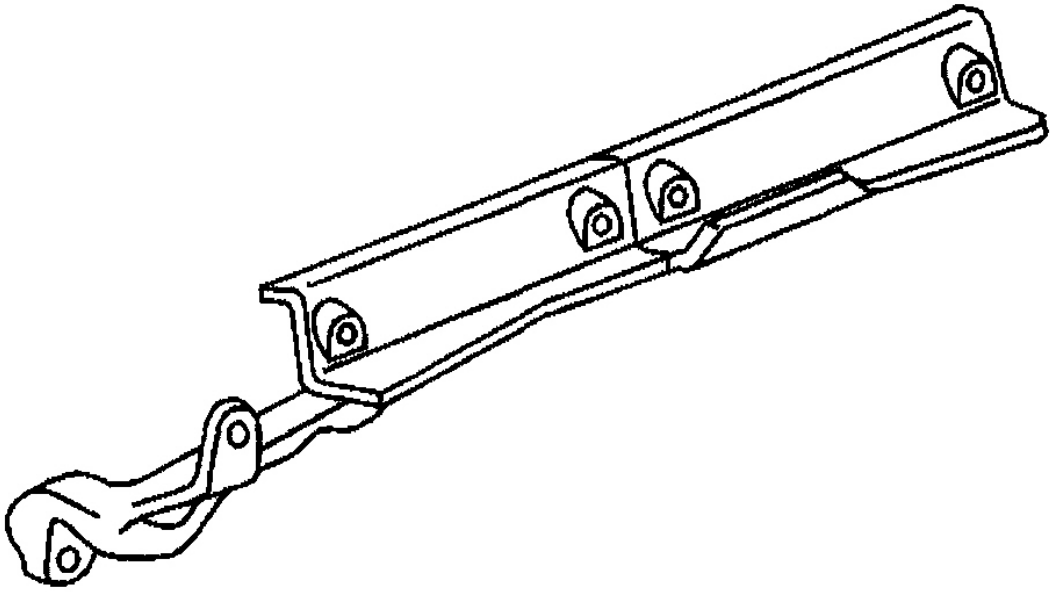

G01734071

Fig. 179: Identifying Front Side Rail
Courtesy of GENERAL MOTORS CORP.

Installation Procedure

1. Install the front and center rail assembly.

   CAUTION: Refer to FASTENER NOTICE .

2. Install the spacers and the screw attaching the center rail (9) to the rear side rail (8).

   Tighten

   Tighten the screw to 19 N.m (14 lb ft).

3. Install the spacers and the screw attaching the center rail (9) to the balance link.

   Tighten

   Tighten the screw to 23 N.m (17 lb ft).

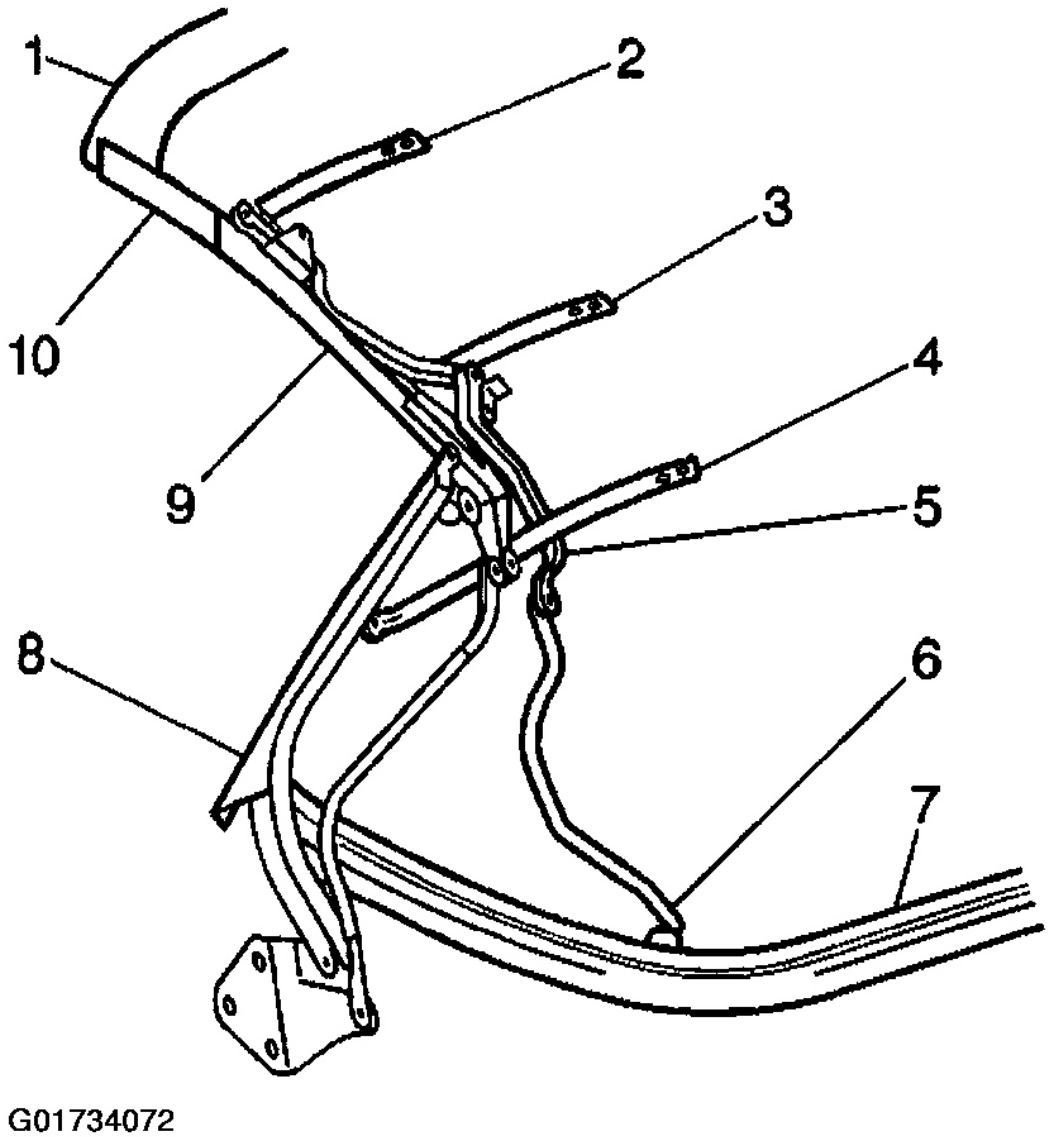

Fig. 180: Identifying Main Control Link Bracket
Courtesy of GENERAL MOTORS CORP.

4. Install the spacers and the screw attaching the main control link to the front side rail.

   Tighten

   Tighten the screw to 20 N.m (15 lb ft).

5. Install the spacers and the screw attaching the main control link to the center side rail.

   Tighten

   Tighten the screw to 20 N.m (15 lb ft).

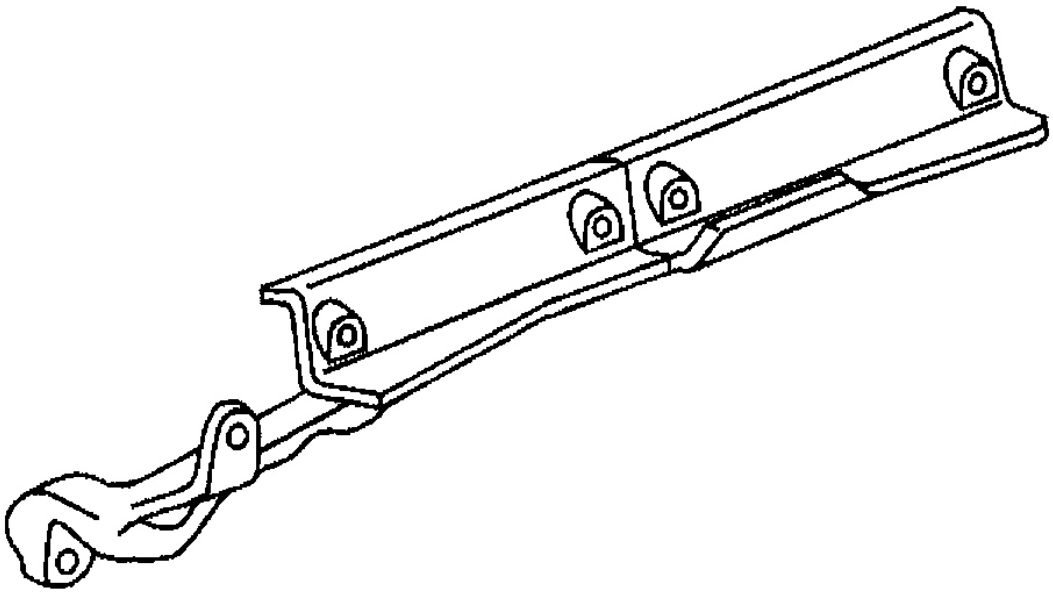

G01734073

Fig. 181: Identifying Front Side Rail
Courtesy of GENERAL MOTORS CORP.

6. Install the nuts attaching the #1 bow (1) to the front side rail.

   Tighten

   Tighten the nuts to 14 N.m (10 lb ft).

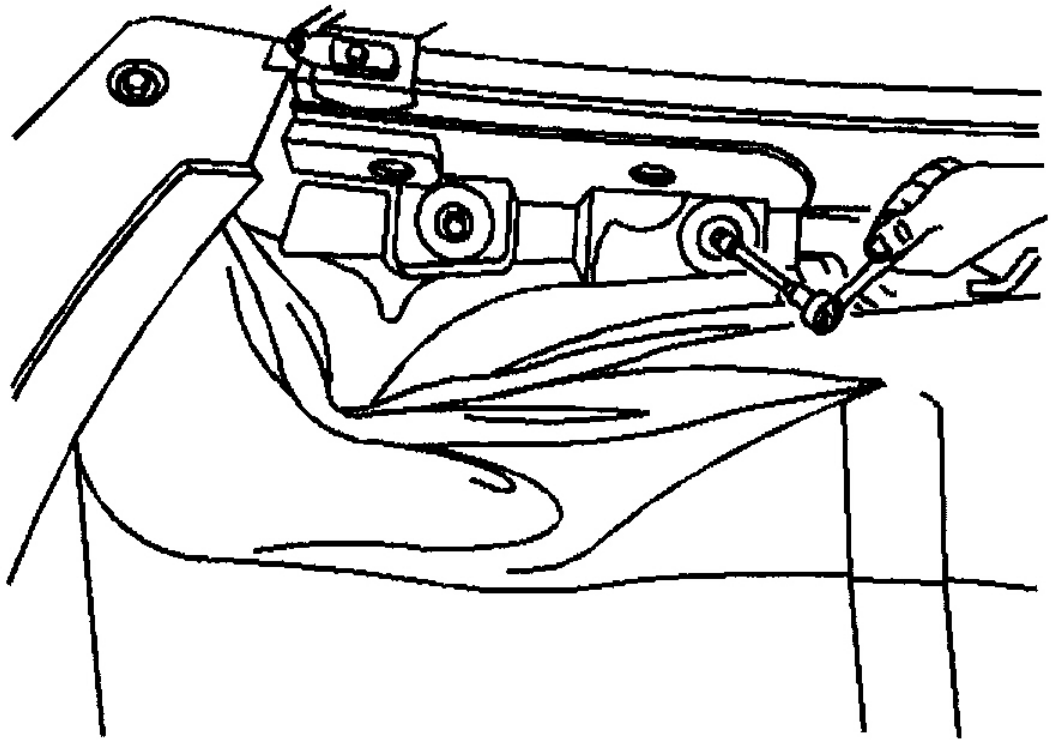

G01734074

Fig. 182: Installing #1 Bow Front Side Rail Nuts
Courtesy of GENERAL MOTORS CORP.

7. Install the headliner push-on retainers to the #1 bow.

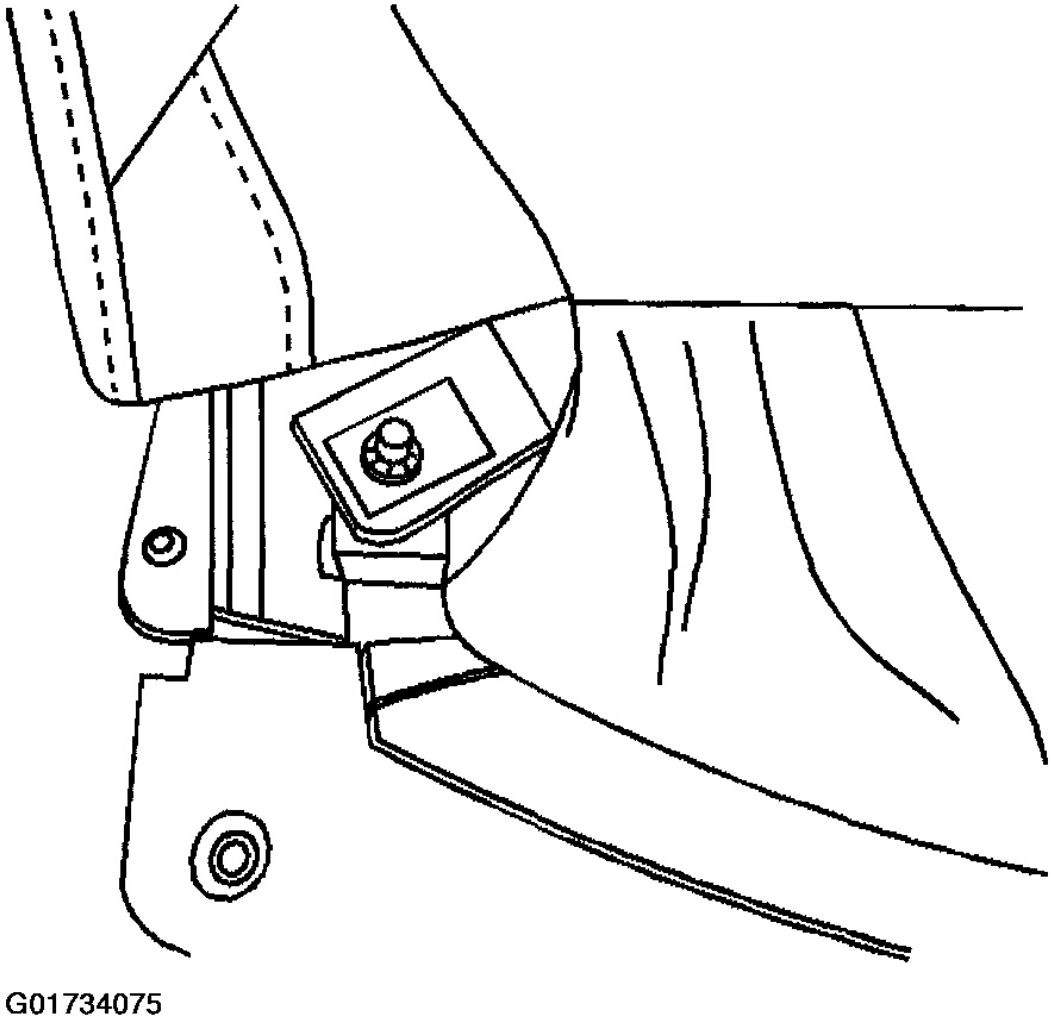

Fig. 183: Identifying #1 Bow Headliner Push-On Retainers
Courtesy of GENERAL MOTORS CORP.

8. Install the headliner screw to the #1 bow.

   Tighten

   Tighten the screws to 2 N.m 18 lb in).

9. With an assistant install the folding top to the vehicle. Refer to **Folding Top Replacement.**
10. Install the front and center side rail weatherstrip retainers. Refer to **Weatherstrip Retainer Replacement - Folding Top (Front and Center Side Rail)** **Weatherstrip Retainer**

Replacement - Folding Top (Rear Side Rail) .

11. Before stapling the top cover to the #1 bow, refer to **Folding Top Seal Compression Panel Replacement** .
12. Reposition the folding top to the original position.

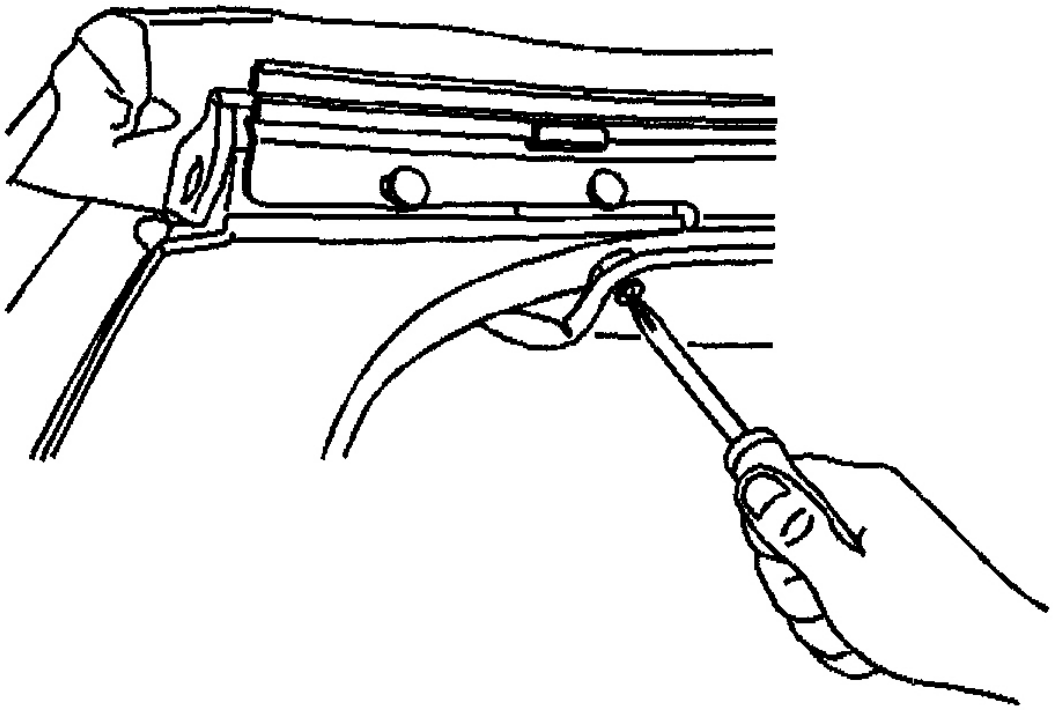

G01734076

Fig. 184: Installing #1 Bow Headliner Screws
Courtesy of GENERAL MOTORS CORP.

FOLDING TOP MAIN CONTROL LINK REPLACEMENT

Removal Procedure

1. Remove the folding top and place the top upside down on a clean flat surface. Refer to **Folding Top Replacement** .
2. Remove the following components from the rear side rail.
   - **2.1.** The headliner screws
   - **2.2.** The glare cover elastic strap screws

2.3. The headliner elastic strap screws

3. Remove the headliner screw from the #1 bow.

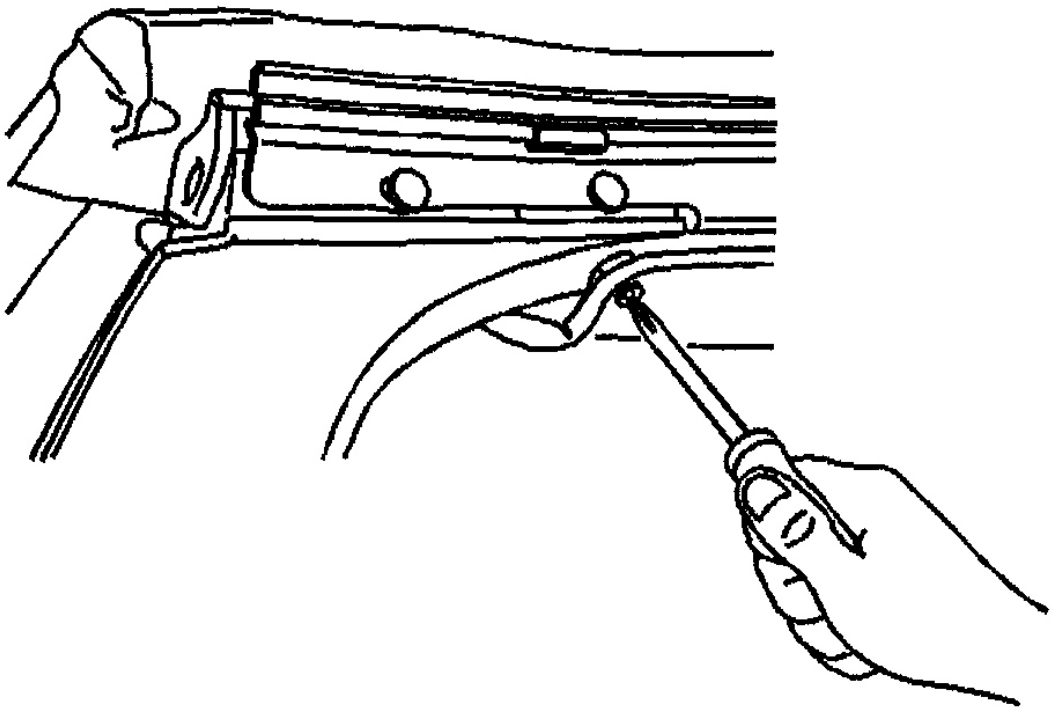

Fig. 185: Removing #1 Bow Headliner Screws
Courtesy of GENERAL MOTORS CORP.

4. Remove the headlining push-on retainers from the #1 bow.

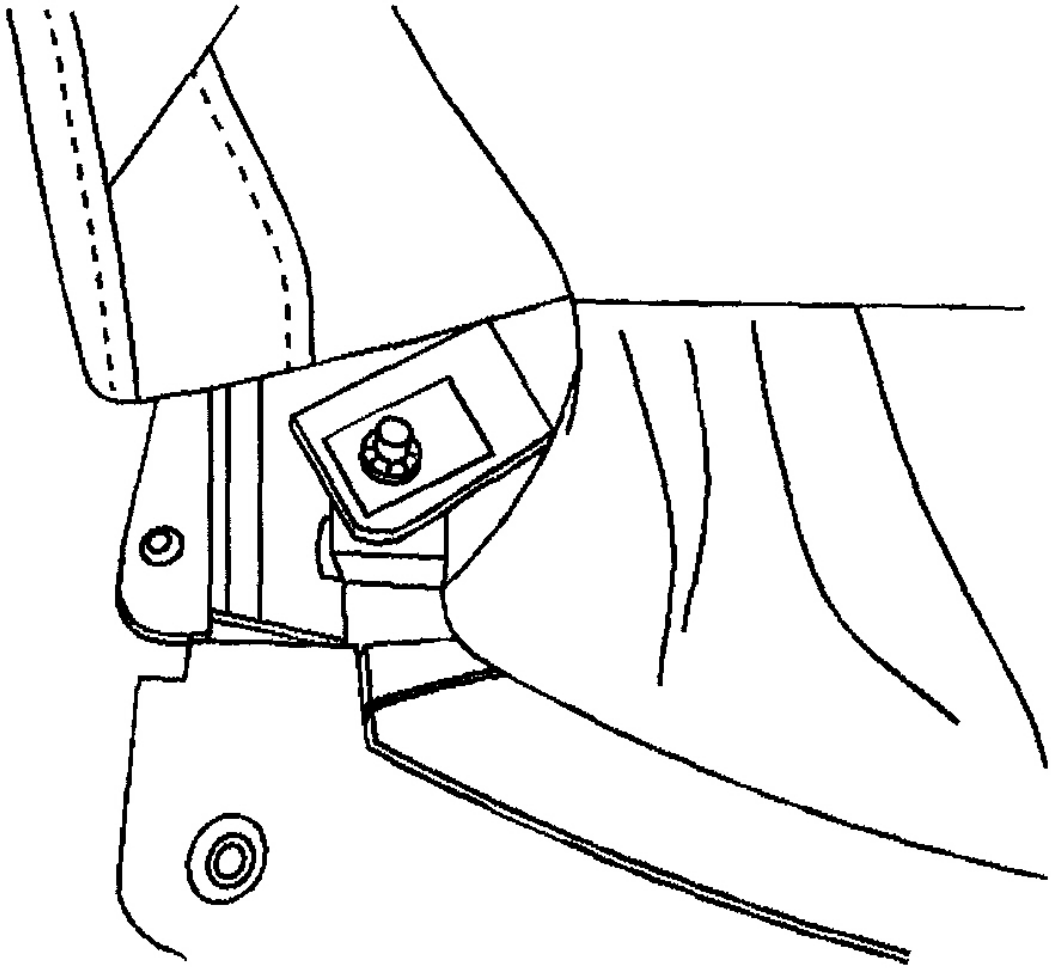

Fig. 186: Removing #1 Bow Headliner Push-On Retainers
Courtesy of GENERAL MOTORS CORP.

5. Remove the main control link bracket screws from the #2 bow (2).
6. Remove the main control link bracket screws from the #3 bow (3).
7. Remove the main control link bracket screws from the #4 bow (4).
8. Using a grease pencil mark the end position of the adjustable link rod as an aid in assembling a new part.
9. Remove the screw (6) from the end of the main control link rod on the #5 bow (7).
10. Remove the screw from the main control link on the center side rail.

11. Remove the screw from the main control link on the front side rail.

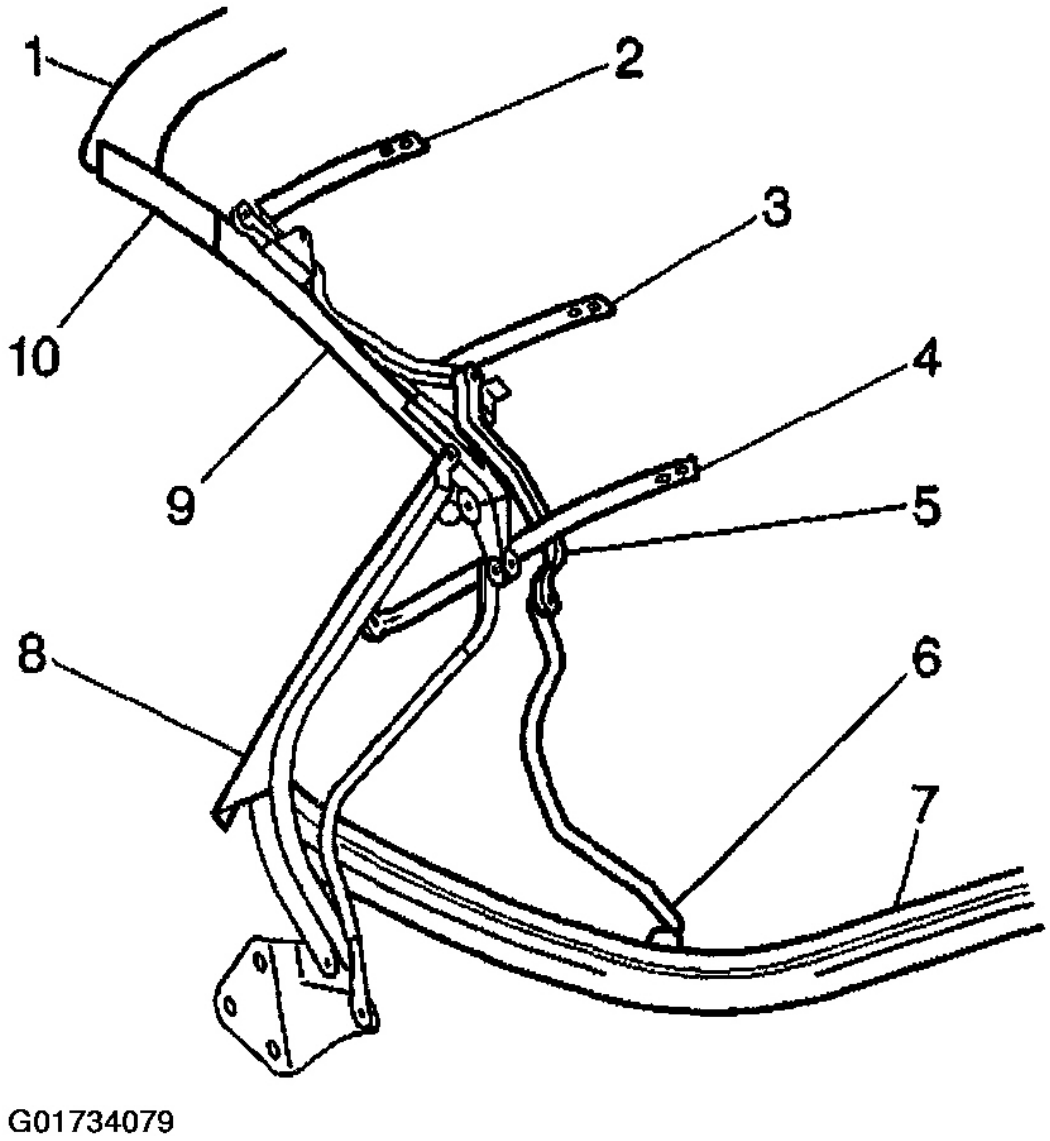

Fig. 187: Identifying Main Control Link Bracket
Courtesy of GENERAL MOTORS CORP.

12. Remove the main control link.

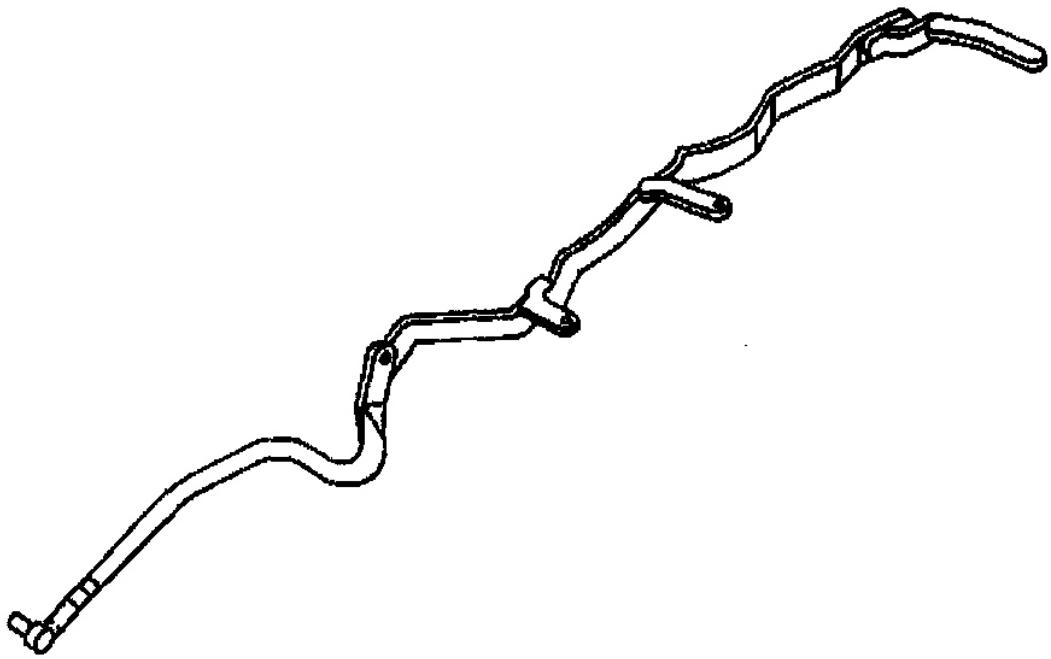

G01734080

Fig. 188: Identifying Main Control Link Bracket
Courtesy of GENERAL MOTORS CORP.

Installation Procedure

1. Position the main control link to the top.

   CAUTION: Refer to FASTENER NOTICE .

2. Install the spacers and the screw attaching the main control link to the front side rail.

   Tighten

   Tighten the screw to 20 N.m (15 lb ft).

3. Install the spacers and the screw attaching the main control link to the center side rail.

   Tighten

Tighten the screw to 20 N.m (15 lb ft).

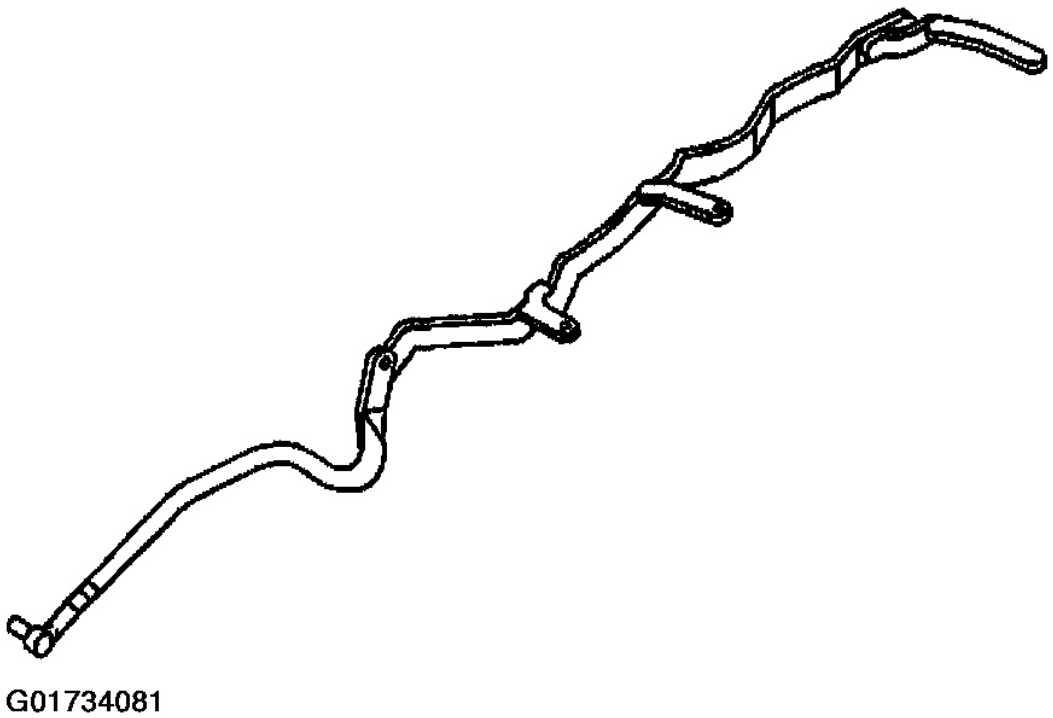

Fig. 189: Identifying Main Control Link Bracket
Courtesy of GENERAL MOTORS CORP.

4. Adjust the end of the link adjuster (6) rod to match the marked position.
5. Install the end screw to the main control link rod on the #5 bow (7).

Tighten

Tighten the screw to 15 N.m (11 lb ft).

6. Install the screws to the control link brackets on the #2, 3, and 4 roof bows.

Tighten

Tighten the screws to 13 N.m (9 lb ft).

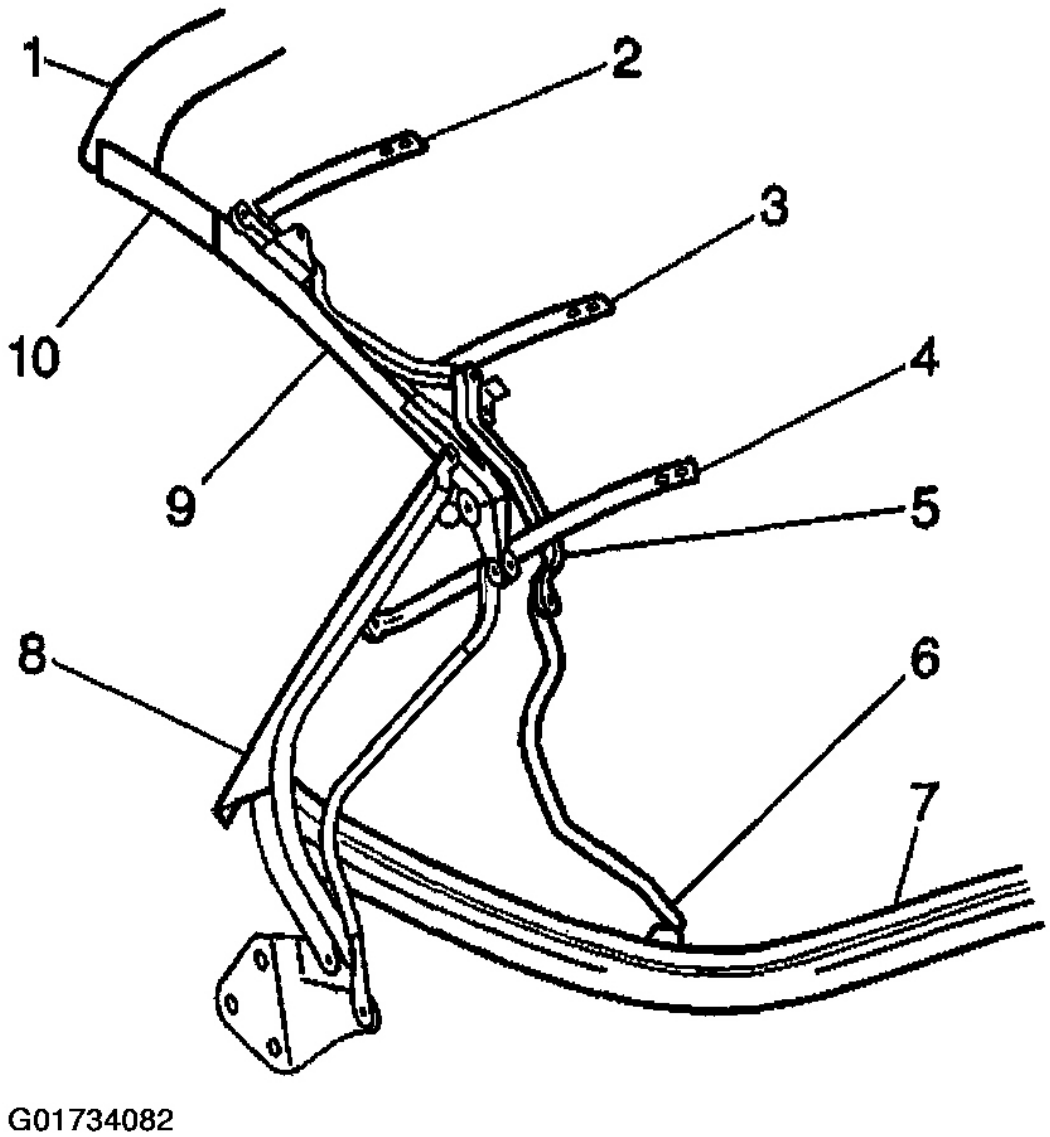

Fig. 190: Identifying Main Control Link Bracket
Courtesy of GENERAL MOTORS CORP.

7. Install the headliner push-on retainers to the #1 bow.

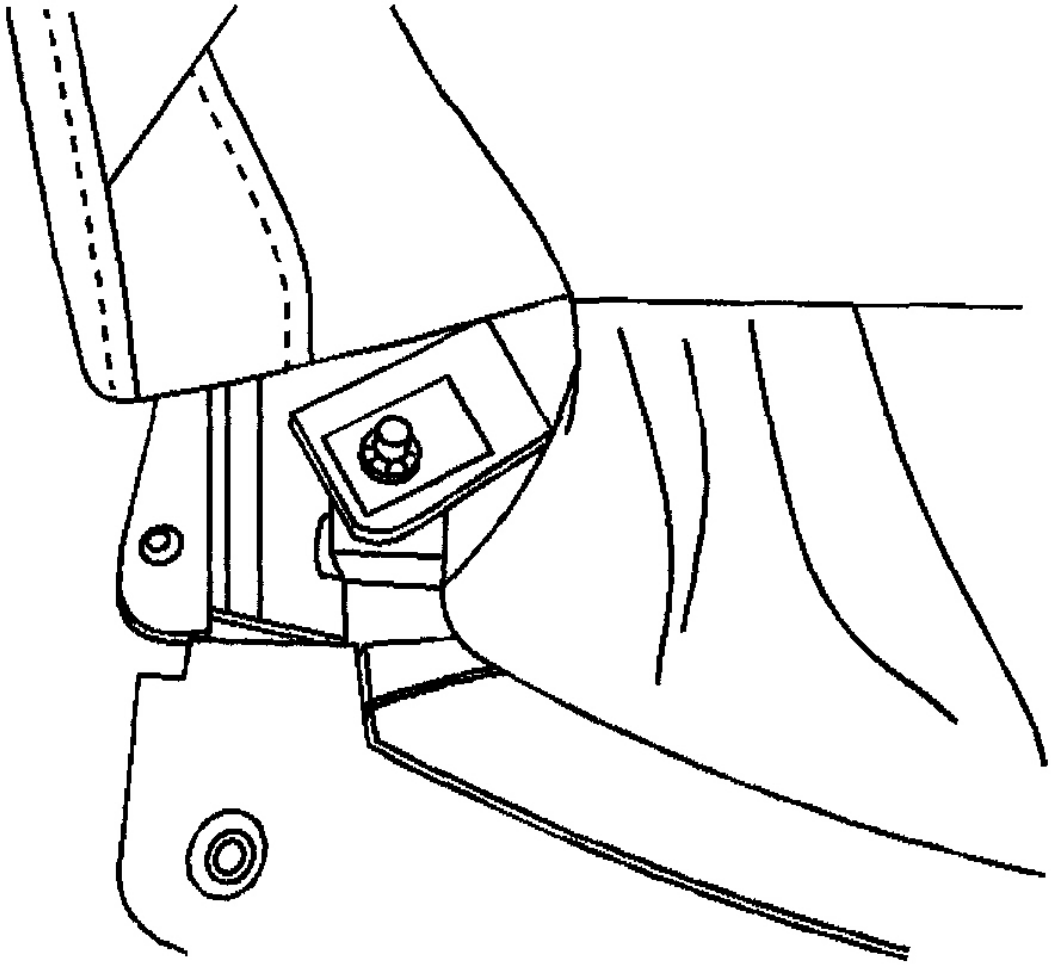

Fig. 191: Installing #1 Bow Headliner Push-On Retainers
Courtesy of GENERAL MOTORS CORP.

8. Install the attaching the headliner screws to the #1 bow.

   Tighten

   Tighten the screws to 2 N.m (18 lb in).

9. Install the glare cover to the #5 bow.

   Tighten

Tighten the screws to 2 N.m (18 lb in).

10. Install the headliner screw to the rear side rail.

    Tighten

    Tighten the screws to 2 N.m (18 lb in).

11. Install the headliner elastic strap screw to the rear side rail.

    Tighten

    Tighten the screws to 2 N.m (18 lb in).

12. Install the folding top. Refer to **Folding Top Replacement** .
13. Reposition the folding top to the original position.

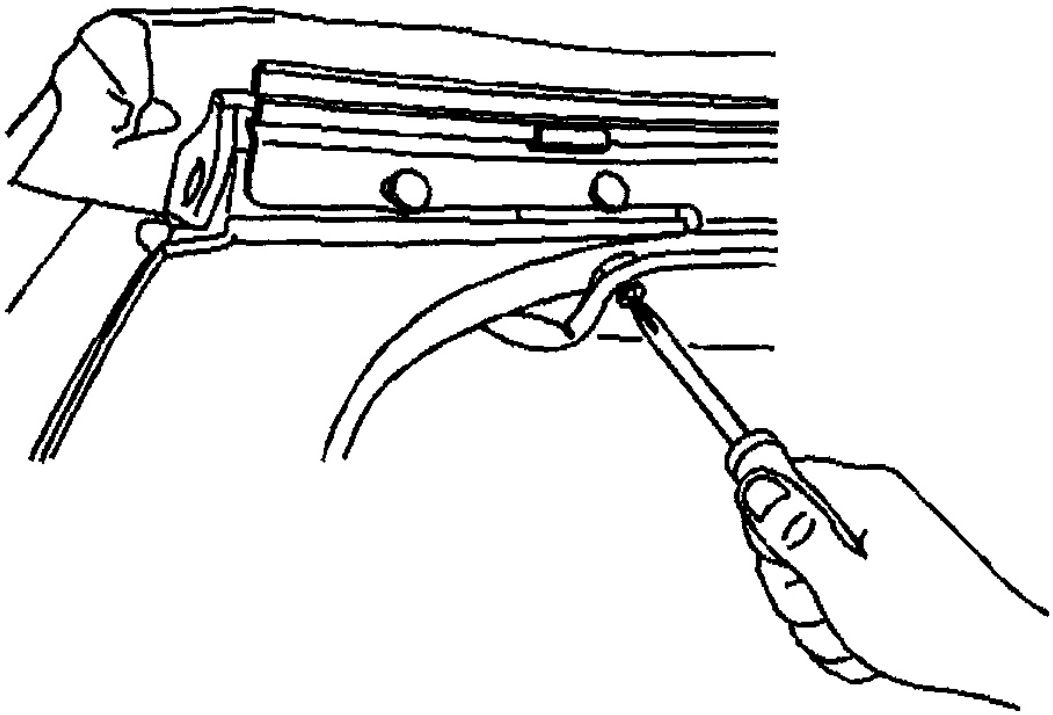

G01734084

Fig. 192: Installing #1 Bow Headliner Screws

Courtesy of GENERAL MOTORS CORP.

FOLDING TOP STOWAGE COMPARTMENT LID REPLACEMENT

Removal Procedure

1. Open and support the folding top stowage lid.
2. Remove the lid release switch (1) from the lid.

   Pry the switch loose with a flat bladed screwdriver.

3. Disconnect the harness (2) from the switch.
4. Remove the harness from the lid.

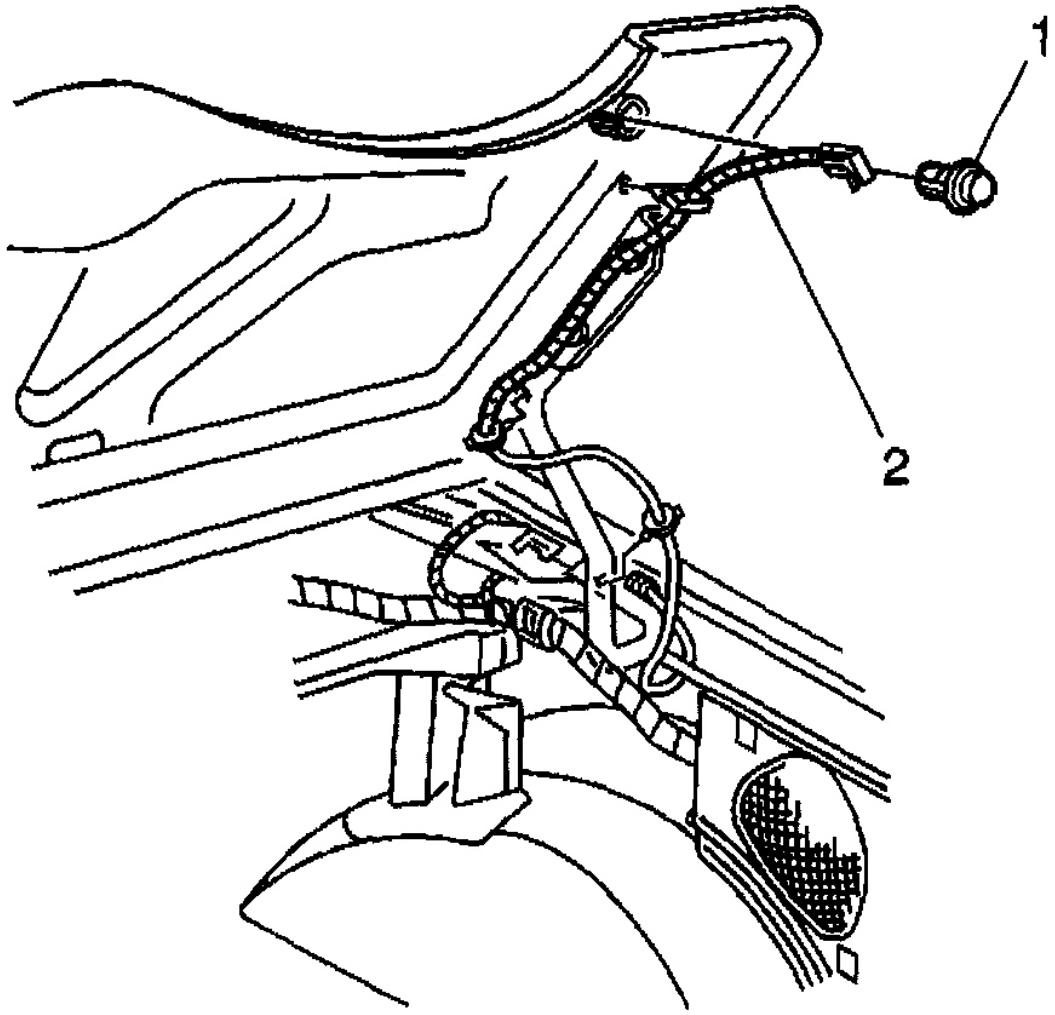

Fig. 193: Removing Stowage Compartment Lid Switch & Harness
Courtesy of GENERAL MOTORS CORP.

5. Using a grease pencil mark the location of the hinges on the lid to aid in installation.
6. Place a protective cover between the stowage lid and the rear compartment lid, and over the top of the quarter panels.
7. With the aid of an assistant remove the hinge bolts from the stowage compartment lid.
8. With the aid of an assistant remove the stowage compartment lid.

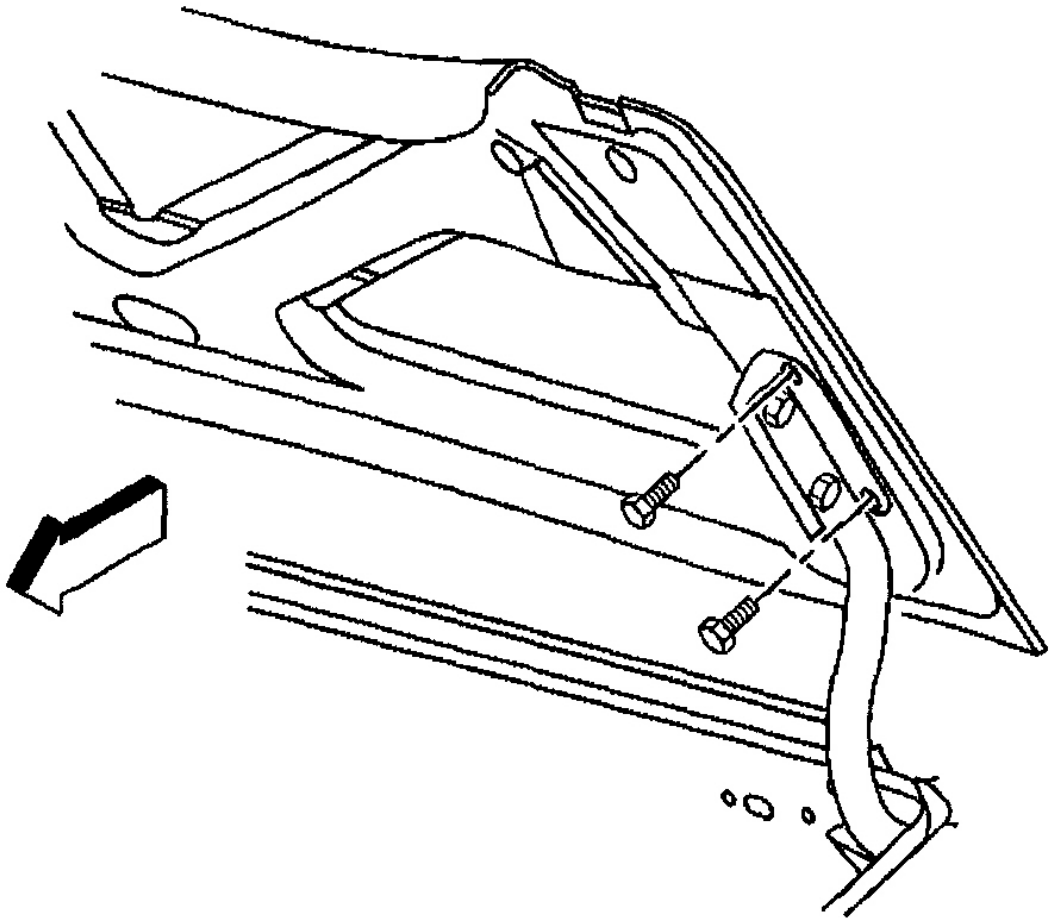

Fig. 194: Removing Stowage Compartment Lid Hinge Bolts
Courtesy of GENERAL MOTORS CORP.

Installation Procedure

1. If required install the anti rattle insulators to a new lid as shown.
   - Install a 6 mm thick X 31 mm square (0.25 inch thick X 1.25 square) insulator to the inside of the flange at the center line of the lid to prevent the closed lid from contacting the extension panel.
   - Install a 12 mm thick X 44 mm square (0.5 inch thick X 1.75 square) insulator to the right and left underside of the lid 38 mm (1.5 inches) in from the raised area of the lid to prevent the closed lid from contacting the roof rail.
   - Install a 12 mm thick X 31 mm square (0.5 inch thick) X (1.25 square) insulator to the

right and left undersides of the flange 127 mm (5 inches) in from the edge of the lid to prevent the closed lid from contacting the roof rail.

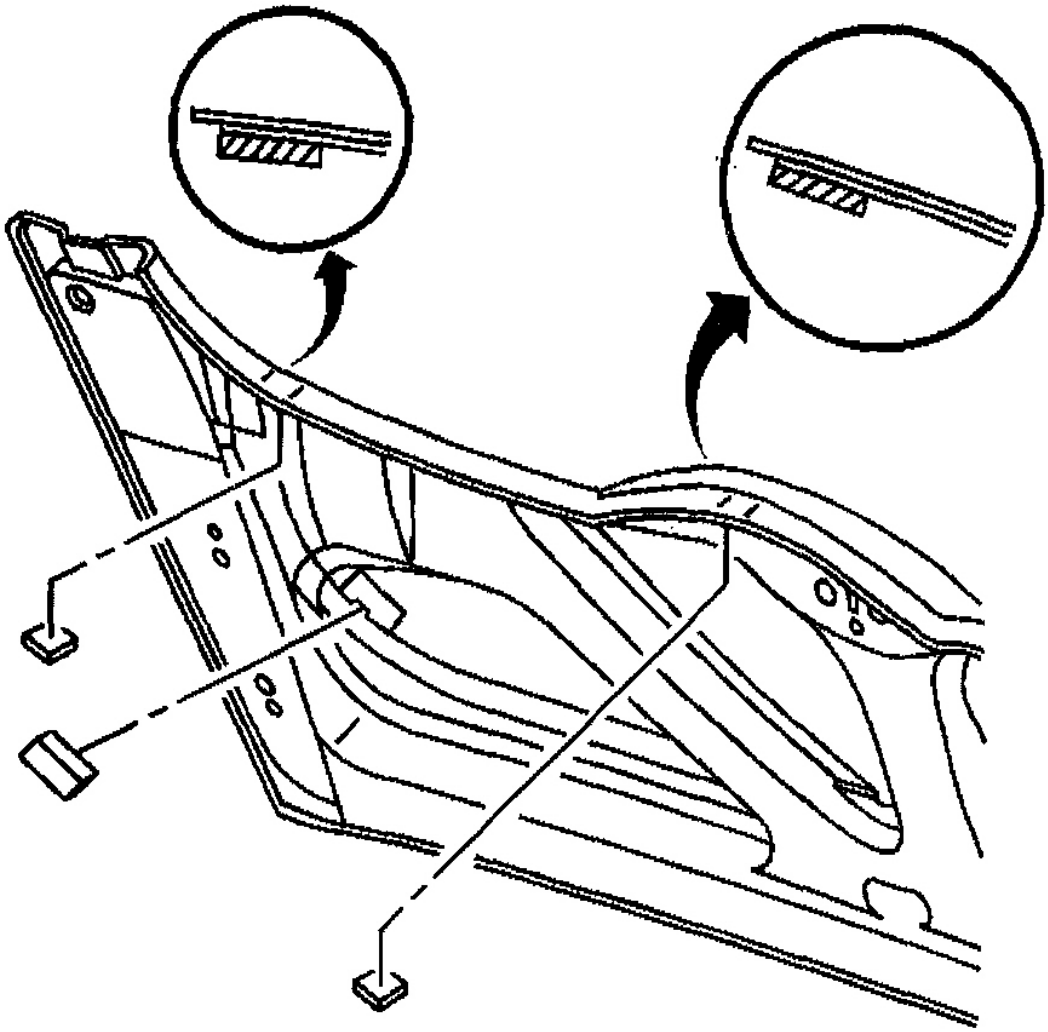

Fig. 195: Installing Stowage Compartment Lid Anti-Rattle Insulators
Courtesy of GENERAL MOTORS CORP.

2. With an assistant position the lid to the hinges, using the grease pencil marks as a reference.

CAUTION: Refer to FASTENER NOTICE .

3. With an assistant install the bolts attaching the hinges to the stowage lid.

   Tighten

   Tighten the bolts to 25 N.m (18 lb ft).

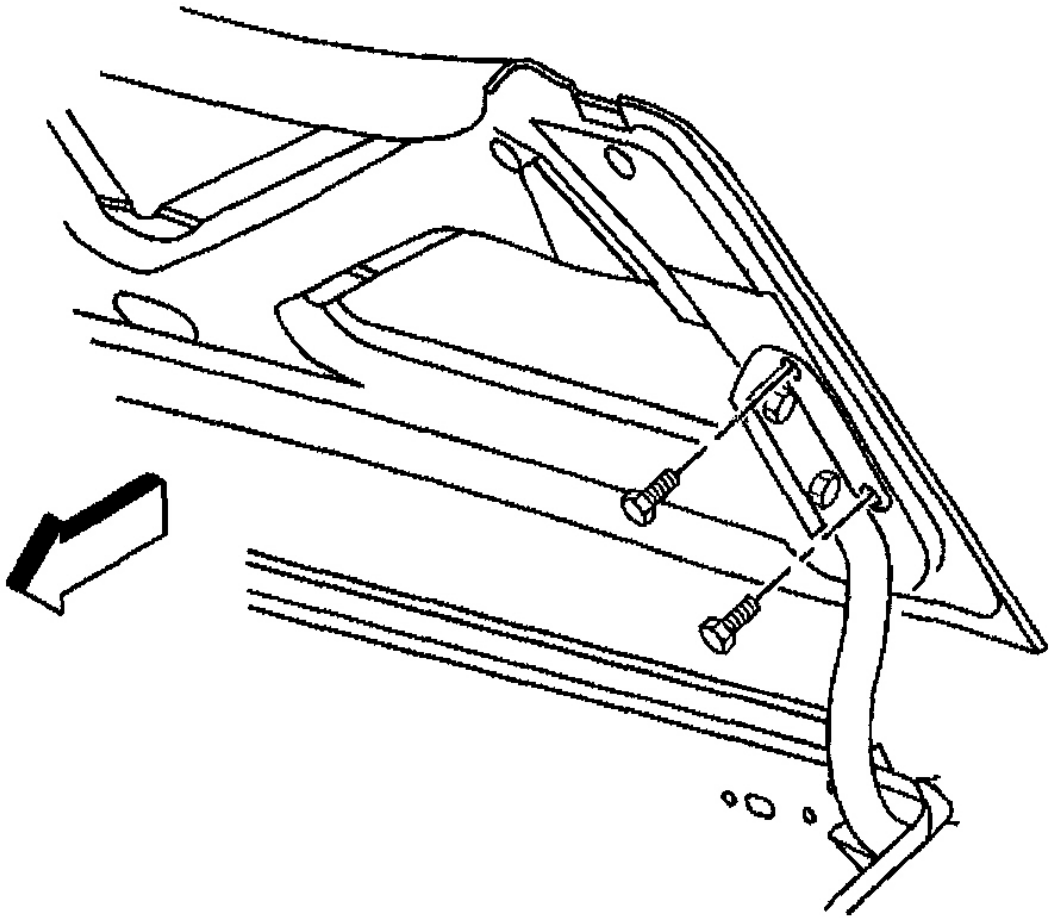

Fig. 196: Installing Stowage Compartment Lid Hinge Bolts
Courtesy of GENERAL MOTORS CORP.

4. Route the switch release harness through the lid and out through the switch opening boss, (left side).
5. Connect the harness (2) to the lid release switch (1).
6. Install the switch to the lid.

7. Align the harness to the slot in the lid boss and push in firmly on the switch until fully seated.
8. Install the wiring harness to the lid.
9. Remove the support and the protective cover.
10. Inspect the operation of the lid and adjust the rear center bumper to flush the stowage lid to the rear compartment lid.

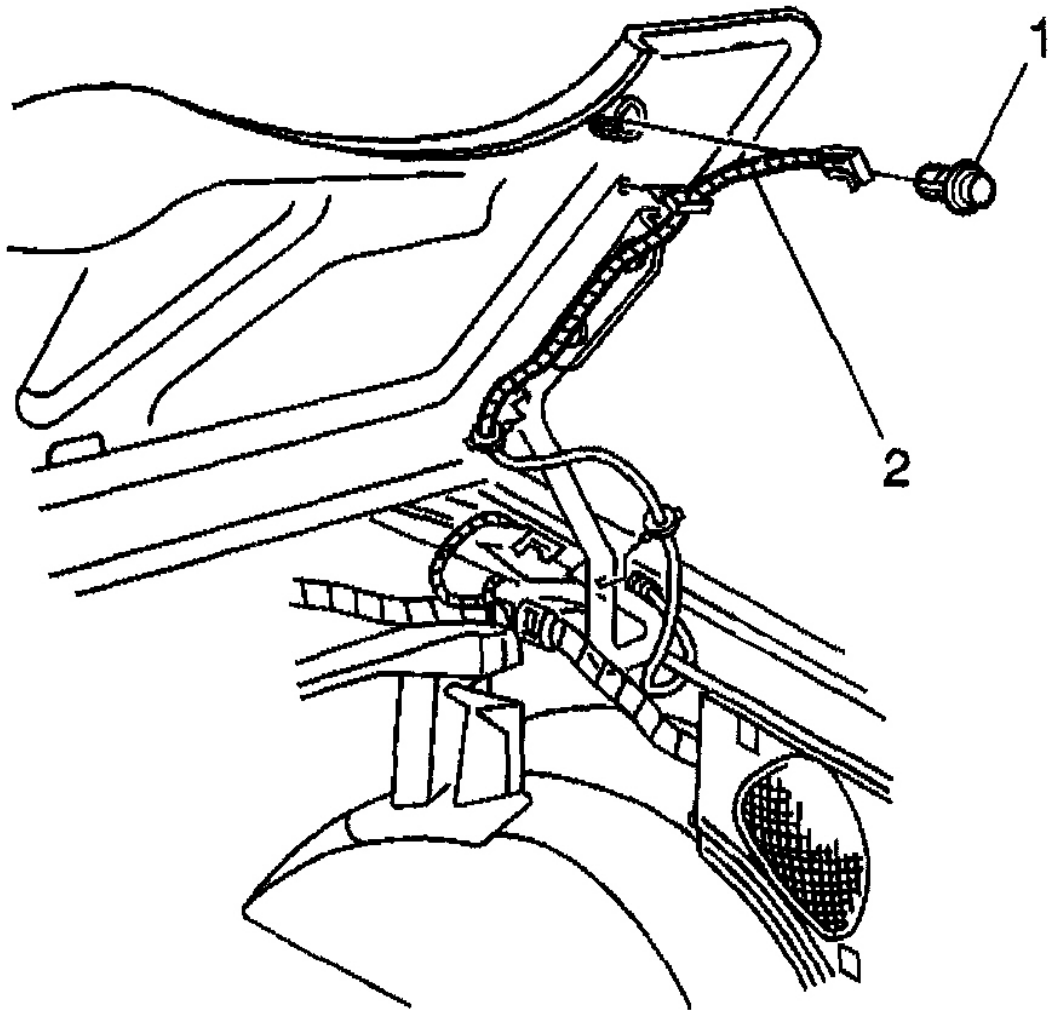

Fig. 197: Installing Stowage Compartment Lid Switch & Harness
Courtesy of GENERAL MOTORS CORP.

FOLDING TOP STOWAGE COMPARTMENT LID HINGE REPLACE

Removal Procedure

Important: The stowage lid and the rear compartment lid will contact if they are opened at the same time. Be sure that one lid is latched at all times.

1. Open the rear compartment.
2. Remove the rear nut attaching the folding top stowage lid hinge.
3. Disconnect the right and left folding top stowage lid struts from the rear of the hinges.
4. Close the rear compartment.

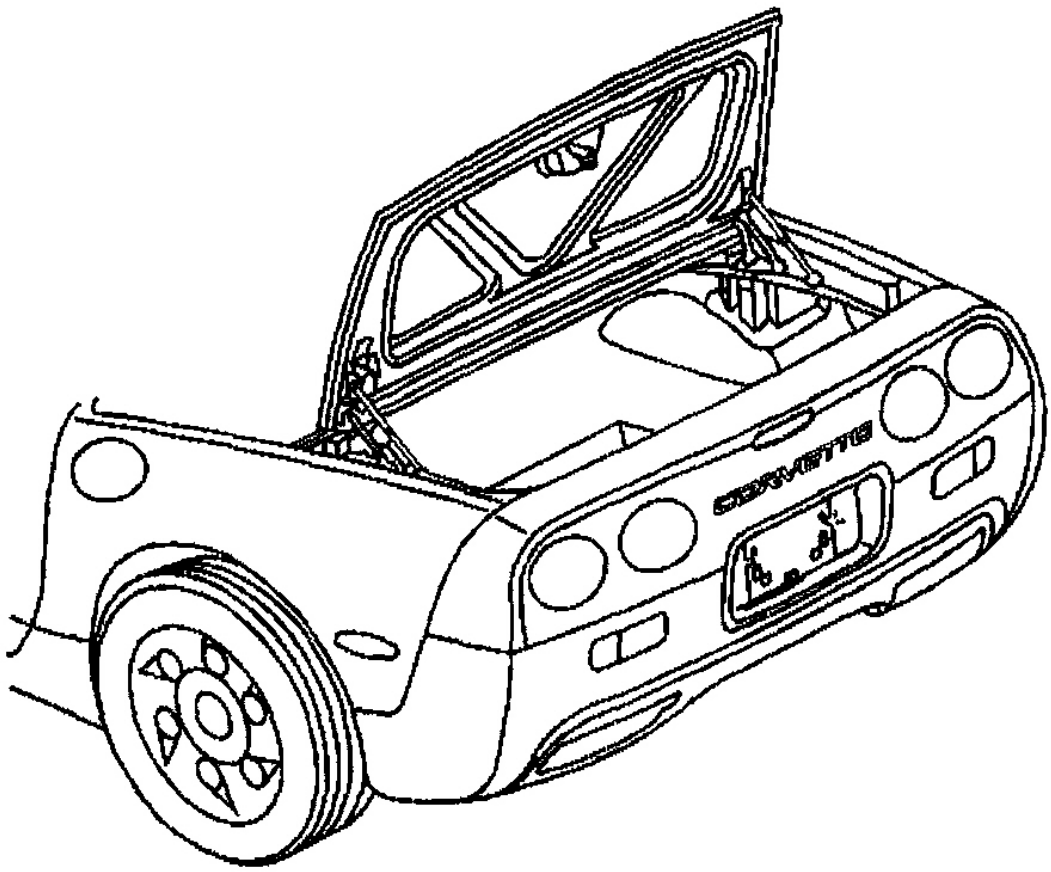

Fig. 198: Identifying Rear Compartment
Courtesy of GENERAL MOTORS CORP.

5. Open the folding top stowage lid and support the lid.
6. Place a protective cover between the stowage lid and the rear compartment lid, and over the top of the quarter panels.
7. Using a grease pencil mark the location of the hinge on the lid to aid in installation.

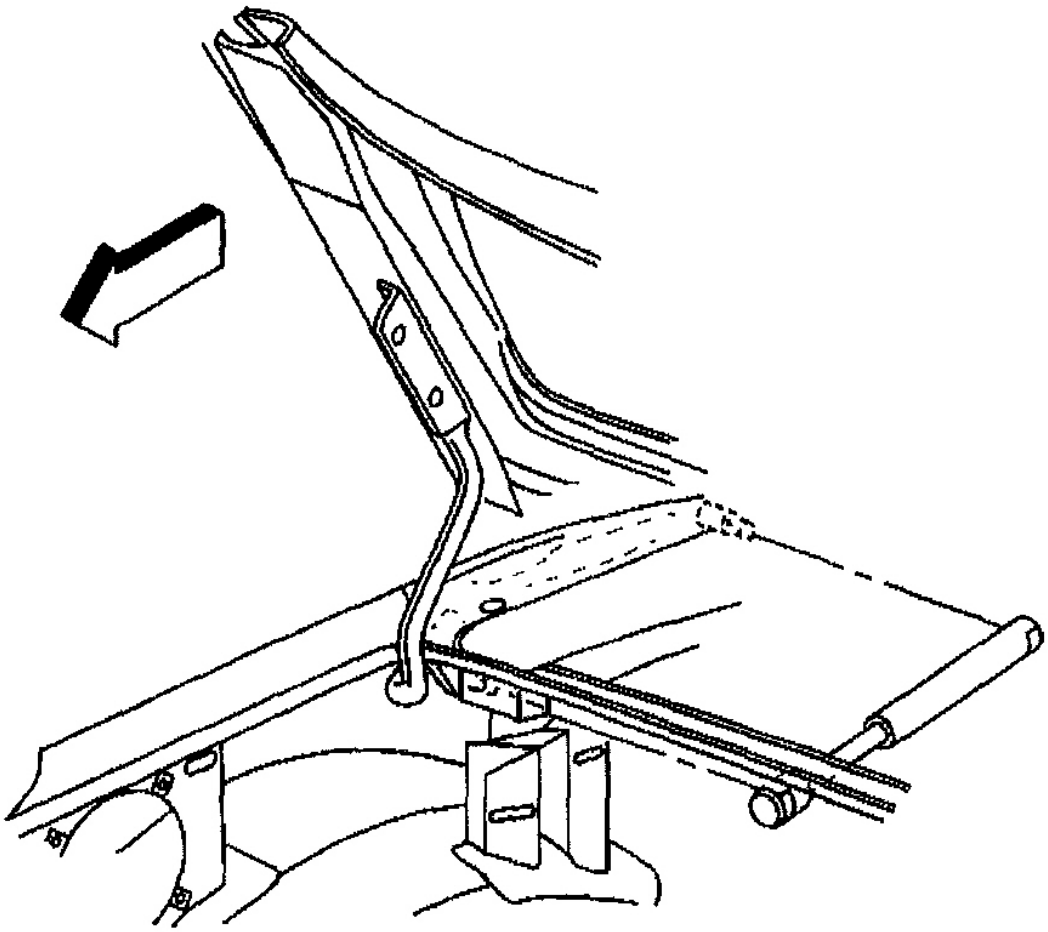

Fig. 199: Identifying Stowage Compartment Lid Hinges
Courtesy of GENERAL MOTORS CORP.

8. Remove the lid release switch harness (2) from the hinge, (drivers side hinge removal).

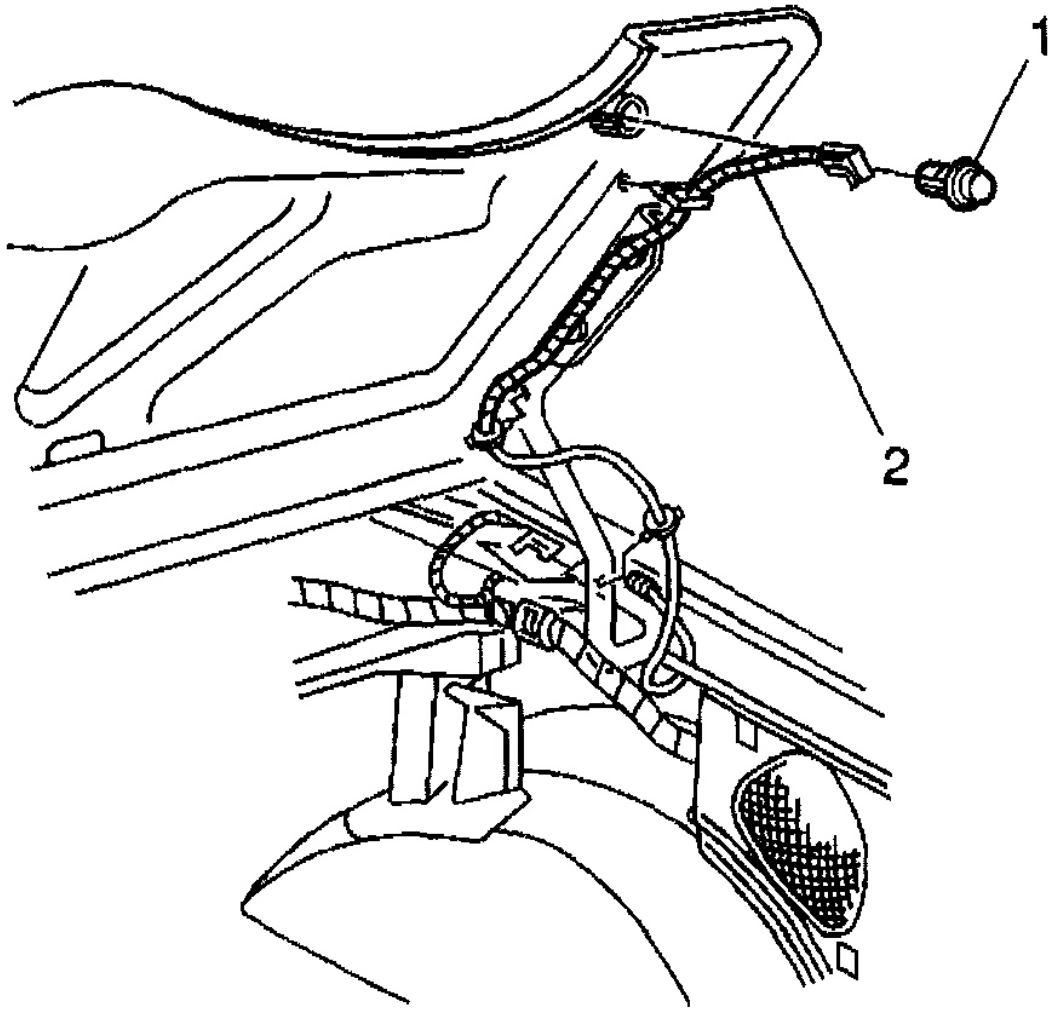

Fig. 200: Removing Stowage Compartment Lid Switch & Wiring Harness
Courtesy of GENERAL MOTORS CORP.

9. Remove the nuts attaching the front of the hinge to the body.
10. Remove the hinge bolts from the lid.
11. Remove the hinge.

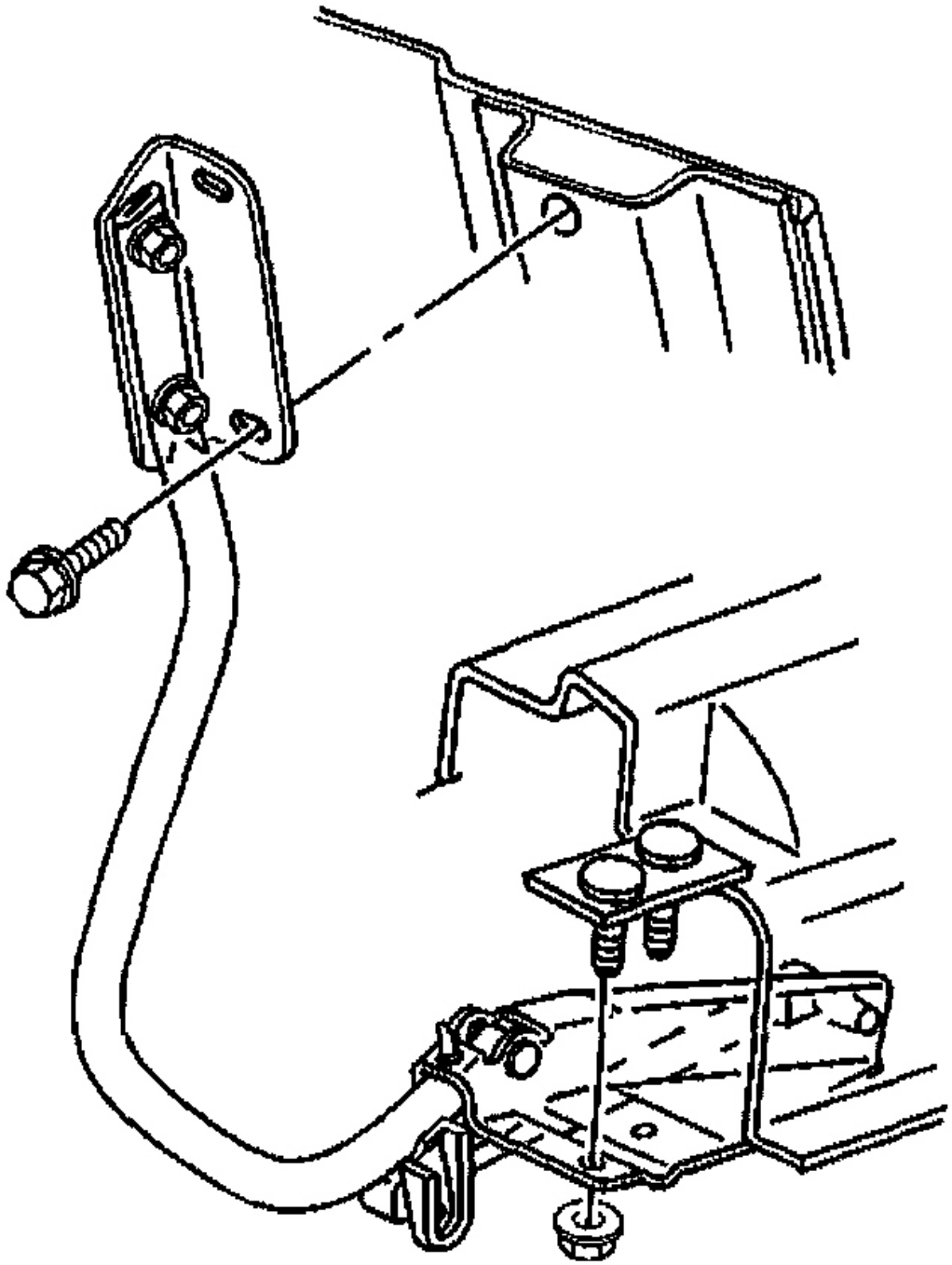

G01734093

Fig. 201: Removing Stowage Compartment Lid Hinge Retaining Nuts & Bolts
Courtesy of GENERAL MOTORS CORP.

Installation Procedure

1. Position the hinge to the stud plate on the body.

   CAUTION: Refer to FASTENER NOTICE .

2. Install the nut attaching the hinge to the front of the body stud plate.

   Tighten

   Tighten the folding top stowage lid hinge to body nut to 32 N.m (23 ft).

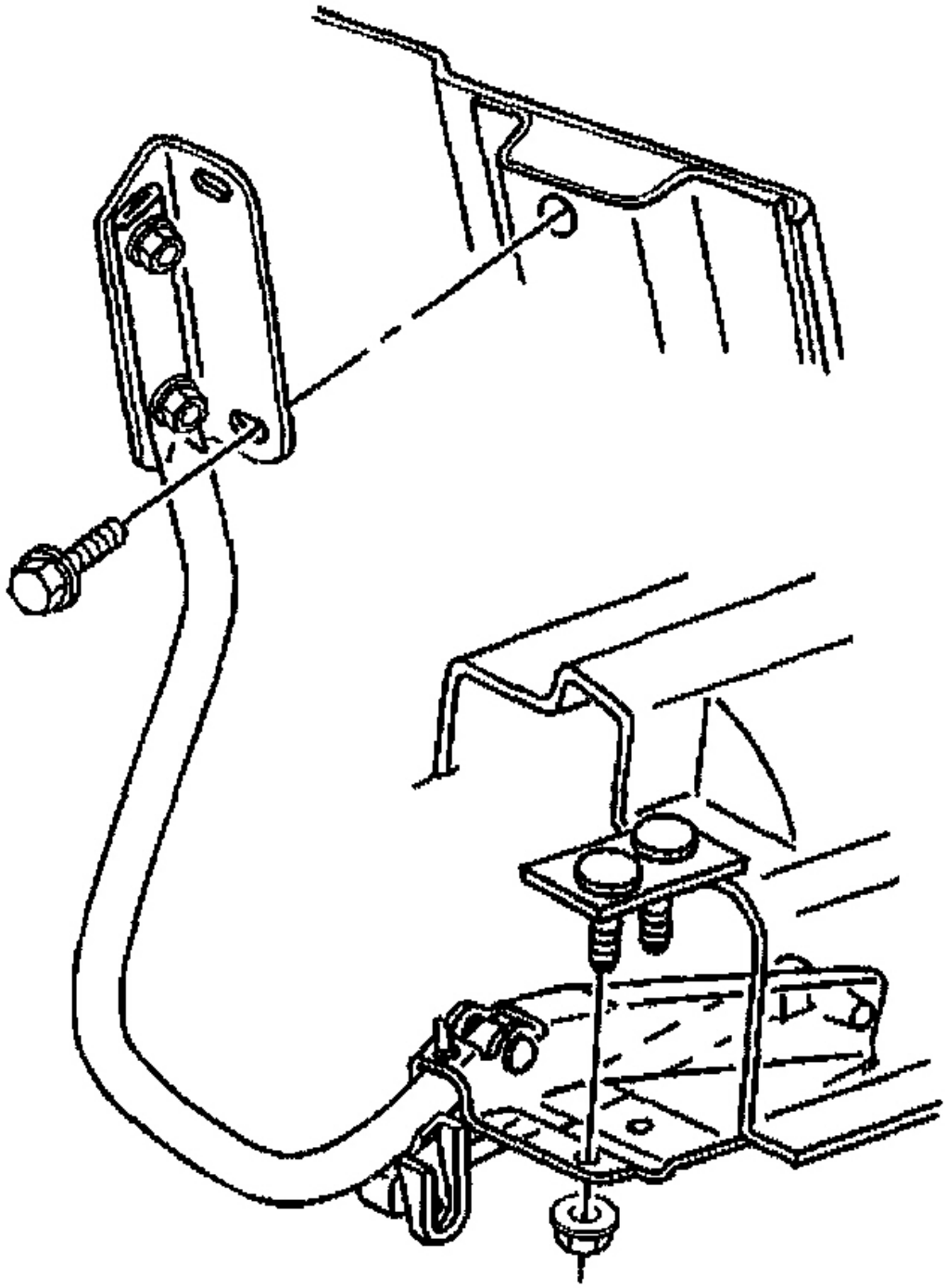

G01734094

Fig. 202: Installing Stowage Compartment Lid Hinge Retaining Nuts
Courtesy of GENERAL MOTORS CORP.

3. Install the hinge bolts to the lid.

   Tighten

   Tighten the folding top stowage lid hinge to lid bolts to 25 N.m (18 ft).

4. Install the strut to the front ball stud on the hinge.
5. Remove the protective covering and the temporary support.

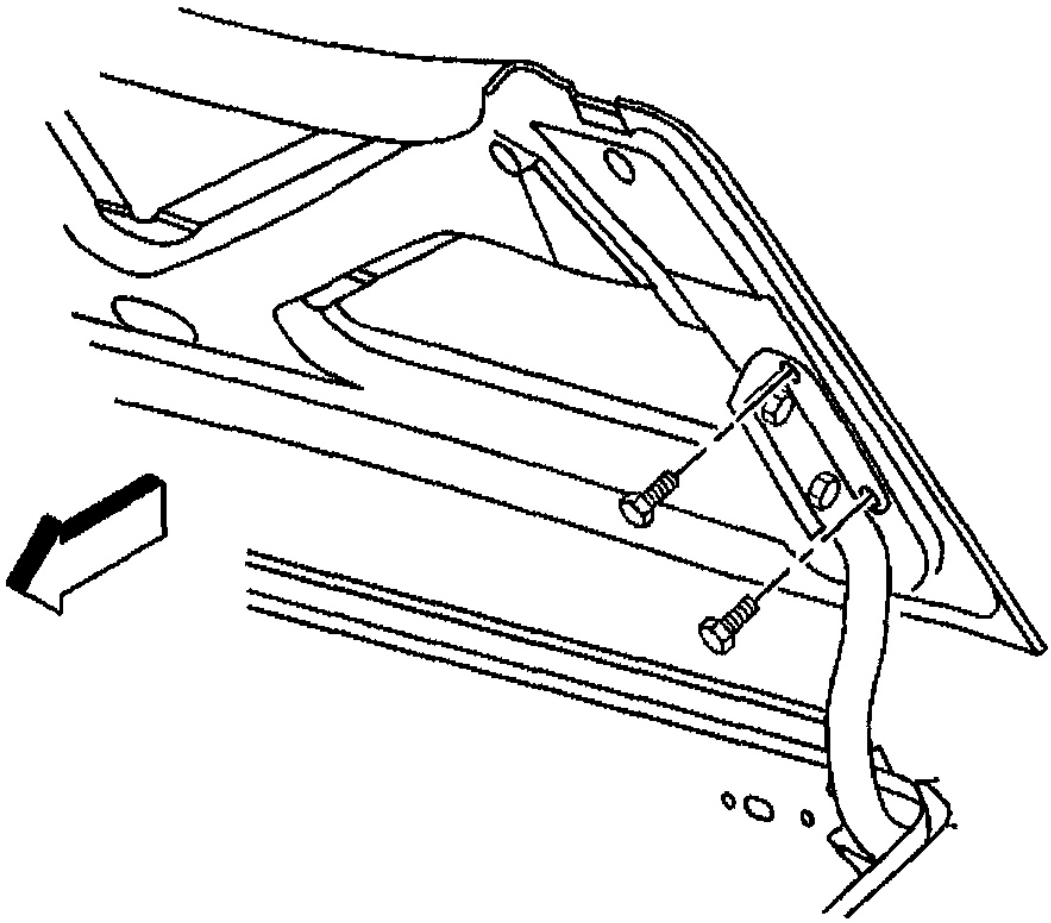

G01734095

Fig. 203: Installing Stowage Compartment Lid Hinge Bolts

Courtesy of GENERAL MOTORS CORP.

6. Install the harness (2) to the hinge, (drivers side).
7. Lower and latch the folding top stowage lid.

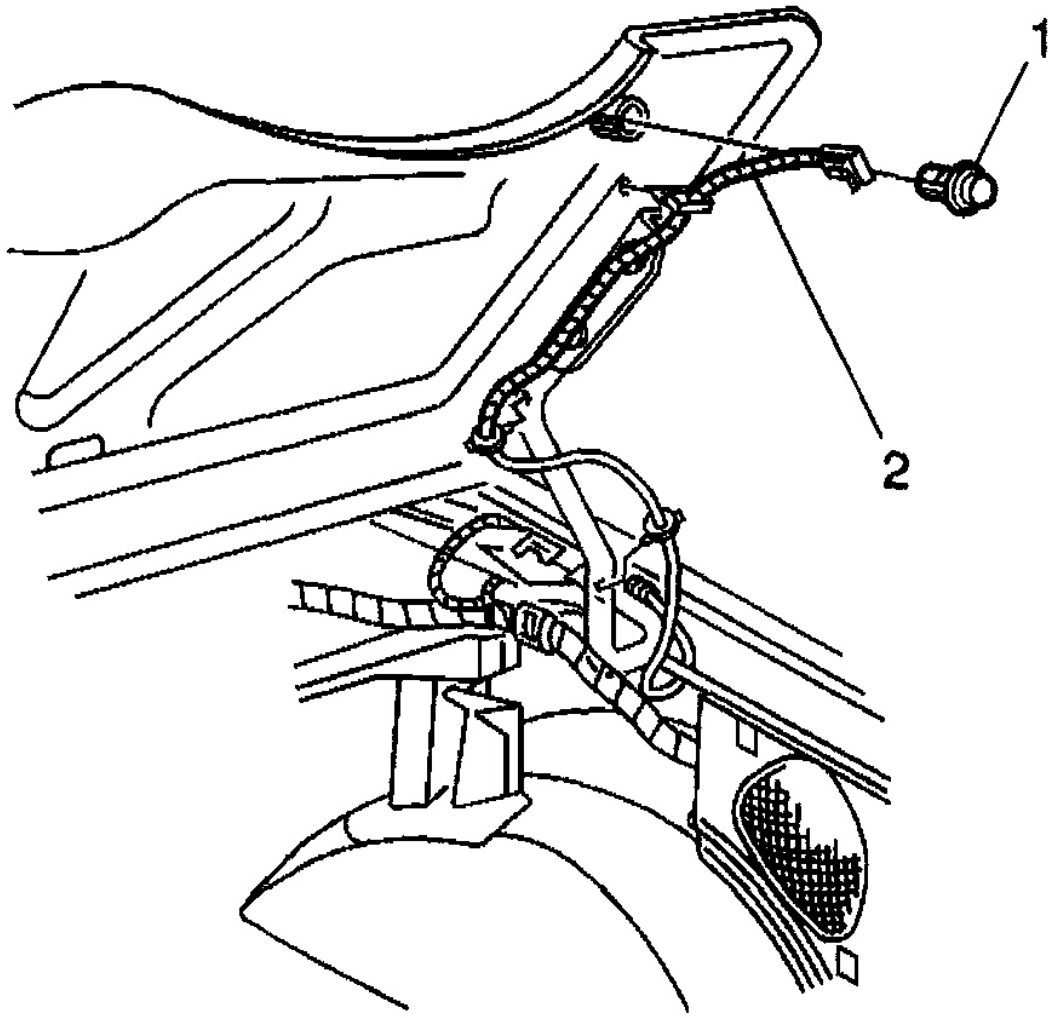

Fig. 204: Installing Stowage Compartment Lid Switch & Wiring Harness
Courtesy of GENERAL MOTORS CORP.

8. Open the rear compartment.
9. Install the nut attaching the hinge to the rear of the body stud plate.

Tighten

Tighten the folding top stowage lid hinge to body nut to 32 N.m (23 ft).

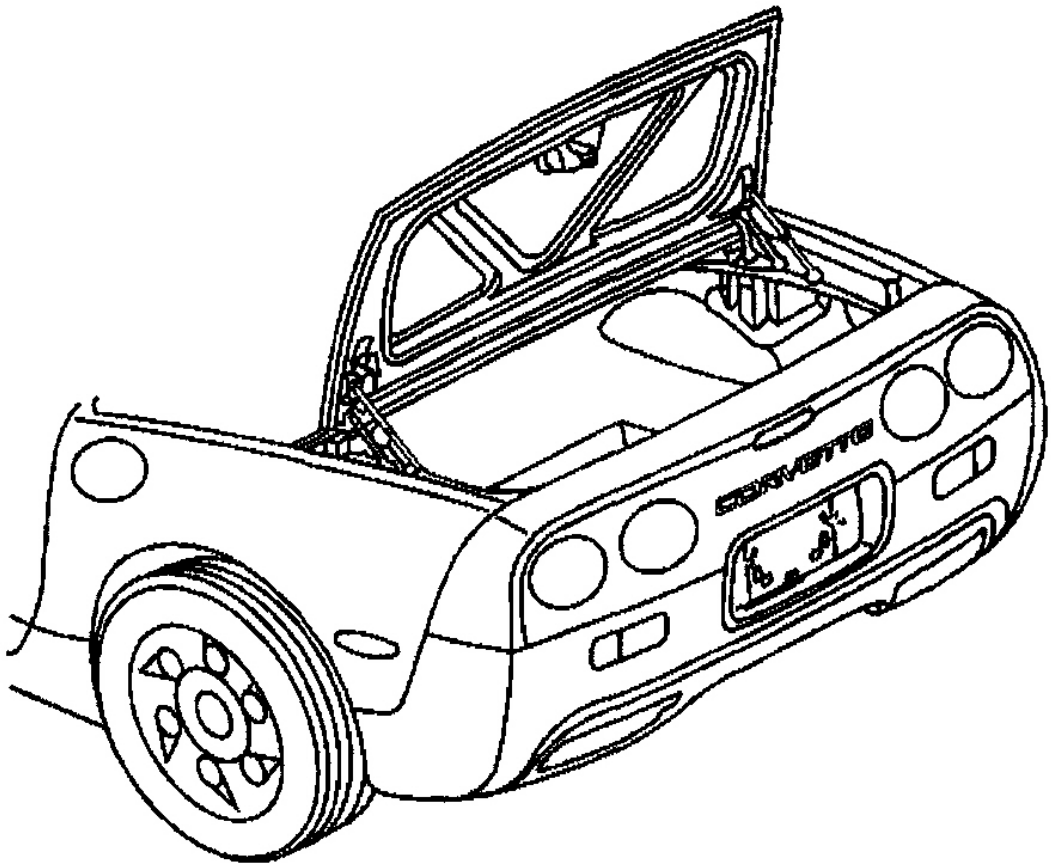

Fig. 205: Identifying Rear Compartment
Courtesy of GENERAL MOTORS CORP.

10. Install the folding top stowage lid struts to the hinges.
11. Inspect the operation of the rear compartment lid.

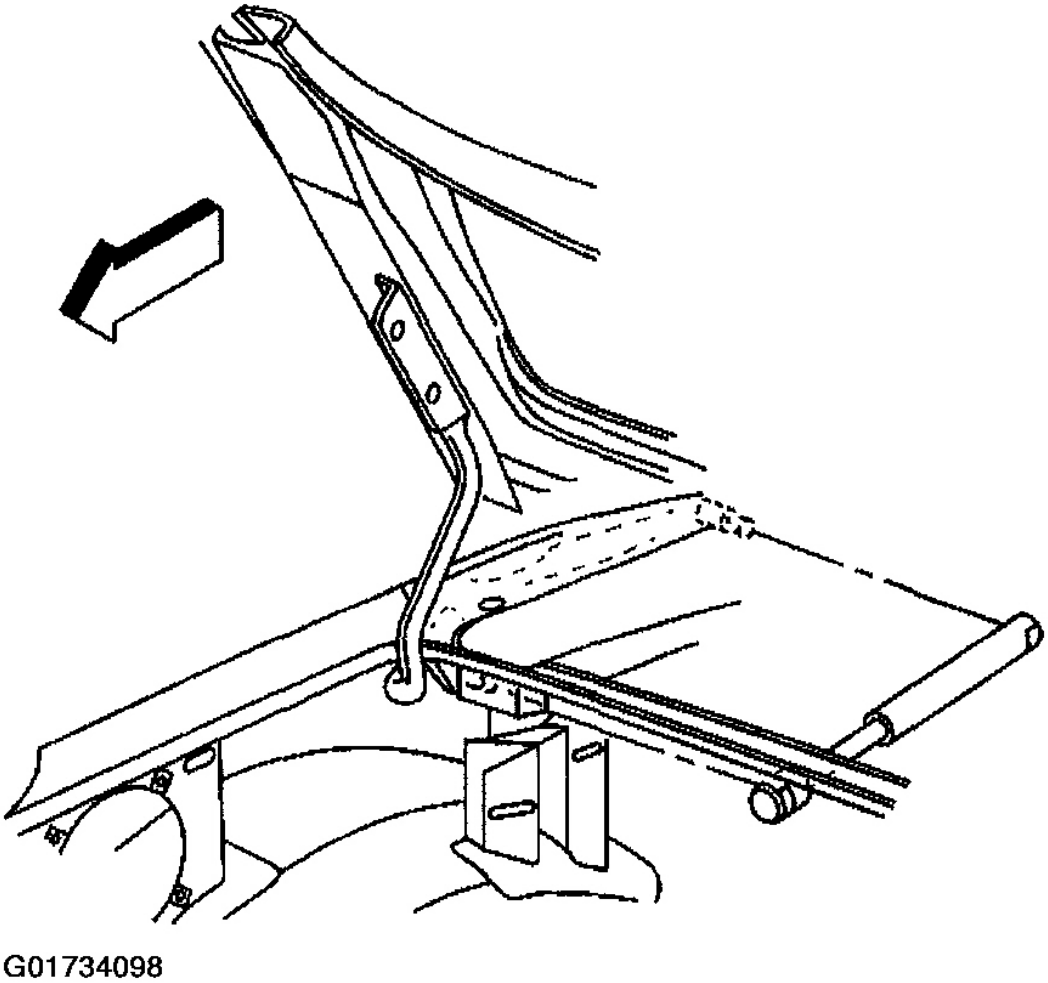

Fig. 206: Installing Stowage Compartment Lid Struts
Courtesy of GENERAL MOTORS CORP.

FOLDING TOP STOWAGE COMPARTMENT LID STRUTS REPLACE

Removal Procedure

1. Open the folding top stowage compartment.

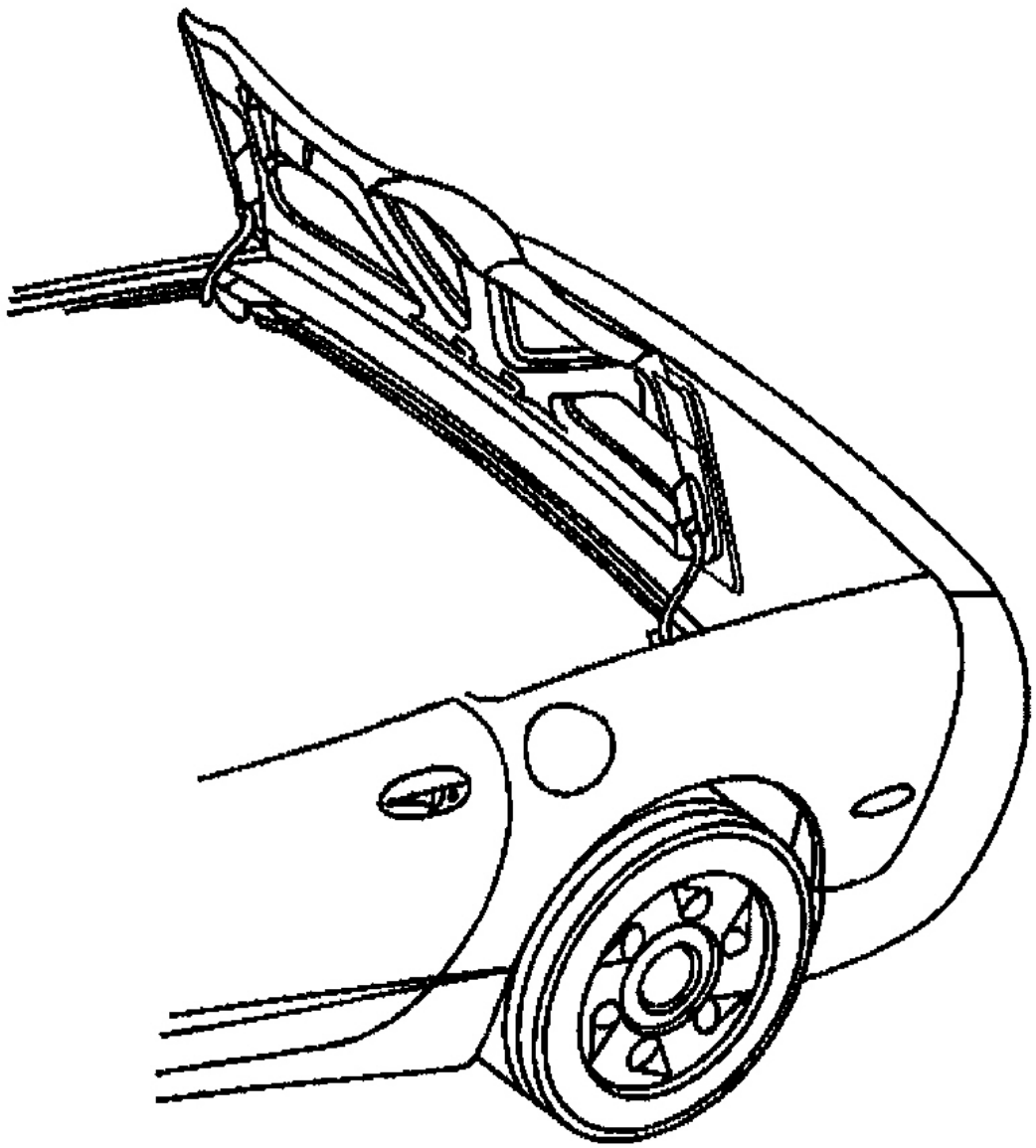

Fig. 207: Identifying Folding Top Stowage Compartment
Courtesy of GENERAL MOTORS CORP.

2. Remove the forward end of the strut from the hinge ball stud.
3. Close the folding top stowage compartment lid.

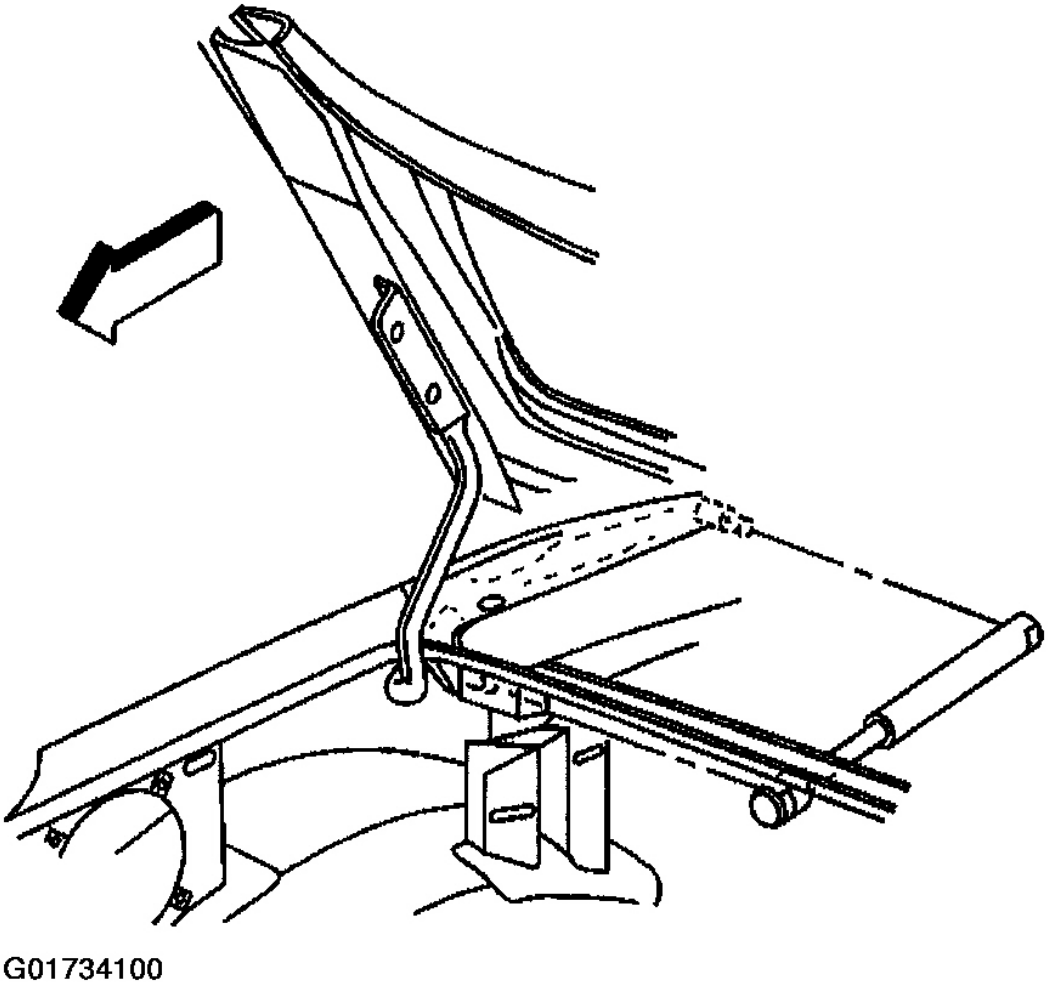

Fig. 208: Removing Folding Top Stowage Compartment Lid Struts
Courtesy of GENERAL MOTORS CORP.

4. Open the rear stowage compartment lid.
5. Remove the strut from the rear ball stud.

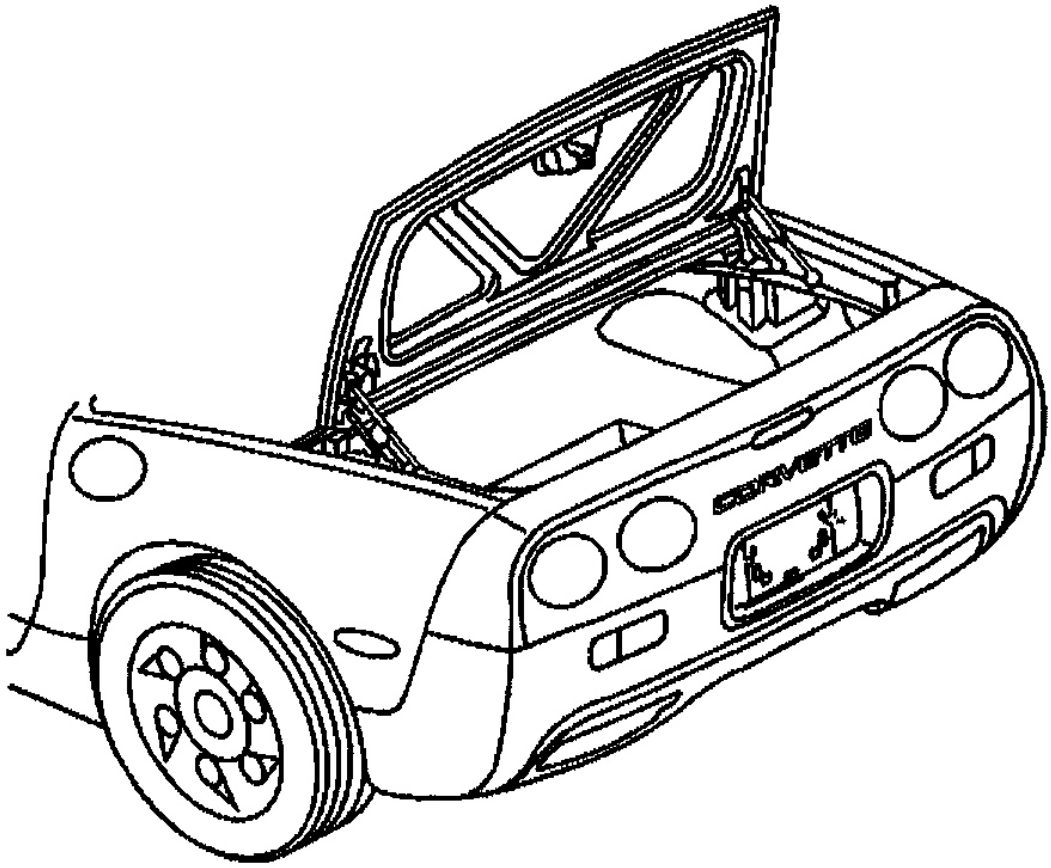

Fig. 209: Identifying Rear Stowage Compartment
Courtesy of GENERAL MOTORS CORP.

Installation Procedure

1. Open the rear stowage compartment lid.

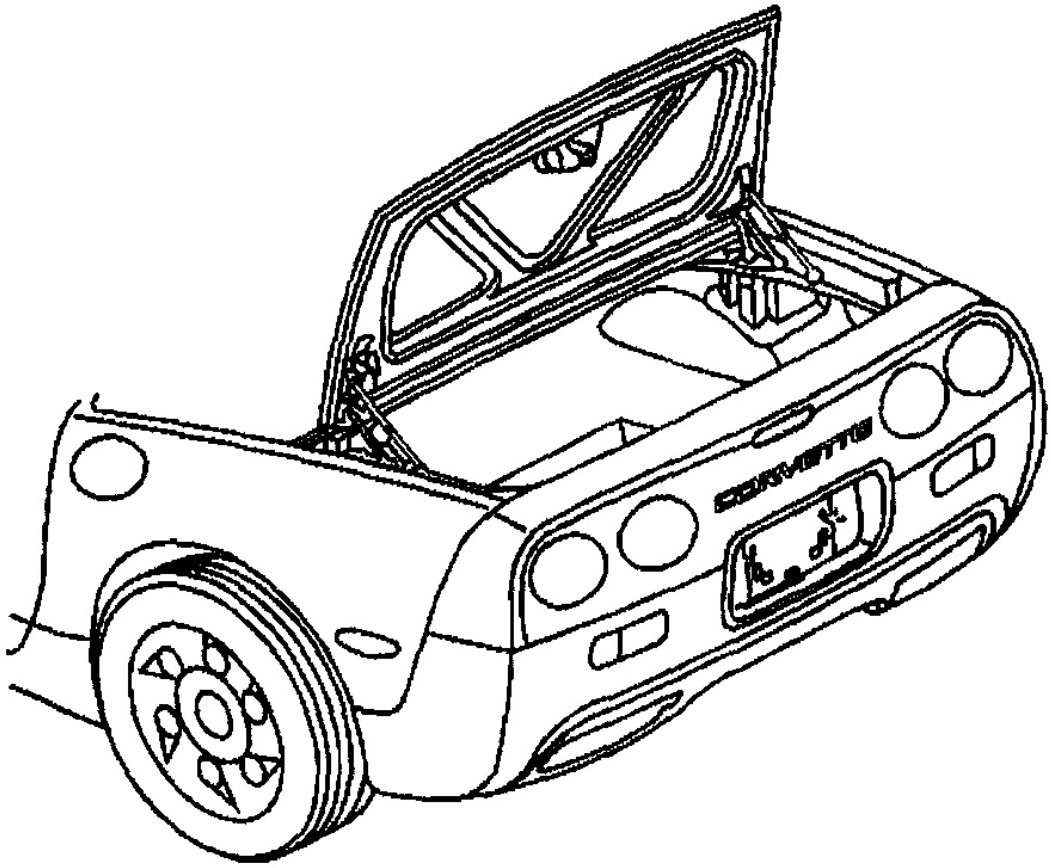

Fig. 210: Identifying Rear Stowage Compartment
Courtesy of GENERAL MOTORS CORP.

2. Position the rod end of the strut through the access hole between the quarter panel and the support.
3. Install the strut to the rear ball stud.
4. Close the rear stowage compartment.

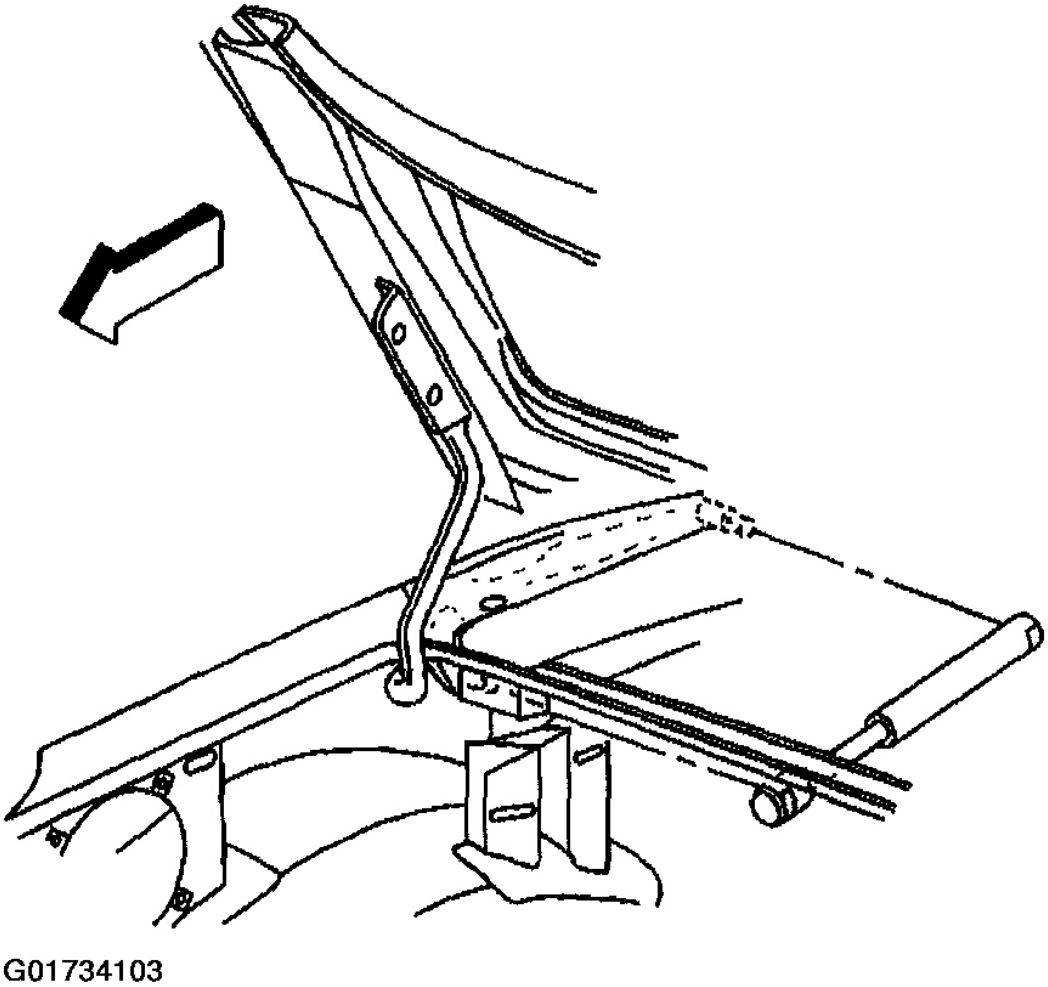

Fig. 211: Removing Stowage Compartment Lid Struts
Courtesy of GENERAL MOTORS CORP.

5. Open the folding top stowage compartment.
6. Install the rod end of the strut to the front of the hinge.
7. Close the folding top stowage compartment.

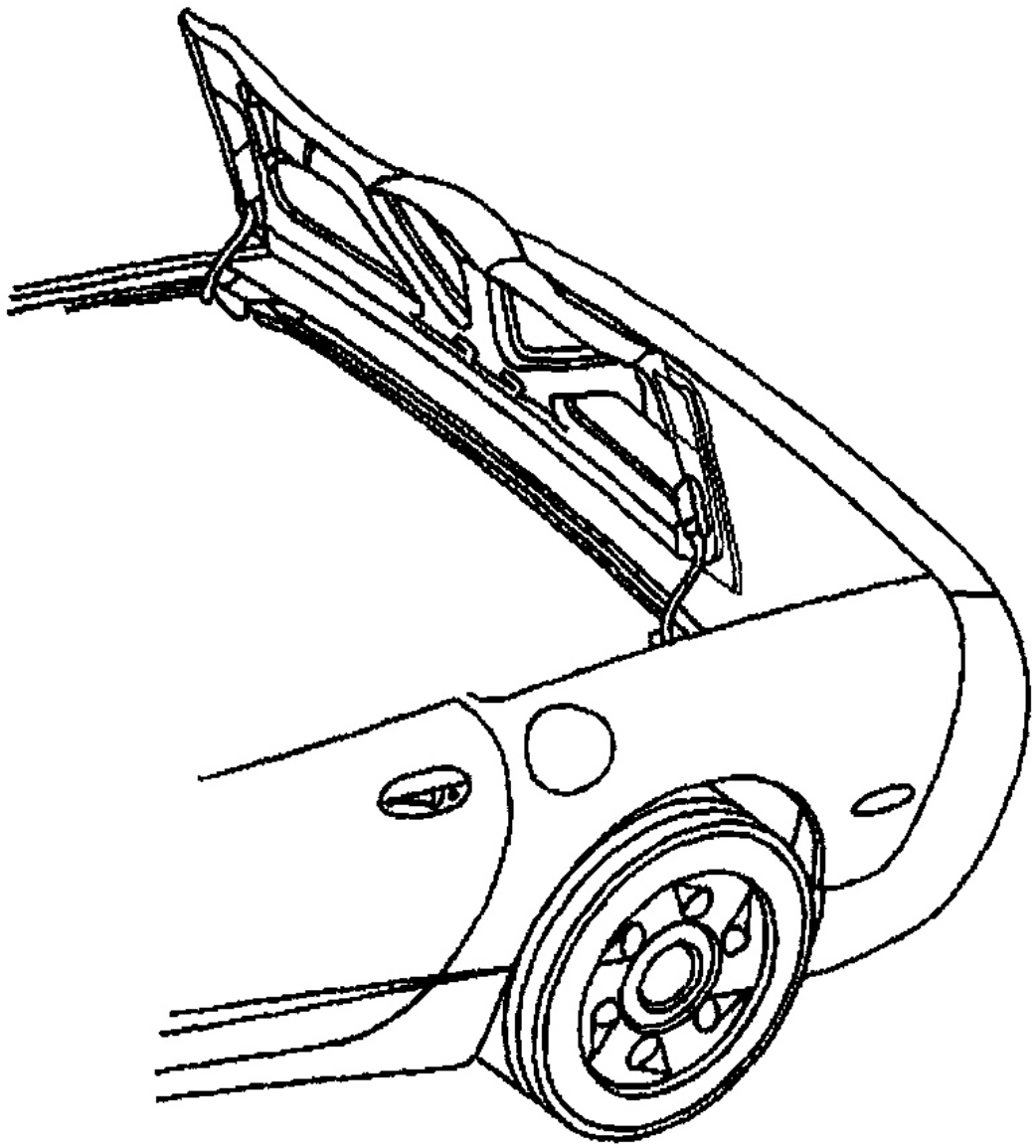

Fig. 212: Identifying Folding Top Stowage Compartment
Courtesy of GENERAL MOTORS CORP.

FOLDING TOP STOWAGE COMPARTMENT LID PROTECTOR

Removal Procedure

1. Using a heat gun heat the protector/molding to soften the adhesive.
2. Lift upward to remove the protector.
3. Remove all old adhesive from the lid depression by using 3M(tm) adhesive remover P/N 8984 or equivalent.
4. Clean the surface with a 50/50 mixture of isopropyl alcohol and water.
5. Dry the surface with a clean cloth.

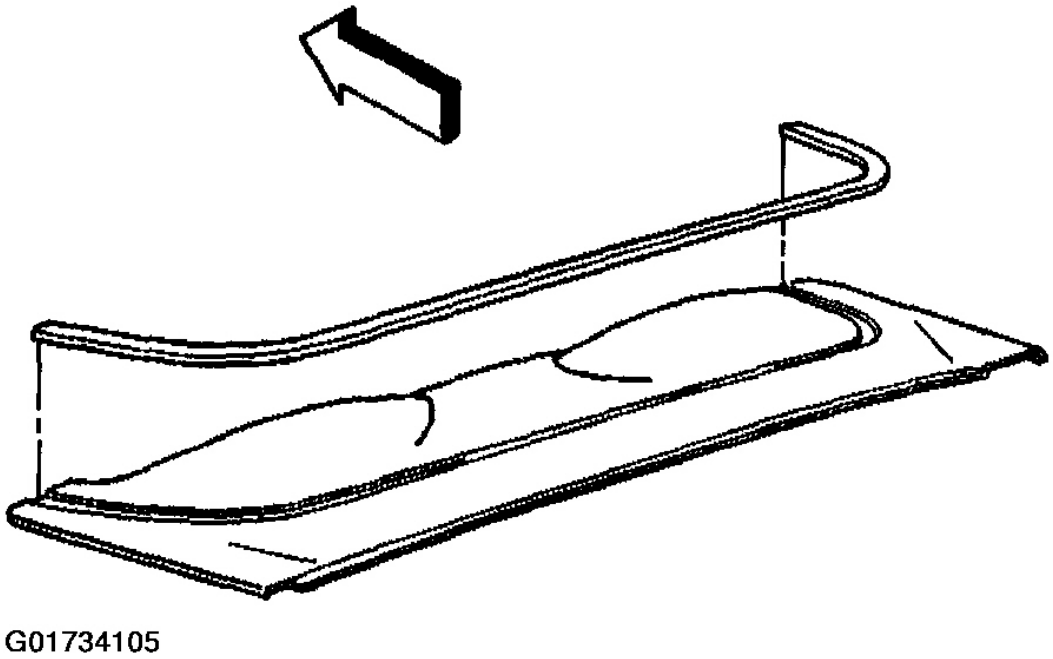

Fig. 213: Removing Stowage Compartment Lid Protector
Courtesy of GENERAL MOTORS CORP.

Installation Procedure

1. Using a heat gun preheat the adhesive on the new protector.
2. Peel the backing from the protector.
3. Position the protector inside the lid depression with the ends of the protector flush with the forward edge of the lid.
4. Press the protector firmly into the lid depression.

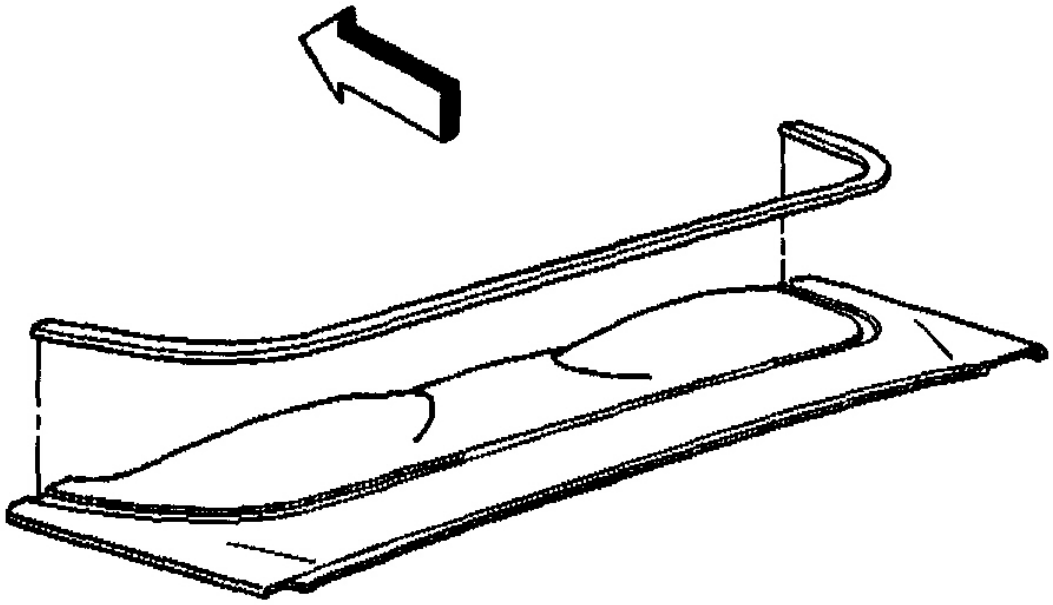

Fig. 214: Installing Stowage Compartment Lid Protector
Courtesy of GENERAL MOTORS CORP.

ROOF LIFT OFF PANEL FRONT LATCH HANDLE REPLACEMENT

Removal Procedure

1. Mark the location of the latch.
2. Rotate the handle and remove the exposed bolt.
3. Remove the trim cover from the latch.
4. Rotate the handle aligning the hole in the handle with the bolt.
5. Remove the bolt and the latch handle assembly.

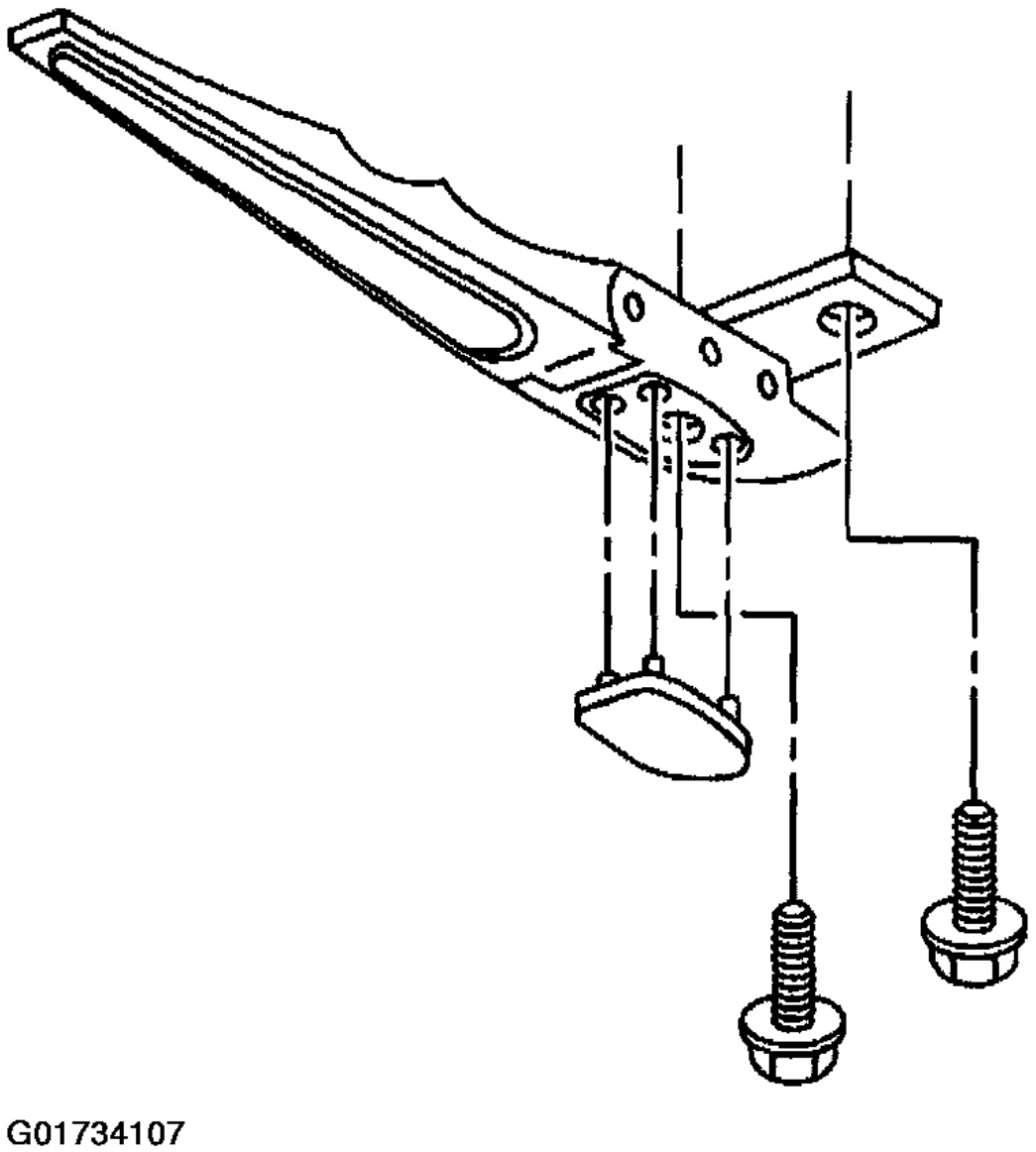

Fig. 215: Removing Roof Lift Off Panel Front Latch Trim & Bolts
Courtesy of GENERAL MOTORS CORP.

Installation Procedure

Important: When installing a new latch leave the spacing collar on the latch handle to achieve a minimum of 2 mm (0.08 in) clearance to the striker.

1. Remove the latch handle trim cover if installed.
2. Apply removable thread locker GM P/N 12345382 (Canadian P/N 10953489) to the latch mounting bolts.
3. Align the latch to the marks on the roof made before removing the latch.
4. Loosely install the latch handle to the roof.
5. Rotate the handle to access the inboard mounting bolt.
    - When installing a latch handle with a spacing collar installed apply forward pressure to the handle while tightening the mounting bolts.
    - If the spacing collar is not available, position the latch handle with a minimum of 2 mm (0.08 in) clearance to the latch.

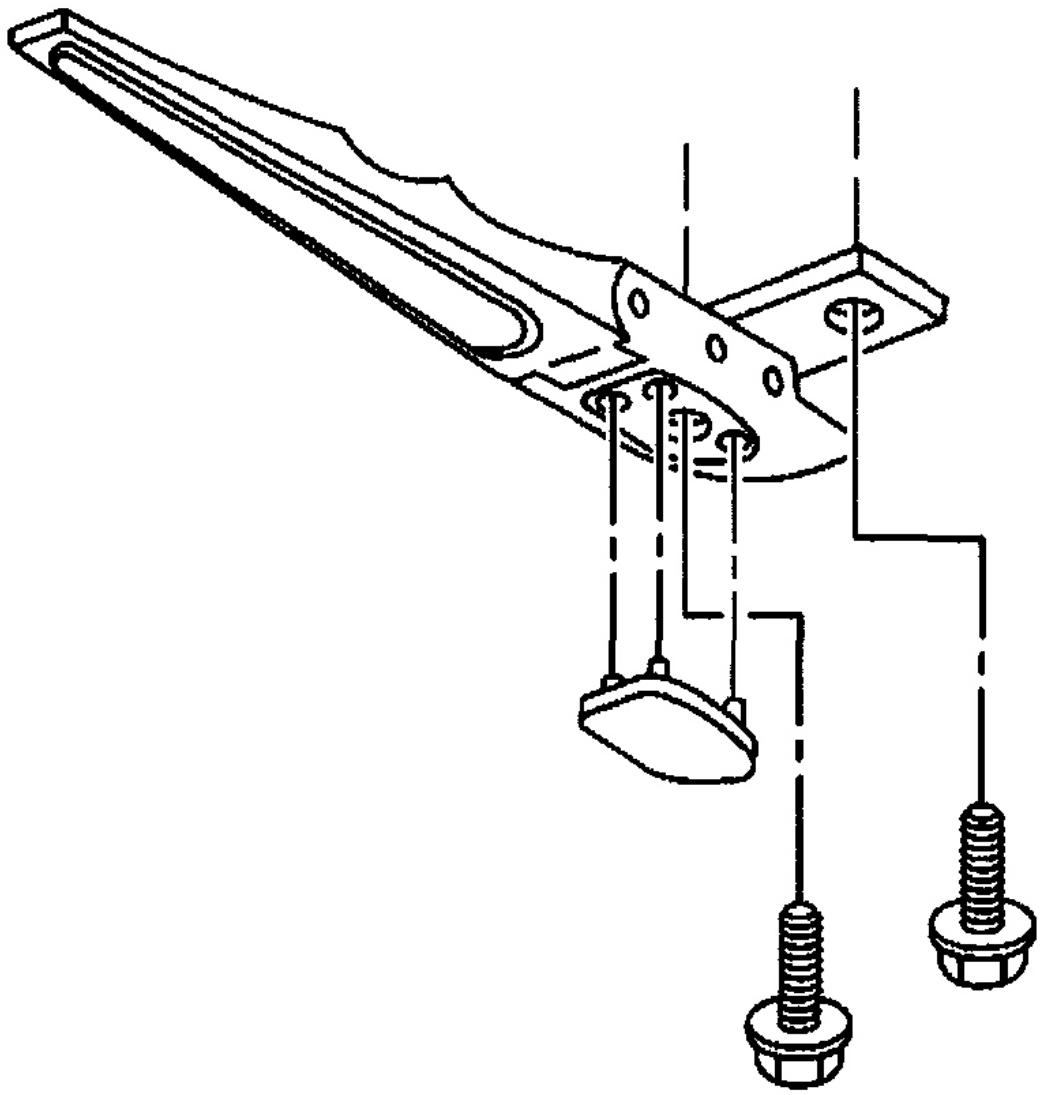

Fig. 216: Installing Roof Lift Off Panel Front Latch Trim & Bolts
Courtesy of GENERAL MOTORS CORP.

CAUTION: Refer to FASTENER NOTICE .

6. Install the inboard bolt.

Tighten

Tighten the latch handle inboard bolt to 18 N.m (13 lb ft).

7. Rotate the handle.
8. Install the outboard bolt.

Tighten

Tighten the latch handle outboard bolt to 18 N.m (13 lb ft).

9. Remove the spacing collar.
10. Completely engage the latch handle.
11. Position the trim cover to the latch handle and press until fully seated.

ROOF LIFT OFF PANEL REAR LATCH REPLACEMENT

Removal Procedure

1. Remove the roof lift off panel.

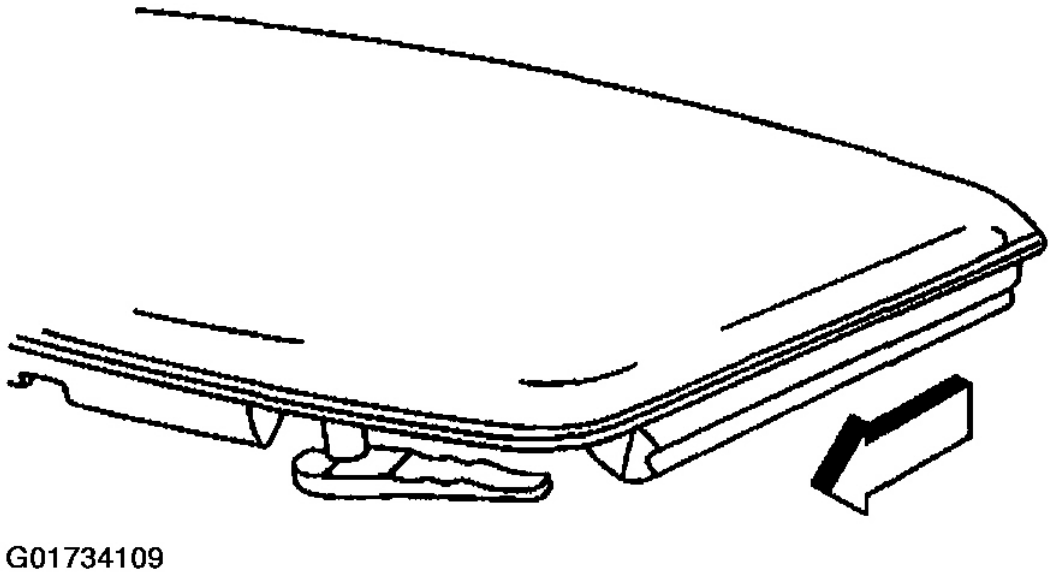

Fig. 217: Removing Roof Lift Off Panel
Courtesy of GENERAL MOTORS CORP.

2. Remove the screws attaching the latch cover.
3. Remove the latch cover from the roof panel.

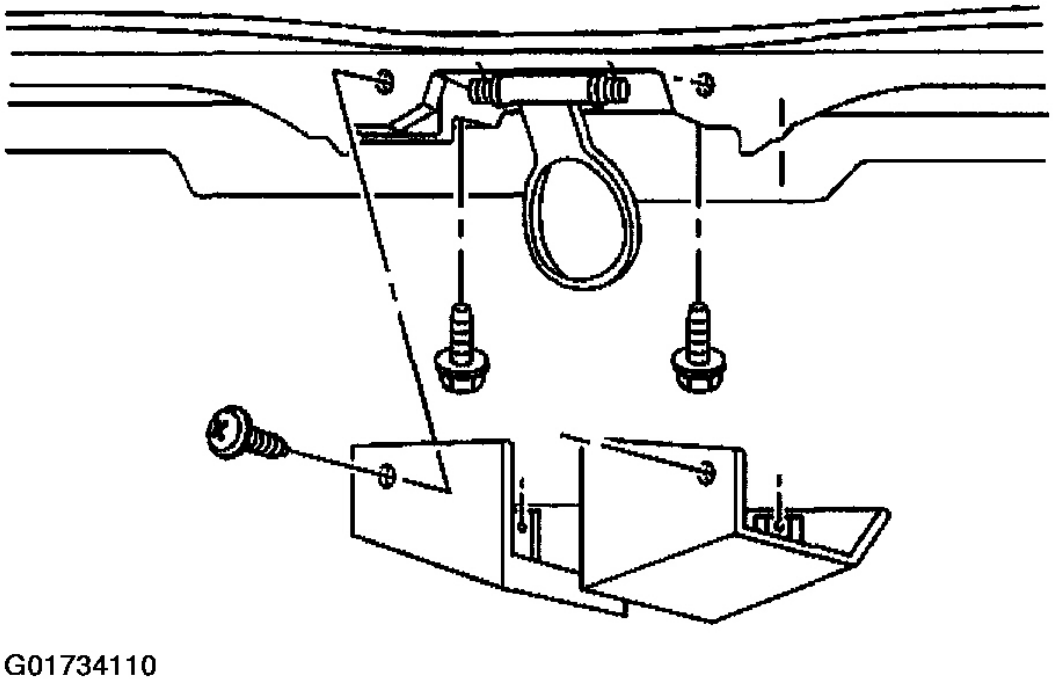

Fig. 218: Removing Roof Lift Off Panel Rear Latch Cover Screws
Courtesy of GENERAL MOTORS CORP.

4. Remove the bolts from the latch.
5. Remove the latch from the roof panel.

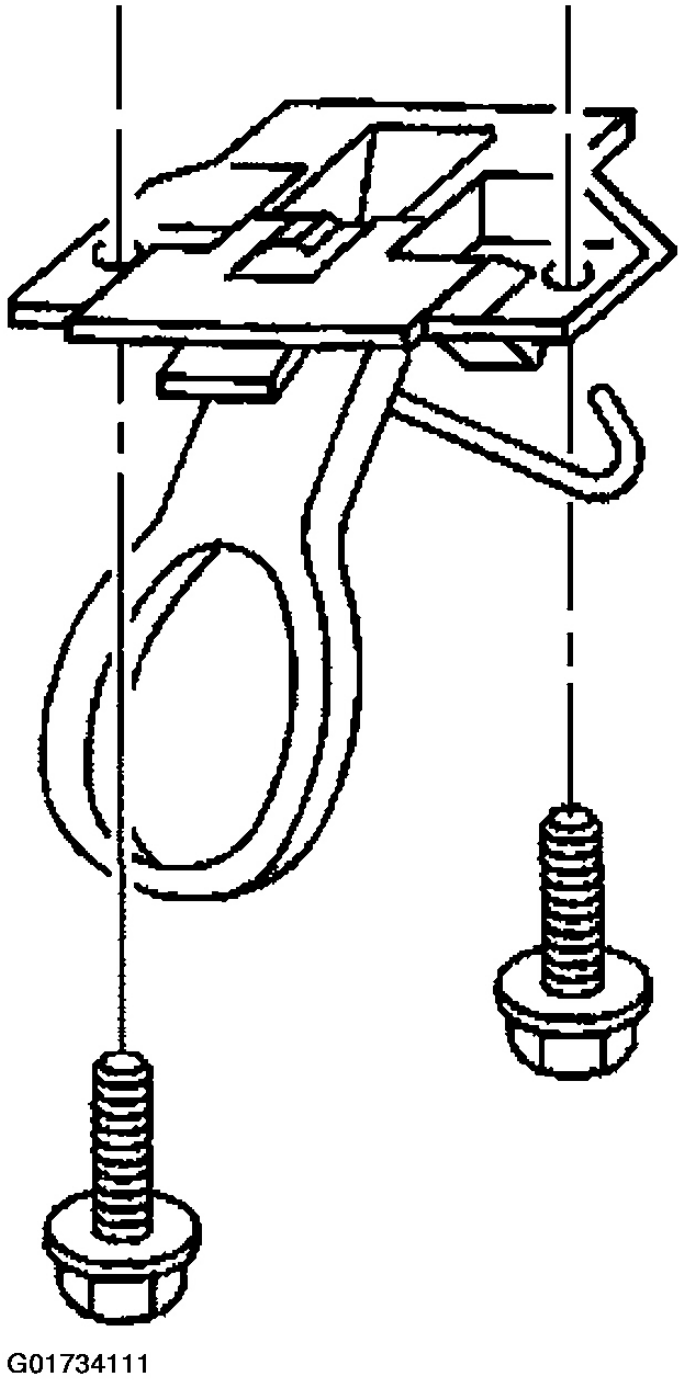

Fig. 219: Removing Roof Lift Off Panel Rear Latch Bolts
Courtesy of GENERAL MOTORS CORP.

Installation Procedure

1. Position the latch to the roof panel.

   CAUTION: Refer to FASTENER NOTICE .

2. Install the bolts to the latch.

   Tighten

   Tighten the roof rear latch bolts to 10 N.m (89 lb in).

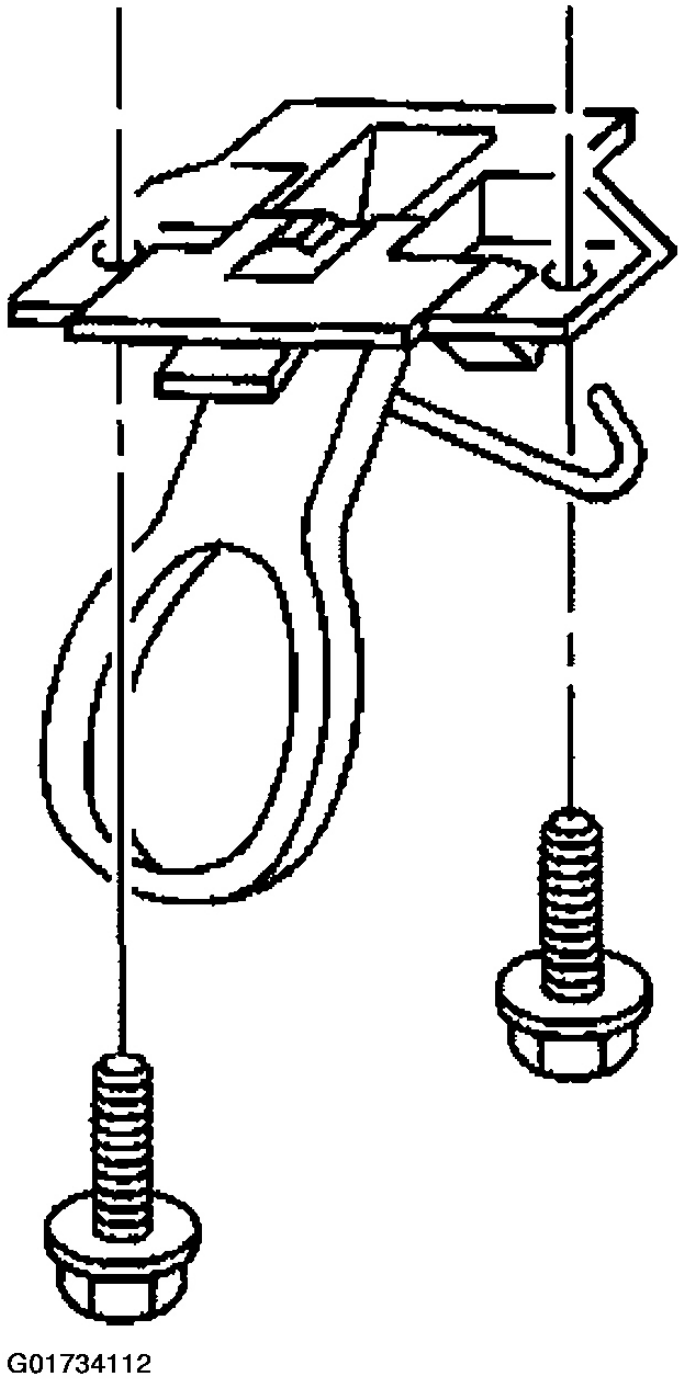

Fig. 220: Installing Roof Lift Off Panel Rear Latch Bolts
Courtesy of GENERAL MOTORS CORP.

3. Install the latch cover and attaching screws.

Tighten

Tighten the roof rear latch cover screws to 3 N.m (27 lb in).

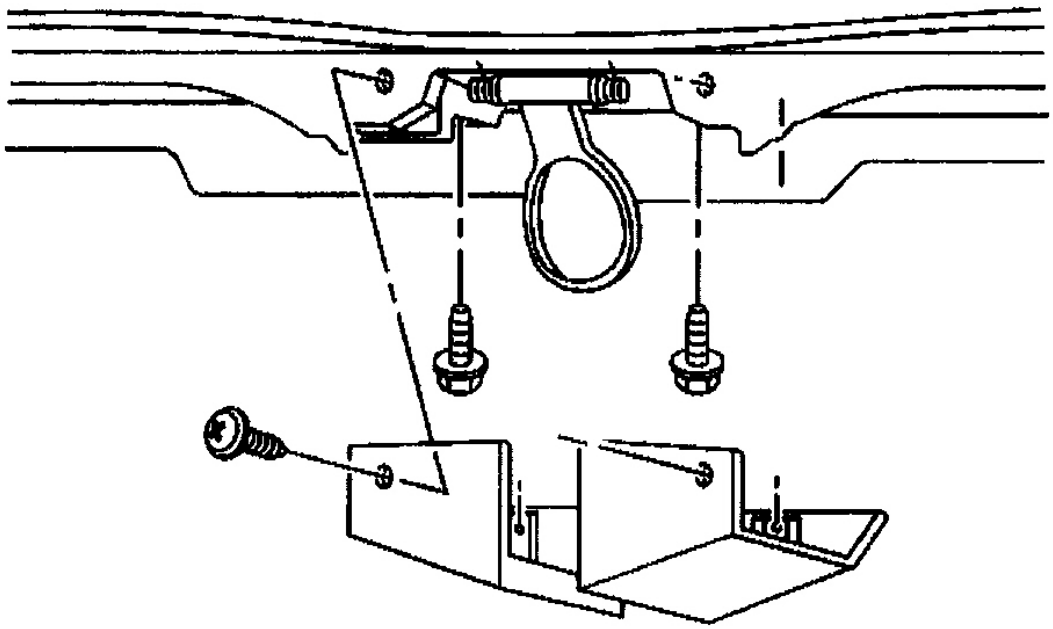

Fig. 221: Installing Roof Lift Off Panel Rear Latch Cover Screws
Courtesy of GENERAL MOTORS CORP.

4. Install the roof lift off panel.
5. Adjust if necessary. Refer to **Roof Lift Off Panel Adjustment** .

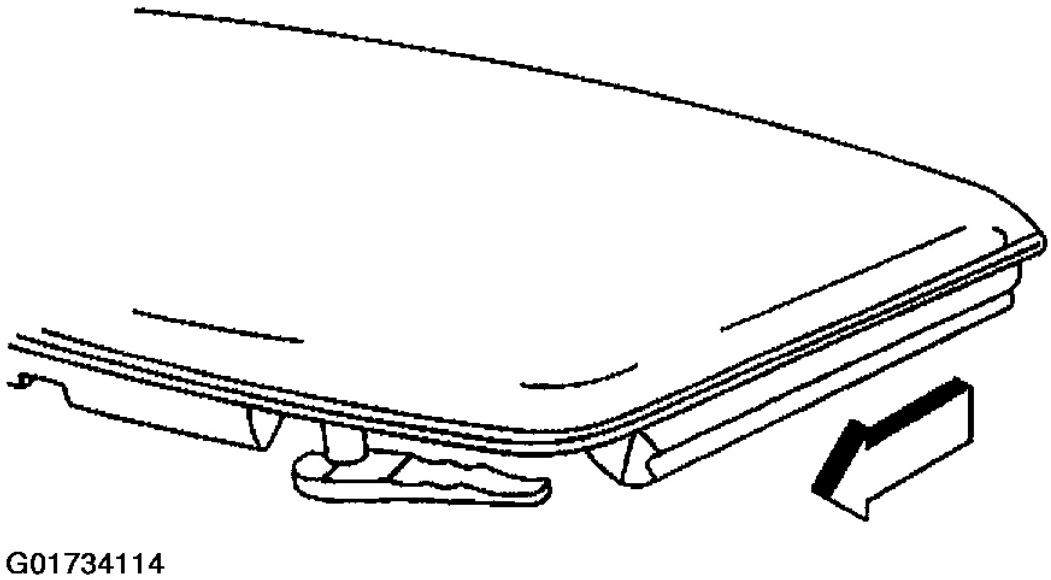

Fig. 222: Installing Roof Lift Off Panel
Courtesy of GENERAL MOTORS CORP.

ROOF LIFT OFF PANEL REAR LOCATOR REPLACEMENT

Removal Procedure

1. Remove the rear roof bow center interior trim panel. Refer to **TRIM PANEL REPLACEMENT - REAR ROOF BOW** .
2. Mark the location of the locator bracket.
3. Remove the locator bracket mounting bolts.
4. Remove the locator and bracket.
5. Mark the location of the locator.
6. Remove the locator from the bracket.

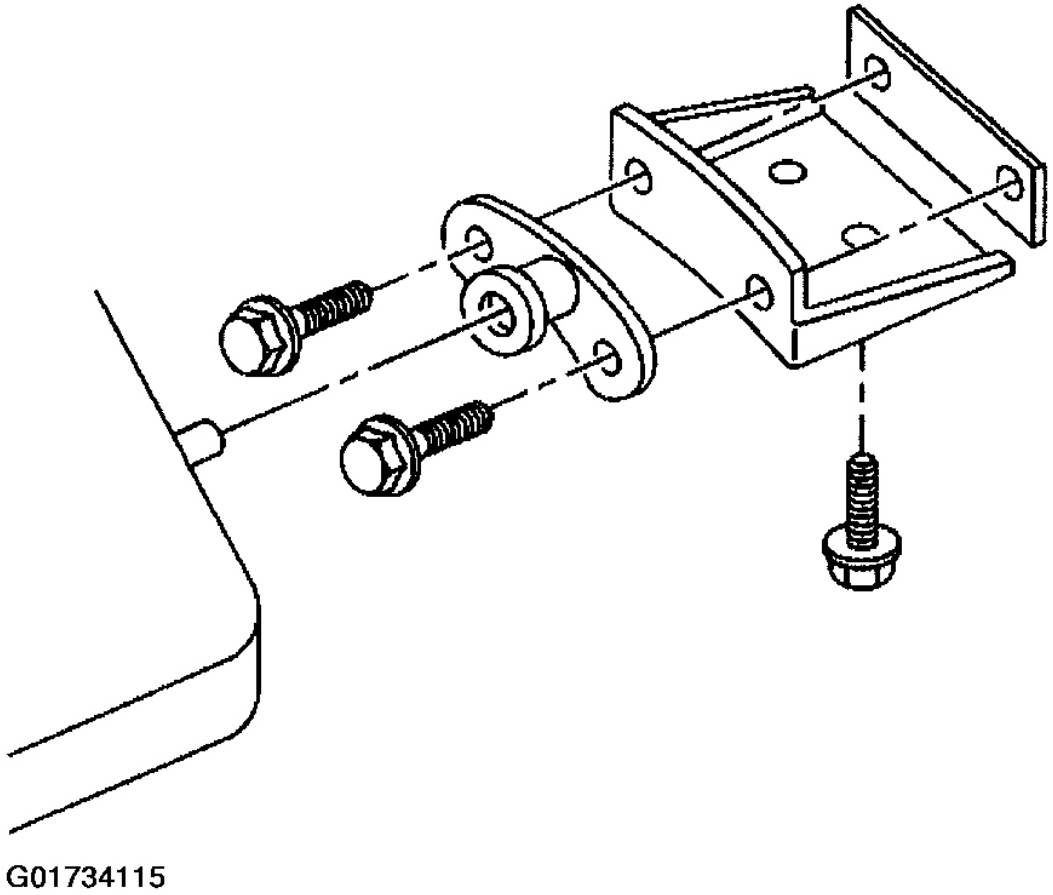

Fig. 223: Removing Locator Bracket Mounting Bolts
Courtesy of GENERAL MOTORS CORP.

Installation Procedure

CAUTION: Refer to FASTENER NOTICE .

1. Install the rear locator to the locator bracket.

   Tighten

   Tighten the roof rear locator to locator bracket bolts to 10 N.m (89 lb in).

2. Install the bracket with the locator to the roof center bow.

Tighten

Tighten the roof rear locator bracket bolts to 50 N.m (37 lb ft).

3. Check and adjust the roof panel as necessary. Refer to **Roof Lift Off Panel Adjustment** .
4. Install the roof bow center interior trim panel. Refer to **TRIM PANEL REPLACEMENT - REAR ROOF BOW** .

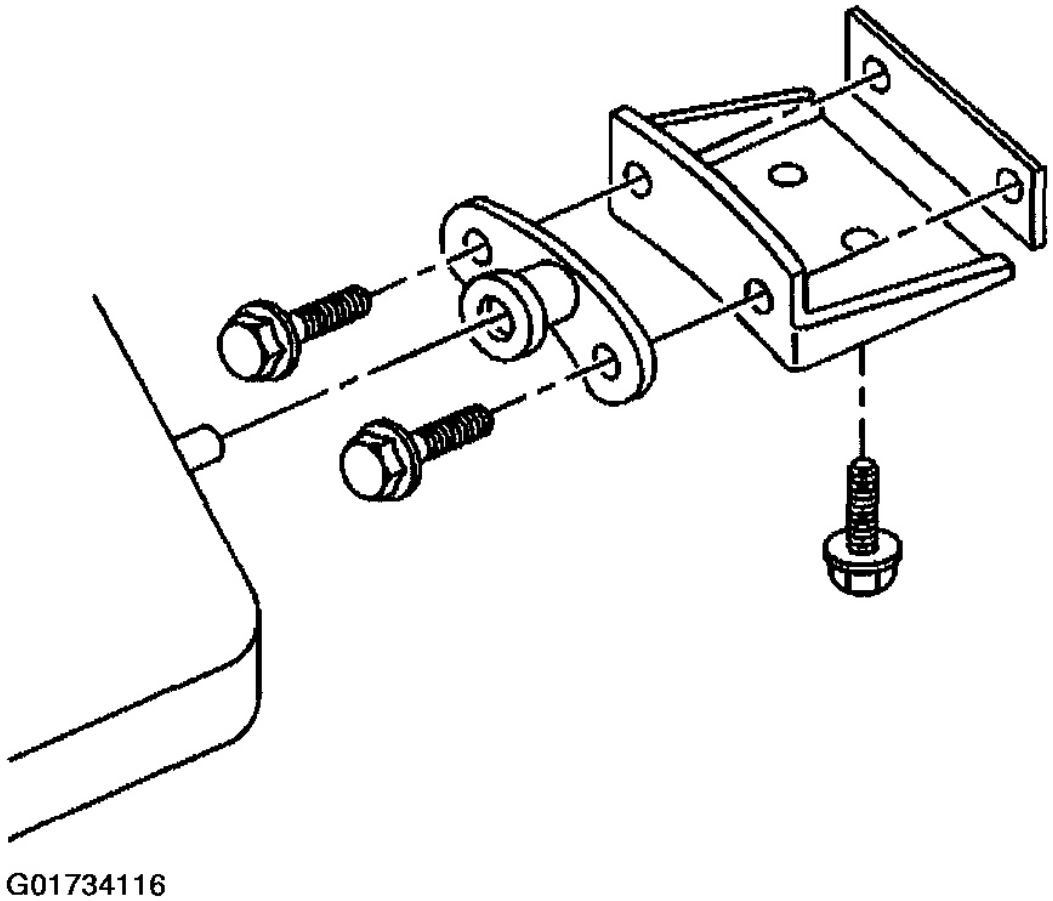

Fig. 224: Installing Locator Bracket Mounting Bolts
Courtesy of GENERAL MOTORS CORP.

ROOF LIFT OFF PANEL REAR LOCATOR PIN REPLACEMENT

Removal Procedure

1. Remove the roof lift off panel.

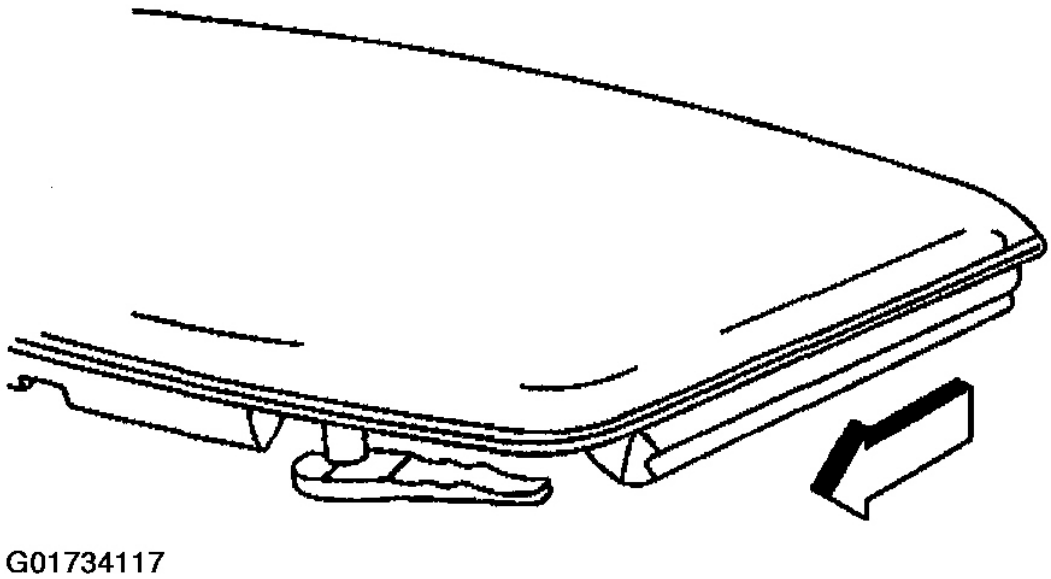

Fig. 225: Removing Roof Lift Off Panel
Courtesy of GENERAL MOTORS CORP.

2. Remove the roof panel rear locator pin from the roof panel.

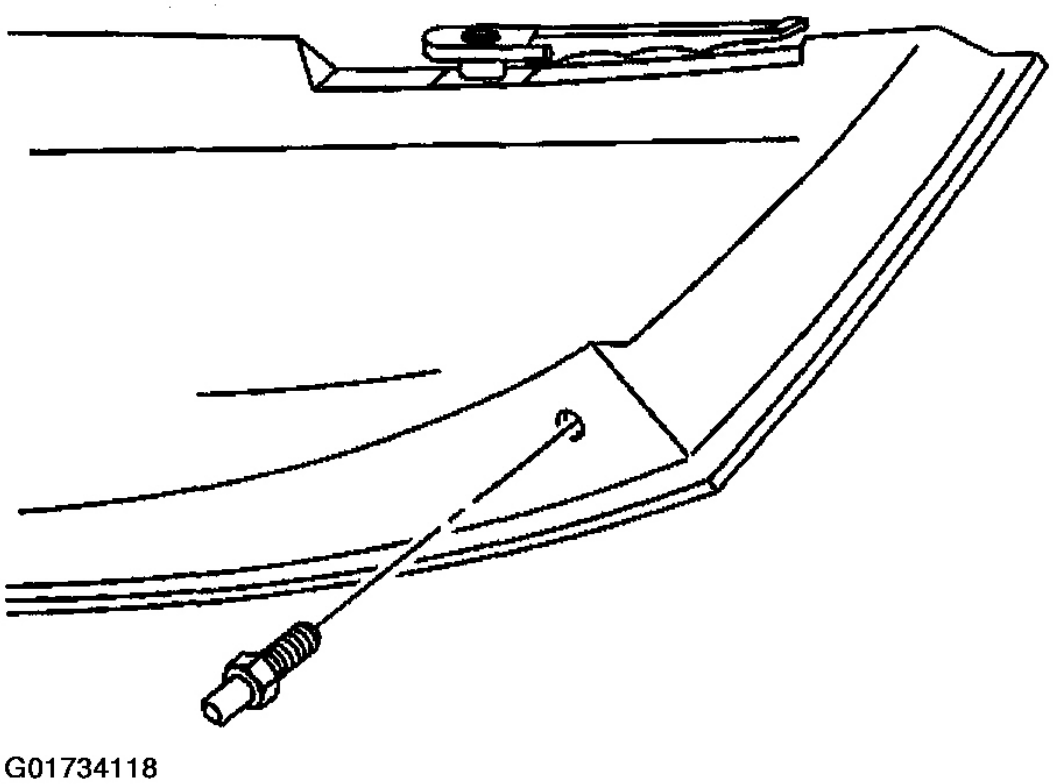

Fig. 226: Removing Roof Lift Off Panel Rear Locator Pin
Courtesy of GENERAL MOTORS CORP.

Installation Procedure

CAUTION: Refer to FASTENER NOTICE .

1. Install the rear roof panel locator pin.

   Tighten

   Tighten the roof rear locator pin to 25 N.m (18 lb ft).

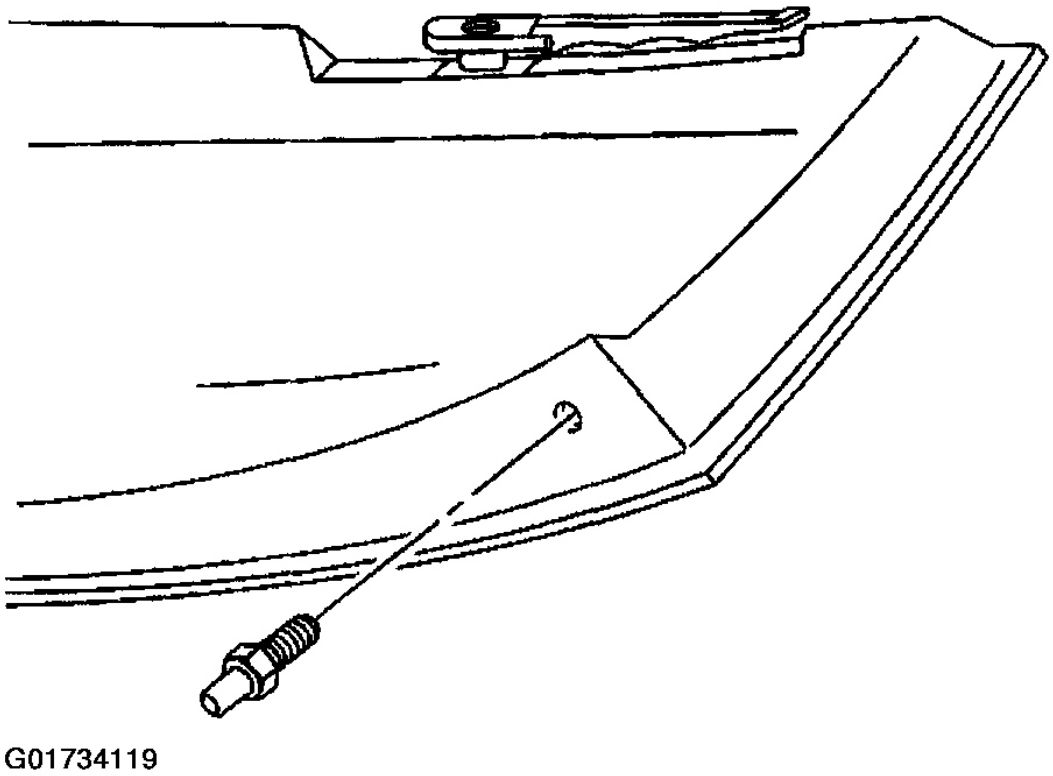

Fig. 227: Installing Roof Lift Off Panel Rear Locator Pin
Courtesy of GENERAL MOTORS CORP.

2. Install the roof panel.

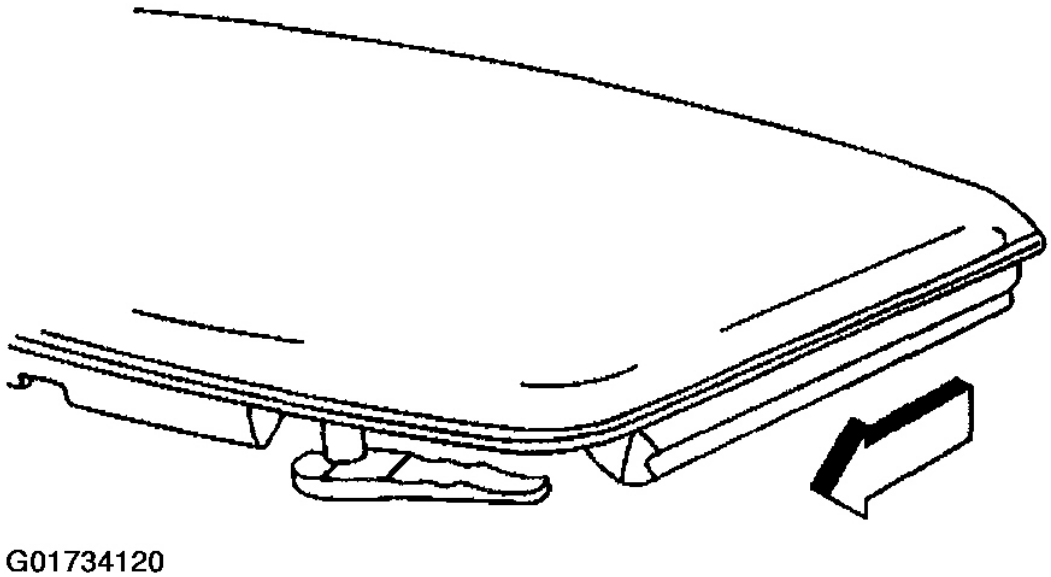

Fig. 228: Installing Roof Lift Off Panel
Courtesy of GENERAL MOTORS CORP.

ROOF LIFT OFF PANEL REAR LATCH STRIKER REPLACEMENT

Removal Procedure

1. Remove the roof bow center interior trim panel. Refer to **TRIM PANEL REPLACEMENT - REAR ROOF BOW** .
2. Mark the location of the striker.
3. Remove the bolts attaching the striker.
4. Remove the striker.

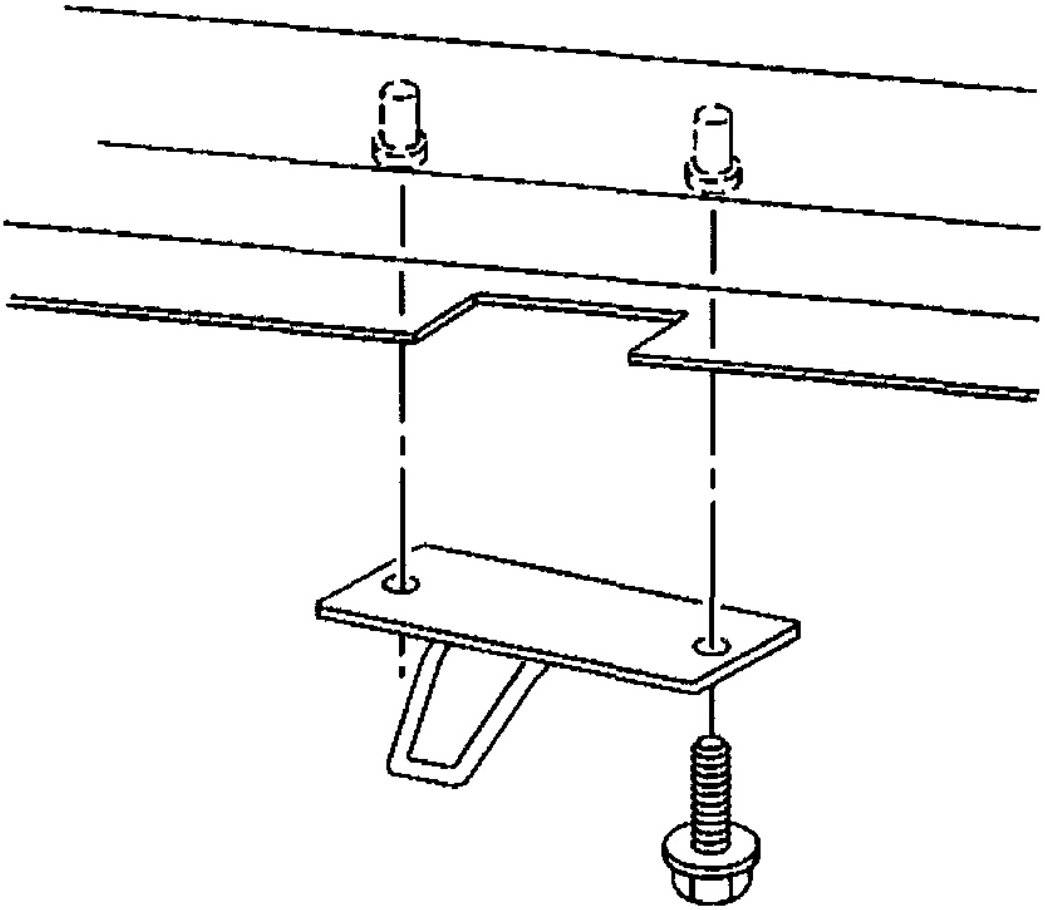

Fig. 229: Removing Roof Lift Off Panel Rear Latch Striker Bolts
Courtesy of GENERAL MOTORS CORP.

Installation Procedure

1. Position the striker to the marks made before removal.

   CAUTION: Refer to FASTENER NOTICE .

2. Install the striker attaching bolts.

   Tighten

Tighten the roof rear latch striker bolts to 10 N.m (89 lb in).

3. Install the roof bow center interior trim panel. Refer to **TRIM PANEL REPLACEMENT - REAR ROOF BOW** .

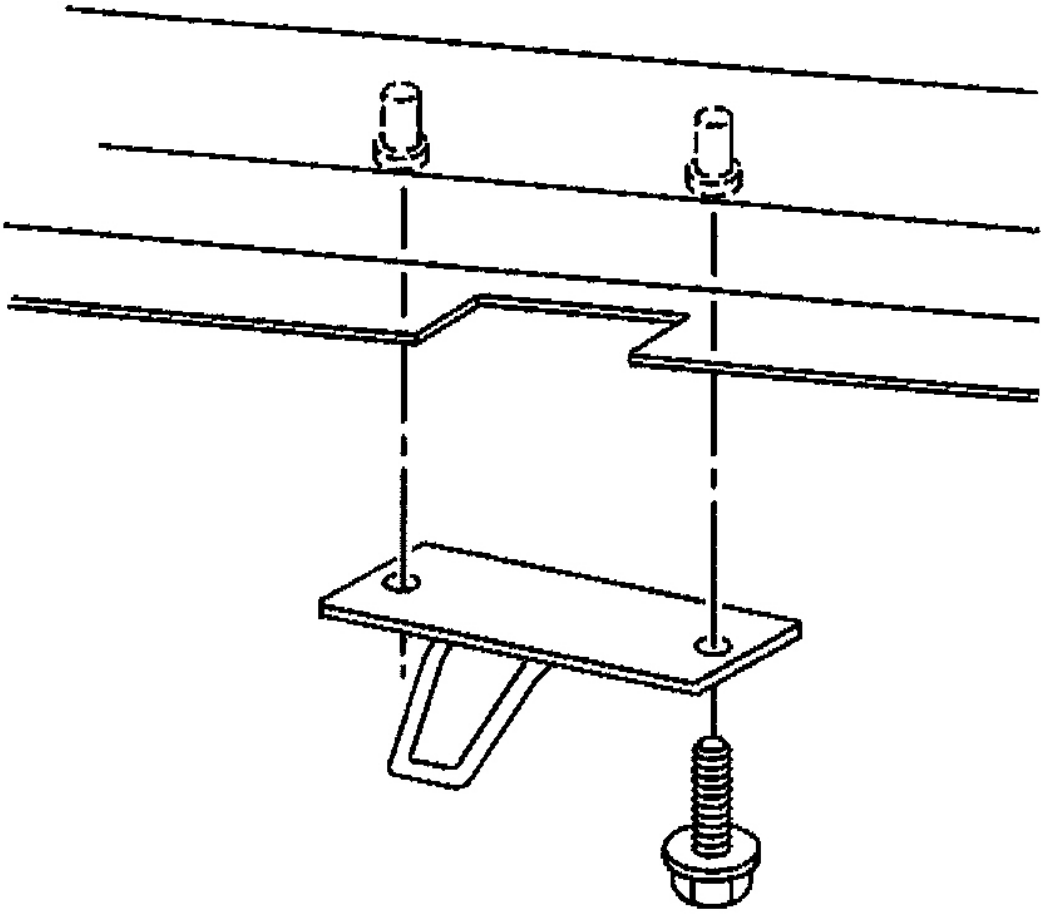

Fig. 230: Installing Roof Lift Off Panel Rear Latch Striker Bolts
Courtesy of GENERAL MOTORS CORP.

ROOF LIFT OFF PANEL FRONT LATCH HANDLE STRIKER

Removal Procedure

1. Remove the roof panel.

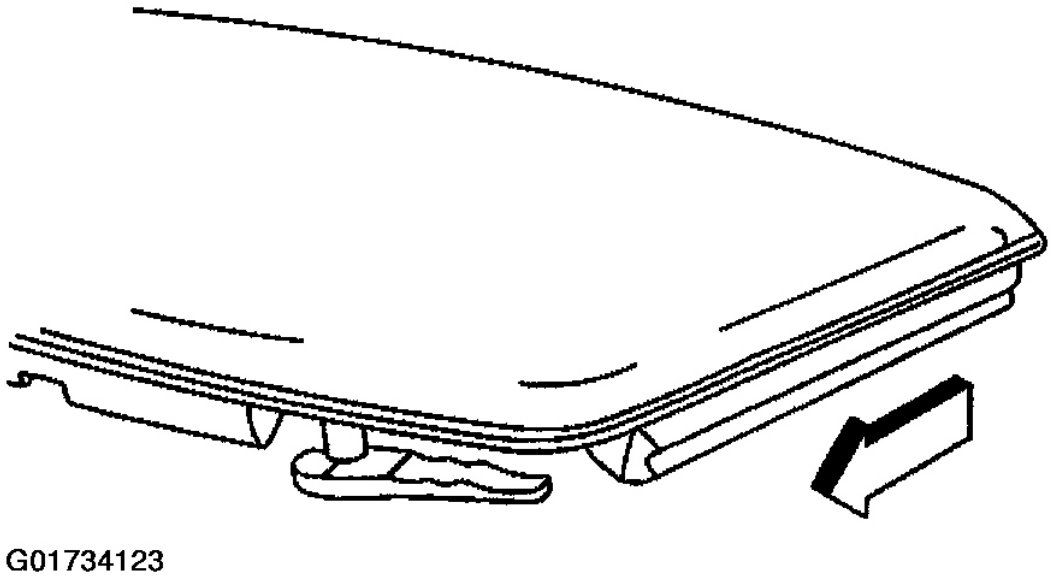

Fig. 231: Removing Roof Lift Off Panel
Courtesy of GENERAL MOTORS CORP.

2. Remove the sunshade. Refer to **SUNSHADE REPLACEMENT** .
3. Remove the side and upper garnish moldings. Refer to **WINDSHIELD UPPER GARNISH MOLDING REPLACEMENT** .

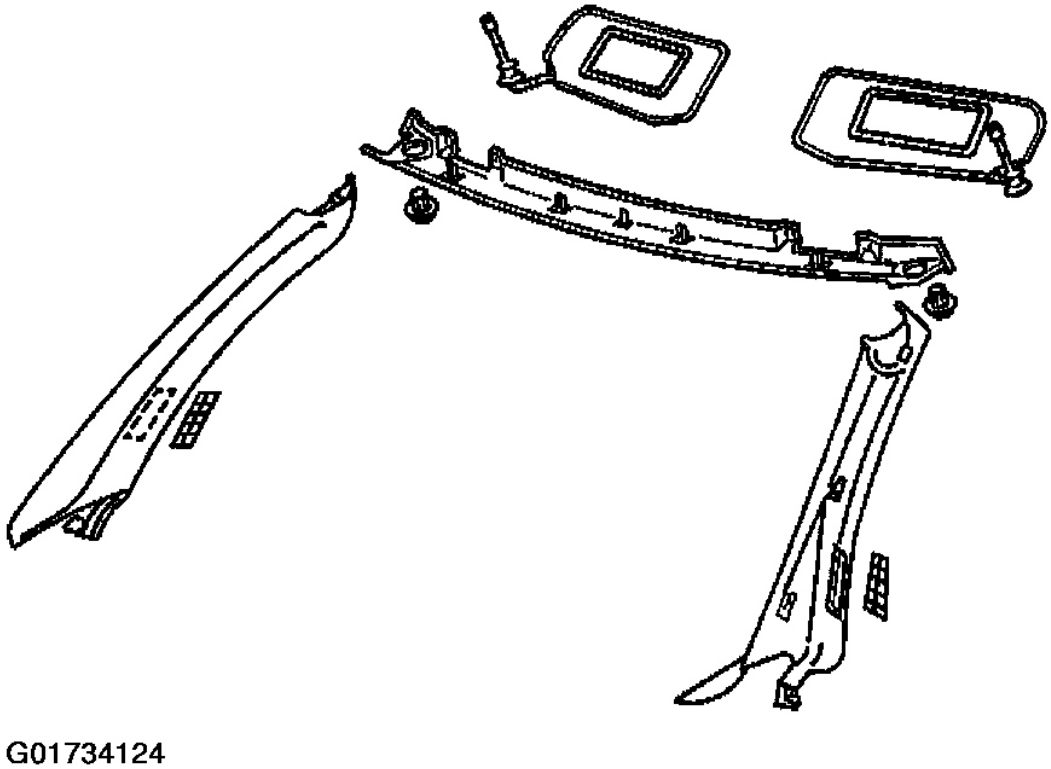

Fig. 232: Identifying Sunshade & Garnish Moldings
Courtesy of GENERAL MOTORS CORP.

4. Mark the location of the striker to aid in installation.
5. Remove the bolts attaching the striker.
6. Removal the striker.

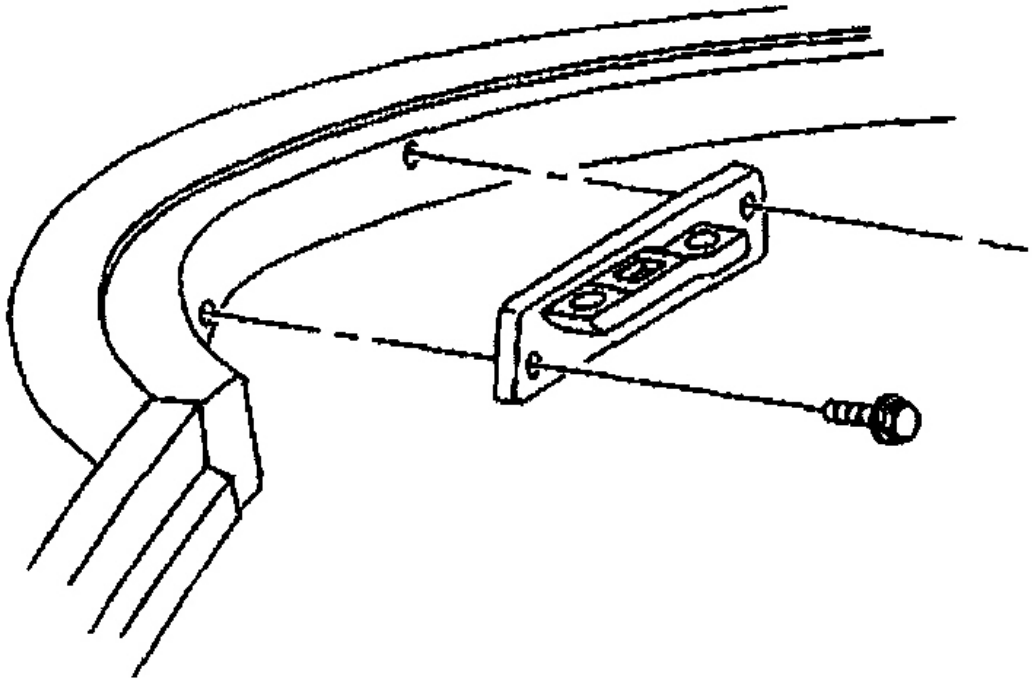

Fig. 233: Removing Front Latch Handle Striker Bolts
Courtesy of GENERAL MOTORS CORP.

Installation Procedure

1. Align the striker with the marks made before removal.

CAUTION: Refer to FASTENER NOTICE .

2. Install the striker attaching bolts.

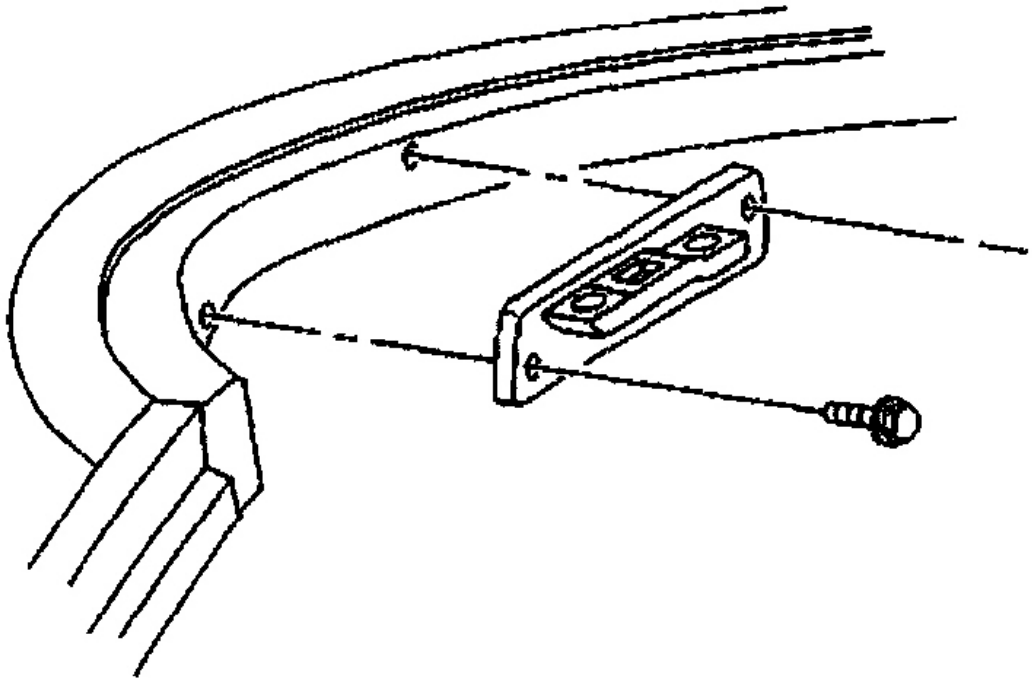

Fig. 234: Installing Front Latch Handle Striker Bolts
Courtesy of GENERAL MOTORS CORP.

Tighten

Tighten the roof rear latch striker bolts to 10 N.m (89 lb in).

3. Install the upper and side garnish moldings. Refer to **WINDSHIELD UPPER GARNISH MOLDING REPLACEMENT** .
4. Install the sunshade. Refer to **SUNSHADE REPLACEMENT** .

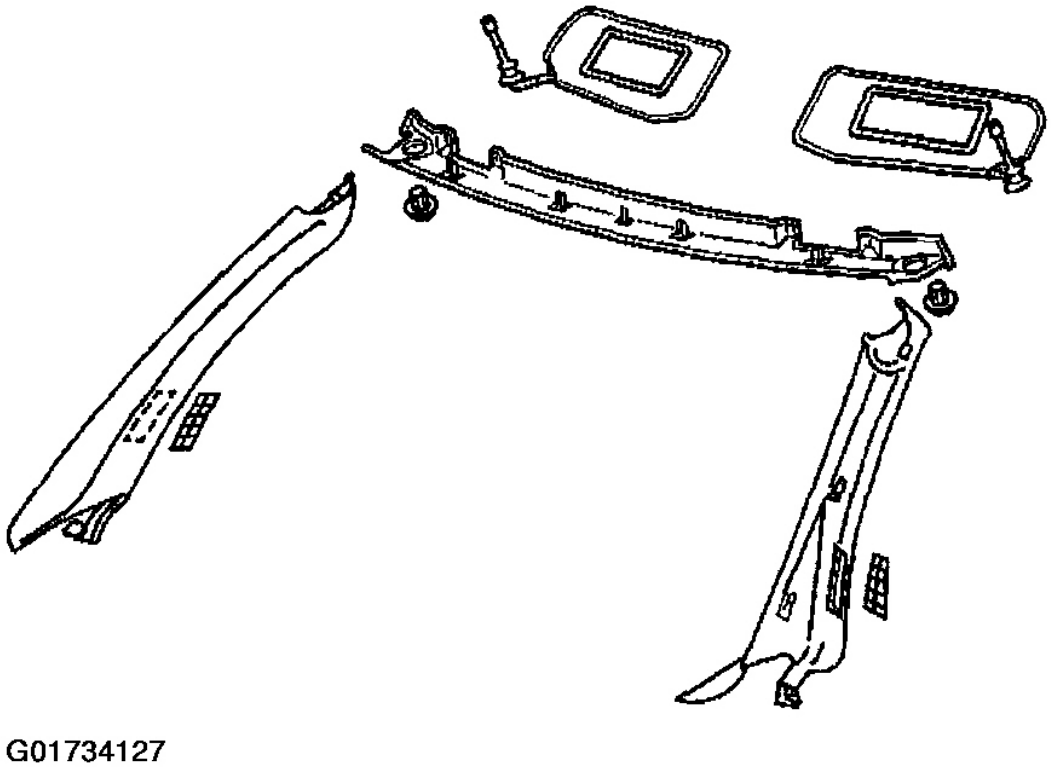

Fig. 235: Identifying Sunshade & Garnish Moldings
Courtesy of GENERAL MOTORS CORP.

5. Install the roof panel.
6. Adjust if necessary. Refer to **Roof Lift Off Panel Adjustment** .

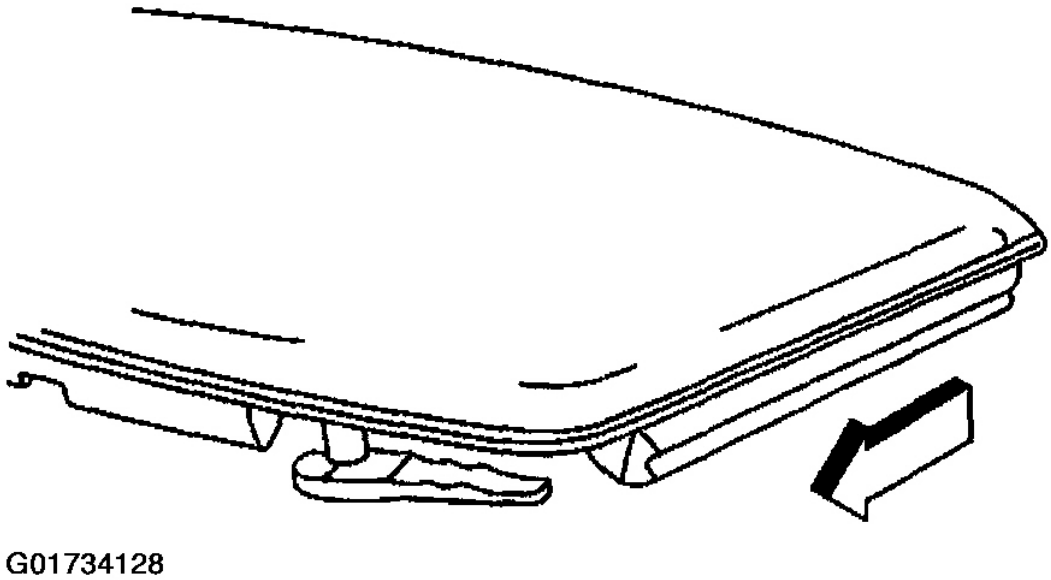

Fig. 236: Installing Roof Lift Off Panel
Courtesy of GENERAL MOTORS CORP.

ROOF LIFT OFF PANEL ADJUSTMENT

1. Perform one or more of the following five adjustment procedures to properly align the roof lift off panel.
2. To adjust the front striker for up down roof alignment perform the following steps:
3. Remove the windshield upper garnish molding. Refer to **WINDSHIELD UPPER GARNISH MOLDING REPLACEMENT** .

3.1. For major up down roof adjustment loosen the striker bolts and reposition the latch striker up or down.

3.2. For minor up or down roof adjustment loosen the striker outboard bolt and slightly loosen the inboard bolt, pivot the striker on the inboard bolt in 2 mm (0.08 in) increments up or down.

CAUTION: Refer to FASTENER NOTICE .

3.3. Tighten the striker bolts.

Tighten

Tighten the roof front latch handle striker bolts to 10 N.m (89 lb in).

3.4. When the striker is properly adjusted the handle will snap closed.

4. Install the windshield upper garnish molding. Refer to **WINDSHIELD UPPER GARNISH MOLDING REPLACEMENT** .

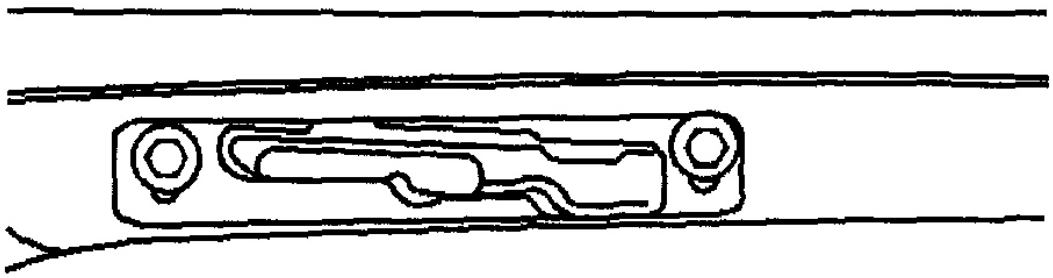

G01734129

Fig. 237: Identifying Roof Lift Off Panel Latch Handle Striker Bolts
Courtesy of GENERAL MOTORS CORP.

5. To adjust the front latch handle forward or rearward perform the following steps:

   5.1. Loosen the latch handle bolts.

   5.2. Position the latch handle forward or rearward. Maintain a minimum of 2 mm (0.08 in) clearance between latch handle and the latch striker to avoid squeaks and rattles.

   5.3. Assure the latch handle base is parallel to the striker to provide clearance to the sunshade mirror door.

   5.4. Tighten the latch handle bolts.

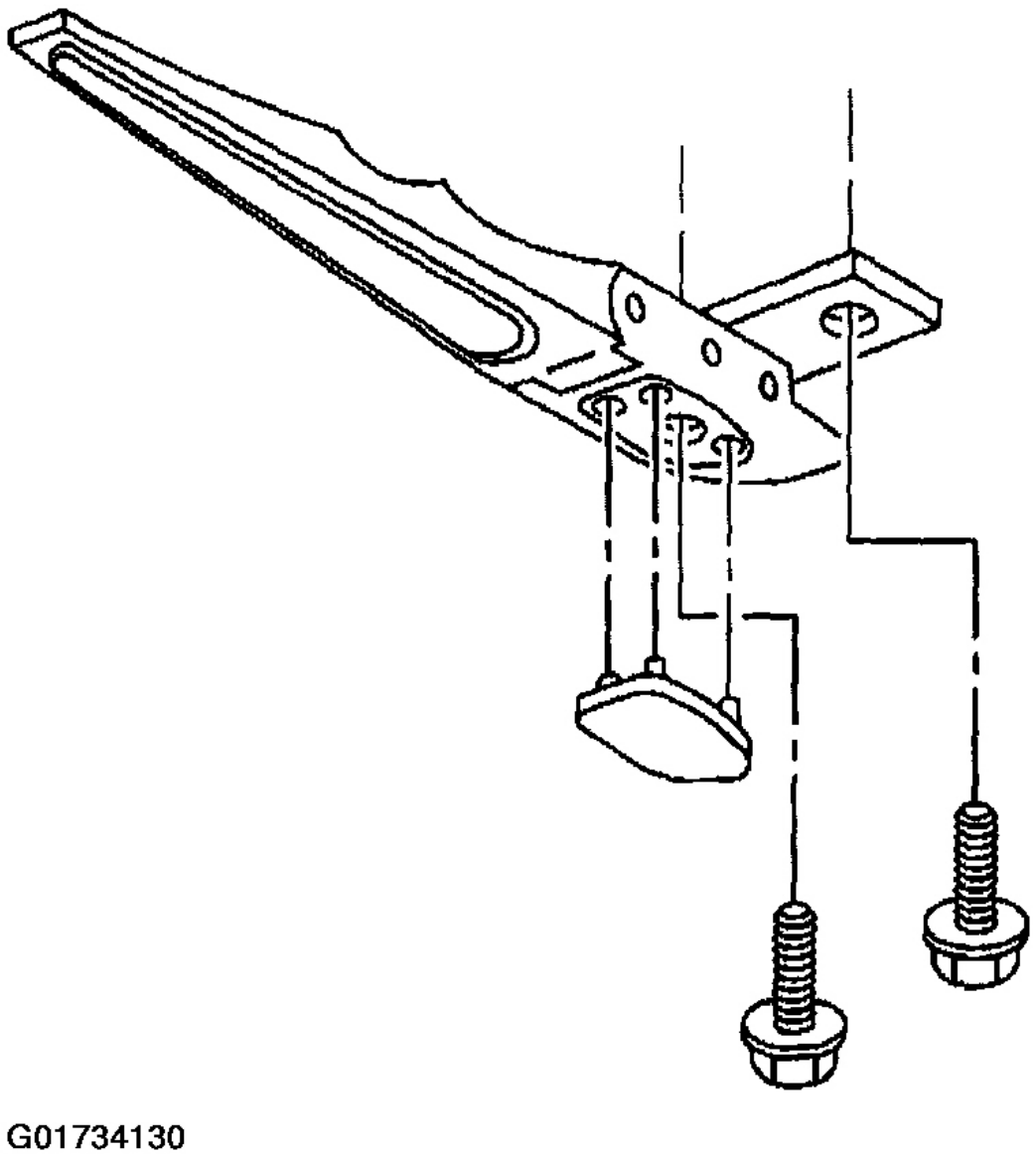

Fig. 238: Adjusting Roof Lift Off Panel Latch Handle Bolts
Courtesy of GENERAL MOTORS CORP.

Tighten

Tighten the roof front latch handle bolts to 13 N.m (10 lb ft).

6. For major rear latch adjustment adjust the rear latch striker performing the following steps:

6.1. Remove the roof lift off panel.

6.2. Remove the roof bow center interior trim panel. Refer to **TRIM PANEL REPLACEMENT - REAR ROOF BOW** .

6.3. Loosen the rear latch striker attaching bolts.

6.4. Adjust the position of the latch striker forward or rearward for major adjustment.

6.5. Tighten the striker attaching bolts.

Tighten

Tighten the roof rear striker bolts to 10 N.m (89 lb in).

6.6. Install the roof lift off panel.

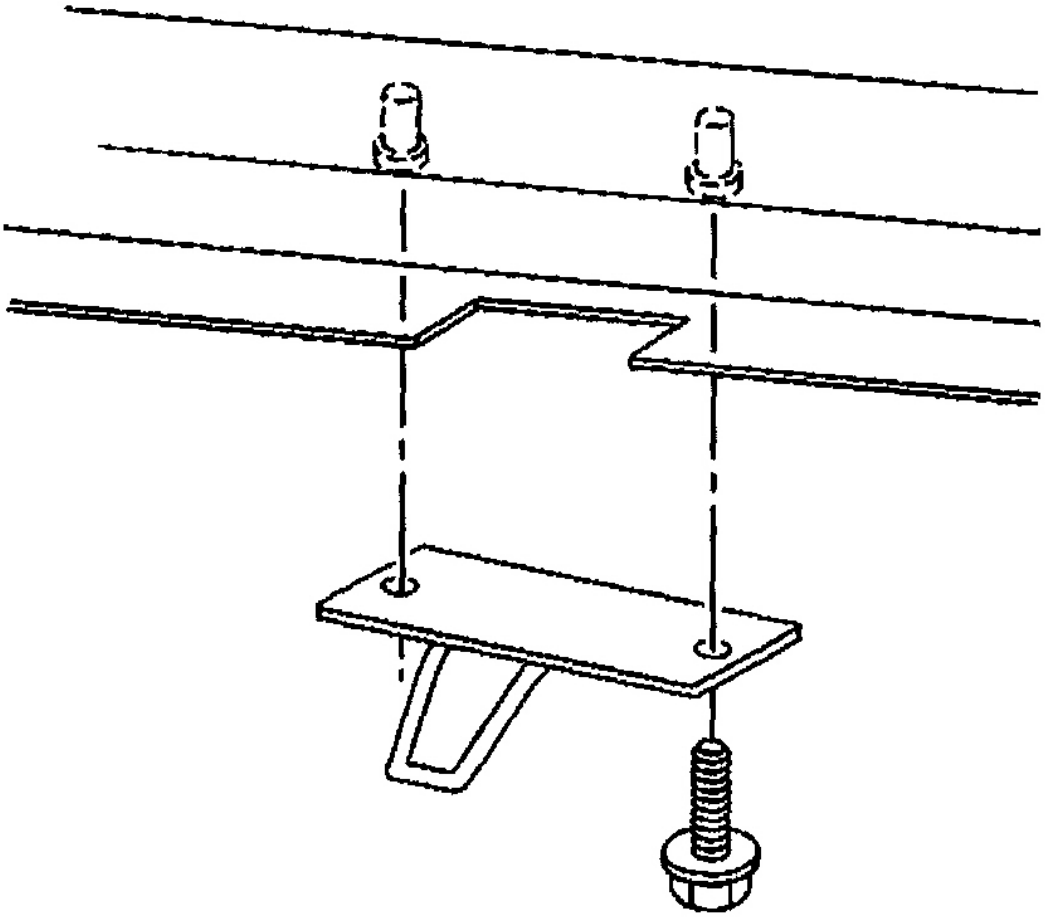

Fig. 239: Adjusting Roof Lift Off Panel Rear Striker Bolts
Courtesy of GENERAL MOTORS CORP.

7. For minor rear latch adjustment, adjust the latch handle hook one turn at a time to achieve moderate pressure to the latch as follows.
   - **7.1.** Remove the roof lift off panel.
   - **7.2.** Loosen the set screw locking the latch hook.
   - **7.3.** Turn the hook in to tighten or out to loosen.
   - **7.4.** Tighten the set screw.
   - **7.5.** Install the roof panel.

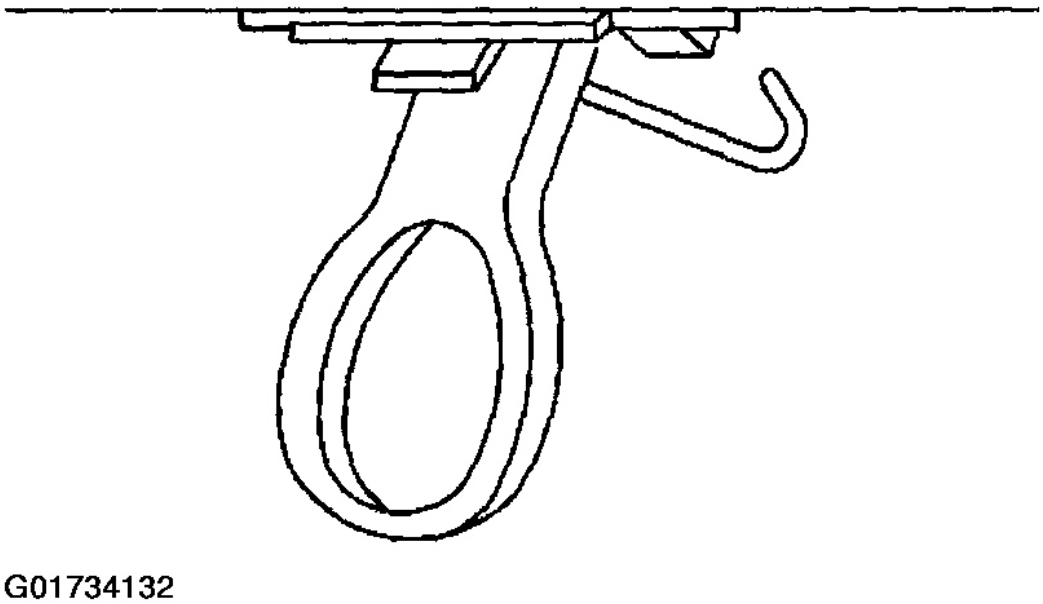

Fig. 240: Identifying Roof Lift Off Panel Rear Latch Handle Hook
Courtesy of GENERAL MOTORS CORP.

8. To adjust the rear locator perform the following steps:
   - **8.1.** With the roof installed on the vehicle loosen the locator mounting bolts.
   - **8.2.** Reposition the locator.
   - **8.3.** Tighten the mounting bolts.

Tighten

Tighten the roof rear locator to locator bracket bolts to 10 N.m (89 lb in).

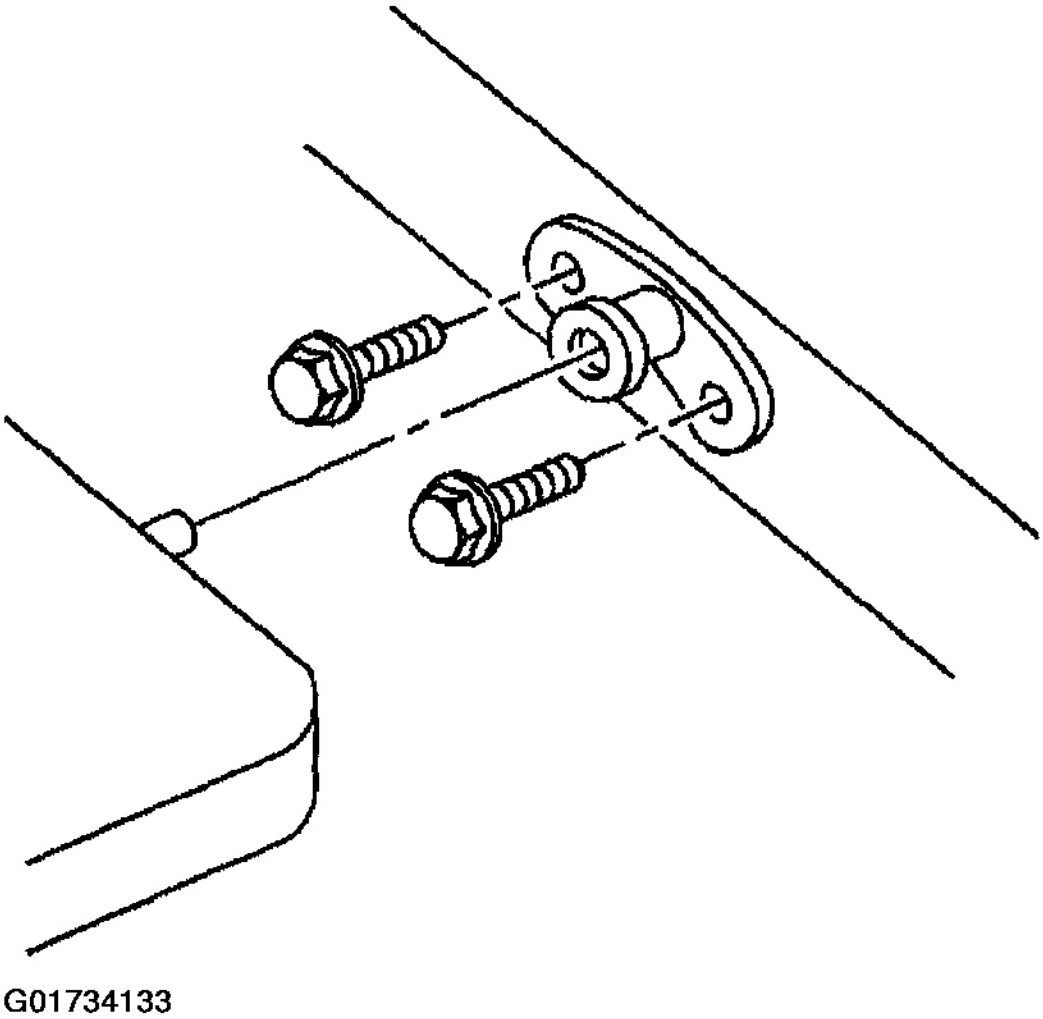

Fig. 241: Adjusting Roof Lift Off Panel Latch Handle Locating Bracket Bolts
Courtesy of GENERAL MOTORS CORP.

ROOF LIFT OFF PANEL MOLDING REPLACEMENT

Removal Procedure

1. Apply tape to the edge of the roof panel to protect the panel.
2. Remove the molding by placing a block of wood against the molding and tapping the block of wood with a hammer.

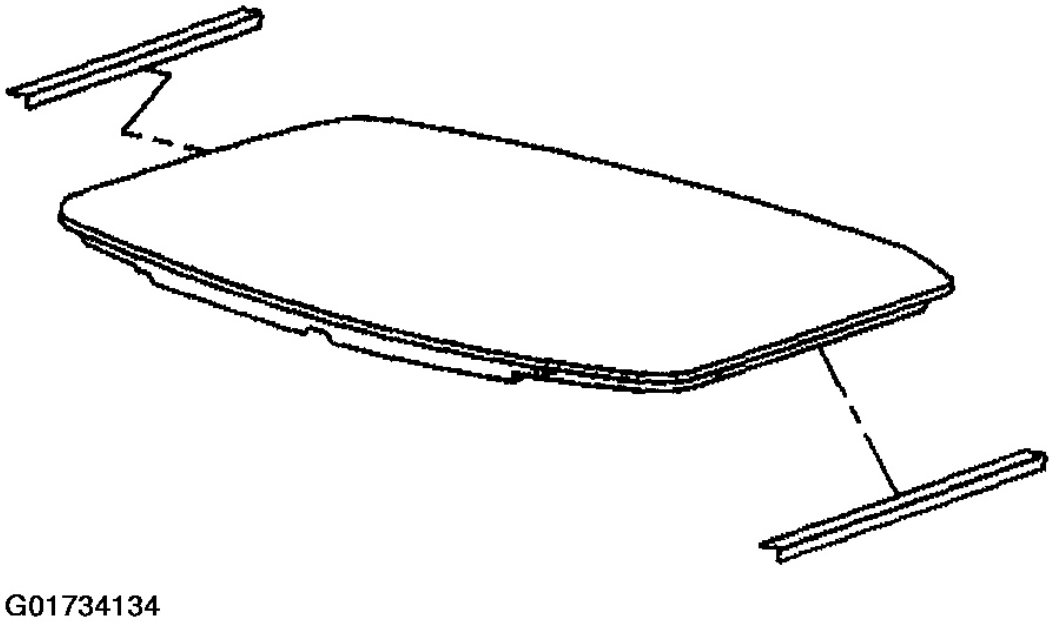

Fig. 242: Removing Roof Lift Off Panel Molding
Courtesy of GENERAL MOTORS CORP.

Installation Procedure

1. Align the locator on the molding to the corresponding locator on the edge of the roof panel.
2. Install the molding by lightly tapping with a rubber mallet until fully seated.
3. Remove the protective tape from the roof panel.

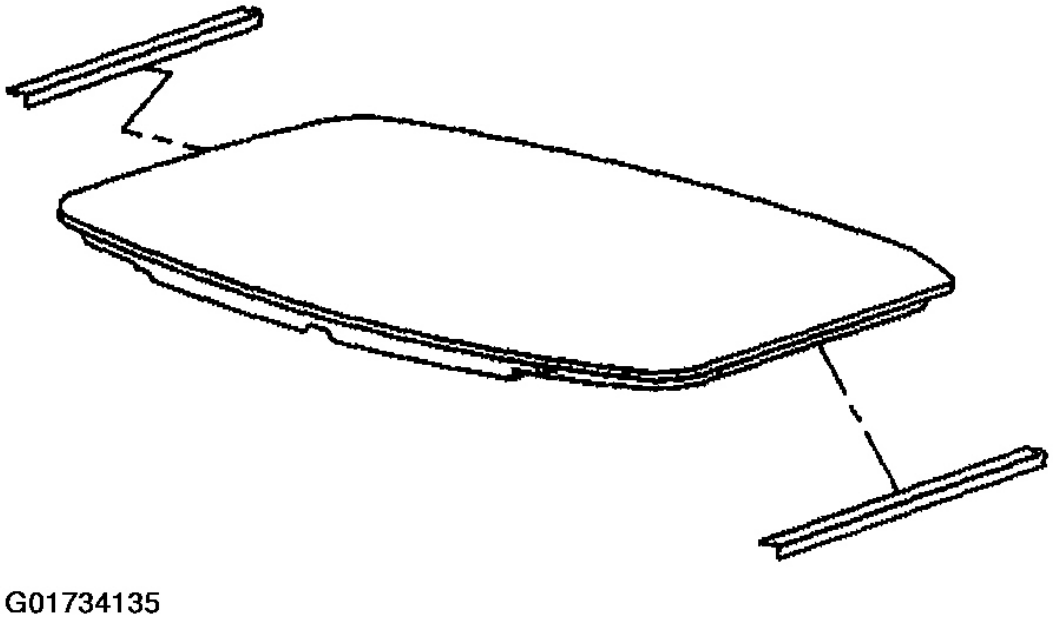

Fig. 243: Installing Roof Lift Off Panel Molding
Courtesy of GENERAL MOTORS CORP.

WEATHERSTRIP REPLACEMENT - LIFT OFF PANEL

Removal Procedure

1. Remove the roof lift off panel.

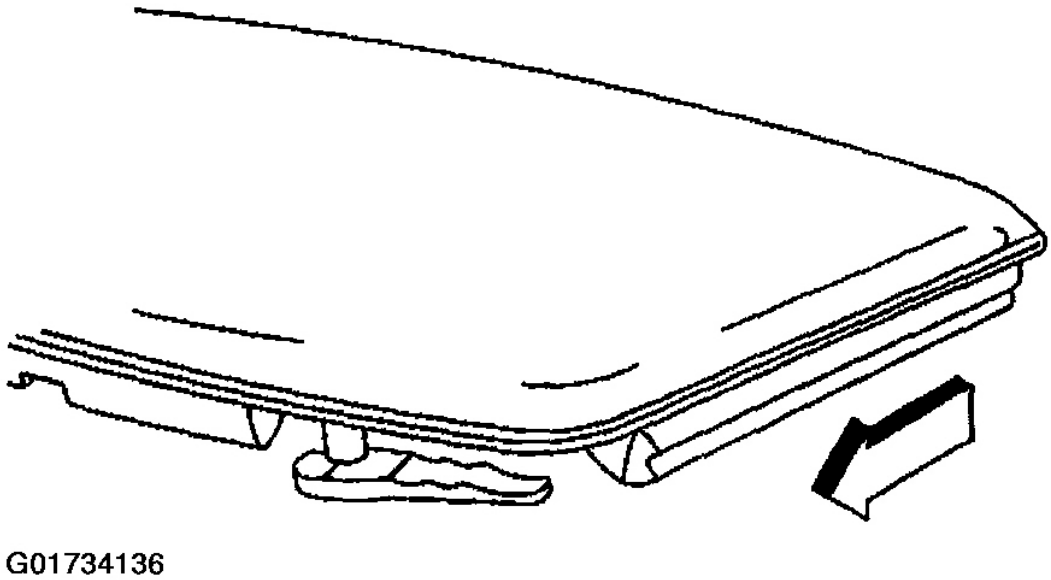

Fig. 244: Removing Roof Lift Off Panel
Courtesy of GENERAL MOTORS CORP.

2. Remove the screws from the ends of the weatherstrip.
3. Remove the weatherstrip from the weatherstrip retainer.
4. Clean the surface with 3M(tm) adhesive remover P/N 8984 or equivalent.

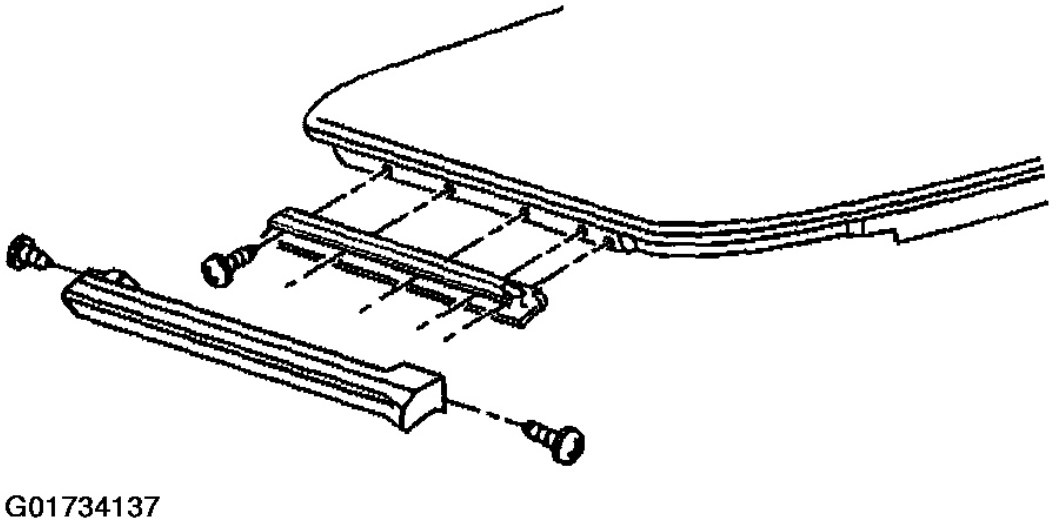

Fig. 245: Removing Roof Lift Off Panel Weatherstrip Screws
Courtesy of GENERAL MOTORS CORP.

Installation Procedure

1. Apply a 6.0 X 40 mm (0.25 X 1.5 in) bead of sealer GM P/N 12345739 (Canadian P/N 10953541) to the front and rear corners of the retainer as shown in the illustration.
   - Apply the bead of sealer to the roof.
   - Apply the bead of sealer to the retainer.
   - Apply the bead of sealer to the ends of the retainer.

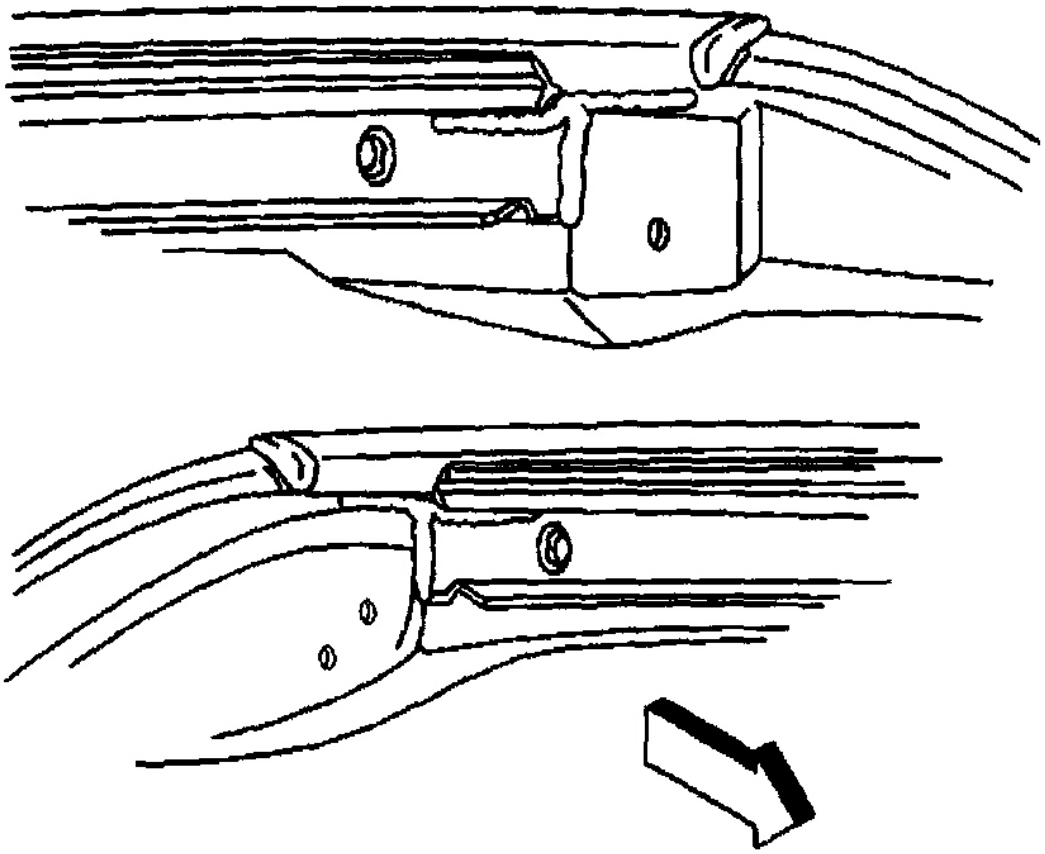

Fig. 246: Applying Roof Lift Off Panel Weatherstrip Retainer Sealant
Courtesy of GENERAL MOTORS CORP.

Important: Do not touch the adhesive backing on the new weatherstrip.

2. Remove the protective backing from the foam tape on the ends of the new weatherstrip, or install two sided tape 3M(tm) P/N 06377 or equivalent to the ends of a reused weatherstrip.
3. Install the weatherstrip into the retainer using a nylon spatula or your fingers. Start at the forward edge and work rearward.

NOTE: Refer to FASTENER NOTICE .

4. Install the screws at the ends of the weatherstrip. Hold the weatherstrip to prevent the weatherstrip from rotating.

Tighten

Tighten the side weatherstrip screws to 3 N.m (27 lb in).

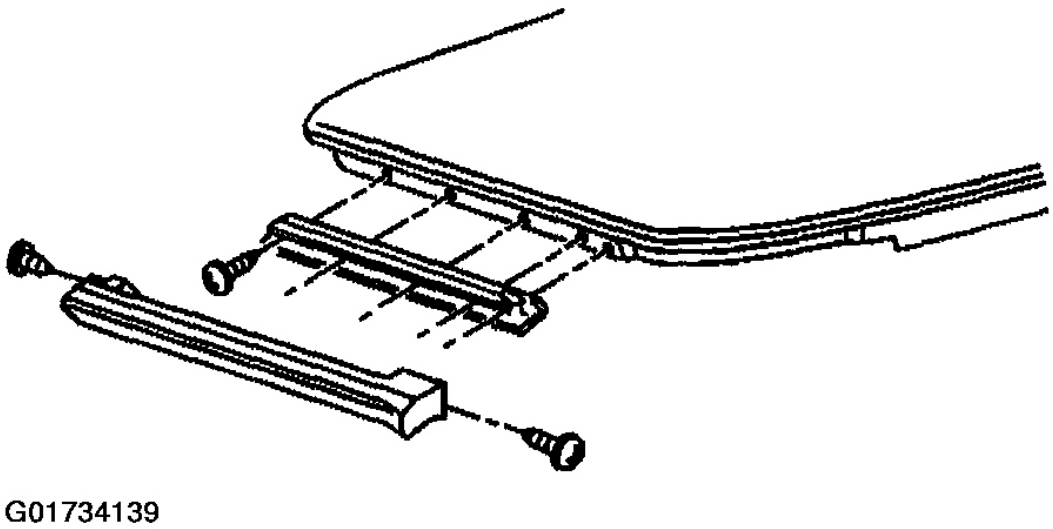

Fig. 247: Installing Roof Lift Off Panel Weatherstrip Screws
Courtesy of GENERAL MOTORS CORP.

5. Install the roof panel.

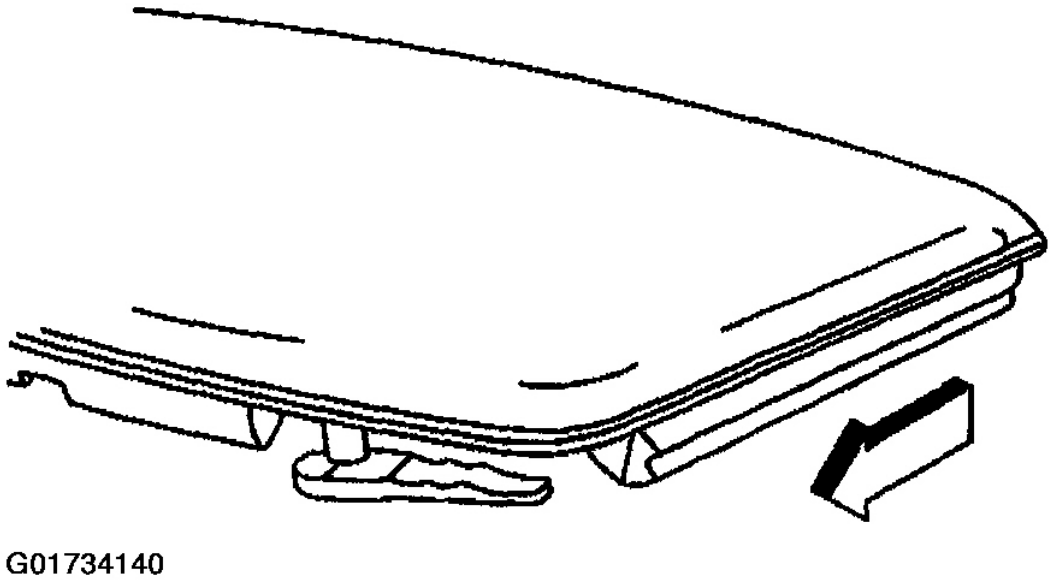

Fig. 248: Installing Roof Lift Off Panel
Courtesy of GENERAL MOTORS CORP.

WEATHERSTRIP RETAINER REPLACEMENT - LIFT OFF PANEL

Removal Procedure

1. Remove the roof panel.

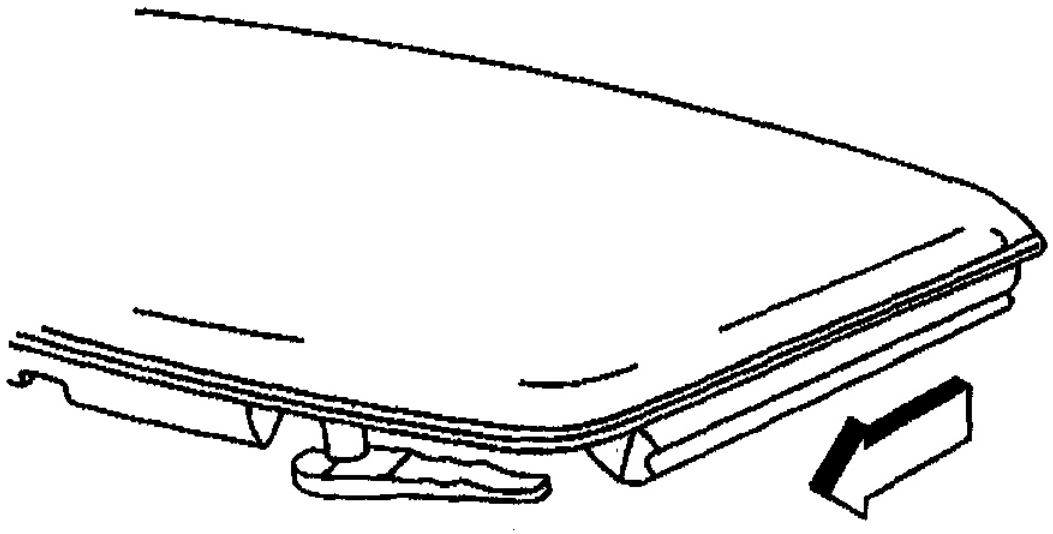

Fig. 249: Removing Roof Lift Off Panel
Courtesy of GENERAL MOTORS CORP.

2. Remove the side weatherstrip. Refer to **Weatherstrip Replacement - Lift Off Panel** .
3. Mark the location of the retainer.
4. Remove the screws attaching the retainer.
5. Remove the retainer by pulling the retainer loose from the roof panel.
6. Clean the retainer and the roof panel contact surfaces using 3M(tm) adhesive remover P/N 8984 or equivalent.

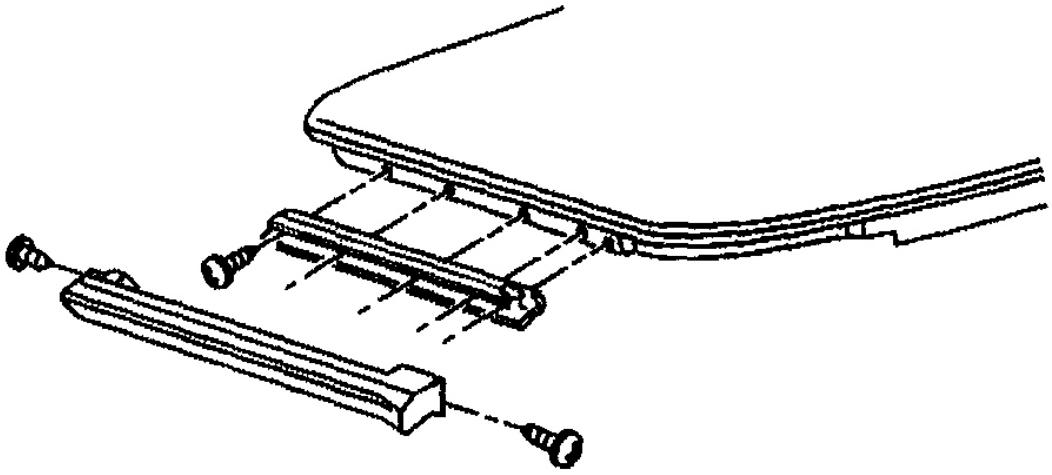

Fig. 250: Removing Roof Lift Off Panel Weatherstrip Screws
Courtesy of GENERAL MOTORS CORP.

Installation Procedure

Important: A minimum of 2 mm (0.08 in) of foam sealing tape must extend beyond the edge of the retainer to prevent water leaks.

1. Apply foam sealing tape to a reusable retainer.
2. Apply a bead of sealer GM P/N 12345739 (Canadian P/N 10953541) across the front of the window blowout clip above the screw hole as shown in the illustration.
3. Install the clip to the retainer aligning the clip to the front hole in the retainer.

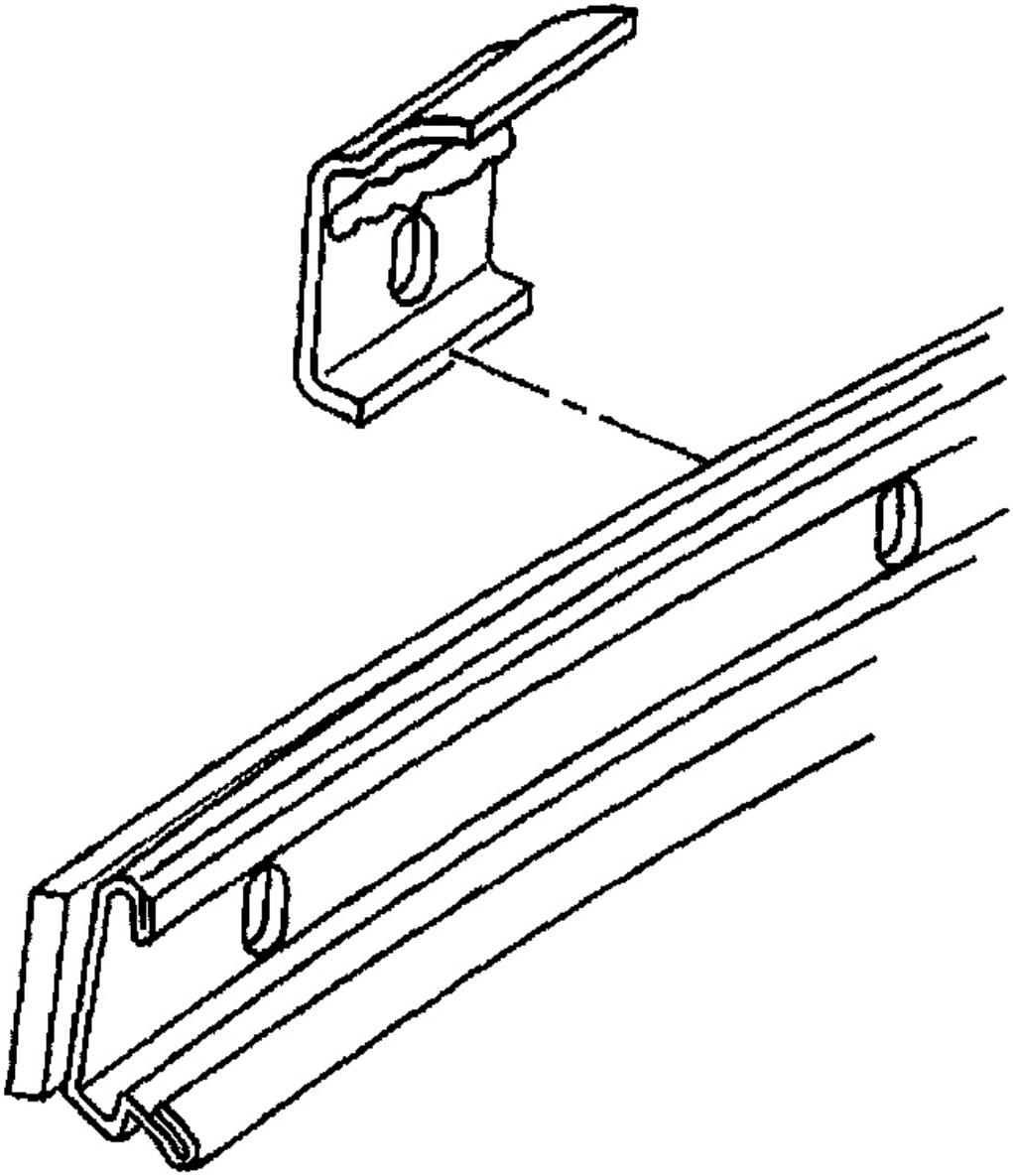

Fig. 251: Applying Weatherstrip Retainer Window Blowout Clip Sealant
Courtesy of GENERAL MOTORS CORP.

4. Apply a bead of sealer GM P/N 12345739 (Canadian P/N 10953541) across the full length of the back of the retainer outside the screw holes as shown in the illustration.

5. Position the retainer to the marks made before removal.

CAUTION: Refer to FASTENER NOTICE .

6. Install the forward screw aligning the retainer fore and aft.

   Important:

   Stripped, broken, or improperly seated screws must be replaced or repaired to prevent water leaks.

7. Install the remaining screws.

   Tighten

   Tighten the side weatherstrip retainer screws to 3 N.m (27 lb in).

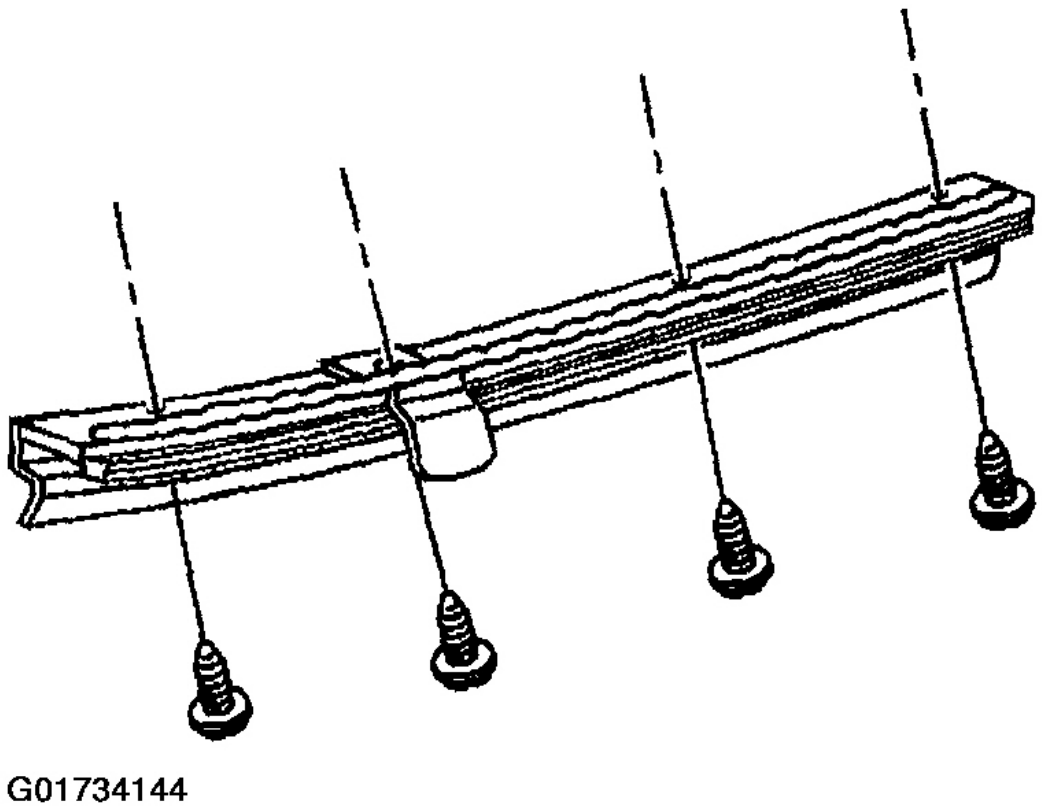

Fig. 252: Installing Side Weatherstrip Retainer Screws
Courtesy of GENERAL MOTORS CORP.

8. Apply a bead of sealer GM P/N 12345739 (Canadian P/N 1095354) to the ends of the retainer and install the side weatherstrip. Refer to **Weatherstrip Retainer Replacement - Lift Off Panel** .
9. Install the roof panel.

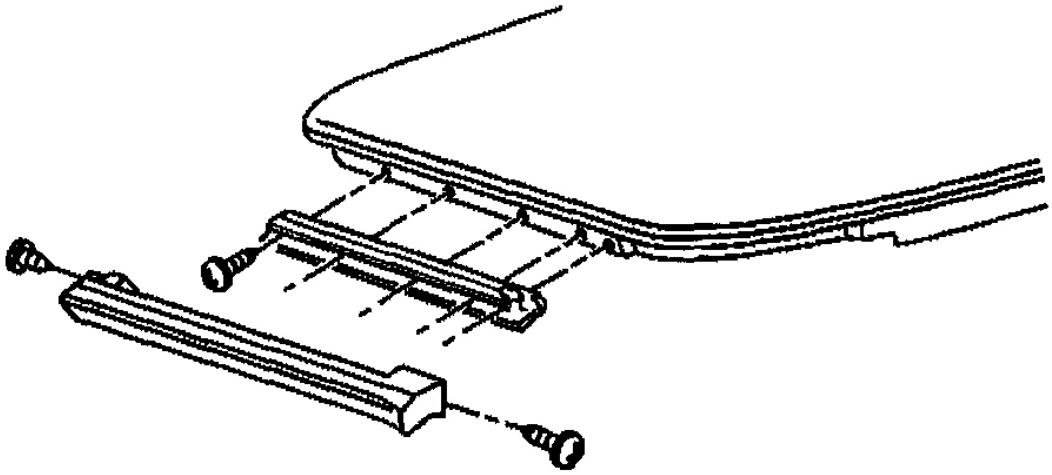

Fig. 253: Installing Weatherstrip Retainer Screws
Courtesy of GENERAL MOTORS CORP.

DESCRIPTION & OPERATION

LIFT OFF PANEL DESCRIPTION

There are 2 roof lift off panels available. One roof panel is composed of a see through polycarbonate and the other roof panel is composed of SMC plastic painted to match the body color. Either of the roof lift off panels can be stored in the rear cargo compartment. Special egg shaped brackets on the floor of the rear cargo area support the rear of the stored roof panel. Release pins on the rear lift window panel latches secure the front of the stored roof panel.