2010 Cadillac Escalade Two-mode Hybrid

In Brief 1-1
Initial Drive Information 1-2
Hybrid Features 1-4
Performance and Maintenance 1-6

Seats and Restraint System 2-1
Restraint System Check 2-2

Features and Controls 3-1
Storage Areas 3-2
Starting and Operating Your Vehicle 3-3

Instrument Panel 4-1
Climate Controls 4-2
Warning Lights, Gages, and Indicators 4-3
Driver Information Center (DIC) 4-7
Audio System(s) 4-9

Driving Your Vehicle 5-1
Your Driving, the Road, and the Vehicle 5-2
Towing 5-2

Service and Appearance Care 6-1
Service 6-2
Checking Things Under the Hood 6-3
Four-Wheel Drive 6-23
Electrical System 6-24
Tires 6-26
Appearance Care 6-54
Capacities and Specifications 6-55

Maintenance Schedule 7-1
Maintenance Schedule 7-2

Index i-1

GENERAL MOTORS, GM, the GM Emblem, CADILLAC, the CADILLAC Crest & Wreath, and the name Escalade are registered trademarks of General Motors.

This manual describes features that may or may not be on your specific vehicle either because they are options that you did not purchase or due to changes subsequent to the printing of this owner manual. Please refer to the purchase documentation relating to your specific vehicle to confirm each of the features found on your vehicle. For vehicles first sold in Canada, substitute the name “General Motors of Canada Limited” for Cadillac Motor Division wherever it appears in this manual.

Keep this manual in the vehicle for quick reference.

Canadian Owners

Propriétaires Canadiens

A French language copy of this manual can be obtained from your dealer/retailer or from:

On peut obtenir un exemplaire de ce guide en français auprès du concessionnaire ou à l'adresse suivante:

Helm, Incorporated
P.O. Box 07130
Detroit, MI 48207

1-800-551-4123

Numéro de poste 6438 de langue française

www.helminc.com

Litho in U.S.A.
Part No. 25855013 A First Printing

©2009 General Motors. All Rights Reserved.

Introduction

Your hybrid SUV is designed to be more fuel efficient than the standard SUV, which results in reduced carbon dioxide emissions.

Using this Supplement

This supplement contains information specific to the hybrid components of the vehicle. It does not explain everything you need to know about the vehicle. Read this supplement along with the owner manual to learn about the vehicle's features and controls.

Index

A good place to look for what you need is the Index in back of this supplement. It is an alphabetical list of what is in the supplement, and the page number where you will find it.

✍ NOTES

Section 1 In Brief

Initial Drive Information 1-2
Transmission 1-2
Four-Wheel Drive 1-2
Hybrid Features 1-4
Hybrid Safety Information 1-4
Fuel Economy Gage 1-4
Automatic Engine Start/Stop Feature 1-5
Regenerative Braking 1-5
Battery 1-6
Service 1-6
Performance and Maintenance 1-6
Tire Sealant and Compressor Kit 1-6

Initial Drive Information

Transmission

Range Selection Mode

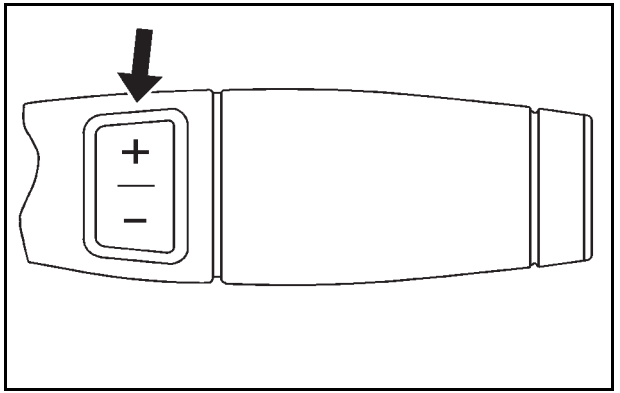

The Range Selection Mode switch is located on the shift lever. To enable the Range Selection feature, move the column shift lever to the M (Manual) position. The current range will appear next to the M. This is the highest attainable range with all lower gears accessible. As an example, when 3 (Third) gear is selected, 1 (First) through 3 (Third) gears are available.

Press the plus/minus buttons, located on the steering column shift lever, to select the desired range of gears for current driving conditions. See Automatic Transmission Operation in the owner manual.

Cruise control can be used while the vehicle is in Range Selection Mode.

Four-Wheel Drive

If the vehicle has four-wheel drive, you can send the engine's driving power to all four wheels for extra traction. Read the following before using four-wheel drive.

Automatic Transfer Case

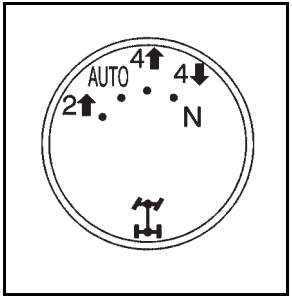

The transfer case knob is located to the left of the instrument panel cluster. You can choose among five driving settings:

2 ↑ (Two-Wheel Drive High): This setting is used for driving in most street and highway situations.

AUTO (Automatic Four-Wheel Drive) : This setting is ideal for use when road surface traction conditions are variable.

4 ↑ (Four-Wheel Drive High): Use the four-wheel high position when you need extra traction, such as on snowy or icy roads or in most off-road situations.

4 ↓ (Four-Wheel Drive Low) : This setting delivers extra torque. You might choose Four-Wheel Drive Low if you are driving off-road in deep sand, deep mud, deep snow, and while climbing or descending steep hills.

N (Neutral) : Shift the vehicle's transfer case to N (Neutral) only when towing the vehicle. See Recreational Vehicle Towing or Towing Your Vehicle in the index of the Owner Manual.

See *Four-Wheel Drive on page 3-9*.

Hybrid Features

Hybrid Safety Information

This vehicle has a standard 12-volt battery and a high-voltage hybrid battery. Only a trained service technician with the proper knowledge and tools should inspect, test, or replace the hybrid battery. See your dealer/retailer if the hybrid battery needs service.

The 12-volt battery cables, in the engine compartment, are clearly labeled. In emergency situations, first responders can cut those cables to disable the high-voltage hybrid battery system.

Fuel Economy Gage

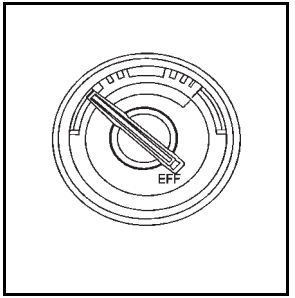

United States

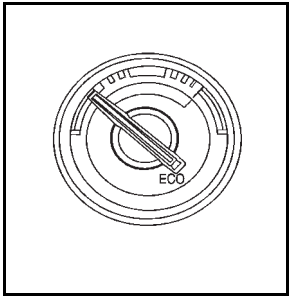

Canada

This gage shows when the vehicle is operating at a fuel efficient point.

Driving behavior that improves fuel efficiency makes the fuel indicator move to the high efficiency band on the fuel gage.

See *Fuel Economy Gage on page 4-5* for more information.

Automatic Engine Start/Stop Feature

Start the engine as you would any other engine. See “Starting the Engine” in the owner manual for more information on starting. The hybrid system provides very quiet engine starting. If pulling a trailer with trailer brakes, see *Towing a Trailer on page 5-7* for more information.

Auto Stop

The vehicle has an Auto Stop feature. After a successful engine start, the engine may turn off and operate in the Auto Stop mode.

Keep your foot firmly on the brake pedal until you are ready for the vehicle to move.

Engine OFF and AUTO STOP modes are indicated on the tachometer display. When the tachometer needle indicates OFF, the engine is not running and will remain off until the ignition key is placed in the START position or a remote vehicle start is performed. When the tachometer needle indicates AUTO STOP, the hybrid system is on, the engine is not running, but may Auto Start at any time without notice. See *Tachometer on page 4-4* for more information.

A chime will sound if the driver door is opened while in Auto Stop as a reminder that the ignition switch is not in the LOCK/OFF position. Always turn the ignition switch to LOCK/OFF and remove the key from the ignition switch when exiting the vehicle.

Auto Start

The vehicle also has an Auto Start feature. The engine will remain off while in Auto Stop mode until vehicle conditions require the engine to run. The near-instant starting of the engine from Auto Stop mode is called Auto Start.

EV Mode

The vehicle also has an EV mode which uses only the electric motor to move the vehicle. With light acceleration, the vehicle will drive in EV mode. EV mode is unavailable when the vehicle is out of fuel.

See Starting the Vehicle in the Two-Mode Hybrid supplement to the owner manual.

Regenerative Braking

Regenerative braking enables the electric drive motor to operate as a generator when coasting or braking. Energy from the moving vehicle recharges the hybrid battery.

The hydraulic disc brakes work with the regenerative braking to insure effective braking.

The braking system is computer controlled and blends the regenerative braking with the conventional hydraulic disc brakes to meet any requirements for deceleration. Because the controller applies the hydraulic brakes through its high pressure accumulator, you may occasionally hear the motor driven pump when it recharges the system. This is normal. In the event of a controller problem, the brake pedal may be harder to push and the stopping distance may be longer.

See Regenerative Braking, Warning Lights, Gages, and Indicators and Driver Information Center (DIC) in the owner manual.

Battery

This vehicle has a standard 12-volt battery and a high-voltage hybrid battery. When a new standard 12-volt battery is needed, see your dealer/retailer for one that has the replacement number shown on the original battery's label.

Only a trained service technician with the proper knowledge and tools should inspect, test, or replace the hybrid battery. See your dealer/retailer if the hybrid battery needs service. See *Battery on page 6-17*.

Service

Never try to do your own service on hybrid components. You can be injured and the vehicle can be damaged if you try to do your own service work. Service and repair of these hybrid components should only be performed by a trained service technician with the proper knowledge and tools. See *Doing Your Own Service Work on page 6-2*.

Performance and Maintenance

Tire Sealant and Compressor Kit

This vehicle has a tire sealant and compressor kit which can be used to seal small punctures in the tread area of the tire.

See “Tire Sealant and Compressor Kit” for complete operating information.

Section 2 Seats and Restraint System

Restraint System Check 2-2
Replacing Restraint System Parts After a Crash 2-2

Restraint System Check

Replacing Restraint System Parts After a Crash

If an airbag inflates or the vehicle has been in a crash, the vehicle's sensing system may command the automatic hybrid battery disconnect to open. When the battery disconnect is open, the hybrid battery will be off and the vehicle will not start. The airbag readiness light and/or SERVICE HYBRID SYSTEM warning message may come on in the Driver Information Center (DIC).

See “Airbag Readiness Light” in the owner manual and *Driver Information Center (DIC) on page 4-7* for more information.

To operate the vehicle, the automatic hybrid battery disconnect must be reconnected by a qualified service technician and sensing system parts will need to be replaced. Have the vehicle serviced right away.

Section 3 Features and Controls

Storage Areas 3-2
Power Outlet Alternating Current 3-2
Starting and Operating Your Vehicle 3-3
Starting the Vehicle 3-3
Automatic Transmission Operation 3-5
Four-Wheel Drive 3-9
Shifting Into Park 3-14
Engine Coolant Heater 3-16
Regenerative Braking 3-17
Running the Vehicle While Parked 3-17

Storage Areas

Power Outlet Alternating Current

The vehicle may have a power outlet that can be used to plug in electrical equipment that uses a maximum limit of 150 watts.

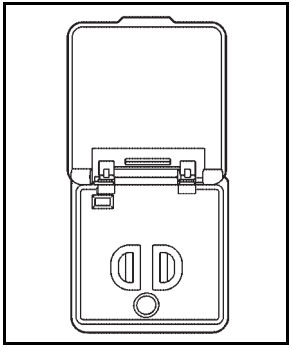

The power outlet is located in the rear cargo area on the driver side.

An indicator light on the outlet turns on to show it is in use. The light comes on when the ignition is in ON/RUN and equipment requiring less than 150 watts is plugged into the outlet, and no system fault is detected.

The indicator light does not come on when the ignition is in LOCK/OFF or if no equipment is plugged into the outlet.

If equipment is connected using more than 150 watts, or a system fault is detected, a protection circuit shuts off the power supply and the indicator light turns off. To reset the circuit, unplug the item and plug it back in or turn the Retained Accessory Power (RAP) off and then back on. The power restarts when equipment using 150 watts or less is plugged into the outlet and a system fault is not detected.

The power outlet is not designed for the following electrical equipment and may not work properly if these items are plugged into the power outlet:

- Equipment with high initial peak wattage such as: compressor-driven refrigerators and electric power tools.
- Other equipment requiring an extremely stable power supply such as: microcomputer-controlled electric blankets, touch sensor lamps, etc.

See *High Voltage Devices and Wiring on page 6-3*.

Starting and Operating Your Vehicle

Starting the Vehicle

⚠ WARNING:

Exiting the vehicle, without first shifting into P (Park), may cause the vehicle to move, and you or others can be seriously injured. Because the vehicle has the Automatic Engine Start/Stop feature, the vehicle's engine might seem to be shut off when you come to a complete stop. However, once the brake pedal is released, the vehicle can move. The vehicle's engine can also restart at any time.

Shift to P (Park) and turn the ignition to LOCK/OFF, before exiting the vehicle.

Start the engine as you would any other engine. See "Starting the Engine" in the owner manual for more information on starting. If pulling a trailer with trailer brakes, see *Towing a Trailer on page 5-7* for more information.

Auto Stop

The vehicle has an Auto Stop feature. After a successful engine start, the engine may turn off and operate in the Auto Stop mode. Some of the vehicle conditions that allow the engine to stop running and enter the Auto Stop mode are:

- Ignition switch is in the ON/RUN position.
- The hood is closed.
- The gear selector is in P (Park), R (Reverse), N (Neutral) or D (Drive).
- The hybrid battery is at an acceptable state of charge.
- The hybrid battery voltage, temperature or power limits are not exceeded. In very hot conditions, Auto Stop may be unavailable until the hybrid battery has cooled.
- The engine is at operating temperature.
- The vehicle may enter Auto Stop after a remote vehicle start.

If you are on an incline, the hybrid drive motor can help keep the vehicle from rolling backwards, even if the engine is in Auto Stop.

With your foot off the brake and the vehicle on level ground, the hybrid drive motor may cause the vehicle to roll slowly forward, even when the engine is in Auto Stop.

Keep your foot firmly on the brake pedal until you are ready for the vehicle to move.

Engine OFF and AUTO STOP modes are indicated on the tachometer display. When the tachometer needle indicates OFF, the engine is not running and will remain off until the ignition key is placed in the START position or a remote vehicle start is performed. When the tachometer needle indicates AUTO STOP, the hybrid system is on, the engine is not running, but may Auto Start at any time without notice. See *Tachometer on page 4-4* for more information.

A chime will sound if the driver door is opened while in Auto Stop as a reminder that the ignition switch is not in the LOCK/OFF position. Always turn the ignition switch to LOCK/OFF and remove the key from the ignition switch when exiting the vehicle.

Auto Start

The vehicle also has an Auto Start feature. The engine will remain off while in Auto Stop mode until vehicle conditions require the engine to run. The near-instant starting of the engine from Auto Stop mode is called Auto Start. Some of the vehicle conditions that may cause the engine to Auto Start are:

- The hood is opened.
- The gear selector is in M (Manual Mode).
- The hybrid battery state of charge is too low.
- The hybrid battery voltage, temperature or power limits are exceeded.
- A remote vehicle start has been requested.
- The engine is not at operating temperature.
- Acceleration demands require the use of the engine.

EV Mode

The vehicle also has an Electric Vehicle (EV) mode which uses only the electric motor to move the vehicle. With light acceleration, the vehicle will drive in EV mode. EV mode is unavailable when the vehicle is out of fuel.

If increased acceleration is required, or the vehicle reaches approximately 40 km/h (30 mph), the engine will start automatically. The engine shuts off at speeds below 40 km/h (25 mph) unless the transmission is in M (Manual Mode) or Auto Stop is disabled.

During heavy acceleration, both the engine and hybrid electric motors supply power. A sensation similar to a transmission gear change can be felt as the transmission changes modes. Engine RPM may remain above 4,000 RPM for a longer period during hard acceleration.

Automatic Transmission Operation

The vehicle has an electronic shift position indicator within the instrument panel cluster.

There are several different positions for the shift lever.

P R N D M

See “Range Selection Mode” later in this section.

P (Park) : This position locks the rear wheels. It is the best position to use when you start the engine because the vehicle cannot move easily.

When parked on a hill, especially when the vehicle has a heavy load, you may notice an increase in the effort to shift out of P (Park). See “Shifting Into P (Park)” in the Index of vehicle's owner manual for more information.

⚠ WARNING:

It is dangerous to get out of the vehicle if the shift lever is not fully in P (Park) with the parking brake firmly set. The vehicle can roll.

Do not leave the vehicle when the engine is running unless you have to. If you have left the engine running, the vehicle can move suddenly. You or others could be injured. To be sure the vehicle will not move, even when you are on fairly level ground, always set the parking brake and move the shift lever to P (Park). See Shifting Into Park in the Owner Manual. If you are pulling a trailer, see *Towing a Trailer on page 5-7*.

⚠ WARNING:

If you have Four-Wheel Drive, the vehicle will be free to roll — even if the shift lever is in P (Park) — if the transfer case is in Neutral. So, be sure the transfer case is in a drive gear, Two-Wheel Drive High or Four-Wheel Drive High or Four-Wheel Drive Low — not in Neutral. See “Shifting Into Park” in the Owner Manual.

R (Reverse) : Use this gear to back up.

Notice: **Shifting to R (Reverse) while the vehicle is moving forward could damage the transmission. The repairs would not be covered by the vehicle warranty. Shift to R (Reverse) only after the vehicle is stopped.**

To rock the vehicle back and forth to get out of snow, ice, or sand without damaging the transmission, see “If Your Vehicle is Stuck in Sand, Mud, Ice, or Snow” in the Index of the vehicle's owner manual.

N (Neutral) : In this position, the engine and transmission are not connected with the wheels. To restart the engine when the vehicle is already moving, use N (Neutral) only.

⚠ WARNING:

Shifting into a drive gear while the engine is running at high speed is dangerous. Unless your foot is firmly on the brake pedal, the vehicle could move very rapidly. You could lose control and hit people or objects. Do not shift into a drive gear while the engine is running at high speed.

Notice: **Shifting out of P (Park) or N (Neutral) with the engine running at high speed may damage the transmission. The repairs would not be covered by the vehicle warranty. Be sure the engine is not running at high speed when shifting the vehicle.**

D (Drive) : This position is for normal driving. It provides the best fuel economy. If you need more power for passing, and you are:

- Going less than about 35 mph (55 km/h), push the accelerator pedal about halfway down.
- Going about 35 mph (55 km/h) or more, push the accelerator all the way down.

D (Drive) or M (Manual Mode) can be used when towing a trailer, carrying a heavy load, driving on steep hills, or for off-road driving. You may want to shift the transmission to a lower gear selection if the transmission shifts too often.

Downshifting the transmission in slippery road conditions could result in skidding. See “Skidding” under “Loss of Control” in the owner manual for more information.

When temperatures are very cold, the transmission's gear shifting may be delayed, providing more stable shifts until the engine warms up. Shifts may be more noticeable with a cold transmission. This difference in shifting is normal.

M (Manual Mode) : This position lets drivers select the range of gears appropriate for current driving conditions. If the vehicle has this feature, see “Range Selection Mode” later in this section.

Notice: **Spinning the tires or holding the vehicle in one place on a hill using only the accelerator pedal may damage the transmission. The repair will not be covered by the vehicle warranty. If you are stuck, do not spin the tires. When stopping on a hill, use the brakes to hold the vehicle in place.**

The vehicle has a shift stabilization feature that adjusts the transmission shifting to the current driving conditions to reduce rapid upshifts and downshifts. If the shift stabilization feature determines that a current vehicle speed cannot be maintained, the transmission does not upshift. In some cases, this may appear to be a delayed shift, however the transmission is operating normally.

Range Selection Mode

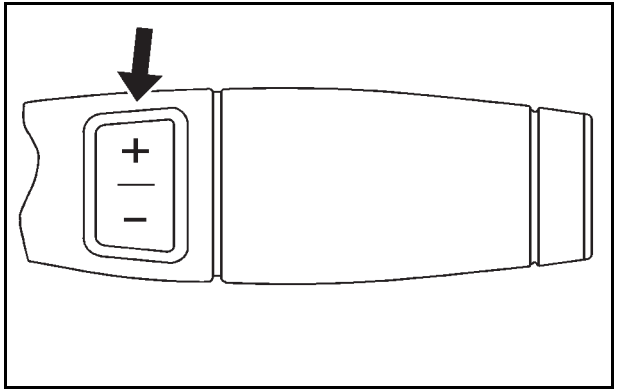

The Range Selection Mode controls the vehicle's transmission.

To use this feature:

1. Move the shift lever to the M (Manual Mode).
2. Press the plus/minus button to upshift or downshift selecting the desired range of gears.

A number displays next to the M, indicating the current gear that has been selected. The number displayed in the gear indicator is the highest gear that can be used.

The vehicle can automatically shift to lower gears as it adjusts to driving conditions. When 3 (Third) is selected, 1 (First) through 3 (Third) gears are automatically shifted by the vehicle, but 4 (Fourth) cannot be used until it is selected.

The Range Selection Mode controls the vehicle and engine speed while driving down a hill or towing a trailer, by allowing you to select a desired range of gears.

When you move the shift lever into M, the transmission will default to M4. In this gear range, effective engine braking occurs at speeds above 45 mph (72 km/h).

Pushing the minus (−) button on the shift lever reduces the gear range.

In the M3 gear range, effective engine braking occurs at speeds above 35 mph (56 km/h).

In the M2 gear range, effective engine braking occurs at speeds above 25 mph (40 km/h).

In the M1 gear range, effective engine braking occurs at speeds above 10 mph (16 km/h).

When operating in M (Manual Mode), Auto Stop is disabled. For better vehicle efficiency, operate the vehicle in D (Drive) not M (Manual Mode).

Cruise control can be used while using the Range Selection Mode.

Four-Wheel Drive

If the vehicle has four-wheel drive, you can send the engine's driving power to all four wheels for extra traction. Read the following before using four-wheel drive.

Notice: **Driving on clean, dry pavement in Four-Wheel-Drive High or Four-Wheel-Drive Low for an extended period of time may cause premature wear on your vehicle's powertrain. Do not drive on clean, dry pavement in Four-Wheel-Drive High or Four-Wheel-Drive Low for extended periods of time.**

While driving on clean dry pavement and during tight turns, you may experience a vibration in the steering system.

The vehicle has StabiliTrak®. Shifting into Four-Wheel-Drive Low will turn Traction Control and StabiliTrak® off. See StabiliTrak® System in the index of the Owner Manual for more information.

Front Axle

The front axle engages and disengages automatically when you shift the transfer case. Some delay for the axle to engage or disengage is normal.

Automatic Transfer Case

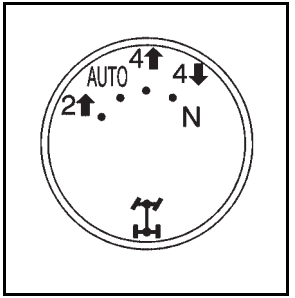

The transfer case knob is located to the left of the instrument panel cluster.

Use this dial to shift into and out of four-wheel drive.

You can choose among five driving settings:

Indicator lights in the switches show you which setting you are in. The indicator lights will come on briefly when you turn on the ignition and the last chosen setting will stay on. If the lights do not come on, you should take the vehicle to your dealer/retailer for service. An indicator light will flash while shifting. It will stay on when the shift is completed. If for some reason the transfer case cannot make a requested shift, it will return to the last chosen setting.

2 ↑ (Two-Wheel Drive High): This setting is used for driving in most street and highway situations. The front axle is not engaged in two-wheel drive. This setting also provides the best fuel economy.

AUTO (Automatic Four-Wheel Drive) : This setting is ideal for use when road surface traction conditions are variable. When driving your vehicle in AUTO, the front axle is engaged, but the vehicle's power is primarily sent to the rear wheels. When the vehicle's software determines a need for more traction, the system will transfer more power to the front wheels. Driving in this mode results in slightly lower fuel economy than Two-Wheel Drive High.

4 ↑ (Four-Wheel Drive High): Use the four-wheel high position when you need extra traction, such as on snowy or icy roads or in most off-road situations. This setting also engages the front axle to help drive the vehicle. This is the best setting to use when plowing snow.

4 ↓ (Four-Wheel Drive Low) : This setting also engages the front axle and delivers extra torque. You may never need this setting. It sends maximum power to all four wheels. You might choose Four-Wheel Drive Low if you are driving off-road in deep sand, deep mud, deep snow, and while climbing or descending steep hills.

The vehicle has StabiliTrak®. Shifting into Four-Wheel-Drive Low will turn Traction Control and StabiliTrak® off. See StabiliTrak® System in the index of the Owner Manual for more information.

⚠ WARNING:

Shifting the transfer case to N (Neutral) can cause the vehicle to roll even if the transmission is in P (Park). You or someone else could be seriously injured. Be sure to set the parking brake before placing the transfer case in N (Neutral). See Parking Brake in the index of the Owner Manual for more information.

N (Neutral) : Shift the vehicle's transfer case to N (Neutral) only when towing the vehicle. See Recreational Vehicle Towing or Towing Your Vehicle in the index of the Owner Manual.

If the SERVICE 4 WHEEL DRIVE message stays on, you should take the vehicle to your dealer/retailer for service. See *DIC Warnings and Messages on page 4-7* for more information.

Shifting Into Four-Wheel Drive High or AUTO (Automatic Four-Wheel Drive)

Turn the knob to the Four-Wheel High or AUTO position. This can be done at any speed, except when shifting from Four-Wheel Drive Low. The indicator light will flash while shifting. It will remain on when the shift is completed.

Shifting Into Two-Wheel Drive High

Turn the knob to the Two-Wheel High position. This can be done at any speed, except when shifting from Four-Wheel Drive Low.

See “Shifting Out of Four-Wheel Drive Low” later in this section for more information.

Shifting Into Four-Wheel Drive Low

When Four-Wheel Low is engaged, vehicle speed should be kept below 45 mph (72 km/h). Extended high-speed operation in 4L may damage or shorten the life of the drivetrain.

To shift to the Four-Wheel Drive Low position, the ignition must be in ON/RUN and the vehicle must be stopped or moving less than 3 mph (5 km/h) with the transmission in N (Neutral). The preferred method for shifting into Four-Wheel Drive Low is to have the vehicle moving 1 to 2 mph (1.6 to 3.2 km/h). Turn the knob to the Four-Wheel Drive Low position. You must wait for the Four-Wheel Drive Low indicator light to stop flashing and remain on before shifting the transmission into gear.

Notice: **Shifting the transmission into gear before the Four-Wheel Drive Low indicator light has stopped flashing could damage the transfer case. To help avoid damaging the vehicle, always wait for the Four-Wheel Drive Low indicator light to stop flashing before shifting the transmission into gear.**

The vehicle may have significant engagement noise and bump when shifting between Four-Wheel Drive Low and Four-Wheel Drive High ranges or from N (Neutral) while the engine is running.

If the knob is turned to the Four-Wheel Drive Low position when the vehicle is in gear and/or moving, the Four-Wheel Drive Low indicator light will flash for 30 seconds and not complete the shift unless the vehicle is moving less than 3 mph (5 km/h) and the transmission is in N (Neutral). After 30 seconds the transfer case will shift to Four-Wheel Drive High mode.

Shifting Out of Four-Wheel Drive Low

To shift from Four-Wheel Drive Low to Four-Wheel Drive High, AUTO, or Two-Wheel Drive High, the vehicle must be stopped or moving less than 3 mph (5 km/h) with the transmission in N (Neutral) and the ignition in ON/RUN. The preferred method for shifting out of Four-Wheel Drive Low is to have your vehicle moving 1 to 2 mph (1.6 to 3.2 km/h). Turn the knob to the Four-Wheel Drive High, AUTO, or Two-Wheel Drive High position. You must wait for the Four-Wheel Drive High, AUTO, or Two-Wheel Drive High indicator light to stop flashing and remain on before shifting the transmission into gear.

Notice: **Shifting the transmission into gear before the Four-Wheel Drive Low indicator light has stopped flashing could damage the transfer case. To help avoid damaging the vehicle, always wait for the Four-Wheel Drive Low indicator light to stop flashing before shifting the transmission into gear.**

The vehicle may have significant engagement noise and bump when shifting between Four-Wheel Drive Low and Four-Wheel Drive High ranges or from N (Neutral) while the engine is running.

If the knob is turned to the Four-Wheel Drive High, AUTO, or Two-Wheel Drive High switch position when the vehicle is in gear and/or moving, the Four-Wheel Drive High, AUTO or Two-Wheel Drive High indicator light will flash for 30 seconds but will not complete the shift unless the vehicle is moving less than 3 mph (5 km/h) and the transmission is in N (Neutral).

Shifting into Neutral

To shift the transfer case into N (Neutral):

1. Make sure the vehicle is parked so that it will not roll.
2. Set the parking brake and apply the regular brake pedal. See Parking Brake in the index of the Owner Manual for more information.
3. Start the vehicle or turn the ignition to ON/RUN.
4. Put the transmission in N (Neutral).
5. Shift the transfer case to Two-Wheel Drive High.
6. Turn the transfer case dial clockwise to N (Neutral) until it stops and hold it there until the N (Neutral) light starts blinking. This will take at least 10 seconds. Then slowly release the dial to the Four-Wheel Drive Low position. The N (Neutral) light will come on when the transfer case shift to N (Neutral) is complete.

7. If the engine is running, verify that the transfer case is in N (Neutral) by shifting the transmission to R (Reverse) for one second, then shift the transmission to D (Drive) for one second.
8. Turn the ignition to ACC/ACCESSORY, which will turn the engine off.
9. Place the transmission shift lever in P (Park).
10. Release the parking brake prior to moving the vehicle.
11. Turn the ignition to LOCK/OFF.

Shifting Out of Neutral

To shift the transfer case out of N (Neutral):

1. Set the parking brake and apply the regular brake pedal.
2. Turn the ignition to ON/RUN with the engine off, and shift the transmission to N (Neutral).
3. Turn the transfer case dial to the desired transfer case shift position (Two-Wheel Drive High, Four-Wheel Drive High, AUTO).

   After the transfer case has shifted out of N (Neutral), the N (Neutral) light will go out.
4. Release the parking brake prior to moving the vehicle.

Notice: **Shifting the transmission into gear before the Four-Wheel Drive Low indicator light has stopped flashing could damage the transfer case. To help avoid damaging the vehicle, always wait for the Four-Wheel Drive Low indicator light to stop flashing before shifting the transmission into gear.**

5. Start the engine and shift the transmission to the desired position.

Excessively shifting the transfer case into or out of the different modes may cause the transfer case to enter the shift protection mode. This will protect the transfer case from possible damage and will only allow the transfer case to respond to one shift per 10 seconds. The transfer case may stay in this mode for up to three minutes.

Shifting Into Park

⚠ WARNING:

It can be dangerous to get out of the vehicle if the shift lever is not fully in P (Park) with the parking brake firmly set. The vehicle can roll. If you have left the engine running, the vehicle can move suddenly. You or others could be injured. To be sure the vehicle will not move, even when you are on fairly level ground, use the steps that follow. With four-wheel drive, if the transfer case is in N (Neutral), the vehicle will be free to roll, even if the shift lever is in P (Park). So, be sure the transfer case is in a drive gear — not in N (Neutral). If you are pulling a trailer, see *Towing a Trailer on page 5-7*.

1. Hold the brake pedal down, then set the parking brake.

   See Parking Brake in the index of the Owner Manual for more information.

2. Move the shift lever into the P (Park) position by pulling the shift lever toward you and moving it up as far as it will go.
3. Be sure the transfer case is in a drive gear — not in N (Neutral).
4. Turn the ignition key to LOCK/OFF.
5. Remove the key and take it with you. If you can leave the vehicle with the ignition key in your hand, the vehicle is in P (Park).

Leaving the Vehicle With the Engine Running

⚠ WARNING:

It can be dangerous to leave the vehicle with the engine running. The vehicle could move suddenly if the shift lever is not fully in P (Park) with the parking brake firmly set.

If you have four-wheel drive and the transfer case is in N (Neutral), the vehicle will be free to roll, even if the shift lever is in P (Park). So be sure the transfer case is in a drive gear — not in N (Neutral).

And, if you leave the vehicle with the engine running, it could overheat and even catch fire. You or others could be injured. Do not leave the vehicle with the engine running unless you have to.

If you have to leave the vehicle with the engine running, be sure your vehicle is in P (Park) and the parking brake is firmly set before you leave it. After you move the shift lever into P (Park), hold the regular brake pedal down. Then, see if you can move the shift lever away from P (Park) without first pulling it toward you. If you can, it means that the shift lever was not fully locked into P (Park).

Torque Lock

If parking on a hill and the transmission not shifted into P (Park) properly, the weight of the vehicle may put too much force on the parking pawl in the transmission. You may find it difficult to pull the shift lever out of P (Park). This is called torque lock. To prevent torque lock, set the parking brake and then shift into P (Park) properly before you leave the driver seat. To find out how, see *Shifting Into Park on page 3-14*.

When you are ready to drive, move the shift lever out of P (Park) before you release the parking brake.

If torque lock does occur, you may need to have another vehicle push yours a little uphill to take some of the pressure from the parking pawl in the transmission, then you will be able to pull the shift lever out of P (Park).

Engine Coolant Heater

The engine coolant heater can provide easier starting and better fuel economy during engine warm-up in cold weather conditions at or below − 18°C (0°F). Vehicles with an engine heater should be plugged in at least four hours before starting. An internal thermostat in the plug-end of the cord may exist which will prevent engine coolant heater operation at temperatures above −18°C (0°F).

To Use the Engine Coolant Heater

1. Turn off the engine.
2. Open the hood and unwrap the electrical cord. The cord is secured to a wiring harness between the engine and the Hybrid Auxiliary Underhood Fuse Block with a clip. Carefully remove the wire tie which secures the electrical cord. Do not cut the electrical cord.
3. Plug the cord into a normal, grounded 110-volt AC outlet.

⚠ WARNING:

Plugging the cord into an ungrounded outlet could cause an electrical shock. Also, the wrong kind of extension cord could overheat and cause a fire. You could be seriously injured. Plug the cord into a properly grounded three-prong 110-volt AC outlet. If the cord will not reach, use a heavy-duty three-prong extension cord rated for at least 15 amps.

4. Before starting the engine, be sure to unplug and store the cord as it was before to keep it away from moving engine parts. If you do not, it could be damaged.

The length of time the heater should remain plugged in depends on several factors. Ask a dealer/retailer in the area where you will be parking the vehicle for the best advice on this.

Regenerative Braking

Regenerative braking is a hybrid technology that enables the electric drive motor to operate as a generator when coasting or braking. Energy from the moving vehicle recharges the hybrid battery.

The hydraulic disc brakes work with the regenerative braking to insure effective braking, such as when a high braking demand is requested.

The braking system is computer controlled and blends the regenerative braking with the conventional hydraulic disc brakes to meet any requirements for deceleration. The controller interprets the braking request and uses regenerative braking, conventional hydraulic braking or a combination of both as necessary. Because the controller applies the hydraulic brakes through its high pressure accumulator, you may occasionally hear the motor driven pump when it recharges the system. This is normal.

In the event of a controller problem, the brake pedal may be harder to push and the stopping distance may be longer.

Running the Vehicle While Parked

It is better not to park with the engine running. But if you ever have to, here are some things to know.

⚠ WARNING:

Exiting the vehicle, without first shifting into P (Park), may cause the vehicle to move, and you or others can be seriously injured. Because the vehicle has the Automatic Engine Start/Stop feature, the vehicle's engine might seem to be shut off when you come to a complete stop. However, once the brake pedal is released, the vehicle can move. The vehicle's engine can also restart at any time.

Shift to P (Park) and turn the ignition to LOCK/OFF, before exiting the vehicle.

Follow the proper steps to be sure the vehicle will not move. See "Shifting Into Park" in the owner manual for more information.

If pulling a trailer, see *Towing a Trailer on page 5-7* for more information.

✍ NOTES

Section 4 Instrument Panel

Climate Controls 4-2
Warning Lights, Gages, and Indicators 4-3
Instrument Panel Cluster 4-3
Tachometer 4-4
Charging System Light 4-4
Fuel Economy Gage 4-5
Oil Pressure Light 4-6
Driver Information Center (DIC) 4-7
DIC Warnings and Messages 4-7
Audio System(s) 4-9
Navigation/Radio System 4-9

Climate Controls

For more information on the vehicle's climate control system, see “Climate Control System” in the owner manual.

Electric Air Conditioning Compressor

This hybrid vehicle has a electrically powered air conditioning compressor. This allows for continuous air conditioning operation and passenger comfort, even while the hybrid engine cycles on and off.

When operating the climate control system, select the AUTO mode and the desired temperature setting. The climate control system automatically adjusts the fan speed and airflow direction. The climate control system continues to adjust the climate control settings chosen for best use of electrical power.

At mild temperatures, select a warmer air conditioner temperature or turn the air conditioner off to get maximum fuel economy. Continuous air conditioner use can cause the vehicle to Auto Start more frequently. During hot weather, driving with the windows closed and the air conditioner set to Auto mode, will result in better Hybrid system performance.

Some noise may be heard occasionally from the compressor, especially when air conditioning use is high and the engine has turned off.

Warning Lights, Gages, and Indicators

Instrument Panel Cluster

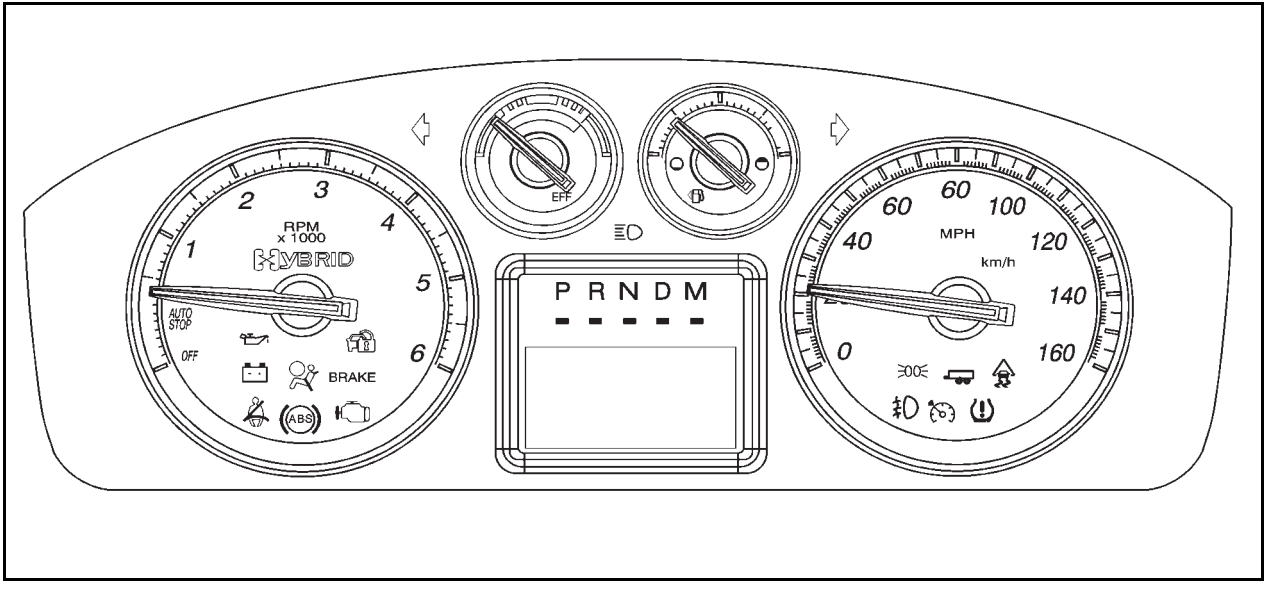

United States version shown, Canada similar

Tachometer

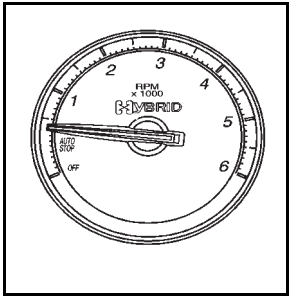

United States Version shown, Canada similar

When the gas engine is off and the key is in the ON/RUN position, the tachometer indicates the state of the vehicle:

- AUTO STOP position indicates that the vehicle is still able to move and the engine could restart, by an Auto Start, at any time.
- OFF position indicates that either the vehicle was turned off or the engine has stalled.

When the engine is on, the tachometer indicates the engine's revolutions per minute.

Charging System Light

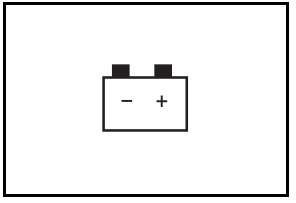

This 12 V battery light comes on briefly when the ignition is turned to ON/RUN, but the engine is not running, as a check to show it is working.

It should go out once the engine has been started. If it stays on, or comes on while driving, there could be a problem with the 12 V charging system. Have the vehicle serviced by your dealer/retailer. A 12 V charging system Driver Information Center (DIC) message may also appear. See *DIC Warnings and Messages on page 4-7* for more information. This light could indicate that there are electrical problems. Have it checked right away. If a short distance must be driven with the light on, be certain to turn off all the accessories.

Fuel Economy Gage

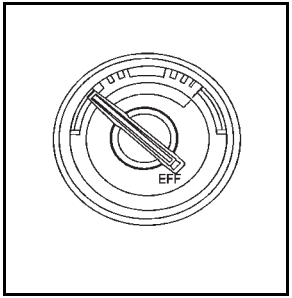

United States

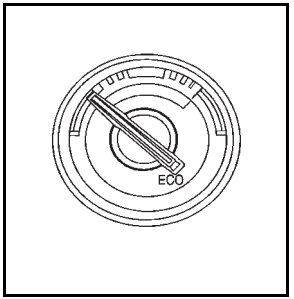

Canada

This gage displays how efficiently the vehicle is being driven.

There are three zones on the drive efficiency gage.

Green Zone : Fuel efficient driving behavior makes the indicator display in the green zone on the gage.

White Zones : Decreased fuel efficiency driving behavior makes the indicator display in the two white zones. The indicator in the white zone on the left side of the gage indicates decreased fuel efficiency with a large amount of decelerations. The indicator in the white zone on the right side of the gage indicates decreased fuel efficiency with a large amount of accelerations.

Oil Pressure Light

⚠ WARNING:

Do not keep driving if the oil pressure is low. The engine can become so hot that it catches fire. Someone could be burned. Check the oil as soon as possible and have the vehicle serviced.

Notice: **Lack of proper engine oil maintenance can damage the engine. The repairs would not be covered by the vehicle warranty. Always follow the maintenance schedule in this manual for changing engine oil.**

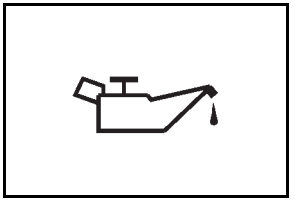

This light comes on briefly as a check it works, when the ignition is in ON/RUN. If it does not, have the vehicle serviced.

If the light comes on and stays on, it means that oil is not flowing through the engine properly. The vehicle could be low on oil and might have some other system problem.

During an AUTO STOP there is zero oil pressure, but this light will not come on.

Driver Information Center (DIC)

Trip/Fuel Menu Items

Press the trip/fuel button to display the Trip/Fuel Menu items. For more items see “DIC Operation and Displays” in the owner manual.

Instantaneous Fuel Economy (IFE)

This display normally shows instantaneous fuel economy. When the vehicle is in Auto Stop mode AUTO STOP or IFE = 99 MPG (l/00km) will be displayed. See *Starting the Vehicle on page 3-3* for more information.

DIC Warnings and Messages

Warning messages are displayed on the DIC to notify the driver that the status of the vehicle has changed and that some action may be needed by the driver to correct the condition. If there is more than one message that needs to be displayed they will appear one after another.

Some messages may not require immediate action, but you can press any of the DIC buttons on the instrument panel to acknowledge that you received the messages and to clear them from the display.

Some messages cannot be cleared from the DIC display because they are more urgent. These messages require action before they can be cleared. You should take any messages that appear on the display seriously and remember that clearing the messages will only make the messages disappear, not correct the problem.

For information on other DIC messages, see “DIC Warnings and Messages” in the owner manual Index.

HOOD OPEN

If the hood is not fully closed or there is a problem with the hood switch, this message will be displayed. Close the hood to clear the message. If the HOOD OPEN message continues to be displayed after verifying the hood is closed, you should have the hood switch serviced. Failure to service the hood switch properly can result in an Auto Start condition.

Auto Stops will be disabled when this message is displayed. If the vehicle is in auto stop mode when this message appears, the engine will instantly start.

OIL PRESSURE LOW STOP ENGINE

If engine oil pressure is low, this message will be displayed on the DIC. Stop the vehicle as soon as safely possible and do not operate it until the cause of the low oil pressure has been corrected. Check your oil level as soon as possible and have your vehicle serviced. See “Engine Oil” in the owner manual Index.

SERVICE 4 WHEEL DRIVE

This message may display if a problem occurs with the four-wheel-drive system. If this message appears, stop as soon as possible and turn off the vehicle. Make sure the key is in the LOCK/OFF position for at least one minute and then restart the vehicle and check for the message on the DIC display. If the message is still displayed or appears again when you begin driving, the four-wheel-drive system needs service. See your dealer/retailer.

SERVICE BATTERY CHARGING SYSTEM

If the 12V battery system faults or fails this message will appear on the DIC. The battery/charging system light will appear in the instrument panel cluster. See “Battery Warning Light” in the owner manual Index. Driving with this message on could drain the battery. Have the electrical system checked as soon as possible.

SERVICE BRAKE SYSTEM

This message may be displayed if there is a problem with the brake system. You will still be able to brake, but it will be noticeably more difficult. Pull off the road to a safe location and have your vehicle towed to the nearest dealer/retailer for service. See “Brakes,” “Brake System Warning Light,” and “ABS Brake System Warning Light” in the owner manual Index.

This message may also come on when you are towing a trailer. See “Trailer Brakes” under *Towing a Trailer on page 5-7* for more information.

SERVICE HYBRID SYSTEM

If this message is displayed on the DIC, the vehicle may continue to operate, but you need to have it serviced as soon as possible.

SERVICE POWER STEERING

This message displays if a problem has been detected with the electric power steering. Have the vehicle serviced by your dealer/retailer immediately.

Audio System(s)

Navigation/Radio System

The vehicle has a navigation radio system. See the owner manual for more information.

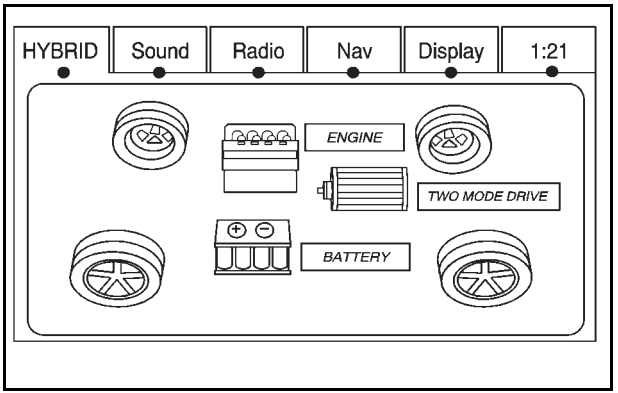

Press the CONFIG button on the radio to display the hybrid screen.

The screen shows:

- Auto Stop
- Battery Charging
- Engine Idle
- 2-Wheel and 4-Wheel Drive Modes for:
  - Engine Power
  - Battery Power
  - Hybrid Power

✍ NOTES

Section 5 Driving Your Vehicle

Your Driving, the Road, and the Vehicle 5-2
Electric Power Steering 5-2

Towing 5-2
Towing Your Vehicle 5-2
Recreational Vehicle Towing 5-2
Towing a Trailer 5-7

Your Driving, the Road, and the Vehicle

Electric Power Steering

This vehicle has On-Demand Electric-Assist Power Steering instead of conventional full-time hydraulic power steering. It uses electricity supplied by the same battery which is re-charged by the regenerative braking system.

Because the system is On-Demand Electric-Assist, energy is used only when the steering wheel is turned, or when the steering gear is used to help isolate the forces of rough roads. This system does not use power steering fluid, making it maintenance-free.

Towing

Towing Your Vehicle

Consult your dealer/retailer or a professional towing service if the disabled vehicle needs to be towed.

Recreational Vehicle Towing

Recreational vehicle towing means towing the vehicle behind another vehicle – such as behind a motorhome. The two most common types of recreational vehicle towing are known as dinghy towing and dolly towing. Dinghy towing is towing the vehicle with all four wheels on the ground. Dolly towing is towing the vehicle with two wheels on the ground and two wheels up on a device known as a dolly.

Here are some important things to consider before recreational vehicle towing:

- What is the towing capacity of the towing vehicle? Be sure to read the tow vehicle manufacturer's recommendations.
- What is the distance that will be travelled? Some vehicles have restrictions on how far and how long they can tow.
- Is the proper towing equipment going to be used? See your dealer/retailer or trailering professional for additional advice and equipment recommendations.
- Is the vehicle ready to be towed? Just as preparing the vehicle for a long trip, make sure the vehicle is prepared to be towed. See “Before Leaving on a Long Trip” in the owner manual index.

Dinghy Towing

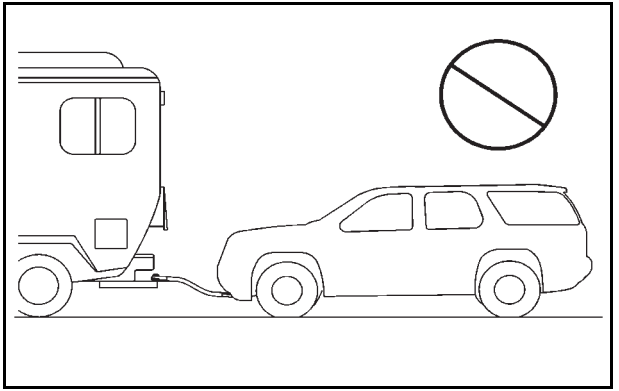

Notice: **If the vehicle is towed with all four wheels on the ground, the drivetrain components could be damaged. The repairs would not be covered by the vehicle warranty. Do not tow the vehicle with all four wheels on the ground.**

The vehicle should not be towed with all four wheels on the ground.

Dolly Towing

Front Towing (Front Wheels Off the Ground)

Two-Wheel-Drive Vehicles

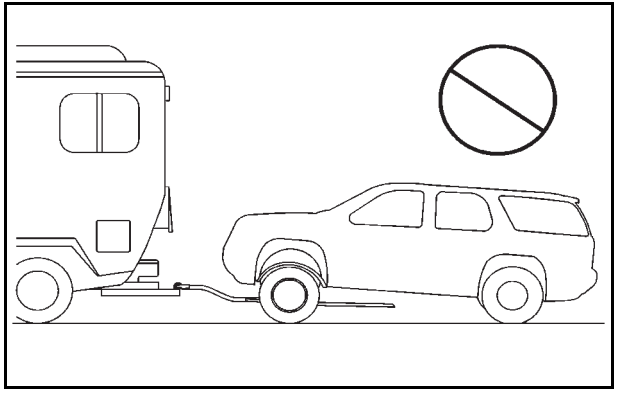

Notice: **If a two-wheel-drive vehicle is towed with the rear wheels on the ground, the transmission could be damaged. The repairs would not be covered by the vehicle warranty. Never tow the vehicle with the rear wheels on the ground.**

Two-wheel-drive vehicles should not be towed with the rear wheels on the ground. Two-wheel-drive transmissions have no provisions for internal lubrication while being towed.

To dolly tow a two-wheel-drive vehicle, the vehicle must be towed with the rear wheels on the dolly. See “Rear Towing (Rear Wheels Off the Ground)” later in this section for more information.

Four-Wheel-Drive Vehicles

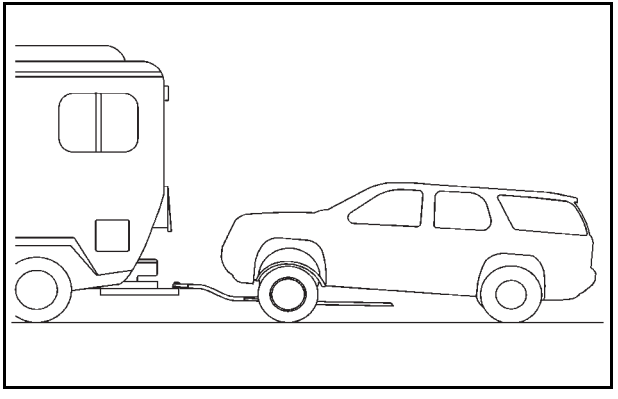

Use the following procedure to dolly tow a four-wheel-drive vehicle from the front:

1. Attach the dolly to the tow vehicle following the dolly manufacturer's instructions.
2. Drive the front wheels onto the dolly.
3. Shift the transmission to P (Park).
4. Firmly set the parking brake. See “Parking Brake” in the owner manual index.

⚠ WARNING:

Shifting a four-wheel-drive vehicle's transfer case into N (Neutral) can cause the vehicle to roll even if the transmission is in P (Park). The driver or others could be injured. Make sure the parking brake is firmly set before the transfer case is shifted to N (Neutral).

5. Shift the transfer case to N (Neutral). See “Shifting into N (Neutral)” under *Four-Wheel Drive on page 3-9*.
6. Secure the vehicle to the dolly following the manufacturer's instructions.
7. Release the parking brake only after the vehicle being towed is firmly attached to the towing vehicle.
8. Turn the ignition to LOCK/OFF.

After towing, see “Shifting Out of N (Neutral)” under *Four-Wheel Drive on page 3-9*.

Rear Towing (Rear Wheels Off the Ground)

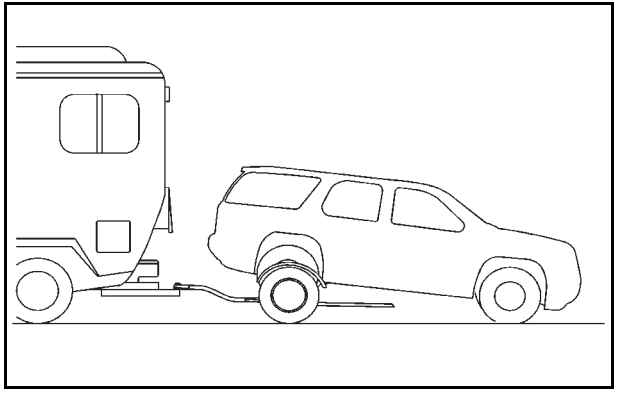

Two-Wheel-Drive Vehicles

Use the following procedure to dolly tow a two-wheel-drive vehicle from the rear:

1. Attach the dolly to the tow vehicle following the dolly manufacturer's instructions.
2. Drive the rear wheels onto the dolly.
3. Firmly set the parking brake. See “Parking Brake” in the owner manual index.
4. Put the transmission in P (Park).
5. Secure the vehicle to the dolly following the manufacturer's instructions.
6. Use an adequate clamping device designed for towing to ensure that the front wheels are locked into the straight position.
7. Turn the ignition to LOCK/OFF.

Four-Wheel-Drive Vehicles

Use the following procedure to dolly tow a four-wheel-drive vehicle from the rear:

1. Attach the dolly to the tow vehicle following the dolly manufacturer's instructions.
2. Drive the rear wheels onto the dolly.
3. Firmly set the parking brake. See “Parking Brake” in the owner manual index.
4. Put the transmission in P (Park).
5. Secure the vehicle to the dolly following the manufacturer's instructions.

6. Use an adequate clamping device designed for towing to ensure that the front wheels are locked into the straight position.

⚠ WARNING:

Shifting a four-wheel-drive vehicle's transfer case into N (Neutral) can cause the vehicle to roll even if the transmission is in P (Park). The driver or others could be injured. Make sure the parking brake is firmly set before the transfer case is shifted to N (Neutral).

7. Shift the transfer case to N (Neutral). See “Shifting into N (Neutral)” under *Four-Wheel Drive on page 3-9*.
8. Turn the ignition to LOCK/OFF.

After towing, see “Shifting Out of N (Neutral)” under *Four-Wheel Drive on page 3-9*.

Towing a Trailer

For more information, see “Towing a Trailer” in the owner manual Index.

Weight of the Trailer

How heavy can a trailer safely be?

It depends on how the rig is used. For example, speed, altitude, road grades, outside temperature and how much the vehicle is used to pull a trailer are all important. It can depend on any special equipment on the vehicle, and the amount of tongue weight the vehicle can carry.

Maximum trailer weight is calculated assuming only the driver is in the tow vehicle and it has all the required trailering equipment. The weight of additional optional equipment, passengers and cargo in the tow vehicle must be subtracted from the maximum trailer weight.

Use the following charts to determine how much the vehicle can weigh, based upon the vehicle model and options.

Vehicle	Axle Ratio	Maximum Trailer Weight	GCWR*
2WD 6.0 L V8	3.08	5,800 lbs (2 631 kg)	12,000 lbs (5 443 kg)
4WD 6.0 L V8	3.08	5,600 lbs (2 540 kg)	12,000 lbs (5 443 kg)
*The Gross Combination Weight Rating (GCWR) is the total allowable weight of the completely loaded vehicle and trailer including any passengers, cargo, equipment and conversions. The GCWR for the vehicle should not be exceeded.			

Trailer Brakes

If a trailer is being towed that has trailer brakes and the trailer brakes are manually applied while driving slower than 25 mph (40 km/h), the vehicle may go into auto stop mode even if the brakes are not being pressed. Using the trailer brake system manually can make the hybrid vehicle perform as if the brake pedal in the vehicle is being pressed. The trailer brake operation check will still work. If the trailer brakes are manually applied for an extended period of time, the SERVICE BRAKE SYSTEM DIC message comes on. The message goes off after the trailer brakes have been released. No other action is necessary. For more information, see “Trailer Brakes” in the Index of the vehicle's owner manual.

Section 6 Service and Appearance Care

Service 6-2
Doing Your Own Service Work 6-2
Checking Things Under the Hood 6-3
High Voltage Devices and Wiring 6-3
Engine Compartment Overview 6-4
Automatic Transmission Fluid 6-5
Drive Motor/Generator Control Module (DMCM) Coolant Surge Tank Pressure Cap 6-8
Drive Motor/Generator Control Module (DMCM) Cooling System 6-9
Power Steering Fluid 6-13
Brakes 6-13
Battery 6-17
Jump Starting 6-18
Four-Wheel Drive 6-23
Electrical System 6-24
High Voltage Devices and Wiring 6-24
Fuses and Circuit Breakers 6-24
Underhood Fuse Block 6-25
Tires 6-26
Inflation - Tire Pressure 6-26
Tire Pressure Monitor Operation 6-28
Tire Inspection and Rotation 6-31
If a Tire Goes Flat 6-32
Tire Sealant and Compressor Kit (Without Selector Switch) 6-33
Tire Sealant and Compressor Kit (With Selector Switch) 6-43
Tire Sealant and Compressor Kit Storage 6-53
Appearance Care 6-54
Vehicle Care/Appearance Materials 6-54
Capacities and Specifications 6-55

Service

Doing Your Own Service Work

⚠ WARNING:

Never try to do your own service on hybrid components. You can be injured and the vehicle can be damaged if you try to do your own service work. Service and repair of these hybrid components should only be performed by a trained service technician with the proper knowledge and tools.

⚠ WARNING:

You can be injured and the vehicle could be damaged if you try to do service work on a vehicle without knowing enough about it.

- Be sure you have sufficient knowledge, experience, the proper replacement parts, and tools before attempting any vehicle maintenance task.
- Be sure to use the proper nuts, bolts, and other fasteners. English and metric fasteners can be easily confused. If the wrong fasteners are used, parts can later break or fall off. You could be hurt.

If doing some of your own service work, use the proper service manual. It tells you much more about how to service the vehicle than this manual can. To order the proper service manual, see “Service Publications Ordering Information” in the owner manual.

This vehicle has an airbag system. Before attempting to do your own service work, see “Servicing Your Airbag-Equipped Vehicle” in the owner manual.

Keep a record with all parts receipts and list the mileage and the date of any service work performed. See “Maintenance Record” in the owner manual.

Checking Things Under the Hood

High Voltage Devices and Wiring

⚠ WARNING:

Exposure to high voltage can cause shock, burns, and even death. The high voltage systems in your vehicle can only be serviced by technicians with special training.

High voltage devices are identified by labels. Do not remove, open, take apart, or modify these devices. High voltage cable or wiring has orange covering. Do not probe, tamper with, cut, or modify high voltage cable or wiring.

Engine Compartment Overview

When you open the hood on your vehicle, you will see:

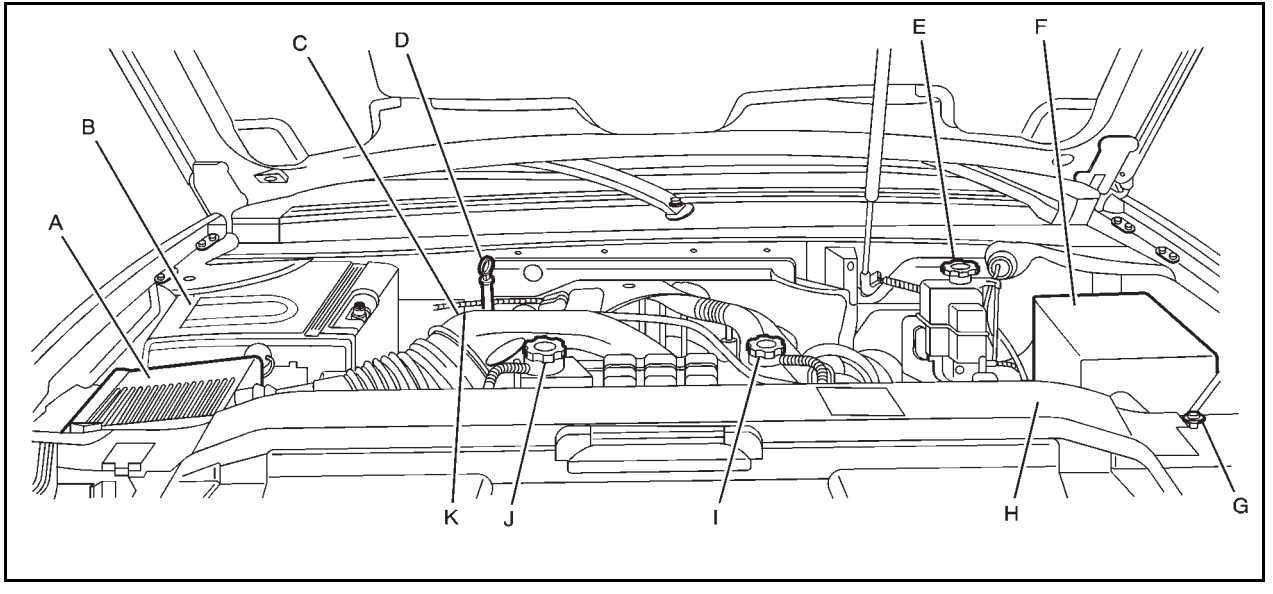

A. See “Engine Air Cleaner/Filter” in the owner manual.

B. Drive Motor/Generator Control Module (DMCM). See *Drive Motor/Generator Control Module (DMCM) Cooling System on page 6-9*.

C. Engine Oil Dipstick. See “Engine Oil” in the owner manual.

D. See *Automatic Transmission Fluid on page 6-5*.

E. Brake Fluid Reservoir. See “Brakes” in the owner manual.

F. See “Underhood Fuse Block” in the owner manual.

G. See “Windshield Washer Fluid” in the owner manual.

H. Hybrid Auxiliary Fuse Block. See *Underhood Fuse Block on page 6-25*.

I. DMCM Coolant Surge Tank Pressure Cap. See *Drive Motor/Generator Control Module (DMCM) Coolant Surge Tank Pressure Cap on page 6-8*.

J. Engine Coolant Surge Tank Pressure Cap. See “Cooling System” in the owner manual.

K. Engine Oil Fill Cap. See “Engine Oil” in the owner manual.

Automatic Transmission Fluid

When to Check and Change Automatic Transmission Fluid

It is usually not necessary to check the transmission fluid level. The only reason for fluid loss is a transmission leak or overheating the transmission. If you suspect a small leak, then use the following checking procedures to check the fluid level. However, if there is a large leak, then it may be necessary to have the vehicle towed to a dealer/retailer service department and have it repaired before driving the vehicle further.

Notice: **Use of the incorrect automatic transmission fluid may damage the vehicle, and the damages may not be covered by the vehicle's warranty. Always use the automatic transmission fluid listed in *Recommended Fluids and Lubricants on page 7-2*.**

Change the fluid and filter at the intervals listed in the Maintenance Schedule. See Scheduled Maintenance in the owner manual. Be sure to use the transmission fluid listed in *Recommended Fluids and Lubricants on page 7-2*.

How to Check Automatic Transmission Fluid

Notice: **Too much or too little fluid can damage your transmission. Too much can mean that some of the fluid could come out and fall on hot engine parts or exhaust system parts, starting a fire. Too little fluid could cause the transmission to overheat. Be sure to get an accurate reading if you check your transmission fluid.**

Before checking the fluid level, prepare the vehicle as follows:

1. Start the engine and park the vehicle on a level surface. Keep the engine running.
2. Apply the parking brake and place the shift lever in P (Park).
3. With your foot on the brake pedal, move the shift lever through each gear range, pausing for about three seconds in each range. Then, move the shift lever back to P (Park).
4. Allow the engine to idle (500 – 800 RPM) for at least one minute. Slowly release the brake pedal.
5. Keep the engine running and press the Trip/Fuel button or trip odometer reset stem until TRANS TEMP (Transmission Temperature) displays on the Driver Information Center (DIC).
6. Using the TRANS TEMP reading, determine and perform the appropriate check procedure. If the TRANS TEMP reading is not within the required temperature ranges, allow the vehicle to cool, or operate the vehicle until the appropriate transmission fluid temperature is reached.

Cold Check Procedure

Use this procedure only as a reference to determine if the transmission has enough fluid to be operated safely until a hot check procedure can be made. The hot check procedure is the most accurate method to check the fluid level. Perform the hot check procedure at the first opportunity. Use this cold check procedure to check fluid level when the transmission temperature is between 24°C and 34°C (75°F and 93°F).

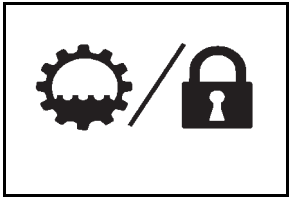

1. Locate the transmission dipstick at the rear of the engine compartment, on the passenger side of the vehicle.

   See *Engine Compartment Overview on page 6-4* for more information.
2. Pull out the dipstick and wipe it with a clean rag or paper towel.

3. Install the dipstick by pushing it back in all the way, wait three seconds, and then pull it back out again.
4. Check both sides of the dipstick and read the lower level. Repeat the check procedure to verify the reading.

5. If the fluid level is below the COLD check band, add only enough fluid as necessary to bring the level into the COLD band. It does not take much fluid, generally less than 0.5 Liter (1 Pint). Do not overfill.
6. Perform a hot check at the first opportunity after the transmission reaches a normal operating temperature between 60°C and 75°C (140°F and 167°F).
7. If the fluid level is in the acceptable range, push the dipstick back in all the way.

Hot Check Procedure

Use this procedure to check the transmission fluid level when the transmission fluid temperature is between 60°C and 75°C (140°F and 167°F).

The hot check is the most accurate method to check the fluid level. The hot check should be performed at the first opportunity in order to verify the cold check. The fluid level rises as fluid temperature increases, so it is important to ensure the transmission temperature is within range.

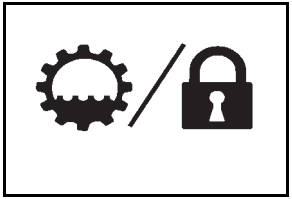

1. Locate the transmission dipstick at the rear of the engine compartment, on the passenger side of the vehicle.

   See *Engine Compartment Overview on page 6-4* for more information.
2. Pull out the dipstick and wipe it with a clean rag or paper towel.
3. Install the dipstick by pushing it back in all the way, wait three seconds, and then pull it back out again.
4. Check both sides of the dipstick and read the lower level. Repeat the check procedure to verify the reading.

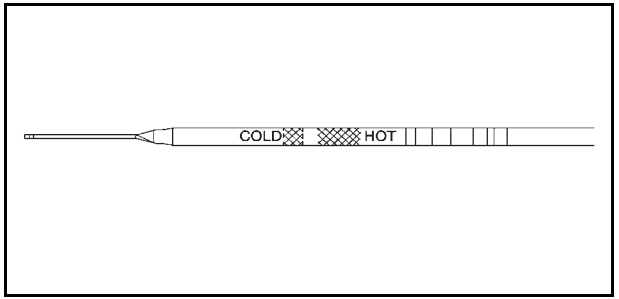

5. Safe operating level is within the HOT cross hatch band on the dipstick. If the fluid level is not within the HOT band, and the transmission temperature is between 60°C and 75°C (140°F and 167°F), add or drain fluid as necessary to bring the level into the HOT band. If the fluid level is low, add only enough fluid to bring the level into the HOT band. It does not take much fluid, generally less than 0.5 Liter (1 Pint). Do not overfill.
6. If the fluid level is in the acceptable range, push the dipstick back in all the way.

Consistency of Readings

Always check the fluid level at least twice using the procedure described previously. Consistency (repeatable readings) is important to maintaining proper fluid level. If readings are still inconsistent, contact your dealer/retailer.

Drive Motor/Generator Control Module (DMCM) Coolant Surge Tank Pressure Cap

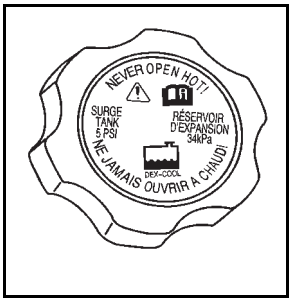

See *Engine Compartment Overview on page 6-4* for more information on location.

The Drive Motor/Generator Control Module (DMCM) coolant surge tank pressure cap must be fully installed on the hybrid coolant surge tank.

Notice: **If the pressure cap is not tightly installed, coolant loss and possible damage to the Drive Motor/Generator Control Module (DMCM) may occur. Be sure the cap is properly and tightly secured.**

Drive Motor/Generator Control Module (DMCM) Cooling System

In addition to the regular cooling system, the vehicle also has a cooling system for the DMCM system. This system is serviced differently than the vehicle's main cooling system. The DMCM cooling system includes the DMCM coolant surge tank, DMCM surge tank pressure cap, DMCM cooling pumps, hybrid cooling radiator and the Drive Motor/Generator Control Module (DMCM). The DMCM cooling system uses a 50/50 pre-mixed DEX-COOL™ coolant and deionized water available at your dealer/retailer. See “Engine Coolant” and “Cooling System” in the owner manual for more information.

When you decide it is safe to lift the hood, here is what you will see:

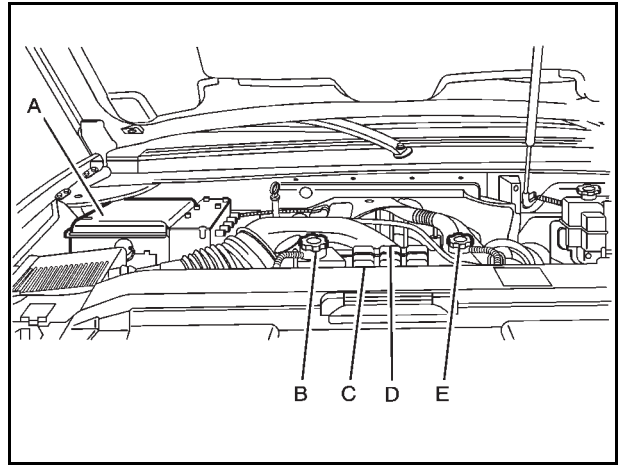

A. Drive Motor/ Generator Control Module (DMCM)

B. Engine Coolant Surge Tank Pressure Cap

C. DMCM Coolant Surge Tank/Engine Coolant Surge Tank

D. DMCM Cooling Hoses (Out of View)

E. DMCM Coolant Tank Pressure Cap

If the coolant inside the DMCM coolant surge tank is boiling, do not do anything else until it cools down.

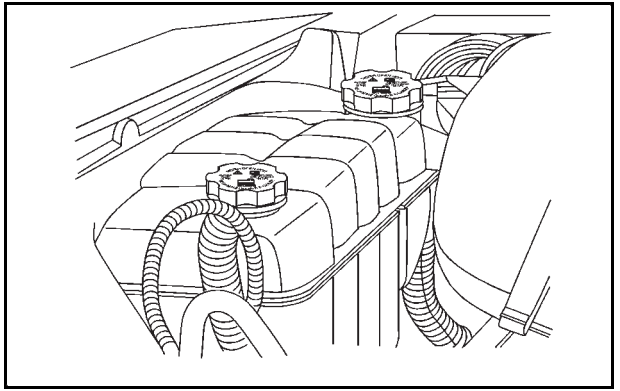

The coolant level should be at or above the FULL COLD mark with the vehicle parked on a level surface. If it is not, there might be a leak at the DMCM cooler core, DMCM pressure cap, DMCM cooler hoses, DMCM cooling pump or somewhere else in the DMCM cooling system.

Notice: **Running the engine when there is a leak in the hybrid cooling system can cause the hybrid cooling system to lose all coolant and can damage the system. Get any leak fixed before you drive the vehicle or run the engine.**

How to Add Coolant to the DMCM Coolant Surge Tank

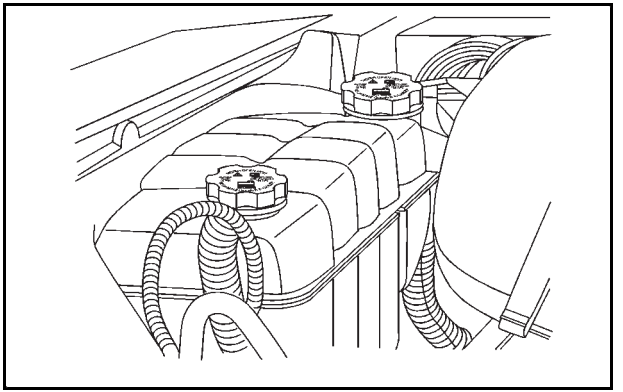

If no problem has been found yet, check to see if coolant is visible in the DMCM coolant surge tank. If coolant is visible, add pre-mixed DEX-COOL™ coolant, available at your dealer/retailer, at the DMCM coolant surge tank, but be sure the DMCM cooling system, including the DMCM coolant surge tank pressure cap, is cool before you do it. Use the procedure following.

⚠ WARNING:

Steam and scalding liquids from a hot cooling system can blow out and burn you badly. They are under pressure, and if you turn the coolant surge tank pressure cap — even a little — they can come out at high speed. Never turn the cap when the cooling system, including the coolant surge tank pressure cap, is hot. Wait for the cooling system and coolant surge tank pressure cap to cool if you ever have to turn the pressure cap.

Notice: **Using coolant other than a pre-mixed DEX-COOL, available at your dealer/retailer, may damage your vehicle. Any repairs would not be covered by your warranty. Always use a pre-mixed DEX-COOL (silicate-free) coolant in your vehicle.**

⚠ WARNING:

You can be burned if you spill coolant on hot engine parts. Coolant contains ethylene glycol and it will burn if the engine parts are hot enough. Do not spill coolant on a hot engine.

If the DMCM coolant is empty , the vehicle must be serviced by your dealer and a special fill procedure must be followed.

Notice: **Attempting to fill the DMCM cooling surge tank yourself when the fluid level is empty can damage your vehicle. Your vehicle must be serviced.**

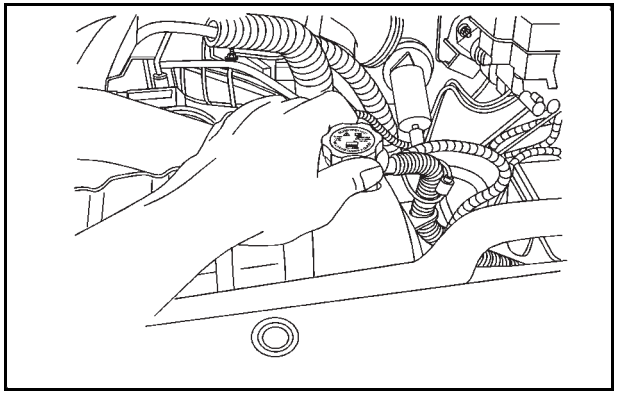

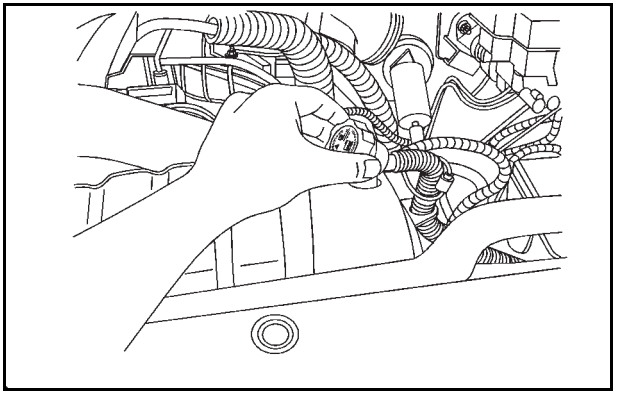

1. Park the vehicle on a level surface and turn the vehicle off. Remove the DMCM coolant surge tank pressure cap when the DMCM cooling system, including the DMCM coolant surge tank pressure cap and DMCM cooling hoses, are no longer hot. Turn the DMCM coolant surge tank pressure cap slowly counterclockwise (left) about one full turn. Wait 30 seconds.
2. Then keep turning the DMCM coolant surge tank pressure cap slowly, and remove it.
3. Add the pre-mixed DEX-COOL™, available at your dealer/retailer, to the DMCM coolant surge tank until the level reaches the FULL COLD mark.
4. Turn the ignition to ON/RUN without starting the engine. The hybrid cooling pumps will run and any trapped air will purge to the surge tank.

5. Add the pre-mixed DEX-COOL™, available at your dealer/retailer, until the coolant level is maintained at the FULL COLD mark. This should take no longer than two minutes of hybrid cooling pump operation.

   If the level cannot be kept at the FULL COLD level, your vehicle may need service. See your dealer/retailer.

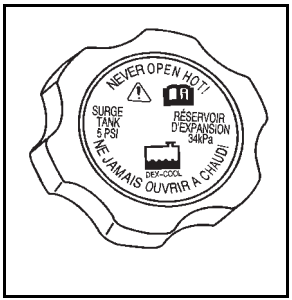

6. Then replace the DMCM coolant surge tank pressure cap. Be sure the pressure cap is hand-tight and fully seated.

Notice: **Using tap water, cooling system sealers or conditioners in an attempt to stop coolant leaks can damage the DMCM and engine cooling systems. Never use tap water, cooling system sealers or conditioners in your cooling system.**

Power Steering Fluid

The vehicle has electric power steering and does not use power steering fluid.

Brakes

Brake Fluid

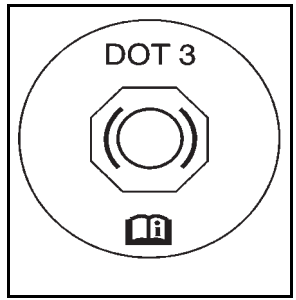

The brake master cylinder reservoir is filled with DOT 3 brake fluid. See *Engine Compartment Overview on page 6-4* for the location of the reservoir.

There are only two reasons why the brake fluid level in the reservoir might go down:

- The brake fluid level goes down because of normal brake lining wear. When new linings are installed, the fluid level goes back up.
- A fluid leak in the brake hydraulic system can also cause a low fluid level. Have the brake hydraulic system fixed, since a leak means that sooner or later the brakes will not work well.

Do not top off the brake fluid. Adding fluid does not correct a leak. If fluid is added when the linings are worn, there will be too much fluid when new brake linings are installed. Add or remove brake fluid, as necessary, only when work is done on the brake hydraulic system.

⚠ WARNING:

If too much brake fluid is added, it can spill on the engine and burn, if the engine is hot enough. You or others could be burned, and the vehicle could be damaged. Add brake fluid only when work is done on the brake hydraulic system. See “Checking Brake Fluid” in this section.

When the brake fluid falls to a low level, the brake warning light comes on. See “Brake System Warning Light” in the owner manual.

Refer to the Maintenance Schedule to determine when to check the brake fluid. See “Scheduled Maintenance” in the owner manual.

Checking Brake Fluid

Check brake fluid by looking at the brake fluid reservoir. See *Engine Compartment Overview on page 6-4*.

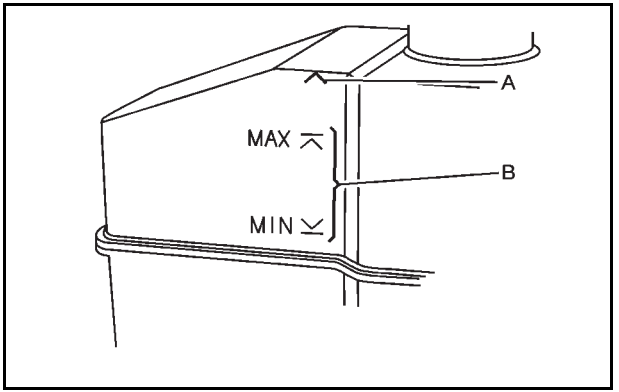

With the engine not running for at least one minute, the maximum fluid level (A) is at the top of the reservoir body. With the engine running, the fluid level should be in the proper operating range (B) between the MIN and MAX marks. If it is not, have the brake hydraulic system checked to see if there is a leak.

After work is done on the brake hydraulic system, make sure the level, with the engine running, is in the proper operating range (B) between the MIN and MAX marks.

What to Add

Use only new DOT 3 brake fluid from a sealed container. See “Recommended Fluids and Lubricants” in the owner manual.

Always clean the brake fluid reservoir cap and the area around the cap before removing it. This helps keep dirt from entering the reservoir.

⚠ WARNING:

With the wrong kind of fluid in the brake hydraulic system, the brakes might not work well. This could cause a crash. Always use the proper brake fluid.

Notice:

- **Using the wrong fluid can badly damage brake hydraulic system parts. For example, just a few drops of mineral-based oil, such as engine oil, in the brake hydraulic system can damage brake hydraulic system parts so badly that they will have to be replaced. Do not let someone put in the wrong kind of fluid.**
- **If brake fluid is spilled on the vehicle's painted surfaces, the paint finish can be damaged. Be careful not to spill brake fluid on the vehicle. If you do, wash it off immediately. See “Washing Your Vehicle” in the owner manual.**

Brake Wear

This vehicle has disc brakes. Disc brake pads have built-in wear indicators that make a high-pitched warning sound when the brake pads are worn and new pads are needed. The sound can come and go or be heard all the time the vehicle is moving, except when applying the brake pedal firmly.

⚠ WARNING:

The brake wear warning sound means that soon the brakes will not work well. That could lead to an accident. When the brake wear warning sound is heard, have the vehicle serviced.

Notice: **Continuing to drive with worn-out brake pads could result in costly brake repair.**

Some driving conditions or climates can cause a brake squeal when the brakes are first applied or lightly applied. This does not mean something is wrong with the brakes.

Properly torqued wheel nuts are necessary to help prevent brake pulsation. When tires are rotated, inspect brake pads for wear and evenly tighten wheel nuts in the proper sequence to torque specifications in “Capacities and Specifications” in the owner manual.

Brake linings should always be replaced as complete axle sets.

Brake Pedal Travel

See your dealer/retailer if the brake pedal does not return to normal height, or if there is a rapid increase in pedal travel. This could be a sign that brake service might be required.

Brake Adjustment

Every time the brakes are applied, the disc brakes adjust for wear.

Replacing Brake System Parts

The braking system on a vehicle is complex. Its many parts have to be of top quality and work well together if the vehicle is to have really good braking. The vehicle was designed and tested with top-quality brake parts. When parts of the braking system are replaced — for example, when the brake linings wear down and new ones are installed — be sure to get new approved replacement parts. If this is not done, the brakes might not work properly. For example, if someone puts in brake linings that are wrong for the vehicle, the balance between the front and rear brakes can change — for the worse. The braking performance expected can change in many other ways if the wrong replacement brake parts are installed.

Battery

This vehicle has a standard 12-volt battery and a high-voltage hybrid battery.

Refer to the replacement number on the original battery label when a new standard 12-volt battery is needed.

Only a trained service technician with the proper knowledge and tools should inspect, test, or replace the hybrid battery. See your dealer/retailer if the hybrid battery needs service. The dealer/retailer has information on how to recycle the hybrid battery. There is also information available at http://www.recyclemybattery.com.

If an airbag inflates or the vehicle has been in a crash, the vehicle's sensing system might command the automatic hybrid battery disconnect to open. See *Replacing Restraint System Parts After a Crash on page 2-2* for more information.

⚠ DANGER:

Battery posts, terminals, and related accessories contain lead and lead compounds, chemicals known to the State of California to cause cancer and reproductive harm. Wash hands after handling.

Vehicle Storage

⚠ WARNING:

Batteries have acid that can burn you and gas that can explode. You can be badly hurt if you are not careful. See *Jump Starting on page 6-18* for tips on working around a battery without getting hurt.

Infrequent Usage: Remove the 12-volt battery black, negative (−) cable from the battery to keep the battery from running down.

Extended Storage: Remove the 12-volt battery black, negative (−) cable from the battery or use a battery trickle charger.

Remember to reconnect the battery when ready to drive the vehicle.

Jump Starting

⚠ WARNING:

Personal injury, death, or damage to the vehicle can result if you try jump starting or using a battery charger on the high voltage hybrid battery. Use only the 12-volt battery for jump starting and charging.

If the vehicle's 12-volt battery has run down, you may want to use another vehicle and some jumper cables to start your vehicle. Use the following steps to do it safely.

⚠ WARNING:

Batteries can hurt you. They can be dangerous because:

- They contain acid that can burn you.
- They contain gas that can explode or ignite.
- They contain enough electricity to burn you.

If you do not follow these steps exactly, some or all of these things can hurt you.

Notice: **Ignoring these steps could result in costly damage to the vehicle that would not be covered by the warranty.**

Trying to start the vehicle by pushing or pulling it will not work, and it could damage the vehicle.

1. Check the other vehicle. It must have a 12-volt battery with a negative ground system.

Notice: **If the other vehicle's system is not a 12-volt system with a negative ground, both vehicles can be damaged. Only use vehicles with 12-volt systems with negative grounds to jump start your vehicle.**

2. Get the vehicles close enough so the jumper cables can reach, but be sure the vehicles are not touching each other. It could cause a ground connection you do not want. You would not be able to start your vehicle, and the bad grounding could damage the electrical systems.

   To avoid the possibility of the vehicles rolling, set the parking brake firmly on both vehicles involved in the jump start procedure. Put the automatic transmission in P (Park) or a manual transmission in N (Neutral) before setting the parking brake. If you have a four-wheel-drive vehicle, be sure the transfer case is in a drive gear, not in N (Neutral).

Notice: **If you leave the radio or other accessories on during the jump starting procedure, they could be damaged. The repairs would not be covered by the warranty. Always turn off the radio and other accessories when jump starting the vehicle.**

3. Turn off the ignition on both vehicles. Unplug unnecessary accessories plugged into the cigarette lighter or the accessory power outlets. Turn off the radio and all the lamps that are not needed.

   This avoids sparks and helps save both batteries. It could save the radio!

4. Open the hood on the other vehicle and locate the positive (+) and negative (−) terminal locations on that vehicle.

   Your vehicle has a remote positive (+) and a remote negative (−) jump starting terminal. You should always use these remote terminals instead of the terminals on the battery.

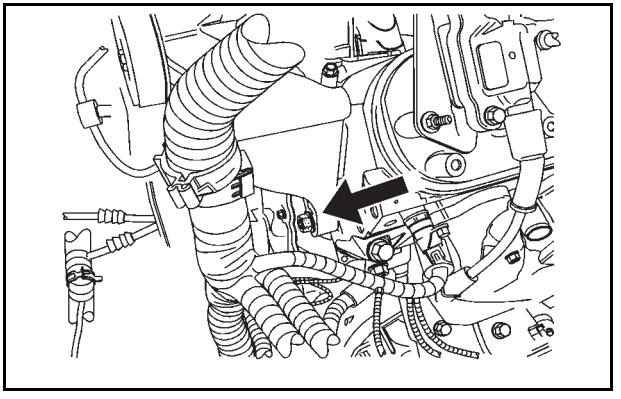

   If the vehicle has a remote positive (+), it is located under a red plastic cover at the positive battery post. To uncover the remote positive (+) terminal, open the red plastic cover.

5. The remote negative (−) is a solid engine ground.

⚠ WARNING:

An electric fan can start up even when the engine is not running and can injure you. Keep hands, clothing and tools away from any underhood electric fan.

⚠ WARNING:

Using an open flame near a battery can cause battery gas to explode. People have been hurt doing this, and some have been blinded. Use a flashlight if you need more light.

(Continued)

WARNING: (Continued)

Be sure the battery has enough water. You do not need to add water to the battery installed in your new vehicle. But if a battery has filler caps, be sure the right amount of fluid is there. If it is low, add water to take care of that first. If you do not, explosive gas could be present.

Battery fluid contains acid that can burn you. Do not get it on you. If you accidentally get it in your eyes or on your skin, flush the place with water and get medical help immediately.

⚠ WARNING:

Fans or other moving engine parts can injure you badly. Keep your hands away from moving parts once the engine is running.

6. Check that the jumper cables do not have loose or missing insulation. If they do, you could get a shock. The vehicles could be damaged too.

   Before you connect the cables, here are some basic things you should know. Positive (+) goes to positive (+) or to a remote positive (+) terminal if the vehicle has one. Negative (−) will go to a heavy, unpainted metal engine part or a solid engine ground.

   Do not connect positive (+) to negative (−) or you will get a short that would damage the battery and maybe other parts too. Do not connect the negative (−) cable to the negative (−) terminal on the dead battery because this can cause sparks.

7. Connect the red positive (+) cable to the positive (+) terminal of the vehicle with the dead battery. Use a remote positive (+) if the vehicle has one.
8. Do not let the other end touch metal. Connect it to the positive (+) terminal of the good battery. Use a remote positive (+) if the vehicle has one.
9. Now connect the black negative (−) cable to the negative (−) terminal of the good battery. Use a remote negative (−) if the vehicle has one.

   Do not let the other end touch anything until the next step. The other end of the negative (−) cable does not go to the dead battery. It goes to a heavy, unpainted metal engine part or to the remote negative (−) terminal on the vehicle with the dead battery.

10. Connect the other end of the negative (−) cable to the remote negative (−) terminal, on the vehicle with the dead battery.
11. Now start the vehicle with the good battery and run the engine for a while.
12. Try to start the vehicle that had the dead battery. If it will not start after a few tries, it probably needs service.

Notice: **If the jumper cables are connected or removed in the wrong order, electrical shorting may occur and damage the vehicle. The repairs would not be covered by the vehicle warranty. Always connect and remove the jumper cables in the correct order, making sure that the cables do not touch each other or other metal.**

Jumper Cable Removal

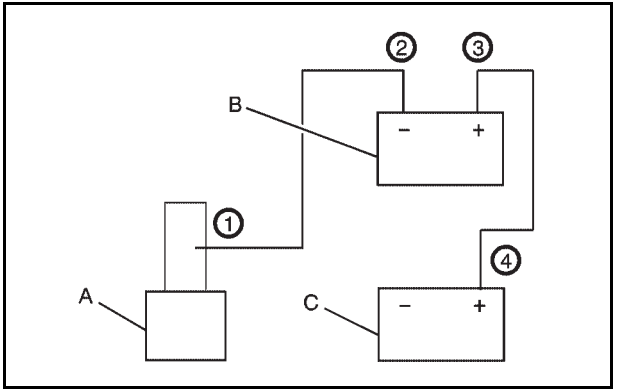

A. Heavy, Unpainted Metal Engine Part or Remote Negative (−) Terminal
B. Good Battery or Remote Positive (+) and Remote Negative (−) Terminals
C. Dead Battery or Remote Positive (+) Terminal

To disconnect the jumper cables from both vehicles:

1. Disconnect the black negative (−) cable from the vehicle that had the bad battery.
2. Disconnect the black negative (−) cable from the vehicle with the good battery.
3. Disconnect the red positive (+) cable from the vehicle with the good battery.
4. Disconnect the red positive (+) cable from the other vehicle.
5. Return the remote positive (+) terminal cover to its original position.

Four-Wheel Drive

Lubricant checks in this section also apply to these vehicles. There are two additional systems that need lubrication.

Transfer Case

When to Check Lubricant

It is not necessary to regularly check transfer case fluid unless you suspect there is a leak, or you hear an unusual noise. A fluid loss could indicate a problem. Have it inspected and repaired.

How to Check Lubricant

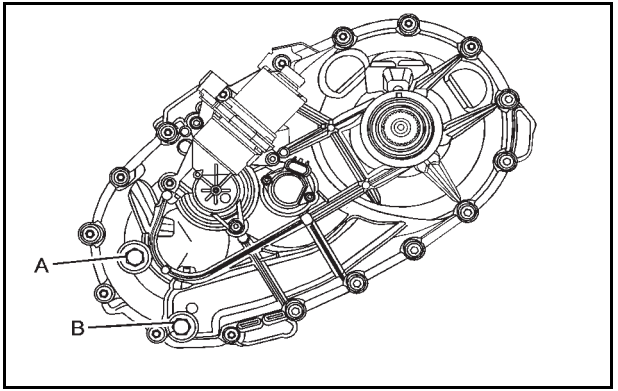

Active Transfer Case

A. Fill Plug

B. Drain Plug

To get an accurate reading, the vehicle should be on a level surface.

If the level is below the bottom of the fill plug hole, you will need to add some lubricant. Add enough lubricant to raise the level to the bottom of the fill plug hole. Use care not to overtighten the plug.

When to Change Lubricant

Refer to the Maintenance Schedule to determine how often to change the lubricant. See “Scheduled Maintenance” in the owner manual.

What to Use

Refer to the Maintenance Schedule to determine what kind of lubricant to use. See “Recommended Fluids and Lubricants” in the owner manual.

Electrical System

High Voltage Devices and Wiring

⚠ WARNING:

Exposure to high voltage can cause shock, burns, and even death. The high voltage systems in your vehicle can only be serviced by technicians with special training.

High voltage devices are identified by labels. Do not remove, open, take apart, or modify these devices. High voltage cable or wiring has orange covering. Do not probe, tamper with, cut, or modify high voltage cable or wiring.

Fuses and Circuit Breakers

The wiring circuits in the vehicle are protected from short circuits by a combination of fuses, circuit breakers and fusible thermal links. This greatly reduces the chance of fires caused by electrical problems.

Be sure you replace a bad fuse with a new one of the identical size and rating.

If you ever have a problem on the road and do not have a spare fuse, you can borrow one that has the same amperage. Just pick some feature of the vehicle that you can get along without, like the radio or cigarette lighter, and use its fuse, if it is the correct amperage. Replace it as soon as you can.

The vehicle also has a special fuse in the battery box for the 300-volt batteries. If this fuse has failed and needs to be replaced, the vehicle will be disabled and you will need to have the vehicle repaired by your dealer/retailer. Do not attempt to self-service this fuse.

Underhood Fuse Block

Hybrid Auxiliary Underhood Fuse Block

The hybrid underhood fuse block is located in the engine compartment near the front of the vehicle. Lift the cover for access to the fuse/relay block. See *Engine Compartment Overview on page 6-4* for more information on its location. For more information on the main underhood fuse block, see “Underhood Fuse Block” in the owner manual.

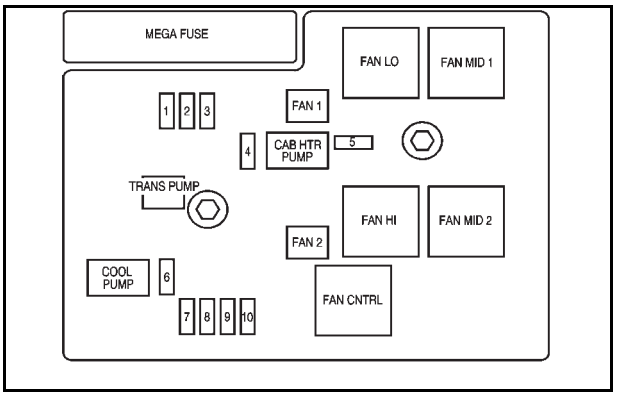

Fuses	Usage
1	ACPO
2	BECM FAN
3	ACCM
4	CAB HTR PMP
5	EMPTY
6	COOL PUMP
7	EPS
8	Drive Motor/Generator Control Module 1
9	Drive Motor/Generator Control Module 2
10	BECM

J-Case	Usage
FAN 1	Cooling Fan 1
TRANS PUMP	Auxiliary Transmission Fluid Pump
FAN 2	Cooling Fan 2
CAB HTR PMP	Cab Heater Pump

Relays	Usage
FAN LOW	Cooling Fan Low Speed Relay
FAN MID 1	Cooling Fan Mid 1
FAN HI	Cooling Fan High Speed Relay
FAN MID 2	Cooling Fan Mid 2
FAN CNTRL	Cooling Fan Control

Tires

Inflation - Tire Pressure

Tires need the correct amount of air pressure to operate effectively.

Notice: **Do not let anyone tell you that under-inflation or over-inflation is all right. It is not. If your tires do not have enough air (under-inflation), you can get the following:**

- **Too much flexing**
- **Too much heat**
- **Tire overloading**
- **Premature or irregular wear**
- **Poor handling**
- **Reduced fuel economy**

If your tires have too much air (over-inflation), you can get the following:

- **Unusual wear**
- **Poor handling**
- **Rough ride**
- **Needless damage from road hazards**

A vehicle specific Tire and Loading Information label is attached to your vehicle. This label shows your vehicle's original equipment tires and the correct inflation pressures for your tires when they are cold. The recommended cold tire inflation pressure, shown on the label, is the minimum amount of air pressure needed to support your vehicle's maximum load carrying capacity.

For additional information regarding how much weight your vehicle can carry, and an example of the Tire and Loading Information label, see “Loading Your Vehicle” in the Index of the owner manual. How you load your vehicle affects vehicle handling and ride comfort. Never load your vehicle with more weight than it was designed to carry.

When to Check

Check your tires once a month or more.

How to Check

Use a good quality pocket-type gage to check tire pressure. You cannot tell if your tires are properly inflated simply by looking at them. Radial tires may look properly inflated even when they're underinflated. Check the tire's inflation pressure when the tires are cold. Cold means your vehicle has been sitting for at least three hours or driven no more than 1 mile (1.6 km).

Remove the valve cap from the tire valve stem. Press the tire gage firmly onto the valve to get a pressure measurement. If the cold tire inflation pressure matches the recommended pressure on the tire and loading information label, no further adjustment is necessary. If the pressure is low, add air until you reach the recommended amount.

If you overfill the tire, release air by pushing on the metal stem in the center of the tire valve. Recheck the tire pressure with the tire gage.

Be sure to put the valve caps back on the valve stems. They help prevent leaks by keeping out dirt and moisture.

Tire Pressure Monitor Operation

This vehicle may have a Tire Pressure Monitor System (TPMS). The TPMS is designed to warn the driver when a low tire pressure condition exists. TPMS sensors are mounted onto each tire and wheel assembly. The TPMS sensors monitor the air pressure in the vehicle's tires and transmit the tire pressure readings to a receiver located in the vehicle.

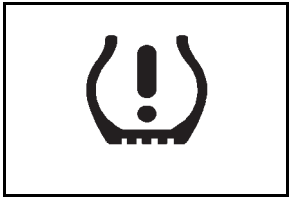

When a low tire pressure condition is detected, the TPMS will illuminate the low tire pressure warning symbol located on the instrument panel cluster.

At the same time a message to check the pressure in a specific tire appears on the Driver Information Center (DIC) display. The low tire pressure warning light and the DIC warning message come on at each ignition cycle until the tires are inflated to the correct inflation pressure. Using the DIC, tire pressure levels can be viewed by the driver. For additional information and details about the DIC operation and displays see *DIC Warnings and Messages on page 4-7*. Also, see “DIC Operation and Displays” in the Index of the owner manual for more information.

The low tire pressure warning light may come on in cool weather when the vehicle is first started, and then turn off as you start to drive. This could be an early indicator that the air pressure in the tire(s) are getting low and need to be inflated to the proper pressure.

A Tire and Loading Information label, attached to your vehicle, shows the size of your vehicle's original equipment tires and the correct inflation pressure for your vehicle's tires when they are cold. See “Loading Your Vehicle” for an example of the Tire and Loading Information label and its location on your vehicle. Also see *Inflation - Tire Pressure on page 6-26*.

Your vehicle's TPMS can warn you about a low tire pressure condition but it does not replace normal tire maintenance. See “Tire Inspection and Rotation” and “Tires” in the Index of the owner manual for more information.

Notice: **Using non-approved tire sealants could damage the Tire Pressure Monitor System (TPMS) sensors. TPMS sensor damage caused by using an incorrect tire sealant is not covered by the vehicle warranty. Always use the GM approved tire sealant available through your dealer/retailer.**

Your vehicle, when new, included a factory-installed Tire Sealant and Compressor Kit. This kit uses a GM approved liquid tire sealant. See *Tire Sealant and*

Compressor Kit (Without Selector Switch) on page 6-43 or *Tire Sealant and Compressor Kit (With Selector Switch) on page 6-43*.

TPMS Malfunction Light and Message

The TPMS will not function properly if one or more of the TPMS sensors are missing or inoperable. When the system detects a malfunction, the low tire warning light flashes for about one minute and then stays on for the remainder of the ignition cycle. A DIC warning message is also displayed. The low tire warning light and DIC warning message come on at each ignition cycle until the problem is corrected. Some of the conditions that can cause the malfunction light and DIC message to come on are:

- The TPMS sensor matching process was started but not completed or not completed successfully after rotating the vehicle's tires. The DIC message and TPMS malfunction light should go off once the TPMS sensor matching process is performed successfully. See “TPMS Sensor Matching Process” later in this section.
- One or more TPMS sensors are missing or damaged. The DIC message and the TPMS malfunction light should go off when the TPMS sensors are installed and the sensor matching process is performed successfully. See your dealer/retailer for service.
- Replacement tires or wheels do not match your vehicle's original equipment tires or wheels. Tires and wheels other than those recommended for your vehicle could prevent the TPMS from functioning properly. See “Buying New Tires” in the Index of the owner manual.
- Operating electronic devices or being near facilities using radio wave frequencies similar to the TPMS could cause the TPMS sensors to malfunction.

If the TPMS is not functioning it cannot detect or signal a low tire condition. See your dealer/retailer for service if the TPMS malfunction light and DIC message comes on and stays on.

TPMS Sensor Matching Process

Each TPMS sensor has a unique identification code. Any time you rotate your vehicle's tires or replace one or more of the TPMS sensors, the identification codes will need to be matched to the new tire/wheel position. The sensors are matched to the tire/wheel positions in the following order: driver side front tire, passenger side front tire, passenger side rear tire, and driver side rear tire using a TPMS diagnostic tool. See your dealer/retailer for service.

The TPMS sensors can also be matched to each tire/wheel position by increasing or decreasing the tire's air pressure. If increasing the tire's air pressure, do not exceed the maximum inflation pressure indicated on the tire's sidewall.

To decrease air-pressure out of a tire you can use the pointed end of the valve cap, a pencil-style air pressure gage, or a key.

You have two minutes to match the first tire/wheel position, and five minutes overall to match all four tire/wheel positions. If it takes longer than two minutes, to match the first tire and wheel, or more than five minutes to match all four tire and wheel positions the matching process stops and you need to start over.

The TPMS sensor matching process is outlined below:

1. Set the parking brake.
2. Turn the ignition switch to ON/RUN with the engine off.
3. Press 🔒 and 🔓 on the Remote Keyless Entry (RKE) transmitter at the same time for approximately five seconds. The horn sounds twice to signal the receiver is in relearn mode and TIRE LEARNING ACTIVE message displays on the DIC screen.
4. Start with the driver side front tire.

5. Remove the valve cap from the valve cap stem. Activate the TPMS sensor by increasing or decreasing the tire's air pressure for five seconds, or until a horn chirp sounds. The horn chirp, which may take up to 30 seconds to sound, confirms that the sensor identification code has been matched to this tire and wheel position.
6. Proceed to the passenger side front tire, and repeat the procedure in Step 5.
7. Proceed to the passenger side rear tire, and repeat the procedure in Step 5.
8. Proceed to the driver side rear tire, and repeat the procedure in Step 5. The horn sounds two times to indicate the sensor identification code has been matched to the driver side rear tire, and the TPMS sensor matching process is no longer active. The TIRE LEARNING ACTIVE message on the DIC display screen goes off.
9. Turn the ignition switch to LOCK/OFF.
10. Set all four tires to the recommended air pressure level as indicated on the Tire and Loading Information label.
11. Put the valve caps back on the valve stems.

Tire Inspection and Rotation

Tires should be rotated every 5,000 to 8,000 miles (8 000 to 13 000 km).

Any time you notice unusual wear, rotate your tires as soon as possible and check wheel alignment. Also check for damaged tires or wheels. See “When It Is Time for New Tires” and “Wheel Replacement” in the Index of the owner manual for more information.

The purpose of regular rotation is to achieve more uniform wear for all tires on the vehicle. The first rotation is the most important. See “Scheduled Maintenance” in the Index of the owner manual.

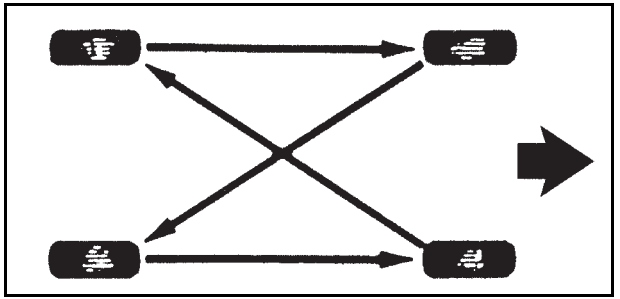

When rotating your tires, always use the correct rotation pattern shown here.

After the tires have been rotated, adjust the front and rear inflation pressures as shown on the Tire and Loading Information label. See “Loading Your Vehicle” in the Index of the owner manual for an example of the label and its location on your vehicle.

The Tire Pressure Monitor System (TPMS) sensors will need to be reset after a tire rotation. See “TPMS Sensor Identification Codes” under “Tire Pressure Monitor Operation”.

Make certain that all wheel nuts are properly tightened. See “Wheel Nut Torque” under “Capacities and Specifications” in the Index of the owner manual.

If a Tire Goes Flat

The vehicle has a tire sealant and compressor kit. See *Tire Sealant and Compressor Kit (Without Selector Switch) on page 6-33* or *Tire Sealant and Compressor Kit (With Selector Switch) on page 6-43*. There is no spare tire, no tire changing equipment, and no place to store a tire.

It is unusual for a tire to blow out while you are driving, especially if you maintain your tires properly. See “Tires” in the Index of the owner manual. If air goes out of a tire, it is much more likely to leak out slowly. But, if you should ever have a blow out, here are a few tips about what to expect and what to do:

If a front tire fails, the flat tire will create a drag that pulls the vehicle toward that side. Take your foot off the accelerator pedal and grip the steering wheel firmly. Steer to maintain lane position, and then gently brake to a stop well out of the traffic lane.

A rear blow out, particularly on a curve, acts much like a skid and may require the same correction you would use in a skid. In any rear blow out, remove your foot from the accelerator pedal. Get the vehicle under control by steering the way you want the vehicle to go. It may be very bumpy and noisy, but you can still steer. Gently brake to a stop, well off the road if possible.

If a tire goes flat, avoid further tire and wheel damage by driving slowly to a level place and stopping. Then do this:

1. Turn on the hazard warning flashers. See “Hazard Warning Flashers” in the Index of the owner manual.
2. Park the vehicle. Set the parking brake firmly and put the shift lever in P (Park).
3. Turn off the engine.
4. Inspect the flat tire.

If the tire has been separated from the wheel, has damaged sidewalls, or has a puncture larger than a ¼ inch (6 mm), the tire is too severely damaged for the tire sealant and compressor kit to be effective. See “Roadside Service” in the Index of the owner manual.

If the tire has a puncture less than a ¼ inch (6 mm) in the tread area of the tire, see *Tire Sealant and Compressor Kit (Without Selector Switch) on page 6-33* or *Tire Sealant and Compressor Kit (With Selector Switch) on page 6-43*.

Tire Sealant and Compressor Kit (Without Selector Switch)

System Identification

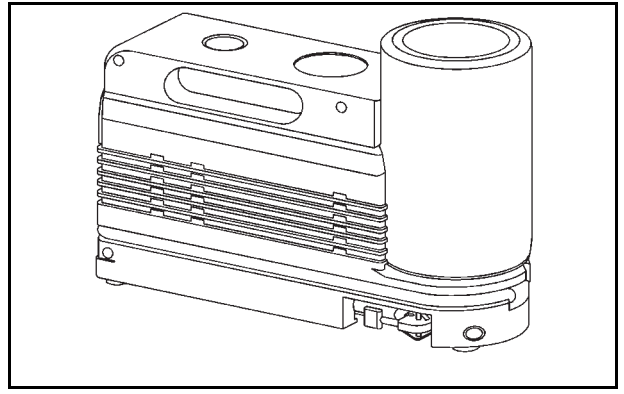

If the vehicle has the tire sealant and compressor kit shown above, see the operating instructions that follow.

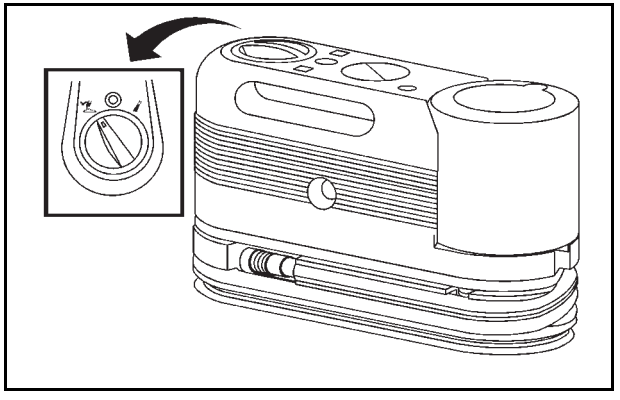

If the vehicle has the tire sealant and compressor kit shown above, follow the operating instructions under “Tire Sealant and Compressor Kit (With Selector Switch).”

⚠ WARNING:

Idling a vehicle in an enclosed area with poor ventilation is dangerous. Engine exhaust may enter the vehicle. Engine exhaust contains Carbon Monoxide (CO) which cannot be seen or smelled. It can cause unconsciousness and even death. Never run the engine in an enclosed area that has no fresh air ventilation. For more information, see ”Engine Exhaust” in the owner manual.

⚠ WARNING:

Over-inflating a tire could cause the tire to rupture and you or others could be injured. Be sure to read and follow the tire sealant and compressor kit instructions and inflate the tire to its recommended pressure. Do not exceed the recommended pressure.

⚠ WARNING:

Storing the tire sealant and compressor kit or other equipment in the passenger compartment of the vehicle could cause injury. In a sudden stop or collision, loose equipment could strike someone. Store the tire sealant and compressor kit in its original location.

If this vehicle has a tire sealant and compressor kit, there may not be a spare tire, tire changing equipment, and on some vehicles there may not be a place to store a tire.

The tire sealant and compressor can be used to temporarily seal punctures up to ¼ inch (6 mm) in the tread area of the tire. It can also be used to inflate an under inflated tire.

If the tire has been separated from the wheel, has damaged sidewalls, or has a large puncture, the tire is too severely damaged for the tire sealant and compressor kit to be effective. See “Roadside Assistance Program” in the owner manual.

Read and follow all of the tire sealant and compressor kit instructions.

The kit includes:

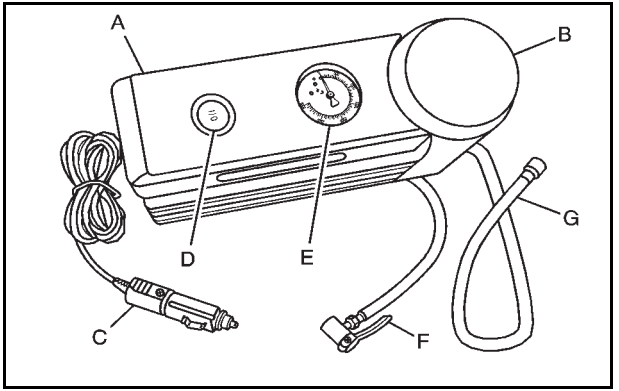

A. Air Compressor
B. Tire Sealant Canister
C. Power Plug
D. On/Off Button
E. Pressure Gage
F. Air Only Hose (Black)
G. Sealant/Air Hose (Clear)

Tire Sealant

Read and follow the safe handling instructions on the label adhered to the sealant canister.

Check the tire sealant expiration date on the sealant canister. The sealant canister should be replaced before its expiration date. Replacement sealant canisters are available at your local dealer/retailer. See “Removal and Installation of the Sealant Canister” following.

There is only enough sealant to seal one tire. After usage, the sealant canister and sealant/air hose assembly must be replaced. See “Removal and Installation of the Sealant Canister” following.

Using the Tire Sealant and Compressor Kit to Temporarily Seal and Inflate a Punctured Tire

Follow the directions closely for correct sealant usage.

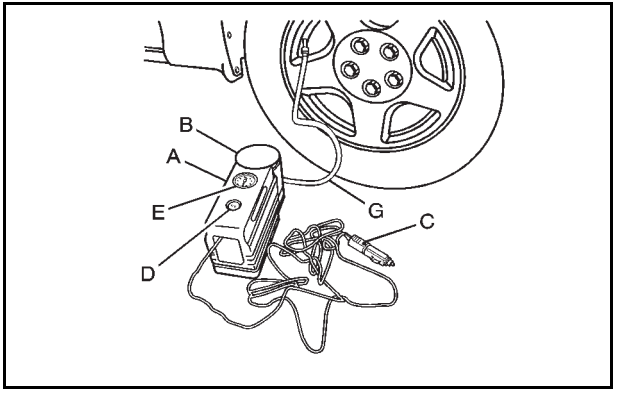

When using the tire sealant and compressor kit during cold temperatures, warm the kit in a heated environment for 5 minutes. This will help to inflate the tire faster.

Always do a safety check first. See *If a Tire Goes Flat on page 6-32*.

1. Remove the tire sealant and compressor kit from its storage location. See *Tire Sealant and Compressor Kit Storage on page 6-53*.

   Make sure the on/off button (D) is in the off (O) position.

2. Unwrap the sealant/air hose (F) and the power plug (C).

3. Place the kit on the ground.

   Make sure the tire valve stem is positioned close to the ground so the hose will reach it.

4. Remove the valve stem cap from the flat tire by turning it counterclockwise.

5. Attach the sealant/air hose (F) onto the tire valve stem. Turn it clockwise until it is tight.

6. Plug the power plug (C) into the accessory power outlet in the vehicle. Unplug all items from other accessory power outlets. See “Accessory Power Outlet(s) in the owner manual.”

   If the vehicle has an accessory power outlet, do not use the cigarette lighter.

   If the vehicle only has a cigarette lighter, use the cigarette lighter.

   Do not pinch the power plug cord in the door or window.

7. Start the vehicle. The vehicle must be running while using the air compressor.

8. Press the on/off (D) button to turn the tire sealant and compressor kit on.

   The compressor will inject sealant and air into the tire.

   The pressure gage (E) will initially show a high pressure while the compressor pushes the sealant into the tire. Once the sealant is completely dispersed into the tire, the pressure will quickly drop and start to rise again as the tire inflates with air only.

9. Inflate the tire to the recommended inflation pressure using the pressure gage (E). The recommended inflation pressure can be found on the Tire and Loading Information label. See *Inflation - Tire Pressure on page 6-26*.

   The pressure gage (E) may read higher than the actual tire pressure while the compressor is on. Turn the compressor off to get an accurate pressure reading. The compressor may be turned on/off until the correct pressure is reached.

Notice: **If the recommended pressure cannot be reached after approximately 25 minutes, the vehicle should not be driven farther. The tire is too severely damaged and the tire sealant and compressor kit cannot inflate the tire. Remove the power plug from the accessory power outlet and unscrew the inflating hose from the tire valve. See "Roadside Assistance Program" in the owner manual.**

10. Press the on/off button (D) to turn the tire sealant and compressor kit off.

    The tire is not sealed and will continue to leak air until the vehicle is driven and the sealant is distributed in the tire, therefore, Steps 11 through 17 must be done immediately after Step 10.

    Be careful while handling the tire sealant and compressor kit as it could be warm after usage.

11. Unplug the power plug (C) from the accessory power outlet in the vehicle.
12. Turn the sealant/air hose (F) counterclockwise to remove it from the tire valve stem.
13. Replace the tire valve stem cap.
14. Replace the sealant/air hose (F), and the power plug (C) back in their original location.

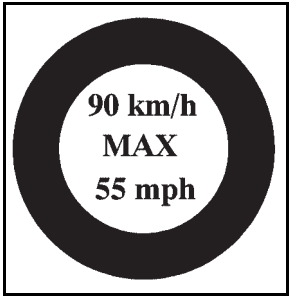

15. If the flat tire was able to inflate to the recommended inflation pressure, remove the maximum speed label from the sealant canister (B) and place it in a highly visible location.

    The label is a reminder not to exceed 55 mph (90 km/h) until the damaged tire is repaired or replaced.

16. Return the equipment to its original storage location in the vehicle.
17. Immediately drive the vehicle 5 miles (8 km) to distribute the sealant in the tire.
18. Stop at a safe location and check the tire pressure. Refer to Steps 1 through 11 under “Using the Tire Sealant and Compressor Kit without Sealant to Inflate a Tire (Not Punctured).”

    If the tire pressure has fallen more than 10 psi (68 kPa) below the recommended inflation pressure, stop driving the vehicle. The tire is too severely damaged and the tire sealant cannot seal the tire. See “Roadside Assistance Program” in the owner manual.

    If the tire pressure has not dropped more than 10 psi (68 kPa) from the recommended inflation pressure, inflate the tire to the recommended inflation pressure.
19. Wipe off any sealant from the wheel, tire or vehicle.
20. Dispose of the used sealant canister (B) and sealant/air hose (F) assembly at a local dealer/retailer or in accordance with local state codes and practices.
21. Replace it with a new canister available from your dealer/retailer.
22. After temporarily sealing a tire using the tire sealant and compressor kit, take the vehicle to an authorized dealer/retailer within a 100 miles (161 km) of driving to have the tire repaired or replaced.

Using the Tire Sealant and Compressor Kit without Sealant to Inflate a Tire (Not Punctured)

To use the air compressor to inflate a tire with air only and not sealant:

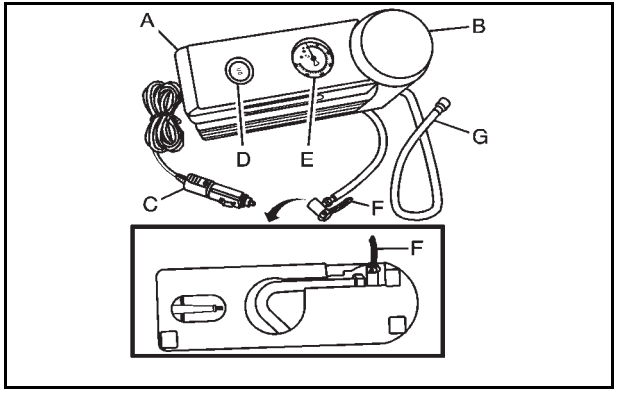

Always do a safety check first. See *If a Tire Goes Flat on page 6-32*.

1. Remove the tire sealant and compressor kit from its storage location. See *Tire Sealant and Compressor Kit Storage on page 6-53*.
2. Unlock the air only hose (F) from the sealant canister (B) by pulling up on the lever.
3. Pull the air only hose (F) from the sealant canister (B).
4. Remove the power plug (C) from the air compressor (A).
5. Place the kit on the ground.

   Make sure the tire valve stem is positioned close to the ground so the hose will reach it.
6. Remove the tire valve stem cap by turning it counterclockwise.
7. Attach the air only hose (F) onto the tire valve stem and press the lever down to secure it.

8. Plug the power plug (C) into the accessory power outlet in the vehicle. Unplug all items from other accessory power outlets. See “Accessory Power Outlet(s) in the owner manual.”

   If the vehicle has an accessory power outlet, do not use the cigarette lighter.

   If the vehicle only has a cigarette lighter, use the cigarette lighter.

   Do not pinch the power plug cord in the door or window.

9. Start the vehicle. The vehicle must be running while using the air compressor.

10. Press the on/off (D) button to turn the compressor on.

    The compressor will inflate the tire with air only.

11. Inflate the tire to the recommended inflation pressure using the pressure gage (E). The recommended inflation pressure can be found on the Tire and Loading Information label. See *Inflation - Tire Pressure on page 6-26*.

    The pressure gage (E) may read higher than the actual tire pressure while the compressor is on. Turn the compressor off to get an accurate reading. The compressor may be turned on/off until the correct pressure is reached.

12. Press the on/off button (D) to turn the tire sealant and compressor kit off.

    Be careful while handling the tire sealant and compressor kit as it could be warm after usage.

13. Unplug the power plug (C) from the accessory power outlet in the vehicle.

14. Disconnect the air only hose (C) from the tire valve stem, by turning it counterclockwise, and replace the tire valve stem cap.

15. Replace the air only hose (F) and the power plug (C) back in its original location.

16. Place the equipment in the original storage location in the vehicle.

Removal and Installation of the Sealant Canister

To remove the sealant canister:

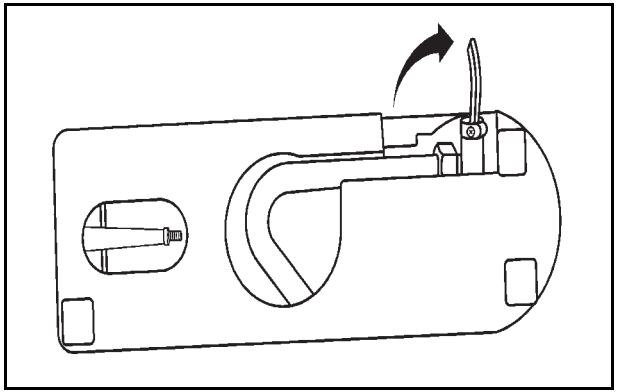

1. Unlock the air only hose (F) from the sealant canister (B) by pulling up on the lever.
2. Pull the air only hose (F) from the sealant canister (B).
3. Unwrap the sealant/air hose (F) from the compressor (A).

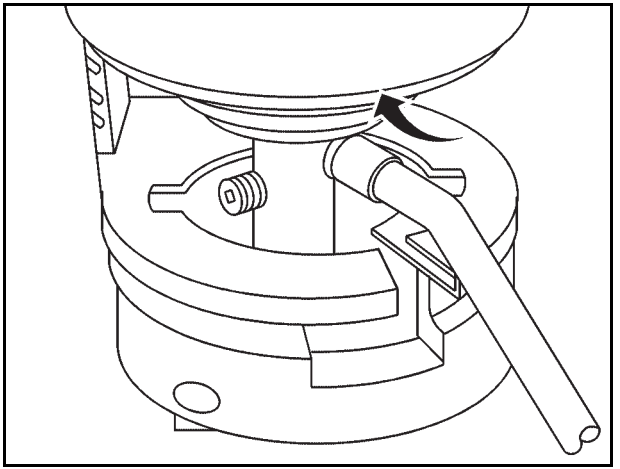

4. Turn the sealant canister (B) so the inflator filling hose is aligned with the slot in the compressor.
5. Lift the sealant canister (B) from the compressor and replace with a new sealant canister. See your dealer/retailer for more information.

To install a new sealant canister:

1. Align the sealant/air hose (F) with the slot in the air compressor.
2. Push the sealant canister (B) down and turn it clockwise.
3. Wrap the sealant/air hose (F) around the air compressor channel to stow it in its original location.
4. Push the air compressor inflator hose (F) onto the sealant canister inlet and push the lever down.

Tire Sealant and Compressor Kit (With Selector Switch)

System Identification

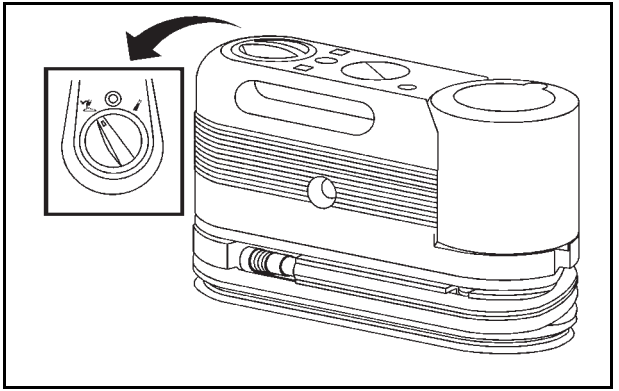

If the vehicle has the tire sealant and compressor kit shown above, see the operating instructions that follow.

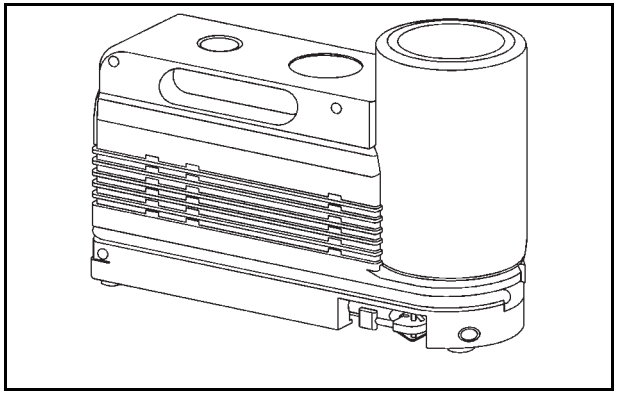

If the vehicle has the tire sealant and compressor kit shown above, follow the operating instructions under “Tire Sealant and Compressor Kit (Without Selector Switch).”

⚠ WARNING:

Idling a vehicle in an enclosed area with poor ventilation is dangerous. Engine exhaust may enter the vehicle. Engine exhaust contains Carbon Monoxide (CO) which cannot be seen or smelled. It can cause unconsciousness and even death. Never run the engine in an enclosed area that has no fresh air ventilation. For more information, see ”Engine Exhaust” in the owner manual.

⚠ WARNING:

Over-inflating a tire could cause the tire to rupture and you or others could be injured. Be sure to read and follow the tire sealant and compressor kit instructions and inflate the tire to its recommended pressure. Do not exceed the recommended pressure.

⚠ WARNING:

Storing the tire sealant and compressor kit or other equipment in the passenger compartment of the vehicle could cause injury. In a sudden stop or collision, loose equipment could strike someone. Store the tire sealant and compressor kit in its original location.

If this vehicle has a tire sealant and compressor kit, there may not be a spare tire, tire changing equipment, and on some vehicles there may not be a place to store a tire.

The tire sealant and compressor can be used to temporarily seal punctures up to ¼ inch (6 mm) in the tread area of the tire. It can also be used to inflate an under inflated tire.

If the tire has been separated from the wheel, has damaged sidewalls, or has a large puncture, the tire is too severely damaged for the tire sealant and compressor kit to be effective. See “Roadside Assistance Program” in the owner manual.

Read and follow all of the tire sealant and compressor kit instructions.

The kit includes:

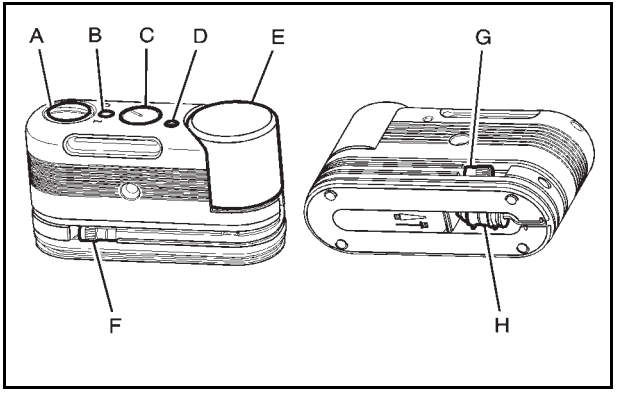

A. Selector Switch (Sealant/Air or Air Only)
B. On/Off Button
C. Pressure Gage
D. Pressure Deflation Button
E. Tire Sealant Canister
F. Sealant/Air Hose (Clear)
G. Air Only Hose (Black)
H. Power Plug

Tire Sealant

Read and follow the safe handling instructions on the label adhered to the sealant canister.

Check the tire sealant expiration date on the sealant canister. The sealant canister should be replaced before its expiration date. Replacement sealant canisters are available at your local dealer/retailer. See “Removal and Installation of the Sealant Canister” following.

There is only enough sealant to seal one tire. After usage, the sealant canister and sealant/air hose assembly must be replaced. See “Removal and Installation of the Sealant Canister” following.

Using the Tire Sealant and Compressor Kit to Temporarily Seal and Inflate a Punctured Tire

Follow the directions closely for correct sealant usage.

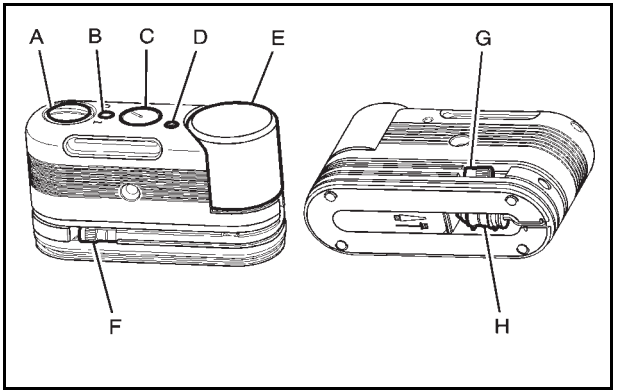

When using the tire sealant and compressor kit during cold temperatures, warm the kit in a heated environment for 5 minutes. This will help to inflate the tire faster.

Always do a safety check first. See *If a Tire Goes Flat on page 6-32*. Do not remove any objects that have penetrated the tire.

1. Remove the tire sealant and compressor kit from its storage location. See *Tire Sealant and Compressor Kit Storage on page 6-53*.
2. Unwrap the sealant/air hose (F) and the power plug (H).
3. Place the kit on the ground.
4. Remove the valve stem cap from the flat tire by turning it counterclockwise.
5. Attach the sealant/air hose (F) onto the tire valve stem. Turn it clockwise until it is tight.
6. Plug the power plug (H) into the accessory power outlet in the vehicle. Unplug all items from other accessory power outlets. See “Accessory Power Outlet(s) in the owner manual.”

   If the vehicle has an accessory power outlet, do not use the cigarette lighter.

   If the vehicle only has a cigarette lighter, use the cigarette lighter.

   Do not pinch the power plug cord in the door or window.
7. Start the vehicle. The vehicle must be running while using the air compressor.
8. Turn the selector switch (A) counterclockwise to the Sealant + Air position.
9. Press the on/off (B) button to turn the tire sealant and compressor kit on.

   The compressor will inject sealant and air into the tire.

   The pressure gage (C) will initially show a high pressure while the compressor pushes the sealant into the tire. Once the sealant is completely dispersed into the tire, the pressure will quickly drop and start to rise again as the tire inflates with air only.

10. Inflate the tire to the recommended inflation pressure using the pressure gage (C). The recommended inflation pressure can be found on the Tire and Loading Information label. See *Inflation - Tire Pressure on page 6-26*.

    The pressure gage (C) may read higher than the actual tire pressure while the compressor is on. Turn the compressor off to get an accurate pressure reading. The compressor may be turned on/off until the correct pressure is reached.

Notice: **If the recommended pressure cannot be reached after approximately 25 minutes, the vehicle should not be driven farther. The tire is too severely damaged and the tire sealant and compressor kit cannot inflate the tire. Remove the power plug from the accessory power outlet and unscrew the inflating hose from the tire valve. See "Roadside Assistance Program" in the owner manual.**

11. Press the on/off button (B) to turn the tire sealant and compressor kit off.

    The tire is not sealed and will continue to leak air until the vehicle is driven and the sealant is distributed in the tire, therefore, Steps 12 through 18 must be done immediately after Step 11.

    Be careful while handling the tire sealant and compressor kit as it could be warm after usage.

12. Unplug the power plug (H) from the accessory power outlet in the vehicle.
13. Turn the sealant/air hose (F) counterclockwise to remove it from the tire valve stem.
14. Replace the tire valve stem cap.
15. Replace the sealant/air hose (F), and the power plug (H) back in their original location.

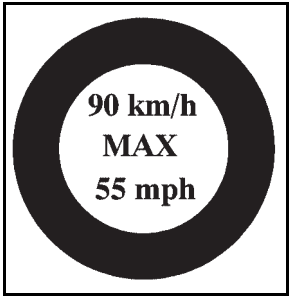

16. If the flat tire was able to inflate to the recommended inflation pressure, remove the maximum speed label from the sealant canister (E) and place it in a highly visible location.

    The label is a reminder not to exceed 55 mph (90 km/h) until the damaged tire is repaired or replaced.

17. Return the equipment to its original storage location in the vehicle.
18. Immediately drive the vehicle 5 miles (8 km) to distribute the sealant in the tire.
19. Stop at a safe location and check the tire pressure. Refer to Steps 1 through 11 under “Using the Tire Sealant and Compressor Kit without Sealant to Inflate a Tire (Not Punctured).”

    If the tire pressure has fallen more than 10 psi (68 kPa) below the recommended inflation pressure, stop driving the vehicle. The tire is too severely damaged and the tire sealant cannot seal the tire. See “Roadside Assistance Program” in the owner manual.

    If the tire pressure has not dropped more than 10 psi (68 kPa) from the recommended inflation pressure, inflate the tire to the recommended inflation pressure.
20. Wipe off any sealant from the wheel, tire, and vehicle.
21. Dispose of the used sealant canister (E) and sealant/air hose (F) assembly at a local dealer/retailer or in accordance with local state codes and practices.
22. Replace it with a new canister available from your dealer/retailer.
23. After temporarily sealing a tire using the tire sealant and compressor kit, take the vehicle to an authorized dealer/retailer within a 100 miles (161 km) of driving to have the tire repaired or replaced.

Using the Tire Sealant and Compressor Kit without Sealant to Inflate a Tire (Not Punctured)

To use the air compressor to inflate a tire with air only and not sealant:

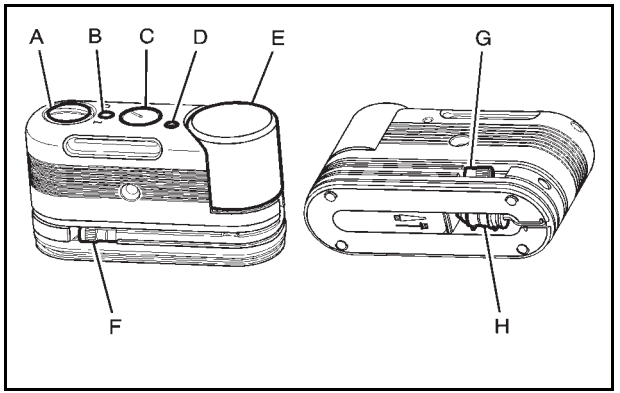

Always do a safety check first. See *If a Tire Goes Flat on page 6-32*.

1. Remove the tire sealant and compressor kit from its storage location. See *Tire Sealant and Compressor Kit Storage on page 6-53*.
2. Unwrap the air only hose (G) and the power plug (H).
3. Place the kit on the ground.
4. Remove the tire valve stem cap from the flat tire by turning it counterclockwise.
5. Attach the air only hose (G) onto the tire valve stem by turning it clockwise until it is tight.
6. Plug the power plug (H) into the accessory power outlet in the vehicle. Unplug all items from other accessory power outlets. See “Accessory Power Outlet(s) in the owner manual.”

   If the vehicle has an accessory power outlet, do not use the cigarette lighter.

   If the vehicle only has a cigarette lighter, use the cigarette lighter.

   Do not pinch the power plug cord in the door or window.

7. Start the vehicle. The vehicle must be running while using the air compressor.
8. Turn the selector switch (A) clockwise to the Air Only position.
9. Press the on/off (B) button to turn the compressor on.

   The compressor will inflate the tire with air only.
10. Inflate the tire to the recommended inflation pressure using the pressure gage (C). The recommended inflation pressure can be found on the Tire and Loading Information label. See *Inflation - Tire Pressure on page 6-26*.

    The pressure gage (C) may read higher than the actual tire pressure while the compressor is on. Turn the compressor off to get an accurate reading. The compressor may be turned on/off until the correct pressure is reached.

    If you inflate the tire higher than the recommended pressure you can adjust the excess pressure by pressing the pressure deflation button (D) until the proper pressure reading is reached. This option is only functional when using the air only hose (G).
11. Press the on/off button (B) to turn the tire sealant and compressor kit off.

    Be careful while handling the tire sealant and compressor kit as it could be warm after usage.
12. Unplug the power plug (H) from the accessory power outlet in the vehicle.
13. Disconnect the air only hose (G) from the tire valve stem, by turning it counterclockwise, and replace the tire valve stem cap.
14. Replace the air only hose (G) and the power plug (H) and cord back in its original location.
15. Place the equipment in the original storage location in the vehicle.

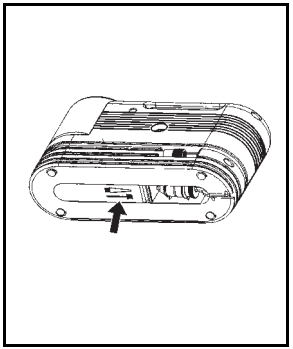

The tire sealant and compressor kit has an accessory adapter located in a compartment on the bottom of its housing that may be used to inflate air mattresses, balls, etc.

Removal and Installation of the Sealant Canister

To remove the sealant canister:

1. Unwrap the sealant hose.

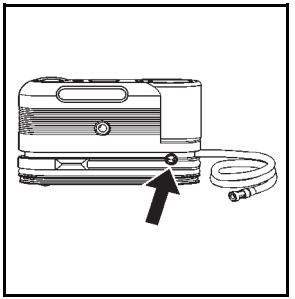

2. Press the canister release button.
3. Pull up and remove the canister.
4. Replace with a new canister which is available from your dealer/retailer.
5. Push the new canister into place.

Tire Sealant and Compressor Kit Storage

The tire sealant and compressor kit is located under the storage tray on the driver side trim panel (over the rear wheelhouse).

To access the tire sealant and compressor kit:

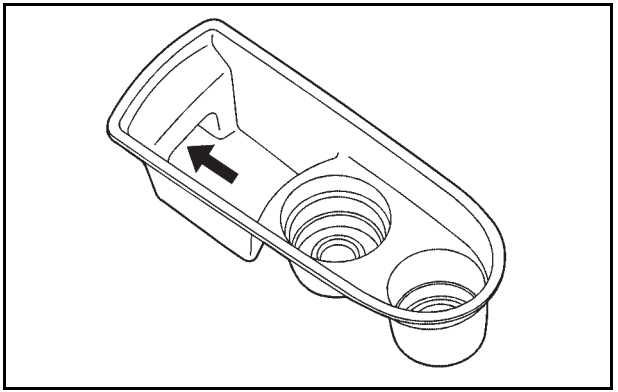

1. Remove the tray by pulling up on the finger depression to access the tire sealant and compressor kit.

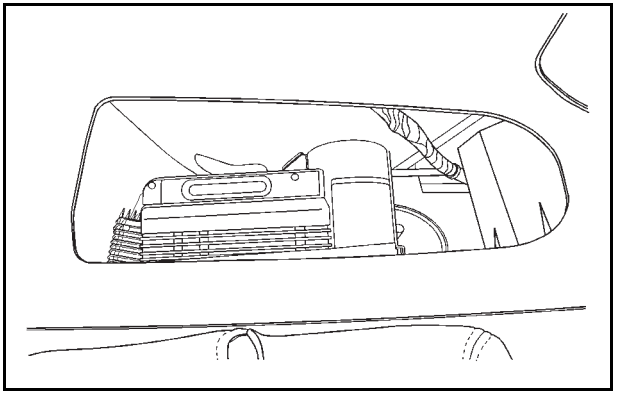

2. Locate the tire sealant and compressor kit.
3. Remove the sealant and compressor kit without a selector switch by pulling the velcro strip up and back.

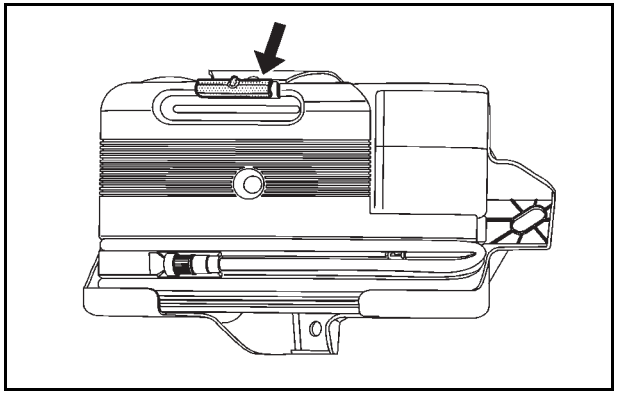

Remove the sealant and compressor kit with a selector switch by lifting upward on the yellow tab to release the unit.

4. Remove the sealant and compressor kit from its plastic tray assembly.

To store the tire sealant and compressor kit, reverse the steps.

Appearance Care

Vehicle Care/Appearance Materials

When scraping the windshield glass to remove ice and snow, stay clear of the hybrid decal.

To have the hybrid decals removed from the vehicle, please see your dealer/retailer.

Capacities and Specifications

Application	Capacities	
	English	Metric
Automatic Transmission* (Pan Removal and Filter Replacement)	11.5 qt	10.9 L
Cooling System		
Drive Motor Generator Control Module Cooling System	2.9 qt	2.7 L
6.0L V8 Engine Cooling System	18.3 qt	17.3 L
Fuel Tank	24.5 gal	92.7 L
*Transmission fluid capacity is approximate. See *Automatic Transmission Fluid on page 6-5* for information on checking fluid level.		
All capacities are approximate. Recheck fluid level after filling.		

Engine Specifications

Engine	VIN Code	Transmission	Spark Plug Gap
6.0L V8	J	Automatic	0.040 in (1.02 mm)

✍ NOTES

Section 7 Maintenance Schedule

Maintenance Schedule 7-2
At Least Once a Year 7-2
Recommended Fluids and Lubricants 7-2
Engine Drive Belt Routing 7-2

Maintenance Schedule

At Least Once a Year

Tire Sealant and Compressor Kit

Check the sealant expiration date printed on the instruction label of the Tire Sealant and Compressor Kit at least once a year. See your dealer/retailer for a replacement canister.

Recommended Fluids and Lubricants

Fluids identified below are specific to the hybrid vehicle and can be obtained from your dealer/retailer. See the owner manual for the other fluids and lubricants recommended for the vehicle.

Usage	Fluid/Lubricant
Drive Motor/ Generator Control Module (DMCM) Cooling System	Always use the pre-mixed 50/50 mixture of de-ionized water and DEX-COOL® (silicate-free) coolant available at your dealer/retailer. See *Drive Motor/Generator Control Module (DMCM) Cooling System on page 6-9*.

Engine Drive Belt Routing

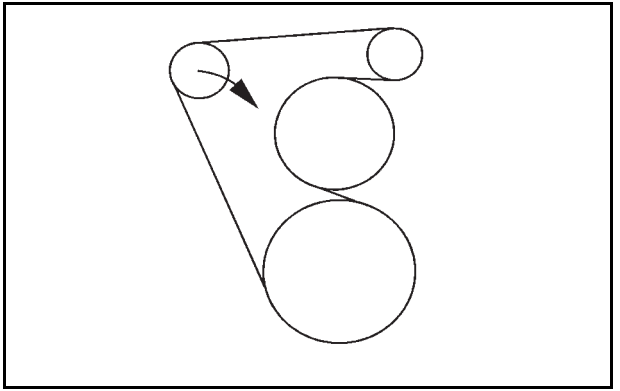

A

Alternating Current
Power Outlet 3-2
Audio System(s)
Navigation/Radio System 4-9
Automatic Transmission, Fluid 6-5

B

Battery 6-17
Belt Routing, Engine 7-2
Brakes 6-13
Regenerative Braking 3-17

C

Canadian Owners ii
Capacities and Specifications 6-55
Charging System Light 4-4
Climate Controls 4-2
Compressor Kit, Tire Sealant 6-33, 6-43
Coolant Surge Tank Pressure Cap, (DMCM) 6-8
Cooling System, (DMCM) 6-9

D

Drive Motor/Generator Control Module (DMCM)
Coolant Surge Tank Pressure Cap 6-8
Drive Motor/Generator Control Module (DMCM)
Cooling System 6-9
Driver Information Center (DIC) 4-7
Warnings and Messages 4-7

E

Engine
Compartment Overview 6-4
Drive Belt Routing 7-2
Engine Coolant Heater 3-16

F

Flat Tire 6-32
Fluid
Power Steering 6-13
Four-Wheel Drive 3-8, 6-23
Fuel Economy Gage 4-5

G

Gages
Fuel Economy 4-5
Tachometer 4-4

H

High Voltage Devices and Wiring 6-3

I

Inflation - Tire Pressure 6-26
Instrument Panel Cluster 4-3
Introduction iii

J

Jump Starting 6-18

L

Lights
Charging System 4-4
Oil Pressure 4-6

M

Maintenance Schedule
At Least Once a Year 7-2
Recommended Fluids and Lubricants 7-2
Manual, How to Use iii

N

Navigation/Radio System 4-9

O

Oil
Pressure Light 4-6
Owners, Canadian ii

P

Power
Steering Fluid 6-13
Power Outlet Alternating Current 3-2

R

Radios
Navigation/Radio System 4-9
Recommended Fluids and Lubricants 7-2
Regenerative Braking 3-17
Restraint System Check
Replacing Restraint System Parts After a Crash . . . 2-2
Running the Vehicle While Parked 3-17

S

Sealant Kit, Tire 6-33, 6-43
Service
Doing Your Own Work 6-2
Specifications and Capacities 6-55
Starting Your Vehicle 3-3
Steering
Fluid, Power 6-13
Storing the Tire Sealant and Compressor Kit 6-53

T

Tachometer 4-4
Tires
If a Tire Goes Flat 6-32
Inflation, Pressure 6-26
Inspection and Rotation 6-31
Sealant and Compressor Kit 6-33, 6-43, 6-53
Towing
Towing Your Vehicle 5-2
Trailer 5-7
Transmission, Automatic Fluid 6-5

V

Vehicle
Running While Parked 3-17
Voltage Devices, and Wiring 6-3

W

Wiring, High Voltage Devices 6-3