ELECTRICAL

Wiring Systems and Power Management - Component Locator - Door Component Views - Escalade, Suburban, Tahoe, Yukon

DOOR COMPONENT VIEWS

DRIVER DOOR COMPONENTS (X88 OR Z88)

cardiagn.com

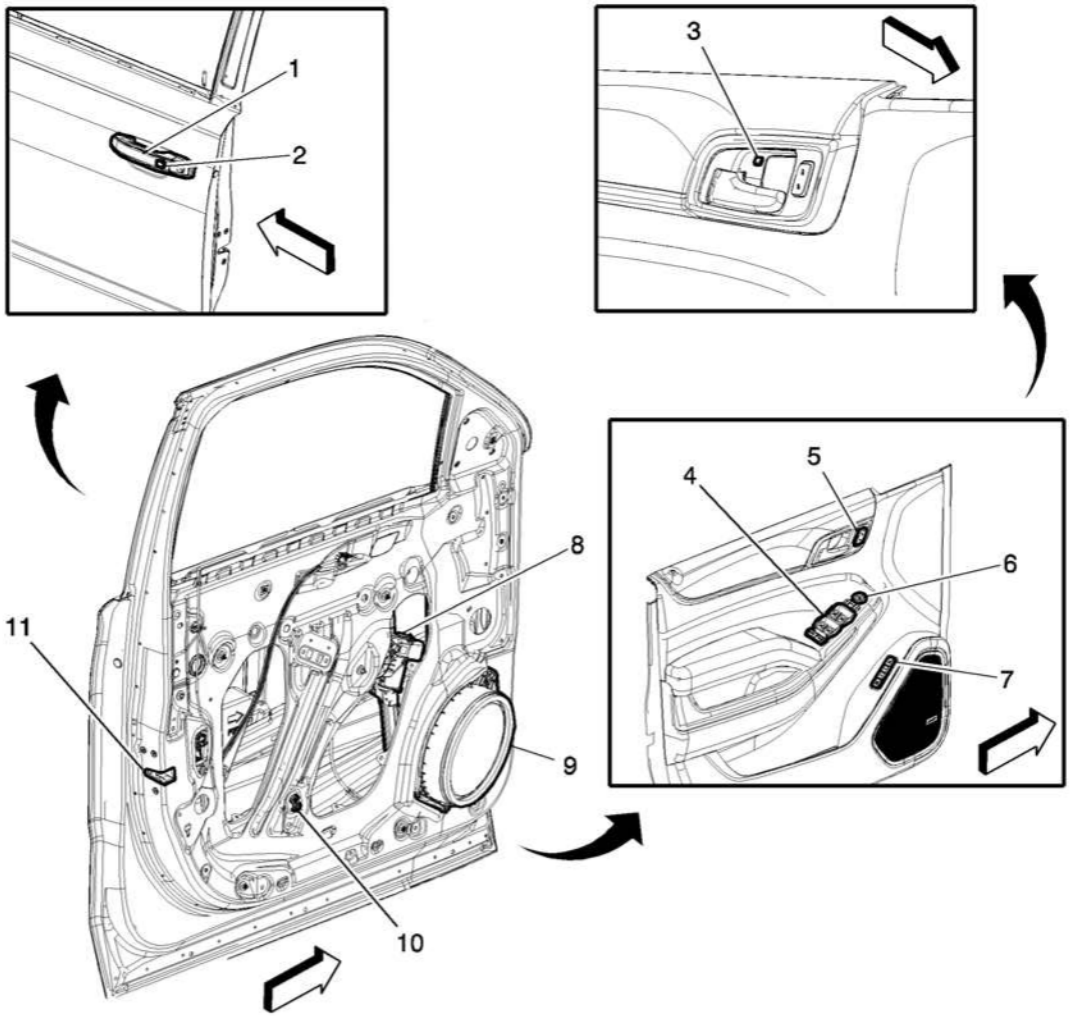

Fig. 1: Driver Door Components (X88 or Z88)
Courtesy of GENERAL MOTORS COMPANY

Items
1: A24D Door Handle Assembly - Driver Exterior **A24D Door Handle Assembly - Driver Exterior ((X88/Z88)+ATH)**
2: B27D Door Handle Switch - Driver Exterior
3: E1C Accent Lamp - Driver Door Handle **E1C Accent Lamp - Driver Door Handle**

cardiagn.com

Items
4: S79D Window Switch - Driver **S79D Window Switch - Driver**
5: S13D Door Lock Switch - Driver **S13D Door Lock Switch - Driver (X88/Z88)** **S13D Door Lock Switch - Driver (Z75)**
6: S52 Outside Rearview Mirror Switch **S52 Outside Rearview Mirror Switch (-A45)** **S52 Outside Rearview Mirror Switch (A45 with Z75)** **S52 Outside Rearview Mirror Switch (A45)**
7: S47D Seat Memory Switch - Driver (A45) **S47D Seat Memory Switch - Driver (A45)**
8: M74D Window Motor - Driver **M74D Window Motor - Driver**
9: P19AG Speaker - Left Front Door **P19AG Speaker - Left Front Door (-UQH)**
10: B63LF Side Impact Sensor - Left Front **B63LF Side Impact Sensor - Left Front**
11: A23D Door Latch Assembly - Driver **A23D Door Latch Assembly - Driver**

DRIVER DOOR COMPONENTS (Z75)

cardiagn.com

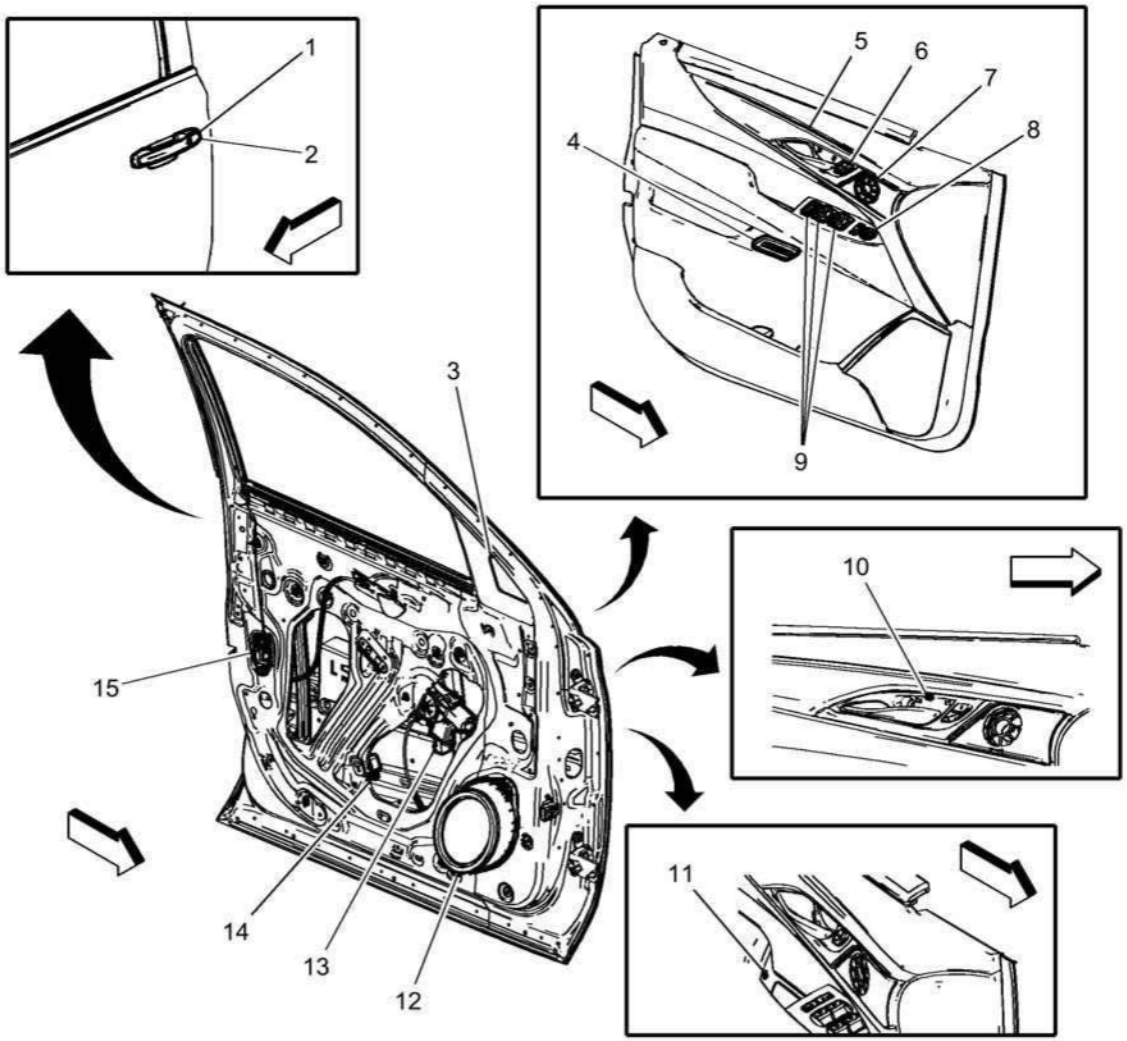

Fig. 2: Driver Door Components (Z75)
Courtesy of GENERAL MOTORS COMPANY

Items
1: A24D Door Handle Assembly - Driver Exterior **A24D Door Handle Assembly - Driver Exterior (Z75)**
2: B27D Door Handle Switch - Driver Exterior
3: P19HD Speaker - Left Front Door Tweeter (UQH) **P19HD Speaker - Left Front Door Tweeter (UQH)**

cardiagn.com

Items
4: S47D Seat Memory Switch - Driver (A45) **S47D Seat Memory Switch - Driver (A45)**
5: E1D Accent Lamp - Driver Door (Z75) **E1D Accent Lamp - Driver Door (Z75)**
6: S13D Door Lock Switch - Driver **S13D Door Lock Switch - Driver (Z75)**
7: P19AG Speaker - Left Front Door **P19AG Speaker - Left Front Door (-UQH)**
8: S52 Outside Rearview Mirror Switch **S52 Outside Rearview Mirror Switch (-A45)** **S52 Outside Rearview Mirror Switch (A45 with Z75)** **S52 Outside Rearview Mirror Switch (A45)**
9: S79D Window Switch - Driver **S79D Window Switch - Driver**
10: E1C Accent Lamp - Driver Door Handle **E1C Accent Lamp - Driver Door Handle**
11: E63D Flood Lamp - Driver Door Handle (Z75) **E63D Flood Lamp - Driver Door Handle (Z75)**
12: P19DD Speaker - Left Front Door Woofer (UQH) **P19DD Speaker - Left Front Door Woofer (UQH)**
13: M74D Window Motor - Driver **M74D Window Motor - Driver**
14: B63LF Side Impact Sensor - Left Front **B63LF Side Impact Sensor - Left Front**
15: A23D Door Latch Assembly - Driver **A23D Door Latch Assembly - Driver**

PASSENGER DOOR COMPONENTS (X88 OR Z88)

cardiagn.com

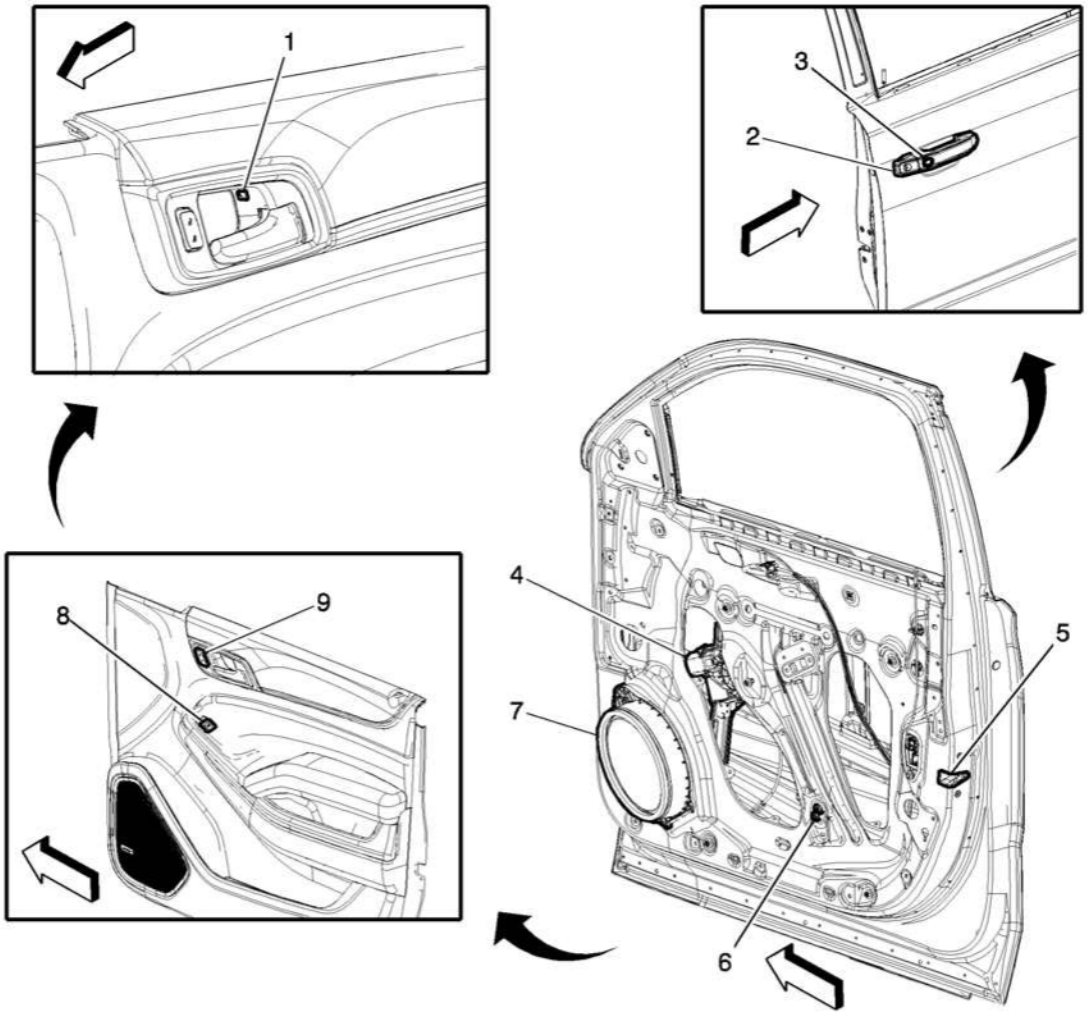

Fig. 3: Passenger Door Components (X88 or Z88)
Courtesy of GENERAL MOTORS COMPANY

Items
1: E1M Accent Lamp - Passenger Door Handle **E1M Accent Lamp - Passenger Door Handle**
2: A24P Door Handle Assembly - Passenger Exterior **A24P Door Handle Assembly - Passenger Exterior ((X88/Z88)+ATH)**
3: B27P Door Handle Switch - Passenger Exterior

cardiagn.com

Items
4: M74P Window Motor - Passenger **M74P Window Motor - Passenger**
5: A23P Door Latch Assembly - Passenger **A23P Door Latch Assembly - Passenger**
6: B63RF Side Impact Sensor - Right Front **B63RF Side Impact Sensor - Right Front**
7: P19AH Speaker - Right Front Door **P19AH Speaker - Right Front Door (-UQH)**
8: S79P Window Switch - Passenger **S79P Window Switch - Passenger (-A45)** **S79P Window Switch - Passenger (A45)**
9: S13P Door Lock Switch - Passenger **S13P Door Lock Switch - Passenger (X88/Z88)**

PASSENGER DOOR COMPONENTS (Z75)

cardiagn.com

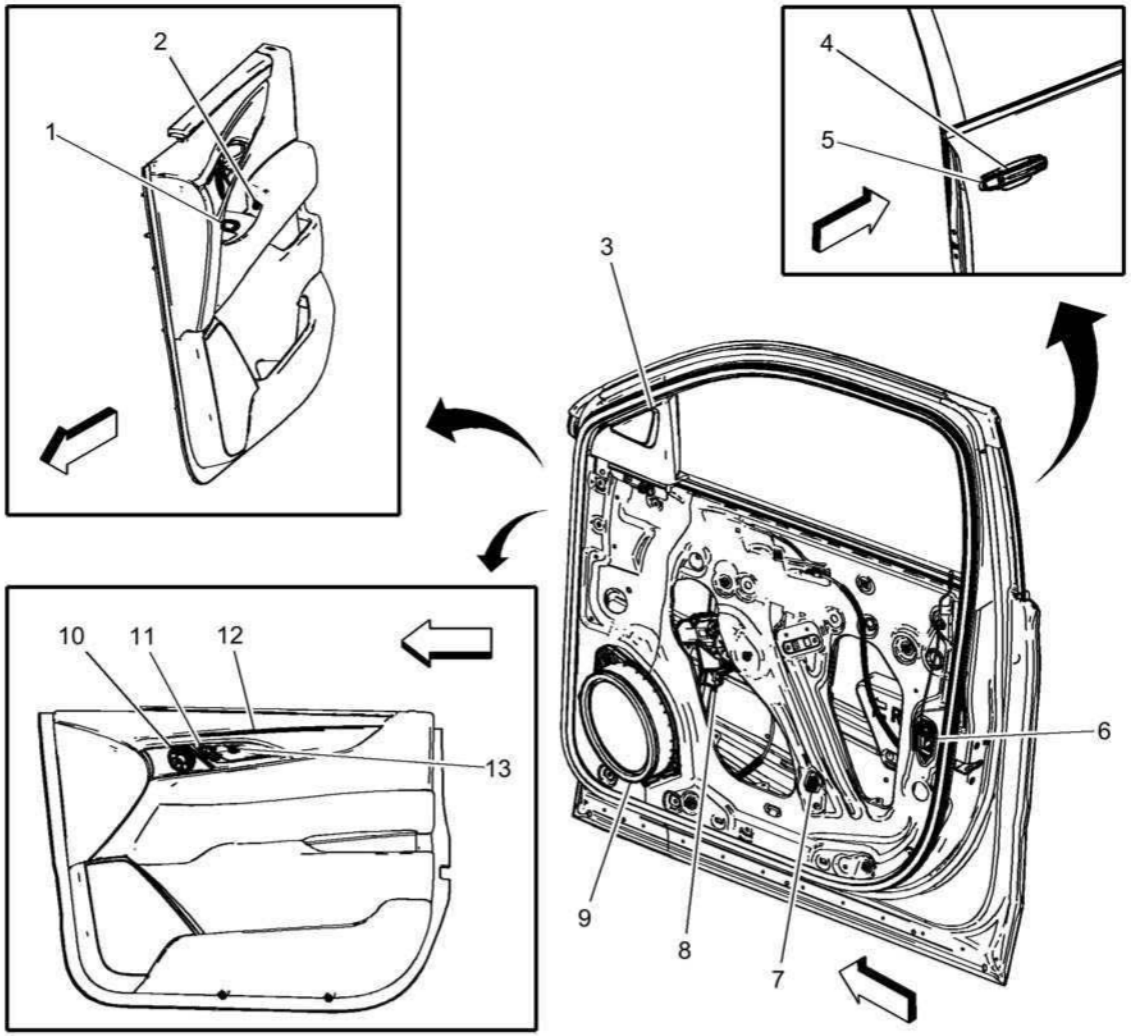

Fig. 4: Passenger Door Components (Z75)
Courtesy of GENERAL MOTORS COMPANY

Items
1: S79P Window Switch - Passenger **S79P Window Switch - Passenger (-A45)** **S79P Window Switch - Passenger (A45)**
2: E63P Flood Lamp - Passenger Door Handle (Z75) **E63P Flood Lamp - Passenger Door Handle (Z75)**
3: P19VD Speaker - Right Front Door Tweeter (UQH) **P19VD Speaker - Right Front Door Tweeter (UQH)**

cardiagn.com

Items
4: A24P Door Handle Assembly - Passenger Exterior **A24P Door Handle Assembly - Passenger Exterior (Z75)**
5: B27P Door Handle Switch - Passenger Exterior
6: A23P Door Latch Assembly - Passenger **A23P Door Latch Assembly - Passenger**
7: B63RF Side Impact Sensor - Right Front **B63RF Side Impact Sensor - Right Front**
8: M74P Window Motor - Passenger **M74P Window Motor - Passenger**
9: P19PD Speaker - Right Front Door Woofer (UQH) **P19PD Speaker - Right Front Door Woofer (UQA/UQH/UQS)**
10: P19AH Speaker - Right Front Door **P19AH Speaker - Right Front Door (-UQH)**
11: S13P Door Lock Switch - Passenger **S13P Door Lock Switch - Passenger (Z75)**
12: E1P Accent Lamp - Passenger Door (Z75) **E1P Accent Lamp - Passenger Door (Z75)**
13: E1M Accent Lamp - Passenger Door Handle **E1M Accent Lamp - Passenger Door Handle**

LEFT REAR DOOR COMPONENTS (X88 OR Z88)

cardiagn.com

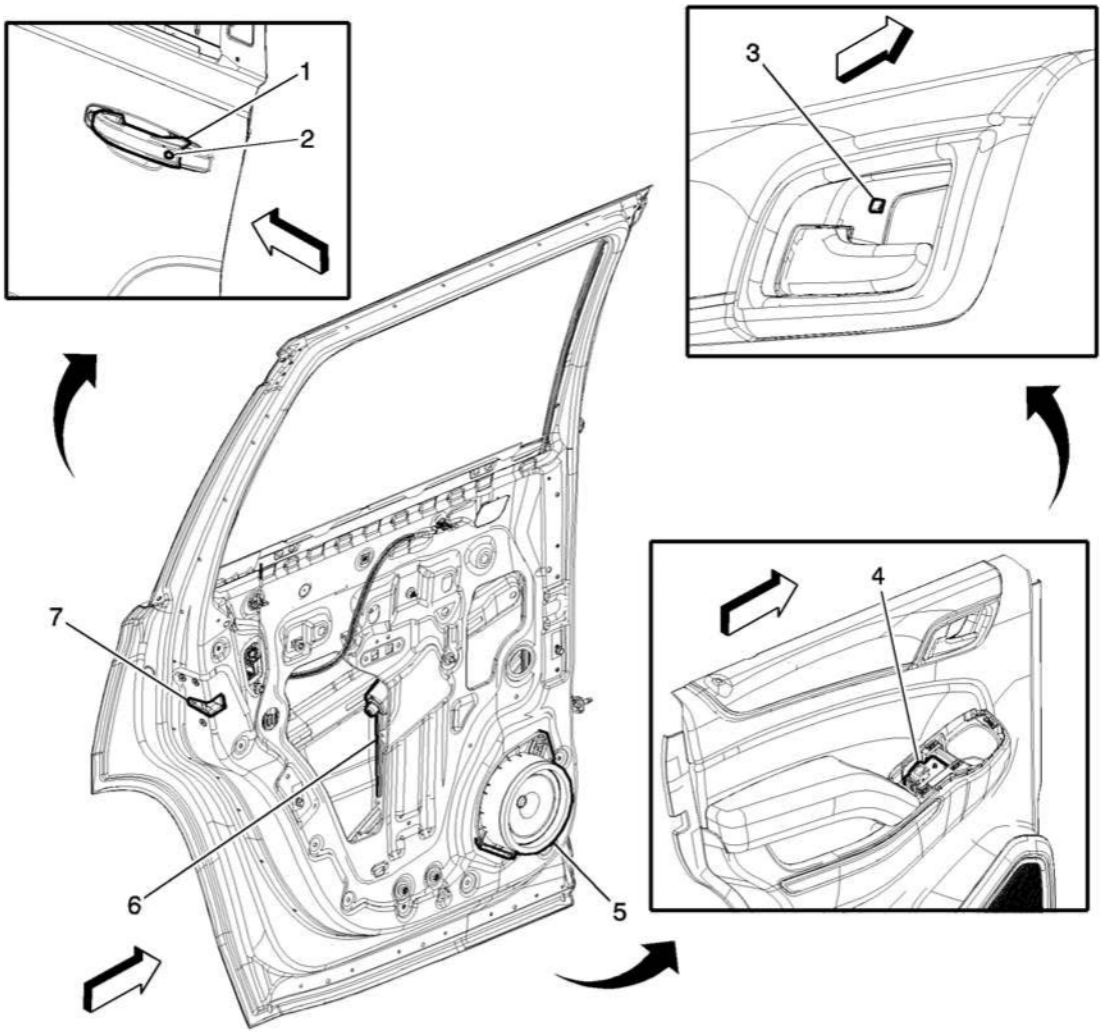

Fig. 5: Left Rear Door Components (X88 or Z88)
Courtesy of GENERAL MOTORS COMPANY

Items
1: A24LR Door Handle Assembly - Left Rear Exterior **A24LR Door Handle Assembly - Left Rear Exterior ((X88/Z88)+ATH)**
2: B27LR Door Handle Switch - Left Rear Exterior
3: E1E Accent Lamp - Left Rear Door Handle **E1E Accent Lamp - Left Rear Door Handle (X88/Z88)**

cardiagn.com

Items
4: S79LR Window Switch - Left Rear **S79LR Window Switch - Left Rear**
5: P19AL Speaker - Left Rear Door **P19AL Speaker - Left Rear Door**
6: M74LR Window Motor - Left Rear **M74LR Window Motor - Left Rear**
7: A23LR Door Latch Assembly - Left Rear **A23LR Door Latch Assembly - Left Rear**

LEFT REAR DOOR COMPONENTS (Z75)

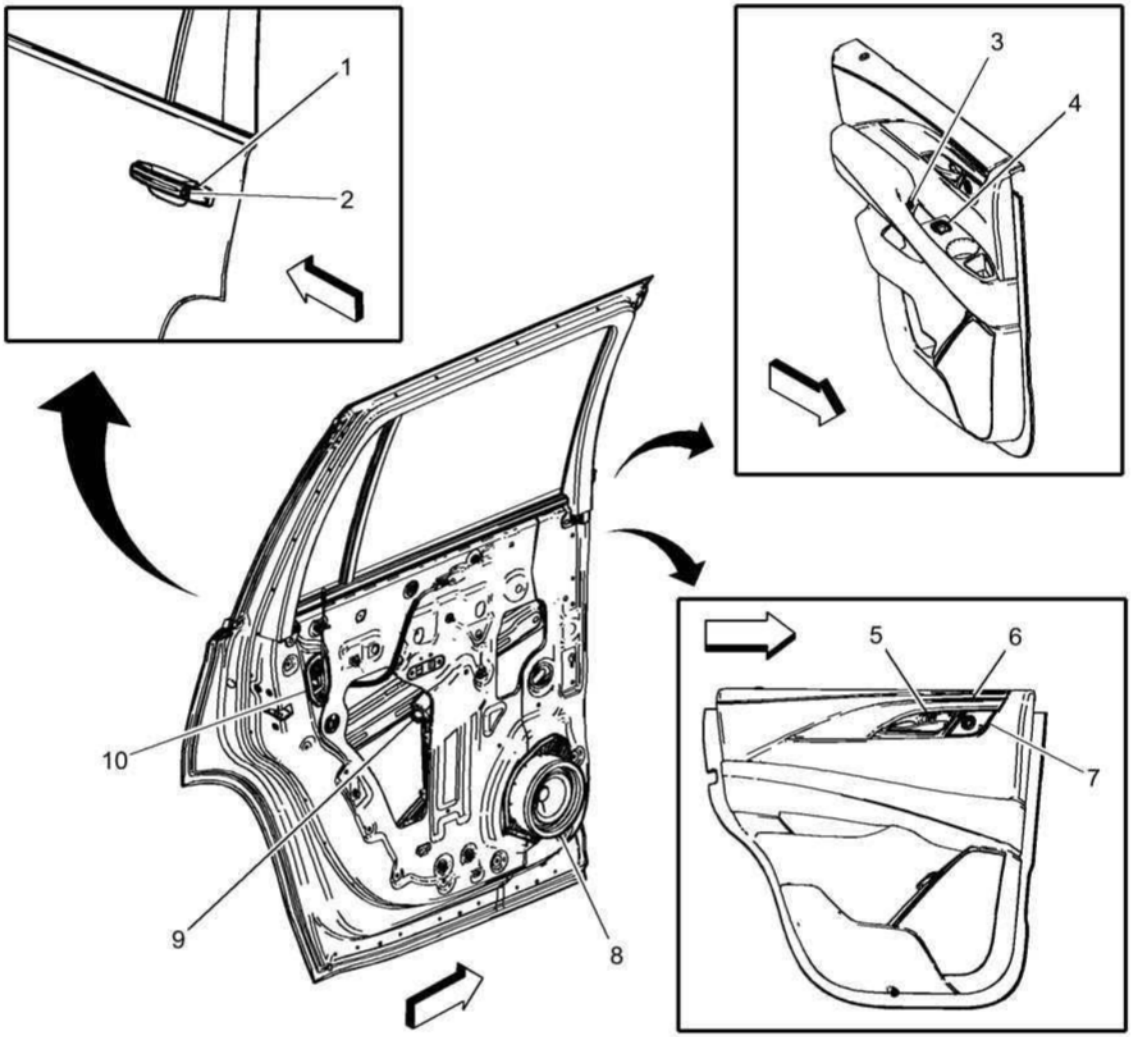

cardiagn.com

Fig. 6: Left Rear Door Components (Z75)
Courtesy of GENERAL MOTORS COMPANY

Items
1: A24LR Door Handle Assembly - Left Rear Exterior **A24LR Door Handle Assembly - Left Rear Exterior (Z75)**
2: B27LR Door Handle Switch - Left Rear Exterior
3: E55LR Flood Lamp - Left Rear Door Pocket (Z75) **E55LR Flood Lamp - Left Rear Door Pocket (Z75)**
4: S79LR Window Switch - Left Rear **S79LR Window Switch - Left Rear**
5: E1E Accent Lamp - Left Rear Door Handle
6: E1LR Accent Lamp - Left Rear Door (Z75) **E1LR Accent Lamp - Left Rear Door (Z75)**
7: P19M Speaker - Left Rear Tweeter (UQH) **P19M Speaker - Left Rear Tweeter (UQH)**
8: P19AL Speaker - Left Rear Door **P19AL Speaker - Left Rear Door**
9: M74LR Window Motor - Left Rear **M74LR Window Motor - Left Rear**
10: A23LR Door Latch Assembly - Left Rear **A23LR Door Latch Assembly - Left Rear**

RIGHT REAR DOOR COMPONENTS (X88 OR Z88)

cardiagn.com

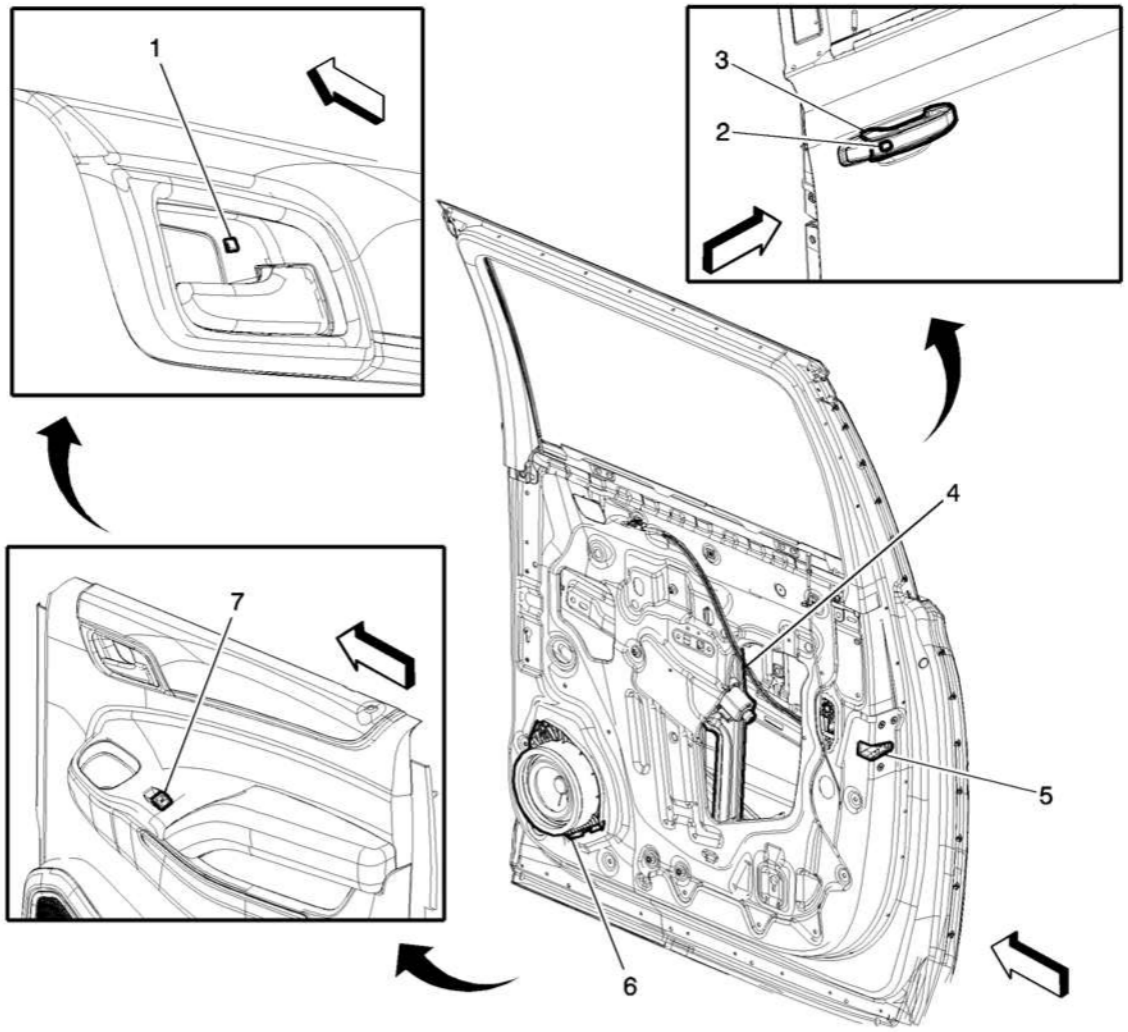

Fig. 7: Right Rear Door Components (X88 or Z88)
Courtesy of GENERAL MOTORS COMPANY

Items
1: E1E Accent Lamp - Left Rear Door Handle **E1E Accent Lamp - Left Rear Door Handle (X88/Z88)**
2: B27RR Door Handle Switch - Right Rear Exterior
3: A24RR Door Handle Assembly - Right Rear Exterior **A24RR Door Handle Assembly - Right Rear Exterior ((X88/Z88)+ATH)**

cardiagn.com

Items
4: M74RR Window Motor - Right Rear **M74RR Window Motor - Right Rear**
5: A23P Door Latch Assembly - Passenger **A23P Door Latch Assembly - Passenger**
6: P19AM Speaker - Right Rear Door **P19AM Speaker - Right Rear Door**
7: S79RR Window Switch - Right Rear **S79RR Window Switch - Right Rear**

RIGHT REAR DOOR COMPONENTS (Z75)

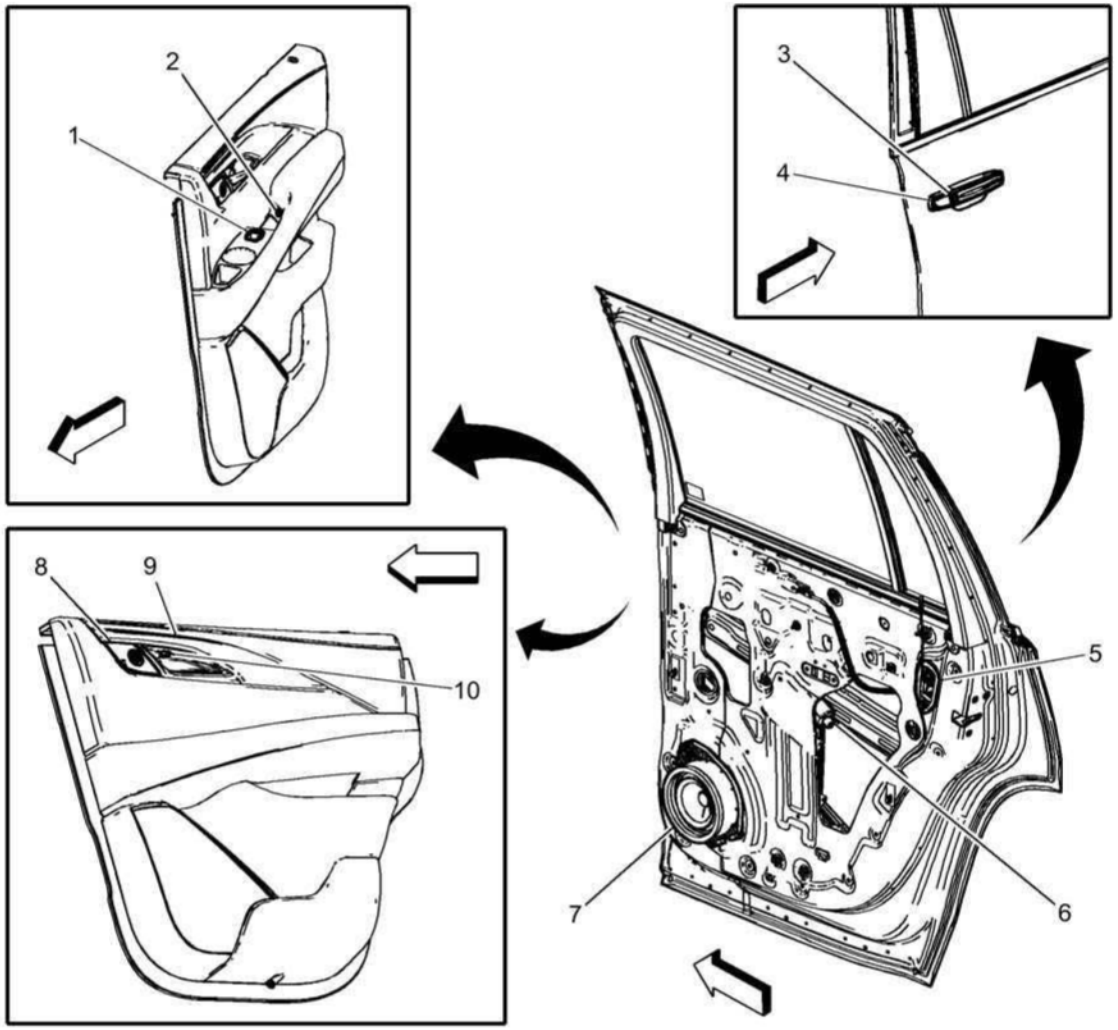

cardiagn.com

Fig. 8: Right Rear Door Components (Z75)
Courtesy of GENERAL MOTORS COMPANY

Items
1: S79RR Window Switch - Right Rear **S79RR Window Switch - Right Rear**
2: E55RR Flood Lamp - Right Rear Door Pocket (Z75) **E55RR Flood Lamp - Right Rear Door Pocket (Z75)**
3: B27RR Door Handle Switch - Right Rear Exterior
4: A24RR Door Handle Assembly - Right Rear Exterior **A24RR Door Handle Assembly - Right Rear Exterior (Z75)**
5: A23RR Door Latch Assembly - Right Rear **A23RR Door Latch Assembly - Right Rear**
6: M74RR Window Motor - Right Rear **M74RR Window Motor - Right Rear**
7: P19AM Speaker - Right Rear Door **P19AM Speaker - Right Rear Door**
8: P19Z Speaker - Right Rear Tweeter (UQH) **P19Z Speaker - Right Rear Tweeter (UQH)**
9: E1RR Accent Lamp - Right Rear Door (Z75) **E1RR Accent Lamp - Right Rear Door (Z75)**
10: E1F Accent Lamp - Right Rear Door Handle **E1F Accent Lamp - Right Rear Door Handle (Z75)**

DOOR MIRROR COMPONENTS

cardiagn.com

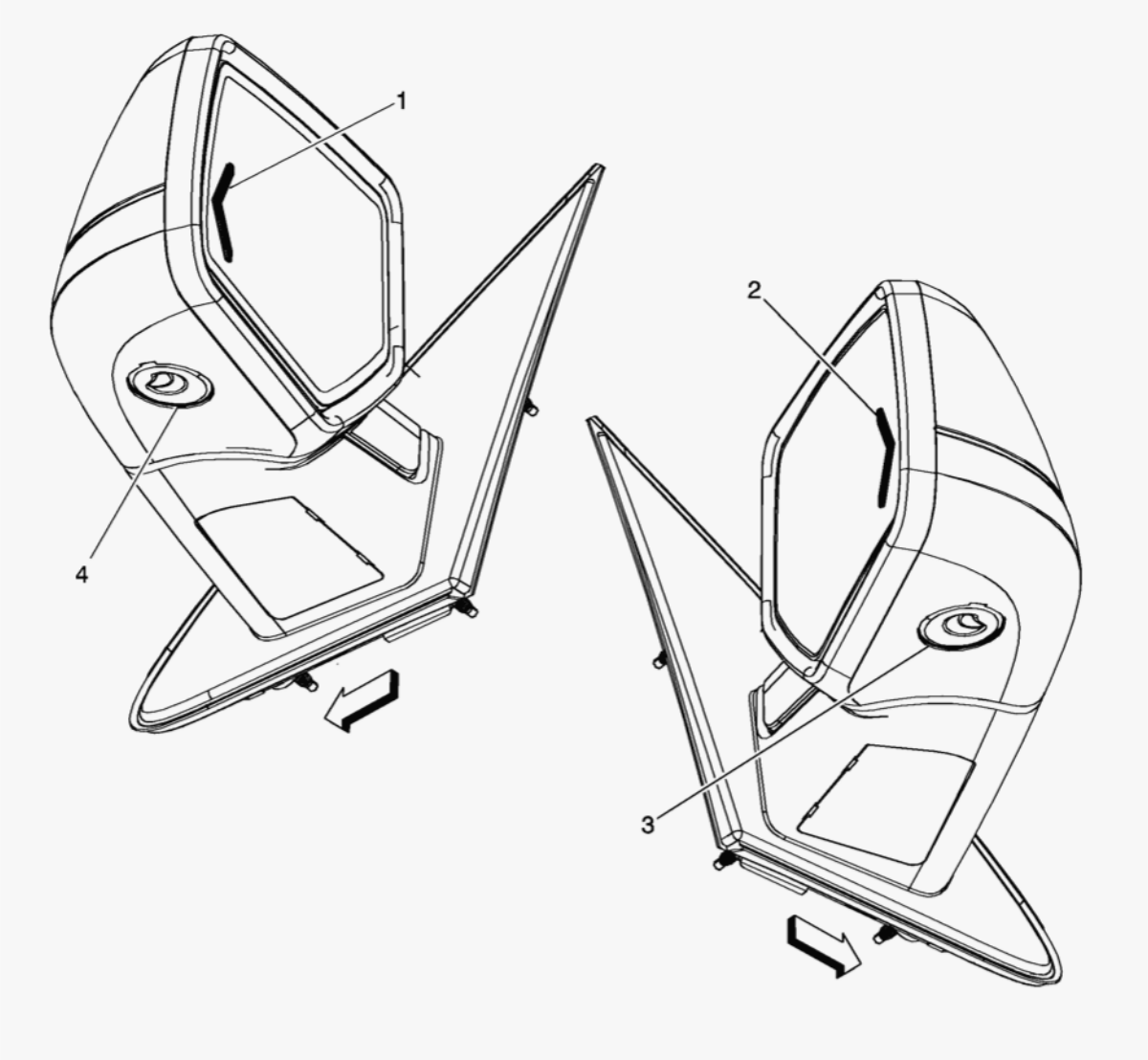

Fig. 9: Door Mirror Components
Courtesy of GENERAL MOTORS COMPANY

Items
1: E4Y Turn Signal Repeater Lamp - Left
2: E4Z Turn Signal Repeater Lamp - Right
3: E8YP Outside Rearview Mirror Courtesy Lamp - Passenger (DL3) **E8YP Outside Rearview Mirror Courtesy Lamp - Passenger (DL3)**

cardiagn.com

Items
4: E8YD Outside Rearview Mirror Courtesy Lamp - Driver (DL3) **E8YD Outside Rearview Mirror Courtesy Lamp - Driver (DL3)**

LIFTGATE COMPONENTS

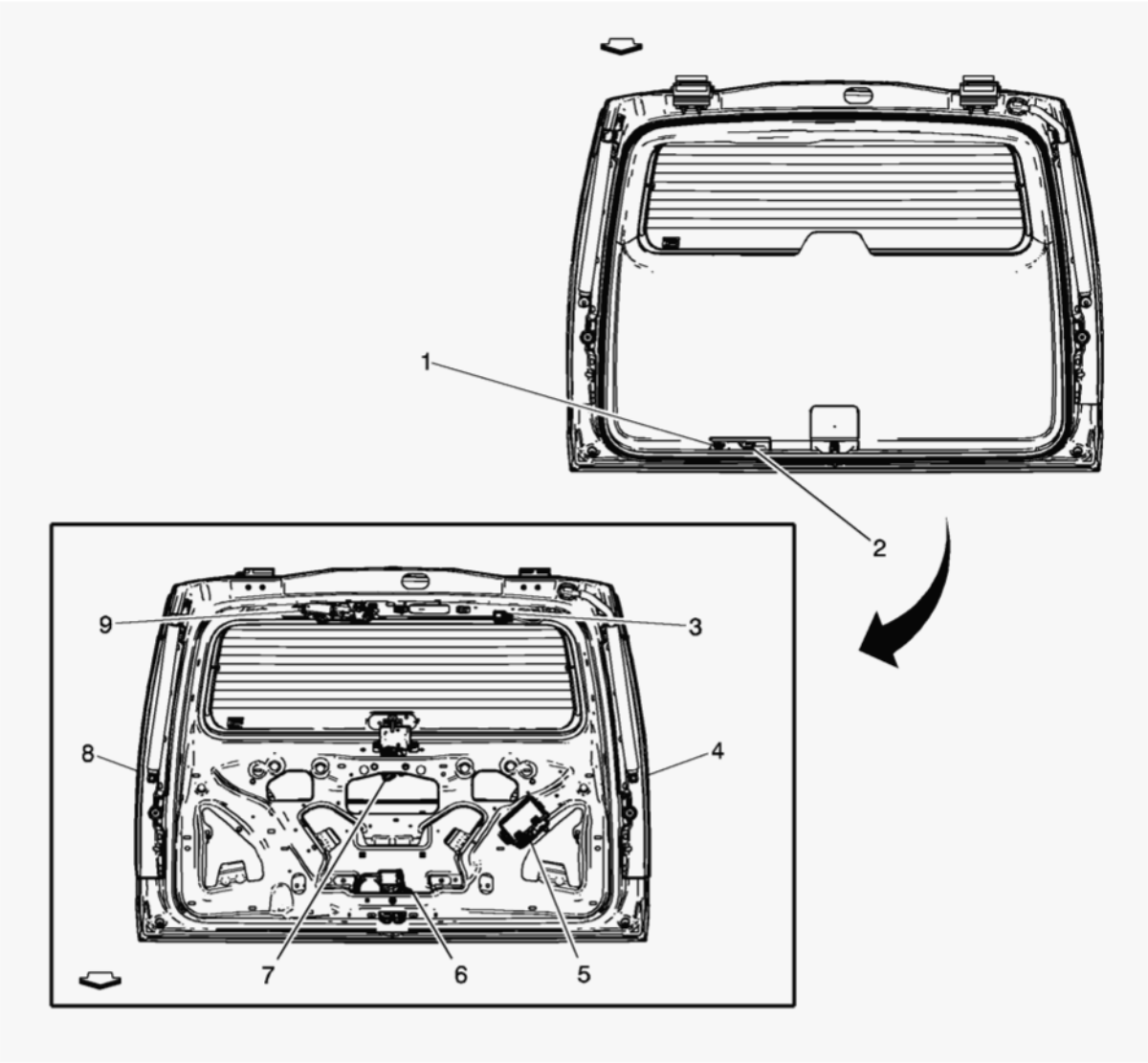

Fig. 10: Liftgate Components
Courtesy of GENERAL MOTORS COMPANY

cardiagn.com

Items
1: S46 Liftgate Handle Switch (TB5 or TC2) **S46 Liftgate Handle Switch (TB5/TC2)**
2: B70 Liftgate Close Switch (TB5 or TC2) **B70 Liftgate Close Switch (TB5/TC2)**
3: M31 Liftgate Motor (TB5 or TC2) **M31 Liftgate Motor (TB5/TC2)**
4: B71L Liftgate Object Sensor - Left (TB5 or TC2) **B71L Liftgate Object Sensor - Left (TB5/TC2)**
5: K39 Liftgate Control Module (TB5 or TC2) **K39 Liftgate Control Module X1 (TB5/TC2)** **K39 Liftgate Control Module X2 (TB5/TC2)** **K39 Liftgate Control Module X3 (TB5/TC2)**
6: A23C Liftgate Latch Assembly **A23C Liftgate Latch Assembly (-TB5/TC2)** **A23C Liftgate Latch Assembly (TB5/TC2)**
7: M33 Liftgate Window Latch Assembly
8: B71R Liftgate Object Sensor - Right (TB5 or TC2) **B71R Liftgate Object Sensor - Right (TB5/TC2)**
9: M45 Rear Wiper Motor **M45 Rear Wiper Motor**

cardiagn.com

ELECTRICAL

Wiring Systems and Power Management - Component Locator - Electrical Center Identification Views - Escalade, Suburban, Tahoe, Yukon

ELECTRICAL CENTER IDENTIFICATION VIEWS

X50A FUSE BLOCK - UNDERHOOD LABEL

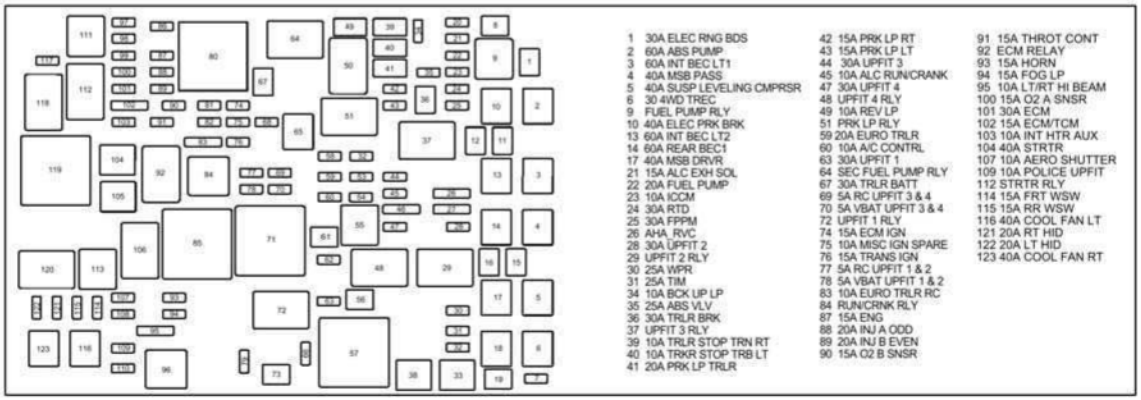

Fig. 1: X50A Fuse Block - Underhood Label
Courtesy of GENERAL MOTORS COMPANY

X50A FUSE BLOCK - UNDERHOOD TOP VIEW

cardiagn.com

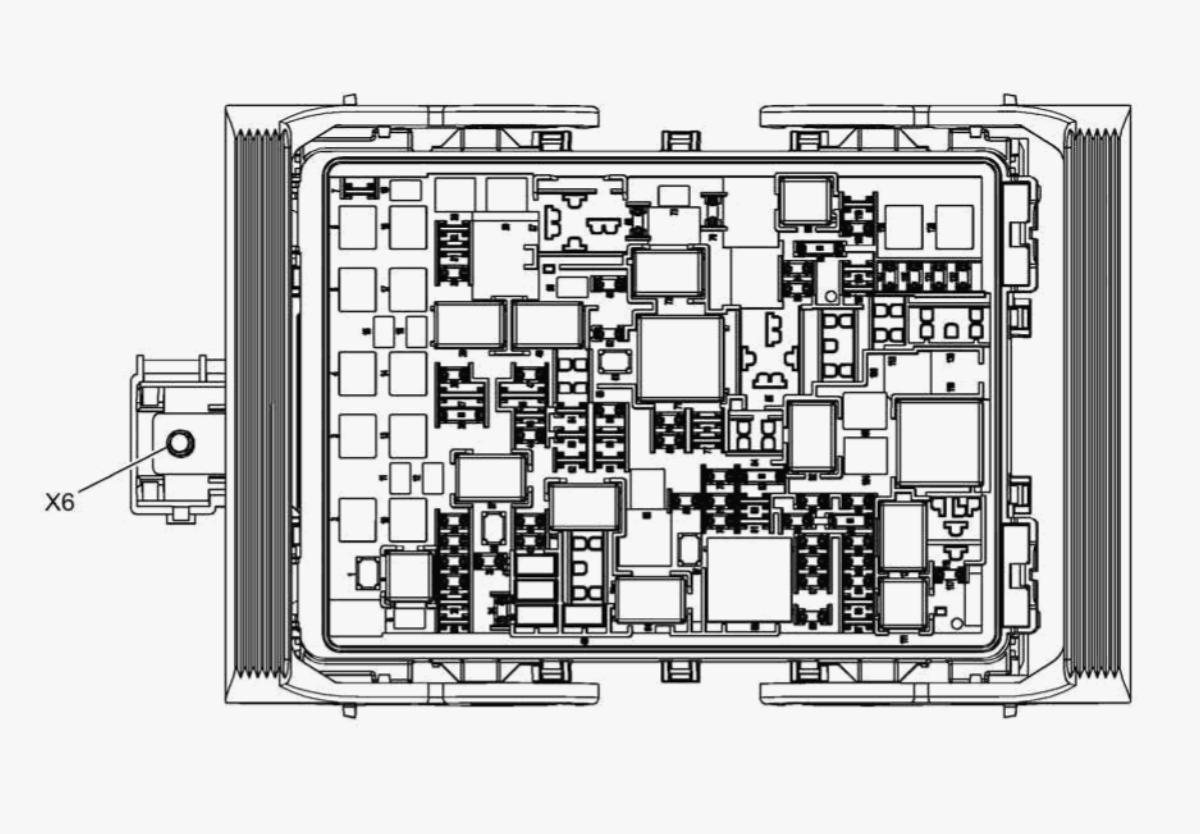

Fig. 2: X50A Fuse Block - Underhood Top View
Courtesy of GENERAL MOTORS COMPANY

X50A Fuse Block - Underhood Usage

No.	Device Label Name	Fuse And Relay Description	Rating	Circuits
Fuses				
1	ELEC RNG BDS	F1UA	30A	K4 Assist Step Control Module
2	ABS PUMP	F2UA	60A	K17 Electronic Brake Control Module
3	INT BEC LT1	F3UA	60A	X51L Fuse Block - Instrument Panel Left
4	MSB PASS	F4UA	40A	M101R Seat Belt Retractor Motor Module - Right (AX7)
5	SUSP LEVELING CMPRSR	F5UA	40A	KR98 Vehicle Level Control Compressor Relay (Z85 or Z95)

cardiagn.com

No.	Device Label Name	Fuse And Relay Description	Rating	Circuits
6	4WD TREC	F6UA	30A	A16 Transfer Case Motor (NP0 or NQH), K69 Transfer Case Control Module (NP0 or NQH)
7	-	F7UA	-	Not Used
8	-	F8UA	-	Not Used
10	ELEC PRK BRK	F10UA	40A	K83 Parking Brake Control Module (J71)
11	-	F11UA	-	Not Used
12	-	F12UA	-	Not Used
13	INT BEC LT2	F13UA	60A	X51L Fuse Block - Instrument Panel Left
14	REAR BEC1	F14UA	60A	X53A Fuse Block - Rear Body
15	-	F15UA	-	Not Used
16	-	F16UA	-	Not Used
17	MSB DRVR	F17UA	40A	M101L Seat Belt Retractor Motor Module - Left (AX7)
18	-	F18UA	-	Not Used
19	-	F19UA	-	Not Used
20	-	F20UA	-	Not Used
21	ALC EXH SOL	F21UA	15A	Q4 Vehicle Level Control Solenoid Valve (Z85)
22	FUEL PUMP	F22UA	20A	KR23A Fuel Pump Relay (L96), A7 Fuel Pump and Level Sensor Assembly (L96)
23	ICCM	F23UA	10A	K38 Chassis Control Module (JL1 or Z85)
24	RTD	F24UA	30A	K19 Suspension Control Module (Z95)
25	FPPM	F25UA	30A	K111 Fuel Pump Driver Control Module (L83 or L86)
26	AHA_RVC	F26UA	5A	K9 Body Control Module
27	-	F27UA	-	Not Used
28	UPFIT 2	F28UA	30A	W9 Blunt Cut - Police Provision (5W4 or 9C1)
30	WPR	F30UA	25A	KR12B Windshield Wiper Relay, KR12C Windshield Wiper Speed Control Relay
31	TIM	F31UA	25A	K101 Trailer Interface Control Module (VQ9)
32	-	F32UA	-	Not Used
33	-	F33UA	-	Not Used

cardiagn.com

No.	Device Label Name	Fuse And Relay Description	Rating	Circuits
34	BCK UP LP	F34UA	10A	A10 Inside Rearview Mirror (DD8), B87 Rearview Camera (DD8 without UVH), E5A Backup Lamp - Left, E5B Backup Lamp - Right
35	ABS VLV	F35UA	25A	K17 Electronic Brake Control Module
36	TRLR BRK	F36UA	30A	K67 Trailer Brake Control Module (JL1), W24 Blunt Cut Trailer Brakes Provision (without JL1)
38	-	F38UA	-	Not Used
39	TRLR STOP TRN RT	F39UA	10A	X88 Trailer Connector
40	TRLR STOP TRN LT	F40UA	10A	X88 Trailer Connector
41	PRK LP TRLR	F41UA	20A	X88 Trailer Connector
42	PRK LP RT	F42UA	15A	E2RF Side Marker Lamp - Right Front (X88 or Z88), E4K Park Lamp - Right Front (without Y91 or Z75), E5F Tail Lamp - Right (Z75 or Z88), E13RA Headlamp Assembly - Right (Z75), E42R Tail Lamp Assembly - Right (X88), E69R Multifunction Lamp Assembly - Front Fascia Right (Z75)
43	PRK LP LT	F43UA	15A	E2LF Side Marker Lamp - Left Front (X88 or Z88), E4J Park Lamp - Left Front (without Y91 or Z75), E5E Tail Lamp - Left (Z75 or Z88), E13LA Headlamp Assembly - Left (Z75), E42L Tail Lamp Assembly - Left (X88), E69L Multifunction Lamp Assembly - Front Fascia Left (Z75)
44	UPFIT 3	F44UA	30A	W9 Blunt Cut - Police Provision (5W4 or 9C1)
45	ALC RUN/CRANK	F45UA	10A	KR98 Vehicle Level Control Compressor Relay (Z85)
46	-	F46UA	-	Not Used
47	UPFIT 4	F47UA	30A	W9 Blunt Cut - Police Provision (5W4 or 9C1)
49	REV LP	F49UA	10A	X88 Trailer Connector
52	-	F52UA	-	Not Used
53	-	F53UA	-	Not Used
54	-	F54UA	-	Not Used
56	-	F56UA	-	Not Used
58	-	F58UA	-	Not Used

cardiagn.com

No.	Device Label Name	Fuse And Relay Description	Rating	Circuits
59	EURO TRLR	F59UA	20A	W8 Blunt Cut - Trailer Provision (VQ9)
60	A/C CONTRL	F60UA	10A	KR29 A/C Compressor Clutch Relay
61	-	F61UA	-	Not Used
62	-	F62UA	-	Not Used
63	UPFIT 1	F63UA	30A	W9 Blunt Cut - Police Provision (5W4 or 9C1)
65	-	F65UA	-	Not Used
66	-	F66UA	-	Not Used
67	TRLR BATT	F67UA	30A	X88 Trailer Connector
68	SEC FUEL PUMP	F68UA	20A	KR23B Fuel Pump Relay - Secondary (L96), A6D Fuel Pump and Level Sensor Assembly - Secondary (L96)
69	RC UPFIT 3 & 4	F69UA	5A	KR161C Configurable Provision Relay 3 (5W4 or 9C1), KR161D Configurable Provision Relay 4 (5W4 or 9C1)
70	VBAT UPFIT 3 & 4	F70UA	5A	KR161C Configurable Provision Relay 3 (5W4 or 9C1), KR161D Configurable Provision Relay 4 (5W4 or 9C1)
73	-	F73UA	-	Not Used
74	ECM IGN	F74UA	15A	K20 Engine Control Module, K38 Chassis Control Module, K111 Fuel Pump Control Module (L83 or L86)
75	MISC IGN SPARE	F75UA	10A	W9 Blunt Cut - Police Provision (5W4 or 9C1)
76	TRANS IGN	F76UA	15A	K71 Transmission Control Module, Front Axle Engagement Actuator (NP0 or NQH)
77	RC UPFIT 1 & 2	F77UA	5A	KR161A Configurable Provision Relay 1 (5W4 or 9C1), KR161B Configurable Provision Relay 2 (5W4 or 9C1)
78	VBAT UPFIT 1 & 2	F78UA	5A	KR161A Configurable Provision Relay 1 (5W4 or 9C1), KR161B Configurable Provision Relay 2 (5W4 or 9C1)
79	-	F79UA	-	Not Used
81	-	F81UA	-	Not Used
82	-	F82UA	-	Not Used
83	EURO TRLR RC	F83UA	10A	K101 Trailer Interface Control Module (VQ9)
86	-	F86UA	-	Not Used

cardiagn.com

No.	Device Label Name	Fuse And Relay Description	Rating	Circuits
87	ENG	F87UA	15A	B75C Multifunction Intake Air Sensor, B198 Fuel Composition Sensor (without L96 or Z75)
88	INJ A ODD	F88UA	20A	K20 Engine Control Module (L83 or L86), Q17A Fuel Injector 1 (L96), Q17C Fuel Injector 3 (L96), Q17E Fuel Injector 5 (L96), Q17G Fuel Injector 7 (L96), T8A Ignition Coil 1, T8C Ignition Coil 3, T8E Ignition Coil 5, T8G Ignition Coil 7
89	INJ B EVEN	F89UA	20A	K20 Engine Control Module (L83 or L86), Q17B Fuel Injector 2 (L96), Q17D Fuel Injector 4 (L96), Q17F Fuel Injector 6 (L96), Q17H Fuel Injector 8 (L96), T8B Ignition Coil 2, T8D Ignition Coil 4, T8F Ignition Coil 6, T8H Ignition Coil 8
90	O2 B SNSR	F90UA	15A	B52D Heated Oxygen Sensor - Bank 1 Sensor 2, B52F Heated Oxygen Sensor - Bank 2 Sensor 2
91	THROT CONT	F91UA	15A	K20 Engine Control Module (L96), M60A Active Grille Air Shutter 1 Motor Module (Z75), M60B Active Grille Air Shutter 2 Motor Module (Z75)
93	HORN	F93UA	15A	P12 Horn
94	FOG LP	F94UA	15A	E29LF Fog Lamp - Left Front (T3U), E29RF Fog Lamp - Right Front (T3U)
95	LT/RT HI BEAM	F95UA	10A	E4E Headlamp - Left High Beam (X88 or Z88), E4F Headlamp - Right High Beam (X88 or Z88), E13LA Headlamp Assembly - Left (Z75), E13RA Headlamp Assembly - Right (Z75)
97	-	F97UA	-	Not Used
98	-	F98UA	-	Not Used
99	-	F99UA	-	Not Used
100	O2 A SNSR	F100UA	15A	B52C Heated Oxygen Sensor - Bank 1 Sensor 1, B52E Heated Oxygen Sensor - Bank 2 Sensor 1, Q12 Evaporative Emission Purge Solenoid Valve, Q43 Valve Lifter Oil Manifold Assembly (L83 or L86), Q44 Engine Oil Pressure Control Solenoid Valve (L83 or L86)

cardiagn.com

No.	Device Label Name	Fuse And Relay Description	Rating	Circuits
101	ECM	F101UA	30A	K20 Engine Control Module (L83 or L86)
102	ECM/TCM	F102UA	15A	K20 Engine Control Module, K71 Transmission Control Module
103	INT HTR AUX	F103UA	10A	KR79 Auxiliary Battery Relay 2 (5W4 or 9C1), KR81 Auxiliary Battery Relay 1 (5W4 or 9C1)
104	STRTR	F104UA	40A	KR27 Starter Relay
105	-	F105UA	-	Not Used
107	AERO SHUTTER	F107UA	10A	Not Used
108	-	F108UA	-	Not Used
109	POLICE UPFIT	F109UA	10A	X122 Forward Lamp Harness to Forward Lamp Harness (6J7)
110	-	F110UA	-	Not Used
114	FRT WSW	F114UA	15A	G24 Windshield Washer Pump
115	RR WSW	F115UA	15A	G19 Rear Window Washer Pump
116	COOL FAN LT	F116UA	40A	G10L Cooling Fan Motor - Left
117	-	F117UA	-	Not Used
121	RT HID	F121UA	20A	T7R Headlamp Ballast - Right (T4F)
122	LT HID	F122UA	20A	T7L Headlamp Ballast - Left (T4F)
123	COOL FAN RT	F123UA	40A	G10R Cooling Fan Motor - Right
Relays				
9	FUEL PUMP RLY	KR23A Fuel Pump Relay	-	A7 Fuel Pump and Level Sensor Assembly (L96)
29	UPFIT 2 RLY	KR161B Configurable Provision Relay 2	-	F28UA
37	UPFIT 3 RLY	KR161C Configurable Provision Relay 3	-	F44UA
48	UPFIT 4 RLY	KR161D Configurable Provision Relay 4	-	F47UA
50	-	-	-	Not Used
51	PRK LP RLY	KR53 Park Lamps Relay	-	F41UA, F42UA, F43UA

cardiagn.com

No.	Device Label Name	Fuse And Relay Description	Rating	Circuits
55	-	-	-	Not Used
57	-	-	-	Not Used
64	SEC FUEL PUMP RLY	KR23B Fuel Pump Relay - Secondary	-	A6D Fuel Pump and Level Sensor Assembly - Secondary (L96)
71	-	-	-	Not Used
72	UPFIT 1 RLY	KR161A Configurable Provision Relay 1	-	F63UA
80	-	-	-	Not Used
84	RUN/CRNK RLY	KR73 Ignition Main Relay	-	F45UA (Z85), F69UA, F74UA, F76UA, F77UA, F107UA
85	-	-	-	Not Used
92	ECM RLY	KR75 Engine Controls Ignition Relay	-	F87UA, F88UA, F89UA, F90UA, F100UA, F101UA, KR29 A/C Compressor Clutch Relay
96	-	-	-	Not Used
106	-	-	-	Not Used
111	-	-	-	Not Used
112	STRTR RLY	KR27 Starter Relay	-	M64 Starter Motor
113	-	-	-	Not Used
118	-	-	-	Not Used
119	-	-	-	Not Used
120	-	-	-	Not Used
Important: Relays listed below are non-serviceable Printed Circuit Board (PCB) relays and are internal to the block				
-	-	KR3 Horn Relay	-	F93UA
-	-	KR6 Rear Window Washer Pump Relay	-	F115UA
-	-	KR11 Windshield Washer Pump Relay	-	F114UA
-	-	KR12B Windshield Wiper Relay	-	KR12C Windshield Wiper Speed Control Relay

cardiagn.com

No.	Device Label Name	Fuse And Relay Description	Rating	Circuits
-	-	KR12C Windshield Wiper Speed Control Relay	-	M75 Windshiled Wiper Motor
-	-	KR29 A/C Compressor Clutch Relay	-	Q2 A/C Compressor Clutch
-	-	KR46 Front Fog Lamp Relay	-	F94UA (T3U)
-	-	KR48 Headlamp High Beam Relay	-	F95UA
-	-	KR49 Headlamp Low Beam Relay	-	F121UA (T4F), F122UA (T4F)
-	-	KR61 Trailer Backup Lamps Relay	-	F34UA, F49UA
-	-	KR63L Trailer Stop/Turn Signal Lamp Relay - Left	-	F40UA
-	-	KR63R Trailer Stop/Turn Signal Lamp Relay - Right	-	F39UA
Note: Items listed below are diagnostic testing points				
TP1	-	TP1	-	KR29 A/C Compressor Clutch Relay
TP2	-	TP2	-	KR12C Windshield Wiper Speed Control Relay

X50A FUSE BLOCK - UNDERHOOD BOTTOM VIEW

cardiagn.com

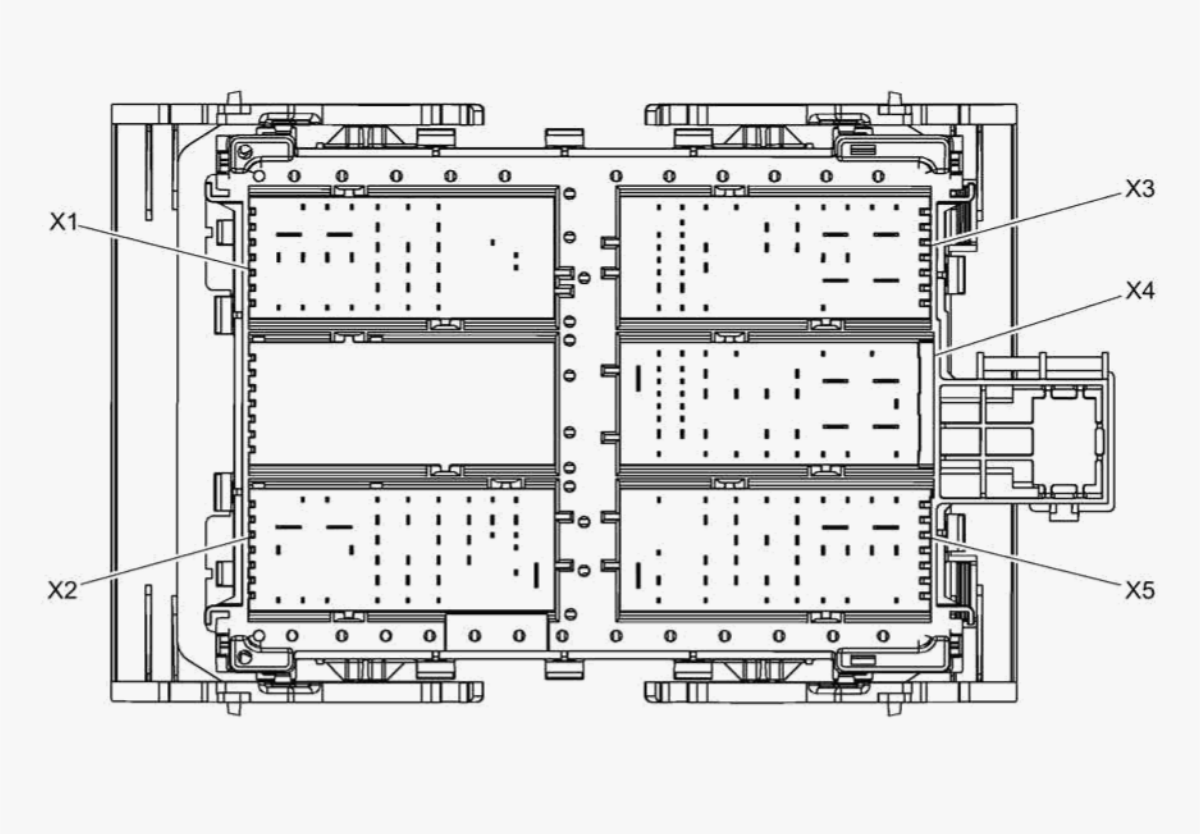

Fig. 3: X50A Fuse Block - Underhood Bottom View
Courtesy of GENERAL MOTORS COMPANY

X50A FUSE BLOCK - UNDERHOOD X1

cardiagn.com

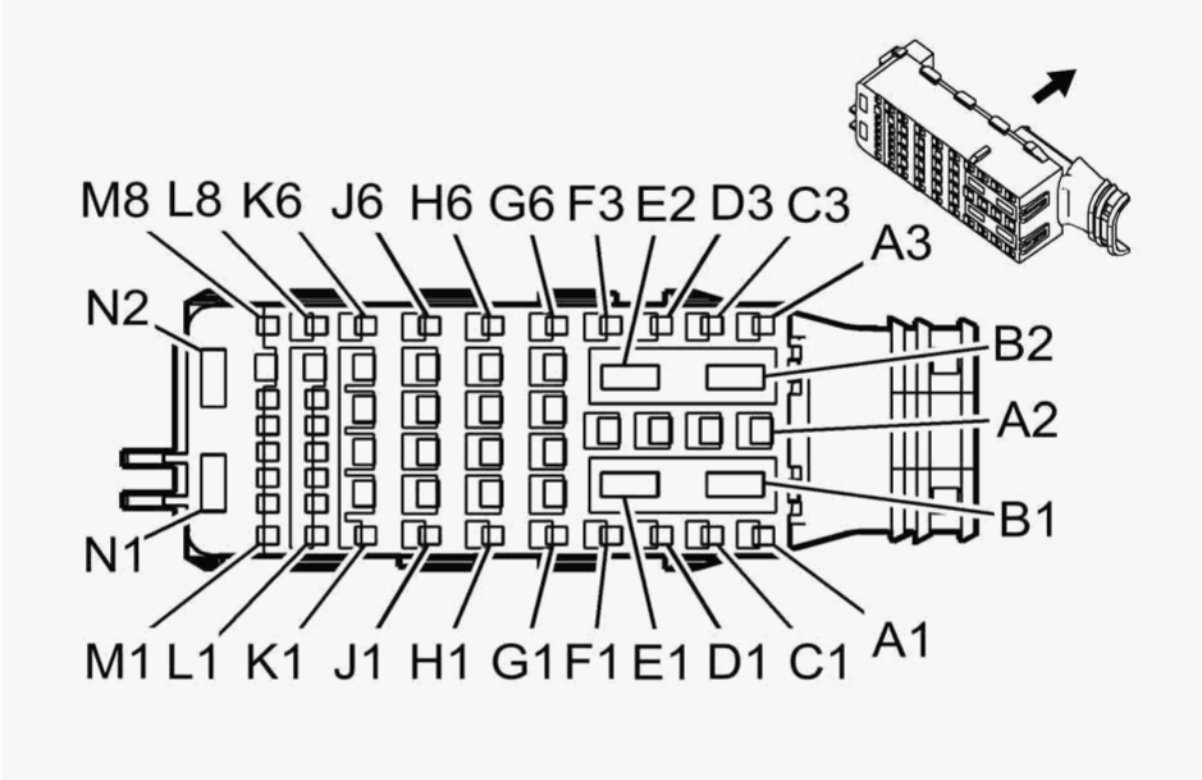

Connector Part Information

- Harness Type: Forward Lamp
- OEM Connector: 33116190
- Service Connector: 19329923
- Description: 58-Way F 1.5, 2.8, 800 Metri-Pack Series (BN)

Terminal Part Information

Terminal Type ID	Terminated Lead	Diagnostic Test Probe	Terminal Removal Tool	Service Terminal	Tray	Core Crimp	Insulation Crimp
I	13575544	J-35616-35 (VT)	J-38125-12A	1326030-6	12	E	C
II	13575718	J-35616-44 (YE)	J-38125-558	12110127	2	F	G
III	19301761	J-35616-35 (VT)	J-38125-12A	Not Available	Not Available	Not Available	Not Available
III	19301761	J-35616-35 (VT)	J-38125-12A	Not Available	Not Available	Not Available	Not Available

cardiagn.com

Terminal Type ID	Terminated Lead	Diagnostic Test Probe	Terminal Removal Tool	Service Terminal	Tray	Core Crimp	Insulation Crimp
IV	19301767	J-35616-2A (GY)	J-38125-560	Not Available	Not Available	Not Available	Not Available
IV	19301767	J-35616-2A (GY)	J-38125-560	Not Available	Not Available	Not Available	Not Available

Pin	Size	Color	Circuit	Function	Terminal Type ID	Option
A1	-	-	-	Not Occupied	-	-
A2	0.75	YE	712	Left Headlamp Low Beam Control	III	-
A3 - B1	-	-	-	Not Occupied	-	-
B2	4	RD/GY	642	Battery Positive Voltage	II	-
C1	-	-	-	Not Occupied	-	-
C2	0.75	YE	312	Right Headlamp Low Beam Control	III	-
C3	-	-	-	Not Occupied	-	-
D1	0.75	YE	712	Left Headlamp Low Beam Control	IV	-
D2	0.75	D-BU/VT	392	Rear Window Washer Pump Control	III	-
D3	0.75 0.75	L-GN/VT L-GN/PU	1315 1315	Right Front Turn Signal Lamp Control	IV	- -
E1	-	-	-	Not Occupied	-	-
E2	4	RD/WH	342	Battery Positive Voltage	II	-
F1	0.5	GY/BN	309	Right Park Lamp Control	IV	-
F2	0.75	GY/VT	228	Windshield Washer Pump Control	III	-
F3	0.75	D-BU/WH	1314	Left Front Turn Signal Lamp Control	IV	-
G1	0.5	VT/GY	709	Left Park Lamp Control	IV	-
G2 - G3	-	-	-	Not Occupied	-	-
G4	0.75	BK	150	Ground	III	-
G5	0.75	RD/D-BU	3940	Battery Positive Voltage	I	-
G6	-	-	-	Not Occupied	-	-
H1	0.5	YE/GY	57	Left Cornering Lamp Control	IV	-
H2	0.75	GY/D-BU	7538	Left Front DRL Control	III	-
H3	0.75	D-BU/BN	7539	Right Front DRL Control	III	-

cardiagn.com

Pin	Size	Color	Circuit	Function	Terminal Type ID	Option
H4	0.5 0.75	WH WH	311 311	Right Headlamp High Beam Control	III I	- -
H5	-	-	-	Not Occupied	-	-
H6	0.75	D-BU/BN	7539	Right Front DRL Control	IV	-
J1	0.5	YE/WH	58	Right Cornering Lamp Control	IV	-
J2	0.75	BN/GY	29	Horn Control	III	-
J3	0.5	BN/VT	2234	Front Fog Lamp Control	III	-
J4	0.5 0.75	WH WH	711 711	Left Headlamp High Beam Control	III I	- -
J5	0.75	YE	312	Right Headlamp Low Beam Control	III	-
J6	0.75	GY/D-BU	7538	Left Front DRL Control	IV	-
K1 - M3	-	-	-	Not Occupied	-	-
M4	0.5	WH/D-BU	3203	Right Headlamp Bulb Outage Signal	IV	-
M5	0.5	D-BU/VT	3204	Left Headlamp Bulb Outage Signal	IV	-
M6 - N2	-	-	-	Not Occupied	-	-

X50A FUSE BLOCK - UNDERHOOD X2

cardiagn.com

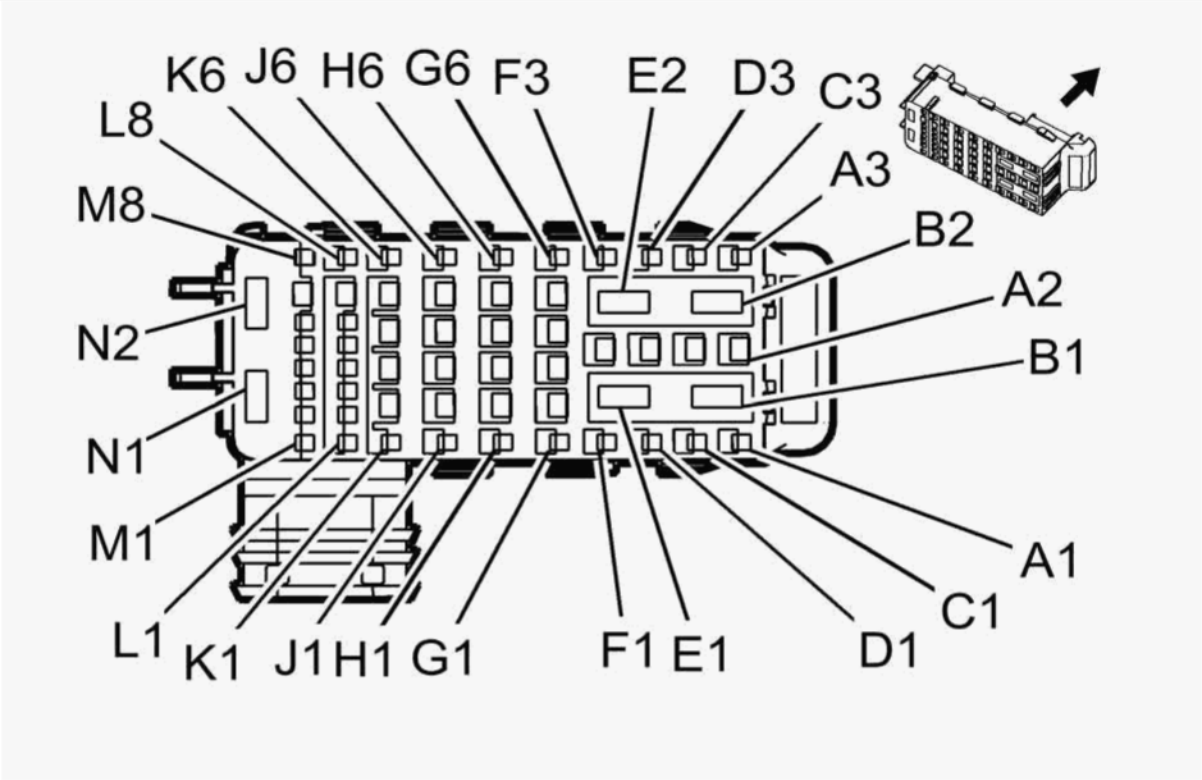

Connector Part Information

- Harness Type: Engine
- OEM Connector: 33116191
- Service Connector: 19332891
- Description: 58-Way F 1.5, 2.8, 800 Metri-Pack Series (GN)

Terminal Part Information

Terminal Type ID	Terminated Lead	Diagnostic Test Probe	Terminal Removal Tool	Service Terminal	Tray	Core Crimp	Insulation Crimp
I	13575718	J-35616-44 (YE)	J-38125-558	12110127	2	F	G
II	19301761	J-35616-35 (VT)	J-38125-12A	Not Available	Not Available	Not Available	Not Available
II	19301761	J-35616-35 (VT)	J-38125-12A	Not Available	Not Available	Not Available	Not Available
II	19301761	J-35616-35 (VT)	J-38125-12A	Not Available	Not Available	Not Available	Not Available

cardiagn.com

Terminal Type ID	Terminated Lead	Diagnostic Test Probe	Terminal Removal Tool	Service Terminal	Tray	Core Crimp	Insulation Crimp
III	19301767	J-35616-2A (GY)	J-38125-560	Not Available	Not Available	Not Available	Not Available
III	19301767	J-35616-2A (GY)	J-38125-560	Not Available	Not Available	Not Available	Not Available

Pin	Size	Color	Circuit	Function	Terminal Type ID	Option
A1	0.5	WH/GY	459	A/C Compressor Clutch Relay Control	III	-
A2 - B2	-	-	-	Not Occupied	-	-
C1	0.75	BN/L-GN	59	A/C Compressor Clutch Control	III	-
C2 - D2	-	-	-	Not Occupied	-	-
D3	0.5	YE/BK	625	Starter Enable Relay Control	III	-
E1	-	-	-	Not Occupied	-	-
E2	4	YE	6	Starter Solenoid Crank Ignition Voltage	I	-
F1	-	-	-	Not Occupied	-	-
F2	2.5	BK	550	Ground	II	-
F3 - G2	-	-	-	Not Occupied	-	-
G3	0.5	VT/D-BU	5293	Powertrain Main Relay Fused Supply (4)	II	-
G4	2.5	VT/D-BU	5290	Powertrain Main Relay Fused Supply (1)	II	-
G5	0.75	RD/L-GN	1840	Battery Positive Voltage	II	-
G6	0.5	RD/WH	3440	Battery Positive Voltage	III	-
H1	-	-	-	Not Occupied	-	-
H2	0.75	VT/D-BU	5291	Powertrain Main Relay Fused Supply (2)	II	-
H3	0.75	VT/D-BU	5293	Powertrain Main Relay Fused Supply (4)	II	-
H4	-	-	-	Not Occupied	-	-
H5	0.5	RD/BN	440	Battery Positive Voltage	II	-
H6	0.5	YE	5991	Powertrain Relay Coil Control	III	-
J1	-	-	-	Not Occupied	-	-
J2	0.5	VT/D-BU	5294	Powertrain Main Relay Fused Supply (5)	II	-
J3	0.75	VT/D-BU	5291	Powertrain Main Relay Fused Supply (2)	II	-
J4	0.75	VT/D-BU	5292	Powertrain Main Relay Fused Supply (3)	II	-
J5	0.5	VT/D-BU	5294	Powertrain Main Relay Fused Supply (5)	II	-

cardiagn.com

Pin	Size	Color	Circuit	Function	Terminal Type ID	Option
J6	0.75	VT/D-BU	5290	Powertrain Main Relay Fused Supply (1)	III	-
K1 - K2	-	-	-	Not Occupied	-	-
K3	0.75	VT/D-BU	5291	Powertrain Main Relay Fused Supply (2)	II	-
K4	0.75	VT/D-BU	5292	Powertrain Main Relay Fused Supply (3)	II	-
K5	0.75	VT/D-BU	5292	Powertrain Main Relay Fused Supply (3)	II	-
K6 - L6	-	-	-	Not Occupied	-	-
L7	0.5	VT/BK	2139	Run/Crank Ignition 1 Voltage	II	-
L8 - M4	-	-	-	Not Occupied	-	-
M5	0.5	GY	5660	Fuel Pump Controller Data Out Signal	III	-
M6	0.75	BK/WH	451	Signal Ground	III	-
M7	0.5	VT/L-GN	439	Run/Crank Ignition 1 Voltage	II	-
M8 - N2	-	-	-	Not Occupied	-	-

X50A FUSE BLOCK - UNDERHOOD X3

cardiagn.com

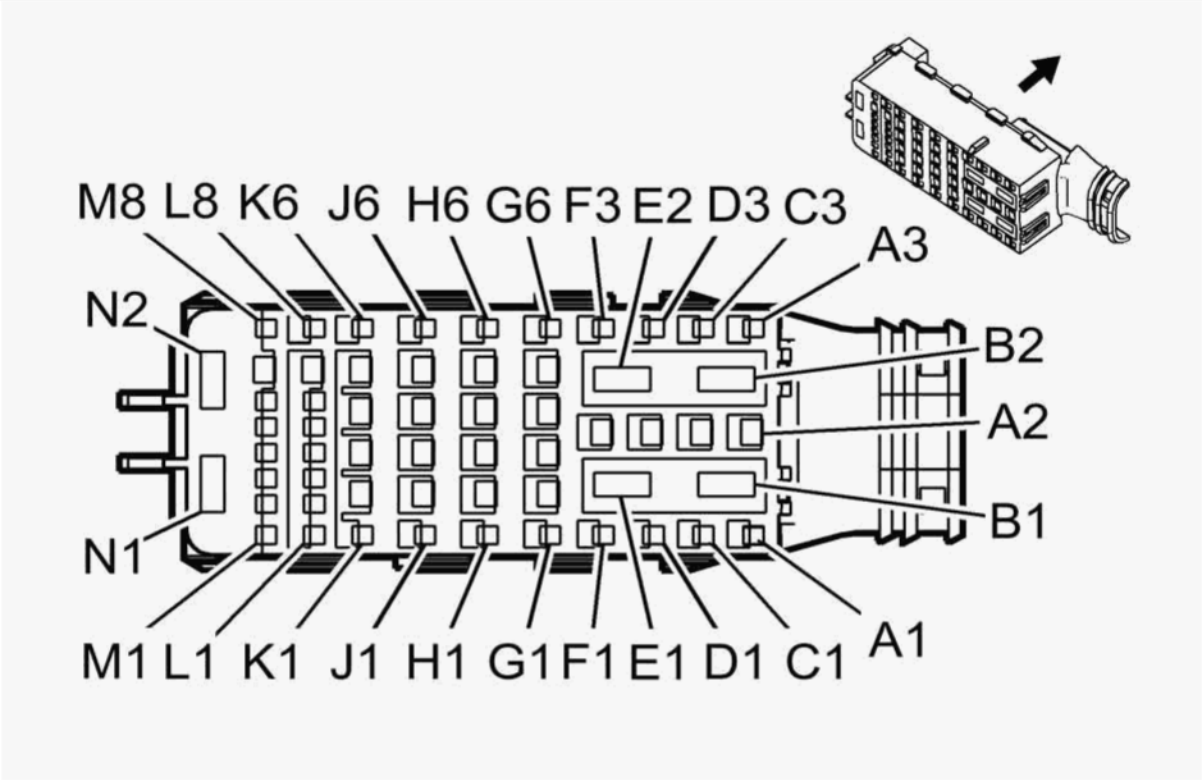

Connector Part Information

- Harness Type: Body
- OEM Connector: 33116188
- Service Connector: 19332892
- Description: 58-Way F 1.5, 2.8, 800 Metri-Pack Series (GY)

Terminal Part Information

Terminal Type ID	Terminated Lead	Diagnostic Test Probe	Terminal Removal Tool	Service Terminal	Tray	Core Crimp	Insulation Crimp
I	13575718	J-35616-44 (YE)	J-38125-558	12092445	16	G	G
II	13575718	J-35616-44 (YE)	J-38125-558	12110127	2	F	G
II	13575718	J-35616-44 (YE)	J-38125-558	12110127	2	F	G
III	19301761	J-35616-35 (VT)	J-38125-12A	Not Available	Not Available	Not Available	Not Available

cardiagn.com

Terminal Type ID	Terminated Lead	Diagnostic Test Probe	Terminal Removal Tool	Service Terminal	Tray	Core Crimp	Insulation Crimp
III	19301761	J-35616-35 (VT)	J-38125-12A	Not Available	Not Available	Not Available	Not Available
III	19301761	J-35616-35 (VT)	J-38125-12A	Not Available	Not Available	Not Available	Not Available
IV	19301767	J-35616-2A (GY)	J-38125-560	Not Available	Not Available	Not Available	Not Available
IV	19301767	J-35616-2A (GY)	J-38125-560	Not Available	Not Available	Not Available	Not Available

Pin	Size	Color	Circuit	Function	Terminal Type ID	Option
A1	0.5	YE/D-BU	18	Left Rear Stop/Turn Lamp Control	IV	-
A2 - A3	-	-	-	Not Occupied	-	-
B1	4	RD/GY	1342	Battery Positive Voltage	I	-
B2	2.5	RD/D-BU	1842	Battery Positive Voltage	II	-
C1	0.5	BN/L-GN	19	Right Rear Stop/Turn Lamp Control	IV	-
C2 - C3	-	-	-	Not Occupied	-	-
D1	0.75	L-GN/VT	1315	Right Front Turn Signal Lamp Control	IV	-
D2	0.5	WH/D-BU	3203	Right Headlamp Bulb Outage Signal	III	-
D3 - E1	-	-	-	Not Occupied	-	-
E2	4	RD/WH	4042	Battery Positive Voltage	II	-
F1	0.75	D-BU/WH	1314	Left Front Turn Signal Lamp Control	IV	-
F2	0.5	D-BU/VT	3204	Left Headlamp Bulb Outage Signal	III	-
F3	0.5	YE/WH	962	-	IV	-
G1	0.75	D-BU/BN	7539	Right Front DRL Control	IV	-
G2 - H1	-	-	-	Not Occupied	-	-
H2	1	BK	550	Ground	III	-
H3 - H6	-	-	-	Not Occupied	-	-
J1	0.35	WH/VT	860	Front Windshield Wiper Switch High Signal	IV	-
J2 - K2	-	-	-	Not Occupied	-	-
K3	1	YE/BN	95	Windshield Wiper Motor Low Speed Control	III	-
K4	1	WH	92	Windshield Wiper Motor High Speed Control	III	-
K5	-	-	-	Not Occupied	-	-
K6	0.35	BN/GY	2268	Windshield Washer Relay Control	IV	-

cardiagn.com

Pin	Size	Color	Circuit	Function	Terminal Type ID	Option
L1	0.75	GY/D-BU	7538	Left Front DRL Control	IV	-
L2	0.35	BN/VT	1969	Headlamp High Beam Relay Control	IV	-
L3	0.35	L-GN/WH	2270	Rear Window Washer Relay Control	IV	-
L4	0.35	GY	91	Windshield Wiper Motor Relay Coil Control	IV	-
L5	0.5	BN	1317	Fog Lamp Relay Control	IV	-
L6	0.35	BN/WH	28	Horn Relay Control	IV	-
L7	-	-	-	Not Occupied	-	-
L8	0.5	YE/GY	57	Left Cornering Lamp Control	IV	-
M1	0.75	YE	312	Right Headlamp Low Beam Control	IV	-
M2	-	-	-	Not Occupied	-	-
M3	0.5	YE/WH	58	Right Cornering Lamp Control	IV	-
M4	0.75	D-BU/BN	7539	Right Front DRL Control	IV	-
M5	0.5	RD/WH	961	-	IV	-
M6	-	-	-	Not Occupied	-	-
M7	2.5	D-BU	965	-	III	-
M8	0.35	VT/WH	239	Run/Crank Ignition 1 Voltage	IV	-
N1 - N2	-	-	-	Not Occupied	-	-

X50A FUSE BLOCK - UNDERHOOD X4

cardiagn.com

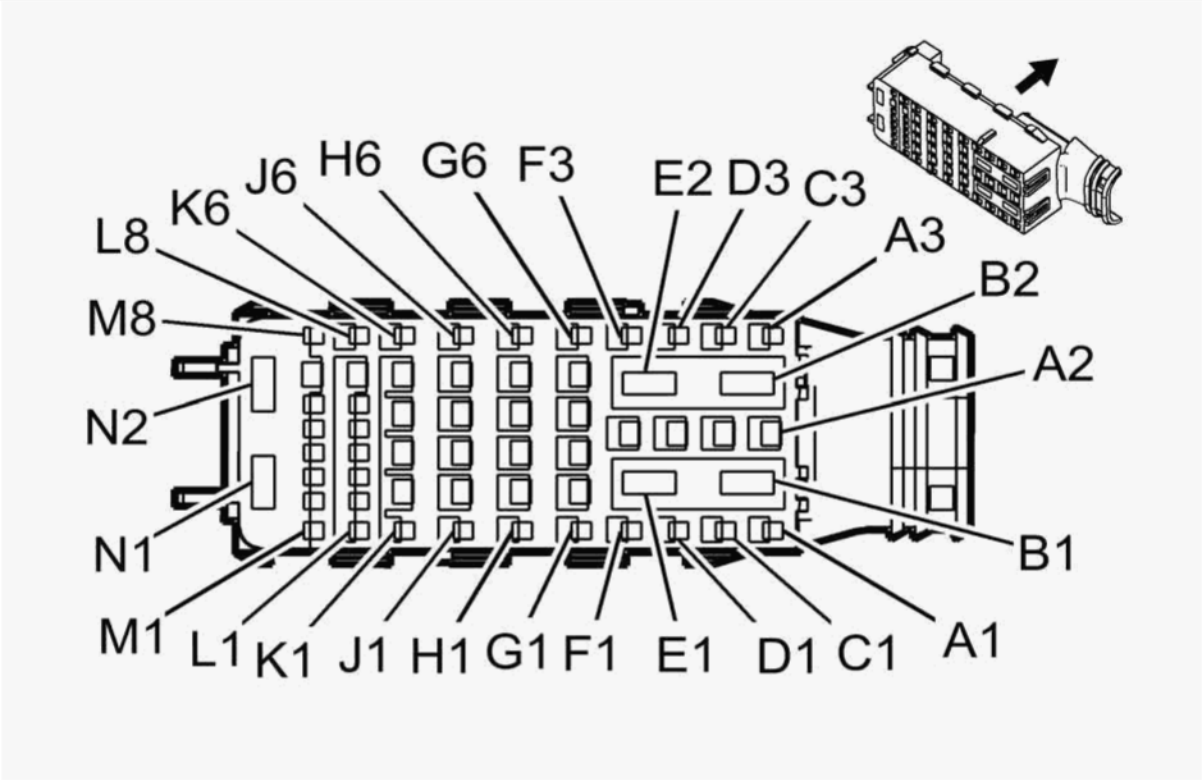

Connector Part Information

- Harness Type: Body
- OEM Connector: 33116186
- Service Connector: 19332893
- Description: 58-Way F 1.5, 2.8, 800 Metri-Pack Series (BK)

Terminal Part Information

Terminal Type ID	Terminated Lead	Diagnostic Test Probe	Terminal Removal Tool	Service Terminal	Tray	Core Crimp	Insulation Crimp
I	13575718	J-35616-44 (YE)	J-38125-558	12110127	2	F	G
II	13575718	J-35616-44 (YE)	J-38125-558	Not Available	Not Available	Not Available	Not Available
III	19301761	J-35616-35 (VT)	J-38125-12A	Not Available	Not Available	Not Available	Not Available
III	19301761	J-35616-35 (VT)	J-38125-12A	Not Available	Not Available	Not Available	Not Available

cardiagn.com

Terminal Type ID	Terminated Lead	Diagnostic Test Probe	Terminal Removal Tool	Service Terminal	Tray	Core Crimp	Insulation Crimp
III	19301761	J-35616-35 (VT)	J-38125-12A	Not Available	Not Available	Not Available	Not Available
IV	19301767	J-35616-2A (GY)	J-38125-560	Not Available	Not Available	Not Available	Not Available
IV	19301767	J-35616-2A (GY)	J-38125-560	Not Available	Not Available	Not Available	Not Available

Pin	Size	Color	Circuit	Function	Terminal Type ID	Option
A1	-	-	-	Not Occupied	-	-
A2	0.75	GY/YE	7542	Left Rear Stop Lamp Control	III	-
A3	0.35 0.5	L-GN/WH L-GN/WH	24 24	Backup Lamp Control	IV	- -
B1	4	RD/GY	1042	Battery Positive Voltage	I	-
B2	5	RD/VT	842	Battery Positive Voltage	I	-
C1	0.75	WH/YE	7541	Right Rear Stop Lamp Control	IV	-
C2 - D3	-	-	-	Not Occupied	-	-
E1	6	RD/WH	942	-	II	-
E2	5	RD/D-BU	42	Battery Positive Voltage	I	-
F1 - G1	-	-	-	Not Occupied	-	-
G2	2.5	GY/BK	966	-	III	-
G3 - G5	-	-	-	Not Occupied	-	-
G6	0.5	YE/BK	5356	Left Tail Lamp Outage Detection Signal	IV	-
H1 - H4	-	-	-	Not Occupied	-	-
H5	2.5	RD/L-GN	242	Battery Positive Voltage	III	-
H6	0.5	VT/YE	5357	Right Tail Lamp Outage Detection Signal	IV	-
J1	0.75	GY/D-BU	7538	Left Front DRL Control	IV	-
J2 - J5	-	-	-	Not Occupied	-	-
J6	0.75	BK/WH	451	Signal Ground	IV	-
K1	0.75	YE	712	Left Headlamp Low Beam Control	IV	-
K2	2.5	RD/L-GN	968	-	III	-
K3 - K4	-	-	-	Not Occupied	-	-
K5	2.5	YE/BN	967	-	III	-

cardiagn.com

Pin	Size	Color	Circuit	Function	Terminal Type ID	Option
K6	-	-	-	Not Occupied	-	-
L1	0.5	WH/D-BU	964	-	IV	-
L2	0.35	YE/GY	5187	Right Trailer Turn Signal Lamp Control	IV	-
L3	0.35	D-BU/BN	38	Backup Lamp Relay Control	IV	-
L4	0.35	D-BU/WH	5186	Left Trailer Turn Signal Lamp Control	IV	-
L5	0.35	D-BU	45	Park Lamp Relay Control	IV	-
L6	0.5	L-GN/GY	963	-	IV	-
L7 - L8	-	-	-	Not Occupied	-	-
M1	0.75	RD/YE	2340	Battery Positive Voltage	IV	-
M2	-	-	-	Not Occupied	-	-
M3	0.35	BN/YE	1970	Headlamp Low Beam Relay Control	IV	-
M4	-	-	-	Not Occupied	-	-
M5	0.35	L-GN/VT	5199	Run/Crank Relay Coil Control	IV	-
M6 - N2	-	-	-	Not Occupied	-	-

X50A FUSE BLOCK - UNDERHOOD X5

cardiagn.com

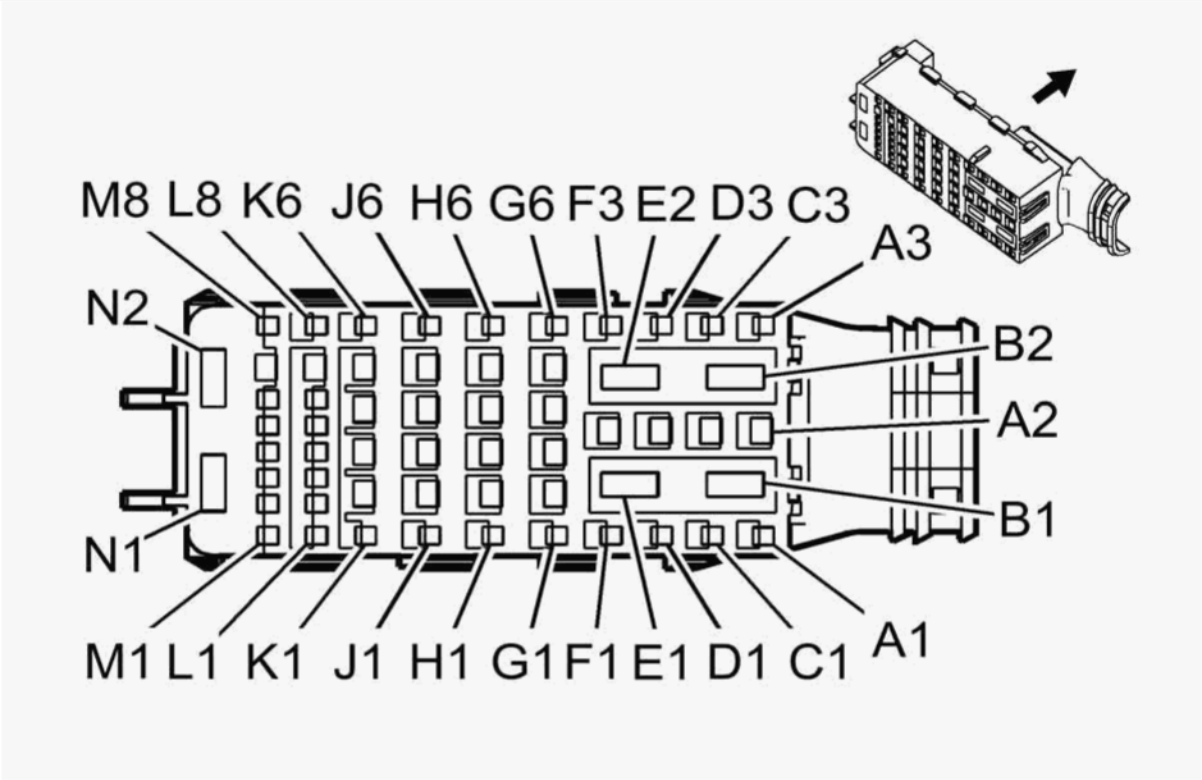

Connector Part Information

- Harness Type: Chassis
- OEM Connector: 33116189
- Service Connector: 19332894
- Description: 58-Way F 1.5, 2.8, 800 Metri-Pack Series (NA)

Terminal Part Information

Terminal Type ID	Terminated Lead	Diagnostic Test Probe	Terminal Removal Tool	Service Terminal	Tray	Core Crimp	Insulation Crimp
I	13575718	J-35616-44 (YE)	J-38125-558	12110127	2	F	G
II	13575832	J-35616-35 (VT)	J-38125-11A	7116-4112-02	14	C	D
III	19300635	J-35616-2A (GY)	J-38125-217	Not Available	Not Available	Not Available	Not Available
IV	19301761	J-35616-35 (VT)	J-38125-12A	Not Available	Not Available	Not Available	Not Available

cardiagn.com

Terminal Type ID	Terminated Lead	Diagnostic Test Probe	Terminal Removal Tool	Service Terminal	Tray	Core Crimp	Insulation Crimp
IV	19301761	J-35616-35 (VT)	J-38125-12A	Not Available	Not Available	Not Available	Not Available
IV	19301761	J-35616-35 (VT)	J-38125-12A	Not Available	Not Available	Not Available	Not Available
V	19301767	J-35616-2A (GY)	J-38125-560	Not Available	Not Available	Not Available	Not Available
V	19301767	J-35616-2A (GY)	J-38125-560	Not Available	Not Available	Not Available	Not Available

Pin	Size	Color	Circuit	Function	Terminal Type ID	Option
A1	0.75	GY/YE	7542	Left Rear Stop Lamp Control	V	-
A2	0.5 0.5	YE/L-GN YE/D-BU	18 18	Left Rear Stop/Turn Lamp Control	IV	- -
A3	0.5	BN/L-GN	19	Right Rear Stop/Turn Lamp Control	V	-
B1	5	RD/YE	442	Battery Positive Voltage	I	-
B2	-	-	-	Not Occupied	-	-
C1	0.75 0.75	L-GN/WH L-GN	24 24	Backup Lamp Control	V	- -
C2	2.5	RD/YE	1142	Battery Positive Voltage	IV	-
C3 - D1	-	-	-	Not Occupied	-	-
D2	1.5	GY	120	Fuel Pump Control	IV	-
D3	0.75	WH/YE	7541	Right Rear Stop Lamp Control	V	-
E1	4	RD/WH	1642	Battery Positive Voltage	I	-
E2 - F3	-	-	-	Not Occupied	-	-
G1	0.5	YE/BK	5356	Left Tail Lamp Outage Detection Signal	V	-
G2	2.5	RD/VT	1940	Battery Positive Voltage	IV	-
G3	3	RD/L-GN	2440	Battery Positive Voltage	II	-
G4	0.75	RD/WH	2040	Battery Positive Voltage	IV	-
G5	-	-	-	Not Occupied	-	-
G6	0.75	RD/L-GN	2440	Battery Positive Voltage	V	-
H1	0.5	VT/YE	5357	Right Tail Lamp Outage Detection Signal	V	-
H2	-	-	-	Not Occupied	-	-
H3	0.5	RD/L-GN	1840	Battery Positive Voltage	IV	-

cardiagn.com

Pin	Size	Color	Circuit	Function	Terminal Type ID	Option
H4 - J1	-	-	-	Not Occupied	-	-
J2	2.5	RD/L-GN	242	Battery Positive Voltage	IV	-
J3	1.5	GY/BN	2109	Trailer Park Lamp Control	IV	-
J4	2.5	RD/VT	1640	Battery Positive Voltage	IV	-
J5	0.5 0.75	VT/L-GN PU/L-GN	439 439	Run/Crank Ignition 1 Voltage	IV	- -
J6	-	-	-	Not Occupied	-	-
K1	0.5	VT/BK	739	Run/Crank Ignition 1 Voltage	V	-
K2	0.5	VT/GY	709	Left Park Lamp Control	IV	-
K3	-	-	-	Not Occupied	-	-
K4	0.5	GY/BN	309	Right Park Lamp Control	IV	-
K5	0.75	YE/GY	1618	Left Rear Trailer Stop/Turn Lamp Control	IV	-
K6	0.75	L-GN/VT	1619	Right Rear Trailer Stop/Turn Lamp Control	V	-
L1 - L6	-	-	-	Not Occupied	-	-
L7	2.5	GY	120	Fuel Pump Control	IV	-
L8 - M4	-	-	-	Not Occupied	-	-
M5	0.5	GY	5660	Fuel Pump Controller Data Out Signal	III	-
M6	-	-	-	Not Occupied	-	-
M7	0.5	VT/D-BU	5294	Powertrain Main Relay Fused Supply (5)	IV	-
M8	0.75	WH/L-GN	1624	Trailer Backup Lamp Control	V	-
N1	-	-	-	Not Occupied	-	-
N2	4	RD/L-GN	742	Battery Positive Voltage	I	-

X50A FUSE BLOCK - UNDERHOOD X6

-

Connector Part Information

- Harness Type: Fuse Block - Battery
- OEM Connector: 13585650

cardiagn.com

- Service Connector: Service by Cable Assembly - See Part Catalog
- Description: Ring Terminal

Terminal Part Information

Terminal Type ID	Terminated Lead	Diagnostic Test Probe	Terminal Removal Tool	Service Terminal	Tray	Core Crimp	Insulation Crimp
I	Not Available	No Tool Required	Not Available	Not Available	Not Available	Not Available	Not Available

Pin	Size	Color	Circuit	Function	Terminal Type ID	Option
A	25	RD/GN	242	Battery Positive Voltage	I	-

X50D FUSE BLOCK - BATTERY TOP VIEW

cardiagn.com

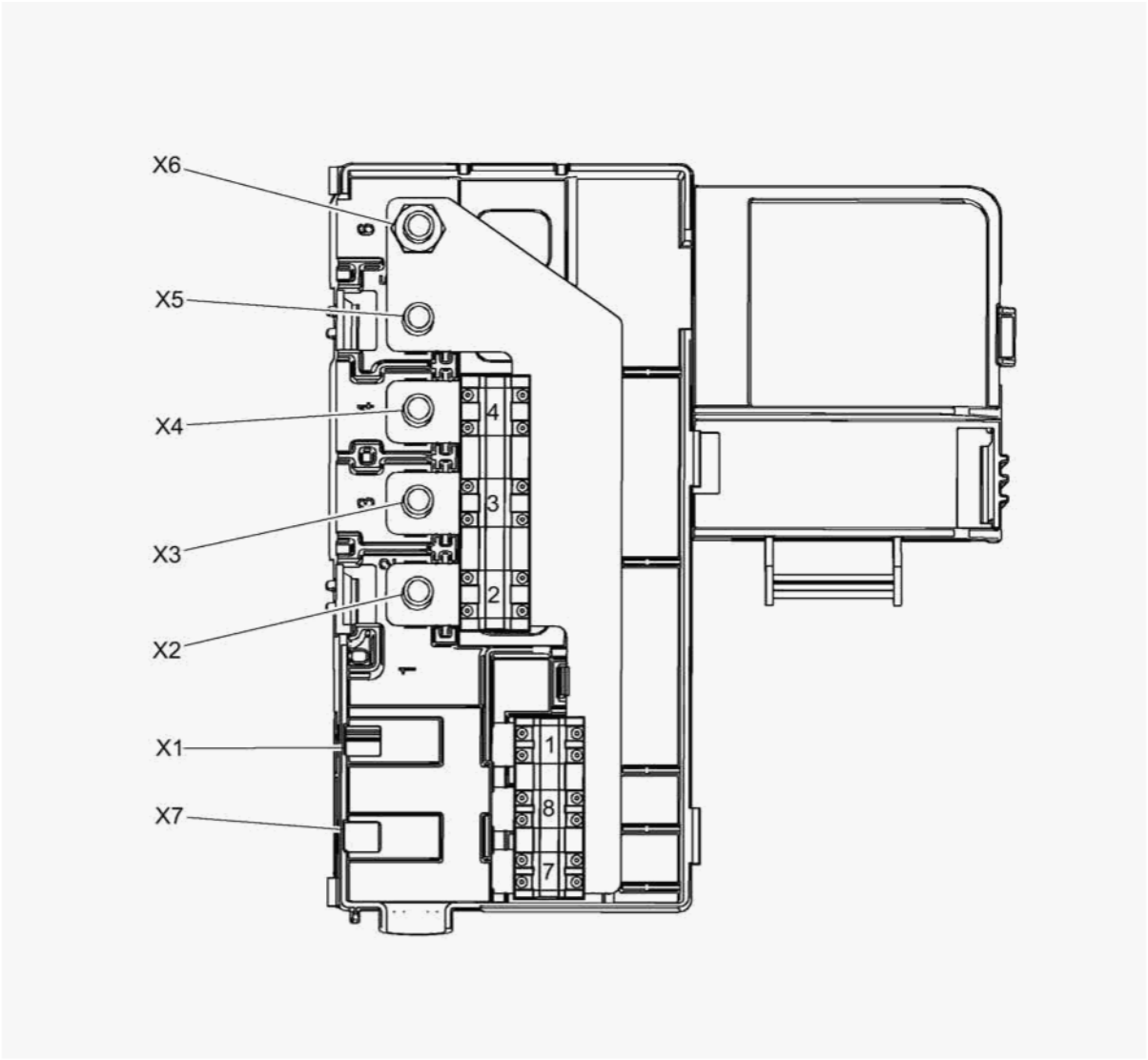

Fig. 4: X50D Fuse Block - Battery Top View
Courtesy of GENERAL MOTORS COMPANY

X50D Fuse Block - Battery Usage

No.	Device Label Name	Device Assigned Name	Rating	Description
1	-	F1UD	100A	KR79 Auxiliary Battery Relay 2 (5W4 or 9C1)

cardiagn.com

No.	Device Label Name	Device Assigned Name	Rating	Description
2	-	F2UD	175A (L83 or L86) 250A (L96)	G13 Generator, X50A Fuse Block - Underhood
3	-	F3UD	-	Not Occupied
4	-	F4UD	175A	K43 Power Steering Control Module (L83 or L86)
5	-	F7UD	60A	X51R Fuse Block - Instrument Panel Right
6	-	F8UD	60A	X51R Fuse Block - Instrument Panel Right

X50D FUSE BLOCK - BATTERY X1 (5W4 OR 9C1)

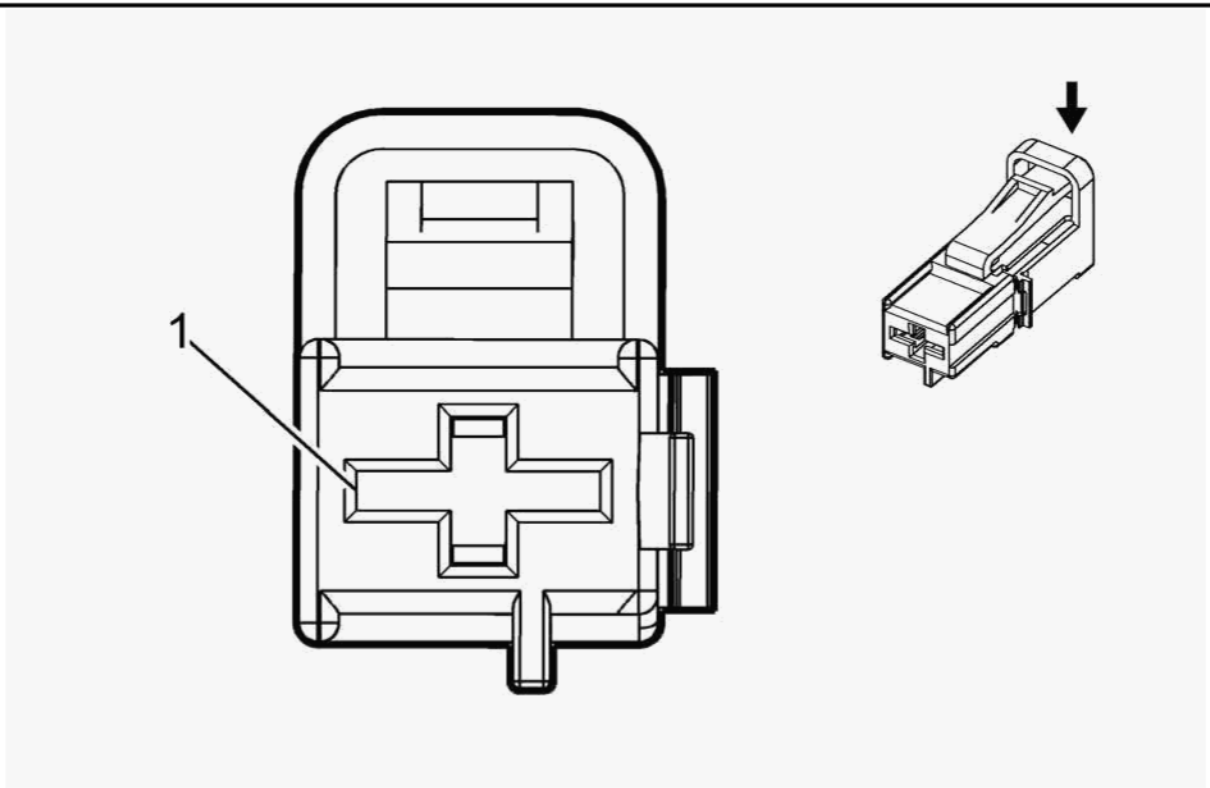

Connector Part Information

- Harness Type: Battery - Auxiliary
- OEM Connector: 13629098

cardiagn.com

- Service Connector: 19329825
- Description: 1-Way F 8.0 Series (BU)

Terminal Part Information

Terminal Type ID	Terminated Lead	Diagnostic Test Probe	Terminal Removal Tool	Service Terminal	Tray	Core Crimp	Insulation Crimp
I	Not Available	J-35616-44 (YE)	Not Available	Not Available	Not Available	Not Available	Not Available

Pin	Size	Color	Circuit	Function	Terminal Type ID	Option
A	10	RD/VT	842	Battery Positive Voltage	I	-

X50D FUSE BLOCK - BATTERY X4

-

Connector Part Information

- Harness Type: Battery Cable
- OEM Connector: 13584018
- Service Connector: Service by Cable Assembly - See Part Catalog
- Description: Ring Terminal

Terminal Part Information

Terminal Type ID	Terminated Lead	Diagnostic Test Probe	Terminal Removal Tool	Service Terminal	Tray	Core Crimp	Insulation Crimp
I	Not Available	No Tool Required	Not Available	Not Available	Not Available	Not Available	Not Available

Pin	Size	Color	Circuit	Function	Terminal Type ID	Option
A	25 25	RD/YE RD/GN	2 242	Battery Positive Voltage Battery Positive Voltage	I	- -

cardiagn.com

X50D FUSE BLOCK - BATTERY X2

-

Connector Part Information

- Harness Type: Battery Cable Jumper
- OEM Connector: 13584017
- Service Connector: Service by Cable Assembly - See Part Catalog
- Description: Ring Terminal

Terminal Part Information

Terminal Type ID	Terminated Lead	Diagnostic Test Probe	Terminal Removal Tool	Service Terminal	Tray	Core Crimp	Insulation Crimp
I	Not Available	No Tool Required	Not Available	Not Available	Not Available	Not Available	Not Available

Pin	Size	Color	Circuit	Function	Terminal Type ID	Option
A	25	RD/VT	842	Battery Positive Voltage	I	-

X50D FUSE BLOCK - BATTERY X5

-

Connector Part Information

- Harness Type: Fuse Block - Starter Motor
- OEM Connector: 13584016
- Service Connector: Service by Cable Assembly - See Part Catalog
- Description: Ring Terminal

Terminal Part Information

Terminal Type ID	Terminated Lead	Diagnostic Test Probe	Terminal Removal Tool	Service Terminal	Tray	Core Crimp	Insulation Crimp

cardiagn.com

Terminal Type ID	Terminated Lead	Diagnostic Test Probe	Terminal Removal Tool	Service Terminal	Tray	Core Crimp	Insulation Crimp
I	Not Available	No Tool Required	Not Available	Not Available	Not Available	Not Available	Not Available

Pin	Size	Color	Circuit	Function	Terminal Type ID	Option
A	35	RD/YE	2	Unfused Battery Positive Voltage	I	-

X50D FUSE BLOCK - BATTERY X6

-

Connector Part Information

- Harness Type: Fuse Block - Battery
- OEM Connector: 22806489
- Service Connector: Service by Cable Assembly - See Part Catalog
- Description: Ring Terminal

Terminal Part Information

Terminal Type ID	Terminated Lead	Diagnostic Test Probe	Terminal Removal Tool	Service Terminal	Tray	Core Crimp	Insulation Crimp
I	Not Available	No Tool Required	Not Available	Not Available	Not Available	Not Available	Not Available

Pin	Size	Color	Circuit	Function	Terminal Type ID	Option
A	35	RD	1	Unfused Battery Positive Voltage	I	-

X50D FUSE BLOCK - BATTERY X7

cardiagn.com

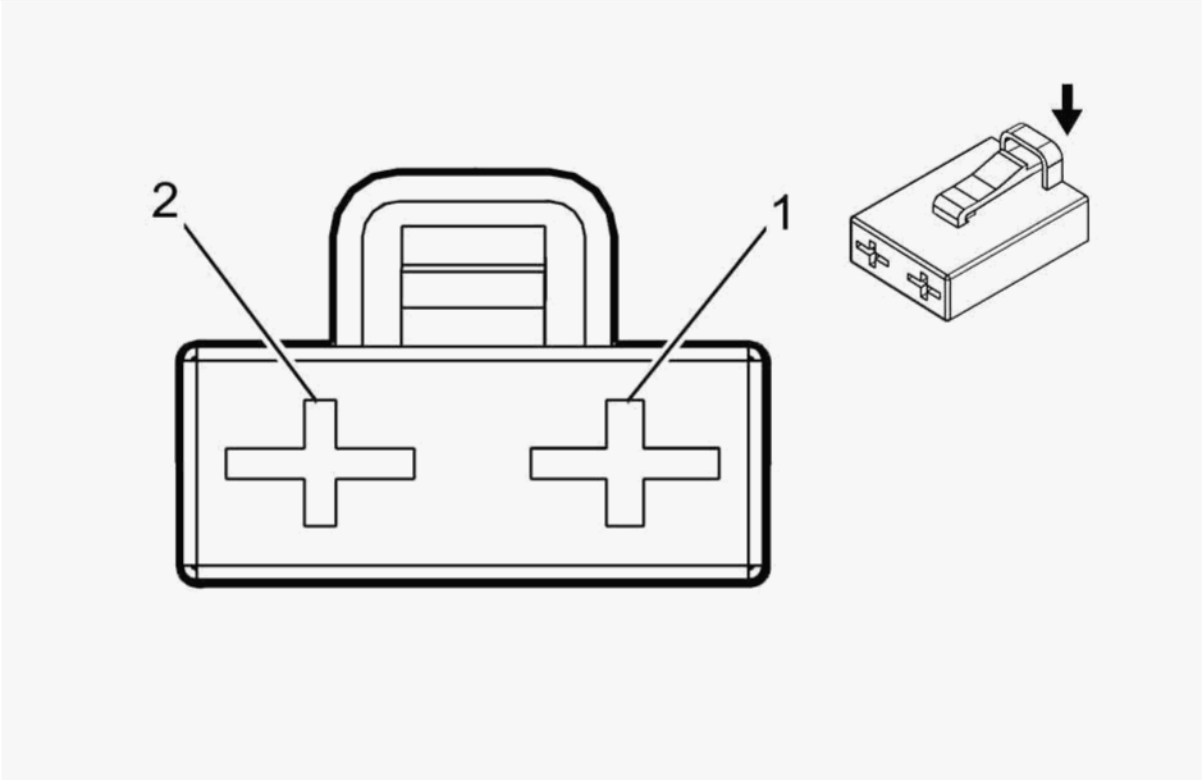

Connector Part Information

- Harness Type: Body
- OEM Connector: 13627842
- Service Connector: 19329484
- Description: 2-Way F 8.0 Series (BU)

Terminal Part Information

Terminal Type ID	Terminated Lead	Diagnostic Test Probe	Terminal Removal Tool	Service Terminal	Tray Name	Core Crimp	Insulation Crimp
I	Not Required	J-35616-44 (YE)	Not Required	Not Required	Not Required	Not Required	Not Required

Pin	Size	Color	Circuit	Function	Terminal Type ID	Option

cardiagn.com

Pin	Size	Color	Circuit	Function	Terminal Type ID	Option
1	6	RD/GY	142	Battery Positive Voltage	I	-
2	6	RD/L-GN	242	Battery Positive Voltage	I	-

X50E FUSE BLOCK - BATTERY AUXILIARY TOP VIEW (5W4 OR 9C1)

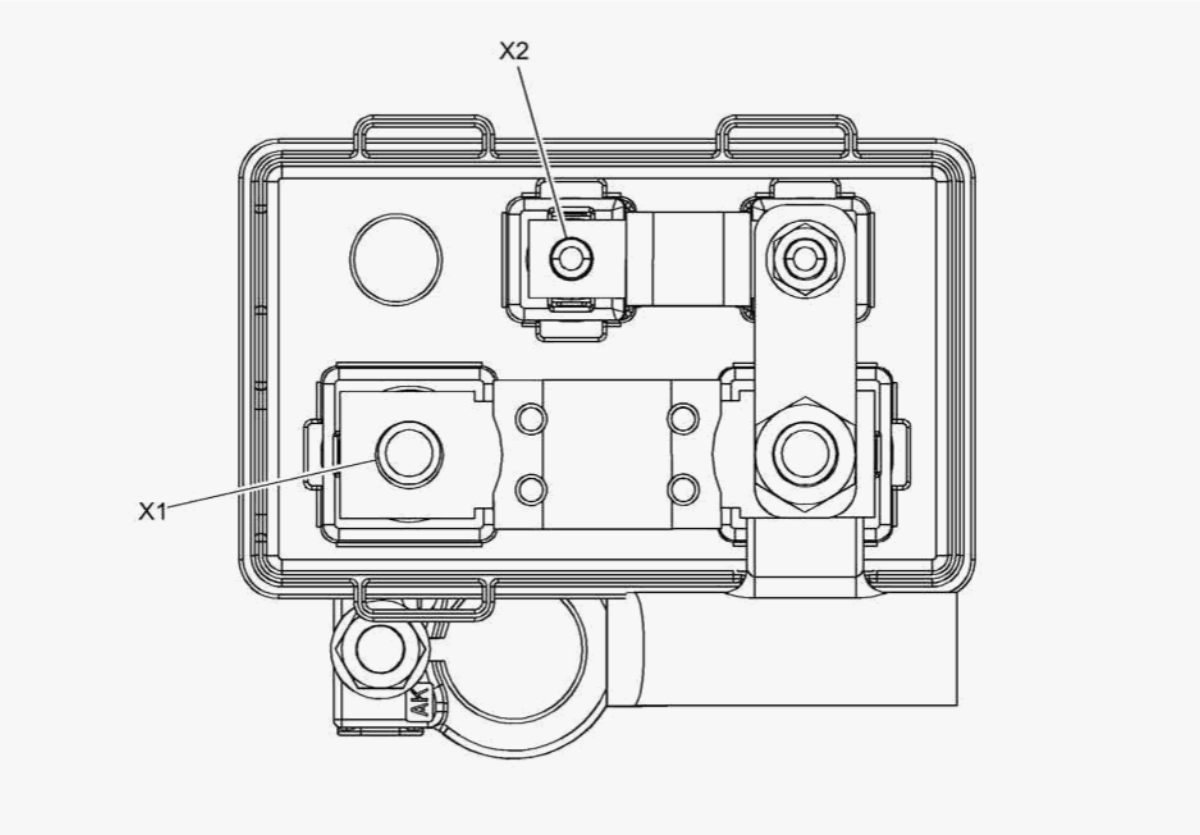

Fig. 5: X50E Fuse Block -- Battery Auxiliary Top View (5W4) or (9C1)
Courtesy of GENERAL MOTORS COMPANY

X50E Fuse Block - Battery Auxiliary Usage

No.	Device Label Name	Device Assigned Name	Rating	Description
1	-	F1UE	100A	KR81 Auxiliary Battery Relay 1, X53A Fuse Block - Rear

cardiagn.com

No.	Device Label Name	Device Assigned Name	Rating	Description
				Body
2	-	F2UE	50A	W9 Blunt Cut - Police Provision

X50E FUSE BLOCK - AUXILIARY BATTERY X1 (5W4 AND 9C1)

-

Connector Part Information

- Harness Type: Body
- OEM Connector: 13609633
- Service Connector: Not Available
- Description: Ring Terminal

Terminal Part Information

Terminal Type ID	Terminated Lead	Diagnostic Test Probe	Terminal Removal Tool	Service Terminal	Tray	Core Crimp	Insulation Crimp
I	Not Available	No Tool Required	Not Available	Not Available	Not Available	Not Available	Not Available

Pin	Size	Color	Circuit	Function	Terminal Type ID	Option
A	10 10	RD/GN YE/BU	742 5442	Battery Positive Voltage Battery Positive Voltage	I	- -

X50E FUSE BLOCK - AUXILIARY BATTERY X2 (5W4 AND 9C1)

-

Connector Part Information

- Harness Type: Body
- OEM Connector: 12103517
- Service Connector: Not Available
- Description: Ring Terminal

cardiagn.com

Terminal Part Information

Terminal Type ID	Terminated Lead	Diagnostic Test Probe	Terminal Removal Tool	Service Terminal	Tray	Core Crimp	Insulation Crimp
I	Not Available	No Tool Required	Not Available	Not Available	Not Available	Not Available	Not Available

Pin	Size	Color	Circuit	Function	Terminal Type ID	Option
A	4	YE/VT	5542	Battery Positive Voltage	I	-

X51L FUSE BLOCK - INSTRUMENT PANEL LEFT LABEL

cardiagn.com

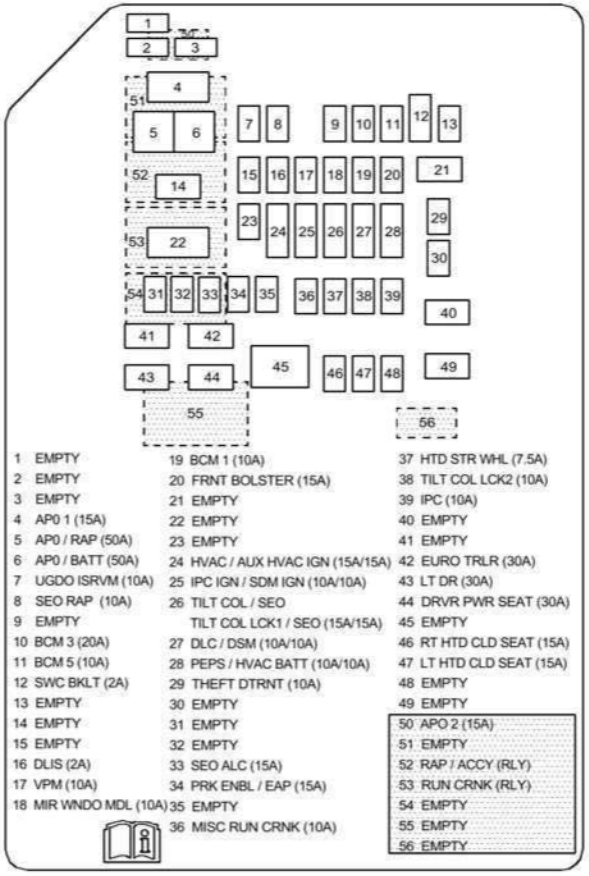

Fig. 6: X51L Fuse Block -- Instrument Panel Left Label (Late)
Courtesy of GENERAL MOTORS COMPANY

X51L FUSE BLOCK - INSTRUMENT PANEL LEFT TOP VIEW

cardiagn.com

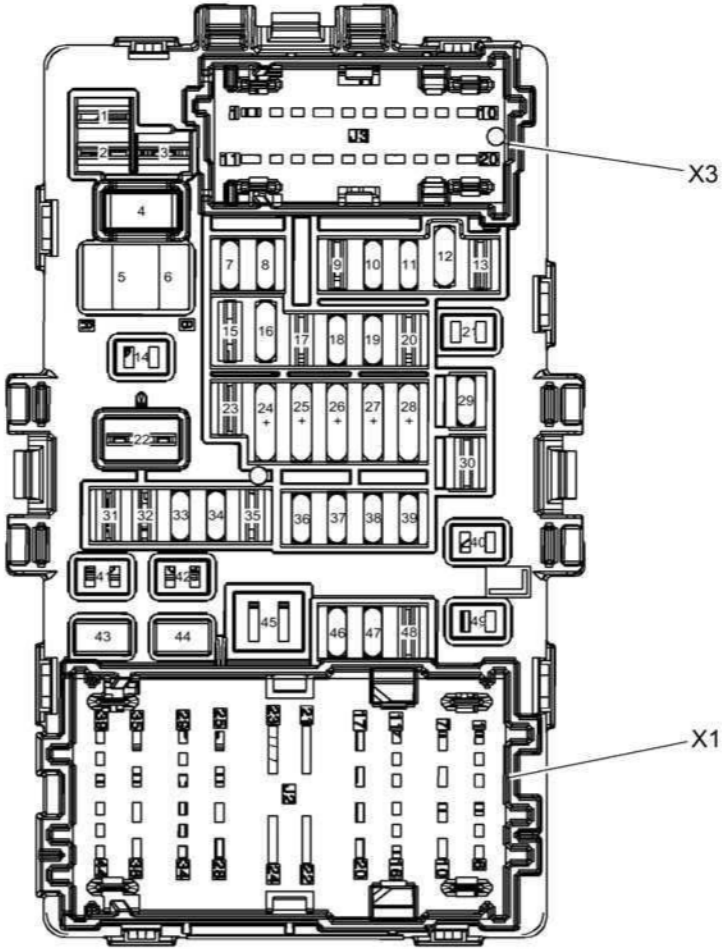

Fig. 7: X51L Fuse Block -- Instrument Panel Left Top View
Courtesy of GENERAL MOTORS COMPANY

X50L Fuse Block - Instrument Panel Left Usage

No.	Device Label Name	Device Assigned Name	Rating	Description
Fuses				

cardiagn.com

No.	Device Label Name	Device Assigned Name	Rating	Description
1	EMPTY	F1DL	-	Not Used
2	EMPTY	F2DL	-	Not Used
3	EMPTY	F3DL	-	Not Used
4	APO 1 (15A)	F4DL	15A	E32 Cigarette Lighter Receptacle (DT4), X80G Accessory Power Receptacle - Instrument Panel (D07 without DT4)
5	APO/RAP (50A)	F5DL	50A	F4DL, F50DL
6	APO/BATT (50A)	F6DL	50A	F4DL, F50DL
7	UGDO ISRVM (10A)	F7DL	10A	S25 Garage Door Opener (UG1), S63 Roof Beacon Switch (TRW)
8	SEO RAP (10A)	F8DL	10A	KR103 DVD Relay (AYE), M69 Sunroof Motor (CF5), T22 Mobile Device Wireless Charger Module (K4C), W9 Blunt Cut - Police Provision (5W4 or 9C1)
9	EMPTY	F9DL	-	Not Used
10	BCM 3 (20A)	F10DL	20A	E4H Headlamp - Right Low Beam (X88 or Z88), E4LF Turn Signal Lamp - Left Front (X88 or Z75), E4Y Turn Signal Repeater Lamp - Left (DL3 or DR4), E5R Stop Lamp - Right Rear (X88 with T89), K9 Body Control Module, KR57 Rear Fog Lamp Relay (T79), K166L Multifunction LED Control Module - Left Headlamp (X88 with TB8, Z88 or Z75), K166R Multifunction LED Control Module - Right Headlamp (Z75), K167L Multifunction LED Control Module - Front Fascia Left (Z75), K174R Multifunction LED Control Module - Right Tail Lamp (Z88 or Z75)
11	BCM 5 (10A)	F11DL	10A	A23C Liftgate latch Assembly (TB4), A23LR Door Latch Assembly - Left Rear, A23RR Door Latch Assembly - Right Rear, B10B Ambient Light/Sunload Sensor, B55 Hood Ajar Switch, B174W Frontview Camera - Windshield (UFL or UGN with Z75), E1A Accent Lamp - Driver Seat, E1AA Floor Accent Lamp - Left Front, E1AB Floor Accent Lamp - Right Front, E1B Accent Lamp - Passenger Seat, E1C Accent Lamp - Driver Door Handle, E1D Accent Lamp - Driver Door (Z75), E1E Accent Lamp - Left Rear Door Handle, E1F

cardiagn.com

No.	Device Label Name	Device Assigned Name	Rating	Description
				Accent Lamp - Right Rear Door Handle, E1LR Accent Lamp - Left Rear Door (Z75), E1M Accent Lamp - Passenger Door Handle, E1P Accent Lamp - Passenger Door (Z75), E1RR Accent Lamp - Right Rear Door (Z75), E38 Flood Lamp - Center Console, E55LR Flood Lamp - Left Rear Door Pocket (Z75), E55RR Flood Lamp - Right Rear Door Pocket (Z75), E63D Flood Lamp - Driver Door Handle (Z75), E63P Flood Lamp - Passenger Door Handle (Z75), KR6 Rear Window Washer Pump Relay, K9 Body Control Module, K14 Distance Sensing Cruise Control Module (K59), K17 Electronic Brake Control Module, K19 Suspension Control Module (Z95), K33 HVAC Control Module, K36 Inflatable Restraint Sensing and Diagnostic Module, K43 Power Steering Control Module, KR61 Trailer Backup Lamps Relay, K73 Telematics Communication Interface Control Module (UE1), K74 Human Machine Interface Control Module (IO5 or IO6), KR76A Retained Accessory Power Relay 1, KR76B Retained Accessory Power Relay 2, K83 Park Brake Control Module (J71), KR95A Liftgate Unlatch Relay (TB4), K124 Active Saftey Control Module (UGN with Z75), KR162 Liftgate Window Unlatch Relay, M4 Air Inlet Door Actuator, M6B Air Temperature Door Actuator - Auxiliary, M6L Air Temperature Door Actuator - Left, M6R Air Temperature Door Actuator - Right, M33 Liftgate Window Latch Assembly, M37B Mode Door Actuator - Auxiliary, M37L Mode Door Actuator - Left, M101L Seat Belt Retractor Motor Module - Left (AX7), M101R Seat Belt Retractor Motor Module - Right (AX7), P22A Video Display - 2nd Row (U42), P22B Video Display - 3rd Row (DNU), S13D Door Lock Switch - Driver, S13P Door Lock Switch - Passenger, S30 Headlamp Switch, S46B Liftgate Unlatch Switch (TB4), S78 Turn Signal/Multifunction Switch, S79D Window Switch - Driver, S141 Liftgate Window Unlatch Switch

cardiagn.com

No.	Device Label Name	Device Assigned Name	Rating	Description
12	SWC BKLT (2A)	F12DL	2A	S70L Steering Wheel Controls Switch - Left
13	EMPTY	F13DL	-	Not Used
14	EMPTY	F14DL	-	Not Used
15	EMPTY	F15DL	-	Not Used
16	DLIS (2A)	F16DL	2A	S39 Ignition Switch (without BTM)
17	VPM (10A)	F17DL	10A	K157 Video Processing Control Module (UVH)
18	MIR WNDO MDL (10A)	F18DL	10A	S52 Outside Rearview Mirror Switch, S79D Window Switch - Driver
19	BCM 1 (10A)	F19DL	10A	E6 Center High Mounted Stop Lamp, E7L License Plate Lamp - Left, E7R License Plate Lamp - Right, E8A Door Sill Plate Lamp - Driver (Z75), E8Q Door Sill Plate Lamp - Left Rear (Z75), E8B Door Sill Plate Lamp - Passenger (Z75), E8R Door Sill Plate Lamp - Right Rear (Z75), E28 Center Console Compartment Lamp (D07 without DCK), E31L Sunshade Mirror Lamp - Left, E31R Sunshade Mirror Lamp - Right, E36AH Dome Lamp (LWB), E37H Dome/Reading Lamps - Left Roof Rail (AZ3), E37J Dome/Reading Lamps - Right Roof Rail (AZ3), E37B Dome/Reading Lamps - 2nd Row (without U42), E37C Dome/Reading Lamps - 3rd Row (without DNU), E37EL Dome/Reading Lamps - Front Overhead Console Left, E37ER Dome/Reading Lamps - Front Overhead Console Right, K9 Body Control Module, K101 Trailer Interface Control Module (VQ9), P22A Video Display - 2nd Row (U42), P22B Video Display - 3rd Row (DNU), S5 Center Console Compartment Lamp Switch (D07 without DCK), S30 Headlamp Switch, S33 Horn Switch
20	FRT BLSTR (15A)	F20DL	15A	K134D Seat Bolster Memory Control Module - Driver (ULT), K134P Seat Bolster Memory Control Module - Passenger (ULT), S64D Seat Adjuster Switch - Driver (ULT), S64P Seat Adjuster Switch - Passenger (ULT)
21	EMPTY	F21DL	-	Not Used
22	EMPTY	F22DL	-	Not Used

cardiagn.com

No.	Device Label Name	Device Assigned Name	Rating	Description
23	EMPTY	F23DL	-	Not Used
24	HVAC/AUX HVAC IGN (15A/15A)	F24DL	15A	K33 HVAC Control Module, K175 Center Console Compartment Cooler Control Module (DCK)
25	IPC IGN/SDM IGN (10A/10A)	F25DL	10A	P14 Passenger Air Bag Disabled Indicator, P16 Instrument Cluster, P43 Collision Alert Indicators (UEU without UVC)
26	TILT COL/SEO TILT COL LCK1/SEO (15A/15A)	F26DL	15A	E35L Exterior Spot Lamp - Left (7X6 or 7X7), E35R Exterior Spot Lamp - Right (7X7), K60 Steering Column Lock Module (BTM), K99 Steering Column Position Control Module (N38)
27	DLC/DSM (10A/10A)	F27DL	10A	K40D Seat Memory Control Module - Driver (A45), K40P Seat Memory Control Module - Passenger (AG2), X84 Data Link Connector
28	PEPS/HVAC BATT (10A/10A)	F28DL	10A	K33 HVAC Control Module, K84 Keyless Entry Control Module (BTM)
29	THEFT DTRNT (10A)	F29DL	10A	B165 Content Theft Deterrent Sensor Module (UTU or UTV), P4 Security Siren (UTR)
30	EMPTY	F30DL	-	Not Used
31	EMPTY	F31DL	-	Not Used
32	EMPTY	F32DL	-	Not Used
33	SEO ALC (15A)	F33DL	15A	W9 Blunt Cut - Police Provision (5W4 or 9C1)
34	PRK ENBL/EAP (15A)	F34DL	10A	KR16B Park Brake Relay, KR1F Adjustable Pedal Relay - Forward, KR1R Adjustable Pedal Relay - Rearward, M5 Adjustable Pedal Motor (JF4 without A45)
35	EMPTY	F35DL	-	Not Used
36	MISC RUN CRNK (10A)	F36DL	10A	A10 Inside Rear View Mirror (AZ3 or DD8), A34 HVAC Controls - Auxiliary (AZ3 or DD8), B87 Rearview Camera (UVC), K69 Transfer Case Control Module (NQH or NP0)
37	HTD STR WHL (7.5A)	F37DL	7.5A	K32 Steering Wheel Heating Control Module (UVD)
38	TILT COL LCK2 (10A)	F38DL	10A	K60 Steering Column Lock Module (BTM)
39	IPC (10A)	F39DL	10A	K78 Head-Up Display Module (UV6), P16 Instrument Cluster, P17 Info Display Module, S31D Seat Heating and

cardiagn.com

No.	Device Label Name	Device Assigned Name	Rating	Description
				Cooling Switch - Driver (KB6 without Z75), S31P Seat Heating and Cooling Switch - Passenger (KB6 without Z75)
40	EMPTY	F40DL	-	Not Used
41	EMPTY	F41DL	-	Not Used
42	EURO TRLR	F42DL	30A	Blunt Cut - Trailer Provision (VQ9)
43	LT DR (30A)	F43DL	30A	M74D Window Motor - Driver, S79LR Window Switch - Left Rear
44	DRVR PWR SEAT (30A)	F44DL	30A	K40D Seat Memory Control Module - Driver (A45), S64D Seat Adjuster Switch - Driver (without A45)
45	EMPTY	F45DL	-	Not Used
46	RT HTD CLD SEAT (15A)	F46DL	15A	K53P Seat Blower Assembly - Passenger Back (KB6), K55P Seat Blower Assembly - Passenger Cushion (KB6)
47	LT HTD CLD SEAT (15A)	F47DL	15A	K53D Seat Blower Assembly - Driver Back (KB6), K55P Seat Blower Assembly - Driver Cushion (KB6)
48	EMPTY	F48DL	-	Not Used
49	EMPTY	F49DL	-	Not Used

X51L FUSE BLOCK - INSTRUMENT PANEL LEFT BOTTOM VIEW

cardiagn.com

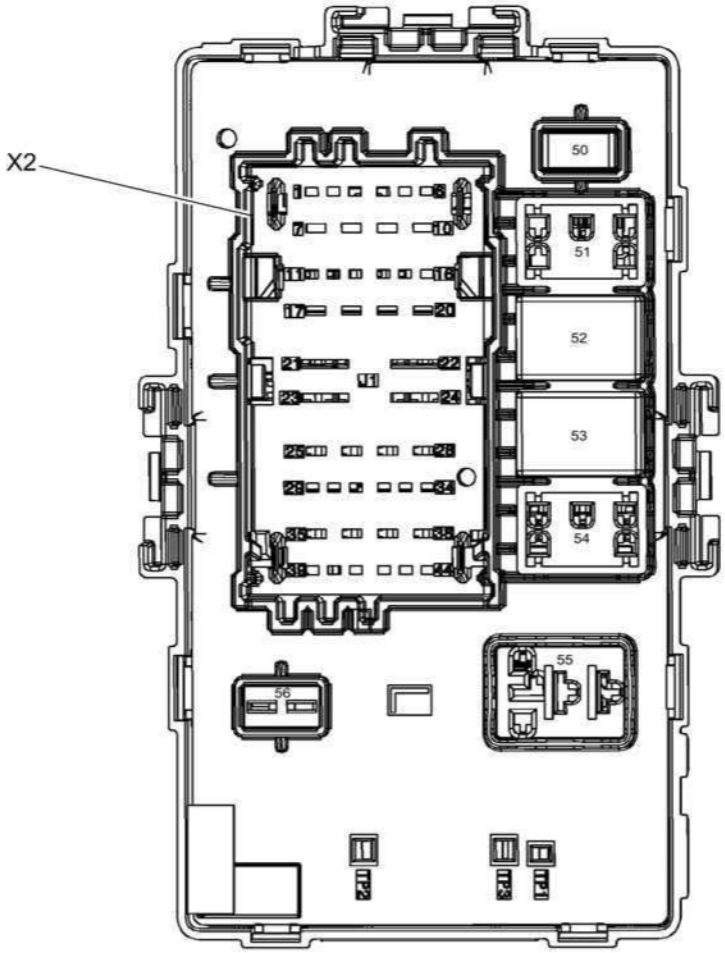

Fig. 8: X51L Fuse Block -- Instrument Panel Left Bottom View
Courtesy of GENERAL MOTORS COMPANY

X50L Fuse Block - Instrument Panel Left Usage

No.	Device Label Name	Fuse And Relay Description	Rating	Circuits
Fuses				

cardiagn.com

No.	Device Label Name	Fuse And Relay Description	Rating	Circuits
50	APO 2 (15A)	F50DL	15A	X80G Accessory Power Receptacle - Instrument Panel (AZ3 without DT4)
56	EMPTY	F56DL	-	Not Used
Relays				
51	EMPTY	-	-	Not Used
52	RAP/ACCY (RLY)	KR76A Retained Accessory Power Relay 1	-	F8DL, F5DL
53	RUN CRNK (RLY)	KR73 Ignition Main Relay	-	F24DL, F25DL, F33DL, F36DL, F37DL, F38DL
54	EMPTY	-	-	Not Used
55	EMPTY	-	-	Not Used
Important: Relays listed below are non-serviceable Printed Circuit Board (PCB) relays and are internal to the block				
-	-	KR87 Transmission Park Position Relay	-	KR1F Adjustable Pedal Relay - Forward (JF4 without A45), KR1R Adjustable Pedal Relay - Rearward (JF4 without A45), S143L Folding Seat Control Switch - 2nd Row Left (ATN or ATT), S143R Folding Seat Control Switch - 2nd Row Right (ATN or ATT), S144A Folding Seat Control Switch - Rear Compartment 2nd Row (ATN or ATT), S144B Folding Seat Control Switch - Rear Compartment 3rd Row (ATN or ATT)
-	-	KR1F Adjustable Pedal Relay - Forward	-	M5 Adjustable Pedal Motor (JF4 without A45)
-	-	KR1R Adjustable Pedal Relay - Rearward	-	M5 Adjustable Pedal Motor (JF4 without A45)

X51L FUSE BLOCK - INSTRUMENT PANEL LEFT X1

cardiagn.com

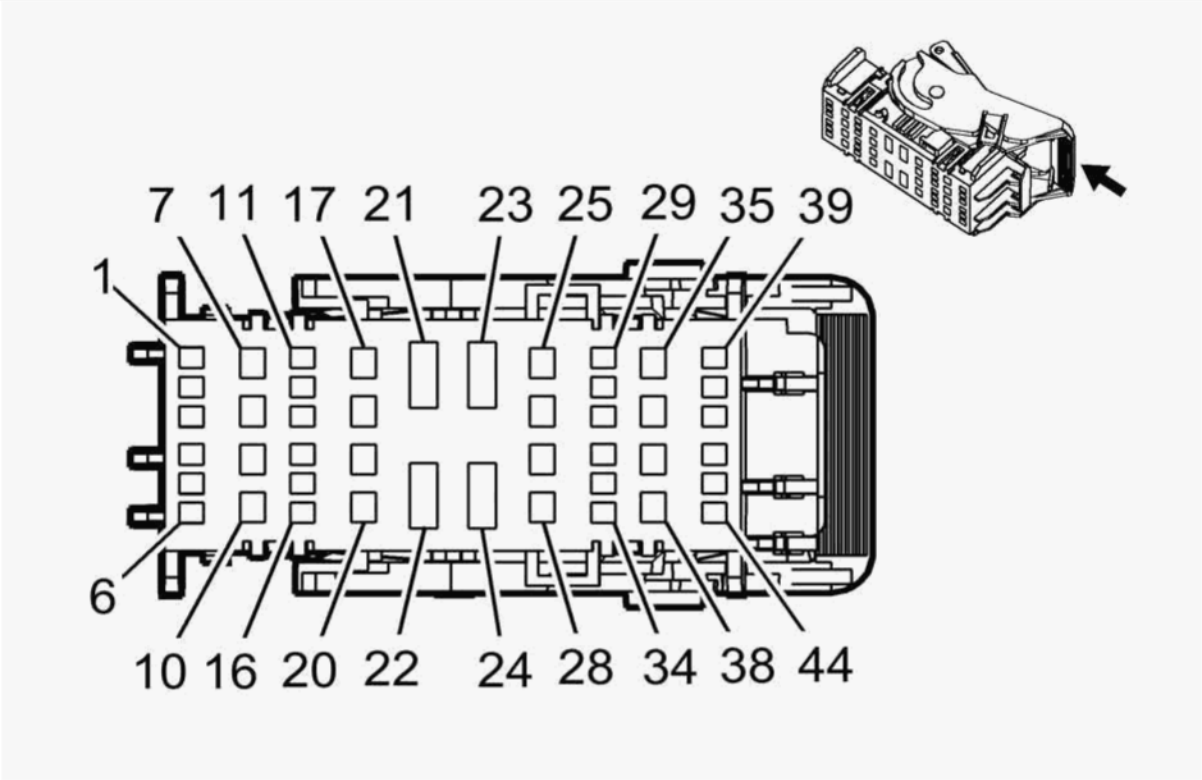

Connector Part Information

- Harness Type: Body
- OEM Connector: 13967687
- Service Connector: 19329455
- Description: 44-Way F 1.5, 2.8, 800 Metri-Pack Series (BK)

Terminal Part Information

Terminal Type ID	Terminated Lead	Diagnostic Test Probe	Terminal Removal Tool	Service Terminal	Tray	Core Crimp	Insulation Crimp
I	13575718	J-35616-44 (YE)	J-38125-558	12110127	2	F	G
II	13575838	J-35616-35 (VT)	J-38125-11A	7116-4111-02	13	E	A
III	13578891	J-35616-2A (GY)	J-38125-11A	Not Available	Not Available	Not Available	Not Available
IV	19301761	J-35616-35 (VT)	J-38125-12A	Not Available	Not Available	Not Available	Not Available

cardiagn.com

Terminal Type ID	Terminated Lead	Diagnostic Test Probe	Terminal Removal Tool	Service Terminal	Tray	Core Crimp	Insulation Crimp
IV	19301761	J-35616-35 (VT)	J-38125-12A	Not Available	Not Available	Not Available	Not Available
IV	19301761	J-35616-35 (VT)	J-38125-12A	Not Available	Not Available	Not Available	Not Available
V	19301767	J-35616-2A (GY)	J-38125-560	Not Available	Not Available	Not Available	Not Available
V	19301767	J-35616-2A (GY)	J-38125-560	Not Available	Not Available	Not Available	Not Available

Pin	Size	Color	Circuit	Function	Terminal Type ID	Option
1	0.5	RD/BN	2240	Battery Positive Voltage	V	-
2	0.5	RD/D-BU	4540	Battery Positive Voltage	V	-
3	0.5	RD/VT	1640	Battery Positive Voltage	III	-
4	-	-	-	Not Occupied	-	-
5	0.5	RD/BN	1140	Battery Positive Voltage	V	-
6 - 13	-	-	-	Not Occupied	-	-
14	0.5	RD/YE	4340	Battery Positive Voltage	V	-
15	0.35	L-GN/GY	5286	Adjustable Pedal Switch Forward Signal	V	-
16	0.5	RD/VT	1940	Battery Positive Voltage	V	-
17	0.75	RD/L-GN	6140	Battery Positive Voltage	IV	-
18	0.75 0.75	RD/L-GN RD/L-GN	5140 5140	Battery Positive Voltage	IV II	- -
19	-	-	-	Not Occupied	-	-
20	0.75	L-GN/VT	5130	Adjustable Pedal Actuator Forward Control	IV	-
21	5	RD/VT	842	Battery Positive Voltage	I	-
22	-	-	-	Not Occupied	-	-
23	5	RD/D-BU	42	Battery Positive Voltage	I	-
24 - 26	-	-	-	Not Occupied	-	-
27	2.5	RD/YE	5040	Battery Positive Voltage	IV	-
28	0.75	YE	5129	Adjustable Pedal Actuator Rearward Control	IV	-
29	-	-	-	Not Occupied	-	-
30	0.5	VT/WH	1939	Run/Crank Ignition 1 Voltage	V	-
31	-	-	-	Not Occupied	-	-

cardiagn.com

Pin	Size	Color	Circuit	Function	Terminal Type ID	Option
32	0.5	VT/L-GN	1739	Run/Crank Ignition 1 Voltage	V	-
33	0.35	WH/GY	5285	Adjustable Pedal Switch Rearward Signal	V	-
34	0.5	YE/BK	5813	Park Enable Control	V	-
35	-	-	-	Not Occupied	-	-
36	2.5	RD/D-BU	1842	Battery Positive Voltage	IV	-
37	2.5	RD/D-BU	1842	Battery Positive Voltage	IV	-
38 - 41	-	-	-	Not Occupied	-	-
42	0.35	L-GN/VT	5199	Run/Crank Relay Coil Control	V	-
43	0.35 0.35	GY/L-GN GY/VT	4083 755	RAP Relay 2 Coil Control RAP Relay Coil Control	V	- -
44	0.35	VT/YE	43	Accessory Ignition Voltage	V	-

X51L FUSE BLOCK - INSTRUMENT PANEL LEFT X2

cardiagn.com

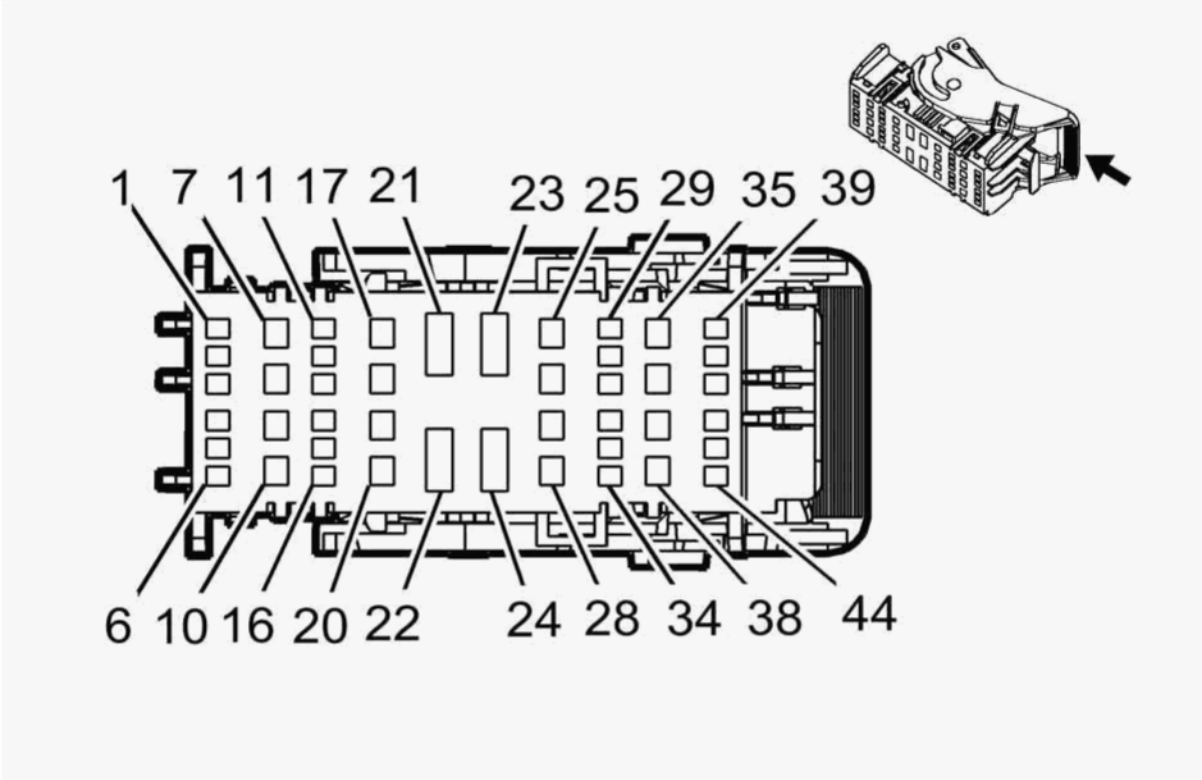

Connector Part Information

- Harness Type: Instrument Panel
- OEM Connector: 13967688
- Service Connector: 19329456
- Description: 44-Way F 1.5, 2.8, 800 Metri-Pack Series (GY)

Terminal Part Information

Terminal Type ID	Terminated Lead	Diagnostic Test Probe	Terminal Removal Tool	Service Terminal	Tray	Core Crimp	Insulation Crimp
I	19301761	J-35616-35 (VT)	J-38125-12A	Not Available	Not Available	Not Available	Not Available
I	19301761	J-35616-35 (VT)	J-38125-12A	Not Available	Not Available	Not Available	Not Available
I	19301761	J-35616-35 (VT)	J-38125-12A	Not Available	Not Available	Not Available	Not Available
II	19301767	J-35616-2A (GY)	J-38125-560	Not Available	Not Available	Not Available	Not Available

cardiagn.com

Terminal Type ID	Terminated Lead	Diagnostic Test Probe	Terminal Removal Tool	Service Terminal	Tray	Core Crimp	Insulation Crimp
II	19301767	J-35616-2A (GY)	J-38125-560	Not Available	Not Available	Not Available	Not Available

Pin	Size	Color	Circuit	Function	Terminal Type ID	Option
1 - 2	-	-	-	Not Occupied	-	-
3	0.5	YE	6817	LED Backlight Dimming Control	II	-
4	0.35	BN	6136	Control	II	-
5	0.5	RD/D-BU	540	Battery Positive Voltage	II	-
6	-	-	-	Not Occupied	-	-
7	0.5	RD/BN	2940	Battery Positive Voltage	I	-
8	1	RD/GY	2140	Battery Positive Voltage	I	-
9	-	-	-	Not Occupied	-	-
10	1.5	RD/BN	4240	Battery Positive Voltage	I	-
11 - 13	-	-	-	Not Occupied	-	-
14	0.5 0.75	RD/GY RD/GY	4140 4140	Battery Positive Voltage	II	- -
15	0.5	VT/GY	539	Run/Crank Ignition 1 Voltage	II	-
16 - 17	-	-	-	Not Occupied	-	-
18	0.5	RD/WH	2740	Battery Positive Voltage	I	-
19	-	-	-	Not Occupied	-	-
20	1.5	RD/WH	1040	Battery Positive Voltage	I	-
21 - 24	-	-	-	Not Occupied	-	-
25	0.5	RD/VT	3340	Battery Positive Voltage	I	-
26	0.5	RD/WH	640	Battery Positive Voltage	I	-
27	0.5 1.5	RD/VT RD/VT	4640 4640	Battery Positive Voltage	I	- -
28	0.5	VT/BK	1639	Run/Crank Ignition 1 Voltage	I	-
29 - 33	-	-	-	Not Occupied	-	-
34	0.5	VT/BK	739	Run/Crank Ignition 1 Voltage	II	-
35	0.5	RD/GY	2840	Battery Positive Voltage	I	-

cardiagn.com

Pin	Size	Color	Circuit	Function	Terminal Type ID	Option
36	0.75	D-BU/VT	807	OFF /Accessory Ignition Voltage	I	-
37	0.5	VT/WH	1139	Run/Crank Ignition 1 Voltage	I	-
38	0.35	VT/L-GN	1739	Run/Crank Ignition 1 Voltage	I	-
39 - 42	-	-	-	Not Occupied	-	-
43	0.35	YE	6812	Out of Park Signal	II	-
44	0.75	BK	1850	Ground	II	-

X51L FUSE BLOCK - INSTRUMENT PANEL LEFT X3

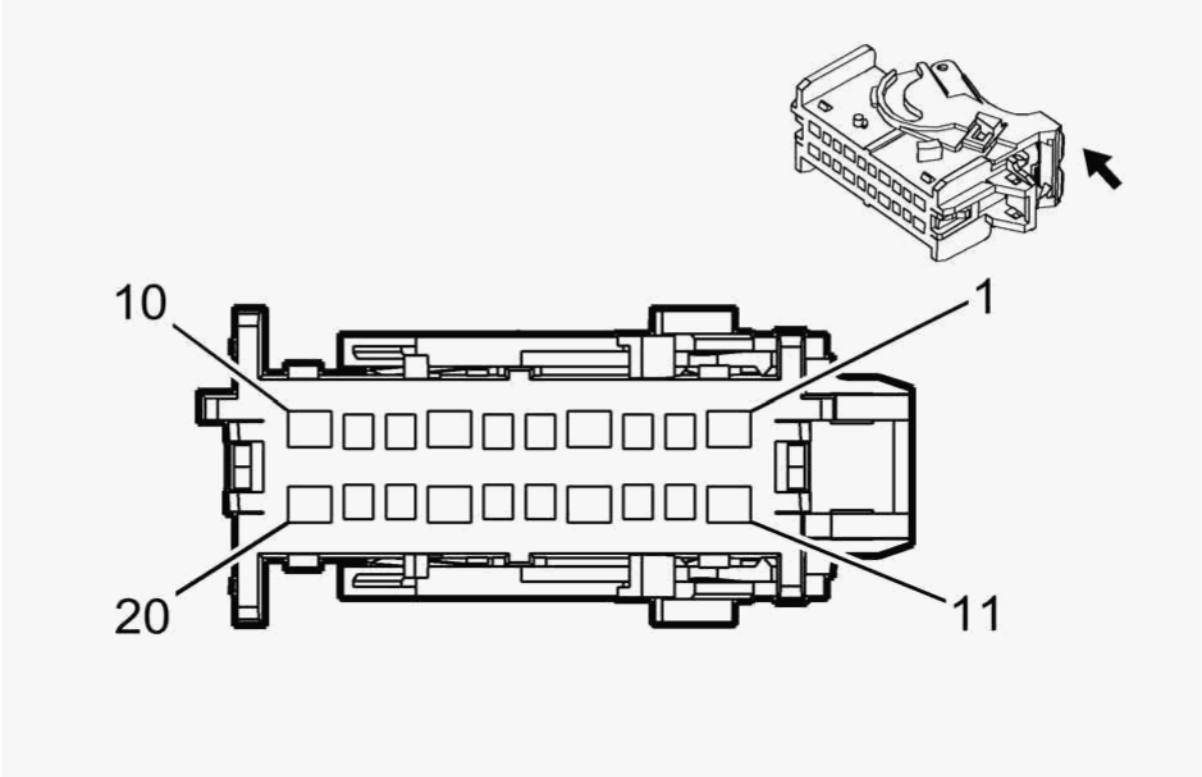

Connector Part Information

- Harness Type: Headliner
- OEM Connector: 15547106

cardiagn.com

- Service Connector: 13597270
- Description: 20-Way F 1.5, 2.8 OCS Series (BK)

Terminal Part Information

Terminal Type ID	Terminated Lead	Diagnostic Test Probe	Terminal Removal Tool	Service Terminal	Tray	Core Crimp	Insulation Crimp
I	19301761	J-35616-35 (VT)	J-38125-12A	Not Available	Not Available	Not Available	Not Available
II	19301767	J-35616-2A (GY)	J-38125-560	Not Available	Not Available	Not Available	Not Available

Pin	Size	Color	Circuit	Function	Terminal Type ID	Option
1 - 10	-	-	-	Not Occupied	-	-
11	0.35	VT/YE	43	Accessory Ignition Voltage	I	-
12	0.5	RD/YE	240	Battery Positive Voltage	II	-
13	0.35	VT/L-GN	1739	Run/Crank Ignition 1 Voltage	II	-
14	0.35	VT/BK	1139	Run/Crank Ignition 1 Voltage	I	-
15 - 20	-	-	-	Not Occupied	-	-

X51R FUSE BLOCK - INSTRUMENT PANEL RIGHT LABEL

cardiagn.com

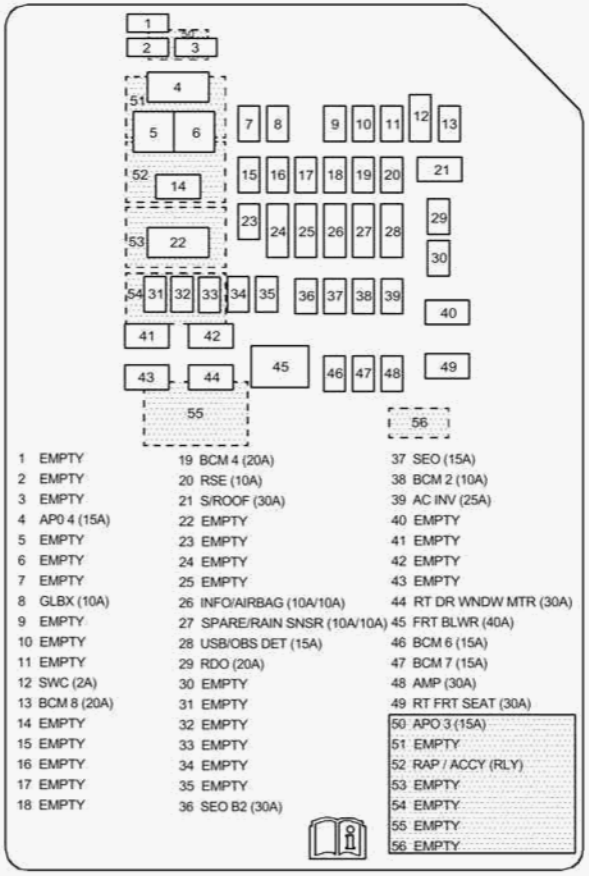

Fig. 9: X51L Fuse Block -- Instrument Panel Right Label
Courtesy of GENERAL MOTORS COMPANY

cardiagn.com

ELECTRICAL

Wiring Systems and Power Management - Component Locator - Ground Views - Escalade, Suburban, Tahoe, Yukon

GROUND VIEWS

G100 (L83 WITH 5W4 OR 9C1)

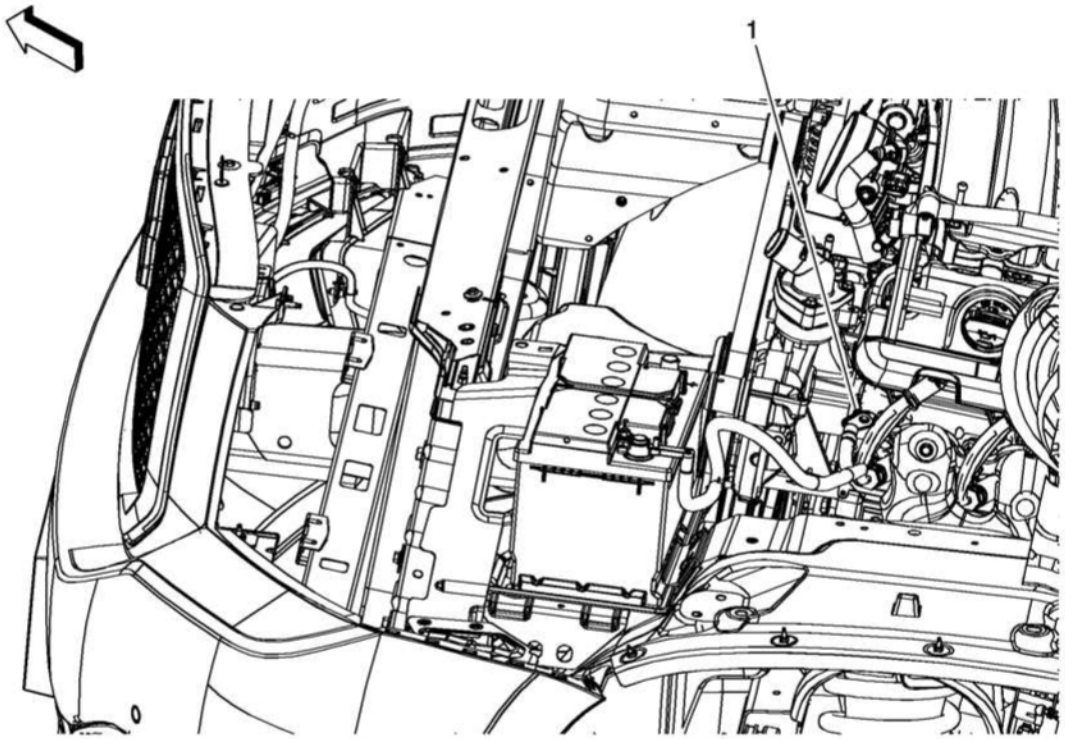

Fig. 1: G100 (L83 with 5W4 or 9C1)
Courtesy of GENERAL MOTORS COMPANY

Items
1: G100 (L96 or L83 with 5W4 or 9C1)

cardiagn.com

G100, G110 AND G120 (L96)

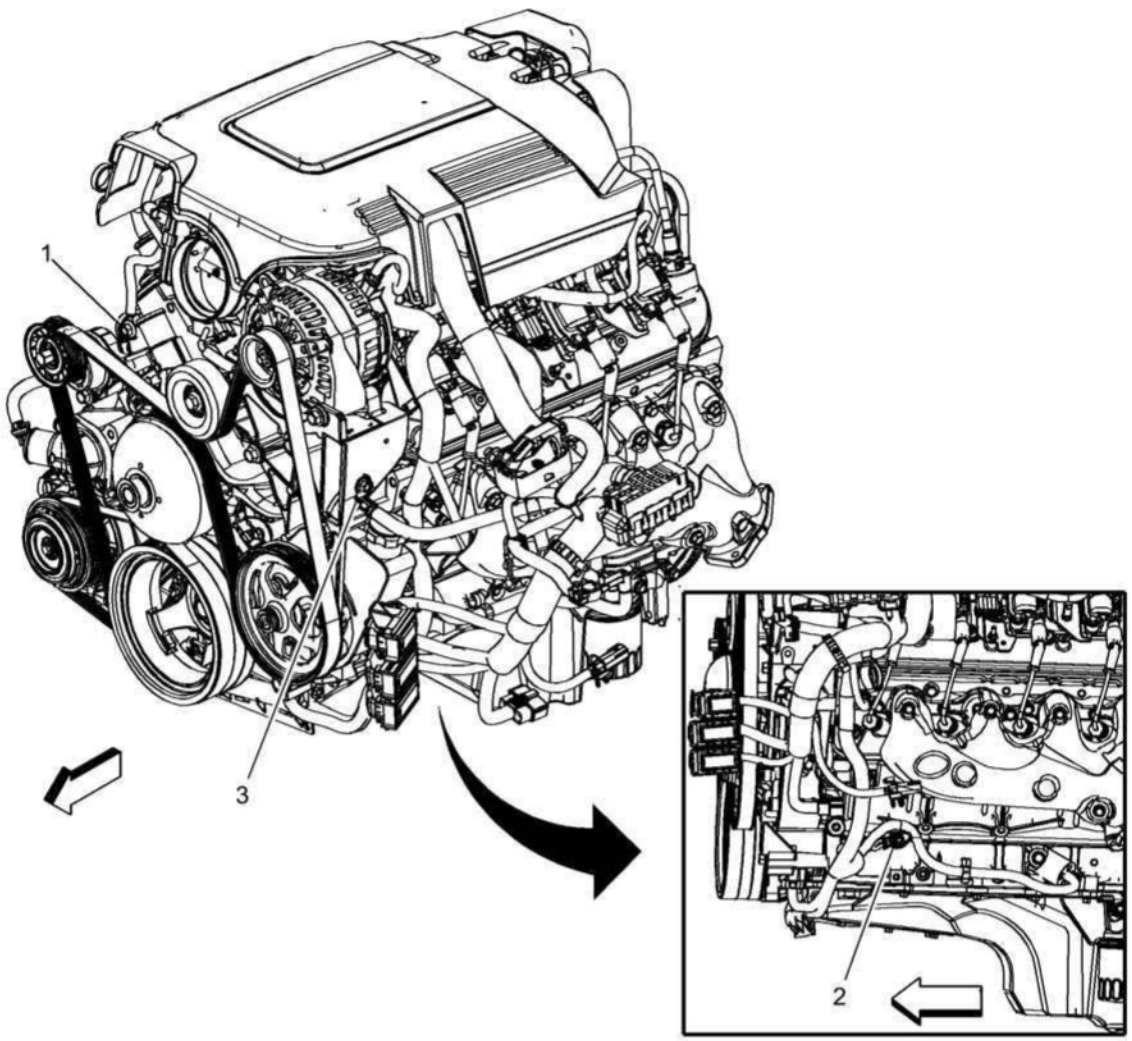

Fig. 2: G100, G110 and G120 (L96)
Courtesy of GENERAL MOTORS COMPANY

Items
1: G120 (L96)

cardiagn.com

Items
2: G110
3: G100 (L96 or L83 with 5W4 or 9C1)

G101

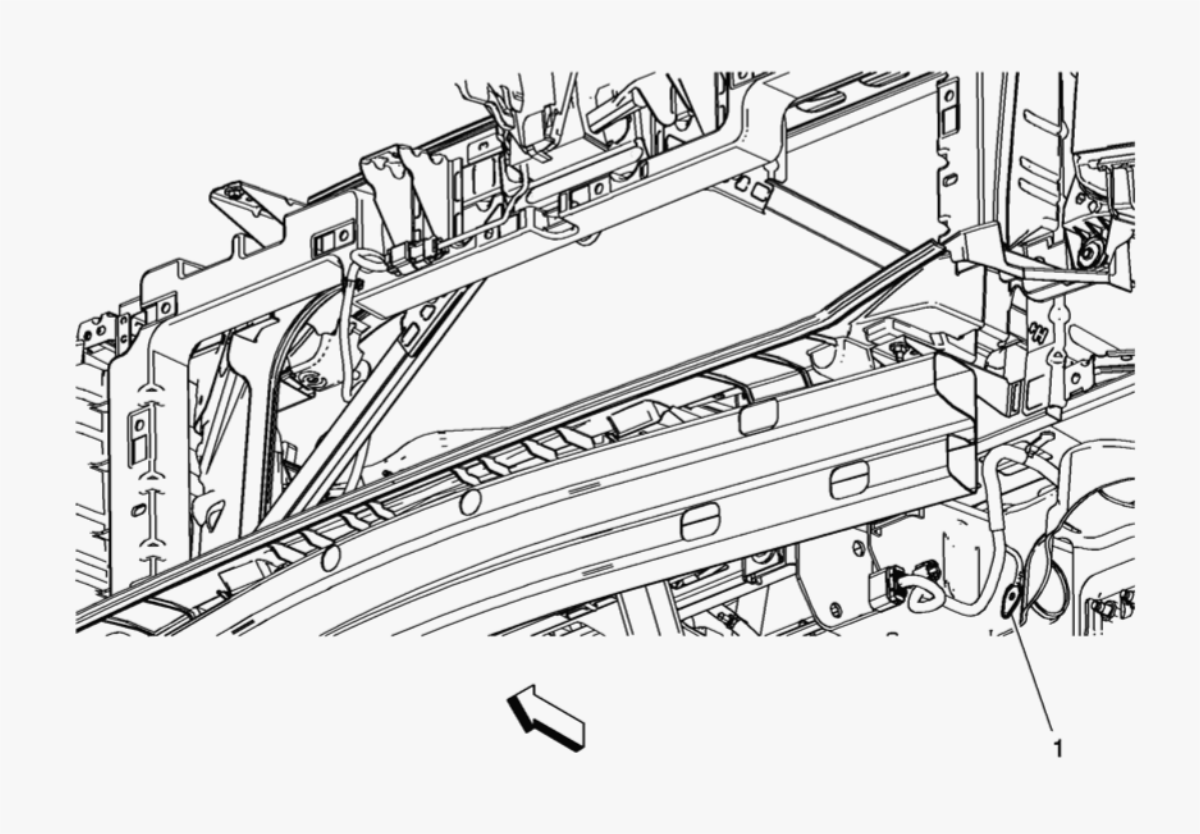

Fig. 3: G101
Courtesy of GENERAL MOTORS COMPANY

Items
1: G101

G102

cardiagn.com

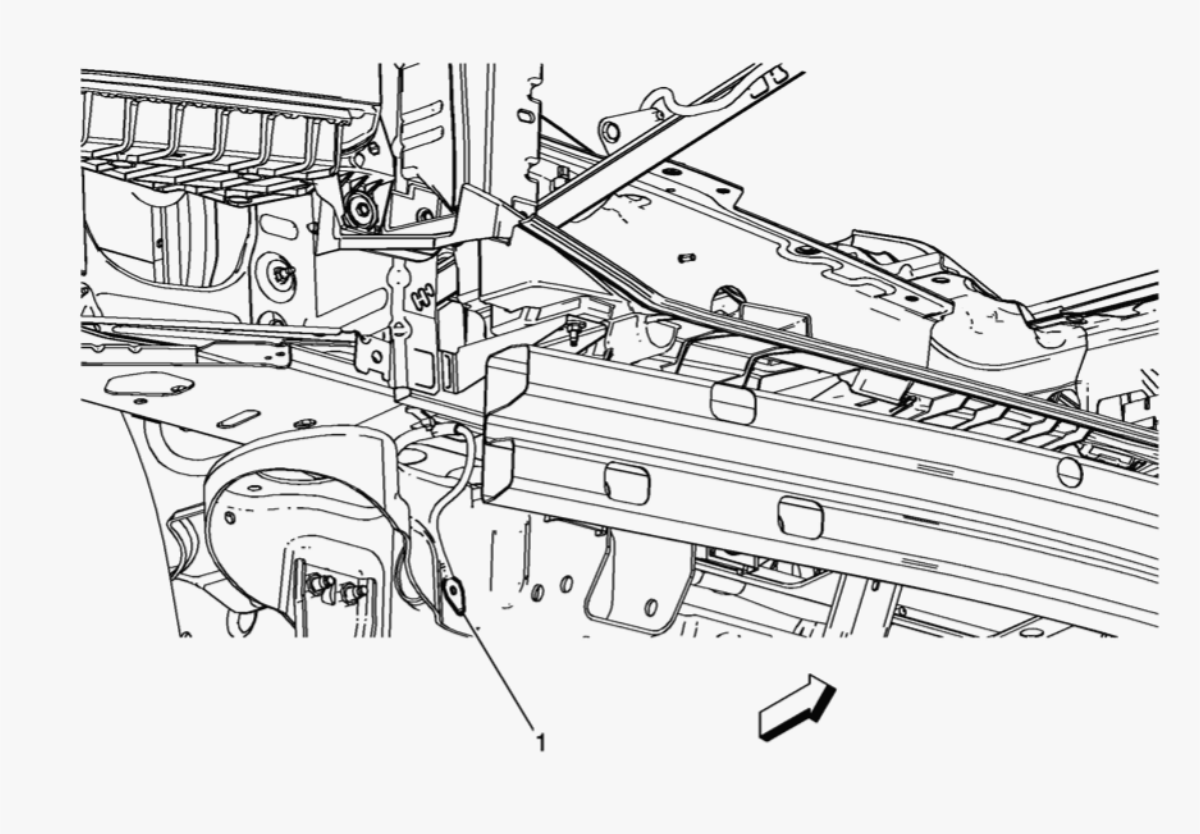

Fig. 4: G102
Courtesy of GENERAL MOTORS COMPANY

Items
1: G102

G103 AND G125 (L83 OR L86)

cardiagn.com

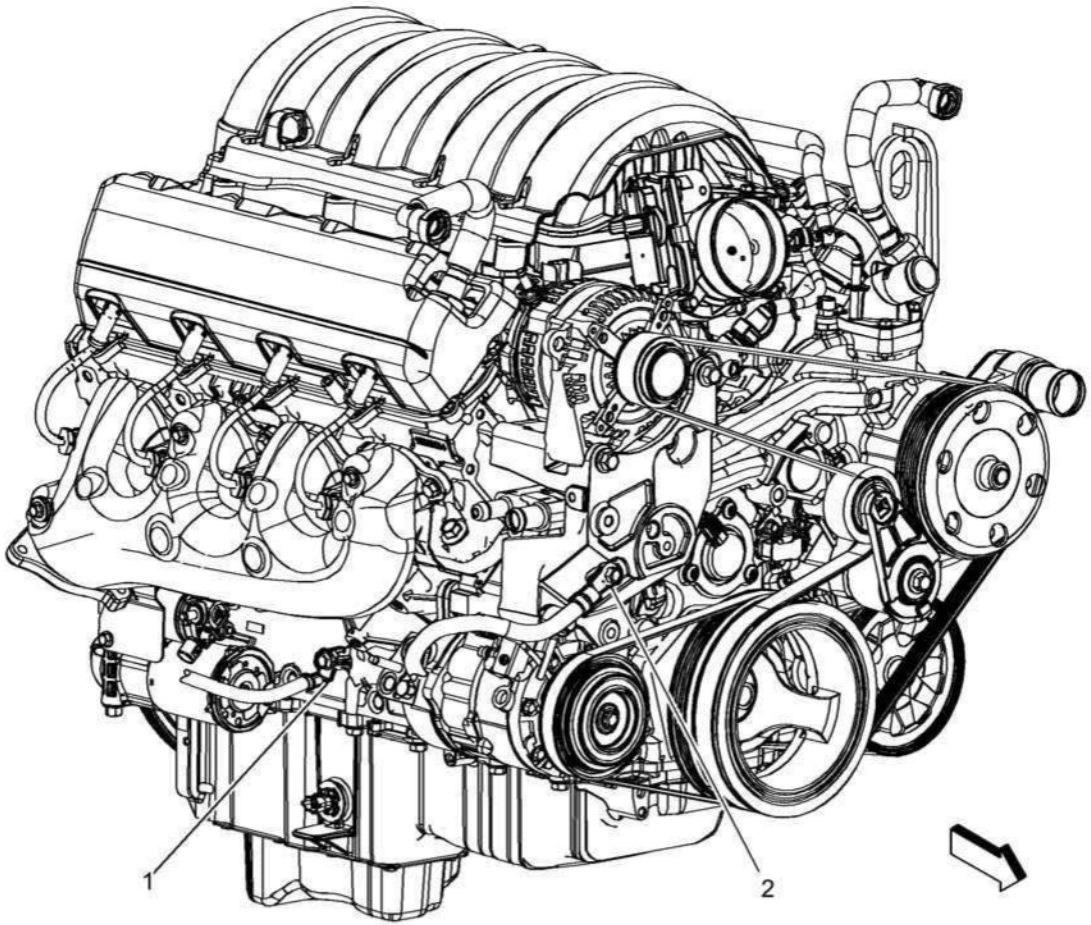

Fig. 5: G103 and G125 (L83 or L86)
Courtesy of GENERAL MOTORS COMPANY

Items
1: G103
2: G125 (L83 or L86)

cardiagn.com

G110 (L83 OR L86)

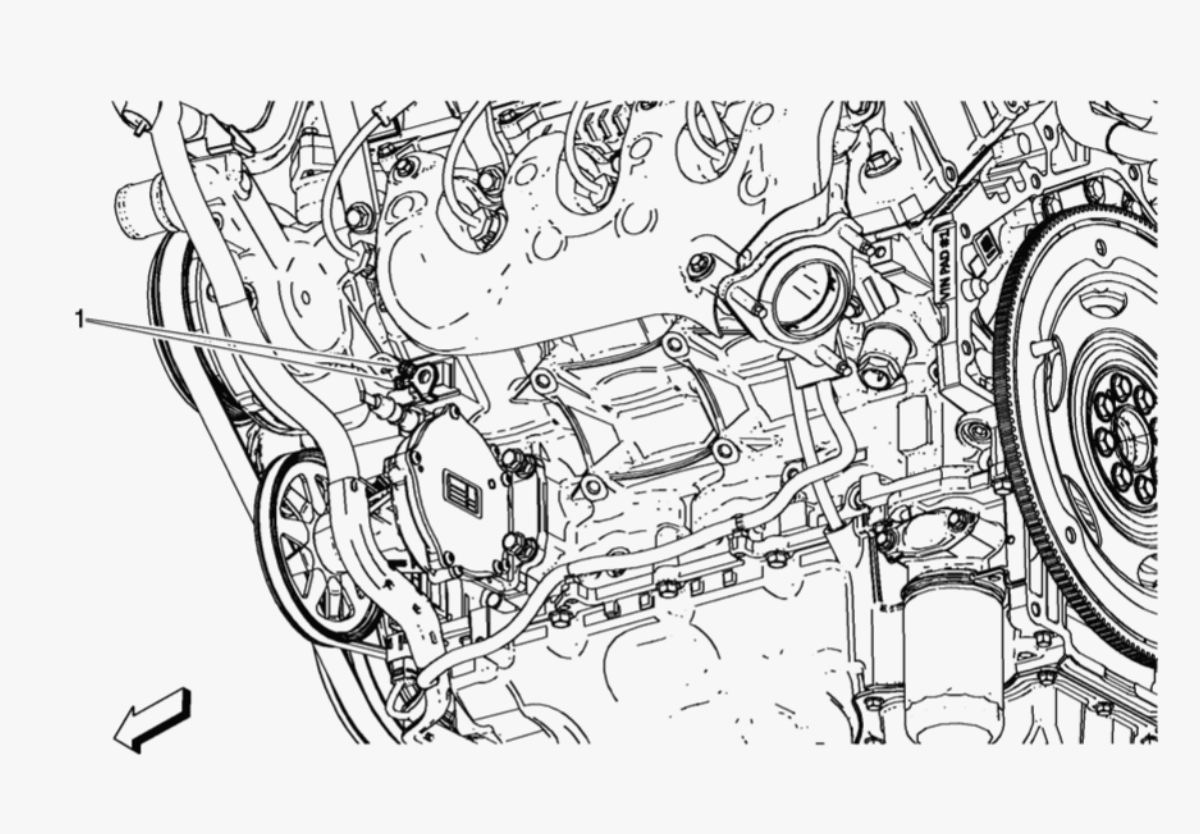

Fig. 6: G110 (L83 or L86)
Courtesy of GENERAL MOTORS COMPANY

Items
1: G110

G121

cardiagn.com

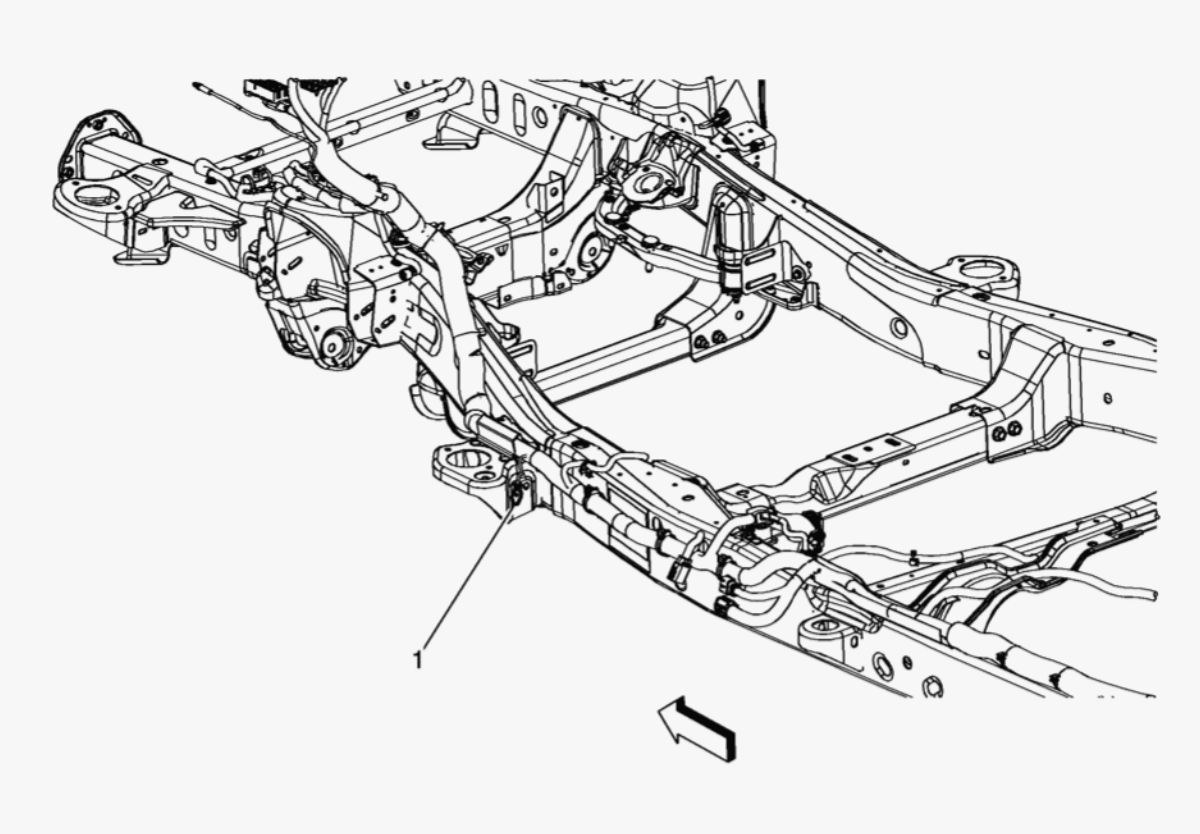

Fig. 7: G121
Courtesy of GENERAL MOTORS COMPANY

Items
1: G121

G130 AND G140 (L83 OR L86)

cardiagn.com

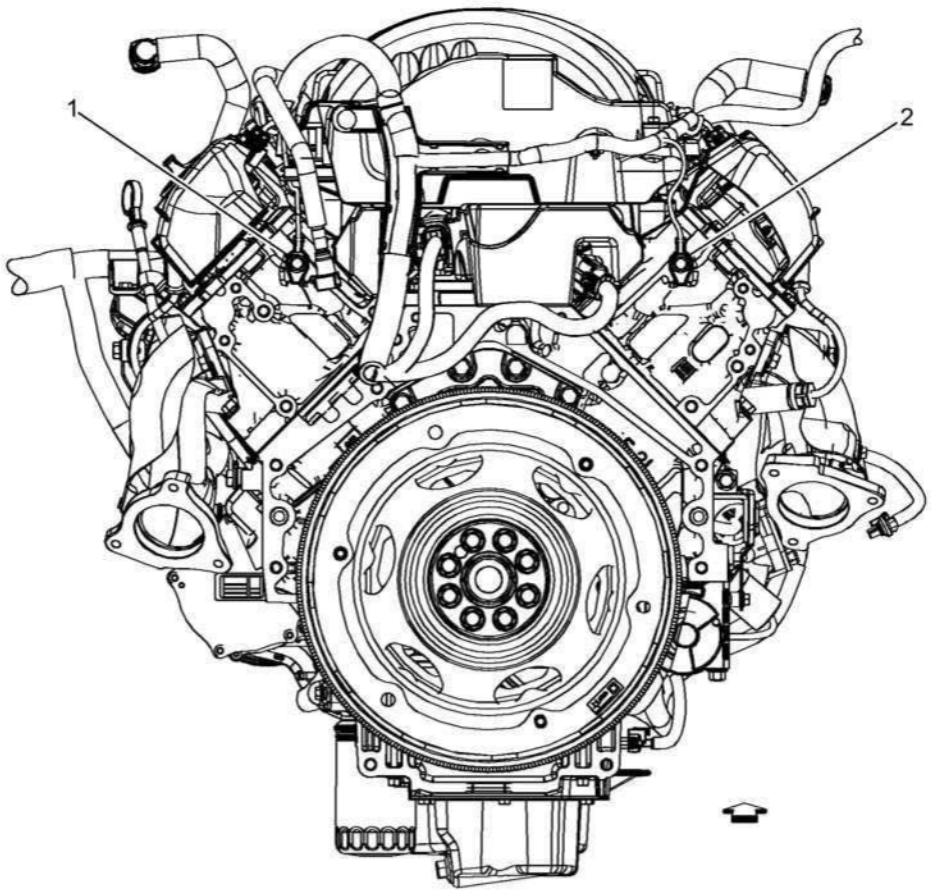

Fig. 8: G130 and G140 (L83 or L86)
Courtesy of GENERAL MOTORS COMPANY

Items
1: G130 (L83 or L86)
2: G140 (L83 or L86)

cardiagn.com

G141 (L83 OR L86)

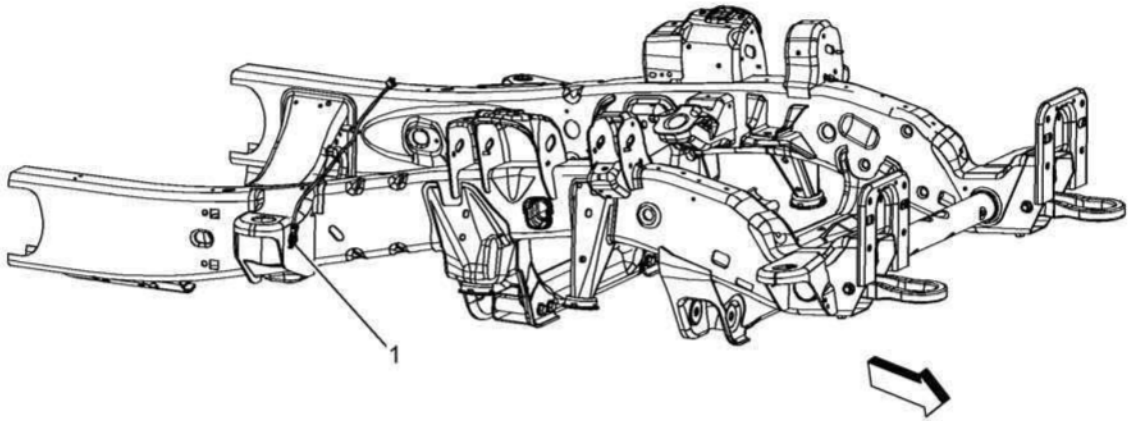

Fig. 9: G141 (L83 or L86)
Courtesy of GENERAL MOTORS COMPANY

Items
1: G141 (L83 or L86)

cardiagn.com

G210

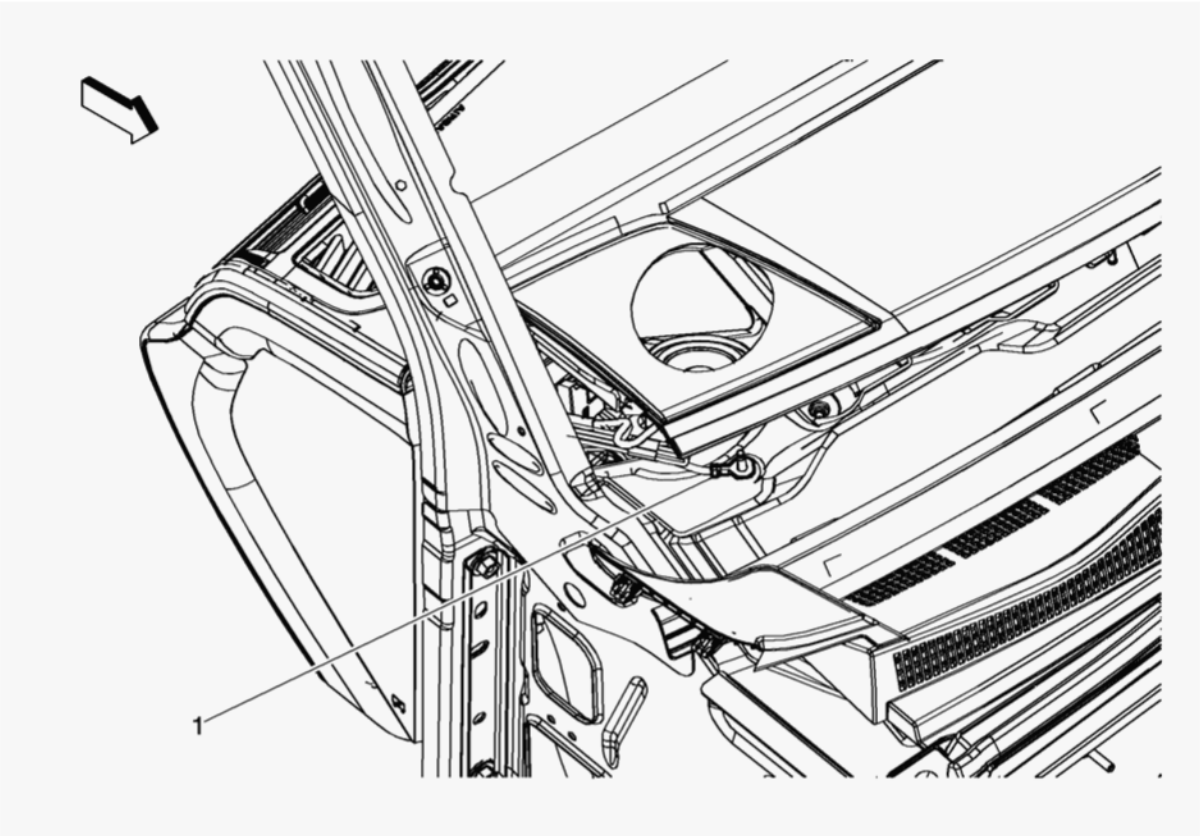

Fig. 10: G210
Courtesy of GENERAL MOTORS COMPANY

Items
1: G210

G218

cardiagn.com

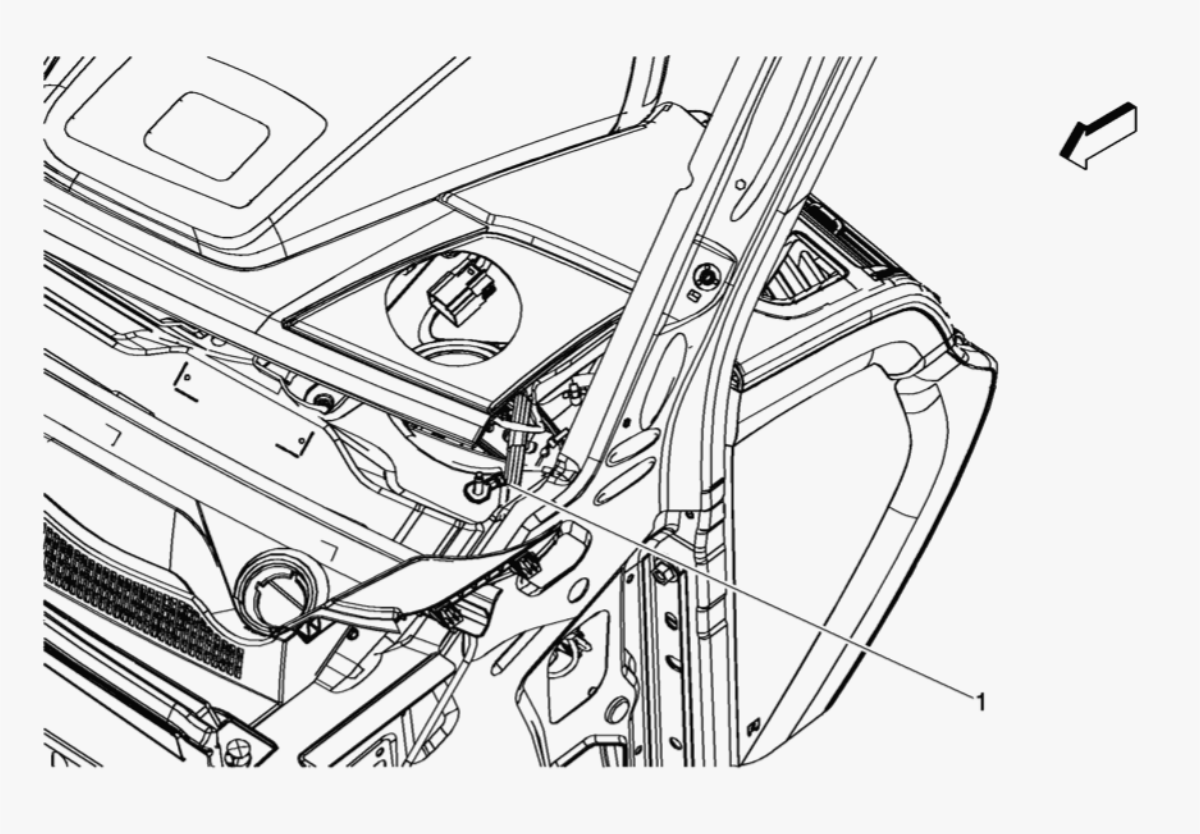

Fig. 11: G218
Courtesy of GENERAL MOTORS COMPANY

Items
1: G218

G311 AND G325

cardiagn.com

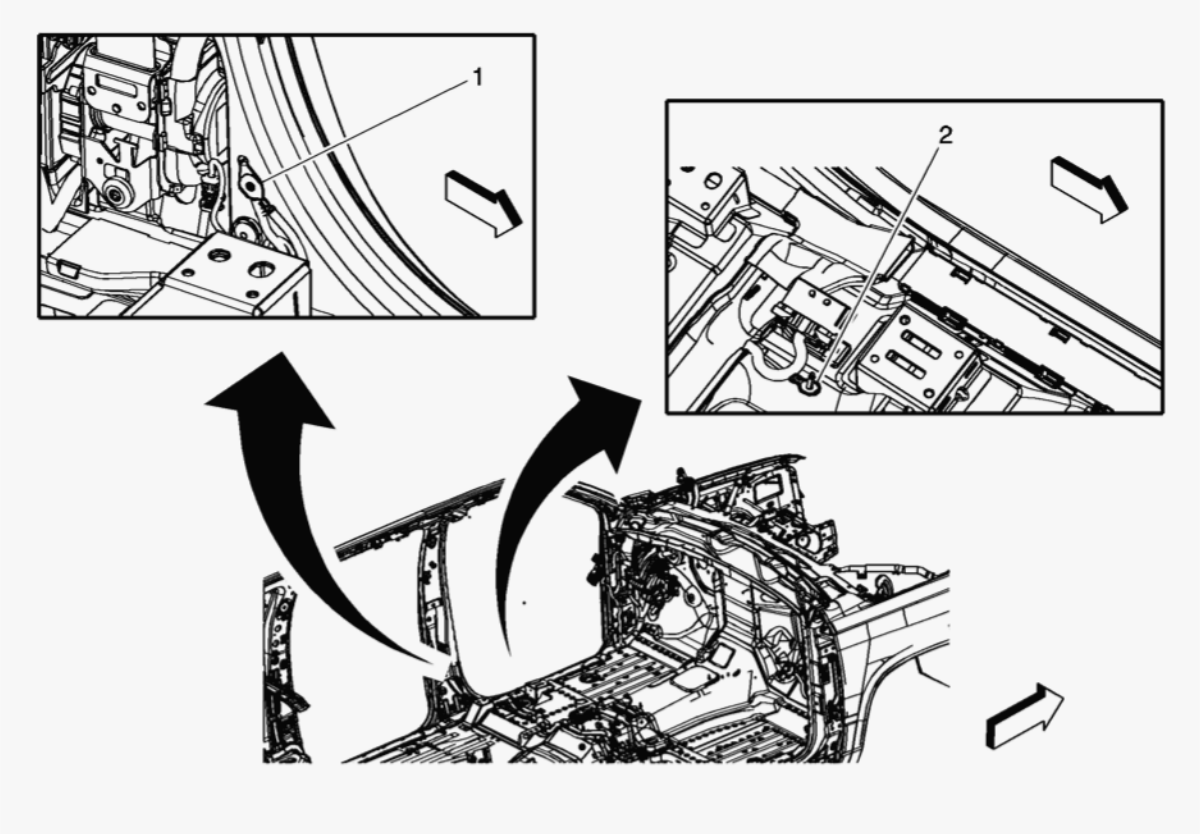

Fig. 12: G311 and G325
Courtesy of GENERAL MOTORS COMPANY

Items
1: G311
2: G325

G312 AND G327

cardiagn.com

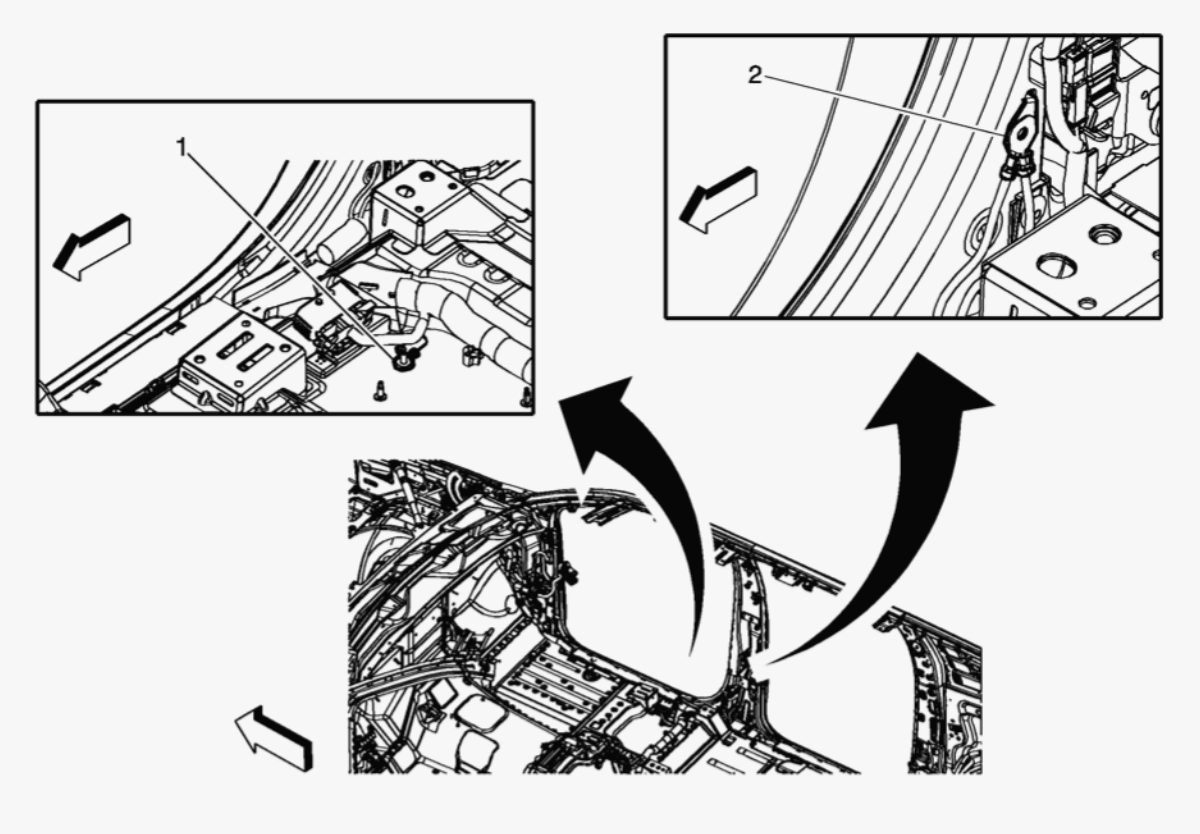

Fig. 13: G312 and G327
Courtesy of GENERAL MOTORS COMPANY

Items
1: G327
2: G312

G400

cardiagn.com

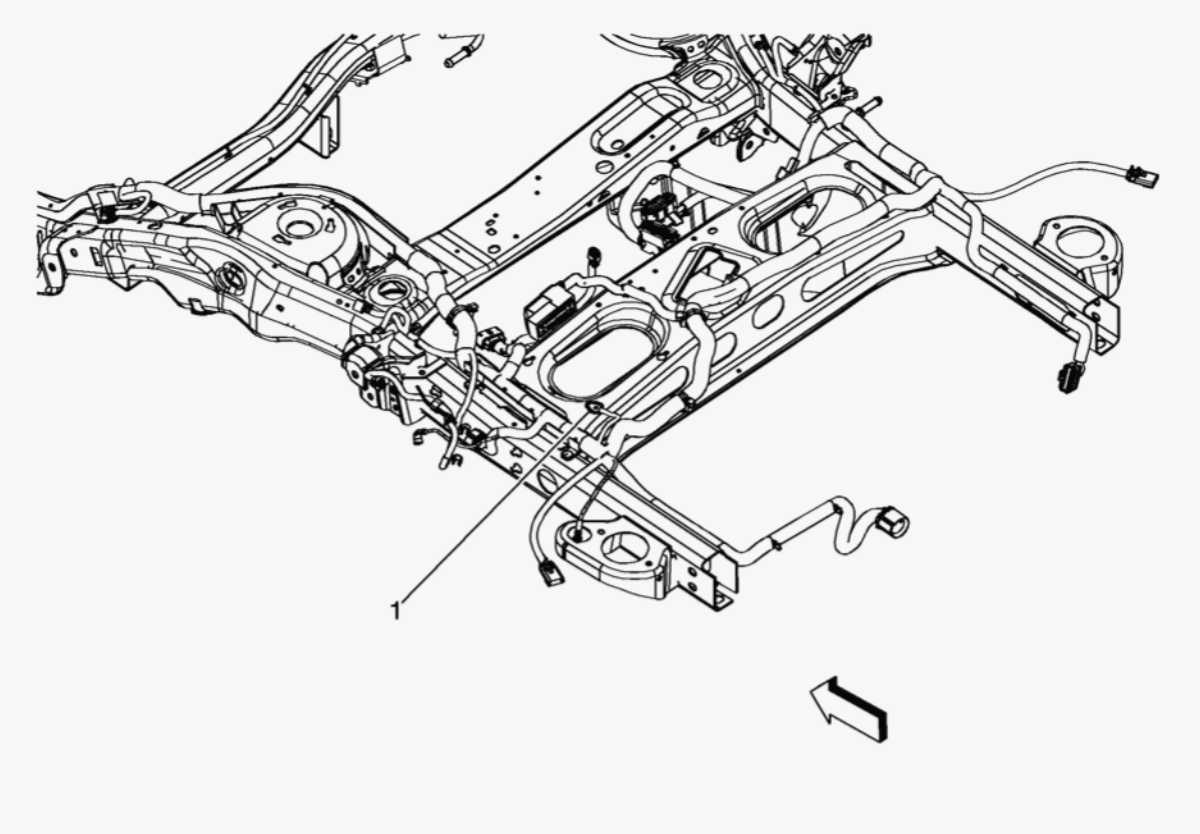

Fig. 14: G400
Courtesy of GENERAL MOTORS COMPANY

Items
1: G400

G402

cardiagn.com

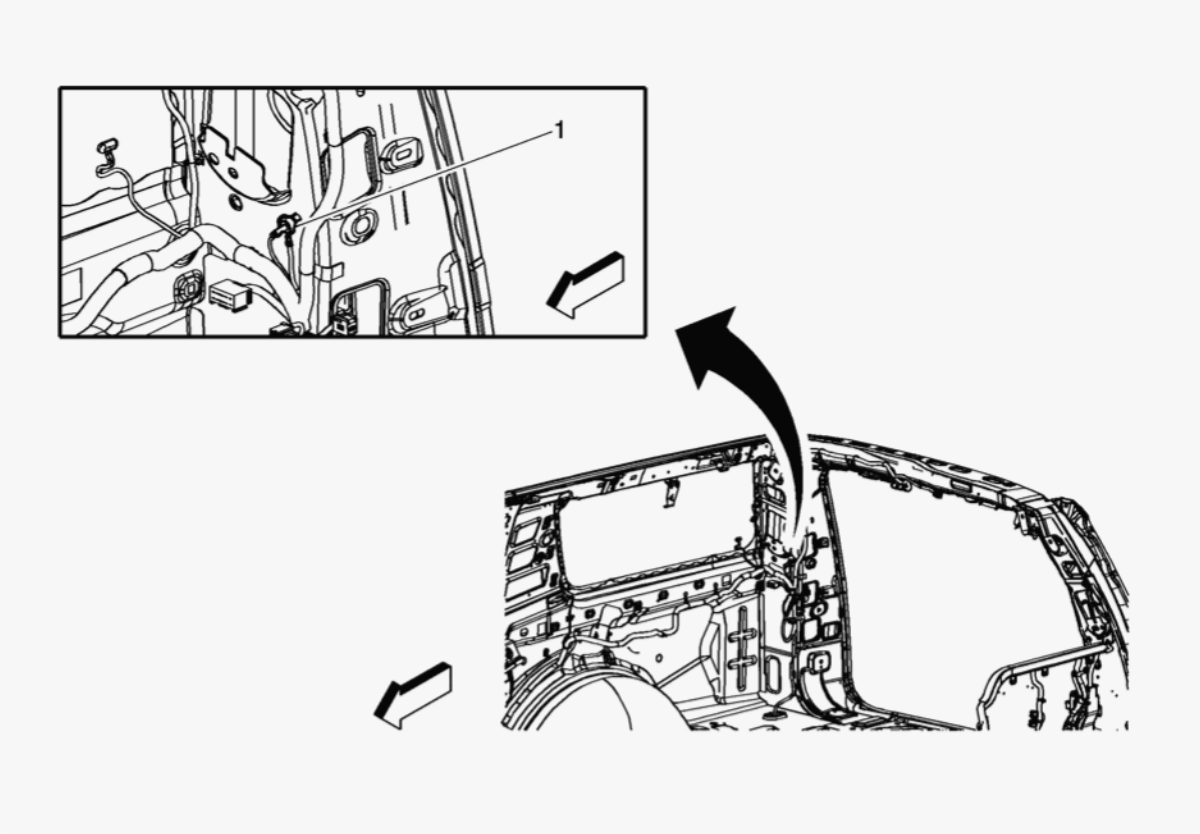

Fig. 15: G402
Courtesy of GENERAL MOTORS COMPANY

Items
1: G402

cardiagn.com

ELECTRICAL

Wiring Systems and Power Management - Component Locator - Master Electrical Component List - Escalade, Suburban, Tahoe, Yukon

MASTER ELECTRICAL COMPONENT LIST

Code	Name	Option	Location	Locator View	Connector End View
A3L	Sunshade - Left	-	In the front of the passenger compartment, above the driver seat	-	-
A3R	Sunshade - Right	-	In the front of the passenger compartment, above the passenger seat	-	-
A6D	Fuel Pump and Level Sensor Assembly - Secondary	L96	Under the vehicle, mounted in the rear fuel tank	-	A6D Fuel Pump and Level Sensor Assembly - Secondary
A7	Fuel Pump and Level Sensor Assembly	-	Under the vehicle in the fuel tank	-	A7 Fuel Pump and Level Sensor Assembly
A9A	Outside Rearview Mirror - Driver	-	Outside the vehicle, at the front of the driver door	• Front of Vehicle Components (X88) • Front of Vehicle Components (Z88) • Front of Vehicle Components (Z75)	-
A9B	Outside Rearview Mirror - Passenger	-	Outside the vehicle, at the front	• Front of Vehicle Components (Z75)	-

cardiagn.com

Code	Name	Option	Location	Locator View	Connector End View
			of the passenger door	• Front of Vehicle Components (X88) • Front of Vehicle Components (Z88)	
A10	Inside Rearview Mirror	-	In the passenger compartment, at the top center of the windshield	Overhead Console Components	A10 Inside Rearview Mirror
A11	Radio	-	In the passenger compartment, center of the instrument panel, behind the HVAC controls	• Front of Instrument Panel Components (X88/Z88 without D07/DCK) • Back of Instrument Panel Components (X88/Z88 without D07/DCK)	• A11 Radio X1 • A11 Radio X2 • A11 Radio X3
A14D	Seat Lumbar Support Pump - Driver	A45, with Y91 or Z75 without ULT	In the passenger compartment, part of the driver seat back	Driver Seat Back Components	A14D Seat Lumbar Support Pump - Driver
A14P	Seat Lumbar Support Pump - Passenger	Y91 or Z75 without ULT	In the passenger compartment, part of the passenger seat back	Passenger Seat Components View	A14P Seat Lumbar Support Pump - Passenger
A16	Transfer Case Motor	NP0 or NQH	On the underbody, mounted to the bottom rear of the transfer case	Transfer Case Components (NP0 or NQH)	A16 Transfer Case Motor

cardiagn.com

Code	Name	Option	Location	Locator View	Connector End View
A19D	DVD Player - Driver Seat Headrest	AYE	In the passenger compartment, back side of driver seat head rest	-	-
A19P	DVD Player - Passenger Seat Headrest	AYE	In the passenger compartment, back side of passenger seat head rest	-	-
A20	Radio/HVAC Controls	Z75	In the passenger compartment, at the center of the instrument panel, part of the info display module	-	-
A22	Radio Controls	X88 or Z88	In the passenger compartment, at the center of the instrument panel, part of the info display module	Back of Instrument Panel Components (X88/Z88 with D07/DCK)	-
A23C	Liftgate Latch Assembly	-	In the passenger compartment, at the bottom middle of the liftgate	Liftgate Components	• A23C Liftgate Latch Assembly (TB5/TC2) • A23C Liftgate Latch Assembly (-TB5/TC2)
A23D	Door Latch Assembly - Driver	-	In the passenger compartment, at the middle rear of the driver door	• Driver Door Components (X88 or Z88) • Driver Door Components (Z75)	A23D Door Latch Assembly - Driver
A23LR	Door Latch Assembly - Left Rear	-	In the passenger compartment, at	• Left Rear Door	A23LR Door Latch Assembly - Left Rear

cardiagn.com

Code	Name	Option	Location	Locator View	Connector End View
			the middle rear of the left rear door	Components (Z75) • Left Rear Door Components (X88 or Z88)	
A23P	Door Latch Assembly - Passenger	-	In the passenger compartment, at the middle rear of the passenger door	• Passenger Door Components (X88 or Z88) • Right Rear Door Components (X88 or Z88) • Passenger Door Components (Z75)	A23P Door Latch Assembly - Passenger
A23RR	Door Latch Assembly - Right Rear	-	In the passenger compartment, at the middle rear of the right rear door	Right Rear Door Components (Z75)	A23RR Door Latch Assembly - Right Rear
A24D	Door Handle Assembly - Driver Exterior	-	Outside the vehicle, at the rear of the driver door	• Driver Door Components (Z75) • Driver Door Components (X88 or Z88)	• B27D Door Handle Switch - Driver Exterior (X88/Z88) • B27D Door Handle Switch - Driver Exterior (Z75)
A24LR	Door Handle Assembly - Left Rear Exterior	-	Outside the vehicle, at the rear of the left rear door	• Left Rear Door Components (Z75) • Left Rear Door Components (X88 or Z88)	• A24LR Door Handle Assembly - Left Rear Exterior (X88/Z88) • A24LR Door Handle Assembly - Left Rear Exterior (Z75)
A24P	Door Handle Assembly - Passenger Exterior	-	Outside the vehicle, at the rear	• Passenger Door Components (X88	• A24P Door Handle Assembly - Passenger Exterior

cardiagn.com

Code	Name	Option	Location	Locator View	Connector End View
			of the passenger door	or Z88) • Passenger Door Components (Z75)	(ATH+(X88/Z88)) • A24P Door Handle Assembly - Passenger Exterior (Z75)
A24RR	Door Handle Assembly - Right Rear Exterior	-	Outside the vehicle, at the rear of the right rear door	• Right Rear Door Components (X88 or Z88) • Right Rear Door Components (Z75)	• A24RR Door Handle Assembly - Right Rear Exterior (X88/Z88) • A24RR Door Handle Assembly - Right Rear Exterior (Z75)
A26	HVAC Controls	X88 or Z88	In the passenger compartment, at the center of the instrument panel, part of the info display module	• Front of Instrument Panel Components (X88/Z88 without D07/DCK) • Front of Instrument Panel Components (Z75)	-
A33	Media Disc Player	TG5 or U42	In the passenger compartment, lower center of the instrument panel, behind the radio controls	• Front of Instrument Panel Components (Z75) • Back of Instrument Panel Components (X88/Z88 with D07/DCK) • Front of Instrument Panel Components (X88/Z88 without D07/DCK)	• A33 Media Disc Player X1 (TG5) • A33 Media Disc Player X1 (U42) • A33 Media Disc Player X2

cardiagn.com

Code	Name	Option	Location	Locator View	Connector End View
A34	HVAC Controls - Auxiliary	D07 or DCK	In the passenger compartment, forward of center, between the driver and passenger seat, at the back of the floor console	• Center Console Rear Component Views (Z75) • Center Console Rear Component Views (X88/Z88)	• A34 HVAC Controls - Auxiliary (X88/Z88+D07) • A34 HVAC Controls - Auxiliary (X88/Z88+DCK) • A34 HVAC Controls - Auxiliary (Z75+D07) • A34 HVAC Controls - Auxiliary (Z75+DCK)
A34	HVAC Controls - Auxiliary	AZ3	In the passenger compartment, overhead, forward of center, behind the front bench seat	Headliner Components	A34 HVAC Controls - Auxiliary (AZ3)
B1	A/C Refrigerant Pressure Sensor	-	In the front of the engine compartment, on the right side of the A/C compressor	• Right Rear Side of Engine Components (L83 or L86) • Right Rear Side of Engine Components (L96)	B1 A/C Refrigerant Pressure Sensor
B5LF	Wheel Speed Sensor - Left Front	-	Outside the vehicle, in the left front hub assembly	Chassis Components View	B5LF Wheel Speed Sensor - Left Front
B5LR	Wheel Speed Sensor - Left Rear	-	Outside the vehicle, in the left rear, along axle at brake rotor	Chassis Components View	B5LR Wheel Speed Sensor - Left Rear
B5RF	Wheel Speed Sensor - Right Front	-	Outside the vehicle, in the right front hub assembly	Chassis Components View	B5RF Wheel Speed Sensor - Right Front

cardiagn.com

Code	Name	Option	Location	Locator View	Connector End View
B5RR	Wheel Speed Sensor - Right Rear	-	Outside the vehicle, in the right rear, along axle at brake rotor	-	B5RR Wheel Speed Sensor - Right Rear
B7C	Air Temperature Sensor - Duct Lower Auxiliary	-	In the passenger compartment, in the floor vent of the rear HVAC	-	-
B7D	Air Temperature Sensor - Duct Left Lower	-	In the passenger compartment, behind the instrument panel, on the left side of the HVAC module	Front of HVAC Assembly Components	-
B7E	Air Temperature Sensor - Duct Right Lower	-	In the passenger compartment, behind the instrument panel, on the right side of the HVAC module	Front of HVAC Assembly Components	-
B7G	Air Temperature Sensor - Duct Upper Auxiliary	SWB	In the passenger compartment, in the roof vent of the rear HVAC	-	-
B7H	Air Temperature Sensor - Duct Left Upper	-	In the passenger compartment, behind the instrument panel, on the upper left side of the HVAC module	Back of HVAC Assembly Components	-
B7J	Air Temperature Sensor - Duct Right Upper	-	In the passenger compartment,	Back of HVAC Assembly Components	-

cardiagn.com

Code	Name	Option	Location	Locator View	Connector End View
			behind the instrument panel, on the upper right side of the HVAC module		
B9	Ambient Air Temperature Sensor	-	Left front of the vehicle, left of the hood latch assembly	• Behind Front Fascia Components (Z75) • Front of Vehicle Components (Z75) • Behind Front Fascia Components (X88/Z88) • Front of Vehicle Components (X88) • Front of Vehicle Components (Z88)	B9 Ambient Air Temperature Sensor
B10B	Ambient Light/Sunload Sensor	-	In the passenger compartment, at the top center of the instrument panel, in the defroster deflector	• Back of Instrument Panel Components (X88/Z88 with D07/DCK) • Front of Instrument Panel Components (X88/Z88 without D07/DCK) • Front of Instrument Panel	B10B Ambient Light/Sunload Sensor

cardiagn.com

Code	Name	Option	Location	Locator View	Connector End View
				Components (Z75)	
B12A	Transmission Fluid Pressure Switch	MYC or MYD	Under the vehicle, internal to the transmission assembly, part of the control solenoid valve	-	-
B13	Transmission Fluid Temperature Sensor	-	Under the vehicle, internal to the transmission assembly, part of the control solenoid valve	Automatic Transmission Valve Body Components (M5U)	-
B14A	Transmission Output Shaft Speed Sensor	-	Under the vehicle, internal to the transmission assembly	Automatic Transmission Case Components (M5U)	B14A Transmission Output Shaft Speed Sensor
B14C	Transmission Input Shaft Speed Sensor	-	Under the vehicle, internal to the transmission assembly	-	-
B14D	Transmission Intermediate Shaft Speed Sensor	M5U	Under the vehicle, internal to the transmission assembly	-	-
B15	Transmission Internal Mode Switch	M5U	Under the vehicle, internal to the transmission assembly	Automatic Transmission Case Components (M5U)	-
B18	Battery Current Sensor	-	In the engine compartment, right rear, near the	Right Rear of Engine Compartment Components (1 of 2)	B18 Battery Current Sensor

cardiagn.com

Code	Name	Option	Location	Locator View	Connector End View
			battery, on the negative battery cable		
B19B	Brake Booster Vacuum Sensor	-	At the rear of the engine compartment, left of the brake fluid reservoir, on brake booster vacuum check valve	Left Side of Engine Compartment Component View	B19B Brake Booster Vacuum Sensor
B20	Brake Fluid Level Switch	-	At the rear of the engine compartment, on the brake fluid reservoir	Left Side of Engine Compartment Component View	B20 Brake Fluid Level Switch
B22	Brake Pedal Position Sensor	-	In the passenger compartment, behind the brake pedal assembly	Behind Left Side of Instrument Panel Components (1 of 2)	B22 Brake Pedal Position Sensor
B23	Camshaft Position Sensor	-	In the engine compartment, at the front of the engine, left side of timing chain cover.	Front of Engine Components (L83 or L86)	B23 Camshaft Position Sensor
B24	Cellular Phone Microphone	-	In the passenger compartment, at the front center of the headliner, near the left sunshade	Headliner Components	B24 Cellular Phone Microphone
B26	Crankshaft Position Sensor	-	In the engine compartment, lower right rear of engine block	• Right Rear Side of Engine Components (L96) • Right Rear Side of	• B26 Crankshaft Position Sensor ((L83/L86)+MYC) • B26 Crankshaft Position Sensor (L86+M5U)

cardiagn.com

Code	Name	Option	Location	Locator View	Connector End View
				Engine Components (L83 or L86)	• B26 Crankshaft Position Sensor (L96)
B27D	Door Handle Switch - Driver Exterior	-	Outside the vehicle, at the rear of the driver door, part of the door handle assembly	• Driver Door Components (Z75) • Driver Door Components (X88 or Z88)	• B27D Door Handle Switch - Driver Exterior (X88/Z88) • B27D Door Handle Switch - Driver Exterior (Z75)
B27LR	Door Handle Switch - Left Rear Exterior	-	Outside the vehicle, at the rear of the left rear door, part of the door handle assembly	• Left Rear Door Components (Z75) • Left Rear Door Components (X88 or Z88)	• A24LR Door Handle Assembly - Left Rear Exterior (X88/Z88) • A24LR Door Handle Assembly - Left Rear Exterior (Z75)
B27P	Door Handle Switch - Passenger Exterior	-	Outside the vehicle, at the rear of the passenger door, part of the door handle assembly	• Passenger Door Components (X88 or Z88) • Passenger Door Components (Z75)	• A24P Door Handle Assembly - Passenger Exterior (ATH+(X88/Z88)) • A24P Door Handle Assembly - Passenger Exterior (Z75)
B27RR	Door Handle Switch - Right Rear Exterior	-	Outside the vehicle, at the rear of the right rear door, part of the door handle assembly	• Right Rear Door Components (X88 or Z88) • Right Rear Door Components (Z75)	• A24RR Door Handle Assembly - Right Rear Exterior (X88/Z88) • A24RR Door Handle Assembly - Right Rear Exterior (Z75)
B34	Engine Coolant Temperature Sensor	L83 or L86	In the engine compartment, top of the engine, left of the air intake, in	Left Side of Engine Components (L83 or L86)	• B34 Engine Coolant Temperature Sensor ((L83/L86)+MYC) • B34 Engine Coolant Temperature Sensor (L86+M5U)

cardiagn.com

Code	Name	Option	Location	Locator View	Connector End View
			the water outlet housing		
B34	Engine Coolant Temperature Sensor	L96	In the engine compartment, left side of the engine, under the generator	Left Rear Side of Engine Components (L96)	B34 Engine Coolant Temperature Sensor (L96)
B35	Engine Oil Level Switch	L83 or L86	In the engine compartment, bottom right side of engine	Right Rear Side of Engine Components (L83 or L86)	B35 Engine Oil Level Switch
B37B	Engine Oil Pressure Sensor	L83 or L86	In the engine compartment, top of the engine, below throttle body	Left Side of Engine Components (L83 or L86)	• B37B Engine Oil Pressure Sensor ((L83/L86)+MYC) • B37B Engine Oil Pressure Sensor (L86+M5U)
B37B	Engine Oil Pressure Sensor	L96	In the engine compartment, top of the engine, below throttle body	Left Rear Side of Engine Components (L96)	B37B Engine Oil Pressure Sensor (L96)
B39	A/C Evaporator Temperature Sensor	-	In the passenger compartment, part of HVAC module, behind the instrument panel	Back of HVAC Assembly Components	-
B46B	Fuel Level Sensor - Secondary	L96	Under the vehicle, at the rear of the vehicle, inside the rear fuel tank, part of A6D fuel pump and level sensor - Secondary	-	-
B46	Fuel Level Sensor	-	Under the vehicle, inside the fuel tank,	-	-

cardiagn.com

Code	Name	Option	Location	Locator View	Connector End View
			part of A6 fuel pump and level sensor		
B47	Fuel Pressure Sensor	-	On the vehicle underbody, on the fuel line, near the transmission crossmember mount	-	-
B52C	Heated Oxygen Sensor - Bank 1 Sensor 1	-	On the vehicle underbody, near the top left side of the transmission	• Heated Oxygen Sensors (L83 or L86) • Heated Oxygen Sensors (L96)	B52C Heated Oxygen Sensor - Bank 1 Sensor 1
B52D	Heated Oxygen Sensor - Bank 1 Sensor 2	-	On the vehicle underbody, near the left frame rail downstream from the catalytic converter	• Heated Oxygen Sensors (L96) • Heated Oxygen Sensors (L83 or L86)	B52D Heated Oxygen Sensor - Bank 1 Sensor 2
B52E	Heated Oxygen Sensor - Bank 2 Sensor 1	-	On the vehicle underbody, near the right frame rail even with the catalytic converter	• Heated Oxygen Sensors (L83 or L86) • Heated Oxygen Sensors (L96)	• B52E Heated Oxygen Sensor - Bank 2 Sensor 1 ((L83/L86)+MYC) • B52E Heated Oxygen Sensor - Bank 2 Sensor 1 (L86+M5U) • B52E Heated Oxygen Sensor - Bank 2 Sensor 1 (L96)
B52F	Heated Oxygen Sensor - Bank 2 Sensor 2	-	On the vehicle underbody, near the right frame rail	• Heated Oxygen Sensors (L83 or L86)	B52F Heated Oxygen Sensor - Bank 2 Sensor 2

cardiagn.com

Code	Name	Option	Location	Locator View	Connector End View
			downstream from the catalytic converter	• Heated Oxygen Sensors (L96)	
B55	Hood Ajar Switch	L96	In the front of the engine compartment, part of the hood latch	Behind Front Fascia Components (X88/Z88)	-
B55	Hood Ajar Switch	L83 or L86	In the front of the engine compartment, part of the hood latch	• Behind Front Fascia Components (Z75) • Behind Front Fascia Components (X88/Z88)	B55 Hood Ajar Switch
B59L	Front Impact Sensor - Left	-	At the front of the vehicle, behind the front fascia, left of center, behind the bumper beam	• Behind Front Fascia Components (Z75) • Behind Front Fascia Components (X88/Z88)	B59L Front Impact Sensor - Left
B59R	Front Impact Sensor - Right	-	At the front of the vehicle, behind the front fascia, right of center, behind the bumper beam	• Behind Front Fascia Components (X88/Z88) • Behind Front Fascia Components (Z75)	B59R Front Impact Sensor - Right
B61P	Seat Belt Tension Sensor - Passenger	-	In the passenger compartment, right	-	B61P Seat Belt Tension Sensor - Passenger

cardiagn.com

Code	Name	Option	Location	Locator View	Connector End View
			side, at the base of the B-pillar		
B62D	Seat Position Sensor - Driver	-	In the passenger compartment, right front corner of the driver seat track assembly	• Driver Seat Cushion Components (without ULT) • Driver Seat Cushion Components (ULT)	B62D Seat Position Sensor - Driver
B63LF	Side Impact Sensor - Left Front	-	In the driver door, behind the trim panel, toward the rear of the door	• Driver Door Components (X88 or Z88) • Driver Door Components (Z75)	B63LF Side Impact Sensor - Left Front
B63LR	Side Impact Sensor - Left Rear	-	Behind the left rear door, near the jam, underneath the trim panel, left of the second row left seat.	• Left Front of Passenger Compartment Views (Z75) • Left Rear of Passenger Compartment Views (Z75)	B63LR Side Impact Sensor - Left Rear
B63RF	Side Impact Sensor - Right Front	-	In the passenger door, behind the trim panel, toward the rear of the door	• Passenger Door Components (X88 or Z88) • Passenger Door Components (Z75)	B63RF Side Impact Sensor - Right Front

cardiagn.com

Code	Name	Option	Location	Locator View	Connector End View
B63RR	Side Impact Sensor - Right Rear	-	Behind the right rear door, near the jam, underneath the trim panel, right of the second row right seat.	-	B63RR Side Impact Sensor - Right Rear
B67A	Ultrasonic Intrusion Sensor 1	UTT	In the passenger compartment, at the front of the roof, in the overhead console, part of the Content Theft Deterrent Sensor Module	-	-
B67B	Ultrasonic Intrusion Sensor 2	UTT	In the passenger compartment, at the front of the roof, in the overhead console, part of the Content Theft Deterrent Sensor Module	-	-
B67C	Ultrasonic Intrusion Sensor 3	UTT	In the passenger compartment, at the front of the roof, in the overhead console, part of the Content Theft Deterrent Sensor Module	-	-
B68A	Knock Sensor 1	-	In the engine compartment, on the left side of the engine, near the	Left Side of Engine Components (L83 or L86)	• B68A Knock Sensor 1 ((L83/L86)+MYC) • B68A Knock Sensor 1

cardiagn.com

Code	Name	Option	Location	Locator View	Connector End View
			back, below the cylinder head		(L86+M5U) • B68A Knock Sensor 1 (L96)
B68B	Knock Sensor 2	-	In the engine compartment, on the right side of the engine, near the back, below the cylinder head	• Right Rear Side of Engine Components (L96) • Right Rear Side of Engine Components (L83 or L86)	• B68B Knock Sensor 2 ((L83/L86)+MYC) • B68B Knock Sensor 2 (L86+M5U) • B68B Knock Sensor 2 (L96)
B70	Liftgate Close Switch	TB5 or TC2	In the passenger compartment, at the bottom of the liftgate, behind the liftgate trim.	Liftgate Components	B70 Liftgate Close Switch
B71L	Liftgate Object Sensor - Left	TB5 or TC2	At the rear of the vehicle, along the left edge of the liftgate	Liftgate Components	B71L Liftgate Object Sensor - Left
B71R	Liftgate Object Sensor - Right	TB5 or TC2	At the rear of the vehicle, along the right edge of the liftgate	Liftgate Components	B71R Liftgate Object Sensor - Right
B74	Manifold Absolute Pressure Sensor	L83 or L86	In the engine compartment, on the top of the intake manifold, left of the throttle body	Left Side of Engine Components (L83 or L86)	• B74 Manifold Absolute Pressure Sensor ((L83/L86)+MYC) • B74 Manifold Absolute Pressure Sensor (L86+M5U)
B74	Manifold Absolute Pressure Sensor	L96	In the engine compartment, on the top of the	Left Rear Side of Engine Components (L96)	B74 Manifold Absolute Pressure Sensor (L96)

cardiagn.com

Code	Name	Option	Location	Locator View	Connector End View
			engine, behind the throttle body		
B75C	Multifunction Intake Air Sensor	-	Right side of the engine compartment, in the air intake duct, near the air cleaner	• Right Rear Side of Engine Components (L83 or L86) • Left Rear Side of Engine Components (L96)	B75C Multifunction Intake Air Sensor
B77LF	Radio Volume Compensator Interior Noise Microphone - Left Front	NKC	In the passenger compartment, on the left side of the headliner, at the over head grab handle	Headliner Components	B77LF Radio Volume Compensator Interior Noise Microphone - Left Front
B77R	Radio Volume Compensator Interior Noise Microphone - Rear	NKC	In the passenger compartment, at the rear of the headliner	Headliner Components	B77R Radio Volume Compensator Interior Noise Microphone - Rear
B77RF	Radio Volume Compensator Interior Noise Microphone - Right Front	NKC	In the passenger compartment, on the right side of the headliner, at the over head grab handle	• Headliner Components • Headliner Components	B77RF Radio Volume Compensator Interior Noise Microphone - Right Front
B80	Park Brake Switch	without J71	In the passenger compartment, at the left side of the Driver Footwell, on top of brake pedal assembly	Left Front of Passenger Compartment Views (Z75)	B80 Park Brake Switch

cardiagn.com

Code	Name	Option	Location	Locator View	Connector End View
B81B	Park Position Switch	-	In the passenger compartment, on the steering column near the base of the shifter	Steering Column Components (2 of 2)	• B81B Park Position Switch • B87 Rearview Camera
B87	Rearview Camera	DRZ	At the rear of the vehicle, on the outside of the liftgate, in the high mount stop light bezel	-	-
B87	Rearview Camera	UVC or UVH	At the rear of the vehicle, on the outside of the liftgate, in the license plate bezel	• Rear of Vehicle Components (X88) • Rear of Vehicle Components (Z88) • Rear of Vehicle Components (Z75)	-
B88D	Seat Belt Switch - Driver	-	In the passenger compartment, part of the driver seat belt buckle	• Driver Seat Cushion Components (without ULT) • Driver Seat Cushion Components (ULT)	B88D Seat Belt Switch - Driver
B88P	Seat Belt Switch - Passenger	-	In the passenger compartment, part of the passenger front seat belt buckle	Passenger Seat Cushion Components (without ULT)	B88P Seat Belt Switch - Passenger

cardiagn.com

Code	Name	Option	Location	Locator View	Connector End View
B99	Steering Wheel Angle Sensor	-	In the passenger compartment, near the base of the steering column, near the floor	Steering Column Components (1 of 2)	B99 Steering Wheel Angle Sensor
B107	Accelerator Pedal Position Sensor	-	In the passenger compartment, on the driver floor board above the accelerator pedal	Behind Left Side of Instrument Panel Components (1 of 2)	B107 Accelerator Pedal Position Sensor
B115	Vehicle Speed Sensor	NP0 or NQH	Under the vehicle, center, forward of middle, on top of transfer case	Transfer Case Components (NP0 or NQH)	B115 Vehicle Speed Sensor
B118B	Windshield Washer Fluid Level Switch	-	In the engine compartment, left front, on the bottom of the washer reservoir bottle	• Left Front Corner of Vehicle Components • Left Side of Engine Compartment Component View	B118B Windshield Washer Fluid Level Switch
B119	Multi-axis Acceleration Sensor	UGN	In the passenger compartment, under floor console, next to the Inflatable Restraint Sensing and Diagnostic Module	Front Center of The Passenger Compartment Components	B119 Multi-axis Acceleration Sensor
B124LR	Folding Seat Back Position Switch - 2nd Row Left	ATN or ATT	In the passenger compartment, part of the left second row seat, located	2nd Row Left Bucket Seat Components (ATN)	B124LR Folding Seat Back Position Switch - 2nd Row Left

cardiagn.com

Code	Name	Option	Location	Locator View	Connector End View
			below the outboard seat back hinge		
B124RR	Folding Seat Back Position Switch - 2nd Row Right	ATN or ATT	In the passenger compartment, part of the right second row seat, located below the outboard seat back hinge	2nd Row Right Bucket Seat Components (ATN)	B124RR Folding Seat Back Position Switch - 2nd Row Right
B137B	Power Steering Shaft Torque/Position Sensor	-	Under the vehicle, near the steering gear assembly	-	-
B150	Fuel Tank Pressure Sensor	-	Under the vehicle, at the rear, mounted to the EVAP cannister	Chassis Components View	B150 Fuel Tank Pressure Sensor
B152LF	Suspension Position Sensor - Left Front	Z95	Outside the vehicle, at the left front corner, rear side of the strut tower	-	B152LF Suspension Position Sensor - Left Front
B152LR	Suspension Position Sensor - Left Rear	Z95	Outside the vehicle, at the left rear corner, above the upper control arm mount to the frame rail	Chassis Components View	B152LR Suspension Position Sensor - Left Rear
B152RF	Suspension Position Sensor - Right Front	Z95	Outside the vehicle, at the right front corner, rear side of the strut tower	-	B152RF Suspension Position Sensor - Right Front
B152RR	Suspension Position Sensor - Right Rear	Z95	Outside the vehicle, at the right	• Chassis Components View	B152RR Suspension Position Sensor - Right Rear

cardiagn.com

Code	Name	Option	Location	Locator View	Connector End View
			rear corner, above the upper control arm mount to the frame rail	• Chassis Components View	
B159L	Glass Breakage Sensor - Left	UTT	In the rear compartment, left side, underneath rear quarter glass window	Left Rear Cargo Area Components	• B159L Glass Breakage Sensor - Left (UTV+SWB) • B159L Glass Breakage Sensor - Left (UTV-SWB)
B159R	Glass Breakage Sensor - Right	UTT	In the rear compartment, right side, underneath rear quarter glass window	Right Rear Cargo Area Components	• B159R Glass Breakage Sensor - Right (UTT/UTV+SWB) • B159R Glass Breakage Sensor - Right (UTV-SWB)
B165	Content Theft Deterrent Sensor Module	UTT	In the passenger compartment, at the front of the roof, in the overhead console	-	B165 Content Theft Deterrent Sensor Module
B174G	Frontview Camera - Grille	UVH	At the front of the vehicle, center, in the upper grille	-	-
B174W	Frontview Camera - Windshield	UFL, UHX, or UGN	In the passenger compartment, at the top middle of the windshield	Overhead Console Components	B174W Frontview Camera - Windshield
B196	Air Suspension Pressure Sensor	Z85 or Z95	under the vehicle, at the left rear, part of the level ride compressor	-	-
B198	Fuel Composition Sensor	FHS	Under the vehicle, between the fuel tank and the	-	B198 Fuel Composition Sensor

cardiagn.com

Code	Name	Option	Location	Locator View	Connector End View
			electronic brake control module, on the main fuel line		
B200	Rain Sensor Module	-	In the passenger compartment, at the top middle of the windshield	-	-
B218L	Side Object Sensor Module - Left	UKC	At the left rear corner of the vehicle, mounted to the inside of the rear fascia	Behind Rear Fascia Components	B218L Side Object Sensor Module - Left
B218R	Side Object Sensor Module - Right	UKC	At the right rear corner of the vehicle, mounted to the inside of the rear fascia	Behind Rear Fascia Components	B218R Side Object Sensor Module - Right
B225L	Sideview Camera - Left	UVH	Outside the vehicle, in the left outside rearview mirror	-	-
B225R	Sideview Camera - Right	UVH	Outside the vehicle, in the right outside rearview mirror	-	-
B227	Gear Position Sensor	NP0 or NQH	Under the vehicle, on the top rear of the transfer case	Transfer Case Components (NP0 or NQH)	B227 Gear Position Sensor
B233B	Radar Sensor Module - Long Range	-	At the front of the vehicle, mounted in the center of the upper grille	Front of Vehicle Components (Z75)	B233B Radar Sensor Module - Long Range

cardiagn.com

Code	Name	Option	Location	Locator View	Connector End View
B233LF	Radar Sensor Module - Short Range Left Front	UVZ	At the front of the vehicle, mounted to the inside left of the front fascia	-	B233LF Radar Sensor Module - Short Range Left Front
B233LR	Radar Sensor Module - Short Range Left Rear	UVZ	At the rear of the vehicle, mounted to the inside of the rear fascia left of center	Behind Rear Fascia Components	B233LR Radar Sensor Module - Short Range Left Rear
B233RF	Radar Sensor Module - Short Range Right Front	UVZ	At the front of the vehicle, mounted to the inside right of the front fascia	-	B233RF Radar Sensor Module - Short Range Right Front
B233RR	Radar Sensor Module - Short Range Right Rear	UVZ	At the rear of the vehicle, mounted to the inside of the rear fascia right of center	Behind Rear Fascia Components	B233RR Radar Sensor Module - Short Range Right Rear
B275A	Hands-Free Liftgate Sensor - Upper	TC2	At the rear of the vehicle, center, mounted to the underside of the rear bumper, above trailer hitch	-	-
B275B	Hands-Free Liftgate Sensor - Lower	TC2	At the rear of the vehicle, center, mounted to the underside of the rear bumpe, below trailer hitch	-	-
B306A	Parking Assist Sensor - Front Left Outer	UD5	At the front of the vehicle, mounted in the front bumper	• Front of Vehicle Components (Z75) • Front of Vehicle	B306A Parking Assist Sensor - Front Left Outer

cardiagn.com

Code	Name	Option	Location	Locator View	Connector End View
				Components (X88) • Heated Oxygen Sensors (L96)	
B306B	Parking Assist Sensor - Front Left Middle	UD5	At the front of the vehicle, mounted in the front bumper	• Front of Vehicle Components (Z75) • Front of Vehicle Components (X88) • Heated Oxygen Sensors (L83 or L86)	B306B Parking Assist Sensor - Front Left Middle
B306C	Parking Assist Sensor - Front Right Middle	UD5	At the front of the vehicle, mounted in the front bumper	• Front of Vehicle Components (Z75) • Front of Vehicle Components (X88) • Heated Oxygen Sensors (L96)	B306C Parking Assist Sensor - Front Right Middle
B306D	Parking Assist Sensor - Front Right Outer	UD5	At the front of the vehicle, mounted in the front bumper	• Front of Vehicle Components (Z75) • Front of Vehicle Components (X88) • Behind Front Fascia Components (Z75)	B306D Parking Assist Sensor - Front Right Outer

cardiagn.com

Code	Name	Option	Location	Locator View	Connector End View
B306E	Parking Assist Sensor - Rear Left Outer	UD5 or UD7	At the rear of the vehicle, mounted in the rear bumper	• Rear of Vehicle Components (Z75) • Rear of Vehicle Components (X88) • Behind Front Fascia Components (Z75)	B306E Parking Assist Sensor - Rear Left Outer
B306F	Parking Assist Sensor - Rear Left Middle	UD5 or UD7	At the rear of the vehicle, mounted in the rear bumper	• Rear of Vehicle Components (Z75) • Rear of Vehicle Components (X88) • Chassis Components View	B306F Parking Assist Sensor - Rear Left Middle
B306G	Parking Assist Sensor - Rear Right Middle	UD5 or UD7	At the rear of the vehicle, mounted in the rear bumper	• Rear of Vehicle Components (Z75) • Rear of Vehicle Components (X88) • Driver Door Components (X88 or Z88)	B306G Parking Assist Sensor - Rear Right Middle
B306H	Parking Assist Sensor - Rear Right Outer	UD5 or UD7	At the rear of the vehicle, mounted in the rear bumper	• Rear of Vehicle Components (Z75) • Rear of Vehicle Components (X88)	B306H Parking Assist Sensor - Rear Right Outer

cardiagn.com

Code	Name	Option	Location	Locator View	Connector End View
				• Left Rear of Passenger Compartment Views (Z75)	
B306K	Parking Assist Sensor - Side Left Front	UKG	At the front of the vehicle, mounted in the front bumper	Front of Vehicle Components (Z75)	-
B306L	Parking Assist Sensor - Side Right Front	UKG	At the front of the vehicle, mounted in the front bumper	Front of Vehicle Components (Z75)	-
B306M	Parking Assist Sensor - Side Left Rear	UKG	At the rear of the vehicle, mounted in the rear bumper	Rear of Vehicle Components (Z75)	B306M Parking Assist Sensor - Side Left Rear
B306N	Parking Assist Sensor - Side Right Rear	UKG	At the rear of the vehicle, mounted in the rear bumper	Rear of Vehicle Components (Z75)	B306N Parking Assist Sensor - Side Right Rear
B310	Fuel Pressure/Temperature Sensor	L86 or L83	In the engine compartment, mounted to the left rear of engine fuel injector rail	Top of Engine Components (L83 or L86)	-
C1B	Battery - Auxiliary	5W4 or 9C1	In the engine compartment, on the left side, forward of the underhood fuse block	Left Side of Engine Compartment Component View	-
C1	Battery	-	In the engine compartment, on the left side, near the underhood fuse block	Right Rear of Engine Compartment Components (1 of 2)	-

cardiagn.com

Code	Name	Option	Location	Locator View	Connector End View
E1A	Accent Lamp - Driver Seat	AN3 or A95	In the passenger compartment, under the driver seat	• Driver Seat Cushion Components (ULT) • Driver Seat Cushion Components (without ULT)	E1A Accent Lamp - Driver Seat
E1AA	Floor Accent Lamp - Left Front	-	In the passenger compartment, under the left side of the instrument panel	• Back of Instrument Panel Components (Z75) • Back of Instrument Panel Components (X88/Z88 without D07/DCK)	E1AA Floor Accent Lamp - Left Front
E1AB	Floor Accent Lamp - Right Front	-	In the passenger compartment, under the right side of the instrument panel	• Back of Instrument Panel Components (X88/Z88 without D07/DCK) • Back of Instrument Panel Components (Z75)	-
E1B	Accent Lamp - Passenger Seat	AN3 or A95	In the passenger compartment, under the passenger seat	• Passenger Seat Cushion Components (without ULT) • Passenger Seat	E1B Accent Lamp - Passenger Seat

cardiagn.com

Code	Name	Option	Location	Locator View	Connector End View
				Cushion Components (ULT)	
E1C	Accent Lamp - Driver Door Handle	-	In the passenger compartment, forward of center, left side, on the driver door, near the door handle	• Driver Door Components (Z75) • Driver Door Components (X88 or Z88)	E1C Accent Lamp - Driver Door Handle
E1D	Accent Lamp - Driver Door	Z75	In the passenger compartment, forward of center, left side, on the driver door, in the arm rest	Driver Door Components (Z75)	E1D Accent Lamp - Driver Door (Z75)
E1E	Accent Lamp - Left Rear Door Handle	-	In the passenger compartment, rearward of center, left side, on the left rear door, near the door handle	• Right Rear Door Components (X88 or Z88) • Left Rear Door Components (X88 or Z88) • Left Rear Door Components (Z75)	• E1E Accent Lamp - Left Rear Door Handle (X88/Z88) • E1E Accent Lamp - Left Rear Door Handle (Z75)
E1F	Accent Lamp - Right Rear Door Handle	-	In the passenger compartment, rearward of center, right side, on the right rear door, near the door handle	Right Rear Door Components (Z75)	• E1F Accent Lamp - Right Rear Door Handle (X88/Z88) • E1F Accent Lamp - Right Rear Door Handle (Z75)

cardiagn.com

Code	Name	Option	Location	Locator View	Connector End View
E1LR	Accent Lamp - Left Rear Door	Z75	In the passenger compartment, rearward of center, left side, on the left rear door, above the door handle	Left Rear Door Components (Z75)	E1LR Accent Lamp - Left Rear Door
E1M	Accent Lamp - Passenger Door Handle	-	In the passenger compartment, forward of center, right side, on the passenger door, near the door handle	• Passenger Door Components (X88 or Z88) • Passenger Door Components (Z75)	E1M Accent Lamp - Passenger Door Handle
E1P	Accent Lamp - Passenger Door	Z75	In the passenger compartment, forward of center, right side, on the passenger door, in the arm rest	Passenger Door Components (Z75)	E1P Accent Lamp - Passenger Door (Z75)
E1RR	Accent Lamp - Right Rear Door	Z75	In the passenger compartment, rearward of center, right side, on the right rear door, above the door handle	Right Rear Door Components (Z75)	E1RR Accent Lamp - Right Rear Door
E2LF	Side Marker Lamp - Left Front	-	At the left front corner of the vehicle, inside the headlamp assembly, part of the headlamp assembly	• Headlamp Components (X88) • Headlamp Components (Z75) • Headlamp Components (Z88)	-

cardiagn.com

Code	Name	Option	Location	Locator View	Connector End View
				• Headlamp Components (Z88)	
E2RF	Side Marker Lamp - Right Front	-	At the right front corner of the vehicle, inside the headlamp assembly, part of the headlamp assembly	• Headlamp Components (X88) • Headlamp Components (Z75)	-
E4A	Cornering Lamp - Left	Z75	At the front left corner of the vehicle, in the front fascia, in the multifunction lamp assembly	-	-
E4AC	Park/Daytime Running Lamp - Left	X88 or Z88	At the left front corner of the vehicle, inside the headlamp assembly, part of the headlamp assembly	• Headlamp Components (X88) • Headlamp Components (Z88)	-
E4AD	Park/Daytime Running Lamp - Right	X88 or Z88	At the right front corner of the vehicle, inside the headlamp assembly, part of the headlamp assembly	• Headlamp Components (X88) • Headlamp Components (Z88)	-
E4AL	Park/Daytime Running Lamp - Left Lower	Z75	At the front left corner of the vehicle, in the front fascia, in the	Front of Vehicle Components (Z75)	-

cardiagn.com

Code	Name	Option	Location	Locator View	Connector End View
			multifunction lamp assembly		
E4AM	Park/Daytime Running Lamp - Right Lower	Z75	At the front right corner of the vehicle, in the front fascia, in the multifunction lamp assembly	Front of Vehicle Components (Z75)	-
E4B	Cornering Lamp - Right	Z75	At the front right corner of the vehicle, in the front fascia, in the multifunction lamp assembly	-	-
E4C	Daytime Running Lamp - Left	Z75	At the left front corner of the vehicle, inside the headlamp assembly, part of the headlamp assembly	Headlamp Components (Z75)	-
E4D	Daytime Running Lamp - Right	Z75	At the right front corner of the vehicle, inside the headlamp assembly, part of the headlamp assembly	Headlamp Components (Z75)	-
E4E	Headlamp - Left High Beam	X88 or Z88	At the left front corner of the vehicle, inside the headlamp assembly, part of	• Headlamp Components (X88) • Headlamp Components (Z88)	-

cardiagn.com

Code	Name	Option	Location	Locator View	Connector End View
			the headlamp assembly		
E4E	Headlamp - Left High Beam	Z75	At the left front corner of the vehicle, inside the headlamp assembly, part of the headlamp assembly	Headlamp Components (Z75)	-
E4F	Headlamp - Right High Beam	X88 or Z88	At the right front corner of the vehicle, inside the headlamp assembly, part of the headlamp assembly	• Headlamp Components (X88) • Headlamp Components (Z88)	-
E4F	Headlamp - Right High Beam	Z75	At the right front corner of the vehicle, inside the headlamp assembly, part of the headlamp assembly	Headlamp Components (Z75)	-
E4G	Headlamp - Left Low Beam	X88 or Z88	At the right front corner of the vehicle, inside the headlamp assembly, part of the headlamp assembly	• Headlamp Components (X88) • Headlamp Components (Z88)	-
E4G	Headlamp - Left Low Beam	Z75	At the left front corner of the vehicle, inside the	Headlamp Components (Z75)	-

cardiagn.com

Code	Name	Option	Location	Locator View	Connector End View
			headlamp assembly, part of the headlamp assembly		
E4H	Headlamp - Right Low Beam	X88 or Z88	At the right front corner of the vehicle, inside the headlamp assembly, part of the headlamp assembly	• Headlamp Components (X88) • Headlamp Components (Z88)	-
E4H	Headlamp - Right Low Beam	Z75	At the right front corner of the vehicle, inside the headlamp assembly, part of the headlamp assembly	Headlamp Components (Z75)	-
E4J	Park Lamp - Left Front	X88 without Y91	At the left front corner of the vehicle, inside the headlamp assembly	Headlamp Components (X88)	-
E4K	Park Lamp - Right Front	X88 without Y91	At the right front corner of the vehicle, inside the headlamp assembly	Headlamp Components (X88)	-
E4LF	Turn Signal Lamp - Left Front	X88 or Z88	At the left front corner of the vehicle, inside the headlamp assembly	Headlamp Components (X88)	-
E4LF	Turn Signal Lamp - Left Front	Z75	At the front left corner of the vehicle, in the front	Front of Vehicle Components (Z75)	-

cardiagn.com

Code	Name	Option	Location	Locator View	Connector End View
			fascia, in the multifunction lamp assembly		
E4LR	Turn Signal Lamp - Left Rear	Z88, Z75, or X88 with T89	At the left rear corner of the vehicle, inside the tail lamp assembly	• Tail Lamp Components (X88) • Tail Lamp Components (Z88) • Tail Lamp Components (Z75)	-
E4RF	Turn Signal Lamp - Right Front	X88 or Z88	At the right front corner of the vehicle, inside the headlamp assembly	Headlamp Components (X88)	-
E4RF	Turn Signal Lamp - Right Front	Z75	At the front right corner of the vehicle, in the front fascia, in the multifunction lamp assembly	Front of Vehicle Components (Z75)	-
E4RR	Turn Signal Lamp - Right Rear	Z88, Z75, or X88 with T89	At the right rear corner of the vehicle, inside the tail lamp assembly	• Tail Lamp Components (Z88) • Tail Lamp Components (Z75) • Tail Lamp Components (X88)	-
E4Y	Turn Signal Repeater Lamp - Left	DL3	At the front of the Left front door, part of the Outside	Door Mirror Components	-

cardiagn.com

Code	Name	Option	Location	Locator View	Connector End View
			Rearview Mirror, part of the mirror glass		
E4Y	Turn Signal Repeater Lamp - Left	DR4	At the front of the Left front door, part of the Outside Rearview Mirror	**Door Mirror Components**	-
E4Z	Turn Signal Repeater Lamp - Right	DL3	At the front of the Right front door, part of the Outside Rearview Mirror, part of the mirror glass	**Door Mirror Components**	-
E4Z	Turn Signal Repeater Lamp - Right	DR4	At the front of the Right front door, part of the Outside Rearview Mirror	**Door Mirror Components**	-
E5A	Backup Lamp - Left	X88 or Z88	At the left rear corner of the vehicle, inside the tail lamp assembly	• **Tail Lamp Components (X88)** • **Tail Lamp Components (Z88)**	-
E5A	Backup Lamp - Left	Z75	At the left rear corner of the vehicle, inside the tail lamp assembly, part of the tail lamp assembly	**Tail Lamp Components (Z75)**	-
E5AS	Stop/Turn Signal Lamp - Left Upper	X88 without T89	At the left rear corner of the vehicle, inside the tail lamp assembly	**Tail Lamp Components (X88)**	-

cardiagn.com

Code	Name	Option	Location	Locator View	Connector End View
E5AT	Stop/Turn Signal Lamp - Left Lower	X88 without T89	At the left rear corner of the vehicle, inside the tail lamp assembly	Tail Lamp Components (X88)	-
E5AU	Stop/Turn Signal Lamp - Right Upper	X88 without T89	At the right rear corner of the vehicle, inside the tail lamp assembly	Tail Lamp Components (X88)	-
E5AV	Stop/Turn Signal Lamp - Right Lower	X88 without T89	At the right rear corner of the vehicle, inside the tail lamp assembly	Tail Lamp Components (X88)	-
E5B	Backup Lamp - Right	X88 or Z88	At the right rear corner of the vehicle, inside the tail lamp assembly	• Tail Lamp Components (X88) • Tail Lamp Components (Z88)	-
E5B	Backup Lamp - Right	Z75	At the right rear corner of the vehicle, inside the tail lamp assembly, part of the tail lamp assembly	Tail Lamp Components (Z75)	-
E5E	Tail Lamp - Left	-	At the left rear corner of the vehicle, inside the tail lamp assembly	• Tail Lamp Components (X88) • Tail Lamp Components (Z88) • Tail Lamp Components (Z75)	-

cardiagn.com

Code	Name	Option	Location	Locator View	Connector End View
E5F	Tail Lamp - Right	-	At the right rear corner of the vehicle, inside the tail lamp assembly	• Tail Lamp Components (X88) • Tail Lamp Components (Z88) • Tail Lamp Components (Z75)	-
E5L	Stop Lamp - Left	Z88, Z75, or X88 with T89	At the left rear corner of the vehicle, inside the tail lamp assembly	• Tail Lamp Components (Z88) • Tail Lamp Components (Z75) • Tail Lamp Components (X88)	-
E5R	Stop Lamp - Right	Z88, Z75, or X88 with T89	At the right rear corner of the vehicle, inside the tail lamp assembly	• Tail Lamp Components (Z88) • Tail Lamp Components (Z75) • Tail Lamp Components (X88)	-
E6	Center High Mounted Stop Lamp	-	At the rear of the vehicle, center, mounted above the liftgate window	• Rear of Vehicle Components (X88) • Rear of Vehicle Components (Z88) • Rear of Vehicle Components (Z75)	E6 Center High Mounted Stop Lamp

cardiagn.com

Code	Name	Option	Location	Locator View	Connector End View
E7L	License Plate Lamp - Left	-	At the rear of the vehicle, near center, mounted above the license plate mount	• Rear of Vehicle Components (X88) • Rear of Vehicle Components (Z75) • Rear of Vehicle Components (Z88)	E7L License Plate Lamp - Left
E7R	License Plate Lamp - Right	-	At the rear of the vehicle, near center, mounted above the license plate mount	• Rear of Vehicle Components (X88) • Rear of Vehicle Components (Z88) • Rear of Vehicle Components (Z75)	E7R License Plate Lamp - Right
E8A	Door Sill Plate Lamp - Driver	Z75	In the passenger compartment, forward of center, left, at the bottom of the driver door opening on the sill	Left Front of Passenger Compartment Views (Z75)	E8A Door Sill Plate Lamp - Driver
E8B	Door Sill Plate Lamp - Passenger	Z75	In the passenger compartment, forward of center, right, at the bottom of the passenger door opening on the sill	-	E8B Door Sill Plate Lamp - Passenger
E8Q	Door Sill Plate Lamp - Left Rear	Z75	In the passenger compartment, forward of center,	Left Rear of Passenger Compartment Views (Z75)	E8Q Door Sill Plate Lamp - Left Rear

cardiagn.com

Code	Name	Option	Location	Locator View	Connector End View
			left, at the bottom of the left rear door opening on the sill		
E8R	Door Sill Plate Lamp - Right Rear	Z75	In the passenger compartment, forward of center, right, at the bottom of the right rear door opening on the sill	-	**E8R Door Sill Plate Lamp - Right Rear**
E8XA	Door Handle Courtesy Lamp - Driver Exterior	HD7	On the outside of the vehicle, left side, rear of driver door, part of the door handle assembly	-	-
E8XB	Door Handle Courtesy Lamp - Passenger Exterior	HD7	On the outside of the vehicle, right side, rear of passenger door, part of the door handle assembly	-	-
E8XC	Door Handle Courtesy Lamp - Left Rear Exterior	HD7	On the outside of the vehicle, left side, rear of left rear door, part of the door handle assembly	-	-
E8XD	Door Handle Courtesy Lamp - Right Rear Exterior	HD7	On the outside of the vehicle, right side, rear of right rear door, part of the door handle	-	-

cardiagn.com

Code	Name	Option	Location	Locator View	Connector End View
			assembly		
E8YD	Outside Rearview Mirror Courtesy Lamp - Driver	DL3	At the front of the Left front door, bottom of the Outside Rearview Mirror	• Front of Vehicle Components (Z75) • Door Mirror Components	-
E8YP	Outside Rearview Mirror Courtesy Lamp - Passenger	DL3	At the front of the Right front door, bottom of the Outside Rearview Mirror	• Front of Vehicle Components (Z75) • Door Mirror Components	-
E8ZL	Running Board Step Courtesy Lamp - Left	BRS	Outside of vehicle, left side, under the rocker, mounted in the running board	-	-
E8ZR	Running Board Step Courtesy Lamp - Right	BRS	Outside of vehicle, right side, under the rocker, mounted in the running board	-	-
E13LA	Headlamp Assembly - Left	-	At the left front corner of the vehicle	• Front of Vehicle Components (X88) • Front of Vehicle Components (Z88) • Front of Vehicle Components (Z75)	-
E13RA	Headlamp Assembly - Right	-	At the right front corner of the vehicle	• Front of Vehicle Components (X88) • Front of Vehicle	-

cardiagn.com

Code	Name	Option	Location	Locator View	Connector End View
				Components (Z88) • Front of Vehicle Components (Z75)	
E14A	Seat Heating Element - Driver Back	KA1 or KB6	In the passenger compartment, in the driver seat back	Driver Seat Back Components	• E14A Seat Heating Element - Driver Back (X88/Z88+KQV) • E14A Seat Heating Element - Driver Back
E14B	Seat Heating Element - Driver Cushion	KA1 or KB6	In the passenger compartment, part of the driver seat cushion	• Driver Seat Cushion Components (without ULT) • Driver Seat Cushion Components (ULT)	• E14B Seat Heating Element - Driver Cushion (X88/Z88+KQV) • E14B Seat Heating Element - Driver Cushion
E14C	Seat Heating Element - Passenger Back	KA1 or KB6	In the passenger compartment, in the passenger seat back	Passenger Seat Components View	• E14C Seat Heating Element - Passenger Back (X88/Z88+KQV) • E14C Seat Heating Element - Passenger Back
E14D	Seat Heating Element - Passenger Cushion	KA1 or KB6	In the passenger compartment, part of the passenger seat cushion	Passenger Seat Cushion Components (without ULT)	• E14D Seat Heating Element - Passenger Cushion (ULT) • E14D Seat Heating Element - Passenger Cushion (AG1/AG2-ULT) • E14D Seat Heating Element - Passenger Cushion (-AG1/AG2/ULT)

cardiagn.com

Code	Name	Option	Location	Locator View	Connector End View
E14F	Seat Heating Element - Left Rear Cushion	KA6	In the passenger compartment, in the 2nd row seat, left cushion	• 2nd Row Seat Cushions Components (ATT) • 2nd Row Left Bucket Seat Components (ATN)	• E14F Seat Heating Element - Left Rear Cushion (X88/Z88+KA6) • E14F Seat Heating Element - Left Rear Cushion
E14H	Seat Heating Element - Right Rear Cushion	KA6	In the passenger compartment, in the 2nd row seat, right cushion	• 2nd Row Seat Cushions Components (ATT) • 2nd Row Right Bucket Seat Components (ATN)	• E14H Seat Heating Element - Right Rear Cushion (X88/Z88+KA6) • E14H Seat Heating Element - Right Rear Cushion
E15	Steering Wheel Heater	UVD	In the passenger compartment, in the steering wheel.	-	-
E17D	Outside Rearview Mirror Glass - Driver	-	Outside of the vehicle, left side, forward on the driver door, inside the outside rear view mirror	-	-
E17P	Outside Rearview Mirror Glass - Passenger	-	Outside of the vehicle, right side, forward on the passenger door, inside the outside rear view mirror	-	-

cardiagn.com

Code	Name	Option	Location	Locator View	Connector End View
E18	Rear Defogger Grid	-	In the passenger compartment, on the inside of the liftgate window	Rear of Vehicle Components (Z75)	• E18 Rear Defogger Grid X1 • E18 Rear Defogger Grid X2
E28	Center Console Compartment Lamp	D07 without DCK	In the passenger compartment, inside the center console compartment	• Center Console Internal Component Views (X88/Z88) • Center Console Top Component Views (Z75)	E28 Center Console Compartment Lamp
E29LF	Fog Lamp - Left Front	T3U	At the left front corner of the vehicle, in the front bumper	• Front of Vehicle Components (X88) • Front of Vehicle Components (Z88)	E29LF Fog Lamp - Left Front (X88)
E29LR	Fog Lamp - Left Rear	T79	At the left rear corner of the vehicle, in the rear fascia	-	• E29LR Fog Lamp - Left Rear (X88) • E29LR Fog Lamp - Left Rear (Z75)
E29RF	Fog Lamp - Right Front	T3U	At the right front corner of the vehicle, in the front bumper	• Front of Vehicle Components (X88) • Front of Vehicle Components (Z88)	E29RF Fog Lamp - Right Front (X88)
E29RR	Fog Lamp - Right Rear	T79	At the right rear corner of the vehicle, in the rear	-	• E29RR Fog Lamp - Right Rear (X88) • E29RR Fog Lamp - Right Rear

cardiagn.com

Code	Name	Option	Location	Locator View	Connector End View
			fascia		(Z75)
E31L	Sunshade Mirror Lamp - Left	-	In the passenger compartment, on the left sunshade	Overhead Console Components	E31L Sunshade Mirror Lamp - Left
E31R	Sunshade Mirror Lamp - Right	-	In the passenger compartment, on the right sunshade	Overhead Console Components	E31R Sunshade Mirror Lamp - Right
E32	Cigarette Lighter Receptacle	DT4 with AZ3	In the passenger compartment, center of instrument panel, below P17 Info Display	-	-
E32	Cigarette Lighter Receptacle	DT4 with D07 or DCK	In the passenger compartment, on top of the floor console, below P17 Info Display	-	-
E35L	Exterior Spot Lamp - Left	7X6 or 7X7	In the passenger compartment, forward, top left corner of the instrument panel near the A-Pillar	Back of Instrument Panel Components (X88/Z88 without D07/DCK)	E35L Exterior Spot Lamp - Left
E35R	Exterior Spot Lamp - Right	7X7	In the passenger compartment, forward, top right corner of the instrument panel near the A-Pillar	Back of Instrument Panel Components (X88/Z88 without D07/DCK)	E35R Exterior Spot Lamp - Right
E36AH	Dome Lamp	without SWB	In the rear compartment, near	-	E36AH Dome Lamp

cardiagn.com

Code	Name	Option	Location	Locator View	Connector End View
			center, overhead, in the headliner		
E37B	Dome/Reading Lamps - 2nd Row	without U42	In the passenger compartment, overhead, in the headliner between the front and second row seating	Headliner Components	E37B Dome/Reading Lamps - 2nd Row
E37B	Dome/Reading Lamps - 2nd Row	U42	In the passenger compartment, overhead, in the headliner between the front and second row seating, part of the second row video display	Headliner Components	E37B Dome/Reading Lamps - 2nd Row
E37C	Dome/Reading Lamps - 3rd Row	without DNU	In the passenger compartment, overhead, in the headliner behind the second row seating	Headliner Components	E37C Dome/Reading Lamps - 3rd Row
E37C	Dome/Reading Lamps - 3rd Row	DNU	In the passenger compartment, overhead, in the headliner behind the second row seating, part of the third row video display	Headliner Components	E37C Dome/Reading Lamps - 3rd Row
E37EL	Dome/Reading Lamps - Front Overhead Console	-	In the passenger compartment, at	Overhead Console Components	E37EL Dome/Reading Lamps - Front Overhead Console Left

cardiagn.com

Code	Name	Option	Location	Locator View	Connector End View
	Left		the left front of the headliner, in the overhead console		
E37ER	Dome/Reading Lamps - Front Overhead Console Right	-	In the passenger compartment, at the right front of the headliner, in the overhead console	Overhead Console Components	E37ER Dome/Reading Lamps - Front Overhead Console Right
E37H	Dome/Reading Lamps - Left Roof Rail	U42	In the passenger compartment, overhead, in the video display between the front and second row seating	Headliner Components	E37H Dome/Reading Lamps - Left Roof Rail
E37J	Dome/Reading Lamps - Right Roof Rail	U42	In the passenger compartment, overhead, in the video display between the front and second row seating	Headliner Components	E37J Dome/Reading Lamps - Right Roof Rail
E38	Flood Lamp - Center Console	-	In the passenger compartment, overhead, forward of center, on the overhead console	Overhead Console Components	E38 Flood Lamp - Center Console
E42L	Tail Lamp Assembly - Left	-	Outside of the vehicle, at the left rear corner of the vehicle	• Rear of Vehicle Components (Z75) • Rear of Vehicle Components (Z88) • Rear of Vehicle Components	-

cardiagn.com

Code	Name	Option	Location	Locator View	Connector End View
				(X88)	
E42R	Tail Lamp Assembly - Right	-	Outside of the vehicle, at the right rear corner of the vehicle	• Rear of Vehicle Components (Z75) • Rear of Vehicle Components (X88) • Rear of Vehicle Components (Z88)	-
E55LR	Flood Lamp - Left Rear Door Pocket	Z75	In the passenger compartment, rear of center, left side, in the left rear door trim, inside the arm rest	Left Rear Door Components (Z75)	E55LR Flood Lamp - Left Rear Door Pocket
E55RR	Flood Lamp - Right Rear Door Pocket	Z75	In the passenger compartment, rear of center, right side, in the right rear door trim, inside the arm rest	Right Rear Door Components (Z75)	E55RR Flood Lamp - Right Rear Door Pocket
E63D	Flood Lamp - Driver Door Handle	Z75	In the passenger compartment, forward of center, left side, in the driver door trim, inside the door handle pocket	Driver Door Components (Z75)	E63D Flood Lamp - Driver Door Handle (Z75)
E63P	Flood Lamp - Passenger Door Handle	Z75	In the passenger compartment, forward of center, right side, in the	Passenger Door Components (Z75)	E63P Flood Lamp - Passenger Door Handle (Z75)

cardiagn.com

Code	Name	Option	Location	Locator View	Connector End View
			passenger door trim, inside the door handle pocket		
E69L	Multifunction Lamp Assembly - Front Fascia Left	Z75	Outside of the vehicle, front left corner, mounted in the front fascia	-	-
E69R	Multifunction Lamp Assembly - Front Fascia Right	Z75	Outside of the vehicle, front right corner, mounted in the front fascia	-	-
F101	Passenger Instrument Panel Air Bag X1	-	In the passenger compartment, at the top of the passenger side of the instrument panel	• F101 Passenger Instrument Panel Air Bag • F101 Passenger Instrument Panel Air Bag X2	• F101 Passenger Instrument Panel Air Bag • F101 Passenger Instrument Panel Air Bag X2
F101	Passenger Instrument Panel Air Bag X2	-	In the passenger compartment, at the top of the passenger side of the instrument panel	• F101 Passenger Instrument Panel Air Bag • F101 Passenger Instrument Panel Air Bag X2	• F101 Passenger Instrument Panel Air Bag • F101 Passenger Instrument Panel Air Bag X2
F105L	Roof Rail Air Bag - Left	-	In the passenger compartment, left side, overhead, along the left roof rail	-	-
F105R	Roof Rail Air Bag - Right	-	In the passenger compartment, right side, overhead,	-	-

cardiagn.com

Code	Name	Option	Location	Locator View	Connector End View
			along the right roof rail		
F106D	Seat Side Air Bag - Driver	-	In the passenger compartment, on the left side of the left front seat back	Driver Seat Back Components	• F106D Seat Side Air Bag - Driver (KB6) • F106D Seat Side Air Bag - Driver (ULT+A45)
F106DA	Seat Side Air Bag - Driver Inboard	AYQ	In the passenger compartment, on the right side of the left front seat back	Driver Seat Back Components	• F106DA Seat Side Air Bag - Driver Inboard (KB6) • F106DA Seat Side Air Bag - Driver Inboard (ULT+A45)
F106P	Seat Side Air Bag - Passenger	-	In the passenger compartment, on the right side of the right front seat back	Passenger Seat Components View	• F106P Seat Side Air Bag - Passenger (KB6) • F106P Seat Side Air Bag - Passenger (ULT+A45)
F107	Steering Wheel Air Bag	-	In the passenger compartment, in the center of the steering wheel	-	-
F112D	Seat Belt Retractor Pretensioner - Driver	-	In the passenger compartment, left side, at the base of the B-pillar	Left Front of Passenger Compartment Views (Z75)	• F112D Seat Belt Retractor Pretensioner - Driver (AX7) • F112D Seat Belt Retractor Pretensioner - Driver (-AX7)
F112P	Seat Belt Retractor Pretensioner - Passenger	-	In the passenger compartment, right side, at the base of the B-pillar	-	• F112P Seat Belt Retractor Pretensioner - Passenger (AX7) • F112P Seat Belt Retractor Pretensioner - Passenger (-AX7)

cardiagn.com

Code	Name	Option	Location	Locator View	Connector End View
F113D	Seat Belt Anchor Pretensioner - Driver	-	In the passenger compartment, on the lower outside of the driver seat, mounted to the seat track	• Driver Seat Cushion Components (without ULT) • Driver Seat Cushion Components (ULT)	F113D Seat Belt Anchor Pretensioner - Driver
F113P	Seat Belt Anchor Pretensioner - Passenger	-	In the passenger compartment, on the lower outside of the passenger seat, mounted to the seat track	Passenger Seat Cushion Components (without ULT)	F113P Seat Belt Anchor Pretensioner - Passenger
G1	A/C Compressor	-	In the engine compartment, right side, mounted on the lower front of the engine	Left Side of Engine Components (L83 or L86)	-
G3	Air Suspension Compressor	Z85 or Z95	under the vehicle, at the left rear, behind left rear tire	-	G3 Air Suspension Compressor
G10L	Cooling Fan Motor - Left	-	At the front of the engine compartment, in the center of the left fan assembly	Cooling Fans	G10L Cooling Fan Motor - Left
G10R	Cooling Fan Motor - Right	-	At the front of the engine compartment, in the center of the right fan assembly	Cooling Fans	G10R Cooling Fan Motor - Right

cardiagn.com

Code	Name	Option	Location	Locator View	Connector End View
G12B	Fuel Pump - Secondary	L96	Under the vehicle, in the secondary fuel tank, part of the fuel pump and level sensor assembly	-	-
G12	Fuel Pump	-	Under the vehicle, in the fuel tank, part of the fuel pump and level sensor assembly	-	-
G13	Generator	L83 or L86	In the engine compartment, right of center, at the top right front of the engine	Left Side of Engine Components (L83 or L86)	G13 Generator
G13	Generator	L96	In the engine compartment, left of center, at the top left front of the engine	Left Rear Side of Engine Components (L96)	G13 Generator
G18	High Pressure Fuel Pump	L83 or L86	In the engine compartment, rearward of center, at the top back center of the engine, underneath the intake manifold	Top of Engine Components (L83 or L86)	G18 High Pressure Fuel Pump (L83/L96)
G19	Rear Window Washer Pump	-	In the engine compartment, left side, forward of the wheel well, behind the driver side head	Left Front Corner of Vehicle Components	G19 Rear Window Washer Pump

cardiagn.com

Code	Name	Option	Location	Locator View	Connector End View
			lamp assembly		
G24	Windshield Washer Pump	-	In the engine compartment, left side, forward of the wheel well, attached to the washer fluid reservoir, below the left headlamp assembly	• Left Front Corner of Vehicle Components • Left Side of Engine Compartment Component View	G24 Windshield Washer Pump
G31D	Seat Lumbar/Bolster Pump - Driver	ULT	In the passenger compartment, inside driver seat cushion	Driver Seat Cushion Components (ULT)	G31D Seat Lumbar/Bolster Pump - Driver
G31P	Seat Lumbar/Bolster Pump - Passenger	ULT	In the passenger compartment, inside passenger seat cushion	Passenger Seat Cushion Components (ULT)	G31P Seat Lumbar/Bolster Pump - Passenger
K4	Assist Step Control Module	BRS	Underneath the vehicle, along the outside of the left frame rail, near the the driver door	Chassis Components View	• K4 Assist Step Control Module X1 • K4 Assist Step Control Module X2
K8A	Blower Motor Control Module - Auxiliary	-	In the rear compartment, right side, behind the rear quarter interior trim	-	-
K9	Body Control Module	-	In the passenger compartment, at the lower left side of the instrument panel	• Back of Instrument Panel Components (X88/Z88 without D07/DCK)	• K9 Body Control Module X1 • K9 Body Control Module X2 • K9 Body Control Module X4 • K9 Body Control Module X5

cardiagn.com

Code	Name	Option	Location	Locator View	Connector End View
				• Left Front of Passenger Compartment Views (Z75)	• K9 Body Control Module X6 • K9 Body Control Module X7
K13	DVD Control Module	AYE	In the passenger compartment, in the floor console, left side under the instrument panel	-	-
K14	Distance Sensing Cruise Control Module	K59	Front of vehicle, left side bottom, behind the front fascia, on the frame rail, near ground G101	Behind Front Fascia Components (X88/Z88)	K14 Distance Sensing Cruise Control Module
K17	Electronic Brake Control Module	-	Underneath the vehicle, left side, along the inside of the frame rail, near the left side of the transmission	Chassis Components View	• K17 Electronic Brake Control Module (L96) • K17 Electronic Brake Control Module (-L96)
K19	Suspension Control Module	Z95	Underneath the vehicle, at the back, left of center, top side of the rear most chassis cross member, above spare tire	Chassis Components View	K19 Suspension Control Module
K20	Engine Control Module	-	In the engine compartment, to the left of the engine	Left Side of Engine Compartment Component View	• K20 Engine Control Module X1 ((L83/L86)+MYC) • K20 Engine Control Module X1 (L86+M5U)

cardiagn.com

Code	Name	Option	Location	Locator View	Connector End View
					• K20 Engine Control Module X1 (L96) • K20 Engine Control Module X2 ((L83/L86)+MYC) • K20 Engine Control Module X2 (L86+M5U) • K20 Engine Control Module X2 (L96) • K20 Engine Control Module X3 ((L83/L86)+MYC) • K20 Engine Control Module X3 (L86+M5U) • K20 Engine Control Module X3 (L96)
K29R	Seat Heating Control Module - Rear	KA6	In the passenger compartment, rear of center, left side, under the second row seat cushion	• 2nd Row Bench Seat Cushions Bottom Components (ATT) • 2nd Row Left Bucket Seat Components (ATN)	• K29R Seat Heating Control Module - Rear X1 (X88/Z88+KA6) • K29R Seat Heating Control Module - Rear X1 • K29R Seat Heating Control Module - Rear X2 (X88/Z88+KA6) • K29R Seat Heating Control Module - Rear X2
K29	Seat Heating Control Module	KA1	In the passenger compartment, forward of center, right side, under the passenger seat cushion	Passenger Seat Cushion Components (without ULT)	• K29 Seat Heating Control Module X1 (X88/Z88+KQV) • K29 Seat Heating Control Module X1 • K29 Seat Heating Control

cardiagn.com

Code	Name	Option	Location	Locator View	Connector End View
					Module X2 (X88/Z88+KQV) • K29 Seat Heating Control Module X2
K32	Steering Wheel Heating Control Module	UVD	In the passenger compartment, on lower center of the steering wheel assembly behind the steering wheel air bag	-	-
K33	HVAC Control Module	-	In the passenger compartment, in the passenger side of the Instrument Panel, behind the glove box, mounted to the top of the HVAC assembly	Front of HVAC Assembly Components	• K33 HVAC Control Module X1 • K33 HVAC Control Module X2 • K33 HVAC Control Module X3 • K33 HVAC Control Module X4
K36	Inflatable Restraint Sensing and Diagnostic Module	-	In the passenger compartment, under the center console, on the floor	Left Front of Passenger Compartment Views (Z75)	• K36 Inflatable Restraint Sensing and Diagnostic Module X1 • K36 Inflatable Restraint Sensing and Diagnostic Module X2
K38	Chassis Control Module	JL1 or Z85	Under the vehicle, at the rear, right side, mounted to the bracket above the spare tire	Chassis Components View	K38 Chassis Control Module
K39	Liftgate Control Module	TB5 or TC2	In the rear compartment, left side of the tailgate,	Liftgate Components	• K39 Liftgate Control Module X1 • K39 Liftgate Control Module X2

cardiagn.com

Code	Name	Option	Location	Locator View	Connector End View
			behind the trim.		
K40D	Seat Memory Control Module - Driver	A45 or ULT	In the passenger compartment, left side, under the driver seat cushion	• Driver Seat Cushion Components (without ULT) • Driver Seat Cushion Components (ULT)	• K40D Seat Memory Control Module - Driver X4 • K40D Seat Memory Control Module - Driver X5 • K40D Seat Memory Control Module - Driver X6
K40P	Seat Memory Control Module - Passenger	AG2 or ULT	In the passenger compartment, right side, under the passenger seat cushion	Passenger Seat Cushion Components (ULT)	• K40P Seat Memory Control Module - Passenger X1 • K40P Seat Memory Control Module - Passenger X2 • K40P Seat Memory Control Module - Passenger X3
K43	Power Steering Control Module	-	Underneath the vehicle, towards the front, on the power steering rack assembly	-	-
K53D	Seat Blower Assembly - Driver Back	X88/Z88	In the passenger compartment, forward of center, left side, inside the driver seat back	-	K53D Seat Blower Assembly - Driver Back (X88/Z88)
K53D	Seat Blower Assembly - Driver Back	Z75	In the passenger compartment, forward of center, left side, inside the driver seat back	Driver Seat Back Components	K53D Seat Blower Assembly - Driver Back

cardiagn.com

Code	Name	Option	Location	Locator View	Connector End View
K53P	Seat Blower Assembly - Passenger Back	X88/Z88	In the passenger compartment, forward of center, right side, inside the passenger seat back	-	K53P Seat Blower Assembly - Passenger Back (X88/Z88)
K53P	Seat Blower Assembly - Passenger Back	Z75	In the passenger compartment, forward of center, right side, inside the passenger seat back	Passenger Seat Components View	K53P Seat Blower Assembly - Passenger Back
K55D	Seat Blower Assembly - Driver Cushion	X88/Z88	In the passenger compartment, forward of center, left side, inside the driver seat cushion	-	K55D Seat Blower Assembly - Driver Cushion (X88/Z88)
K55D	Seat Blower Assembly - Driver Cushion	Z75	In the passenger compartment, forward of center, left side, inside the driver seat cushion	• Driver Seat Cushion Components (without ULT) • Driver Seat Cushion Components (ULT)	K55D Seat Blower Assembly - Driver Cushion
K55P	Seat Blower Assembly - Passenger Cushion	X88/Z88	In the passenger compartment, forward of center, right side, inside the passenger seat cushion	-	K55P Seat Blower Assembly - Passenger Cushion (X88/Z88)

cardiagn.com

Code	Name	Option	Location	Locator View	Connector End View
K55P	Seat Blower Assembly - Passenger Cushion	Z75	In the passenger compartment, forward of center, right side, inside the passenger seat cushion	• Passenger Seat Cushion Components (without ULT) • Passenger Seat Cushion Components (ULT)	K55P Seat Blower Assembly - Passenger Cushion
K56	Serial Data Gateway Module	-	In the passenger compartment, under the instrument panel, left of the steering column	-	• K56 Serial Data Gateway Module X1 • K56 Serial Data Gateway Module X2
K60	Steering Column Lock Module	BTM	In the passenger compartment, on steering column, at shift lever	Steering Column Components (2 of 2)	K60 Steering Column Lock Module
K69	Transfer Case Control Module	NP0 or NQH	In the passenger compartment, under the instrument panel, right of the accelerator pedal	Behind Left Side of Instrument Panel Components (1 of 2)	• K69 Transfer Case Control Module X1 • K69 Transfer Case Control Module X2 • K69 Transfer Case Control Module X3
K71	Transmission Control Module	MYC or MYD	In the engine compartment, inside the transmission assembly, part of the control solenoid valve	Left Side of Engine Compartment Component View	K71 Transmission Control Module

cardiagn.com

Code	Name	Option	Location	Locator View	Connector End View
K71	Transmission Control Module	M5U	In the engine compartment, left side of bulkhead, near the brake master cylinder	Left Side of Engine Compartment Component View	K71 Transmission Control Module
K73	Telematics Communication Interface Control Module	UE1	In the passenger compartment, inside instrument panel, right side, above glove box	Back of Instrument Panel Components (Z75)	• K73 Telematics Communication Interface Control Module X1 • K73 Telematics Communication Interface Control Module X2
K74	Human Machine Interface Control Module	IO5 or IO6	In the passenger compartment, right side of the instrument panel, below the passenger air bag	• Back of Instrument Panel Components (Z75) • Back of Instrument Panel Components (X88/Z88 without D07/DCK)	• K74 Human Machine Interface Control Module X1 • K74 Human Machine Interface Control Module X2
K77	Remote Control Door Lock Receiver	-	In the passenger compartment, right rear, on C-pillar	-	K77 Remote Control Door Lock Receiver
K83	Park Brake Control Module	J71	Underneath the vehicle, at the rear, near center of the rear bumper bar	Chassis Components View	K83 Park Brake Control Module
K84	Keyless Entry Control Module	ATH or BTM	In the rear compartment, left side, underneath rear quarter window behind trim	• Right Rear Cargo Area Components • Left Rear Cargo Area Components	• K84 Keyless Entry Control Module X1 • K84 Keyless Entry Control Module X2

cardiagn.com

Code	Name	Option	Location	Locator View	Connector End View
K85	Passenger Presence Module	-	In the passenger compartment, under the front of the front passenger seat cushion	• Passenger Seat Cushion Components (ULT) • Passenger Seat Cushion Components (without ULT)	K85 Passenger Presence Module
K89	Immobilizer Control Module	without BTM	In the passenger compartment, on the driver side, near the ignition cylinder	Center Console Bottom Component Views	K89 Immobilizer Control Module
K89	Immobilizer Control Module	BTM	In the passenger compartment, near center, between the driver and passenger seat, inside floor console	Center Console Bottom Component Views	K89 Immobilizer Control Module
K99	Steering Column Position Control Module	N38	In the passenger compartment, forward, left side, mounted to the bottom of the steering column	Steering Column Components (1 of 2)	• K99 Steering Column Position Control Module X1 • K99 Steering Column Position Control Module X2 • K99 Steering Column Position Control Module X3 • K99 Steering Column Position Control Module X4
K111	Fuel Pump Driver Control Module	-	Underneath the vehicle, rear, mounted to the	Chassis Components View	K111 Fuel Pump Driver Control Module

cardiagn.com

Code	Name	Option	Location	Locator View	Connector End View
			bracket above the spare tire		
K124	Active Safety Control Module	UGN with Z75	In the rear compartment, left side, underneath rear quarter glass window, behind trim	Left Rear Cargo Area Components	• K124 Active Safety Control Module X1 • K124 Active Safety Control Module X2
K127	Communication Interface Module - WLAN Router	Accessory Router	Inside the vehicle, under the instrument panel, near the driver side hush panel	-	-
K133	Trailer Brake Power Control Module	JL1	Under the vehicle, mounted to the bracket above the spare tire, next to K111	Chassis Components View	K133 Trailer Brake Power Control Module
K134D	Seat Bolster Memory Control Module - Driver	ULT	In the passenger compartment, inside driver seat cushion	Driver Seat Cushion Components (ULT)	K134D Seat Bolster Memory Control Module - Driver
K134P	Seat Bolster Memory Control Module - Passenger	ULT	In the passenger compartment, inside passenger seat cushion	Passenger Seat Cushion Components (ULT)	K134P Seat Bolster Memory Control Module - Passenger
K157	Video Processing Control Module	UVH	In the passenger compartment, front, left side, left of steering column, behind instrument panel, near the BCM	Left Front of Passenger Compartment Views (Z75)	• K157 Video Processing Control Module X1 • K157 Video Processing Control Module X2

cardiagn.com

Code	Name	Option	Location	Locator View	Connector End View
K166L	Multifunction LED Control Module - Left Headlamp	-	Outside the vehicle, left front corner, attached to the headlamp assembly	Headlamp Components (Z75)	-
K166R	Multifunction LED Control Module - Right Headlamp	-	Outside the vehicle, right front corner, attached to the headlamp assembly	Headlamp Components (Z75)	-
K167L	Multifunction LED Control Module - Front Fascia Left	Z75	Outside the vehicle, left front corner, inside front fascia, attached to the Multifunction Lamp Assembly	-	-
K167R	Multifunction LED Control Module - Front Fascia Right	Z75	Outside the vehicle, right front corner, inside front fascia, attached to the Multifunction Lamp Assembly	-	-
K169	Folding Seat Control Module - 3rd Row	AS8	In the passenger compartment, in the 3rd row seat, left side, inside seat back in the lower left corner	3rd Row Seat Back Components (AS8)	• K169 Folding Seat Control Module - 3rd Row X1 (AS8) • K169 Folding Seat Control Module - 3rd Row X2 (AS8)
K171	Hands-Free Liftgate Sensor Control Module	TC2	At the rear of the vehicle, center, mounted to the underside of the rear bumper	Behind Rear Fascia Components	K171 Hands-Free Liftgate Sensor Control Module X1 (TC2)

cardiagn.com

Code	Name	Option	Location	Locator View	Connector End View
K174L	Multifunction LED Control Module - Left Tail Lamp	Z75 or Z88	At the left rear corner of the vehicle, internal to the left tail lamp assembly, attached the tail lamp assembly	• Tail Lamp Components (Z75) • Tail Lamp Components (Z75)	-
K174R	Multifunction LED Control Module - Right Tail Lamp	Z75 or Z88	At the left rear corner of the vehicle, internal to the right tail lamp assembly, attached the tail lamp assembly	-	-
K175	Center Console Compartment Cooler Control Module	DCK	In the passenger compartment, center, inside center console at the floor	-	K175 Center Console Compartment Cooler Control Module
K182	Parking Assist Control Module	UD5 or UD7	In the rear compartment, behind the rear seat, left side near the wheel well, behind the rear compartment trim	Left Rear Cargo Area Components	• K182 Parking Assist Control Module X1 (UD5/UD7/UKG) • K182 Parking Assist Control Module X2 (UD5/UD7/UKG) • K182 Parking Assist Control Module X3 (UD5/UD7/UKG)
K188	Human Machine Interface Control Module Bypass Module	IO5 or IO6	In the passenger compartment, in the instrument panel	-	K188 Human Machine Interface Control Module Bypass Module X1
KR4B	Outside Rearview Mirror Heater Relay	DL3 or DR4	In the rear body fuse block	-	-

cardiagn.com

Code	Name	Option	Location	Locator View	Connector End View
KR5	Rear Defogger Relay	C49	In the rear body fuse block	-	-
KR23A	Fuel Pump Relay	-	In the underhood fuse block	-	-
KR23B	Fuel Pump Relay - Secondary	L96	In the underhood fuse block	-	-
KR27	Starter Relay	-	In the underhood fuse block	-	-
KR53	Park Lamps Relay	-	In the underhood fuse block	-	-
KR57	Rear Fog Lamp Relay	T79	In the rear body fuse block	-	-
KR58	Roof Beacon Relay	TRW	In the passenger compartment, overhead, in the overhead console	-	-
KR73	Ignition Main Relay	-	In the underhood fuse block	-	-
KR75	Engine Controls Ignition Relay	-	In the underhood fuse block	-	-
KR79	Auxiliary Battery Relay 2	5W4 or 9C1	In the engine compartment, left side, near C1B Auxiliary Battery	-	-
KR81	Auxiliary Battery Relay 1	5W4 or 9C1	In the engine compartment, left side, near C1B Auxiliary Battery	-	-
KR95A	Liftgate Unlatch Relay	TB4	In the rear body fuse block	-	-
KR98	Vehicle Level Control Compressor Relay	Z85 or Z95	In the engine compartment, left side, under brake	-	**KR98 Vehicle Level Control Compressor Relay**

cardiagn.com

Code	Name	Option	Location	Locator View	Connector End View
			master cylinder		
KR103	DVD Relay	AYE	In the passenger compartment, in the floor console, left side under the instrument panel	-	-
KR161A	Configurable Provision Relay 1	5W4 or 9C1	In the underhood fuse block	-	-
KR161B	Configurable Provision Relay 2	5W4 or 9C2	In the underhood fuse block	-	-
KR161C	Configurable Provision Relay 3	5W4 or 9C3	In the underhood fuse block	-	-
KR161D	Configurable Provision Relay 4	5W4 or 9C4	In the underhood fuse block	-	-
KR162	Liftgate Window Unlatch Relay	-	In the rear body fuse block	-	-
M4	Air Inlet Door Actuator	-	In the passenger compartment, behind the instrument panel glove box	**Front of HVAC Assembly Components**	**M4 Air Inlet Door Actuator**
M5	Adjustable Pedal Motor	JF4	In the passenger compartment, left side, in the driver footwell, attached to the accelerator pedal assembly	**Behind Left Side of Instrument Panel Components (1 of 2)**	**M5 Adjustable Pedal Motor**
M6B	Air Temperature Door Actuator - Auxiliary	-	In the rear compartment, under the right rear quarter window, forward of the rear blower under trim.	-	-

cardiagn.com

Code	Name	Option	Location	Locator View	Connector End View
M6L	Air Temperature Door Actuator - Left	-	In the passenger compartment, behind the instrument panel, on the HVAC case center	Front of HVAC Assembly Components	M6L Air Temperature Door Actuator - Left
M6R	Air Temperature Door Actuator - Right	-	In the passenger compartment, behind the instrument panel, on the HVAC case	Back of HVAC Assembly Components	M6R Air Temperature Door Actuator - Right
M7	Transmission Shift Lock Control Solenoid Actuator	-	In the passenger compartment, right side of the steering wheel, attached to transmission shift lever	Steering Column Components (2 of 2)	M7 Transmission Shift Lock Control Solenoid Actuator
M8B	Blower Motor - Auxiliary	-	In the rear compartment, right side, behind the interior rear quarter trim	-	-
M8	Blower Motor	-	In the passenger compartment, behind the passenger side of the instrument panel	Back of HVAC Assembly Components	M8 Blower Motor
M26	Front Axle Engagement Actuator	NP0 or NQH	Underside of the vehicle, at the front, center, on front axle	Front Axle Components	M26 Front Axle Engagement Actuator

cardiagn.com

Code	Name	Option	Location	Locator View	Connector End View
M27	Fuel Fill Door Unlatch Actuator	N08	Underside of the vehicle, near the back, left side, under rear quarter glass window, in rear quarter panel	-	M27 Fuel Fill Door Unlatch Actuator
M31	Liftgate Motor	TB5 or TC2	In the rear compartment, left side of liftgate, on liftgate strut	Liftgate Components	M31 Liftgate Motor
M33	Liftgate Window Latch Assembly	-	In the rear compartment, inside the tailgate, at center	Liftgate Components	M33 Liftgate Window Latch Assembly
M37B	Mode Door Actuator - Auxiliary	-	In the passenger compartment, forward, internal to the instrument panel	-	-
M37L	Mode Door Actuator - Left	-	In the passenger compartment, behind the left side of the instrument panel, on the upper left side of the HVAC module	Front of HVAC Assembly Components	M37L Mode Door Actuator - Left
M38	Power Steering Motor	-	Under the vehicle, part of the steering gear assembly	-	-
M45	Rear Wiper Motor	-	At rear of vehicle, in the liftgate	Liftgate Components	M45 Rear Wiper Motor
M50D	Seat Front Vertical Motor - Driver	-	In the passenger compartment,	Driver Seat Cushion Components (without	M50D Seat Front Vertical Motor - Driver

cardiagn.com

Code	Name	Option	Location	Locator View	Connector End View
			under the front of the driver seat, next to the right seat track	ULT)	
M50P	Seat Front Vertical Motor - Passenger	-	In the passenger compartment, under the front of the passenger seat, next to the right seat track	Passenger Seat Cushion Components (without ULT)	M50P Seat Front Vertical Motor - Passenger
M51D	Seat Horizontal Motor - Driver	-	In the passenger compartment, under the center of the driver seat, between the seat tracks	• Driver Seat Cushion Components (without ULT) • Driver Seat Cushion Components (ULT)	M51D Seat Horizontal Motor - Driver
M51P	Seat Horizontal Motor - Passenger	-	In the passenger compartment, under the center of the passenger seat, between the seat tracks	• Passenger Seat Cushion Components (ULT) • Passenger Seat Cushion Components (without ULT)	M51P Seat Horizontal Motor - Passenger
M52D	Seat Lumbar Support Horizontal Motor - Driver	without Y91 or Z75	In the passenger compartment, part of the driver seat back	Driver Seat Back Components	M52D Seat Lumbar Support Horizontal Motor - Driver

cardiagn.com

Code	Name	Option	Location	Locator View	Connector End View
M52P	Seat Lumbar Support Horizontal Motor - Passenger	without Y91 or Z75	In the passenger compartment, part of the passenger seat back	Passenger Seat Components View	M52P Seat Lumbar Support Horizontal Motor - Passenger
M55D	Seat Rear Vertical Motor - Driver	-	In the passenger compartment, under the front of the driver seat, next to the left seat track	• Driver Seat Cushion Components (without ULT) • Driver Seat Cushion Components (ULT)	M55D Seat Rear Vertical Motor - Driver
M55P	Seat Rear Vertical Motor - Passenger	-	In the passenger compartment, under the front of the passenger seat, next to the left seat track	• Passenger Seat Cushion Components (without ULT) • Passenger Seat Cushion Components (ULT) • Passenger Seat Cushion Components (ULT)	M55P Seat Rear Vertical Motor - Passenger
M56D	Seat Recline Motor - Driver	-	In the passenger compartment, part of the driver seat back	Driver Seat Back Components	M56D Seat Recline Motor - Driver
M56P	Seat Recline Motor - Passenger	-	In the passenger compartment, part of the passenger	Passenger Seat Components View	M56P Seat Recline Motor - Passenger

cardiagn.com

Code	Name	Option	Location	Locator View	Connector End View
			seat back		
M60A	Active Grille Air Shutter 1 Motor Module	Z75	Outside the vehicle, near the left front corner of the vehicle, behind the fascia	-	-
M60B	Active Grille Air Shutter 2 Motor Module	Z75	Outside the vehicle, near the right front corner of the vehicle, behind the fascia	-	-
M64	Starter Motor	-	In the engine compartment, lower right rear of the engine	• Right Rear Side of Engine Components (L96) • Right Rear Side of Engine Components (L83 or L86)	• M64 Starter Motor ((L83/L86)+MYC) • M64 Starter Motor (L86+M5U) • M64 Starter Motor (L96)
M65	Steering Column Telescope Motor	N38	In the passenger compartment, forward, left of center, on the steering column	-	-
M68	Steering Column Tilt Motor	N38	In the passenger compartment, forward, left of center, on the steering column	-	-
M69	Sunroof Motor	CF5	In the passenger compartment, overhead, in the center of the	-	-

cardiagn.com

Code	Name	Option	Location	Locator View	Connector End View
			headliner		
M74D	Window Motor - Driver	-	In the passenger compartment, behind the driver door trim panel, at the center of the door	• Driver Door Components (Z75) • Driver Door Components (X88 or Z88)	M74D Window Motor - Driver
M74LR	Window Motor - Left Rear	-	In the passenger compartment, center of the left rear door, behind the door trim panel	• Left Rear Door Components (X88 or Z88) • Left Rear Door Components (Z75)	M74LR Window Motor - Left Rear
M74P	Window Motor - Passenger	-	In the passenger compartment, behind the front passenger door trim panel, at the center of the door	• Passenger Door Components (X88 or Z88) • Passenger Door Components (Z75)	M74P Window Motor - Passenger
M74RR	Window Motor - Right Rear	-	In the passenger compartment, center of the right rear door, behind the door trim panel	• Right Rear Door Components (X88 or Z88) • Right Rear Door Components (Z75)	M74RR Window Motor - Right Rear
M75	Windshield Wiper Motor	-	At the left rear of the engine compartment, near the windshield	Left Side of Engine Compartment Component View	-
M77D	Outside Rearview Mirror Motor - Driver	-	Outside of the vehicle, left side, forward on the	-	-

cardiagn.com

Code	Name	Option	Location	Locator View	Connector End View
			driver door, inside the outside rear view mirror		
M77P	Outside Rearview Mirror Motor - Passenger	-	Outside of the vehicle, right side, forward on the passenger door, inside the outside rear view mirror	-	-
M78D	Outside Rearview Mirror Folding Motor - Driver	DL3 or DR4	Outside of the vehicle, left side, forward on the driver door, inside the outside rear view mirror	-	-
M78P	Outside Rearview Mirror Folding Motor - Passenger	DL3 or DR4	Outside of the vehicle, right side, forward on the passenger door, inside the outside rear view mirror	-	-
M91	Instrument Panel Compartment Door Unlatch Actuator	Z75	In the passenger compartment, forward, right side, inside the instrument panel on the glove box	-	M91 Instrument Panel Compartment Door Unlatch Actuator
M95L	Assist Step - Left	BRS	Under the vehicle, along the left frame rail, under the driver door	Chassis Components View	M95L Assist Step - Left
M95R	Assist Step - Right	BRS	Under the vehicle, along the right	Chassis Components View	M95R Assist Step - Right

cardiagn.com

Code	Name	Option	Location	Locator View	Connector End View
			frame rail, under the passenger door		
M101L	Seat Belt Retractor Motor Module - Left	AX7	In the passenger compartment, left side, at the base of the B-Pillar, part of the seat belt retractor	Left Front of Passenger Compartment Views (Z75)	M101L Seat Belt Retractor Motor Module - Left
M101R	Seat Belt Retractor Motor Module - Right	AX7	In the passenger compartment, right side, at the base of the B-Pillar, part of the seat belt retractor	-	M101R Seat Belt Retractor Motor Module - Right
M107LR	Folding Seat Motor - 2nd Row Left	ATN or ATT	In the passenger compartment, left side, under 2nd row seat cushion	• 2nd Row Left Bucket Seat Components (ATN) • 2nd Row Bench Seat Cushions Bottom Components (ATT)	M107LR Folding Seat Motor - 2nd Row Left
M107RR	Folding Seat Motor - 2nd Row Right	ATN or ATT	In the passenger compartment, right side, under 2nd row seat cushion	• 2nd Row Right Bucket Seat Components (ATN) • 2nd Row Bench Seat Cushions Bottom Components (ATT)	M107RR Folding Seat Motor - 2nd Row Right

cardiagn.com

cardiagn.com

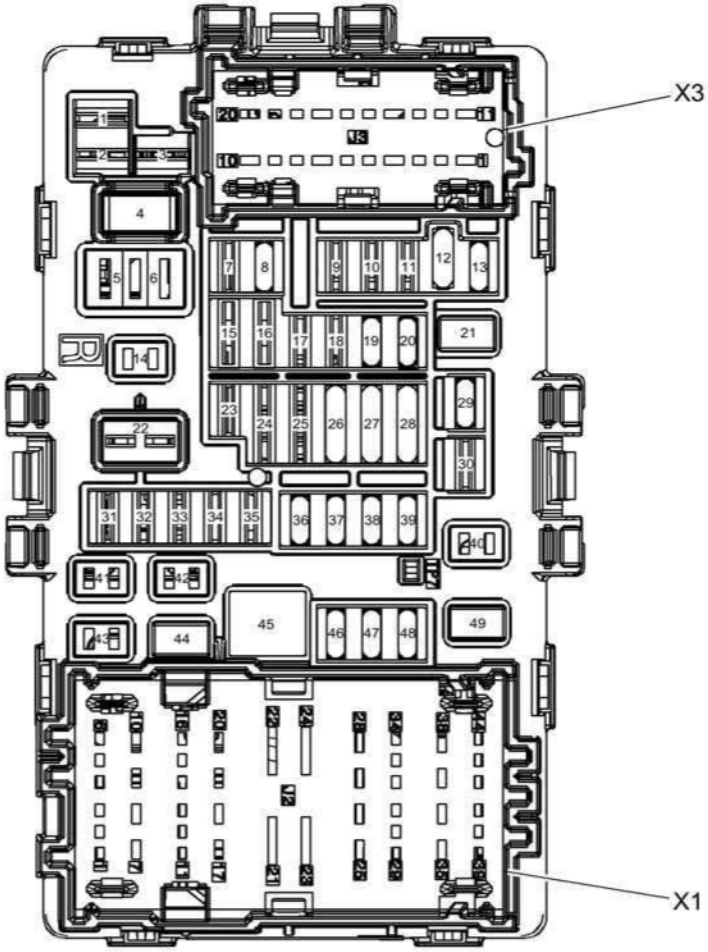

Fig. 1: X51R Fuse Block- Instrument Panel Right Top View
Courtesy of GENERAL MOTORS COMPANY

X50R Fuse Block- Instrument Panel Right Usage

No.	Device Label Name	Device Assigned Name	Rating	Description
Fuses				

cardiagn.com

No.	Device Label Name	Device Assigned Name	Rating	Description
1	EMPTY	F1DR	-	Not Used
2	EMPTY	F2DR	-	Not Used
3	EMPTY	F3DR	-	Not Used
4	APO 4 (15A)	F4DR	15A	X80D Accessory Power Receptacle- Center Console Compartment (AZ3 with AVF or D07 without AVF), X80L Accessory Power Receptacle- Center Console Rear (D07)
5	EMPTY	F5DR	-	Not Used
6	EMPTY	F6DR	-	Not Used
7	EMPTY	F7DR	-	Not Used
8	GLBX (10A)	F8DR	-	KR147 Instrument Panel Compartment Door Unlatch Actuator Relay (Z75), M91 Instrument Panel Compartment Door Unlatch Actuator (Z75)
9	EMPTY	F9DR	-	Not Used
10	EMPTY	F10DR	-	Not Used
11	EMPTY	F11DR	-	Not Used
12	SWC (2A)	F12DR	2A	S70L Steering Wheel Controls Switch- Left, S70R Steering Wheel Controls Switch- Right
13	BCM 8 (20A)	F13DR	20A	A23D Door Latch Assembly- Driver, A23LR Door Latch Assembly- Left Rear, A23P Door Latch Assembly- Passenger, A23RR Door Latch Assembly- Right Rear, K9 Body Control Module, KR113 Child Security Lock Disable Relay, M27 Fuel Fill Door Unlatch Actuator
14	EMPTY	F14DR	-	Not Used
15	EMPTY	F15DR	-	Not Used
16	EMPTY	F16DR	-	Not Used
17	EMPTY	F17DR	-	Not Used
18	EMPTY	F18DR	-	Not Used
19	BCM 4 (20A)	F19DR	-	E4G Headlamp- Left Low Beam (X88 or Z88), E4RF Turn Signal Lamp- Right Front (X88 or Z75), E4Z Turn Signal Repeater Lamp- Right (DL3 or DR4), E5L Stop Lamp- Left (X88 with T89), K9 Body Contol Module, K166R

cardiagn.com

No.	Device Label Name	Device Assigned Name	Rating	Description
				Multifunction LED Control Module- Right Headlamp (X88 with TB8, Z88 or Z75), K166L Multifunction LED Control Module- Left Headlamp (Z75), K167R Multifunction LED Control Module- Front Fascia Right (Z75), K174L Multifunction LED Control Module- Left Tail Lamp (Z88 or Z75)
20	RSE (10A)	F20DR	10A	P22A Video Display- 2nd Row (U42), P22B Video Display- 3rd Row (DNU), S48C Multifunction Switch 1- Instrument Panel (Z75), S48D Multifunction Switch 2- Instrument Panel (Z75), S140 Media Disc Eject Switch (TG5 or U42)
21	S/ROOF (30A)	F21DR	30A	KR58 Roof Beacon Relay (TRW), M69 Sunroof Motor (CF5)
22	EMPTY	F22DR	-	Not Used
23	EMPTY	F23DR	-	Not Used
24	EMPTY	F24DR	-	Not Used
25	EMPTY	F25DR	-	Not Used
26	INFO/AIRBAG (10A/10A)	F26DR	10A	K36 Inflatable Restraint Sensing and Diagnostic Module, K73 Telematics Communication Interface Control Module (UE1), K85 Passenger Presence Module
27	SPARE/RAIN SNSR (10A/10A)	F27DR	10A	B200 Rain Sensor Module, S79P Window Switch- Passenger
28	USB / OBS DET (10A)	F28DR	10A	B174W Frontview Camera- Windshield (UFL, UHX or UGN with Z75), B218R Side Object Sensor Module- Right (UKC), K14 Distance Sensing Cruise Control Module (K59), K41 Front and Rear Parking Assist Control Module (UD5 or UD7), K124 Active Saftey Control Module (UGN), X83 Auxiliary Audio Input (AZ3)
29	RDO (20A)	F29DR	20A	A11 Radio, A33 Media Disc Player, K74 Human Machine Interface Control Module (IO5 or IO6), X82 Audio/Video Input Adapter (D07 with U42), X83 Auxiliary Audio Input (D07)
30	EMPTY	F30DR	-	Not Used

cardiagn.com

No.	Device Label Name	Device Assigned Name	Rating	Description
31	EMPTY	F31DR	-	Not Used
32	EMPTY	F32DR	-	Not Used
33	EMPTY	F33DR	-	Not Used
34	EMPTY	F34DR	-	Not Used
35	EMPTY	F35DR	-	Not Used
36	SEO B2 (30A)	F36DR	30A	KR103 DVD Relay (AYE), X55X Fuse Holder- Video Display (AYE), X61A Junction Block- Instrument Panel (AYE)
37	SEO (15A)	F37DR	15A	Not Used
38	BCM 2 (10A)	F38DR	10A	K9 Body Control Module, KR81 Auxiliary Battery Relay 1 (5W4 or 9C1), S30 Headlamp Switch, S77 Transfer Case Shift Control Switch (NP0 or NQH), X81 Accessory Power Receptacle- 110V AC (KI4), X81B Accessory Power Receptacle- 220V AC (KI5)
39	AC INV (25A)	F39DR	25A	T1 Accessory DC/AC Power Inverter Module (KI4 or KI5)
40	EMPTY	F40DR	-	Not Used
41	EMPTY	F41DR	-	Not Used
42	EMPTY	F42DR	-	Not Used
43	EMPTY	F43DR	-	Not Used
44	RT DR WNDW MTR (30A)	F44DR	30A	M74P Window Motor- Passenger, S79P Window Switch- Passenger
45	FRT BLWR (40A)	F45DR	40A	M8 Blower Motor
46	BCM 6 (15A)	F46DR	15A	E4RR Turn Signal Lamp- Right Rear (X88 with T89), E5AU Stop/Turn Signal Lamp- Right Upper (X88 without T89), E5AV Stop/Turn Signal Lamp- Right Lower (X88 without T89), E37B Dome/Reading Lamps- 2nd Row (without U42), E37C Dome/Reading Lamps- 3rd Row (without DNU), E37EL Dome/Reading Lamps- Front Overhead Console Left, E37ER Dome/Reading Lamps- Front Overhead Console Right, E37H Dome/Reading Lamps- Left Roof Rail (AZ3), E37J Dome/Reading Lamps-

cardiagn.com

No.	Device Label Name	Device Assigned Name	Rating	Description
				Right Roof Rail (AZ3), F12DL, K9 Body Control Module, KR11 Windshield Washer Pump Relay, KR12B Windshield Wiper Relay, K20 Engine Control Module, K38 Chassis Control Module (IK9, JL1 or Z85), K69 Transfer Case Control Module (NP0 or NQH), K71 Transmission Control Module (M5U), K111 Fuel Pump Control Module, K167R Multifunction LED Control Module- Front Fascia Right (Z75), K174R Multifunction LED Control Module- Right Tail Lamp (Z88 or Z75), P22A Video Display- 2nd Row (U42), P22B Video Display- 3rd Row (DNU), Q8 Control Solenoid Valve Assembly (MYC), S12 Dome Lamp Switch, S13D Door Lock Switch- Driver, S13P Door Lock Switch- Passenger, S25 Garage Door Opener (UG1), S27 Heads-Up Display Switch (UV6), S30 Headlamp Switch, S38 Ignition Mode Switch (BTM), S43 Content Theft Deterrent Sensor Disable Switch (UTT), S45B Liftgate Control Switch- Interior (TB5 or TC2), S47D Seat Memory Switch- Driver (A45), S48A Multifunction Switch- Instrument Panel (X88 or Z88), S48D Multifunction Switch 2- Instrument Panel (Z75), S52 Outside Rearview Mirror Switch (without A45), S72 Sunroof Switch (CF5), S76 Trailer Brake Control Switch (JL1), S77 Transfer Case Shift Control Switch (NP0 or NQH), S79P Window Switch- Passenger, S91 Park Brake Control Switch (J71), S140 Media Disc Eject Switch (Z75), S145 Center Console Compartment Cooler Switch (DCK)
47	BCM 7 (15A)	F47DR	15A	A23D Door Latch Assembly- Driver, A23LR Door Latch Assembly- Left Rear, A23P Door Latch Assembly- Passenger, A23RR Door Latch Assembly- Right Rear, E4LR Turn Signal Lamp- Left Rear, E5AS Stop/Turn Signal Lamp- Left Upper, E5AT Stop/Turn Signal Lamp- Left Lower, E8XA Door Handle Courtesy Lamp- Driver Exterior (DL3 or DR4 with HD7), E8XB Door Handle Courtesy Lamp- Passenger Exterior (DL3 or DR4 with HD7), E8XC

cardiagn.com

No.	Device Label Name	Device Assigned Name	Rating	Description
				Door Handle Courtesy Lamp- Left Rear Exterior (HD7), E8XD Door Handle Courtesy Lamp- Right Rear Exterior (HD7), E8YD Outside Rearview Mirror Courtesy Lamp- Driver (DL3 or DR4), E8YP Outside Rearview Mirror Courtesy Lamp- Passenger (DL3 or DR4), E8ZL Running Board Step Courtesy Lamp- Left (BRS), E8ZR Running Board Step Courtesy Lamp- Right (BRS), K9 Body Control Module, K174L Multifunction LED Control Module- Left Tail Lamp (Z88 or Z75), KR114 Door Lock Relay, M7 Transmission Shift Lock Control Solenoid Actuator, M27 Fuel Fill Door Unlatch Actuator (N08)
48	AMP (30A)	F48DR	30A	T3 Audio Amplifier (IO5 or IO6)
49	RT FRT SEAT (30A)	F49DR	30A	K40P Seat Memory Control Module- Passenger (AG2 with ULT), S64P Seat Adjuster Switch- Passenger (AG2 without ULT)

X51R FUSE BLOCK- INSTRUMENT PANEL RIGHT BOTTOM VIEW

cardiagn.com

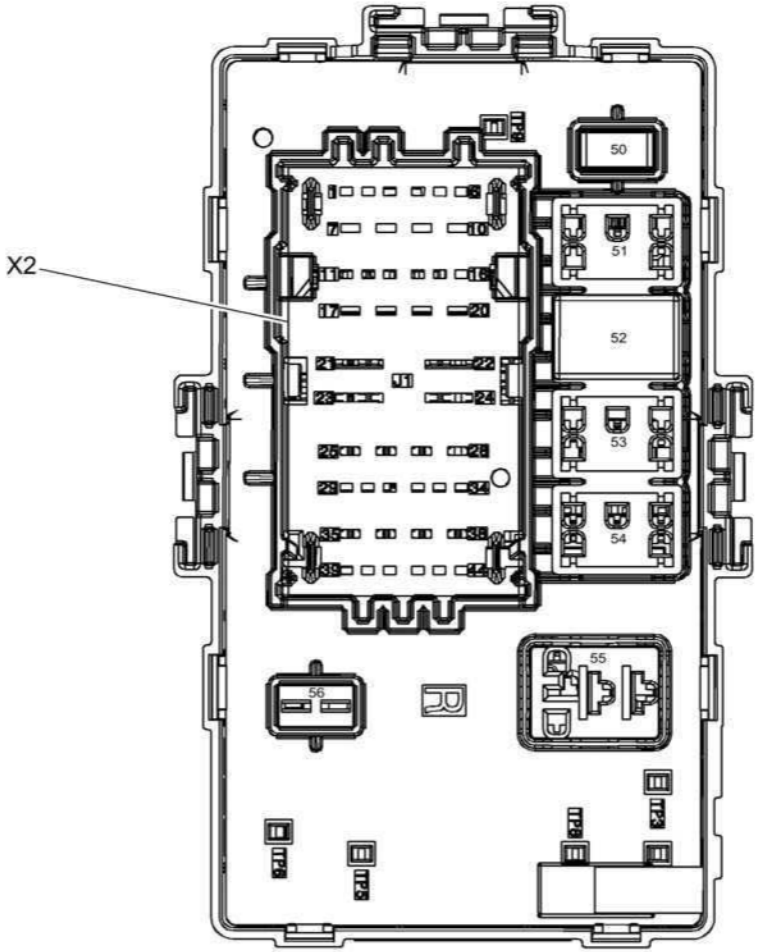

Fig. 2: X51R Fuse Block- Instrument Panel Right Bottom View
Courtesy of GENERAL MOTORS COMPANY

X50R Fuse Block- Instrument Panel Right Usage

No.	Fuse And Relay Description	Device Assigned Name	Rating	Circuits
Fuses				

cardiagn.com

No.	Fuse And Relay Description	Device Assigned Name	Rating	Circuits
50	APO 3 (15A)	F50DR	15A	X80D Accessory Power Receptacle- Center Console Compartment (AZ3 without AVF or D07 with AVF), X80E Accessory Power Receptacle - Center Seat (AZ3)
56	EMPTY	F56DR	-	Not Used
Relays				
51	EMPTY	-	-	Not Used
52	RAP / ACCY RELAY	KR76B Retained Accessory Power Relay 2	-	F4DR, F50DR
53	EMPTY	-	-	Not Used
54	EMPTY	-	-	Not Used
55	EMPTY	-	-	Not Used
Important: Relays listed below are non-serviceable Printed Circuit Board (PCB) relays and are internal to the block				
-	KR113 Child Security Lock Disable Relay	-	-	A23LR Door Latch Assembly- Left Rear, A23P Door Latch Assembly- Passenger, A24RR Door Latch Assembly- Right Rear
-	KR114 Door Dead Lock Relay (N08 or UTT)	-	-	A24D Door Latch Assembly- Driver, A23LR Door Latch Assembly- Left Rear, A23P Door Latch Assembly- Passenger, A24RR Door Latch Assembly- Right Rear, M27 Fuel Fill Door Unlatch Actuator (N08)
-	KR147 Instrument Panel Compartment Door Unlatch Actuator Relay (Z75)	-	-	M91 Instrument Panel Compartment Door Unlatch Actuator (Z75)

X51R FUSE BLOCK- INSTRUMENT PANEL RIGHT X1

cardiagn.com

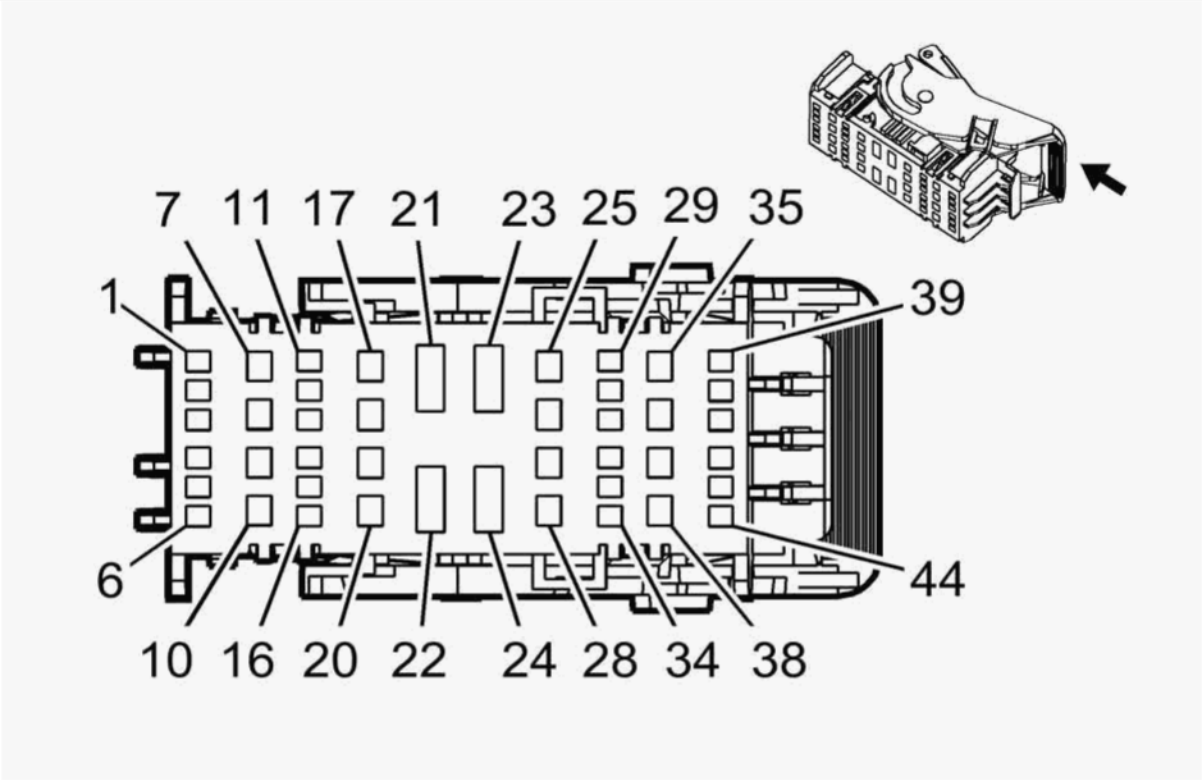

Connector Part Information

- Harness Type: Body
- OEM Connector: 13967689
- Service Connector: 19329457
- Description: 44-Way F 1.5, 2.8, 800 Metri-Pack Series (NA)

Terminal Part Information

Terminal Type ID	Terminated Lead	Diagnostic Test Probe	Terminal Removal Tool	Service Terminal	Tray	Core Crimp	Insulation Crimp
I	13575718	J-35616-44 (YE)	J-38125-558	12110127	2	F	G
II	13575718	J-35616-44 (YE)	J-38125-558	Not Available	Not Available	Not Available	Not Available
III	13575839	J-35616-35 (VT)	J-38125-11A	7116-4112-02	14	C	D
IV	19301761	J-35616-35 (VT)	J-38125-12A	Not Available	Not Available	Not Available	Not Available

cardiagn.com

Terminal Type ID	Terminated Lead	Diagnostic Test Probe	Terminal Removal Tool	Service Terminal	Tray	Core Crimp	Insulation Crimp
IV	19301761	J-35616-35 (VT)	J-38125-12A	Not Available	Not Available	Not Available	Not Available
IV	19301761	J-35616-35 (VT)	J-38125-12A	Not Available	Not Available	Not Available	Not Available
V	19301767	J-35616-2A (GY)	J-38125-560	Not Available	Not Available	Not Available	Not Available
V	19301767	J-35616-2A (GY)	J-38125-560	Not Available	Not Available	Not Available	Not Available
V	19301767	J-35616-2A (GY)	J-38125-560	Not Available	Not Available	Not Available	Not Available

Pin	Size	Color	Circuit	Function	Terminal Type ID	Option
1	1.5	GY	295	Door Lock Actuator Lock Control	V	-
2	1.5	WH/D-BU	3266	Child Security Lock Motor Lock Control	V	-
3	0.35	VT/YE	3267	Child Security Lock Relay Control	V	-
4	1.5	GY/L-GN	3271	Door Lock Control (2)	V	-
5	-	-	-	Not Occupied	-	-
6	0.35 0.35	GY/L-GN GY/VT	4083 755	RAP Relay 2 Coil Control RAP Relay Coil Control	V	- -
7- 14	-	-	-	Not Occupied	-	-
15	0.35	RD/D-BU	840	Battery Positive Voltage	V	-
16	0.35 0.5	RD/L-GN RD/L-GN	4440 4440	Battery Positive Voltage	V	- -
17	-	-	-	Not Occupied	-	-
18	1.5	VT/YE	143	Accessory Ignition Voltage	IV	-
19	2.5 2.5	RD/WH RD/WH	1340 1340	Battery Positive Voltage	IV III	- -
20	2.5 2.5	RD/WH RD/WH	1340 1340	Battery Positive Voltage	III IV	- -
21	6	RD/L-GN	242	Battery Positive Voltage	II	-
22	4	RD/VT	542	Battery Positive Voltage	I	-
23	-	-	-	Not Occupied	-	-
24	6	RD/GY	142	Battery Positive Voltage	II	-
25- 26	-	-	-	Not Occupied	-	-

cardiagn.com

Pin	Size	Color	Circuit	Function	Terminal Type ID	Option
27	0.75	RD/VT	340	Battery Positive Voltage	IV	-
28	-	-	-	Not Occupied	-	-
29	1.5	D-BU/WH	195	Door Lock Control	V	-
30	1.5	BN	5910	Door Double Lock Actuator Lock Control	V	-
31	-	-	-	Not Occupied	-	-
32	0.5	L-GN/BN	6132	Local Interconnect Network Serial Data Bus 1	V	-
33	0.75	RD/WH	3440	Battery Positive Voltage	V	-
34	0.75	RD/L-GN	5140	Battery Positive Voltage	V	-
35- 36	-	-	-	Not Occupied	-	-
37	2.5	RD/YE	3740	Battery Positive Voltage	IV	-
38	2.5	RD/BN	1440	Battery Positive Voltage	IV	-
39	-	-	-	Not Occupied	-	-
40	0.75 0.75	GY GY	295 5911	Door Lock Actuator Lock Control Door Lock Actuator Lock Control 2	V	- -
41	0.35	D-BU/BN	7547	Security Lock Relay Control	V	-
42	0.35 0.5	RD/D-BU RD/D-BU	840 840	Battery Positive Voltage	V	- -
43	0.75	RD/L-GN	3140	Battery Positive Voltage	V	-
44	-	-	-	Not Occupied	-	-

X51R FUSE BLOCK- INSTRUMENT PANEL RIGHT X2

cardiagn.com

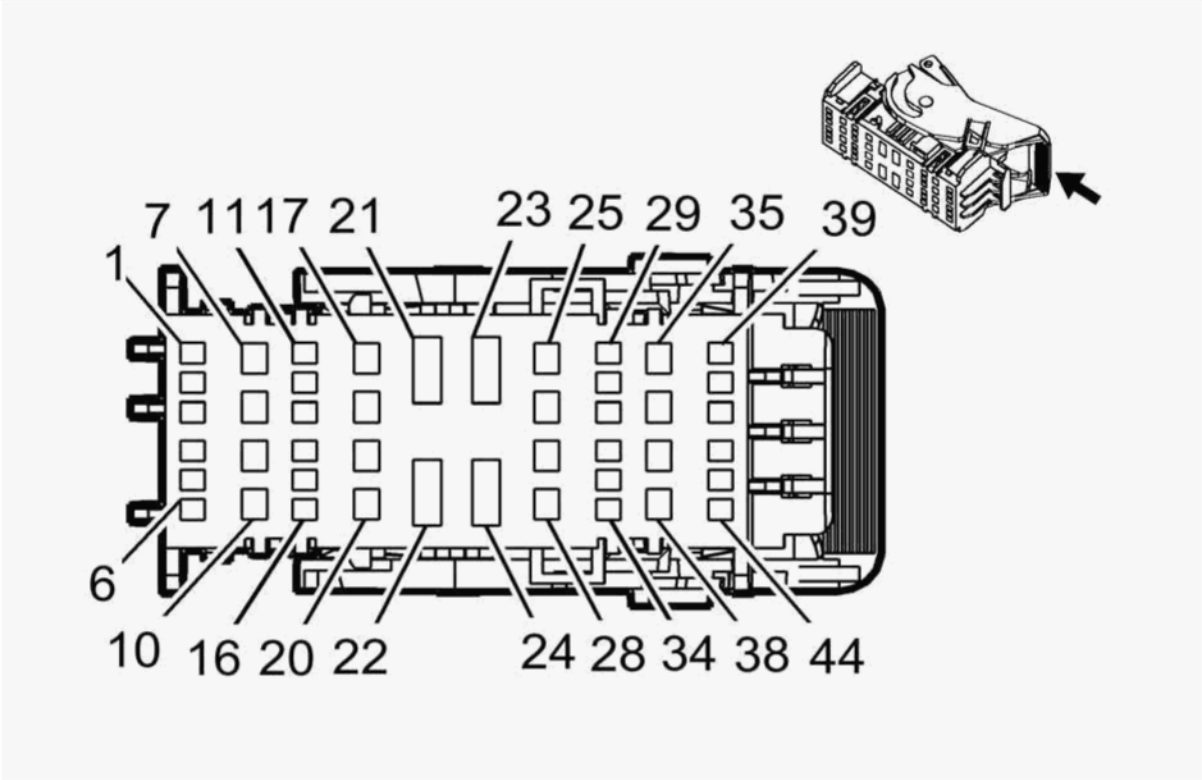

Connector Part Information

- Harness Type: Instrument Panel
- OEM Connector: 13967690
- Service Connector: 19329458
- Description: 44-Way F 1.5, 2.8, 800 Metri-Pack Series (GN)

Terminal Part Information

Terminal Type ID	Terminated Lead	Diagnostic Test Probe	Terminal Removal Tool	Service Terminal	Tray	Core Crimp	Insulation Crimp
I	13575718	J-35616-44 (YE)	J-38125-558	12110127	2	F	G
II	19301761	J-35616-35 (VT)	J-38125-12A	Not Available	Not Available	Not Available	Not Available
II	19301761	J-35616-35 (VT)	J-38125-12A	Not Available	Not Available	Not Available	Not Available
II	19301761	J-35616-35 (VT)	J-38125-12A	Not Available	Not Available	Not Available	Not Available

cardiagn.com

Terminal Type ID	Terminated Lead	Diagnostic Test Probe	Terminal Removal Tool	Service Terminal	Tray	Core Crimp	Insulation Crimp
III	19301767	J-35616-2A (GY)	J-38125-560	Not Available	Not Available	Not Available	Not Available

Pin	Size	Color	Circuit	Function	Terminal Type ID	Option
1	0.5	RD/L-GN	1540	Battery Positive Voltage	III	-
2	0.35	BN/WH	4046	Glove Box Door Release Relay Control	III	-
3- 6	-	-	-	Not Occupied	-	-
7	0.75	RD/VT	4040	Battery Positive Voltage	II	-
8	0.75	RD/D-BU	2540	Battery Positive Voltage	II	-
9	-	-	-	Not Occupied	-	-
10	1.5	VT/YE	243	Accessory Ignition Voltage	II	-
11- 15	-	-	-	Not Occupied	-	-
16	0.35	RD/YE	3040	Battery Positive Voltage	III	-
17	1	RD/VT	340	Battery Positive Voltage	II	-
18	-	-	-	Not Occupied	-	-
19	0.5	BN/GY	4048	Glove Box Door Release Control	II	-
20- 21	-	-	-	Not Occupied	-	-
22	2.5	BK	1050	Ground	I	-
23- 28	-	-	-	Not Occupied	-	-
29	0.5	RD/BN	2240	Battery Positive Voltage	III	-
30- 33	-	-	-	Not Occupied	-	-
34	0.35	RD/D-BU	3240	Battery Positive Voltage	III	-
35	2.5	RD/GY	4140	Battery Positive Voltage	II	-
36- 37	-	-	-	Not Occupied	-	-
38	1.5	RD/YE	2340	Battery Positive Voltage	II	-
39- 44	-	-	-	Not Occupied	-	-

X51R FUSE BLOCK- INSTRUMENT PANEL RIGHT X3

cardiagn.com

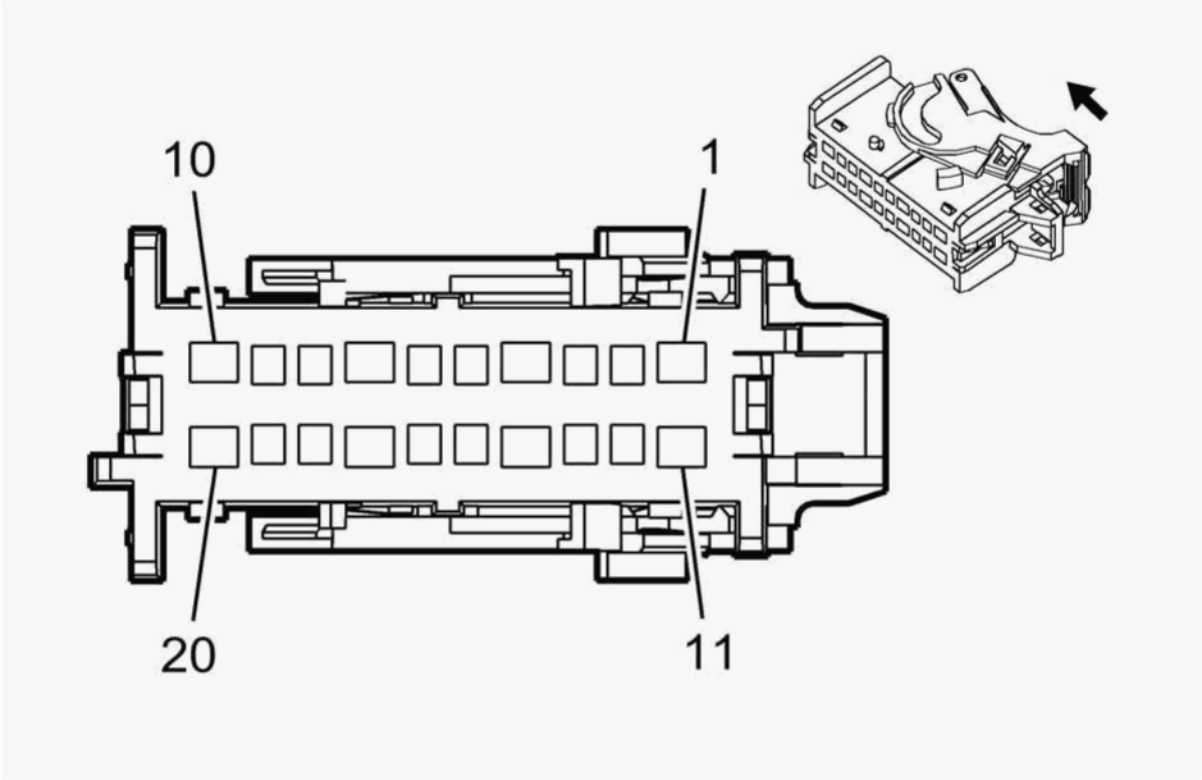

Connector Part Information

- Harness Type: A-Pillar
- OEM Connector: 15547107
- Service Connector: Service by Harness- See Part Catalog
- Description: 20-Way F 1.5, 2.8 OCS Series (GY)

Terminal Part Information

Terminal Type ID	Terminated Lead	Diagnostic Test Probe	Terminal Removal Tool	Service Terminal	Tray	Core Crimp	Insulation Crimp
I	Not Required	J-35616-2A (GY)	Not Required	Not Required	Not Required	Not Required	Not Required
II	Not Required	J-35616-35 (VT)	Not Required	Not Required	Not Required	Not Required	Not Required
II	Not Required	J-35616-35 (VT)	Not Required	Not Required	Not Required	Not Required	Not Required
II	Not Required	J-35616-35 (VT)	Not Required	Not Required	Not Required	Not Required	Not Required

cardiagn.com

Pin	Size	Color	Circuit	Function	Terminal Type ID	Option
1	2.5	RD/L-GN	3140	Battery Positive Voltage	II	-
2	0.5	L-GN/BN	6132	Local Interconnect Network Serial Data Bus 1	I	-
3- 7	-	-	-	Not Occupied	-	-
8	0.35	RD/D-BU	840	Battery Positive Voltage	I	-
9	-	-	-	Not Occupied	-	-
10	0.35 2.5	BK BK	1050 1050	Ground	II	- -
11- 20	-	-	-	Not Occupied	-	-

X53A FUSE BLOCK- REAR BODY TOP VIEW

cardiagn.com

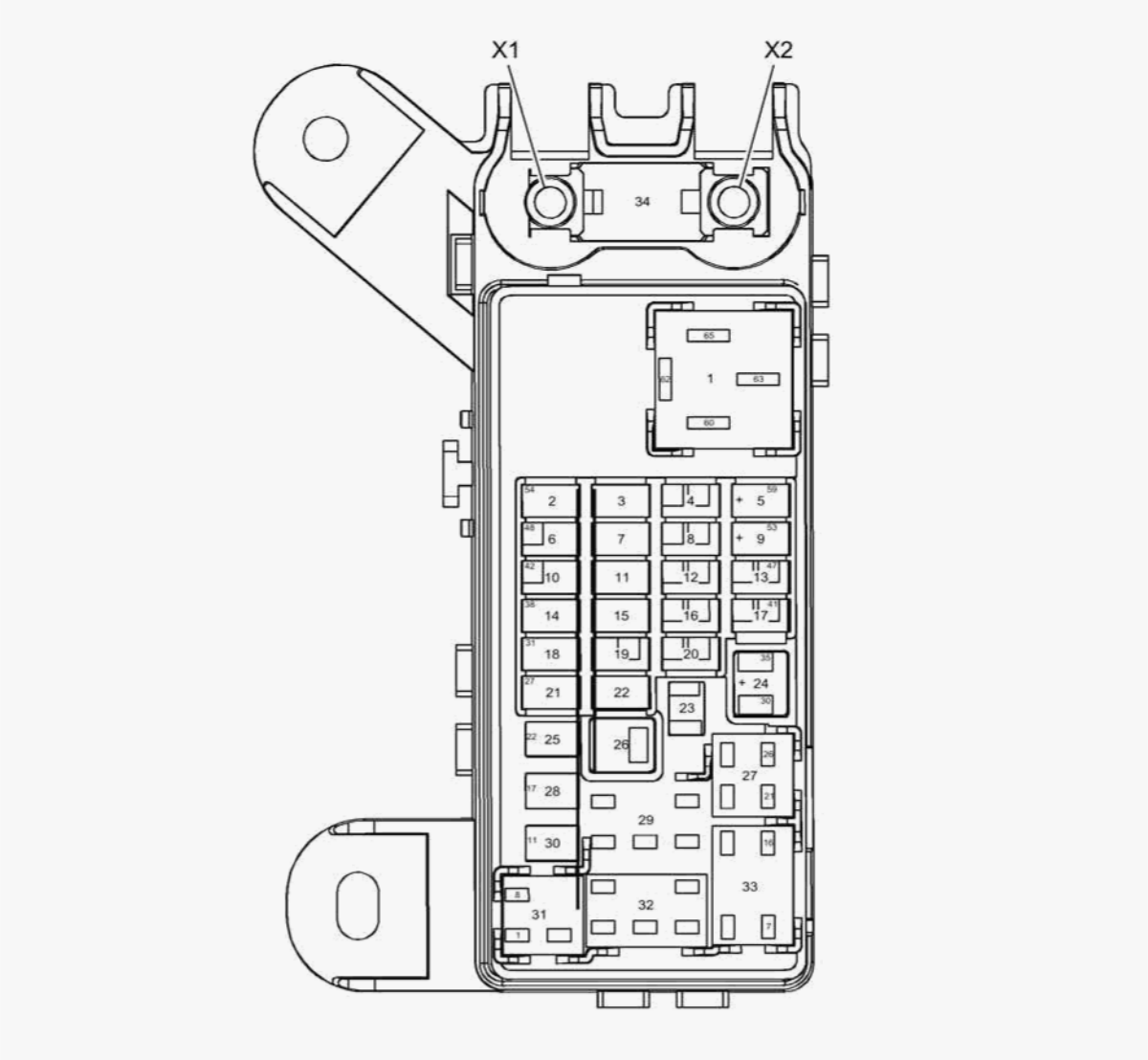

Fig. 3: X53A Fuse Block- Rear Body Top View
Courtesy of GENERAL MOTORS COMPANY

X53A Fuse Block- Rear Body Usage

No.	Device Label Name	Fuse And Relay Description	Rating	Circuits
Fuses				

cardiagn.com

No.	Device Label Name	Fuse And Relay Description	Rating	Circuits
2	-	F2RA	15A	K29R Seat Heating Control Module- Rear (KA6)
3	-	F3RA	15A	K29R Seat Heating Control Module- Rear (KA6)
4	-	F4RA	15A	E17D Outside Rearview Mirror Glass- Driver (DL3 or DL8 or DR4), E17P Outside Rearview Mirror Glass- Passenger (DL3 or DL8 or DR4)
5	-	F5RA	15A	Not Used
6	-	F6RA	-	Not Used
7	-	F7RA	10A	KR95A Liftgate Unlatch Relay (TB4)
8	-	F8RA	-	Not Used
9	-	F9RA	10A	B159L Glass Breakage Sensor- Left (UTV)
10	-	F10RA	-	Not Used
11	-	F11RA	10A	KR162 Liftgate Window Unlatch Relay
12	-	F12RA	-	Not Used
13	-	F13RA	-	Not Used
14	-	F14RA	10A	K39 Liftgate Control Module (TB5)
15	-	F15RA	20A	M45 Rear Wiper Motor
16	-	F16RA	-	Not Used
17	-	F17RA	-	Not Used
18	-	F18RA	30A	K8A Blower Motor Control Module- Auxiliary
19	-	F19RA	-	Not Used
20	-	F20RA	-	Not Used
21	-	F21RA	20A	Folding Seat Motor- Left 2nd Row (ATN or ATT), Folding Seat Motor- Right 2nd Row (ATN or ATT)
22	-	F22RA	10A	KR57 Rear Fog Lamp Relay (T79)
23	-	F23RA	-	Not Used
24	-	F24RA	30A	F9RA (UTV), E18 Rear Defogger Grid
25	-	F25RA	30A	K39 Liftgate Control Module (TB5)
26	-	F26RA	-	Not Used
28	-	F28RA	30A	K169 Folding Seat Control Module- 3rd Row (AS8)

cardiagn.com

No.	Device Label Name	Fuse And Relay Description	Rating	Circuits
30	-	F30RA	20A	X80RL Accessory Power Receptacle- Rear Compartment Left, X80RR Accessory Power Receptacle- Rear Compartment Right
Relays				
1	-	KR5 Rear Defogger Relay	-	F5RA, F9RA, F24RA
27	-	KR95A Liftgate Unlatch Relay	-	M30 Liftgate Latch (TB4)
29	-	-	-	Not Used
31	-	KR4B Outside Rearview Mirror Heater Relay	-	E17D Outside Rearview Mirror Glass - Driver (DL3, DL8 or DR4), E17P Outside Rearview Mirror Glass - Passenger (DL3, DL8 or DR4), F4RA
32	-	KR57 Rear Fog Lamp Relay	-	E29LR Fog Lamp - Left Rear (T79), E29RR Fog Lamp - Right Rear (T79)
33	-	KR162 Liftgate Window Unlatch Relay	-	M33 Liftgate Window Latch Assembly

X53A FUSE BLOCK- REAR BODY

-

Connector Part Information

- Harness Type: Body
- OEM Connector: 13940427
- Service Connector: 13586872
- Description: -

Terminal Part Information

Terminal Type ID	Terminated Lead	Diagnostic Test Probe	Terminal Removal Tool	Service Terminal	Tray	Core Crimp	Insulation Crimp
I	13575544	J-35616-35 (VT)	J-38125-12A	Not Available	Not Available	Not Available	Not Available

cardiagn.com

Terminal Type ID	Terminated Lead	Diagnostic Test Probe	Terminal Removal Tool	Service Terminal	Tray	Core Crimp	Insulation Crimp
II	13575718	J-35616-44 (YE)	J-38125-558	Not Available	Not Available	Not Available	Not Available
III	13575721	J-35616-4A (PU)	J-38125-553	Not Available	Not Available	Not Available	Not Available
III	13575721	J-35616-4A (PU)	J-38125-553	Not Available	Not Available	Not Available	Not Available
IV	13575824	J-35616-5 (PU)	J-38125-11A	Not Available	Not Available	Not Available	Not Available
IV	13575824	J-35616-5 (PU)	J-38125-11A	Not Available	Not Available	Not Available	Not Available
V	13575833	J-35616-42 (RD)	J-38125-11A	Not Available	Not Available	Not Available	Not Available
VI	13575835	J-35616-42 (RD)	J-38125-11A	Not Available	Not Available	Not Available	Not Available
VII	13579923	J-35616-4A (PU)	J-38125-553	Not Available	Not Available	Not Available	Not Available
VIII	13579978	J-35616-43 (RD)	J-38125-553	Not Available	Not Available	Not Available	Not Available
IX	13582322	J-35616-35 (VT)	J-38125-11A	Not Available	Not Available	Not Available	Not Available
X	19300659	J-35616-43 (RD)	J-38125-553	Not Available	Not Available	Not Available	Not Available
XI	19301761	J-35616-35 (VT)	J-38125-12A	Not Available	Not Available	Not Available	Not Available
XII	Not Available	No Tool Required	No Tool Required	Not Available	Not Available	Not Available	Not Available

Pin	Size	Color	Circuit	Function	Terminal Type ID	Option
1	0.5 0.5	RD/VT RD/VT	340 340	Battery Positive Voltage	I XI	- -
2	0.35	BN/VT	193	Rear Defog Relay Control	XI	-
3	0.5 0.5	RD/VT RD/VT	340 340	Battery Positive Voltage	I XI	- -
5	0.35	YE/VT	317	Fog Lamp Relay Coil Control	XI	-
6	0.35	GY/YE	6188	Lift Glass/Rear Compartment Lid Motor Release Control	XI	-
7	0.5	RD/YE	4340	Battery Positive Voltage	XI	-
8	0.5 0.5	BK BK	1150 1150	Ground	IX XI	- -
9	0.5 0.5	BK BK	1150 1150	Ground	XI IX	- -
10	0.5	YE/GY	122	Rear Fog Lamp Control	XI	-

cardiagn.com

Pin	Size	Color	Circuit	Function	Terminal Type ID	Option
11	1.5	RD/D-BU	6040	Battery Positive Voltage	IV	-
15	0.5	D-BU/YE	6795	Lift Glass/Rear Compartment Lid Motor Release Control 2	XI	-
16	0.5	BK	1150	Ground	XI	-
17	2.5	RD/D-BU	1240	Battery Positive Voltage	IV	-
20	0.35	L-GN/BN	5706	Endgate Latch Relay Control	XI	-
21	0.5	RD/BN	4240	Battery Positive Voltage	XI	-
22	3	RD/GY	7040	Battery Positive Voltage	IV	-
25	0.5	D-BU/WH	6128	Rear Closure Unlatch Motor Unlatch Control	XI	-
26	0.35	YE	5704	Endgate Latch Relay Coil Control	XI	-
27	0.75	RD/D-BU	1240	Battery Positive Voltage	III	-
28	0.5	RD/VT	340	Battery Positive Voltage	III	-
30	4	BN/VT	938	-	VIII	-
31	2.5	RD/GY	1740	Battery Positive Voltage	VII	-
35	2.5	BN/VT	293	Rear Defog Element Control	X	-
36	0.5	RD/D-BU	840	Battery Positive Voltage	III	-
37	0.75	RD/YE	3040	Battery Positive Voltage	III	-
43	0.5	RD/YE	4340	Battery Positive Voltage	III	-
49	0.5	RD/BN	4240	Battery Positive Voltage	III	-
52	2.5	BN/VT	293	Rear Defog Element Control	VII	-
53	0.5	BN/VT	293	Rear Defog Element Control	XII	-
54	0.75	RD/L-GN	5140	Battery Positive Voltage	III	-
55	0.75	RD/L-GN	6140	Battery Positive Voltage	III	-
56	0.5	RD/VT	340	Battery Positive Voltage	III	-
57	0.5	BN/YE	2267	Mirror Heating Element Control	III	-
60	0.5	BK	1150	Ground	V	-
61	4	RD/D-BU	42	Battery Positive Voltage	VI	-
62	4	BN/VT	938	-	VI	-
63	4	RD/D-BU	42	Battery Positive Voltage	VI	-

cardiagn.com

Pin	Size	Color	Circuit	Function	Terminal Type ID	Option
64	6	RD/WH	942	-	II	-
65	0.35 0.5	BN/VT BN/VT	193 193	Rear Defog Relay Control	V	- -

X55X FUSE HOLDER- VIDEO DISPLAY (AYE)

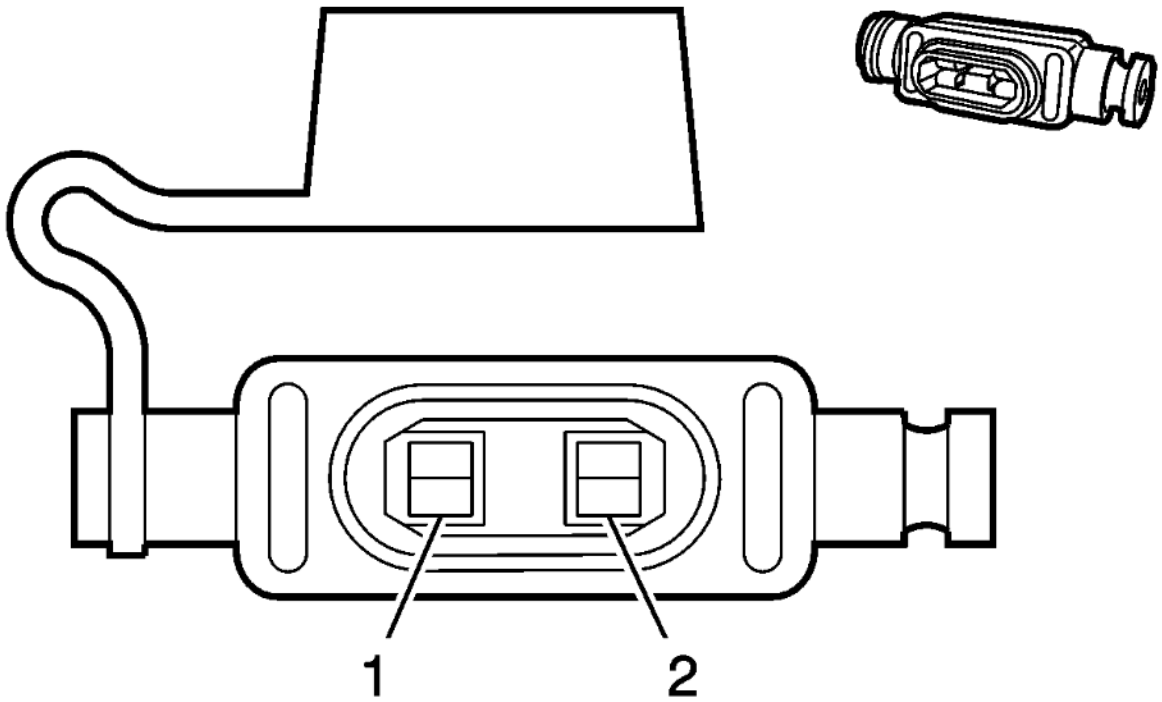

Connector Part Information

- Harness Type: Accessory Power Harness
- OEM Connector: Not Available
- Service Connector: Service by Harness - See Part Catalog
- Description: 2-Way Fuse Holder

cardiagn.com

Terminal Part Information

Terminal Type ID	Terminated Lead	Diagnostic Test Probe	Terminal Removal Tool	Service Terminal	Tray	Core Crimp	Insulation Crimp
I	Not Required	Not Required	Not Required	Not Required	Not Required	Not Required	Not Required

Pin	Size	Color	Circuit	Function	Terminal Type ID	Option
1	-	RD	-	Battery Positive Voltage	I	-
2	-	RD	-	Battery Positive Voltage	I	-

X61A JUNCTION BLOCK- INSTRUMENT PANEL TOP VIEW

cardiagn.com

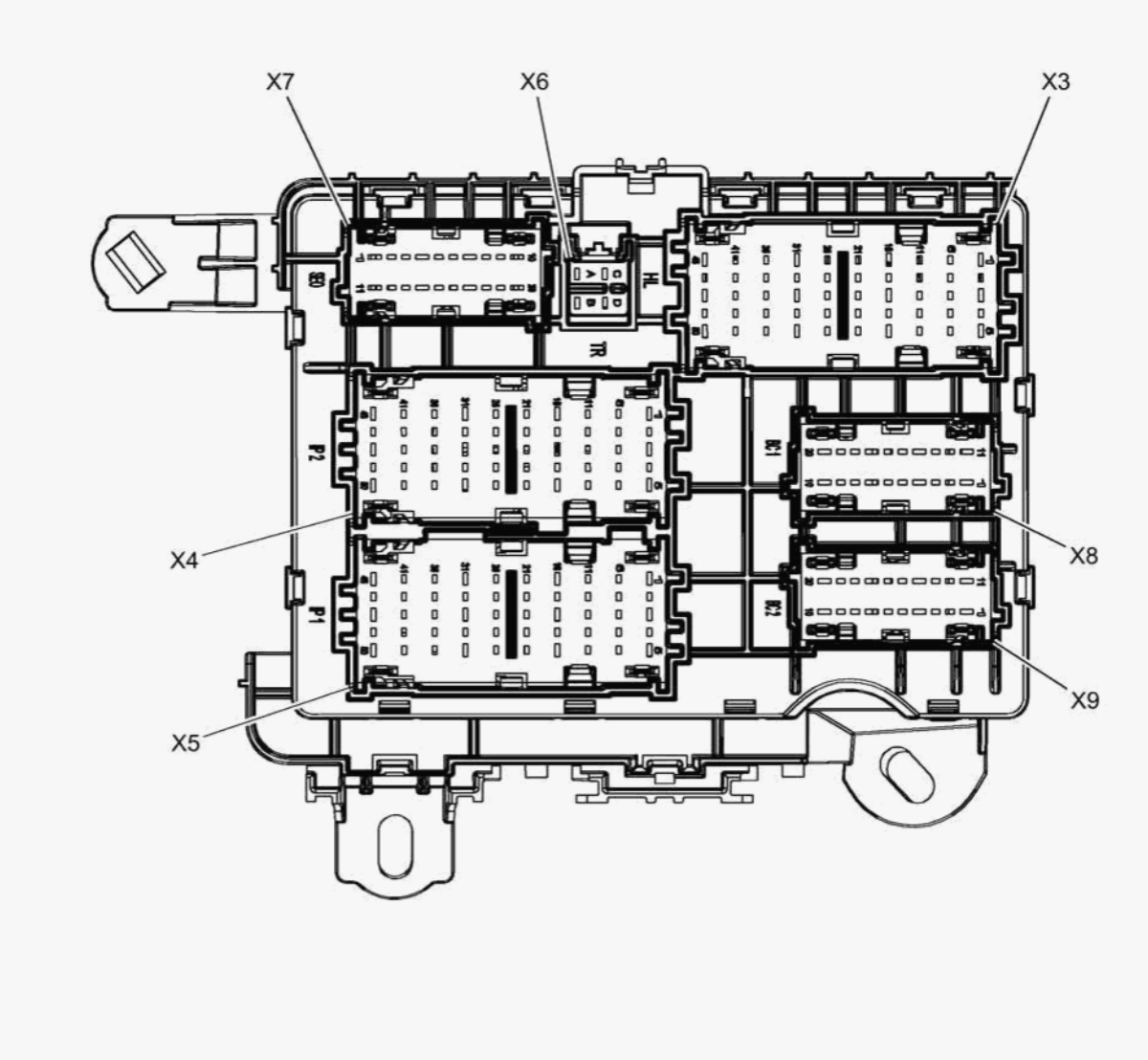

Fig. 4: X61A Junction Block- Instrument Panel Top View
Courtesy of GENERAL MOTORS COMPANY

X61A JUNCTION BLOCK- INSTRUMENT PANEL BOTTOM VIEW

cardiagn.com

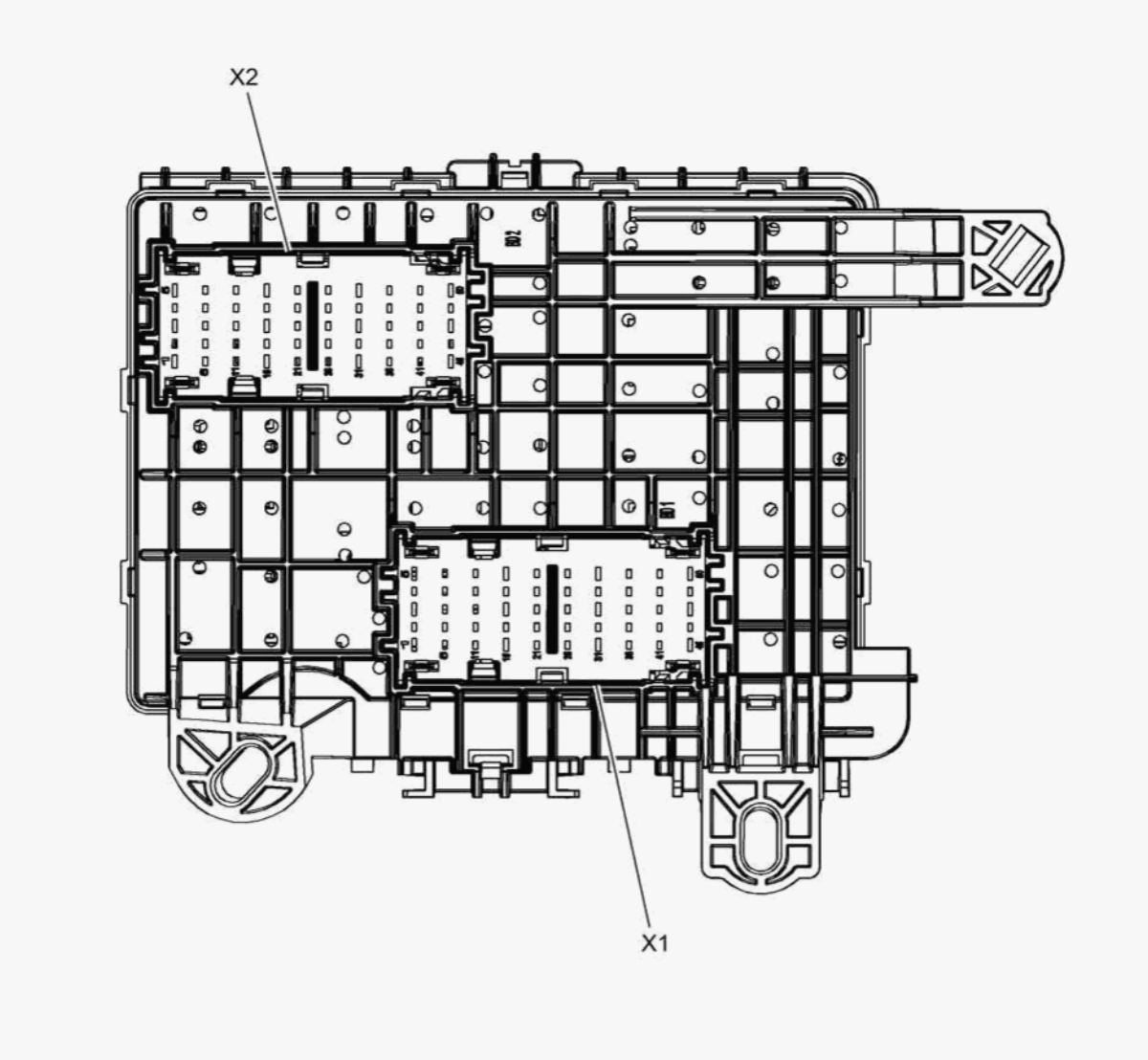

Fig. 5: X61A Junction Block- Instrument Panel Bottom View
Courtesy of GENERAL MOTORS COMPANY

X61A JUNCTION BLOCK- INSTRUMENT PANEL X1

cardiagn.com

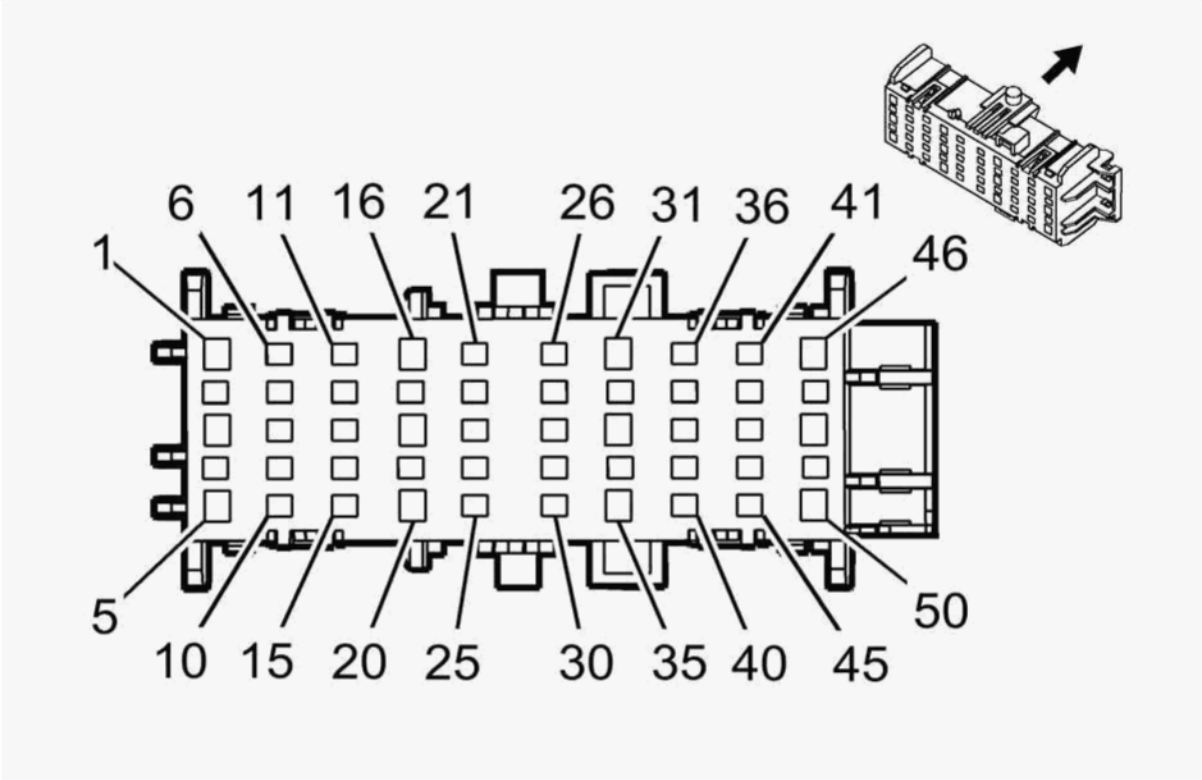

Connector Part Information

- Harness Type: Body
- OEM Connector: 33114819
- Service Connector: 19301798
- Description: 50-Way F 1.5, 2.8 OCS Series (BK)

Terminal Part Information

Terminal Type ID	Terminated Lead	Diagnostic Test Probe	Terminal Removal Tool	Service Terminal	Tray	Core Crimp	Insulation Crimp
I	19301761	J-35616-35 (VT)	J-38125-12A	Not Available	Not Available	Not Available	Not Available
I	19301761	J-35616-35 (VT)	J-38125-12A	Not Available	Not Available	Not Available	Not Available
I	19301761	J-35616-35 (VT)	J-38125-12A	Not Available	Not Available	Not Available	Not Available
II	19301767	J-35616-2A (GY)	J-38125-560	Not Available	Not Available	Not Available	Not Available

cardiagn.com

Terminal Type ID	Terminated Lead	Diagnostic Test Probe	Terminal Removal Tool	Service Terminal	Tray	Core Crimp	Insulation Crimp
II	19301767	J-35616-2A (GY)	J-38125-560	Not Available	Not Available	Not Available	Not Available

Pin	Size	Color	Circuit	Function	Terminal Type ID	Option
1	-	-	-	Not Occupied	-	-
2	0.5	GY/BK	1570	Front Axle Actuator Control	II	-
3- 10	-	-	-	Not Occupied	-	-
11	0.35	GY/L-GN	2555	Rear Park Assist Disable Signal	II	-
12- 15	-	-	-	Not Occupied	-	-
16	2.5	D-BU	965	-	I	-
17	-	-	-	Not Occupied	-	-
18	0.5	D-BU/YE	6105	High Speed GMLAN Serial Data (+) (2)	I	-
19	0.5	D-BU/YE	6105	High Speed GMLAN Serial Data (+) (2)	II	-
20	0.5	WH	6106	High Speed GMLAN Serial Data (-) (2)	I	-
21	0.5	RD/WH	961	-	II	-
22	0.35	VT	185	Low Washer Fluid Indicator Control	II	-
23	0.35	BN/YE	780	Driver Door Lock Switch Lock Signal	II	-
24	0.5	BN	7634	Integrated Trailer Brake Controller Redundant Manual Apply Signal	II	-
25	0.35	GY	5697	Child Lockout Indicator Control	II	-
26	0.5	D-BU/RD	7632	Integrated Trailer Brake Controller Switch 5 Volt Reference	II	-
27	0.5	BK/BN	7631	Integrated Trailer Brake Controller Switch Low Reference	II	-
28	0.35	BN/WH	781	Driver Door Lock Switch Unlock Signal	II	-
29	0.5	YE	7635	Integrated Trailer Brake Controller Manual Apply Signal	II	-
30	0.5	L-GN/GY	963	-	II	-
31	2.5	GY/BK	966	-	I	-
32	0.5	WH	6106	High Speed GMLAN Serial Data (-) (2)	II	-

cardiagn.com

Pin	Size	Color	Circuit	Function	Terminal Type ID	Option
33	0.5	VT/BN	300	Run Ignition 3 Voltage	I	-
34	0.5	YE/WH	962	-	II	-
35	2.5	YE/BN	967	-	I	-
36	0.35	WH/GY	5285	Adjustable Pedal Switch Rearward Signal	II	-
37	-	-	-	Not Occupied	-	-
38	0.5	WH/D-BU	964	-	II	-
39	1	D-BU/VT	1134	Park Brake Switch Signal	II	-
40	0.5	L-GN	5060	Low Speed GMLAN Serial Data	II	-
41	0.5	L-GN/BK	7633	Integrated Trailer Brake Controller User Gain Signal	II	-
42	0.35	L-GN/GY	5286	Adjustable Pedal Switch Forward Signal	II	-
43	0.35	L-GN/VT	1601	Steering Column Lock Signal	II	-
44	0.5	WH/D-BU	3691	Trailer Brake Apply Signal	II	-
45	0.35	L-GN/BN	5852	Rear Park Assist LED Disable Signal	II	-
46	0.5	VT/WH	1939	Run/Crank Ignition 1 Voltage	I	-
47	0.5	WH	6816	Indicator Dimming Control	II	-
48	2.5	RD/L-GN	968	-	I	-
49	0.5	YE/WH	816	Brake Transmission Shift Interlock Solenoid Control	II	-
50	2.5	BK	2550	Ground	I	-

X61A JUNCTION BLOCK- INSTRUMENT PANEL X2

cardiagn.com

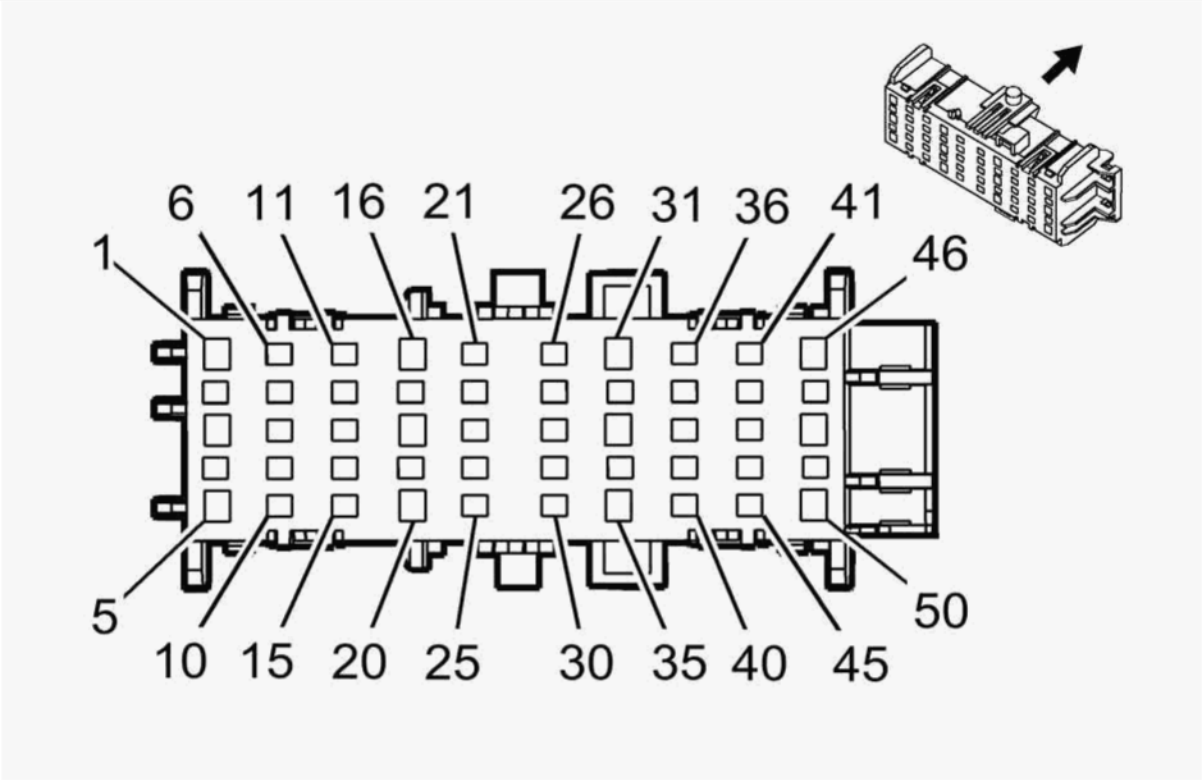

Connector Part Information

- Harness Type: Body
- OEM Connector: 33115109
- Service Connector: 19329464
- Description: 50-Way F 1.5, 2.8 OCS Series (GY)

Terminal Part Information

Terminal Type ID	Terminated Lead	Diagnostic Test Probe	Terminal Removal Tool	Service Terminal	Tray	Core Crimp	Insulation Crimp
I	13575543	J-35616-35 (VT)	J-38125-12A	1326030-8	13	B	F
II	19301761	J-35616-35 (VT)	J-38125-12A	Not Available	Not Available	Not Available	Not Available
II	19301761	J-35616-35 (VT)	J-38125-12A	Not Available	Not Available	Not Available	Not Available
II	19301761	J-35616-35 (VT)	J-38125-12A	Not Available	Not Available	Not Available	Not Available

cardiagn.com

Terminal Type ID	Terminated Lead	Diagnostic Test Probe	Terminal Removal Tool	Service Terminal	Tray	Core Crimp	Insulation Crimp
III	19301767	J-35616-2A (GY)	J-38125-560	Not Available	Not Available	Not Available	Not Available
III	19301767	J-35616-2A (GY)	J-38125-560	Not Available	Not Available	Not Available	Not Available
III	19301767	J-35616-2A (GY)	J-38125-560	Not Available	Not Available	Not Available	Not Available

Pin	Size	Color	Circuit	Function	Terminal Type ID	Option
1- 2	-	-	-	Not Occupied	-	-
3	4	RD/GY	1342	Battery Positive Voltage	I	-
4	0.35	D-BU	2307	Passenger Air Bag On Indicator Control	III	-
5	0.35 0.5	RD/L-GN RD/L-GN	3140 3140	Battery Positive Voltage	II	- -
6	0.5	WH	2501	High Speed GMLAN Serial Data (-) (1)	III	-
7	0.5	D-BU	2500	High Speed GMLAN Serial Data (+) (1)	III	-
8	0.35	WH/RD	6207	Memory Sensor High Reference	III	-
9	0.35	BK/YE	1691	Automatic Day/Night Mirror Low Reference	III	-
10	0.35	YE/WH	1690	Automatic Day/Night Mirror Signal	III	-
11	0.35	D-BU	5952	Adjustable Pedal Position Sensor Brake Signal	III	-
12	0.75 1.5	YE YE	5129 5129	Adjustable Pedal Actuator Rearward Control	III	- -
13- 14	-	-	-	Not Occupied	-	-
15	0.35	L-GN/WH	24	Backup Lamp Control	III	-
16	2.5	YE/BN	1569	Transfer Case Lock Solenoid Control	II	-
17	-	-	-	Not Occupied	-	-
18	4	BK	550	Ground	I	-
19	0.35	VT/WH	5234	Passenger Seat Belt Indicator Control	III	-
20	0.35	L-GN	6112	Power Lift Gate On/Off Switch Signal	II	-
21	0.75 1.5	L-GN/VT L-GN/VT	5130 5130	Adjustable Pedal Actuator Forward Control	III	- -
22	0.35	BK/GY	6206	Memory Sensor Low Reference	III	-
23	0.5	WH/BN	6815	Inadvertent Power Control	III	-

cardiagn.com

Pin	Size	Color	Circuit	Function	Terminal Type ID	Option
24	0.35	L-GN	2308	Passenger Air Bag Off Indicator Control	III	-
25	-	-	-	Not Occupied	-	-
26	0.35	D-BU/GY	7473	Incremental Encoder Impulse Signal	III	-
27	0.35	VT	7476	Incremental Encoder Sensor Low Reference	III	-
28	-	-	-	Not Occupied	-	-
29	0.5	GY	157	Interior Lamp Control	III	-
30	0.35	GY	156	Courtesy Lamp Switch Signal	III	-
31	4	YE/VT	1553	Transfer Case Motor Counter Clockwise Control	I	-
32	0.35	YE	7474	Incremental Encoder Direction Signal	III	-
33- 34	-	-	-	Not Occupied	-	-
35	2.5	RD/L-GN	242	Battery Positive Voltage	II	-
36	0.35	WH/L-GN	7475	Incremental Encoder Sensor 8 Volt Reference	III	-
37	0.5	YE/WH	1695	Four Wheel Drive Wheel Lock Indicator Control	III	-
38	0.35	VT/YE	5985	Accessory Wakeup Serial Data	III	-
39	-	-	-	Not Occupied	-	-
40	0.35	GY/BK	6113	Rear Lift Gate Open/Close Switch Signal	III	-
41- 42	-	-	-	Not Occupied	-	-
43	0.35	GY/WH	3153	Lane Departure Warning Disable Switch Signal	III	-
44	0.5	WH/D-BU	3691	Trailer Brake Apply Signal	III	-
45	-	-	-	Not Occupied	-	-
46	4	YE/GY	1552	Transfer Case Motor Clockwise Control	I	-
47	0.5	L-GN/GY	817	Vehicle Speed Signal	III	-
48	2.5	D-BU	47	Trailer Auxiliary Control	II	-
49	0.35	WH	3152	Lane Departure Warning Indicator Control	III	-
50	0.35	VT/YE	43	Accessory Ignition Voltage	II	-

X61A JUNCTION BLOCK- INSTRUMENT PANEL X3

cardiagn.com

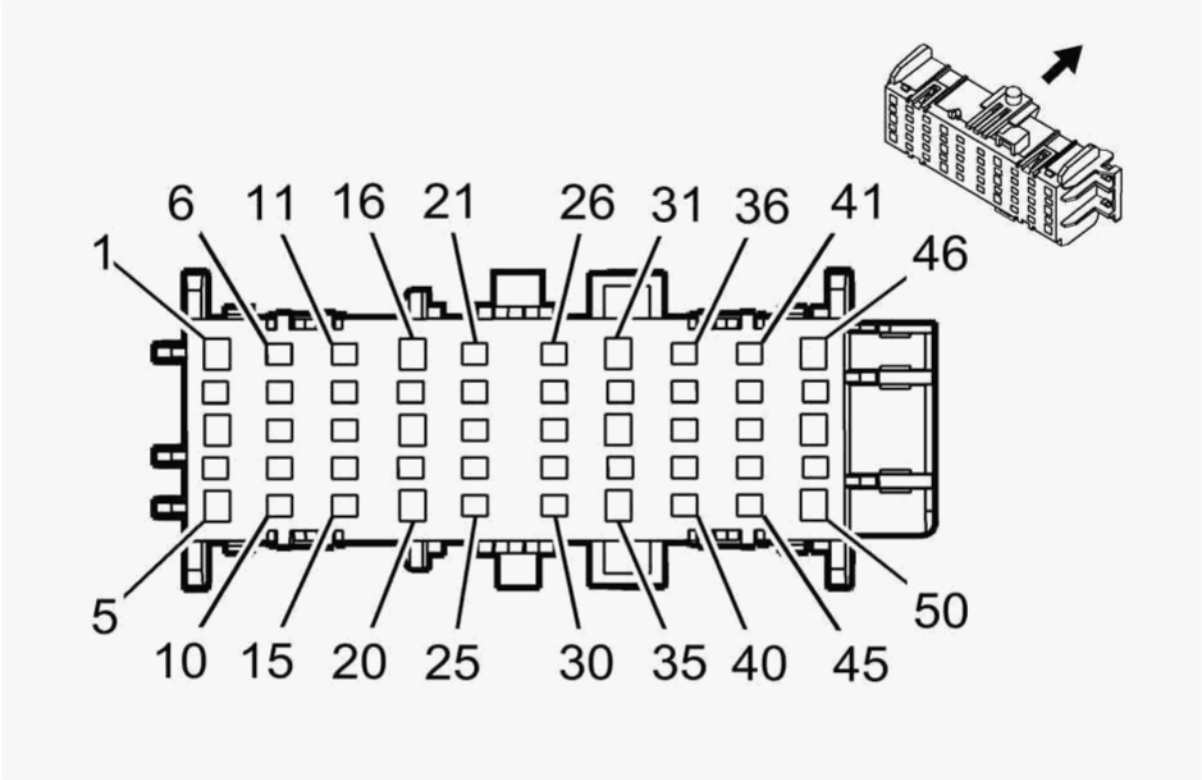

Connector Part Information

- Harness Type: Headliner
- OEM Connector: 33115112
- Service Connector: 19329467
- Description: 50-Way F 1.5, 2.8 OCS Series (BU)

Terminal Part Information

Terminal Type ID	Terminated Lead	Diagnostic Test Probe	Terminal Removal Tool	Service Terminal	Tray	Core Crimp	Insulation Crimp
I	13578891	J-35616-2A (GY)	J-38125-11A	Not Available	Not Available	Not Available	Not Available
II	19301761	J-35616-35 (VT)	J-38125-12A	Not Available	Not Available	Not Available	Not Available
II	19301761	J-35616-35 (VT)	J-38125-12A	Not Available	Not Available	Not Available	Not Available
III	19301767	J-35616-2A (GY)	J-38125-560	Not Available	Not Available	Not Available	Not Available

cardiagn.com

Pin	Size	Color	Circuit	Function	Terminal Type ID	Option
1- 2	-	-	-	Not Occupied	-	-
3	0.35 0.5	RD/L-GN RD/L-GN	3140 3140	Battery Positive Voltage	II	- -
4	0.35	D-BU	2307	Passenger Air Bag On Indicator Control	I	-
5- 7	-	-	-	Not Occupied	-	-
8	0.35	YE/WH	1690	Automatic Day/Night Mirror Signal	III	-
9	0.35	BK/YE	1691	Automatic Day/Night Mirror Low Reference	III	-
10- 12	-	-	-	Not Occupied	-	-
13	0.35 0.5	L-GN/RD L-GN/RD	24 24	Backup Lamp Control	III	- -
14- 16	-	-	-	Not Occupied	-	-
17	0.35	L-GN/BK	2515	Keypad Control	III	-
18	0.35	L-GN	6112	Power Lift Gate On/Off Switch Signal	II	-
19	0.35	VT/WH	5234	Passenger Seat Belt Indicator Control	I	-
20	-	-	-	Not Occupied	-	-
21	0.35	L-GN/D-BU	2514	Keypad Signal	III	-
22	0.35	YE/BN	2516	Keypad Green LED Control	III	-
23	-	-	-	Not Occupied	-	-
24	0.35	L-GN/RD	2308	Passenger Air Bag Off Indicator Control	I	-
25	0.5	WH/BN	6815	Inadvertent Power Control	III	-
26	-	-	-	Not Occupied	-	-
27	0.5	YE	6817	LED Backlight Dimming Control	III	-
28	0.35	GY/D-BU	156	Courtesy Lamp Switch Signal	I	-
29	0.5	GY	157	Interior Lamp Control	III	-
30- 35	-	-	-	Not Occupied	-	-
36	0.35	BN/WH	2517	Keypad Red LED Control	III	-
37	-	-	-	Not Occupied	-	-
38	0.35	GY/BK	6113	Rear Lift Gate Open/Close Switch Signal	I	-
39- 40	-	-	-	Not Occupied	-	-
41	0.35	GY/L-GN	328	Interior Lamp Defeat Switch Signal	I	-

cardiagn.com

Pin	Size	Color	Circuit	Function	Terminal Type ID	Option
42	0.35 0.35	VT/L-GN VT/L-GN	7558 7558	LED Ambient Lighting Control 2	III I	- -
43- 44	-	-	-	Not Occupied	-	-
45	0.35	GY/WH	3153	Lane Departure Warning Disable Switch Signal	III	-
46	2.5	BK	1050	Ground	II	-
47	0.35	L-GN	5060	Low Speed GMLAN Serial Data	III	-
48	-	-	-	Not Occupied	-	-
49	0.35	WH	3152	Lane Departure Warning Indicator Control	III	-
50	-	-	-	Not Occupied	-	-

X61A JUNCTION BLOCK- INSTRUMENT PANEL X4

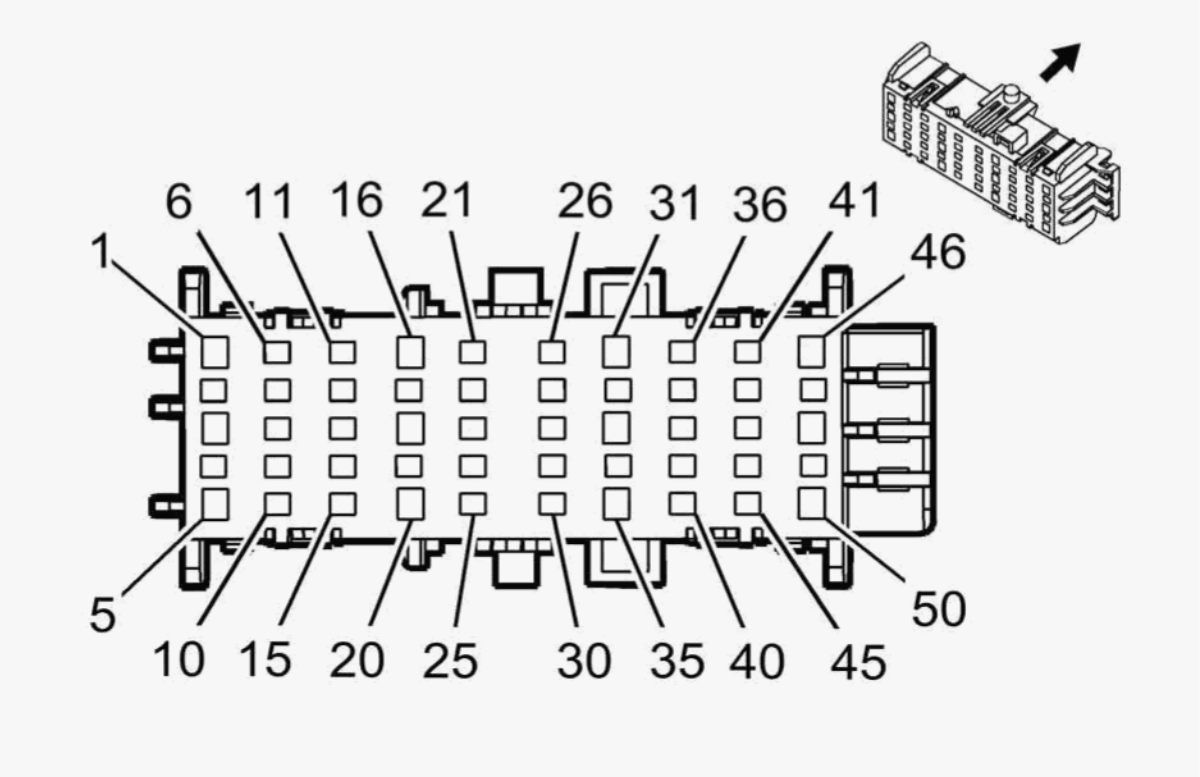

cardiagn.com

Connector Part Information

- Harness Type: Instrument Panel
- OEM Connector: 33115111
- Service Connector: 19329466
- Description: 50-Way F 1.5, 2.8 OCS Series (GN)

Terminal Part Information

Terminal Type ID	Terminated Lead	Diagnostic Test Probe	Terminal Removal Tool	Service Terminal	Tray	Core Crimp	Insulation Crimp
I	19301761	J-35616-35 (VT)	J-38125-12A	Not Available	Not Available	Not Available	Not Available
I	19301761	J-35616-35 (VT)	J-38125-12A	Not Available	Not Available	Not Available	Not Available
I	19301761	J-35616-35 (VT)	J-38125-12A	Not Available	Not Available	Not Available	Not Available
I	19301761	J-35616-35 (VT)	J-38125-12A	Not Available	Not Available	Not Available	Not Available
II	19301767	J-35616-2A (GY)	J-38125-560	Not Available	Not Available	Not Available	Not Available
II	19301767	J-35616-2A (GY)	J-38125-560	Not Available	Not Available	Not Available	Not Available

Pin	Size	Color	Circuit	Function	Terminal Type ID	Option
1	-	-	-	Not Occupied	-	-
2	0.35	YE/VT	2516	Keypad Green LED Control	II	-
3	0.35	BK/L-GN	552	Sensor Low Reference	I	-
4	0.5	WH	2501	High Speed GMLAN Serial Data (-) (1)	II	-
5	0.5	D-BU	2500	High Speed GMLAN Serial Data (+) (1)	I	-
6	0.5	YE	6817	LED Backlight Dimming Control	II	-
7	0.35	L-GN/WH	2514	Keypad Signal	II	-
8	0.35	GY/RD	598	5 Volt Reference	II	-
9	0.35	WH/L-GN	526	Stop Lamp Switch Signal	II	-
10	0.35	D-BU/YE	1693	Four Wheel Drive Switch Signal	II	-
11	0.35	GY/WH	3153	Lane Departure Warning Disable Switch Signal	II	-
12- 13	-	-	-	Not Occupied	-	-

cardiagn.com

Pin	Size	Color	Circuit	Function	Terminal Type ID	Option
14	0.35	BN	1560	Neutral Indicator Control	II	-
15	0.35	GY/RD	6029	Four Wheel Drive Mode Switch 5 Volt Reference	II	-
16	2.5	BK	1050	Ground	I	-
17- 18	-	-	-	Not Occupied	-	-
19	0.35	L-GN/BK	2515	Keypad Control	II	-
20	-	-	-	Not Occupied	-	-
21	0.5	VT/L-GN	7558	LED Ambient Lighting Control 2	II	-
22	0.35	BN/WH	2517	Keypad Red LED Control	II	-
23	0.35	BN/BK	1566	4 HI Indicator Control	II	-
24	0.35	VT/WH	1565	4 LO Indicator Control	II	-
25	0.35	VT/L-GN	1739	Run/Crank Ignition 1 Voltage	II	-
26	0.35	WH	3152	Lane Departure Warning Indicator Control	II	-
27	0.35	GY/L-GN	328	Interior Lamp Defeat Switch Signal	II	-
28- 29	-	-	-	Not Occupied	-	-
30	0.35	GY/L-GN	1561	AWD Indicator Control	II	-
31	1.5	RD/YE	2340	Battery Positive Voltage	I	-
32	0.5	BK/WH	1851	Signal Ground	II	-
33	0.35 0.75	BK/WH BK/WH	1851 1851	Signal Ground	I	- -
34	0.35	BK/WH	1851	Signal Ground	II	-
35	2.5	BK/WH	1851	Signal Ground	I	-
36	-	-	-	Not Occupied	-	-
37	0.35	BK/WH	1851	Signal Ground	II	-
38	0.5	BK/WH	1851	Signal Ground	II	-
39	0.35	BK/WH	1851	Signal Ground	II	-
40	0.35	L-GN/BK	1563	2 HI Indicator Control	II	-
41	0.35	BK/WH	1851	Signal Ground	II	-
42	0.35	BK/WH	1851	Signal Ground	II	-
43	0.35	BK/WH	1851	Signal Ground	II	-

cardiagn.com

Pin	Size	Color	Circuit	Function	Terminal Type ID	Option
44	0.35	BK	2550	Ground	II	-
45	0.35	BK	2550	Ground	II	-
46	0.75	BK	2550	Ground	I	-
47	0.35	BK	2550	Ground	II	-
48	0.5 0.75	BK BK	2550 2550	Ground	I	- -
49	0.35	BK	2550	Ground	II	-
50	0.75	BK	2550	Ground	I	-

X61A JUNCTION BLOCK- INSTRUMENT PANEL X5

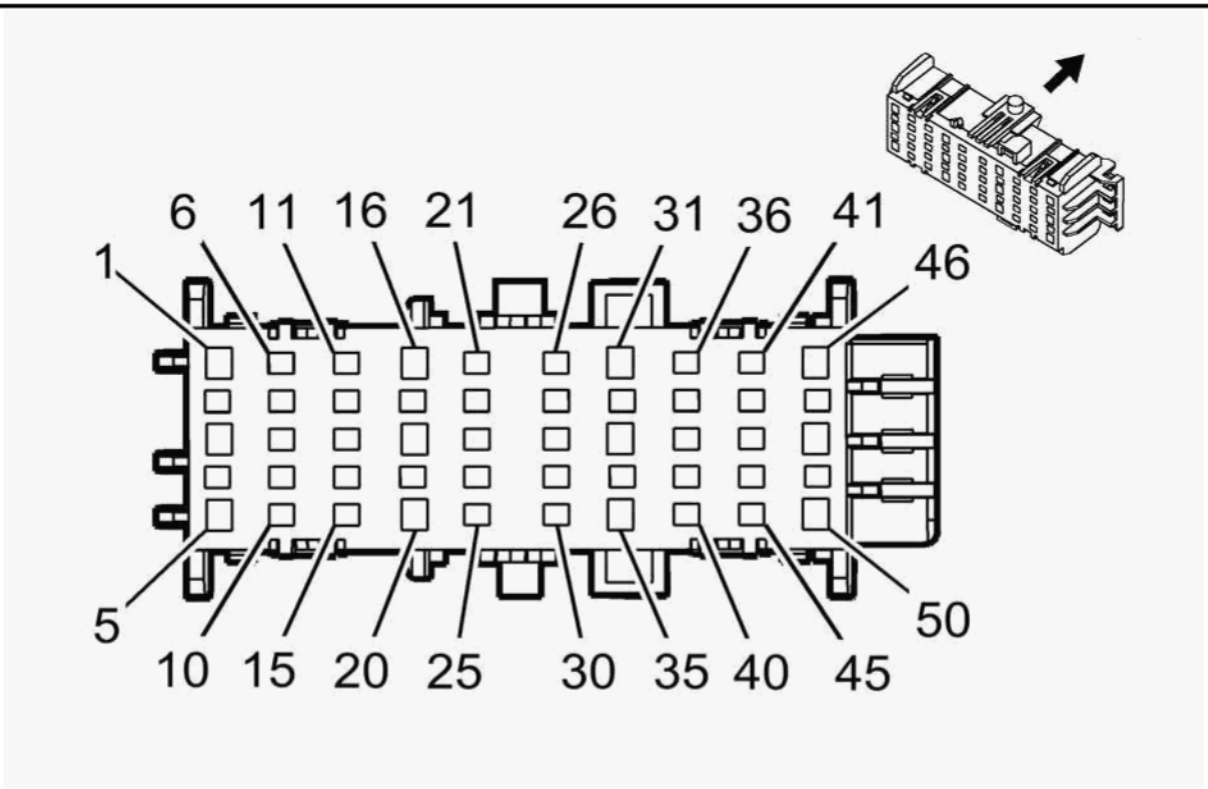

Connector Part Information

cardiagn.com

- Harness Type: Instrument Panel
- OEM Connector: 33115110
- Service Connector: 19329465
- Description: 50-Way F 1.5, 2.8 OCS Series (NA)

Terminal Part Information

Terminal Type ID	Terminated Lead	Diagnostic Test Probe	Terminal Removal Tool	Service Terminal	Tray	Core Crimp	Insulation Crimp
I	19301761	J-35616-35 (VT)	J-38125-12A	Not Available	Not Available	Not Available	Not Available
I	19301761	J-35616-35 (VT)	J-38125-12A	Not Available	Not Available	Not Available	Not Available
II	19301767	J-35616-2A (GY)	J-38125-560	Not Available	Not Available	Not Available	Not Available
II	19301767	J-35616-2A (GY)	J-38125-560	Not Available	Not Available	Not Available	Not Available

Pin	Size	Color	Circuit	Function	Terminal Type ID	Option
1	0.5	WH	6106	High Speed GMLAN Serial Data (-) (2)	I	-
2	0.5	D-BU/YE	6105	High Speed GMLAN Serial Data (+) (2)	II	-
3	0.5	D-BU/YE	6105	High Speed GMLAN Serial Data (+) (2)	I	-
4- 5	-	-	-	Not Occupied	-	-
6	0.35	GY	5697	Child Lockout Indicator Control	II	-
7	0.5	BN	7634	Integrated Trailer Brake Controller Redundant Manual Apply Signal	II	-
8	0.35	BN/YE	780	Driver Door Lock Switch Lock Signal	II	-
9	0.35	VT	185	Low Washer Fluid Indicator Control	II	-
10	0.5	RD/WH	961	-	II	-
11	0.5	L-GN/GY	963	-	II	-
12	0.5	YE	7635	Integrated Trailer Brake Controller Manual Apply Signal	II	-
13	0.35	BN/WH	781	Driver Door Lock Switch Unlock Signal	II	-
14	0.5	BK/BN	7631	Integrated Trailer Brake Controller Switch Low Reference	II	-

cardiagn.com

Pin	Size	Color	Circuit	Function	Terminal Type ID	Option
15	0.5	D-BU/RD	7632	Integrated Trailer Brake Controller Switch 5 Volt Reference	II	-
16	-	-	-	Not Occupied	-	-
17	0.5	YE/WH	962	-	II	-
18	0.5	VT/BN	300	Run Ignition 3 Voltage	I	-
19	0.5	WH	6106	High Speed GMLAN Serial Data (-) (2)	II	-
20- 21	-	-	-	Not Occupied	-	-
22	0.5	D-BU/VT	1134	Park Brake Switch Signal	II	-
23	0.5	WH/D-BU	964	-	II	-
24	-	-	-	Not Occupied	-	-
25	0.35	WH/GY	5285	Adjustable Pedal Switch Rearward Signal	II	-
26	0.35	L-GN/BN	5852	Rear Park Assist LED Disable Signal	II	-
27	0.5	WH/D-BU	3691	Trailer Brake Apply Signal	II	-
28	0.35	L-GN/VT	1601	Steering Column Lock Signal	II	-
29	0.35	L-GN/GY	5286	Adjustable Pedal Switch Forward Signal	II	-
30	0.5	L-GN/BK	7633	Integrated Trailer Brake Controller User Gain Signal	II	-
31	-	-	-	Not Occupied	-	-
32	0.5	YE/WH	816	Brake Transmission Shift Interlock Solenoid Control	II	-
33	-	-	-	Not Occupied	-	-
34	0.5	WH	6816	Indicator Dimming Control	II	-
35- 36	-	-	-	Not Occupied	-	-
37	0.35	WH	6816	Indicator Dimming Control	II	-
38	0.35	WH	6816	Indicator Dimming Control	II	-
39	0.5	WH	6816	Indicator Dimming Control	II	-
40- 44	-	-	-	Not Occupied	-	-
45	0.35	GY/L-GN	2555	Rear Park Assist Disable Signal	II	-
46- 50	-	-	-	Not Occupied	-	-

cardiagn.com

X61A JUNCTION BLOCK- INSTRUMENT PANEL X6

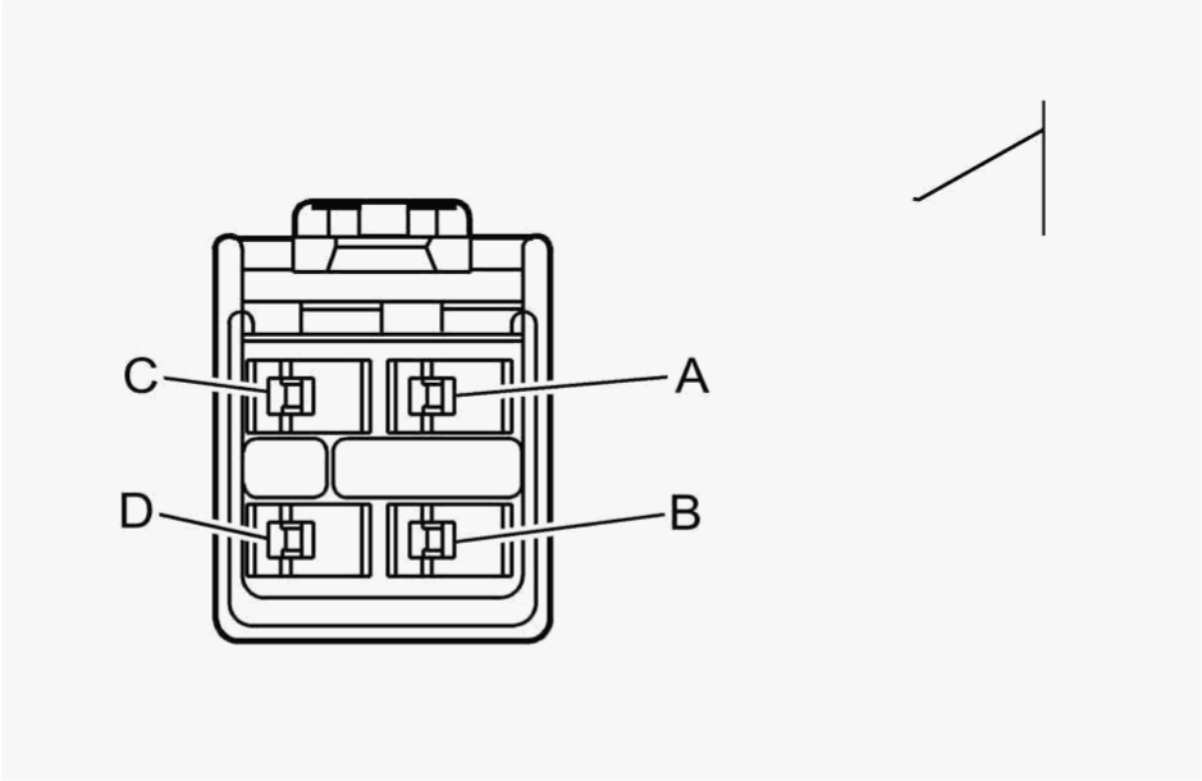

Connector Part Information

- Harness Type: Trailer Tow
- OEM Connector: 12194033
- Service Connector: Service by Harness- See Part Catalog
- Description: 4-Way F 280 Metri-Pack Series, Flexlock (CR)

Terminal Part Information

Terminal Type ID	Terminated Lead	Diagnostic Test Probe	Terminal Removal Tool	Service Terminal	Tray	Core Crimp	Insulation Crimp
I	Not Required	J-35616-4A (PU)	Not Required	Not Required	Not Required	Not Required	Not Required
I	Not Required	J-35616-4A (PU)	Not Required	Not Required	Not Required	Not Required	Not Required

cardiagn.com

Pin	Size	Color	Circuit	Function	Terminal Type ID	Option
A	0.5	BK	1050	Ground	I	-
B	0.5	WH/D-BU	3691	Trailer Brake Apply Signal	I	-
C	2.5	RD/L-GN	242	Battery Positive Voltage	I	-
D	2.5	D-BU	47	Trailer Auxiliary Control	I	-

X61A JUNCTION BLOCK- INSTRUMENT PANEL X7 (AYE/5W4/9C1/ACCESSORY WIFI)

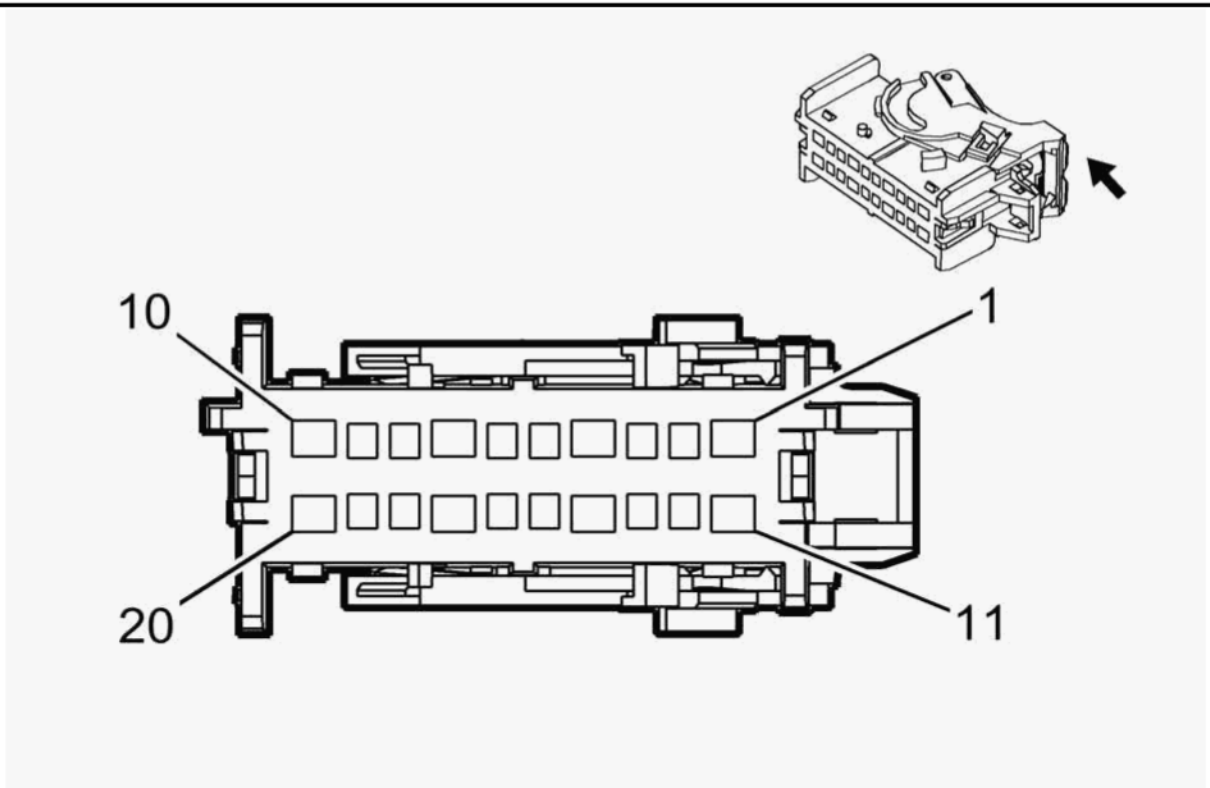

Connector Part Information

- Harness Type: Instrument Panel
- OEM Connector: 13597271
- Service Connector: 25801650
- Description: 20-Way F 1.5, 2.8 OCS Series (NA)

cardiagn.com

Terminal Part Information

Terminal Type ID	Terminated Lead	Diagnostic Test Probe	Terminal Removal Tool	Service Terminal	Tray	Core Crimp	Insulation Crimp
I	19301761	J-35616-35 (VT)	J-38125-12A	Not Available	Not Available	Not Available	Not Available
I	19301761	J-35616-35 (VT)	J-38125-12A	Not Available	Not Available	Not Available	Not Available
II	19301767	J-35616-2A (GY)	J-38125-560	Not Available	Not Available	Not Available	Not Available

Pin	Size	Color	Circuit	Function	Terminal Type ID	Option
1	2.5	RD/L-GN	968	-	I	-
2- 3	-	-	-	Not Occupied	-	-
4	2.5	YE/BN	967	-	I	-
5- 7	-	-	-	Not Occupied	-	-
8	0.5	VT/YE	43	Accessory Ignition Voltage	II	-
9	-	-	-	Not Occupied	-	-
10	0.5	BK	1050	Ground	I	-
11	0.5	VT/WH	1939	Run/Crank Ignition 1 Voltage	I	-
12- 13	-	-	-	Not Occupied	-	-
14	2.5	GY/BK	966	-	I	-
15- 18	-	-	-	Not Occupied	-	-
19	0.5	L-GN/GY	817	Vehicle Speed Signal	II	-
20	2.5	D-BU	965	-	I	-

X61A JUNCTION BLOCK- INSTRUMENT PANEL X8

cardiagn.com

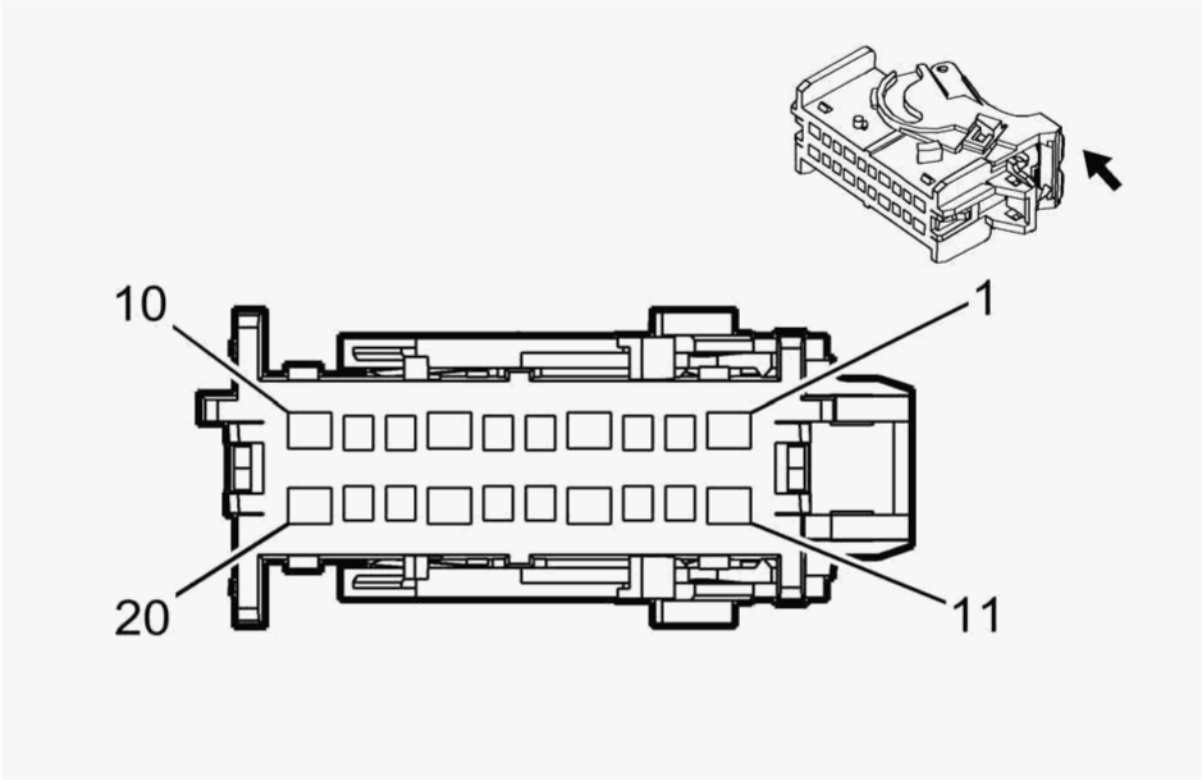

Connector Part Information

- Harness Type: Brake Clutch Jumper
- OEM Connector: 15547106
- Service Connector: Service by Harness- See Part Catalog
- Description: 20-Way F 1.5, 2.8 OCS Series (BK)

Terminal Part Information

Terminal Type ID	Terminated Lead	Diagnostic Test Probe	Terminal Removal Tool	Service Terminal	Tray	Core Crimp	Insulation Crimp
I	Not Required	J-35616-2A (GY)	Not Required	Not Required	Not Required	Not Required	Not Required
I	Not Required	J-35616-2A (GY)	Not Required	Not Required	Not Required	Not Required	Not Required
II	Not Required	J-35616-35 (VT)	Not Required	Not Required	Not Required	Not Required	Not Required

cardiagn.com

Pin	Size	Color	Circuit	Function	Terminal Type ID	Option
1- 7	-	-	-	Not Occupied	-	-
8	0.5	WH/L-GN	526	Stop Lamp Switch Signal	I	-
9	0.5	WH	2501	High Speed GMLAN Serial Data (-) (1)	I	-
10	0.5	D-BU	2500	High Speed GMLAN Serial Data (+) (1)	II	-
11	-	-	-	Not Occupied	-	-
12	0.5	WH	2501	High Speed GMLAN Serial Data (-) (1)	I	-
13	0.5	D-BU	2500	High Speed GMLAN Serial Data (+) (1)	I	-
14	0.5	WH/RD	6207	Memory Sensor High Reference	II	-
15	0.5	D-BU	5952	Adjustable Pedal Position Sensor Brake Signal	I	-
16	1.5	YE	5129	Adjustable Pedal Actuator Rearward Control	I	-
17	0.5	BK/GY	6206	Memory Sensor Low Reference	II	-
18	1.5	L-GN/VT	5130	Adjustable Pedal Actuator Forward Control	I	-
19	0.5	BK/L-GN	552	Sensor Low Reference	I	-
20	0.5	GY/RD	598	5 Volt Reference	II	-

X61A JUNCTION BLOCK- INSTRUMENT PANEL X9

cardiagn.com

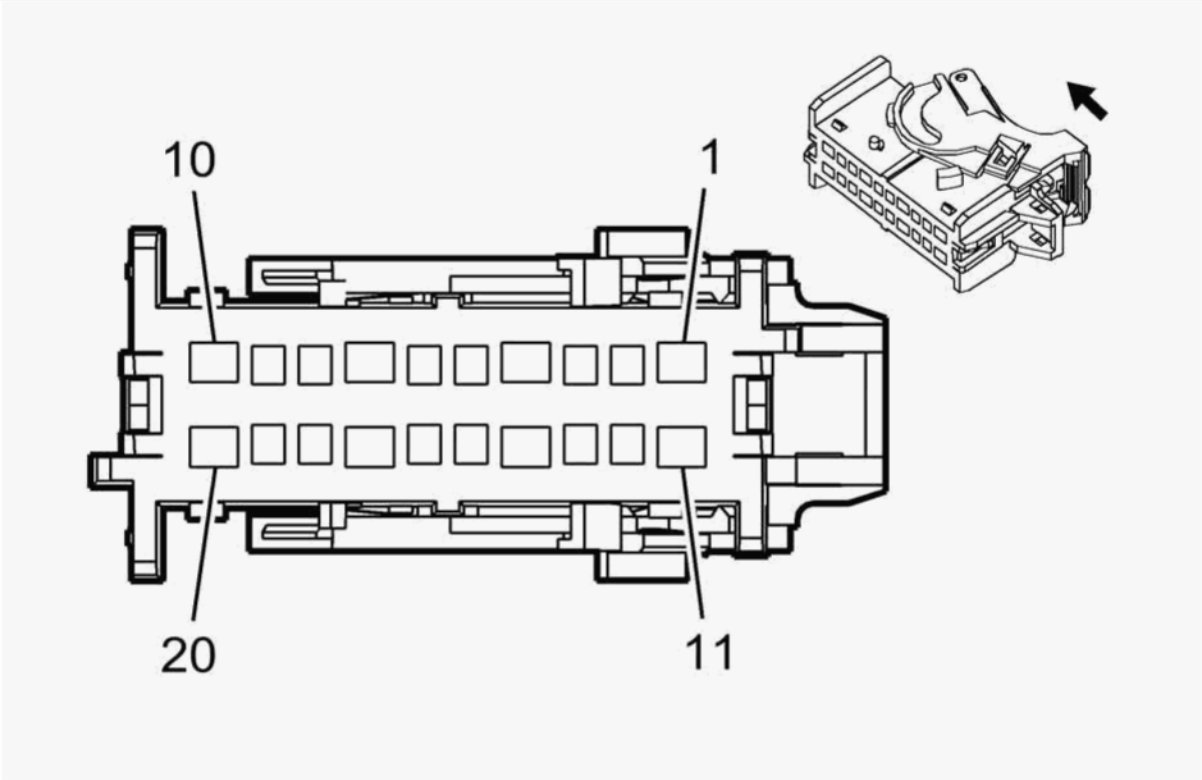

Connector Part Information

- Harness Type: Brake Clutch Jumper
- OEM Connector: 15547107
- Service Connector: Service by Harness- See Part Catalog
- Description: 20-Way F 1.5, 2.8 OCS Series (GY)

Terminal Part Information

Terminal Type ID	Terminated Lead	Diagnostic Test Probe	Terminal Removal Tool	Service Terminal	Tray	Core Crimp	Insulation Crimp
I	Not Required	J-35616-2A (GY)	Not Required	Not Required	Not Required	Not Required	Not Required
II	Not Required	J-35616-35 (VT)	Not Required	Not Required	Not Required	Not Required	Not Required
II	Not Required	J-35616-35 (VT)	Not Required	Not Required	Not Required	Not Required	Not Required
II	Not Required	J-35616-35 (VT)	Not Required	Not Required	Not Required	Not Required	Not Required

cardiagn.com

Terminal Type ID	Terminated Lead	Diagnostic Test Probe	Terminal Removal Tool	Service Terminal	Tray	Core Crimp	Insulation Crimp
II	Not Required	J-35616-35 (VT)	Not Required	Not Required	Not Required	Not Required	Not Required

Pin	Size	Color	Circuit	Function	Terminal Type ID	Option
1	2.5	YE/BN	1569	Transfer Case Lock Solenoid Control	II	-
2	0.35	D-BU/YE	1693	Four Wheel Drive Switch Signal	I	-
3	0.35	GY/RD	6029	Four Wheel Drive Mode Switch 5 Volt Reference	I	-
4	0.35	BN/BK	1566	4 HI Indicator Control	II	-
5	0.35	VT/WH	1565	4 LO Indicator Control	I	-
6	0.35	VT/L-GN	1739	Run/Crank Ignition 1 Voltage	I	-
7	0.35	VT/YE	5985	Accessory Wakeup Serial Data	II	-
8	0.35	L-GN/BK	1563	2 HI Indicator Control	I	-
9	0.35	GY/L-GN	1561	AWD Indicator Control	I	-
10	0.5	GY/BK	1570	Front Axle Actuator Control	II	-
11	3	RD/GY	1342	Battery Positive Voltage	II	-
12	0.35	BN	1560	Neutral Indicator Control	I	-
13	0.35	VT	7476	Incremental Encoder Sensor Low Reference	I	-
14	3	BK	550	Ground	II	-
15	0.35	D-BU/GY	7473	Incremental Encoder Impulse Signal	I	-
16	0.35	YE	7474	Incremental Encoder Direction Signal	I	-
17	4	YE/VT	1553	Transfer Case Motor Counter Clockwise Control	II	-
18	0.35	WH/L-GN	7475	Incremental Encoder Sensor 8 Volt Reference	I	-
19	0.5	YE/WH	1695	Four Wheel Drive Wheel Lock Indicator Control	I	-
20	4	YE/GY	1552	Transfer Case Motor Clockwise Control	II	-

cardiagn.com