Steering System

GENERAL

STEERING COLUMN & SHAFT
STEERING COLUMN／SHAFT

MECHANICAL POWER STEERING SYSTEM
POWER STEERING GEAR BOX
POWER STEERING HOSES
POWER STEERING OIL PUMP

GENERAL

GENERAL E62E77A9

Items			Specifications
Steering column/ shaft	Type		Tilt & Telescopic
Steering gear	Type		Rack & pinion
	Rack stroke		148 mm (5.83 in)
	Steering angle (Max.)	Inner	39.2°
		Outer	31.6°
Power steering pump	Type		Vane
	Diesel	Relief pressure	102 kgf/cm^2
		Discharge	8.5 cc/rev
	Gasoline	Relief pressure	97 kgf/cm^2
		Discharge	9.6 cc/rev

TIGHTENING TORQUE

Items	Nm	kgf.m	lb-ft
Hub nut	90 ~ 110	9.0 ~ 10.0	65 ~ 72
Steering wheel lock nut	40 ~ 50	4.0 ~ 5.0	29 ~ 36
Steering column mounting bolts and nut	13 ~ 18	1.3 ~ 1.8	9.4 ~ 13.0
Steering column dust cover mounting nuts	4 ~ 6	0.4 ~ 0.6	2.9 ~ 4.3
Bolt connecting steering column to universal joint	30 ~ 35	3.0 ~ 3.5	22 ~ 25
Bolt connecting universal joint to steering gear	30 ~ 35	3.0 ~ 3.5	22 ~ 25
Tie rod end castle nut	24 ~ 34	2.4 ~ 3.4	17 ~ 25
Front lower arm ball joint assembly bolts	100 ~ 120	10.0 ~ 12.0	72 ~ 87
Heat protector bolts	4 ~ 6	0.4 ~ 0.6	2.9 ~ 4.3
Steering gear box to sub-frame bolts	60 ~ 80	6.0 ~ 8.0	43 ~ 58
Power steering pump mounting bolts	17 ~ 26	1.7 ~ 2.6	12 ~ 19
Pressure tube to oil pump eye bolt	55 ~ 65	5.5 ~ 6.5	40 ~ 47
Pressure tube to valve body housing nut	12 ~ 18	1.2 ~ 1.8	9 ~ 13
Return tube to valve body housing nut	12 ~ 18	1.2 ~ 1.8	9 ~ 13
Front Stabilizer link to front strut assembly nut	100 ~ 120	10.0 ~ 12.0	72 ~ 87
Front roll stopper bolt and nut	50 ~ 65	5.0 ~ 6.5	40 ~ 47
Rear roll stopper bolt and nut	50 ~ 65	5.0 ~ 6.5	40 ~ 47
Sub-frame to body bolts	140 ~ 160	14.0 ~ 16.0	101 ~ 116
Sub-frame to body nuts	70 ~ 90	7.0 ~ 9.0	51 ~ 65
Sub-frame stay bolts	70 ~ 90	7.0 ~ 9.0	51 ~ 65

LUBRICANT E082FC29

Item	Recommended lubricant	Quantity
Steering column bearing	Multipurpose grease	As required
Rack and pinion gear	Multipurpose greas	As required
Bellows	Silicon grease	As required
Oil pump	PSF-3	As required

SPECIAL TOOLS E62CD38C

Tool (Number and Name)	Illustration	Use
09222-32100 Valve stem oil seal installer	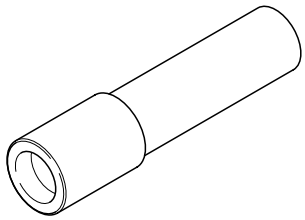 EPRF001B	Installation of the oil pump oil seal
09555-21000 Bar	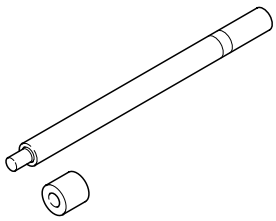 EPRF001D	Removal and installation of the oil seal (Use with 09573-33100, 09573-33000,09573-21000)
09561-11001 Steering wheel puller	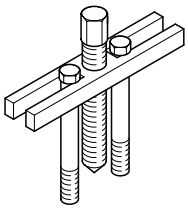 EPRF001E	Removal of steering wheel
09568-34000 Ball joint puller	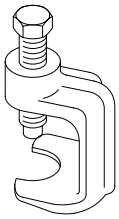 KPRE103I	Separation of the tie rod end bail joint

Tool (Number and Name)	Illustration	Use
09572-21000 Oil pressure gauge	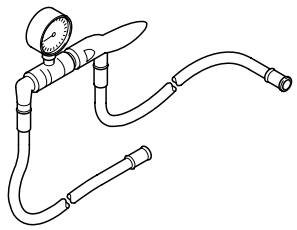 EPRF001F	Measurement of the oil pressure (Use with 09572-22100, 09572-21200)
09572-21200 Oil pressure gauge adapter	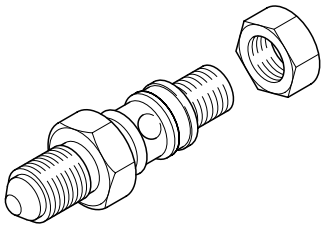 EPRF001G	Measurement of the oil pressure (Use with 09572-21000, 09572-22100)
09572-22100 Oil pressure gauge adapter	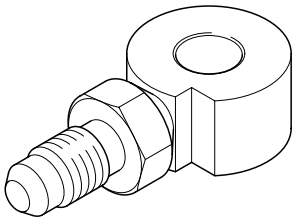 EPRF001H	Measurement of the oil pressure (Use with 09572-21000, 09572-21200)
09573-21100 Oil seal installer	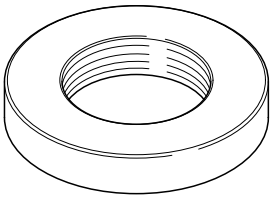 EPRF001I	Installation of the back up washer and oil seal (Use with 09753-21000,09573-33100, 09555-21000)
09573-33100 Oil seal guide	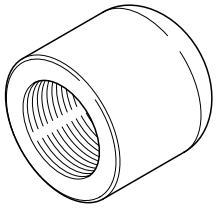 EPRF001K	Removal and installation of the oil seal (Use with 09573-21000, 09573-33000,09555-21000)

Tool (Number and Name)	Illustration	Use
09432-21600 Braring installer	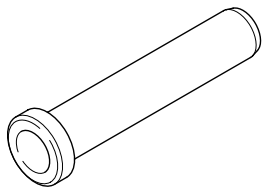 APJF001K	Installing the pinion gear bearing
09434-14200 Counter shaft bearing installer	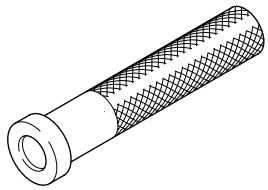 APJF001M	Installing the gear box oil seal
09565-11100 Preload socket	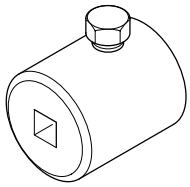 APJF001A	Measuring the pinion shaft preload

TROUBLESHOOTING E4FE78AA

Symptom	Probable cause	Remedy
Excessive play in steering	Loose yoke plug	Retighten
	Loose steering gear mounting bolts	Retighten
	Loose or worn tie rod end	Retighten or replace as necessary
Steering wheel operation is not smooth (Insufficient power assist)	V-belt slippage	Readjust
	Damaged V-belt	Replace
	Low fluid level	Replenish
	Air in the fluid	Bleed air
	Twisted or damaged hoses	Correct the routing or replace
	Insufficient oil pump pressure	Repair or replace the oil pump
	Sticky flow control valve	Replace
	Excessive internal oil pump leakage	Replace the damaged parts
	Excessive oil leaks from rack and pinion in gear box	Replace the damaged parts
	Distorted or damaged gear box or valve body seals	Replace
Steering wheel does not return properly	Excessive turning resistance of tierod end	Replace
	Yoke plug excessively tight	Adjust
	Tie rod and/or ball joint cannot turn smoothly	Replace
	Loose mounting of gear box mounting bracket Worn steering shaft joint and/or	Retighten
	Worn steering shaft joint and/or body grommet	Correct or replace
	Distorted rack	Replace
	Damaged pinion bearing	Replace
	Twisted or damaged hoses	Reposition or replace
	Damaged oil pressure control valve	Replace
	Damaged oil pump input shaft bearing	Replace
Noise	Hissing Noise in Steering Gear There is some noise with all power steering systems. One of the most common is a hissing sound when the steering wheel is turned and the car is not moving. This noise will be most evident when turning the wheel while the brakes are being applied. There is no relationship between this noise and steering performance. Do not replace the valve unless the "hissing" noise becomes extreme. A replaced valve will also make a slight noise, and is not always a solution for the condition.	

Symptom	Probable cause	Remedy
Rattling or chucking noise in the rack and pinion	Interference with hoses from vehicle body	Reposition
	Loose gear box bracket	Retighten
	Loose tie rod end and/or ball joint	Retighten
	Worn tie rod and/or ball joint	Replace
Noise in the oil pump	Low fluid level	Replenish
	Air in the fluid	Bleed air
	Loose pump mounting bolts	Retighten
	Loose yoke plug	Retighten

SERVICE ADJUSTMENT PROCEDURE E2570252

CHECKING STEERING WHEEL FREE PLAY

1. Start the engine and with the steering wheel in the straight ahead position.
2. Measure the play while turning the steering wheel to the left and right.

Standard value :
Steering wheel free play : 30 mm (1.2 in)

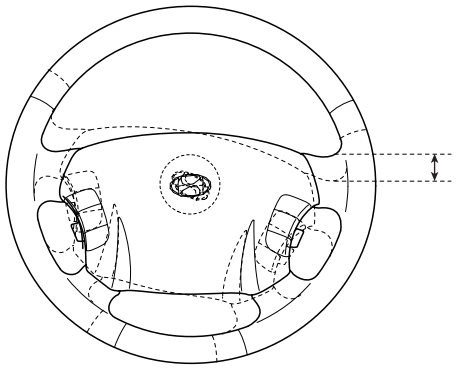

SCMST6513L

3. If the play exceeds the standard value, inspect the connection between the steering shaft and tie rod ends.

CHECKING STEERING ANGLE

1. Place the front wheel on a turning radius gauge and measure the steering angle.

STEERING ANGLE

Inner	39.2°
Outer	31.6°

2. If the measured value is not within the standard value, adjust the toe and inspect again.

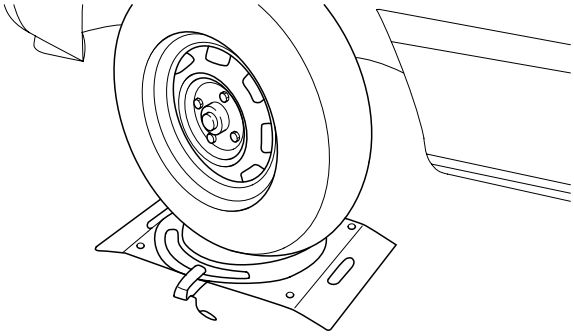

EPRF010A

CHECKING THE TIE ROD END BALL JOINT STARTING TORQUE

1. Disconnect the tie rod end from the knuckle with the special tool (09568-4A000).

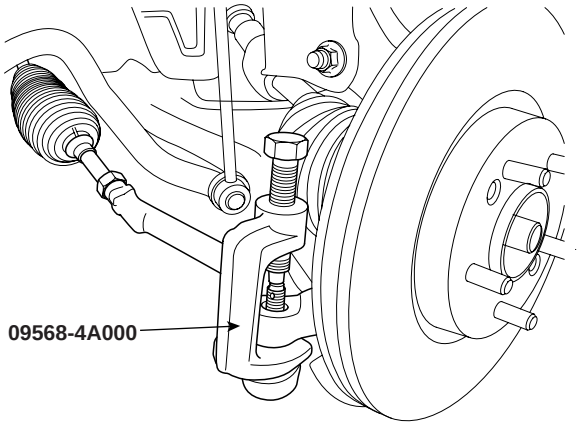

SCMST6534D

2. Shake the ball joint stud several times to check for looseness.

Tie rod end ball joint starting torque : 2.96 Nm (30 kg.cm, 2.18 lb-ft) or less

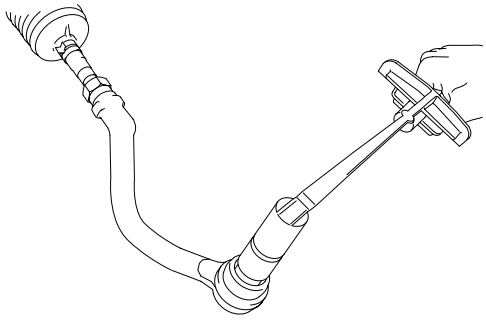

KPBF010F

3. If the starting torque exceeds the upper limit of the standard value, replace the tie rod end.

4. Even if the starting torque is below the lower limit of the standard value, check the play of the ball joint and replace if necessary.

CHECKING STEERING WHEEL RETURN

1. The force required to turn the steering wheel and the wheel return should be the same for both moderate and sharp turns.

2. When the steering wheel is turned 90˚ and held for a couple of seconds while the vehicle is being driven at 20-30 kph (12-19 mph), the steering wheel should return at least 20˚ from its central position when it is released.

NOTE

If the steering wheel is turned very quickly, steering may be momentarily difficult. This is not a malfunction because the oil pump output will be somewhat decreased.

SCMST6514L

CHECKING POWER STEERING FLUID LEVEL

1. Position the vehicle on a level surface.
2. Start the engine. With the vehicle kept stationary, turn the steering wheel several times continuously to raise the fluid temperature to 50-60°C (122-140°F).
3. With the engine at idle, turn the steering wheel fully clockwise and counter-clockwise several times.
4. Make sure that there is no foaming or cloudiness in the reservoir fluid.
5. Stop the engine and check for any difference in fluid level between a stationary and a running engine.

NOTE

1. *If the fluid level varies 5 mm (0.2 in) or more, bleed the system again.*
2. *If the fluid level suddenly rises after stopping the engine, further bleeding is required.*
3. *Incomplete bleeding will produce a chattering sound in the pump and noise in the flow control valve, and lead to decreased durability of the pump.*

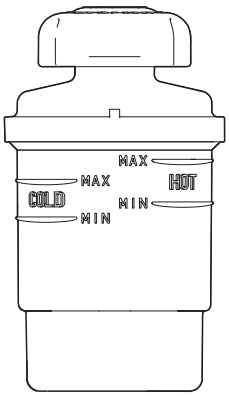

SCMST6540D

REPLACING POWER STEERING FLUID

1. Jack up the front wheels and support them with jack-stands.
2. Disconnect the return hose from the oil reservoir and plug the oil reservoir.
3. Connect a vinyl hose to the disconnected return hose, and drain the oil into a container.
4. Remove the fuel pump fuse, then start the engine and wait for the engine to stall. Next, while operating the starting motor intermittently, turn the steering wheel all the way to the left and then to the right several times to drain the fluid.
5. Connect the return hoses, then fill the oil reservoir with the specified fluid.
6. Reinstall the fuel pump fuse.
7. Start the engine. Check for oil leakage.
8. Stop the engine.
9. Bleed the system.

Power steering fluid type : PSF-3
Total quantity : Approx 1.0 liter

AIR BLEEDING

1. Remove the fuel pump fuse, then start the engine and wait for the engine to stall. Next, while operating the starting motor intermittently (for 15 ~ 20 seconds), turn the steering wheel all the way to the left and then to the right five or six times.

NOTE

1. During air bleeding, replenish the fluid supply so that the level never falls below the lower position of the filter.
2. If air bleeding is done while the vehicle is idling, the air will be broken up and absorbed into the fluid. Be sure to do the bleeding only while cranking.
3. Reinstall the fuel pump fuse, and start the engine(idling).
4. Turn the steering wheel to the left and the right until there are no air bubbles in the oil reservoir.

CAUTION

Do not hold the steering wheel turned all the way to either side for more than ten seconds.

5. Confirm that the fluid is not milky, and that the level is up to the position specified on the level gauge.
6. Confirm that there is little change in the surface of the fluid when the steering wheel is turned left and right.

CAUTION

1. If the surface of the fluid changes considerably, air bleeding should be done again.
2. If the fluid level rises suddenly when the engine is stopped, it indicates that there is still air in the system.
3. If there is air in the system, a jingling noise may be heard from the pump and the control valve may also produce unusual noises. Air in the system will shorten the life of the pump and other parts.

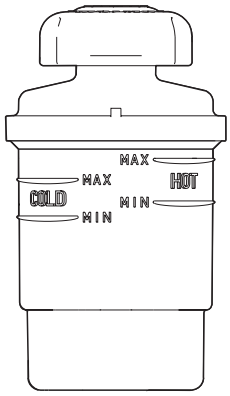

SCMST6540D

OIL PUMP PRESSURE TEST (OIL PUMP RELIEF PRESSURE)

1. Disconnect the pressure hose from the oil pump. Connect the special tool between the oil pump and pressure hose as illustrated.

2. Bleed the air, and then start the engine and turn the steering wheel several times so that the fluid temperature rises to approximately 50°C (122°F).

3. Set the engine speed to 1,000 rpm.

4. Close the shut-off valve of the special tool and measure the fluid pressure to confirm that it is within the range.

standard vaule :
Relief pressure: 102 kgf/cm^2

CAUTION

Don' t keep the shut-off valve on the pressure gauge closed for longer than seconds.

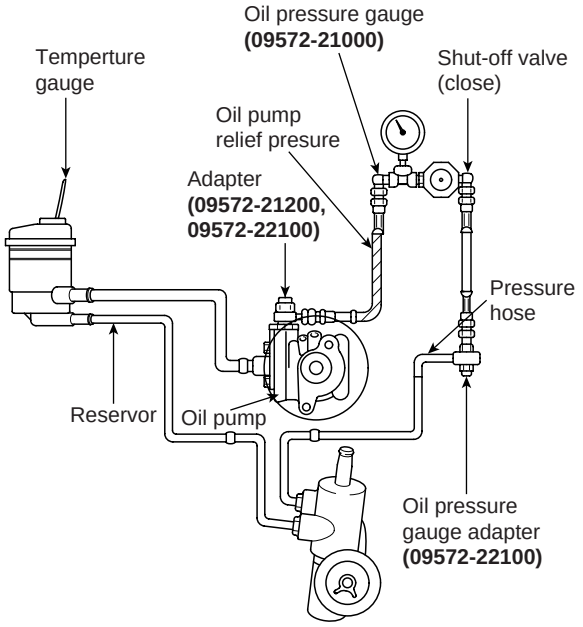

EPRF002B

5. Remove the special tools, and tighten the pressure hose to the specified torque.

Tightening Torque Nm(kgf·m, lb-ft) :
55 ~ 65(5.5 ~ 6.5, 40 ~ 47)

6. Bleed the system.

STEERING COLUMN & SHAFT

STEERING COLUMN／SHAFT

COMPONENTS E78E9120

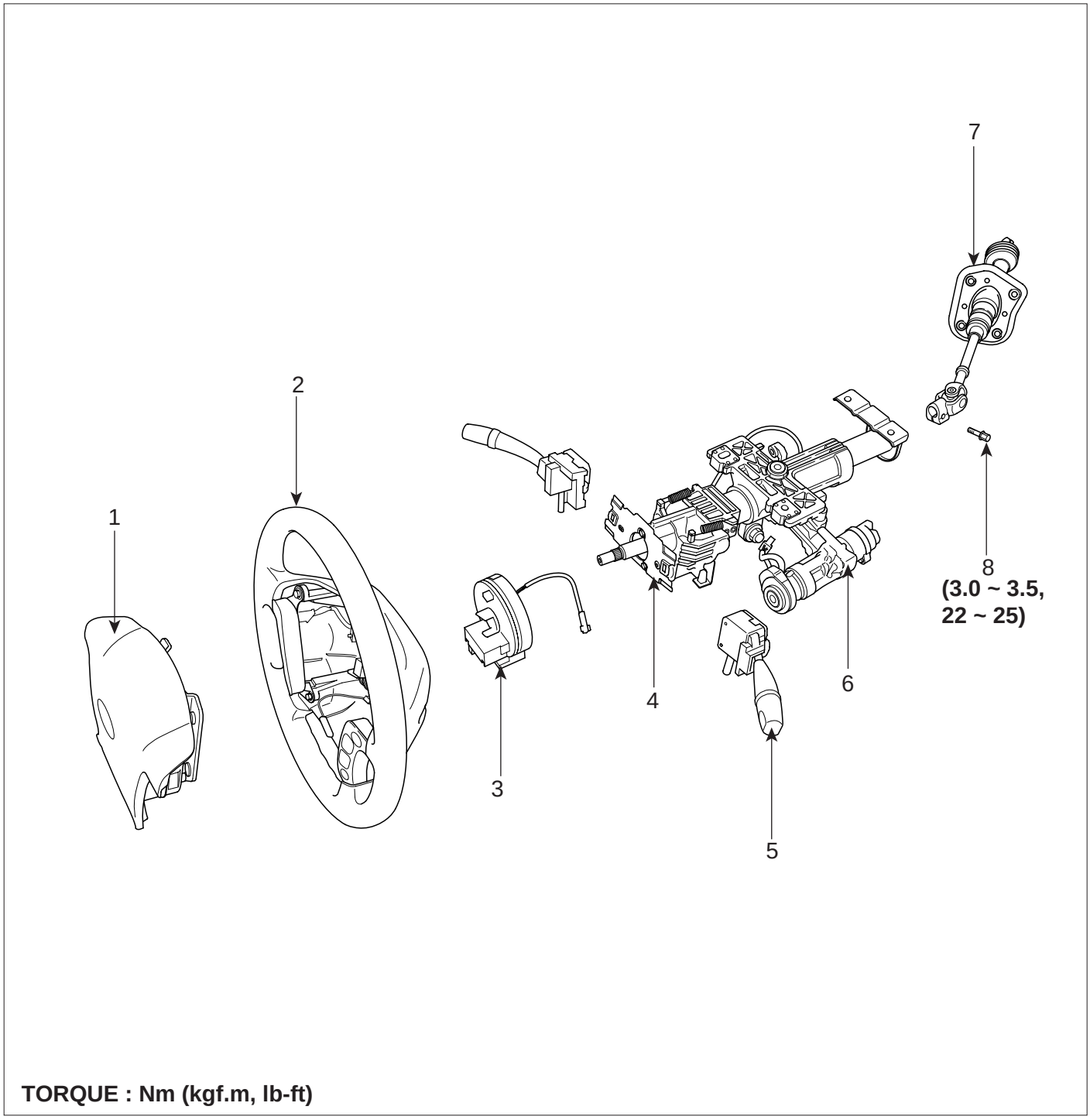

1. Air bag module
2. Steering wheel
3. Clock spring
4. Steering column assembly
5. Multifunction switch
6. Key lock assembly
7. Universal joint assembly
8. Bolt

REMOVAL EFC9B4A9

1. Disconnect the negative terminal from the battery (A) and then wait for 30 seconds.

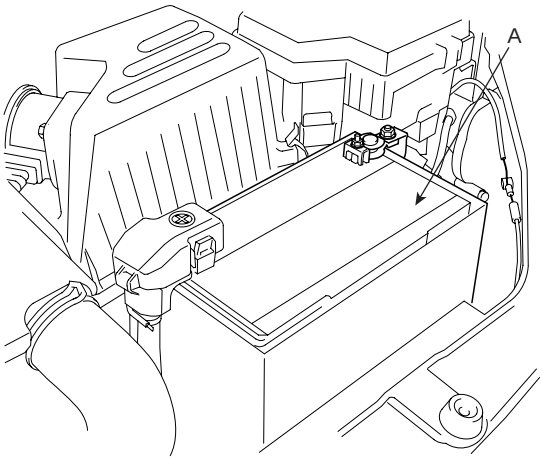

SCMST6501L

2. Loosen the bolts in the illustration.

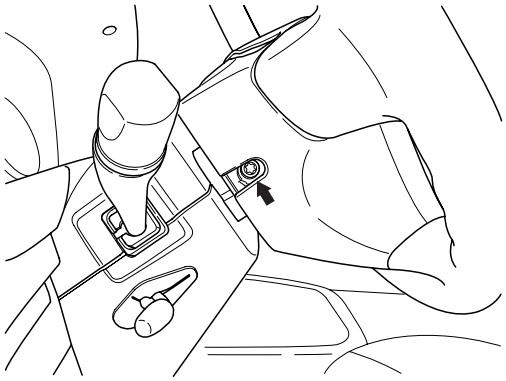

SCMST6501D

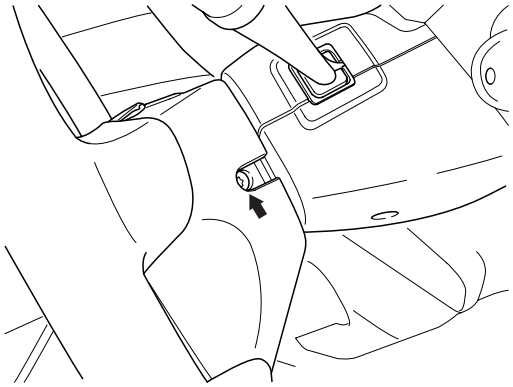

SCMST6502D

3. Disconnect the connectors (A, B) and remove the airbag module.

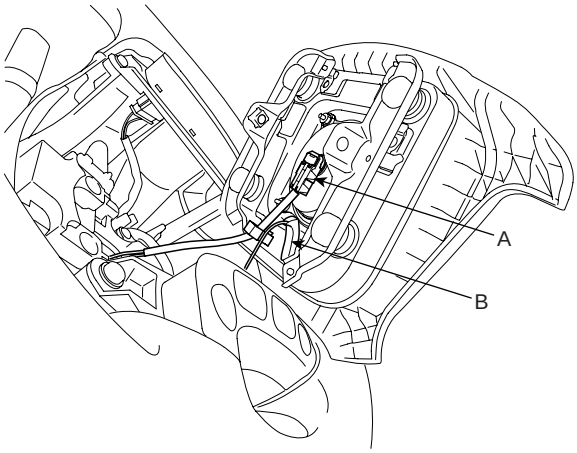

SCMST6503D

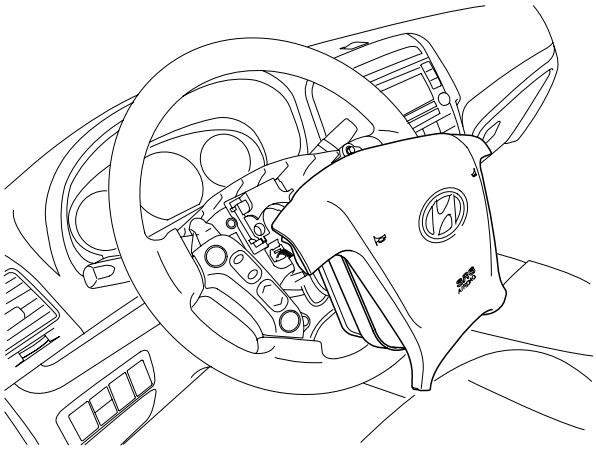

SCMST6504D

4. Disconnect the connector (A) and remove the dynamic damper (B).

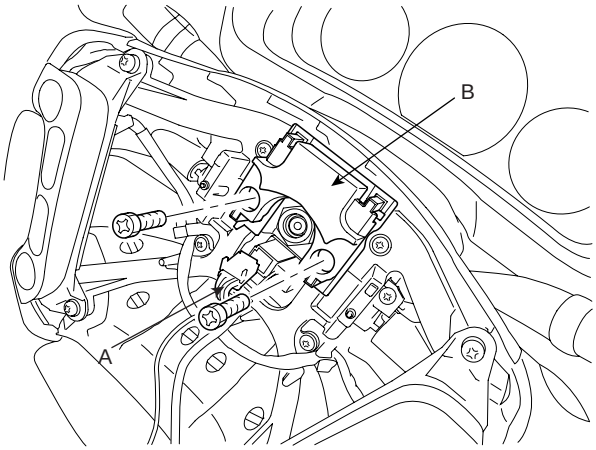

SCMST6505D

5. Remove the steering wheel lock nut.

Tightening torque Nm (kgf.m, lb-ft):
40 ~ 50 (4.0 ~ 5.0, 29 ~ 36)

6. After making the marks on the steering wheel and shaft for reinstallation, remove the steering wheel using a SST (09561-11001).

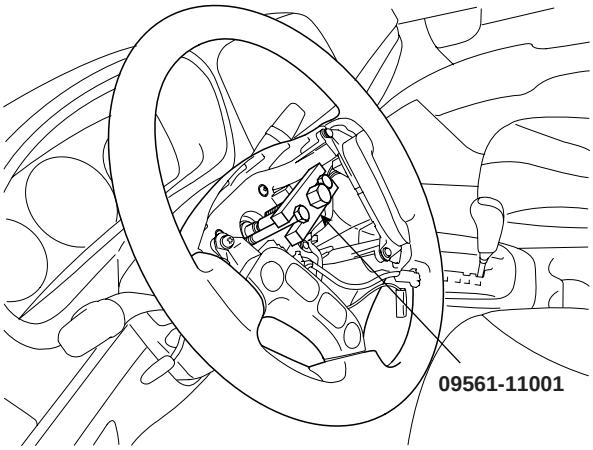

SCMST6506D

CAUTION

Do not hammer on the steering wheel to remove it; it may damage the steering column.

7. Remove the hood latch release handle (A) and the cowl side trim (B).

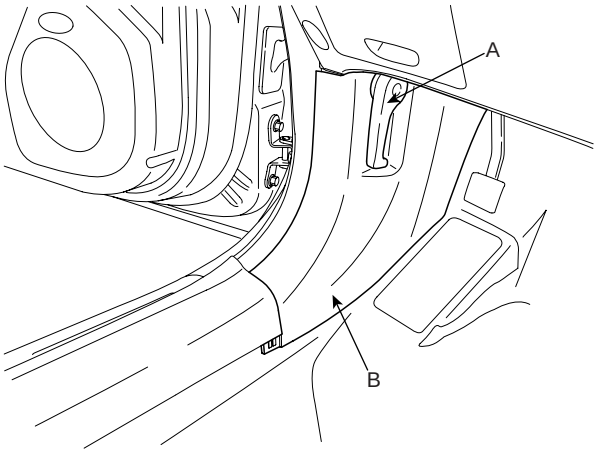

SCMST6508D

8. Loosen the lower crash pad panel mounting screws.

[LHD]

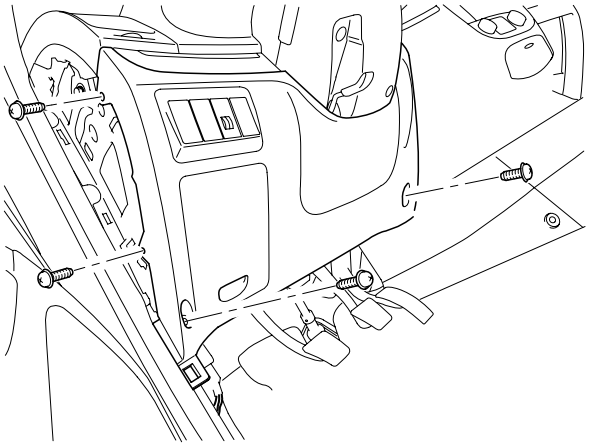

SCMST6509D

[RHD]

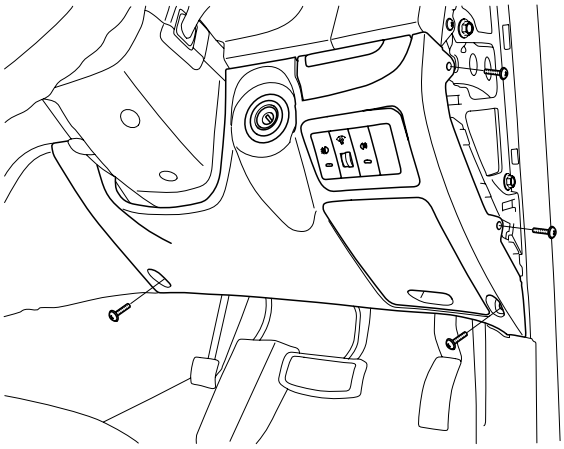

SCMST6001L

9. Disconnect the connectors from the lower crash pad and then remove the lower crash pad.

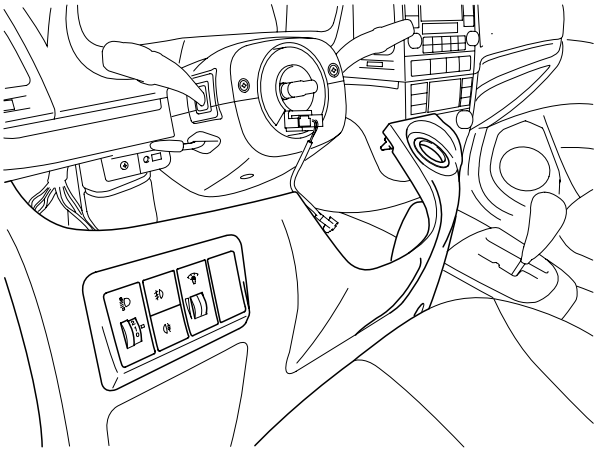

SCMST6510D

10. Remove the reinforcing panel (A).

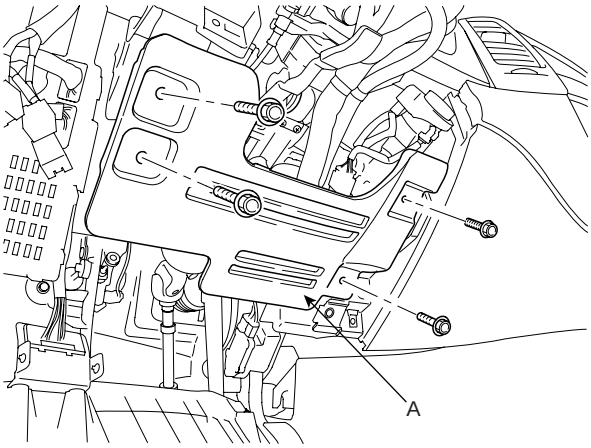

SCMST6511D

11. Loosen the screws, and then remove the steering column upper (A) and lower shrouds (B).

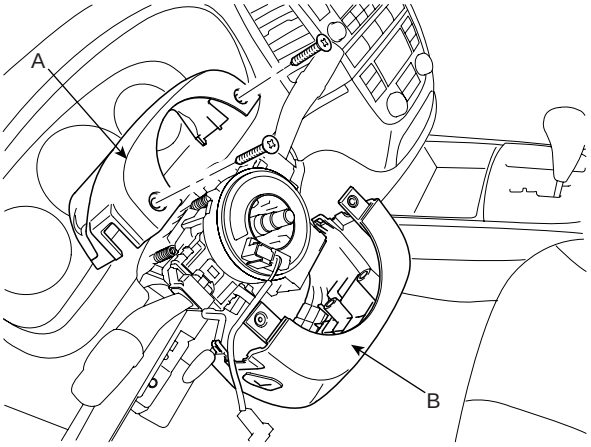

SCMST6512D

12. Disconnect the connectors from the clock spring and then remove the clock spring (A) from the steering column.

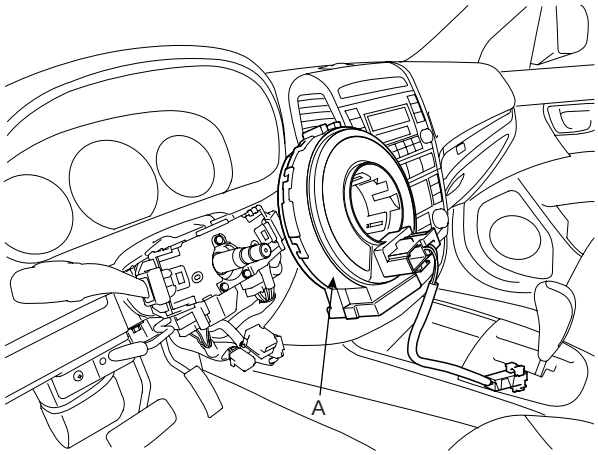

SCMST6513D

13. Remove the multifunction switch by pressing the marked portions in the illustration.

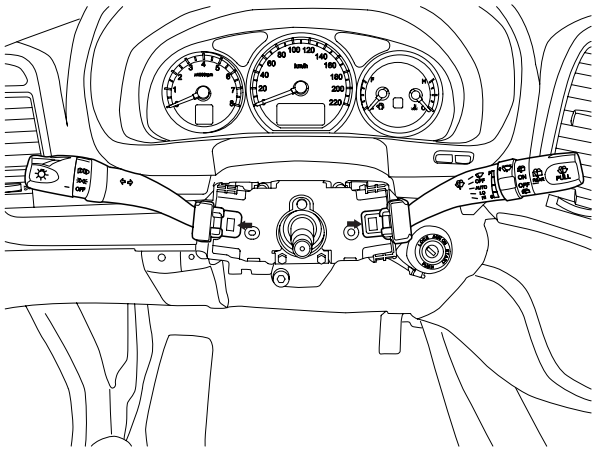

SCMST6514D

14. Loosen the bolt (A) and then disconnect the universal joint assembly from the steering gear pinion shaft.

Tightening torque Nm (kgf.m, lb-ft): 30 ~ 35 (3.0 ~ 3.5, 22 ~ 25)

[LHD]

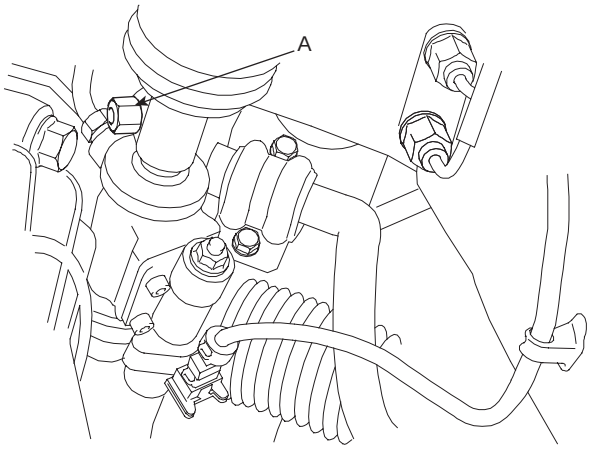

SCMST6025D

[RHD]

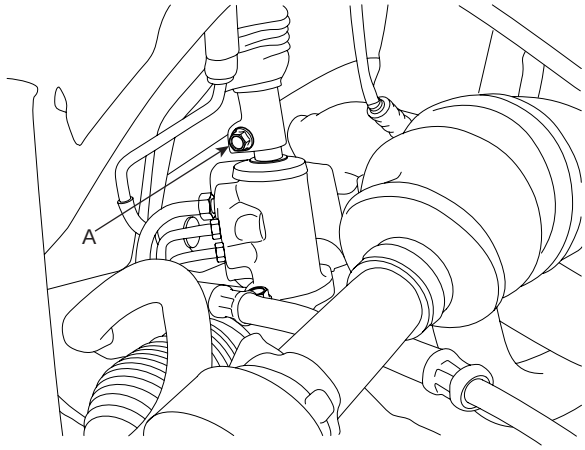

SCMST6002L

15. Loosen the dust cover mounting nuts.

Tightening torque Nm (kgf.m, lb-ft):
4 ~ 6 (0.4 ~ 0.6, 2.9 ~ 4.3)

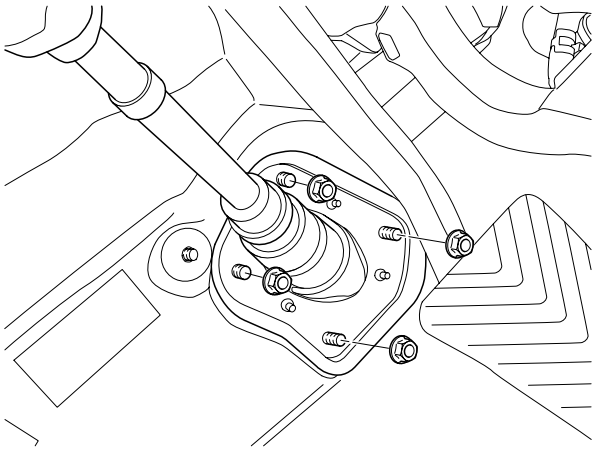

SCMST6516D

16. Disconnect the connector (A).

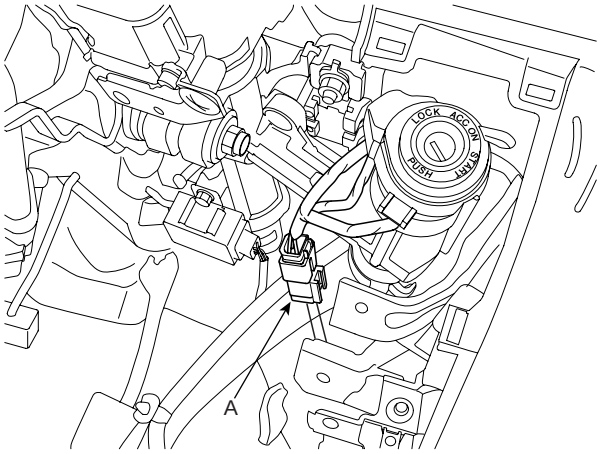

SCMST6517D

17. Disconnect the ignition switch connector (A) and then remove the steering column assembly by loosening the steering column mounting bolts and nuts.

Tightening torque Nm (kgf.m, lb-ft):
13 ~ 18 (1.3 ~ 1.8, 9.4 ~ 13.0)

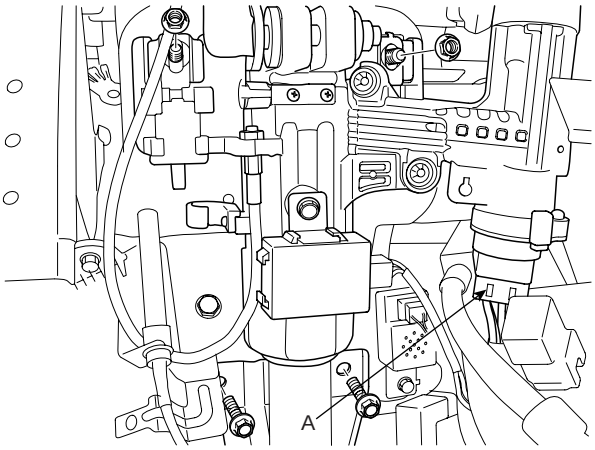

SCMST6518D

DISASSEMBLY EB23AA9D

KEY LOCK ASSEMBLY

1. Make a groove on head of the special bolt (A) by using a punch.

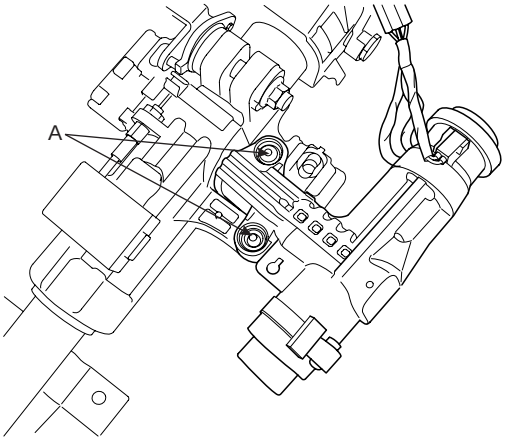

SCMST6519D

2. Remove the key lock assembly from the steering column by loosing special bolts.

3. When reassembling the key lock assembly, loosely install new special bolts to the steering column shaft.

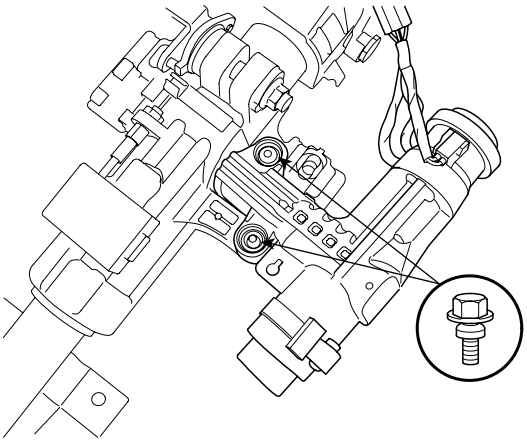

SCMST6535D

4. Tighten the special bolt until its head is cut off.

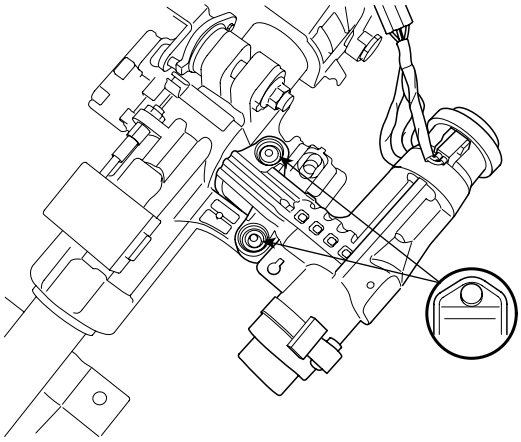

SCMST6536D

UNIVERSAL JOINT ASSEMBLY

1. Remove the universal joint assembly from the steering column assembly by loosening the bolt (A).

Tightening torque Nm (kfg.m, lb-ft):
30 ~ 35 (3.0 ~ 3.5, 22 ~ 25)

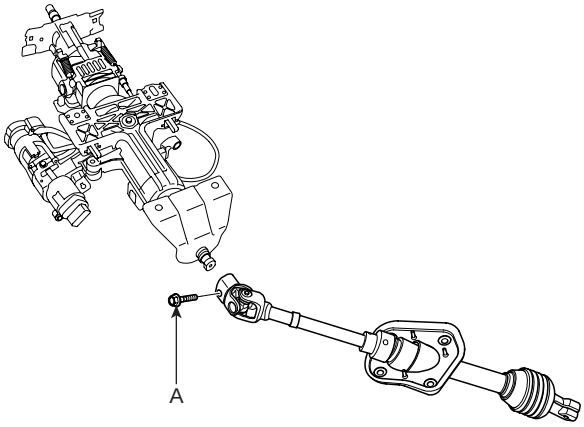

SCMST6520D

2. Reassembly is the reverse of disassembly.

INSPECTION E5B5514D

1. Check the steering column shaft for damage and deformation.
2. Check connection for play, damage and smooth operation.
3. Check the joint bearing for wear and damage.

INSTALLATION ED6CC43A

NOTE

Before installing, apply multipurpose grease to each moving parts.

1. Installation is the reverse of removal.

CAUTION

Align the marks on the steering wheel and shaft for reinstallation when installing the steering wheel.

MECHANICAL POWER STEERING SYSTEM

COMPONENTS EC107BCA

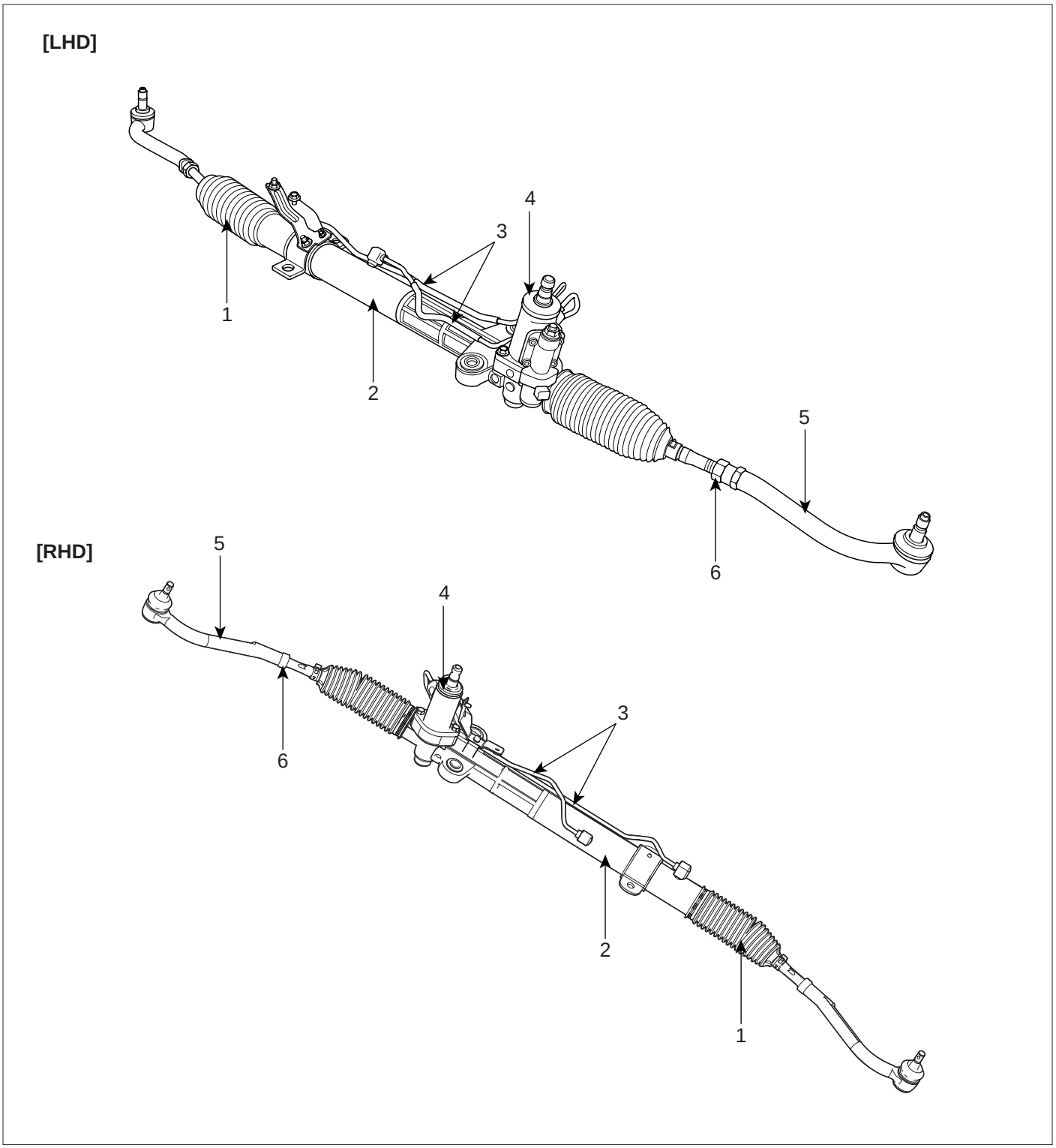

1. Bellows
2. Rack housing
3. Feed tube
4. Valve body assembly
5. Tie rod end assembly
6. Lock nut

SCMST6502L

POWER STEERING GEAR BOX

COMPONENT E95EE087

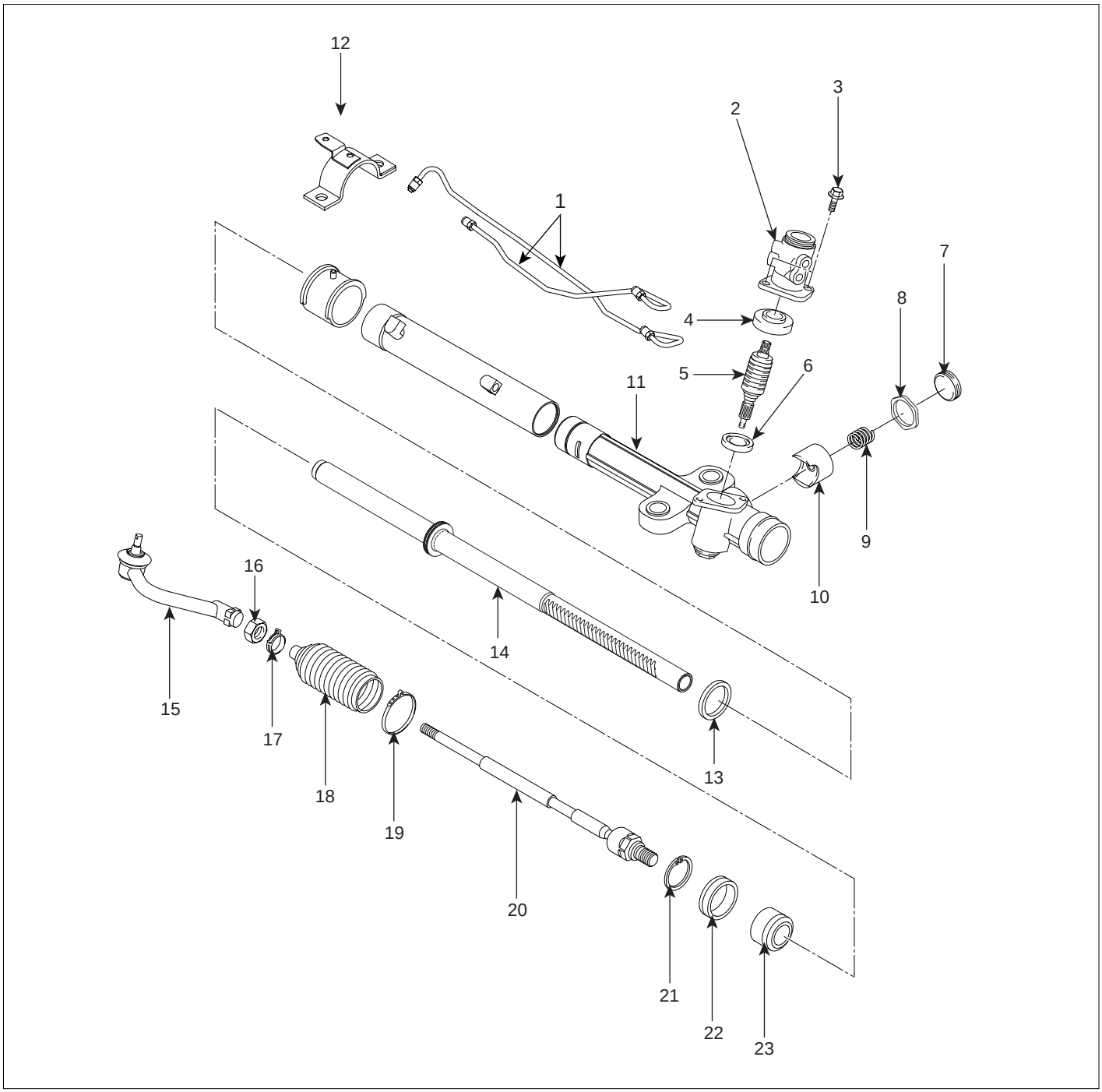

1. Feed tube
2. Valve body housing
3. Bolt
4. Oil seal
5. Pinion valve assembly
6. Oil seal
7. Yoke plug
8. Lock nut
9. Rack support spring
10. Rack support yoke
11. Rack housing
12. Power steering gear box mounting clamp
13. Oil seal
14. Rack
15. Tie rod end
16. Lock nut
17. Bellows clip
18. Bellows
19. Bellows band
20. Tie rod
21. Circlip
22. Oil seal
23. Rack stopper

SCMST6510L

REMOVAL E0BCF615

1. Remove the both front wheels.

Tightening torque Nm (kgf.m, lb-ft):
110 ~ 140 (11.0 ~ 14.0, 80 ~ 101)

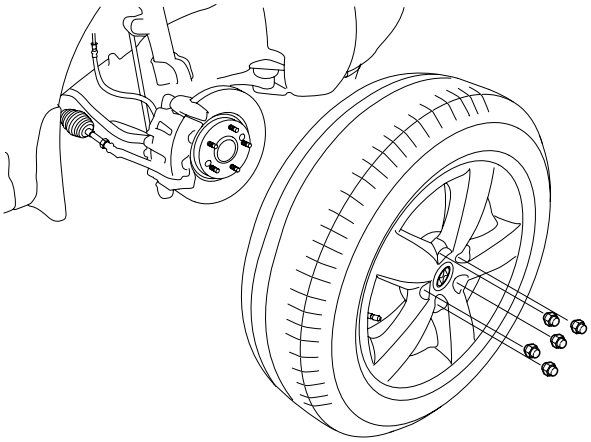

SCMST6003D

2. Drain the power steering fluid by disconnecting the return hose (A).

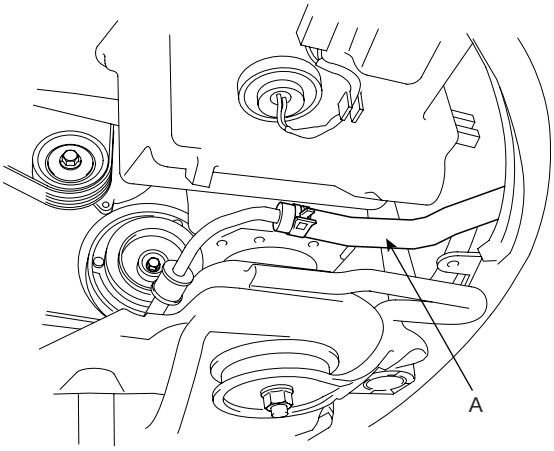

SCMST6521D

3. Disconnect the pressure tube (A) from the power steering pump by loosening the eye bolt.

Tightening torque Nm (kgf.m, lb-ft):
55 ~ 65 (5.5 ~ 6.5, 40 ~ 47)

[DIESEL]

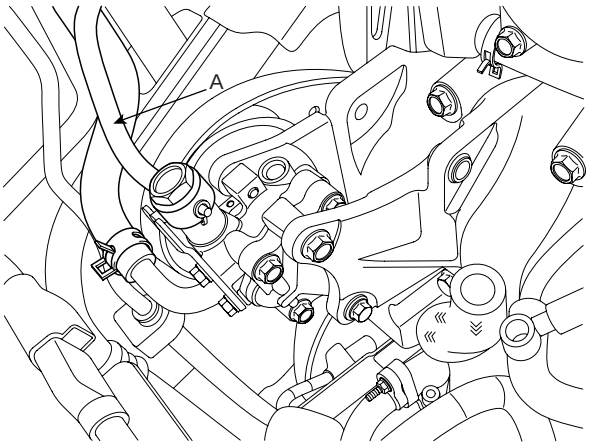

SCMST6800D

[GASOLINE]

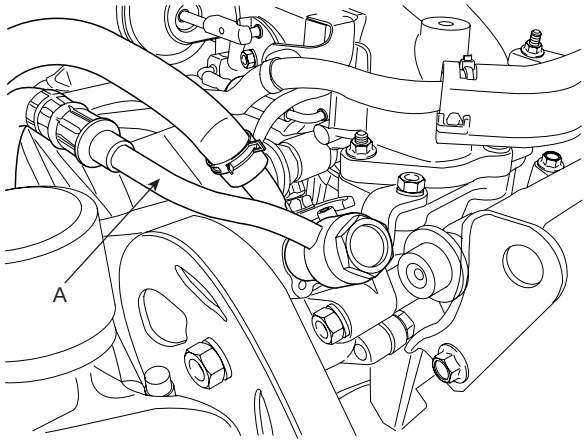

SCMST6503L

4. Disconnect the stabilizer bar link (A) from the front strut assembly.

Tightening torque Nm (kgf.m, lb-ft):
100 ~ 120 (10.0 ~ 12.0, 72 ~ 87)

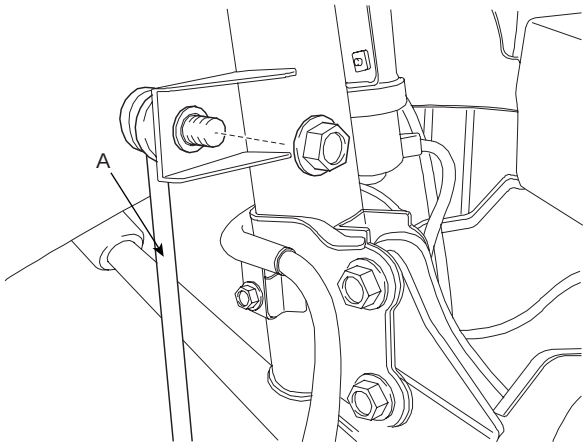

SCMST6530D

5. Remove the tie-rod end split pin (A) and castle nut (B).

Tightening torque Nm (kgf.m, lb-ft):
24 ~ 34 (2.4 ~ 3.4, 17 ~ 25)

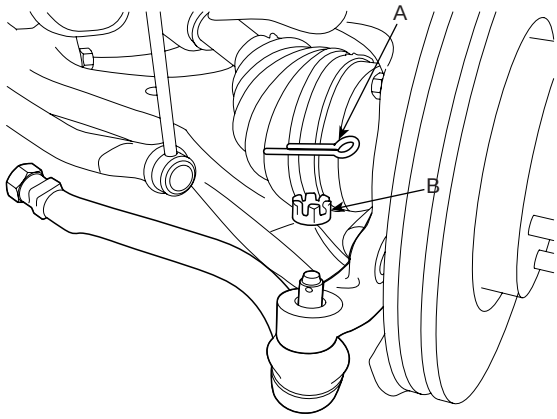

SCMST6007D

6. Disconnect the tie rod end (A) from the knuckle by using a SST (09568-4A000 or 09568-34000).

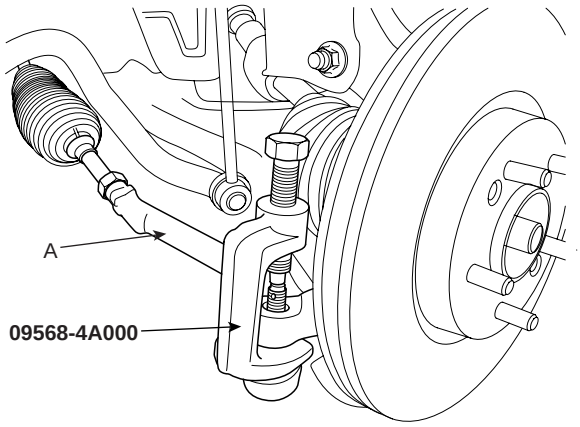

SCMST6008D

7. Remove the bolt pin and nut (A) and disconnect the lower arm (B) from the knuckle.

Tightening torque Nm (kgf.m, lb-ft):
100 ~ 120 (10.0 ~ 12.0, 72 ~ 87)

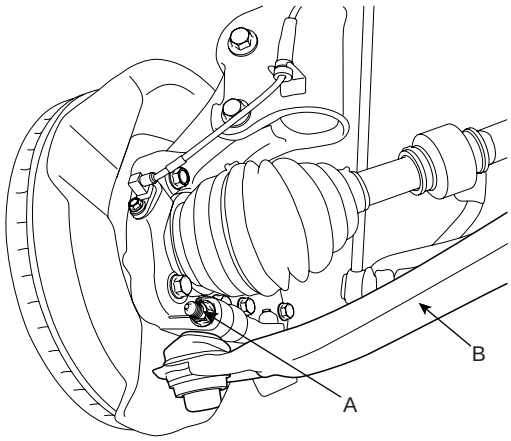

SCMST6009D

8. Repeat on the other side.

9. Remove the bolt (A) connecting steering gear pinion shaft to universal joint and the EPS solenoid connector (B).

Tightening torque Nm (kgf.m, lb-ft):
30 ~ 35 (3.0 ~ 3.5, 22 ~ 25)

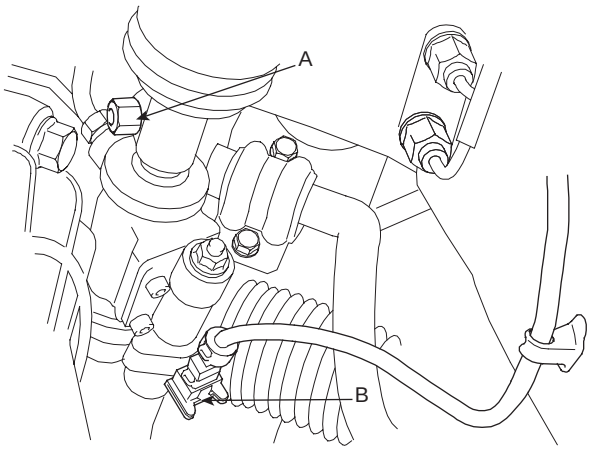

SCMST6537D

10. Remove the front and rear roll stopper bolts (A, B).

Tightening torque Nm (kgf.m, lb-ft):
50 ~ 65 (5.0 ~ 6.5, 36 ~ 47)

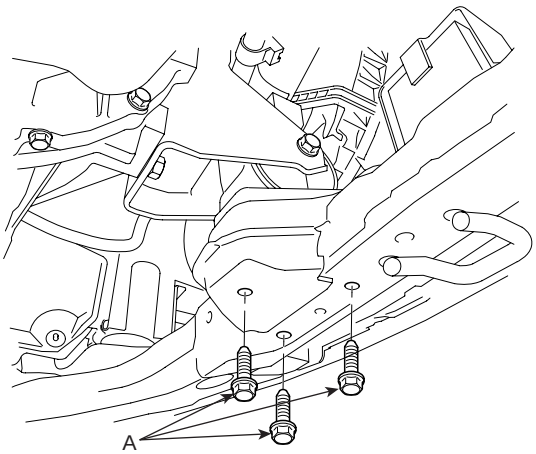

SCMST6522D

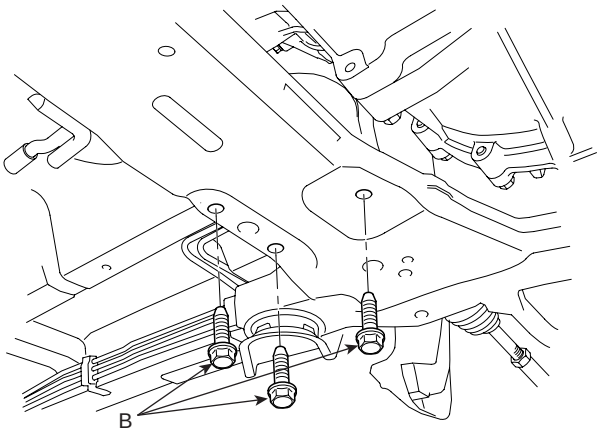

SCMST6523D

11. Remove the muffler hanger (A).

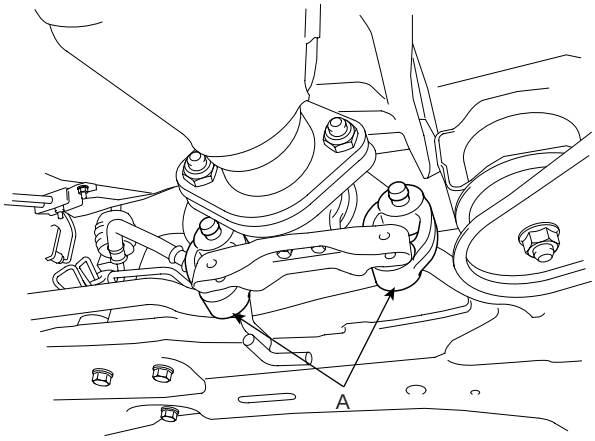

SCMST6524D

12. Remove the sub-frame (A) and stay by loosening the bolts and nuts.

Tightening torque Nm (kgf.m, lb-ft):
Sub-frame stay mounting bolts
70 ~ 90 (7.0 ~ 9.0, 51 ~ 65)
Sub-frame mounting nuts
70 ~ 90 (7.0 ~ 9.0, 51 ~ 65)
Sub-frame mounting bolts
140 ~ 160 (14.0 ~ 16.0, 101 ~ 116)

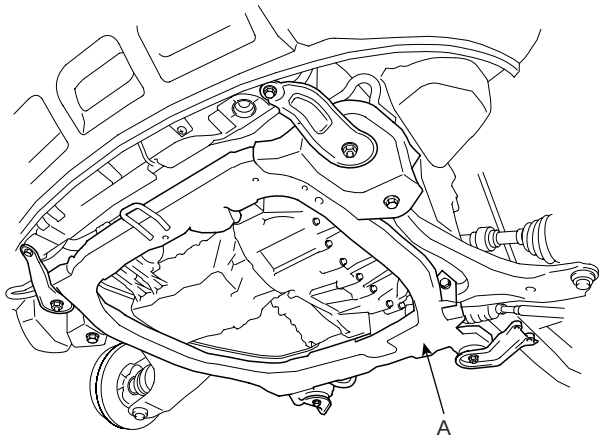

SCMST6525D

13. Remove the heat protector (A).

Tightening torque Nm (kgf.m, lb-ft):
4 ~ 6 (0.4 ~ 0.6, 2.9 ~ 4.3)

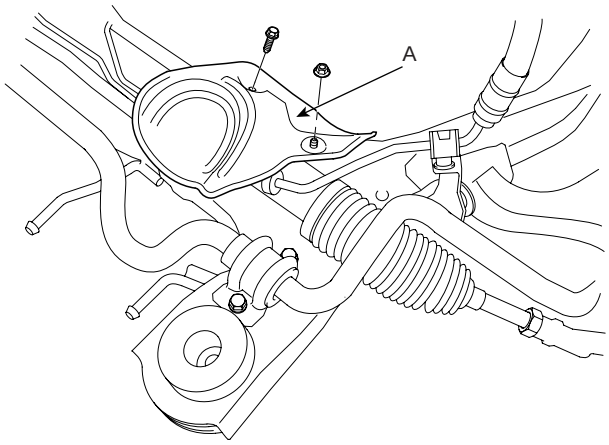

SCMST6526D

14. Disconnect the pressure tube (A) and return (B) from the valve body housing.

Tightening torque Nm (kgf.m, lb-ft):
12 ~ 18 (1.2 ~ 1.8, 9 ~ 13)

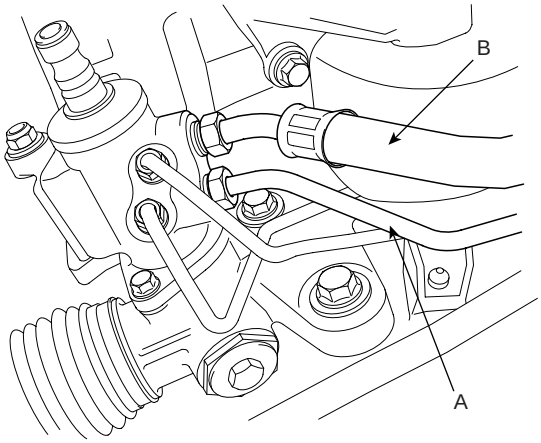

SCMST6527D

15. Remove the tube bracket bolts and nut.

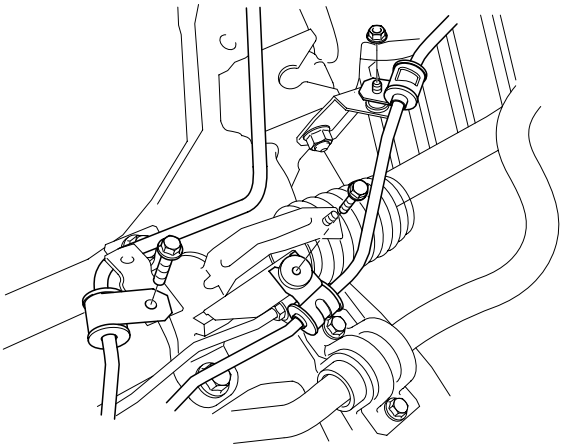

SCMST6528D

16. Remove the power steering gear box from the sub-frame by loosening the mounting bolts.

Tightening torque Nm (kgf.m, lb-ft):
60 ~ 80 (6.0 ~ 8.0, 43~58)

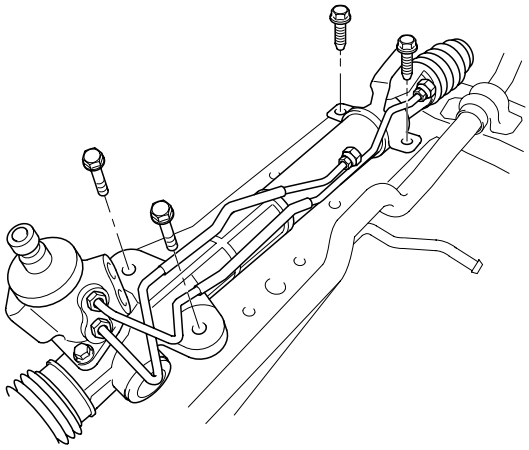

SCMST6529D

DISASSEMBLY EDB5D50E

1. Remove the tie rod end (B) from the tie rod (A).

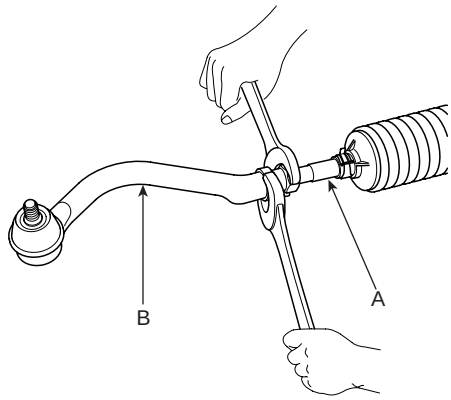

KPBF202A

2. Remove the dust cover (B) from the ball joint (A).

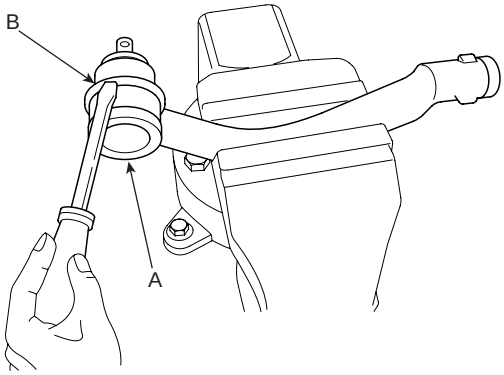

EPBF500H

3. Remove the bellows band (A).

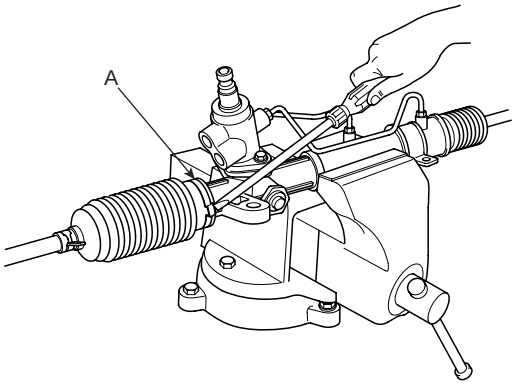

KPBF006F

4. Remove the bellows clip (A).

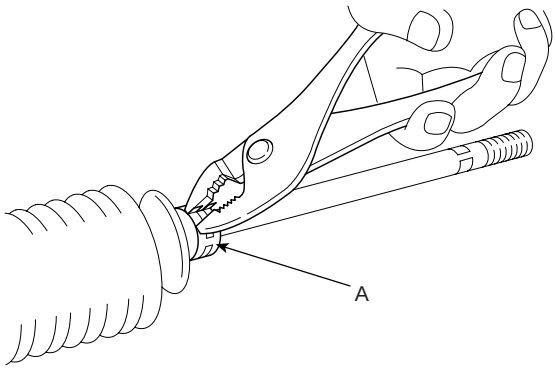

EPKE013I

5. Pull the bellows out toward the tie rod.

NOTE

Check for rust on the rack when the bellows are replaced.

6. Remove the feed tube(A) from the rack housing.

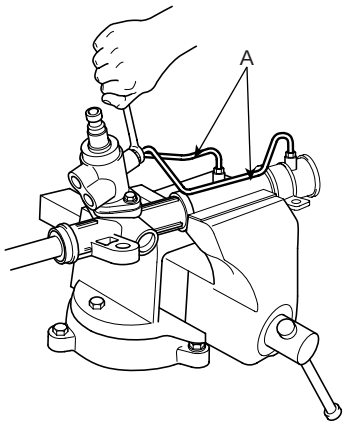

APHE006H

7. While moving the rack slowly, drain the fluid from the rack housing.

8. Unstake the tab washer (A) which fixes the tie rod (B) and rack (C) with a chisel.

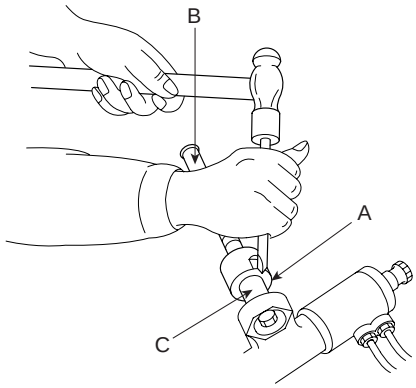

EPKE037A

9. Remove the tie rod (B) from the rack (A).

CAUTION

Remove the tie rod (B) from the rack (A), taking care not to twist the rack.

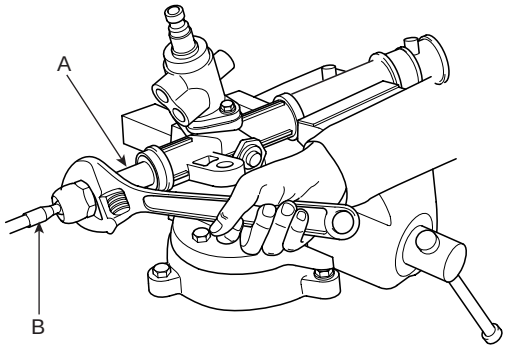

KPBF006J

10. Remove the yoke plug locking nut (A).

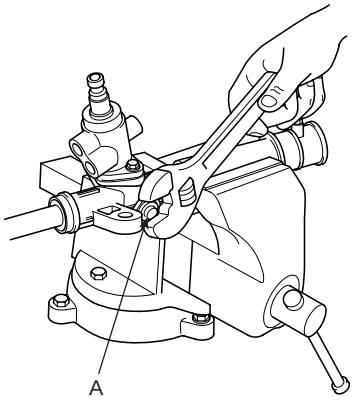

KPBF006K

11. Remove the yoke plug (B) with a 14mm socket (A).

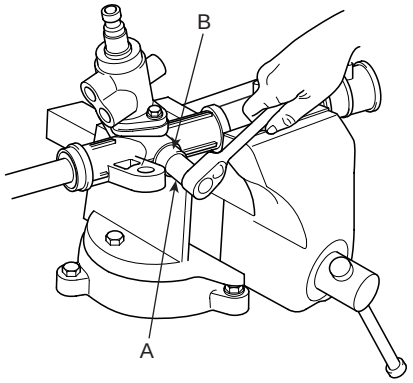

KPBF006L

12. Remove the lock nut (D), yoke plug (C), rack support spring (B) and rack support yoke (A) from the gear box.

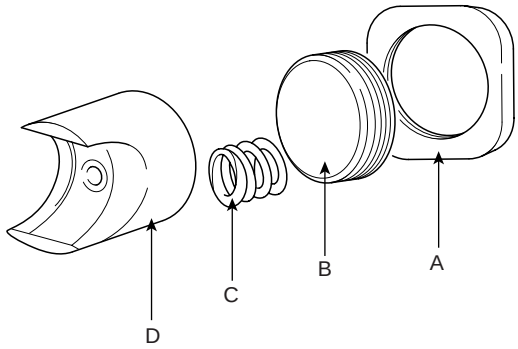

APJF005L

13. When the end of the circlip comes out of the notched-hole of the housing rack cylinder, turn the rack stopper (A) clockwise and remove the circlip.

CAUTION

Be careful not to damage the rack.

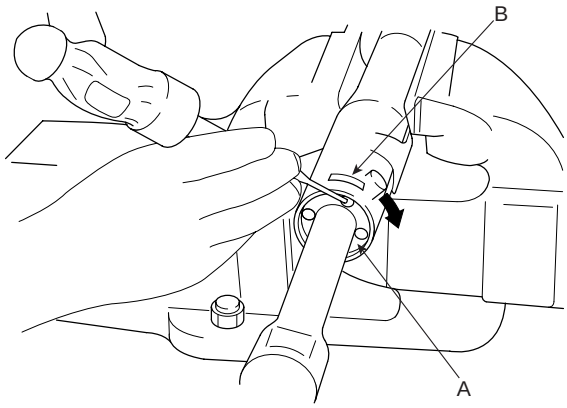

UPBG500K

14. When the end of the circlip comes out of the notched hole (A) of the housing rack cylinder, turn the rack stopper (B) counterclockwise and remove the circlip.

CAUTION

Be careful not to damage the rack.

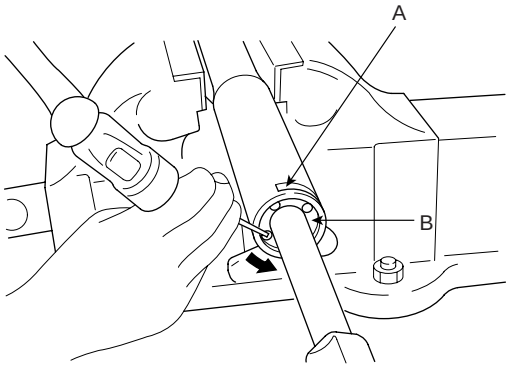

EPKE013R

15. Remove the rack bushing and rack from the rack housing.

16. Remove the O-ring(A) from the rack bushing (B).

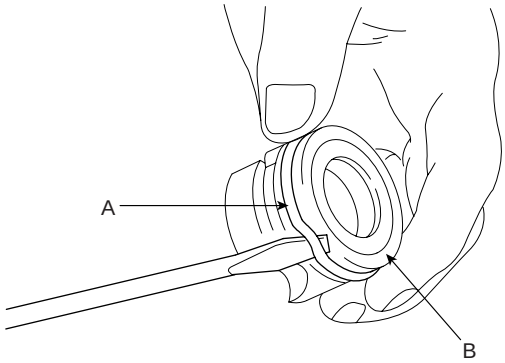

EPKE013T

17. Remove the oil seal (B) from the rack bushing (A).

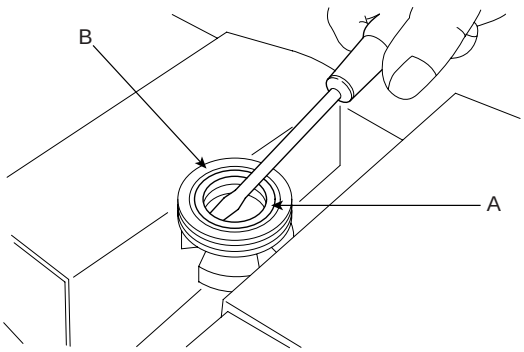

EPKE013U

18. Remove the valve body (A) from the valve body housing (B) with a soft hammer.

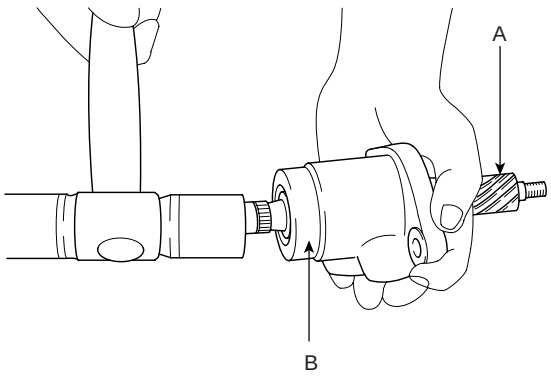

UPBG500L

19. Using the special tool, remove the oil seal and ballbearing from the valve body housing.

20. Remove the oil seal and O-ring from the rack housing.

CAUTION

Be careful not to damage the pinion valve cylinderinside of the rack housing.

21. Using the special tool (09573-33100, 09555-21000),remove the oil seal (A) from the rack housing.

CAUTION

Be careful not to damage the rack cylinder insideof the rack housing.

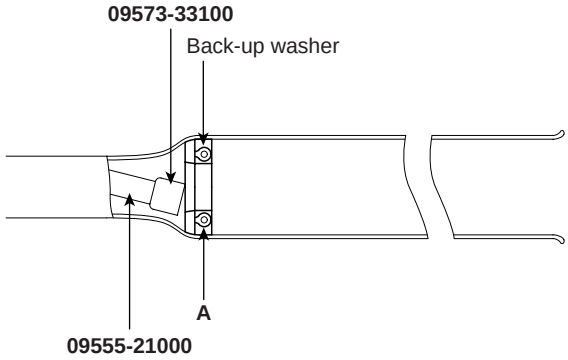

EPRF210B

INSPECTION E003BEEE

1. Rack
   1) Check for rack tooth face damage or wear.
   2) Check for oil seal contact surface damage.
   3) Check for rack bending or twisting.
   4) Check for oil seal ring damage or wear.
   5) Check for oil seal damage or wear.

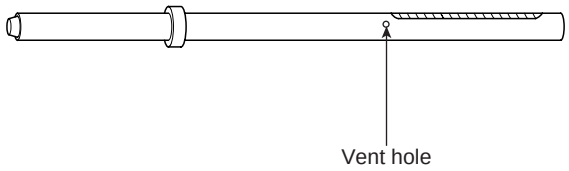

LPJF006C

2. Pinion valve
   1) Check for pinion gear tooth face damage or wear.
   2) Check for oil seal contact surface damage.
   3) Check for seal ring damage or wear.
   4) Check for oil seal damage or wear.

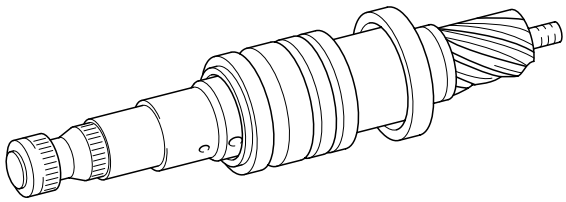

APJF013Z

3. Bearing
   1) Check for seizure or abnormal noise during abearing rotation.
   2) Check for excessive play.
   3) Check for missing needle bearing rollers.
4. Others
   1) Check for damage of the rack housing cylinder bore.
   2) Check for boot damage, cracking or aging.

REASSEMBLY E1B2884F

1. Apply the specified fluid to the entire surface of the rack oil seal.

Recommended fluid : PSF-3

2. Install the backup washer and oil seal (A) to the specified position in the rack housing.

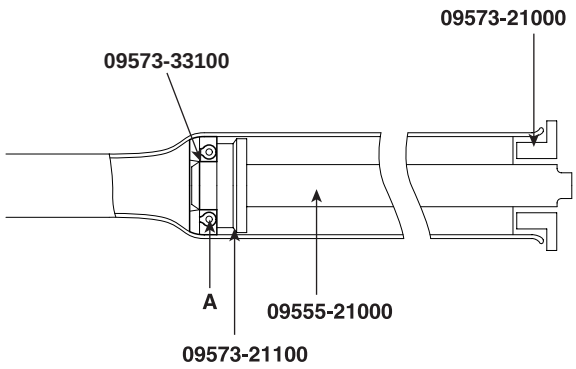

KPBF007F

3. Apply the specified fluid to the entire surface of the rack bushing oil seal.

Recommended fluid : PSF-3

4. Install the oil seal (A) in the rack bushing (B).

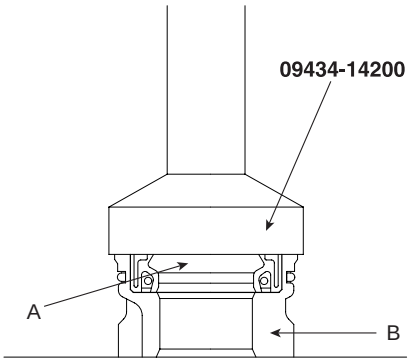

EPKE230B

5. Apply the specified fluid to the entire surface of the O-ring and install it in the rack bushing.

6. Apply the specified grease to the rack teeth.

Recommended grease Multipurpose grease SAE J310a NLGI No.2

NOTE

Do not plug the vent hole(A) in the rack with grease.

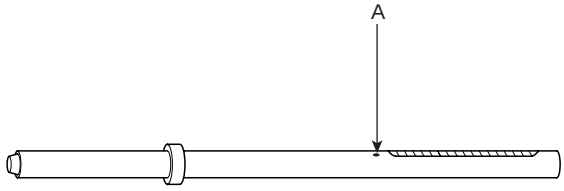

APJF014E

7. Insert the rack(A) into the rack housing(B) and install the rack bushing(C).

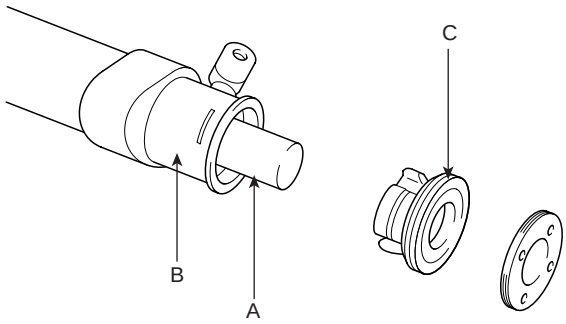

UPBG500M

8. Push in the rack stopper (A) until the circlip groove of the rack stopper is aligned with the notched hole of the rack housing. Then, install the circlip while turning the rack stopper.

CAUTION

The circlip should not be visible through the notched hole of the rack housing.

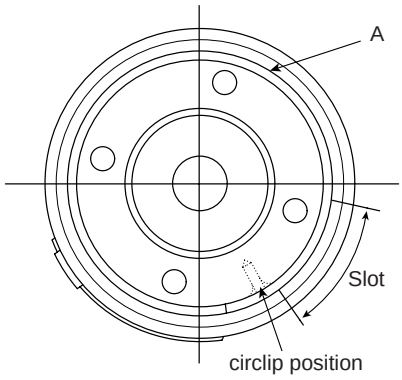

EPBF500C

9. Using special Tool (09432-21600), install the oil seal and the ball bearing in the valve body (A).

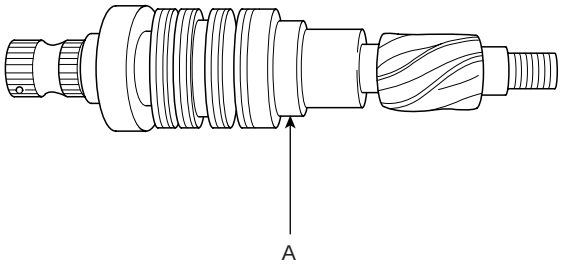

EPKE230E

10. After applying the specified fluid and grease to the pinion valve assembly (A), install it in the rack housing assembly.

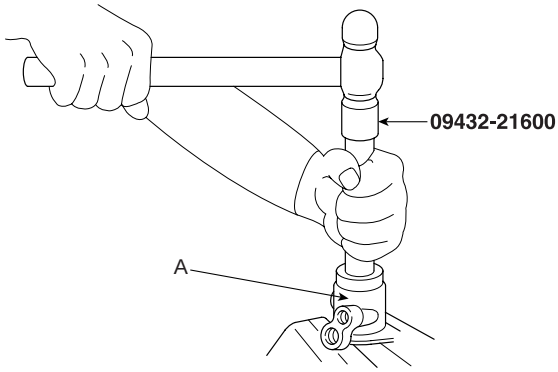

APGE008G

11. After applying the specified fluid to the oil seal, install it in the rack housing and fix the valve body assembly(A) and O-ring in the gear box(B).

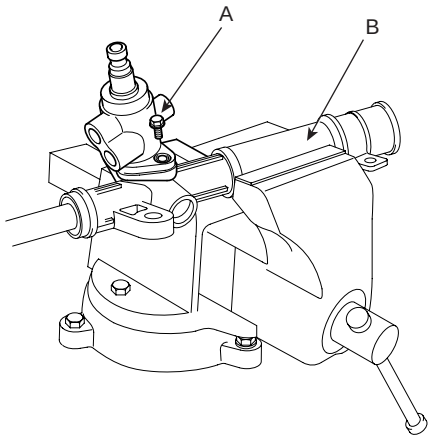

APHE007F

12. Install the rack support yoke (A), rack supportspring (B), yoke plug (C) and lock nut (D) in the ordershown in the illustration. Apply semi-drying sealantto the threaded section of the yoke plug before installation.

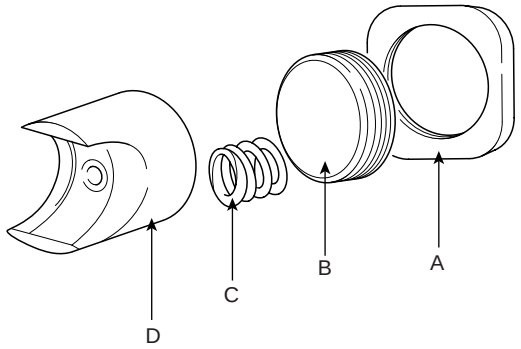

APJF005L

13. With the rack placed in the center position, attach the yoke plug to the rack housing. Tighten the yoke plug to 12 Nm (120 kg·cm, 8.9 lb·ft), with a 14mm socket (A). Loosen the yoke plug approximately from 30° to 60° and tighten the yoke nut to the specified torque.

Tightening Torque Nm(kgf·m, lb-ft) : 50 ~ 70(5 ~ 7, 37 ~ 52)

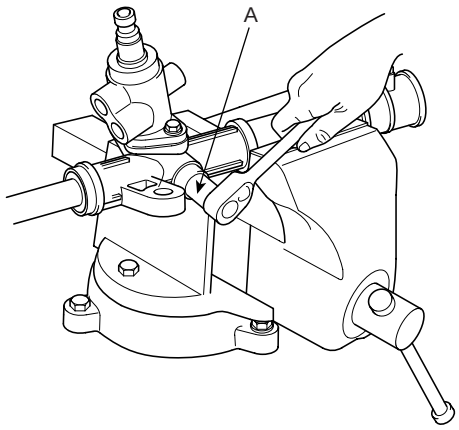

APHE007I

14. Tighten the feed tube (A) to the specified torque and install the mounting rubber using adhesive.

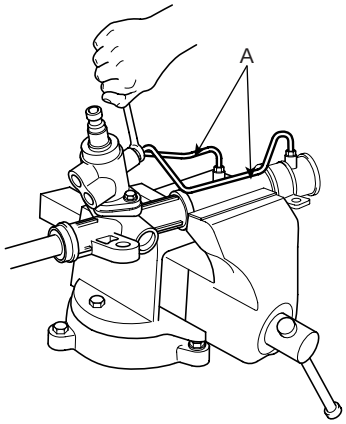

APHE006H

15. Apply the specified grease to the bellows mounting position (fitting groove) of the tie rod.

Recommended grease : Silicone grease

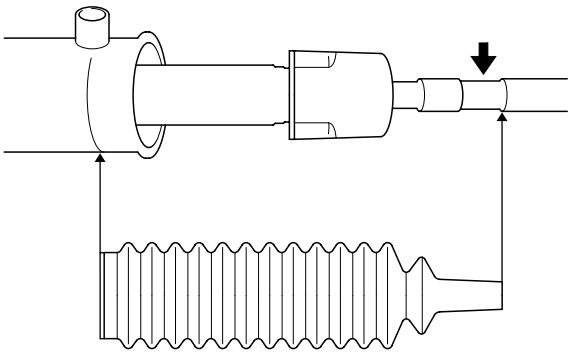

APGE008C

16. Install the new attaching band to the bellows.

NOTE

When the bellows are installed, a new band must be used.

17. Install the bellows in position, taking care not to twist it.

18. Fill the dust cover inner side and lip with the specified grease, and fix the dust cover in position with the clipring attached in the groove of the tie rod end.

Recommended grease A : POLY LUB GLY 801K or equivalent B : SHOWA SUNLIGHT MB2 or equivalent Dust cover inner side and lip : THREE BOND

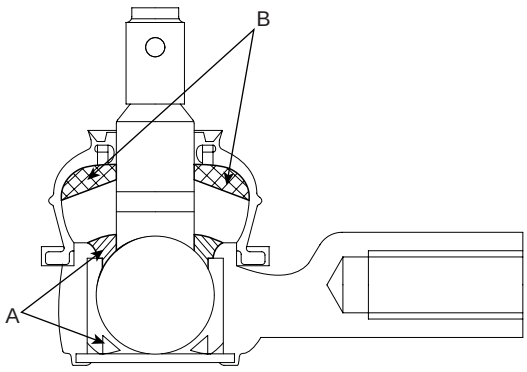

EPKE043A

19. Install the tie rod end (B) to the tie rod (A).

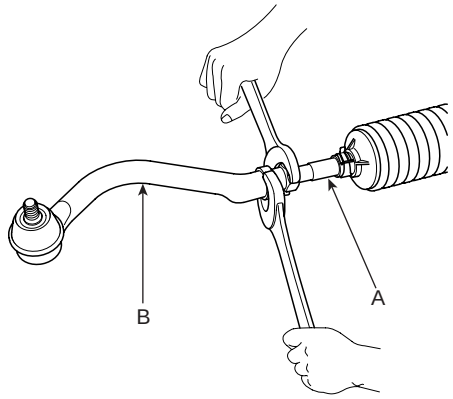

KPBF202A

INSTALLATION ECBE4BC2

1. Installation is the reverse of removal.

NOTE

Be sure to connect between a tube and a hose as shown in the illustration.

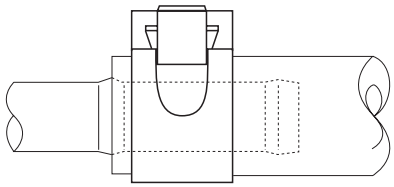

LPLG500J

2. Add the power steering oil.
3. After installation, bleed the power steering system. (Refer to the air bleeding in ST group)
4. Adjust the wheel alignment. (Refer to SS group)

POWER STEERING HOSES

COMPONENTS E332082E

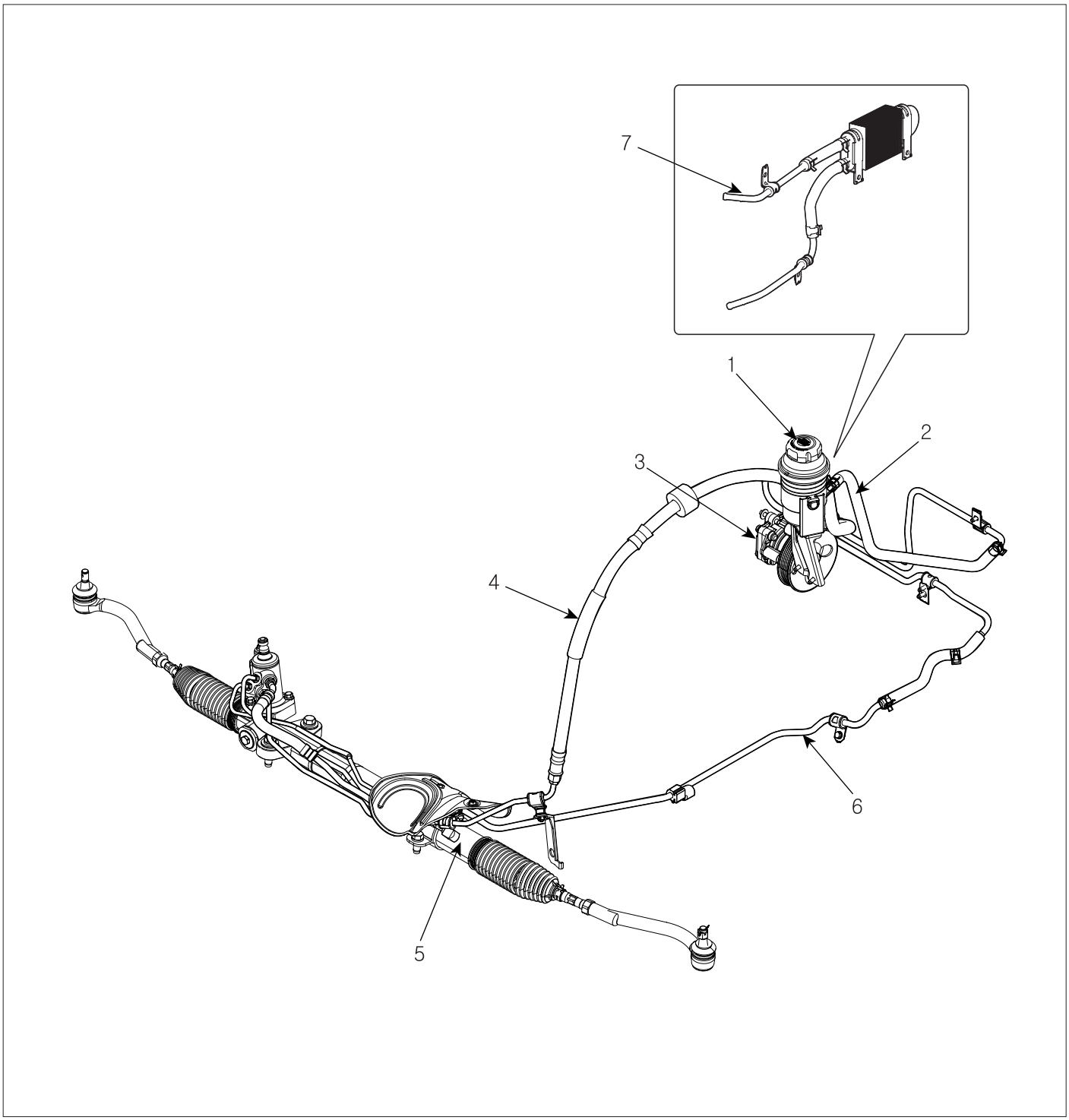

1. Power steering oil reservior
2. Suction hose
3. Power steering oil pump
4. Pressure tube
5. Power steering geat box
6. Return tube
7. Oil cooler (Gasoline only)

SCMST6511L

REMOVAL E8F174D6

1. Drain the power steering fluid by disconnecting return hose (A).

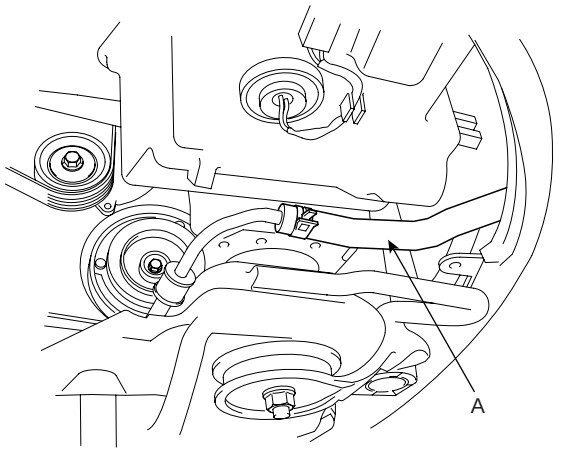

SCMST6521D

2. Disconnect the pressure tube (A) and suction hose (B) from the power steering oil pump.

Tightening torque Nm (kgf.m, lb-ft):
55 ~ 65 (4.5 ~ 5.5, 40 ~ 47)

[DIESEL]

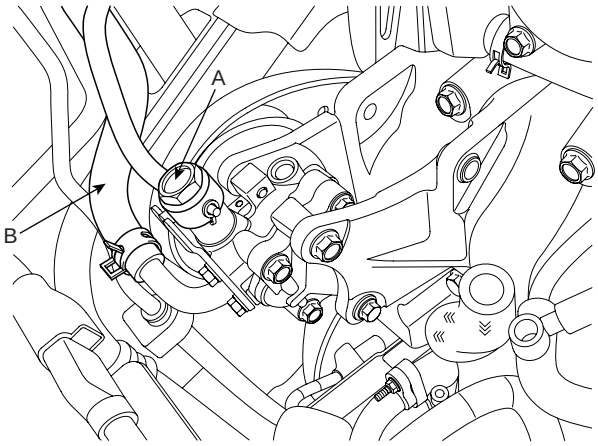

SCMST6538D

[GASOLINE]

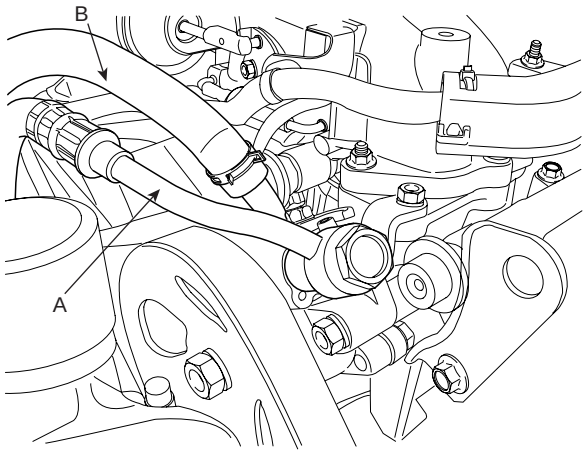

SCMST6504L

3. Disconnect the pressure tube (A) and return tube (B) from the valve body housing.

Tightening torque Nm (kgf.m, lb-ft):
12 ~ 18 (1.2 ~ 1.8, 9 ~ 13)

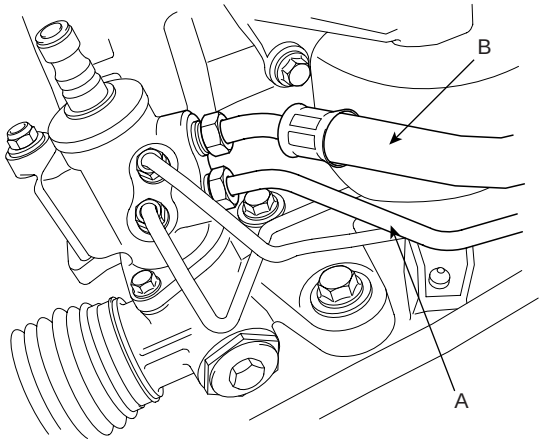

SCMST6527D

4. Loosen the pressure and return tube bracket bolts and nut.

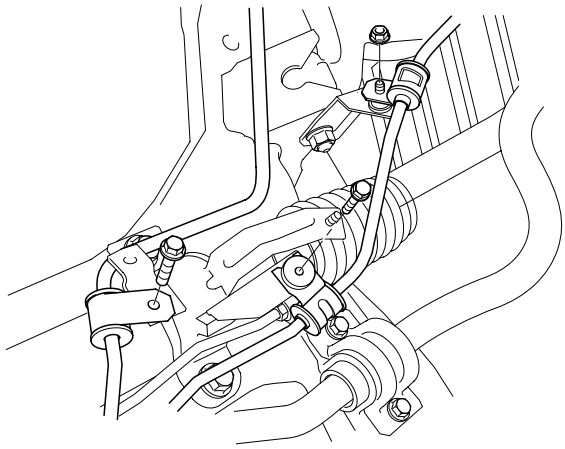

SCMST6528D

5. Remove the return tube bracket bolts.

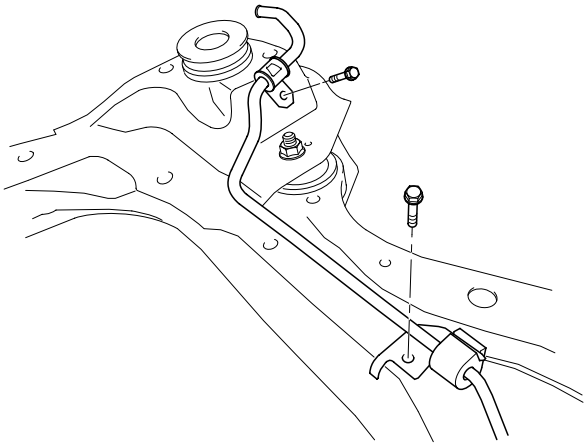

SCMST6531D

6. Remove the front bumper and then loosen the cooler tube bracket bolts.

[DIESEL]

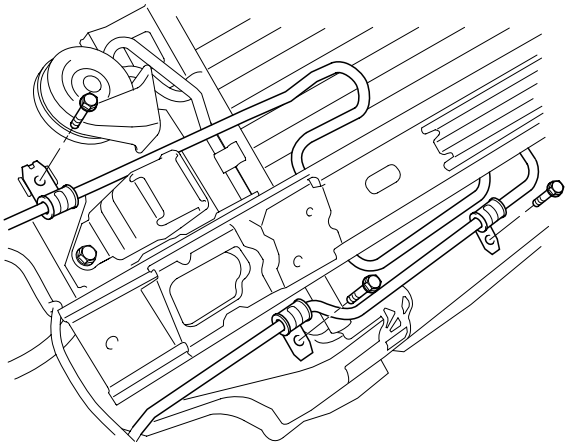

SCMST6505L

[GASOLINE]

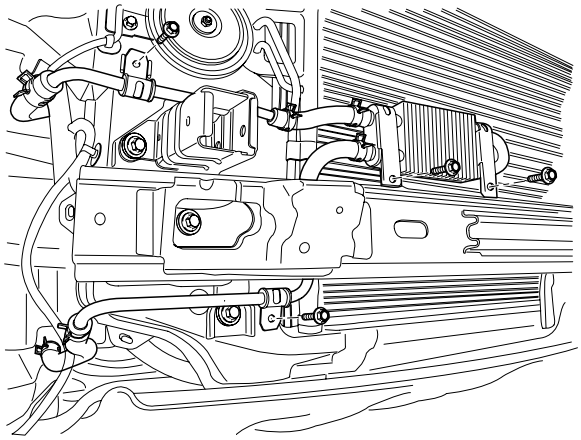

SCMST6512L

7. Remove the power steering hose tubes.

INSTALLATION E6EEDC80

1. Installation is the reverse of removal.

NOTE

Be sure to connect between a tube and a hose as shown in the illustration.

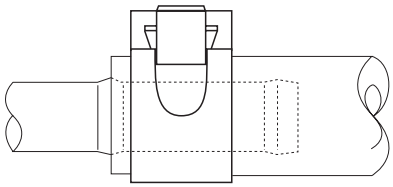

LPLG500J

CAUTION

The pressure tube does not twist and come in contact with other components.

2. Add the power steering oil.

3. After installation, bleed the power steering system. (Refer to air bleeding in ST group)

POWER STEERING OIL PUMP

COMPONENTS E5FCB3BF

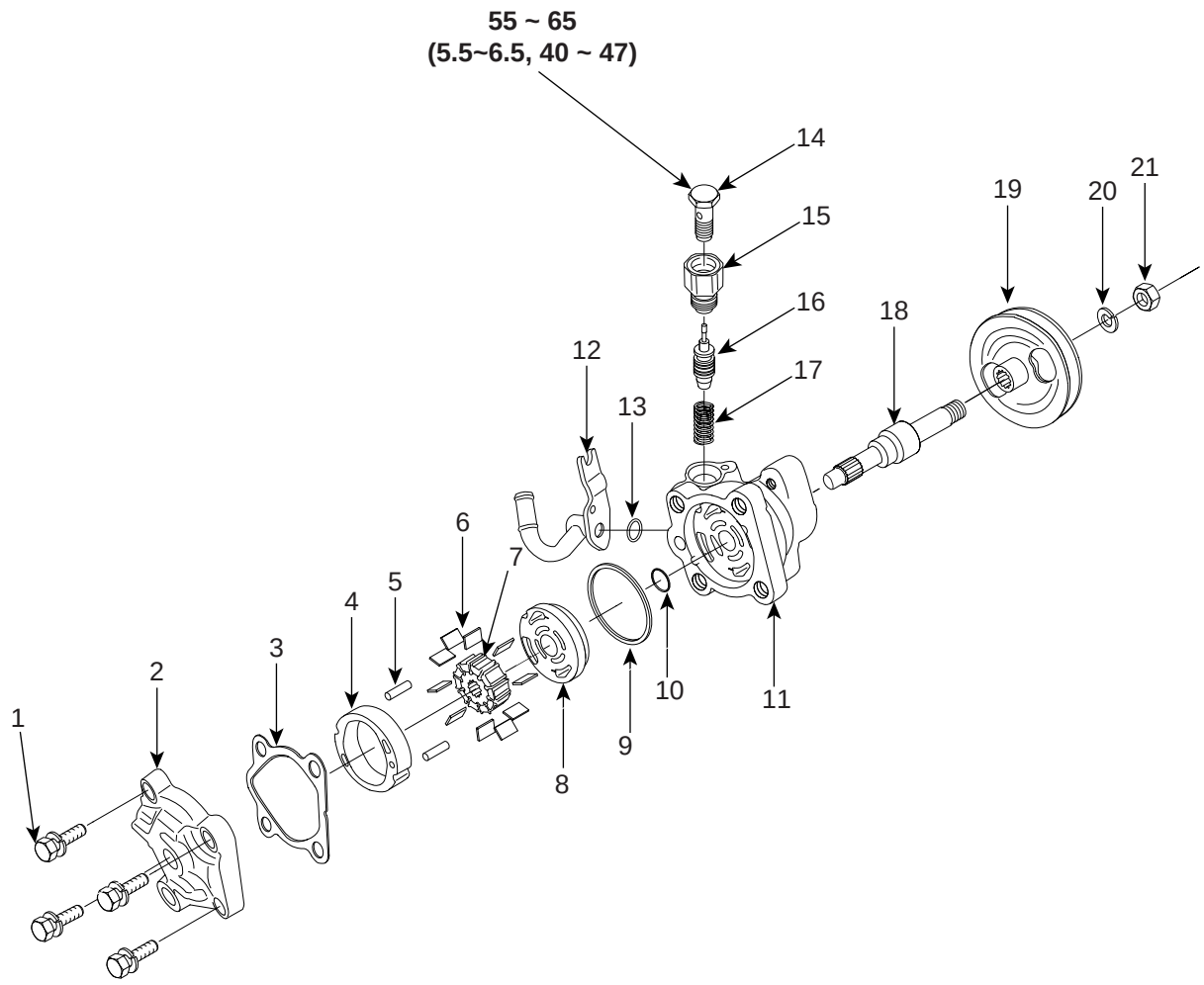

TORQUE : Nm (kgf.m, lb-ft)

1. Bolt
2. Oil pump cover assembly
3. Gasket
4. Cam ring
5. Lock pin
6. Vane
7. Rotor
8. Side plate
9. O-ring(Inner)
10. O-ring(Outer)
11. Front housing
12. Suction pipe
13. O-ring
14. Bolt
15. Connector
16. Flow control valve
17. Flow control spring
18. Shaft
19. Pulley
20. Washer
21. Nut

LPLG500U

REMOVAL EA4F3A9F

1. Remove the intercooler assembly. (Diesel only, refer to EM group)

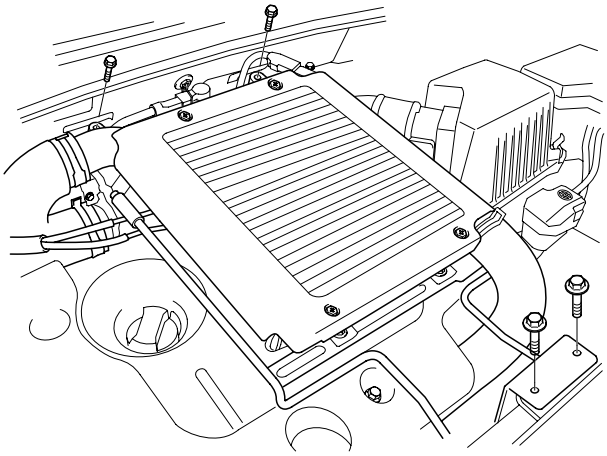

SCMST6506L

2. Remove the drive belt.
3. Remove the alternator. (Diesel only, refer to EE group)
4. Disconnect the oil pressure switch.
5. Disconnect the pressure tube (A) and suction hose (B) from the power steering pump assembly.

Tightening torque Nm (kgf-m, lb-ft):
55 ~ 65 (5.5 ~ 6.5, 40 ~ 47)

[DIESEL]

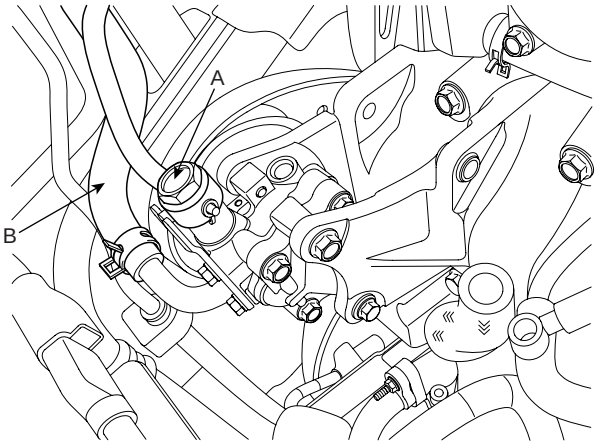

SCMST6538D

[GASOLINE]

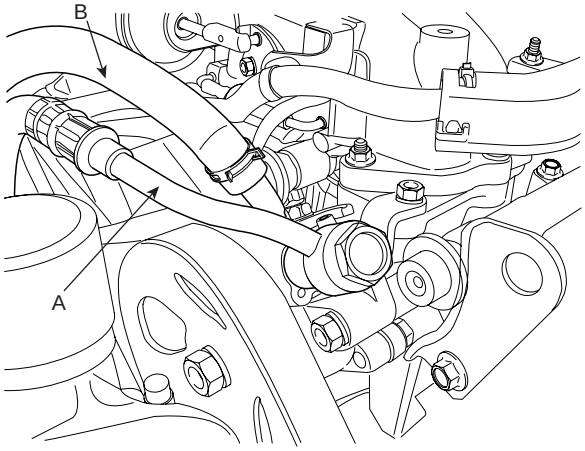

SCMST6504L

6. Loosen the power steering pump mounting bolt and nut, and then remove the power steering pump assembly from the pump bracket.

Tightening torque Nm (kgf-m, lb-ft):
17 ~ 26 (1.7 ~ 2.6, 12 ~ 19)

[DIESEL]

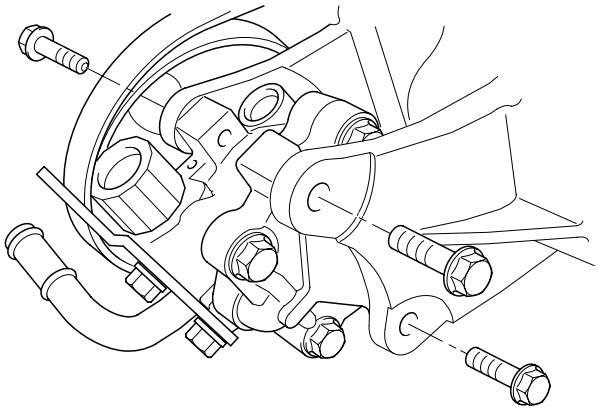

SCMST6532D

[GASOLINE]

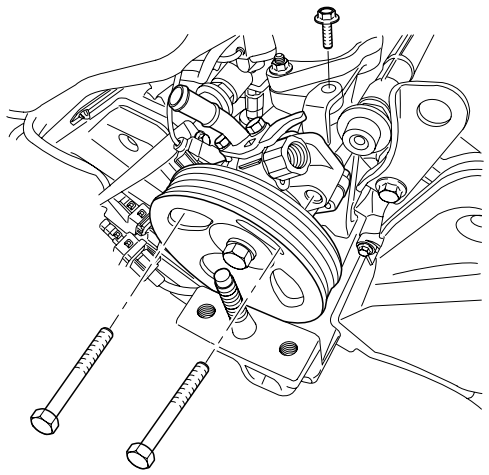

SCMST6509L

NOTE

Be careful not to spill the fluid from the power steering oil pump.

DISASSEMBLY E32DF37D

1. Remove two bolts from the oil pump body (A), and then remove the suction pipe (B) and O-ring.

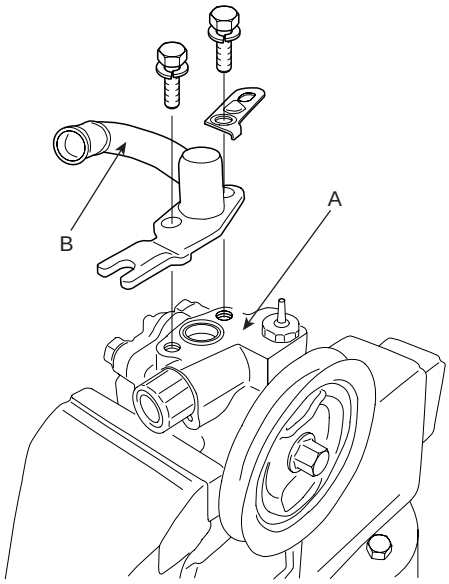

EPNG004A

2. Loosen the four bolts and remove the oil pump cover assembly (A) and the gasket.

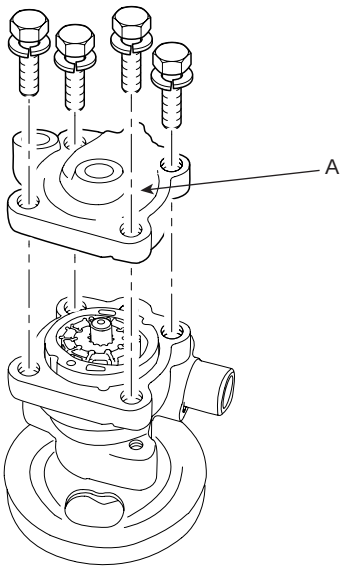

EPNG005A

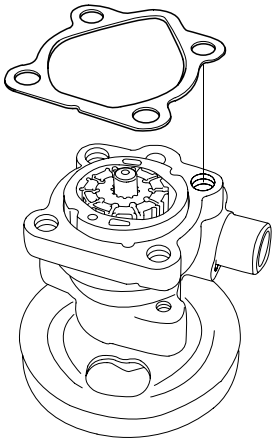

EPNG006A

3. Remove the rotor and vanes.

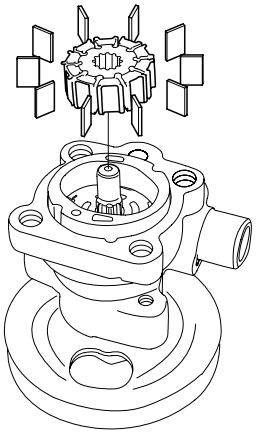

EPNG007A

4. Remove the cam ring.

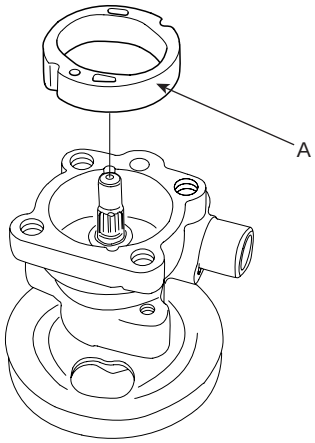

EPNG008A

5. Remove the oil pump side plate (A).

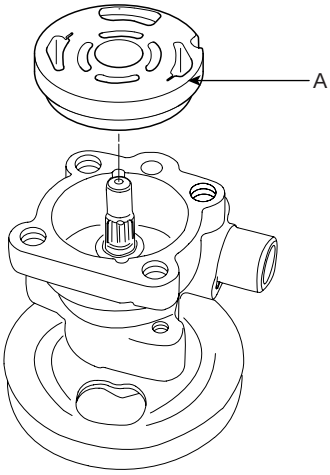

BPKG501E

6. Remove the inner and outer O-ring (A).

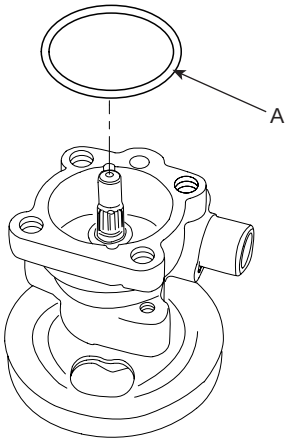

EPNG010A

NOTE

When assembling, use a new gasket and O-ring.

7. Mount the pump in a vise and remove the pulley (A) nut and the spring washer.

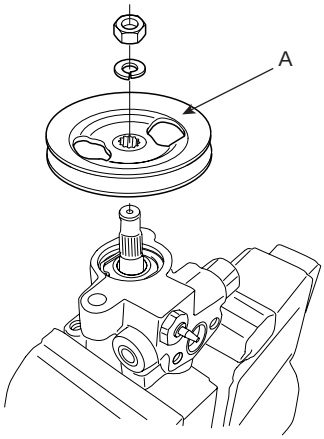

EPNG011A

8. After removing the snap ring (A) of the shaft with snap ring pliers, remove the dust spacer.

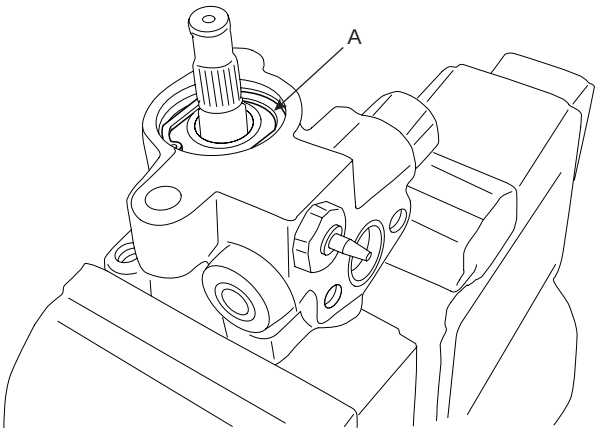

EPNG012A

9. Tap the rotor side of the shaft slightly with a plastic hammer (A) to remove the shaft (B).

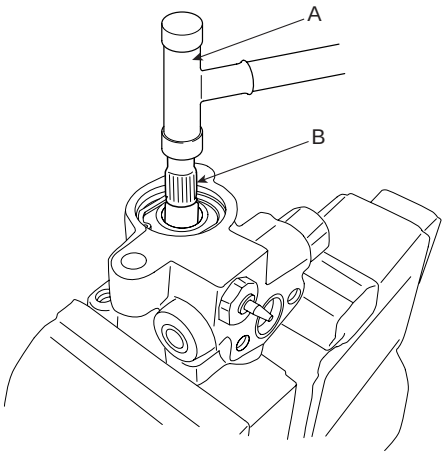

EPNG500Q

10. Remove the oil seal from the oil pump body.

NOTE

When assembling, use a new oil seal.

11. Remove the connector from the oil pump body, and take out the flow control valve (A) and the flow control spring (B).

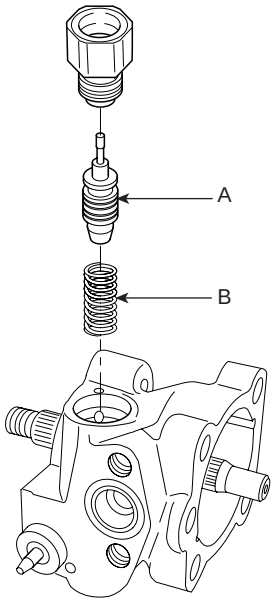

EPNG013A

12. Remove the O-ring from the connector.

CAUTION

Do not disassemble the flow control valve.

INSPECTION EBCD78DF

1. Check that the flow control valve is not bent.
2. Check the shaft for wear and damage.
3. Check the V belt for wear and deterioration.
4. Check the grooves of the rotor and vanes for stratified abrasion.
5. Check the contact surface of the cam ring and vanes for stratified abrasion.
6. Check vanes for damage.
7. Check that there is no striped wear in the side plate or contacting part between the shaft and the pump cover surface.

REASSEMBLY E52DD673

1. Install the flow control spring (B), the flow control valve (A) and the connector into the pump body.

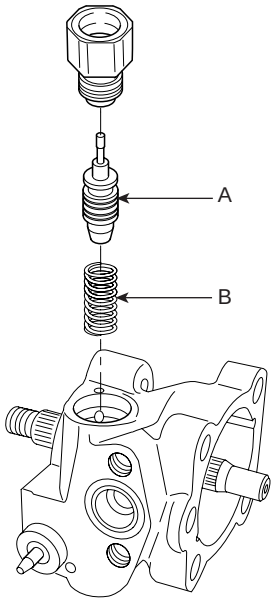

EPNG013A

2. Install the oil seal in the pump body by using the special tool (09222-32100).

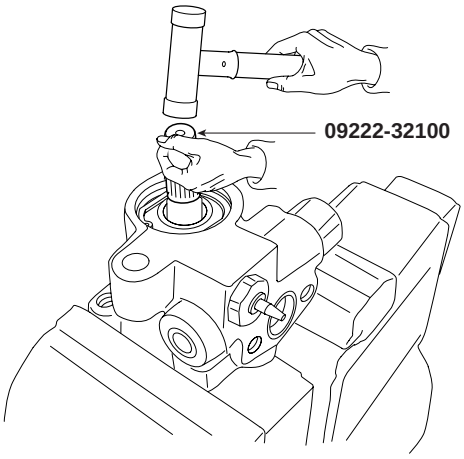

EPNG500R

3. After inserting the shaft assembly into the pump body, install the dust spacer and snap ring (A).

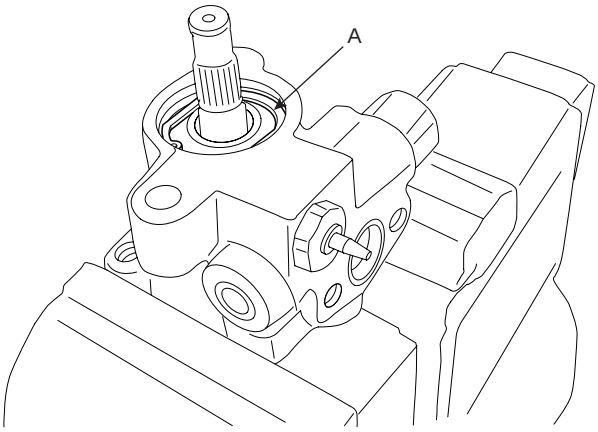

EPNG012A

4. Install the pump pulley(A).

Tightening torque :
55 ~ 69 Nm (5.5 ~ 6.9 kgf·m, 39.8 ~ 49.9 lb-ft)

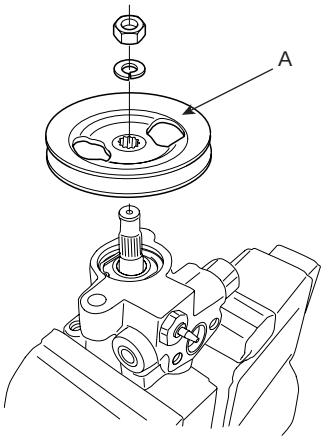

EPNG011A

5. Install the inner O-ring and outer O-ring (A).

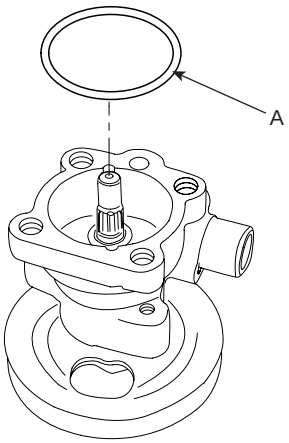

EPNG010A

6. Install the oil pump side plate (A).

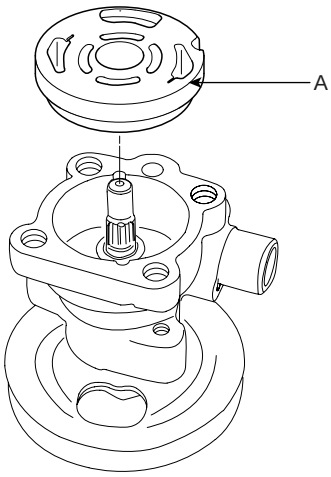

BPKG501E

7. After inserting the lock pin into the groove of the front housing, install the camring (A) attending to the direction.

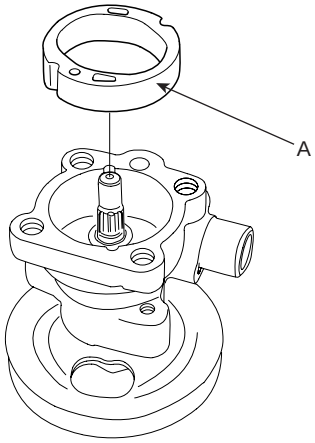

EPNG008A

8. Install the rotor and the vanes.

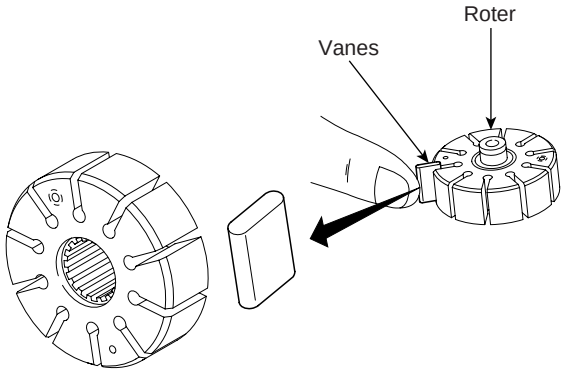

EPRF401D

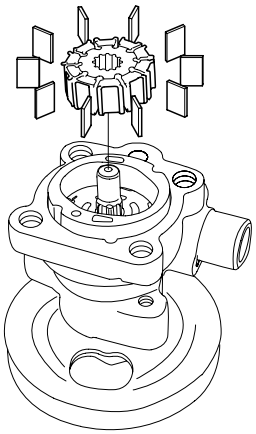

EPNG007A

9. Install the gasket and oil pump cover assembly (A).

Tightening torque Nm (kgf-m, lb-ft): 15.3 ~ 20.2 (1.56 ~ 2.04, 11.3 ~ 14.9)

10. Install the O-ring (A) and the suction pipe mounting bolt.

Tightening torque Nm (kgf-m, lb-ft): 13.6 ~ 18.4 (1.36 ~ 1.84, 9.84 ~ 13.3)

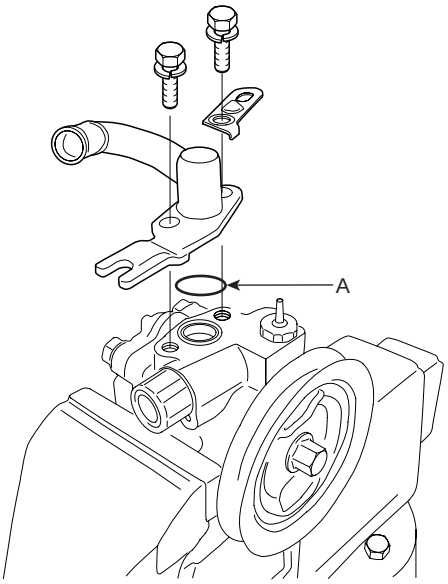

EPNG500S

INSTALLATION EA9BFCE7

1. Installation is the reverse of removal.

NOTE

Be sure to connect between a tube and a hose as shown in the illustration.

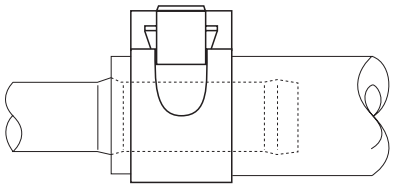

LPLG500J

CAUTION

The pressure tube does not twist and come in contact with other components.

2. Add the power steering fluid.
3. Bleed the power steering system. (Refer to the air bleeding in ST-group)
4. Check the oil pump pressure. (Refer to the oil pump pressure test in ST-group)