Lift Plate and Holding Fixture Installation

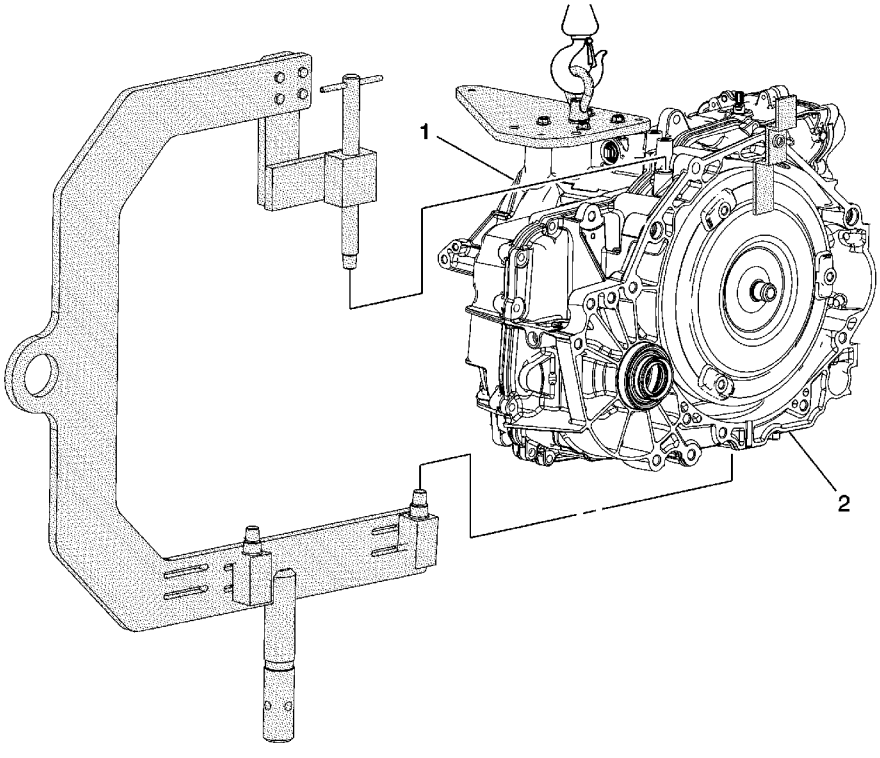

Callout	Component Name
1	*DT-47811-A* Transmission Lift Plate **Warning:** Handle with care, the transmission assembly weighs over 83 Kg (183 lbs). Bodily injury could occur if not handled properly. **Caution:** Refer to Fastener Caution in the Preface section. **Tip** After installation of lift plate, raise the transmission with an overhead hoist. **Tighten** 12 N·m (106 lb in)
2	*J-46625* Transmission Holding Fixture *J-46625-10* Holding Fixture Adapter **Tip** Adjust mounting block on fixture to match bosses on case. **Tighten**

cardiagn.com

cardiagn.com

Torque Converter Removal

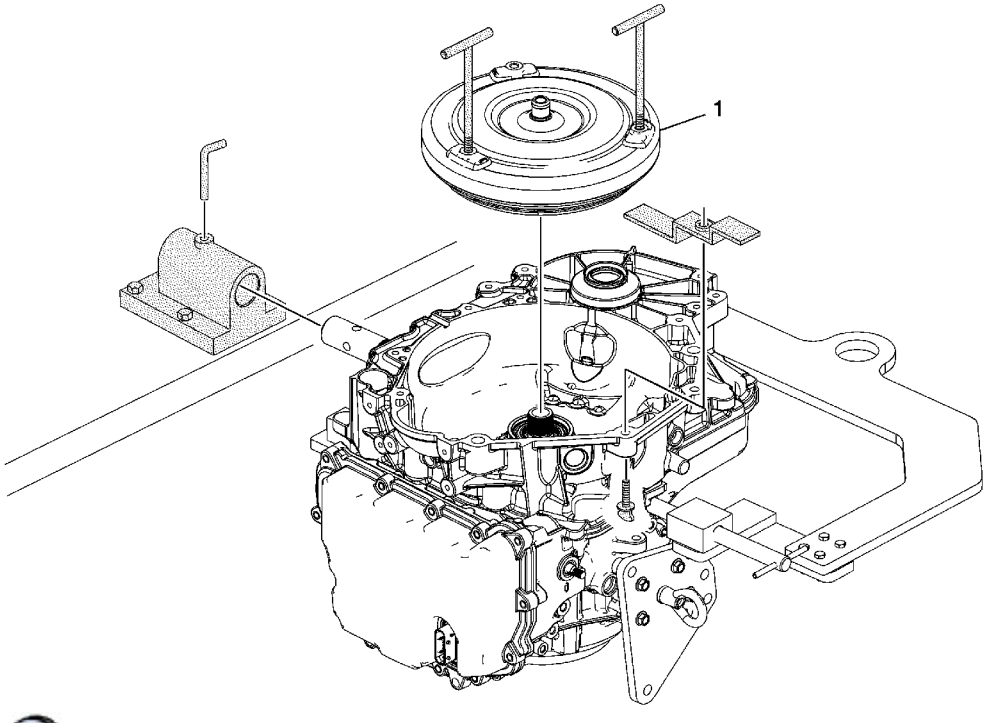

Callout	Component Name
1	Lock Pin **Warning:** Lock pin must be secured into the bench fixture to hold the transmission and prevent bodily injury. **Tip** Ensure the *J-3289-20* holding fixture is mounted to a bench that is properly supported and will support the weight of the transmission assembly without tipping. *J-39890* holding fixture adapter and an engine stand can be used as an alternative method for supporting the transmission assembly during repairs. **Special Tools** • *J-3289-20* Holding Fixture • *J-39890* Transmission Holding Fixture Adapter
2	*J-21366* Torque Converter Holding Strap
	Torque Converter Assembly **Caution:** Only install the lift assist handles until it stops. Do not tighten. Over

cardiagn.com

3	**Tip** Failure to raise the torque converter straight up could damage the torque converter clutch lip seal inside the torque converter clutch assembly. **Special Tools** *J-46409* Torque Converter Lifting Handles

cardiagn.com

Control Valve Body Assembly Removal

Table 1: Control Valve Body Cover Removal
Table 2: Control Solenoid (With Body and TCM) Valve Assembly Removal
Table 3: Control Valve Body Assembly Removal

Control Valve Body Cover Removal

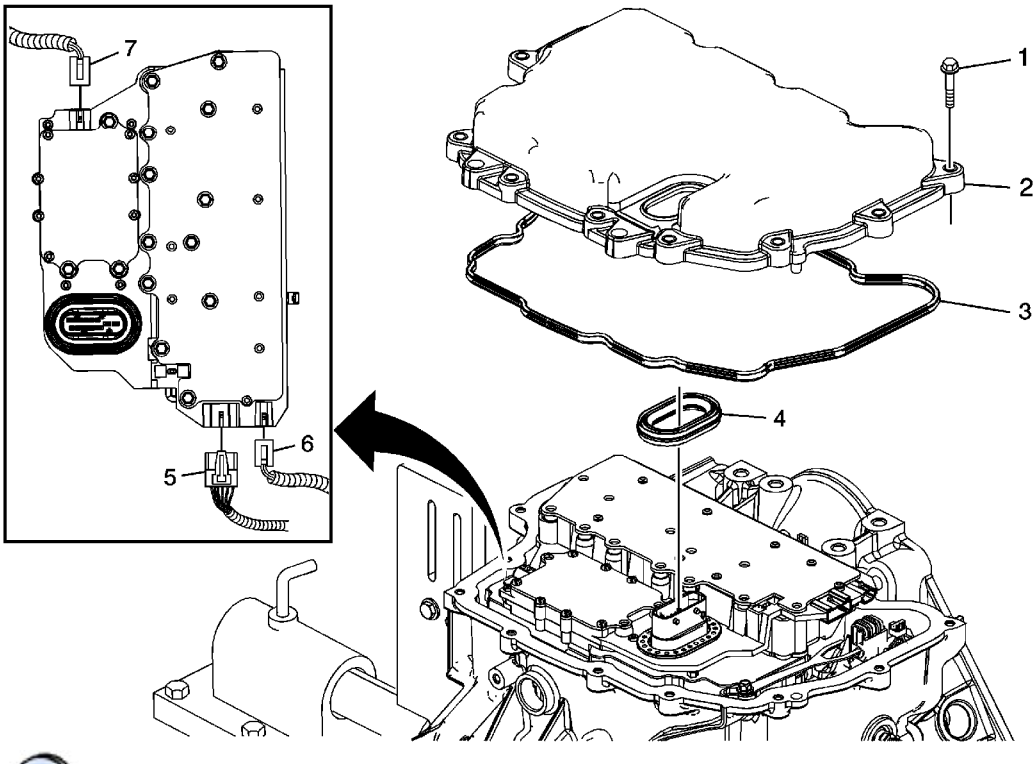

Control Valve Body Cover Removal

Callout	Component Name
1	Control Valve Body Cover Bolts M6 x 30 (Qty: 13)
2	Control Valve Body Cover
3	Control Valve Body Gasket **Tip** Discard the seal. It is not reusable.
4	Control Valve Body Cover Wiring Connector Hole Seal **Caution:** Support the control solenoid valve assembly around the connector when removing the seal. Excessive pulling force can damage the internal electrical connections.

cardiagn.com

5	Shift Position Switch Connector
6	Output Speed Sensor Connector
7	Input Speed Sensor Connector

Control Solenoid (With Body and TCM) Valve Assembly Removal

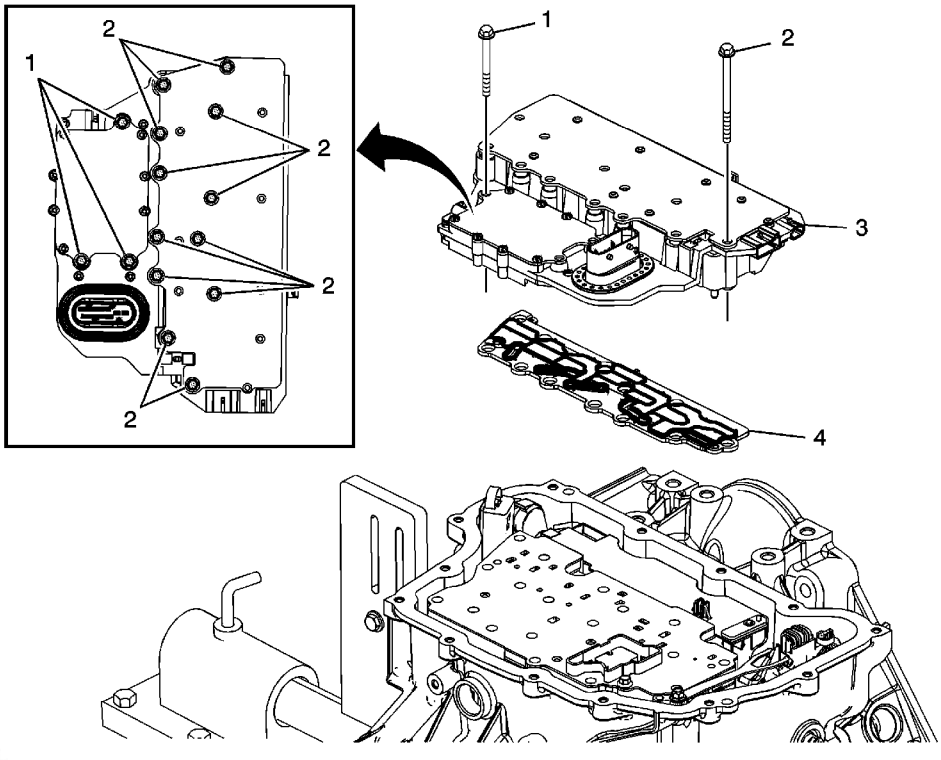

Control Solenoid (With Body and TCM) Valve Assembly Removal

Callout	Component Name
1	Control Valve Body M5 x 40.5 (Qty: 3)
2	Control Valve Body Bolt M6 x 30 (Qty: 12)
3	Control Solenoid (with Body and TCM) Valve Assembly
4	Control Solenoid Valve Assembly Filter Plate **Caution:** Use care when removing or installing the filter plate assembly. A broken or missing retaining tab may not adequately secure the filter plate to the control solenoid valve assembly, resulting in possible damage or contamination. **Tip** • Discard the filter plate. It is not reusable. • Inspect the pressure switch seals for damage or contamination. Replace the

cardiagn.com

Control Valve Body Assembly Removal

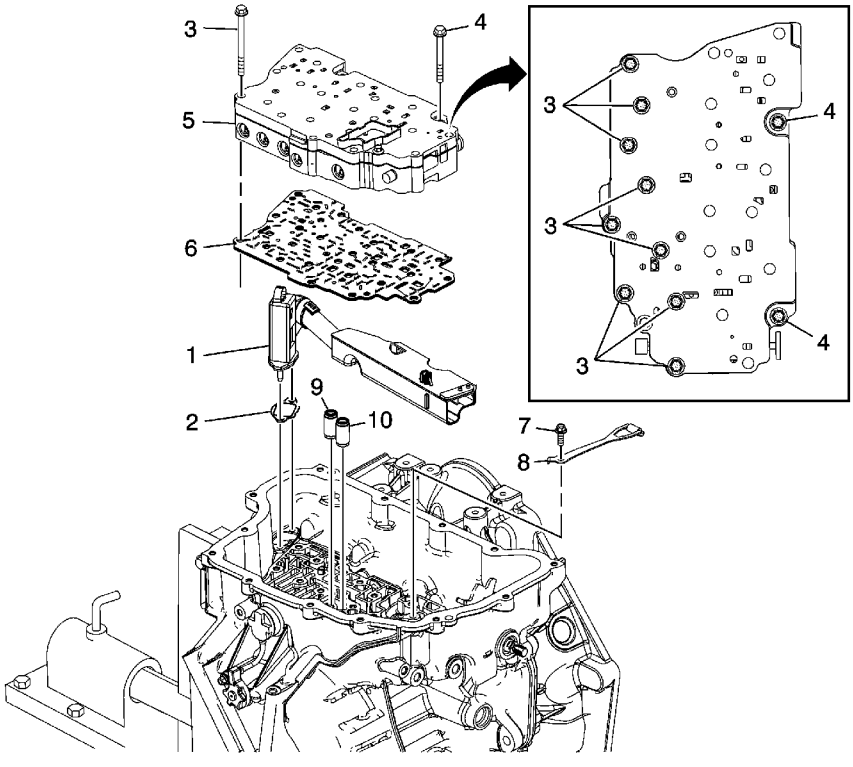

Control Valve Body Assembly Removal

Callout	Component Name
1	Fluid Level Control Valve
2	Fluid Level Control Valve Gasket
3	Control Valve Body Bolt M6 x 60 (Qty: 9)
4	Control Valve Body Bolt M6 x 53 (Qty: 2)
5	Control Valve Body Assembly
6	Control Valve Body Spacer Plate Assembly
7	Manual Shaft Detent Spring Bolt M6 x 16 (Qty: 1)
8	Manual Shaft Detent Lever Spring Assembly
9	1-2-3-4 Clutch Fluid Passage Seal **Tip** Discard the seal. It is not reusable.
10	Low/Reverse Clutch Fluid Passage Seal **Tip** Discard the seal. It is not reusable.

cardiagn.com

Input and Output Speed Sensor Removal

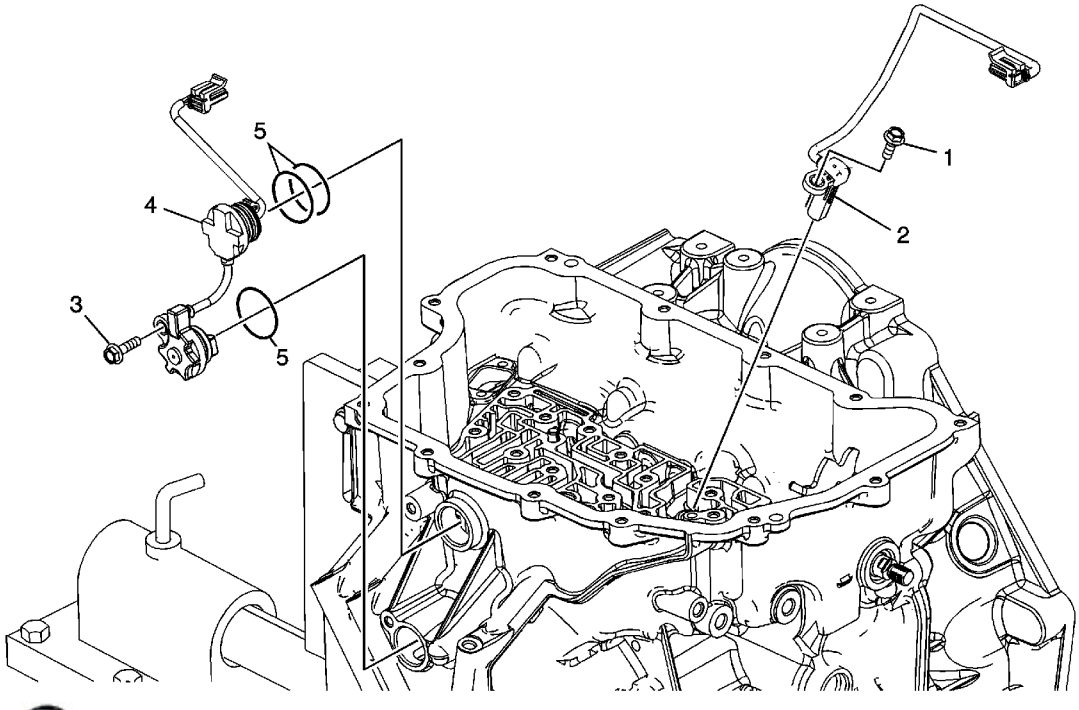

Callout	Component Name
1	A/Trans Output Speed Sensor Bolt M6 x 18 (Qty: 1)
2	A/Trans Output Speed Sensor Assembly
3	Input Speed Sensor Bolt M6 x 23 (Qty: 1)
4	Input Speed Sensor Assembly **Tip** Compress the locking tabs on the plug to release it from the case and to avoid damaging the retainers.
5	Input Speed Sensor Assembly Seals (Qty: 3) **Tip** Discard the seals. They are not reusable.

cardiagn.com

Torque Converter Housing with Fluid Pump Assembly Removal

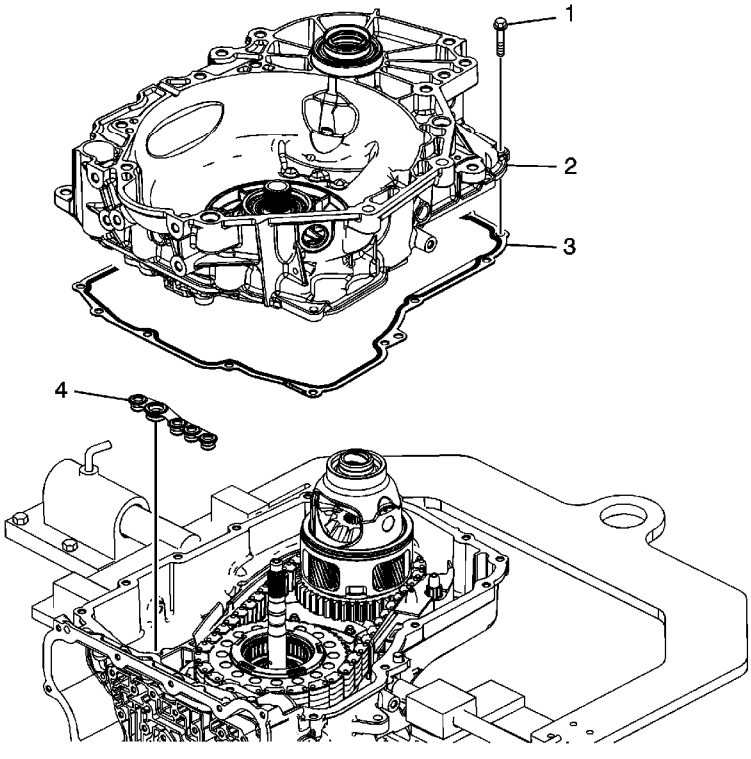

Callout	Component Name
1	Torque Converter and Differential Housing Bolts M8 x 30 (Qty: 15)
2	Torque Converter with Fluid Pump Housing Assembly
3	Torque Converter Housing Gasket **Tip** Discard the seal. It is not reusable.
4	Fluid Pump Seal Assembly **Tip** Discard the seal. It is not reusable.

cardiagn.com

Front Differential Carrier Assembly Removal

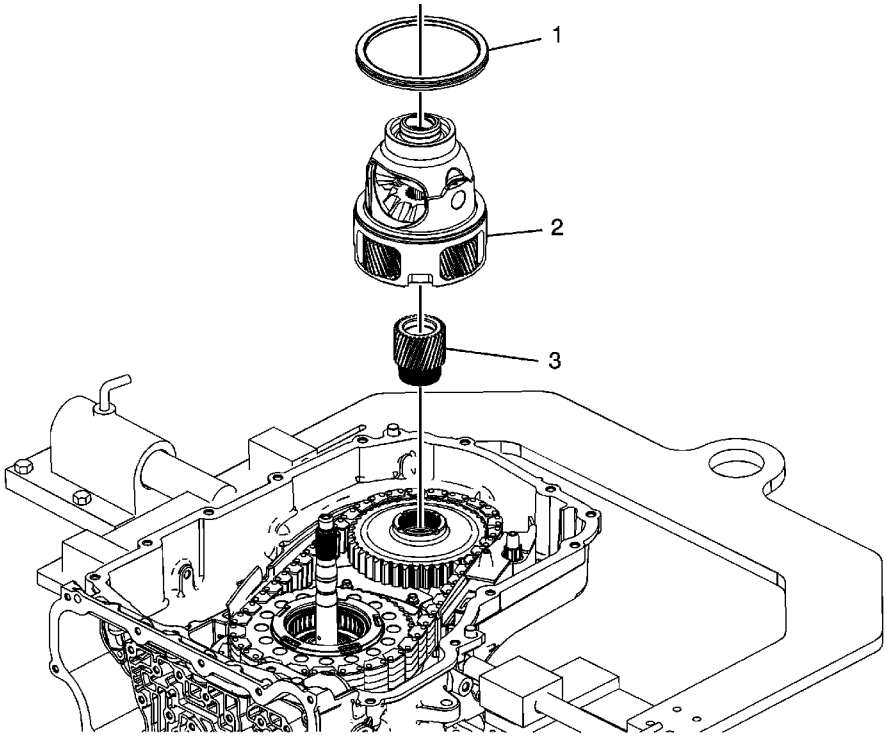

Callout	Component Name
1	Front Differential Carrier Bearing Assembly
2	Differential Carrier Assembly
3	

cardiagn.com

Drive and Driven Sprocket, Drive Link, and Park Pawl Removal

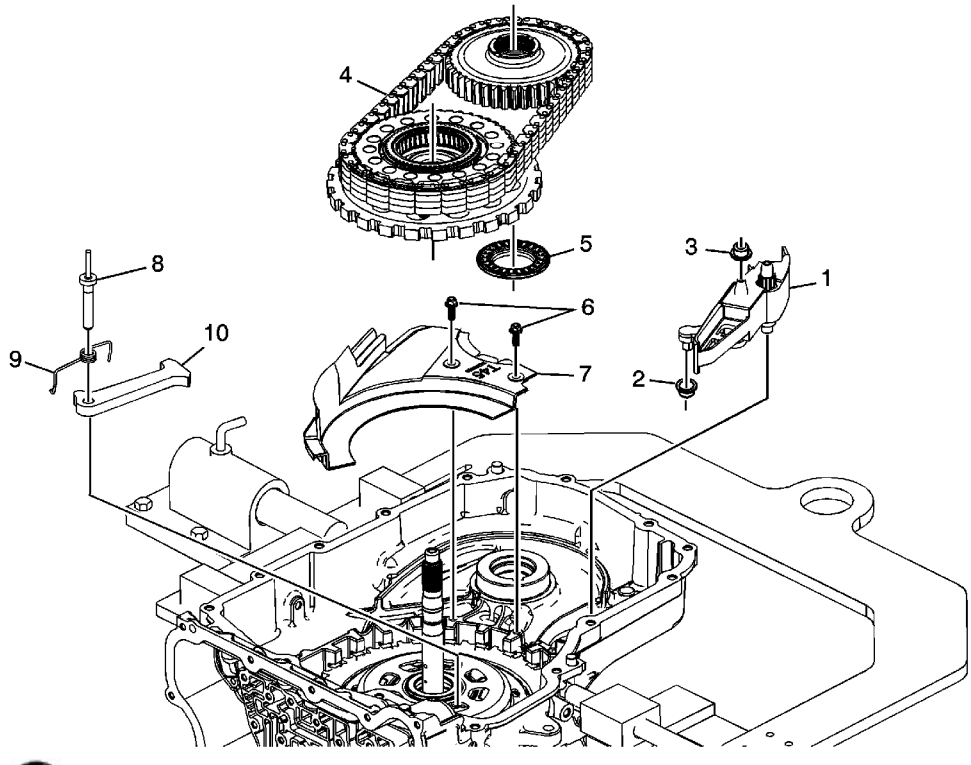

Callout	Component Name
1	Drive Link Lube Scoop
2	Drive Link Lube Scoop Seals
3	Drive Link Lube Fluid Seal
4	Driven Sprocket Assembly, Drive Sprocket and Park Gear Assembly and Drive Link **Tip** 1. The drive link, drive and driven sprocket assemblies must be removed at the same time. 2. The driven sprocket ball bearing inner race has a slight interference fit with the case. Pull straight up to ease removal.
5	Driven Sprocket Bearing Assembly **Tip** The driven sprocket bearing may be stuck to the driven sprocket.
6	Front Differential Carrier Baffle Bolts M6 x 16 (Qty: 2)
7	Front Differential Carrier Baffle

cardiagn.com

9	Park Pawl Spring
10	Park Pawl

cardiagn.com

Internal Components Removal

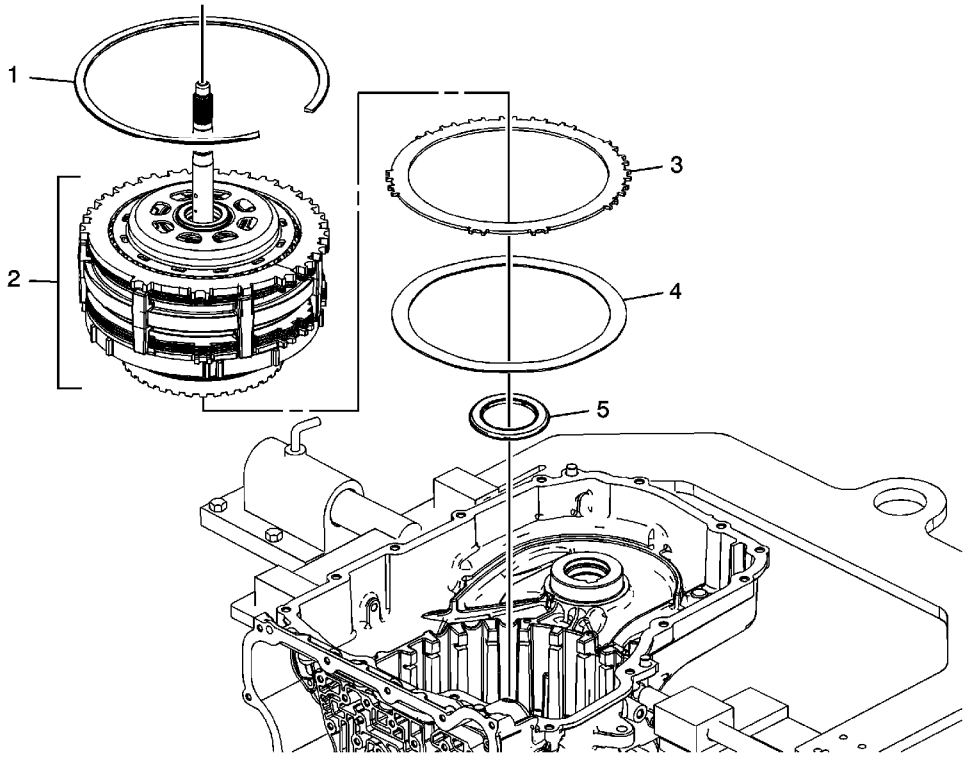

Callout	Component Name
1	1-2-3-4 Clutch Backing Plate Retainer Ring **Warning:** The retainer is under tension. Use care when removing or installing the retainer. Personal injury could result. **Caution:** Use caution during removal or installation of the retainer ring to avoid damage to the case machined surface in the park pawl area. Burrs or raised edges on the case machined surface can cause the park pawl to bind and prohibit it from engaging the park gear. **Tip** Remove one end of the retainer using *J-28585* remover or equivalent and work the retainer out of the case groove. **Special Tools** *J-28585* Snap Ring Remover or equivalent
2	3-5 Reverse and 4-5-6 Clutch Housing Assembly, Gearset, Low-Reverse Clutch Assembly and Low-Reverse and 1-2-3-4 Clutch Housing

cardiagn.com

3	2-6 Clutch Plate (Qty: 1)
4	2-6 Clutch Apply Plate (Waved)
5	35R and 456 Clutch Housing Thrust Bearing Assembly

cardiagn.com

2-6 Clutch Piston Removal

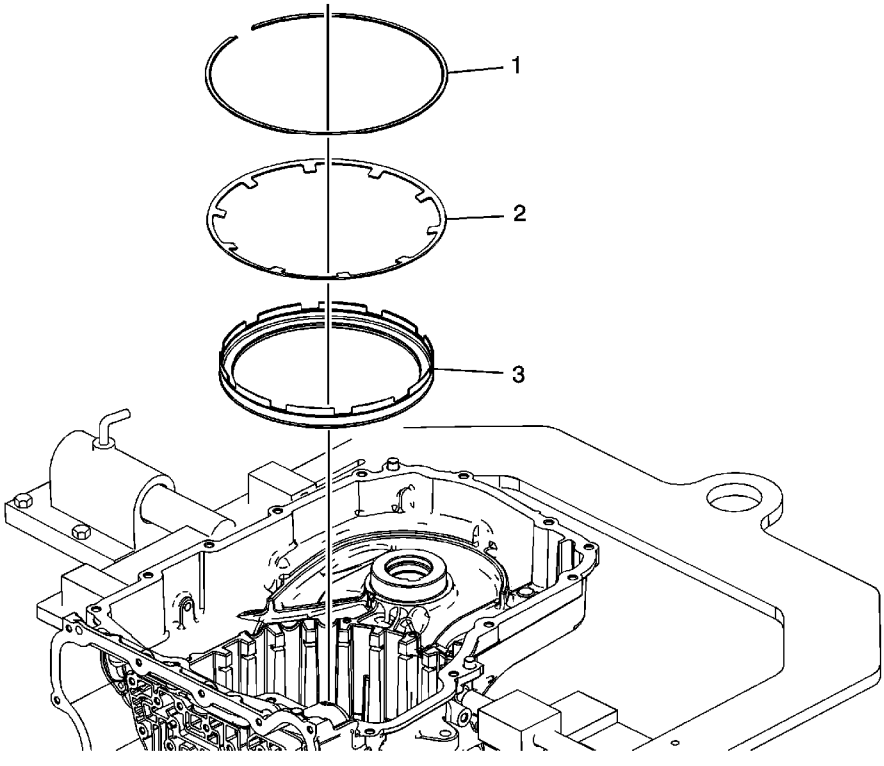

Callout	Component Name
1	2-6 Clutch Spring Retainer **Special Tool** *J 28585* Snap Ring Remover or equivalent
2	2-6 Clutch Spring
3	2-6 Clutch Piston Assembly **Tip** • Use pliers to remove the piston. • Inspect the piston seals for damage and/or wear. The piston is reusable.

cardiagn.com

Manual Shift Detent Lever with Shaft Position Switch Assembly and Park Pawl Actuator Removal

Table 1: Manual Shaft Detent (w/Shift Position Switch) Lever Assembly Removal
Table 2: Park Pawl and Actuator Guide Removal

Manual Shaft Detent (w/Shift Position Switch) Lever Assembly Removal

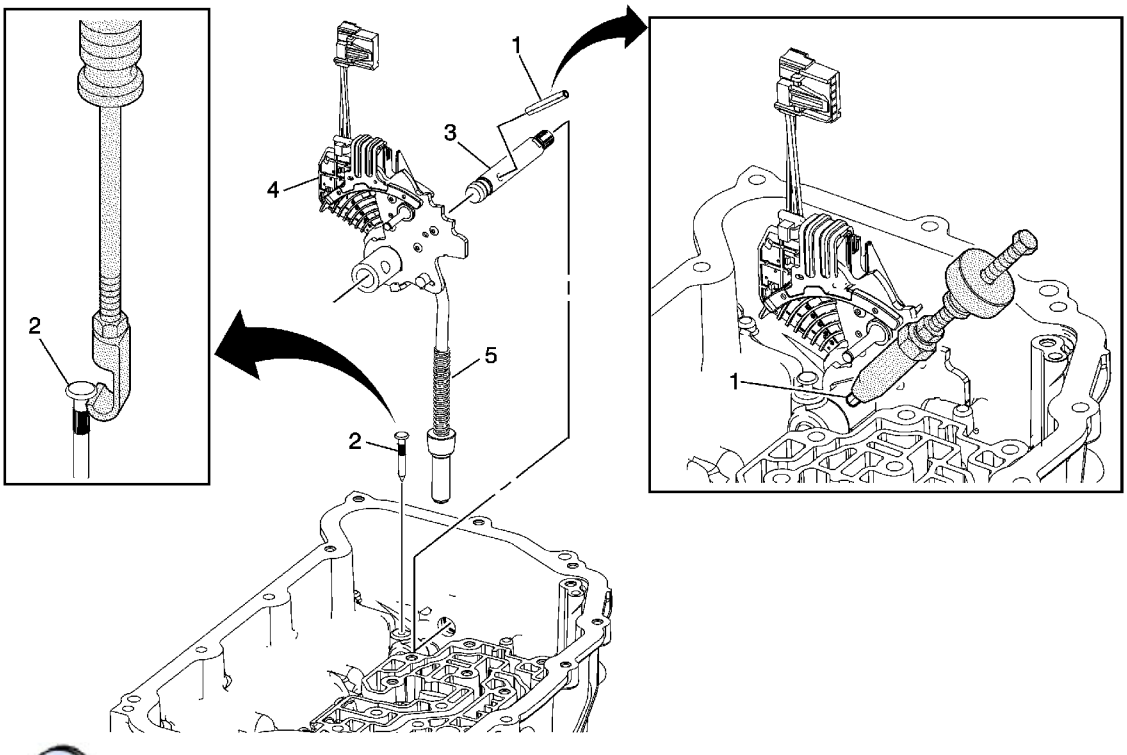

Manual Shaft Detent (w/Shift Position Switch) Lever Assembly Removal

Callout	Component Name
1	Manual Shaft Detent Lever Hub Pin **Special Tool** *DT-48550* Detent Lever Pin Remover
	Manual Shift Shaft Pin **Tip** Discard the pin. It is not reusable.

© 2010 General Motors Corporation. All rights reserved.

cardiagn.com

2	• *J 23129* Universal Seal Remover • *J 6125-B* Slide Hammer
3	Manual Shaft
4	Manual Shaft Detent (w/Shift Position Switch) Lever Assembly
5	Park Pawl Actuator Assembly

Park Pawl Actuator Guide Removal

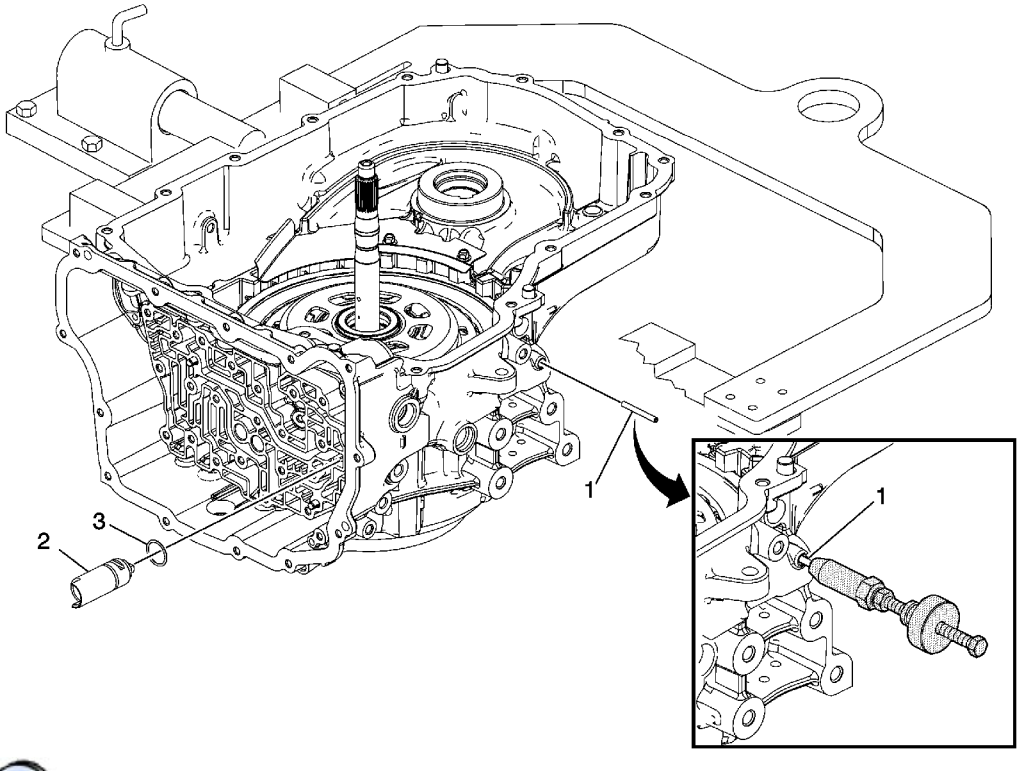

Park Pawl and Actuator Guide Removal

Callout	Component Name
1	Park Pawl Actuator Guide Pin
2	Park Pawl Actuator Guide Assembly
3	Park Pawl Actuator Guide Assembly Seal **Tip** Discard the seal. It is not reusable.

cardiagn.com

Manual Shift Shaft Seal Removal

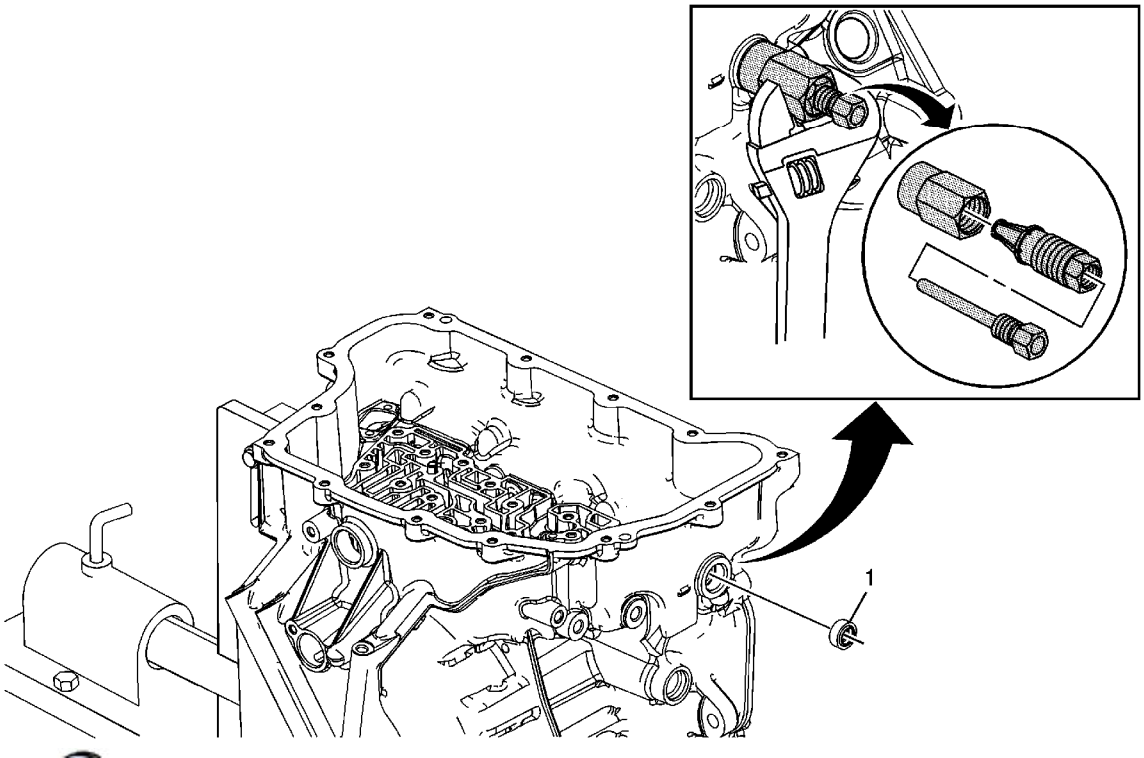

Callout	Component Name
1	Manual Shift Shaft Seal **Tip** Use the *J 45201* seal remover to remove the seal to prevent damage to the case surface. **Special Tools** *J 45201* Seal Remover

cardiagn.com

Input Shaft Support Replacement

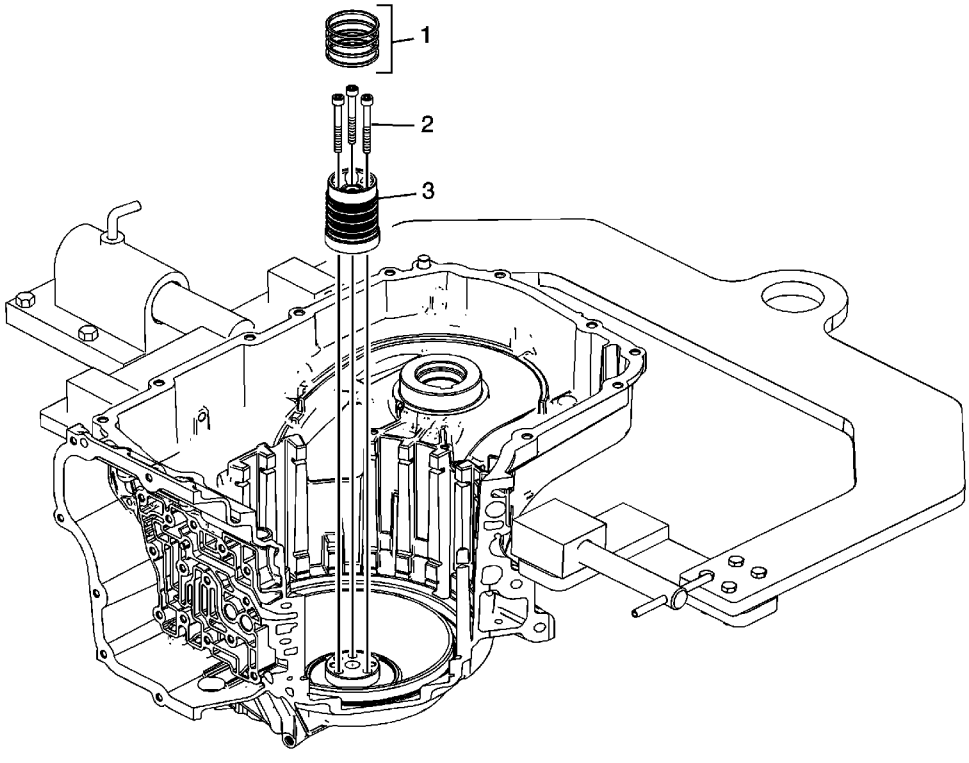

Callout	Component Name
1	3-5 Reverse and 4-5-6 Clutch Fluid Seals (Qty: 4) **Tip** • Discard the fluid seals. They are not reusable. • Refer to 3-5-Reverse and 4-5-6 Clutch Fluid Seal Ring Replacement.
2	Input Shaft Support Bolts M6 x 50 (Qty: 3) **Caution:** Refer to Fastener Caution in the Preface section. **Tighten** 12 N·m (106 lb in)
3	Input Shaft Support **Tip** Inspect the support for wear, damage or porosity.

cardiagn.com

3-5-Reverse and 4-5-6 Clutch Fluid Seal Ring Replacement

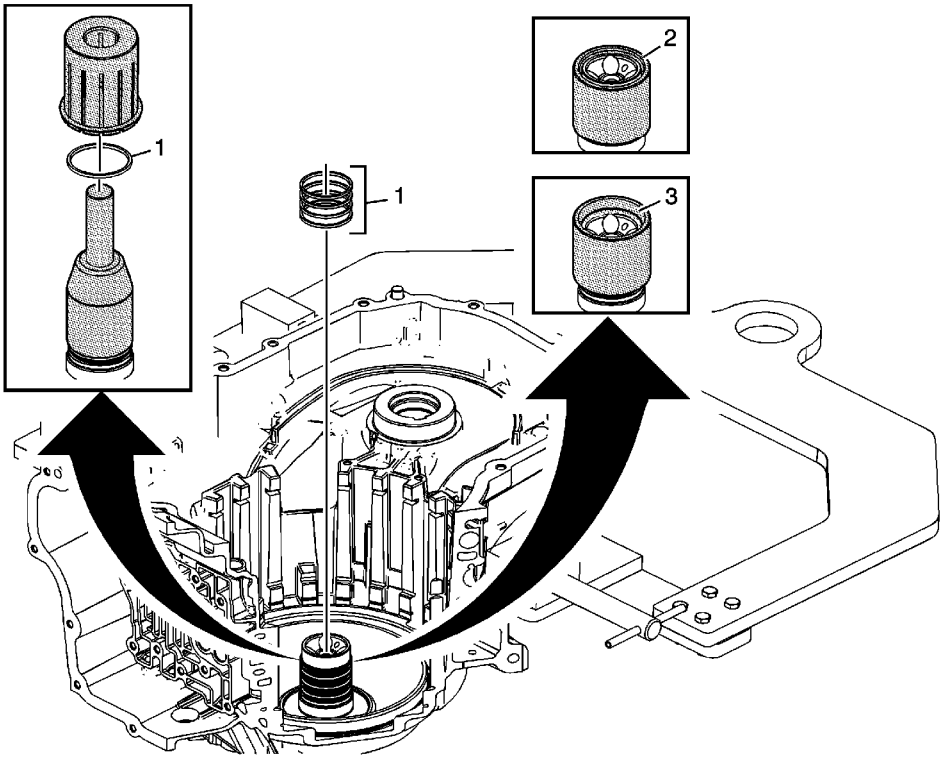

Callout	Component Name
1	3-5 Reverse and 4-5-6 Clutch Fluid Seals (Qty: 4) **Tip** 1. Place J-46620-3 which is part of *J-46620* installer over the case hub and adjust it so that only the bottom seal ring is exposed. 2. Place a NEW fluid seal ring onto J-46620-3 which is part of *J-46620* installer . 3. Use J-46620-2 which is part of *J-46620* installer to push the fluid seal ring down over J-46620-3 which is part of *J-46620* installer into the hub ring groove. 4. Repeat the above steps to install all 4 seal rings, adjusting J-46620-3 which is part of *J-46620* installer to the appropriate ring groove. **Special Tools** *J-46620* Seal Installer
	Small Chamfer Up

cardiagn.com

2	hand to help shrink the seal if J-46620-1 is difficult to install over the seal rings. **Tip** Install J-46620-1 which is part of *J-46620* installer with the large chamfer end down over the fluid seal rings and leave J-46620-1 which is part of *J-46620* installer on the seals for at least 60 seconds. **Special Tools** *J-46620* Seal Installer
3	Large Chamfer Up **Tip** 1. Install J-46620-1 which is part of *J-46620* installer with the small chamfer end facing down for at least 60 seconds. This will properly size the bottom seal ring. 2. Leaving J-46620-1 which is part of *J-46620* installer on the fluid seal rings for an extended period of time could cause a fluid leak on the initial clutch piston circuit until the seal rings warm up and expand to the proper dimension. **Special Tools** *J-46620* Seal Installer

cardiagn.com

Front Wheel Drive Shaft Seal Replacement - Case Side

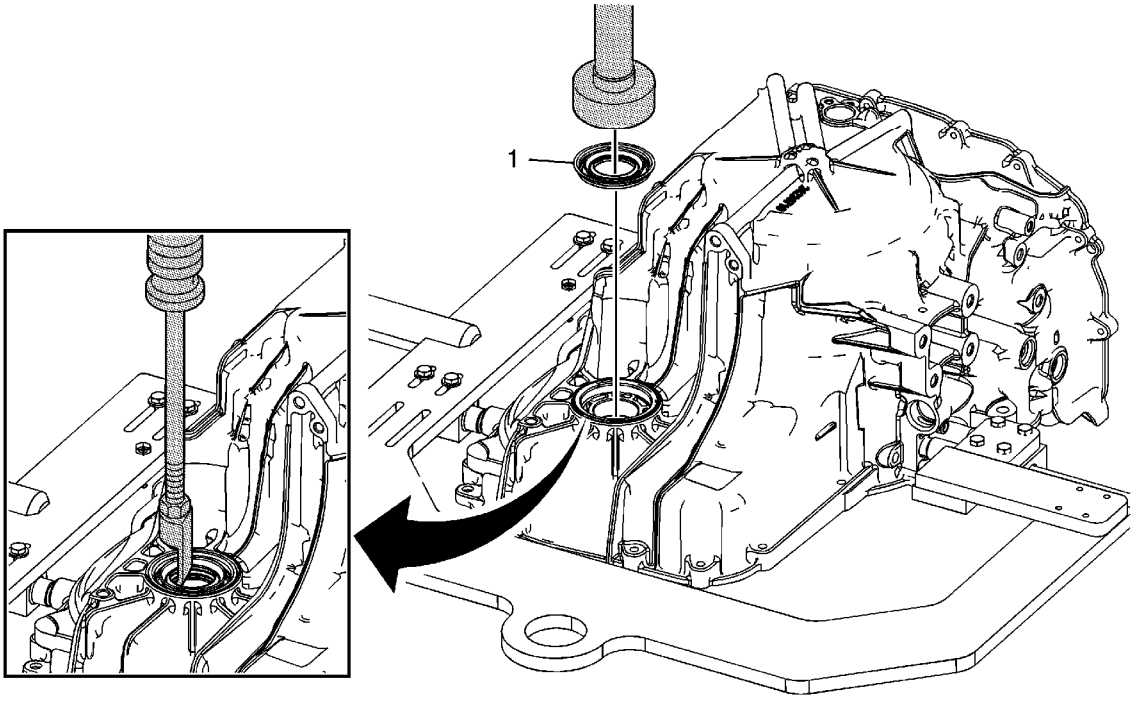

Callout	Component Name
1	Front Wheel Drive Shaft Oil Seal **Special Tools** • *DT-47790* Seal Installer • *J 6125-B* Slide Hammer • *J 8092* Driver Handle • *J 23129* Universal Seal Remover

cardiagn.com

Transmission Case Cleaning and Inspection

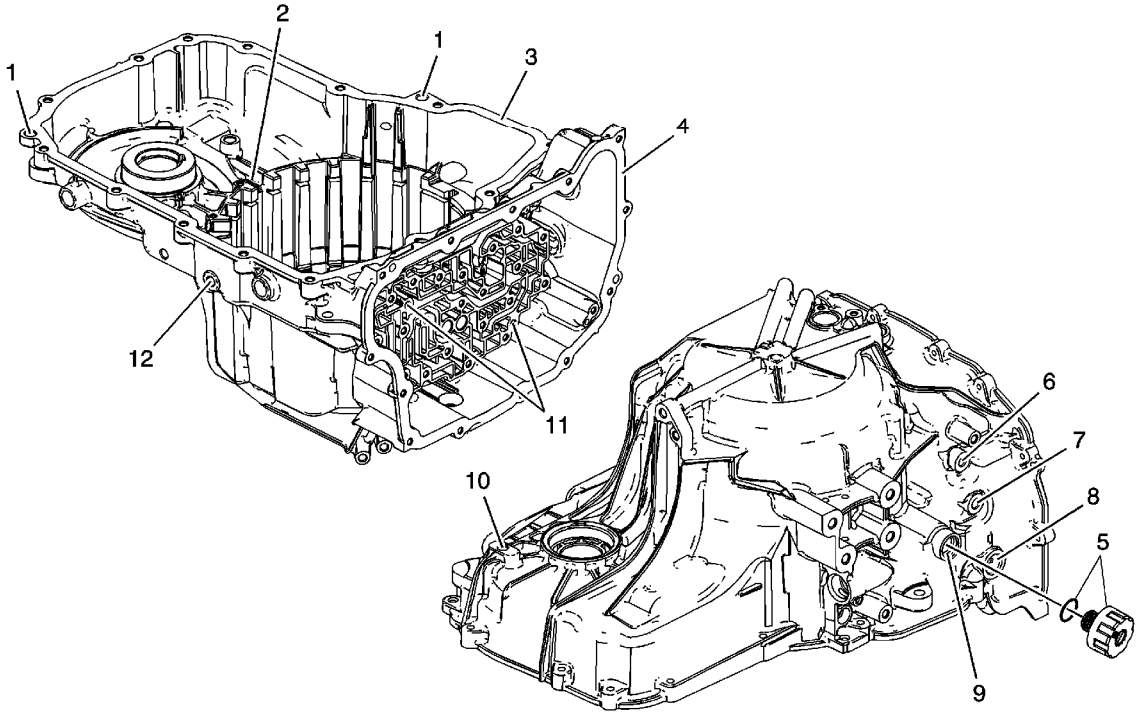

Callout	Component Name
Caution: Do not use abrasive pads or bristle devices to clean the sealing surfaces. Abrasive pads produce a fine grit that can effect transmission function. Abrasive pads can also remove enough metal to create oil leaks. **Caution:** After cleaning the transmission components, allow to air dry. Do not use cloth or paper towels in order to dry any transmission components. Lint from the towels can cause component failure. **Caution:** Do not reuse cleaning solvents. Previously used solvents may deposit sediment which may damage the component. **Preliminary Procedures** 1. Thoroughly clean the transmission case assembly, including case threads, with clean solvent. 2. Clean gasket sealing surfaces. Remove all residual gasket material. 3. Inspect all threaded holes. If necessary, repair any thread damage.	
	Torque Converter Housing Locating Pin **Procedure**

cardiagn.com

1	**Specification** The locating pins installed height is 7.4 mm (0.29 in).
2	Fluid Trough Check Ball **Specification** The check ball installed depth is 11.5 mm (0.45 in).
3	Converter Housing Sealing Surface
4	Control Valve Body Cover Sealing Surface
5	Fill Cap Seal
6	Transmission Fluid Cooler Pipe Sealing Surface
7	Fluid Pressure Test Plug **Caution:** Refer to Fastener Caution in the Preface section. **Tighten** 12 N·m (106 lb in)
8	Manual Shift Shaft Seal Surface
9	Fluid Fill Cap Sealing Surface
10	Fluid Level Plug **Tighten** 12 N·m (106 lb in)
11	Valve Body Locating Pin **Procedure** Inspect the valve body locating pins. **Specification** The locating pins installed height is 5.8 mm (0.22 in).
12	Drain Plug **Tighten** 12 N·m (106 lb in)

cardiagn.com

Manual Shift Detent Lever with Shaft Position Switch Assembly and Park Pawl Actuator Installation

Table 1: Park Pawl and Actuator Guide Installation
Table 2: Installation

Park Pawl Actuator Guide Installation

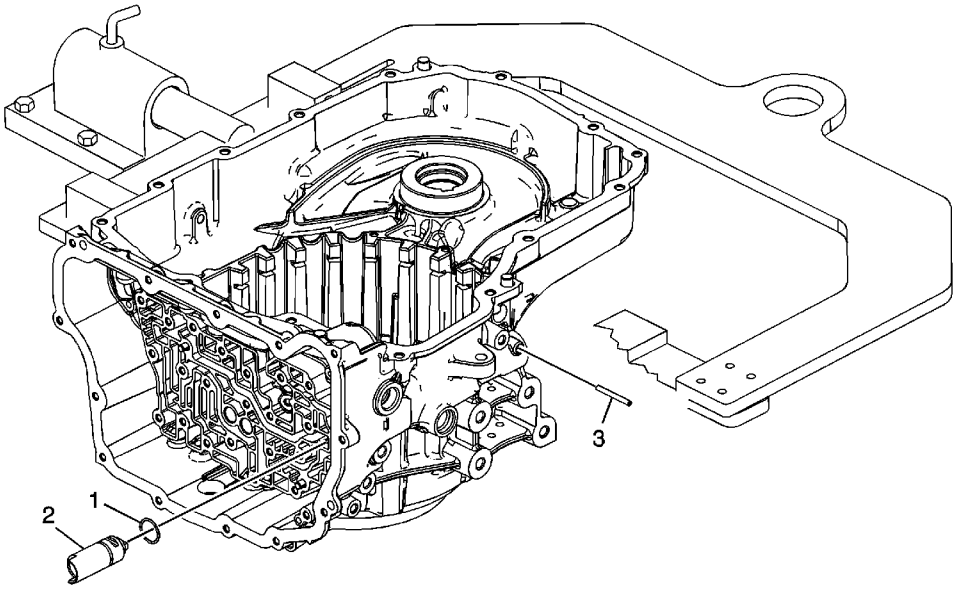

Park Pawl and Actuator Guide Installation

Callout	Component Name
1	Park Pawl Actuator Guide Assembly Seal
2	Park Pawl Actuator Guide Assembly
3	Park Pawl Actuator Guide Pin **Procedure** Install the park pawl actuator guide pin. **Specification** The park pawl actuator guide pin installed height is 9.7 mm (0.38 in).

cardiagn.com

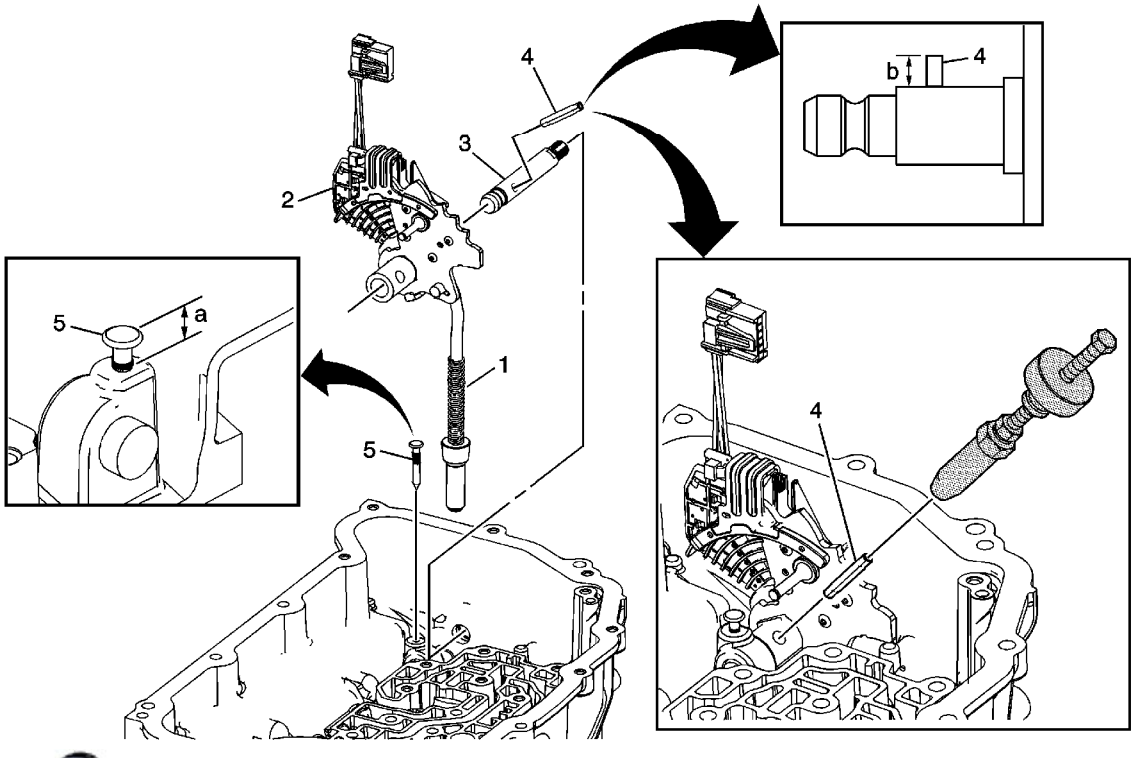

Installation

Callout	Component Name
1	Park Pawl Actuator Assembly
2	Manual Shift Detent (with Shaft Position Switch) Lever Assembly
3	Manual Shaft **Tip** Lubricate the shaft with ATF to prevent damage to the manual shift shaft seal during installation.
4	Manual Shaft Detent Lever Hub Pin **Tip** Use a NEW pin to ensure proper engagement with the shaft. *DT-48550* remover can also be used to install the pin. **Procedure** Install the manual shaft detent lever hub pin. **Specification:** The manual shaft detent lever hub pin installed height is (b) 7.9 mm (0.38 in).

cardiagn.com

	DT-48550 Detent Lever Pin Remover
5	Manual Shift Shaft Pin **Caution:** Use J 41229 to install the manual shaft pin at the correct height in order to properly secure the manual shaft. If you install the pin too deep, the case bore may crack. **Tip** Use a NEW pin to ensure proper engagement with the case. **Procedure** Inspect pin height. **Specification:** The manual shift shaft pin installed height is within (a) 7.2-8.2 mm (0.28-0.32 in). **Special Tools** *J-41229* Manual Shaft Pin Installer

cardiagn.com

Manual Shift Shaft Seal Installation

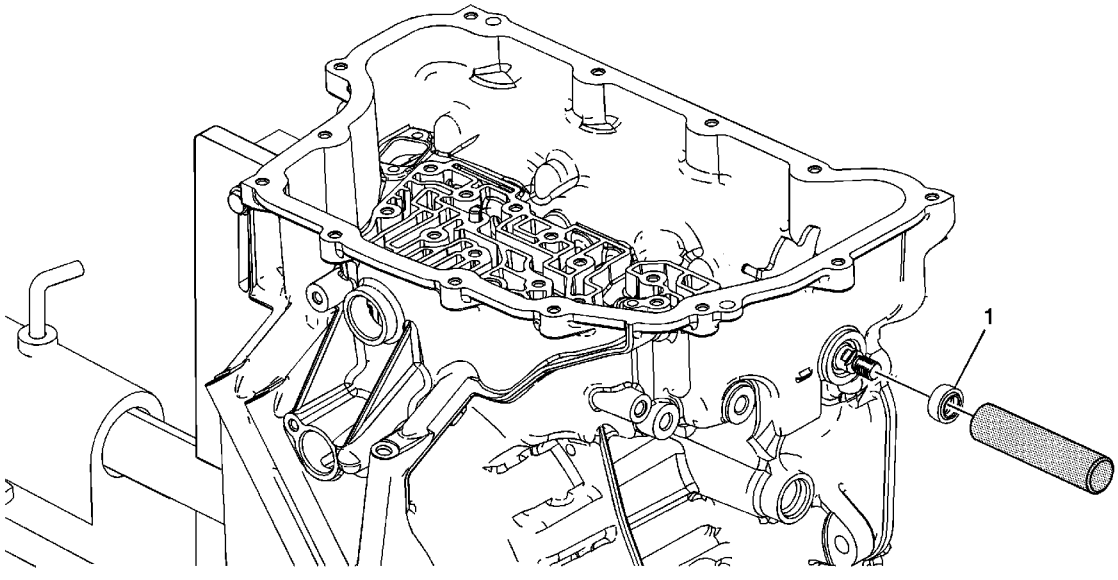

Callout	Component Name
1	Manual Shift Shaft Seal **Special Tool** *DT-49101* Seal Installer

cardiagn.com

2-6 Clutch Piston Installation

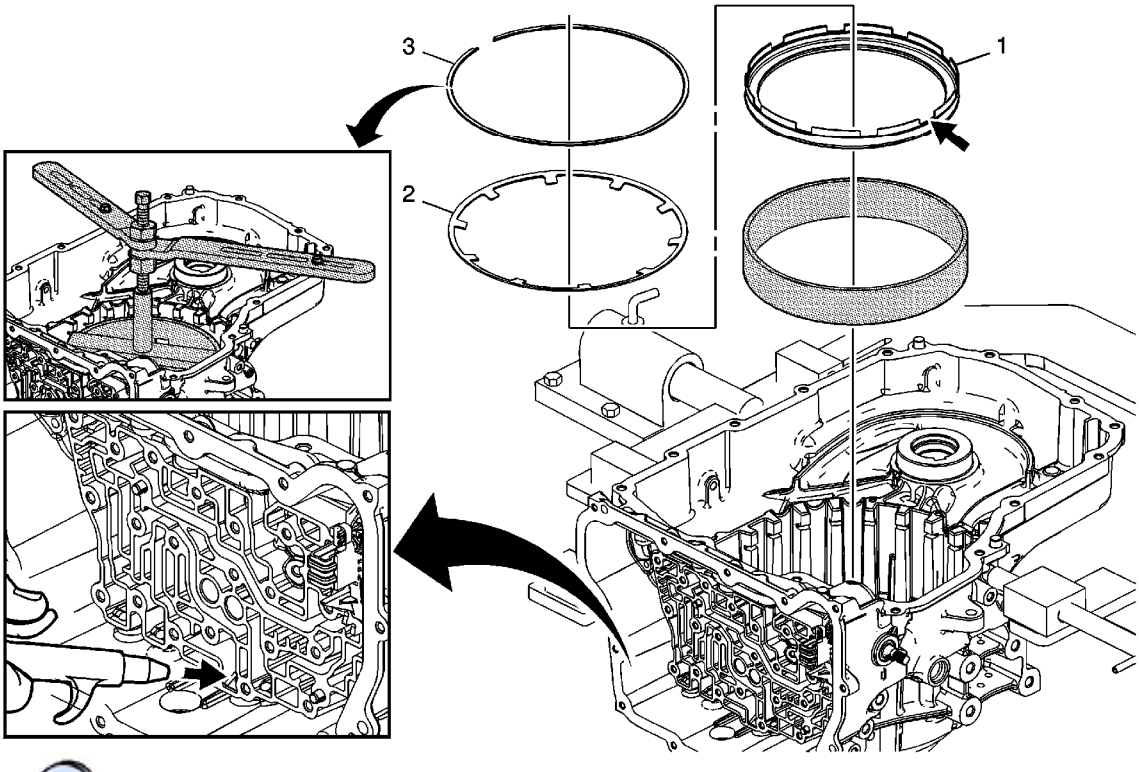

Callout	Component Name
1	2-6 Clutch Piston Assembly **Tip** • Position the 2-6 piston air bleed and large slot toward the top of the case. • *DT-47796* seal protector prevents the piston seal lip from damage during installation. Apply a thin coat of ATF to the I.D. of the *DT-47796* seal protector to ease installation of the piston. **Special Tool** *DT-47796* Seal Protector
2	2-6 Clutch Spring
	2-6 Clutch Spring Retainer **Caution:** Regulate the air pressure to 40 psi maximum. High pressure could cause the piston to over travel and damage the piston seals. **Tip** • Place the retainer on the 2-6 clutch spring and align the retainer opening with

cardiagn.com

3	• Apply shop air to the clutch fluid feed hole in the case to verify proper piston operation. **Special Tools** • *DT-47797* Spring Installer • *DT-48056* Spring Compressor Bridge

cardiagn.com

Low and Reverse and 1-2-3-4 Clutch Housing, Low and Reverse Clutch Assembly, Output Sun Gear, and 2-6 Clutch Plate Disassemble

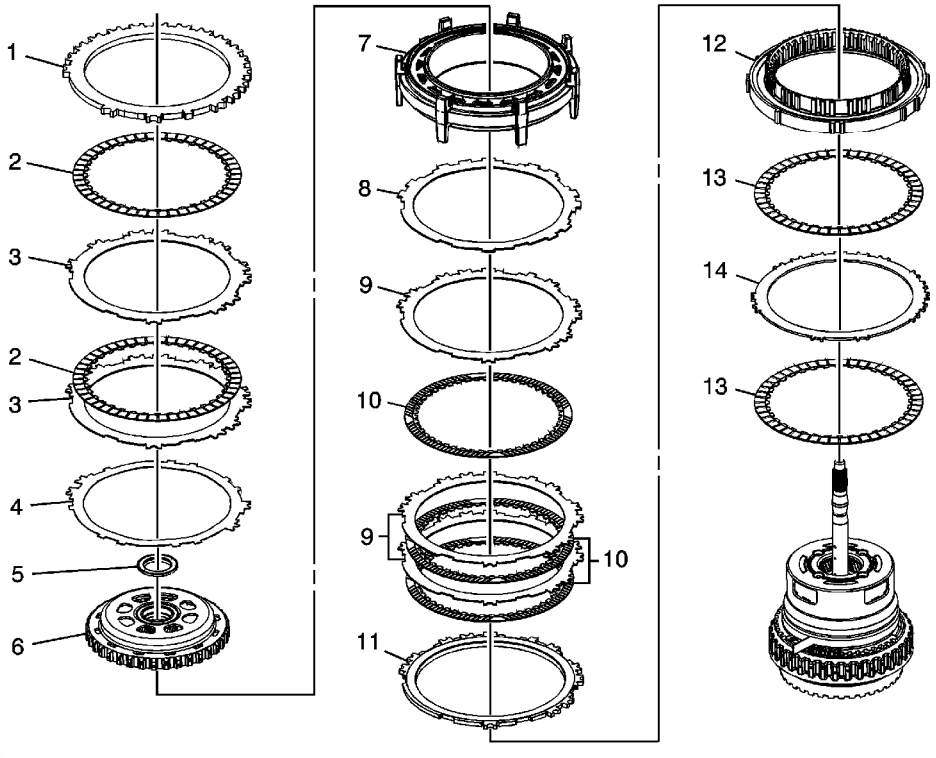

Callout	Component Name
1	1-2-3-4 Clutch Backing Plate
2	1-2-3-4 Clutch Plate Assembly (Qty: 2)
3	1-2-3-4 Clutch Plate (Qty: 2)
4	1-2-3-4 Clutch Waved Plate
5	Output Sun Gear Thrust Bearing Assembly **Tip** The sun gear thrust bearing may be stuck to the driven sprocket hub.
6	Output Sun Gear Assembly
7	Low-Reverse and 1-2-3-4 Clutch Housing Assembly
8	Low and Reverse Clutch Apply Plate
9	Low and Reverse Clutch Plate (Qty: 3)
10	Low and Reverse Clutch Plate Assembly (Qty: 3)
11	Low and Reverse Clutch Backing Plate

cardiagn.com

13	2-6 Clutch Plate Assembly (Qty: 2)
14	2-6 Clutch Plate (Qty: 1)

cardiagn.com

Input, Reaction, and Output Carrier Disassemble

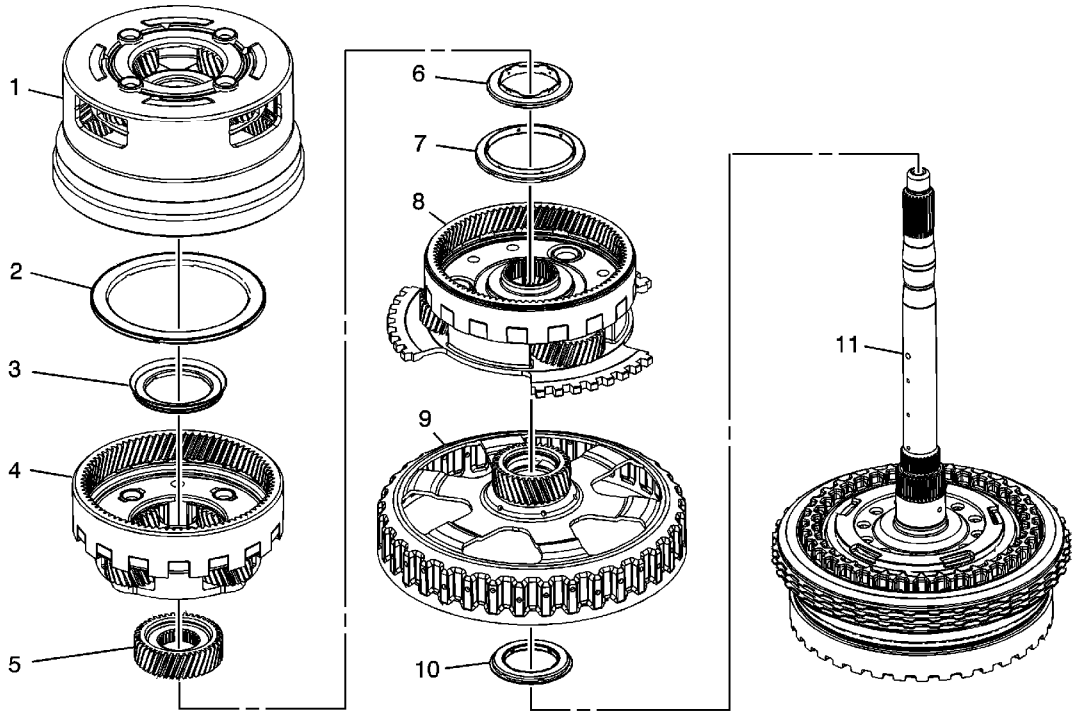

Callout	Component Name
1	Output Carrier Assembly
2	Output Carrier Thrust Bearing Assembly
3	Input Sun Gear Thrust Bearing Assembly
4	Input Carrier Assembly
5	Input Sun Gear
6	Input Sun Gear Thrust Bearing Assembly
7	Input Carrier Thrust Bearing Assembly
8	Reaction Carrier Assembly
9	Reaction Carrier Sun Gear Assembly
10	Reaction Carrier Sun Gear Thrust Bearing **Tip** The sun gear thrust bearing may be stuck to the sun gear.
11	3-5 Reverse and 4-5-6 Clutch Housing Assembly

cardiagn.com

3-5-Reverse and 4-5-6 Clutch Housing Disassemble

Table 1: Turbine Shaft, Reluctor Wheel and Piston Removal
Table 2: 4-5-6 Clutch Plate Removal
Table 3: 4-5-6 Clutch Piston Removal
Table 4: Reluctor Wheel and Piston Removal
Table 5: 3-5 Reverse Clutch Plate Removal

Turbine Shaft, Reluctor Wheel and Piston Removal

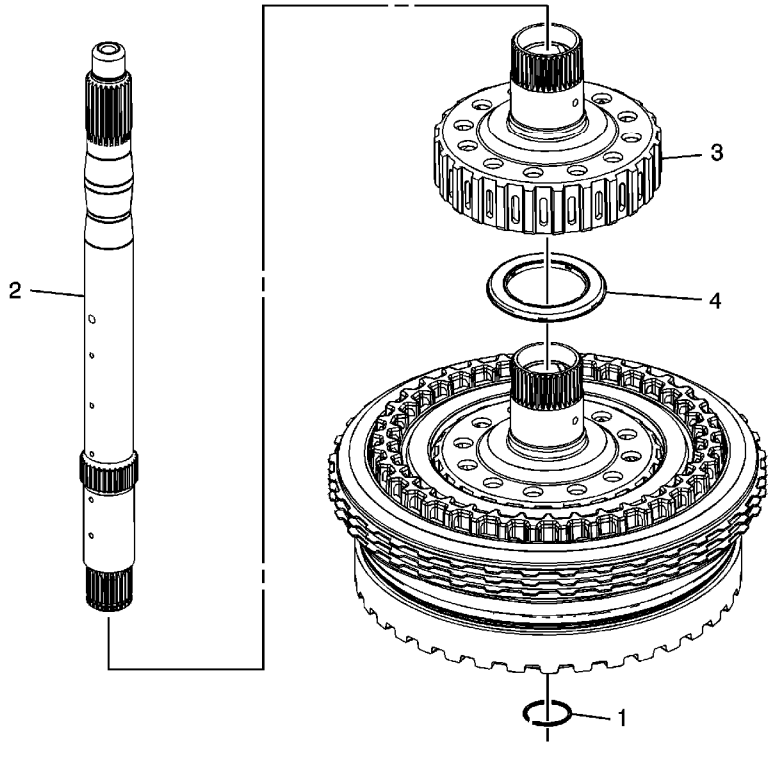

Turbine Shaft, Reluctor Wheel and Piston Removal

Callout	Component Name
1	Turbine Shaft Retainer Ring **Tip** Discard the retainer ring. It is not re-usable. **Special Tools** *J-5586-A* Snap Ring Pliers or equivalent
2	Turbine Shaft

cardiagn.com

4	Reaction Carrier Hub Thrust Bearing Assembly

4-5-6 Clutch Plate Removal

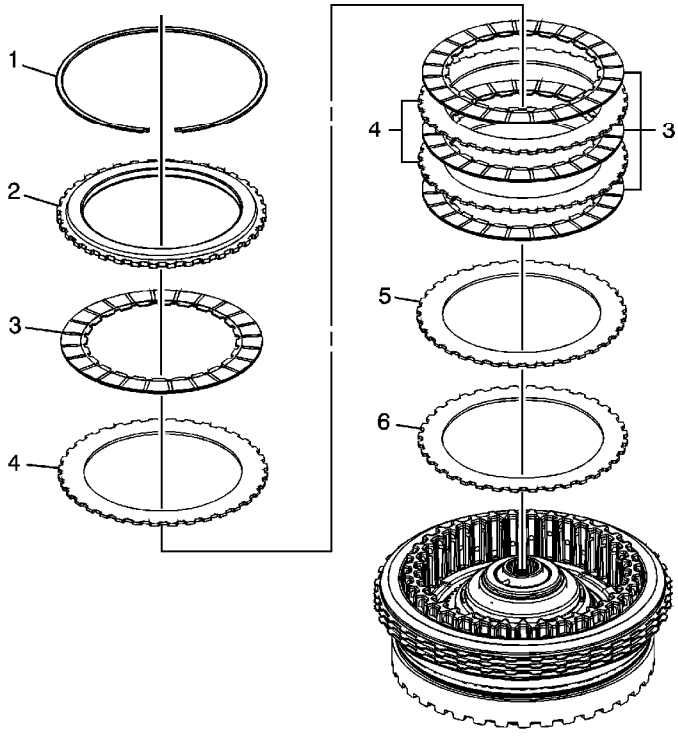

4-5-6 Clutch Plate Removal

Callout	Component Name
1	4-5-6 Clutch Backing Plate Retaining Ring
2	4-5-6 Clutch Backing Plate
3	4-5-6 Clutch Plate Assembly (Qty: 4)
4	4-5-6 Clutch Plate (Qty: 3)
5	4-5-6 Clutch Apply Plate
6	4-5-6 Clutch Wave Plate

4-5-6 Clutch Piston Removal

cardiagn.com

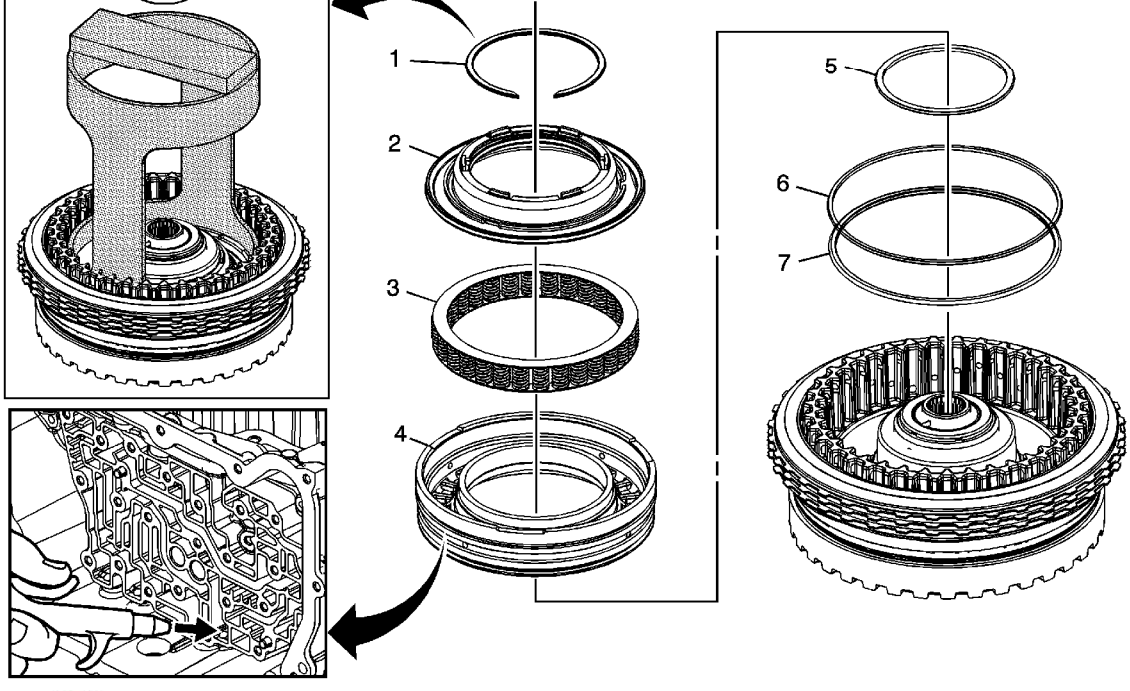

4-5-6 Clutch Piston Removal

Callout	Component Name
1	4-5-6 Clutch Dam Retaining Ring **Special Tools** • *DT-47951-2* Spring Compressor • *J-5586-A* Snap Ring Pliers or equivalent
2	4-5-6 Clutch Piston Fluid Dam Assembly **Tip** 1. Place the 3-5 reverse and 4-5-6 clutch housing onto the support hub in the case. 2. Apply shop air to the 4-5-6 clutch feed hole using a rubber tipped air gun to dislodge the dam piston and the 4-5-6 clutch piston from the clutch housing.
3	4-5-6 Clutch Piston Return Spring Assembly
4	4-5-6 Clutch Piston **Tip** Apply shop air to the 4-5-6 clutch feed hole using a rubber tipped air gun to dislodge the clutch piston.
5	4-5-6 Clutch Piston Inner Seal
6	4-5-6 Clutch Piston Outer Seal (DK Blue) (Stepped)

cardiagn.com

Reluctor Wheel and Piston Removal

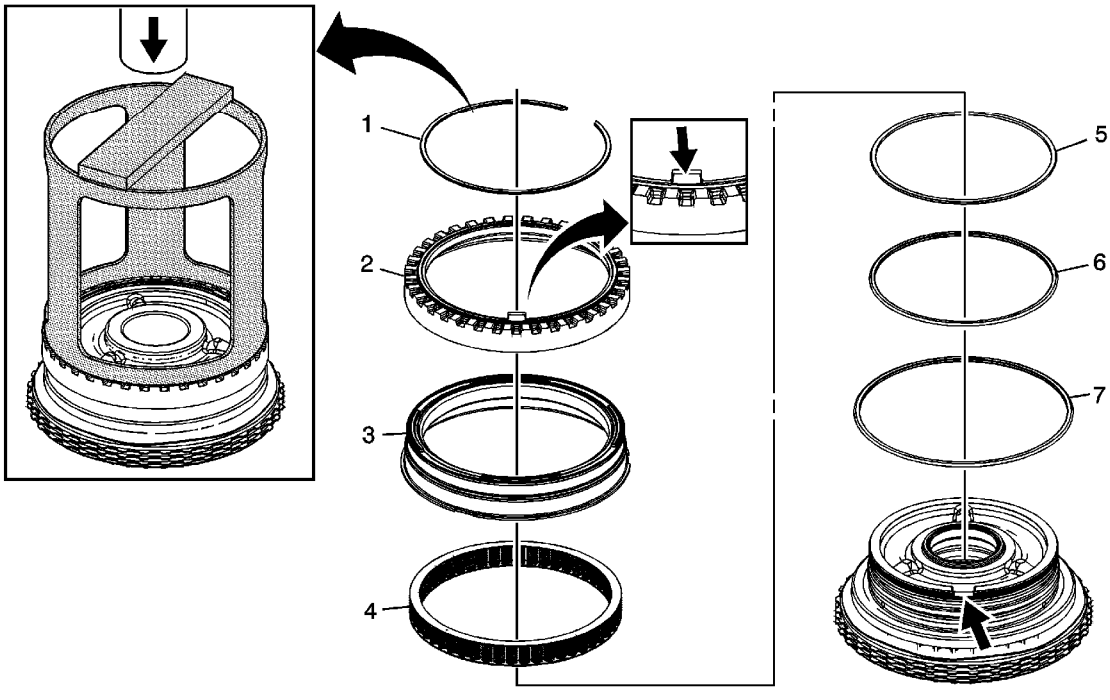

Reluctor Wheel and Piston Removal

Callout	Component Name
1	Input Shaft Speed Sensor Reluctor Ring Retainer Ring **Caution:** Compress the reluctor wheel just enough to clear the retainer. Over compressing the reluctor wheel will break the alignment tab and the clutch housing. **Special Tools** *DT-47694* Piston Spring Compressor
2	Input Shaft Speed Sensor Reluctor Wheel
3	3-5 Reverse Clutch Piston
4	3-5 Reverse Clutch Piston Return Spring Assembly
5	3-5 Reverse Clutch Piston Inner (Reluctor) Seal (Orange)
6	3-5 Reverse Clutch Piston Inner Seal
7	3-5 Reverse Clutch Piston Dam Seal (Black)

3-5 Reverse Clutch Plate Removal

cardiagn.com

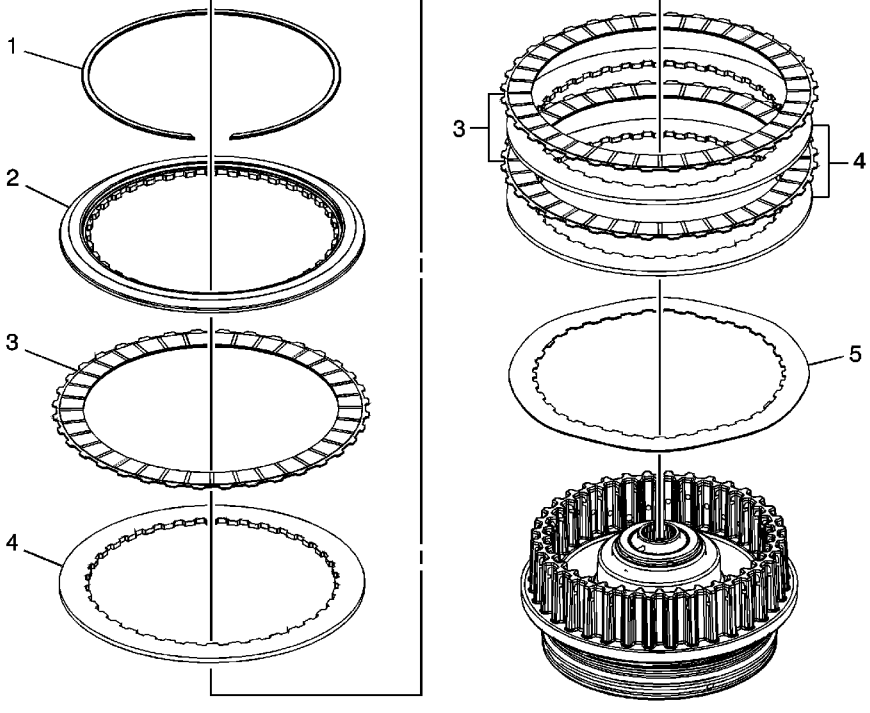

3-5 Reverse Clutch Plate Removal

Callout	Component Name
1	3-5 Reverse Clutch Backing Plate Ring Retainer Ring **Tip** Gently push down on the backing plate to get enough clearance between the backing plate and retainer.
2	3-5 Reverse Clutch Backing Plate
3	3-5 Reverse Clutch Plate Assembly (Qty: 3)
4	3-5 Reverse Clutch Plate (Qty: 3)
5	3-5 Reverse Clutch Apply Plate (Waved)

cardiagn.com

3-5-Reverse and 4-5-6 Clutch Housing Assemble

Table 1: 3-5 Reverse Clutch Plates Installation
Table 2: Reluctor Wheel and Piston Installation
Table 3: 4-5-6 Clutch Piston Installation
Table 4: 4-5-6 Clutch Fluid Dam Installation
Table 5: 4-5-6 Clutch Plates Installation
Table 6: Turbine Shaft Installation

3-5 Reverse Clutch Plates Installation

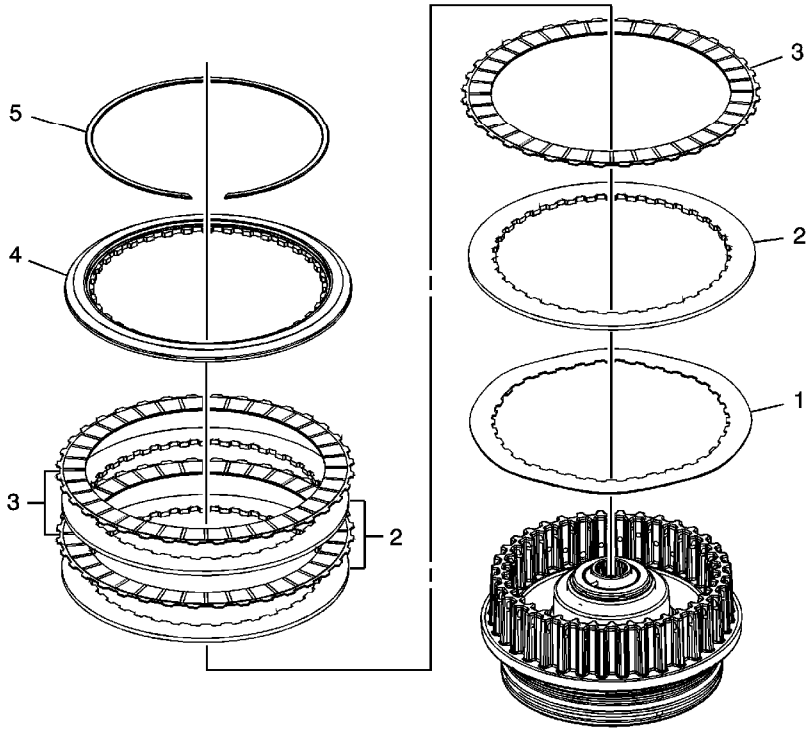

3-5 Reverse Clutch Plates Installation

Callout	Component Name
1	3-5 Reverse Clutch Apply Plate (Waved)
2	3-5 Reverse Clutch Plate (Qty: 3)
3	3-5 Reverse Clutch Plate Assembly (Qty: 3)
4	3-5 Reverse Clutch Backing Plate
5	3-5 Reverse Clutch Backing Plate Ring Retainer Ring

Reluctor Wheel and Piston Installation

cardiagn.com

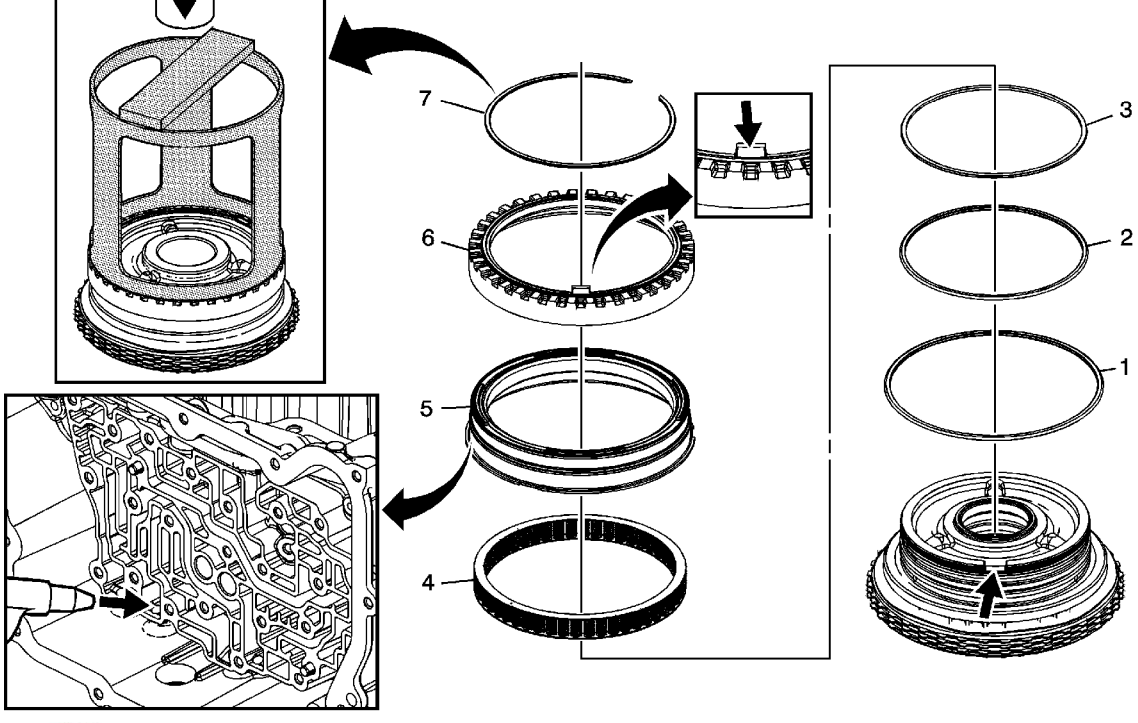

Reluctor Wheel and Piston Installation

Callout	Component Name
1	3-5 Reverse Clutch Piston Dam Seal (Black)
2	3-5 Reverse Clutch Piston Inner Seal
3	3-5 Reverse Clutch Piston Inner (Reluctor) Seal (Orange)
4	3-5 Reverse Clutch Piston Return Spring Assembly
5	3-5 Reverse Clutch Piston
6	Input Shaft Speed Sensor Reluctor Wheel
7	Input Shaft Speed Sensor Reluctor Ring Retainer Ring **Caution:** Compress the reluctor wheel just enough to clear the retainer. Over compressing the reluctor wheel will break the alignment tab and the clutch housing. **Caution:** Regulate the air pressure to 40 psi maximum. High pressure could cause the piston to over travel and damage the piston seals. **Tip** Place the housing assembly onto the input shaft support inside the case. Apply shop air to the clutch fluid feed hole in the case to verify proper piston operation. **Special Tools** *DT-47694* Piston Spring Compressor

cardiagn.com

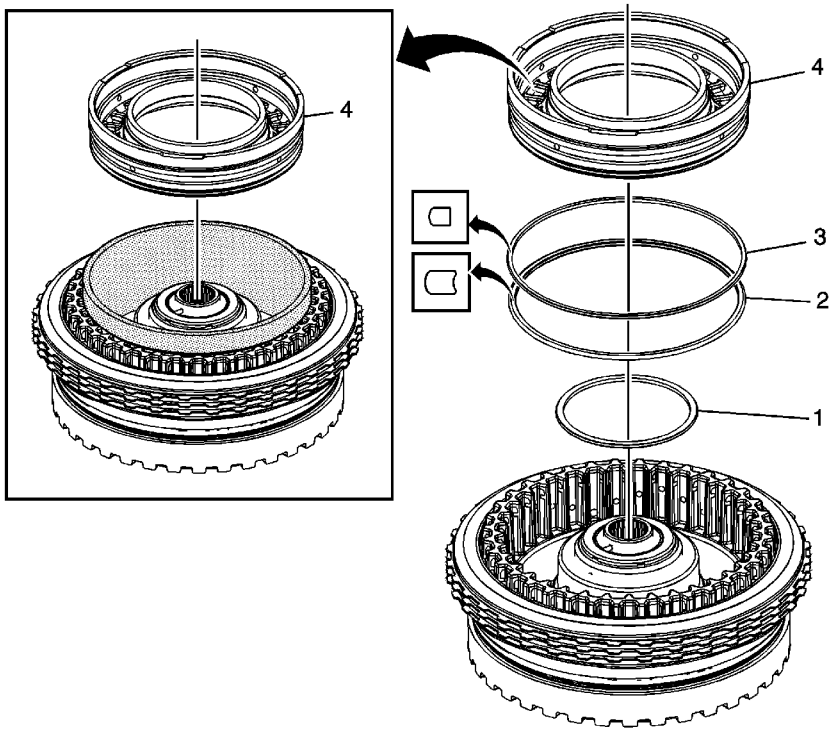

4-5-6 Clutch Piston Installation

Callout	Component Name
1	4-5-6 Clutch Piston Inner Seal
2	4-5-6 Clutch Piston Outer Seal (Large) (Rounded)
3	4-5-6 Clutch Piston Outer Seal (DK Blue) (Stepped)
4	4-5-6 Clutch Piston **Tip** • *DT-47805* seal protector prevents the dam seal lip from damage during installation. Apply a thin coat of ATF to the I.D. of *DT-47805* protector to ease the installation of the piston. • *DT-47951-2* spring compressor can be used as a pusher if necessary. **Special Tools** • *DT-47805* Seal Protector • *DT-47951-2* Spring Compressor

4-5-6 Clutch Fluid Dam Installation

cardiagn.com

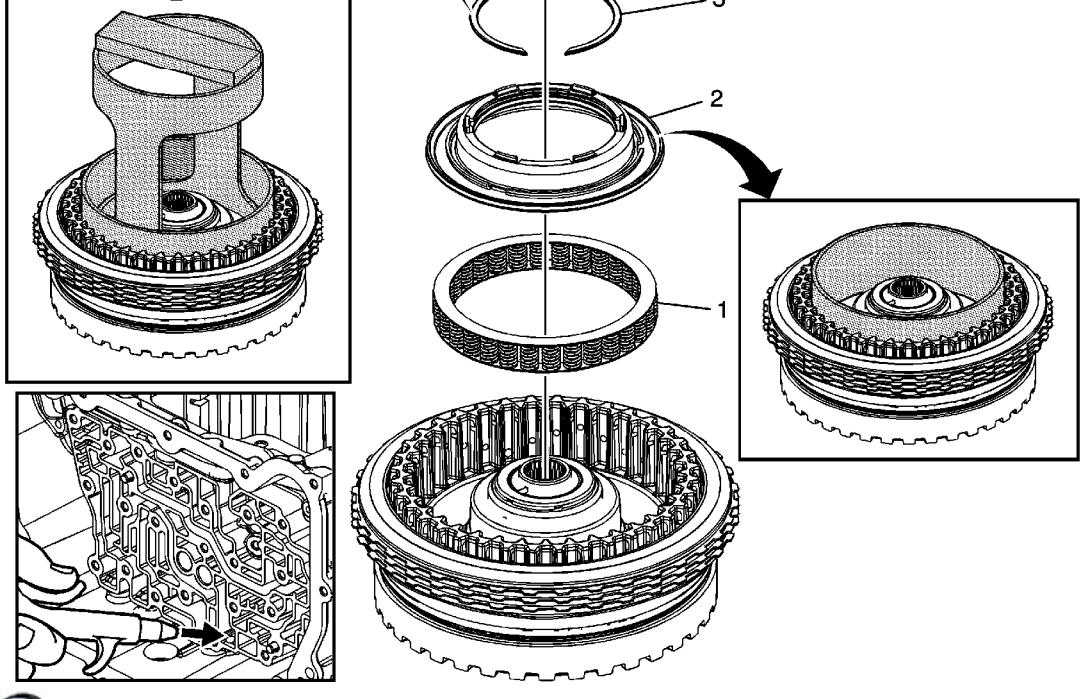

4-5-6 Clutch Fluid Dam Installation

Callout	Component Name
1	4-5-6 Clutch Piston Return Spring Assembly
2	4-5-6 Clutch Piston Fluid Dam Assembly **Tip** *DT-47951-1* seal protector prevents the dam seal lip from damage during installation. Apply a thin coat of ATF to the I.D. of *DT-47951-1* protector to ease the installation of the dam. **Special Tools** *DT-47951-1* Seal Protector
3	4-5-6 Clutch Dam Retaining Ring **Caution:** Regulate the air pressure to 40 psi maximum. High pressure could cause the piston to over travel and damage the piston seals. **Tip** • Leave *DT-47951-1* protector in place while installing the retaining ring. • Place the housing assembly onto the input shaft support inside the case. Apply shop air to the clutch fluid feed hole in the case to verify proper piston operation. **Special Tools**

cardiagn.com

4-5-6 Clutch Plates Installation

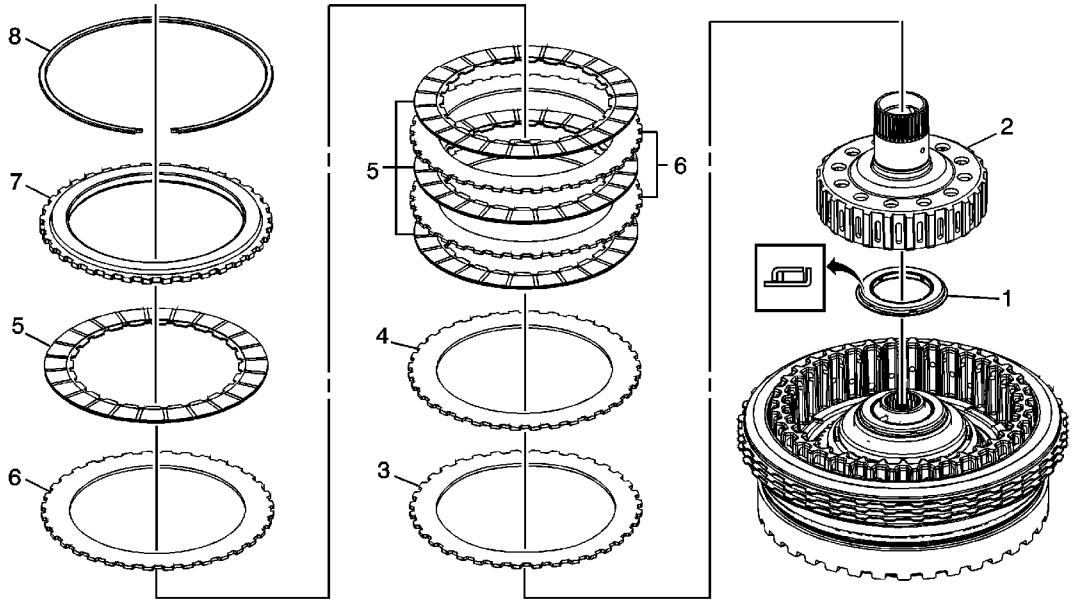

4-5-6 Clutch Plates Installation

Callout	Component Name
1	Reaction Carrier Hub Thrust Bearing Assembly
2	Reaction Carrier Hub Assembly
3	4-5-6 Clutch Wave Plate
4	4-5-6 Clutch Apply Plate
5	4-5-6 Clutch Plate Assembly (Qty: 4)
6	4-5-6 Clutch Plate (Qty: 3)
7	4-5-6 Clutch Backing Plate
8	4-5- 6 Clutch Backing Plate Retaining Ring

Turbine Shaft Installation

cardiagn.com

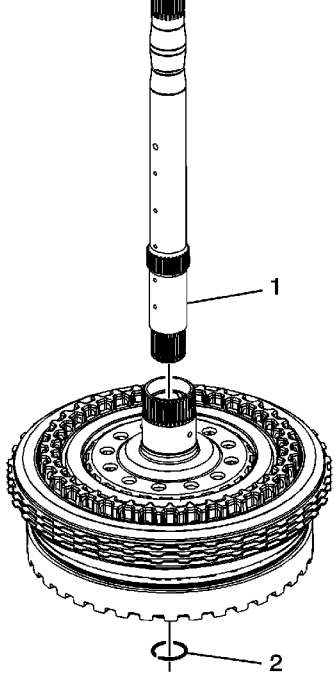

Turbine Shaft Installation

Callout	Component Name
1	Turbine Shaft
2	Turbine Shaft Retainer Ring **Tip** Do not re-use the turbine shaft retainer ring. **Special Tools** *J-5586-A* Snap Ring Pliers or equivalent

cardiagn.com

Input, Reaction, and Output Carrier Assemble

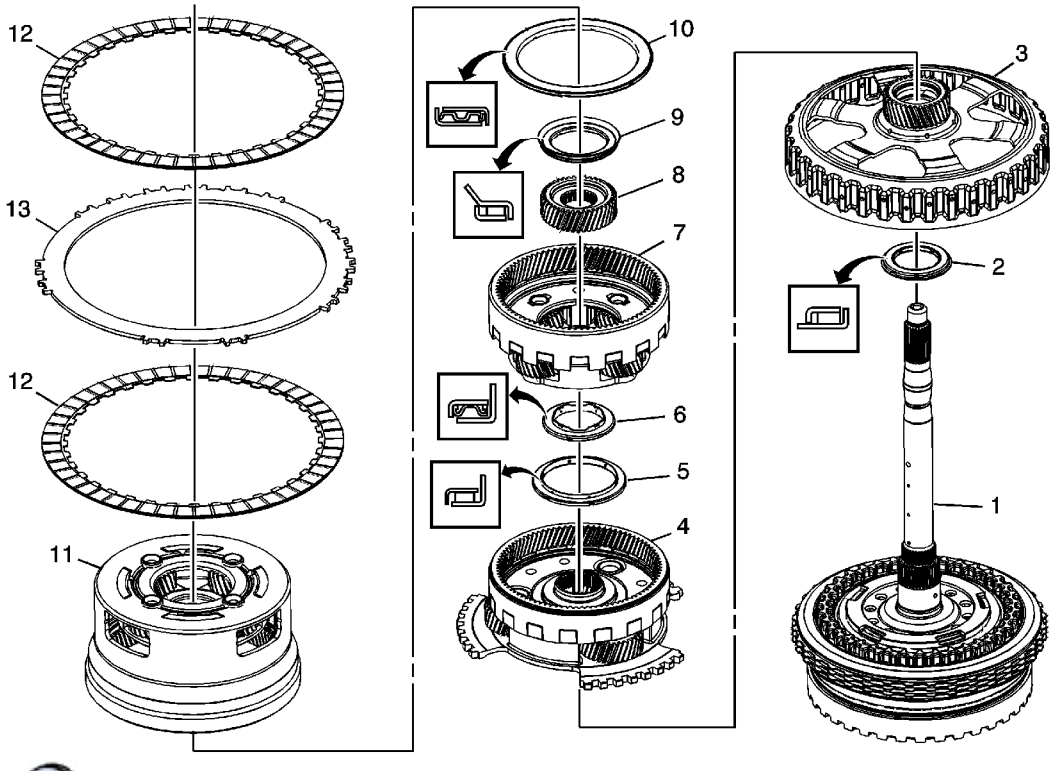

Callout	Component Name
1	3-5 Reverse and 4-5-6 Clutch Housing Assembly
2	Reaction Carrier Sun Gear Thrust Bearing
3	Reaction Carrier Sun Gear Assembly
4	Reaction Carrier Assembly
5	Input Carrier Thrust Bearing Assembly
6	Input Sun Gear Thrust Bearing Assembly
7	Input Carrier Assembly
8	Input Sun Gear
9	Input Sun Gear Thrust Bearing Assembly
10	Output Carrier Thrust Bearing Assembly
11	Output Carrier Assembly
12	2-6 Clutch Plate Assembly (Qty: 2) **Tip** Begin with the clutch plate assembly and alternate with the clutch plate.
	2-6 Clutch Plate (Qty: 1)

© 2010 General Motors Corporation. All rights reserved.

cardiagn.com

	into the case.

cardiagn.com

3-5-Reverse and 4-5-6 Clutch Housing, and Input, Reaction, and Output Carrier Installation

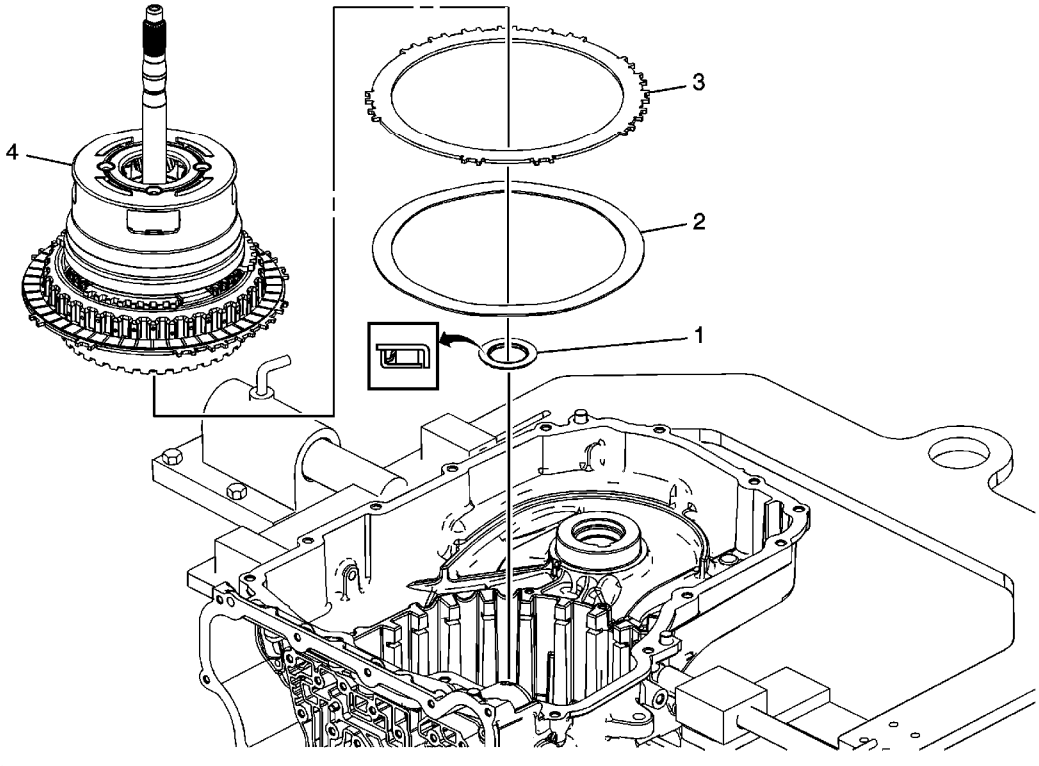

Callout	Component Name
1	3-5 Reverse and 4-5-6 Clutch Housing Thrust Bearing
2	2-6 Clutch Apply Plate (Waved)
3	2-6 Clutch Plate (Qty: 1) **Tip** • Only install one 2-6 Clutch Plate. The remaining clutch plate is installed with the gearset assembly. • Align the large flat areas with the valve body end of the case and the 2 tabs on the clutch plate that are close to each other with the slots at the bottom right corner of the case.
4	3-5 Reverse and 4-5-6 Clutch Housing Assembly and Gearset **Tip** Align the large flat areas of the 2-6 Clutch Plate with the valve body end of the case and the 2 tabs on the clutch plate that are close to each other with the slots at the bottom right corner of the case.

cardiagn.com

Low and Reverse Clutch Assembly and Low and Reverse Clutch Plate Installation

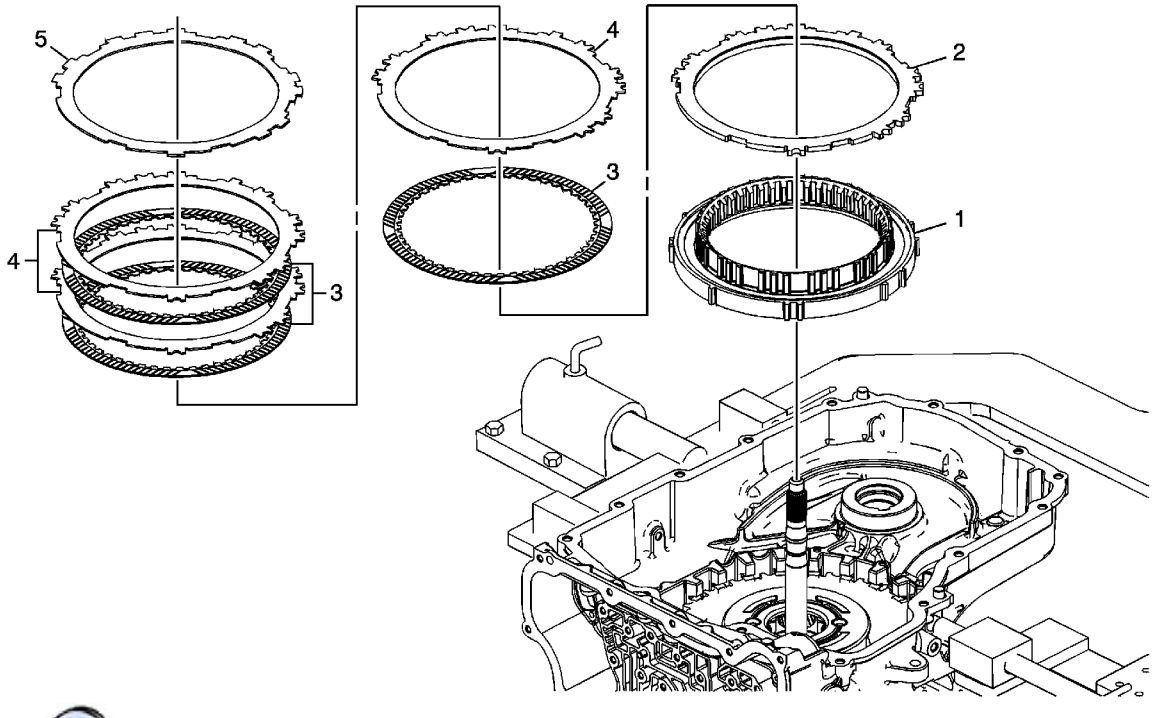

Callout	Component Name
1	Low and Reverse Clutch Assembly (OWC) **Tip** • The Low and Reverse Clutch Assembly should rotate freely in one direction and lock in the opposite direction. • Align the large flat areas of the Low and Reverse Clutch Assembly with the valve body end of the case.
2	Low and Reverse Clutch Backing Plate
3	Low and Reverse Clutch Plate Assembly (Qty: 3)
4	Low and Reverse Clutch Plate (Qty: 3) **Tip** Align the large flat areas of the Low and Reverse Clutch Plate with the valve body end of the case.
5	Low and Reverse Clutch Apply (Waved) Plate **Tip**

cardiagn.com

cardiagn.com

Low and Reverse and 1-2-3-4 Clutch Housing Disassemble

Table 1: Low and Reverse Clutch Piston Removal
Table 2: 1-2-3-4 Clutch Piston Removal

Low and Reverse Clutch Piston Removal

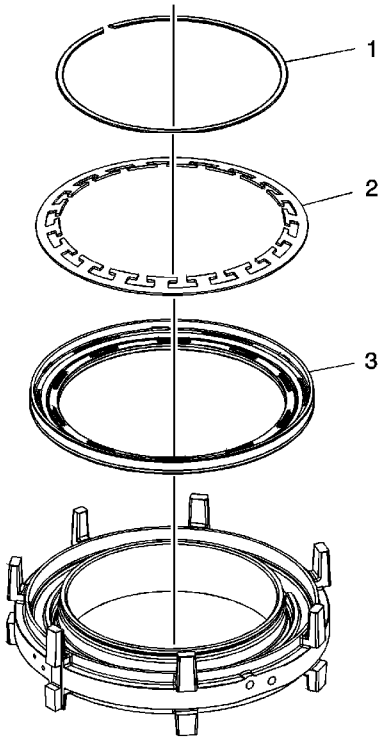

Low and Reverse Clutch Piston Removal

Callout	Component Name
1	Low and Reverse Clutch Spring Retainer **Special Tools** *J-8059* Snap Ring Pliers - Parallel Jaw
2	Low and Reverse Clutch Spring
3	Low and Reverse Clutch Piston

1-2-3-4 Clutch Piston Removal

cardiagn.com

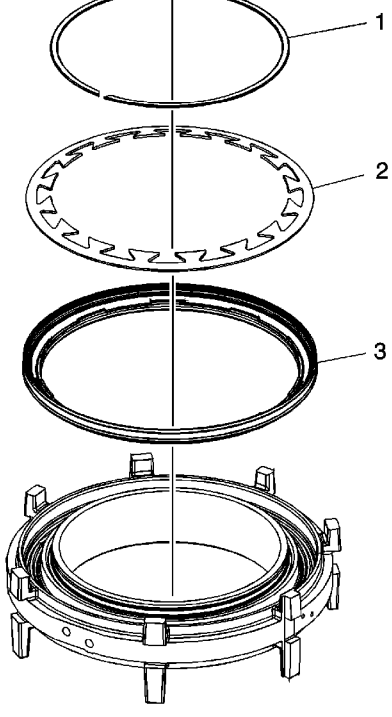

1-2-3-4 Clutch Piston Removal

Callout	Component Name
1	1-2-3-4 Clutch Spring Retainer **Special Tools** *J-8059* Snap Ring Pliers - Parallel Jaw
2	1-2-3-4 Clutch Spring
3	1-2-3-4 Clutch Piston

cardiagn.com

Low and Reverse and 1-2-3-4 Clutch Housing Cleaning and Inspection

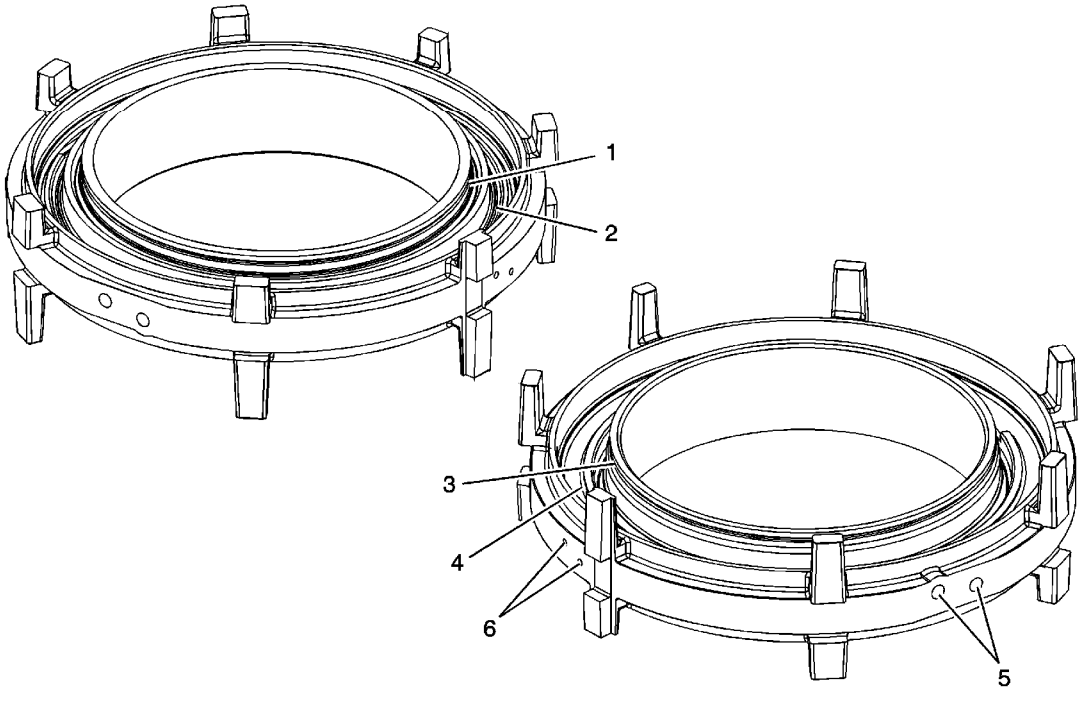

Callout	Component Name
Caution: After cleaning the transmission components, allow to air dry. Do not use cloth or paper towels in order to dry any transmission components. Lint from the towels can cause component failure. **Caution:** Do not reuse cleaning solvents. Previously used solvents may deposit sediment which may damage the component. **Preliminary Procedures** 1. Thoroughly clean the housing with clean solvent. 2. Inspect the piston bores and retainer ring grooves for wear, damage or porosity.	
1	1-2-3-4 Clutch Spring Retainer Groove
2	1-2-3-4 Clutch Piston Bore
3	Low and Reverse Clutch Spring Retainer Groove
4	Low and Reverse Clutch Piston Bore
5	Clutch Oil Passages
6	Air Bleed Passages

cardiagn.com

Low and Reverse and 1-2-3-4 Clutch Housing Assemble

Table 1: 1-2-3-4 Clutch Piston Installation
Table 2: Low and Reverse Clutch Piston Installation

1-2-3-4 Clutch Piston Installation

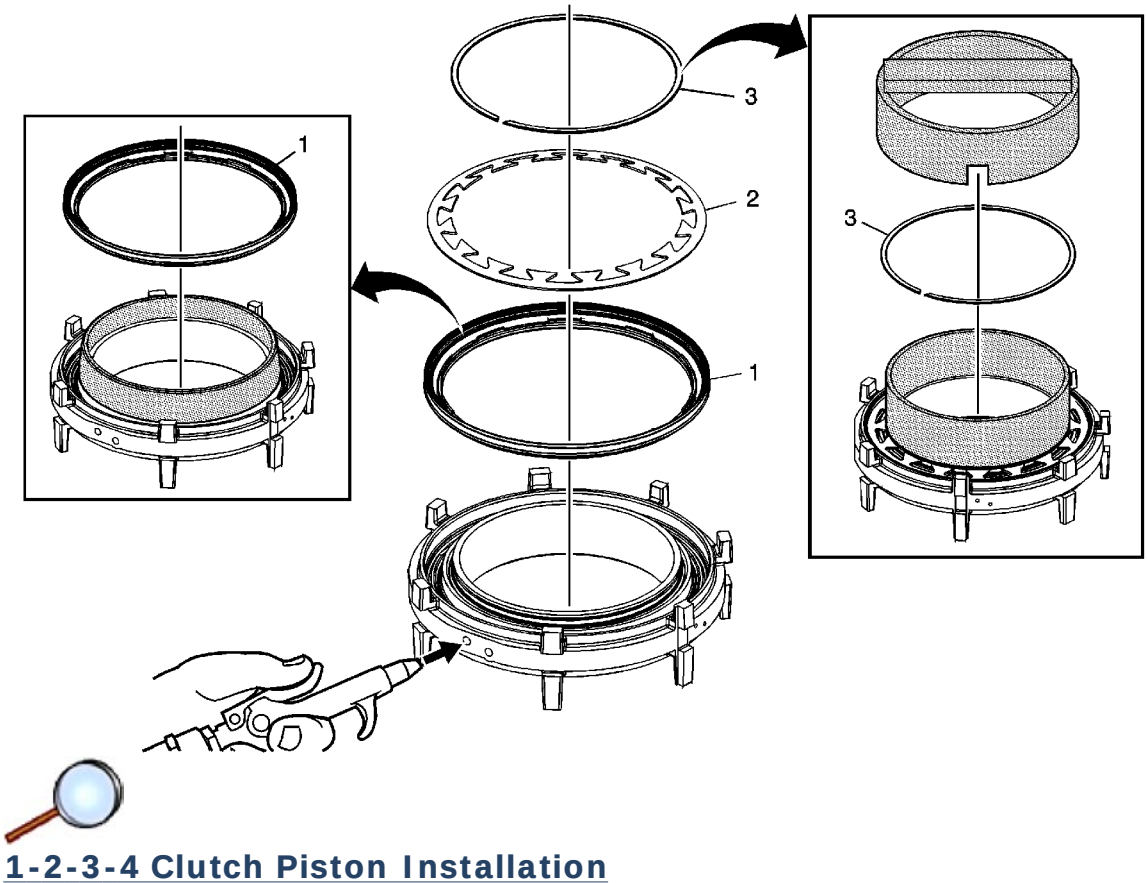

1-2-3-4 Clutch Piston Installation

Callout	Component Name
1	1-2-3-4 Clutch Piston **Tip** *DT-47798* protector prevents the piston seal lip from damage during installation. Apply a thin coat of ATF to the ID of *DT-47798* protector to ease the installation of the piston. **Special Tools** *DT-47798* Seal Protector
2	1-2-3-4 Clutch Spring
	1-2-3-4 Clutch Spring Retainer

© 2010 General Motors Corporation. All rights reserved.

cardiagn.com

3	**Tip** 1. Place the retainer onto DT-47799-1 which is part of *DT-47799* compressor . Compressing the spring using DT-47799-2 which is part of *DT-47799* compressor , will install the retainer into the retainer groove. 2. Apply shop air to the clutch fluid feed hole in the clutch housing to verify proper piston operation. **Special Tools** *DT-47799* Clutch Piston Spring Compressor

Low and Reverse Clutch Piston Installation

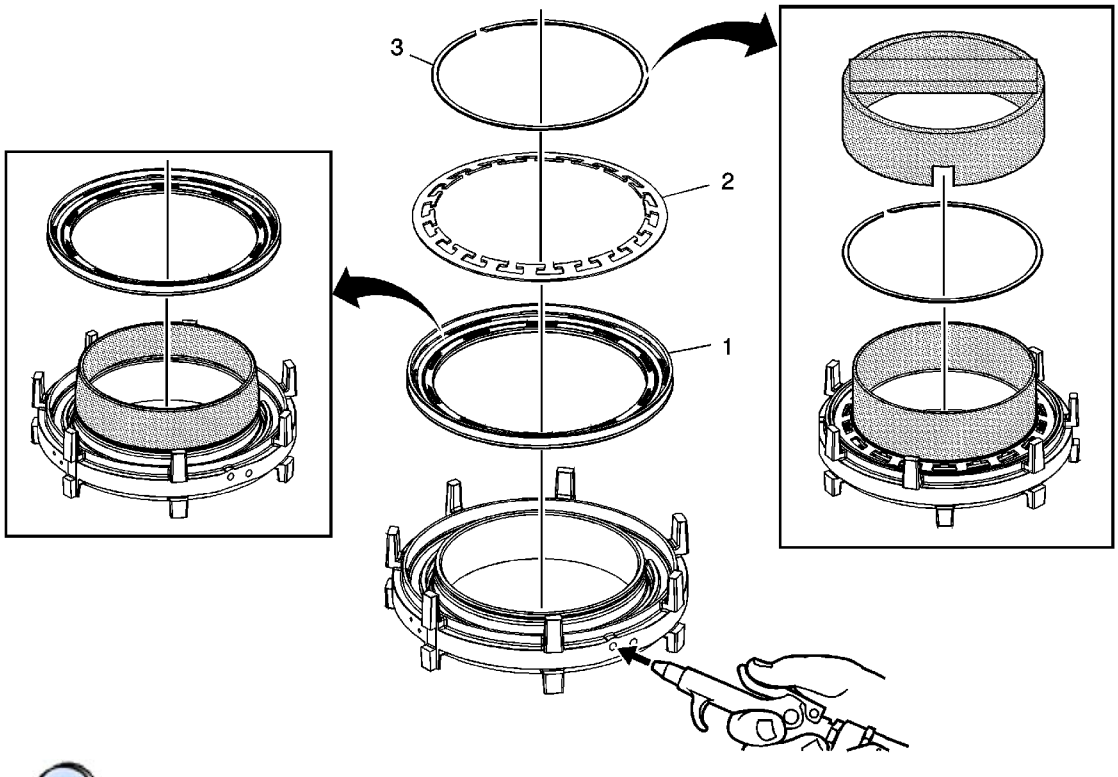

Low and Reverse Clutch Piston Installation

Callout	Component Name
1	Low and Reverse Clutch Piston **Tip** *DT-47807* protector prevents the piston seal lip from damage during installation. Apply a thin coat of ATF to the ID of *DT-47807* protector to ease the installation of the piston.

cardiagn.com

	DT-47807 Clutch Piston Seal Protector
2	Low and Reverse Clutch Spring
3	Low and Reverse Clutch Spring Retainer **Caution:** Regulate the air pressure to 40 psi maximum. High pressure could cause the piston to over travel and damage the piston seals. **Tip** 1. Place the retainer onto DT-47794-1 which is part of *DT-47794* compressor . Compressing the spring using DT-47794-2 which is part of *DT-47794* compressor , will install the retainer into the retainer groove. 2. Apply shop air to the clutch fluid feed hole in the clutch housing to verify proper piston operation. **Special Tools** *DT-47794* Spring Compressor

cardiagn.com

Low and Reverse and 1-2-3-4 Clutch Housing, and 1-2-3-4 Clutch Plate Installation

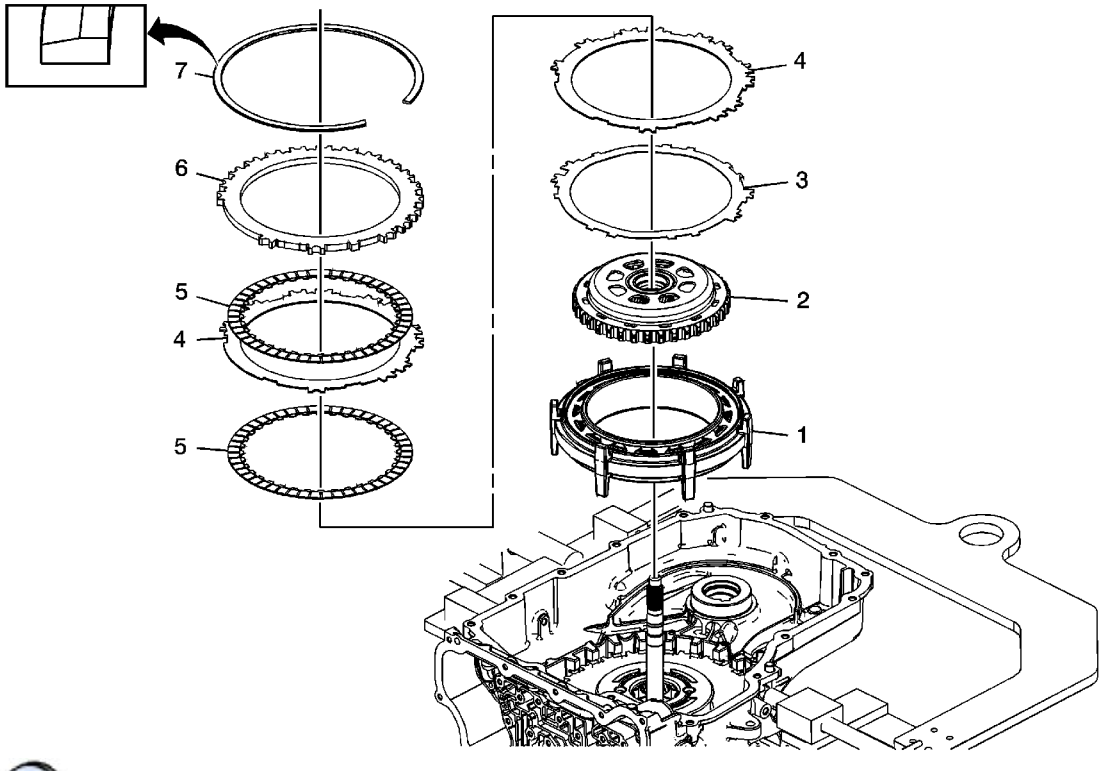

Callout	Component Name
1	Low and Reverse and 1-2-3-4 Clutch Housing **Tip** The longer legs face the bottom of the case and the oil passages face the valve body end of the case.
2	Output Sun Gear Assembly
3	1-2-3-4 Clutch Waved Plate **Tip** Align the single pair of tabs with the bottom valve body end of the case.
4	1-2-3-4 Clutch Plate (Qty: 2)
5	1-2-3-4 Clutch Plate Assembly (Qty: 2)
6	1-2-3-4 Clutch Backing Plate **Tip** Align the single skinny tab with the case spline facing the top of the case.
	1-2-3-4 Clutch Backing Plate Retainer Ring

© 2010 General Motors Corporation. All rights reserved.

cardiagn.com

7	**Caution:** Use caution during removal or installation of the retainer ring to avoid damage to the case machined surface in the park pawl area. Burrs or raised edges on the case machined surface can cause the park pawl to bind and prohibit it from engaging the park gear. **Tip** • Install the retainer with the taper facing away from the backing plate. • Align the retainer opening with the largest gap in the case splines toward the bottom of the case. • Install one end of the retainer into the retainer ring groove. Use *J 28585* snap ring remover and work the retainer into the case groove. Use a screwdriver to hold the retainer away from the case while pushing down on the retainer with *J 28585* snap ring remover . **Special Tool** *J 28585* Snap Ring Remover or equivalent

cardiagn.com

Drive Sprocket, Driven Sprocket, and Drive Link Cleaning and Inspection

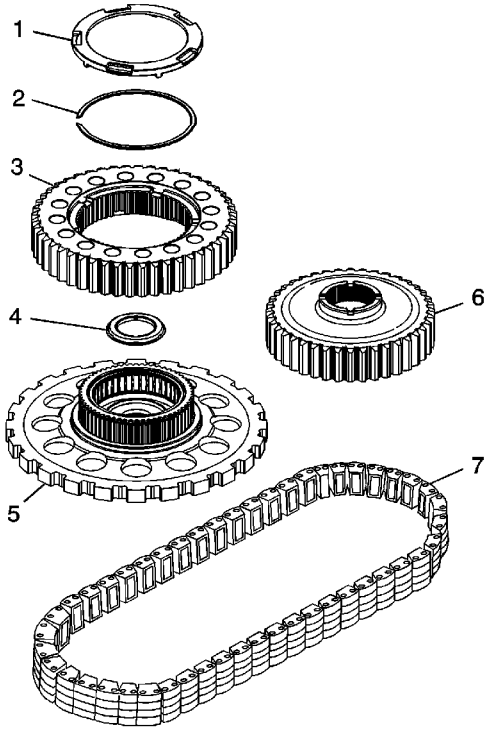

Callout	Component Name
1	Drive Sprocket Thrust Washer
2	Drive Sprocket Retainer Ring
3	Drive Sprocket
4	Drive Sprocket Bearing Assembly
5	Park Gear
6	Driven Sprocket
7	Drive Link Assembly

cardiagn.com

Drive and Driven Sprocket, Drive Link, and Park Pawl Installation

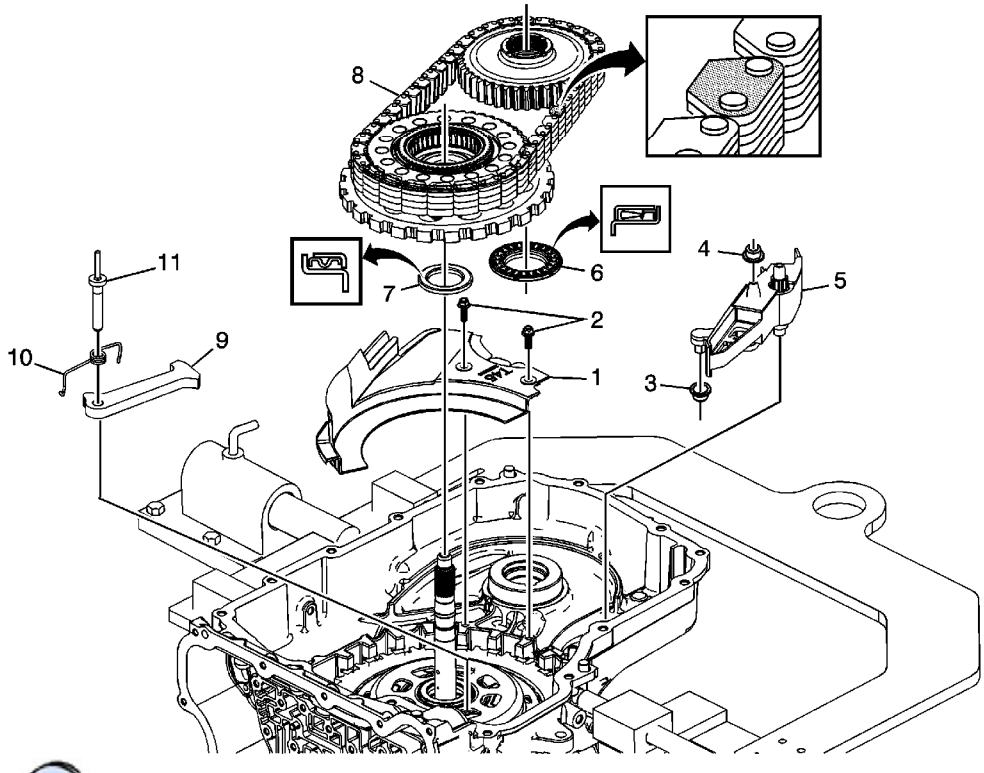

Callout	Component Name
1	Front Differential Carrier Baffle
2	Front Differential Carrier Baffle Bolt M6 x 16 (Qty: 2) **Caution:** Refer to Fastener Caution in the Preface section. **Tighten** 12 N·m (106 lb in)
3	Drive Link Lube Scoop Seal
4	Drive Link Lube Fluid Seal
5	Drive Link Lube Scoop
6	Driven Sprocket Bearing Assembly
7	Drive Sprocket Bearing Assembly
	Driven Sprocket Assembly, Drive Sprocket Assembly and Drive Link **Tip** • Install the drive link with the colored links and/or part number facing up.

cardiagn.com

8	same time. • The ball bearing should spin freely and smoothly. • The driven sprocket ball bearing inner race has a slight interference fit with the case. Tap gently with the palm of a hand or a soft tip hammer to install.
9	Park Pawl
10	Park Pawl Spring
11	Park Pawl Shaft **Tip** Check to ensure that the park pawl operates freely and is not binding.

cardiagn.com

Front Differential Carrier Cleaning and Inspection

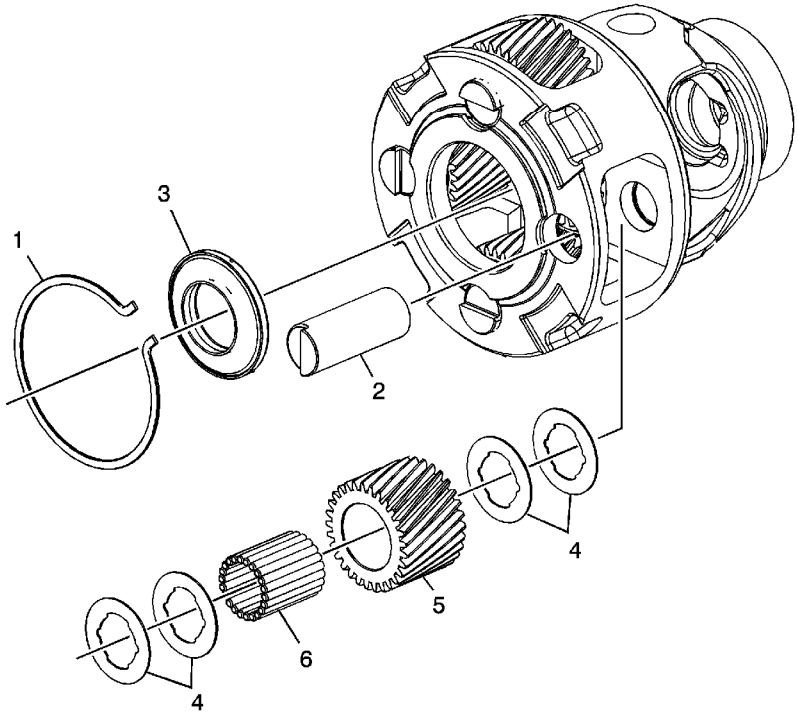

Callout	Component Name
Caution: After cleaning the transmission components, allow to air dry. Do not use cloth or paper towels in order to dry any transmission components. Lint from the towels can cause component failure. **Caution:** Do not reuse cleaning solvents. Previously used solvents may deposit sediment which may damage the component. **Caution:** Keep thrust washers with the gear it was matched to. The thrust washers are selective sizes and it is difficult to identify the proper washer thickness. Improper assembly can cause premature failure of the differential assembly. **Preliminary Procedures** • Clean and inspect the differential assembly, pinion gears and thrust washers for scoring, wear or damage. • The differential assembly is only serviced as an assembly.	
1	Front Differential Pinion Gear Shaft Retainer
2	Front Differential Pinion Gear Pin
3	Sun Gear to Differential Housing Bearing Assembly

cardiagn.com

5	Front Differential Pinion Gear
6	Front Differential Planetary Pinion Gear Bearing Roller

cardiagn.com

Front Differential Carrier Installation

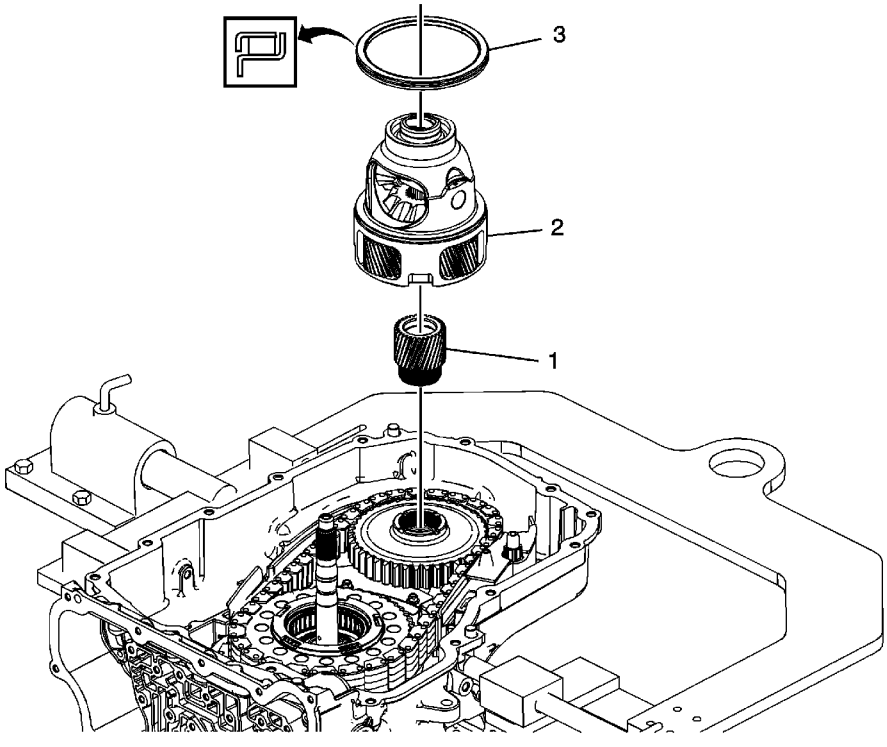

Callout	Component Name
1	Final Drive Sun Gear
2	Differential Carrier Assembly
3	Front Differential Carrier Bearing Asembly

cardiagn.com

Transmission Fluid Pump, Front Differential Carrier Baffle, and Front Differential Ring Gear Removal

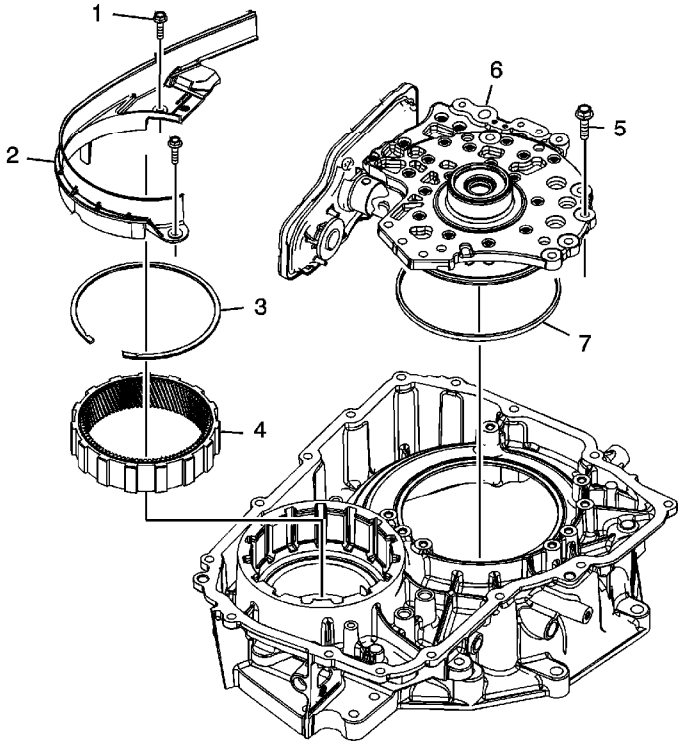

Callout	Component Name
1	Front Differential Carrier Baffle Bolts M6 x 25 (Qty: 2)
2	Front Differential Carrier Baffle
3	Front Differential Ring Gear Retainer **Tip** Note the direction of the taper to ensure proper installation.
4	Front Differential Ring Gear
5	Fluid Pump Bolts M8 x 33 (Qty: 8)
6	Fluid Pump Assembly
7	Torque Converter and Differential Housing Seal

cardiagn.com

Front Wheel Drive Shaft Seal Replacement - Torque Converter Housing Side

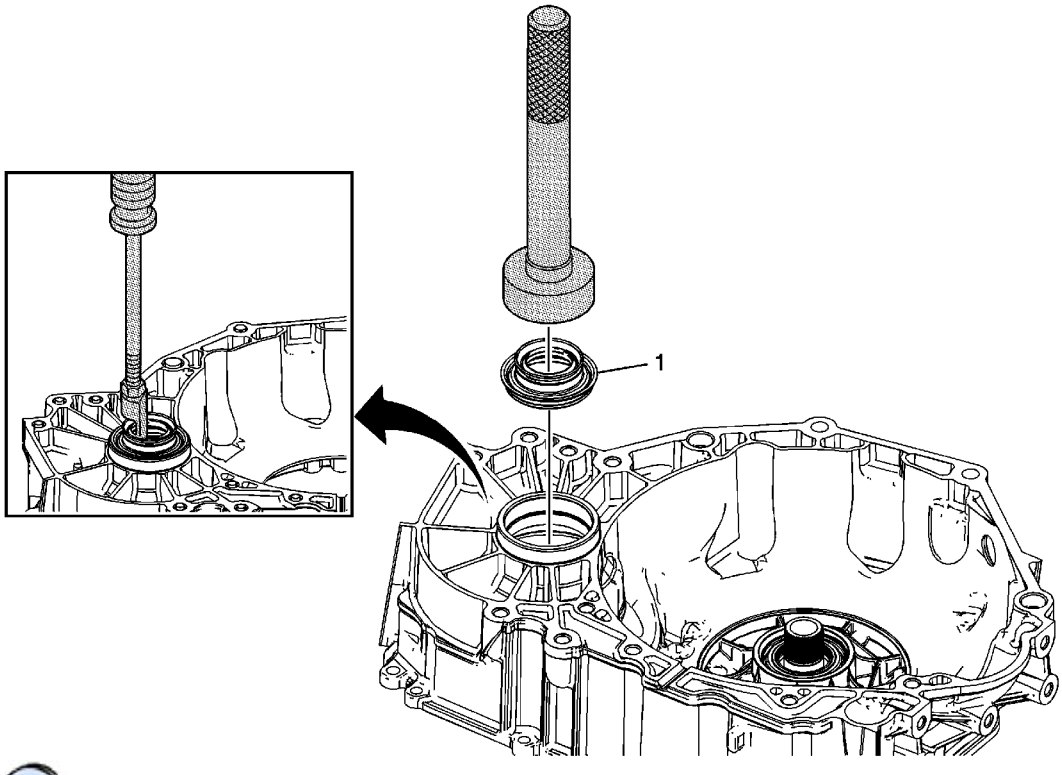

Callout	Component Name
1	Front Wheel Drive Shaft Oil Seal Assembly **Special Tools** • *DT-47790* Seal Installer • *J 6125-B* Slide Hammer • *J 8092* Driver Handle • *J 23129* Universal Seal Remover

cardiagn.com

Torque Converter Housing Cleaning and Inspection

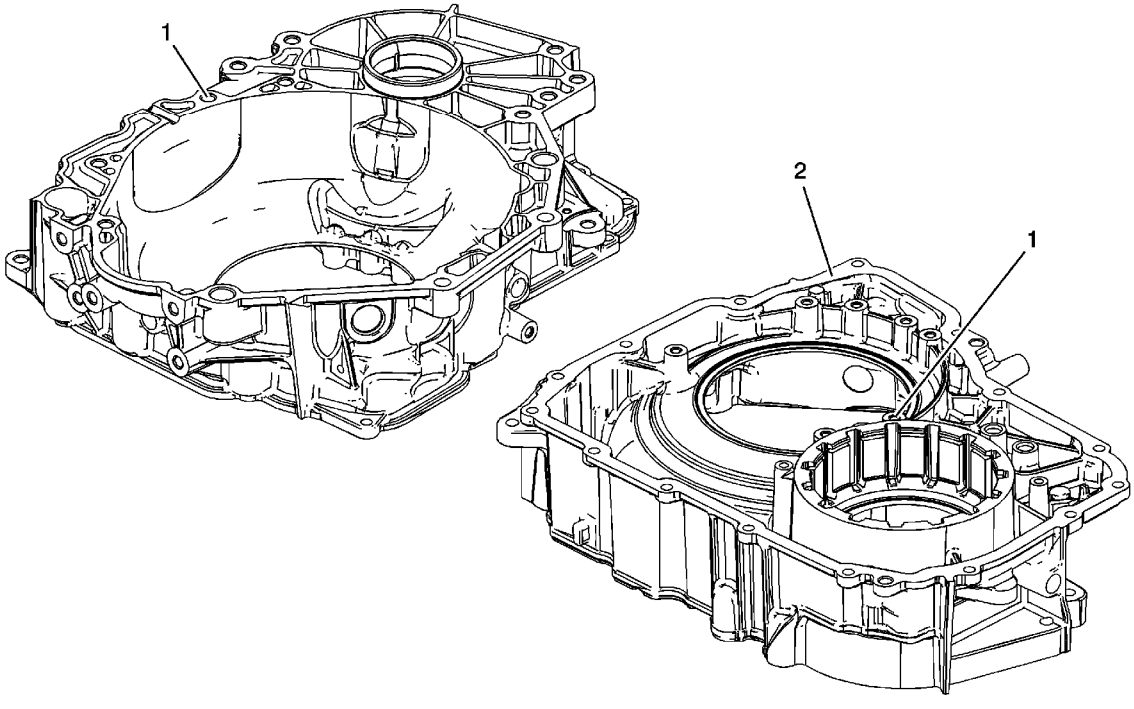

Callout	Component Name
Caution: After cleaning the transmission components, allow to air dry. Do not use cloth or paper towels in order to dry any transmission components. Lint from the towels can cause component failure. **Caution:** Do not reuse cleaning solvents. Previously used solvents may deposit sediment which may damage the component. **Caution:** Do not use abrasive pads or bristle devices to clean the sealing surfaces. Abrasive pads produce a fine grit that can effect transmission function. Abrasive pads can also remove enough metal to create oil leaks. **Preliminary Procedure** Thoroughly clean the torque converter housing, including case threads with clean solvent.	
1	Threaded Hole
2	Gasket Sealing Surface

cardiagn.com

Transmission Fluid Pump Disassemble

Table 1: Fluid Filter Assembly and Torque Converter Fluid Seal Disassemble
Table 2: Fluid Pump Disassemble

Fluid Filter Assembly and Torque Converter Fluid Seal Disassemble

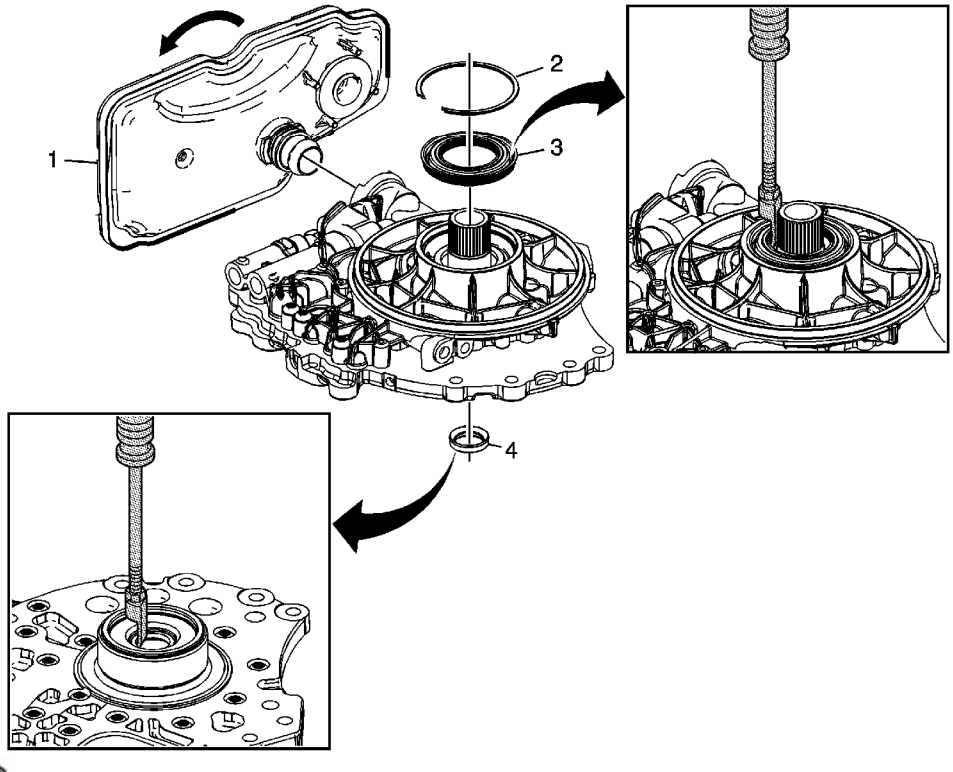

Fluid Filter Assembly and Torque Converter Fluid Seal Disassemble

Callout	Component Name
1	Fluid Filter Assembly **Tip** Rotate filter 90 degrees to disengage locking tangs.
2	Torque Converter Fluid Seal Retainer
3	Torque Converter Fluid Seal **Special Tools** • *J 6125-B* Slide Hammer

cardiagn.com

4	Torque Converter Fluid Seal Assembly **Special Tools** • *J 6125-B* Slide Hammer • *J 23129* Universal Seal Remover

Fluid Pump Disassemble

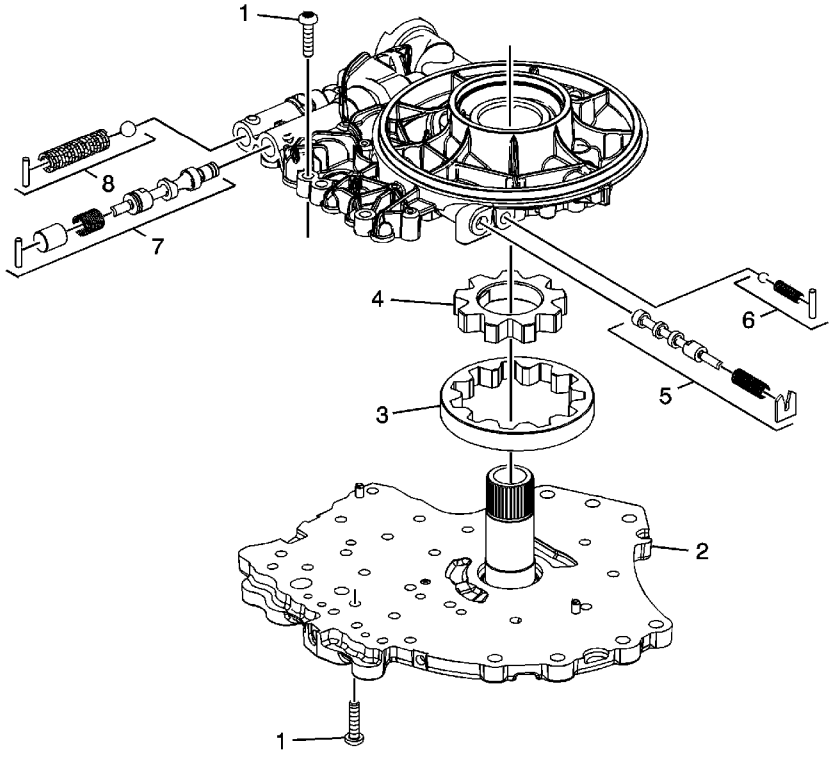

Fluid Pump Disassemble

Callout	Component Name

Warning: Valve springs can be tightly compressed. Use care when removing retainers and plugs. Personal injury could result.

Caution: After cleaning the transmission components, allow to air dry. Do not use cloth or paper towels in order to dry any transmission components. Lint from the towels can cause component failure.

Caution: Do not reuse cleaning solvents. Previously used solvents may deposit sediment which may damage the component.

Preliminary Procedure

cardiagn.com

1	Fluid Pump Cover Bolts M6 x 25 (Qty: 23) **Tip** There are 3 bolts on the pump cover side and 20 bolts on the pump body side.
2	Fluid Pump Cover
3	Fluid Pump Driven Gear
4	Fluid Pump Drive Gear
5	TCC Control Valve Train
6	Fluid Pump Blow Off Ball Valve Train
7	Pressure Regulator Valve Train
8	TCC Blow Off Ball Valve Train

cardiagn.com

Fluid Pump Selective Measurement

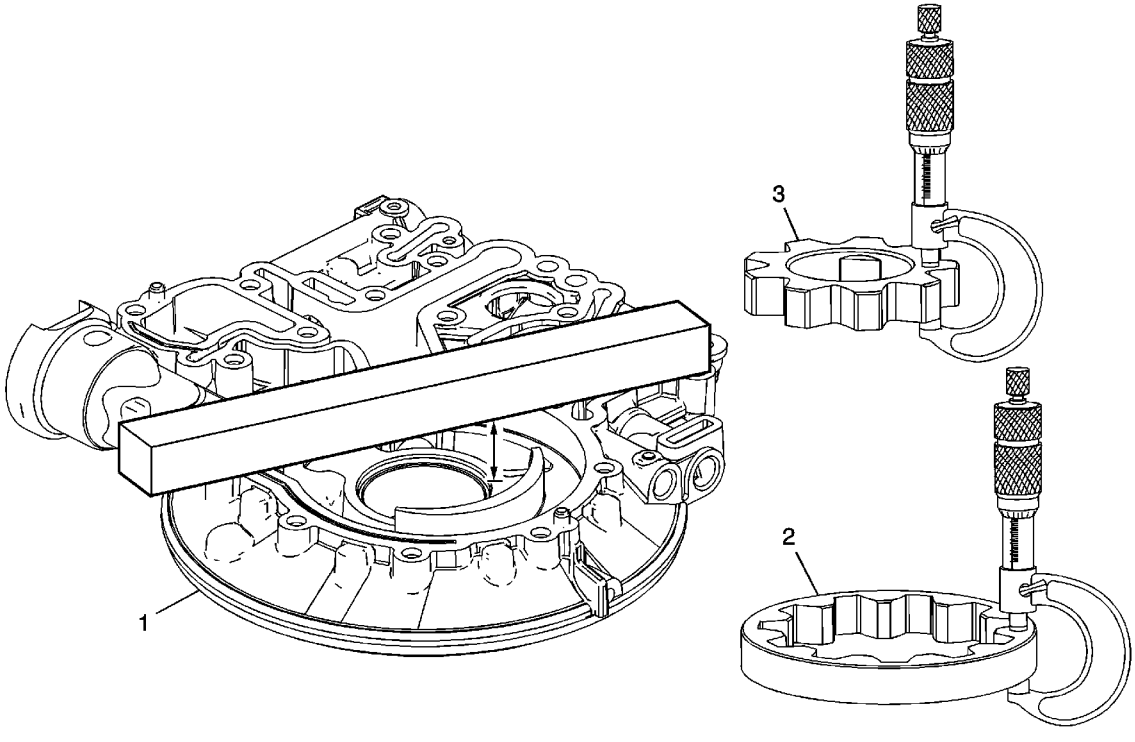

Callout	Component Name
1	A/Trans Fluid Pump Body **Tip** Measure the distance from the bottom of the gage bar to the bottom of the pump rotor cavity. Refer to Fluid Pump Selective Specifications. **Special Tool** *J 34673* Flat Gage Bar or equivalent
2	A/Trans Fluid Pump Driven Gear **Tip** Refer to Fluid Pump Selective Specifications to select the correct gear.
3	A/Trans Fluid Pump Drive Gear **Tip** Refer to Fluid Pump Selective Specifications to select the correct gear.

cardiagn.com

Transmission Fluid Pump Assemble

Table 1: Fluid Pump with Valve Trains Assemble
Table 2: Torque Converter Fluid Seal and Fluid Filter Assembly Assemble

Fluid Pump with Valve Trains Assemble

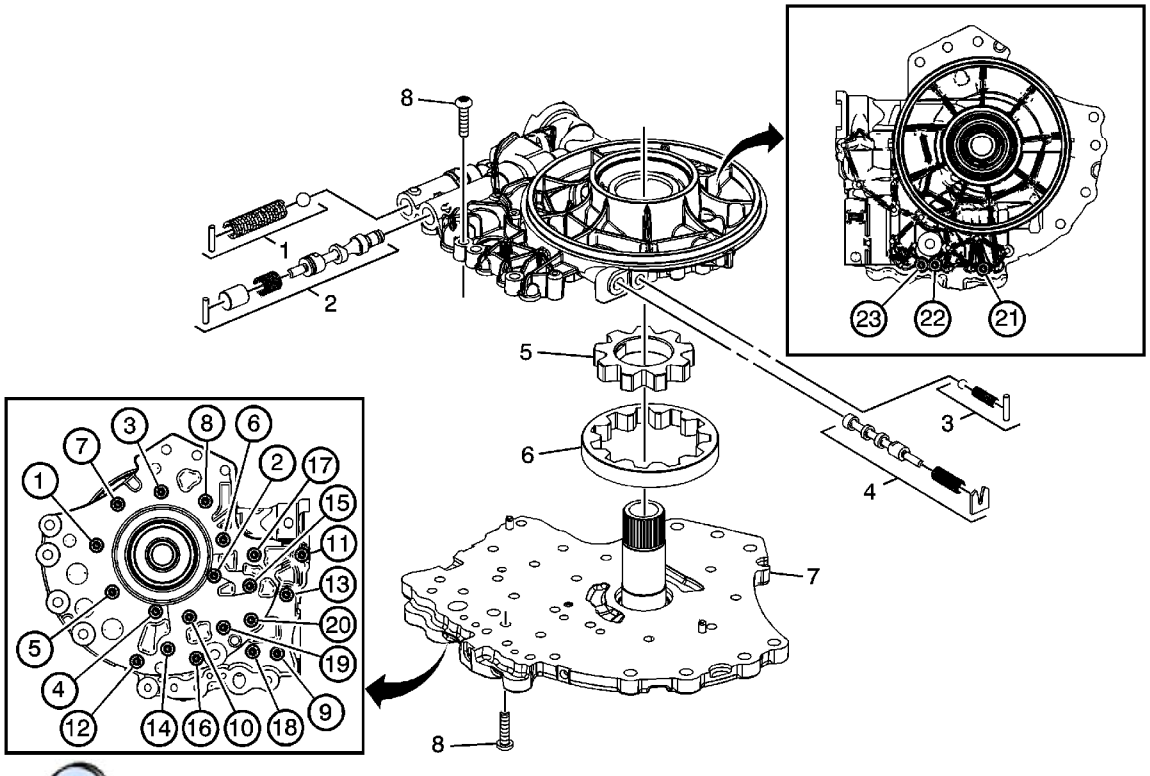

Fluid Pump with Valve Trains Assemble

Callout	Component Name
1	TCC Blow Off Ball Valve Train
2	Pressure Regulator Valve Train
3	Fluid Pump Blow Off Ball Valve Train
4	TCC Control Valve Train
5	Fluid Pump Drive Gear **Tip** The chamfer on the drive gear teeth face towards the pump body.
6	Fluid Pump Driven Gear **Tip** The chamfer on the driven gear OD faces the pump body.

cardiagn.com

8	Fluid Pump Cover Bolt M6 x 25 (Qty: 25) **Caution:** Refer to Fastener Caution in the Preface section. **Tighten** 12 N·m (106 lb in)

Torque Converter Fluid Seal and Fluid Filter Assembly Assemble

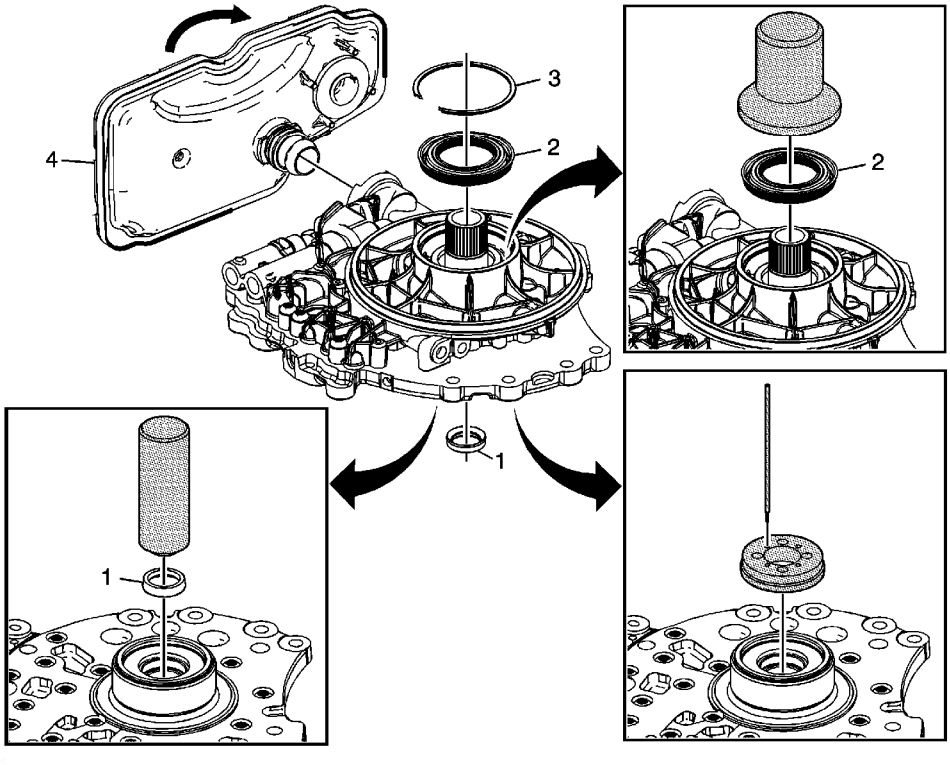

Torque Converter Fluid Seal and Fluid Filter Assembly Assemble

Callout	Component Name
1	Torque Converter Fluid Seal Assembly **Tip** The fluid seal assembly must be staked in place using *DT-49131* tool to ensure proper seal retention. **Special Tools** • *DT-47792* Seal Installer • *DT-49131* Seal Staking Tool
	Torque Converter Fluid Seal

cardiagn.com

2	*DT-47791* Seal Installer
3	Torque Converter Fluid Seal Retainer
4	Fluid Filter Assembly **Tip** Rotate filter 90 degrees to engage locking tangs.

cardiagn.com

Transmission Fluid Pump, Front Differential Carrier Baffle, and Front Differential Ring Gear Installation

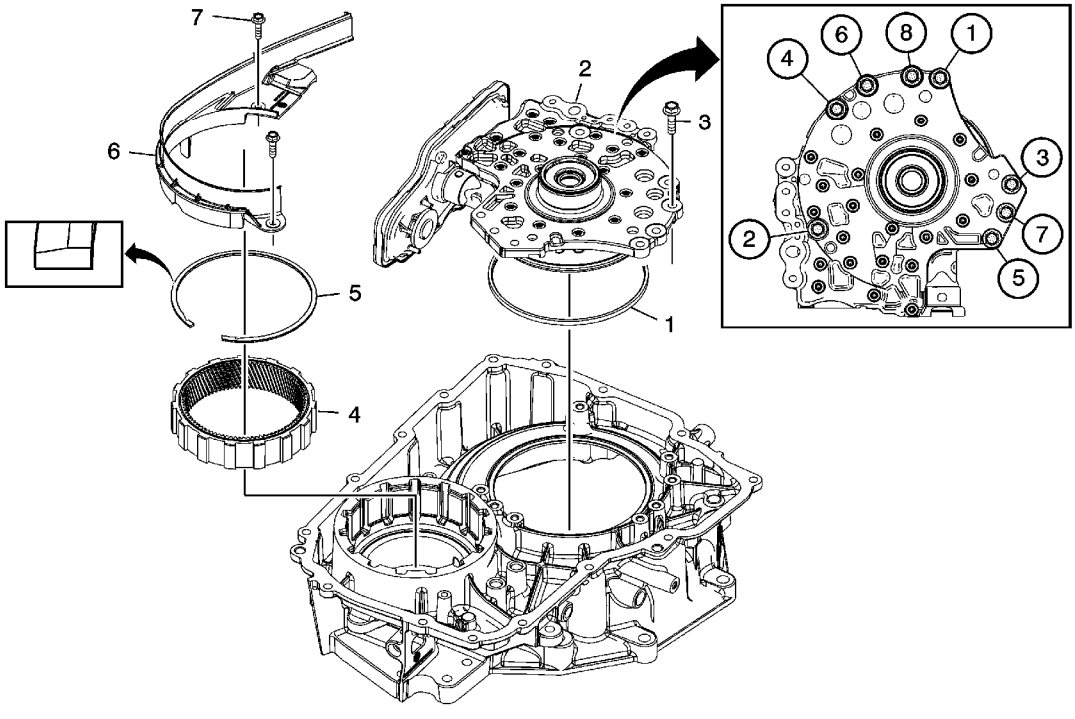

Callout	Component Name
1	Torque Converter and Differential Housing Seal
2	Fluid Pump Assembly
3	Fluid Pump Bolt M8 x 33 (Qty: 8) **Caution:** Refer to Fastener Caution in the Preface section. **Tighten** 10 N·m (89 lb in) then rotate the bolt an additional 45 degrees. **Special Tools** *J-45059* Angle Meter or equivalent
4	Front Differential Ring Gear
5	Front Differential Ring Gear Retainer **Tip** Install the retainer with the taper facing away from the ring gear.

cardiagn.com

7	Front Differential Carrier Baffle Bolt M6 x 25 (Qty: 2) **Tighten** 12 N·m (106.21 lb in)

cardiagn.com

Torque Converter Housing with Fluid Pump Assembly Installation

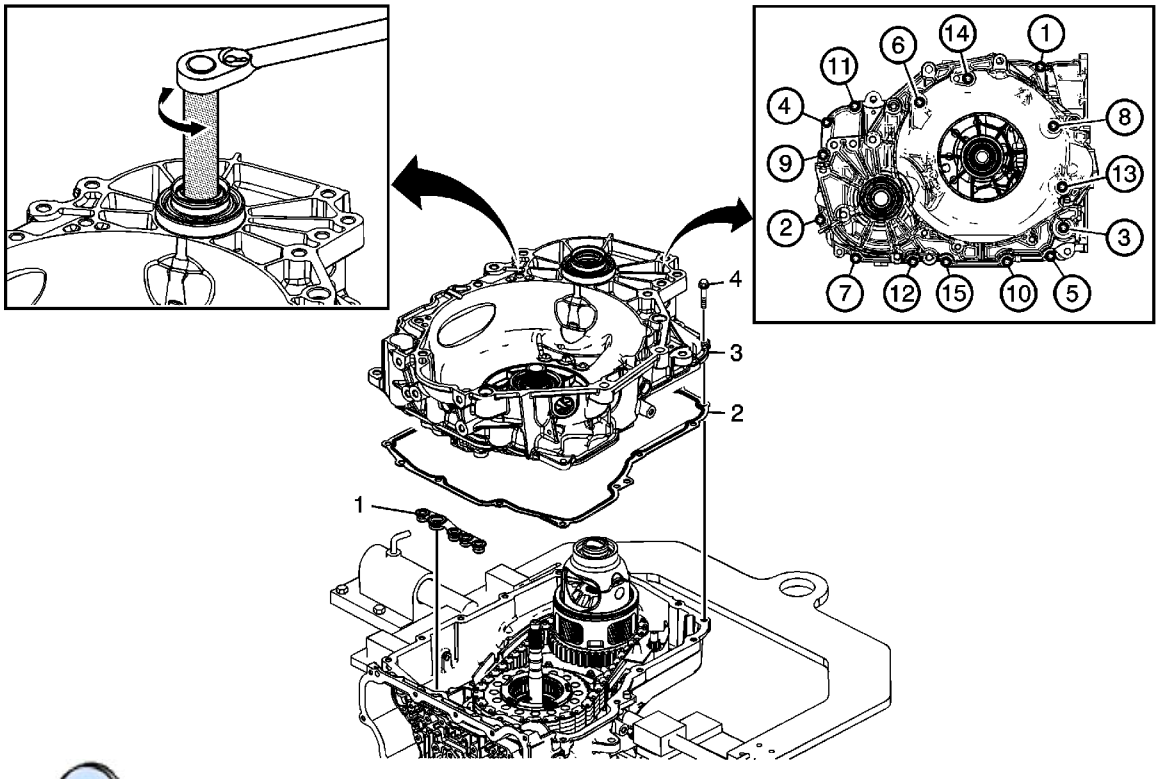

Callout	Component Name
1	Fluid Pump Seal Assembly
2	Torque Converter Housing Gasket
3	Torque Converter (with Fluid Pump) Housing Assembly **Tip** Rotate the differential slightly in each direction using *DT-47793* tool to align the differential pinion gears with the differential ring gear in the torque converter housing. **Special Tools** *DT-47793* Differential Rotating Tool
	Torque Converter and Differential Housing Bolt M8 x 30 (Qty: 15) **Caution:** Refer to Fastener Caution in the Preface section. **Procedure**

cardiagn.com

4	**Tighten** 10 N·m (89 lb in) then rotate bolt an additional 50 degrees. **Special Tools** *J-45059* Angle Meter or equivalent

cardiagn.com

Input and Output Speed Sensor Installation

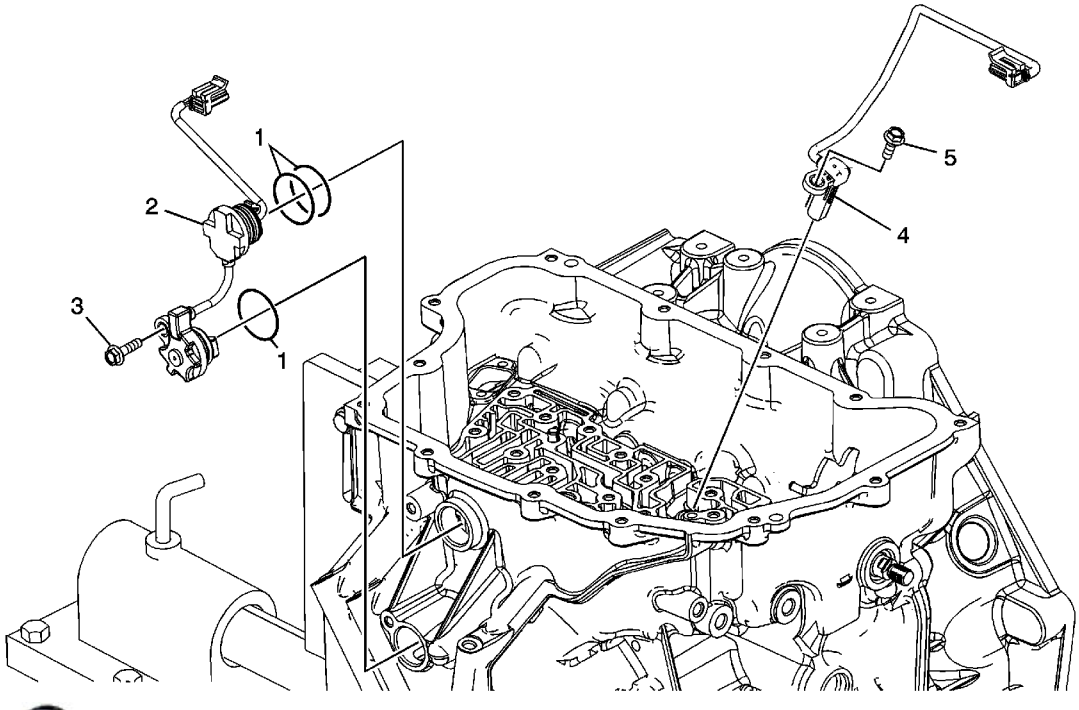

Callout	Component Name
1	Input Speed Sensor Assembly Seals
2	Input Speed Sensor Assembly
3	Input Speed Sensor Bolt M6 x 23 (Qty: 1) **Caution:** Refer to Fastener Caution in the Preface section. **Tighten** 12 N·m (106 lb in)
4	A/Trans Output Speed Sensor Assembly
5	A/Trans Output Speed Sensor Bolt **Tighten** 12 N·m (106 lb in)

cardiagn.com

Control Valve Body Assembly Disassemble

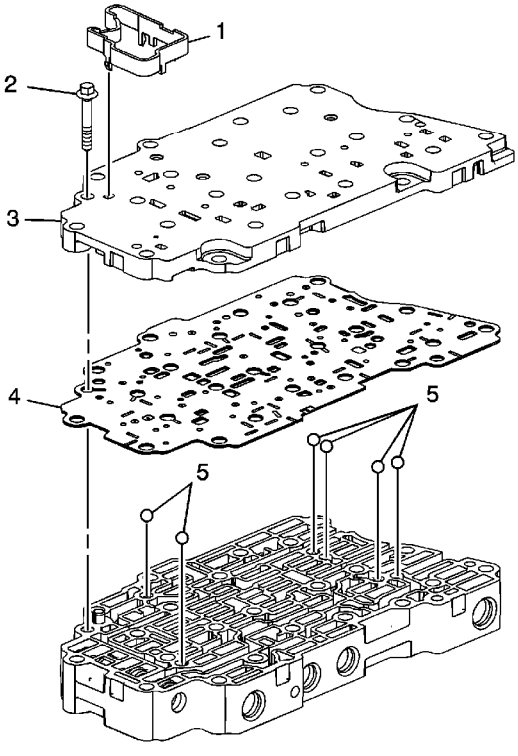

Callout	Component Name
1	Control Solenoid Valve Support
2	Control Valve Body Bolt M5 x 40.5 (Qty: 1)
3	Valve Channel Plate **Tip** Inspect the channel plate bolt pass through holes for damage or burnelling. Any damage could cause leaking. Replace as necessary.
4	Control Valve Channel Plate Spacer Plate Assembly
5	Valve Body Ball Check Valves (Qty: 6)

cardiagn.com

Control Valve Body Cleaning and Inspection

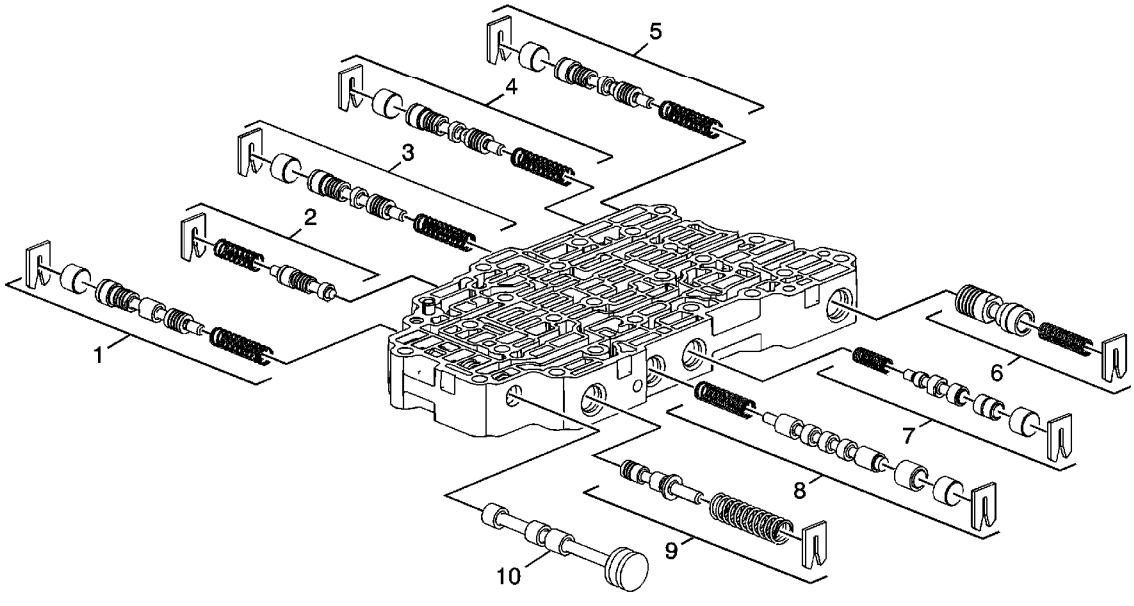

Callout	Component Name
Warning: Valve springs can be tightly compressed. Use care when removing retainers and plugs. Personal injury could result. **Caution:** After cleaning the transmission components, allow to air dry. Do not use cloth or paper towels in order to dry any transmission components. Lint from the towels can cause component failure. **Caution:** Do not reuse cleaning solvents. Previously used solvents may deposit sediment which may damage the component. **Preliminary Procedure** Clean and inspect all valve components and the valve body. The control valve body assembly is only replaceable as an assembly.	
1	First-Reverse and 4-5-6 Clutch Regulator Valve Train
2	1-2-3-4 Clutch Boost Valve Train
3	1-2-3-4 Clutch Regulator Valve Train
4	2-6 Clutch Regulator ValveTrain
5	3-5 Reverse Clutch Regulator Valve Train

cardiagn.com

7	TCC Regulator Apply Valve Train
8	Clutch Select Valve Train
9	Actuator Feed Limit Valve Train
10	Manual Valve

cardiagn.com

Control Valve Channel Plate Cleaning and Inspection

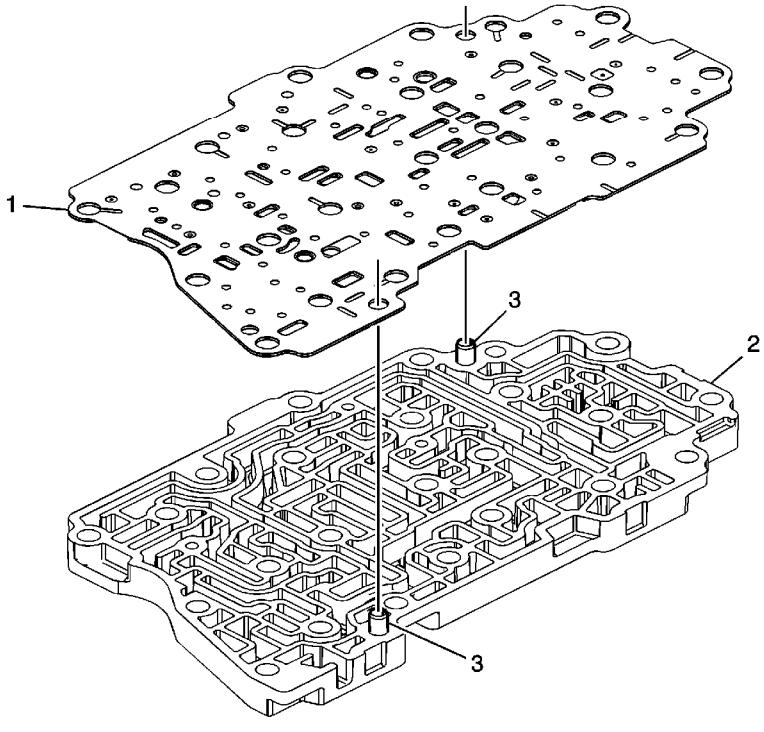

Callout	Component Name
1	Channel Plate to Valve Body Spacer Plate Assembly
2	Valve Channel Plate
3	Control Valve Body Guide Pins

cardiagn.com

Control Valve Body Assembly Assemble

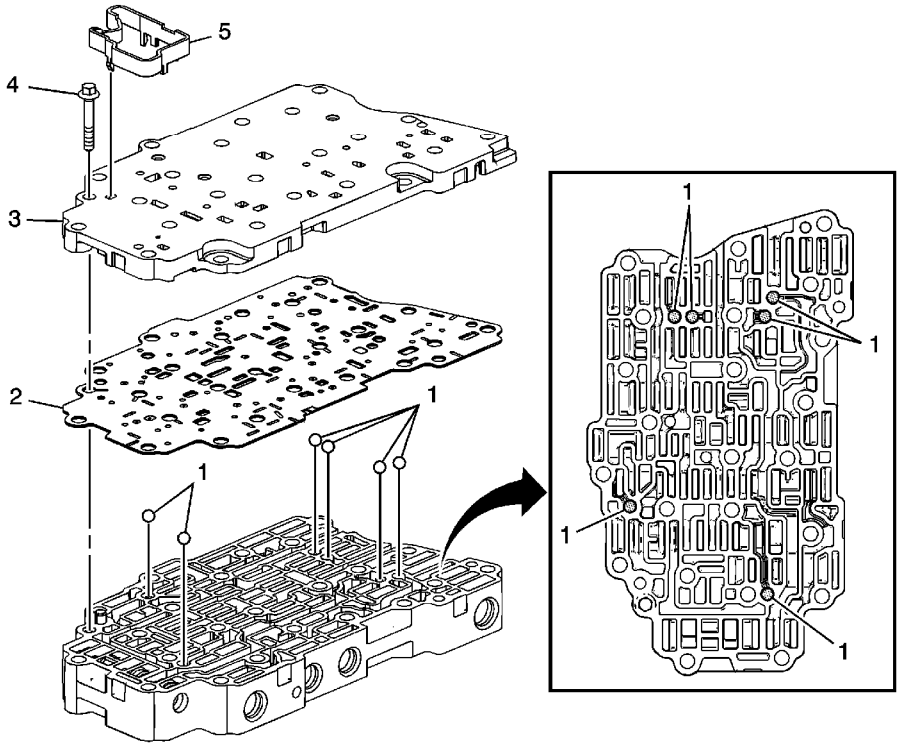

Callout	Component Name
1	Valve Body Ball Check Valve (Qty: 6)
2	Control Valve Channel Plate Spacer Plate Assembly
3	Valve Channel Plate **Tip** Inspect the channel plate bolt pass through holes for damage or burnelling. Any damage could cause leaking. Replace as necessary.
4	Control Valve Body Bolt M5 x 40.5 (Qty: 1) **Caution:** Refer to Fastener Caution in the Preface section. **Tighten** 8 N·m (71 lb in)
5	Control Solenoid Valve Support

cardiagn.com

Control Valve Body Assembly Installation

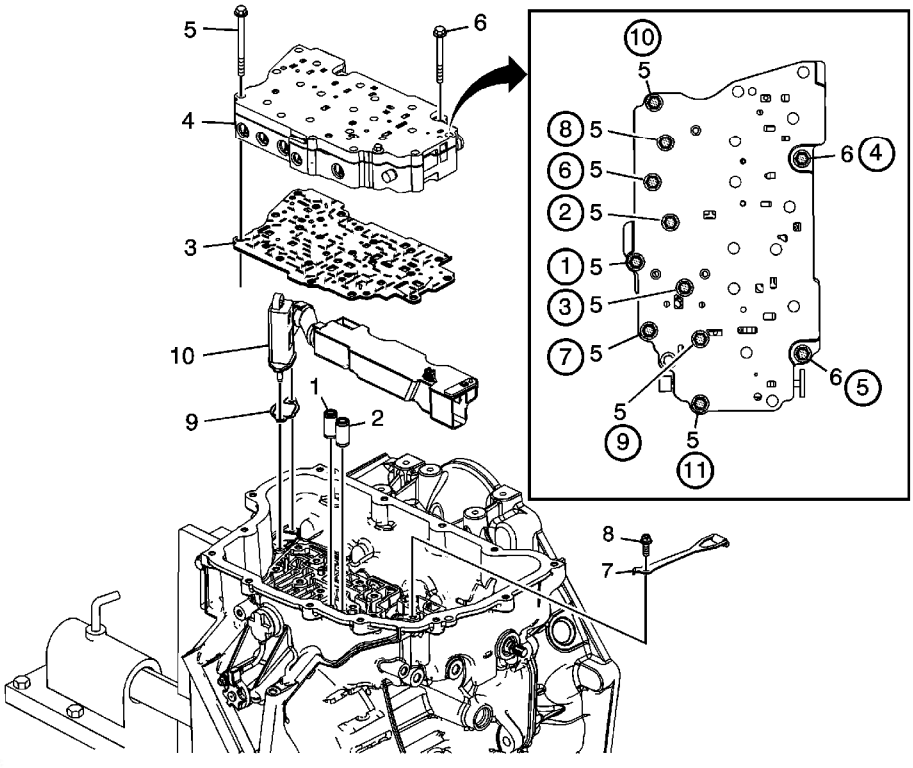

Callout	Component Name
1	Low and Reverse Clutch Fluid Passage Seal
2	1-2-3-4 Clutch Fluid Passage Seal
3	Control Valve Body Spacer Plate Assembly
4	Control Valve Body Assembly
5	Control Valve Body Bolt M6 x 60 (Qty: 9) **Caution:** Refer to Fastener Caution in the Preface section. **Tighten** 12 N·m (106 lb in)
6	Control Valve Body Bolt M6 x 53 (Qty: 2) **Tighten** 12 N·m (106 lb in)
7	Manual Shaft Detent Lever Spring Assembly
8	Manual Shaft Detent Spring Bolt M6 x 16 (Qty: 1) **Tighten**

cardiagn.com

9	Fluid Level Control Valve Gasket
10	Fluid Level Control Valve

cardiagn.com

Control Solenoid Valve and Transmission Control Module Assembly Installation

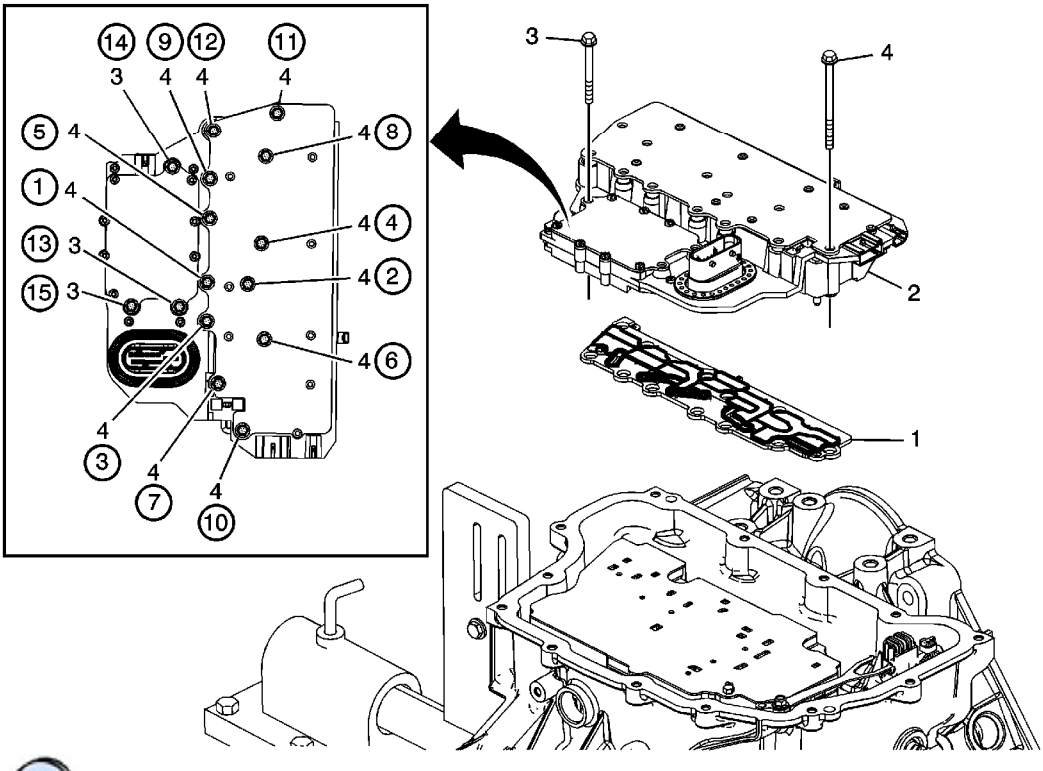

Callout	Component Name
1	Control Solenoid Valve Assembly Filter Plate **Caution:** Use care when removing or installing the filter plate assembly. A broken or missing retaining tab may not adequately secure the filter plate to the control solenoid valve assembly, resulting in possible damage or contamination. **Tip** Install a NEW filter plate to prevent fluid leaks past the fluid seals.
2	Control Solenoid (w/Body and TCM) Valve Assembly
3	Control Valve Body Bolt M5 x 40.5 (Qty: 3) **Caution:** Refer to Fastener Caution in the Preface section. **Tighten** 8 N·m (71 lb in)
4	Control Valve Body Bolt M6 x 97 (Qty: 12) **Tighten**

cardiagn.com

cardiagn.com

Control Valve Body Cover Installation

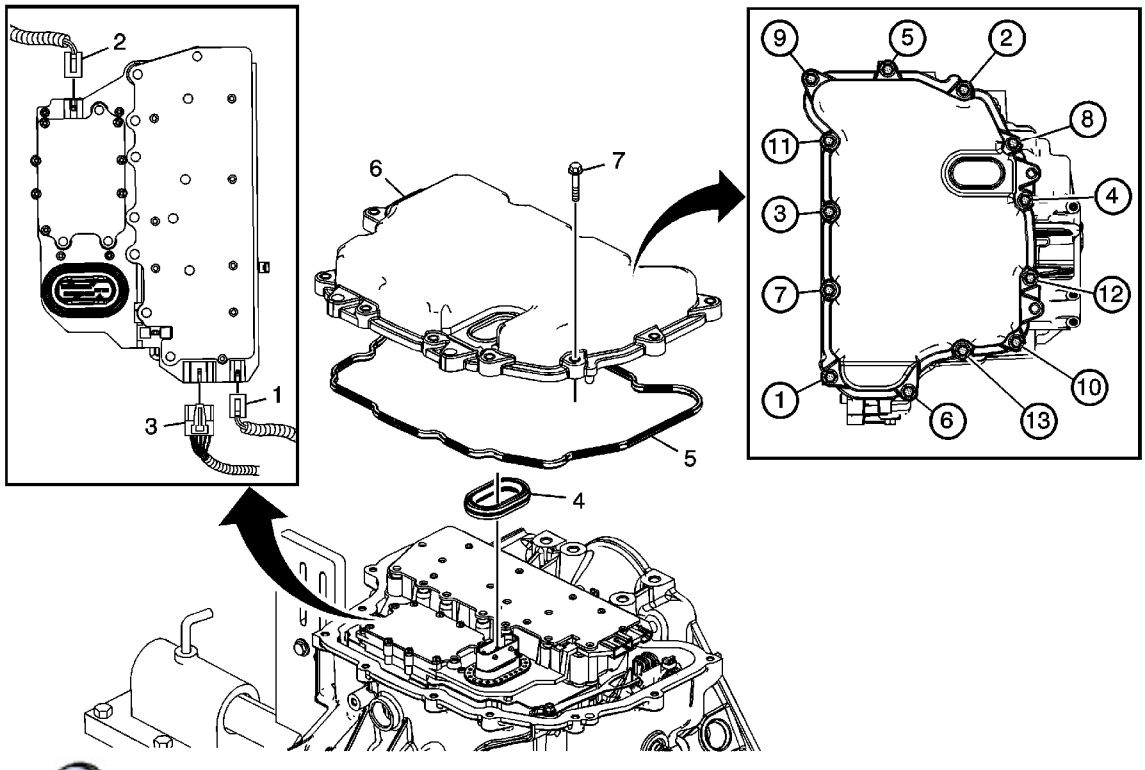

Callout	Component Name
1	Input Speed Sensor Connector
2	Output Speed Sensor Connector
3	Shift Position Switch Connector
4	Control Valve Body Cover Wiring Connector Hole Seal **Tip** Do not re-use the valve body cover wiring connector hole seal.
5	Control Valve Body Cover Gasket **Tip** Do not re-use the valve body cover gasket.
6	Control Valve Body Cover
7	Control Valve Body Cover Bolts M6 x 30 (Qty: 13) **Caution:** Refer to Fastener Caution in the Preface section. **Tighten** 12 N·m (106 lb in)

cardiagn.com

Torque Converter Installation

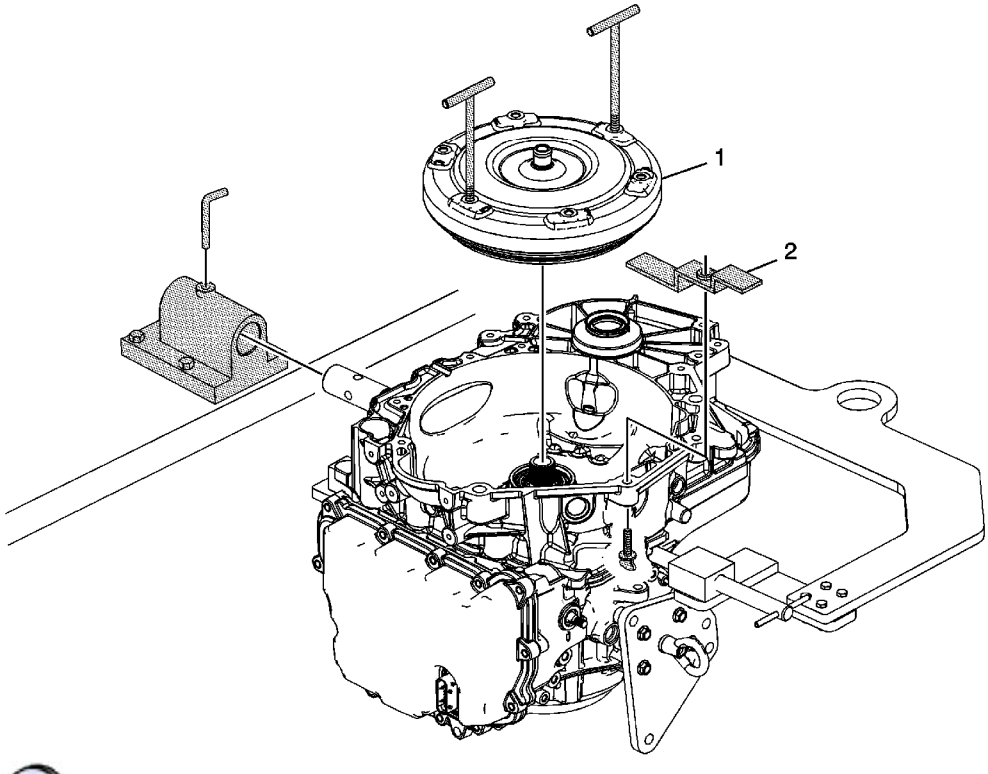

Callout	Component Name
1	Torque Converter Assembly **Tip** Failure to lower the torque converter straight down could damage the torque converter clutch lip seal inside the torque converter clutch assembly. **Special Tools** *J-46409* Torque Converter Lifting Handles
2	*J-21366* Converter Holding Strap **Warning:** The torque converter must be held to the torque converter housing by a retaining device such as shipping brackets. Without the retaining device, the torque converter may slide forward, disengaging the oil pump, or may fall completely out of the transmission causing personal injury and/or property damage.

cardiagn.com

Lift Plate and Holding Fixture Removal

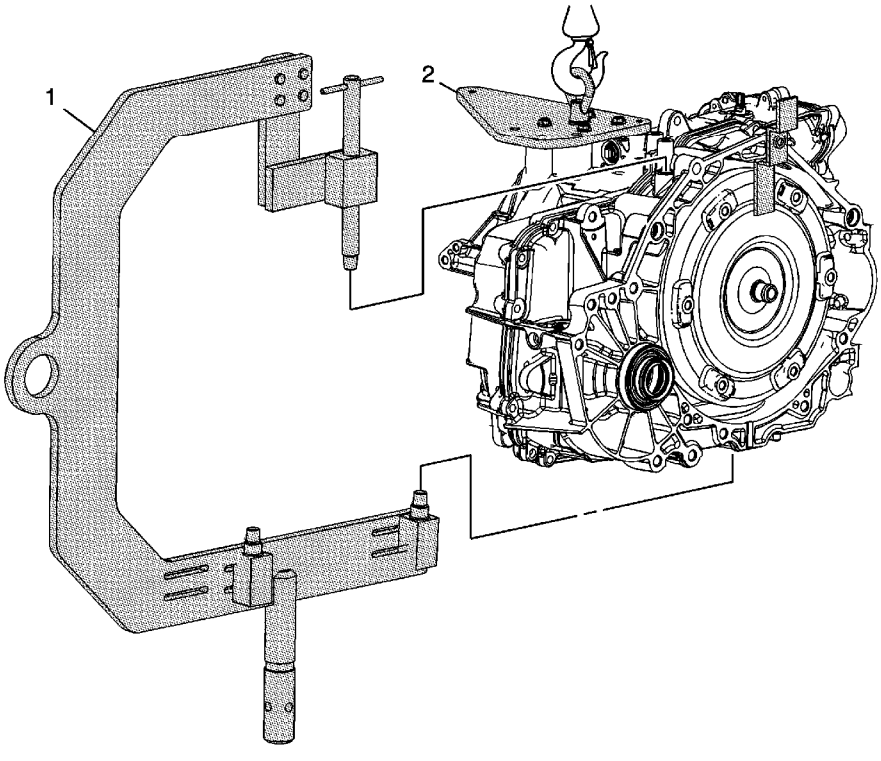

Callout	Component Name
1	*J-46625* Transmission Holding Fixture **Tip** Raise the transmission in order to remove the holding fixture.
2	*DT-47811-A* Transmission Lift Plate **Tip** Lower the transmission assembly onto the transmission jack in order to remove the lift plate.

cardiagn.com