Protected by copyright. Copying for private or commercial purposes, in part or in whole, is not permitted unless authorised by AUDI AG. AUDI AG does not guarantee or accept any liability with respect to the correctness of information in this document. Copyright by AUDI AG.

Workshop Manual

Audi A4 2015 ➤ , Audi A4 Avant 2015 ➤ , Audi A4 China 2016 ➤ , Audi A4 allroad quattro 2016 ➤ , Audi A5 2016 ➤ , Audi Q5 2017 ➤ , Audi Q5 China 2019 ➤

7-speed dual clutch gearbox 0CJ, 0CK, 0CL, 0DN, 0DP

Edition 08.2018

List of Workshop Manual Repair Groups

Repair Group

00 - Technical data
30 - Clutch
34 - Controls, housing
35 - Gears, shafts
39 - Final drive - differential

Protected by copyright. Copying for private or commercial purposes, in part or in whole, is not permitted unless authorised by AUDI AG. AUDI AG does not guarantee or accept any liability with respect to the correctness of information in this document. Copyright by AUDI AG.

Technical information should always be available to the foremen and mechanics, because their careful and constant adherence to the instructions is essential to ensure vehicle road-worthiness and safety. In addition, the normal basic safety precautions for working on motor vehicles must, as a matter of course, be observed.

All rights reserved.
No reproduction without prior agreement from publisher.

Copyright © 2018 Audi AG, Ingolstadt

D4B80597318

Contents

00 - Technical data . . . 1
1 Technical data . . . 1
1.1 Identification . . . 1
1.2 Capacities . . . 1
2 Electrical components . . . 3
3 Safety precautions . . . 4
3.1 General safety precautions . . . 4
3.2 Safety precautions when working on vehicles with start/stop system . . . 4
3.3 Safety precautions when using testers and measuring instruments during a road test . . . 5
3.4 Safety precautions when tow-starting and towing . . . 5
4 Repair instructions . . . 6
4.1 Rules for cleanliness . . . 6
4.2 General repair instructions . . . 6
4.3 Deactivating ATF pump and discharging hydraulic accumulator . . . 7
4.4 Contact corrosion . . . 8
4.5 Safety functions of gearbox control unit . . . 8
5 Transmission layout . . . 10
5.1 Transmission layout - four-wheel drive . . . 10

30 - Clutch . . . 12
1 Clutch . . . 12

34 - Controls, housing . . . 13
1 Selector mechanism . . . 13
1.1 Exploded view - selector mechanism . . . 13
1.2 Exploded view - manual release mechanism for parking lock . . . 16
1.3 Checking selector mechanism . . . 17
1.4 Manual release from position P . . . 22
1.5 Removing and installing selector lever handle . . . 25
1.6 Detaching and attaching selector lever boot on selector lever handle . . . 27
1.7 Removing and installing selector mechanism . . . 27
1.8 Removing and installing manual release cable for parking lock . . . 29
1.9 Removing and installing parking lock solenoid N486 / gear sensor G676 . . . 33
1.10 Renewing seal for parking lock shaft . . . 37
2 Removing and installing gearbox . . . 40
2.1 Removing gearbox . . . 40
2.2 Installing gearbox . . . 61
2.3 Tightening torques for gearbox . . . 69
3 Transporting gearbox . . . 72
4 Securing to engine and gearbox support . . . 73
5 Assembly mountings . . . 74
5.1 Exploded view - assembly mountings . . . 74
5.2 Removing and installing tunnel cross member . . . 74
6 Gear oil circuit . . . 77
6.1 Overview - gear oil circuit . . . 77
6.2 Removing and installing gear oil pump . . . 78
7 ATF circuit . . . 81
7.1 Exploded view - ATF circuit . . . 81
7.2 Removing and installing ATF cooler . . . 83
8 Gear oil . . . 86
8.1 Checking gear oil level . . . 86

Protected by copyright. Copying for private or commercial purposes, in part or in whole, is not permitted unless authorised by AUDI AG. AUDI AG does not guarantee or accept any liability with respect to the correctness of information in this document. Copyright by AUDI AG.

8.2 Draining and filling gear oil 87
9 ATF 91
9.1 Checking ATF level 91
9.2 Draining and filling ATF 94
10 Mechatronic unit 99
10.1 Exploded view - mechatronic unit 99
10.2 Removing and installing oil pan 100
10.3 Removing and installing mechatronic unit 102

35 - Gears, shafts 103
1 Dismantling and assembling gears and shafts 103

39 - Final drive - differential 104
1 Gearbox control system 104
1.1 Overview of fitting locations - gearbox control system 104
2 Oil seals 106
2.1 Overview of fitting locations - oil seals 106
3 Differential 107
3.1 Exploded view - differential 107
4 Four-wheel drive coupling 109

Protected by copyright. Copying for private or commercial purposes, in part or in whole, is not permitted unless authorised by AUDI AG. AUDI AG does not guarantee or accept any liability with respect to the correctness of information in this document. Copyright by AUDI AG.

00 – Technical data

1 Technical data

(ARL005945; Edition 08.2018)

⇒ “1.1 Identification”, page 1

⇒ “1.2 Capacities”, page 1

1.1 Identification

⇒ “1.1.1 Gearbox identification”, page 1

⇒ “1.1.2 Identification - four-wheel drive coupling”, page 1

1.1.1 Gearbox identification

The following details are given on the gearbox housing -arrows-:

- Code letters
- Serial number
- Production date

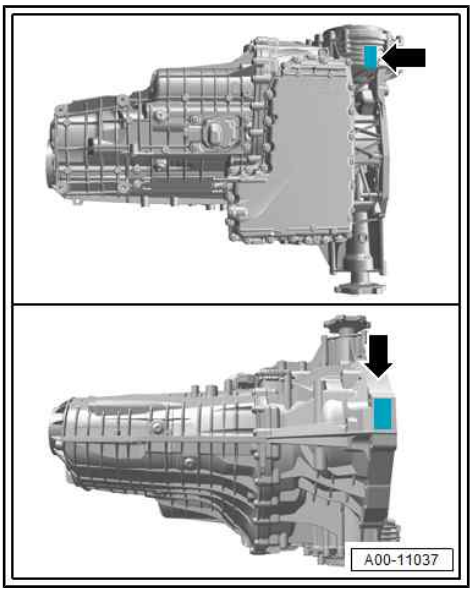

1.1.2 Identification - four-wheel drive coupling

Location on four-wheel drive coupling

- -Arrow A- Production date

Example: 23.03.2016

- -Arrow B- Part number

Example: 0CX 409 431 A

- -Arrow C- Serial number

Example: 0000423

- -Arrow D- Coupling classification

Example: 6046.14

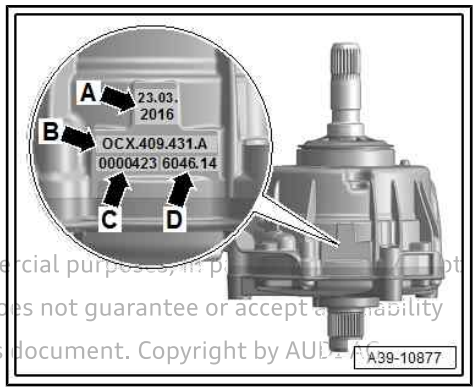

Exploded view of four-wheel drive coupling ⇒ Rear final drive; Rep. gr. 39 ; Four-wheel drive coupling; Exploded view - four-wheel drive coupling

1.2 Capacities

Capacities	ATF	MTF
Initial filling by manufacturer	Approx. 4.35 ltr.	3.8 l

Protected by copyright. Copying for private or commercial purposes, in part or in whole, is not permitted unless authorised by AUDI AG. AUDI AG does not guarantee or accept any liability with respect to the correctness of information in this document. Copyright by AUDI AG.

Capacities	ATF	MTF
ATF change capacity	Approx. 3.5 ltr.	3.8 l
Change interval	⇒ Maintenance tables	
Lubricant	ATF	MTF
	For dual clutch gearbox 0CJ, 0CK, 0CL ⇒ Electronic parts catalogue	

Protected by copyright. Copying for private or commercial purposes, in part or in whole, is not permitted unless authorised by AUDI AG. AUDI AG does not guarantee or accept any liability with respect to the correctness of information in this document. Copyright by AUDI AG.

2 Electrical components

Overview of fitting locations - electrical components can be found in the chapter ⇒ "1 Gearbox control system", page 104

Protected by copyright. Copying for private or commercial purposes, in part or in whole, is not permitted unless authorised by AUDI AG. AUDI AG does not guarantee or accept any liability with respect to the correctness of information in this document. Copyright by AUDI AG.

3 Safety precautions

⇒ “3.1 General safety precautions”, page 4

⇒ “3.2 Safety precautions when working on vehicles with start/stop system”, page 4

⇒ “3.3 Safety precautions when using testers and measuring instruments during a road test”, page 5

⇒ “3.4 Safety precautions when tow-starting and towing”, page 5

3.1 General safety precautions

Observe the following precautions to avoid possible injury and/or damage to the vehicle:

> ⚠ **WARNING**
>
> *Accidents and injury can be caused if a gear is inadvertently engaged while the engine is running.*
>
> - *Prior to performing work with the engine running, move the selector lever to position “P” and pull up the parking brake button to apply the electromechanical parking brake.*

Observe the following precautions to avoid possible injury and/or irreparable damage to electrical and electronic components:

- Switch off ignition before disconnecting and connecting test equipment.

> ⚠ **Caution**
>
> *When disconnecting the battery there is a risk of irreparable damage to electronic components.*
>
> - *Observe notes on procedure for disconnecting the battery.*
> - *Always switch off the ignition before disconnecting the battery.*

– Disconnect battery ⇒ Electrical system; Rep. gr. 27 ; Battery; Disconnecting and connecting battery .

3.2 Safety precautions when working on vehicles with start/stop system

Risk of injury - engine may start unexpectedly

The engine can start unexpectedly if the vehicle's start/stop system is activated. A message in the instrument cluster indicates whether the start/stop system is activated.

– To deactivate the start/stop system, switch off the ignition.

Protected by copyright. Copying for private or commercial purposes, in part or in whole, is not permitted unless authorised by AUDI AG. AUDI AG does not guarantee or accept any liability with respect to the correctness of information in this document. Copyright by AUDI AG.

3.3 Safety precautions when using testers and measuring instruments during a road test

Risk of injury if test equipment is not secured

If an accident occurs and the front passenger's airbag is triggered, test equipment which is not secured adequately may be catapulted through the vehicle with potentially serious consequences.

– Secure test equipment on the rear seat with a strap.

Or

– Have a second mechanic operate test equipment on the rear seat.

3.4 Safety precautions when tow-starting and towing

Risk of damage to gearbox

Incorrect towing of the vehicle may result in damage to the gearbox.

– Move selector lever into position “N” before towing the vehicle.

– Do not exceed a speed of 50 km/h or a distance of 50 km when towing the vehicle.

Protected by copyright. Copying for private or commercial purposes, in part or in whole, is not permitted unless authorised by AUDI AG. AUDI AG does not guarantee or accept any liability with respect to the correctness of information in this document. Copyright by AUDI AG.

4 Repair instructions

⇒ “4.1 Rules for cleanliness”, page 6

⇒ “4.2 General repair instructions”, page 6

⇒ “4.3 Deactivating ATF pump and discharging hydraulic accumulator”, page 7

⇒ “4.4 Contact corrosion”, page 8

⇒ “4.5 Safety functions of gearbox control unit”, page 8

Protected by copyright. Copying for private or commercial purposes, in part or in whole, is not permitted unless authorised by AUDI AG. AUDI AG does not guarantee or accept any liability with respect to the correctness of information in this document. Copyright by AUDI AG.

4.1 Rules for cleanliness

- Carefully clean connection points and the surrounding area with engine cleaner or brake cleaner and dry thoroughly before opening.
- Use cleaning fluid - D 009 401 04- to clean the gearbox and its components.
- Use lint-free cloths for cleaning, such as the “X70” cloth from Kimberly-Clark Professional.
- Seal off open lines and connections immediately with clean plugs or protective caps from engine bung set - VAS 6122- .
- After removal, place parts on a clean surface and cover them. Use sheeting and paper. Use lint-free cloths.
- Carefully cover or seal open components if repairs cannot be carried out immediately.
- Only install clean components; replacement parts should only be unpacked immediately prior to installation.
- Protect unplugged electrical connectors against dirt and moisture and make sure connections are dry when attaching.

4.2 General repair instructions

- Proper tools and the maximum possible care and cleanliness are essential for satisfactory repairs to the transmission units. The usual basic safety precautions also naturally apply when carrying out repair work.
- To avoid repetition, a number of generally applicable instructions for the various repair procedures are summarised here. They apply to the work described in this Manual.

Guided Fault Finding, Vehicle self-diagnosis and Test Instruments

- Before servicing the gearbox, use `Diagnosis` mode to identify the cause of damage as precisely as possible ⇒ Vehicle diagnostic tester.

Special tools

For a complete list of special tools used in this Workshop Manual please refer to ⇒ "Workshop equipment and special tools" .

Environmental and waste disposal regulations for oil

- Gear oil and any other type of oil must be handled with care.
- Dispose of drained oil properly.
- Always adhere to statutory environmental and waste disposal regulations.
- Observe the information shown on the packaging of the oil.

Gearbox

- Do not run the engine or tow the vehicle with the oil pan removed or when there is no gear oil in the gearbox.
- Thoroughly clean all joints and connections and the surrounding areas before disconnecting.
- When installing gearbox, ensure that dowel sleeves are fitted correctly.

O-rings, seals, oil seals and gaskets

- Always renew O-rings, seals, oil seals and gaskets.
- After removing gaskets and seals, always inspect the contact surface on the housing or shaft for burrs resulting from removal or for other signs of damage.
- Thoroughly clean housing joint surfaces before assembling.
- Always replace paper gaskets. Completely remove old gasket and clean sealing surfaces thoroughly.
- Lightly lubricate the outer circumference and sealing lip of oil seals with gear oil before installing.
- Lightly lubricate O-rings with gear oil or vaseline before installation to prevent them from getting crushed during assembly.
- Do not use any other lubricants where gear oil is specified. Otherwise, there is a risk of problems occurring in the gearbox hydraulics.
- The open side of the oil seals faces toward the side with fluid filling.
- When installing a new oil seal, position the seal in the housing so that the sealing lip does not contact the shaft in the same place as the old seal (make use of installation depth tolerances).
- Observe rules for cleanliness ⇒ page 6 .

Locking elements

- Do not over-stretch circlips.
- Renew circlips which have been damaged or over-tensioned.
- Circlips must be properly seated in the base of the groove.

Nuts, bolts

- Loosen bolts in reverse sequence to the specified tightening sequence.
- Bolts and nuts which secure covers and housings should be loosened and tightened in diagonal sequence and in stages if no tightening sequence is specified.
- Renew self-locking nuts.
- Use a wire brush to clean the threads of bolts which are secured with locking fluid. Then apply locking fluid - AMV 185 101 A1- to bolt threads before installing.
- The tightening torques stated apply to non-oiled nuts and bolts.

4.3 Deactivating ATF pump and discharging hydraulic accumulator

Publication, copying for private or commercial purposes, in part or in whole, is not permitted unless authorised by AUDI AG. AUDI AG does not guarantee or accept any liability with respect to the correctness of information in this document. Copyright by AUDI AG.

Special tools and workshop equipment required

- Vehicle diagnostic tester

Copyright by AUDI AG. Copying for private or commercial purposes, in part or in whole, is not permitted without the prior consent of AUDI AG. AUDI AG does not guarantee or accept any liability with respect to the correctness of information in this document. Copyright by AUDI AG.

WARNING

System is pressurised.

The "7-speed dual clutch gearbox 0CJ, 0CK, 0CL" is equipped with an electric ATF pump and hydraulic accumulator.

The electric ATF pump may start up at any time.

Because of the hydraulic accumulator, the ATF system is pressurised even when the ignition is off.

- *The electric ATF pump must always be deactivated and the hydraulic accumulator must be discharged before opening the gearbox.*
- *If the current state of the system is unclear (e.g. if the gearbox control unit is defective or if the gearbox is from an unknown source), only loosen the bolts on the mechatronic unit very slightly so that the oil pressure in the accumulator can dissipate slowly.*
- *Unplug electrical connector on automatic gearbox control unit - J217- before removing oil pan.*
- *Put on safety goggles.*

Deactivating ATF pump and discharging hydraulic accumulator

– Connect Vehicle diagnostic tester and start `Diagnosis` mode.

- `Select own test`
- `02 - Gearbox electronics, Functions`
- Select `02 - ATF pressure relief / Disable ATF pump` or `02 - ATF level` ⇒ `Drain off ATF`

4.4 Contact corrosion

Contact corrosion can occur if unsuitable fasteners are used (e.g. bolts, nuts, washers, etc.).

For this reason, only fasteners with a special surface coating are fitted.

Rubber or plastic parts and adhesives also consist of non-conductive materials.

If you are not sure whether used parts can be re-installed, always fit new parts ⇒ Electronic parts catalogue .

Please note:

- We recommend using only genuine replacement parts; these have been tested and are compatible with aluminium.
- We recommend the use of accessories approved by Audi.
- Damage caused by contact corrosion is not covered by warranty.

4.5 Safety functions of gearbox control unit

In the event of a failure of one or more components/sensors, the gearbox control unit will activate appropriate backup functions. This ensures that the gearbox will not be damaged, however, the function and quality of the gear shifts will be impaired.

Faults detected by the gearbox are classified in four different categories.

- 1) The fault is stored and a backup programme enables the vehicle to drive on (in some cases with restrictions). The driver will not be made aware of the problem, as it is not critical to driving safety or to the gearbox itself. The selector lever position display in the instrument cluster will continue to show the selector lever position currently engaged in the normal way. If at all, the driver will only notice the fault if he experiences driveability problems, and will then automatically contact an Audi Service Partner to identify the cause.
- 2) Certain positions on the selector lever position display in the instrument cluster start to flash. This is to inform the driver that this particular selector lever position is currently not available. Example: position “D” is not available when the selector lever is in position “R” and the vehicle is still rolling backwards. In this case, selector lever position “D” will start to flash on the selector lever position display in the instrument cluster. The gearbox control unit prevents 1st gear from being engaged in order to avoid damage to the gearbox. 1st gear will be engaged once the vehicle has come to a standstill.
- 3) The complete selector lever position display in the instrument cluster is lit up and flashing. The current selector lever position is indicated in the instrument cluster (e.g. “D” is highlighted). This is an indication that the gearbox has been overloaded or the maximum temperature in the gearbox has been exceeded (overheating), e.g. towing a load that was too heavy.
- 4) If the complete selector lever position display in the instrument cluster is lit up and flashing, this means that a serious fault in the gearbox has been identified. The display in the instrument cluster no longer shows the current selector lever position. The defect is critical with regard to driving safety or the gearbox itself. It may no longer be possible to use all gears. The driver is made aware by the flashing gear selection indicator that he should immediately contact an Audi Service Partner.

Protected by copyright. Copying for private or commercial purposes, in part or in whole, is not permitted unless authorised by AUDI AG. AUDI AG does not guarantee or accept any liability with respect to the correctness of information in this document. Copyright by AUDI AG.

5 Transmission layout

5.1 Transmission layout - four-wheel drive

5.1.1 Transmission layout - vehicles with centre differential

1 - Rear final drive

- ❑ Four-wheel drive vehicles only
- ❑ Removing and installing ⇒ Rear final drive; Rep. gr. 39 ; Final drive; Removing and installing final drive

2 - Propshaft

- ❑ Four-wheel drive vehicles only
- ❑ Removing and installing ⇒ Rear final drive; Rep. gr. 39 ; Propshaft; Removing and installing propshaft

3 - 7-speed dual clutch gearbox 0CJ, 0CK, 0CL

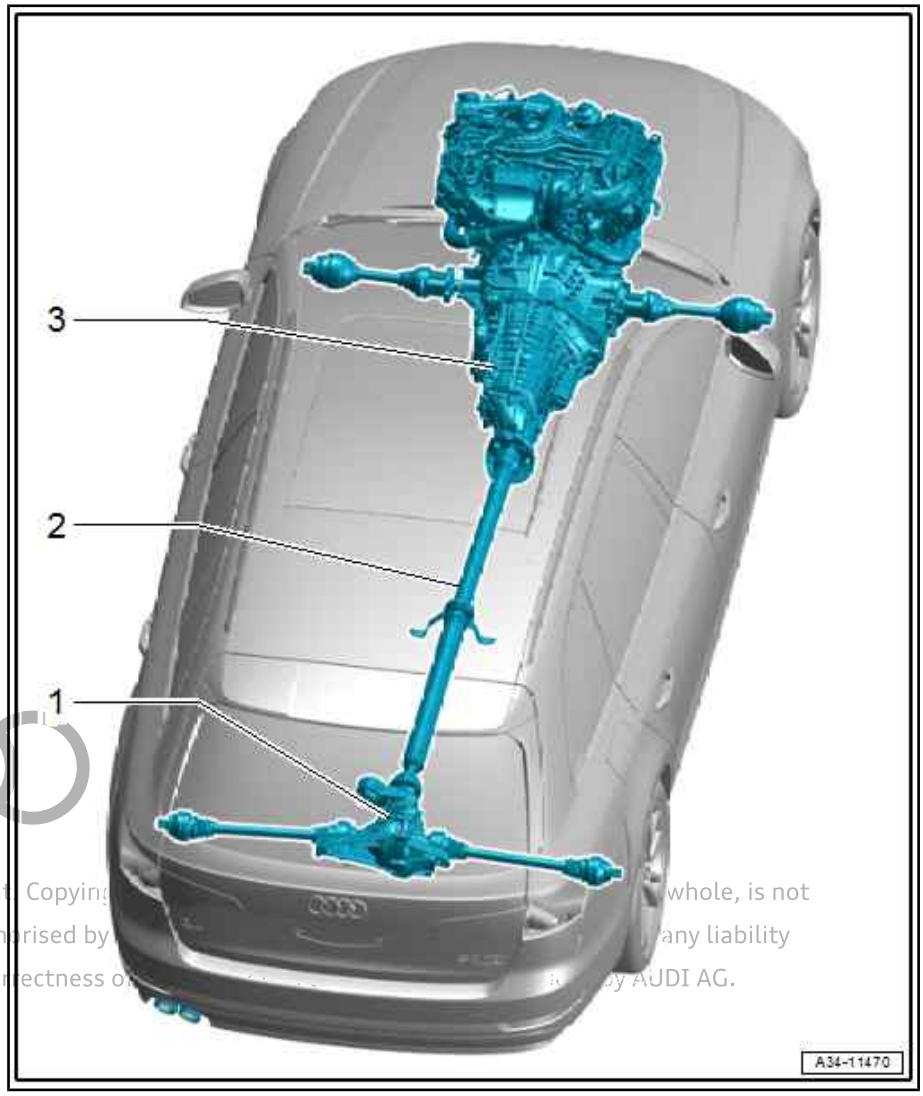

Protected by copyright. Copying whole, is not permitted unless authorised by any liability with respect to the correctness of by AUDI AG.

5.1.2 Transmission layout - vehicles with four-wheel drive coupling

Identification and ratio

Note

-Arrows- point in direction of travel.

Protected by copyright. Copying for private or commercial purposes, in part or in whole, is not permitted unless authorised by AUDI AG. AUDI AG does not guarantee or accept any liability with respect to the correctness of information in this document. Copyright by AUDI AG.

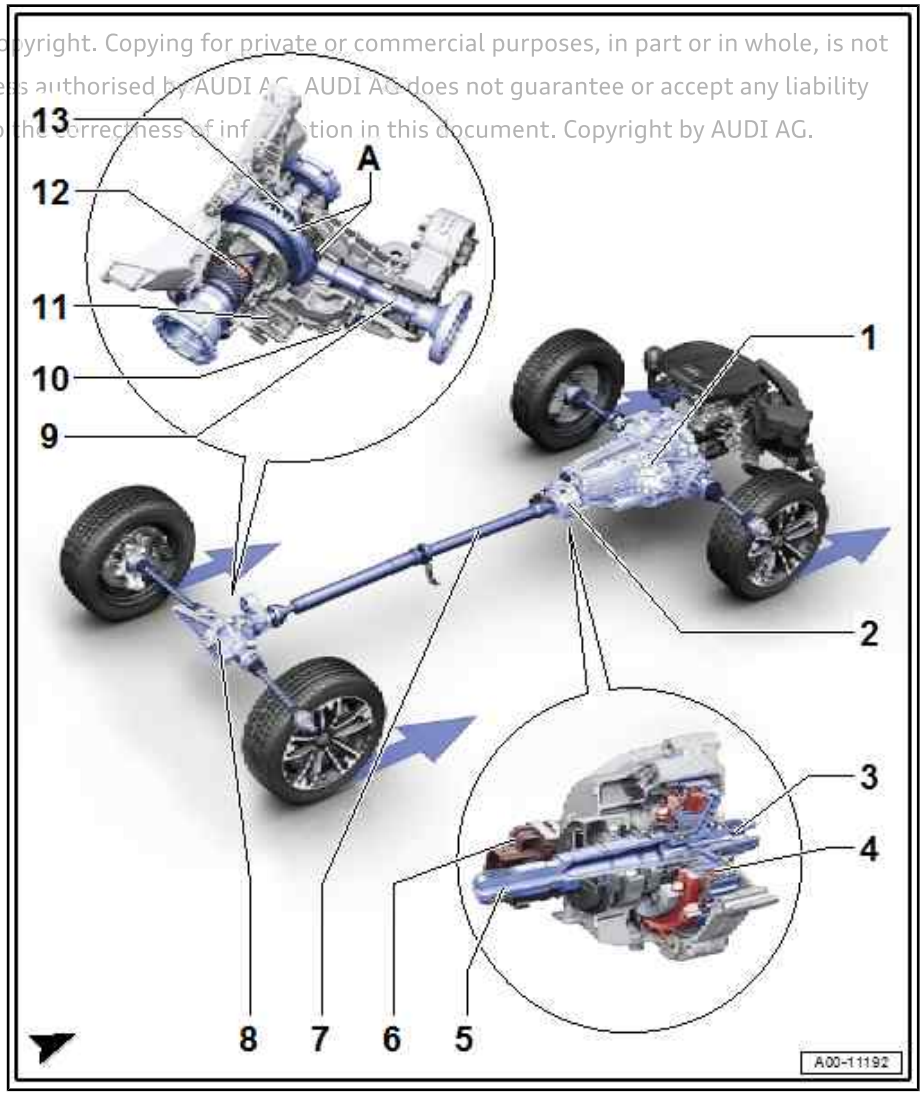

1 - Manual gearbox

- ❑ Layout of components for front-wheel drive and four-wheel drive versions is identical

2 - Four-wheel drive coupling

- ❑ Overview ⇒ Rear final drive; Rep. gr. 39 ; Four-wheel drive coupling

3 - Four-wheel drive coupling input shaft

4 - Multi-plate clutch

5 - Rear splined shaft

6 - All-wheel drive control unit - J492-

With:

- ♦ Clutch actuator for all-wheel drive - V622-
- ♦ Clutch position sender for all-wheel drive - G969-
- ♦ Removing and installing ⇒ Rear final drive; Rep. gr. 39 ; Four-wheel drive coupling; Removing and installing control unit

7 - Propshaft

- ❑ Overview ⇒ Rear final drive; Rep. gr. 39 ; Propshaft

8 - Rear final drive

- ❑ Overview ⇒ Rear final drive; Rep. gr. 39 ; Final drive

9 - Rear pinion shaft

10 - Propshaft speed sender - G970-

11 - Clutch actuator 2 for all-wheel drive - V623-

12 - Dog clutch

13 - Rear differential

A - Rear final drive

30 – Clutch

1 Clutch

All work on the dual clutch is described in ⇒ Servicing 7-speed dual clutch gearbox 0CJ, 0CK, 0CL; Rep. gr. 30 ; Clutch .

Protected by copyright. Copying for private or commercial purposes, in part or in whole, is not permitted unless authorised by AUDI AG. AUDI AG does not guarantee or accept any liability with respect to the correctness of information in this document. Copyright by AUDI AG.

34 – Controls, housing

1 Selector mechanism

⇒ “1.1 Exploded view - selector mechanism”, page 13

⇒ “1.2 Exploded view - manual release mechanism for parking lock”, page 16

⇒ “1.3 Checking selector mechanism”, page 17

⇒ “1.4 Manual release from position P”, page 22

⇒ “1.5 Removing and installing selector lever handle”, page 25

⇒ “1.6 Detaching and attaching selector lever boot on selector lever handle”, page 27

⇒ “1.7 Removing and installing selector mechanism”, page 27

⇒ “1.8 Removing and installing manual release cable for parking lock”, page 29

⇒ “1.9 Removing and installing parking lock solenoid N486 / gear sensor G676 ”, page 33

⇒ “1.10 Renewing seal for parking lock shaft”, page 37

Protected by copyright. Copying for private or commercial purposes, in part or in whole, is not permitted unless authorised by AUDI AG. AUDI AG does not guarantee or accept any liability with respect to the correctness of information in this document. Copyright by AUDI AG.

1.1 Exploded view - selector mechanism

Selector mechanism in passenger compartment

Protected by copyright. Copying for private or commercial purposes, in part or in whole, is not permitted unless authorised by AUDI AG. AUDI AG does not guarantee or accept any liability with respect to the correctness of information in this document. Copyright by AUDI AG.

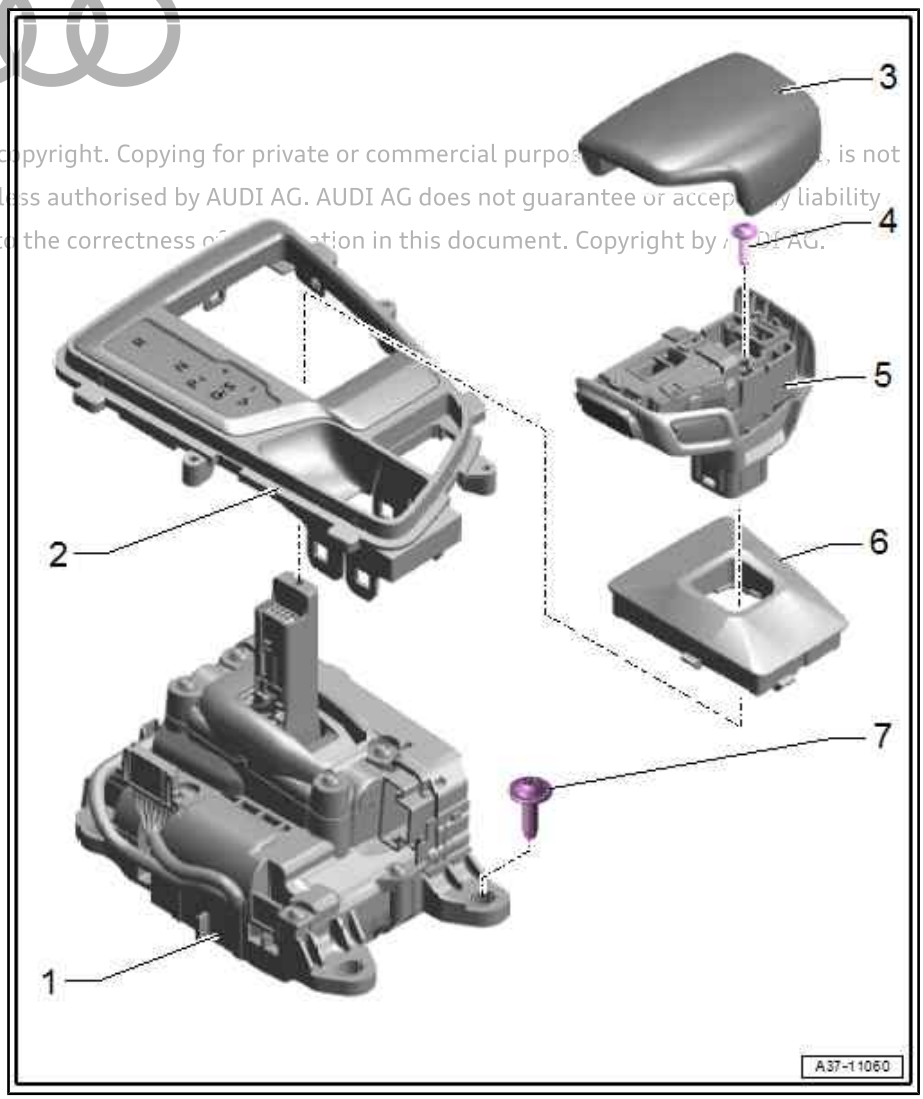

1 - Selector mechanism

- ❑ Combined as one unit with the following components:
- ♦ Selector lever - E313-
- ♦ Selector lever position sender - G727-
- ♦ Sender for lateral selector lever lock - G868-
- ♦ Selector lever sensors control unit - J587-
- ♦ Selector lever lock solenoid - N110-
- ♦ Motor for lateral selector lever lock - V577-
  - ❑ Components cannot be renewed separately if defective
  - ❑ Removing and installing ⇒ page 27

2 - Selected range display - Y5-

- ❑ Removing and installing ⇒ Electrical system; Rep. gr. 96 ; Lights; Overview of fitting locations - lights in centre console

3 - Selector lever handle, top section

- ❑ Removing and installing ⇒ page 25

4 - Bolt

- ❑ Cannot be ordered separately
- ❑ 3.2 Nm

5 - Selector lever handle, bottom section

- ❑ Combined as one unit with the following components:
- ♦ Button for selector lever release - E681-
- ♦ Parking lock button - E816-
  - ❑ Components cannot be renewed separately if defective
  - ❑ Removing and installing ⇒ page 25

6 - Selector lever boot

- ❑ Removing and installing ⇒ page 27

7 - Bolt

- ❑ 8 Nm

Selector mechanism at gearbox

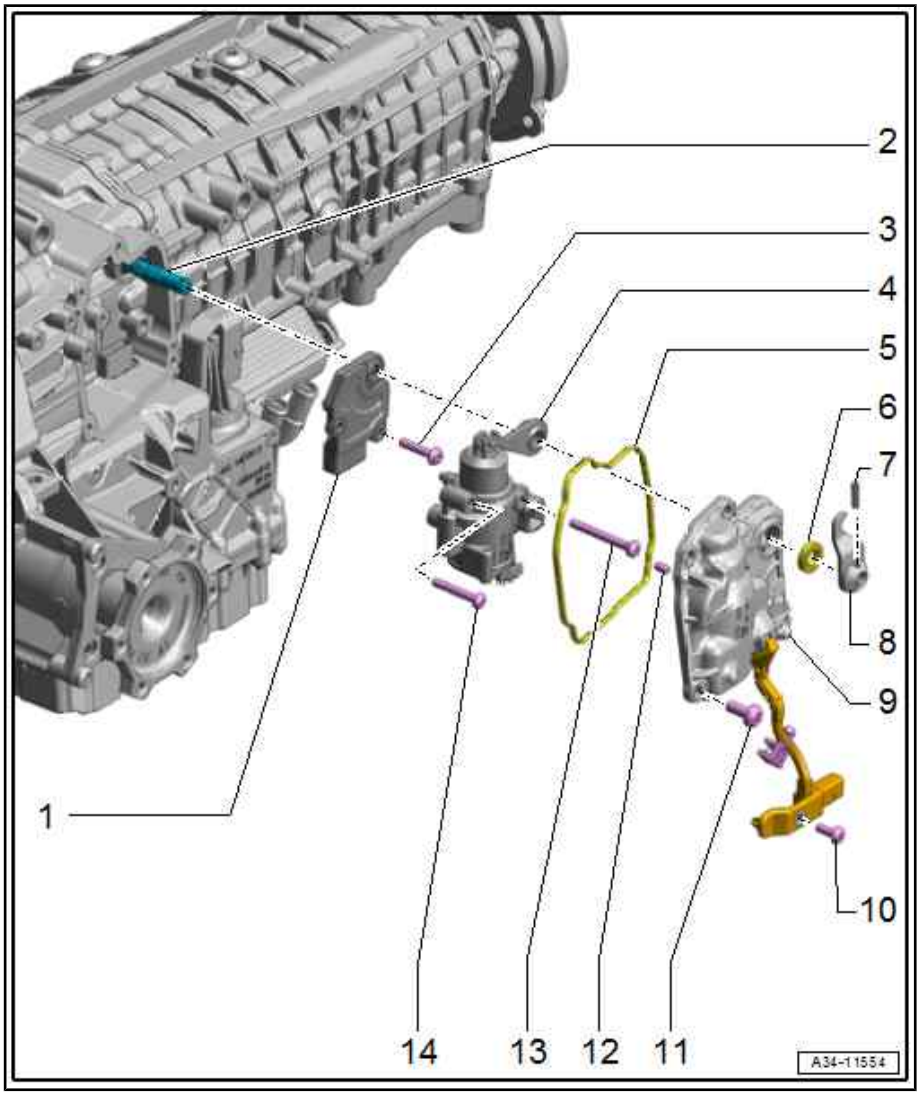

1 - Gear sensor - G676-

- ❑ Removing and installing ⇒ page 33

2 - Shaft

- ❑ For parking lock

3 - Bolt

- ❑ Renew after removing
- ❑ M6 × 30
- ❑ 3 Nm +90°

4 - Parking lock solenoid - N486-

- ❑ Electrohydraulic unit
- ❑ Removing and installing ⇒ page 33

5 - Gasket

- ❑ Renew after removing

6 - Seal

- ❑ For parking lock shaft
- ❑ Renewing ⇒ page 37

7 - Pin

8 - Lever

- ❑ For parking lock
- ❑ Removing and installing ⇒ “1.10 Renewing seal for parking lock shaft”, page 37

9 - Cover

- ❑ For parking lock
- ❑ With electrical wiring harness

10 - Bolt

- ❑ Renew after removing
- ❑ M6 × 14
- ❑ 3 Nm +45°

11 - Bolt

- ❑ M8 × 22
- ❑ Renew after removing
- ❑ 8 Nm +60°

12 - Dowel pin

- ❑ 2x

Copyright by copyright. Copying for private or commercial purposes, in part or in whole, is not permitted unless authorised by AUDI AG. AUDI AG does not guarantee or accept any liability with respect to the correctness of information in this document. Copyright by AUDI AG.

13 - Bolt

- ❑ Renew after removing
- ❑ M6 × 55
- ❑ 3 Nm +180°

14 - Bolt

- ❑ Renew after removing
- ❑ M6 × 35
- ❑ 3 Nm +90°

1.2 Exploded view - manual release mechanism for parking lock

⇒ “1.2.1 Exploded view - manual release mechanism for parking lock, A4/A5”, page 16

⇒ “1.2.2 Exploded view - manual release mechanism for parking lock, Q5”, page 17

1.2.1 Exploded view - manual release mechanism for parking lock, A4/A5

1 - Bolt
- ❑ 2x
- ❑ 4 Nm

2 - Manual release cable
- ❑ For parking lock
- ❑ Do not bend or kink
- ❑ Removing and installing ⇒ page 29

3 - Gearbox

4 - Nut
- ❑ 8 Nm

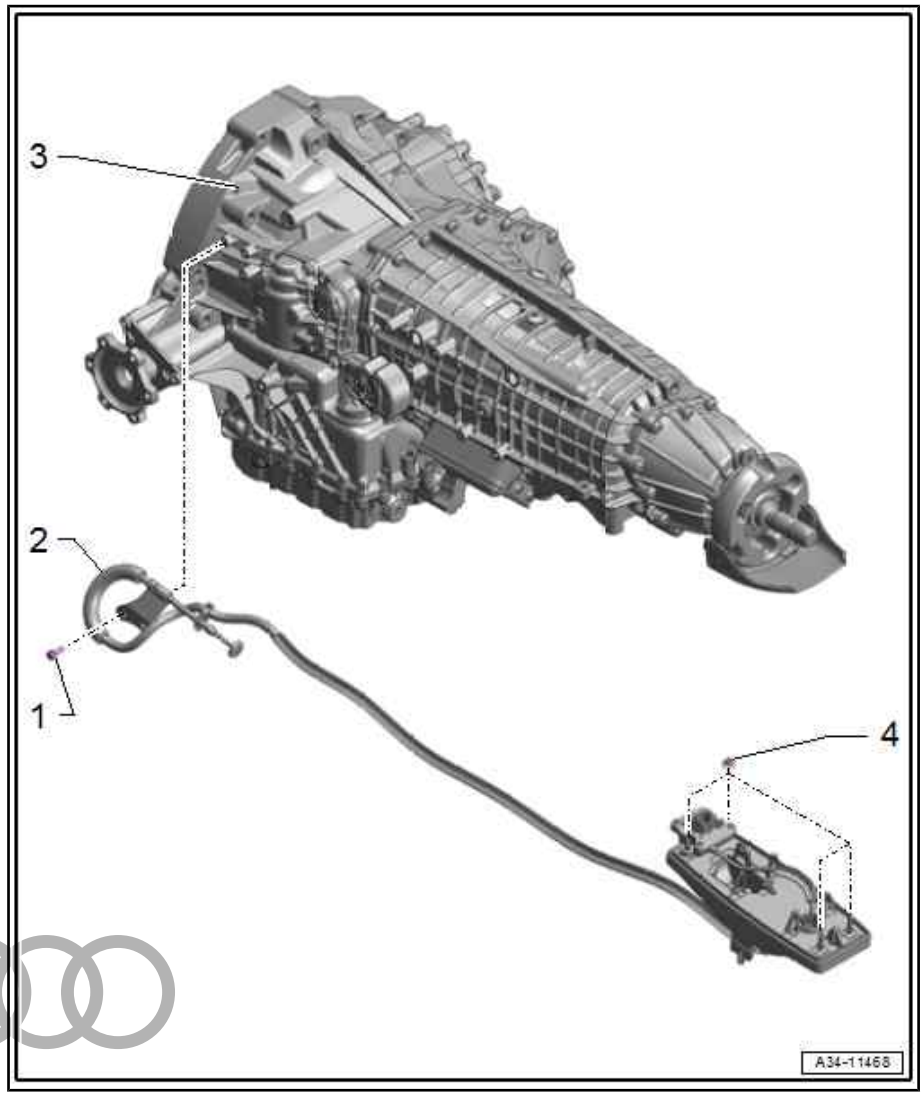

Protected by copyright. Copying for private or commercial purposes, in part or in whole, is not permitted unless authorised by AUDI AG. AUDI AG does not guarantee or accept any liability with respect to the correctness of information in this document. Copyright by AUDI AG.

1.2.2 Exploded view - manual release mechanism for parking lock, Q5

1 - Manual release cable (rear)
- ❑ For parking lock
- ❑ Do not bend or kink
- ❑ Removing and installing ⇒ page 32

2 - Nut
- ❑ 2x
- ❑ 4 Nm

3 - Frame (bottom section)

4 - Frame (top section)

5 - Cover

6 - Bolt
- ❑ 9 Nm

7 - Manual release cable (front)
- ❑ For parking lock
- ❑ Do not bend or kink
- ❑ Removing and installing ⇒ page 30

8 - Nut
- ❑ 8 Nm

9 - Bracket
- ❑ For manual release mechanism

10 - O-ring
- ❑ Renew after removing

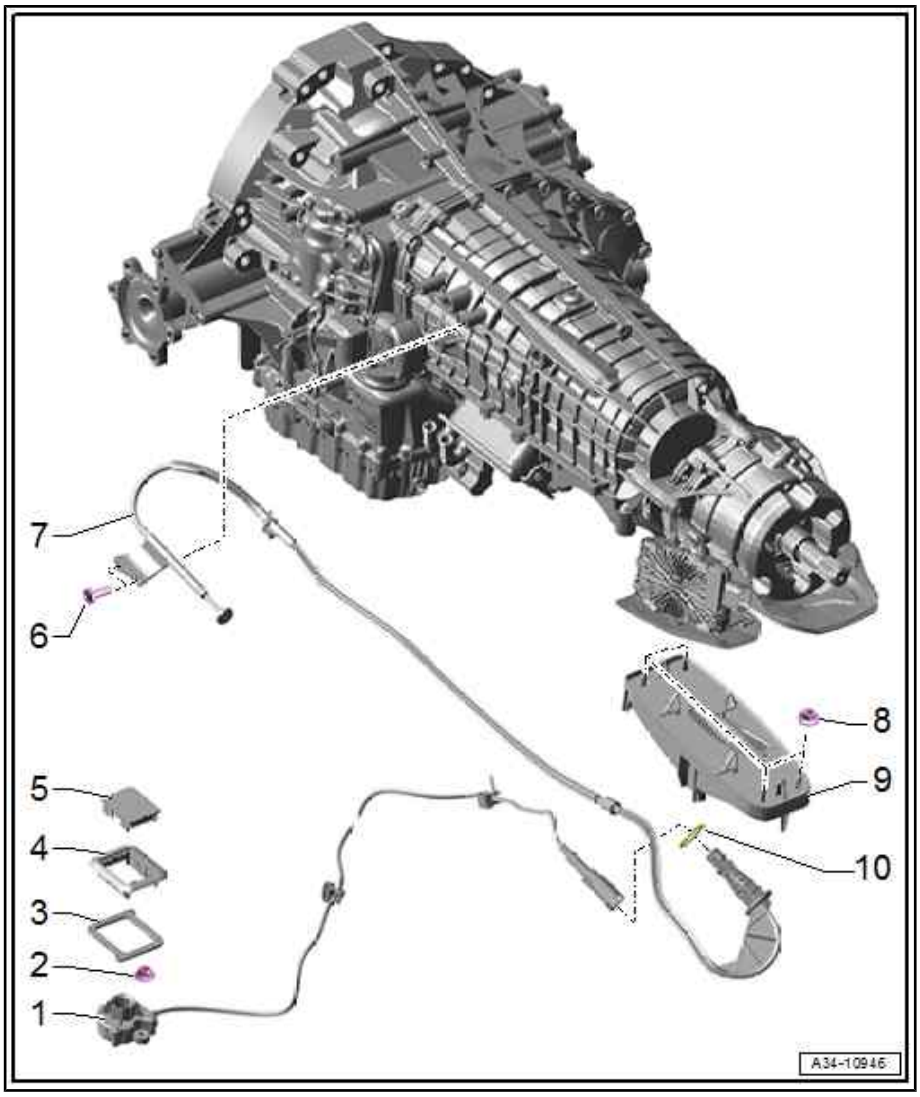

1.3 Checking selector mechanism

WARNING

Accidents and injury can be caused if a gear is inadvertently engaged while the engine is running.

- *Prior to performing work with engine running, put gearbox in position "P" and pull up parking brake button to apply the electromechanical parking brake.*
- *Observe safety precautions when the vehicle is moving ⇒ page 5 .*
- *You must work through all the tests listed.*
- *If the specified results are not obtained, check whether the selector lever is installed correctly ⇒ page 25 and perform "diagnosis" ⇒ Vehicle diagnostic tester.*

Protected by copyright. Copying for private or commercial purposes, in part or in whole, is not permitted unless authorised by AUDI AG. AUDI AG does not guarantee or accept any liability with respect to the correctness of information in this document. Copyright by AUDI AG.

Overview:

- 1. Checking locking functions/function of button ⇒ page 19
- 2. Checking operation of selector mechanism ⇒ page 20
- 3. Checking gear indicator ⇒ page 21
- 4. Checking display in instrument cluster ⇒ page 22
- 5. Checking parking lock ⇒ page 22

Protected by copyright. Copying for private or commercial purposes, in part or in whole, is not permitted unless authorised by AUDI AG. AUDI AG does not guarantee or accept any liability with respect to the correctness of information in this document. Copyright by AUDI AG.

1. Checking locking functions/function of button

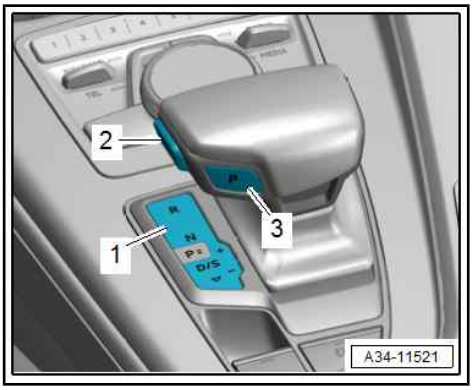

Step 1.1

- Engine running, gearbox in position “P” and brake pedal not pressed.

– Press interlock button -2- and pull selector lever towards rear:

  The gearbox should remain in position “P”.

Step 1.2

- Engine running, gearbox in position “P” and interlock button -2- not pressed.

– Press brake pedal and pull selector lever towards rear:

  The gearbox should remain in position "P".

Step 1.3

- Engine running, gearbox in position “P”, brake pedal and interlock button -2- pressed.

– Shift gearbox into position "D":

  Position “D” should be displayed on the selected range display - Y5- -item 1- and in the instrument cluster.

Step 1.4

- Engine running, gearbox in position “D” and interlock button -2- not pressed.

– Push selector lever forwards towards position “N”:

  It should not be possible to move selector lever, and gearbox should remain in position “D”.

Step 1.5

- Engine running, gearbox in position “D” and interlock button -2- pressed.

– Shift gearbox into position "N":

  Position “N” should be displayed on the selected range display - Y5- -item 1- and in the instrument cluster.

Step 1.6

- Engine running, gearbox in position “D”.

– Move selector lever towards rear:

  The gearbox should shift to “S”, and the display in the instrument cluster should change from “D” to “S”. Move selector lever towards rear again; gearbox position “D” should be selected and displayed again.

Step 1.7

- Engine running.

– Move selector lever to “P”, “R” or “N”.

– Move selector lever into tiptronic gate:

  It should only be possible to shift to the tiptronic gate from “D” or “S”.

Protected by copyright. Copying for private or commercial purposes, in part or in whole, is not permitted unless authorised by AUDI AG. AUDI AG does not guarantee or accept any liability with respect to the correctness of information in this document. Copyright by AUDI AG.

2. Checking operation of selector mechanism (shiftlock)

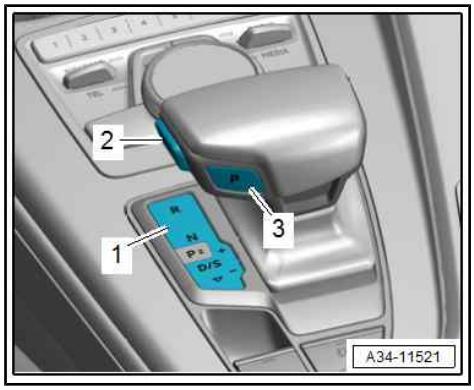

Step 2.1

- Engine running, gearbox in position “D” and vehicle moving at a speed above 3 km/h.

– Shift gearbox into position “N”. Then select “D” without pressing interlock button -2- or brake pedal.

  This operation should be possible.

Step 2.2

- Engine running, gearbox in position “D” and vehicle moving at a speed below 3 km/h.

– Select position “N” and wait for at least 1 second (do not press brake pedal); press interlock button -2-:

  It should not be possible to select position “R” or “D”.

Step 2.3

- Engine running, gearbox in position “N” and vehicle moving at a speed below 3 km/h.

– Press brake pedal; do not press interlock button -2-:

  It should not be possible to select position “R”.

  It should be possible to select position “D”.

Step 2.4

- Engine running, gearbox in position “M”.

– Press "P" button on selector lever handle and move selector lever to “P”:

  “P” should now be selected and displayed in instrument cluster and on "P" button on selector lever handle. In addition, the "P" symbol between position “N” and “D/S” should light up on selected range display - Y5- -item 1-.

  The selector lever should spring back automatically into the automatic gate.

Step 2.5

- Engine running, gearbox in position “M”.

– Move selector lever towards “+” and “–”:

  When the vehicle is driven, the gear indicator in the instrument cluster should change up or down a gear accordingly (where engine speed permits).

Protected by copyright. Copying for private or commercial purposes, in part or in whole, is not permitted unless authorised by AUDI AG. AUDI AG does not guarantee or accept any liability with respect to the correctness of information in this document. Copyright by AUDI AG.

3. Checking gear indicator

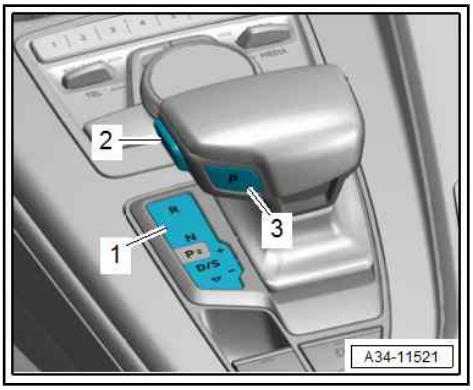

Step 3.1

- Engine running.

– Move selector lever to positions “P”, “R”, “N”, “D/S” and “+/–” one after another:

  The symbol corresponding to the selected gearbox position should light up much brighter that the other symbols.

Step 3.2

- Engine running.

– Press button -3- and move selector lever to “P”:

  The "P" symbol on the button on the selector lever handle should light up as a white function indicator lamp.

  The "P" symbol in the selected range display - Y5- -item 1- should light up as a red function indicator lamp.

  None of the symbols for other gearbox positions should be lit.

Protected by copyright. Copying for private or commercial purposes, in part or in whole, is not permitted unless authorised by AUDI AG. AUDI AG does not guarantee or accept any liability with respect to the correctness of information in this document. Copyright by AUDI AG.

4. Checking display in instrument cluster

Step 4.1

- Engine running, gearbox in position “P” and brake pedal not pressed.

– Press interlock button -2- and pull selector lever towards “D” or “R”:

  The following message should appear in the instrument cluster: “To select a gear please press brake pedal and interlock button on gear selector lever”.

Step 4.2

- Engine running, gearbox in position “P” and brake pedal pressed.

– Pull selector lever towards “D” or “R” without pressing interlock button -2-:

  The following message should appear in the instrument cluster: “To select a gear please press brake pedal and interlock button on gear selector lever”.

Step 4.3

- Engine running, gearbox in position “M”.

– Press interlock button and at the same time hold selector lever in “M” (not in "+" or "-") for at least 20 seconds:

  The following message should appear in the instrument cluster: “Move selector lever into automatic position”. A warning tone should also sound.

5. Checking parking lock

Step 5.1

- Engine running, gearbox in position “D”, “S”, “R”, “M” and vehicle stationary.

– Switch off engine:

  Gearbox position “P” should be selected automatically.

Step 5.2

- Engine running, gearbox in position “N” and vehicle stationary.

– Switch off engine and open driver's door.

  The following message should appear in the instrument cluster: “Shift to P before leaving car, otherwise vehicle can roll away”. A warning tone should also sound.

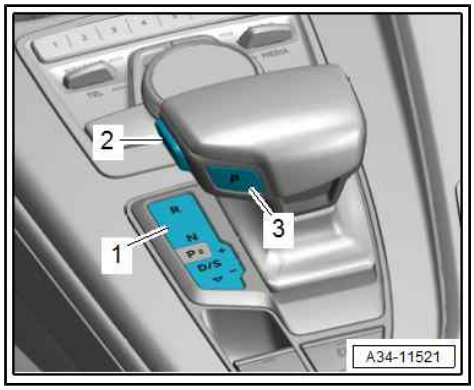

1.4 Manual release from position P

⇒ “1.4.1 Manual release from position P - A4/A5”, page 22
⇒ “1.4.2 Manual release from position P - Q5”, page 23

Protected by copyright. Copying for private or commercial purposes, in part or in whole, is not permitted unless authorised by AUDI AG. AUDI AG does not guarantee or accept any liability with respect to the correctness of information in this document. Copyright by AUDI AG.

1.4.1 Manual release from position P - A4/A5

Note

The manual release mechanism for the parking lock must be checked after removing and installing the gearbox, or if work has been carried out on the manual release mechanism.

Releasing

WARNING

Accident risk; vehicle can start rolling.

- *Pull up parking brake button to apply electromechanical parking brake.*

– Remove lining from cup holder in centre console.

– Take release tool -2- out of vehicle tool kit.

– Insert release tool into mounting -1- for manual release mechanism, as shown.

• Release tool should be perpendicular to direction of travel.

– Turn release tool 90° -arrow A- and at the same time, press it down -arrow B- until it engages.

• Parking lock is now released.

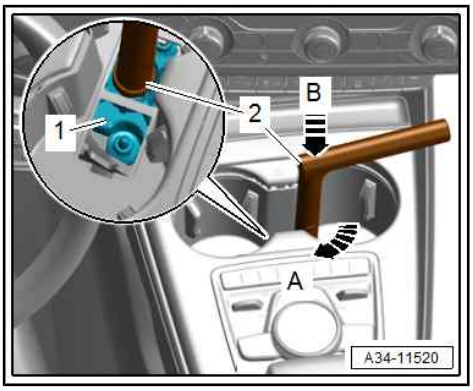

Note

- *When the manual release mechanism for the parking lock has been operated, position "N" will be indicated in the instrument cluster.*
- *The following message will also appear in the instrument cluster: "Vehicle may roll away! P cannot be selected. Please apply parking brake."*

Protected by copyright. Copying for private or commercial purposes, in part or in whole, is not permitted unless authorised by AUDI AG. AUDI AG does not guarantee or accept any liability with respect to the correctness of information in this document. Copyright by AUDI AG.

Reactivating parking lock

Note

The following steps are required in order to reduce the release force and facilitate operation:

– Press brake pedal, start engine and move selector lever through N > D > N.

– Switch off engine, grip wrench with both hands and pull upwards.

– Press brake pedal, start engine and move selector lever through N > D > N.

Note

When the parking lock is engaged, the instrument cluster and the selected range display - Y5- should show the position "P".

1.4.2 Manual release from position P - Q5

Note

The manual release mechanism for the parking lock must be checked after removing and installing the gearbox, or if work has been carried out on the manual release mechanism.

Releasing

WARNING

Accident risk; vehicle can start rolling.

- *Pull up parking brake button to apply electromechanical parking brake.*

– Remove floor mat (driver side).
– Pull off cover -1- for manual release mechanism -arrows-.

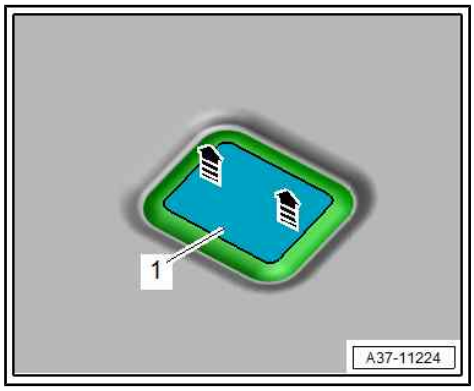

Protected by copyright. Copying for private or commercial purposes, in part or in whole, is not permitted unless authorised by AUDI AG. AUDI AG does not guarantee or accept any liability with respect to the correctness of information in this document. Copyright by AUDI AG.

– Take release tool -1- out of vehicle tool kit.
– Insert release tool into mounting -2- for manual release mechanism, as shown in illustration.
– Turn release tool 90° -arrow B- and at the same time, press it down -arrow A- until it engages.
• Parking lock is now released.

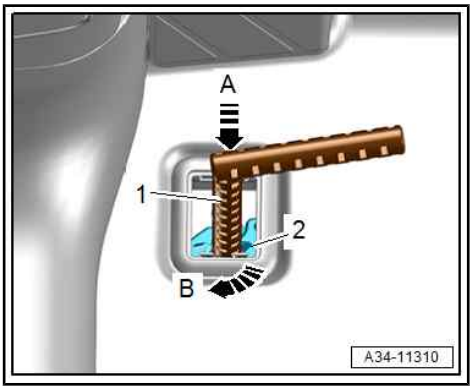

Note

♦ *When the manual release mechanism for the parking lock has been operated, position "N" will be indicated in the instrument cluster.*

♦ *The following message will also appear in the instrument cluster: "Vehicle may roll away! P cannot be selected. Please apply parking brake."*

Reactivating parking lock

Note

The following steps are required in order to reduce the release force and facilitate operation:

– Press brake pedal, start engine and move selector lever through N > D > N.
– Switch off engine, grip wrench with both hands and pull upwards.
– Press brake pedal, start engine and move selector lever through N > D > N.

Protected by copyright. Copying for private or commercial purposes, in part or in whole, is not permitted unless authorised by AUDI AG. AUDI AG does not guarantee or accept any liability with respect to the correctness of information in this document. Copyright by AUDI AG.

Note

When the parking lock is engaged, the instrument cluster and the selected range display - Y5- should show the position "P".

1.5 Removing and installing selector lever handle

Note

The selector lever handle is removed together with the selector lever boot.

Special tools and workshop equipment required

♦ Removal wedge - 3409-

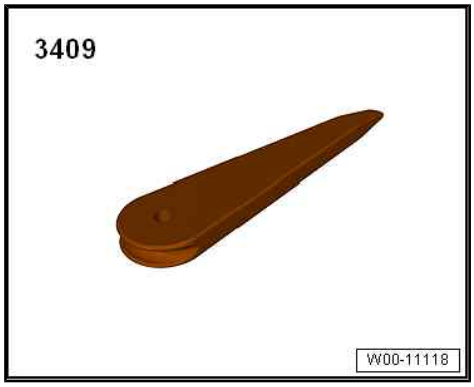

♦ Torque wrench - V.A.G 1410-

Protected by copyright. Copying for private or commercial purposes, in part or in whole, is not permitted unless authorised by AUDI AG. AUDI AG does not guarantee or accept any liability with respect to the correctness of information in this document. Cop

Removing

- Ignition switched off.

– Pull off selector lever handle (top section) -1- upwards -arrows-.

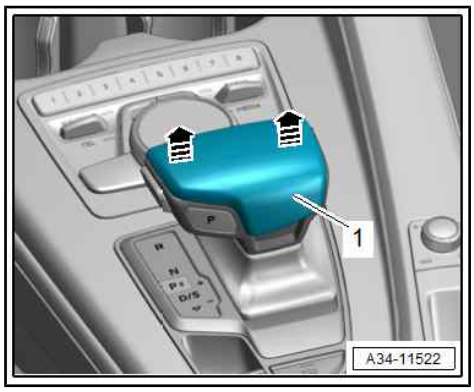

– Carefully pry out selector lever boot at the sides in direction of -arrow- using removal wedge - 3409- .

– Remove bolt -2-.

– Pull off selector lever handle (bottom section) -1- upwards.

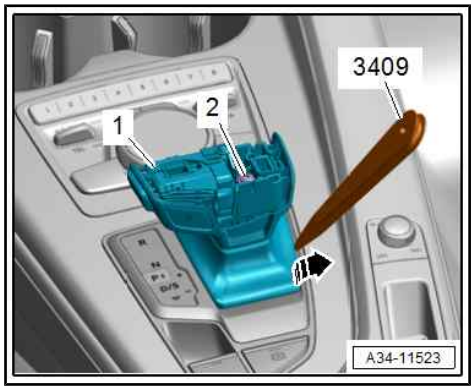

Installing

Installation is carried out in reverse order; note the following:

– Check that retaining clips -arrows- on underside of selector lever handle (top section) -1- are correctly seated; press down further if necessary.

– Press selector lever handle (top section) onto selector lever handle (bottom section).

– Clip selector lever boot onto selected range display - Y5- .

– Check selector mechanism ⇒ page 17 .

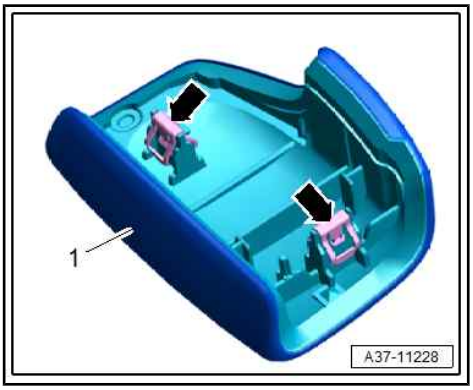

Tightening torques

♦ ⇒ “1.1 Exploded view - selector mechanism”, page 13

1.6 Detaching and attaching selector lever boot on selector lever handle

Disconnecting

– Remove selector lever handle ⇒ page 25 .

– Release catches -arrows- and detach selector lever boot -1- from selector lever handle.

Attaching

– Press selector lever boot onto selector lever handle until you hear it engage.

• Lug -2- on selector lever boot must engage in notch -1- on selector lever handle -arrow-.

– Install selector lever handle ⇒ page 25 .

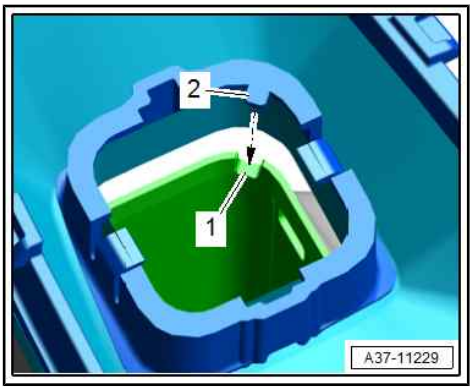

1.7 Removing and installing selector mechanism

Special tools and workshop equipment required

Protected by copyright. Copying for private or commercial purposes, in part or in whole, is not permitted unless authorised by AUDI AG. AUDI AG does not guarantee or accept any liability with respect to the correctness of information in this document. Copyright by AUDI AG.

♦ Torque wrench - V.A.G 1410-

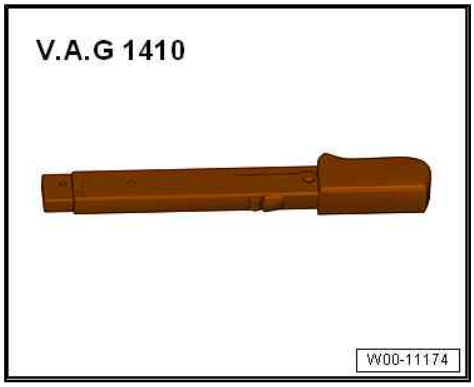

Removing

– Remove selector lever handle ⇒ page 25 .

– Remove centre console insert ⇒ General body repairs, interior; Rep. gr. 68 ; Centre console; Removing and installing centre console insert .

– Unplug electrical connector -1-.

– Unscrew bolts -arrows- and remove selector mechanism -2-.

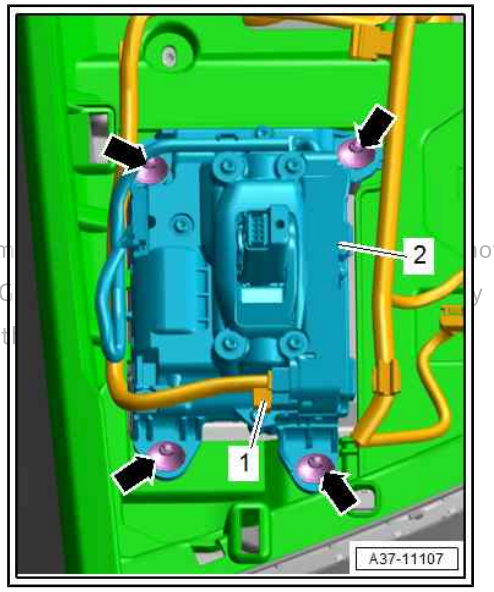

Installing

Installation is carried out in reverse order; note the following:

– Install centre console insert ⇒ General body repairs, interior; Rep. gr. 68 ; Centre console; Removing and installing centre console insert .

– Install selector lever handle ⇒ page 25 .

– Check selector mechanism ⇒ page 17 .

Protected by copyright. Copying for private or com ot
permitted unless authorised by AUDI AG. AUDI AG y
with respect to the correctness of information in t

Tightening torques

♦ ⇒ “1.1 Exploded view - selector mechanism”, page 13

1.8 Removing and installing manual release cable for parking lock

⇒ "1.8.1 Removing and installing manual release cable for parking lock - A4/A5", page 29

⇒ "1.8.2 Removing and installing manual release cable for parking lock (front) - Q5", page 30

⇒ "1.8.3 Removing and installing manual release cable for parking lock (rear) - Q5", page 32

1.8.1 Removing and installing manual release cable for parking lock - A4/A5

Removing

> ⚠ **WARNING**
>
> *Accident risk; vehicle can start rolling.*
>
> ♦ *Pull up parking brake button to apply electromechanical parking brake.*

– Remove selector mechanism ⇒ page 27 .

– Remove insulation.

– Remove nuts -1, 3- and move mounting -2- for manual release mechanism clear.

– Release catches -arrows- and lower manual release retainer -4-.

– Vehicles with 6-cylinder TDI engine: Remove rear noise insulation ⇒ General body repairs, exterior; Rep. gr. 66 ; Noise insulation; Removing and installing noise insulation .

– Remove heat shield for tunnel and place down on propshaft ⇒ General body repairs, exterior; Rep. gr. 66 ; Strips / trim panels / extensions; Exploded view - heat shield .

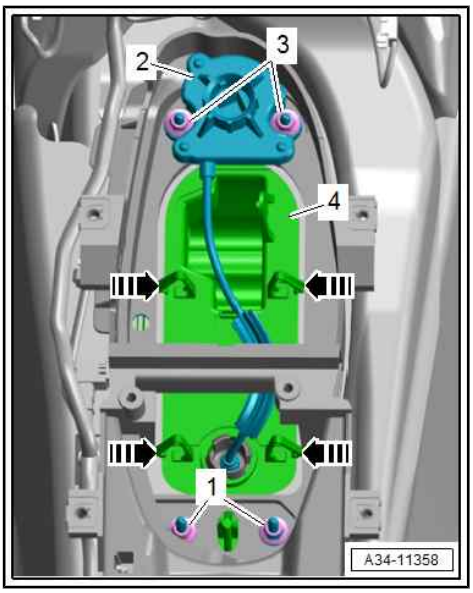

– Unscrew bolts -arrows-, detach parking lock manual release cable -1- and move cable clear.

Protected by copyright. Copying for private or commercial purposes, in whole or in part, is not permitted unless authorised by AUDI AG. AUDI AG does not make any representation or warranty with respect to the correctness of information in this document.

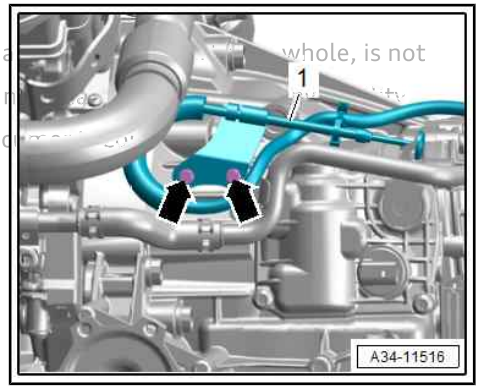

Note

Example shows vehicle with 6-cylinder TDI engine.

Installing

Installation is carried out in reverse order; note the following:

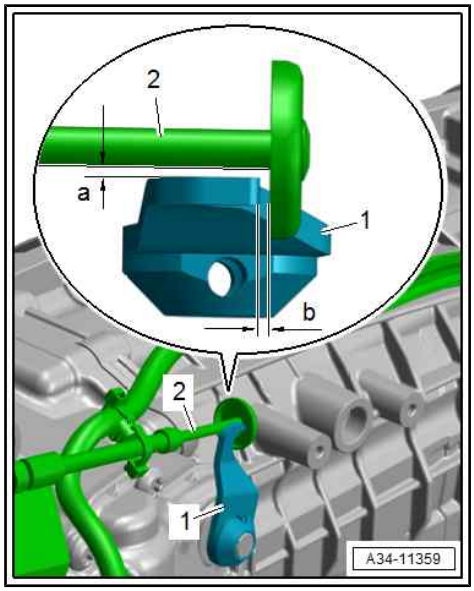

Note

- *Manual release cable -2- should not be in contact with parking lock lever -1- to avoid transmission of mechanical vibration.*
- *Manual release cable -2- should therefore be aligned so that there is a small clearance of dimension -a- and -b-.*

– Check manual release mechanism for parking lock ⇒ page 22 .

Tightening torques

- ⇒ “1.2 Exploded view - manual release mechanism for parking lock”, page 16
- ⇒ General body repairs, exterior; Rep. gr. 66 ; Strips / trim panels / extensions; Exploded view - heat shield
- ⇒ General body repairs, exterior; Rep. gr. 66 ; Noise insulation; Exploded view - noise insulation

1.8.2 Removing and installing manual release cable for parking lock (front) - Q5

Removing

WARNING

Accident risk; vehicle can start rolling.

- *Pull up parking brake button to apply electromechanical parking brake.*

– Remove centre console ⇒ General body repairs, interior; Rep. gr. 68 ; Centre console; Removing and installing centre console .

– Remove insulation.

– Release catches -arrows A- and move sleeve -1- on manual release cable in direction of -arrow B-.

– Disengage manual release cable (rear) from manual release cable (front) -arrow C-.

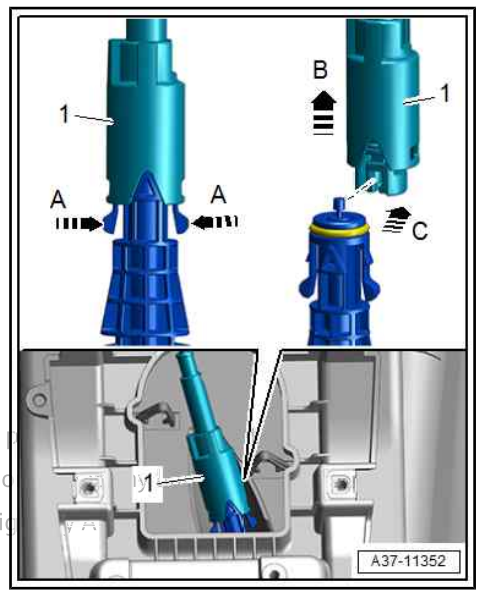

Protected by copyright. Copying for private or commercial purposes, in p
permitted unless authorised by AUDI AG. AUDI AG does not guarantee c
with respect to the correctness of information in this document. Copyrig

– Remove nuts -3-.

– Release catches -arrows- and lower manual release retainer -2-.

– Remove noise insulation (rear) ⇒ General body repairs, exterior; Rep. gr. 66 ; Noise insulation; Removing and installing noise insulation .

– Depending on equipment version: Remove underbody trim (tunnel) ⇒ General body repairs, exterior; Rep. gr. 66 ; Underbody trim; Exploded view - underbody trim .

– Remove heat shield for tunnel and place down on propshaft ⇒ General body repairs, exterior; Rep. gr. 66 ; Strips / trim panels / extensions; Exploded view - heat shield .

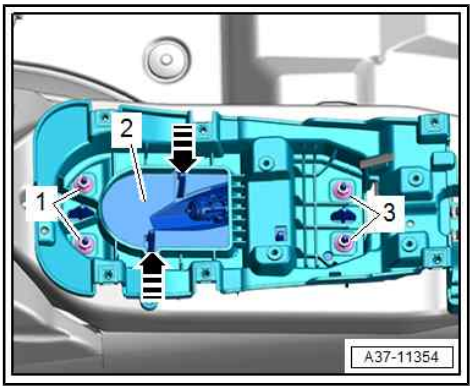

– Unscrew bolts -arrows-, detach parking lock manual release cable -1- and move cable clear.

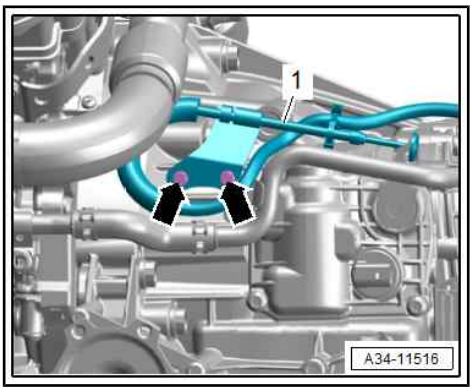

Installing

Installation is carried out in reverse order; note the following:

Note

- *Manual release cable -2- should not be in contact with parking lock lever -1- to avoid transmission of mechanical vibration.*
- *Manual release cable -2- should therefore be aligned so that there is a small clearance of dimension -a- and -b-.*

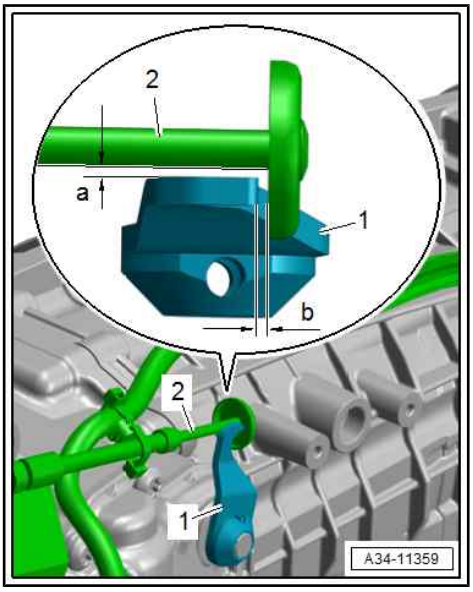

– Install centre console ⇒ General body repairs, interior; Rep. gr. 68 ; Centre console; Removing and installing centre console .

– Check manual release mechanism for parking lock ⇒ page 22 .

Tightening torques

- ⇒ "1.2 Exploded view - manual release mechanism for parking lock", page 16
- ⇒ General body repairs, exterior; Rep. gr. 66 ; Strips / trim panels / extensions; Exploded view - heat shield
- ⇒ General body repairs, exterior; Rep. gr. 66 ; Underbody trim; Exploded view - underbody trim
- ⇒ General body repairs, exterior; Rep. gr. 66 ; Noise insulation; Exploded view - noise insulation

Protected by copyright. Copying for private or commercial purposes, in part or in whole, is not permitted unless authorised by AUDI AG. AUDI AG does not guarantee or accept any liability with respect to the correctness of information in this document. Copyright by AUDI AG.

1.8.3 Removing and installing manual release cable for parking lock (rear) - Q5

Removing

WARNING

Accident risk; vehicle can start rolling.

- *Pull up parking brake button to apply electromechanical parking brake.*

– Remove driver's seat ⇒ General body repairs, interior; Rep. gr. 72 ; Front seats; Removing and installing front seat .

– Remove footwell cover (driver side) ⇒ General body repairs, interior; Rep. gr. 68 ; Storage compartments/covers/trim panels; Removing and installing dash panel cover (driver side) .

– Remove foot rest ⇒ General body repairs, interior; Rep. gr. 70 ; Passenger compartment trim panels; Removing and installing foot rest .

– Remove sill panel trim (driver side) ⇒ General body repairs, interior; Rep. gr. 70 ; Passenger compartment trim panels; Removing and installing sill panel trim .

– Remove centre console ⇒ General body repairs, interior; Rep. gr. 68 ; Centre console; Removing and installing centre console .

– Remove insulation.

Protected by copyright. Copying for private or commercial purposes, in part or in whole, is not permitted unless authorised by AUDI AG. AUDI AG does not guarantee or accept any liability with respect to the correctness of information in this document. Copyright by AUDI AG.

– Release catches -arrows A- and move sleeve -1- on manual release cable in direction of -arrow B-.

– Disengage manual release cable (rear) from manual release cable (front) -arrow C-.

– Push floor covering in driver's footwell to one side.

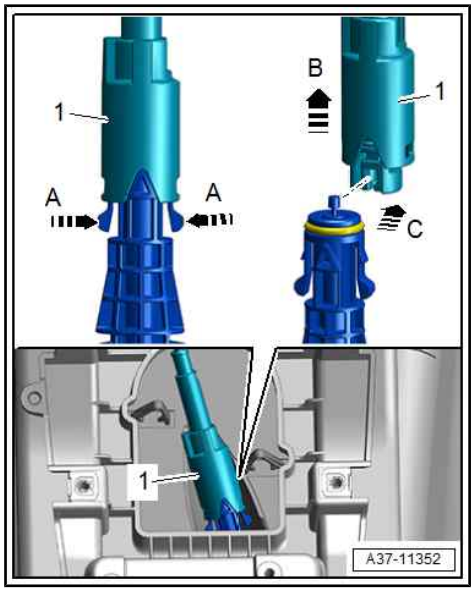

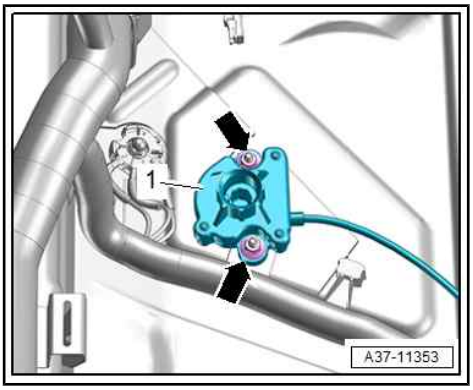

– Remove nuts -arrows-.

– Move parking lock manual release cable (rear) -1- clear and detach.

Installing

Installation is carried out in reverse order; note the following:

– Install centre console ⇒ General body repairs, interior; Rep. gr. 68 ; Centre console; Removing and installing centre console .

– Install sill panel trim (driver side) ⇒ General body repairs, interior; Rep. gr. 70 ; Passenger compartment trim panels; Removing and installing sill panel trim .

– Install foot rest ⇒ General body repairs, interior; Rep. gr. 70 ; Passenger compartment trim panels; Removing and installing foot rest .

– Install footwell cover (driver side) ⇒ General body repairs, interior; Rep. gr. 68 ; Storage compartments/covers/trim panels; Removing and installing dash panel cover (driver side) .

– Install driver's seat ⇒ General body repairs, interior; Rep. gr. 72 ; Front seats; Removing and installing front seat .

– Check manual release mechanism for parking lock
⇒ page 22 .

Protected by copyright. Copying for private or commercial purposes, in part or in whole, is not permitted unless authorised by AUDI AG. AUDI AG does not guarantee or accept any liability with respect to the correctness and completeness of this document. Copyright by AUDI AG.

Tightening torques

♦ ⇒ "1.2 Exploded view - manual release mechanism for parking lock", page 16

♦ ⇒ General body repairs, exterior; Rep. gr. 66 ; Noise insulation; Exploded view - noise insulation

1.9 Removing and installing parking lock solenoid - N486- / gear sensor - G676-

Special tools and workshop equipment required

♦ Press tool - 3276A-

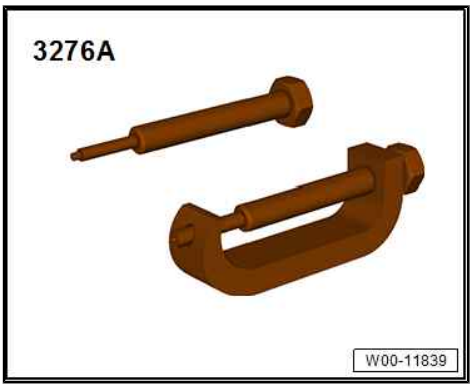

Removing

– Remove noise insulation (rear) ⇒ General body repairs, exterior; Rep. gr. 66 ; Noise insulation; Removing and installing noise insulation .

– Remove mechatronic unit
⇒ "10.3 Removing and installing mechatronic unit", page 102 .

– Remove bolt -arrow- and detach oil pipe -1-.

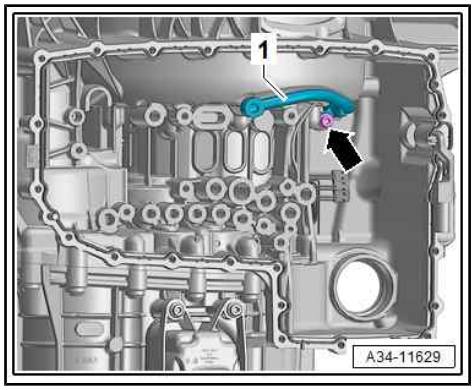

– Remove bolts -arrows- and press coolant pipe for gearbox to one side. (Different versions.)

Protected by copyright. Copying for private or commercial purposes, in
permitted unless authorised by AUDI AG. AUDI AG does not guarantee
with respect to the correctness of information in this document. Copyri

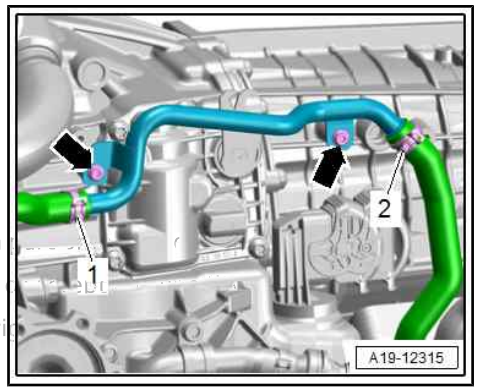

– Unscrew bolts -arrows- and move parking lock manual release cable -1- to one side. (Different versions.)

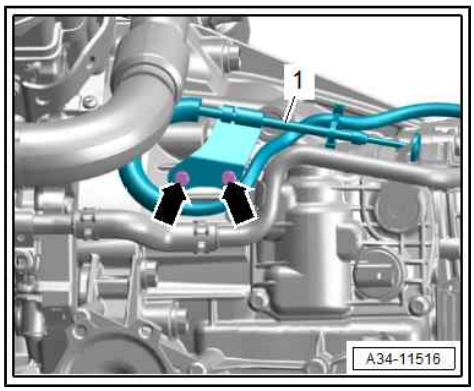

– Drive out roll pin using press tool - 3276/1- and detach parking lock lever.

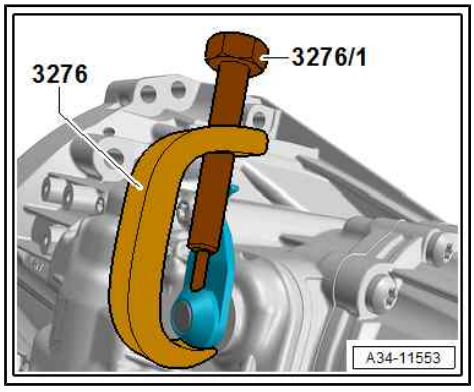

– Remove bolt -2-.
– Unplug electrical connector -3-.
– Remove bolts -arrows- and detach cover -1- for parking lock.

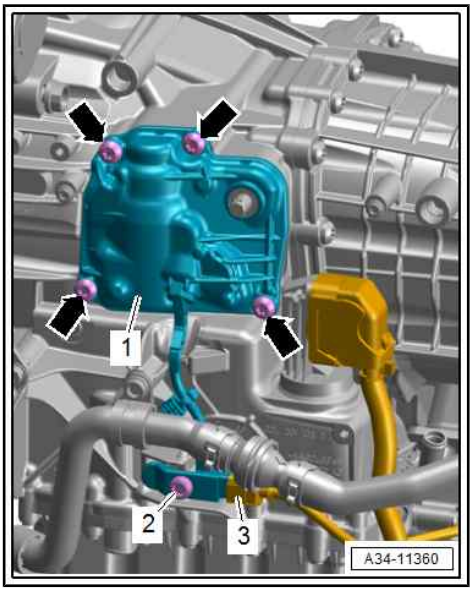

– Remove bolts -arrows-.
– When doing so, use a roll-pin drift to turn parking lock shaft approx. 3° against spring pressure -arrow-.
– Detach parking lock solenoid - N486- .

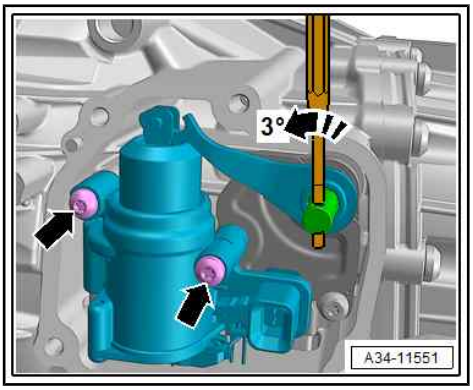

– Remove bolt -arrow- and detach gear sensor - G676- .

Installing

Installation is carried out in reverse order; note the following:

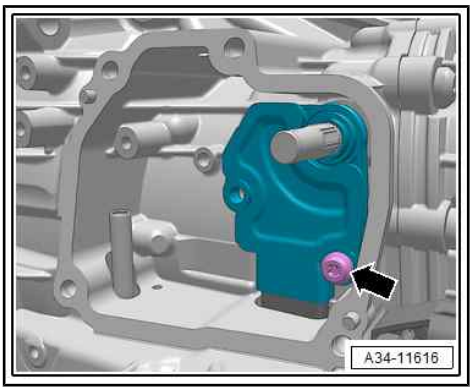

– Slide gear sensor - G676- onto parking lock shaft (pay attention to different notches -arrows-), and screw in bolt -1- hand-tight to secure.

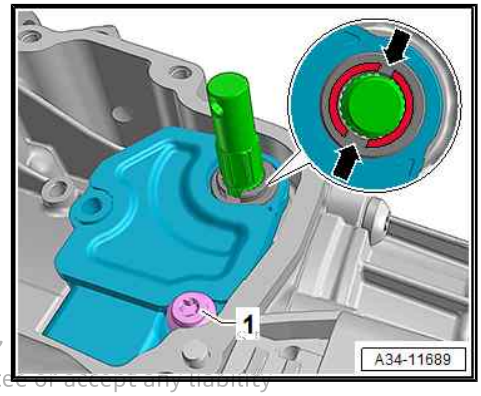

Protected by copyright. Copying for private or commercial purposes, permitted unless authorised by AUDI AG. AUDI AG does not guarantee or accept any liability with respect to the correctness of information in this document. Copyright by AUDI AG.

Copyright. Copying for private or commercia le, is not permitted unless authorised by AUDI AG. AUDI AG does n ability with respect to the correctness of information in this doc

– Check whether splines of gear sensor - G676- are aligned with splines of parking lock shaft.

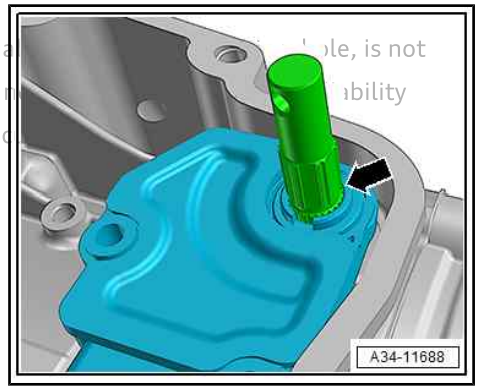

– Tighten securing bolt -arrow- to specified torque.

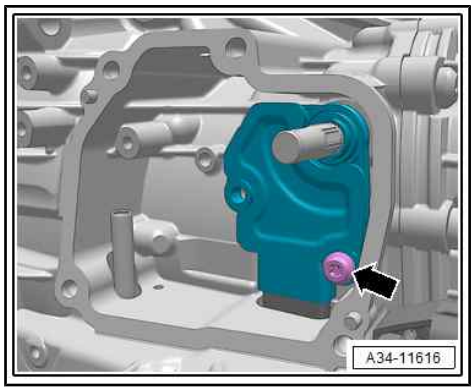

Note

When installing parking lock solenoid - N486- make sure that dowel pin is correctly seated.

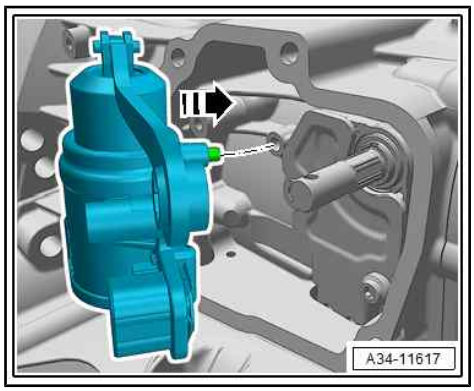

– Screw in both securing bolts -arrows- while spring pressure is released and tighten to specified torque.

– To do so, use a roll-pin drift to turn parking lock shaft approx. 3° against spring pressure.

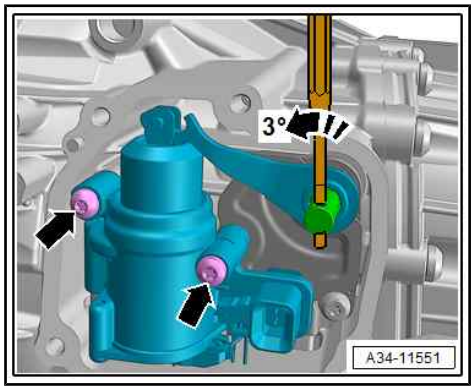

Note

- *Note correct installation position.*
- *Parking lock lever must be flush with splines on shaft -arrow-.*
- *If necessary, release spring pressure and align.*

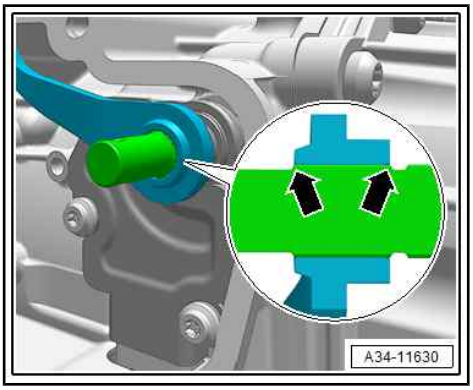

Note

- *The roll pin can also be pressed in using pliers if necessary.*
- *Do NOT knock in the roll pin, as this will damage the shaft.*

Protected by copyright. Copying for private or commercial purposes, in part or in whole, is not permitted unless authorised by AUDI AG. AUDI AG does not guarantee or accept any liability with respect to the correctness of information in this document. Copyright by AUDI AG.

– Press in roll pin using press tool - 3276/1- .

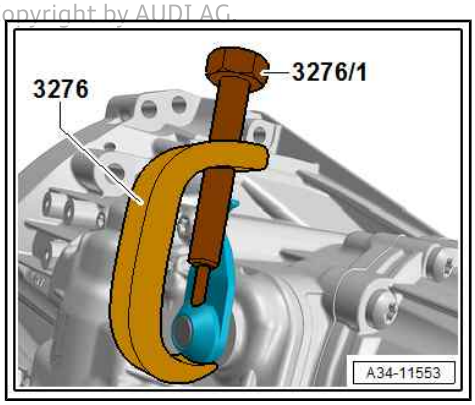

Tightening torques

- ⇒ “1.1 Exploded view - selector mechanism”, page 13
- ⇒ Engine; Rep. gr. 19 ; Coolant pipes; Exploded view - coolant pipes
- ⇒ General body repairs, exterior; Rep. gr. 66 ; Noise insulation; Exploded view - noise insulation

1.10 Renewing seal for parking lock shaft

Special tools and workshop equipment required

- Thrust piece - T10040/3-

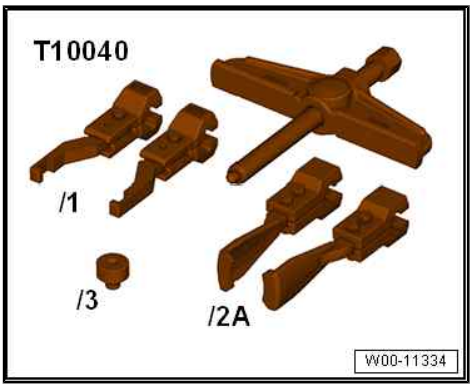

Procedure

– Remove noise insulation (rear) ⇒ General body repairs, exterior; Rep. gr. 66 ; Noise insulation; Removing and installing noise insulation .

– Remove bolts -arrows- and press coolant pipe for gearbox to one side. (Different versions.)

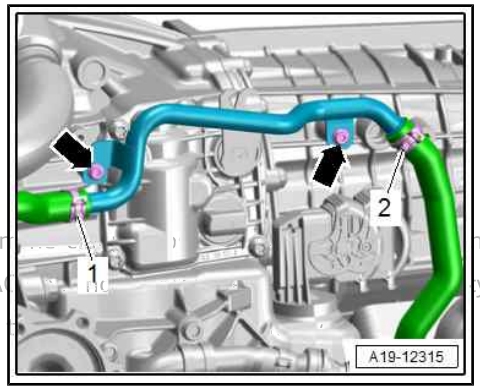

Note

Disregard items -1 and 2-.

Protected by copyright. Copying for private or com ... not permitted unless authorised by AUDI AG. AUDI A ... ty with respect to the correctness of information in

– Unscrew bolts -arrows- and move parking lock manual release cable -1- to one side. (Different versions.)

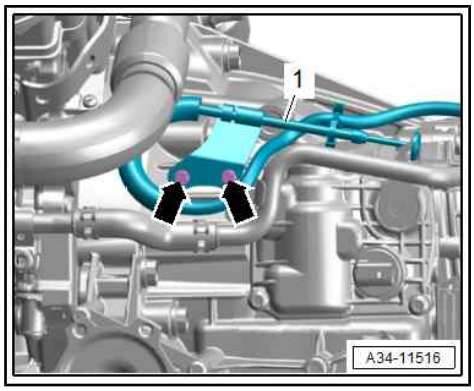

– Remove roll pin -arrow- using press tool - 3276/1- and detach parking lock lever -1-.

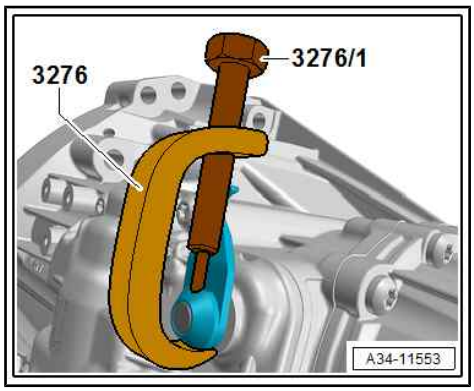

– Remove bolt -2-.
– Unplug electrical connector -3-.
– Remove bolts -arrows- and detach cover -1- for parking lock.

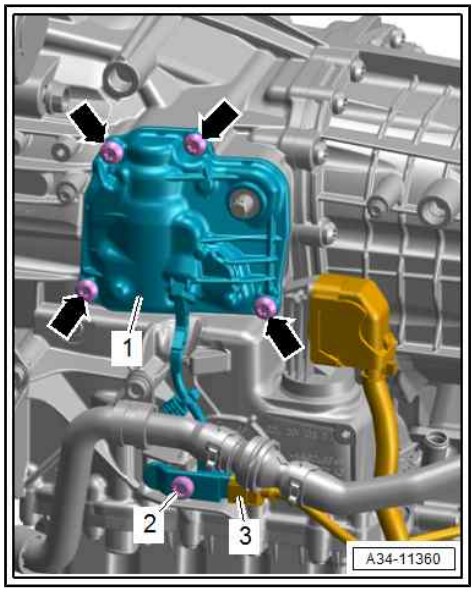

– Press out oil seal using thrust piece - T10040/3- .
– Press in new oil seal to an installation depth of 0.5 mm using thrust piece - T10040/3- .

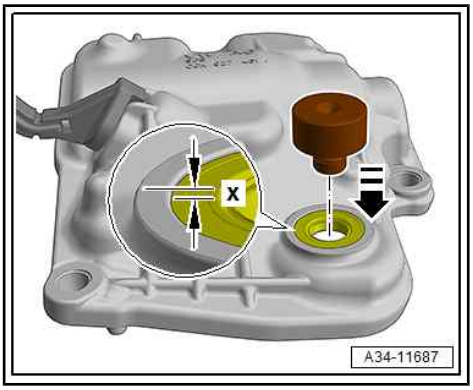

Tightening torques

- ⇒ “1.1 Exploded view - selector mechanism”, page 13
- ⇒ Engine; Rep. gr. 19 ; Coolant pipes; Exploded view - coolant pipes
- ⇒ General body repairs, exterior; Rep. gr. 66 ; Noise insulation; Exploded view - noise insulation

Protected by copyright. Copying for private or commercial purposes, in part or in whole, is not permitted unless authorised by AUDI AG. AUDI AG does not guarantee or accept any liability with respect to the correctness of information in this document. Copyright by AUDI AG.

2 Removing and installing gearbox

⇒ “2.1 Removing gearbox”, page 40

⇒ “2.2 Installing gearbox”, page 61

⇒ “2.3 Tightening torques for gearbox”, page 69

2.1 Removing gearbox

⇒ “2.1.1 Removing gearbox - A4/A5”, page 40

⇒ “2.1.2 Removing gearbox - A4/A5 with 2.0 ltr. TDI engine (PR no. T98)”, page 47

⇒ “2.1.3 Removing gearbox - Q5”, page 54

2.1.1 Removing gearbox - A4/A5

Special tools and workshop equipment required

- Hose clamps up to 25 mm - 3094-

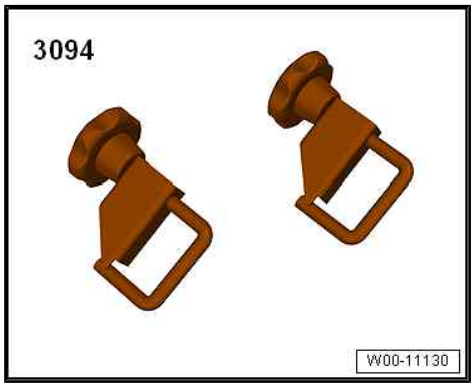

- Ring spanner insert AF 16 - V.A.G 1332/14-

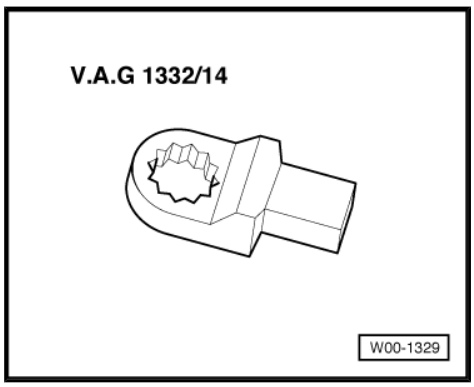

- Engine and gearbox jack - VAS 6931-

Protected by copyright. Copying for private or commercial purposes, in part or in whole, is not permitted unless authorised by AUDI AG. AUDI AG does not guarantee or accept any liability with respect to the correctness of information in this document. Copyright by AUDI AG.

- Adapter - VAS 6948-

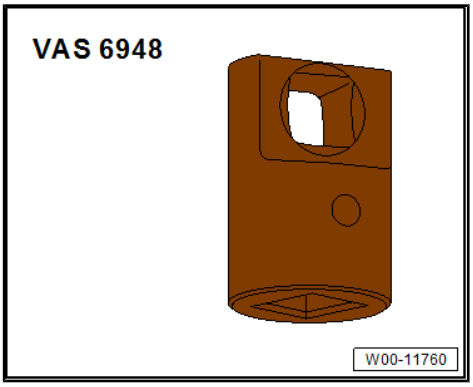

- Tensioning strap - T10038-

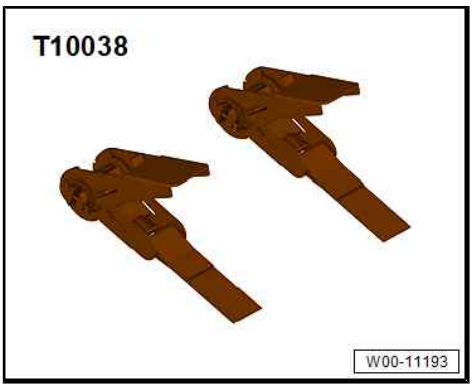

- Gearbox support - T40173-

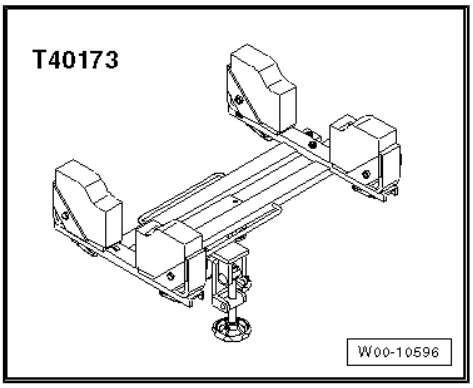

- Wrench 21 mm - T40263-

Protected by copyright. Copying for private or commercial purposes, in part or in whole, is not permitted unless authorised by AUDI AG. AUDI AG does not guarantee or accept any liability with respect to the correctness of information in this document. Copyright by AUDI AG.

♦ Adapter -T40314-

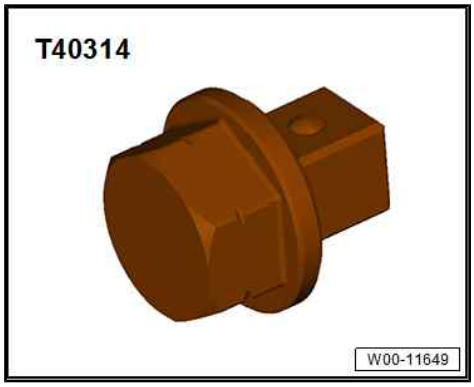

Preparing gearbox support - T40173- :

– Mounting block -arrow- must be rotated so that the longer side faces upwards, as shown in illustration.

Procedure

– Disable ATF pump and discharge hydraulic accumulator ⇒ page 7 .

– Switch off ignition.

– Bring front wheels into straight-ahead position and remove ⇒ Running gear, axles, steering; Rep. gr. 44 ; Wheels, tyres .

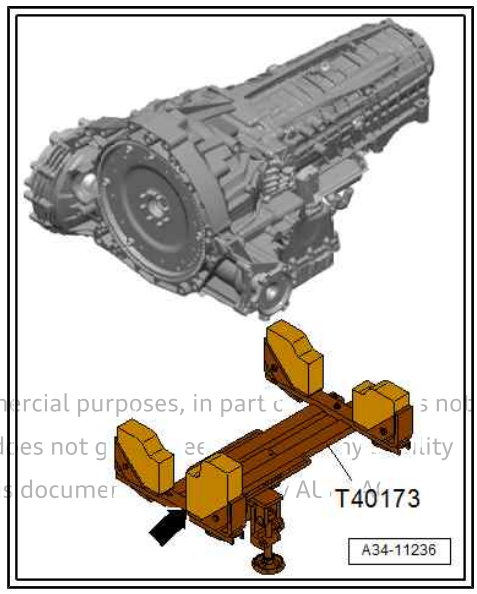

Protected by copyright. Copying for private or commercial purposes, in part or in whole, is not permitted unless authorised by AUDI AG. AUDI AG does not guarantee or assume any liability with respect to the correctness of information in this document. Copyright by AUDI AG.

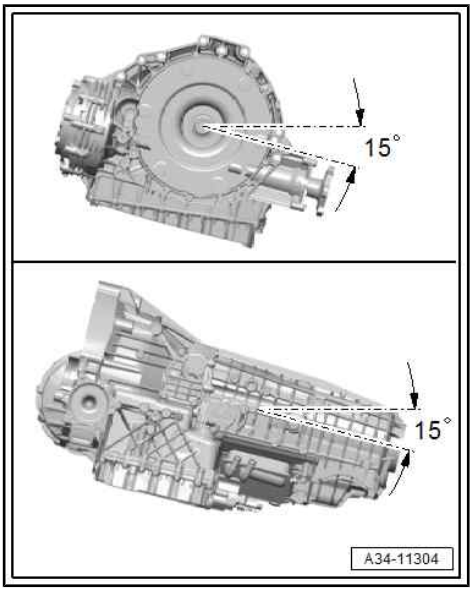

Caution

Risk of damage to gearbox if ATF and gear oil (MTF) mix via shared breather opening.

- *When the gearbox is filled with ATF and gearbox oil (MTF), it must not be tilted further than 15° horizontally or vertically.*
- *If it is necessary to tilt the gearbox further, both the ATF and the gearbox oil (MTF) must be drained ⇒ page 94 and ⇒ page 87 .*

– Remove engine cover panel ⇒ Engine; Rep. gr. 10 ; Engine cover panel; Removing and installing engine cover panel .

– Disconnect earth wire from battery terminal ⇒ Electrical system; Rep. gr. 27 ; Battery; Disconnecting and connecting battery .

– Remove subframe cross brace ⇒ Running gear, axles, steering; Rep. gr. 40 ; Subframe; Removing and installing subframe cross brace .

Caution

Risk of damage to parts of the running gear.

- *Do not let the vehicle down on the wheels if the gearbox mounting, steering rack or subframe cross brace are not properly installed.*

– Remove front exhaust pipe ⇒ Engine; Rep. gr. 26 ; Exhaust pipes/silencers; Exploded view - silencers .

Protected by copyright. Copying for private or commercial purposes, in part or in whole, is not permitted unless authorised by AUDI AG. AUDI AG does not guarantee or accept any liability with respect to the correctness of information in this document. Copyright by AUDI AG.

Vehicles with 3.0 ltr. TDI engine

– Remove emission control module ⇒ Engine; Rep. gr. 26 ; Emission control system; Removing and installing emission control module .

All vehicles (continued)

– Unscrew bolts -arrows- and move parking lock manual release cable -1- clear.

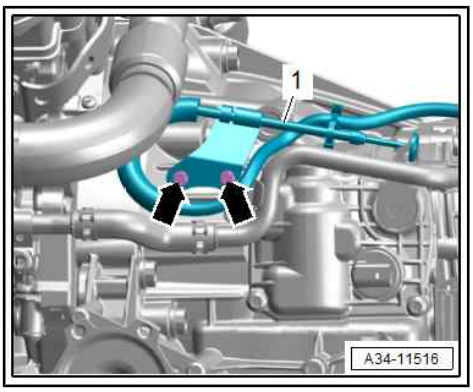

– Remove bolts -2 … 5- securing gearbox to engine (accessible from above).

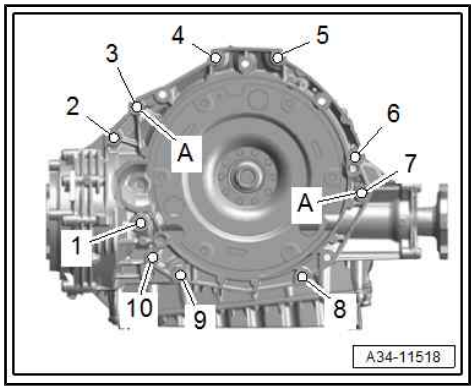

Vehicles with four-wheel drive

– Remove propshaft ⇒ Rear final drive; Rep. gr. 39 ; Propshaft; Removing and installing propshaft .

All vehicles (continued)

– Detach intermediate steering shaft from steering rack and slide together ⇒ Running gear, axles, steering; Rep. gr. 48 ; Steering column; Removing and installing intermediate steering shaft .

– Remove bolts -arrows- securing coolant pipe for gearbox.

– Support engine in installation position ⇒ Engine; Rep. gr. 10 ; Assembly mountings; Supporting engine in installation position .

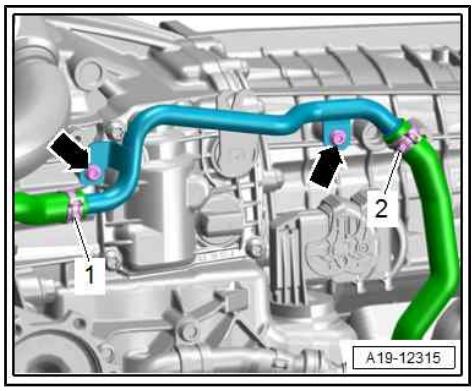

– Clamp off coolant hoses using hose clamps up to 25 mm - 3094- and disconnect hoses (release hose clips -1, 2-).

Protected by copyright. Copying for private or commerc
permitted unless authorised by AUDI AG. AUDI AG does
with respect to the correctness of information in this do

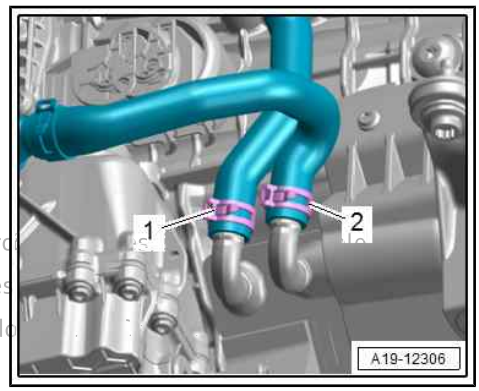

– Remove subframe shield -arrow- (below drive shaft on both sides) ⇒ Running gear, axles, steering; Rep. gr. 40 ; Subframe; Removing and installing subframe shield .

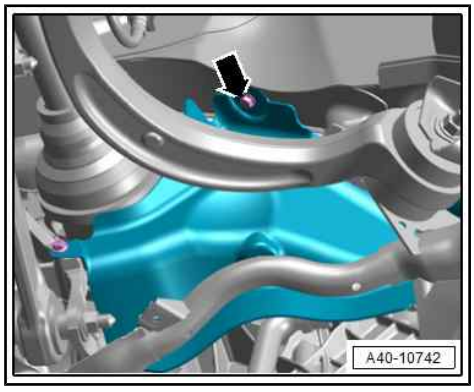

– Detach bottom cover -1- from gearbox -arrow-.

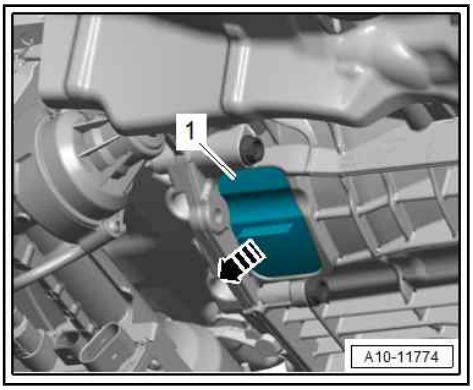

> **Caution**
>
> *Irreparable damage can be caused if the camshaft drive chain slips.*
>
> ♦ *Only turn crankshaft in the direction of engine rotation -arrow-.*

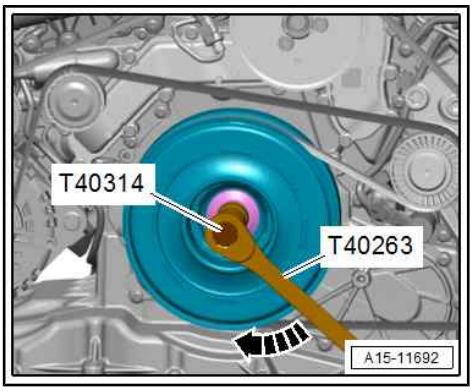

– Turn crankshaft with wrench 21 mm - T40263- and adapter - T40314- .

Vehicles with 3.0 ltr. TDI engine

– Remove 6 bolts -arrow- for flywheel -1- (turn crankshaft 60° in direction of engine rotation each time).

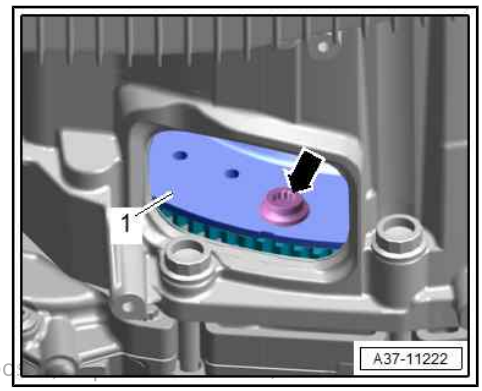

Protected by copyright. Copying for private or commercial purpo
permitted unless authorised by AUDI AG. AUDI AG does not guarantee or accept any liability
with respect to the correctness of information in this document.

Vehicles with 4-cylinder engine

– Remove 3 bolts -arrow- for flywheel -1- (turn crankshaft 120° in direction of engine rotation each time).

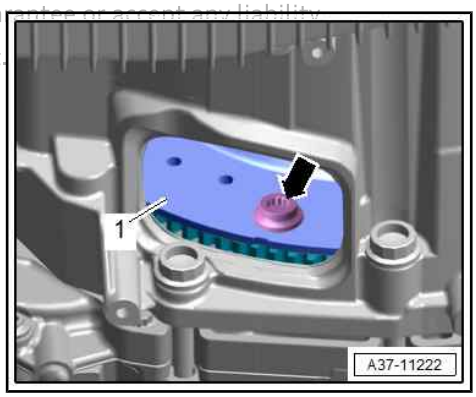

All vehicles (continued)

– Remove heat shield for drive shaft (right-side) ⇒ Running gear, axles, steering; Rep. gr. 40 ; Drive shaft; Removing and installing heat shield for drive shaft .

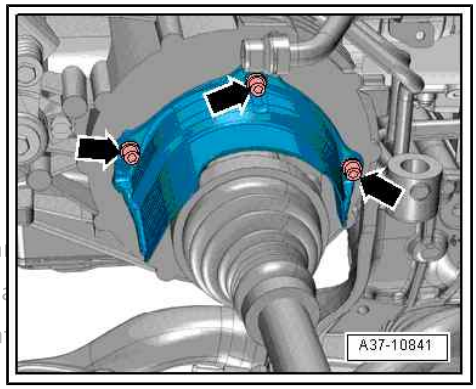

Protected by copyright. Copying for private or commercial purposes, in pa
permitted unless authorised by AUDI AG. AUDI AG does not guarantee or a
with respect to the correctness of information in this document. Copyrigh

– Unbolt drive shafts (left and right) from flange shafts of gearbox ⇒ Running gear, axles, steering; Rep. gr. 40 ; Drive shaft; Removing and installing drive shaft .

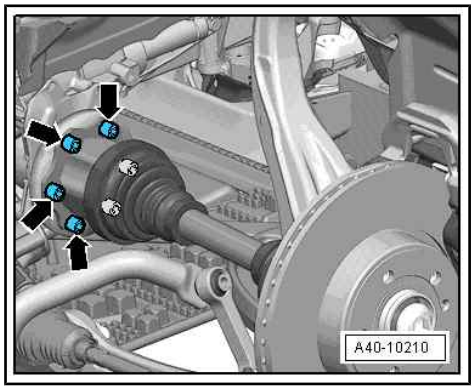

– Remove bolt -2- and move coolant hose to side.

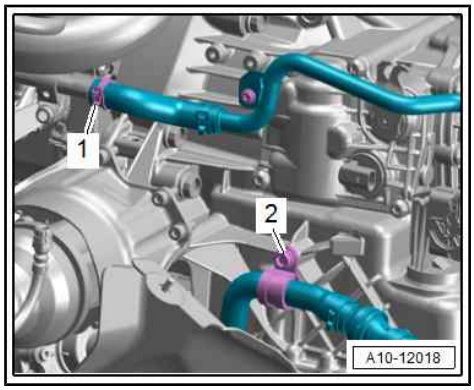

Caution

The gearbox control unit (mechatronic unit) can be damaged by electrostatic discharge.

- *Before handling electrical connectors, mechanic must discharge static. To do so, touch vehicle earth, heater radiator, or lifting platform, with your hand.*
- *Do not touch contact pins in gearbox connector with bare hands.*

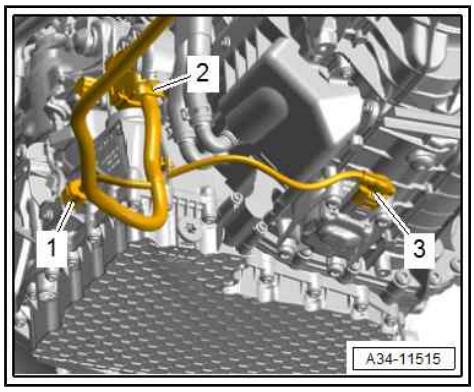

– Unplug electrical connectors:

1 - For parking lock solenoid - N486-

2 - For automatic gearbox control unit - J217-

3 - For electric pump 2 for gearbox - V553-

Vehicles with 3.0 ltr. TDI engine

Protected by copyright. Copying for private or commercial purposes, in p
part is not permitted unless authorised by AUDI AG. AUDI AG does not guarantee o
with respect to the correctness of information in this document. Copyrig

– Insert brace -T40335- in subframe on both sides. If necessary, adjust brace at knurled handle -1-.

– Secure brace with a split pin -arrow- on both sides.

♦ -T40334- can be disregarded.

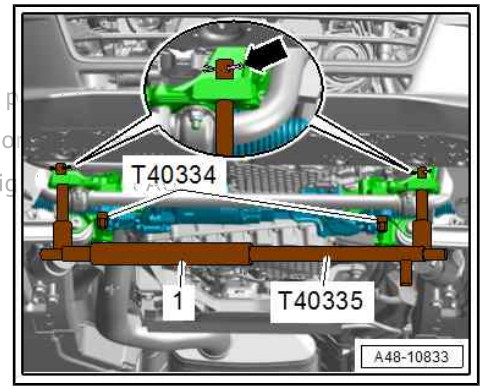

> ⚠ **Caution**
>
> ***Risk of damage to boots.***
>
> ♦ ***Do not hold onto the boots of the steering rack when removing it.***

– Support steering rack -2- with engine and gearbox jack - VAS 6931- (place a suitable piece of foam -1- between steering rack and jack).

– Unscrew locating pins -T40334- on left and right.

– Lower steering rack and press forwards slightly.

All vehicles

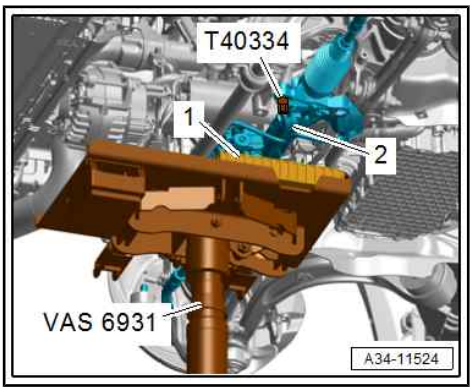

– Remove bolt -1- using ring spanner insert, 16 mm - V.A.G 1332/14- and adapter - VAS 6948- .

– Pull starter off gearbox slightly but do not remove starter.

Vehicles with 3.0 ltr. TDI engine

– Bring steering rack back into its installation position and secure with locating pins -T40334- .

All vehicles

– Unscrew remaining bolts -6 ... 10- securing gearbox to engine.

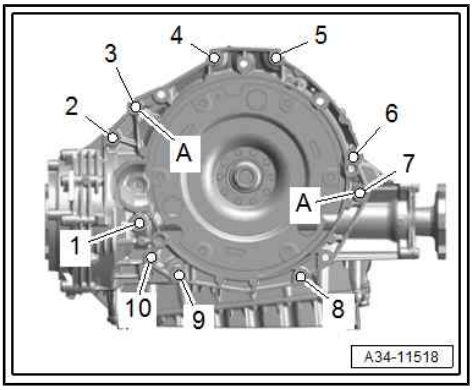

– Position engine and gearbox jack - VAS 6931- with gearbox support - T40173- (set up beforehand) underneath gearbox and secure with tensioning strap -1- as shown in illustration.

– Remove tunnel cross member ⇒ page 74 .

– Detach gearbox from engine and lower carefully using engine and gearbox jack - VAS 6931- (pay attention to electrical wiring and SCR line when doing so).

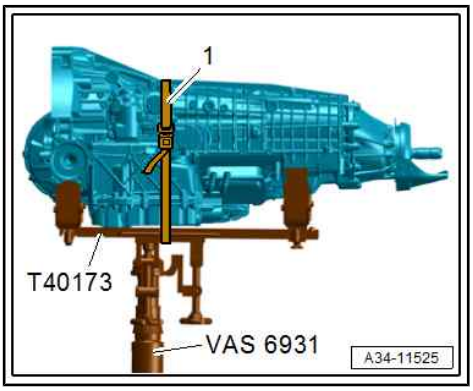

2.1.2 Removing gearbox - A4/A5 with 2.0 ltr. TDI engine (PR no. T98)

Special tools and workshop equipment required

- Hose clamps up to 25 mm - 3094-

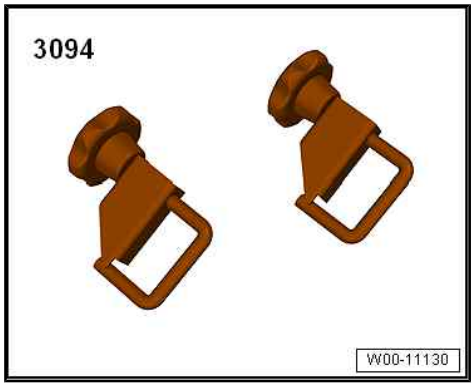

- Ring spanner insert AF 16 - V.A.G 1332/14-

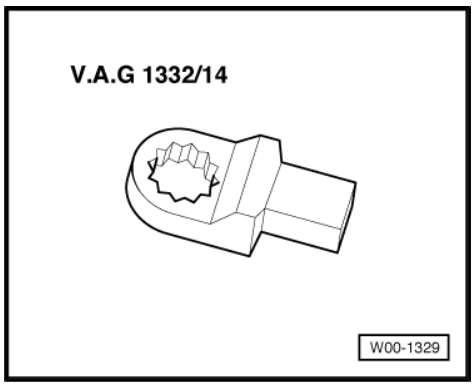

- Hose clip pliers - VAS 6362-

Protected by copyright. Copying for private or commercial purposes, in part or in whole, is not permitted unless authorised by AUDI AG. AUDI AG does not guarantee or accept any liability with respect to the correctness of information in this document. Copyright by AUDI AG.

- Engine and gearbox jack - VAS 6931-

- Adapter - VAS 6948-

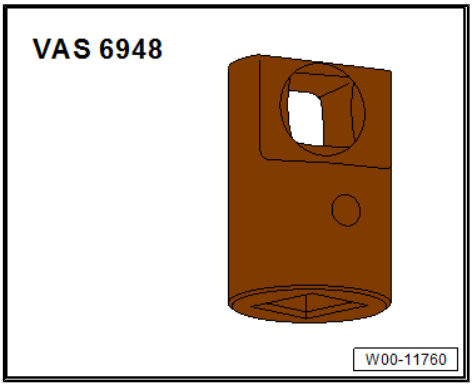

- Tensioning strap - T10038-

Protected by copyright. Copying for private or commercial purposes, in whole, is not permitted unless authorised by AUDI AG. AUDI AG does not guarantee or assume any liability with respect to the correctness of information in this document. Copyright by AUDI AG.

- Gearbox support - T40173-

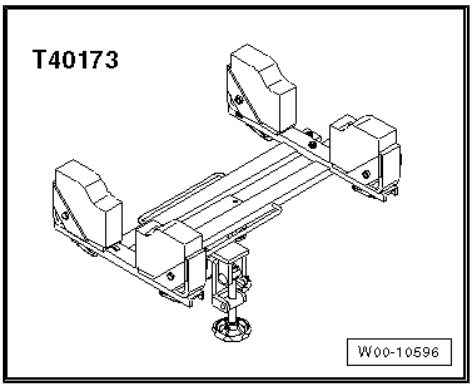

- Wrench 21 mm - T40263-

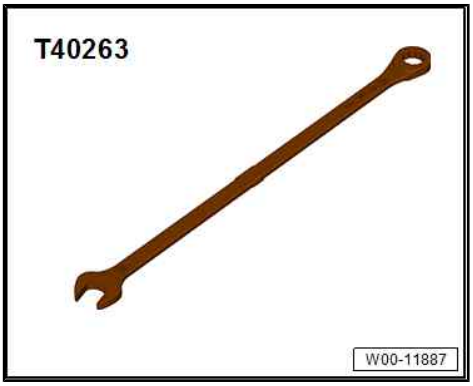

Protected by copyright. Copying for private or commercial purposes, in part or in whole, is not permitted unless authorised by AUDI AG. AUDI AG does not guarantee or assume any liability with respect to the correctness of information in this document. ©2018 AUDI AG.

- Adapter -T40314-

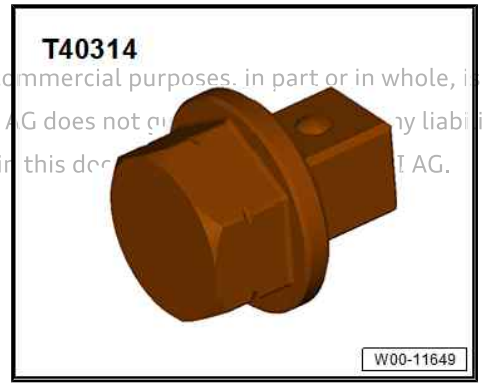

Preparing gearbox support - T40173- :

– Mounting block -arrow- must be rotated so that the longer side faces upwards, as shown in illustration.

Procedure

– Disable ATF pump and discharge hydraulic accumulator ⇒ page 7 .

– Switch off ignition.

– Bring front wheels into straight-ahead position and remove ⇒ Running gear, axles, steering; Rep. gr. 44 ; Wheels, tyres .

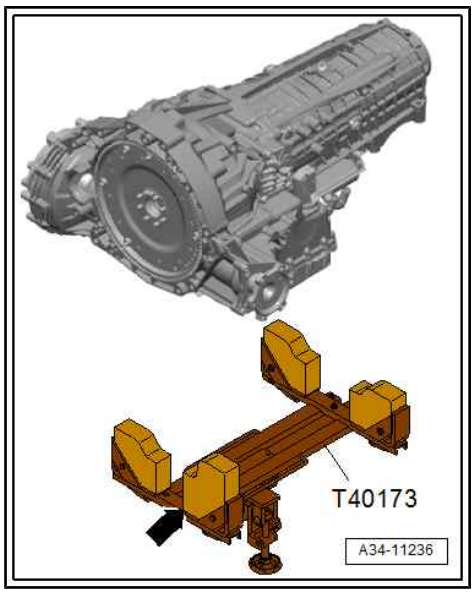

Caution

Risk of damage to gearbox if ATF and gear oil (MTF) mix via shared breather opening.

- *When the gearbox is filled with ATF and gearbox oil (MTF), it must not be tilted further than 15° horizontally or vertically.*
- *If it is necessary to tilt the gearbox further, both the ATF and the gearbox oil (MTF) must be drained* *⇒ page 94* *and* *⇒ page 87* *.*

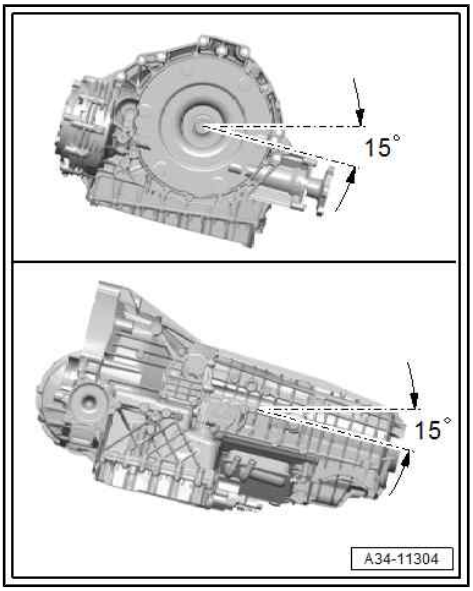

– Disconnect earth wire from battery terminal ⇒ Electrical system; Rep. gr. 27 ; Battery; Disconnecting and connecting battery .

– Remove subframe cross brace ⇒ Running gear, axles, steering; Rep. gr. 40 ; Subframe; Removing and installing subframe cross brace .

– Remove front exhaust pipe ⇒ Engine; Rep. gr. 26 ; Exhaust pipes/silencers; Exploded view - silencers .

– Remove plenum chamber partition panel ⇒ General body repairs, exterior; Rep. gr. 50 ; Bulkhead; Removing and installing plenum chamber partition panel .

– Remove air cleaner housing ⇒ Engine; Rep. gr. 23 ; Air cleaner; Removing and installing air cleaner housing .

Protected by copyright. Copying for private or commercial purposes, in part or in whole, is not permitted unless authorised by AUDI AG. AUDI AG does not guarantee or accept any liability with respect to the correctness of information in this document. Copyright by AUDI AG.

– Release screw-type clip -arrow- for particulate filter.

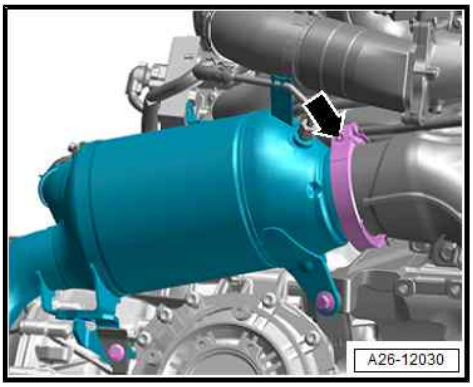

WARNING

Risk of injury caused by soot particles in the air.

Eyes and skin can suffer irritation or injuries.

- *Put on safety goggles.*
- *Put on protective gloves.*

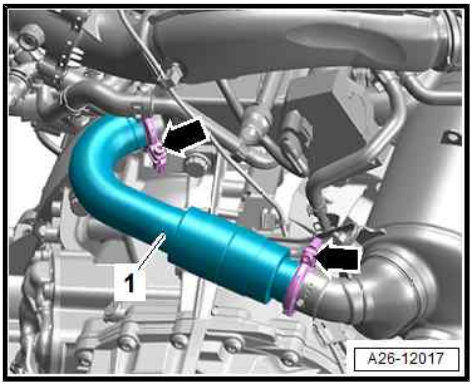

– Release screw-type clips -arrows- and detach exhaust gas recirculation pipe -1-.

– Unscrew bolts - 5- and nuts -3- and remove bracket -2-.

Protected by copyright. Copying for private or commercial purposes, is not permitted unless authorised by AUDI AG. AUDI AG does not guarantee or assume liability with respect to the correctness of information in this document. Copyright by AUDI AG.

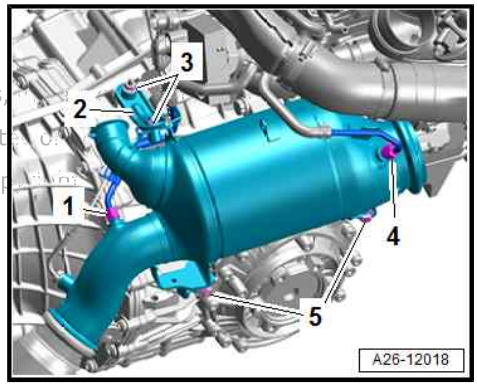

– Remove bolts -2 … 5- securing gearbox to engine (accessible from above).

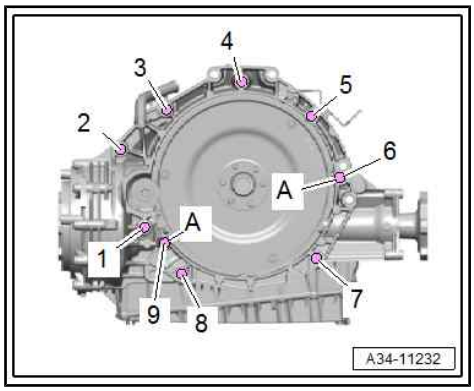

– Place a cloth underneath to catch escaping coolant.
– Clamp off coolant hoses using hose clamps up to 25 mm - 3094- , release hose clips -arrows- and disconnect hoses.
– Install body brace (left-side) ⇒ Running gear, front-wheel drive and four-wheel drive; Rep. gr. 40 ; Suspension strut, upper links; Removing and installing body brace .

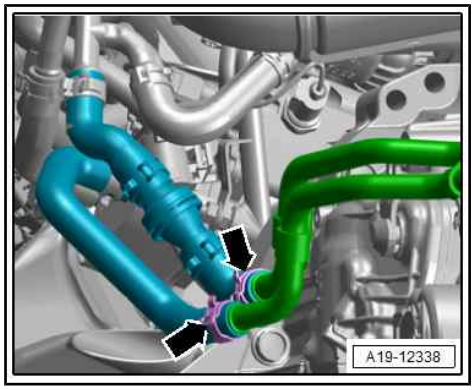

– Use tensioning strap - T10038- to tie up particulate filter as shown.
– Support engine in installation position ⇒ Rep. gr. 10 ; Assembly mountings; Supporting engine in installation position .
– Remove subframe shield (left-side) ⇒ Running gear, axles, steering; Rep. gr. 40 ; Subframe; Removing and installing subframe shield .

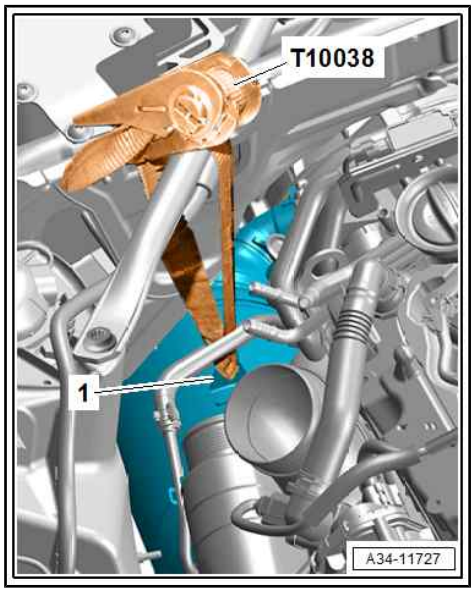

– Remove bolts -arrows- and move manual release cable -1- for parking lock clear.

– Remove drive shaft cover (right-side) ⇒ General body repairs, exterior; Rep. gr. 66 ; Wheel housing liners; Exploded view - wheel housing liner (front) .

– Unbolt drive shafts (left and right) from flange shafts of gearbox and tie them up to rear ⇒ Running gear, axles, steering; Rep. gr. 40 ; Drive shaft; Removing and installing drive shaft .

– Detach intermediate steering shaft from steering rack and move clear by telescoping together ⇒ Running gear, axles, steering; Rep. gr. 48 ; Steering column; Removing and installing steering column .

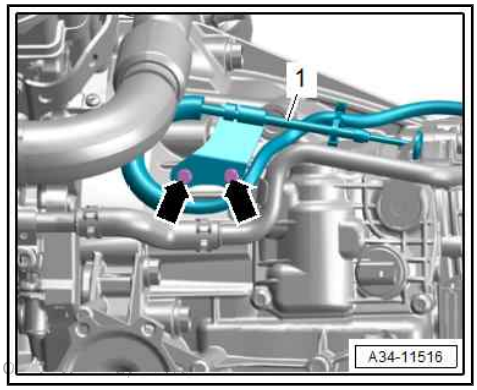

Protected by copyright. Copying for private or commercial purposes, in part or in whole, is not permitted unless authorised by AUDI AG. AUDI AG does not guarantee or accept any liability with respect to the correctness of information in this document. Copyright by AUDI AG.

– Detach bottom cover -1- from gearbox -arrow-.

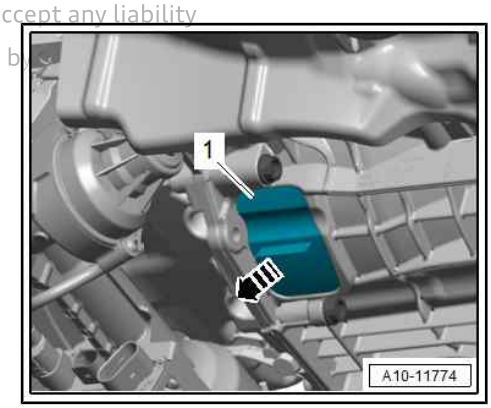

– Position wrench, 21 mm - T40263- and key -T40405- on vibration damper.

• Notch -2- aligns with “OT” (TDC) marking -1- on vibration damper.

> ⚠ **Caution**
>
> ***Risk of irreparable damage to engine if valve gear drive slips***
>
> ♦ ***Only turn crankshaft in the direction of engine rotation -arrow-.***

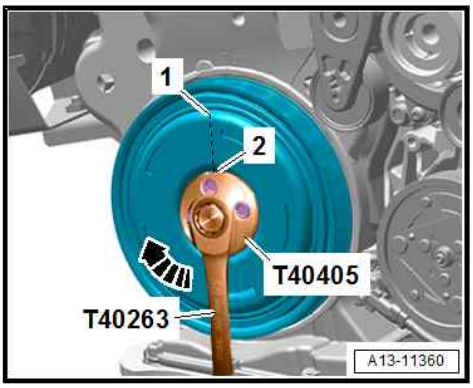

– Counterhold crankshaft at vibration damper.

– Remove 6 bolts -arrow- from drive plate -1-. Turn crankshaft 60° in direction of engine rotation each time.

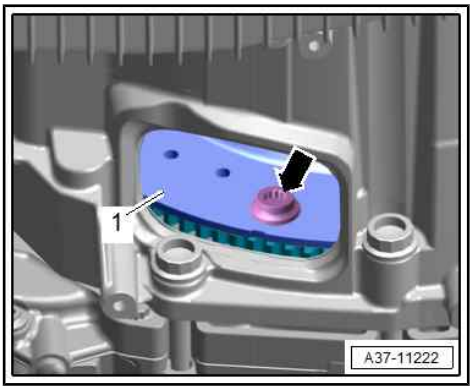

Caution

The gearbox control unit (mechatronic unit) can be damaged by electrostatic discharge.

- *Before handling electrical connectors, mechanic must discharge static. To do so, touch vehicle earth, heater radiator, or lifting platform, with your hand.*
- *Do not touch contact pins in gearbox connector with bare hands.*

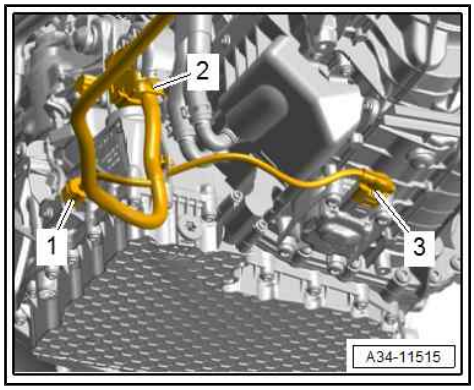

– Unplug electrical connectors -1, 2, 3- and move electrical wires clear.

– Remove bolt -1- using ring spanner insert, 16 mm - V.A.G 1332/14- and adapter - VAS 6948- .

– Pull starter off gearbox slightly but do not remove starter.

– Unscrew remaining bolts -6 ... 9- securing gearbox to engine.

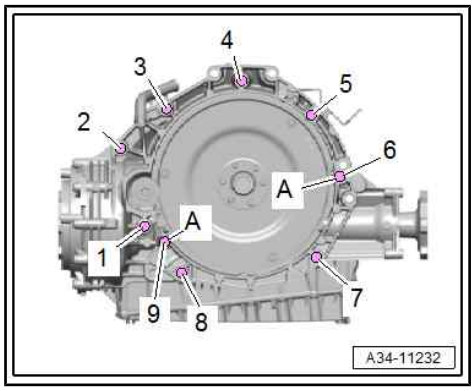

– Position engine and gearbox jack - VAS 6931- with prepared gearbox support - T40173- underneath gearbox and secure with tensioning strap -1-.

– Remove tunnel cross member ⇒ page 74 .

– Detach gearbox from engine and lower carefully using engine and gearbox jack - VAS 6931- (pay attention to electrical wiring when doing so).

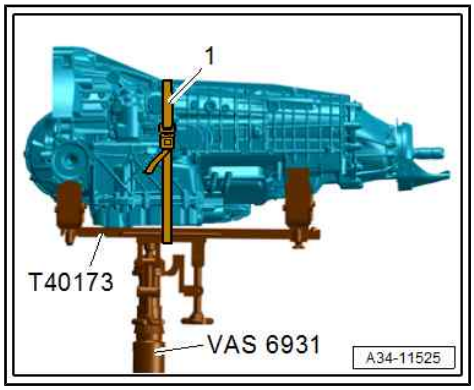

2.1.3 Removing gearbox - Q5

Special tools and workshop equipment required

- Hose clamps up to 25 mm - 3094-

Protected by copyright. Copying for private or commercial purposes, in part or in whole, is not permitted unless authorised by AUDI AG. AUDI AG does not guarantee or accept any liability with respect to the correctness of information in this document. Copyright by AUDI AG.

- Ring spanner insert AF 16 - V.A.G 1332/14-

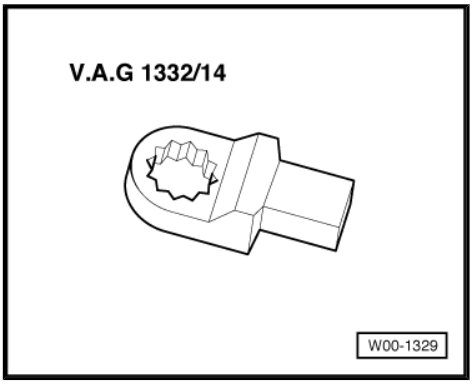

- Engine and gearbox jack - VAS 6931-

- Adapter - VAS 6948-

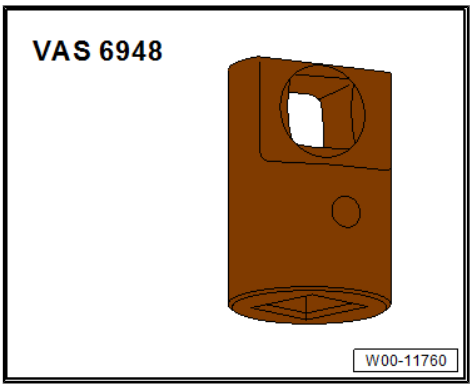

- Tensioning strap - T10038-

Protected by copyright. Copying for private or commercial purposes, in part or in whole, is not permitted unless authorised by AUDI AG. AUDI AG does not guarantee or accept any liability with respect to the correctness of information in this document. Copyright by AUDI AG.

- Gearbox support - T40173-

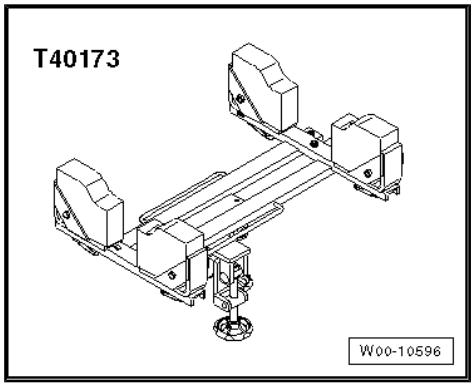

- Wrench 21 mm - T40263- for vehicles with 2.0 ltr. TFSI engine

Protected by copyright. Copying for private or commercial purposes, in part or in whole, is not
permitted unless authorised by AUDI AG. AUDI AG does not guarantee or accept any liability
with respect to the correctness of information in this document. Copyright by AUDI AG.

- Adapter -T40314- for vehicles with 2.0 ltr. TFSI engine

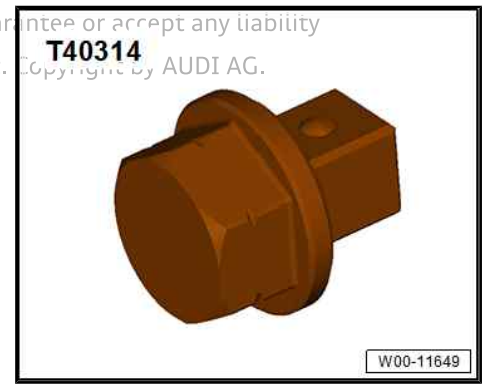

Preparing gearbox support - T40173- :

– Mounting block -arrow- must be rotated so that the longer side faces upwards, as shown in illustration.

Procedure

– Disable ATF pump and discharge hydraulic accumulator ⇒ page 7 .

– Switch off ignition.

– Bring front wheels into straight-ahead position and remove ⇒ Running gear, axles, steering; Rep. gr. 44 ; Wheels, tyres .

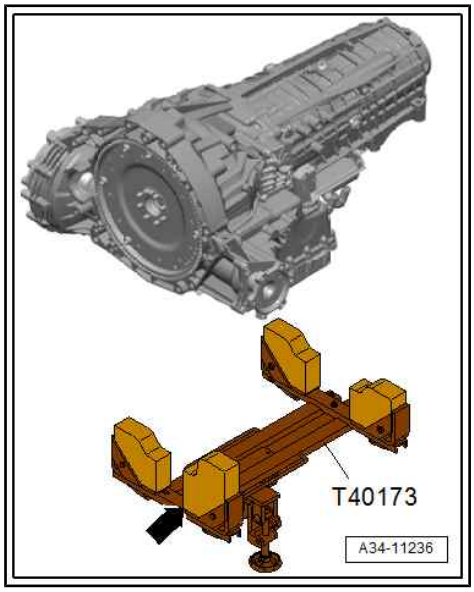

Caution

Risk of damage to gearbox if ATF and gear oil (MTF) mix via shared breather opening.

- *When the gearbox is filled with ATF and gearbox oil (MTF), it must not be tilted further than 15° horizontally or vertically.*
- *If it is necessary to tilt the gearbox further, both the ATF and the gearbox oil (MTF) must be drained* *⇒ page 94* *and* *⇒ page 87* *.*

Protected by copyright. Copying for private or commercial purposes, in part or whole, is not permitted unless authorised by AUDI AG. AUDI AG does not guarantee or accept any liability with respect to the correctness of information in this document. Copyright

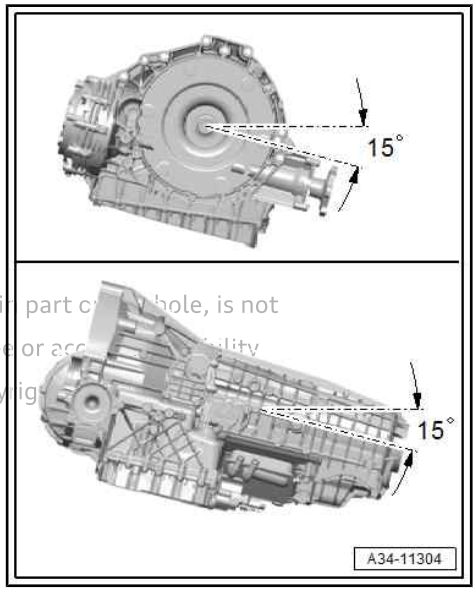

– Remove engine cover panel ⇒ Engine; Rep. gr. 10 ; Engine cover panel; Removing and installing engine cover panel .

– Disconnect earth wire from battery terminal ⇒ Electrical system; Rep. gr. 27 ; Battery; Disconnecting and connecting battery .

– Remove subframe cross brace ⇒ Running gear, axles, steering; Rep. gr. 40 ; Subframe; Removing and installing subframe cross brace .

Caution

Risk of damage to parts of the running gear.

- *Do not let the vehicle down on the wheels if the gearbox mounting, steering rack or subframe cross brace are not properly installed.*

– Remove front exhaust pipe ⇒ Engine; Rep. gr. 26 ; Exhaust pipes/silencers; Exploded view - silencers .

– Unscrew bolts -arrows- and move parking lock manual release cable -1- clear. (Different versions.)

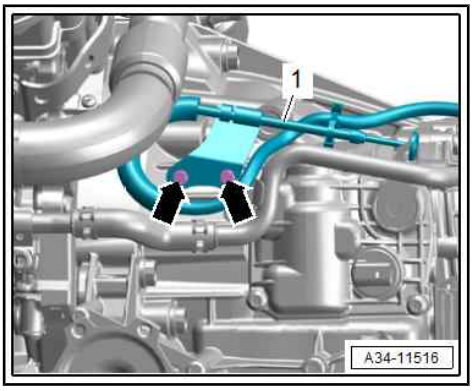

Vehicles with 4-cyl. TFSI engine:

– Remove bolts -2 … 5- securing gearbox to engine (accessible from above).

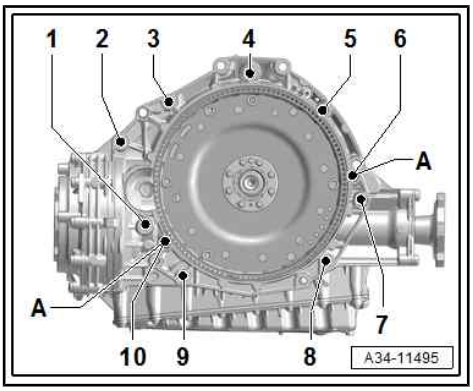

Vehicles with 4-cyl. TDI engine:

– Remove bolts -2 … 5- securing gearbox to engine (accessible from above).

All vehicles:

– Remove propshaft ⇒ Rear final drive; Rep. gr. 39 ; Propshaft; Removing and installing propshaft .

– Detach intermediate steering shaft from steering rack and slide together ⇒ Running gear, axles, steering; Rep. gr. 48 ; Steering column; Removing and installing intermediate steering shaft .

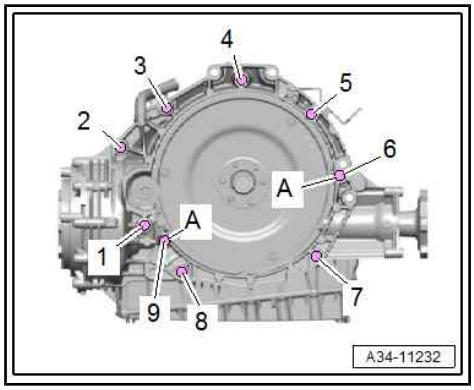

– Remove bolts -arrows- securing coolant pipe for gearbox.

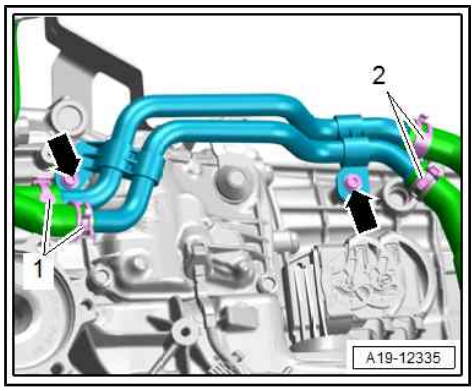

– Clamp off coolant hoses using hose clamps (up to 25 mm) -3094- , release hose clips -1 and 2- and disconnect hoses.

– Support engine in installation position ⇒ Rep. gr. 10 ; Assembly mountings; Supporting engine in installation position .

– Remove front wheels ⇒ Running gear, axles, steering; Rep. gr. 44 ; Wheels, tyres .

– Remove drive shaft cover on both sides ⇒ General body repairs, exterior; Rep. gr. 66 ; Wheel housing liners; Exploded view - wheel housing liner (front) .

Protected by copyright. Copying for private or commerc
permitted unless authorised by AUDI AG. AUDI AG does
with respect to the correctness of information in this d

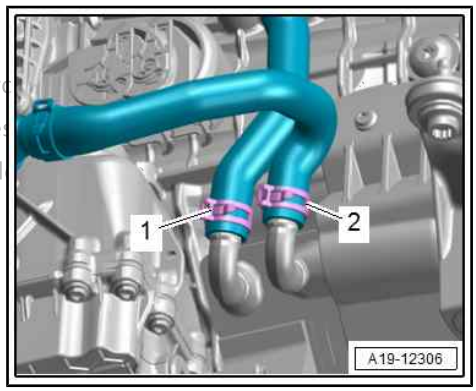

– Remove subframe shield -arrow- (below drive shaft on left side) ⇒ Running gear, axles, steering; Rep. gr. 40 ; Subframe; Exploded view - subframe .

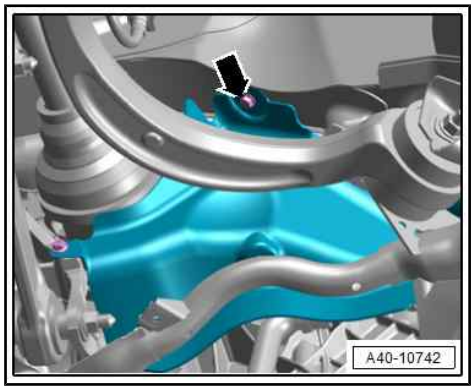

– Detach bottom cover -1- from gearbox -arrow-.

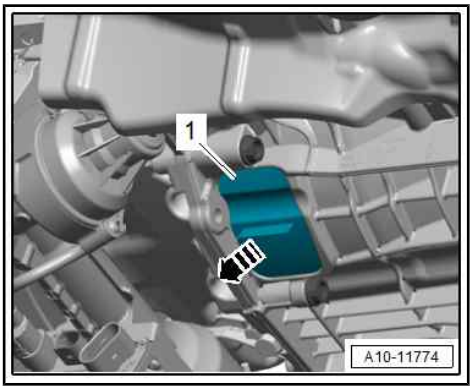

Vehicles with 4-cyl. TFSI engine

– To slacken bolts for flywheel, counterhold crankshaft at central bolt on vibration damper using wrench, 21 mm - T40263- and adapter -T40314- .

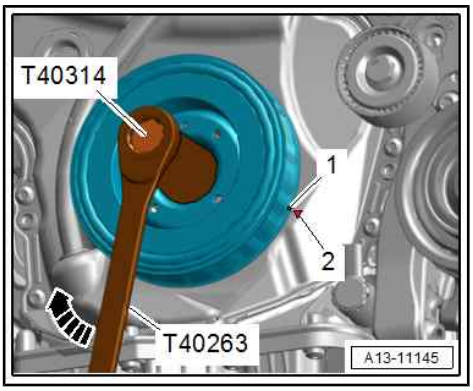

> **Caution**
>
> *Irreparable damage can be caused if the camshaft drive chain slips.*
>
> ♦ *Only turn crankshaft in the direction of engine rotation -arrow-.*

Vehicles with 4-cylinder TDI engine

– Remove cap from vibration damper.

– To slacken bolts for flywheel, counterhold crankshaft with angled ring spanner -1- at central bolt on vibration damper.

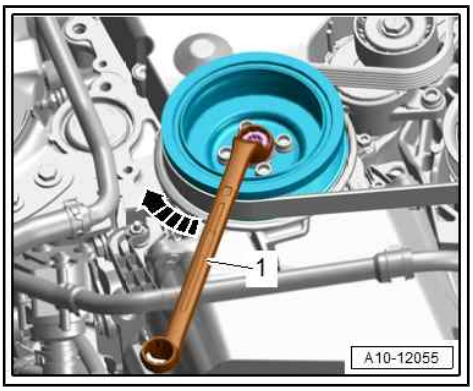

> **Caution**
>
> *Irreparable engine damage can be caused if the toothed belt slips.*
>
> ♦ *Only turn crankshaft in the direction of engine rotation -arrow-.*

All vehicles (continued)

– Remove 3 bolts -arrow- for flywheel -1- (turn crankshaft 120° in direction of engine rotation each time).

Protected by copyright. Copying for private or commercial purposes, in p
permitted unless authorised by AUDI AG. AUDI AG does not guarantee o
with respect to the correctness of information in this document. Copyrig

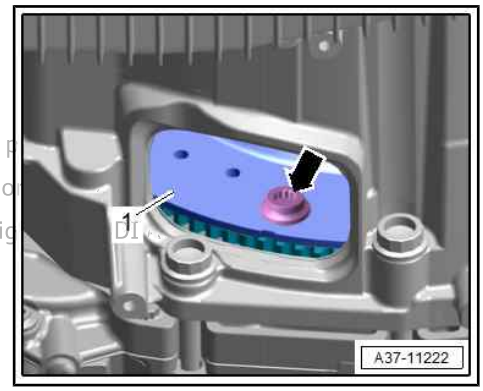

– Remove heat shield for drive shaft (right-side) ⇒ Running gear, axles, steering; Rep. gr. 40 ; Drive shaft; Removing and installing heat shield for drive shaft .

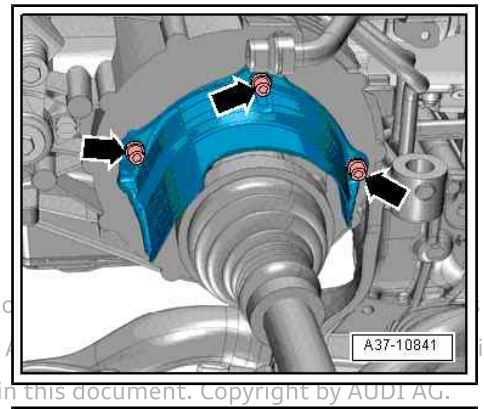

Protected by copyright. Copying for private or co not
permitted unless authorised by AUDI AG. AUDI ity
with respect to the correctness of information in this document. Copyright by AUDI AG.

– Unbolt drive shafts (left and right) from flange shafts of gearbox and tie them up ⇒ Running gear, axles, steering; Rep. gr. 40 ; Drive shaft; Removing and installing drive shaft .

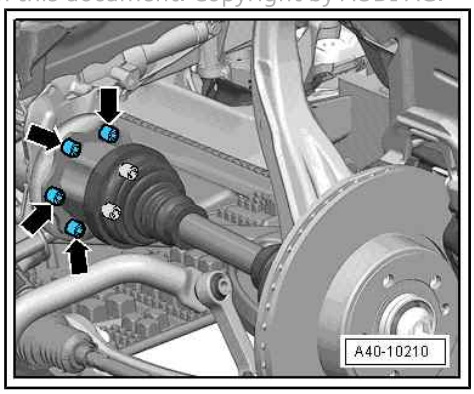

Caution

The gearbox control unit (mechatronic unit) can be damaged by electrostatic discharge.

- *Before handling electrical connectors, mechanic must discharge static. To do so, touch vehicle earth, heater radiator, or lifting platform, with your hand.*
- *Do not touch contact pins in gearbox connector with bare hands.*

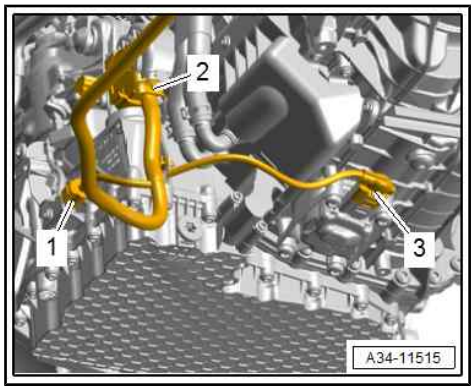

– Unplug electrical connectors:

1 - For parking lock solenoid - N486-

2 - For automatic gearbox control unit - J217-

3 - For electric pump 2 for gearbox - V553-

– Move electrical connector -arrow- for all-wheel drive control unit - J492- clear.

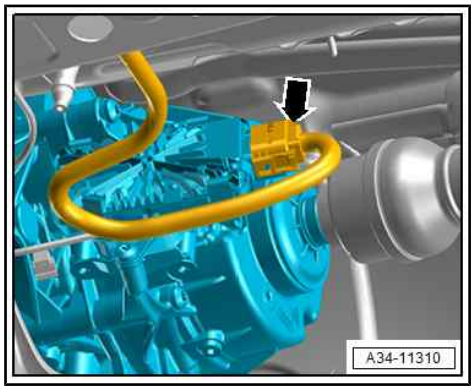

Vehicles with 4-cyl. TFSI engine

– Remove bolt -1- using ring spanner insert, 16 mm - V.A.G 1332/14- and adapter - VAS 6948- .

– Pull starter off gearbox slightly but do not remove starter.

– Unscrew remaining bolts -6 ... 10- securing gearbox to engine.

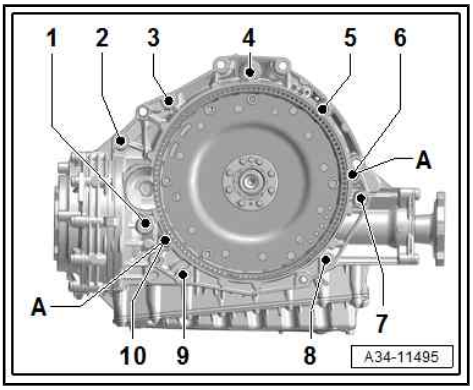

Vehicles with 4-cylinder TDI engine

– Remove bolt -1- using ring spanner insert, 16 mm - V.A.G 1332/14- and adapter - VAS 6948- .

– Pull starter off gearbox slightly but do not remove starter.

– Unscrew remaining bolts -6 ... 9- securing gearbox to engine.

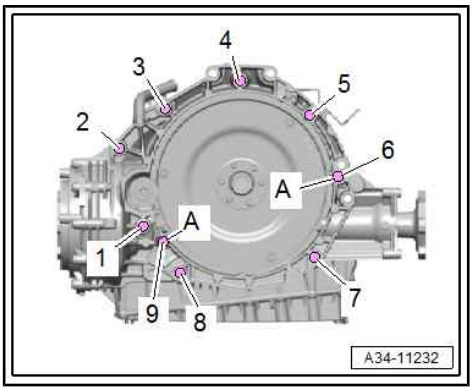

All vehicles (continued)

– Position engine and gearbox jack - VAS 6931- with gearbox support - T40173- (set up beforehand) underneath gearbox and secure with tensioning strap -1- as shown in illustration.

– Remove tunnel cross member ⇒ page 74 .

– Detach gearbox from engine and lower carefully using engine and gearbox jack - VAS 6931- (pay attention to electrical wiring and SCR line when doing so).

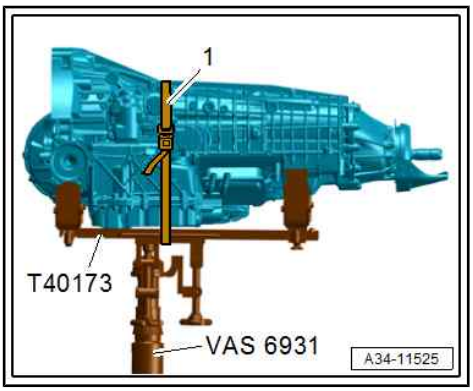

2.2 Installing gearbox

Special tools and workshop equipment required

◆ Ring spanner insert, 16 mm - V.A.G 1332/14-

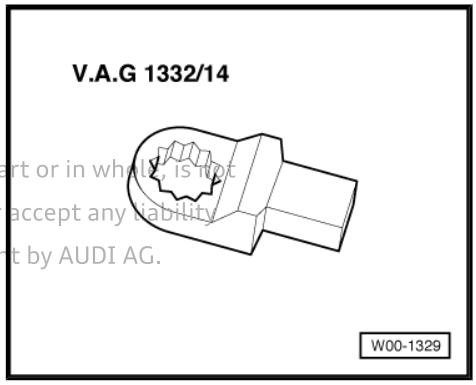

Protected by copyright. Copying for private or commercial purposes, in part or in whole, is not permitted unless authorised by AUDI AG. AUDI AG does not guarantee or accept any liability with respect to the correctness of information in this document. Copyright by AUDI AG.

- Assembly aid - T40169-

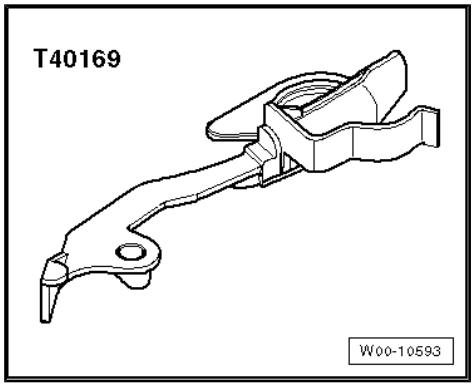

- Transportation lock - T40170-

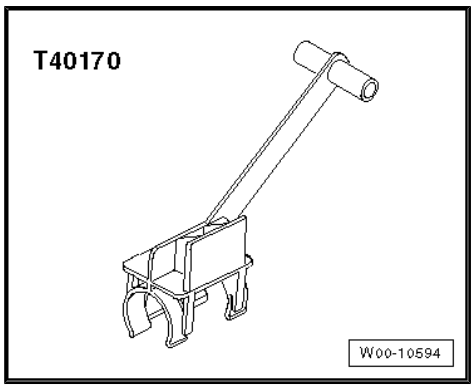

- All special tools specified in removal procedure

Procedure

> ⚠ **Caution**
>
> ***Risk of damage to gearbox if ATF and gear oil (MTF) mix via shared breather opening.***
>
> - ***When the gearbox is filled with ATF and gearbox oil (MTF), it must not be tilted further than 15° horizontally or vertically.***
> - ***If it is necessary to tilt the gearbox further, both the ATF and the gearbox oil (MTF) must be drained ⇒ page 94 and ⇒ page 87 .***

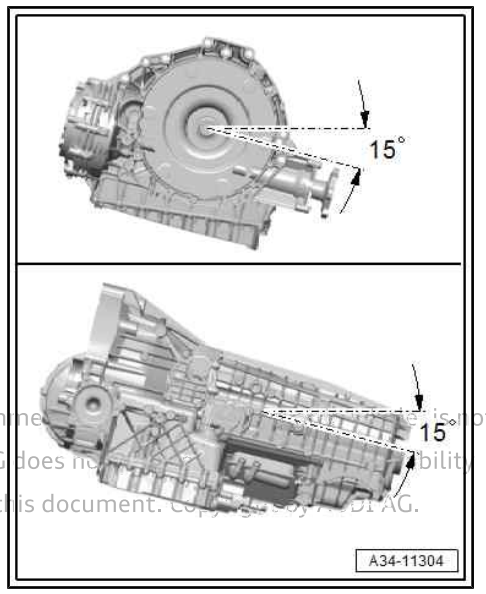

Protected by copyright. Copying for private or commercial purposes, in part or in whole, is not permitted unless authorised by AUDI AG. AUDI AG does not guarantee or assume any liability with respect to the correctness of information in this document. Copyright by AUDI AG.

Note

- *Renew bolts which are tightened by turning through a specified angle.*
- *Renew self-locking nuts and bolts, as well as O-rings, seals and gaskets.*
- *Secure hose connections with the correct hose clips (as original equipment); refer to ⇒ Electronic parts catalogue .*
- *Re-attach all cable ties at the same locations when re-installing.*
- *"Clacking" sound in LuK version dual-mass flywheel with centrifugal pendulum absorber can be disregarded.*
- *When the clutch module -A- is turned -arrows-, a clacking sound can be heard at intervals of approx. 90°. This is caused by moving pendulum masses in the dual-mass flywheel and is not a fault.*

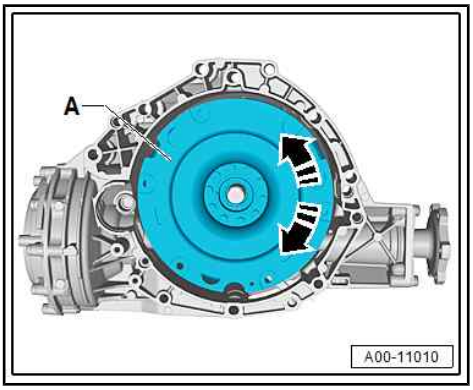

Caution

Risk of leaks on oil pan.

- ***Do not apply gearbox support - T40173- at oil pan.***

– Position gearbox on gearbox support - T40173- and secure with tensioning strap -1-, as shown in illustration.

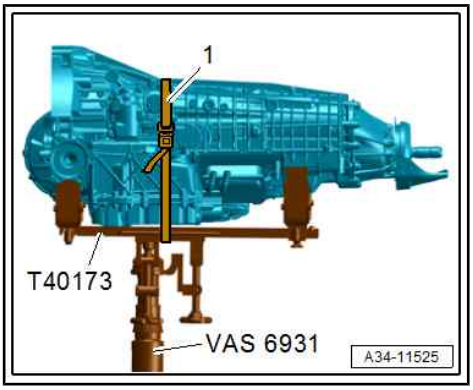

– The following preparations must be made before joining the engine and gearbox:

– Insert assembly aid - T40169- into gearbox housing and flywheel from below, as shown in illustration.

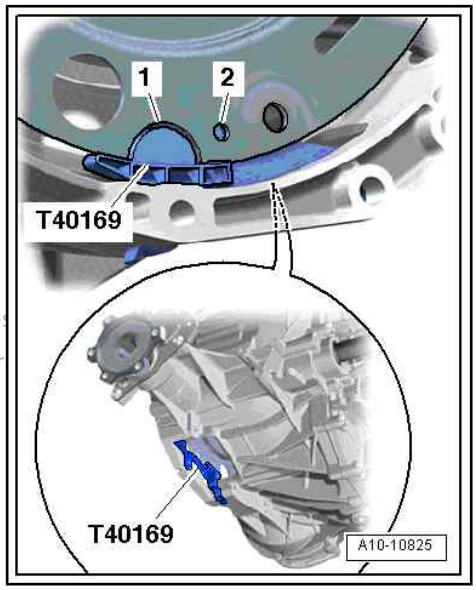

Protected by copyright. Copying for private or commercial purpos
permitted unless authorised by AUDI AG. AUDI AG does not guar
with respect to the correctness of information in this document.

- The assembly tool must engage in the semi-circular recess and in the hole (-arrow A- and -arrow B-).

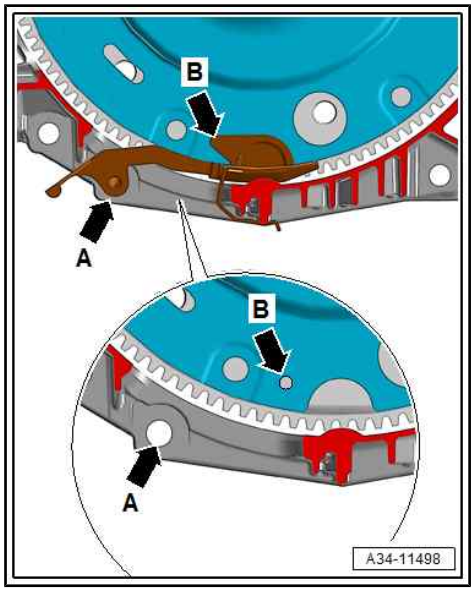

Note

There is only one inspection hole -arrow B- at the periphery; turn the flywheel accordingly.

– Insert transportation lock - T40170- into gearbox housing from below and clamp onto flange shaft -1-.

– Check whether aluminium bolts securing engine to gearbox can be reused; if so, apply marking ⇒ page 71 .

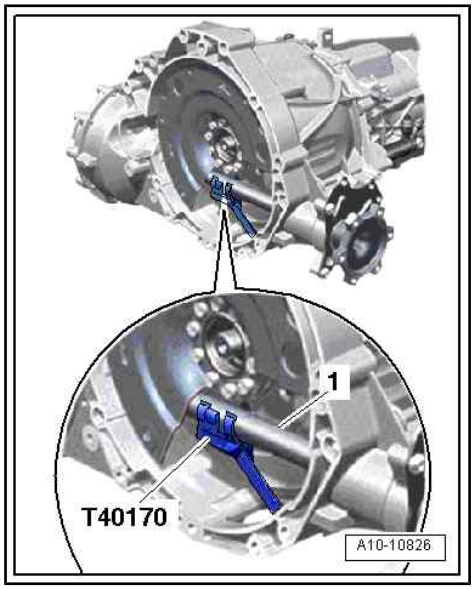

Vehicles with sealing element:

– Clean contact surface -1- on timing chain cover (bottom) and sealing element -2- with cleaning solution - D 009 401 04- .

– Bond sealing element to timing chain cover (bottom).

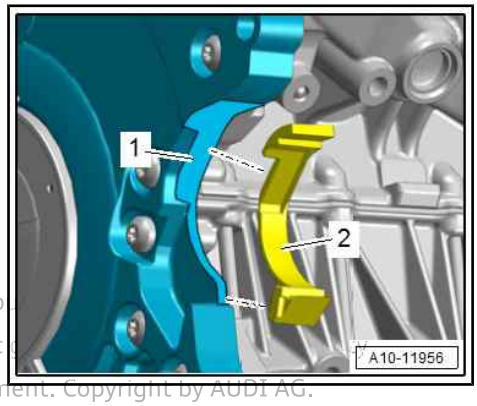

Protected by copyright. Copying for private or commercial p
permitted unless authorised by AUDI AG. AUDI AG does not
with respect to the correctness of information in this document. Copyright by AUDI AG.

Vehicles with 4-cylinder engine:

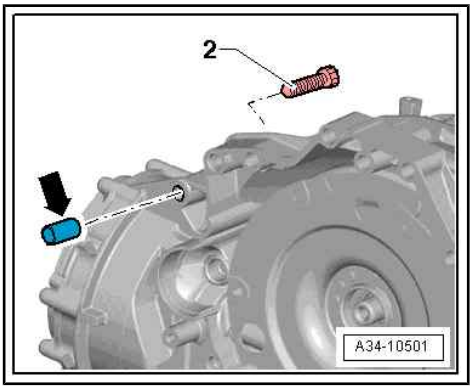

Note

- *Bolt -2- secures the starter to the gearbox and has an additional spacer sleeve -arrow-.*
- *The spacer sleeve must be fitted between starter and gearbox.*

– Move starter into installation position.

Vehicles with 4-cylinder TFSI engine or 6-cylinder TDI engine:

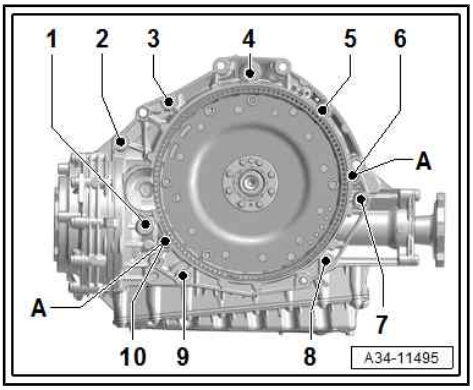

– Check that dowel sleeves -A- for centralising engine/gearbox are fitted in the cylinder block.
– Join gearbox with engine (guide starter as appropriate).
– Screw in bolt -8- by hand until it makes contact.
– Install tunnel cross member ⇒ page 74 .
– Remove support bracket ⇒ Engine; Rep. gr. 10 ; Assembly mountings; Supporting engine in installation position .
– Tighten bolts -1 ... 10-.

Vehicles with 4-cyl. TDI engine:

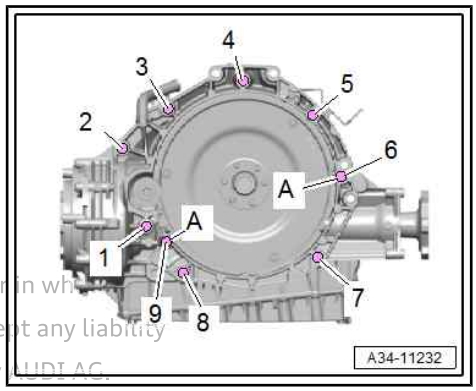

– Check that dowel sleeves -A- for centralising engine/gearbox are fitted in the cylinder block.
– Join gearbox with engine (guide starter as appropriate).
– Screw in bolt -7- by hand until it makes contact.
– Install tunnel cross member ⇒ page 74 .
– Remove support bracket ⇒ Engine; Rep. gr. 10 ; Assembly mountings; Supporting engine in installation position .
– Tighten bolts -1 ... 9-.

Protected by copyright. Copying for private or commercial purposes, in part or in whole, is not permitted unless authorised by AUDI AG. AUDI AG does not guarantee or accept any liability with respect to the correctness of information in this document. Copyright by AUDI AG.

All vehicles:

Caution

Risk of vibrations or rattling noises when driving off.

- ***The work steps must be performed in the sequence shown to ensure that the vibration damper is not under tension when installed.***
- ***The vibration damper must be flat on the drive plate when the first securing bolt is screwed in.***

– Turn crankshaft at vibration damper 360° in direction of engine rotation.

– Remove transportation lock - T40170- .

Protected by copyright. Copying for private or commercial purpo
permitted unless authorised by AUDI AG. AUDI AG does not gua
with respect to the correctness of information in this document.

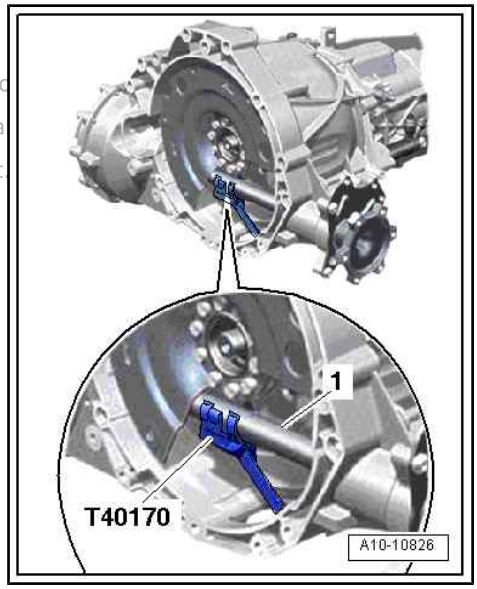

Note

If the vibration damper -1- is not flat on the drive plate, insert transportation lock - T40170- and turn crankshaft through 360° again.

– Tighten first bolt -arrow- to 10 Nm and loosen again; then tighten to 2 Nm (hand-tight).

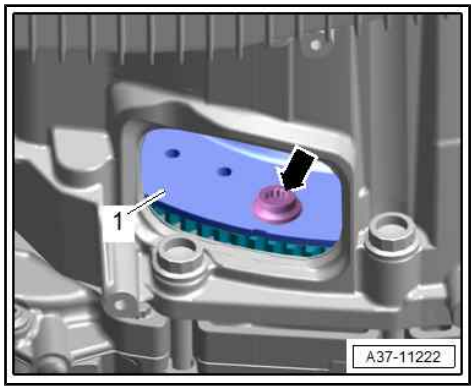

– Remove assembly aid - T40169- .

– Secure flywheel to drive plate as follows:

Vehicles with 4-cylinder engine (three securing bolts):

– Using an angled ring spanner, turn crankshaft at vibration damper 120° further in direction of engine rotation.

– Screw in next bolt in this crankshaft position and tighten ⇒ “2.3 Tightening torques for gearbox”, page 69 .

– Turn crankshaft 120° further in direction of engine rotation, screw in next bolt and tighten.

– Turn crankshaft 120° further in direction of engine rotation and tighten final bolt.

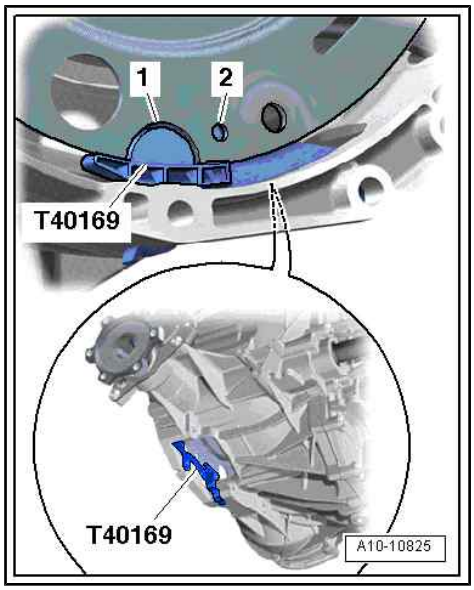

Vehicles with 6-cylinder engine (six securing bolts):

- Turn crankshaft via vibration damper 180° further in direction of engine rotation, screw in bolt -4- and tighten ⇒ “2.3 Tightening torques for gearbox”, page 69 .
- Turn crankshaft 60° further in direction of engine rotation (for each bolt), screw in bolts -5- and -6- and tighten.
- Turn crankshaft 60° further in direction of engine rotation and tighten bolt -1-.
- Turn crankshaft 60° further in direction of engine rotation (for each bolt), screw in bolts -2- and -3- and tighten.

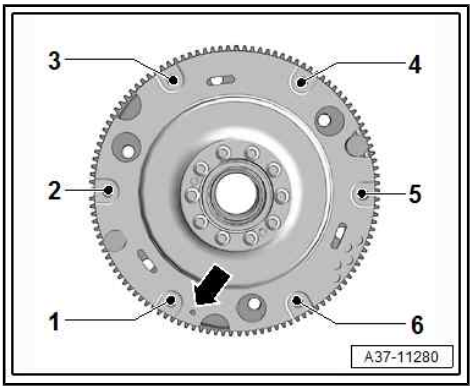

Protected by copyright. Copying for private or commercial purposes, in part or in whole, is not permitted unless authorised by AUDI AG. AUDI AG does not guarantee or accept any liability with respect to the correctness of information in this document. Copyright by AUDI AG.

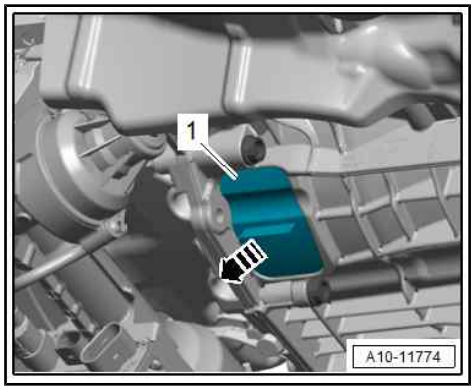

All vehicles:

– Install cover -1-.

Perform remaining installation steps in reverse sequence; observe the following:

– Electrical connections and routing ⇒ Current flow diagrams, Electrical fault finding and Fitting locations.

– Secure drive shafts ⇒ Running gear, axles, steering; Rep. gr. 40 ; Drive shaft; Exploded view - drive shaft .

– Install heat shield for drive shaft ⇒ Running gear, axles, steering; Rep. gr. 40 ; Drive shaft; Removing and installing heat shield for drive shaft .

– Install cover for drive shaft ⇒ General body repairs, exterior; Rep. gr. 66 ; Wheel housing liners; Exploded view - wheel housing liner (front) .

Protected by copyright. Copying for private or commercial purposes, in part or in whole, is not permitted unless authorised by AUDI AG. AUDI AG does not guarantee or accept any liability with respect to the correctness of information in this document. Copyright by AUDI AG.

– Fit front wheels ⇒ Running gear, axles, steering; Rep. gr. 44 ; Wheels, tyres .

– Install manual release cable for parking lock ⇒ page 29 .

– Install coolant pipe for gearbox ⇒ Engine; Rep. gr. 19 ; Coolant pipes; Exploded view - coolant pipes .

– Install intermediate steering shaft ⇒ Running gear, axles, steering; Rep. gr. 48 ; Steering column; Removing and installing intermediate steering shaft .

– Install propshaft ⇒ Rear final drive; Rep. gr. 39 ; Propshaft; Removing and installing propshaft .

– Install emission control module ⇒ Engine; Rep. gr. 26 ; Emission control system; Removing and installing emission control module .

– Install front exhaust pipe ⇒ Engine; Rep. gr. 26 ; Exhaust pipes/silencers; Removing and installing front exhaust pipe .

– Install subframe cross brace ⇒ Running gear, axles, steering; Rep. gr. 40 ; Subframe; Removing and installing subframe cross brace .

– Fill up with coolant ⇒ Engine; Rep. gr. 19 ; Cooling system/ coolant; Draining and filling cooling system .

– Install engine cover panel ⇒ Engine; Rep. gr. 10 ; Engine cover panel; Removing and installing engine cover panel .

– Observe measures required after connecting battery ⇒ Electrical system; Rep. gr. 27 ; Battery; Disconnecting and connecting battery .

– Check MTF level and top up as required ⇒ page 86 .

– Check ATF level and top up as required ⇒ page 91 .

Note

It is not necessary to check the MTF/ATF level if a brand new gearbox is being installed.

Note

If renewing the gearbox, run the function “Replace control unit” in ⇒ Vehicle diagnostic tester.

Procedure

– Connect vehicle diagnostic tester .
– Select `Diagnosis` mode and begin diagnosis.
– Select `Test plan` tab.
– Choose `Select own test` and select following options one after the other:

◆ Drive system
◆ 7-speed dual clutch gearbox 0CJ, 0CK, 0CL, 0DN, 0DP
◆ 01 - Self-diagnosis compatible systems
◆ 02 - Gearbox electronics
◆ 02 - Gearbox electronics, functions
◆ 02 - Replace control unit ⇒ Complete gearbox

– Start the selected program and follow the instructions on the display of the vehicle diagnostic tester.

Protected by copyright. Copying for private or commercial purposes, in part or in whole, is not permitted unless authorised by AUDI AG. AUDI AG does not guarantee or accept any liability with respect to the correctness of information in this document. Copyright by AUDI AG.

2.3 Tightening torques for gearbox

Note

◆ *Tightening torques apply only to lightly greased, oiled, phosphated or black-finished nuts and bolts.*
◆ *Additional lubricants such as engine or gear oil may be used, but do not use lubricants containing graphite.*
◆ *Do not use degreased parts.*
◆ *Tolerance for tightening torques: ± 15%*

◆ Flywheel to drive plate ⇒ Servicing 7-speed dual clutch gearbox 0CJ, 0CK, 0CL, 0DN, 0DP; Rep. gr. 30 ; Clutch; Exploded view - flywheel and dual clutch
◆ Assembly mountings
⇒ “5.1 Exploded view - assembly mountings”, page 74

Gearbox to 4-cylinder TFSI engine:

Item	Bolt	Nm
1[1)]	M10x50 [2)]	65
2[1)]	M12x100 [4)]	30 + 90°
3	M12x75/70 [4) 5]	30 + 90°
6	M12x75/85 [4) 5]	30 + 90°
4, 5	M12x120 [4)]	30 + 90°
7	M12x100 [4)]	30 + 90°
8, 9	M10x40 [4)]	15 + 90°
10	M12x50 [4)]	30 + 90°
A	Dowel sleeves for centralising	

- [1)] Also secures starter
- [2)] Property class 10.9; the steel bolt can be re-used any number of times.
- [4)] Bolts must not be used more often than twice ⇒ page 71 .
- [5] Bolt lengths vary depending on version ⇒ Electronic parts catalogue

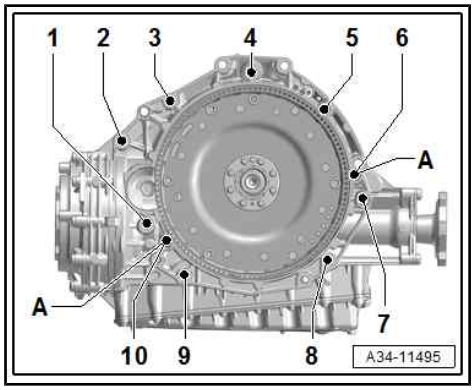

Engine/gearbox attachment (4-cyl. TDI engine):

Item	Bolt	Nm
1[1)]	M10x50 [2)]	65
2[3)]	M12x100 [4)]	30 + 90°
3, 6	M12x75 [4)]	30 + 90°
4, 5	M12x120 [4)]	30 + 90°
7, 8	M10x40 [4)]	15 + 90°
9	M12x50 [4)]	30 + 90°
A	Dowel sleeves for centralising	

- [1)] Also secures starter
- [2)] Property class 10.9; the steel bolt can be re-used any number of times.
- [3)] Also secures starter; with additional spacer sleeve between starter and gearbox.
- [4)] Bolts must not be used more often than twice ⇒ page 71 .

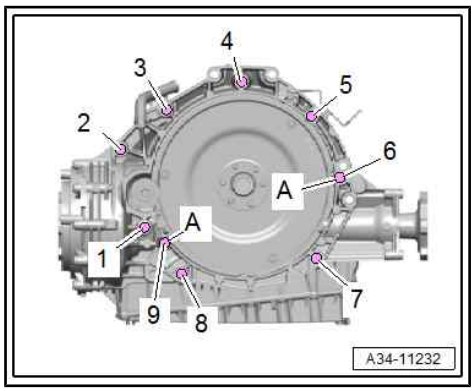

Protected by copyright. Copying for private or commercial purposes, in part or in whole, is not permitted unless authorised by AUDI AG. AUDI AG does not guarantee or accept any liability with respect to the correctness of information in this document. Copyright by AUDI AG.

Engine/gearbox attachment (6-cyl. TDI engine):

Item	Bolt	Nm
1 1)	M10x50 2)	65
2 1)	M12x100 4)	30 + 90°
3, 4, 5, 6	M12x100 4)	30 + 90°
7	M12x125 4)	30 + 90°
8, 9, 10	M10x60 4)	15 + 90°
A	Dowel sleeves for centralising	

- 1) Also secures starter
- 2) Property class 10.9; the steel bolt can be re-used any number of times.
- 4) Bolts must not be used more often than twice ⇒ page 71 .

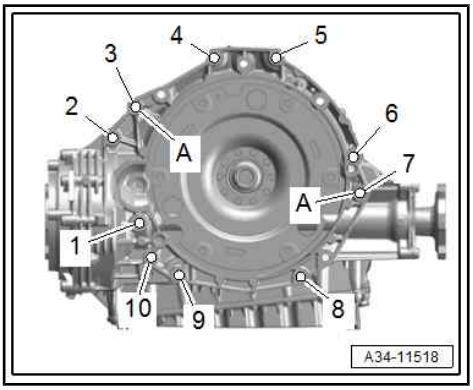

Aluminium bolts must not be used more than twice. After first use, bolts must therefore be identified with an “X” made by two chisel marks -arrow-.

To avoid damaging the bolts when making this mark, do not clamp them directly in a vice. Clamp a 14 mm socket with 1/2" drive in the vice instead, and insert the bolt into the socket, as shown in illustration.

Bolts already marked with an “X” must not be used again.

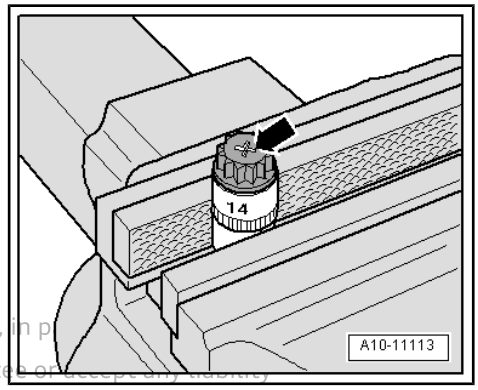

Protected by copyright. Copying for private or commercial purposes, in p
permitted unless authorised by AUDI AG. AUDI AG does not guarante
with respect to the correctness of information in this document. Copyright by AUDI AG.

3 Transporting gearbox

Description of work sequence ⇒ Servicing 7-speed dual clutch gearbox 0CJ, 0CK, 0CL; Rep. gr. 34 ; Transporting gearbox

Protected by copyright. Copying for private or commercial purposes, in part or in whole, is not permitted unless authorised by AUDI AG. AUDI AG does not guarantee or accept any liability with respect to the correctness of information in this document. Copyright by AUDI AG.

4 Securing to engine and gearbox support

Description of work sequence ⇒ Servicing 7-speed dual clutch gearbox 0CJ, 0CK, 0CL, 0DN, 0DP; Rep. gr. 34 ; Securing to engine and gearbox support

Protected by copyright. Copying for private or commercial purposes, in part or in whole, is not permitted unless authorised by AUDI AG. AUDI AG does not guarantee or accept any liability with respect to the correctness of information in this document. Copyright by AUDI AG.

5 Assembly mountings

⇒ “5.1 Exploded view - assembly mountings”, page 74

⇒ “5.2 Removing and installing tunnel cross member”, page 74

5.1 Exploded view - assembly mountings

1 - Bolt
- ❑ 70 Nm

2 - Tunnel cross member
- ❑ Removing and installing ⇒ page 74

3 - Stop
- ❑ For gearbox mounting

4 - Gearbox mounting
- ❑ Removing and installing ⇒ Engine; Rep. gr. 10 ; Assembly mountings; Removing and installing gearbox mounting

5 - Gearbox

6 - Nut
- ❑ 20 Nm

7 - Gearbox support
- ❑ Removing and installing ⇒ Engine; Rep. gr. 10 ; Assembly mountings; Removing and installing gearbox mounting

8 - Bolt
- ❑ 40 Nm

9 - Bolt
- ❑ Renew after removing
- ❑ 20 Nm +90°

10 - Nut
- ❑ 20 Nm

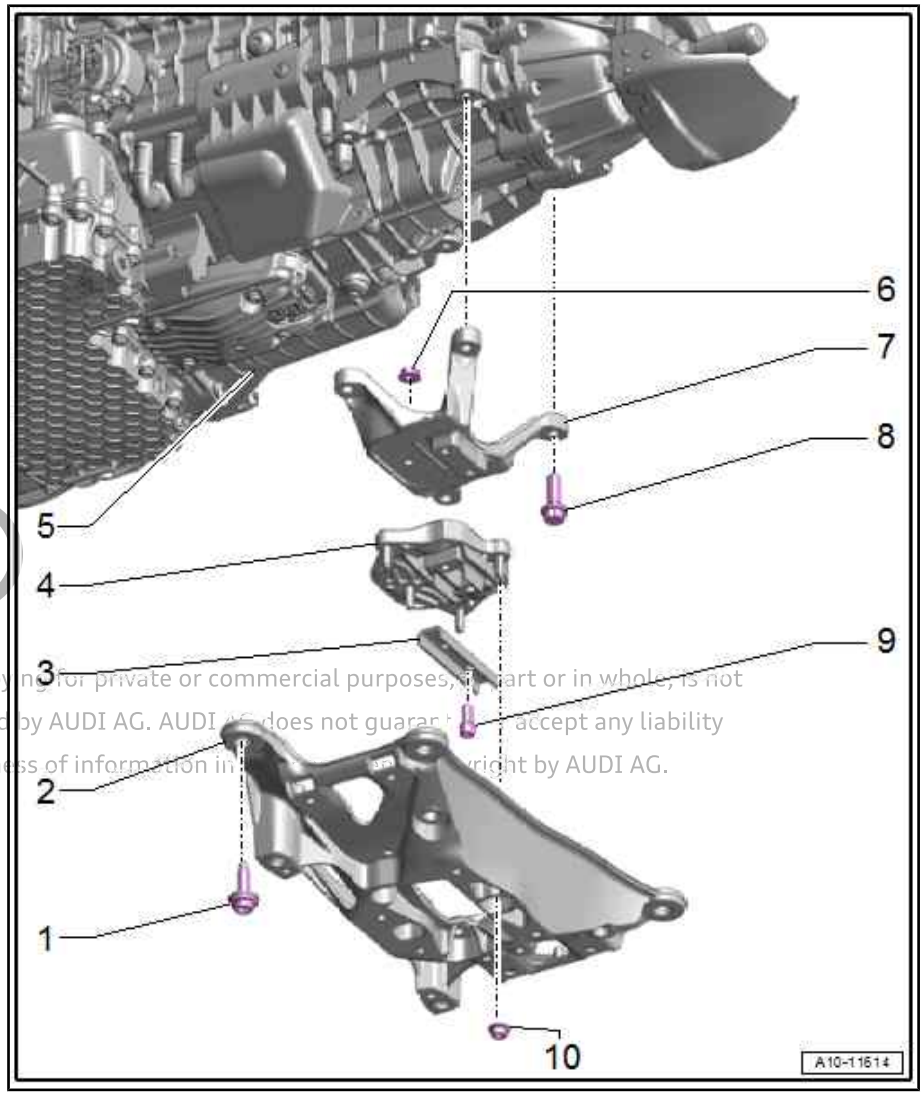

Protected by copyright. Copying for private or commercial purposes, in part or in whole, is not permitted unless authorised by AUDI AG. AUDI AG does not guarantee or accept any liability with respect to the correctness of information in this document. Copyright by AUDI AG.

5.2 Removing and installing tunnel cross member

Special tools and workshop equipment required

♦ Engine and gearbox jack - VAS 6931-

♦ Gearbox support - T10337-

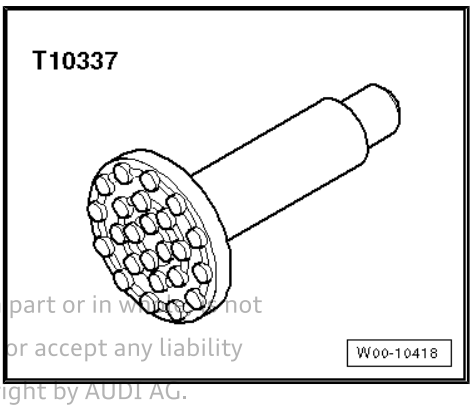

Protected by copyright. Copying for private or commercial purposes, in part or in whole, is not permitted unless authorised by AUDI AG. AUDI AG does not guarantee or accept any liability with respect to the correctness of information in this document. Copyright by AUDI AG.

Removing

– Remove noise insulation (rear) ⇒ General body repairs, exterior; Rep. gr. 66 ; Noise insulation; Removing and installing noise insulation .

– Depending on equipment version: Remove underbody trim (tunnel) ⇒ General body repairs, exterior; Rep. gr. 66 ; Underbody trim; Exploded view - underbody trim .

– Depending on equipment version: Remove bolts -arrows- and nut -2-.

– Detach end plate -1- for cross brace.

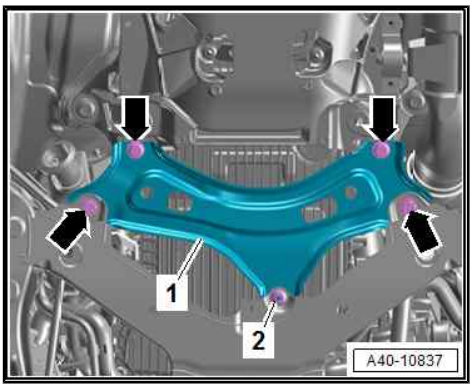

– Remove bolts -arrows- for front exhaust pipe.

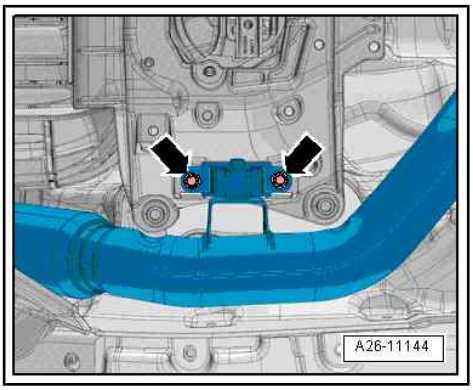

– Set up gearbox support - T10337- on engine and gearbox jack - VAS 6931- and position underneath gearbox, as shown in illustration.

– Raise gearbox slightly.

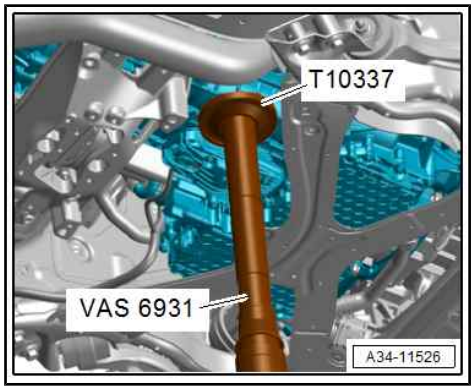

WARNING

Risk of accident.

- *Engine and gearbox jack - VAS 6931- must remain in position when work is being carried out and must not be left unattended.*

– Unscrew bolts -arrows- and nuts -1- and remove tunnel cross member.

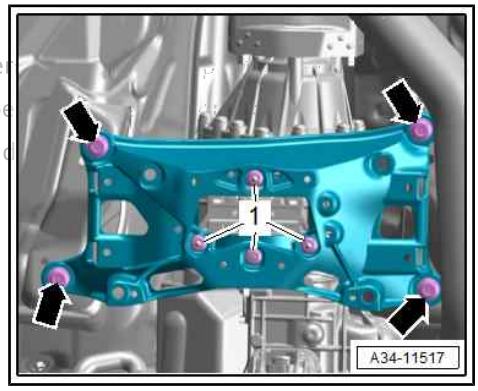

Protected by copyright. Copying for private or commer
permitted unless authorised by AUDI AG. AUDI AG doe
with respect to the correctness of information in this d

Installing

Installation is carried out in reverse sequence.

Tightening torques

- ⇒ “5.1 Exploded view - assembly mountings”, page 74
- ⇒ Engine; Rep. gr. 26 ; Exhaust pipes/silencers; Exploded view - silencers
- ⇒ Running gear, axles, steering; Rep. gr. 40 ; Subframe; Exploded view - subframe
- ⇒ General body repairs, exterior; Rep. gr. 66 ; Underbody trim; Exploded view - underbody trim
- ⇒ General body repairs, exterior; Rep. gr. 66 ; Noise insulation; Exploded view - noise insulation

6 Gear oil circuit

⇒ “6.1 Overview - gear oil circuit”, page 77

⇒ “6.2 Removing and installing gear oil pump”, page 78

6.1 Overview - gear oil circuit

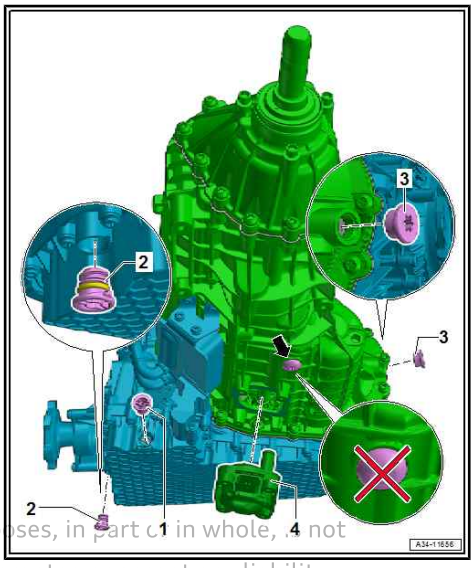

Note

- *The 7-speed dual clutch gearbox has an ATF section and an MTF section.*
- *The ATF is in the blue section of the gearbox and can be drained off via the ATF drain plug -1- and added via the ATF filler plug -2- ⇒ “9 ATF”, page 91 .*
- *The MTF is in the green section of the gearbox and can be drained off by removing the MTF pump -4- and added via the MTF inspection plug -3- ⇒ “8.2 Draining and filling gear oil”, page 87 .*
- *The bolt securing the gear cluster -arrow- is not a drain plug!*

Protected by copyright. Copying for private or commercial purposes, in part or in whole, is not permitted unless authorised by AUDI AG. AUDI AG does not guarantee or accept any liability with respect to the correctness of information in this document. Copyright by AUDI AG.

Protected by copyright. Copying for private or commercial purposes, in part or in whole, is not permitted unless authorised by AUDI AG. AUDI AG does not guarantee or accept any liability with respect to the correctness of information in this document. Copyright by AUDI AG.

1 - Sealing plug

- ❑ For ATF inspection and filler hole
  ⇒ Item 1 (page 83)

2 - Plug

- ❑ For MTF inspection and filler hole
- ❑ Renew after removing
- ❑ 35 Nm

3 - Gear oil pump (MTF pump)

- ❑ With welded gasket
- ❑ Must be removed to drain gear oil (MTF)
- ❑ Renew gear oil pump if gasket is damaged
- ❑ Removing and installing
  ⇒ page 78

4 - Bolt

- ❑ Renew after removing
- ❑ 3 Nm +90°

5 - Sealing plug

- ❑ For ATF
  ⇒ Item 5 (page 83)

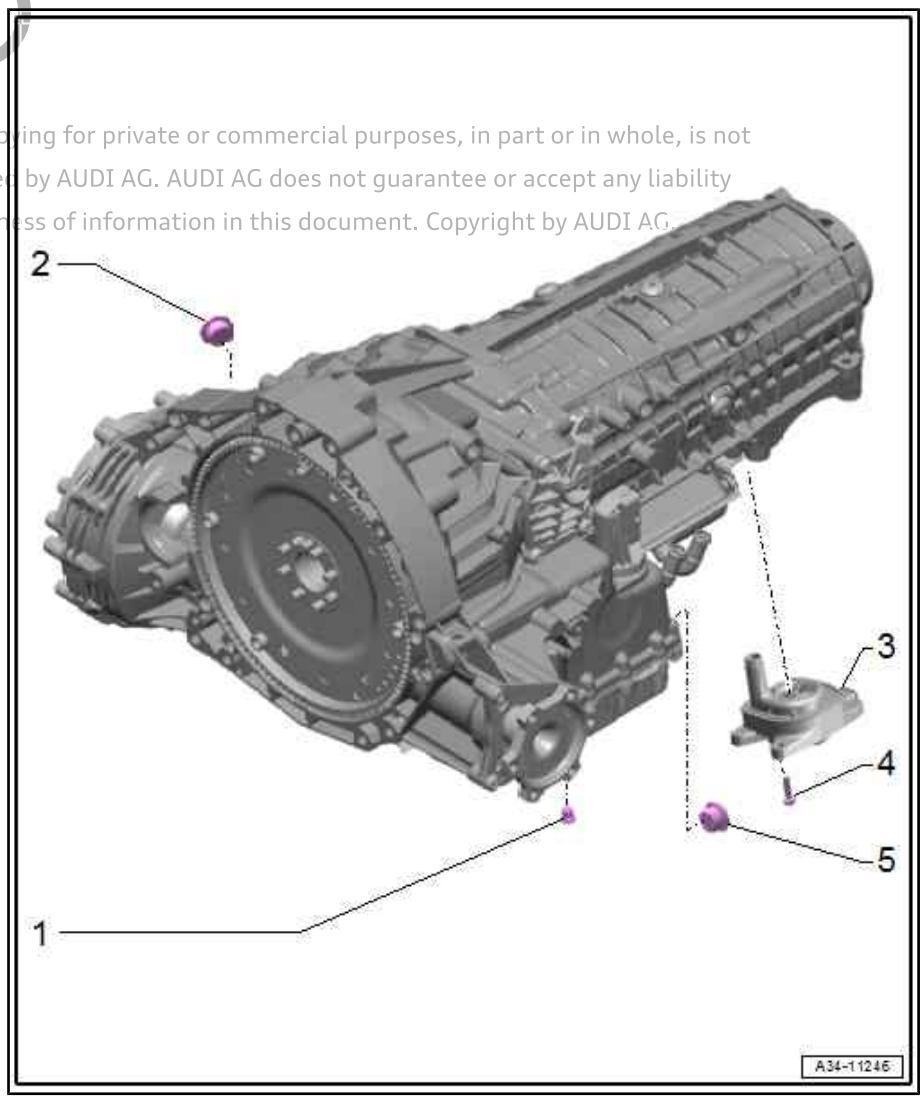

6.2 Removing and installing gear oil pump

Special tools and workshop equipment required

- ♦ Used oil collection and extraction unit - VAS 6622A-

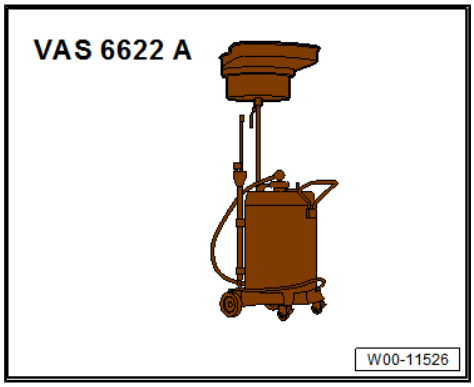

- ♦ Safety goggles

Removing

Note

- *General repair instructions ⇒ page 6 .*
- *Rules for cleanliness ⇒ page 6 .*

- Vehicle must be absolutely horizontal for refilling procedure (drive it onto a four-pillar lifting platform or over an inspection pit).

– Remove noise insulation (rear) ⇒ General body repairs, exterior; Rep. gr. 66 ; Noise insulation; Removing and installing noise insulation .

– Depending on equipment version: Remove bolts -arrows- and nut -2-.

– Detach end plate -1- for cross brace.

– Place used oil collection and extraction unit - VAS 6622A- underneath.

WARNING

Risk of eye injury.

- *Put on safety goggles.*

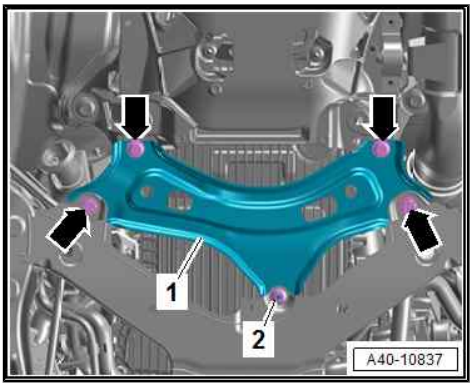

Protected by copyright. Copying for private or commercial purposes, in part or in whole, is not permitted unless authorised by AUDI AG. AUDI AG does not guarantee or accept any liability with respect to the correctness of information in this document. Copyright by AUDI AG.

Caution

Risk of electrochemical corrosion.

- *Connector area must remain free of gear oil (MTF).*
- *Wait until gear oil has drained off before unplugging electrical connector -2-.*

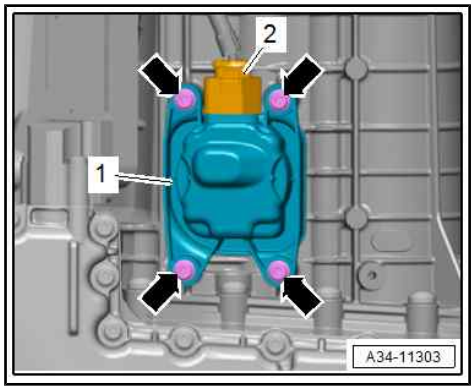

Note

Gearbox drains abruptly when oil pump is removed.

Protected by copyright. Copying for private or commercial purposes, in part or in whole, is not permitted unless authorised by AUDI AG. AUDI AG does not guarantee or accept any liability with respect to the correctness of information in this document. Copyright by AUDI AG.

– Remove bolts -arrows- and detach oil pump -1-.
– When gear oil has drained off, unplug electrical connector -2-.

Caution

Risk of damage to gearbox

If there is no gear oil (MTF) in the gearbox (or not enough oil):

- *The engine must not be started.*
- *The vehicle must not be towed.*

Installing

Installation is carried out in reverse order; note the following:

Note

- *Any gear oil (MTF) that has escaped can cause discolouration of the gear oil pump housing.*
- *Clean sealing surfaces.*

– Fill up gear oil (MTF) ⇒ page 87 .

Tightening torques

- ⇒ “6.1 Overview - gear oil circuit”, page 77
- ⇒ Running gear, axles, steering; Rep. gr. 40 ; Subframe; Exploded view - subframe
- ⇒ General body repairs, exterior; Rep. gr. 66 ; Noise insulation; Exploded view - noise insulation

7 ATF circuit

⇒ "7.1 Exploded view - ATF circuit", page 81

⇒ "7.2 Removing and installing ATF cooler", page 83

7.1 Exploded view - ATF circuit

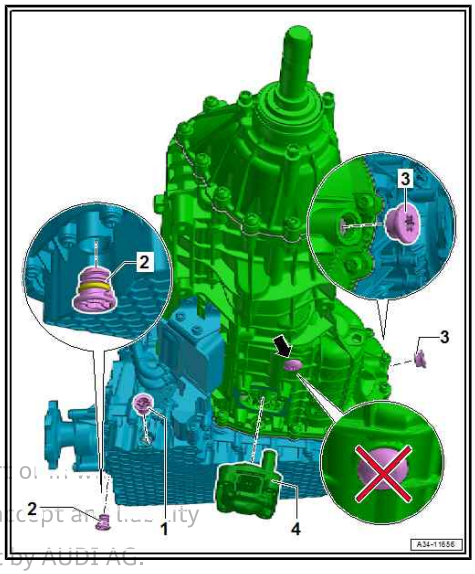

Note

- *The 7-speed dual clutch gearbox has an ATF section and an MTF section.*
- *The ATF is in the blue section of the gearbox and can be drained off via the ATF drain plug -1- and added via the ATF filler plug -2- ⇒ "9 ATF", page 91 .*
- *The MTF is in the green section of the gearbox and can be drained off by removing the MTF pump -4- and added via the MTF inspection plug -3- ⇒ "8.2 Draining and filling gear oil", page 87 .*
- *The bolt securing the gear cluster -arrow- is not a drain plug!*

Protected by copyright. Copying for private or commercial purposes, in part or in whole, is not permitted unless authorised by AUDI AG. AUDI AG does not guarantee or accept any liability with respect to the correctness of information in this document. Copyright by AUDI AG.

Caution

Risk of damage to gearbox

- *All plugs inserted in ATF lines and gearbox when dismantling must be removed.*
- *If you forget to remove the plugs, the ATF cooling will be ineffective and the gearbox will be damaged.*

WARNING

System is pressurised.

- *Deactivate ATF pump and discharge hydraulic accumulator before opening ATF circuit.*
- *See also ⇒ "4.3 Deactivating ATF pump and discharging hydraulic accumulator", page 7 .*

ATF cooler and ATF lines

1 - O-rings
- ❑ Renew after removing

2 - ATF pipe
- ❑ Renew after removing

3 - O-rings
- ❑ Renew after removing

4 - ATF cooler
- ❑ Removing and installing ⇒ page 83

5 - Guard plate
- ❑ Depending on version

6 - Bolt
- ❑ 8 Nm

7 - Bracket

8 - Bolt
- ❑ Tightening torque and sequence ⇒ page 82

9 - Bolt
- ❑ Tightening torque and sequence ⇒ page 82

10 - Coolant hoses

11 - Bolt
- ❑ Tightening torque and sequence ⇒ page 82

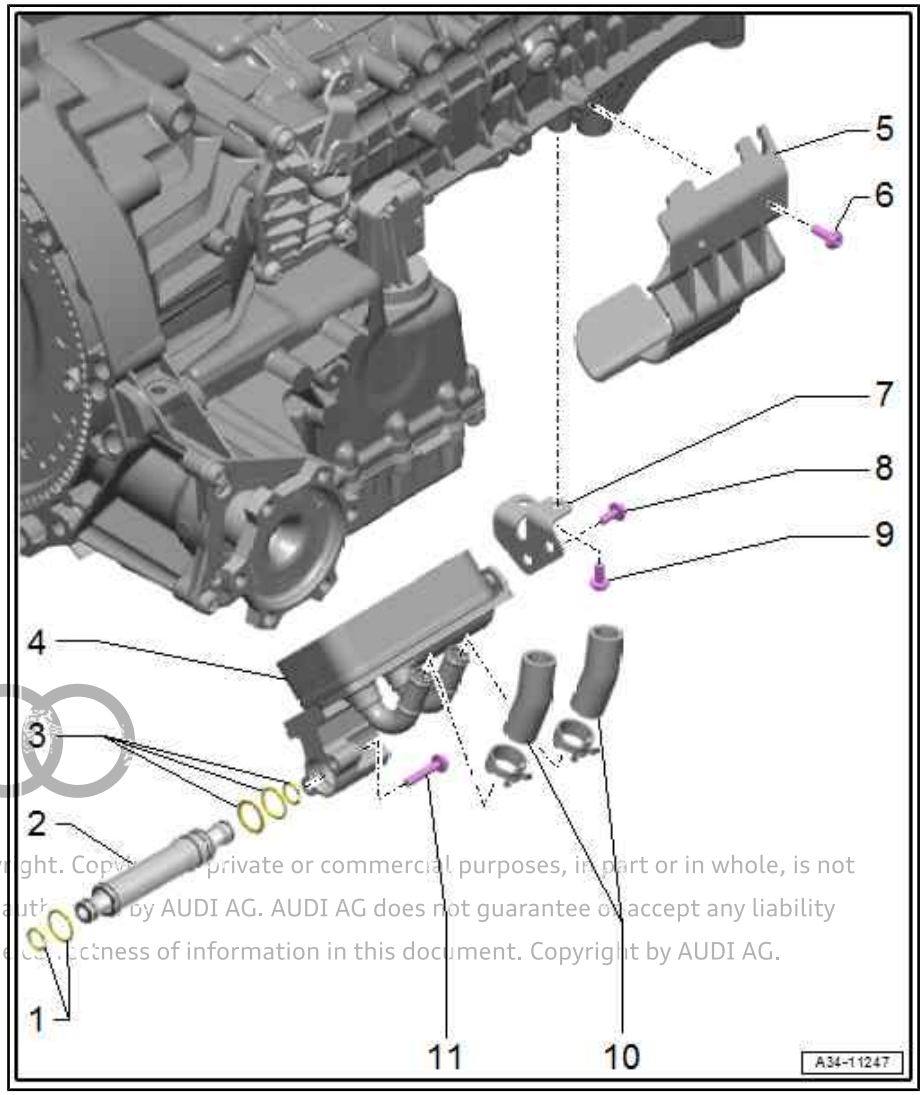

Protected by copyright. Copy[illegible] private or commercial purposes, in part or in whole, is not permitted unless auth[illegible] by AUDI AG. AUDI AG does not guarantee or accept any liability with respect to the co[illegible]ctness of information in this document. Copyright by AUDI AG.

ATF cooler - tightening torque and sequence

– Tighten bolts in stages in the sequence described:

Stage	Bolts	Tightening torque/angle specification
1.	-1-	Screw in by hand until contact is made
2.	-1-	3 Nm + 90°
3.	-2, 3-	Screw in by hand until contact is made
4.	-2, 3-	3 Nm + 30°

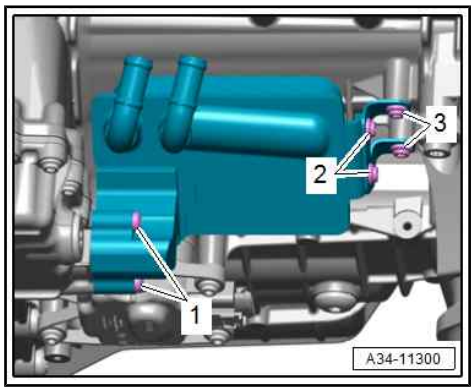

Drain plugs and screw plugs

1 - Sealing plug

- ❑ For ATF inspection and filler hole
- ❑ Renew after removing
- ❑ Tighten as far as stop

2 - Plug

- ❑ For MTF inspection and filler hole
- ❑ Tightening torque ⇒ Item 2 (page 78)

3 - Gear oil pump (MTF pump)

- ❑ Must be removed to drain gear oil (MTF) ⇒ page 78

4 - Bolt

- ❑ Tightening torque ⇒ Item 4 (page 78)

5 - Sealing plug

- ❑ For ATF
- ❑ Renew after removing
- ❑ Tighten as far as stop

Protected by copyright. Copying for private or commercial purposes, in part or in whole, is not permitted unless authorised by AUDI AG. AUDI AG does not guarantee or accept any liability with respect to the correctness of information in this document. Copyright by AUDI AG.

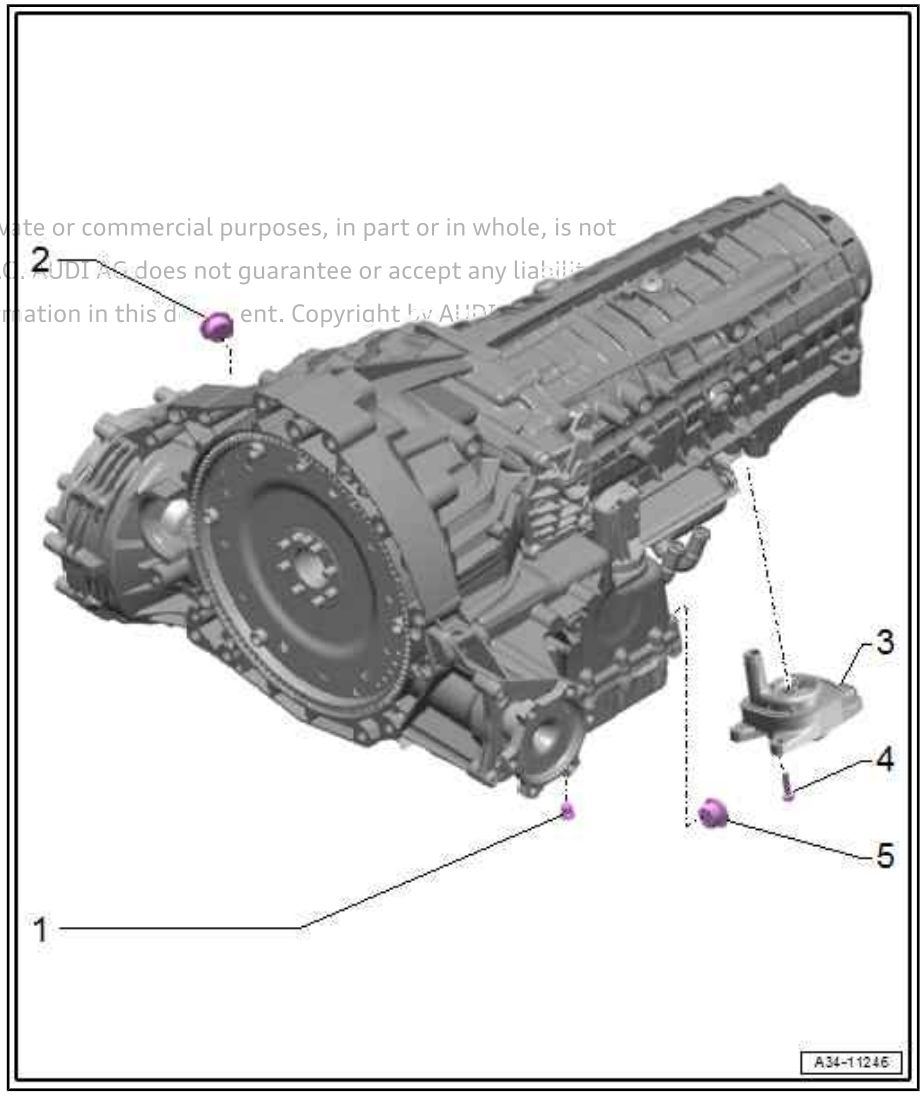

7.2 Removing and installing ATF cooler

Special tools and workshop equipment required

- ♦ Hose clamps up to 25 mm - 3094-

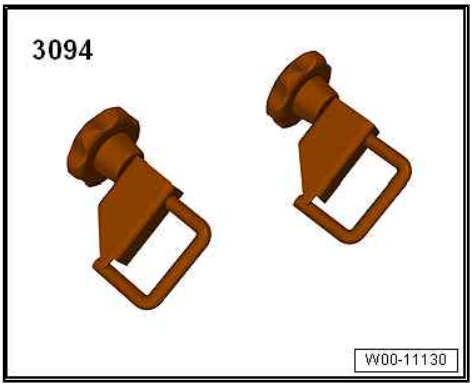

- Engine bung set - VAS 6122-

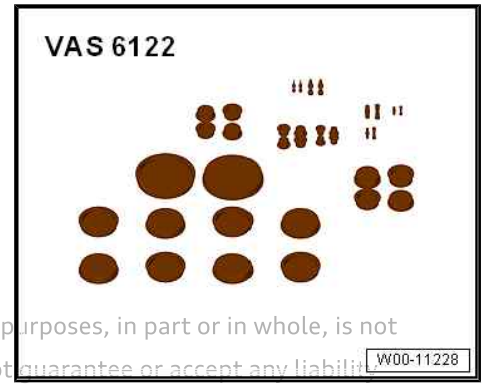

Protected by copyright. Copying for private or commercial purposes, in part or in whole, is not permitted unless authorised by AUDI AG. AUDI AG does not guarantee or accept any liability with respect to the correctness of information in this document. Copyright by AUDI AG.

- Hose clip pliers - VAS 6362-

- Used oil collection and extraction unit - VAS 6622A-

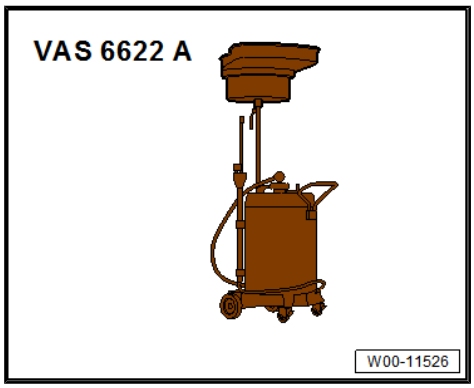

- Torx screwdriver bit T30 - VAS 6959-

Removing

> ⚠ **WARNING**
>
> *System is pressurised.*
>
> - *Deactivate ATF pump and discharge hydraulic accumulator before removing ATF cooler.*

– Using vehicle diagnostic tester , discharge ATF accumulator in automatic gearbox control unit - J217- and disable gearbox auxiliary hydraulic pump - V552-
⇒ “4.3 Deactivating ATF pump and discharging hydraulic accumulator”, page 7 .

– Drain ATF ⇒ page 94 .

Note

Place a cloth underneath to catch escaping coolant.

– Clamp off coolant hoses using hose clamps up to 25 mm - 3094- and disconnect hoses (release hose clips -1, 2-).

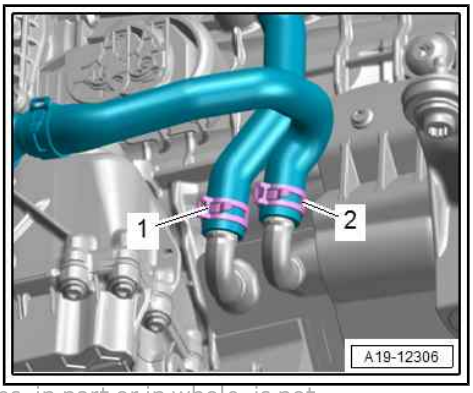

Protected by copyright. Copying for private or commercial purposes, in part or in whole, is not permitted unless authorised by AUDI AG. AUDI AG does not guara
with respect to the correctness of information in this document. C

– Place used oil collection and extraction unit - VAS 6622A- underneath.

– Unscrew bolts -1, 2, 3- and detach bracket.

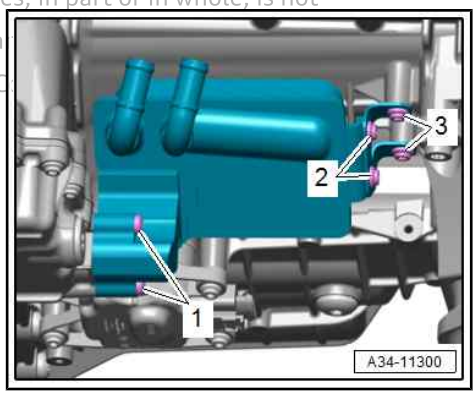

– Detach ATF cooler -2- from ATF pipe -1-.

– Seal off open lines and connections with clean plugs from engine bung set - VAS 6122- .

– Detach ATF pipe.

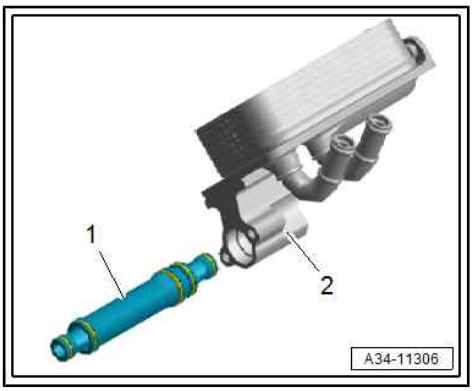

Installing

Installation is carried out in reverse order; note the following:

Note

- *Renew ATF pipe with seals after removal.*
- *Clean ATF cooler before installing.*

Caution

Risk of leaks at ATF cooler!

- ***Note installation position of ATF pipe.***
- ***Pipe end with three seals faces ATF cooler.***

– Screw in bolts by hand until they make contact and then tighten to specified torque.

– If bolts are not accessible, tighten using Torx screwdriver bit T30 - VAS 6959- .

– Check ATF level ⇒ page 91 .

Tightening torques

- ⇒ Fig. ""ATF cooler - tightening torque and sequence"" , page 82

8 Gear oil

⇒ "8.1 Checking gear oil level", page 86

⇒ "8.2 Draining and filling gear oil", page 87

8.1 Checking gear oil level

Special tools and workshop equipment required

- Socket Torx T60 - T40087-

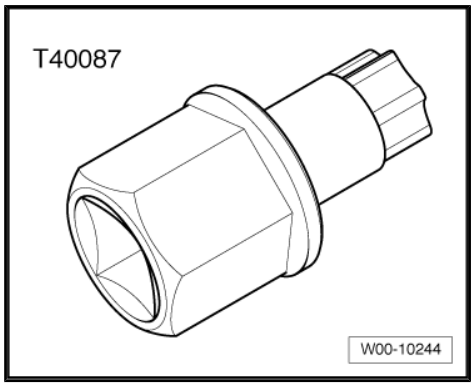

- Safety goggles

Procedure

Note

- *General repair instructions ⇒ page 6 .*
- *Rules for cleanliness ⇒ page 6 .*
- *Always use the correct fluid for the different parts of the gearbox: gear oil (MTF) system and ATF system.*
- *Renew plug for inspection and filler hole.*

- Gear oil about 20 °C (room temperature).
- Vehicle must be absolutely horizontal (drive it onto a four-pillar lifting platform or over an inspection pit).
- The vehicle must be stationary with the engine switched off for at least 15 minutes to allow the oil level to stabilise.

Protected by copyright. Copying for private or commercial purposes, in part or in whole, is not permitted unless authorized by AUDI AG. AUDI AG does not guarantee or accept any liability with respect to the correctness of information in this document. Copyright by AUDI AG.

– Remove noise insulation (rear) ⇒ General body repairs, exterior; Rep. gr. 66 ; Noise insulation; Removing and installing noise insulation .

– Depending on equipment version: Remove bolts -arrows- and nut -2-.

– Detach end plate -1- for cross brace.

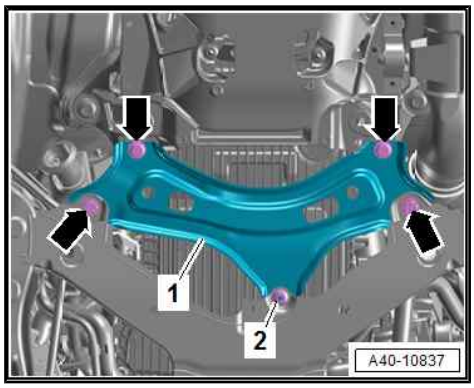

WARNING

Risk of eye injury.

- *Put on safety goggles.*

– Unscrew plug -arrow- for inspection and filler hole on right side of gearbox housing using socket Torx T60 - T40087- .

• Gear oil level (MTF) must be 2 mm below bottom lip of filler and inspection hole.

– If oil level is not correct, fill up with gear oil ⇒ page 87 .

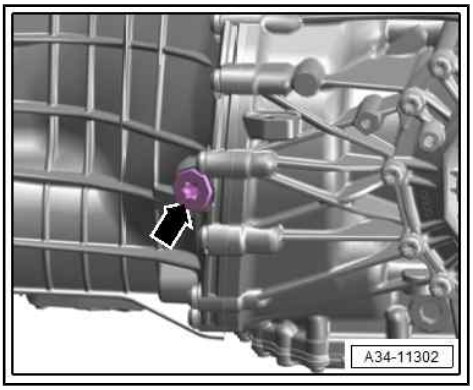

Tightening torques

♦ Screw plug ⇒ “6.1 Overview - gear oil circuit”, page 77

♦ ⇒ Running gear, axles, steering; Rep. gr. 40 ; Subframe; Exploded view - subframe

♦ ⇒ General body repairs, exterior; Rep. gr. 66 ; Noise insulation; Exploded view - noise insulation

Protected by copyright. Copying for private or commercial purposes, in part or in whole, is not permitted unless authorised by AUDI AG. AUDI AG does not guarantee or accept any liability with respect to the correctness of information in this document. Copyright by AUDI AG.

8.2 Draining and filling gear oil

Note

♦ *The 7-speed dual clutch gearbox has an ATF section and an MTF section.*

♦ *The ATF is in the blue section of the gearbox and can be drained off via the ATF drain plug -1- and added via the ATF filler plug -2-* *⇒ “9 ATF”, page 91* *.*

♦ *The MTF is in the green section of the gearbox and can be drained off by removing the MTF pump -4- and added via the MTF inspection plug -3-*
⇒ “8.2 Draining and filling gear oil”, page 87 *.*

♦ *The bolt securing the gear cluster -arrow- is not a drain plug!*

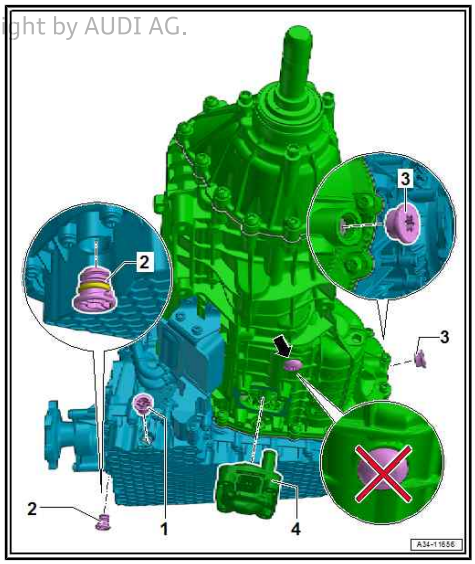

Special tools and workshop equipment required

♦ Used oil collection and extraction unit - VAS 6622A-

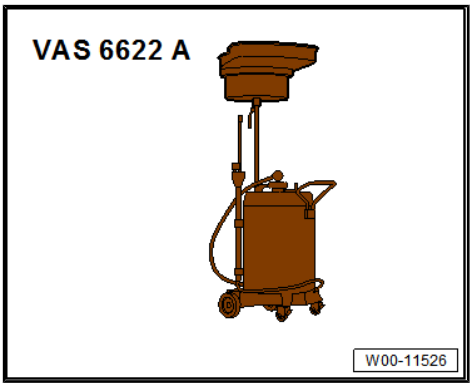

♦ Hand pump for gear oil - VAS 6617-

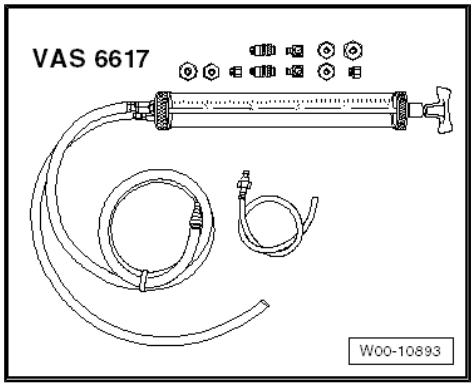

♦ Socket Torx T60 - T40087-

Protected by copyright. Copying for private or commercial purposes, in part or in whole, is not permitted unless authorised by AUDI AG. AUDI AG does not guarantee or accept any liability with respect to the correctness of information in this document. Copyright by AUDI AG.

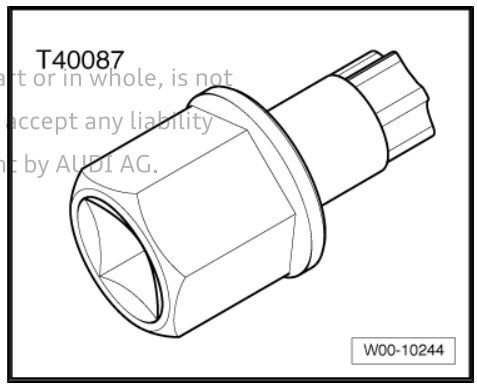

♦ Safety goggles

Draining

Note

♦ *The dual clutch gearbox does not have a drain plug for its oil system; the gear oil pump must be removed to drain the gear oil.*

♦ *General repair instructions* *⇒ page 6* *.*

♦ *Rules for cleanliness* *⇒ page 6* *.*

- Gear oil about 20 °C (room temperature).
- Vehicle must be absolutely horizontal (drive it onto a four-pillar lifting platform or over an inspection pit).

– Remove noise insulation (rear) ⇒ General body repairs, exterior; Rep. gr. 66 ; Noise insulation; Removing and installing noise insulation .

– Depending on equipment version: Remove bolts -arrows- and nut -2-.

– Detach end plate -1- for cross brace.

– Place used oil collection and extraction unit - VAS 6622A- underneath.

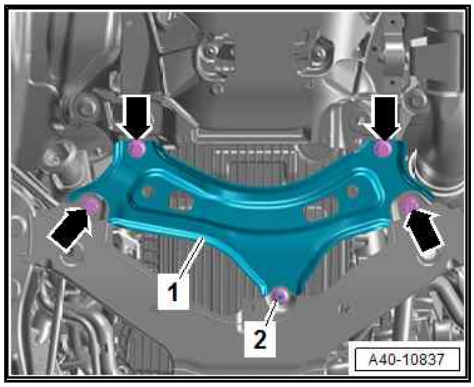

WARNING

Risk of eye injury.

♦ *Put on safety goggles.*

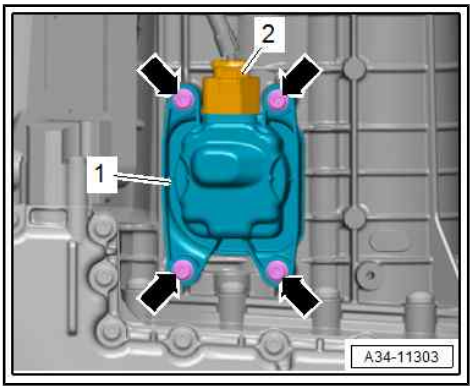

Caution

Risk of electrochemical corrosion.

- *Connector area must remain free of gear oil (MTF).*
- *DO NOT unplug electrical connector -2-.*

Note

Gearbox drains abruptly when oil pump is removed.

– Remove bolts -arrows-, detach oil pump -1- and secure with wire so that it does not drop.

– Drain gear oil (MTF).

Caution

Risk of damage to gearbox

If there is no gear oil (MTF) in the gearbox (or not enough oil):

- *The engine must not be started.*
- *The vehicle must not be towed.*

– Install oil pump ⇒ page 78 .

Filling

WARNING

Risk of eye injury.

- *Put on safety goggles.*

Caution

Risk of damage to gearbox

- *Only the gear oil (MTF) available as a replacement part may be used for dual clutch gearbox 0CJ, 0CK, 0CL, 0DN, 0DP.*
- *Other types of oil cause malfunctions and/or failure of the gearbox.*
- *Select correct type ⇒ Electronic parts catalogue .*
- *The hand pump for gear oil - VAS 6617- must be clean; the ATF must not be mixed with any other types of lubricant. If necessary, rinse hand pump with gear oil (MTF).*

Protected by copyright. Copying for private or commercial purposes, in part or in whole, is not permitted unless authorised by AUDI AG. AUDI AG does not guarantee or accept any liability with respect to the correctness of information in this document. Copyright by AUDI AG.

– Unscrew plug -arrow- for inspection and filler hole on right side of gearbox housing using socket Torx T60 - T40087- .

– Slowly fill gear oil (MTF) using hand pump for gear oil - VAS 6617- .

• Gear oil (MTF) specifications ⇒ Electronic parts catalogue

– Repeat the procedure in several steps by adding gear oil (MTF) every 15 seconds until level is 2 mm below bottom edge of inspection and filler hole.

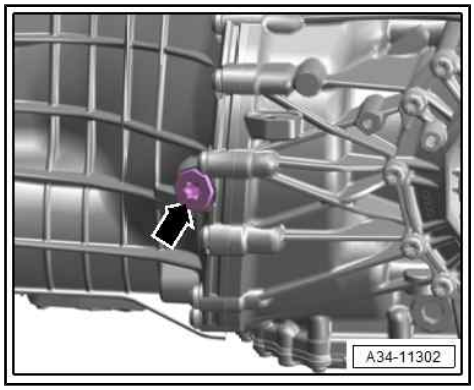

Note

Make sure to wait the required amount of time so that the various oil chambers in the gearbox are filled evenly.

– Tighten plug.

The remaining installation steps are carried out in the reverse sequence.

Tightening torques

♦ Screw plug ⇒ “6.1 Overview - gear oil circuit”, page 77

♦ ⇒ Running gear, axles, steering; Rep. gr. 40 ; Subframe; Exploded view - subframe

♦ ⇒ General body repairs, exterior; Rep. gr. 66 ; Noise insulation; Exploded view - noise insulation

Protected by copyright. Copying for private or commercial purposes, in part or in whole, is not permitted unless authorised by AUDI AG. AUDI AG does not guarantee or accept any liability with respect to the correctness of information in this document. Copyright by AUDI AG.

9 ATF

⇒ “9.1 Checking ATF level”, page 91

⇒ “9.2 Draining and filling ATF”, page 94

9.1 Checking ATF level

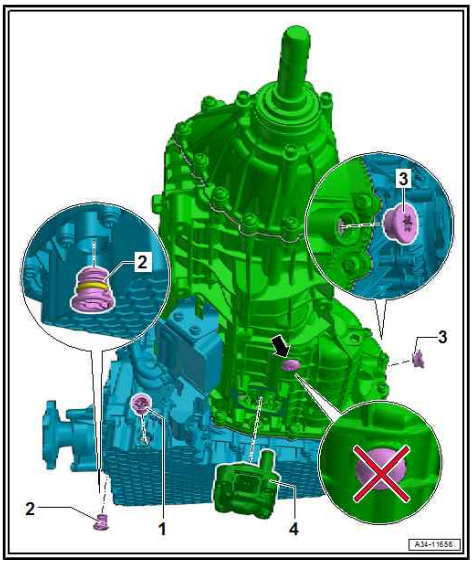

Note

- *The 7-speed dual clutch gearbox has an ATF section and an MTF section.*
- *The ATF is in the blue section of the gearbox and can be drained off via the ATF drain plug -1- and added via the ATF filler plug -2- ⇒ “9 ATF”, page 91 .*
- *The MTF is in the green section of the gearbox and can be drained off by removing the MTF pump -4- and added via the MTF inspection plug -3- ⇒ “8.2 Draining and filling gear oil”, page 87 .*
- *The bolt securing the gear cluster -arrow- is not a drain plug!*

Special tools and workshop equipment required

- Vehicle diagnostic tester
- Used oil collection and extraction unit - VAS 6622A-

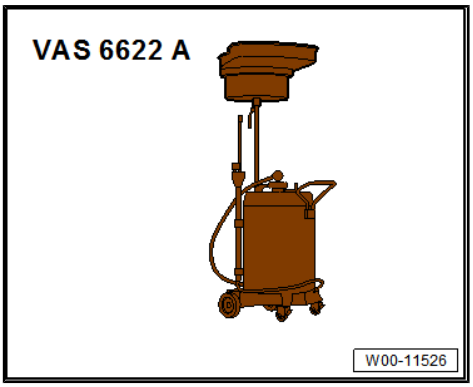

Protected by copyright. Copying for private or commercial purposes, in part or in whole, is not permitted unless authorised by AUDI AG. AUDI AG does not guarantee or accept any liability with respect to the correctness of information in this document. Copyright by AUDI AG.

- Hand pump for gear oil - VAS 6617- with -VAS 6617/1- and - VAS 6617/2-

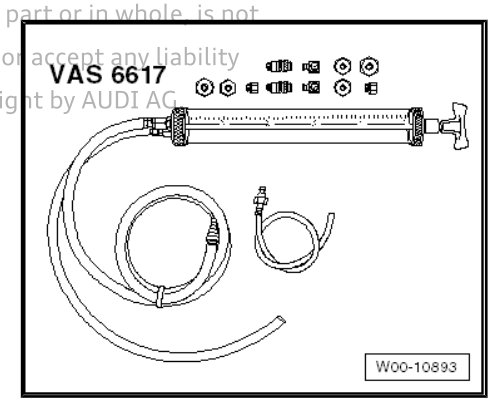

- Adapter - VAS 6617/12-
- Safety goggles
- Protective gloves (acid resistant)

Test conditions

- Gearbox must not be in emergency running (backup) mode.
- Vehicle must be absolutely horizontal (on a four-pillar lifting platform or over an inspection pit).
- Gearbox is in position “P”.
- Parking brake button must be pulled up to apply the electro-mechanical parking brake.
- Extraction hose(s) of an exhaust gas extractor (switched on) must be connected.
- Air conditioner and heating switched off.
- Vehicle diagnostic tester is connected.
- The ATF temperature must not be higher than 35 °C at the beginning of the test. If the temperature is higher, allow the gearbox to cool down before proceeding.

Note

- *ATF level will change depending on ATF temperature.*
- *If ATF level is checked when ATF temperature is too low, this will lead to overfilling.*
- *If ATF level is checked when ATF temperature is too high, this will lead to underfilling.*
- *Both overfilling and underfilling will impair the function of the gearbox.*

Procedure

Note

Renew plug for inspection and filler hole.

– Connect Vehicle diagnostic tester and start `Diagnosis` mode.

- `Select own test`
- `02 - Gearbox electronics, Guided Functions`
- `Check ATF level` ⇒ `3 Check ATF level`

– Follow instructions on screen.

Caution

Risk of damage to gearbox

- *The engine must not be started if only a little or no ATF remains in gearbox after repair work or after excessive ATF leakage.*
- *In this case the gearbox must be filled with ATF before proceeding further* *⇒ page 94* *.*

Protected by copyright. Copying for private or commercial purposes, in part or in whole, is not permitted unless authorised by AUDI AG. AUDI AG does not guarantee or accept any liability with respect to the correctness of information in this document. Copyright by AUDI AG.

– Remove noise insulation (rear) ⇒ General body repairs, exterior; Rep. gr. 66 ; Noise insulation; Removing and installing noise insulation .

Note

- *The ATF level can be checked at the ATF inspection and filler hole.*
- *The ATF level is correct if a small amount of fluid comes out at the ATF inspection and filler hole when ATF temperature is between 35 °C and 45 °C (the fluid level rises due to expansion as it warms up).*

– Place used oil collection and extraction unit - VAS 6622A- underneath.

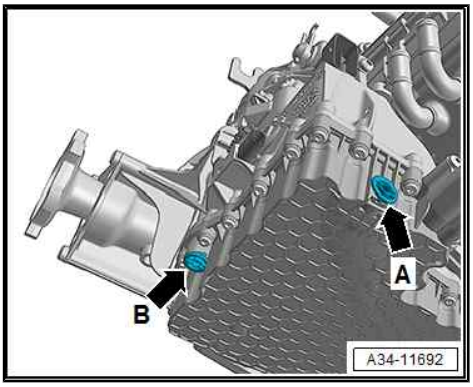

WARNING

Risk of eye injury.

- *Put on safety goggles.*

– As soon as an ATF temperature of 35 °C is reached, unscrew/ open plug for ATF inspection and filler hole -B-.

– Allow any excess ATF to drain off.

If ATF emerges from ATF inspection and filler hole before ATF has reached 45 °C, ATF level is OK.

– Assemble gearbox ⇒ page 94 .

If no ATF emerges from ATF inspection and filler hole when ATF has reached 45 °C, top up with ATF:

– Switch off engine and allow gearbox to cool down to 35 °C.

Caution

Risk of damage to gearbox

- *Only the ATF available as a replacement part may be used for dual clutch gearbox 0CJ, 0CK, 0CL, 0DN, 0DP.*
- *Other types of oil cause malfunctions and/or failure of the gearbox.*
- *Select correct type ⇒ Electronic parts catalogue .*
- *The hand pump for gear oil - VAS 6617- must be clean; the ATF must not be mixed with any other types of lubricant. If necessary, rinse hand pump with ATF.*

Protected by copyright. Copying for private or commercial purposes, in part or in whole, is not permitted unless authorised by AUDI AG. AUDI AG does not guarantee or accept any liability with respect to the correctness of information in this document. Copyright by AUDI AG.

WARNING

Risk of eye injury.

- *Put on safety goggles.*

– Connect hand pump for gear oil - VAS 6617- with -VAS 6617/1- and -VAS 6617/12- at ATF inspection and filler hole.

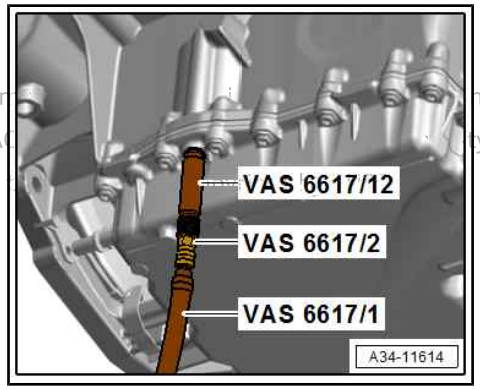

Caution

Risk of damage to gearbox if ATF and gear oil (MTF) mix via shared breather opening.

- ***Do not fill with more than 0.5 ltr. of ATF.***

Protected by copyright. Copying for private or com... not permitted unless authorised by AUDI AG. AUDI AG ... ity for respect to the correctness of information in ...

– Use hand pump to fill gearbox with 0.5 ltr. of ATF.

– Repeat entire work sequence for “Checking ATF level”.

Attaching

Note

The ATF inspection and filler hole must be closed again before the ATF reaches a temperature of 45 °C.

– Tighten plug for inspection and filler hole or close plug by inserting it all the way (depending on type of plug). The ATF level check is now completed.

Tightening torques

- Screw plug ⇒ Item 1 (page 83)
- ⇒ General body repairs, exterior; Rep. gr. 66 ; Noise insulation; Exploded view - noise insulation

9.2 Draining and filling ATF

Note

- *The 7-speed dual clutch gearbox has an ATF section and an MTF section.*
- *The ATF is in the blue section of the gearbox and can be drained off via the ATF drain plug -1- and added via the ATF filler plug -2-.*
- *The MTF is in the green section of the gearbox and can be drained off by removing the MTF pump -4- and added via the MTF inspection plug -3-.*
- *The bolt securing the gear cluster -arrow- is not a drain plug!*

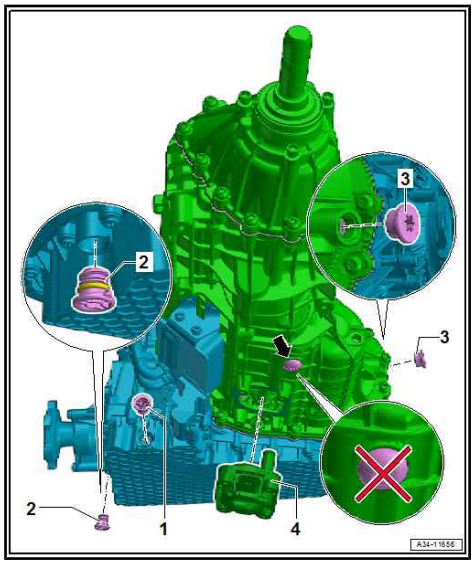

Special tools and workshop equipment required

- Vehicle diagnostic tester

- Used oil collection and extraction unit - VAS 6622A-

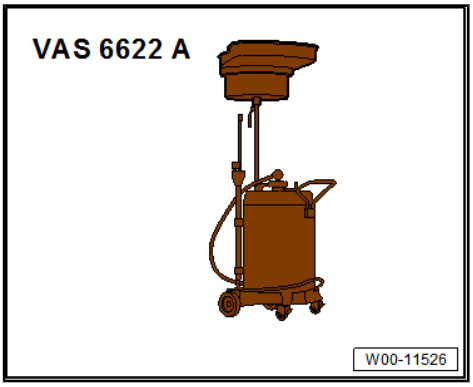

- Hand pump for gear oil - VAS 6617- with -VAS 6617/1- and -VAS 6617/2-

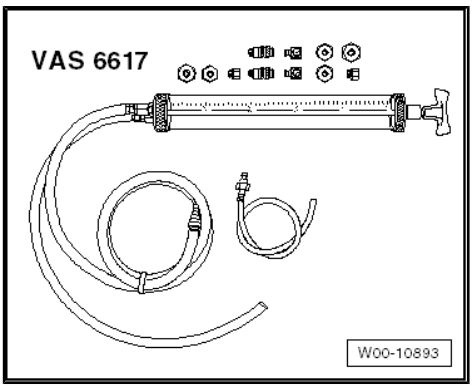

- Adapter - VAS 6617/12-
- Safety goggles
- Protective gloves (acid resistant)

Draining

Note

Renew plug after removal.

- Engine not running.
- Vehicle must be absolutely horizontal (drive it onto a four-pillar lifting platform or over an inspection pit).
- Selector lever in “P”.
- Parking brake button must be pulled up to apply the electro-mechanical parking brake.

– Remove noise insulation (rear) ⇒ General body repairs, exterior; Rep. gr. 66 ; Noise insulation; Removing and installing noise insulation .

Protected by copyright. Copying for private or commercial purposes, in part or in whole, is not permitted unless authorised by AUDI AG. AUDI AG does not guarantee or accept any liability with respect to the correctness of information in this document. Copyright by AUDI AG.

– Depending on equipment version: Remove bolts -arrows- and nut -2-.
– Detach end plate -1- for cross brace.
– Place used oil collection and extraction unit - VAS 6622A- underneath.
– Connect Vehicle diagnostic tester and start `Diagnosis` mode.

♦ `Select own test`

♦ `02 - Gearbox electronics, Guided Functions`

♦ `02 Check ATF level` ⇒ `1 Drain ATF`

– Follow instructions on screen.

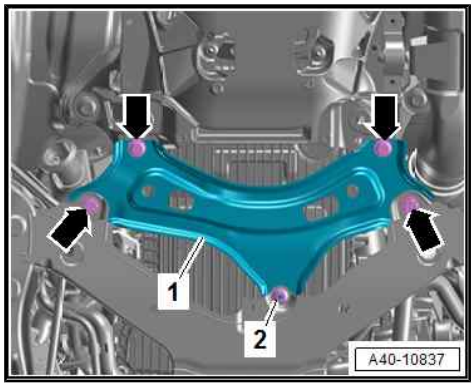

WARNING

Risk of eye injury.

♦ *Put on safety goggles.*

Protected by copyright. Copying for private or commercial purposes, in part or in whole, is not permitted unless authorised by AUDI AG. AUDI AG does not guarantee or accept any liability with respect to the correctness of information in this document. Copyright by AUDI AG.

– Remove drain plug -arrow- and allow ATF to drain off.

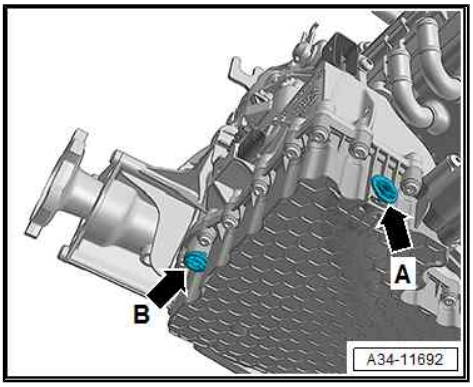

Caution

Risk of damage to gearbox

- *The engine must not be started when there is no more ATF in the gearbox.*

Note

Always adhere to waste disposal regulations.

– Tighten ATF drain plug.

– Clean subframe cross brace and remove any remaining ATF.

Filling

Caution

Risk of damage to gearbox

- *Only the ATF available as a replacement part may be used for dual clutch gearbox 0CJ, 0CK, 0CL, 0DN, 0DP.*
- *Other types of oil cause malfunctions and/or failure of the gearbox.*
- *Select correct type ⇒ Electronic parts catalogue .*
- *The hand pump for gear oil - VAS 6617- must be clean; the ATF must not be mixed with any other types of lubricant. If necessary, rinse hand pump with ATF.*

WARNING

Risk of eye injury.

- *Put on safety goggles.*

– Remove plug -B- from inspection and filler hole.

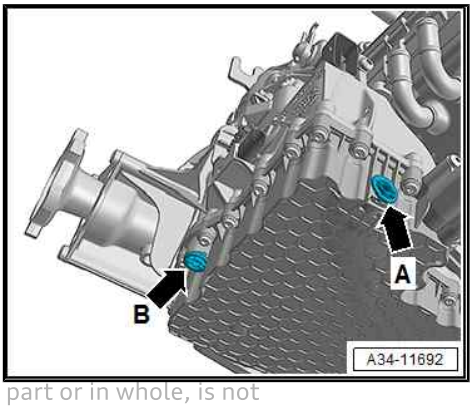

Protected by copyright. Copying for private or commercial purposes, in part or in whole, is not permitted unless authorised by AUDI AG. AUDI AG does not guarantee or accept any liability with respect to the correctness of information in this document. Copyright by AUDI AG.

– Insert hand pump for gear oil - VAS 6617- with -VAS 6617/1- and adapter - VAS 6617/12- into hole.

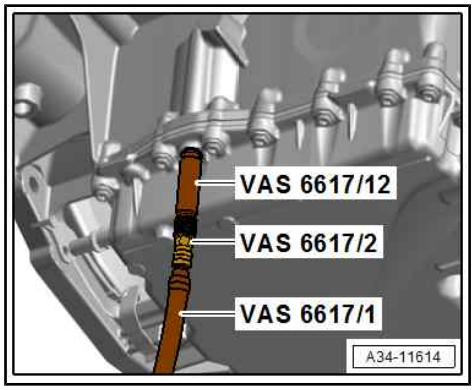

> ⚠ **Caution**
>
> ***Risk of damage to gearbox if ATF and gear oil (MTF) mix via shared breather opening.***
>
> ♦ ***Do not fill with more than 3.5 ltr. of ATF.***

– Use hand pump to fill gearbox with 3.5 ltr. of ATF.

– Connect Vehicle diagnostic tester and start `Diagnosis` mode.

♦ `Select own test`

♦ `02 - Gearbox electronics, Guided Functions`

♦ `02 Check ATF level` ⇒ `2 Fill ATF`

– Start the selected program and follow the instructions on the display of the vehicle diagnostic tester.

– Insert plug -B- into inspection and filler hole as far as stop.

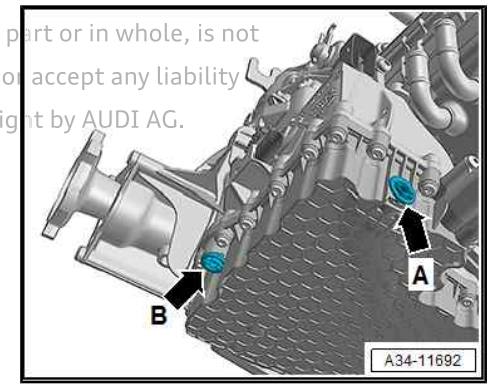

Protected by copyright. Copying for private or commercial purposes, in part or in whole, is not permitted unless authorised by AUDI AG. AUDI AG does not guarantee or accept any liability with respect to the correctness of information in this document. Copyright by AUDI AG.

Tightening torques

♦ Screw plug ⇒ Item 1 (page 83)

♦ ⇒ Running gear, axles, steering; Rep. gr. 40 ; Subframe; Exploded view - subframe

♦ ⇒ General body repairs, exterior; Rep. gr. 66 ; Noise insulation; Exploded view - noise insulation

10 Mechatronic unit

⇒ “10.1 Exploded view - mechatronic unit”, page 99

⇒ “10.2 Removing and installing oil pan”, page 100

⇒ “10.3 Removing and installing mechatronic unit”, page 102

Protected by copyright. Copying for private or commercial purposes, in part or in whole, is not permitted unless authorised by AUDI AG. AUDI AG does not guarantee or accept any liability with respect to the correctness of information in this document. Copyright by AUDI AG.

10.1 Exploded view - mechatronic unit

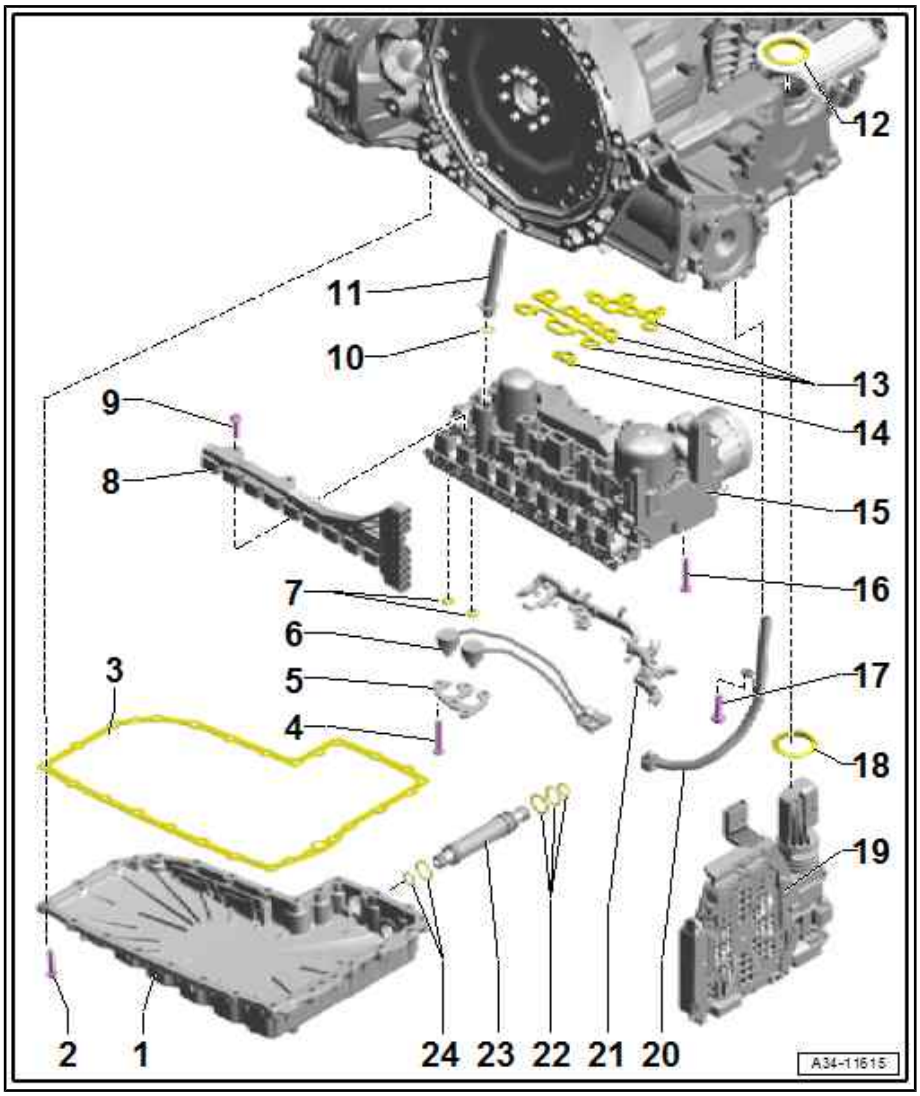

1 - Oil pan

- ❑ Removing and installing ⇒ “10.2 Removing and installing oil pan”, page 100

2 - Bolt

- ❑ M6 × 30
- ❑ Renew after removal
- ❑ Tightening torque and sequence ⇒ page 100

3 - Gasket

- ❑ Renew after removal

4 - Bolt

- ❑ Renew after removal
- ❑ Tightening torque and sequence ⇒ Servicing 7-speed dual clutch gearbox 0CJ, 0CK, 0CL, 0DN, 0DP; Rep. gr. 34 ; Mechatronic unit; Exploded view - mechatronic unit

5 - Bracket

6 - Hydraulic pressure sender 1 - G545- and hydraulic pressure sender 2 - G546-

- ❑ Removing and installing ⇒ Servicing 7-speed dual clutch gearbox 0CJ, 0CK, 0CL, 0DN, 0DP; Rep. gr. 34 ; Mechatronic unit; Exploded view - mechatronic unit

7 - Seals

- ❑ Renew after removal

8 - Contact element

9 - Bolt

- ❑ Renew after removal
- ❑ M6 × 25
- ❑ 3 Nm + 90°

10 - O-ring

- ❑ Renew after removal

11 - Breather pipe

12 - Dust ring

13 - Gaskets

- ❑ Renew after removal

14 - Gasket

- ❑ Renew after removal
- ❑ Depends on model
- ❑ For vehicles with parking lock solenoid - N486-

15 - Mechatronic unit

- ❑ Removing and installing ⇒ “10.3 Removing and installing mechatronic unit”, page 102

16 - Bolts for mechatronic unit ⇒ Servicing 7-speed dual clutch gearbox 0CJ, 0CK, 0CL, 0DN, 0DP; Rep. gr. 34 ; Mechatronic unit; Exploded view - mechatronic unit

- ❑ M6 × 90

17 - Bolt

- ❑ Renew after removal
- ❑ M6 × 22
- ❑ 3 Nm + 90°
- ❑ For vehicles with parking lock solenoid - N486-

18 - Seal

- ❑ Renew after removal

19 - Automatic gearbox control unit - J217-

20 - Oil pipe

- ❑ Depends on model
- ❑ For vehicles with parking lock solenoid - N486-

21 - Wiring

- ❑ Renew after removal

22 - Seals

- ❑ Renew after removal

23 - ATF pipe

- ❑ Renew after removal

24 - Seals

- ❑ Renew after removal

Oil pan - tightening torque and sequence

– Tighten bolts in stages in the sequence described:

Stage	Bolts	Tightening torque/angle specification
1.	-1 … 25-	Screw in by hand until contact is made
2.	-1 … 25-	3 Nm
3.	-1 … 25-	90°

Protected by copyright. Copying for private or commercial purposes, in part or in whole, is not permitted unless authorised by AUDI AG. AUDI AG does not guarantee or assume any liability with respect to the correctness of information in this document.

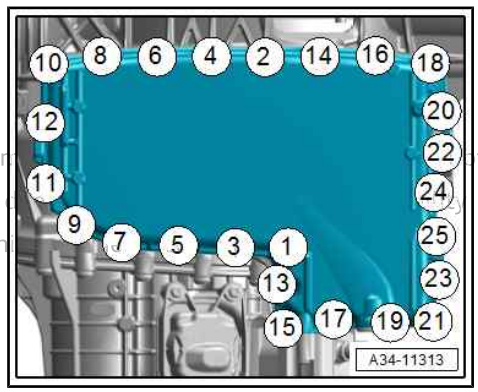

10.2 Removing and installing oil pan

Special tools and workshop equipment required

- Vehicle diagnostic tester
- Engine bung set - VAS 6122-

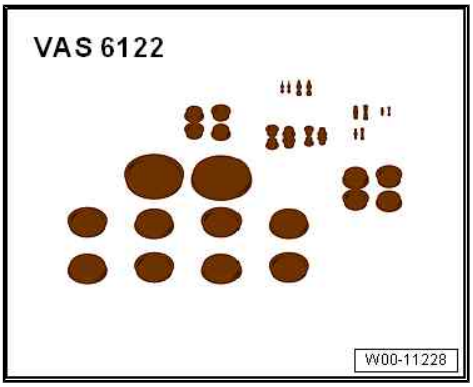

Protected by copyright. Copying for private or commercial purposes, in part or in whole, is not permitted unless authorised by AUDI AG. AUDI AG does not guarantee or accept any liability with respect to the correctness of information in this document. Copyright by AUDI AG.

- Used oil collection and extraction unit - VAS 6622A-

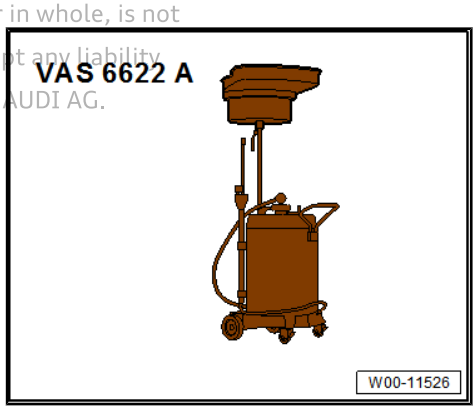

Removing

> ⚠ Caution
>
> *Risk of damage to the gearbox.*
>
> - *Do not run the engine or tow the vehicle with the oil pan removed or when there is no gear oil in the gearbox.*

> ⚠ WARNING
>
> *System is pressurised.*
>
> - *Deactivate ATF pump and discharge hydraulic accumulator before removing oil pan.*

– Using vehicle diagnostic tester , discharge ATF accumulator in automatic gearbox control unit - J217- and disable gearbox auxiliary hydraulic pump - V552-
⇒ “4.3 Deactivating ATF pump and discharging hydraulic accumulator”, page 7 .

– Lower subframe cross brace by a maximum of 150 mm (do not press joint pin of guide link out of tapered seat) ⇒ Running gear, axles, steering; Rep. gr. 40 ; Subframe; Removing and installing subframe cross brace .

– Remove ATF cooler ⇒ page 83 .

– Remove bolts in the sequence -25 ... 1- and detach oil pan.

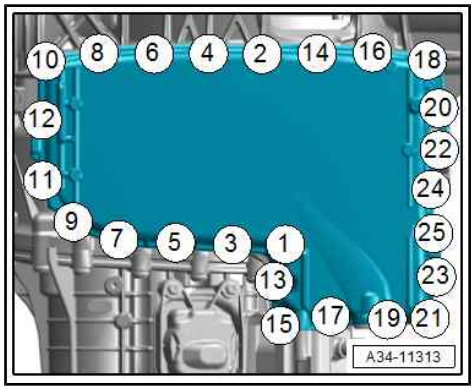

Installing

Installation is carried out in reverse order; note the following:

Note

Renew gasket and ATF pipe after removal.

– Install ATF cooler ⇒ page 83 .

– Install subframe cross brace ⇒ Running gear, axles, steering; Rep. gr. 40 ; Subframe; Removing and installing subframe cross brace .

Tightening torques

♦ ⇒ Fig. ""Oil pan - tightening torque and sequence"" , page 100

10.3 Removing and installing mechatronic unit

Special tools and workshop equipment required

♦ Vehicle diagnostic tester

Removing

WARNING

System is pressurised.

- *Deactivate ATF pump and discharge hydraulic accumulator before removing oil pan.*

– Using vehicle diagnostic tester , discharge ATF accumulator in automatic gearbox control unit - J217- and disable gearbox auxiliary hydraulic pump - V552-
⇒ "4.3 Deactivating ATF pump and discharging hydraulic accumulator", page 7 .

– Remove subframe cross brace ⇒ Running gear, axles, steering; Rep. gr. 40 ; Subframe; Removing and installing subframe cross brace .

– Remove oil pan ⇒ page 100 .

All further work on the mechatronic unit is described in ⇒ Servicing 7-speed dual clutch gearbox 0CJ, 0CK, 0CL, 0DN, 0DP; Rep. gr. 34 ; Mechatronic unit; Removing and installing mechatronic unit .

Installing

Installation is carried out in reverse order; note the following:

– Install subframe cross brace ⇒ Running gear, axles, steering; Rep. gr. 40 ; Subframe; Removing and installing subframe cross brace .

Protected by copyright. Copying for private or commercial purposes, in part or in whole, is not permitted unless authorised by AUDI AG. AUDI AG does not guarantee or accept any liability with respect to the correctness of information in this document. Copyright by AUDI AG.

Tightening torques

♦ ⇒ Servicing 7-speed dual clutch gearbox 0CJ, 0CK, 0CL, 0DN, 0DP; Rep. gr. 34 ; Mechatronic unit; Exploded view - mechatronic unit

35 – Gears, shafts

1 Dismantling and assembling gears and shafts

⇒ Servicing 7-speed dual clutch gearbox 0CJ, 0CL, 0CK, 0DN; Rep. gr. 35 ; Dismantling and assembling gears and shafts .

Protected by copyright. Copying for private or commercial purposes, in part or in whole, is not permitted unless authorised by AUDI AG. AUDI AG does not guarantee or accept any liability with respect to the correctness of information in this document. Copyright by AUDI AG.

39 – Final drive - differential

1 Gearbox control system

⇒ "1.1 Overview of fitting locations - gearbox control system", page 104

1.1 Overview of fitting locations - gearbox control system

1 - Mechatronic unit for dual clutch gearbox - J743-

- ❑ Removing and installing ⇒ page 102

2 - Gearbox oil temperature sender - G93-

3 - Temperature sender in control unit - G510-

4 - Automatic gearbox control unit - J217-

5 - Gearbox input speed sender 2 - G612-

6 - Gearbox input speed sender 1 - G632-

7 - Gear selector movement sensor 4 - G490-

8 - Gear selector movement sensor 3 - G489-

9 - Electric pump 2 for gearbox - V553-

- ❑ Removing and installing ⇒ page 78

10 - Gearbox oil temperature sender 2 - G754-

11 - Gear selector movement sensor 2 - G488-

12 - Gear selector movement sensor 1 - G487-

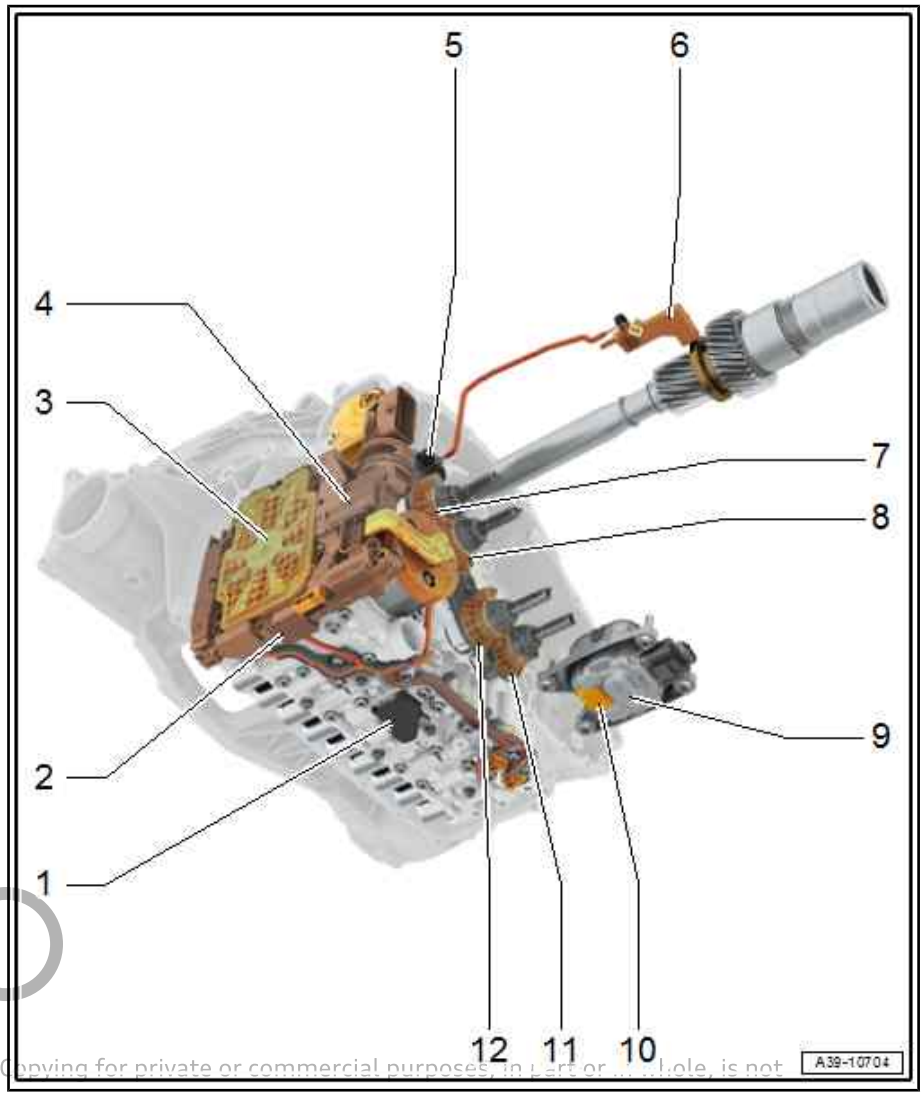

Protected by copyright. Copying for private or commercial purposes, in part or in whole, is not permitted unless authorised by AUDI AG. AUDI AG does not guarantee or accept any liability with respect to the correctness of information in this document. Copyright by AUDI AG.

1 - Gearbox auxiliary hydraulic pump - V552-

2 - Rotor position sender for gearbox auxiliary hydraulic pump - G847-

3 - Gear sensor 2 - G869-

4 - Gear sensor - G676-

5 - Automatic gearbox pressure regulating valve 3 - N217-

6 - Solenoid valve 4 - N91-

7 - Solenoid valve 3 - N90-

8 - Solenoid valve 5 - N92-

9 - Solenoid valve 6 - N93-

10 - Solenoid valve 1 - N88-

11 - Solenoid valve 2 - N89-

12 - Automatic gearbox pressure regulating valve 2 - N216-

13 - Automatic gearbox pressure regulating valve 1 - N215-

14 - Hydraulic pressure sender 1 - G545-

15 - Hydraulic pressure sender 2 - G546-

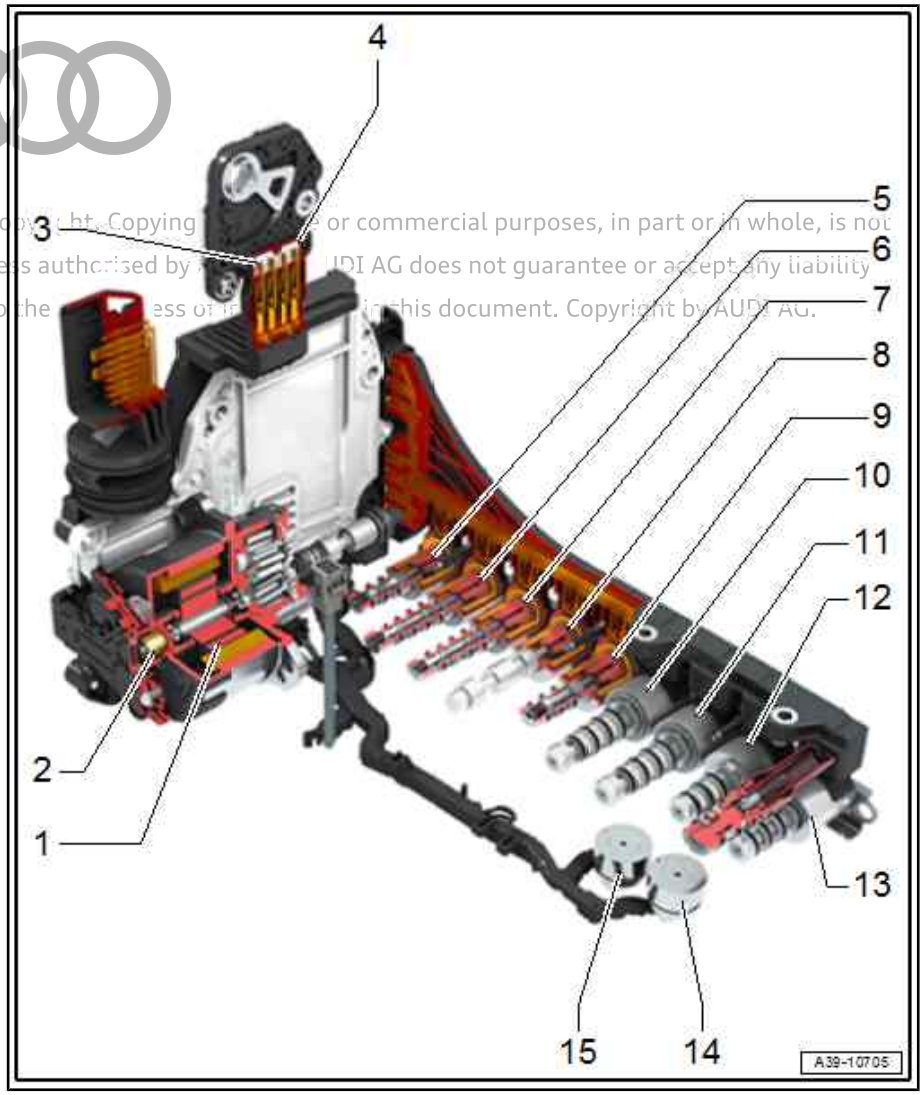

Protected by copyright. Copying for private or commercial purposes, in part or in whole, is not permitted unless authorised by AUDI AG. AUDI AG does not guarantee or accept any liability with respect to the correctness of information in this document. Copyright by AUDI AG.

All-wheel drive control unit - J492- -1-

The following are integrated in the all-wheel drive control unit - J492- :

Clutch actuator for all-wheel drive - V622-

Clutch position sender for all-wheel drive - G969-

Fitting location: the all-wheel drive control unit - J492- -1- is located on rear left of gearbox on the four-wheel drive coupling.

– Removing and installing ⇒ Rear final drive; Rep. gr. 39 ; Four-wheel drive coupling; Removing and installing control unit

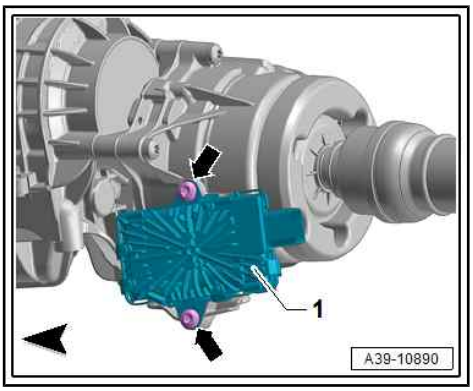

2 Oil seals

⇒ “2.1 Overview of fitting locations - oil seals”, page 106

All work involving oil seals is described in ⇒ Servicing 7-speed dual clutch gearbox 0CJ, 0CK, 0CL, 0DN, 0DP; Rep. gr. 39 ; Oil seals .

2.1 Overview of fitting locations - oil seals

Protected by copyright. Copying for private or commercial purposes, in part or in whole, is not permitted unless authorised by AUDI AG. AUDI AG does not guarantee or accept any liability with respect to the correctness of information in this document. Copyright by AUDI AG.

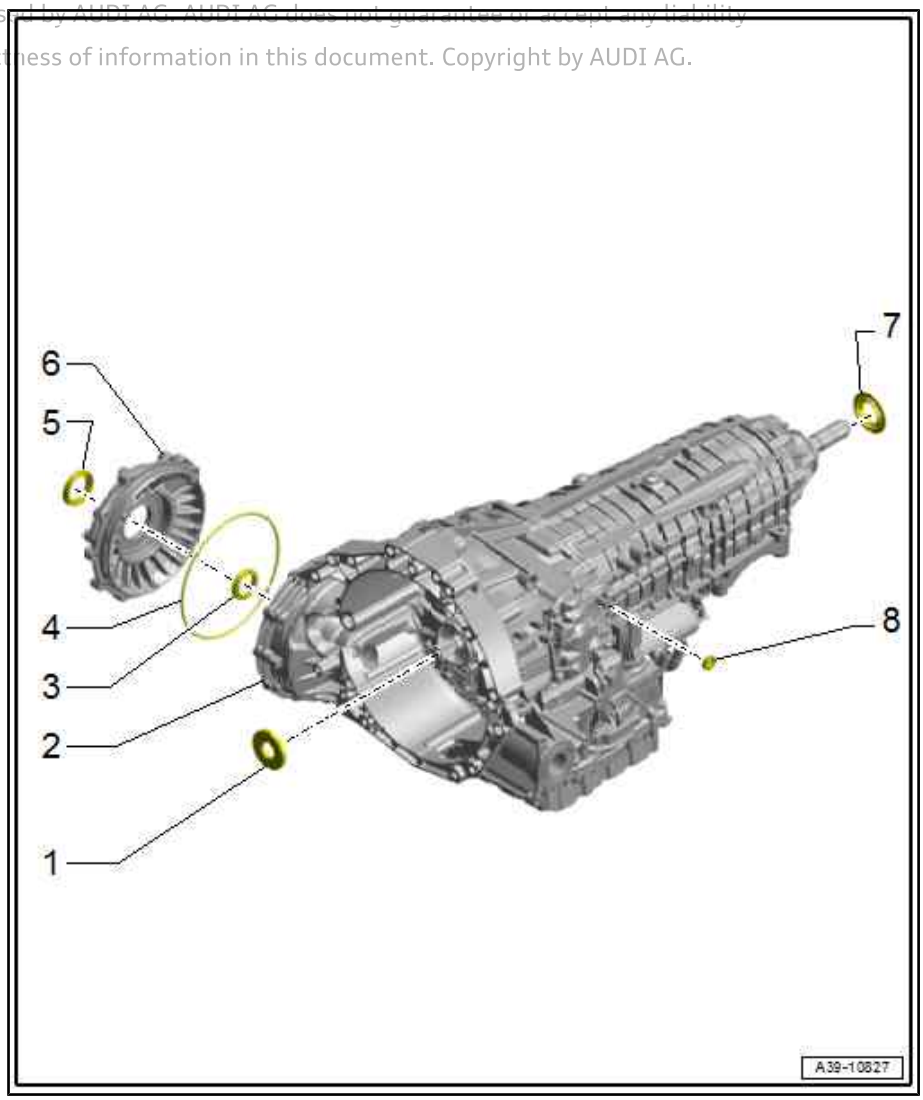

1 - Input shaft oil seal

- ❑ Renewing ⇒ Servicing 7-speed dual clutch gearbox 0CJ, 0CK, 0CL, 0DN, 0DP; Rep. gr. 39 ; Oil seals; Renewing input shaft oil seal

2 - Gearbox

3 - Flange shaft oil seal (left-side)

- ❑ Renewing ⇒ Servicing 7-speed dual clutch gearbox 0CJ, 0CK, 0CL, 0DN, 0DP; Rep. gr. 39 ; Oil seals; Renewing oil seal (left-side)

4 - O-ring

- ❑ Renew after removing

5 - Flange shaft oil seal (right-side)

- ❑ Renewing ⇒ Servicing 7-speed dual clutch gearbox 0CJ, 0CK, 0CL, 0DN, 0DP; Rep. gr. 39 ; Oil seals; Renewing oil seal (right-side)

6 - Cover for final drive

- ❑ Removing and installing ⇒ Servicing 7-speed dual clutch gearbox 0CJ, 0CK, 0CL, 0DN, 0DP; Rep. gr. 39 ; Oil seals; Renewing oil seal (left-side)

7 - Oil seal for rear splined shaft

- ❑ Four-wheel drive vehicles only
- ❑ Renewing ⇒ Servicing 7-speed dual clutch gearbox 0CJ, 0CK, 0CL, 0DN, 0DP; Rep. gr. 39 ; Oil seals; Renewing oil seal for rear splined shaft

8 - Seal for parking lock shaft

- ❑ Renewing ⇒ page 37

3 Differential

All work on differential is described in ⇒ Servicing 7-speed dual clutch gearbox 0CJ, 0CK, 0CL, 0DN, 0DP; Rep. gr. 39 ; Differential; Exploded view - differential .

3.1 Exploded view - differential

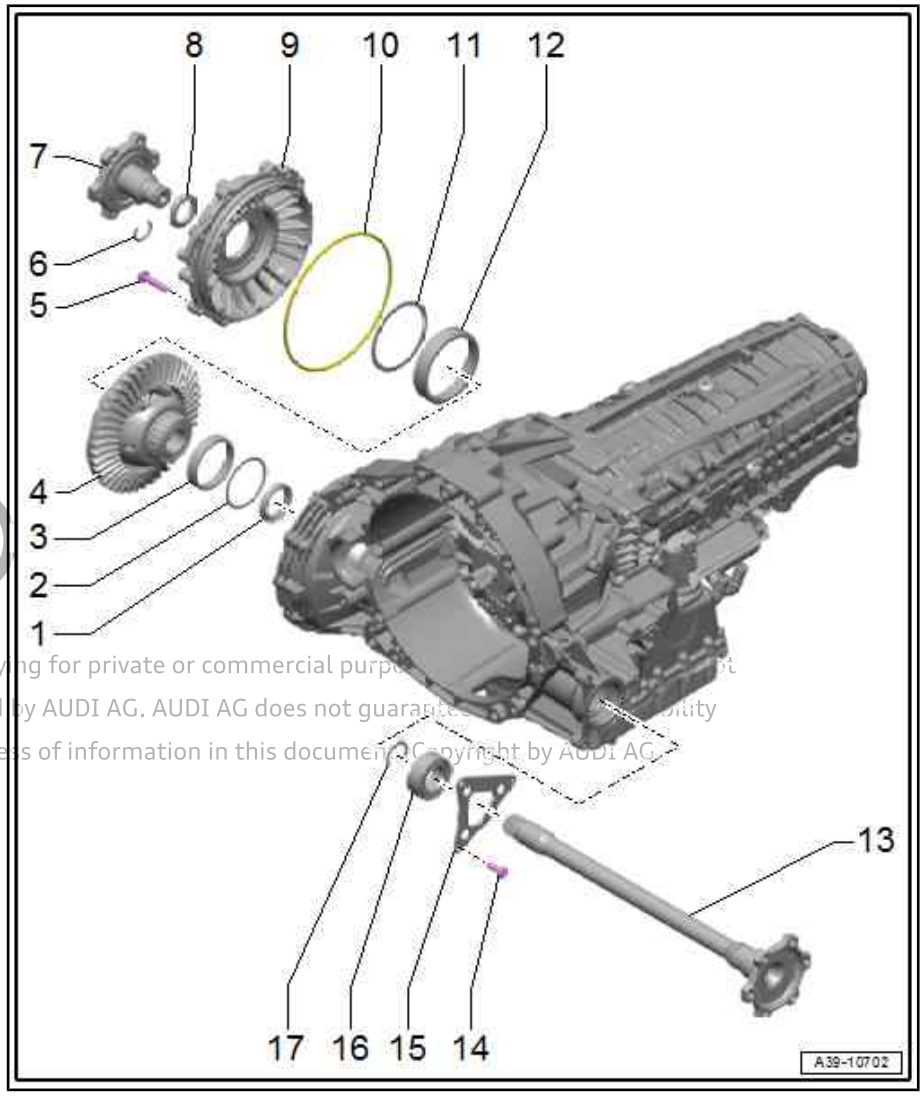

1 - Flange shaft oil seal (left-side)

- ❑ Renewing ⇒ Servicing 7-speed dual clutch gearbox 0CJ, 0CK, 0CL, 0DN, 0DP; Rep. gr. 39 ; Oil seals; Renewing oil seal (left-side)

2 - Shim

- ❑ Behind tapered roller bearing outer race

3 - Tapered roller bearing outer race

4 - Front differential

5 - Bolt

- ❑ Renew after removing
- ❑ Tightening torque and sequence ⇒ Servicing 7-speed dual clutch gearbox 0CJ, 0CK, 0CL, 0DN, 0DP; Rep. gr. 39 ; Differential; Exploded view - differential

Protected by copyright. Copying for private or commercial purposes, in part or in whole, is not permitted unless authorised by AUDI AG. AUDI AG does not guarantee or assume any liability with respect to the correctness of information in this document. Copyright by AUDI AG.

6 - Circlip

- ❑ Renew

7 - Flange shaft (right-side)

- ❑ Removing and installing ⇒ Servicing 7-speed dual clutch gearbox 0CJ, 0CK, 0CL, 0DN, 0DP; Rep. gr. 39 ; Differential; Removing and installing flange shaft (right-side)

8 - Flange shaft oil seal (right-side)

- ❑ Renewing ⇒ Servicing 7-speed dual clutch gearbox 0CJ, 0CK, 0CL, 0DN, 0DP; Rep. gr. 39 ; Oil seals; Renewing oil seal (right-side)

9 - Cover for final drive

- ❑ Removing and installing ⇒ Servicing 7-speed dual clutch gearbox 0CJ, 0CK, 0CL, 0DN, 0DP; Rep. gr. 39 ; Oil seals; Renewing oil seal (left-side)

10 - O-ring

- ❑ Renew after removing

11 - Shim

- ❑ Behind tapered roller bearing outer race

12 - Tapered roller bearing outer race

13 - Flange shaft (left-side)

- ❑ Removing and installing ⇒ Servicing 7-speed dual clutch gearbox 0CJ, 0CK, 0CL, 0DN, 0DP; Rep. gr. 39 ; Differential; Removing and installing flange shaft (left-side)

14 - Bolt

- ❑ 3x
- ❑ Renew after removing
- ❑ 10 Nm +90°

Protected by copyright. Copying for private or commercial purposes, in part or in whole, is not permitted unless authorised by AUDI AG. AUDI AG does not guarantee or accept any liability with respect to the correctness of information in this document. Copyright by AUDI AG.

15 - Bearing plate

- ❑ Secured to flange shaft (left-side) together with bearing -item 16- by circlip -17-

16 - Bearing

- ❑ For flange shaft (left-side)

17 - Circlip

- ❑ For bearing for flange shaft (left-side)

4 Four-wheel drive coupling

For all work on four-wheel drive coupling, refer to ⇒ Rear final drive; Rep. gr. 39 ; Four-wheel drive coupling .

Protected by copyright. Copying for private or commercial purposes, in part or in whole, is not permitted unless authorised by AUDI AG. AUDI AG does not guarantee or accept any liability with respect to the correctness of information in this document. Copyright by AUDI AG.