2004 ENGINE

Engine Electrical - C/K SUV

SPECIFICATIONS

FASTENER TIGHTENING SPECIFICATIONS

Fastener Tightening Specifications

Application	Specification	
	Metric	English
Battery Cable Bracket Bolt	25 N.m	18 lb ft
Battery Cable Channel Bolt	12 N.m	106 lb in
Battery Cable Junction Block Bracket Bolt	9 N.m	80 lb in
Battery Hold Down Retainer Bolt	25 N.m	18 lb ft
Battery Tray Bolt	9 N.m	80 lb in
Battery Tray Nut	25 N.m	18 lb ft
Engine Wiring Harness Ground Bolt	16 N.m	12 lb ft
Engine Wiring Harness Ground/Negative Cable Bolt	25 N.m	18 lb ft
Front Axle Mounting Bracket Nut	95 N.m	70 lb ft
Forward Lamp Wiring Harness Ground/Negative Cable Bolt	9 N.m	80 lb in
Front End Diagonal Brace Bolt	9 N.m	80 lb in
Generator Bracket Bolt - 4.8L, 5.3L, and 6.0L Engines	50 N.m	37 lb ft
Generator Bracket Bolt/Nut - 8.1L	50 N.m	37 lb ft
Generator Bracket Stud	20 N.m	15 lb ft
Generator Bolt	50 N.m	37 lb ft
Generator Cable Nut	9 N.m	80 lb in
Ground Strap Nut	9 N.m	80 lb in
Negative Battery Cable Bolt	17 N.m	13 lb ft
Positive Battery Cable Bolt	17 N.m	13 lb ft
Positive Cable Clip Bolt - 8.1L Engine	8 N.m	71 lb in
Positive Cable Nut	9 N.m	80 lb in
Positive Cable at Underhood Bussed Electrical Center (UBEC) Bolt	9 N.m	80 lb in
Starter Bolt	50 N.m	37 lb ft
Starter Heat Shield Bolt - 8.1L Engine	3 N.m	35 lb in
Starter Heat Shield Nut - 8.1L Engine	5 N.m	44 lb in
Starter Lead Nut	3.4 N.m	30 lb in
Transmission Cover Bolt	9 N.m	80 lb in

BATTERY USAGE

cardiagn.com

Battery Usage

Base	
Cold Cranking Amperage (CCA)	600 A, 770 A
Reserve Capacity Rating	115 Minutes
Replacement Battery Number	78-6YR, 78-7YR
Optional (Dual)	
GM Part Number	19001814

STARTER MOTOR USAGE

Starter Motor Usage

Applications	Starter Model
4.3L (L35)	PG-260G
4.8L (LR4) 5.3L (LM7)	PG-260F2
6.0L (LQ4) 8.1L (L18)	PG-260M
6.6L (LB7) Diesel	Hitachi-S14-100B

GENERATOR USAGE

Generator Usage

Base	
Generator Model	Delphi AD230
Rated Output	102 A
Load Test Output	71 A
Optional (Dual)	
Generator Model	Delphi AD244
Rated Output	130 A
Load Test Output	91 A
Bosch® Generator	
Generator Model	Bosch® 15755900
Rated Output	130 A
Load Test Output	91 A

SCHEMATIC AND ROUTING DIAGRAMS

STARTING AND CHARGING SCHEMATICS

cardiagn.com

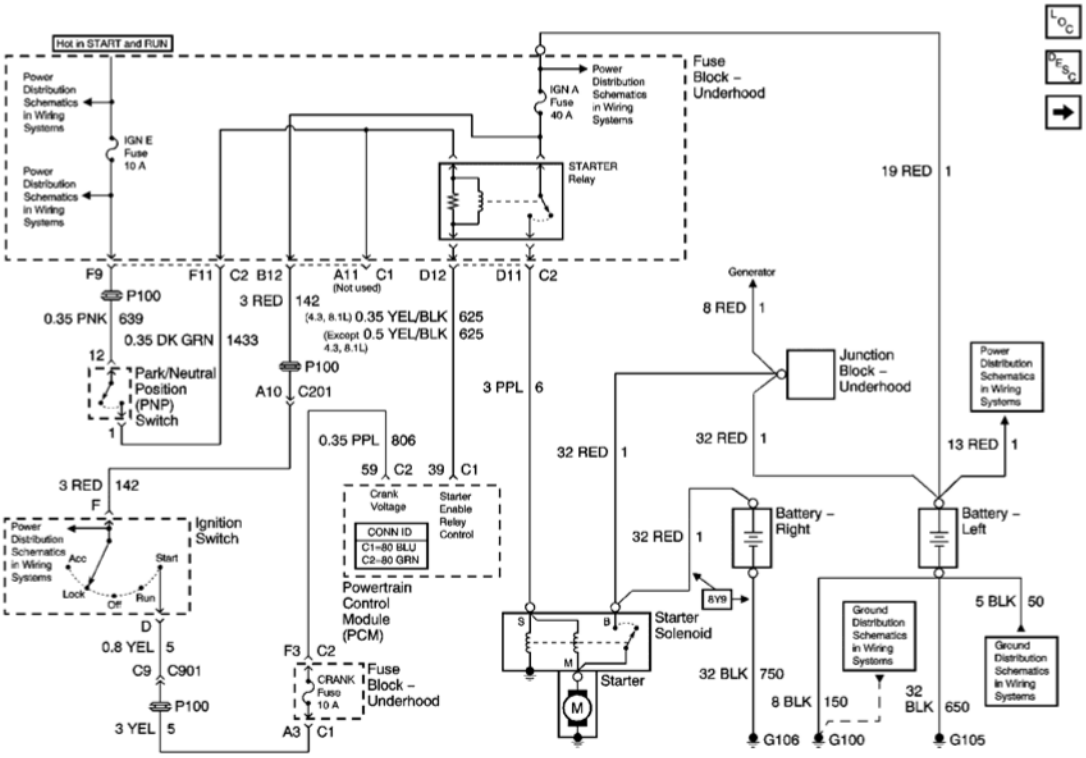

Fig. 1: Starting Schematic
Courtesy of GENERAL MOTORS CORP.

cardiagn.com

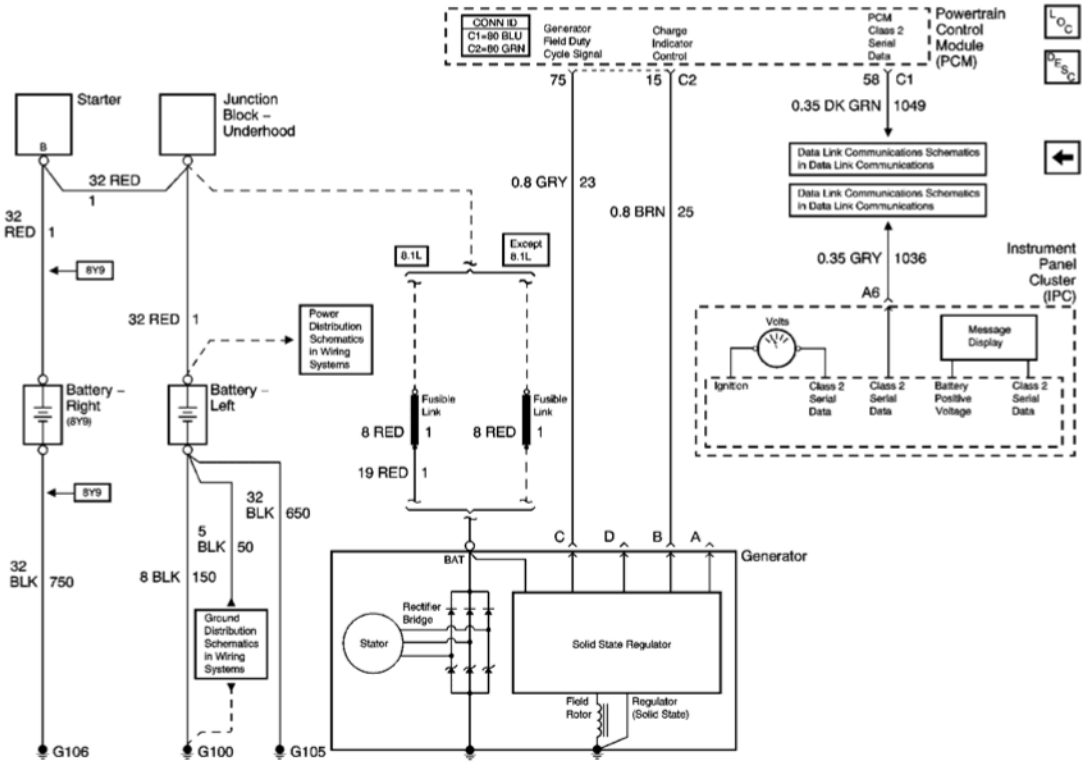

Fig. 2: Charging Schematic
Courtesy of GENERAL MOTORS CORP.

COMPONENT LOCATOR

ENGINE ELECTRICAL COMPONENT VIEWS

cardiagn.com

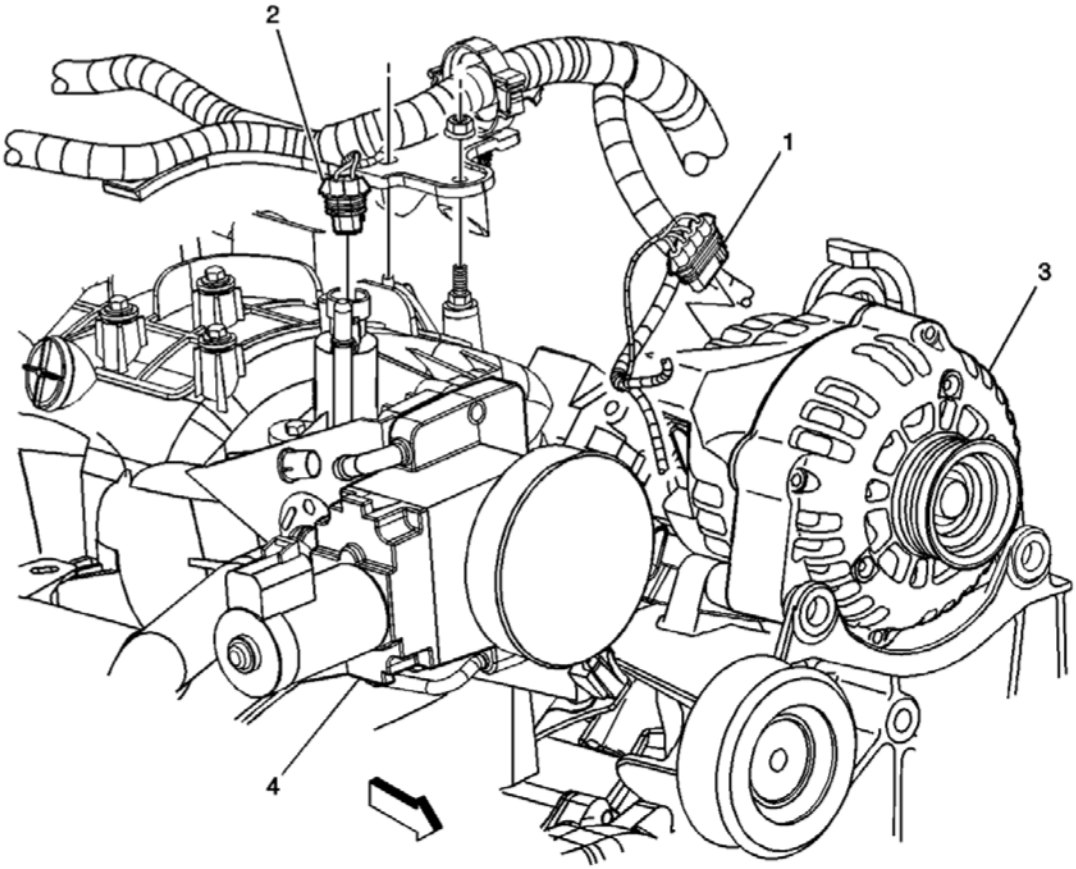

Fig. 3: Engine Component View (4.8L, 5.3L, 6.0L) - Top Front
Courtesy of GENERAL MOTORS CORP.

Callouts For Fig. 3

Callout	Component Name
1	Generator Connector
2	Evaporative Emission (EVAP) Canister Purge Solenoid Connector
3	Generator
4	Throttle Body

cardiagn.com

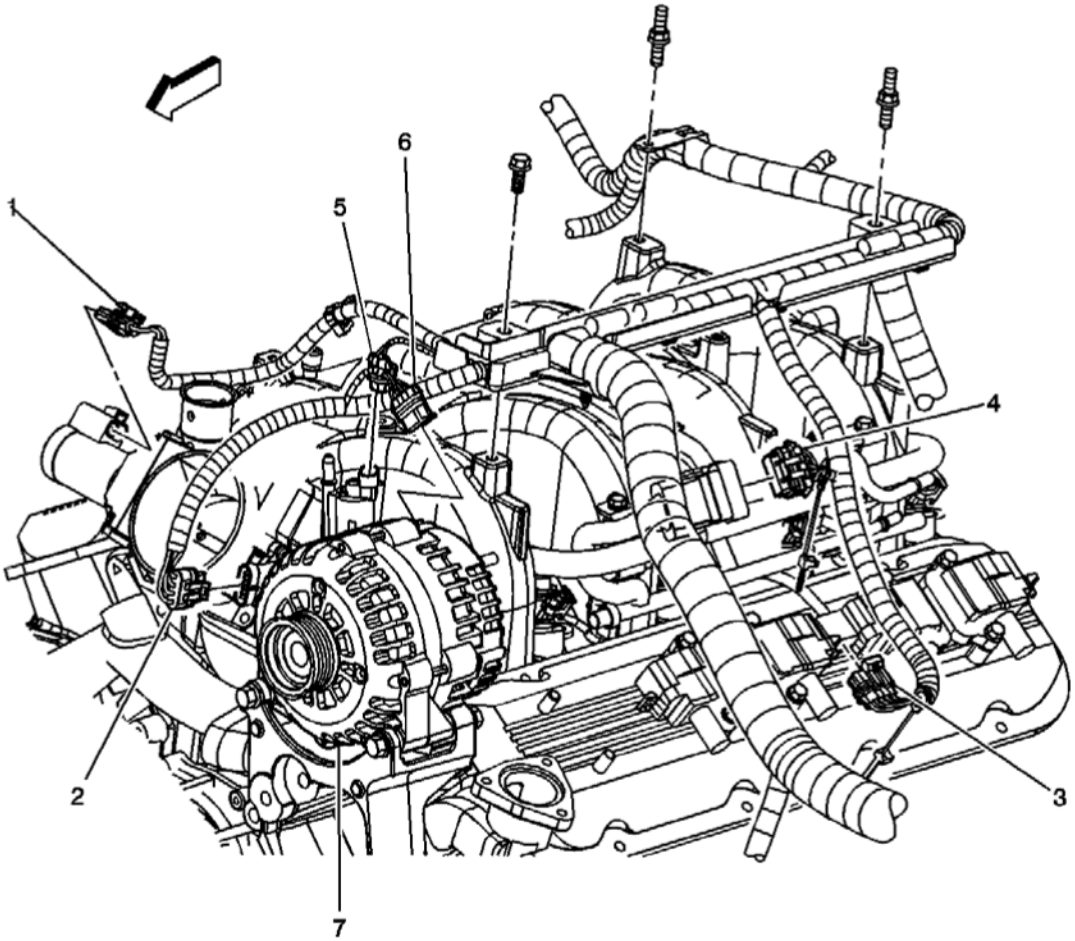

Fig. 4: Engine Component View (8.1L) - Top Left
Courtesy of GENERAL MOTORS CORP.

Callouts For Fig. 4

Callout	Component Name
1	Throttle Actuator Control (TAC) Connector
2	Throttle Position Sensor (TPS) Connector
3	Ignition Coil Connector
4	Fuel Injector Connector
5	Evaporative Emission (EVAP) Canister Purge Solenoid Connector
6	Generator Connector
7	Generator

cardiagn.com

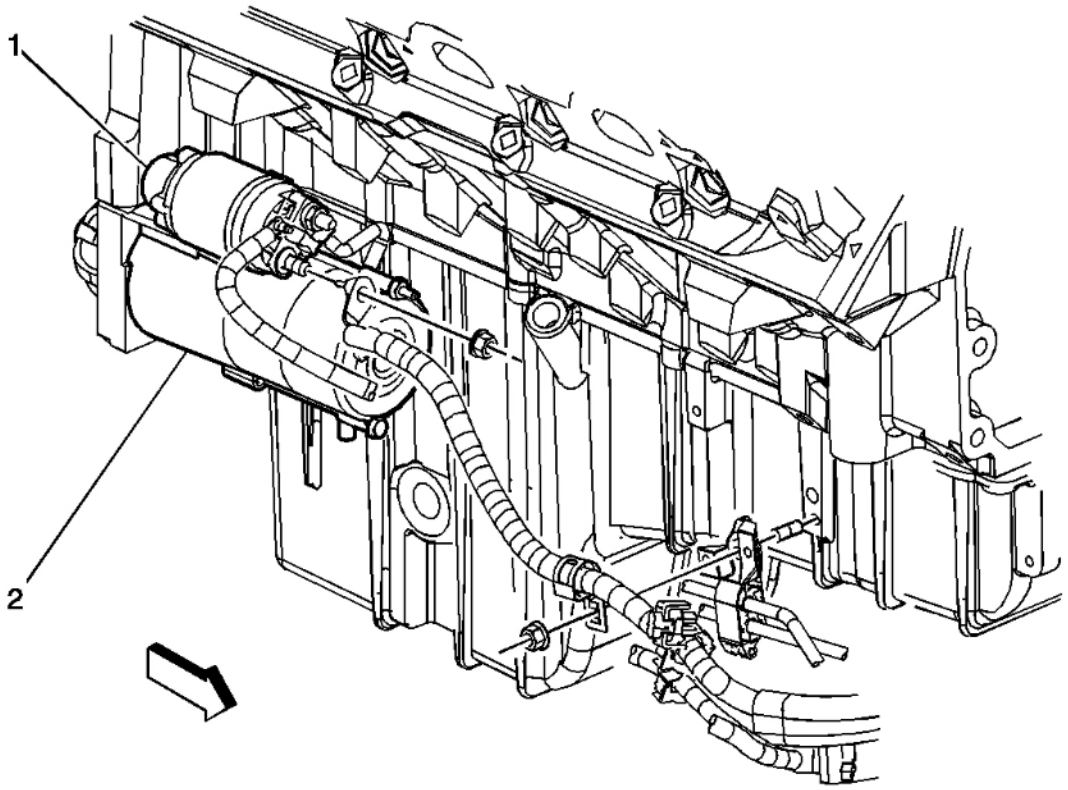

Fig. 5: Starter Component View
Courtesy of GENERAL MOTORS CORP.

Callouts For Fig. 5

Callout	Component Name
1	Starter Solenoid
2	Starter

ENGINE ELECTRICAL CONNECTOR END VIEWS

Generator Connector End View (w/ SBA)

cardiagn.com

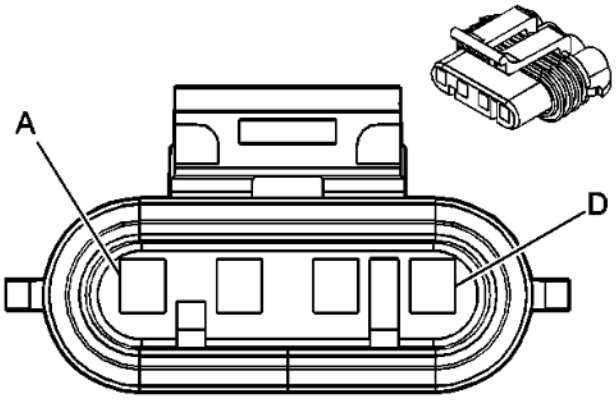

Connector Part Information		• 12186568 • 4-Way F Metri-pack 150 Series Sealed (BLK)	
Pin	**Wire Color**	**Circuit No.**	**Function**
A	DK BLU	5668	Engine On Signal
B	BRN	25	Charge Indicator Control
C	GRY	23	Generator Field Duty Cycle Signal
D	-	-	Not Used

Generator Connector End View (w/o SBA)

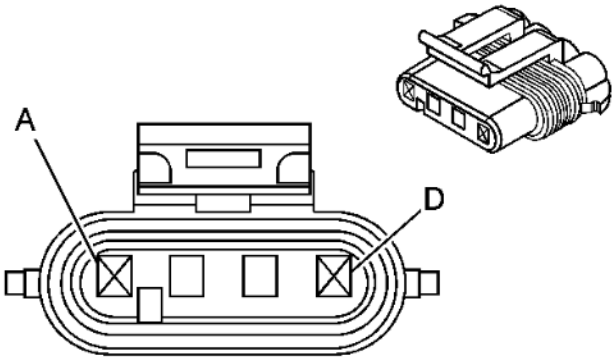

Connector Part Information		• 15355066 • 2-Way F Metri-pack 150 Series Sealed (BGE)	
Pin	**Wire Color**	**Circuit No.**	**Function**
B	BRN	25	Charge Indicator Control
C	GRY	23	Generator Field Duty Cycle Signal

cardiagn.com

DIAGNOSTIC INFORMATION AND PROCEDURES

DIAGNOSTIC STARTING POINT - ENGINE ELECTRICAL

Begin the system diagnosis with the **Diagnostic System Check - Engine Electrical**. The Diagnostic System Check will provide the following information:

- The identification of the control modules which command the system.
- The ability of the control modules to communicate through the serial data circuit.
- The identification of any stored diagnostic trouble codes (DTCs) and their status.

The use of the Diagnostic System Check will identify the correct procedure for diagnosing the system and where the procedure is located.

DIAGNOSTIC SYSTEM CHECK - ENGINE ELECTRICAL

Test Description

The numbers below refer to the step numbers on the diagnostic table.

4: Lack of communication may be due to a partial malfunction of the class 2 serial data circuit or due to a total malfunction of the class 2 serial data circuit. The specified procedure will determine the particular condition.

5: The symptom list in Symptoms will determine the correct diagnostic procedure to use.

6: The presence of DTCs which begin with "U" indicate some other module is not communicating. The specified procedure will compile all the available information before tests are performed.

Diagnostic System Check - Engine Electrical

Step	Action	Yes	No
1	Did you perform the Battery Inspection/Test?	Go to **Step 2**	Go to **Battery Inspection/Test (Non-HP2)**
2	Install a scan tool. Does the scan tool power up?	Go to **Step 4**	Go to **Scan Tool Does Not Power Up**
3	**IMPORTANT:** **The engine may start during the following step. Turn OFF the engine as soon as you have observed the Crank power mode.** 1. Access the Class 2 Power Mode in the Diagnostic Circuit Check on the scan tool. 2. Rotate the ignition switch through all positions while observing the Class 2 Power Mode on the Scan Tool. Refer to the Serial Data Power Mode		

cardiagn.com

	table within the **Body Control System Description and Operation** in Body Control Systems, for a list of the power mode states that correspond to each ignition switch position. Does the Class 2 Power Mode parameter reading match the ignition switch position for all the selected positions?	Go to **Step 4**	Go to **Power Mode Mismatch** in Body Control System
4	1. Turn ON the ignition, with the engine OFF. 2. Attempt to communicate with each module on the class 2 serial data circuit. If using a Tech 2, obtain this information using the class 2 Message Monitor feature. Does the scan tool communicate with any module on the class 2 serial data circuit?	Go to **Step 5**	Go to **Scan Tool Does Not Communicate with Class 2 Device**
5	1. Select the Display DTCs function for each module. If using a Tech 2, use the Class 2 DTC Check feature in order to determine which modules have DTCs set. 2. Record all of the displayed DTCs the DTC status and the module which set the DTC. Does the scan tool display any DTCs?	Go to **Step 6**	Go to **Symptoms - Engine Electrical**
6	Does the scan tool display any DTC beginning with "U"?	Go to **Diagnostic Trouble Code (DTC) List**	Go to **Step 7**
7	Does the scan tool display any DTC beginning with "P"?	Go to **Diagnostic Trouble Code (DTC) List** 4.8 L, 5.3 L, 6.0 L or **Diagnostic Trouble Code (DTC) List** 8.1 L in Engine Controls	Go to **Step 8**
8	Does the scan tool display any DTC beginning with "B"?	Go to **Diagnostic Trouble Code (DTC) List**	Go to **Diagnostic Trouble Code (DTC) List**

SCAN TOOL DATA LIST

Powertrain Control Module (PCM) Scan Tool Data List

Scan Tool Parameter	Data List	Units Displayed	Typical Data Value

cardiagn.com

Ignition ON/Engine OFF			
Ignition 1 Signal	Engine 1,2 Data	Volts	9-14v
GEN L-Terminal Signal Command	Engine 2 Data	OK/No Output	OK
GEN F-Terminal Signal	Engine 2 Data	%	10-90%

SCAN TOOL DATA DEFINITIONS

Ignition 1 Signal

The scan tool displays the current voltage at the battery.

GEN L-Terminal Signal Command

The scan tool displays OK/No Output. The scan tool displays OK until malfunction is detected on the generator L terminal circuit, then it reads No Output.

GEN F-Terminal Signal

The scan tool displays 0%-100%. The scan tool displays 0%-5% until the engine is running, then the percentage value varies depending on electrical loads.

DIAGNOSTIC TROUBLE CODE (DTC) LIST

Diagnostic Trouble Code (DTC) List

DTC	Diagnostic Procedure	Module(s)
B1327	DTC B1327	BCM
B1328	DTC B1328	BCM
P0562	DTC P0562	PCM
P0563	DTC P0563	PCM
P0615	DTC P0615	PCM
P1637	DTC P1637	PCM
P0622	DTC P0622	PCM

DTC B1327

Circuit Description

All vehicle modules monitor system voltage. The system voltage message is sent to other modules via Class 2 message. When the system voltage drops below the specified range DTC B1327 shall set within the affected module.

Conditions for Running the DTC

This DTC shall run only if the module has power, ground and the ignition is not in START mode. This DTC shall execute regardless of the battery voltage, except when the DTC B1390 is set current.

cardiagn.com

Conditions for Setting the DTC

- This DTC shall be set as current when the voltage falls below 9.0 volts for 1.2 seconds.
- When the vehicle exits START the module shall delay checking the voltage for 2 seconds.

Action Taken When the DTC Sets

- A message shall be sent out on the class 2 lines to notify all other modules of low battery voltage.
- The modules disable the setting of U codes and other DTCs.

Conditions for Clearing the DTC

- The DTC will clear current status when the voltage is greater than 9.5 volts for 1.2 seconds.
- A history DTC will clear after 50 consecutive ignition cycles if the condition for the malfunction is no longer present.
- Use the ON-Board clearing DTCs feature.
- Use a scan tool.

Test Description

The numbers below refer to the step numbers on the diagnostic table.

3: Tests for the proper voltage at battery positive voltage sense circuit of the module, if voltage is not within the proper operating range, the voltage sense circuit needs to be tested.

4: Tests the circuit for high resistance.

5: Tests for the proper ground circuit for the module.

DTC B1327

Step	Action	Value(s)	Yes	No
Schematic Reference: Starting and Charging Schematics or **Power Distribution Schematics** in Wiring Systems **Connector End View Reference: Master Electrical Component List** in Wiring Systems				
1	Did you perform the Engine Electrical Diagnostic System Check?	-	Go to **Step 2**	Go to **Diagnostic System Check - Engine Electrical**
2	1. Install a scan tool. 2. Turn ON the ignition, with the engine OFF. 3. With a scan tool, observe the battery voltage parameter in the affected module data list. Or with a DMM, measure the battery voltage at the appropriate circuit of	9.4 V		

cardiagn.com

	the module. Does the voltage measure greater than the specified value?		Go to **Step 6**	Go to **Step 3**
3	1. Turn OFF the ignition. 2. Disconnect the harness connector of the module setting the DTC B1327. 3. Measure the voltage between the battery positive voltage circuit of the module setting the DTC B1327 and the ground circuit of the module setting the DTC B1327. Does the voltage measure greater than the specified value?	9.4 V	Go to **Step 6**	Go to **Step 4**
4	Test the batter positive voltage circuit of the module setting the code for a high resistance or an open. Refer to **Circuit Testing** and **Wiring Repairs** in Wiring Systems. Did you find and correct the condition?	-	Go to **Step 8**	Go to **Step 5**
5	Test the ground sense circuit of the module setting the code for a high resistance or an open. Refer to **Circuit Testing** and **Wiring Repairs** in Wiring Systems. Did you find and correct the condition?	-	Go to **Step 8**	Go to **Step 6**
6	Inspect for poor connections at the harness connector of the module setting the DTC. Refer to **Testing for Intermittent Conditions and Poor Connections** and **Connector Repairs** in Wiring Systems. Did you find and correct the condition?	-	Go to **Step 8**	Go to **Step 7**
7	**IMPORTANT:** **Perform the setup procedure for the module setting the code, if necessary.** Replace the module setting the DTC. Refer to **Control Module References** in Body Control System.Did you complete the replacement?	-	Go to **Step 8**	-
8	1. Use the scan tool in order to clear the DTCs. 2. Operate the vehicle within the Conditions for Running the DTC as specified in the supporting text. Does the DTC reset?	-	Go to **Step 2**	System OK

cardiagn.com

DTC B1328

Circuit Description

All vehicle modules monitor system voltage. The system voltage message is sent to other modules via Class 2 message. When the system voltage is above the specified range DTC B1328 shall set within the affected module.

Conditions for Running the DTC

This DTC shall run only if the module has power, ground and the ignition is not in START mode. This DTC shall execute regardless of the battery voltage, except when the DTC B1390 is set current.

Conditions for Setting the DTC

This DTC will set as current when the voltage is greater than 15.9 volts for 1.2 seconds and DTC B1390 is not set current in the affected module.

Action Taken When the DTC Sets

- A message shall be sent out on the class 2 lines to notify all other modules of high than normal battery voltage.
- The modules disable the setting of U codes and other DTCs.

Conditions for Clearing the DTC

- The DTC will clear current status when the voltage is less than 15.5 volts for 1.2 seconds.
- A history DTC will clear after 50 consecutive ignition cycles if the condition for the malfunction is no longer present.
- Use a scan tool.

Diagnostic Aids

Using a battery charger to jumpstart the vehicle may set DTC B1328 as a history code.

Test Description

The numbers below refer to the step numbers on the diagnostic table.

3: Tests for the proper voltage at the affected module. If the voltage is not within the proper operating range, the charging system needs to be checked.

4: Setup procedure for the module replacement.

DTC B1328

Step	Action	Yes	No
	Did you perform the Engine Electrical Diagnostic System		Go to **Diagnostic**

cardiagn.com

1	Check?	Go to **Step 2**	**System Check - Engine Electrical**
2	1. Install a scan tool. 2. Turn ON the ignition, with the engine OFF. 3. With a scan tool, monitor the DTC Information for DTC B1328 in the affected module. Does the scan tool indicate that DTC B1328 is current?	Go to **Step 4**	Go to **Step 3**
3	With a scan tool, monitor the DTC Information for DTC B1328 in the affected module. Does the scan tool indicate that DTC B1328 is current?	Go to **Step 4**	Go to Diagnostic Aids
4	**IMPORTANT:** **Perform the setup procedure for the module setting the code, if necessary.** Replace the module setting the code. Refer to **Control Module References** in Body Control System.Did you complete the replacement?	Go to **Step 5**	-
5	1. Use the scan tool in order to clear the DTCs. 2. Operate the vehicle within the Conditions for Running the DTC as specified in the supporting text. Does the DTC reset?	Go to **Step 2**	System OK

DTC P0562

Circuit Description

The PCM monitors the system voltage to make sure that the voltage stays within the proper range. If the PCM detects an excessively low system voltage, DTC P0562 will set.

When the charging system detects a fault, the instrument panel cluster (IPC) displays a message or the charge indicator will light.

Conditions for Running the DTC

- Engine run time more than 20 seconds and above 1200 RPM.
- Vehicle speed above 8 km/h (5 mph).

Conditions for Setting the DTC

The PCM detects an improper voltage below 11 volts for 5 seconds.

Action Taken When the DTC Sets

cardiagn.com

- The PCM stores the DTC information into memory when the diagnostic runs and fails.
- The PCM will store conditions which were present when the DTC set as Failure Records data only.
- The PCM disables most outputs.
- The transmission defaults to a predetermined gear.
- The torque converter clutch (TCC) operation is inhibited.
- The instrument panel cluster (IPC) displays a message.
- The malfunction indicator lamp (MIL) will not illuminate.

Conditions for Clearing the DTC

- The Conditions for Setting the DTC are no longer present.
- A history DTC will clear after 40 malfunction free ignition cycles.
- The powertrain control module (PCM) receives the clear code command from the scan tool.

DTC P0562

Step	Action	Value(s)	Yes	No
Schematic Reference: Starting and Charging Schematics **Connector End View Reference: Engine Electrical Connector End Views**				
1	Did you perform the Engine Electrical Diagnostic System Check?	-	Go to **Step 2**	Go to **Diagnostic System Check - Engine Electrical**
2	With the scan tool monitor the Ignition 1 signal voltage in the PCM data list. Does the scan tool display Ignition 1 voltage greater than the specified value?	11 V	Go to **Step 4**	Go to **Step 3**
3	Test the ignition feed circuit to the PCM for high resistance or open. Refer to **Circuit Testing** and**Wiring Repairs** in Wiring Systems. Did you find and correct the condition?	-	Go to **Step 7**	Go to **Step 5**
4	1. Inspect for poor connections at the PCM. Refer to **Testing for Intermittent Conditions and Poor Connections** in Wiring Systems. 2. If you find a poor connection, repair the condition as necessary. Refer to **Wiring Repairs** in Wiring Systems. Did you find and correct the condition?	-	Go to **Step 7**	Go to **Step 6**
5	Repair the ignition feed circuit to the PCM for an open or a short to ground. Refer to **Wiring Repairs** in Wiring Systems.	-		

cardiagn.com

	Is the action complete?		Go to **Step 7**	-
6	**IMPORTANT:** **The replacement PCM must be programmed.** Replace the PCM. Refer to **Powertrain Control Module (PCM) Replacement** in Engine Controls - 4.8L, 5.3L, 6.0L or to **Powertrain Control Module (PCM) Replacement** in Engine Controls - 8.1L.Is the action complete?	-	Go to **Step 7**	-
7	1. Select the Diagnostic Trouble Code (DTC) option and the Clear DTC Information option using the scan tool. 2. Operate the vehicle within the Conditions for Running the DTC as specified in the supporting text, if applicable. Does the DTC reset?	-	Go to **Step 2**	System OK

DTC P0563

Circuit Description

The powertrain control module (PCM) continuously monitors that the system voltage stays within the proper range. If the PCM detects an excessively high system voltage, DTC P0563 will set. A high voltage condition may cause a stalling condition or other driveability concerns.

Conditions for Running the DTC

- The engine run time is more than 20 seconds.
- Engine running above 1200 RPM.
- Vehicle speed above 8 km/h (5 mph).

Conditions for Setting the DTC

- The PCM senses the system voltage is above 19 volts.
- All of the conditions are present for 5 seconds.

Action Taken When the DTC Sets

- The PCM stores DTC P0563 in the PCM memory when the diagnostic runs and fails.
- The PCM will record the operating conditions at the time the diagnostic fails. The PCM stores this information in Failure Records.
- The PCM disables most outputs.
- The transmission defaults to a predetermined gear.

cardiagn.com

- The torque converter clutch (TCC) operation is inhibited.
- The instrument panel cluster (IPC) displays a message.
- The malfunction indicator lamp (MIL) will not illuminate.

Conditions for Clearing the DTC

- The Conditions for Setting the DTC are no longer present.
- A history DTC will clear after 40 malfunction free ignition cycles.
- The Powertrain Control Module (PCM) receives the clear code command from the scan tool.

DTC P0563

Step	Action	Value(s)	Yes	No
Schematic Reference: Starting and Charging Schematics **Connector End View Reference: Engine Electrical Connector End Views**				
1	Did you perform the Engine Electrical Diagnostic System Check?	-	Go to **Step 2**	Go to **Diagnostic System Check - Engine Electrical**
2	1. Turn OFF all the accessories. 2. Measure the battery voltage at the battery using the DMM. 3. Operate the engine speed above 2000 RPM. Is the battery voltage less than the specified value?	19 V	Go to **Step 4**	Go to **Step 3**
3	Replace the generator. Refer to **Generator Replacement (4.8L, 5.3L, and 6.0L Engines)** or **Generator Replacement (8.1L Engine)**. Is the action complete?	-	**Go to Step 5**	-
4	**IMPORTANT:** **The replacement PCM must be programmed.** Replace the PCM. Refer to **Powertrain Control Module (PCM) Replacement** in Engine Controls - 4.8L, 5.3L, 6.0L or to **Powertrain Control Module (PCM) Replacement** in Engine Controls - 8.1L.Is the action complete?	-	Go to **Step 5**	-
5	1. Select the Diagnostic Trouble Code (DTC) option and the Clear DTC Information option using the scan tool. 2. Operate the vehicle within the Conditions	-		

cardiagn.com

	for Running the DTC as specified in the supporting text, if applicable. Does the DTC reset?		Go to **Step 2**	System OK

DTC P0615

Circuit Description

The powertrain control module (PCM) uses output driver modules (ODMs) to control many functions of the engine. The ODMs supply the ground path for the PCM controlled device when the PCM commands the device ON. Each ODM is able to control several outputs. The PCM monitors the ODMs for circuit conditions that are incorrect for the commanded state of the ODM. If the PCM detects an improper circuit condition in the ODM that controls the starter relay, DTC P0615 will set.

Conditions for Running the DTC

System voltage is between 8-16 volts.

Conditions for Setting the DTC

- The PCM detects an improper voltage level on the output circuit that controls the starter relay.
- The condition exists for at least 2 seconds.

Action Taken When the DTC Sets

- The PCM will not illuminate the malfunction indicator lamp (MIL).
- The PCM will store the conditions present when the DTC set as Failure Records data only.

Conditions for Clearing the MIL/DTC

- The history DTC will clear after 40 consecutive warm-up cycles have occurred without a malfunction.
- The DTC can be cleared by using the scan tool Clear DTC Information function.

Diagnostic Aids

Ignition system DTCs set with the ignition switch in the START position if the starter relay or the starter is inoperative. When the PCM enables starter operation, the PCM also initiates the diagnostic test routines for DTCs P0335, P0340, and P0385. If a condition exists which prevents the engine from cranking, the PCM will not receive signal input from the CKP and CMP sensors, and the DTCs will set.

Reviewing the Failure Records vehicle mileage since the diagnostic test last failed may assist in diagnosing the condition. The information may help determine how often the condition that set the DTC occurs.

Test Description

The numbers below refer to the step numbers on the diagnostic table.

cardiagn.com

2: Listen for an audible click when the Start 1 relay operates. Turn the ignition switch back and forth from the ON to START positions. Repeat this as necessary.

3: Tests for voltage at the coil side of the Start 1 relay. The PCM IGN fuse supplies power to the coil side of the Start 1 relay.

4: Verifies that the PCM is providing ground to the Start 1 relay.

5: Tests if ground is constantly being applied to the Start 1 relay.

DTC P0615

Step	Action	Yes	No
Schematic Reference: Starting and Charging Schematics **Connector End View Reference: Engine Electrical Connector End Views**			
1	Did you perform the Engine Electrical Diagnostic System Check?	Go to **Step 2**	Go to **Diagnostic System Check - Engine Electrical**
2	1. Install a scan tool. 2. Turn ON the ignition, with the engine OFF. 3. Turn the ignition back and forth from the ON to START positions. Does the Start 1 relay turn ON and OFF with each command?	Go to **Testing for Intermittent Conditions and Poor Connections** in Wiring Systems	Go to **Step 3**
3	1. Turn OFF the ignition. 2. Disconnect the Start 1 relay. 3. Turn ON the ignition, with the engine OFF. 4. Probe the battery positive voltage of the Start 1 relay coil circuit with a test lamp that is connected to a good ground. Does the test lamp illuminate?	Go to **Step 4**	Go to **Step 8**
4	1. Connect a test lamp between the control circuit of the Start 1 relay and the battery positive voltage of the Start 1 relay coil circuit. 2. Turn the ignition back and forth from the ON to START positions. Does the test lamp turn ON and OFF with each command?	Go to **Step 6**	Go to **Step 5**
5	Test the control circuit of the Start 1 relay for a short to voltage or an open. Refer to **Circuit Testing** and **Wiring Repairs** in Wiring Systems. Did you find and correct the condition?	Go to **Step 11**	Go to **Step 7**
	Inspect for poor connections at the Start 1 relay. Refer		

cardiagn.com

6	to **Testing for Intermittent Conditions and Poor Connections** and **Connector Repairs** in Wiring Systems. Did you find and correct the condition?	Go to **Step 11**	Go to **Step 9**
7	Inspect for poor connections at the PCM. Refer to **Testing for Intermittent Conditions and Poor Connections** and **Connector Repairs** in Wiring Systems. Did you find and correct the condition?	Go to **Step 11**	Go to **Step 10**
8	Repair the battery positive voltage circuit of the Start 1 relay. Refer to **Connector Repairs** in Wiring Systems. Did you complete the repair?	Go to **Step 11**	-
9	Replace the Start 1 relay. Refer to **Relay Replacement (Within an Electrical Center)** or **Relay Replacement (Attached to Wire Harness)** in Wiring Systems. Did you complete the replacement?	Go to **Step 11**	-
10	**IMPORTANT:** **The replacement PCM must be programmed.** Replace the PCM. Refer to **Powertrain Control Module (PCM) Replacement** in Engine Controls.Did you complete the replacement?	Go to **Step 11**	-
11	1. Review and record the scan tool Fail Records data. 2. Use the scan tool in order to clear the DTC. 3. Operate the vehicle within the Conditions for Running the DTC as specified in the supporting text. 4. Using the scan tool, observe the Specific DTC Information for DTC P0615 until the test runs. Does the scan tool indicate that DTC P0615 failed this ignition?	Go to **Step 2**	System OK

DTC P0622

Circuit Description

The engine control module (ECM) uses the generator field duty cycle signal circuit to monitor the duty cycle of the generator. The generator field duty cycle signal circuit connects to the high side of the field winding in the generator. A pulse width modulated (PWM) high side driver in the voltage regulator turns the field winding ON and OFF. The ECM uses the PWM signal input to determine the generator load on the engine. This allows the ECM to adjust the idle speed to compensate for high electrical loads.

The ECM monitors the state of the generator field duty cycle signal circuit. When the key is in the RUN

cardiagn.com

position and the engine is OFF, the ECM should detect a duty cycle near 0 percent. However, when the engine is running, the duty cycle should be between 5 percent and 100 percent. The ECM monitors the PWM signal using a key ON test and a RUN test. During the tests, if the ECM detects an out of range PWM signal, DTC P0622 will set. When the DTC sets, the ECM will send a class 2 serial data message to the IPC to illuminate the charge indicator.

Conditions for Running the DTC

Key ON Test

- No generator, CKP sensors, or CMP sensor DTCs are set.
- The key is in the RUN position.
- The engine is not running.

Run Test

- No generator, CKP sensors, or CMP sensor DTCs are set.
- The engine is less than 3,000 RPM.

Conditions for Setting the DTC

- During the ignition ON test, the ECM detects a PWM signal is out of range.
- During the RUN test, the ECM detects a PWM signal less then 5 percent for more than 6 seconds.

Action Taken When the DTC Sets

- The ECM will store the conditions present when the DTC set as Fail Records data only.
- The malfunction indicator lamp (MIL) will not illuminate.

Conditions for Clearing the DTC

- The Conditions for Setting the DTC are no longer present.
- A history DTC will clear after 40 malfunction free ignition cycles.
- The ECM receives the clear code command from the scan tool.

DTC P0622

Step	Action	Value(s)	Yes	No
Schematic Reference: Starting and Charging Schematics **Connector End View Reference: Engine Electrical Connector End Views**				
1	Did you perform the Engine Electrical Diagnostic System Check?	-	Go to **Step 2**	Go to **Diagnostic System Check - Engine Electrical**

cardiagn.com

2	1. Install a scan tool. 2. Start the engine. 3. With a scan tool, observe the GEN - F Terminal parameter in the engine data list. Does the scan tool indicate that the GEN - F Terminal parameter is within the specified range?	5-95%	Go to **Testing for Intermittent Conditions and Poor Connections** in Wiring Systems	Go to **Step 3**
3	1. Turn ON the ignition, leaving the engine OFF. 2. Connect a test lamp to battery positive voltage and repeatedly probe the generator field duty cycle signal circuit or F-Terminal in the harness connector while monitoring the Generator F-Terminal Signal on the scan tool. Is the Generator F-Terminal Signal display affected?	-	Go to **Step 5**	Go to **Step 4**
4	Test the generator field duty cycle signal circuit for a short or open. Refer to **Circuit Testing** and **Wiring Repairs** in Wiring Systems. Did you find and correct the condition?	-	Go to **Step 8**	Go to **Step 6**
5	Inspect for poor connections at the harness connector of the generator. Refer to **Connector Repairs** in Wiring Systems. Did you find and correct the condition?	-	Go to **Step 8**	Go to **Charging System Test (CS/AD/SI Generators)**
6	Inspect for poor connections at the harness connector of the powertrain control module/engine control module (PCM/ECM). Refer to **Connector Repairs** in Wiring Systems. Did you find and correct the condition?	-	Go to **Step 8**	Go to **Step 7**
7	**IMPORTANT:** **The replacement PCM/ECM must be programmed.** Replace the PCM/ECM. Refer to **Powertrain Control Module (PCM) Replacement** in Engine Controls-4.8L, 5.3L, and 6.0L or **Powertrain Control Module (PCM) Replacement** in Engine Controls-8.1L.Did you complete the repair?	-	Go to **Step 8**	-
	1. Review and record the scan tool Fail Records data.			

cardiagn.com

8	2. Clear any DTCs. 3. Operate the vehicle within the Fail Records conditions as noted. 4. Using a scan tool, monitor the Specific DTC info for this DTC. Does the scan tool indicate that this DTC failed this ignition?	-	Go to **Step 2**	System OK

DTC P1637

Circuit Description

The powertrain control module (PCM) uses the generator turn on signal circuit to control the load of the generator on the engine. A high side driver in the PCM applies a voltage to the voltage regulator. This signals the voltage regulator to turn the field circuit ON and OFF. When the PCM turns ON the high side driver, the voltage regulator turns ON the field circuit. When the PCM turns OFF the high side driver, the voltage regulator turns OFF the field circuit.

The PCM monitors the state of the generator turn on signal circuit. The PCM should detect a low generator turn on signal circuit voltage when the key is ON and the engine is OFF, or when the charging system malfunctions. With the engine running, the PCM should detect a high generator turn on signal circuit. The PCM performs key ON and RUN tests to determine the status of the generator turn on signal circuit. During the key ON test, if the PCM detects a high generator turn on signal circuit voltage, the DTC will set. The DTC will also set if, during the RUN test, the PCM detects a low generator turn on signal circuit. When the DTC sets, the PCM will send a class 2 serial data message to the IPC to illuminate the charge indicator.

Conditions for Running the DTC

- The ignition is ON.
- The engine speed is more than 1,000 RPM.

Conditions for Setting the DTC

- The PCM detects the GEN L-Terminal active with the ignition ON.
- The PCM detects the GEN L-Terminal inactive with the engine operating.
- The above conditions are present for 6 seconds.

Action Taken When the DTC Sets

- The PCM will record the operating conditions presents when the DTC set as Failure Records data only.
- The instrument panel cluster (IPC) displays a message.
- The malfunction indicator lamp (MIL) will not illuminate.

Conditions for Clearing the DTC

cardiagn.com

- The Conditions for Setting the DTC are no longer present.
- A history DTC will clear after 40 malfunction free ignition cycles.
- The PCM receives the clear code command from the scan tool.

DTC P1637

Step	Action	Value	Yes	No
Schematic Reference: Starting and Charging Schematics **Connector End View Reference: Engine Electrical Connector End Views**				
1	Did you perform the Engine Electrical Diagnostic System Check?	-	Go to **Step 2**	Go to **Diagnostic System Check - Engine Electrical**
2	1. Install a scan tool. 2. Start the engine. 3. With a scan tool, monitor the DTC information for DTC P1637 in Engine Controls. Does the scan tool indicate that DTC P1637 has passed?	-	Go to **Testing for Intermittent Conditions and Poor Connections** in Wiring Systems	Go to **Step 3**
3	1. Turn OFF the ignition. 2. Disconnect the generator harness connector. 3. Start the engine and let idle. 4. Measure the voltage between the generator turn on signal circuit and ground. Does the voltage measure near the specified value?	10-11 volts	Go to **Step 5**	Go to **Step 4**
4	Test the generator turn on signal circuit for a short or open. Refer to **Circuit Testing** and **Wiring Repairs** in Wiring Systems. Did you find and correct the condition?	-	Go to **Step 8**	Go to **Step 6**
5	Inspect for poor connections at the harness connector of the generator. Refer to **Connector Repairs** in Wiring Systems. Did you find and correct the condition?	-	Go to **Step 8**	Go to **Charging System Test (CS/AD/SI Generators)**
6	Inspect for poor connections at the harness connector of the powertrain control module (PCM). Refer to **Testing for Intermittent Conditions and Poor Connections** and	-		

cardiagn.com

	Connector Repairs in Wiring Systems. Did you find and correct the condition?		Go to **Step 8**	Go to **Step 7**
7	**IMPORTANT:** **The replacement PCM must be programmed.** Replace the PCM/ECM. Refer to **Powertrain Control Module (PCM) Replacement** in Engine Controls - 4.8L, 5.3L, and 6.0L or **Powertrain Control Module (PCM) Replacement** in Engine Controls - 8.1L.Is action complete?	-	Go to **Step 8**	-
8	1. Use the scan tool in order to clear the DTCs. 2. Operate the vehicle within the Conditions for Running the DTC as specified in the supporting text. Does the DTC reset?	-	Go to **Step 2**	System OK

SYMPTOMS - ENGINE ELECTRICAL

IMPORTANT: The following steps must be completed before using the symptom tables.

- Perform **Diagnostic System Check - Engine Electrical** before using the Symptom Tables in order to verify that all of the following are true:
  - There are no DTCs set.
  - The control module(s) can communicate via the serial data link.
- Review the system operation in order to familiarize yourself with the system functions. Refer to one of the following system operations:
  - **Battery Description and Operation**
  - **Starting System Description and Operation**
  - **Charging System Description and Operation (W/O Generator/Battery Control Module)**

Visual/Physical Inspection

- Inspect for aftermarket devices which could affect the operation of the Starting and Charging Systems. Refer to **Checking Aftermarket Accessories** in Wiring Systems.
- Inspect the easily accessible or visible system components for obvious damage or conditions which could cause the symptom.

Intermittent

Faulty electrical connections or wiring may be the cause of intermittent conditions. Refer to **Testing for Intermittent Conditions and Poor Connections** in Wiring Systems.

cardiagn.com

Symptom List

Refer to a symptom diagnostic procedure from the following list in order to diagnose the symptom:

- **Starter Solenoid Does Not Click**
- **Starter Solenoid Clicks, Engine Does Not Crank**
- **Engine Cranks Slowly**
- **Battery Inspection/Test (Non-HP2)**
- **Charge Indicator Always On**
- **Charge Indicator Inoperative**
- **Charging System Test (CS/AD/SI Generators)**
- **Generator Noise Diagnosis**

BATTERY INSPECTION/TEST (NON-HP2)

Diagnostic Aids

CAUTION: Refer to Battery Disconnect Caution in Cautions and Notices.

IMPORTANT:

- **The battery test using the J 42000 Battery Tester requires correct connections to the battery terminals. See Special Tools and Equipment. A failure to obtain the correct connections during the test may result in a failed test on a good battery.**
- **Use the Out of Vehicle test for each battery when testing a vehicle with dual batteries.**

Follow these instructions in order to avoid an incorrect diagnosis because of connections:

- If testing the vehicle with the battery cables still connected, wiggle the **J 42000** clips on the terminal bolt. See **Special Tools and Equipment**. This may cut through any coating or through any oxidation that may be present on the bolt.

  Even new bolts contain a protective coating that may insulate or cause a resistance in the test circuit.

- If correct connections to the battery terminal bolts in the vehicle are in doubt, perform the following steps:
  1. Disconnect the negative battery cable.
  2. Disconnect the positive battery cable.
  3. Install the test adapters on the terminals.
  4. Follow the instructions for testing a removed battery.
- If the tester displays a REPLACE BATTERY or BAD CELL-REPLACE result for a battery tested in the

cardiagn.com

vehicle with the battery cables connected, perform the following steps:

1. Disconnect the negative battery cable.
2. Disconnect the positive battery cable.
3. Install the tester adapters.

IMPORTANT: Always write the test code displayed by the tester on the repair order for any warranty purposes. The number is a unique code that describes the test data for a particular battery at a particular time. The test code may occasionally repeat when you retest the same battery. More often, each test will result in a different code. Use the test code from the second, or Out of Vehicle test.

4. Follow the instructions for testing a removed battery.
5. Replace the battery only if the second test shows a REPLACE BATTERY or BAD CELL-REPLACE result.

   Use the test code from the second test for any warranty purposes.

- Use the correct terminal adapters.

  Do not use any common bolts or a combination of bolts, of nuts, and of washers as adapters when testing the battery.

  Use the test adapters that are provided with the **J 42000** or GM P/N 12303040 terminal adapters. See **Special Tools and Equipment**. If the adapters that are provided with the **J 42000** require replacement, use GM P/N 12303040. See **Special Tools and Equipment**. Any other adapter may not contact the correct areas of the battery terminal, causing a resistance that may result in an invalid battery test result.

Battery Inspection/Test (Non-HP2)

Step	Action	Value(s)	Yes	No
CAUTION: Refer to **Battery Disconnect Caution** in Cautions and Notices.				
1	Inspect the battery for a cracked, broken, or damaged case, which may be indicated by battery acid leakage. Is the battery OK?	-	Go to **Step 2**	Go to **Step 19**
2	Compare the Cold Cranking Amperage (CCA) and Reserve Capacity (RC) of the battery to the original battery or Original Equipment (OE) specification. Refer to **Battery Usage**. Does the battery meet or exceed the specifications?	-	Go to **Step 3**	Go to **Step 19**
3	Does the hydrometer display a yellow dot?	-	Go to **Step 4**	Go to **Step 5**
	Tap the hydrometer lightly on top with the handle			

cardiagn.com

4	of a small screwdriver in order to dislodge any air bubbles inside the battery. Does the hydrometer still display a yellow dot?	-	Go to **Step 19**	Go to **Step 5**
5	1. Turn OFF the ignition. 2. Attempt to rotate the negative battery cable connector clockwise with light finger pressure. Does the negative connector rotate?	-	Go to **Step 6**	Go to **Step 7**
6	Use a torque wrench in order to verify the torque to loosen the negative battery terminal bolt. Is the torque above the specified value?	10 N.m (88 lb in)	Go to **Step 8**	Go to **Step 7**
7	Disconnect the negative battery cable. Is the cable disconnected?	-	Go to **Step 9**	-
8	1. Disconnect the negative battery cable. 2. Inspect for the following conditions and repair as needed: • The cable bolt is too long or deformed at the end. • There is foreign material present inside the nut in the battery terminal. • Damage to the battery terminal face or cable connector ring. Is the repair complete?	-	Go to **Step 9**	-
9	Rotate the positive battery cable connector clockwise with light finger pressure. Does the positive connector rotate?	-	Go to **Step 10**	Go to **Step 11**
10	Use a torque wrench in order to verify the torque to loosen the positive battery terminal bolt. Is the torque above the specified value?	10 N.m (88 lb in)	Go to **Step 12**	Go to **Step 11**
11	Disconnect the positive battery cable. Is the cable disconnected?	-	Go to **Step 13**	-
12	1. Disconnect the positive battery cable. 2. Inspect for the following conditions and repair as needed: • The cable bolt is too long or deformed at the end. • There is foreign material present inside the nut in the battery terminal. • Damage to the battery terminal face or cable connector ring.	-		

cardiagn.com

	Is the repair complete?		Go to **Step 13**	-
13	1. Clean and wire brush the lead face of both battery terminals and the metal contact rings in both cable connectors. 2. Remove the bolts from the cable connectors in order to provide access to the connector rings as needed. 3. If either of the battery terminals or the cable rings are excessively damaged or corroded, replace as needed. Are the metal connecting parts clean and in good condition?	-	Go to **Step 14**	-
14	1. Connect the positive battery cable to the battery positive terminal. 2. Tighten the cable bolt to the specified value. Is the cable bolt properly tightened?	15 N.m (11 lb ft)	Go to **Step 15**	-
15	1. Connect the negative battery cable to the battery negative terminal. 2. Tighten the cable bolt to the specified value. Is the cable bolt properly tightened?	15 N.m (11 lb ft)	Go to **Step 16**	-
16	**IMPORTANT:** **Ensure that all of the electrical loads are turned OFF.** 1. Install the **J 42000** Battery Tester. See **Special Tools and Equipment**. 2. Follow the directions supplied with the tester. 3. Follow any direction displayed on the tester. Did the tester pass the battery?	-	Go to **Step 17**	Go to **Step 18**
17	1. Press the CODE button on the **J 42000** . See **Special Tools and Equipment**. 2. For warranty purposes, write the displayed code on the repair order. Did you complete this action?	-	Battery OK	-

cardiagn.com

18	1. Press the CODE button on the **J 42000** . See **Special Tools and Equipment**. 2. For warranty purposes, write the displayed code on the repair order. 3. Replace the battery. Refer to **Battery Replacement**. Did you complete the replacement?	-	Battery OK	-
19	Replace the battery. Refer to **Battery Replacement**. Did you complete the replacement?	-	Battery OK	-

BATTERY CHARGING

Tools Required

J 42000 Battery Tester. See **Special Tools and Equipment**.

- For best results, use an automatic taper-rate battery charger with a voltage capability of 16 volts.
- The charging area should be well ventilated.
- Do not charge a battery that appears to be frozen. Allow the battery to warm to room temperature and test it using the **J 42000** before charging. See **Special Tools and Equipment**.

Battery State of Charge

IMPORTANT: Using voltage to determine the batteries state of charge (SOC) is only accurate after the battery has been at rest for 24 hours. This is enough time for the acid in each cell to equalize. If the battery has been charged or discharged in the past 24 hours, the battery SOC will only be an estimate.

The maintenance-free batteries SOC is estimated by reading the voltage of the battery across the battery terminals. Because the voltage is affected by current flow into or out of the battery, the engine must be stopped and all electrical loads turned OFF, including parasitic loads, when checking the voltage. The voltage can also be affected if the battery has just been charged or discharged, so it is important to consider what has happened to the battery in the time just before testing. Use the following procedure to determine the batteries SOC:

1. Be sure all electrical loads are turned OFF.
2. Determine whether the battery has been used in a vehicle or charged within the past 12 hours.
   - If the answer is no, the terminal voltage will be stabilized and no action is necessary before reading the voltage. Skip to step 3.
   - If the answer is yes, terminal voltage will not be stabilized and you should wait 12 hours since the last time the battery was used.
3. Estimate the battery temperature by determining the average temperature to which the battery has been exposed for the past 12 hours.

cardiagn.com

IMPORTANT: The table is accurate to 10 percent only after the battery has been at rest for 12 hours.

4. Measure the battery voltage at the battery terminals. Refer to the following table to determine the SOC according to the estimated battery temperature:

Battery Charging

Battery Voltage	% Charge at 0°C (32°F)	% Charge at 25°C (75°F)
12.75 V	100%	100%
12.7 V	100%	90%
12.6 V	90%	75%
12.45 V	75%	65%
12.2 V	65%	45%
12.0 V	40%	20%

Use the SOC information as follows:

- A battery with a SOC that is below 65 percent must always be recharged before returning it to service or continuing storage.
- A battery with a SOC that is 65 percent or greater is generally considered to be charged enough in order to be returned to normal service or in order to continue storage. However, if the battery is being used in slow traffic or with short drive times, or if the temperature is very hot or very cold, the battery should be fully charged, to at least 90 percent, before returning it to service or continuing storage.

Charging Time Required

The time required to charge a battery will vary depending upon the following factors:

- The battery charger capacity-The higher the charger amperage, the less time it will take to charge the battery.
- The SOC of the battery-A completely discharged battery requires more than twice as much charging time as a half charged battery. In a discharged battery with a voltage below 11 volts, the battery has a very high internal resistance and may only accept a very low current at first. Later, as the charging current causes the acid content to increase in the electrolyte, the charging current will increase. Extremely discharged batteries may not activate the reversed voltage protection in some chargers. Refer to the manufacturer's instructions for operating this circuitry.
- The temperature of the battery-The colder the battery is, the more time it takes to recharge the battery. The charging current accepted by a cold battery is very low at first. As the battery warms, the charging current will increase.

Charging Procedure

NOTE: Turn OFF the ignition when connecting or disconnecting the battery cables, the battery charger or the jumper cables. Failure to do so may damage the PCM or other electronic components.

cardiagn.com

NOTE: Refer to Fastener Notice in Cautions and Notices.

When charging side-terminal batteries with the battery cables connected, connect the charger to the positive cable bolt and to a ground located away from the battery. When charging side-terminal batteries with the battery cables disconnected, install the battery side terminal adapters and connect the charger to the adapters.

Tighten: Tighten the battery side terminal adapters to 15 N.m (11 lb ft).

Use the following procedure to charge the battery:

1. Turn OFF the charger.
2. Ensure that all of the battery terminal connections are clean and tight.
3. Connect the charger positive lead to the battery positive terminal on the battery or the remote jumper stud underhood.

   NOTE: Do not connect the negative charger lead to the housings of other vehicle electrical accessories or equipment. The action of the battery charger may damage such equipment.

4. Connect the negative charger lead to a solid engine ground or to a ground stud in the engine compartment that is connected directly to the battery negative terminal, but away from the battery. If the negative battery cable is disconnected and a terminal adapter is being used, connect directly to the adapter.
5. Turn ON the charger and set to the highest setting for normal charging.
6. Inspect the battery every half hour after starting the battery charger.
   - Charge the battery until the taper-rate charger indicates that the battery is fully charged.
   - Estimate the battery temperature by feeling the side of the battery. If it feels hot to the touch or its temperature is over 45°C (125°F), discontinue charging and allow the battery to cool before resuming charging.
7. After charging, test the battery. Refer to **Battery Inspection/Test (Non-HP2)**.

BATTERY ELECTRICAL DRAIN/PARASITIC LOAD TEST (W/ BCM)

Tools Required

- **J 38758** Parasitic Draw Test Switch. See **Special Tools and Equipment**.
- **J 39200** Digital Multimeter

Battery Electrical Drain

If the vehicle exhibits a low or dead battery after an overnight period, or discharges over a period of 2 or 3 days, the electrical system should be checked for an excessive electrical drain. This is referred to as Parasitic Current Drain.

If a battery needs recharging and no cause is evident, check the vehicle for excessive parasitic current drain.

cardiagn.com

One or more on-board solid state control modules, such as the body control module (BCM) may at some time exhibit a failure mode that causes a high parasitic drain on the vehicle's battery. When the battery is disconnected to install an ammeter, etc., the excessive current drain may not occur once the circuit continuity is restored. Even though cycling the ignition key to the RUN and then to the OFF position may cause such a drain to recur, there may be drains that will not recur unless the vehicle systems are reactivated in a road test. Since the ignition switch must not be rotated to the ACCESSORY, RUN or START position with an ammeter installed between the battery terminal and the battery cable, a current drain test tool must be used as described in the following procedures.

Before starting this procedure, ensure that the ignition switch is in the LOCK position, all electrical accessories are turned OFF, the underhood lamp is disconnected, the door glass is open and the doors are closed.

CAUTION: Refer to Battery Disconnect Caution in Cautions and Notices.

NOTE: **Do not turn the parasitic draw test switch to the OFF position with the engine running. Damage will occur to the vehicle's electrical system.**

NOTE: **The test switch must be in the ON position when removing the fuses in order to maintain continuity in the electrical system. This avoids damaging the digital multimeter due to accidental overloading, such as a door being opened to change a fuse.**

1. Disconnect the battery negative cable. Refer to **Battery Negative Cable Disconnect/Connect Procedure**.

cardiagn.com

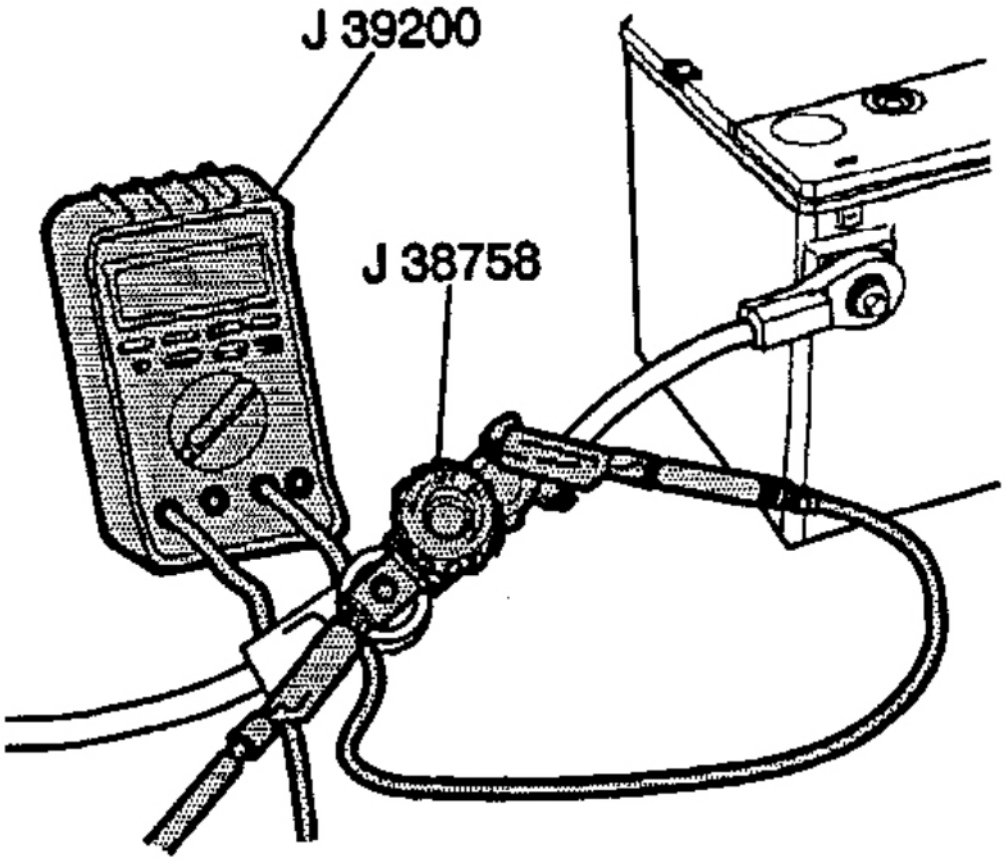

Fig. 6: Connecting J 39200 & J 38758 To Battery Cable
Courtesy of GENERAL MOTORS CORP.

2. Install the male end of the **J 38758** Parasitic Draw Test Switch to the battery negative terminal. See **Special Tools and Equipment**.
3. Turn OFF the test switch.
4. Install the battery negative cable to the female end of the test switch.
5. Turn ON the test switch.
6. Road test the vehicle while activating all accessories, including the radio and the air conditioning.
7. Turn OFF the ignition switch. Remove the key.

IMPORTANT: From this point on, electrical continuity must be maintained in the ground circuit of the battery through the J 38758 in the ON position or through theJ 39200 . See Special Tools and Equipment. The BCM can draw several

cardiagn.com

amps of current after the ignition is turned off. Refer to Body Control System Description and Operation in Body Control System.

8. Install the scan tool and perform the power down now feature from the BCM output menu. After performing this function the scan tool can be powered off or disconnected, then wait an additional 5 minutes before continue testing.
9. Set the **J 39200** Digital Multimeter to the 10 A scale.

IMPORTANT: If an ammeter other than the J 39200 is used, ensure that the vehicle does not have a high current drain that would damage the ammeter when connected to the circuit. This can be done using the following procedure:

1. Connect a jumper wire with an in-line 10 A fuse **J 36169-A** to the terminals of the test switch.
2. Turn the test switch to the OFF position.
3. Wait 10 seconds.
4. If the fuse does not blow, the current is less than 10 A and the ammeter can be used safely.
5. Turn the test switch to the ON position before the fused jumper wire is removed and the multimeter is installed.

10. Connect the ammeter to the test switch terminals.
11. Turn OFF the test switch. This allows the current to flow through the ammeter.
12. Wait at least 60 seconds, then check the current reading.
    - When there is a current reading of 2 A or less, turn ON the test switch, this maintains continuity in the electrical system.
    - Then, switch the meter down to the 2 A scale, for a more accurate reading, when the test switch is reopened.
13. Take the reading in milli-amps.
14. Note the battery reserve capacity. Refer to **Battery Usage**.
    - Divide this number by 4.
    - Compare this to the multimeter reading.
    - The current drain should not exceed this number.
    - Example: If a battery has a reserve capacity of 100 minutes, the current drain should not exceed 25 milli-amps. If the vehicle has 2 batteries, add the reserve capacities together and divide this total by 4.

NOTE: Always turn the test switch knob to the ON position before removing each fuse to maintain continuity in the electrical system and to avoid damaging the meter due to accidental overloading, such as opening a door to change a fuse.

15. When the current draw is too high, remove the electrical system fuses one at a time until the draw returns to a value less than or equal to specifications.
16. Repeat the parasitic current drain test procedure after any repair has been completed.

cardiagn.com

17. When the cause of the excessive current draw has been located and repaired, remove the meter and the parasitic draw test switch and terminal adapters.
18. Connect the negative cable to the battery negative terminal. Refer to **Battery Negative Cable Disconnect/Connect Procedure**.

BATTERY COMMON CAUSES OF FAILURE

A battery is not designed to last forever. With proper care, however, the battery will provide years of good service. If the battery tests good but still fails to perform well, the following are some of the more common causes:

- A vehicle accessory was left on overnight.
- The driving speeds have been slow with frequent stops with many electrical accessories in use, particularly air conditioning, headlights, wipers, heated rear window, cellular telephone, etc.
- The electrical load has exceeded the generator output, particularly with the addition of aftermarket equipment.
- Existing conditions in the charging system, including the following possibilities:
  - A slipping belt
  - A bad generator
- The battery has not been properly maintained, including a loose battery hold down or missing battery insulator if used.
- There are mechanical conditions in the electrical system, such as a short or a pinched wire, attributing to power failure. Refer to **General Electrical Diagnosis Procedures** in Wiring Systems.

Electrolyte Freezing

The freezing point of electrolyte depends on its specific gravity. A fully charged battery will not freeze until the ambient temperature gets below -54°C (-65°F). However, a battery with a low state of charge may freeze at temperatures as high as -7°C (+20°F). Since freezing may ruin a battery, the battery should be protected against freezing by keeping it properly charged. As long as the green eye is visible in the hydrometer, the freezing point of the battery will be somewhere below -32°C (-25°F).

Battery Protection During Vehicle Storage

Certain devices on the vehicle maintain a small continuous current drain on the battery. A battery that is not used for an extended period of time will discharge. Eventually permanent damage will result. Discharged batteries will also freeze in cold weather. Refer to **Battery Inspection/Test (Non-HP2)**.

In order to maintain a battery state of charge while storing the vehicle for more than 30 days:

IMPORTANT: If a green dot is not visible in the hydrometer, charge the battery. Refer to Battery Charging.

1. Ensure that the green dot is visible in the built-in hydrometer.

cardiagn.com

CAUTION: Refer to Battery Disconnect Caution in Cautions and Notices.

2. Disconnect the battery ground to protect the battery from discharge by parasitic current drains.

When the battery cannot be disconnected:

1. Maintain a high state of charge.
2. Establish a regular schedule for recharging the battery every 20-45 days.

A battery that has remained in a discharged state for a long period of time is difficult to recharge or may be permanently damaged.

JUMP STARTING IN CASE OF EMERGENCY (NON HP2)

CAUTION: Batteries produce explosive gases. Batteries contain corrosive acid. Batteries supply levels of electrical current high enough to cause burns. Therefore, in order to reduce the risk of personal injury while working near a battery, observe the following guidelines:

- **Always shield your eyes.**
- **Avoid leaning over the battery whenever possible.**
- **Do not expose the battery to open flames or sparks.**
- **Do not allow battery acid to contact the eyes or the skin.**
  - **Flush any contacted areas with water immediately and thoroughly.**
  - **Get medical help.**

NOTE: This vehicle has a 12 volt, negative ground electrical system. Make sure the vehicle or equipment being used to jump start the engine is also 12 volt, negative ground. Use of any other type of system will damage the vehicle's electrical components.

This vehicle has a 12-volt positive, negative ground electrical system. Do not try to jump start a vehicle, if you are unsure of the other vehicle's positive voltage or ground position. The booster battery and the discharged battery should be treated carefully when using jumper cables.

1. Position the vehicle with the booster battery so that the jumper cables will comfortably reach the battery of the other vehicle.
   - Do not let the 2 vehicles touch.
   - Make sure that the jumper cables do not have loose clamps or missing insulation.
2. Perform the following steps on both vehicles:
   1. Place the automatic transmission in PARK.

cardiagn.com

2. Block the wheels.
3. Set the parking brake.
4. Turn off all electrical loads that are not needed. Leave the hazard flashers ON.
5. Turn OFF the ignition switch.

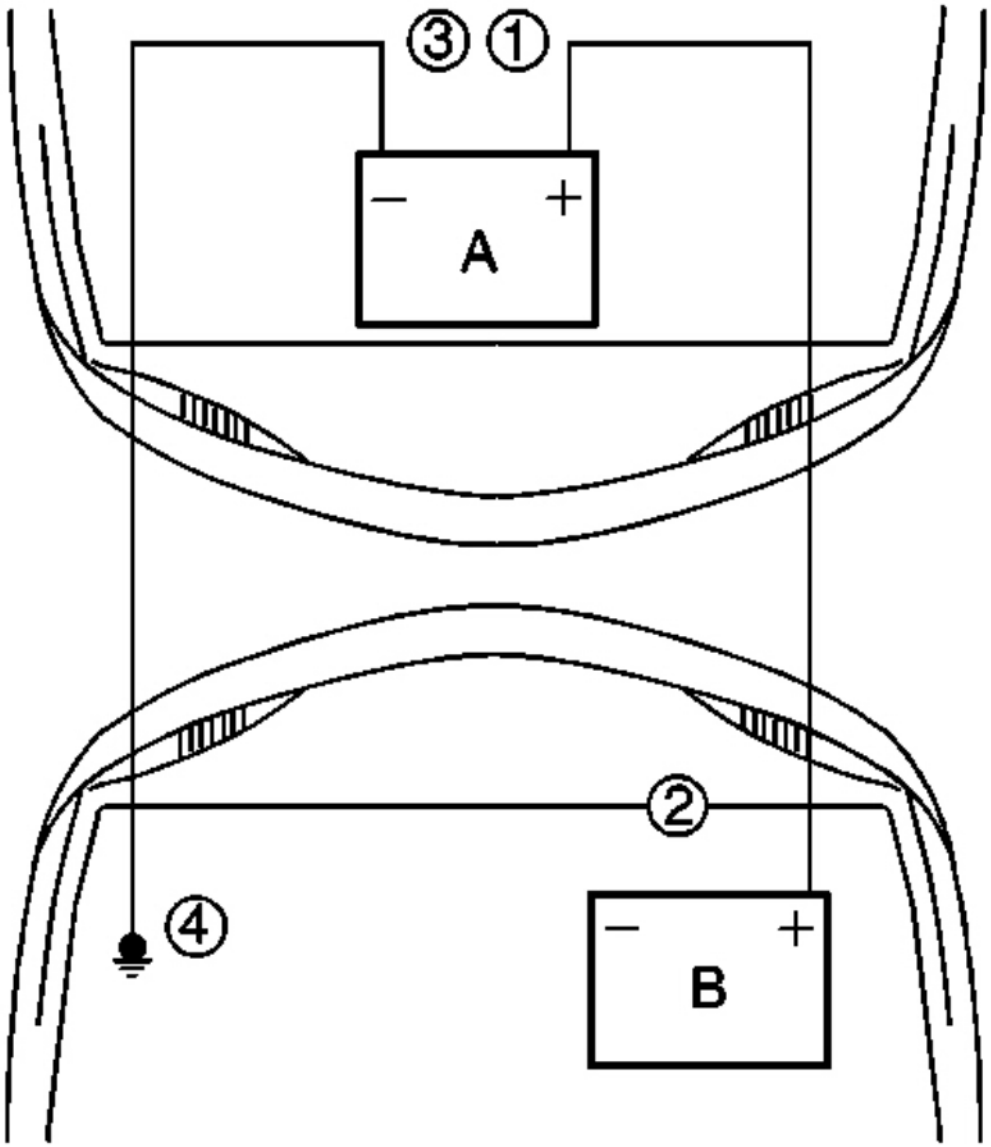

Fig. 7: Identifying Proper Jumper Cable Connection

cardiagn.com

Courtesy of GENERAL MOTORS CORP.

IMPORTANT: Some vehicles have a battery remote positive stud. ALWAYS use the battery remote positive stud in order to give or to receive a jump start. Consult the vehicle's owner's manual for proper connections.

3. Attach the end of one jumper cable to the positive terminal of the discharged battery.
4. Attach the other end of the first cable to the positive terminal of the booster battery.
5. Attach one end of the remaining jumper cable to the negative terminal of the booster battery.

NOTE: Do not connect the negative charger lead to the housings of other vehicle electrical accessories or equipment. The action of the battery charger may damage such equipment.

6. Make the final connection of the negative jumper cable to the block or suitable bracket connected directly to the block, away from the battery.
7. Start the engine of the vehicle that is providing the jump start and turn off all electrical accessories. Raise the engine RPM to approximately 1,500 RPM.
8. Crank the engine of the vehicle with the weak battery.

   If the engine does not crank or cranks too slowly, perform the following steps:

   1. Turn the ignition OFF.
   2. Allow the booster vehicle engine to run at approximately 1,500 RPM for 5 minutes.
   3. Attempt to start the engine of the vehicle with the discharged battery.
9. Reverse the steps exactly when removing the jumper cables. The negative battery cable must first be disconnected from the engine that was jump started.

CHARGING SYSTEM TEST (CS/AD/SI GENERATORS)

Charging System Test (CS/AD/SI Generators)

Step	Action	Value(s)	Yes	No
1	Did you perform the Engine Electrical Diagnostic System Check?	-	Go to **Step 2**	Go to **Diagnostic System Check - Engine Electrical**
2	Start the engine. Observe the charge indicator on the instrument cluster (IPC). Does the charge indicator illuminate or message center (DIC) display a charging system message?	-	Go to **Step 3**	Go to **Symptoms - Engine Electrical**
	IMPORTANT: **The green POWER lamp of the tester should remain illuminated while the tester is being**			

cardiagn.com

3	**used.** 1. Turn OFF the ignition. 2. Connect the red lead of the J 41450-B Universal CS Generator Test Harness to the generator output terminal. 3. Connect the black lead of the J 41450-B to the metal generator housing. Does the green POWER lamp on the tester illuminate?	-	Go to **Step 6**	Go to **Step 4**
4	Measure the voltage from the output terminal of the generator to the generator metal housing. Does the voltage measure equal to the specified value?	12.0 V	Go to **Step 14**	Go to **Step 5**
5	Measure the voltage from the output terminal of the generator to the battery negative terminal. Does the voltage measure equal to the specified value?	12.0 V	Go to **Step 12**	Go to **Step 11**
6	1. Turn OFF completely the load tool before connecting or disconnecting a carbon pile load tester to the battery. Otherwise, sparking at the terminals could cause battery gasses to explode. 2. Connect a carbon pile tester to the vehicle. **IMPORTANT:** **Ensure that all generator output circuit wires pass through the inductive probe.** 3. Connect an inductive ammeter to the output circuit of the generator. 4. Disconnect the generator harness connector. 5. Locate the matching harness connector on the J 41450-B , and connect the connector to the generator. Does the red DIAGNOSTIC lamp on the tester illuminate?	-	Go to **Step 7**	Go to **Step 13**
7	1. Start the engine and allow it to idle for 30 seconds. 2. Increase the engine speed to 2,500 RPM.	-		

cardiagn.com

	Does the red DIAGNOSTIC lamp on the tester illuminate?		Go to **Step 15**	Go to **Step 8**
8	1. Maintain the engine speed at 2,500 RPM. **IMPORTANT:** **If the generator is not capable of producing the Load Test amps, operate the generator at it's maximum possible output.** 2. Turn ON the load of the carbon pile tester and increase the load until the generator output is equal to the Load Test value given in Generator Usage. Does the red DIAGNOSTIC lamp on the tester illuminate?	-	Go to **Step 15**	Go to **Step 9**
9	1. Maintain the engine speed at 2,500 RPM and continue to operate the generator at the load test value. 2. Measure the voltage drop from the output terminal of the generator to the positive terminal on the battery. Refer to **Circuit Testing** and to **Wiring Repairs** in Wiring Systems. Does the voltage measure greater than the specified value?	0.5 V	Go to **Step 11**	Go to **Step 10**
10	1. Maintain the engine speed at 2,500 RPM and continue to operate the generator at the load test value. 2. Measure the voltage drop from the battery negative terminal to the metal housing of the generator. Refer to **Circuit Testing** and to **Wiring Repairs** in Wiring Systems. Does the voltage measure greater than the specified value?	0.5 V	Go to **Step 12**	Go to **Step 16**
11	Repair the high resistance or an open in the output circuit of the generator. Refer to **Circuit Testing** and to **Wiring Repairs** in Wiring Systems. Did you complete the repair?	-	Go to **Step 16**	-
	Repair the high resistance or open in the ground circuit of the generator. Refer to **Circuit Testing**			

cardiagn.com

12	and to **Wiring Repairs** in Wiring Systems. Did you complete the repair?	-	Go to **Step 16**	-
13	1. Disconnect the J 41450-B tester harness connector from the generator, but leave the alligator clips connected so that the green POWER lamp remains illuminated. 2. Connect a jumper lead, with an in-line 100-ohm resistor between the J 41450-B tester harness connector terminal B of the generator and a good ground. Refer to ***Engine Electrical Connector End Views*** . Does the red DIAGNOSTIC lamp illuminate?	-	Go to **Step 15**	Go to **Step 14**
14	There is a problem with the J 41450-B . Refer to the manufacturers instructions, how to test the J 41450-B for proper operation. Has the J 41450-B tester been replaced?	-	Go to **Step 3**	-
15	Replace the generator. Refer to **Generator Replacement (4.8L, 5.3L, and 6.0L Engines)** or **Generator Replacement (8.1L Engine)**. Did you complete the replacement?	-	Go to **Step 16**	-
16	Operate the vehicle in order to verify the repair. Did you correct the condition?	-	System OK	Go to **Step 2**

CHARGE INDICATOR ALWAYS ON

Charge Indicator Always On

Step	Action	Values	Yes	No
1	Did you perform the Engine Electrical Diagnostic System Check?	-	Go to **Step 2**	Go to **Diagnostic System Check - Engine Electrical**
2	Start the engine. Does the battery charge indicator remain illuminated after the 5-second bulb check?	-	Go to **Step 3**	Go to **Testing for Intermittent Conditions and Poor Connections** in Wiring Systems.
3	1. Install a scan tool. 2. With a scan tool, observe the Battery Voltage parameter in the Instrument Panel Cluster data list.	10-15 V		Go to **Charging System Test**

cardiagn.com

	Does the voltage measure within the normal operating range?		Go to **Step 4**	**(CS/AD/SI Generators)**
4	Replace the instrument panel cluster. Refer to **Instrument Panel Cluster (IPC) Replacement** in Instrument Panel, Gages and Console. Did you complete the replacement?	-	Go to **Step 5**	-
5	Operate the system in order to verify the repair. Did you correct the condition?	-	System OK	Go to **Step 2**

CHARGE INDICATOR INOPERATIVE

Charge Indicator Inoperative

Step	Action	Yes	No
1	Did you perform the Diagnostic System Check for Starting and Charging?	Go to **Step 2**	Go to **Diagnostic System Check - Engine Electrical**
2	Turn ON the ignition, with the engine OFF. Does the battery charge indicator illuminate during the bulb check?	Go to **Testing for Intermittent Conditions and Poor Connections** in Wiring Systems	Go to **Step 3**
3	Replace the charge indicator bulb. Refer to **Instrument Panel Cluster (IPC) Replacement** in Instrument Panel, Gages and Console. Did you complete the replacement?	Go to **Step 4**	-
4	Operate the system in order to verify the repair. Did you correct the condition?	System OK	Go to **Step 2**

GENERATOR NOISE DIAGNOSIS

Diagnostic Aids

Noise from a generator may be due to electrical or mechanical noise. Electrical noise magnetic whine usually varies with the electrical load placed on the generator and is a normal operating characteristic of all generators. When diagnosing a noisy generator, it is important to remember that loose or misaligned components around the generator may transmit the noise into the passenger compartment and that replacing the generator may not solve the problem.

Generator Noise Diagnosis

Step	Action	Yes	No
1	Test the generator for proper operation using the Generator Tester. Refer to **Charging System Test (CS/AD/SI Generators)**. Is the generator operating properly?	Go to **Step 2**	Go to **Step 11**
	1. Start the engine. Verify that the noise can be heard.		

cardiagn.com

2	2. Turn OFF the engine. 3. Disconnect the 4-way connector from the generator. 4. Start the engine. 5. Listen for the noise. Has the noise stopped?	Go to **Step 11**	Go to **Step 3**
3	1. Turn OFF the engine. 2. Remove the drive belt. Refer to **Drive Belt Replacement - Accessory** in Engine Mechanical - 4.8L, 5.3L and 6.0L or to **Drive Belt Replacement - Accessory** in Engine Mechanical - 8.1L. 3. Spin the generator pulley by hand. Does the generator shaft spin smoothly and without any roughness or grinding noise?	Go to **Step 4**	Go to **Step 11**
4	Inspect the generator for a loose pulley and/or pulley nut. Is the generator pulley or pulley nut loose?	Go to **Step 11**	Go to **Step 5**
5	1. Loosen all of the generator mounting bolts. 2. Tighten the generator mounting bolts to specifications and in the proper sequence (if necessary). Refer to **Generator Replacement (4.8L, 5.3L, and 6.0L Engines)** or **Generator Replacement (8.1L Engine)**. 3. Install the drive belt. Refer to **Drive Belt Replacement - Accessory** in Engine Mechanical 4.8L, 5.3L and 6.0L or to **Drive Belt Replacement - Accessory** in Engine Mechanical 8.1L. 4. Start the engine. Has the noise decreased or stopped?	System OK	Go to **Step 6**
6	Inspect the generator for the following conditions: • Strained or stretched electrical connections. • Hoses or other vehicle equipment resting on the generator, which may cause the noise to be transmitted into the passenger compartment Are any electrical connections pulling on the generator or are any hoses, etc. resting on the generator?	Go to **Step 7**	Go to **Step 8**
	1. Reroute the electrical connections to relieve the tension.		

cardiagn.com

7	2. Reroute the hoses, etc. away from the generator. 3. Start the engine. Has the noise decreased or stopped?	System OK	Go to **Step 8**
8	Inspect the drive belt for proper tension. Refer to **Drive Belt Tensioner Diagnosis** in Engine Mechanical - 4.8L, 5.3L and 6.0L or to **Drive Belt Tensioner Diagnosis** in Engine Mechanical - 8.1L. Is the drive belt loose?	Go to **Step 9**	Go to **Step 10**
9	1. Replace the drive belt tensioner. Refer to **Drive Belt Tensioner Replacement - Accessory** in Engine Mechanical - 4.8L, 5.3L and 6.0L and to **Drive Belt Tensioner Replacement - Accessory** in Engine Mechanical - 8.1L. 2. Start the engine. Has the noise decreased or stopped?	System OK	Go to **Step 11**
10	Compare the vehicle with a known good vehicle. Do both vehicles make the same noise?	System OK	Go to **Step 11**
11	**IMPORTANT:** **If no definite generator problems were found, be sure that all other possible sources of objectionable noise are eliminated before replacing the generator. Replacing the generator may not change the noise level if the noise is a normal characteristic of the generator or the generator mounting.** Replace the generator. Refer to **Generator Replacement (4.8L, 5.3L, and 6.0L Engines)** or **Generator Replacement (8.1L Engine)**.Has the noise decreased or stopped?	Go to **Step 12**	-
12	Operate the system in order to verify the repair. Did you correct the condition?	System OK	Go to **Step 2**

STARTER SOLENOID DOES NOT CLICK

Starter Solenoid Does Not Click

Step	Action	Yes	No
Schematic Reference: Starting and Charging Schematics			
1	Did you preform the Engine Electrical Diagnostic System Check?	Go to **Step 2**	Go to **Diagnostic System Check - Engine Electrical**
2	Turn the ignition switch to the START position. Does the engine crank?	Go to **Testing for Intermittent Conditions and**	

cardiagn.com

		Poor Connections in Wiring Systems	Go to **Step 3**
3	Turn the ignition switch to the START position. Does the starter motor relay click?	Go to **Step 11**	Go to **Step 4**
4	1. Turn OFF the ignition. 2. Disconnect the powertrain control module (PCM) harness connector. 3. Connect a test lamp between the Crank Voltage circuit of the PCM harness and a good ground. 4. With the transmission in park, turn the ignition switch to the START position. Does the test light illuminate?	Go to **Step 7**	Go to **Step 5**
5	Inspect for poor connections at the PCM connector, Underhood Fuse Block or ignition switch harness connector. Refer to **Testing for Intermittent Conditions and Poor Connections** and **Connector Repairs** in Wiring Systems. Did you find and correct the condition?	Go to **Step 29**	Go to **Step 6**
6	Test the supply voltage circuit of the crank voltage circuit and Crank fuse for an open or high resistance. Refer to **Testing for Intermittent Conditions and Poor Connections** and **Connector Repairs** in Wiring Systems. Did you find and correct the condition?	Go to **Step 29**	Go to **Step 27**
7	1. Turn OFF the ignition. 2. Disconnect the PCM harness connector. 3. Connect a test lamp between the starter enable relay control circuit of the PCM harness and a good ground. 4. Turn the ignition to the START position. Does the test lamp illuminate?	Go to **Step 19**	Go to **Step 8**
8	1. Remove the starter motor relay. 2. Connect a test light from the supply voltage circuit of the starter motor relay coil circuit to ground. 3. With the transmission in park, turn the ignition switch to the START position. Does the test light illuminate?	Go to **Step 9**	Go to **Step 10**
9	1. Connect a test light from the supply voltage circuit of the starter motor relay coil circuit to the control circuit of the starter motor relay coil circuit.		

cardiagn.com

	2. With the transmission in park, turn the ignition switch to the START position. Does the test light illuminate?	Go to **Step 17**	Go to **Step 14**
10	1. Turn OFF the ignition. 2. Disconnect the park neutral position (PNP) switch. Refer to **Park/Neutral Position Switch Replacement** in Automatic Transmission - 4L60-E/4L65-E. 3. Turn ON the ignition, with the engine OFF. 4. Connect a 10-amp fused jumper between the starter motor relay coil control circuits of the PNP switch. 5. With the transmission in PARK, turn the ignition switch to the START position. Does the test lamp illuminate?	Go to **Step 18**	Go to **Step 15**
11	1. Turn OFF the ignition. 2. Disconnect the starter motor relay. 3. Connect a test lamp between the battery positive voltage circuit of the starter motor relay switch circuit and a good ground. Does the test lamp illuminate?	Go to **Step 12**	Go to **Step 23**
12	Connect a 30-amp fused jumper between the battery positive voltage circuit of the starter motor relay switch circuit and the supply voltage circuit of the starter solenoid. Does the engine crank?	Go to **Step 17**	Go to **Step 13**
13	Does the fuse in the jumper open?	Go to **Step 24**	Go to **Step 16**
14	Test the control circuit of the starter motor relay for an open or high resistance. Refer to **Circuit Testing** and **Wiring Repairs** in Wiring Systems. Did you find and correct the condition?	Go to **Step 29**	Go to **Step 25**
15	Test the supply voltage circuit of the starter motor relay coil circuit for an open or high resistance. Refer to **Circuit Testing** and **Wiring Repairs** in Wiring Systems. Did you find and correct the condition?	Go to **Step 29**	Go to **Step 21**
16	Test the supply voltage circuit of the starter solenoid for an open or high resistance. Refer to **Circuit Testing** and **Wiring Repairs** in Wiring Systems. Did you find and correct the condition?	Go to **Step 29**	Go to **Step 22**
17	Inspect for poor connections at the starter motor relay. Refer to **Testing for Intermittent Conditions and Poor**		

cardiagn.com

	Connections and **Connector Repairs** in Wiring Systems. Did you find and correct the condition?	Go to **Step 29**	Go to **Step 25**
18	If equipped with an automatic transmission, inspect for poor connection at the PNP switch harness connector. Refer to **Testing for Intermittent Conditions and Poor Connections** and **Connector Repairs** in Wiring Systems. If OK, perform the **Park/Neutral Position Switch Adjustment** in Automatic Transmission - 4L60-E/4L65-E. Did you find and correct the condition?	Go to **Step 29**	Go to **Step 26**
19	Inspect for poor connections at the harness connector of the PCM. Refer to **Testing for Intermittent Conditions and Poor Connections** and **Connector Repairs** in Wiring Systems. Did you find and correct the condition?	Go to **Step 29**	Go to **Step 20**
20	**IMPORTANT:** **The replacement PCM must be programmed.** Replace the PCM/engine control module (ECM). Refer to **Powertrain Control Module (PCM) Replacement** in Engine Controls - 4.8L, 5.3L, and 6.0L or **Powertrain Control Module (PCM) Replacement** in Engine Controls - 8.1L.Is action complete?	Go to **Step 29**	-
21	Inspect for poor connections at the ignition switch harness connector. Refer to **Testing for Intermittent Conditions and Poor Connections** and **Connector Repairs** in Wiring Systems. Did you find and correct the condition?	Go to **Step 29**	Go to **Step 27**
22	Inspect for poor connections at the starter solenoid. Refer to **Testing for Intermittent Conditions and Poor Connections** and **Connector Repairs** in Wiring Systems. Did you find and correct the condition?	Go to **Step 29**	Go to **Step 28**
23	Repair the open or high resistance in the battery positive voltage circuit of the Starter Motor relay switch circuit. Refer to **Wiring Repairs** in Wiring Systems. Did you complete the repair?	Go to **Step 29**	-
24	Repair the short to ground in the supply voltage circuit of the starter solenoid. Refer to **Wiring Repairs** in Wiring Systems. Did you complete the repair?	Go to **Step 29**	-
25	Replace the Starter Relay. Refer to **Relay Replacement (Within an Electrical Center)** or **Relay Replacement (Attached to Wire Harness)** in Wiring Systems. Did you complete the replacement?	Go to **Step 29**	-
	Replace the PNP switch. Refer to **Park/Neutral Position**		

cardiagn.com

26	**Switch Replacement** in Automatic Transmission - 4L60-E/4L65-E. Did you complete the replacement?	Go to **Step 29**	-
27	Replace the ignition switch. Refer to **Ignition Switch Replacement** in Steering Wheel and Column. Did you complete the replacement?	Go to **Step 29**	-
28	Replace the starter. Refer to **Starter Motor Replacement (4.8L, 5.3L, and 6.0L Engines)** or **Starter Motor Replacement (8.1L Engine)**. Did you complete the replacement?	Go to **Step 29**	-
29	Operate the system for which the symptom occurred. Did you correct the condition?	System OK	Go to **Step 2**

STARTER SOLENOID CLICKS, ENGINE DOES NOT CRANK

Starter Solenoid Clicks, Engine Does Not Crank

Step	Action	Yes	No
Schematic Reference: Starting and Charging Schematics			
1	Did you perform the Engine Electrical Diagnostic System Check?	Go to **Step 2**	**Diagnostic System Check - Engine Electrical**
2	Turn the ignition to the START position. Did the starter solenoid click?	Go to **Step 3**	Go to **Starter Solenoid Does Not Click**
3	Inspect the engine and belt drive system for mechanical binding seized engine, seized generator. Does the engine move freely?	Go to **Step 4**	Go to **Symptoms - Engine Mechanical** in Engine Mechanical - 4.8L, 5.3L and 6.0L or to **Symptoms - Engine Mechanical** in Engine Mechanical - 8.1L
4	Test the battery positive cable between the battery and the starter solenoid for high resistance. Refer to **Circuit Testing** and **Wiring Repairs** in Wiring Systems. Did you find and correct the condition?	Go to **Step 8**	Go to **Step 5**
5	Test the ground circuit between the battery and the starter motor for a high resistance. Refer to **Circuit Testing** and **Wiring Repairs** in Wiring Systems. Did you find and correct the condition?	Go to **Step 8**	Go to **Step 6**
6	Inspect for poor connections at the starter. Refer to **Testing for Intermittent Conditions and Poor**		

cardiagn.com

	Connections and **Connector Repairs** in Wiring Systems. Did you find and correct the condition?	Go to **Step 8**	Go to **Step 7**
7	Replace the Starter. Refer to **Starter Motor Replacement (4.8L, 5.3L, and 6.0L Engines)** or **Starter Motor Replacement (8.1L Engine)**. Did you complete the replacement?	Go to **Step 8**	-
8	Operate the system for which the symptom occurred. Did you correct the condition?	System OK	Go to **Step 2**

ENGINE CRANKS SLOWLY

Perform the following checks:

- Battery - Battery Inspection/Test. Refer to **Battery Inspection/Test (Non-HP2)**.
- Wiring - Inspect the wiring for damage. Inspect all connections to the starter motor, solenoid, battery, and all ground connections. Refer to **Circuit Testing** , **Wiring Repairs** , **Testing for Intermittent Conditions and Poor Connections** and **Connector Repairs** in Wiring Systems.
- Engine - Make sure the engine is not seized. Refer to **Symptoms - Engine Mechanical** or **Symptoms - Engine Mechanical** in Engine Mechanical.

If the battery, the wiring and the engine are functioning properly and the engine continues to crank slowly, replace the starter motor. Refer to **Starter Motor Replacement (4.8L, 5.3L, and 6.0L Engines)** or **Starter Motor Replacement (8.1L Engine)**.

STARTER MOTOR NOISE DIAGNOSIS

Diagnostic Aids

- Inspect the flywheel ring gear for damage or unusual wear.
- Shim the starter if applicable.
- In order to add pinion to ring gear clearance a full size shim must be used. Do not shim only 1 starter mounting bolt. There are 3 shims available in different shapes for clearance. All are 1 mm (0.039 in) thick.

Starter Motor Noise Diagnosis

Step	Action	Yes	No
1	Did you perform the Engine Electrical Diagnostic System Check?	Go to **Step 2**	Go to **Diagnostic System Check - Engine Electrical**
2	Start the engine. Does the starter operate normally?	Go to **Testing for Intermittent Conditions and Poor Connections** in Wiring Systems	Go to **Step 3**
	Start the engine while listening to the starter motor turn.		

cardiagn.com

3	Is there a loud "whoop", it may sound like a siren if the engine is revved while the starter is engaged after the engine starts, but while the starter is still held in the engaged position?	Go to **Step 6**	Go to **Step 4**
4	Do you hear a "rumble", a "growl", or, in some cases, a "knock" as the starter is coasting down to a stop after starting the engine?	Go to **Step 7**	Go to **Step 5**
5	This is often diagnosed as a starter drive gear hang-in or a weak solenoid. When the engine is cranked, do you hear a high-pitched whine after the engine cranks and starts normally?	Go to **Step 6**	Go to **Step 7**
6	Inspect the flywheel ring gear for the following: • Chipped gear teeth • Missing gear teeth • Milled teeth Is the flywheel bent, or does it have damaged teeth?	Go to **Step 8**	Go to **Step 9**
7	1. Remove the starter motor. Refer to **Starter Motor Replacement (4.8L, 5.3L, and 6.0L Engines)** or **Starter Motor Replacement (8.1L Engine)**. 2. Inspect the starter motor bushings and clutch gear. Does the clutch gear have chipped or milled teeth or worn bushings?	Go to **Step 9**	Go to **Step 8**
8	Replace the flywheel. Refer to **Engine Flywheel Replacement** in Engine Mechanical - 4.8L, 5.3L and 6.0L or to **Engine Flywheel Replacement** in Engine Mechanical - 8.1L. Did you complete the replacement?	Go to **Step 10**	-
9	Replace the starter motor. Refer to **Starter Motor Replacement (4.8L, 5.3L, and 6.0L Engines)** or **Starter Motor Replacement (8.1L Engine)**. Did you complete the replacement?	Go to **Step 10**	-
10	Operate the system in order to verify the repair. Did you correct the condition?	System OK	Go to **Step 3**

REPAIR INSTRUCTIONS

BATTERY NEGATIVE CABLE DISCONNECT/CONNECT PROCEDURE

Removal Procedure

cardiagn.com

CAUTION: Refer to Battery Disconnect Caution in Cautions and Notices.

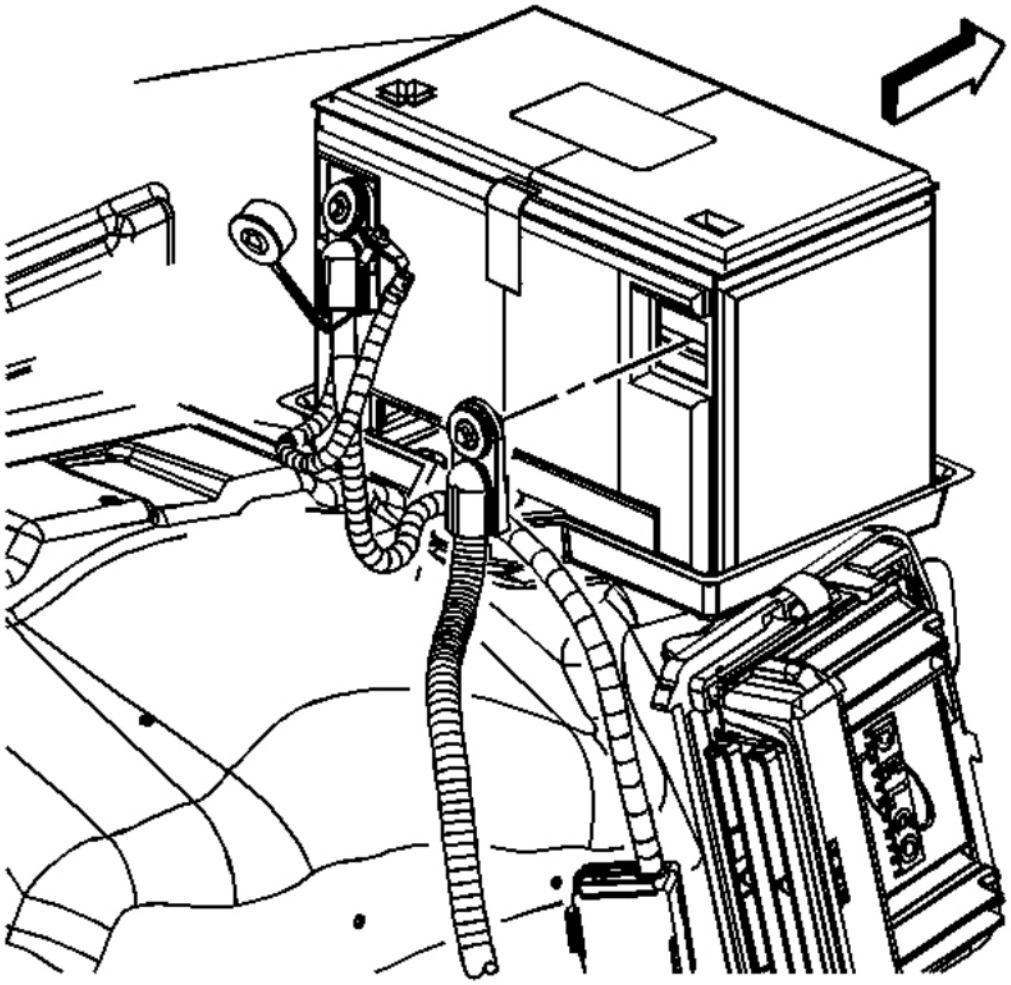

Fig. 8: View Of Negative Battery Cable At Battery
Courtesy of GENERAL MOTORS CORP.

1. Turn off all the lamps and accessories.
2. Turn the ignition OFF.
3. Loosen the negative cable bolt.
4. Remove the battery cable from the battery.

Installation Procedure

cardiagn.com

CAUTION: Refer to Battery Disconnect Caution in Cautions and Notices.

IMPORTANT: Clean any existing corrosion from the battery terminal bolt flange and the battery cable end.

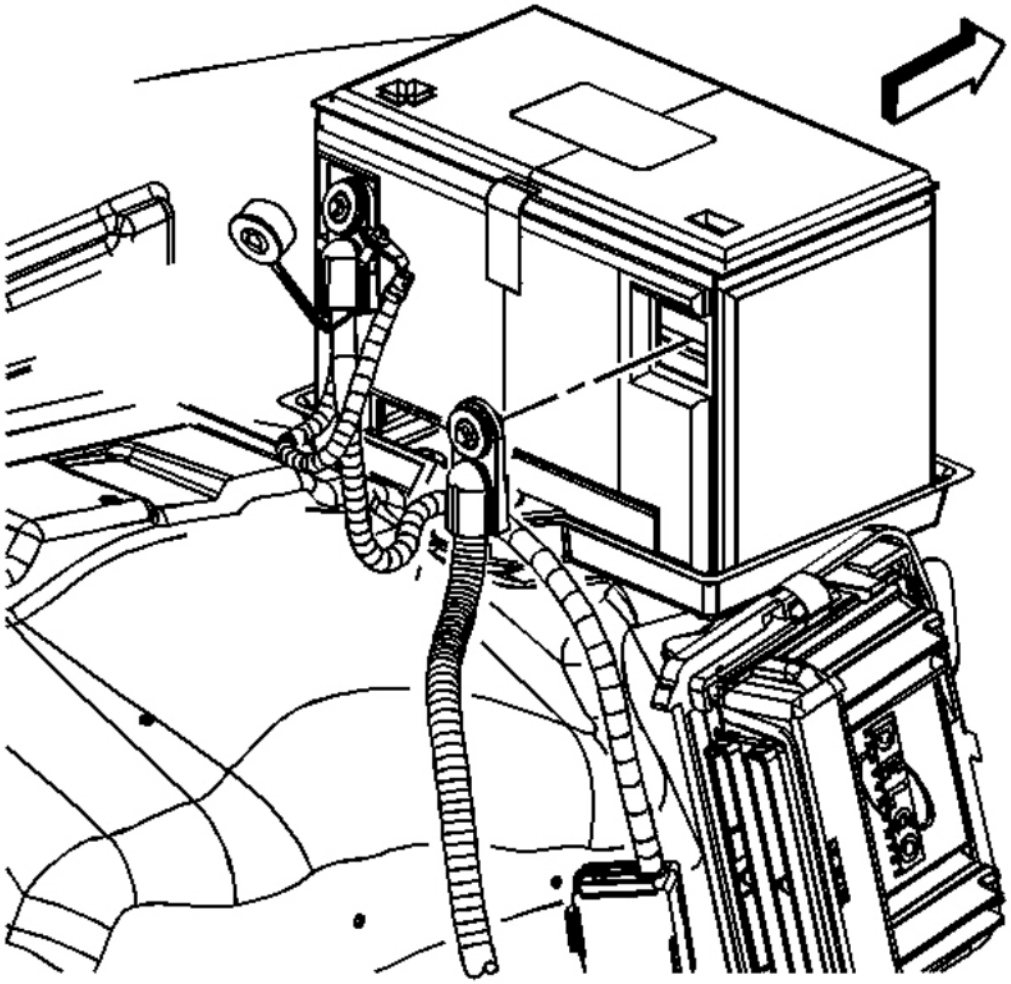

Fig. 9: View Of Negative Battery Cable At Battery
Courtesy of GENERAL MOTORS CORP.

NOTE: Refer to Fastener Notice in Cautions and Notices.

cardiagn.com

1. Install the battery cable to the battery.
2. Tighten the negative cable bolt.

   Tighten: Tighten the bolt to 17 N.m (13 lb ft).

BATTERY NEGATIVE CABLE REPLACEMENT

Removal Procedure

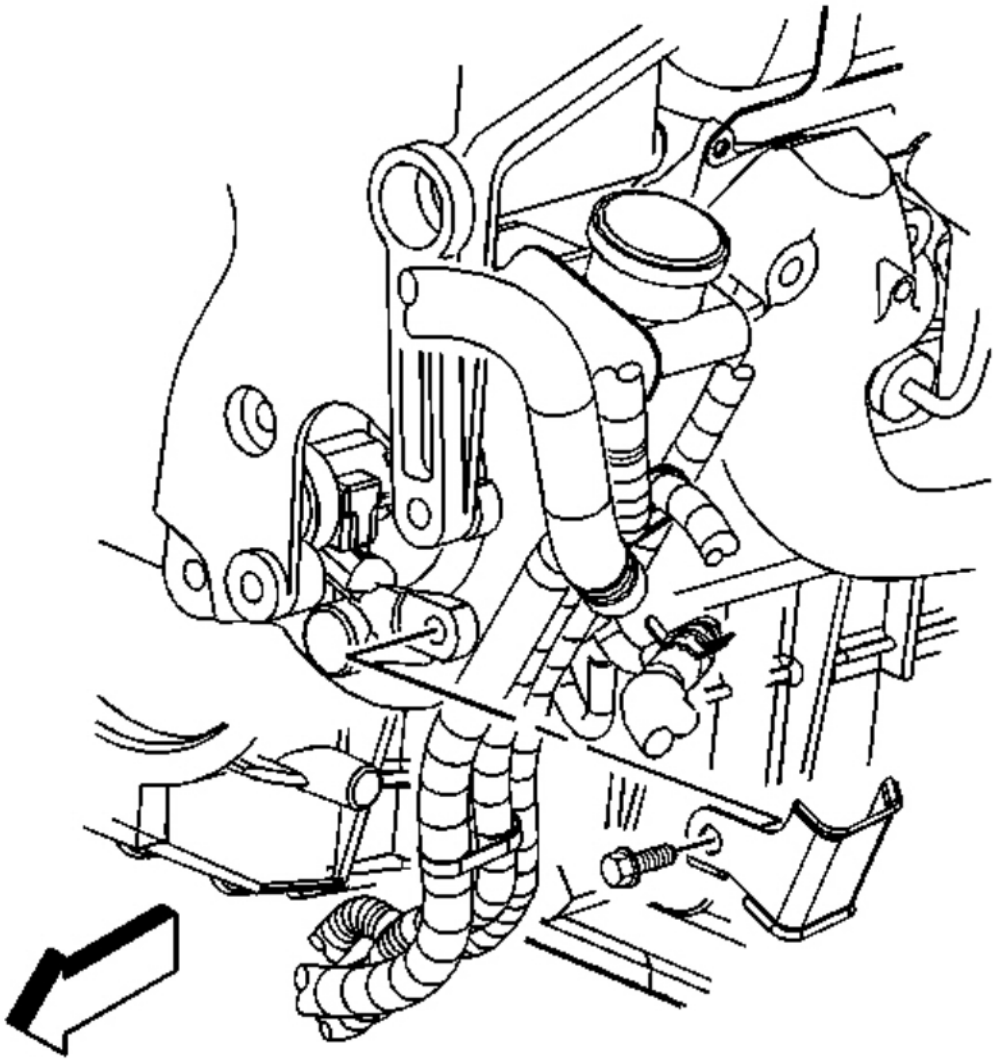

cardiagn.com

Fig. 10: View Of Power Steering Pump Battery Cable Bracket & Bolt
Courtesy of GENERAL MOTORS CORP.

1. Disconnect the negative battery cable. Refer to **Battery Negative Cable Disconnect/Connect Procedure**.
2. If necessary, remove the left front wheel house panel. Refer to **Wheelhouse Panel Replacement** .
3. If equipped with a 4.8L, 5.3L, or 6.0L engine, remove the battery cable bracket bolt and bracket from the power steering pump.

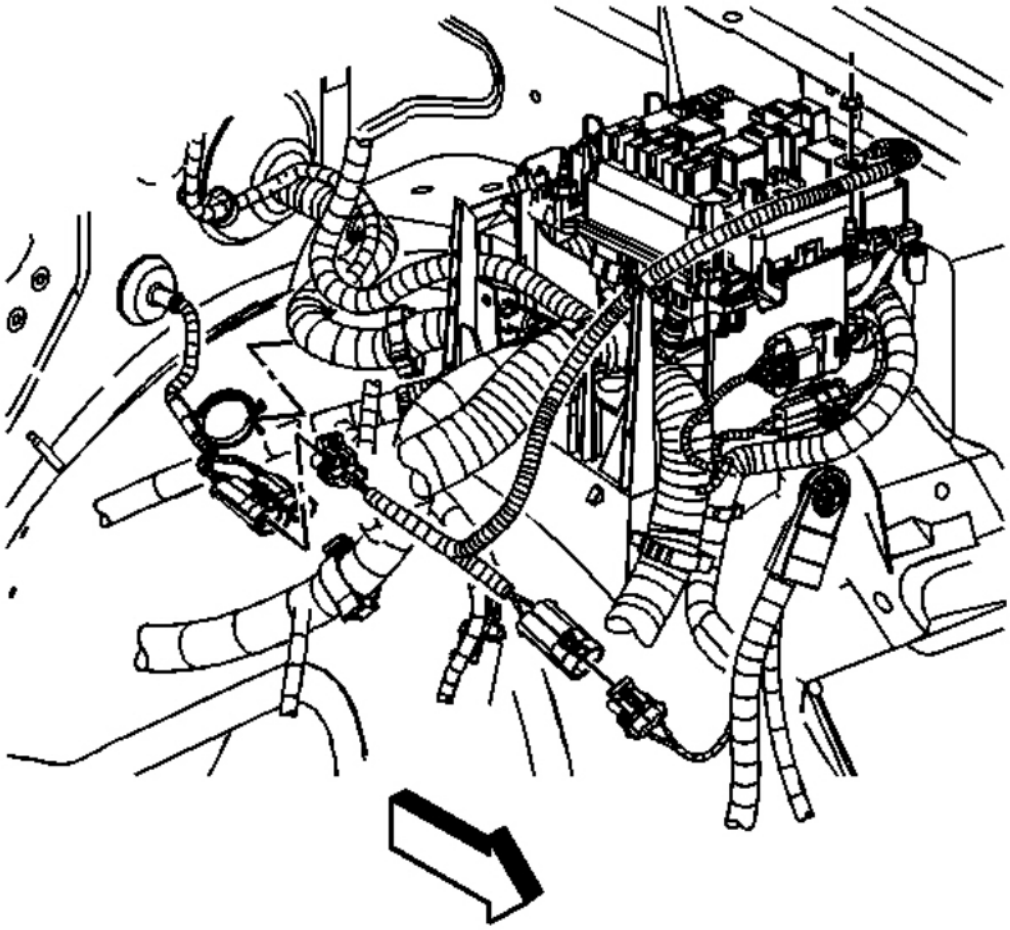

Fig. 11: View Of Accessory Power Fuse Block Front Wiring Harness Electrical Connector
Courtesy of GENERAL MOTORS CORP.

4. If equipped, disconnect the accessory power fuse block front wiring harness electrical connector from the negative cable connector.

cardiagn.com

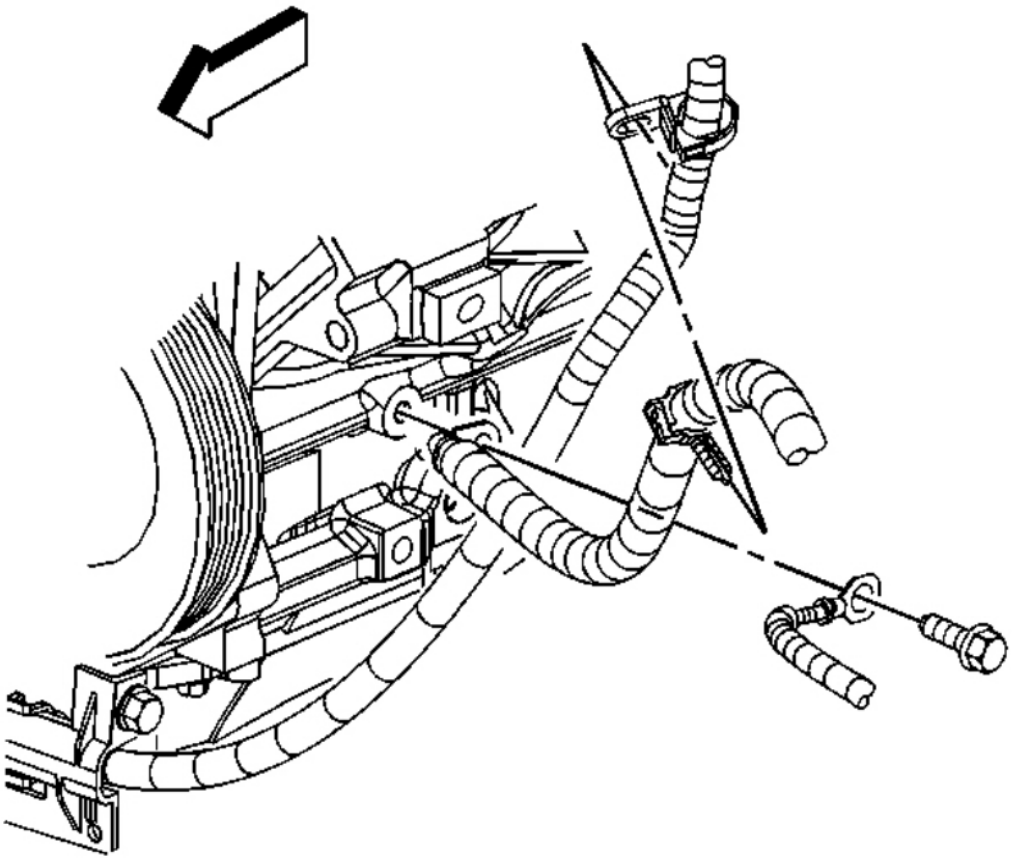

Fig. 12: View Of Negative Cable Clip & Engine Wiring Harness Ground/Negative Cable Bolt (4.8L, 5.3L & 6.0L)
Courtesy of GENERAL MOTORS CORP.

5. If equipped with a 4.8L, 5.3L, or 6.0L engine, perform the following:
    1. Remove the negative cable clip from the positive cable clip.
    2. Raise and suitably support the vehicle. Refer to **Lifting and Jacking the Vehicle** in General Information.
    3. Remove the engine wiring harness ground/negative cable bolt.

cardiagn.com

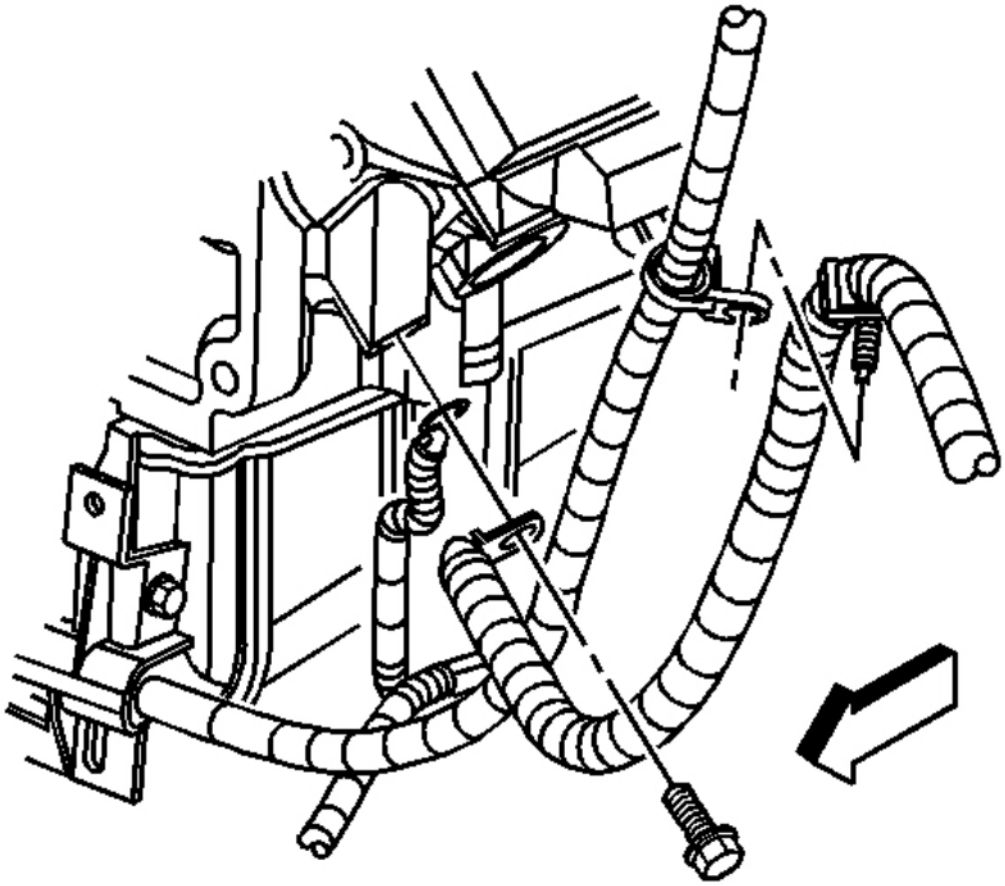

Fig. 13: View Of Negative Cable Clip & Engine Wiring Harness Ground/Negative Cable Bolt (8.1L)
Courtesy of GENERAL MOTORS CORP.

6. If equipped with a 8.1L engine, perform the following:
    1. Remove the negative cable clip from the positive cable clip.
    2. Raise and suitably support the vehicle. Refer to **Lifting and Jacking the Vehicle** in General Information.
    3. Remove the engine wiring harness ground/negative cable bolt.
    4. Reposition the wiring harness ground and negative cables.

cardiagn.com

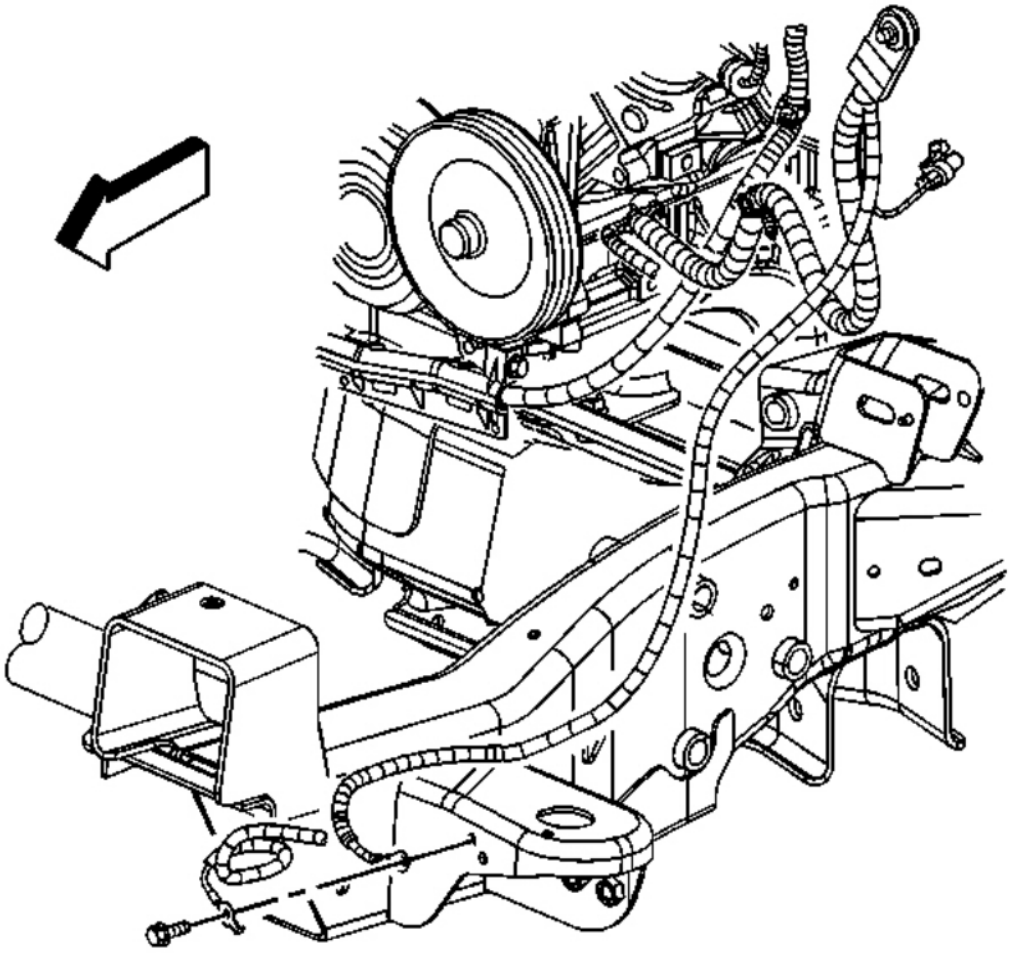

Fig. 14: View Of Forward Lamp Wiring Harness Ground/Negative Cable & Bolt
Courtesy of GENERAL MOTORS CORP.

7. Remove the forward lamp wiring harness ground/negative cable bolt.
8. Remove the negative battery cable.

Installation Procedure

cardiagn.com

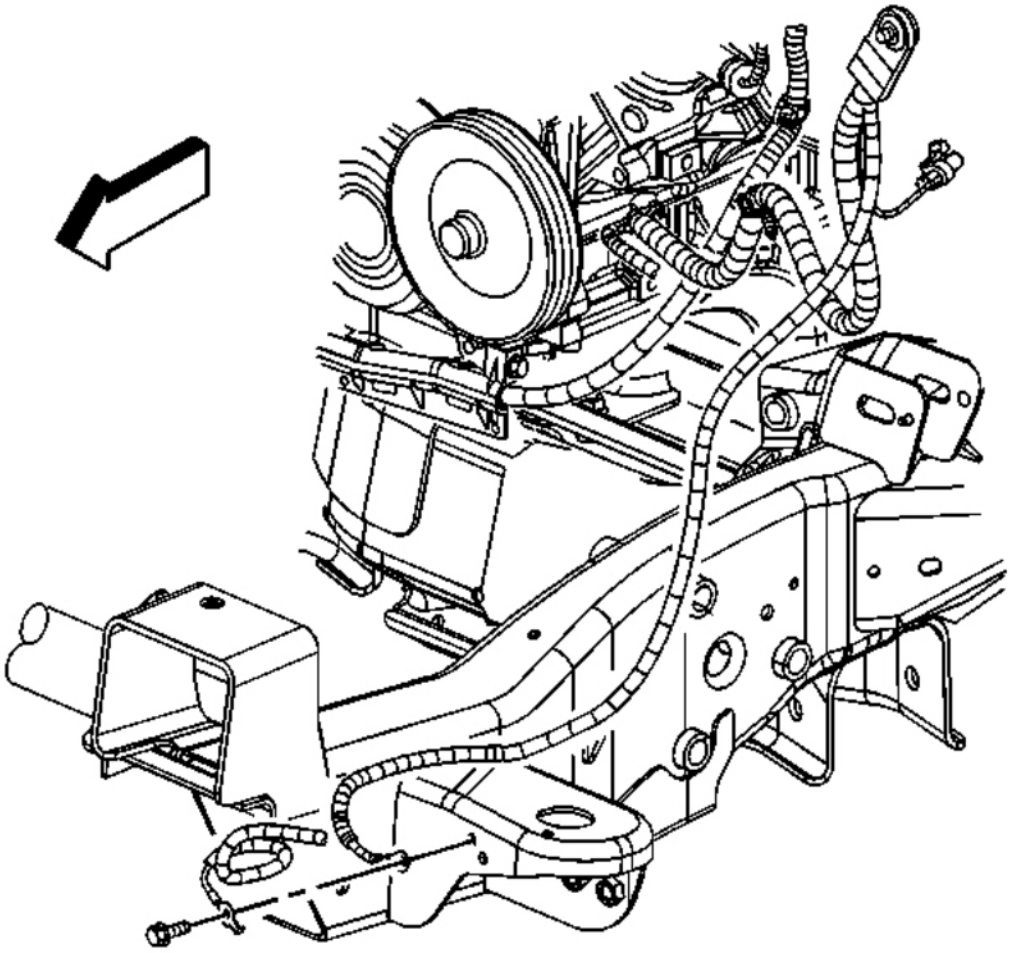

Fig. 15: View Of Forward Lamp Wiring Harness Ground/Negative Cable & Bolt
Courtesy of GENERAL MOTORS CORP.

1. Install the negative battery cable.
2. Position the negative cable and forward lamp wiring harness ring terminals to the frame.

   Insert the anti-rotation tab on the forward lamp wiring harness into the hole in the frame.

   NOTE: Refer to Fastener Notice in Cautions and Notices.

3. Install the forward lamp wiring harness ground/negative cable bolt.

   Tighten: Tighten the bolt to 9 N.m (80 lb in).

cardiagn.com

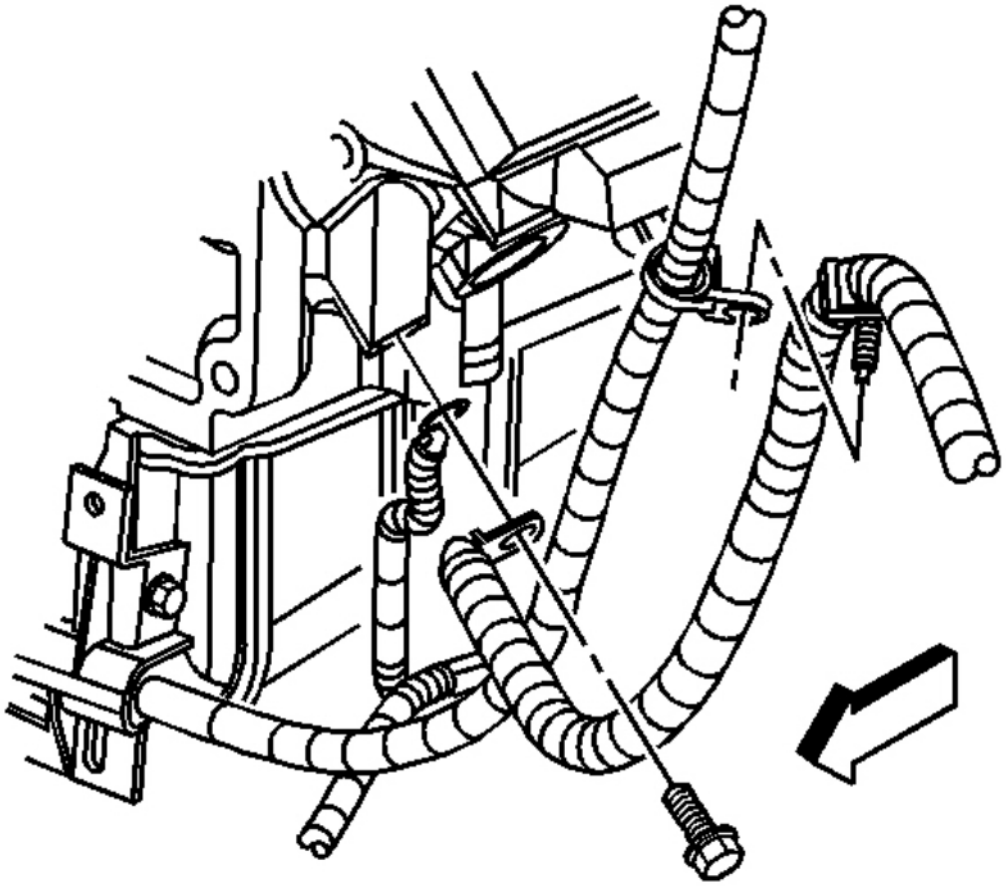

Fig. 16: View Of Negative Cable Clip & Engine Wiring Harness Ground/Negative Cable Bolt (8.1L)
Courtesy of GENERAL MOTORS CORP.

IMPORTANT: The engine wiring harness ground is to be installed under the negative cable ground.

4. If equipped with a 8.1L engine, perform the following:
   1. Position the wiring harness ground and negative cables. Position the anti-rotation tab on the negative cable in the correct location.
   2. Install the engine wiring harness ground/negative cable bolt.

      Tighten: Tighten the bolt to 25 N.m (18 lb ft).

   3. Lower the vehicle.

cardiagn.com

4. Install the negative cable clip to the positive cable clip.

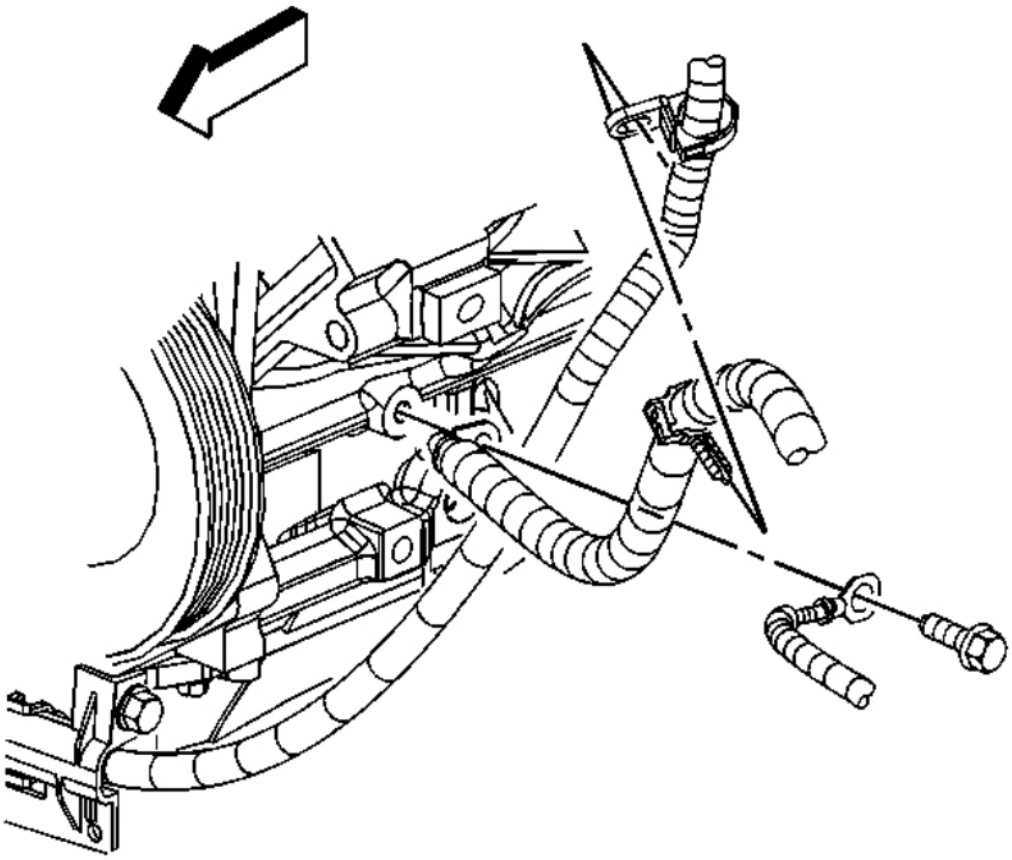

Fig. 17: View Of Negative Cable Clip & Engine Wiring Harness Ground/Negative Cable Bolt (4.8L, 5.3L & 6.0L)
Courtesy of GENERAL MOTORS CORP.

5. If equipped with a 4.8L, 5.3L, or 6.0L engine, perform the following:
   1. Position the negative cable and engine wiring harness ring terminals to the engine block. Position the anti-rotation tab on the negative cable in the correct location.
   2. Install the engine wiring harness ground/negative cable bolt.

      Tighten: Tighten the bolt to 25 N.m (18 lb ft).

   3. Lower the vehicle.
   4. Install the negative cable clip to the positive cable clip.

cardiagn.com

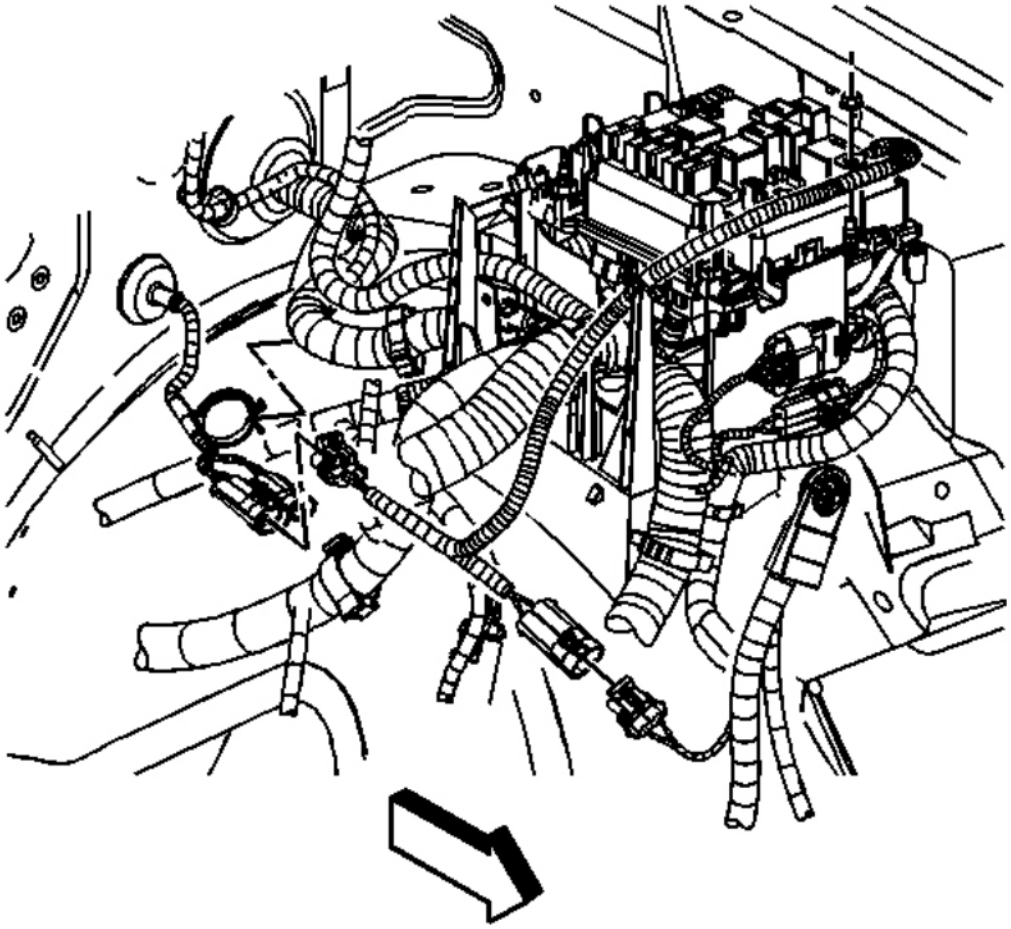

Fig. 18: View Of Accessory Power Fuse Block Front Wiring Harness Electrical Connector
Courtesy of GENERAL MOTORS CORP.

6. If equipped, connect the accessory power fuse block front wiring harness electrical connector to the negative cable connector.

cardiagn.com

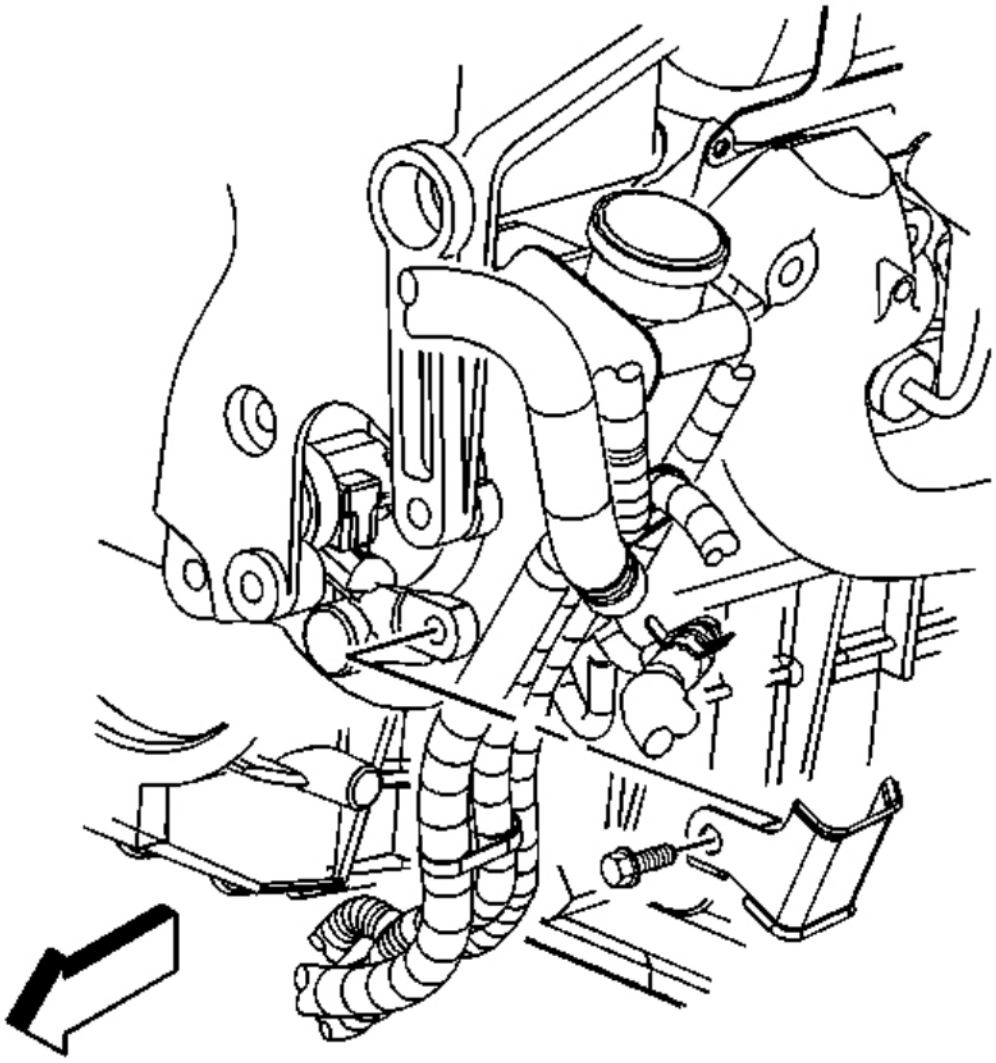

Fig. 19: View Of Power Steering Pump Battery Cable Bracket & Bolt
Courtesy of GENERAL MOTORS CORP.

7. Install the battery cable bracket and bolt to the power steering pump.

   Tighten: Tighten the bolt to 25 N.m (18 lb ft).

8. If necessary, install the left front wheel house panel. Refer to **Wheelhouse Panel Replacement** .
9. Connect the negative battery cable. Refer to **Battery Negative Cable Disconnect/Connect Procedure**.

cardiagn.com

BATTERY POSITIVE CABLE REPLACEMENT

Removal Procedure

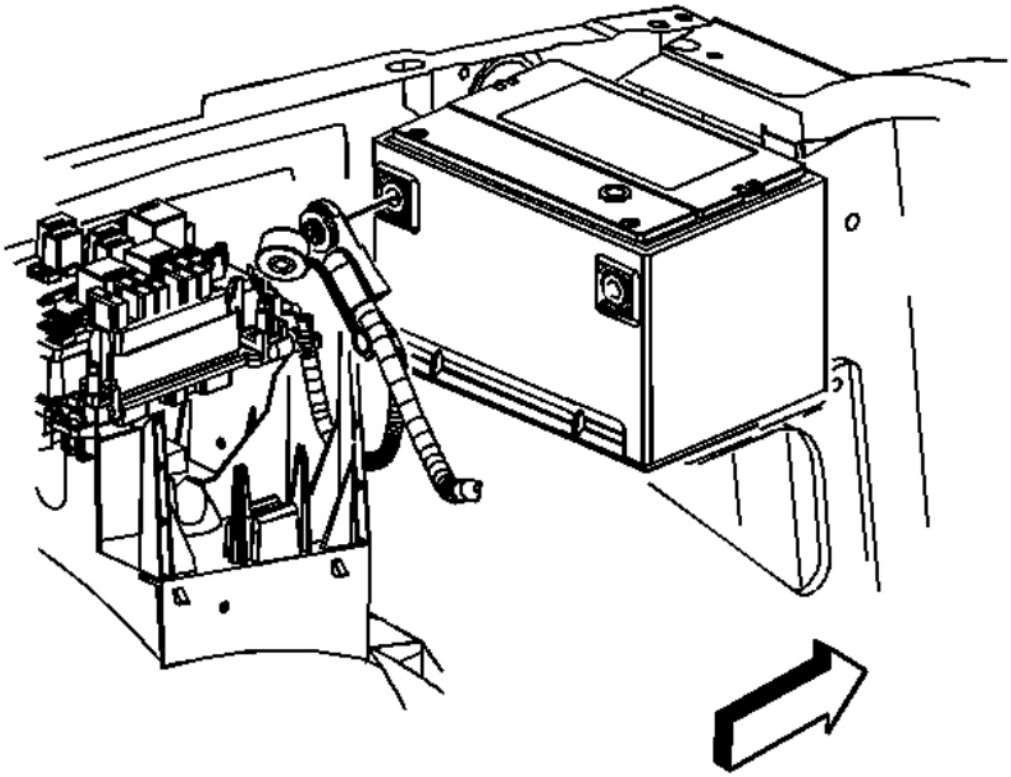

Fig. 20: View Of Battery & Positive Battery Cable
Courtesy of GENERAL MOTORS CORP.

1. Disconnect the negative battery cable. Refer to **Battery Negative Cable Disconnect/Connect Procedure**.
2. Unsnap the positive battery cable cap.
3. Disconnect the positive battery cable.

cardiagn.com

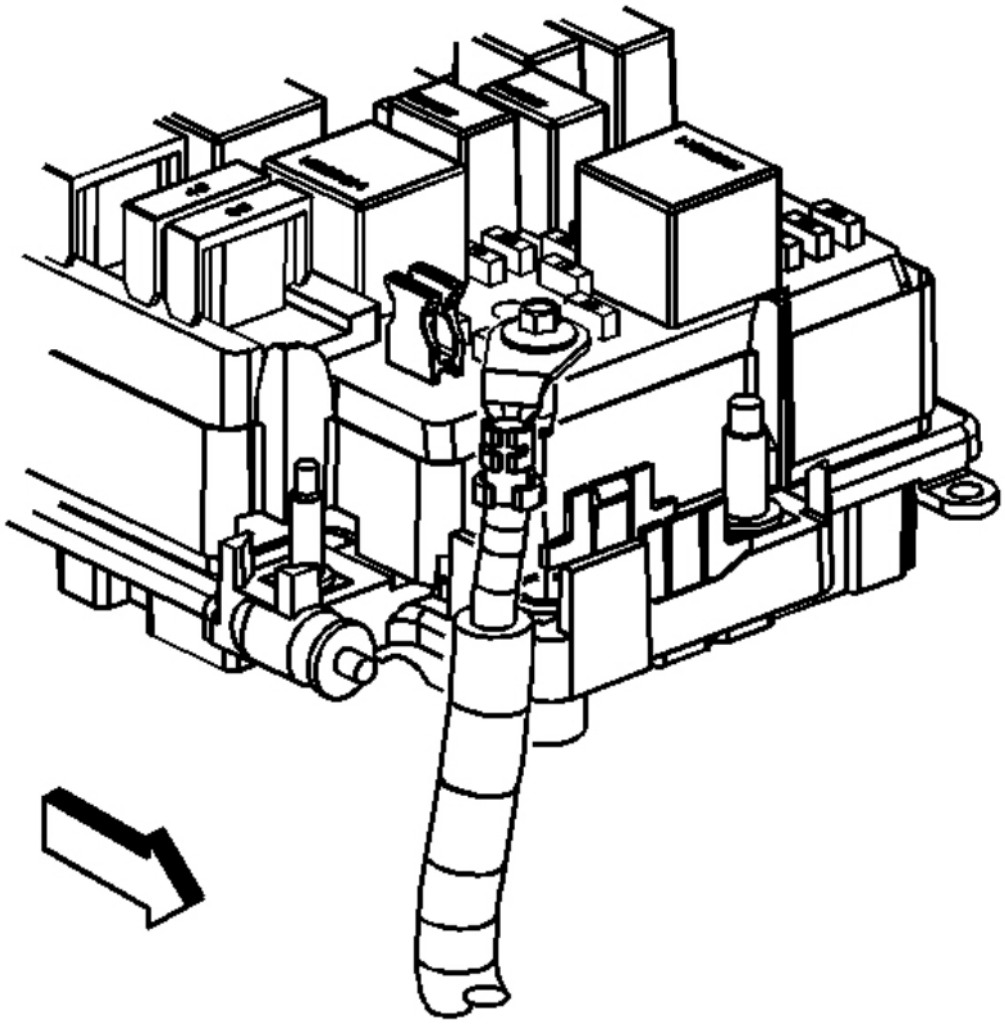

Fig. 21: View Of Underhood Bussed Electrical Center Positive Cable Bolt
Courtesy of GENERAL MOTORS CORP.

IMPORTANT: The bolt is integral to the battery cable and is not removable.

4. Loosen the positive battery cable bolt at the underhood bussed electrical center (UBEC).

cardiagn.com

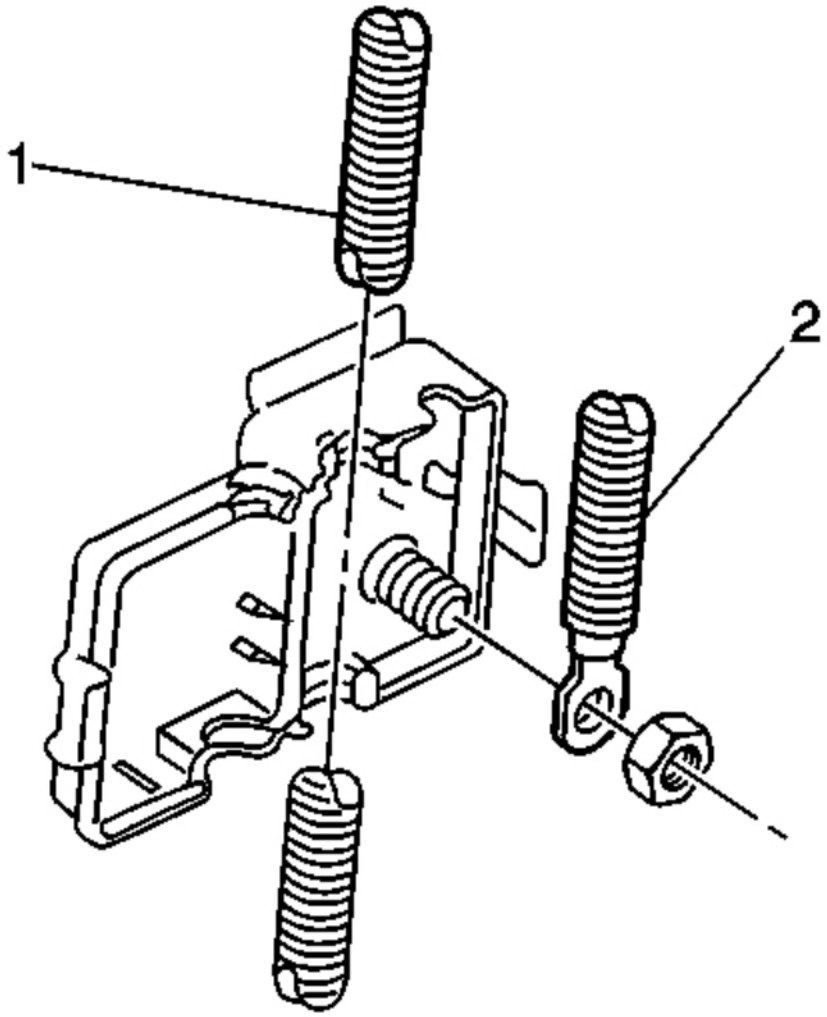

Fig. 22: View Of Battery Cables At Junction Block
Courtesy of GENERAL MOTORS CORP.

5. If necessary, remove the engine sight shield. Refer to **Engine Sight Shield Replacement (4.8L, 5.3L, and 6.0L (RPO LQ4))** or **Engine Sight Shield Replacement (6.0L (RPO LQ9))** in Engine Mechanical - 4.8L, 5.3L, and 6.0L, or **Engine Sight Shield Replacement** in Engine Mechanical - 8.1L.
6. Unsnap the junction block cover.
7. Remove the positive battery cable (1) from the junction block.

cardiagn.com

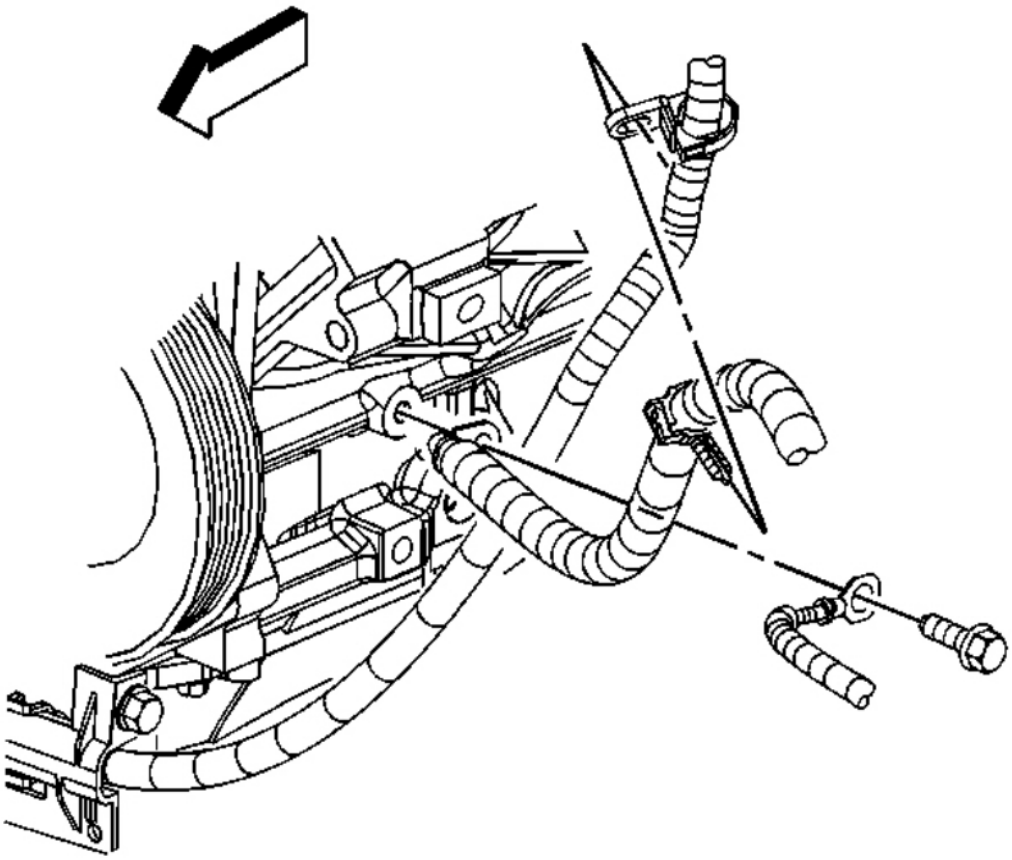

Fig. 23: View Of Negative Cable Clip & Engine Wiring Harness Ground/Negative Cable Bolt (4.8L, 5.3L & 6.0L)
Courtesy of GENERAL MOTORS CORP.

8. If equipped with a 4.8L, 5.3L, or 6.0L engine, remove the negative cable clip from the positive cable clip.
9. Raise and suitably support the vehicle. Refer to **Lifting and Jacking the Vehicle** in General Information.

cardiagn.com

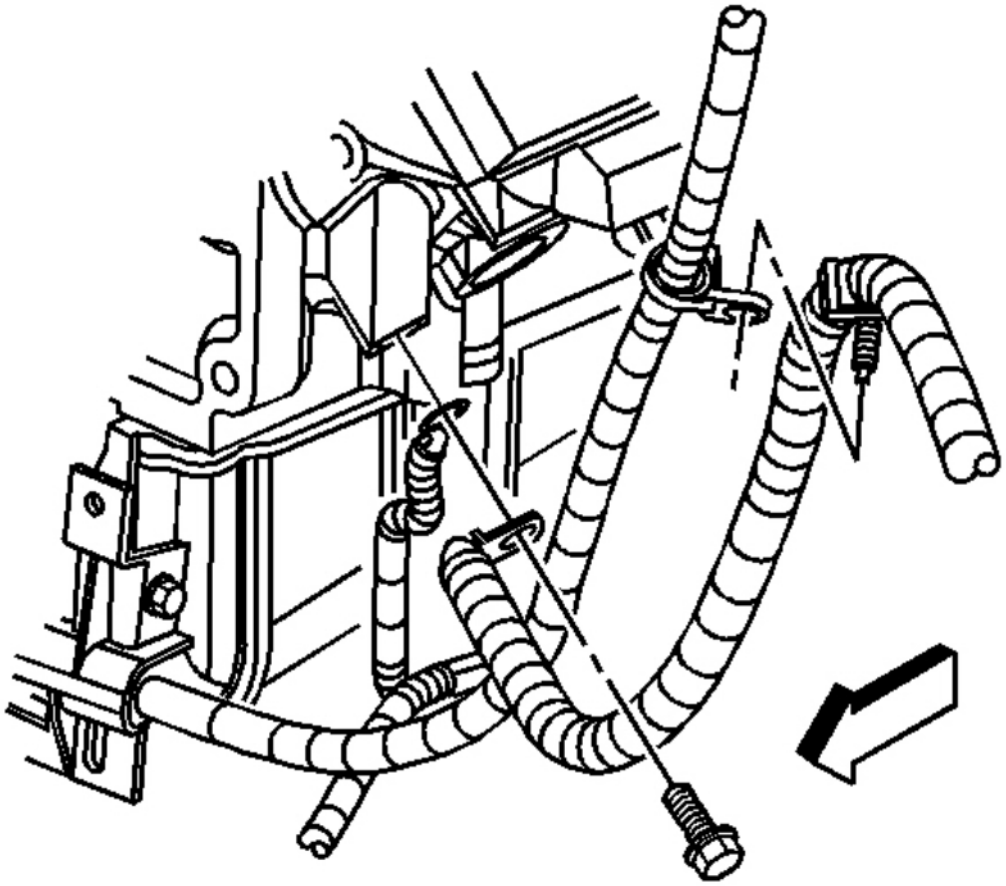

Fig. 24: View Of Negative Cable Clip & Engine Wiring Harness Ground/Negative Cable Bolt (8.1L)
Courtesy of GENERAL MOTORS CORP.

10. If equipped with a 8.1L engine, remove the negative cable clip from the positive cable clip.
11. Raise and suitably support the vehicle. Refer to **Lifting and Jacking the Vehicle** in General Information.

cardiagn.com

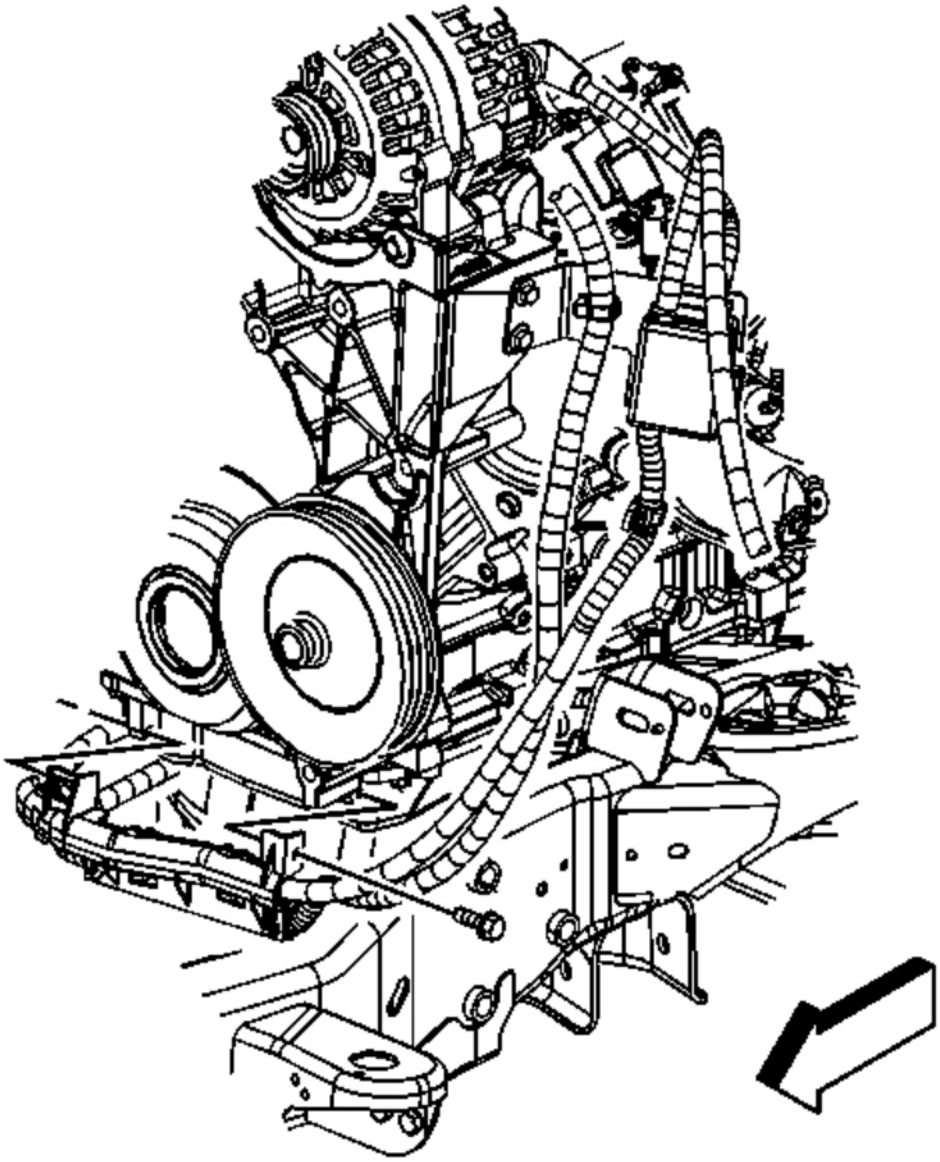

Fig. 25: View Of Positive Battery Cable, Channel & Bolt
Courtesy of GENERAL MOTORS CORP.

12. Remove the positive battery cable channel bolt.
13. Slide the channel pin out of the oil pan tab.
14. Remove the positive battery cable from the channel.

cardiagn.com

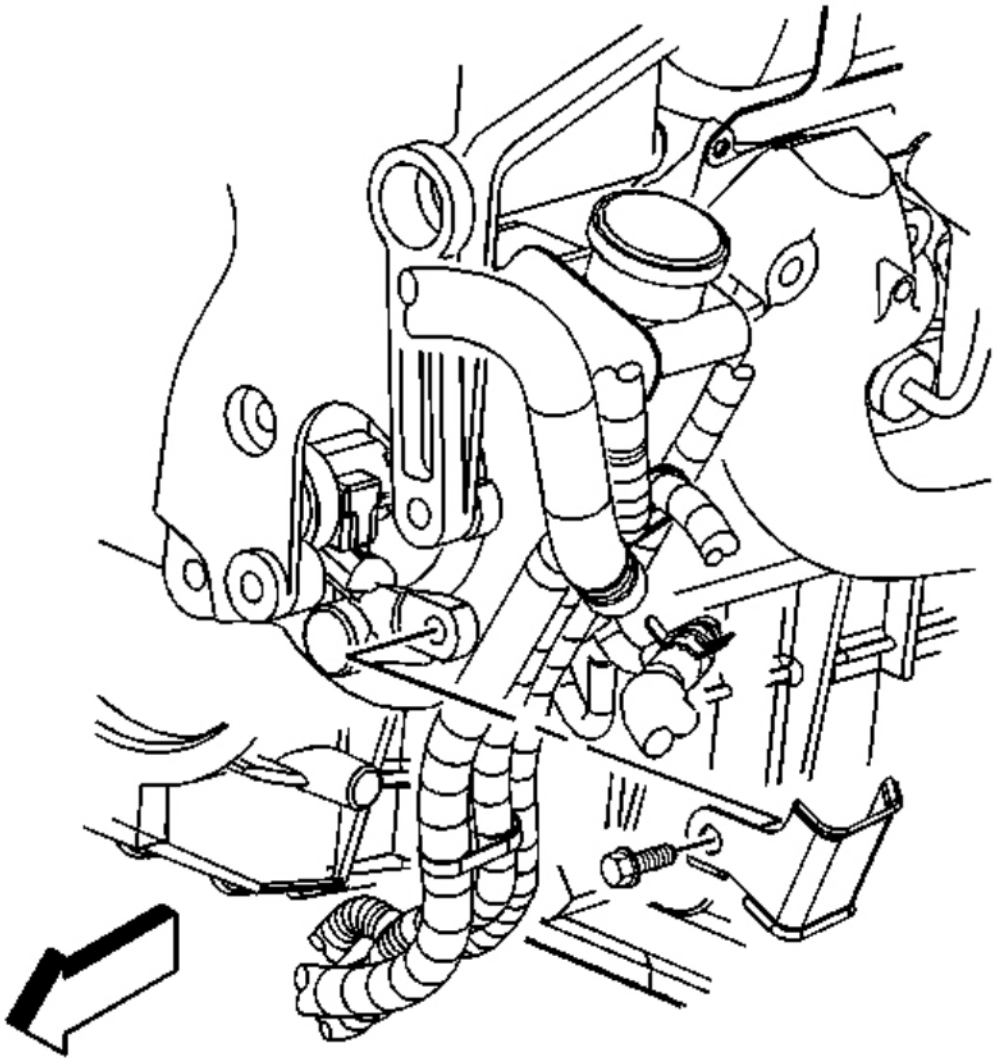

Fig. 26: View Of Power Steering Pump Battery Cable Bracket & Bolt
Courtesy of GENERAL MOTORS CORP.

15. If equipped with a 4.8L, 5.3L, or 6.0L engine, remove the battery cable bracket bolt and bracket from the power steering pump.

cardiagn.com

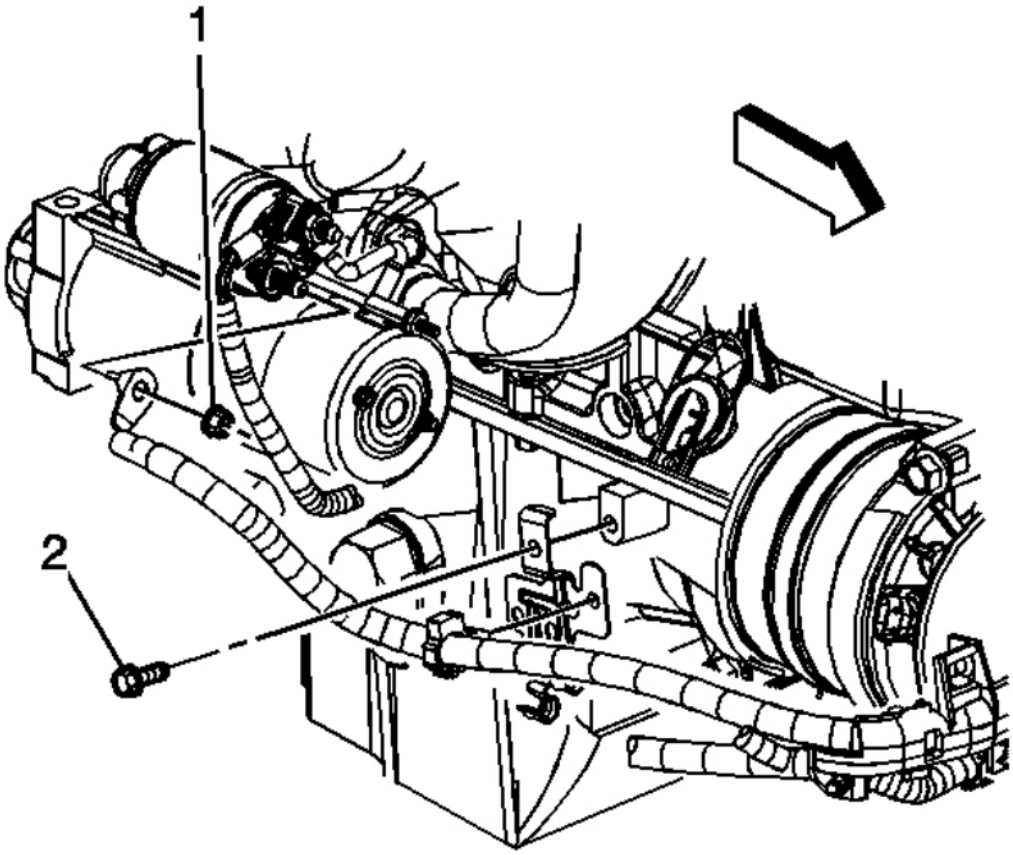

Fig. 27: View Of Positive Cable Nut (4.8L, 5.3L & 6.0L)
Courtesy of GENERAL MOTORS CORP.

16. If equipped with a 4.8L, 5.3L, or 6.0L engine, remove the positive cable nut (1).
17. Remove the positive cable from the starter.
18. Remove the positive cable clip from the clip on the oil pan.
19. Remove the positive cable from the clip on the oil pan.
20. Remove the positive battery cable.

cardiagn.com

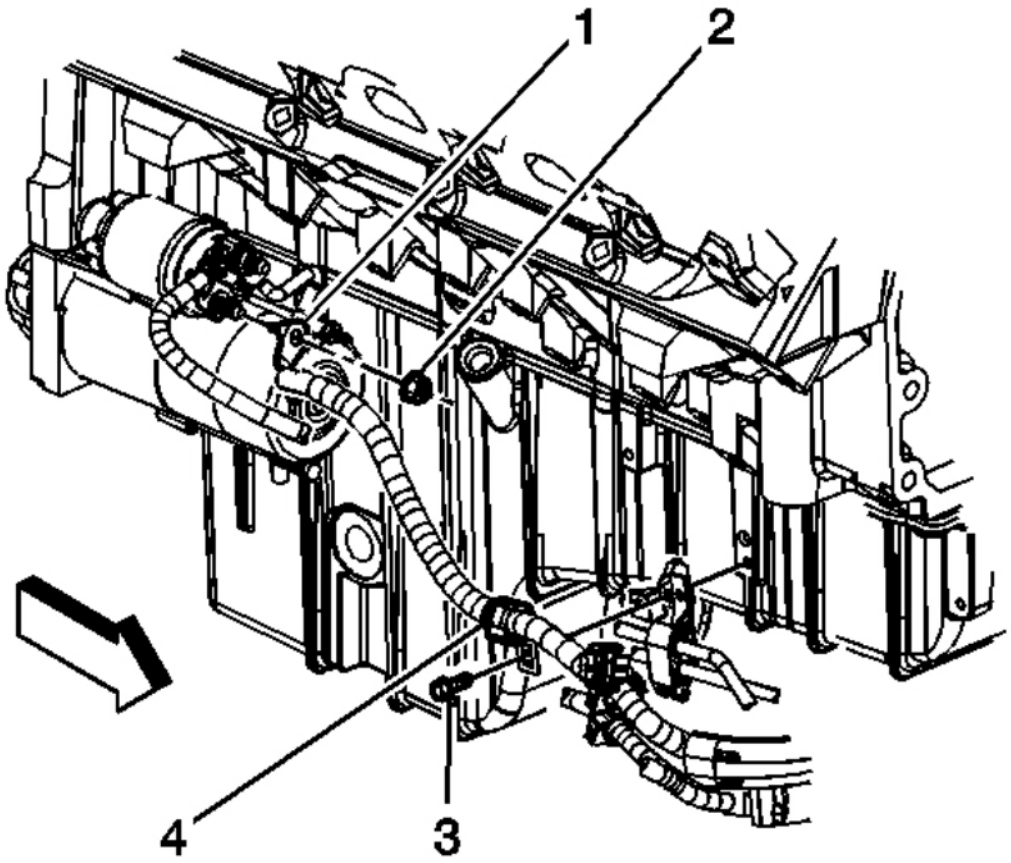

Fig. 28: View Of Positive Cable, Nut & Clip Bolt (8.1L)
Courtesy of GENERAL MOTORS CORP.

21. If equipped with a 8.1L engine, remove the positive cable nut (2).
22. Remove the positive cable (1) from the starter.
23. Remove the positive cable clip bolt (3).
24. Remove the positive cable from the engine harness clip.
25. Remove the positive battery cable.

Installation Procedure

cardiagn.com

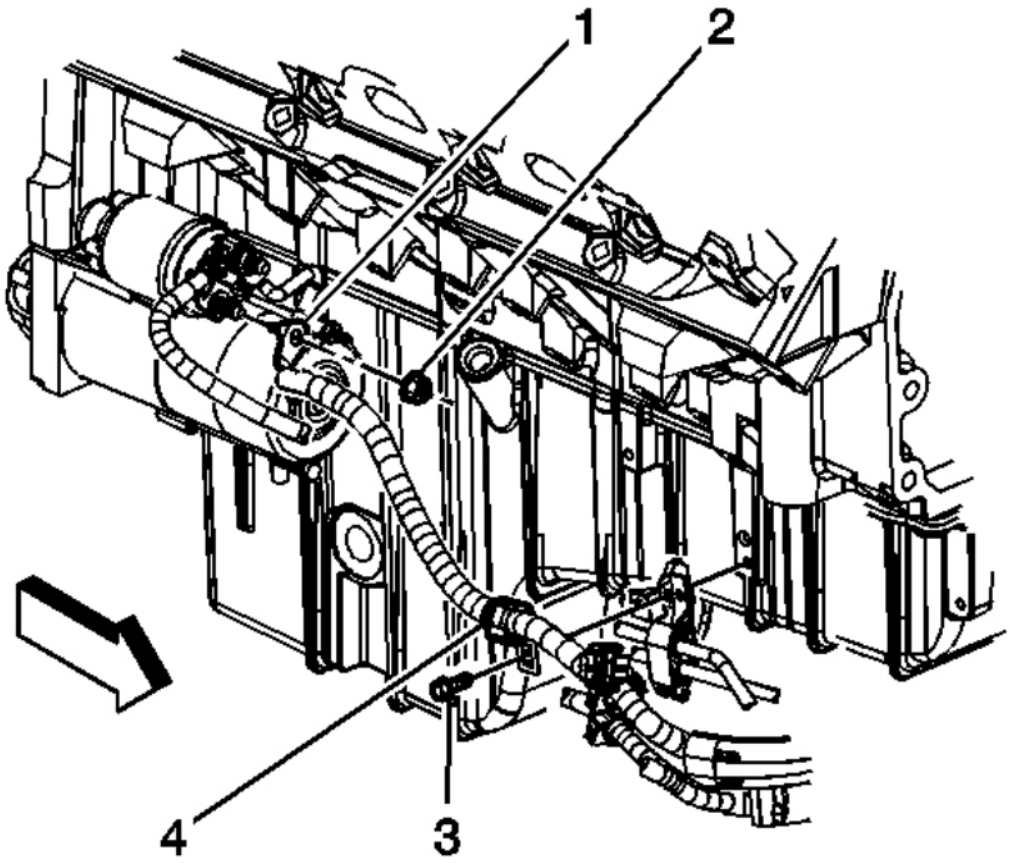

Fig. 29: View Of Positive Cable, Nut & Clip Bolt (8.1L)
Courtesy of GENERAL MOTORS CORP.

1. If equipped with a 8.1L engine, install the positive battery cable.
2. Install the positive cable to the engine harness clip.

NOTE: **Refer to Fastener Notice in Cautions and Notices.**

3. Install the positive cable clip bolt (3).

   Tighten: Tighten the bolt to 8 N.m (71 lb in).

4. Install the positive cable (1) to the starter.
5. Install the positive cable nut (2).

cardiagn.com

Tighten: Tighten the nut to 9 N.m (80 lb in).

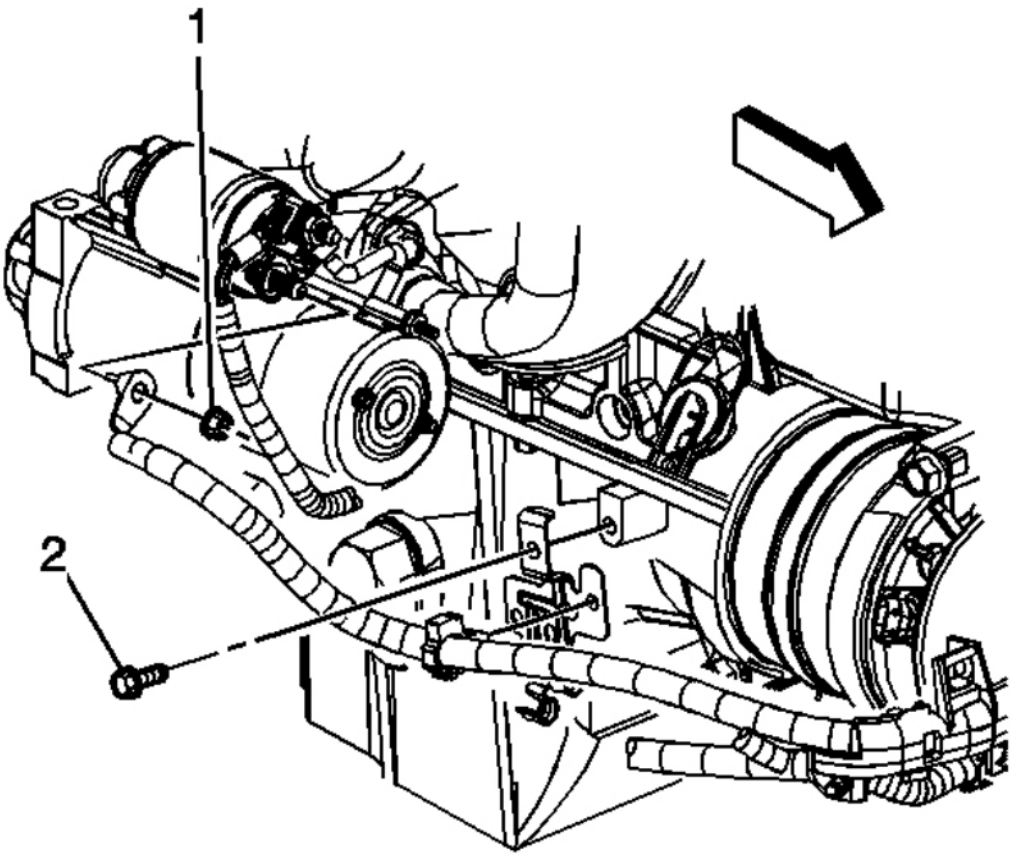

Fig. 30: View Of Positive Cable Nut (4.8L, 5.3L & 6.0L)
Courtesy of GENERAL MOTORS CORP.

6. If equipped with a 4.8L, 5.3L, or 6.0L engine, install the positive battery cable.
7. Install the positive cable to the clip on the oil pan.
8. Install the positive cable clip to the clip on the oil pan.
9. Install the positive cable to the starter.
10. Install the positive cable nut (1).

Tighten: Tighten the nut to 9 N.m (80 lb in).

cardiagn.com

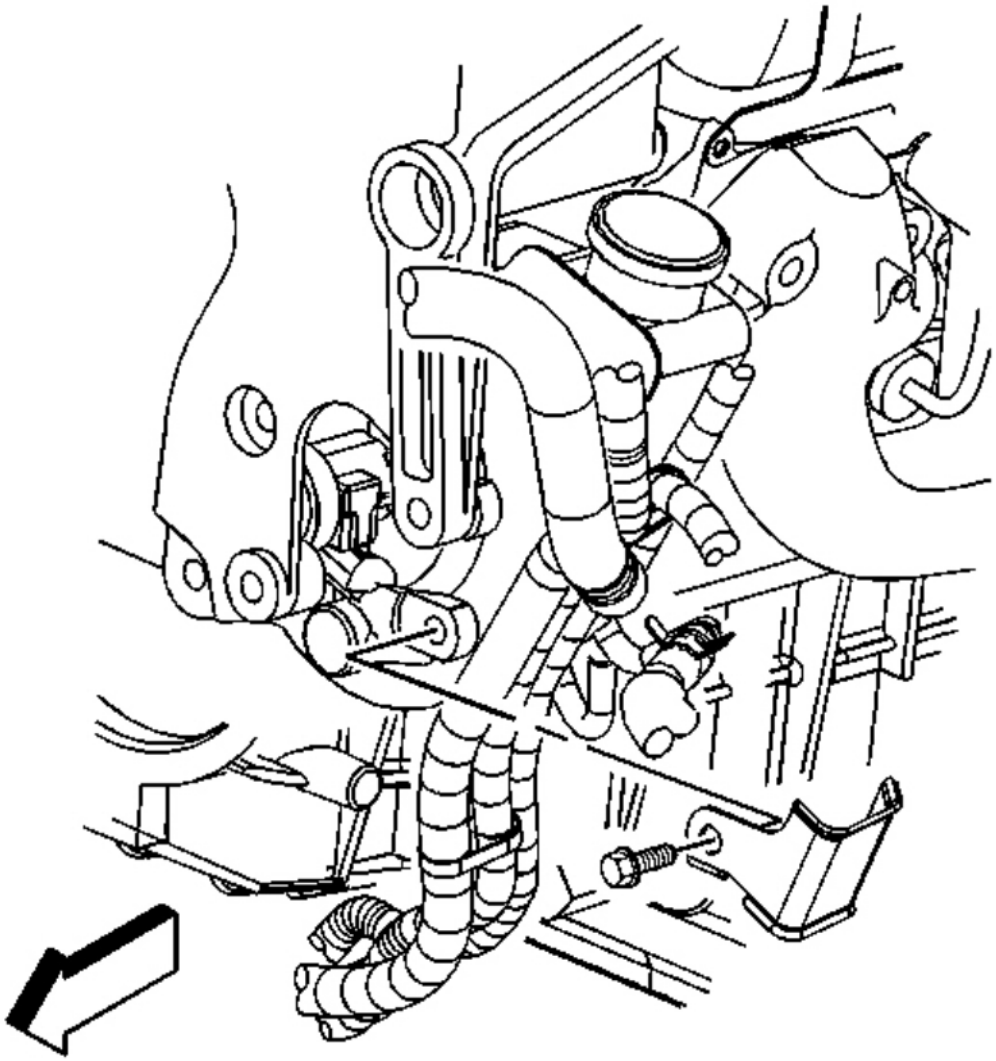

Fig. 31: View Of Power Steering Pump Battery Cable Bracket & Bolt
Courtesy of GENERAL MOTORS CORP.

11. If equipped with a 4.8L, 5.3L, or 6.0L engine, install the battery cable bracket and bolt to the power steering pump.

    Tighten: Tighten the bolt to 25 N.m (18 lb ft).

cardiagn.com

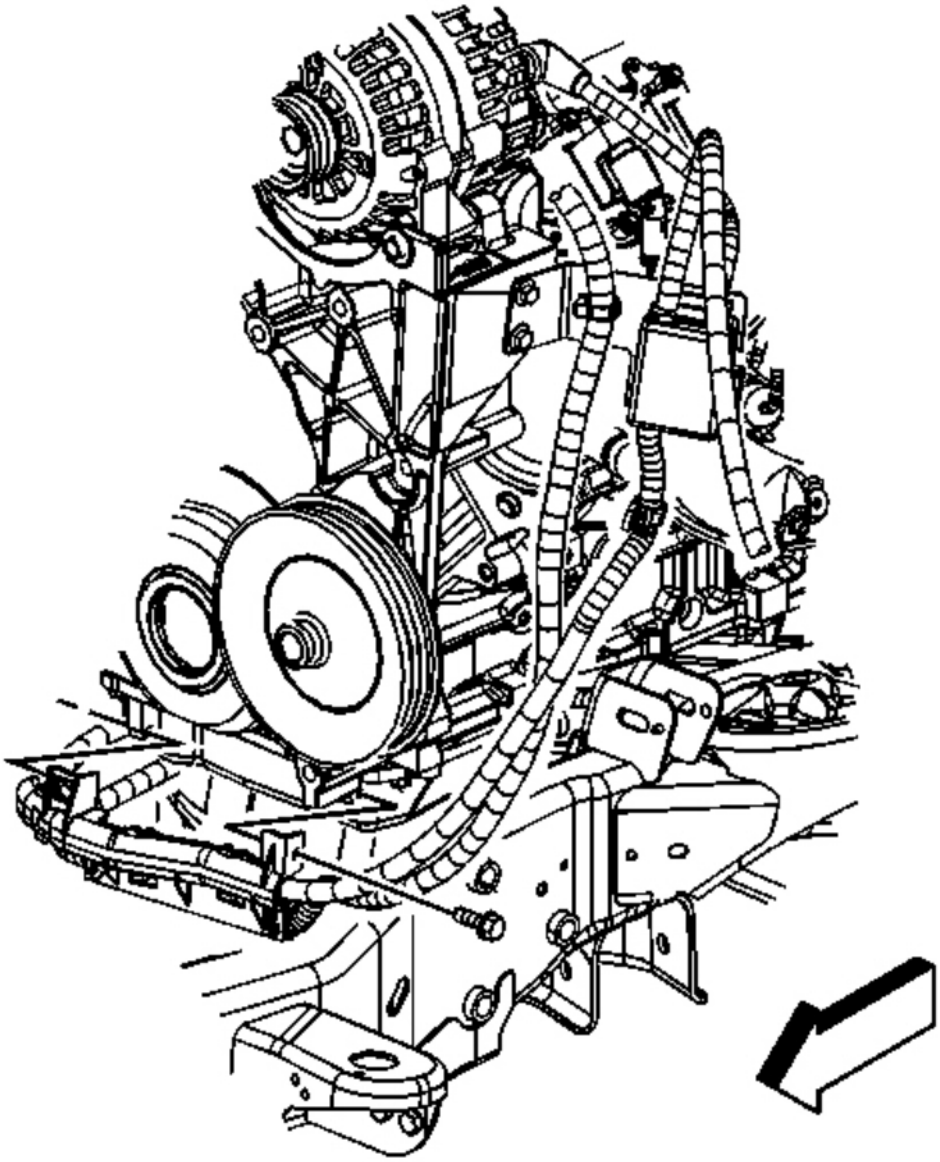

Fig. 32: View Of Positive Battery Cable, Channel & Bolt
Courtesy of GENERAL MOTORS CORP.

12. Install the positive battery cable to the channel.
13. Slide the channel pin into the oil pan tab.
14. Install the positive battery cable channel bolt.

cardiagn.com

Tighten: Tighten the bolt to 12 N.m (106 lb in).

15. Lower the vehicle.

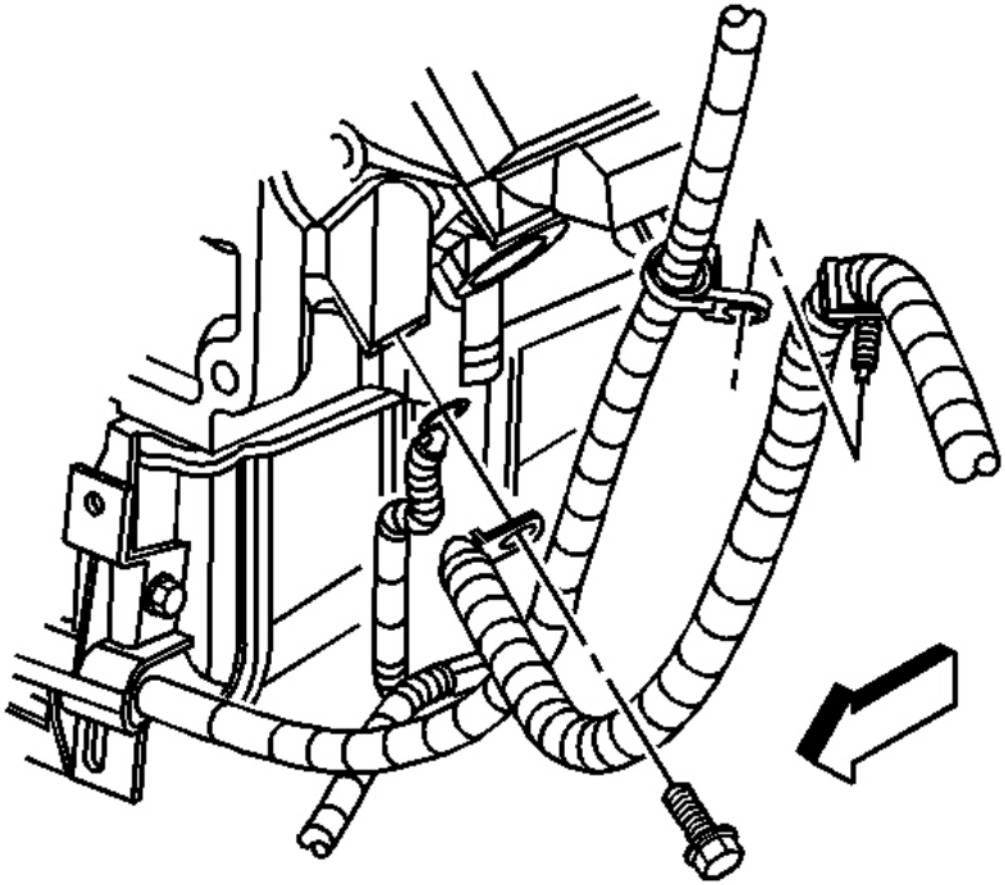

Fig. 33: View Of Negative Cable Clip & Engine Wiring Harness Ground/Negative Cable Bolt (8.1L)
Courtesy of GENERAL MOTORS CORP.

16. If equipped with a 8.1L engine, install the negative cable clip to the positive cable clip.

cardiagn.com

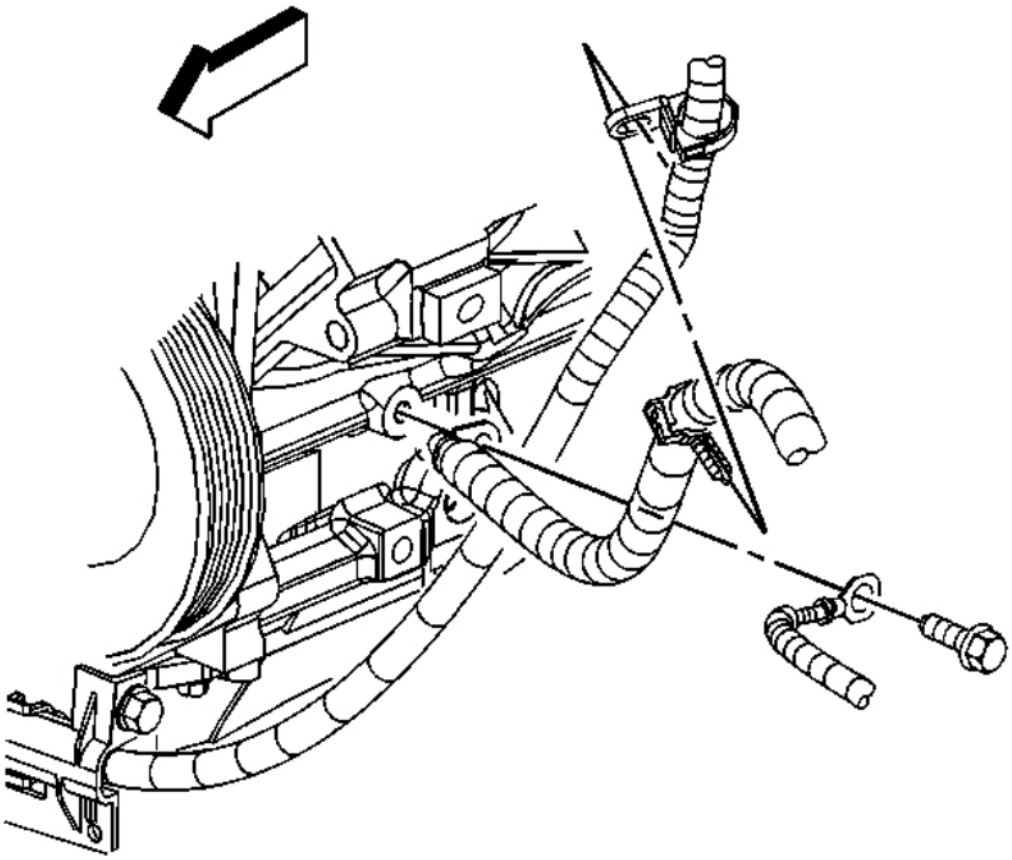

Fig. 34: View Of Negative Cable Clip & Engine Wiring Harness Ground/Negative Cable Bolt (4.8L, 5.3L & 6.0L)
Courtesy of GENERAL MOTORS CORP.

17. If equipped with a 4.8L, 5.3L, or 6.0L engine, install the negative cable clip to the positive cable clip.

cardiagn.com

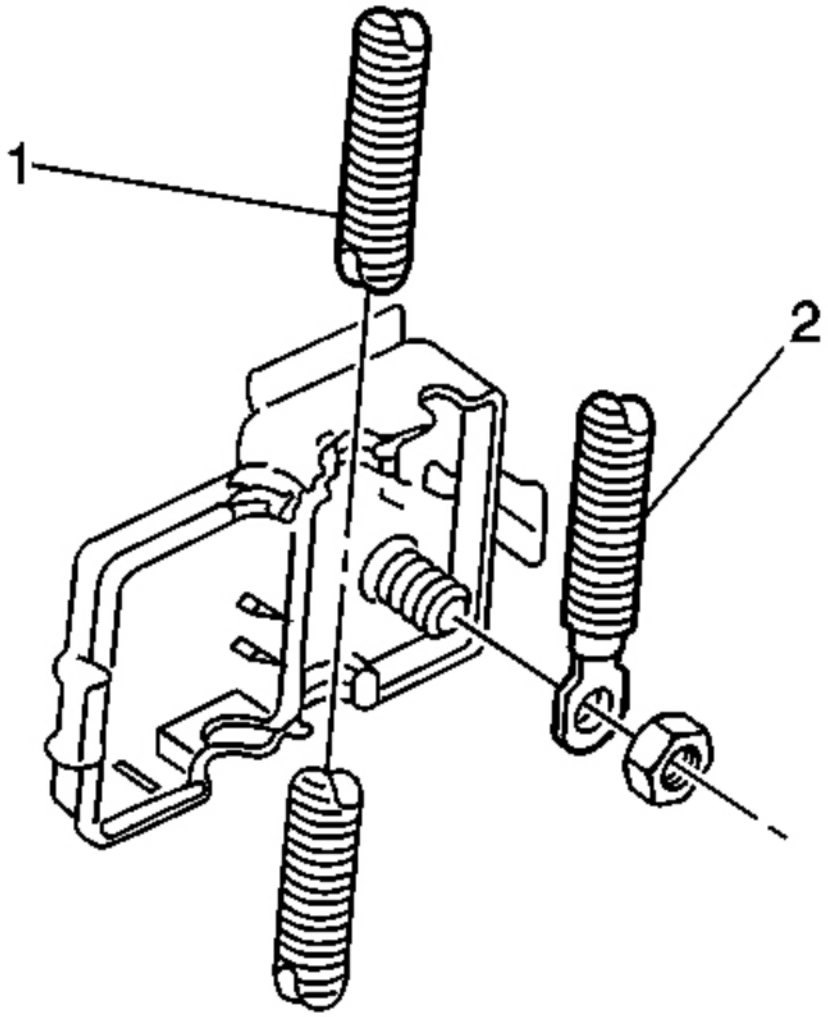

Fig. 35: View Of Battery Cables At Junction Block
Courtesy of GENERAL MOTORS CORP.

18. Install the positive battery cable (1) into the junction block.
19. Snap the junction block cover closed.
20. If necessary, install the engine sight shield. Refer to **Engine Sight Shield Replacement (4.8L, 5.3L, and 6.0L (RPO LQ4))** or **Engine Sight Shield Replacement (6.0L (RPO LQ9))** in Engine Mechanical - 4.8L, 5.3L, and 6.0L, or **Engine Sight Shield Replacement** in Engine Mechanical - 8.1L.

cardiagn.com

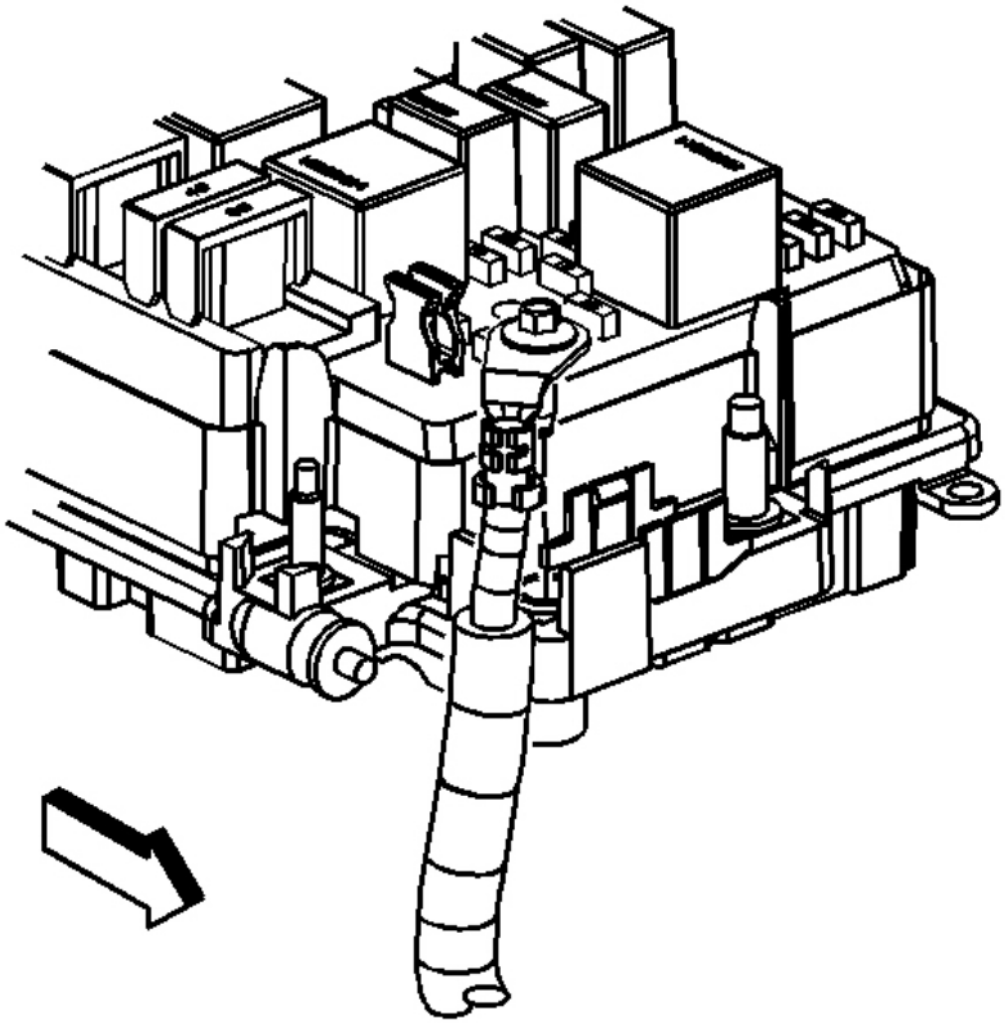

Fig. 36: View Of Underhood Bussed Electrical Center Positive Cable Bolt
Courtesy of GENERAL MOTORS CORP.

21. Tighten the positive cable bolt at the UBEC.

    Tighten: Tighten the bolt to 9 N.m (80 lb in).

cardiagn.com

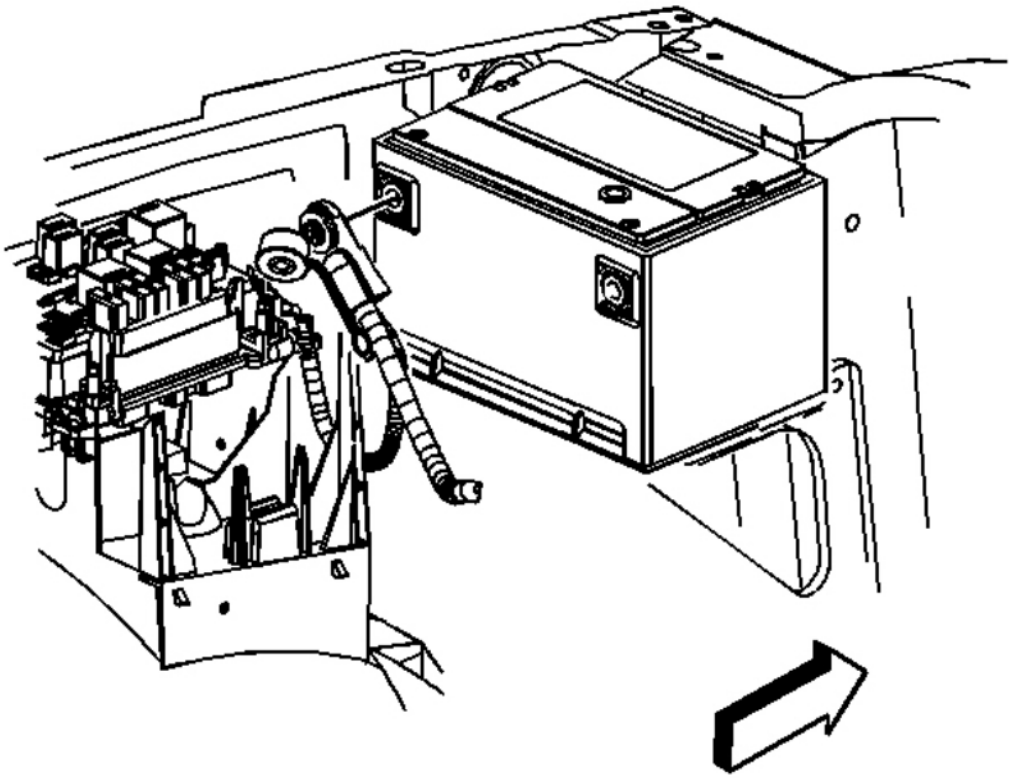

Fig. 37: View Of Battery & Positive Battery Cable
Courtesy of GENERAL MOTORS CORP.

22. Connect the positive battery cable.

    Tighten: Tighten the bolt to 17 N.m (13 lb ft).

23. Snap the positive battery cable cap closed.
24. Connect the negative battery cable. Refer to **Battery Negative Cable Disconnect/Connect Procedure**.

GENERATOR CABLE REPLACEMENT

Removal Procedure

cardiagn.com

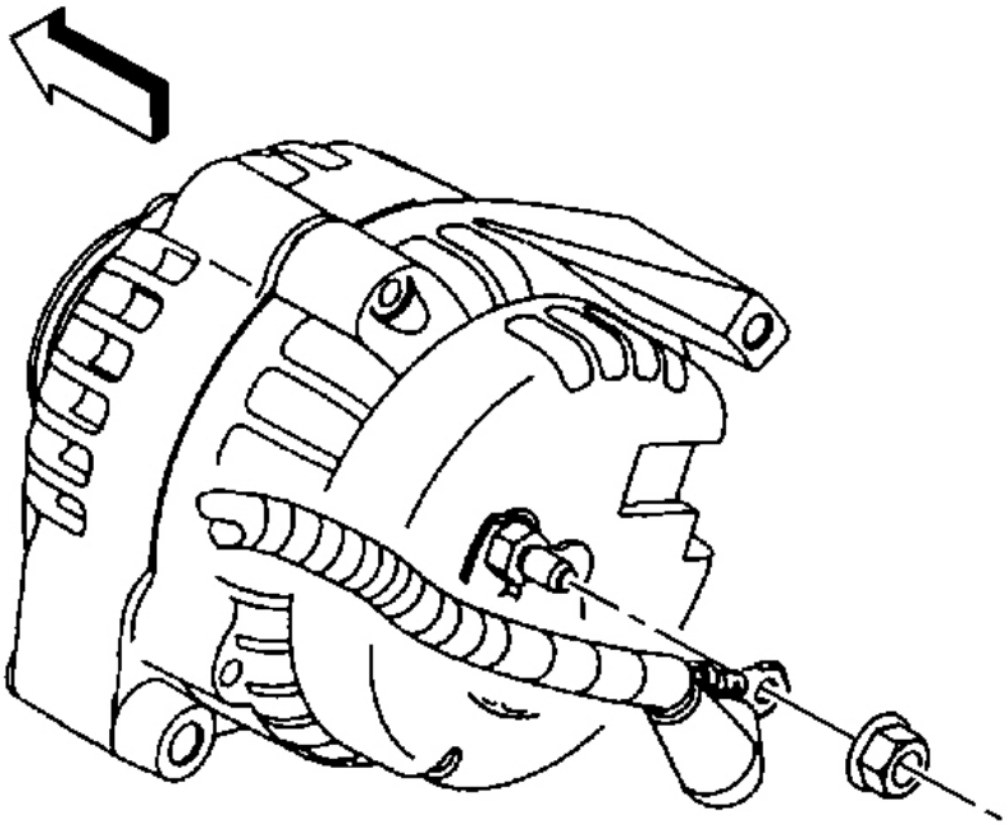

Fig. 38: View Of Generator Cable & Nut
Courtesy of GENERAL MOTORS CORP.

1. Disconnect the negative battery cable. Refer to **Battery Negative Cable Disconnect/Connect Procedure**.
2. If necessary, remove the engine sight shield. Refer to **Engine Sight Shield Replacement (4.8L, 5.3L, and 6.0L (RPO LQ4))** or **Engine Sight Shield Replacement (6.0L (RPO LQ9))** in Engine Mechanical - 4.8L, 5.3L, and 6.0L, or **Engine Sight Shield Replacement** in Engine Mechanical - 8.1L.
3. Remove the generator cable from the generator, perform the following:
    1. Reposition the boot to expose the stud.
    2. Remove the generator cable nut.
    3. Remove the generator cable from the stud.

cardiagn.com

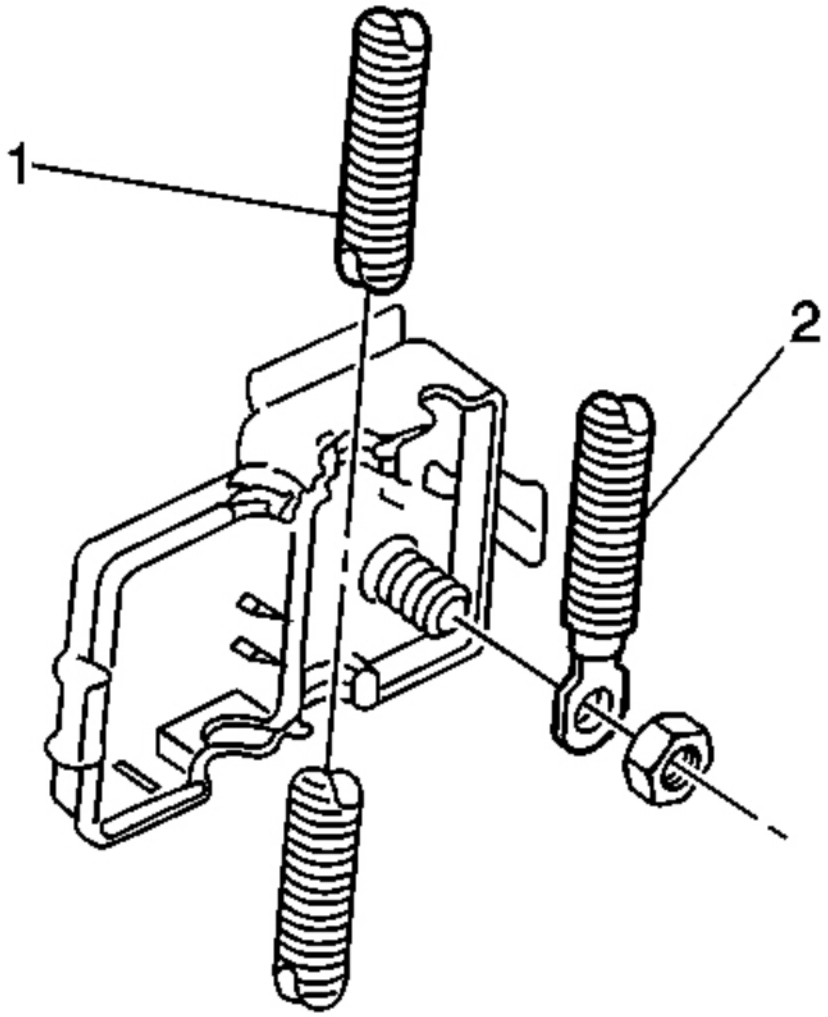

Fig. 39: View Of Battery Cables At Junction Block
Courtesy of GENERAL MOTORS CORP.

4. Open the positive cable junction block.
5. Remove the generator cable nut.
6. Remove the generator cable (2) from the junction block.

Installation Procedure

cardiagn.com

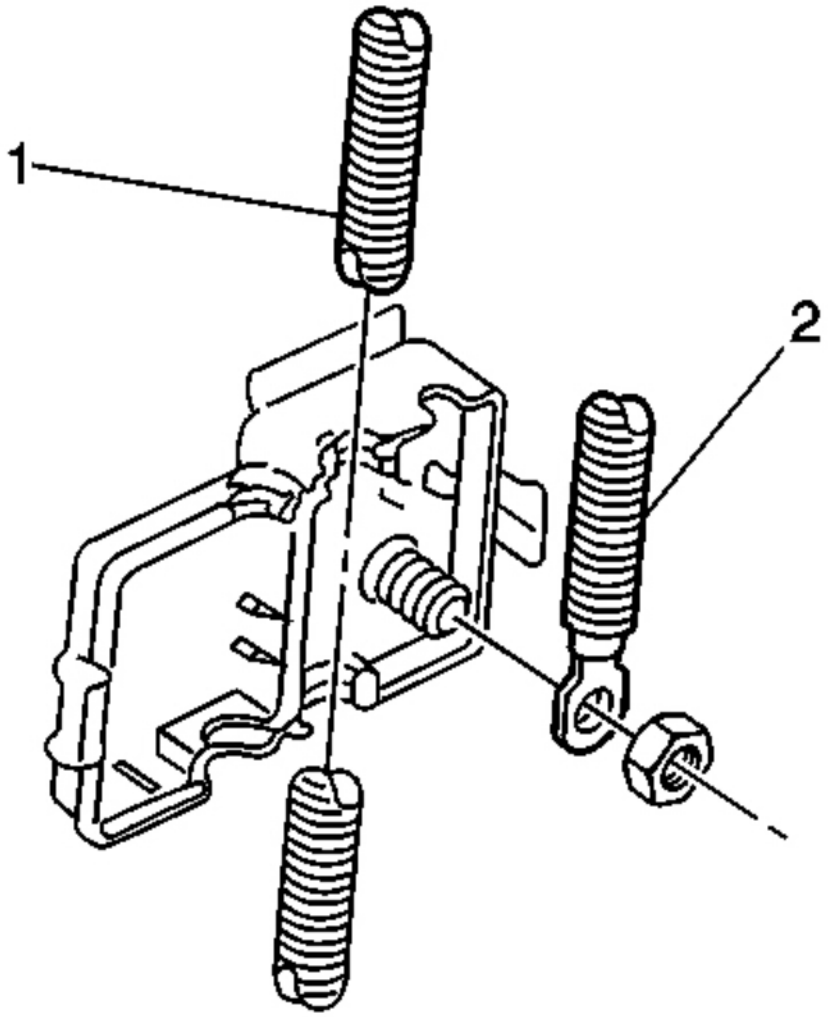

Fig. 40: View Of Battery Cables At Junction Block
Courtesy of GENERAL MOTORS CORP.

NOTE: **Refer to Fastener Notice in Cautions and Notices.**

1. Install the generator cable (2) to the junction block.
2. Install the generator cable nut.

Tighten: Tighten the nut to 9 N.m (80 lb in).

cardiagn.com

3. Close the positive cable junction block.

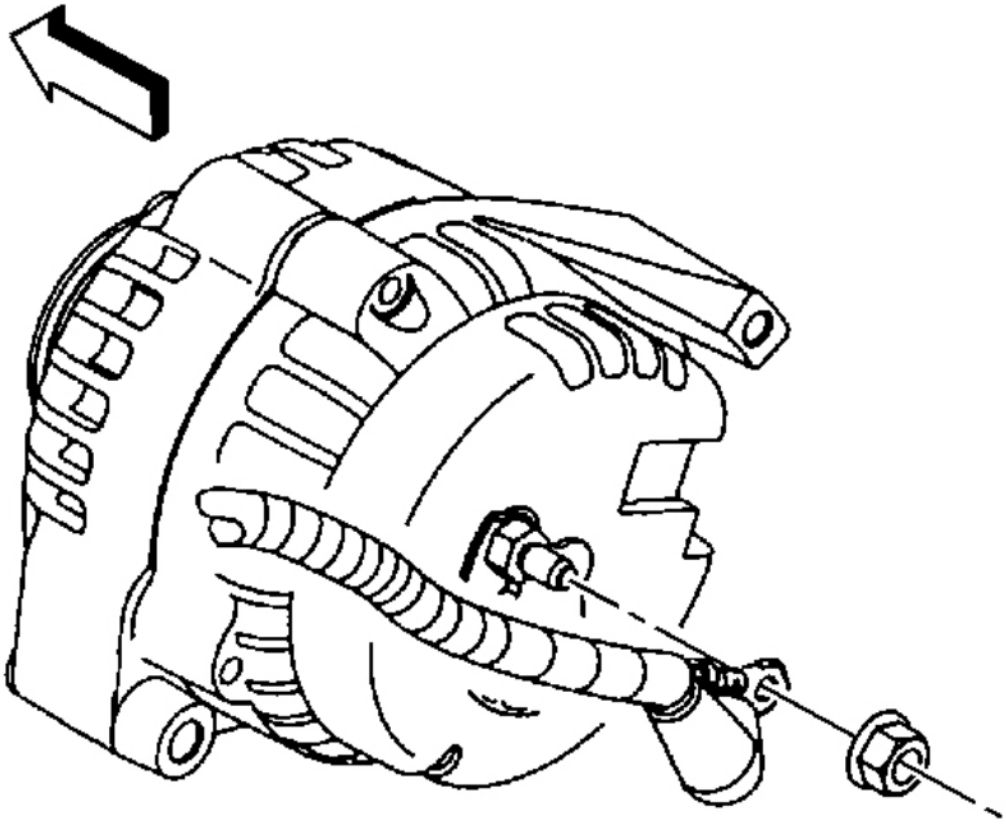

Fig. 41: View Of Generator Cable & Nut
Courtesy of GENERAL MOTORS CORP.

4. Install the generator cable to the generator, perform the following:
   1. Install the generator cable to the stud.
   2. Install the generator cable nut.

      Tighten: Tighten the nut to 9 N.m (80 lb in).

   3. Position the boot to cover the stud.
5. If necessary, install the engine sight shield. Refer to **Engine Sight Shield Replacement (4.8L, 5.3L, and 6.0L (RPO LQ4))** or **Engine Sight Shield Replacement (6.0L (RPO LQ9))** in Engine Mechanical - 4.8L, 5.3L, and 6.0L, or **Engine Sight Shield Replacement** in Engine Mechanical - 8.1L.

cardiagn.com

6. Connect the negative battery cable. Refer to **Battery Negative Cable Disconnect/Connect Procedure**.

BATTERY REPLACEMENT

Removal Procedure

CAUTION: Refer to Battery Disconnect Caution in Cautions and Notices.

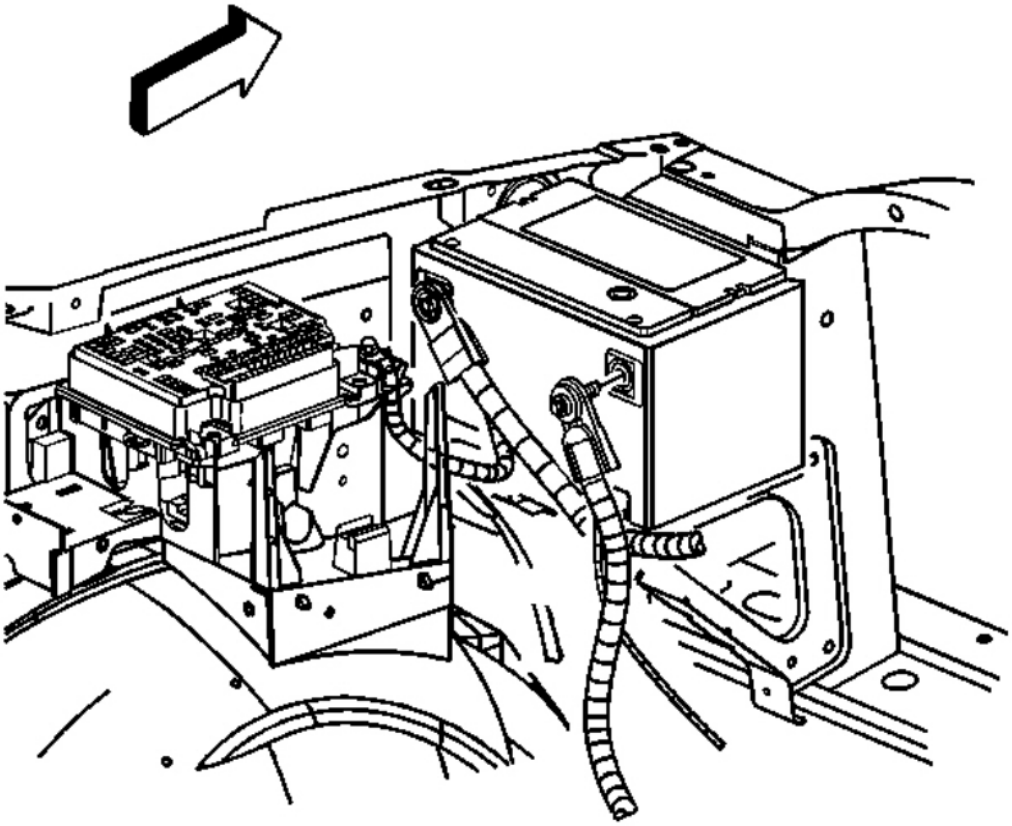

Fig. 42: View Of Battery Cables
Courtesy of GENERAL MOTORS CORP.

1. Disconnect the negative battery cable. Refer to **Battery Negative Cable Disconnect/Connect Procedure**.

cardiagn.com

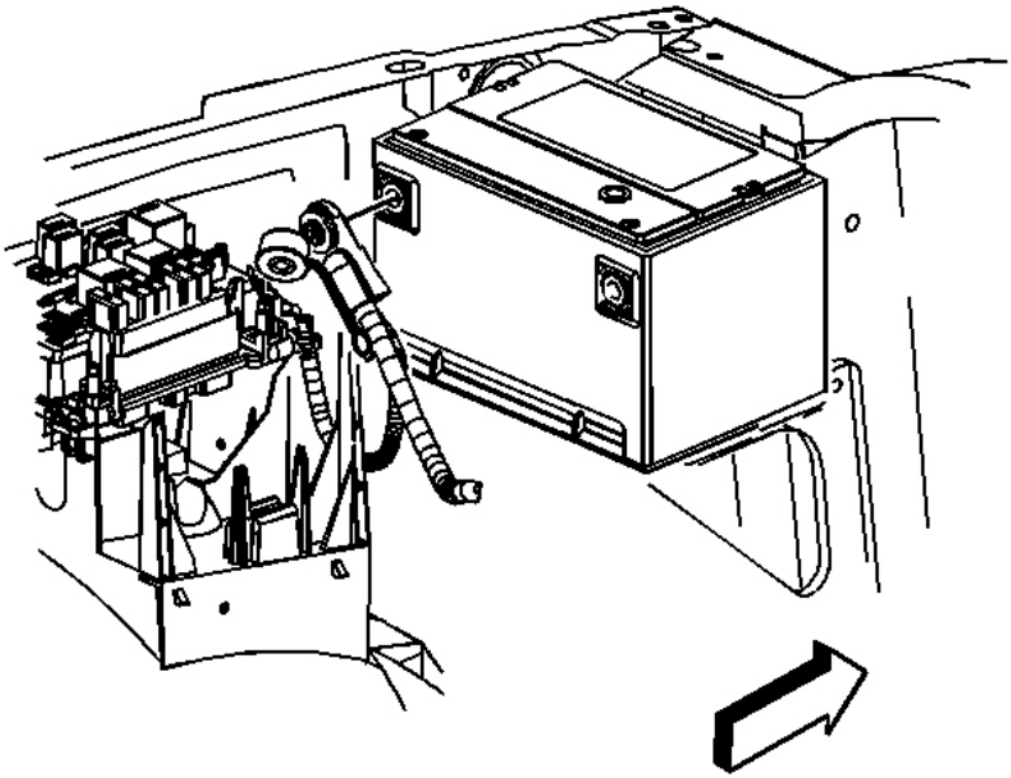

Fig. 43: View Of Battery & Positive Battery Cable
Courtesy of GENERAL MOTORS CORP.

2. Unsnap the positive battery cable cap.
3. Disconnect the positive battery cable.

cardiagn.com

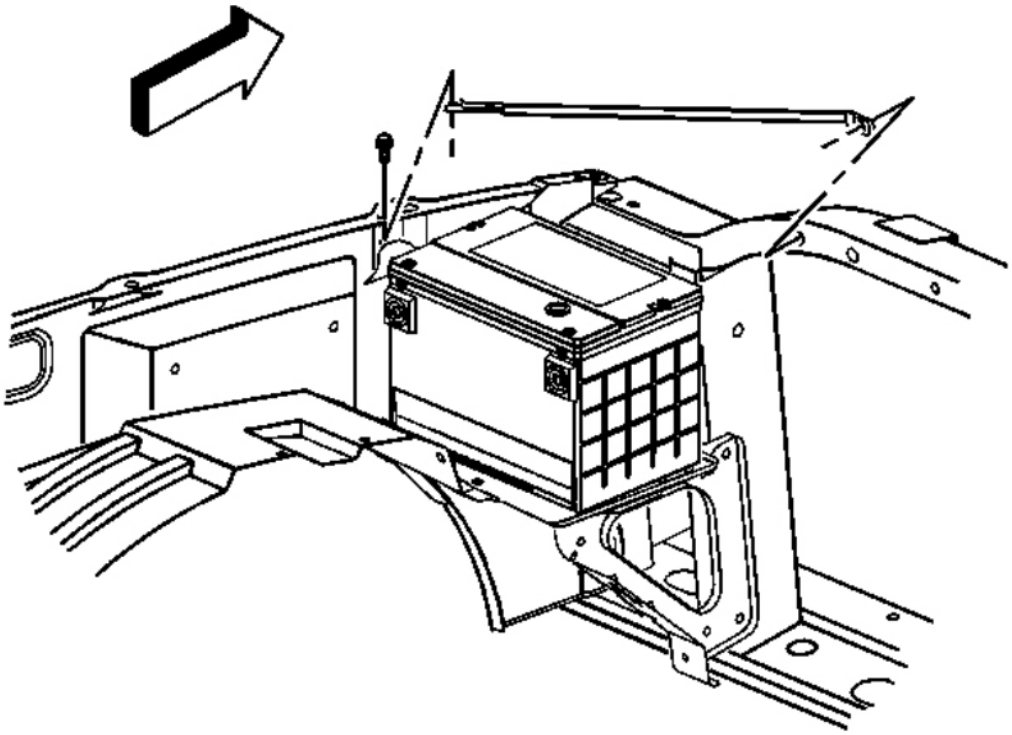

Fig. 44: View Of Front End Diagonal Brace & Bolts
Courtesy of GENERAL MOTORS CORP.

4. Remove the front end diagonal brace bolts and brace.

cardiagn.com

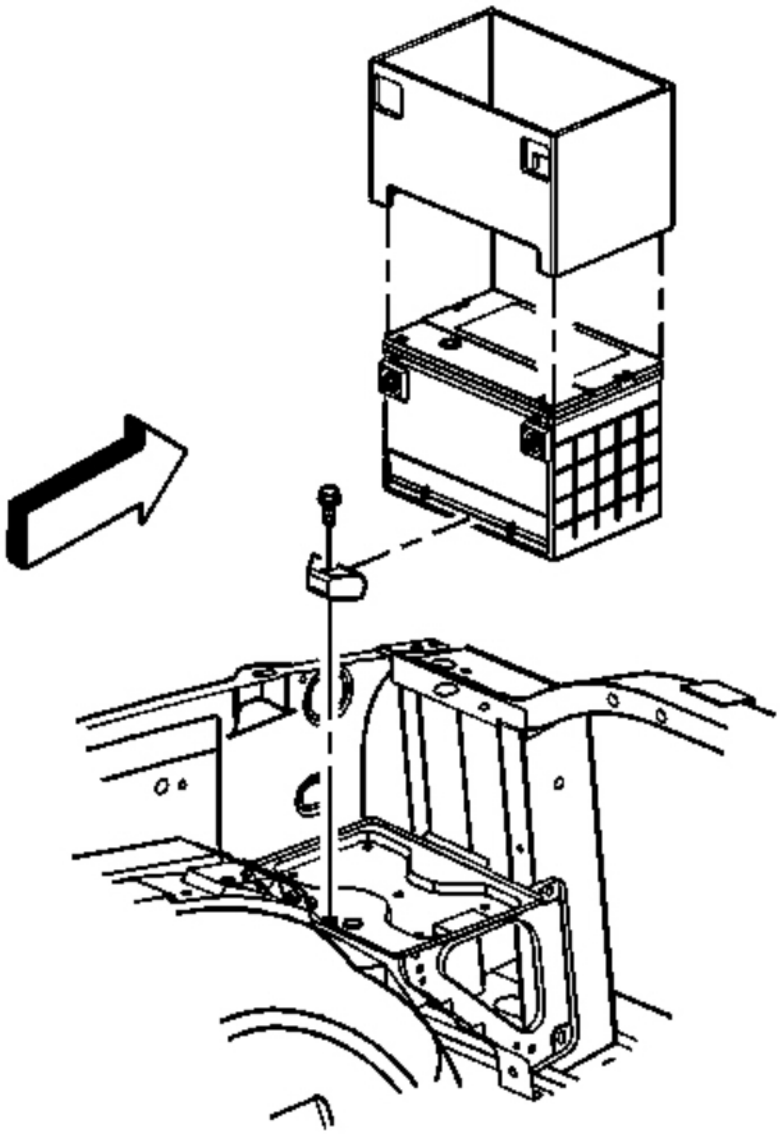

Fig. 45: View Of Battery Hold Down Retainer, Retainer Bolt, Battery & Insulator
Courtesy of GENERAL MOTORS CORP.

5. Remove the battery hold down retainer bolt and retainer.
6. Remove the battery.
7. Remove the battery insulator, if necessary.

cardiagn.com

Installation Procedure

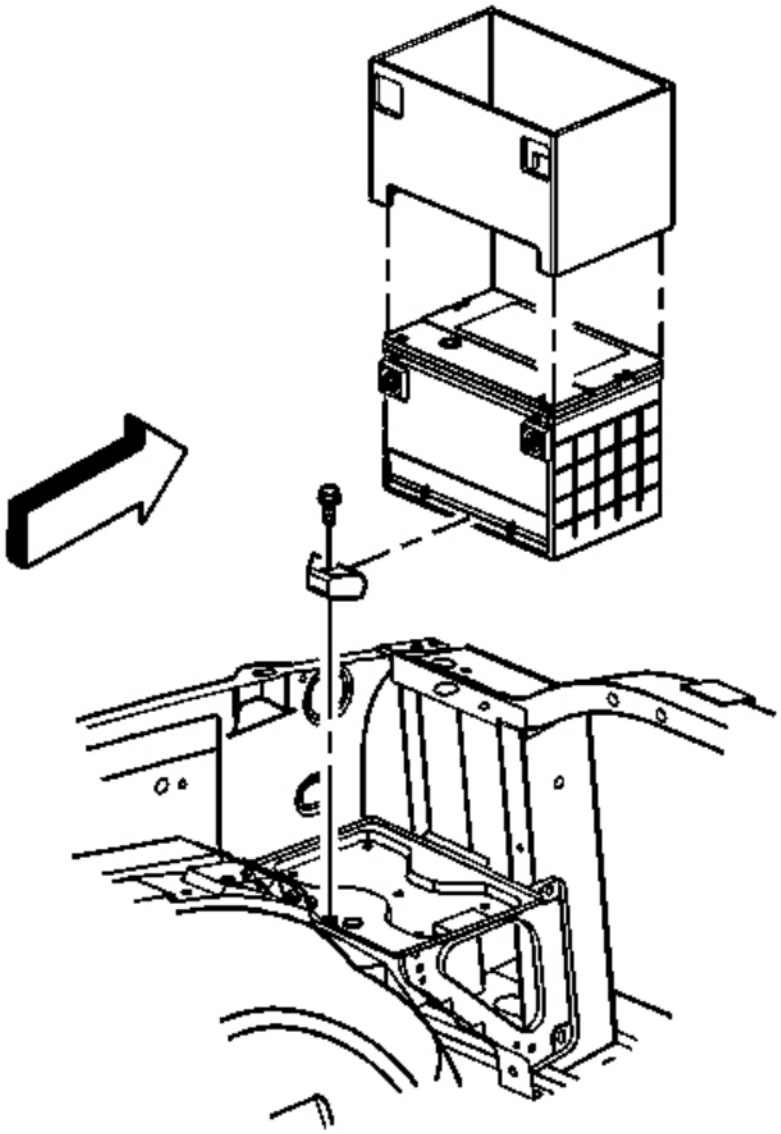

Fig. 46: View Of Battery Hold Down Retainer, Retainer Bolt, Battery & Insulator
Courtesy of GENERAL MOTORS CORP.

1. Install the battery insulator, if necessary.
2. Install the battery.

cardiagn.com

NOTE: **Refer to Fastener Notice in Cautions and Notices.**

3. Install the battery hold down retainer and bolt.

   Tighten: Tighten the bolt to 25 N.m (18 lb ft).

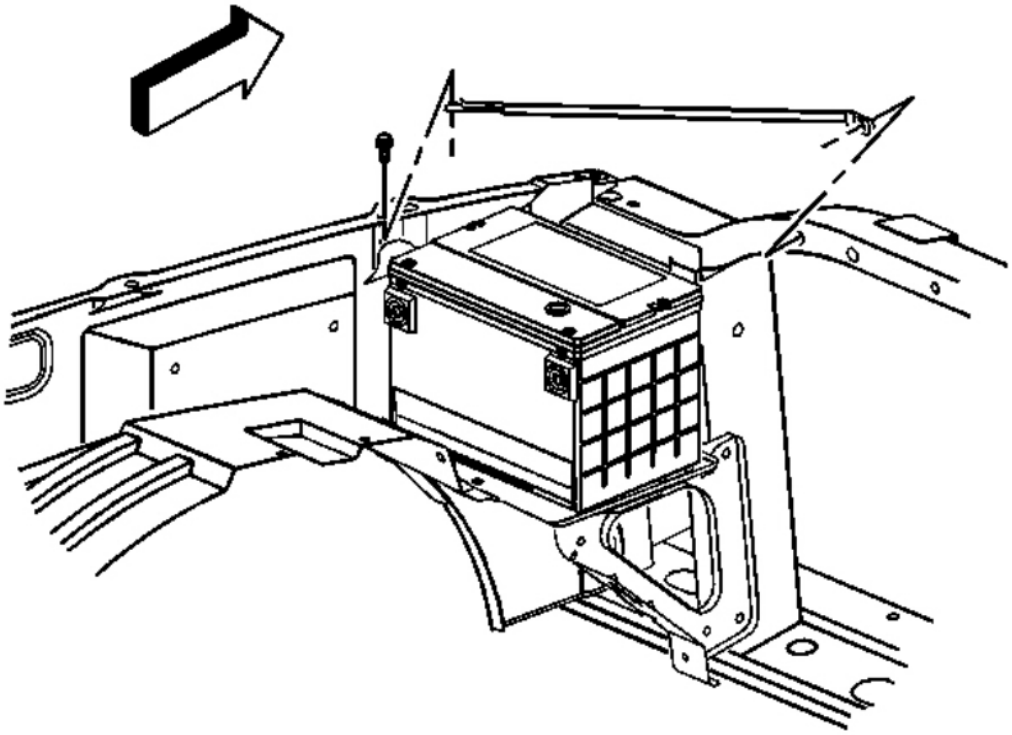

Fig. 47: View Of Front End Diagonal Brace & Bolts
Courtesy of GENERAL MOTORS CORP.

4. Install the front end diagonal brace and bolts.

   Tighten: Tighten the bolts to 9 N.m (80 lb in).

cardiagn.com

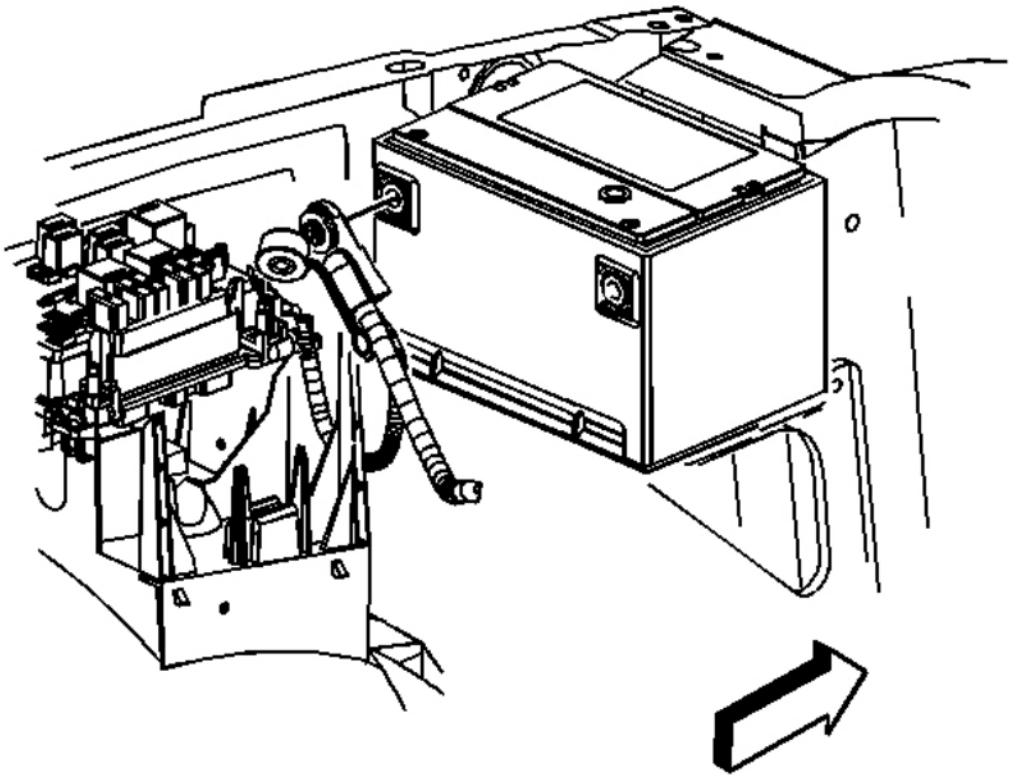

Fig. 48: View Of Battery & Positive Battery Cable
Courtesy of GENERAL MOTORS CORP.

5. Connect the positive battery cable.

   Tighten: Tighten the bolt to 17 N.m (13 lb ft).

6. Snap the positive battery cable cap closed.

cardiagn.com

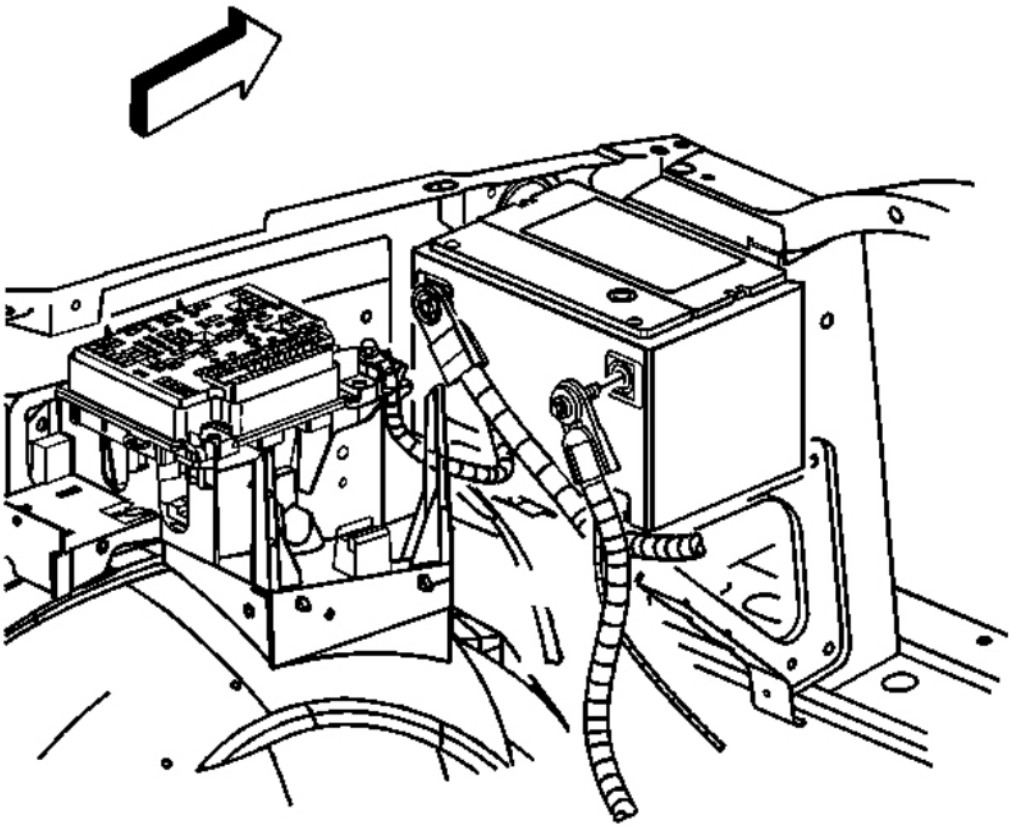

Fig. 49: View Of Battery Cables
Courtesy of GENERAL MOTORS CORP.

7. Connect the negative battery cable. Refer to **Battery Negative Cable Disconnect/Connect Procedure**.

BATTERY TRAY REPLACEMENT

Removal Procedure

cardiagn.com

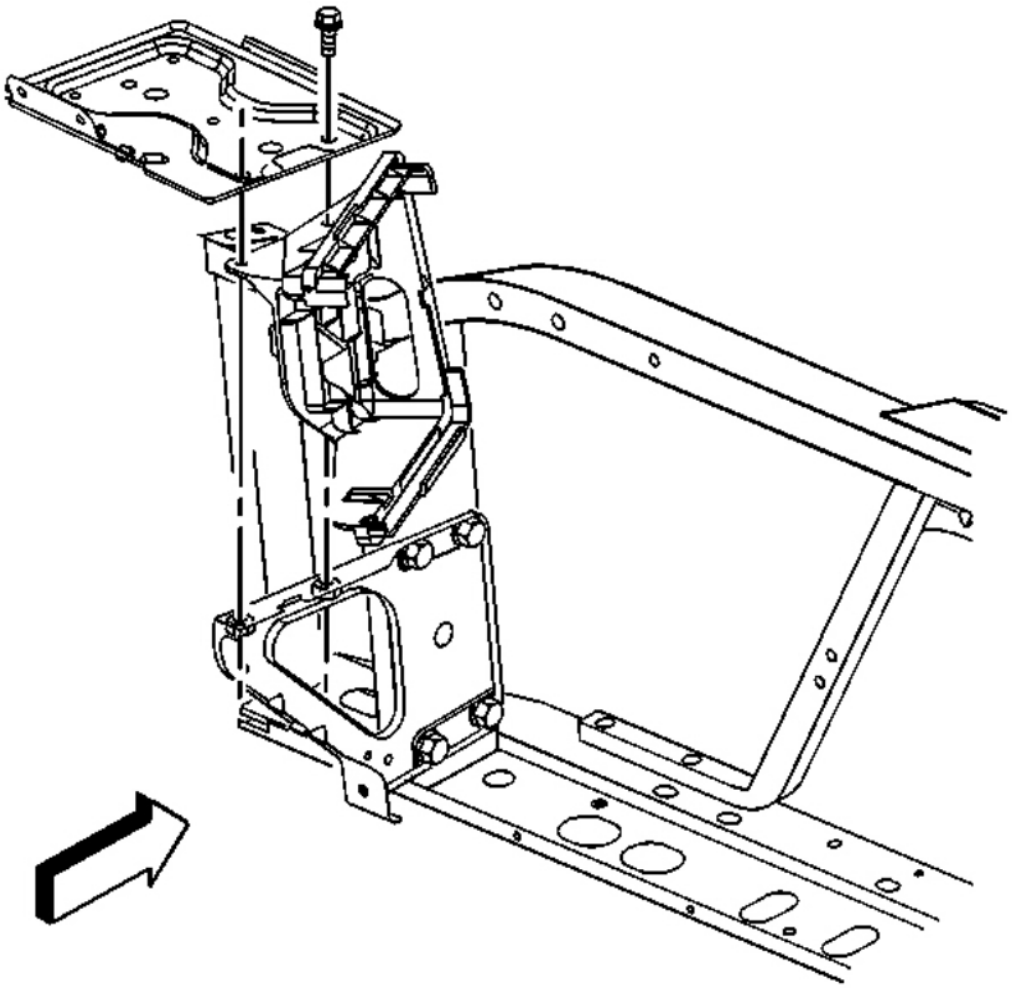

Fig. 50: View Of Battery Tray Support & Bolts
Courtesy of GENERAL MOTORS CORP.

1. Remove the battery. Refer to **Battery Replacement**.
2. Remove the bolts from the battery tray support.

cardiagn.com

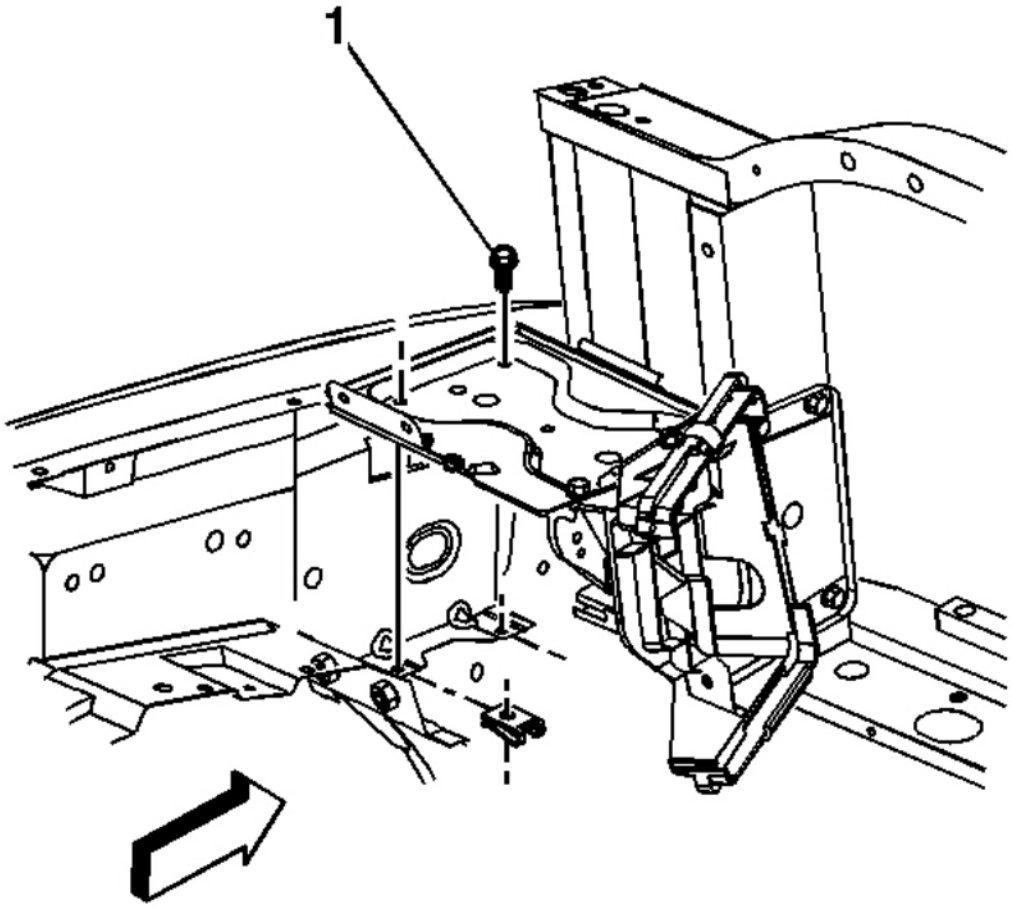

Fig. 51: View Of Fender Inner Panel Bolts
Courtesy of GENERAL MOTORS CORP.

3. Remove the bolts (1) from the fender inner panel.

cardiagn.com

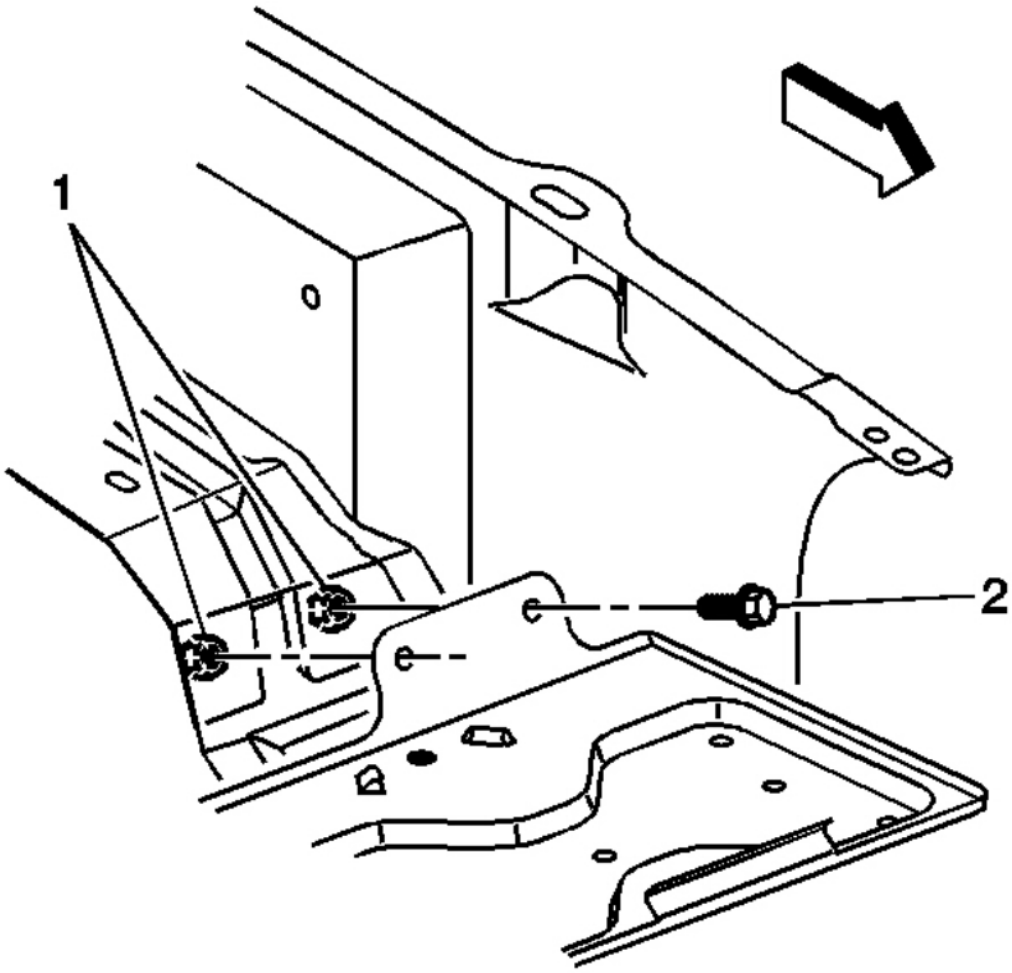

Fig. 52: View Of Battery Tray Reinforcement Bolts
Courtesy of GENERAL MOTORS CORP.

4. Remove the bolts (2) from the battery tray reinforcement.
5. Remove the battery tray.

Installation Procedure

cardiagn.com

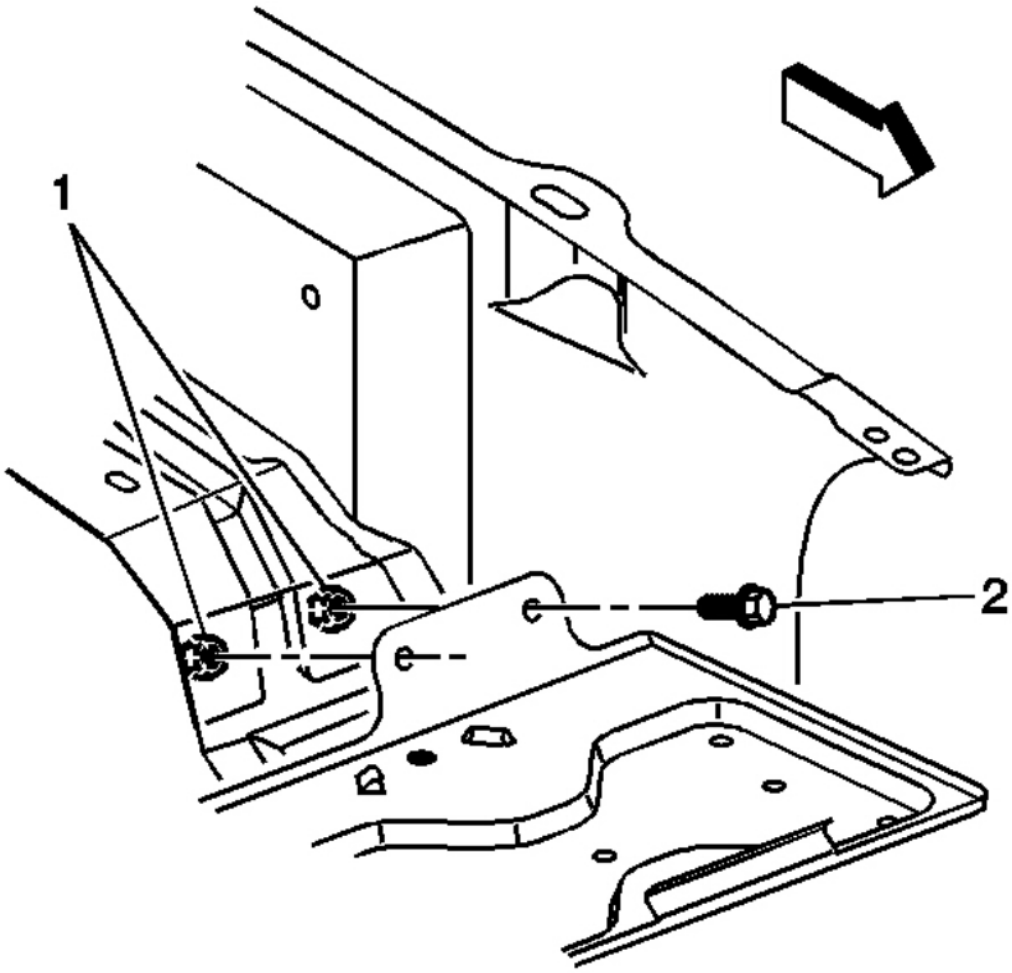

Fig. 53: View Of Battery Tray Reinforcement Bolts
Courtesy of GENERAL MOTORS CORP.

1. Install the battery tray.
2. Install the bolts (2) to the battery tray reinforcement until snug.

cardiagn.com

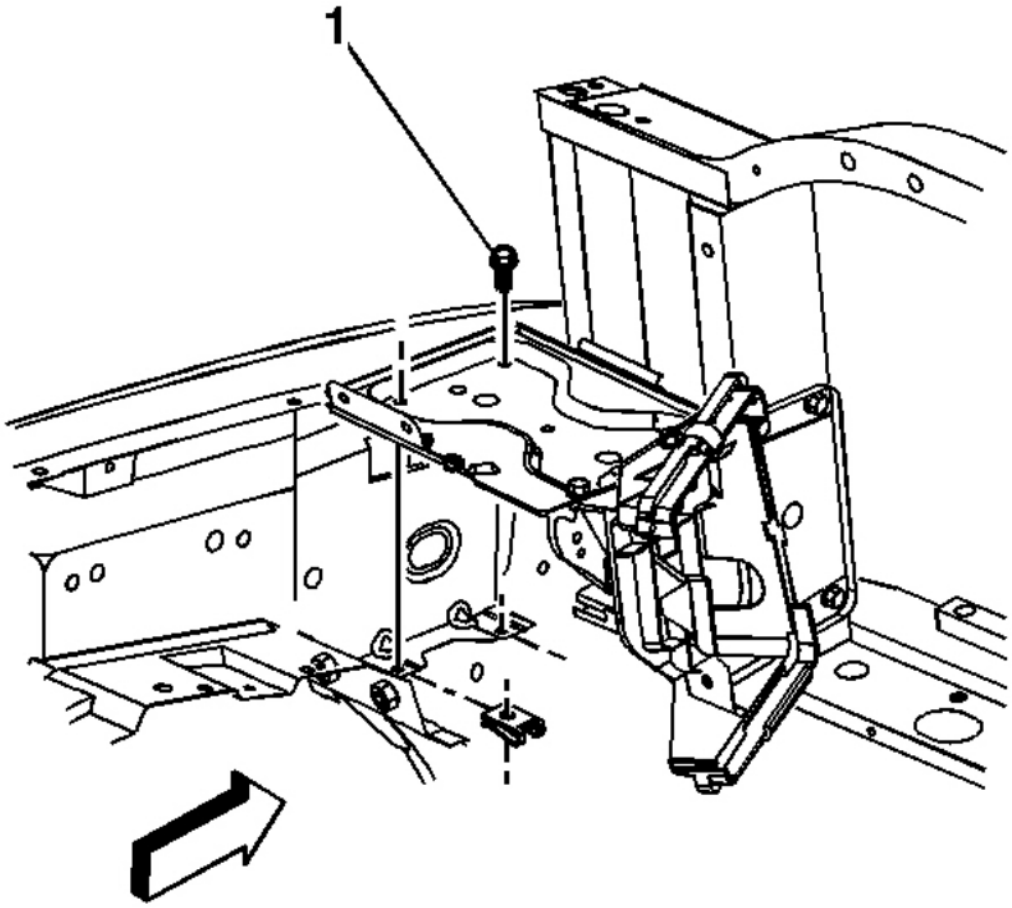

Fig. 54: View Of Fender Inner Panel Bolts
Courtesy of GENERAL MOTORS CORP.

3. Install the bolts (1) to the fender inner panel until snug.

cardiagn.com

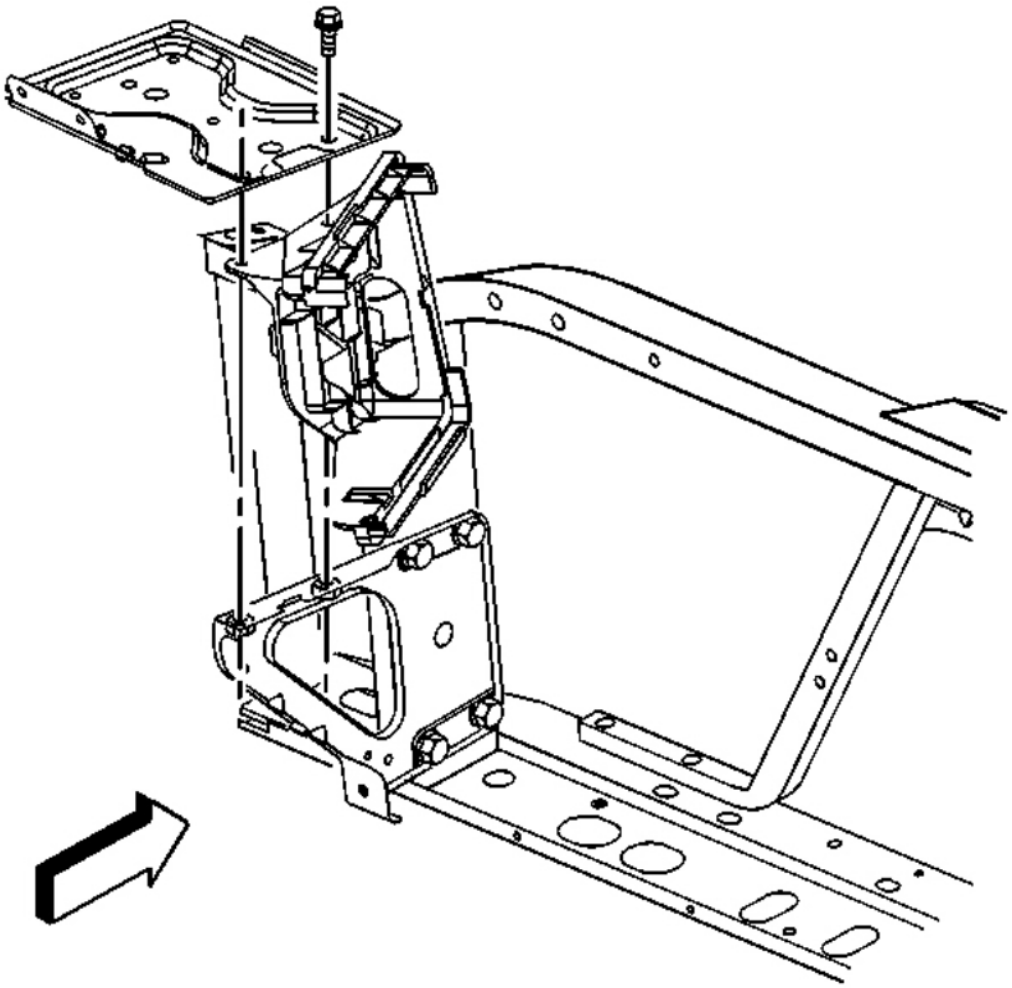

Fig. 55: View Of Battery Tray Support & Bolts
Courtesy of GENERAL MOTORS CORP.

NOTE: Refer to Fastener Notice in Cautions and Notices

4. Install the bolts to the battery tray support until snug.
5. Tighten the battery tray bolts.

   Tighten: Tighten the bolts to 9 N.m (80 lb in).

6. Install the battery. Refer to **Battery Replacement**.

cardiagn.com

GROUND STRAP REPLACEMENT

Removal Procedure

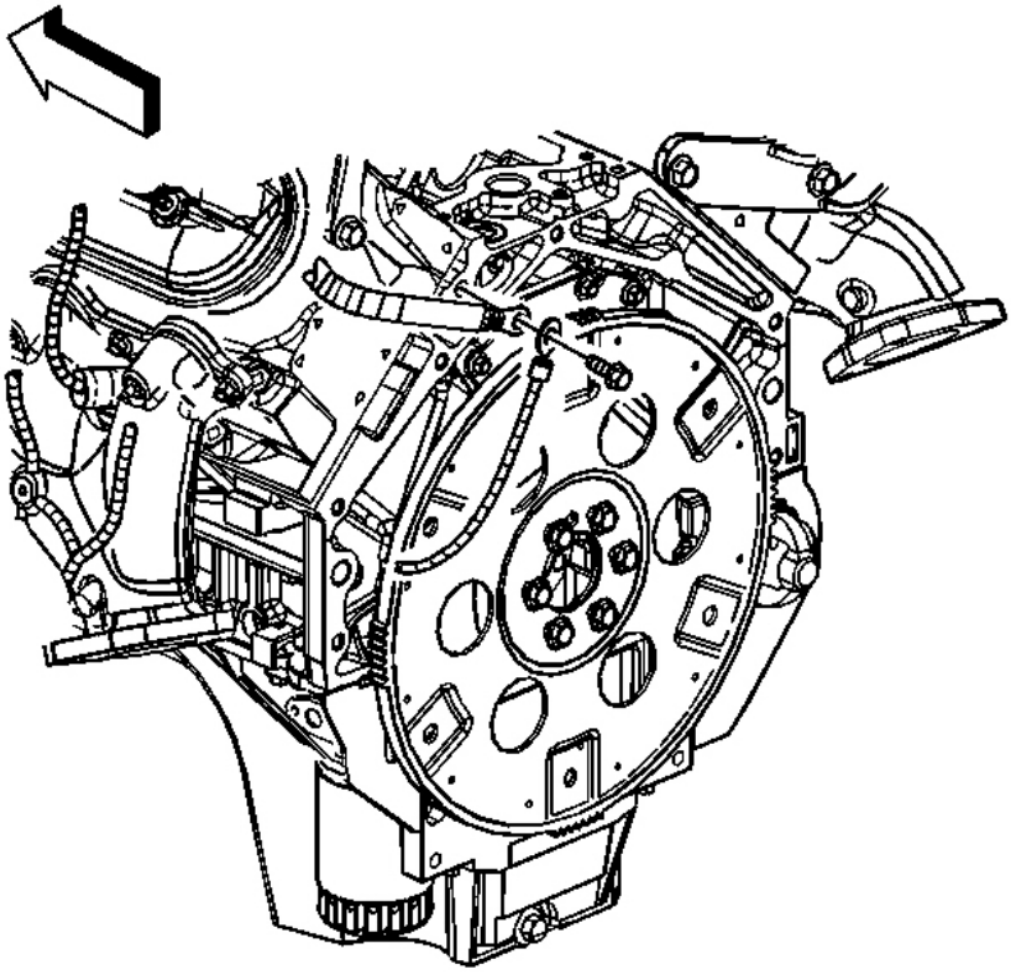

Fig. 56: View Of Ground Cable Bolt At Engine Block
Courtesy of GENERAL MOTORS CORP.

1. If necessary, remove the engine sight shield. Refer to **Engine Sight Shield Replacement (4.8L, 5.3L, and 6.0L (RPO LQ4))** or **Engine Sight Shield Replacement (6.0L (RPO LQ9))** in Engine Mechanical - 4.8L, 5.3L, and 6.0L, or **Engine Sight Shield Replacement** in Engine Mechanical - 8.1L.
2. Remove the engine wiring harness ground bolt.
3. Reposition the engine wiring harness ground and ground strap.

cardiagn.com

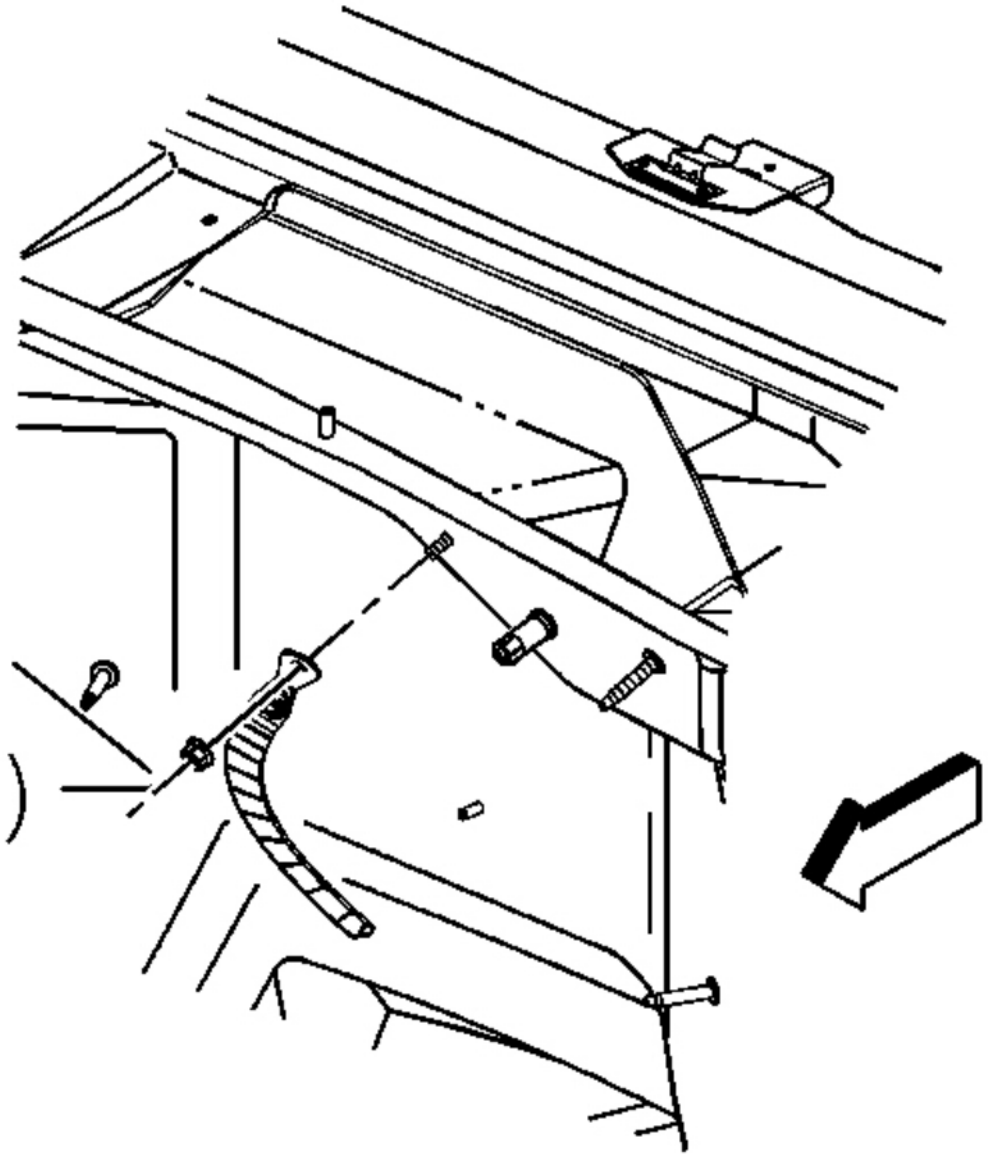

Fig. 57: View Of Ground Strap & Nut
Courtesy of GENERAL MOTORS CORP.

4. Remove the ground strap nut from the stud at the front of dash.
5. Remove the ground strap from the stud.

cardiagn.com

Installation Procedure

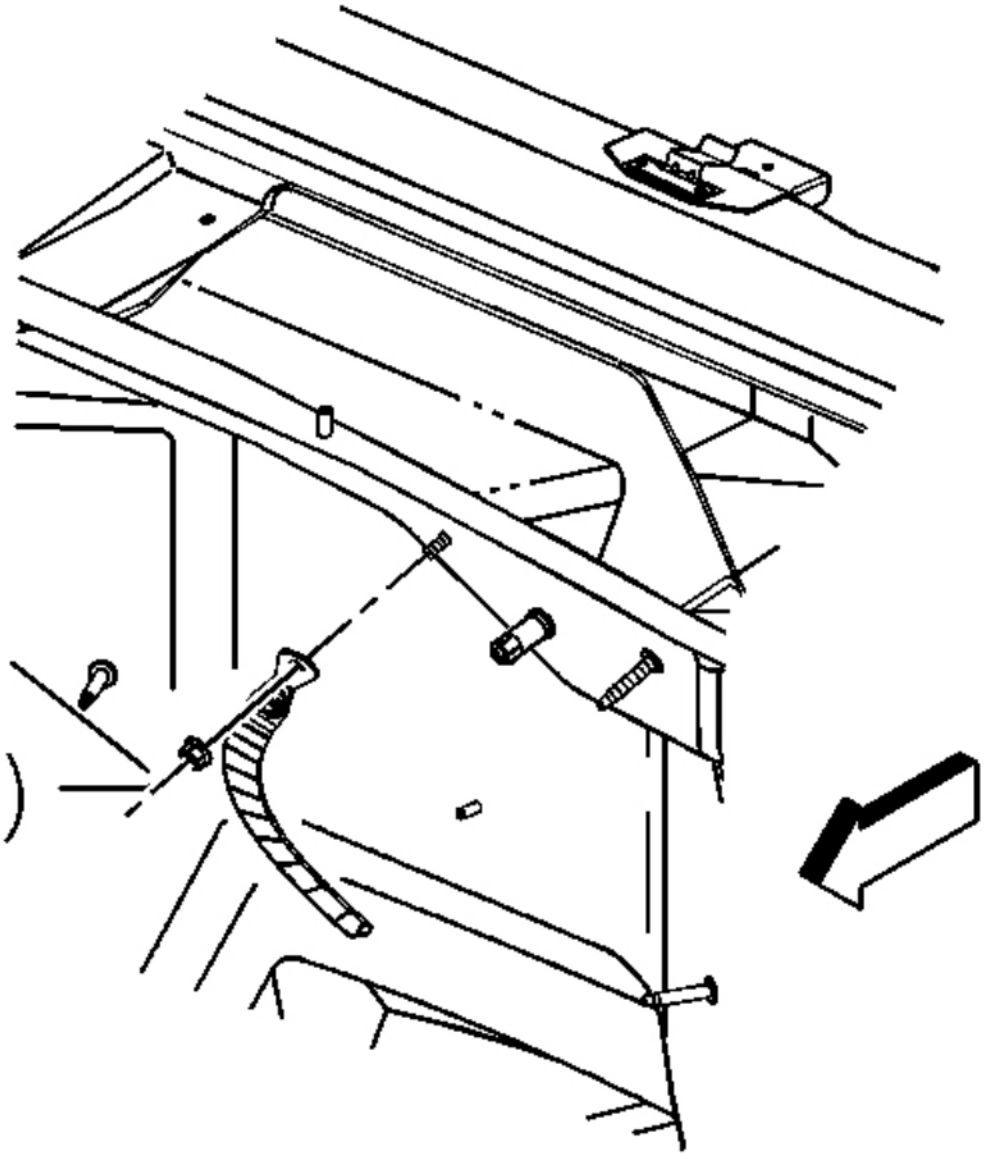

Fig. 58: View Of Ground Strap & Nut
Courtesy of GENERAL MOTORS CORP.

NOTE: **Refer to Fastener Notice in Cautions and Notices.**

cardiagn.com

1. Install the ground strap to the stud.
2. Install the ground strap nut to the stud at the front of dash.

   Tighten: Tighten the nut to 9 N.m (80 lb in).

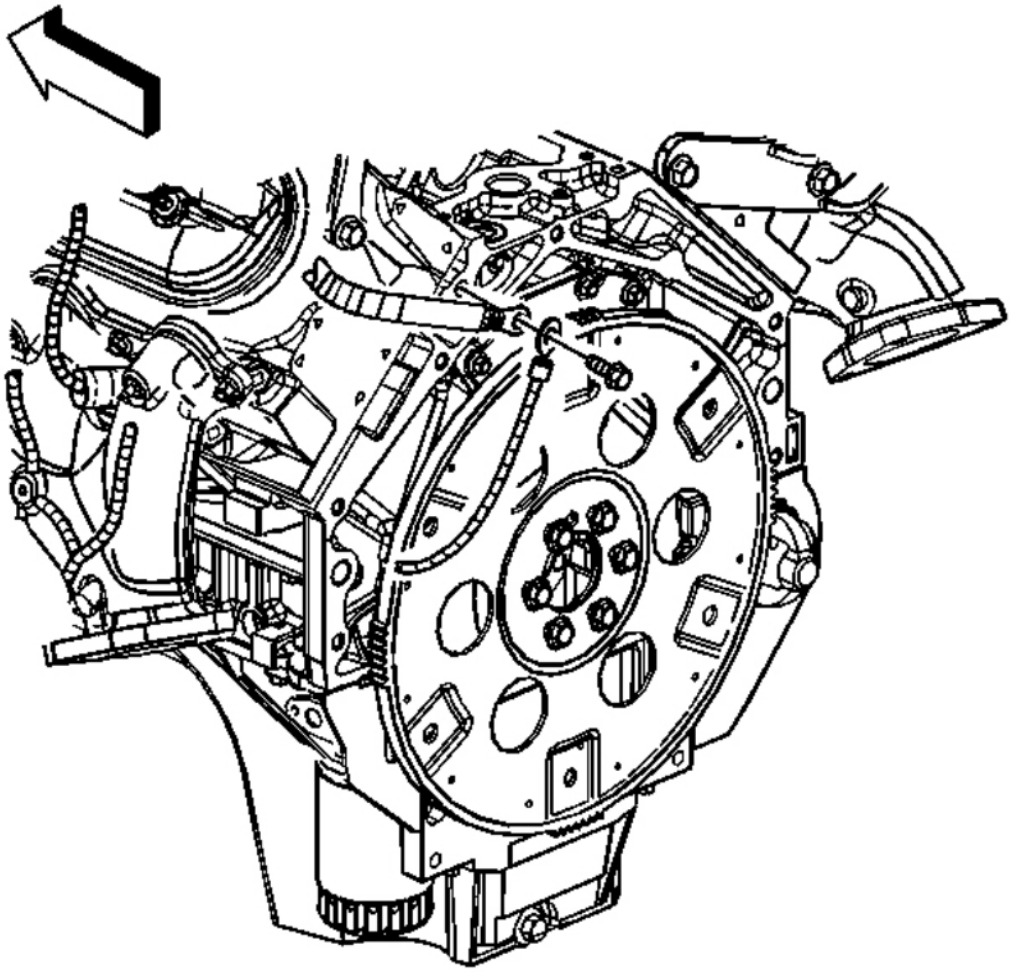

Fig. 59: View Of Ground Cable Bolt At Engine Block
Courtesy of GENERAL MOTORS CORP.

3. Position the ground strap and engine wiring harness ground.
4. Install the engine wiring harness ground bolt.

   Tighten: Tighten the bolt to 16 N.m (12 lb ft).

cardiagn.com

5. If necessary, install the engine sight shield. Refer to **Engine Sight Shield Replacement (4.8L, 5.3L, and 6.0L (RPO LQ4))** or **Engine Sight Shield Replacement (6.0L (RPO LQ9))** in Engine Mechanical - 4.8L, 5.3L, and 6.0L, or **Engine Sight Shield Replacement** in Engine Mechanical - 8.1L.

STARTER MOTOR REPLACEMENT (4.8L, 5.3L, AND 6.0L ENGINES)

Removal Procedure

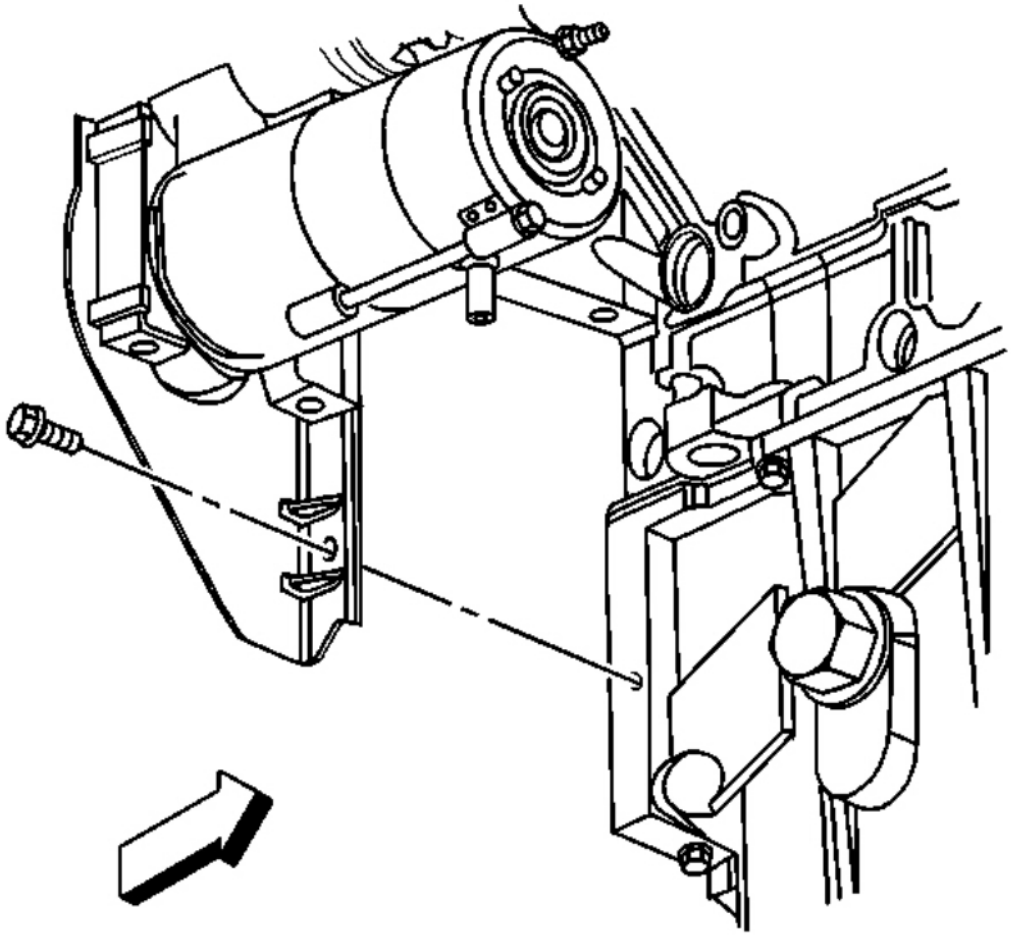

Fig. 60: View Of Transmission Cover Bolt
Courtesy of GENERAL MOTORS CORP.

1. Disconnect the negative battery cable. Refer to **Battery Negative Cable Disconnect/Connect Procedure**.

cardiagn.com

2. Raise and suitably support the vehicle. Refer to **Lifting and Jacking the Vehicle** in General Information.
3. Remove the transmission cover bolt.

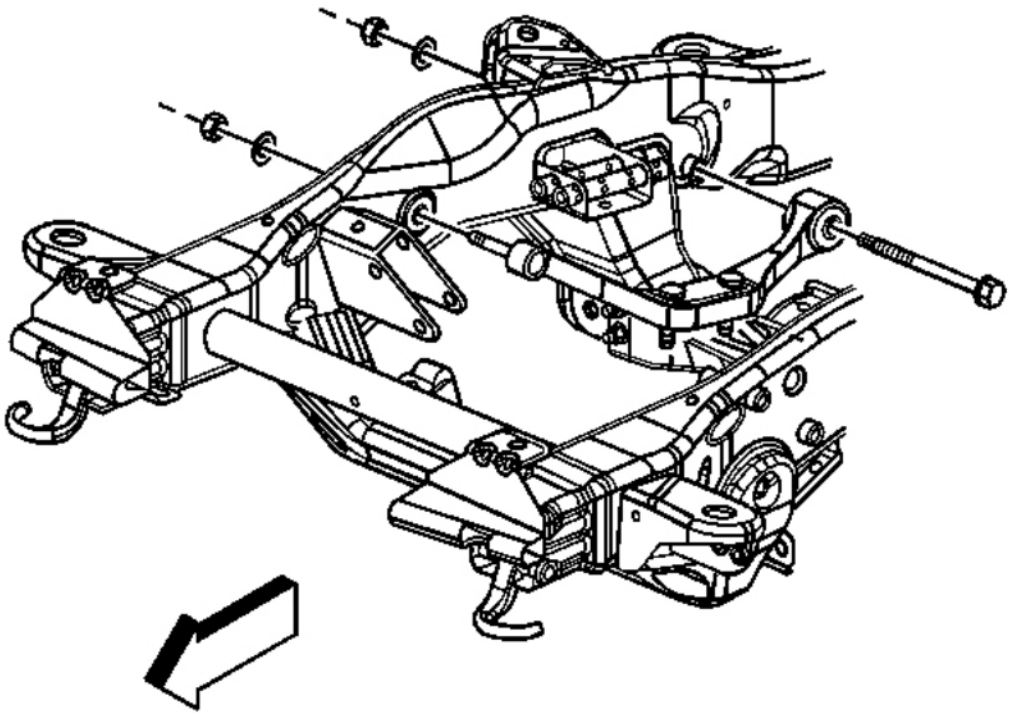

Fig. 61: View Of Front Axle Mounting Bracket Nuts & Bolt (4WD)
Courtesy of GENERAL MOTORS CORP.

4. If equipped with four wheel drive (4WD), remove the front axle mounting bracket nuts.

IMPORTANT: DO NOT remove the bolt.

5. If equipped with 4WD, reposition the front axle mounting bracket bolt until the bolt tip is flush with the support bushing.

cardiagn.com

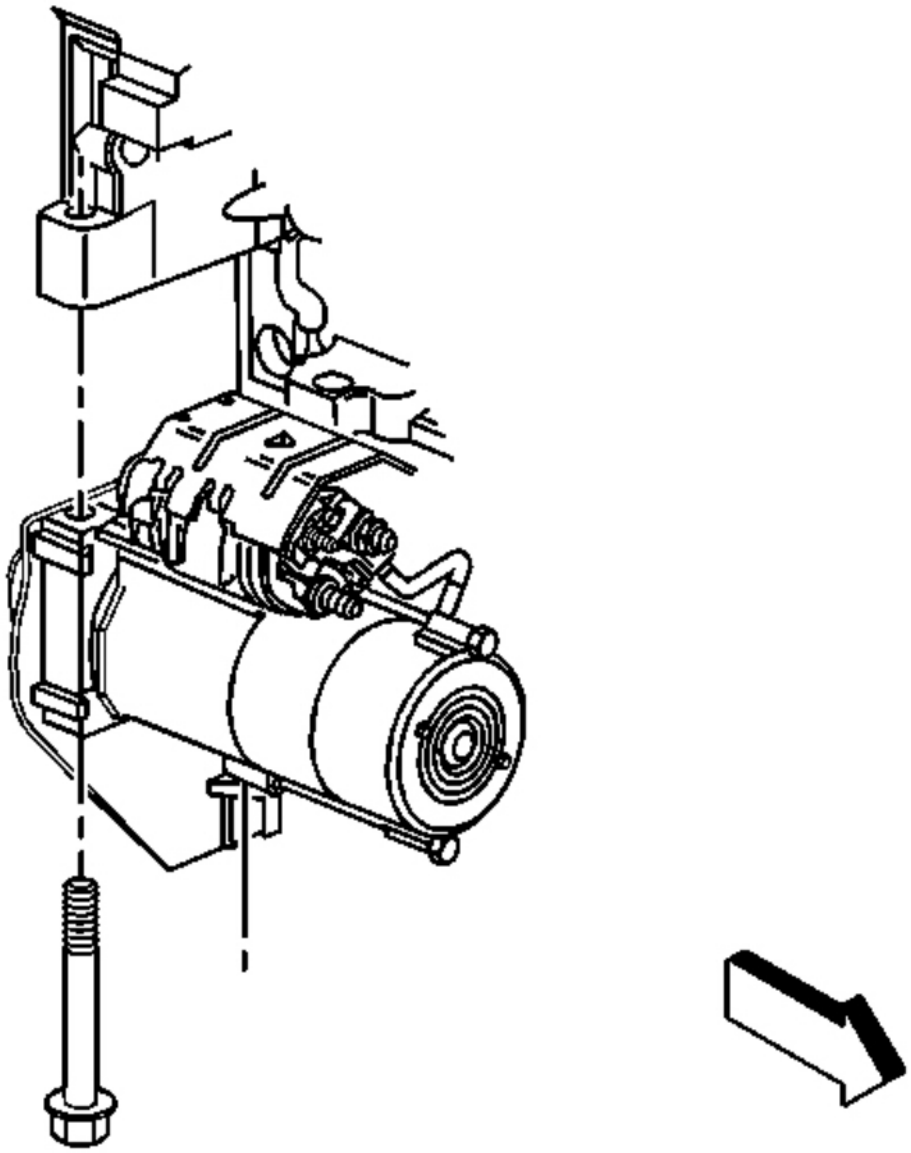

Fig. 62: View Of Starter & Bolts (4.8L, 5.3L & 6.0L)
Courtesy of GENERAL MOTORS CORP.

6. Remove the starter bolts.
7. Disconnect the oil level sensor electrical connector.
8. Slide the starter forward until the starter clears the transmission.

cardiagn.com

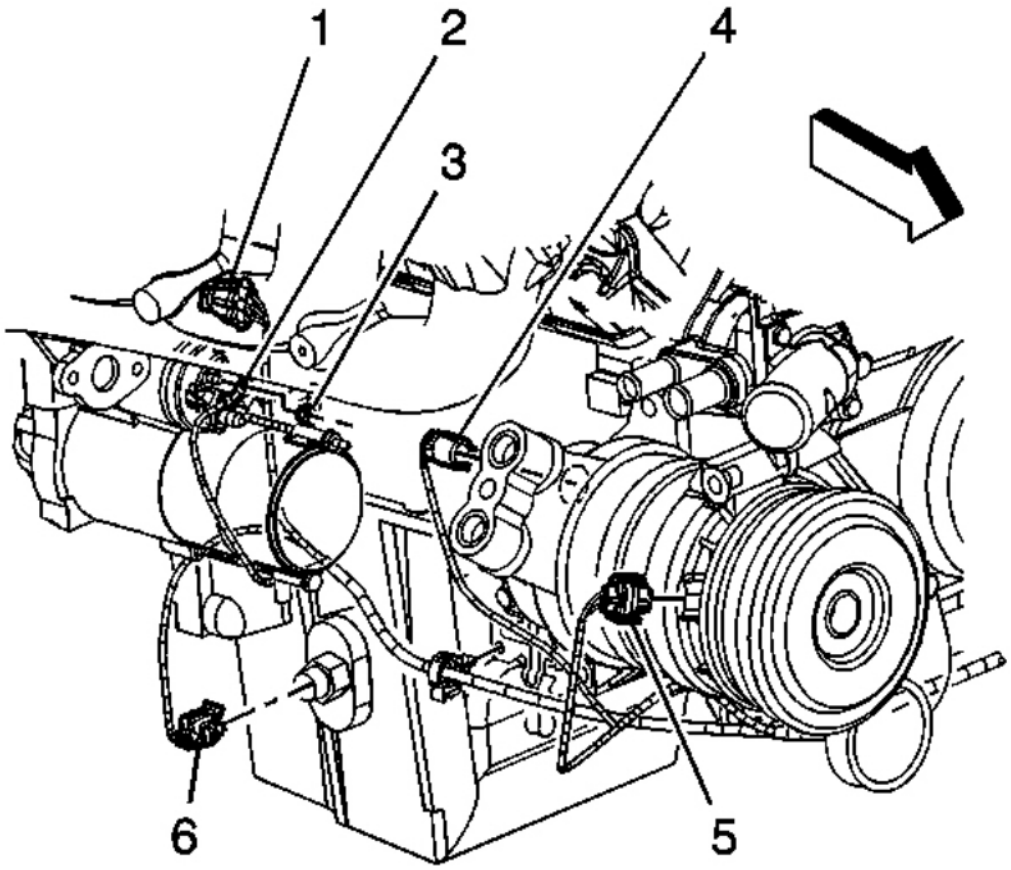

Fig. 63: Identifying Electrical Connector (Right Side Of Engine)
Courtesy of GENERAL MOTORS CORP.

9. Remove the starter lead nut (3).
10. Remove the starter lead (2) from the starter.

cardiagn.com

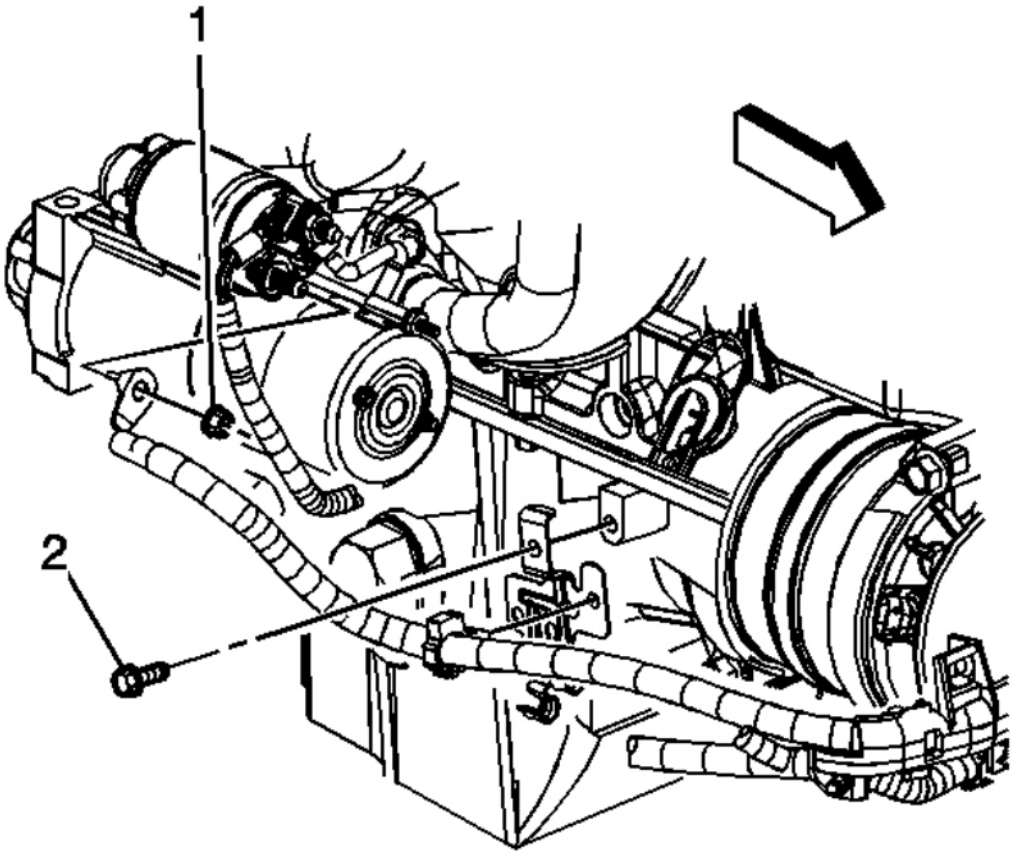

Fig. 64: View Of Positive Cable Nut (4.8L, 5.3L & 6.0L)
Courtesy of GENERAL MOTORS CORP.

11. Remove the positive cable nut (1).
12. Remove the positive cable from the starter.

cardiagn.com

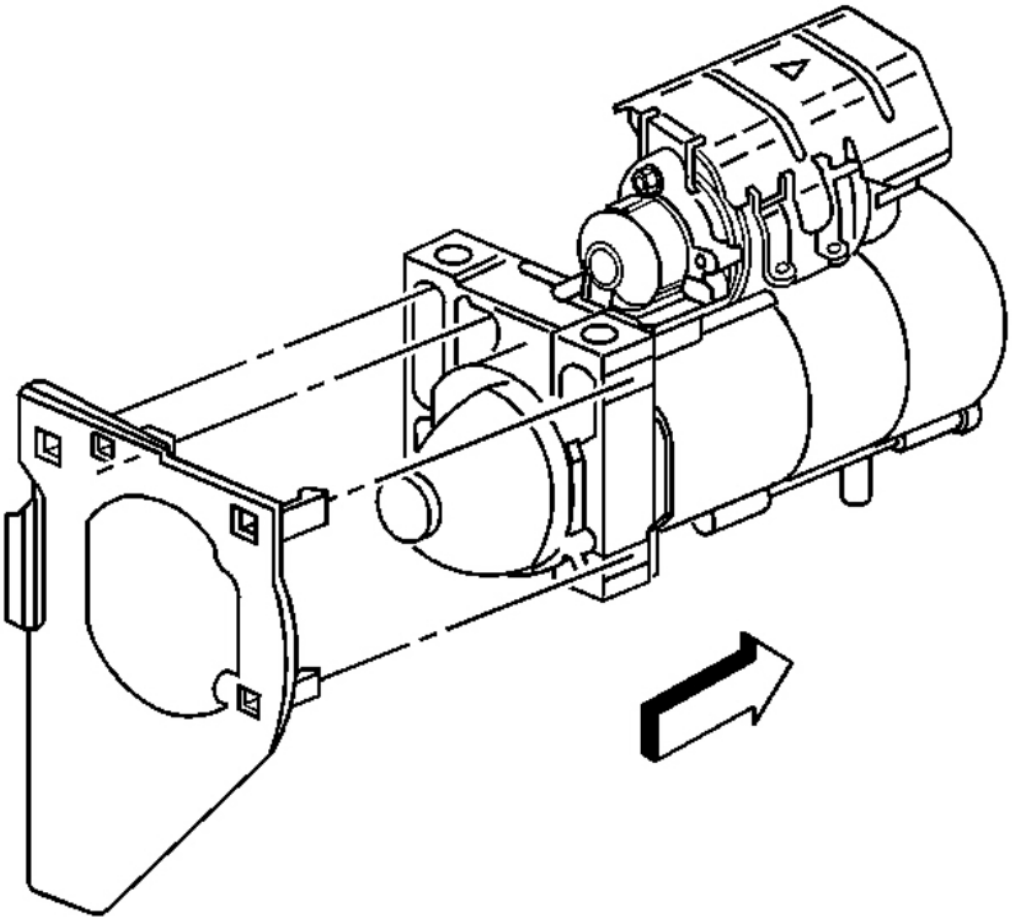

Fig. 65: View Of Transmission Cover
Courtesy of GENERAL MOTORS CORP.

13. Place the starter on a workbench.
14. If necessary, unsnap the transmission cover from the starter.

cardiagn.com

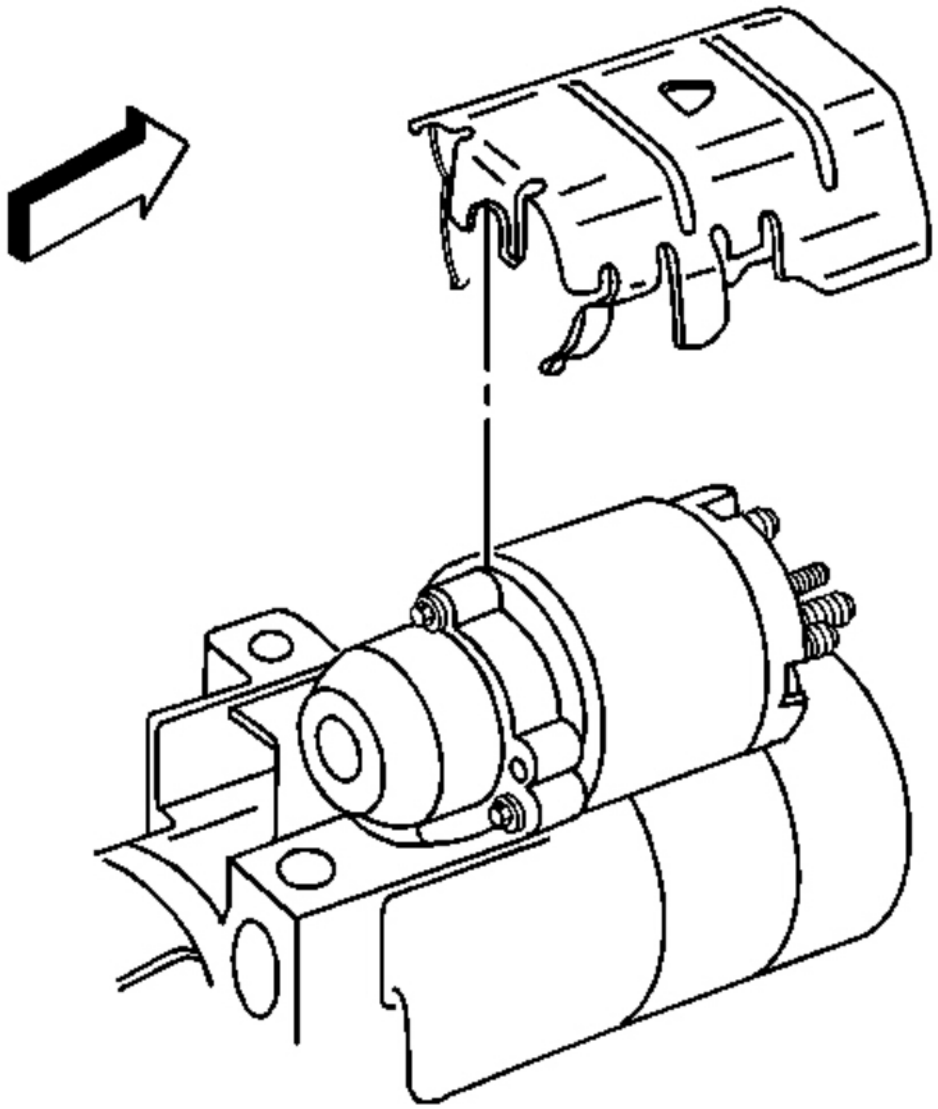

Fig. 66: View Of Starter & Heat Shield
Courtesy of GENERAL MOTORS CORP.

15. If necessary, remove the starter heat shield.

Installation Procedure

cardiagn.com

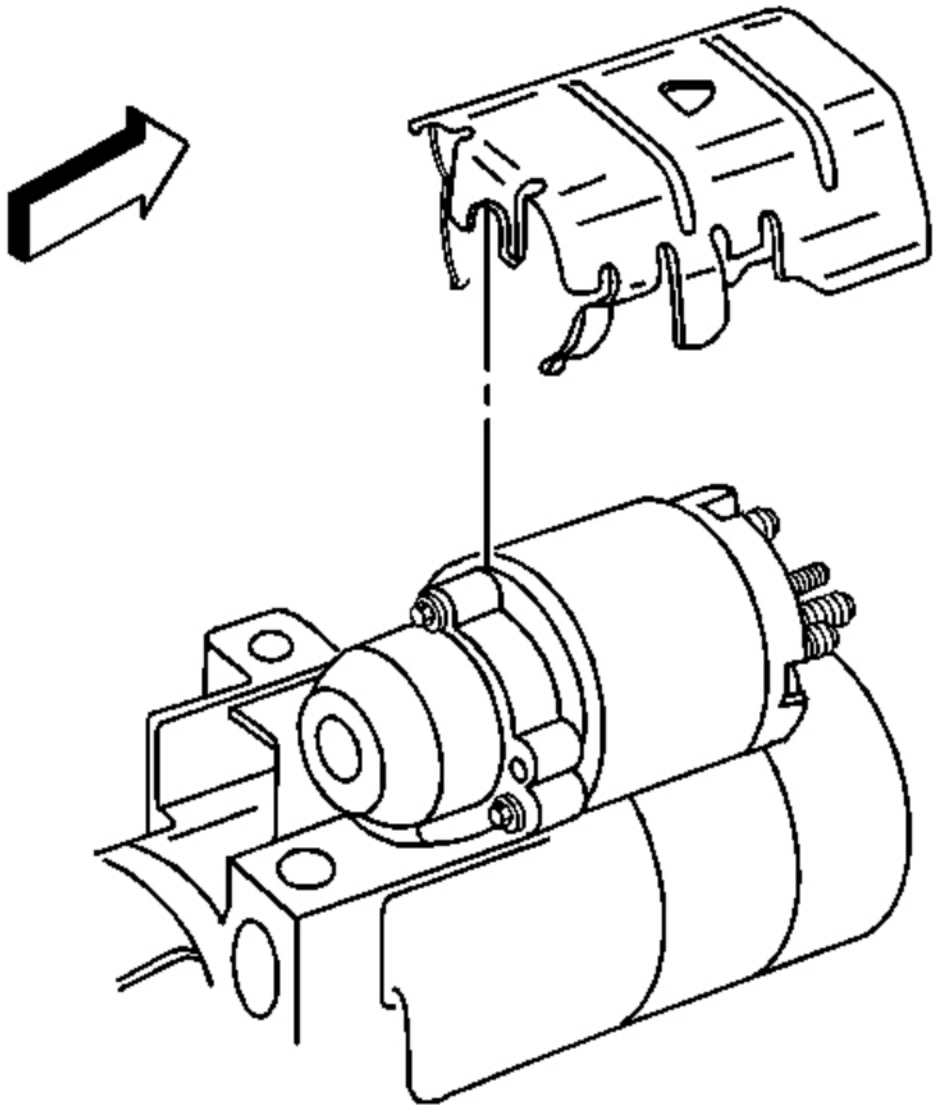

Fig. 67: View Of Starter & Heat Shield
Courtesy of GENERAL MOTORS CORP.

1. If necessary, install the starter heat shield.

cardiagn.com

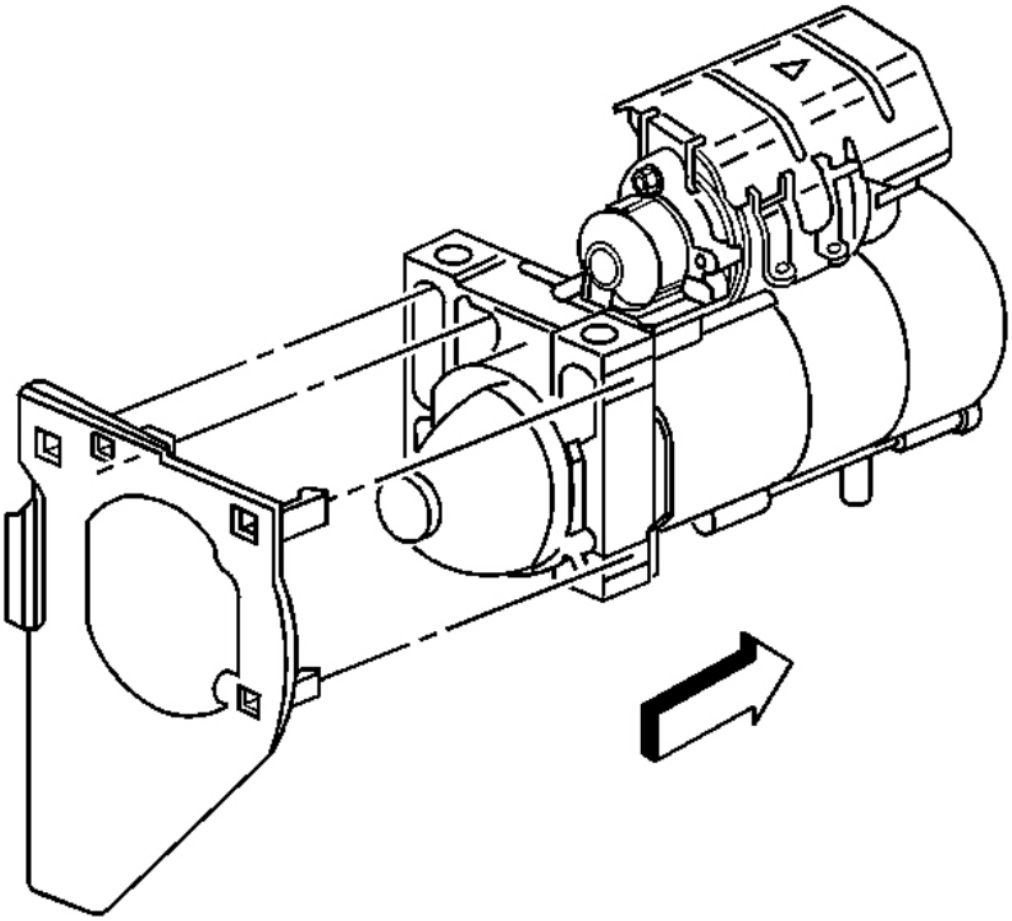

Fig. 68: View Of Transmission Cover
Courtesy of GENERAL MOTORS CORP.

2. If necessary, snap the transmission cover to the starter.

cardiagn.com

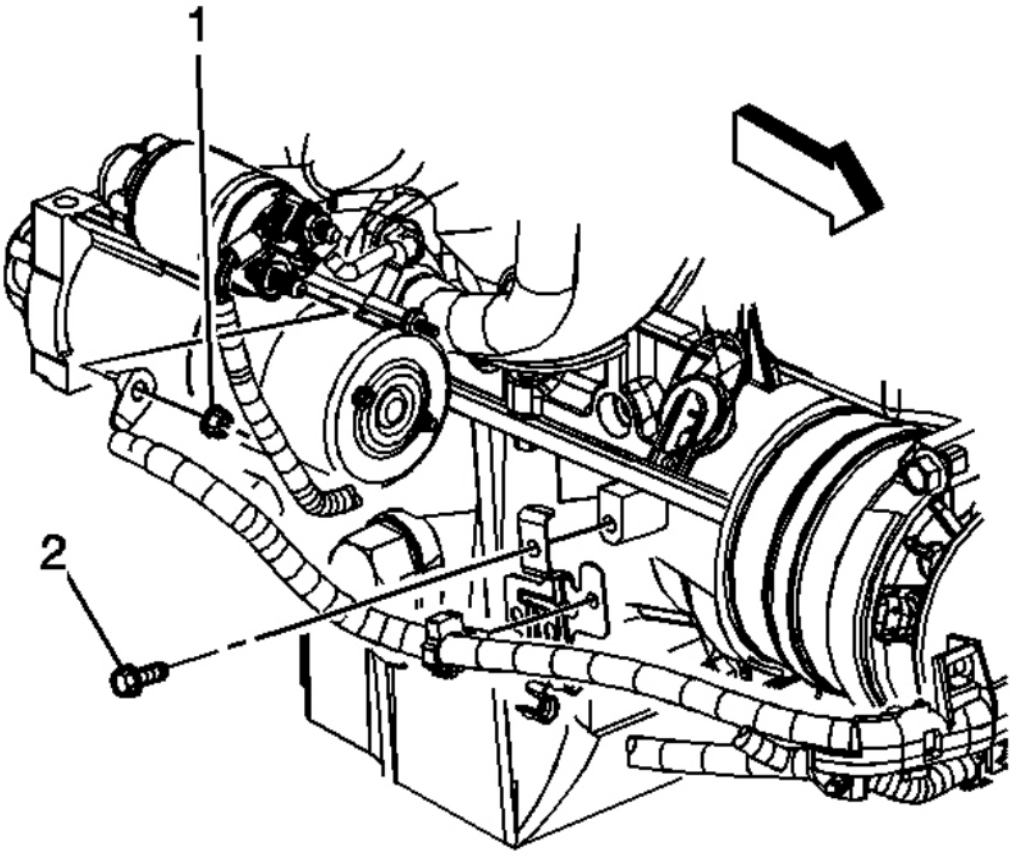

Fig. 69: View Of Positive Cable Nut (4.8L, 5.3L & 6.0L)
Courtesy of GENERAL MOTORS CORP.

NOTE: Refer to Fastener Notice in Cautions and Notices.

3. Install the positive cable to the starter.
4. Install the positive cable nut (1).

Tighten: Tighten the nut to 9 N.m (80 lb in).

cardiagn.com

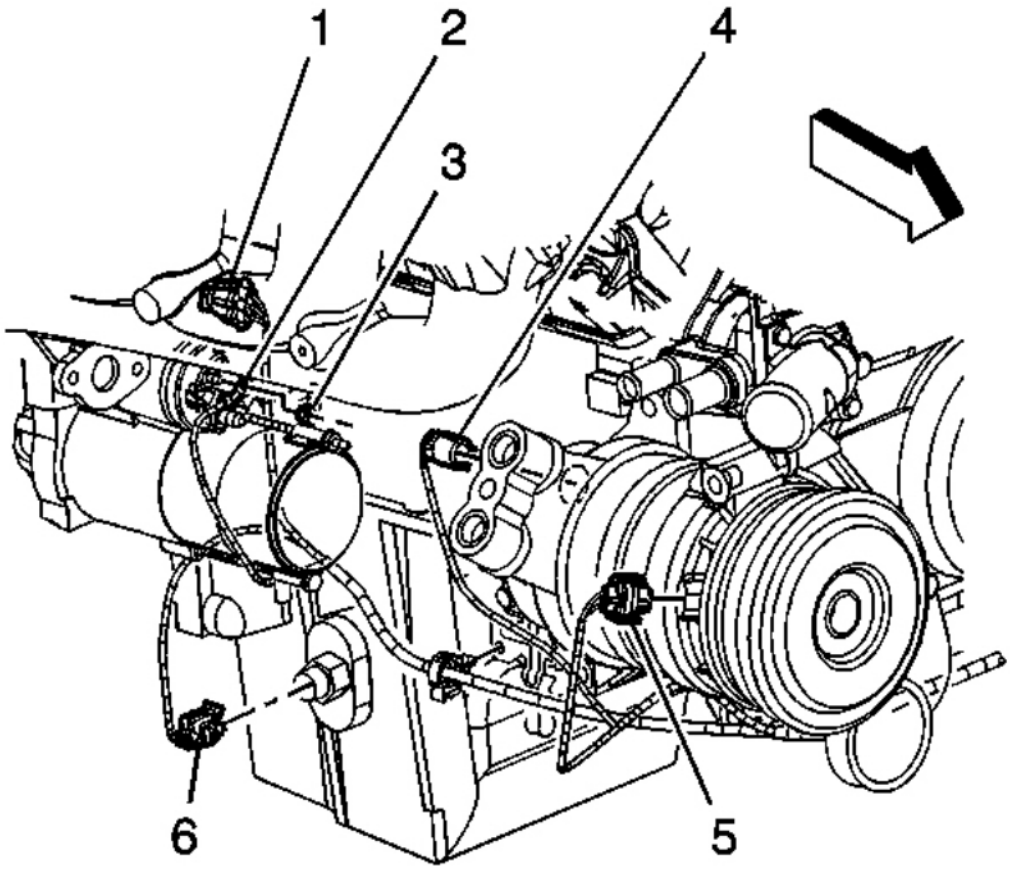

Fig. 70: Identifying Electrical Connector (Right Side Of Engine)
Courtesy of GENERAL MOTORS CORP.

5. Install the starter lead (2) to the starter.
6. Install the starter lead nut (3).

Tighten: Tighten the nut to 3.4 N.m (30 lb in).

cardiagn.com

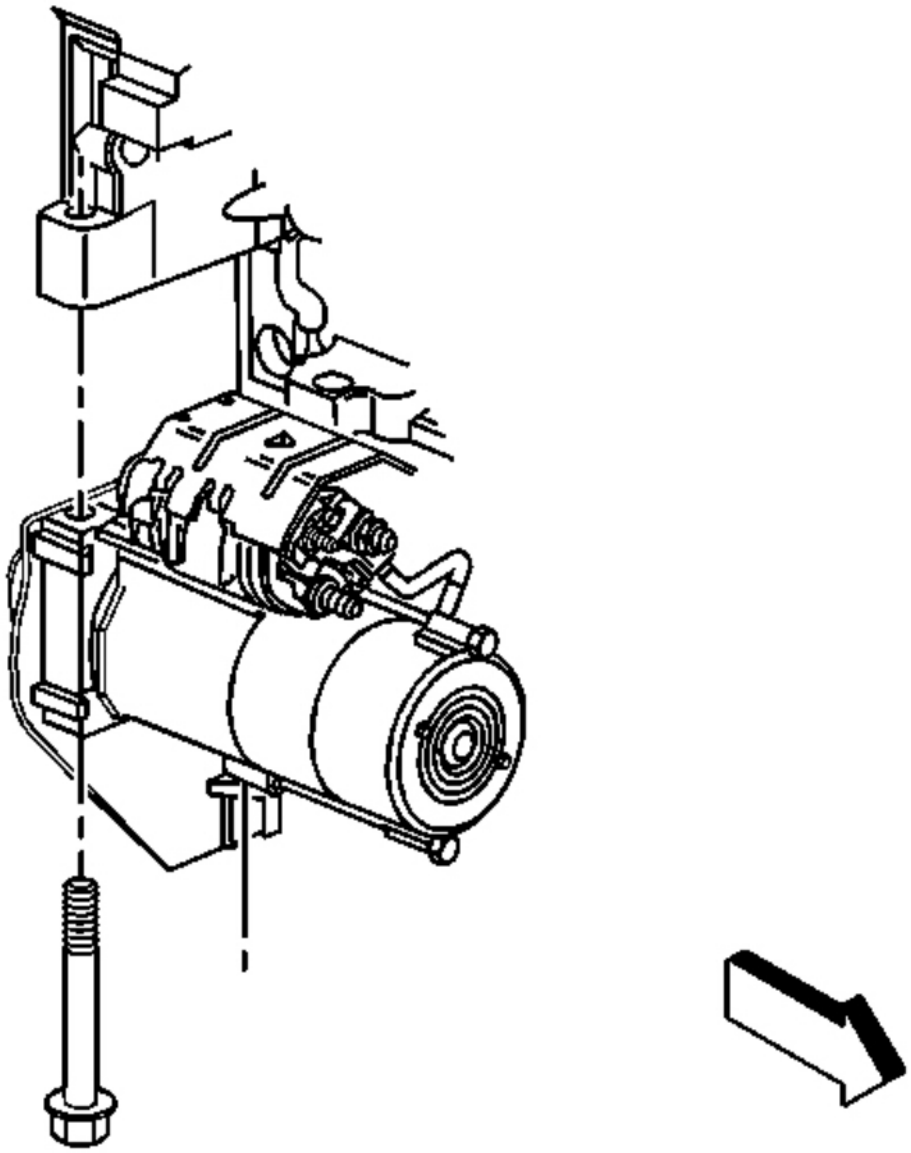

Fig. 71: View Of Starter & Bolts (4.8L, 5.3L & 6.0L)
Courtesy of GENERAL MOTORS CORP.

7. Position the starter into place.
8. Install the starter bolts.

cardiagn.com

Tighten: Tighten the bolts to 50 N.m (37 lb ft).

9. Connect the oil level sensor electrical connector.

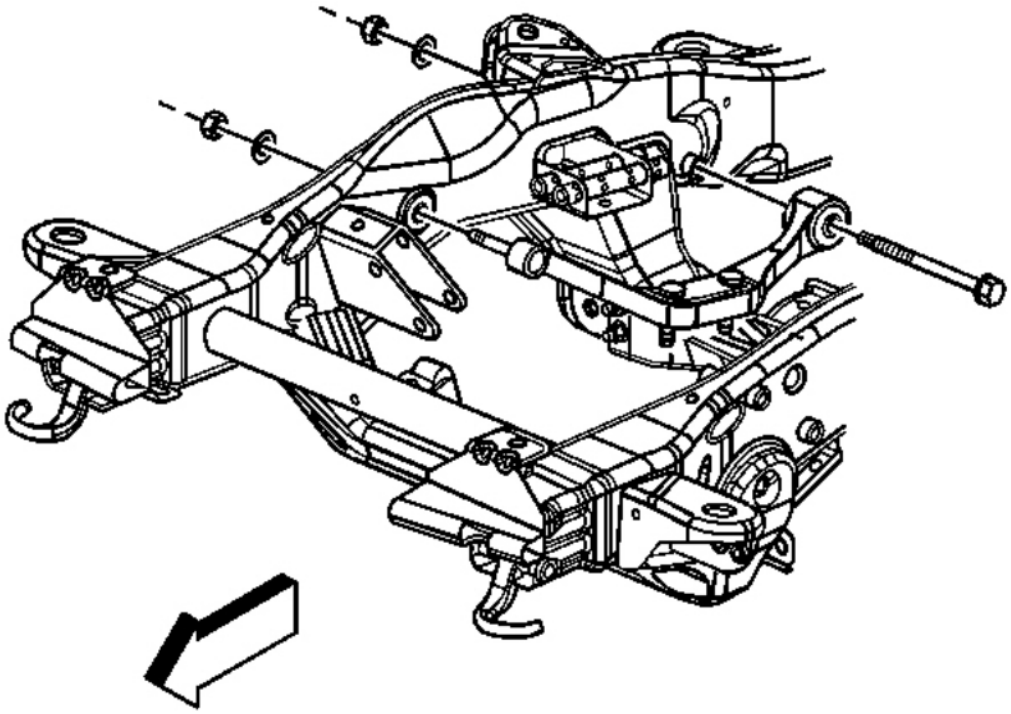

Fig. 72: View Of Front Axle Mounting Bracket Nuts & Bolt (4WD)
Courtesy of GENERAL MOTORS CORP.

10. If equipped with 4WD, position the front axle mounting bracket bolt until the bolt is fully seated.
11. If equipped with 4WD, install the front axle mounting bracket nuts.

Tighten: Tighten the nuts to 95 N.m (70 lb ft).

cardiagn.com

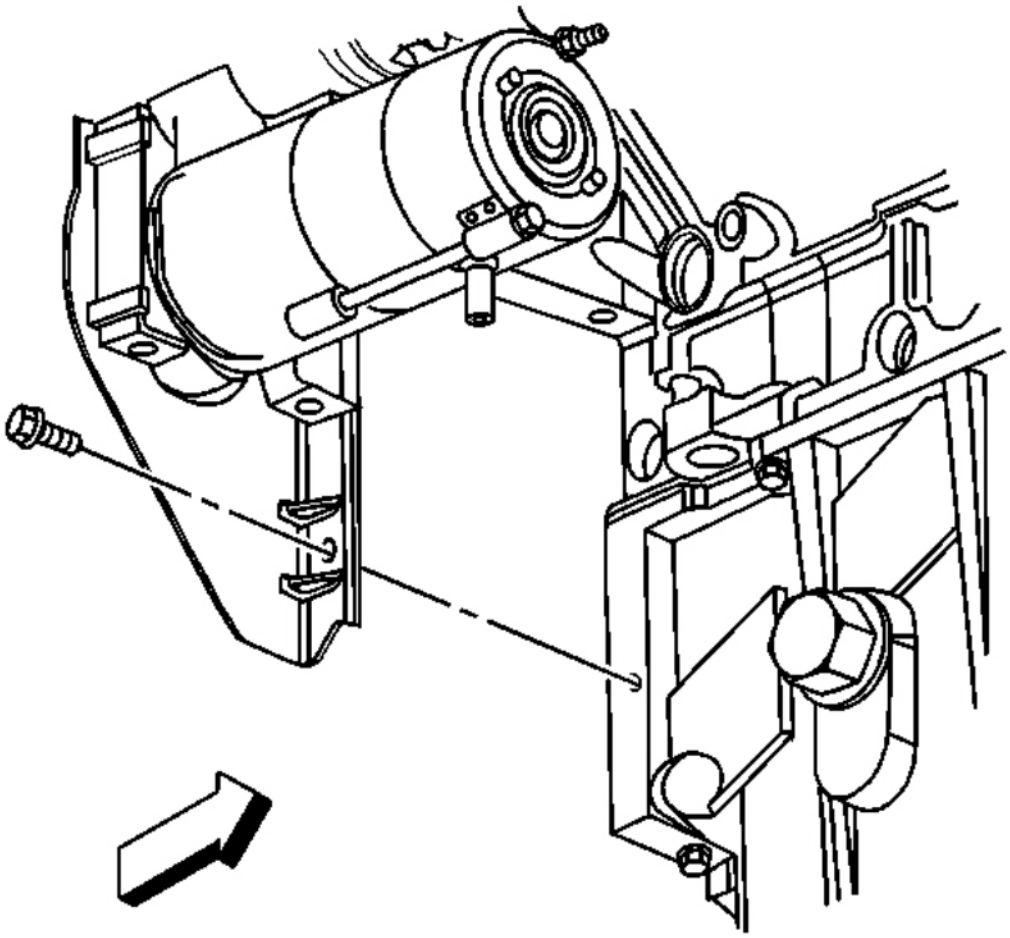

Fig. 73: View Of Transmission Cover Bolt
Courtesy of GENERAL MOTORS CORP.

12. Install the transmission cover bolt.

    Tighten: Tighten the bolt to 9 N.m (80 lb in).

13. Lower the vehicle.
14. Connect the negative battery cable. Refer to **Battery Negative Cable Disconnect/Connect Procedure**.

STARTER MOTOR REPLACEMENT (8.1L ENGINE)

Removal Procedure

cardiagn.com

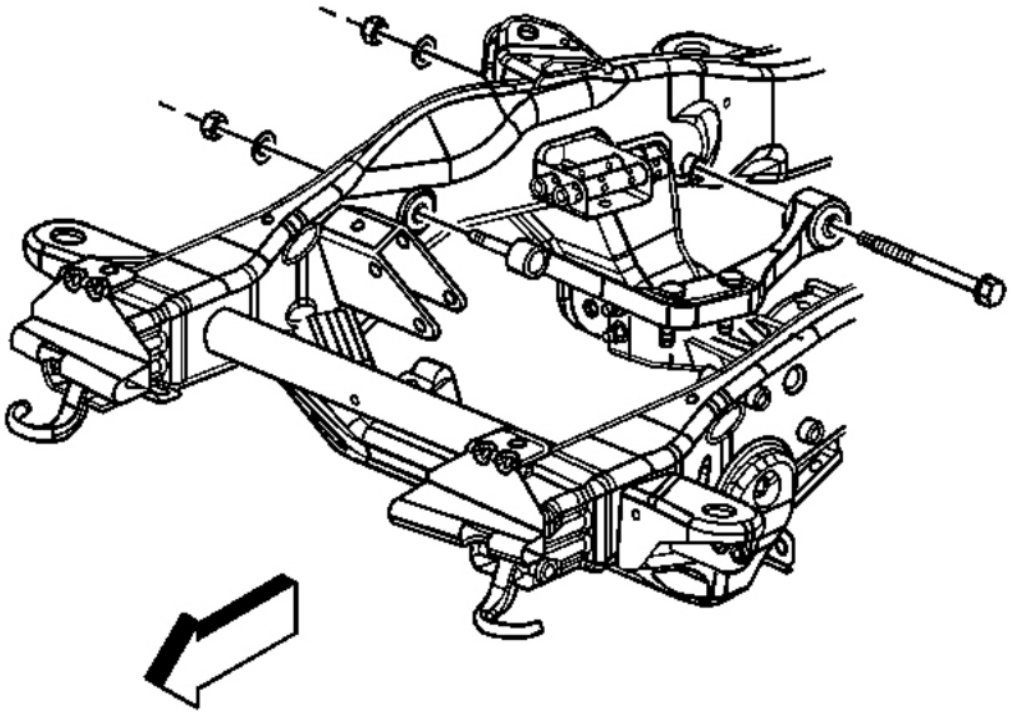

Fig. 74: View Of Front Axle Mounting Bracket Nuts & Bolt (4WD)
Courtesy of GENERAL MOTORS CORP.

1. Disconnect the negative battery cable. Refer to **Battery Negative Cable Disconnect/Connect Procedure**.
2. Raise and suitably support the vehicle. Refer to **Lifting and Jacking the Vehicle** in General Information.
3. If equipped with four wheel drive (4WD), remove the front axle mounting bracket nuts.

IMPORTANT: DO NOT remove the bolt.

4. If equipped with 4WD, reposition the front axle mounting bracket bolt until the bolt tip is flush with the support bushing.

cardiagn.com

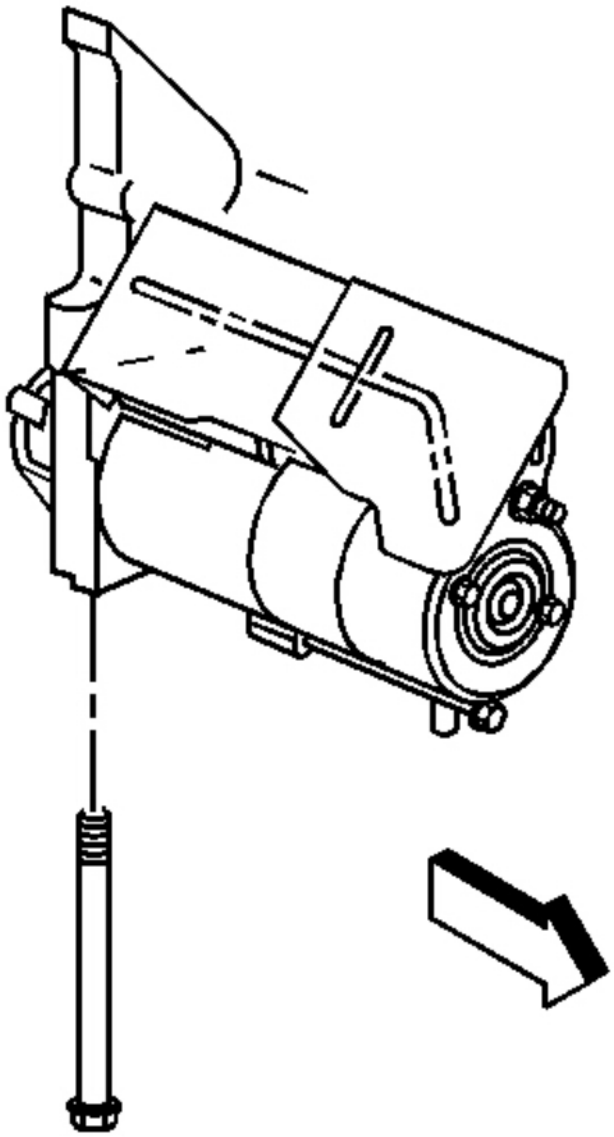

Fig. 75: View Of Starter Motor (8.1L)
Courtesy of GENERAL MOTORS CORP.

5. Remove the starter bolts.
6. Slide the starter forward until the starter clears the transmission.

cardiagn.com

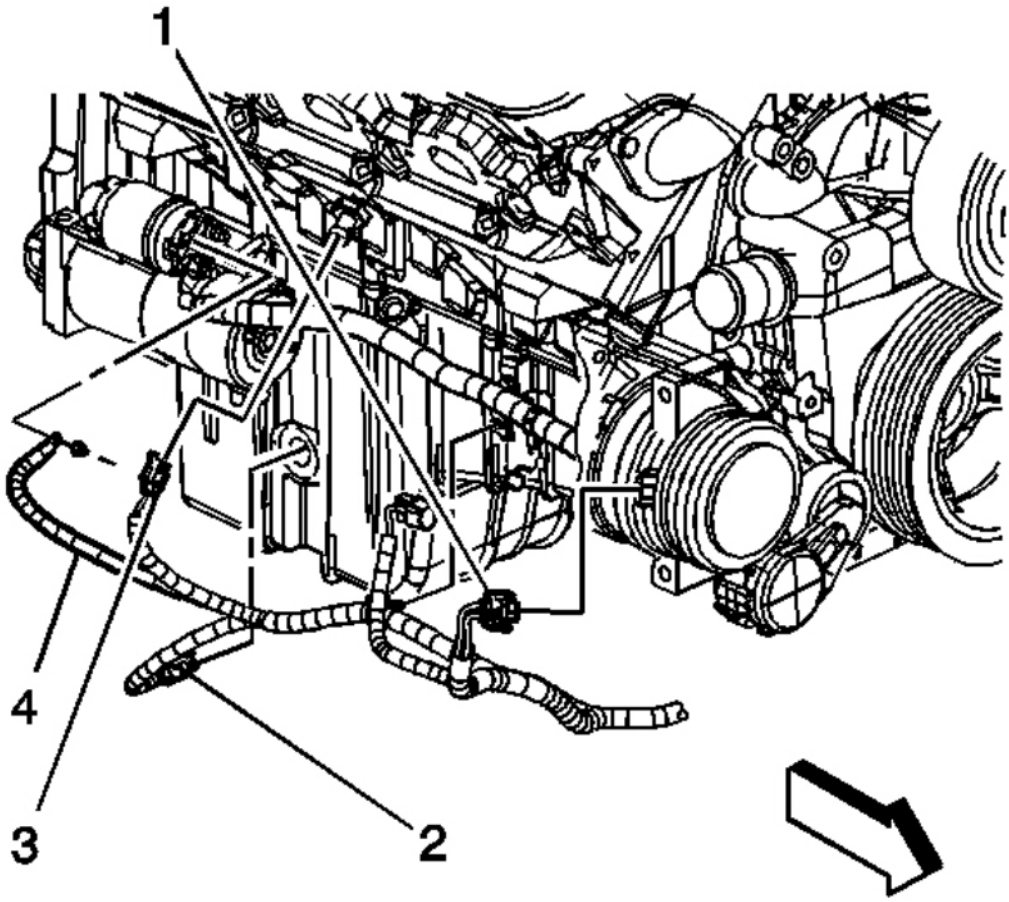

Fig. 76: View Of Starter Lead & Nut (8.1L)
Courtesy of GENERAL MOTORS CORP.

7. Remove the starter lead nut.
8. Remove the starter lead (4) from the starter.

cardiagn.com

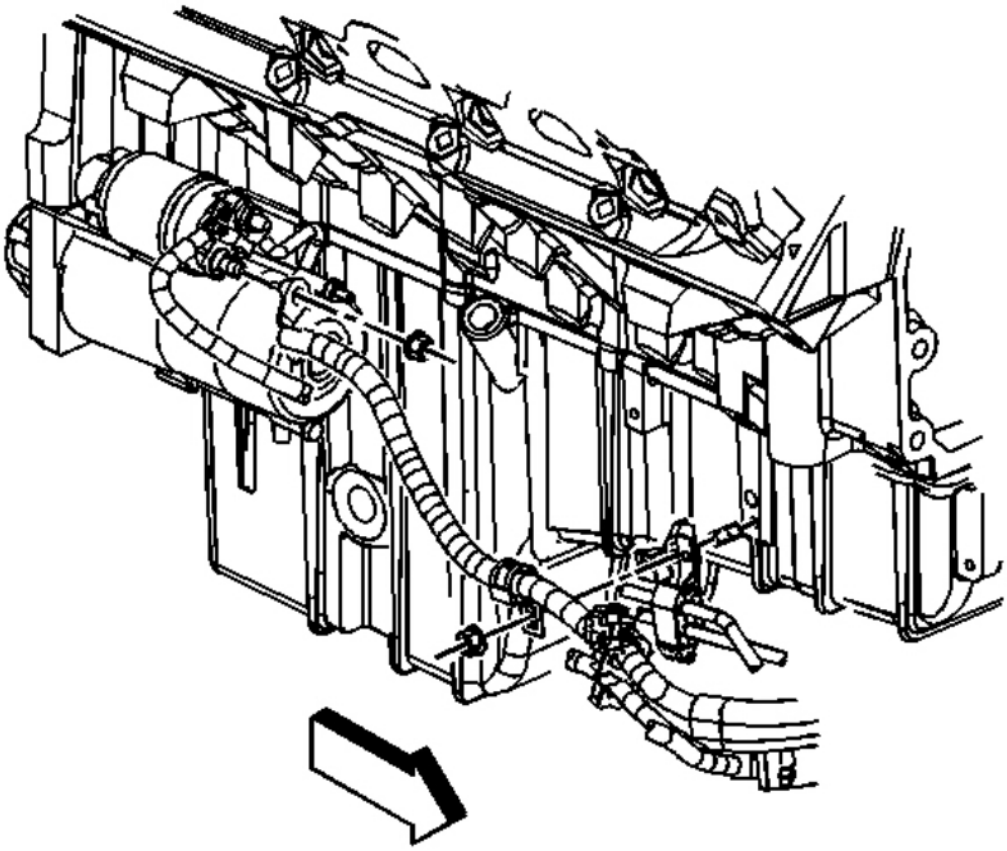

Fig. 77: View Of Positive Cable & Nut (8.1L)
Courtesy of GENERAL MOTORS CORP.

9. Remove the positive cable nut.
10. Remove the positive cable from the starter.

cardiagn.com

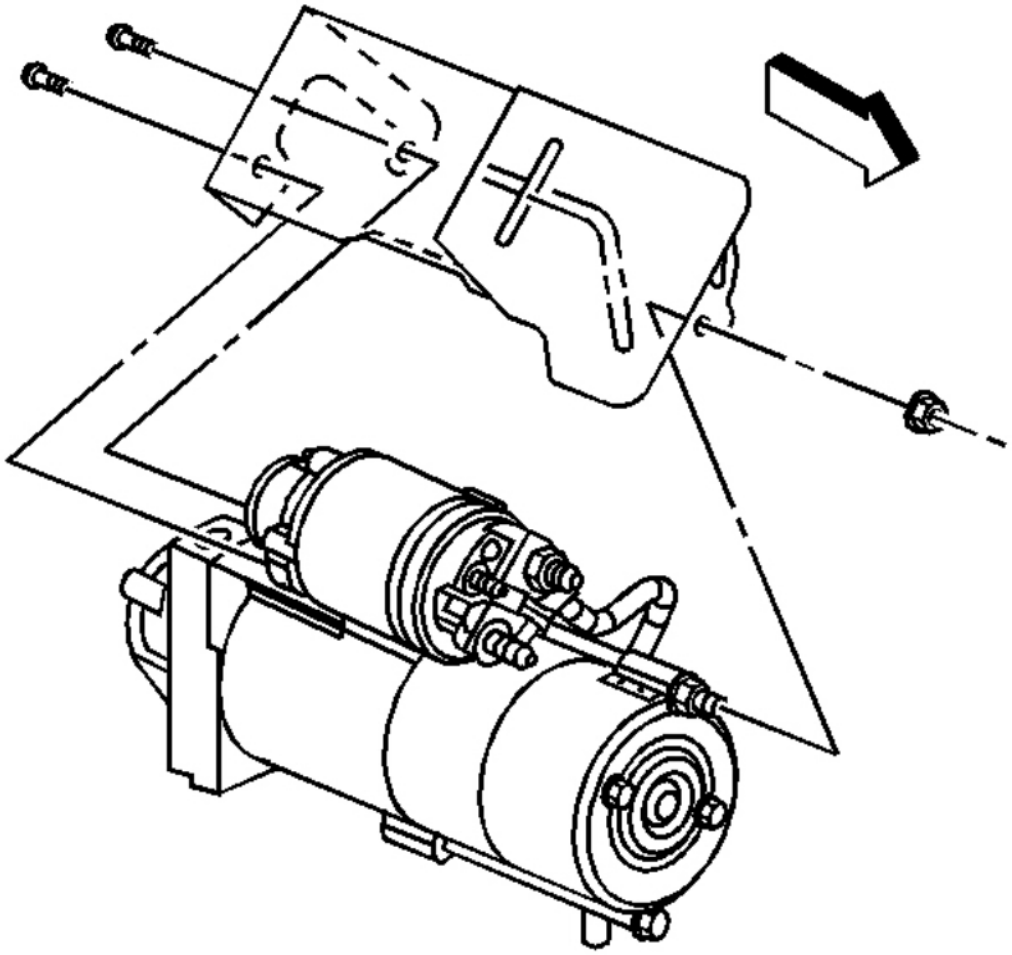

Fig. 78: View of Starter Heat Shield, Bolts, & Nuts
Courtesy of GENERAL MOTORS CORP.

11. If necessary, remove the starter heat shield bolts, nut, and shield.

Installation Procedure

cardiagn.com

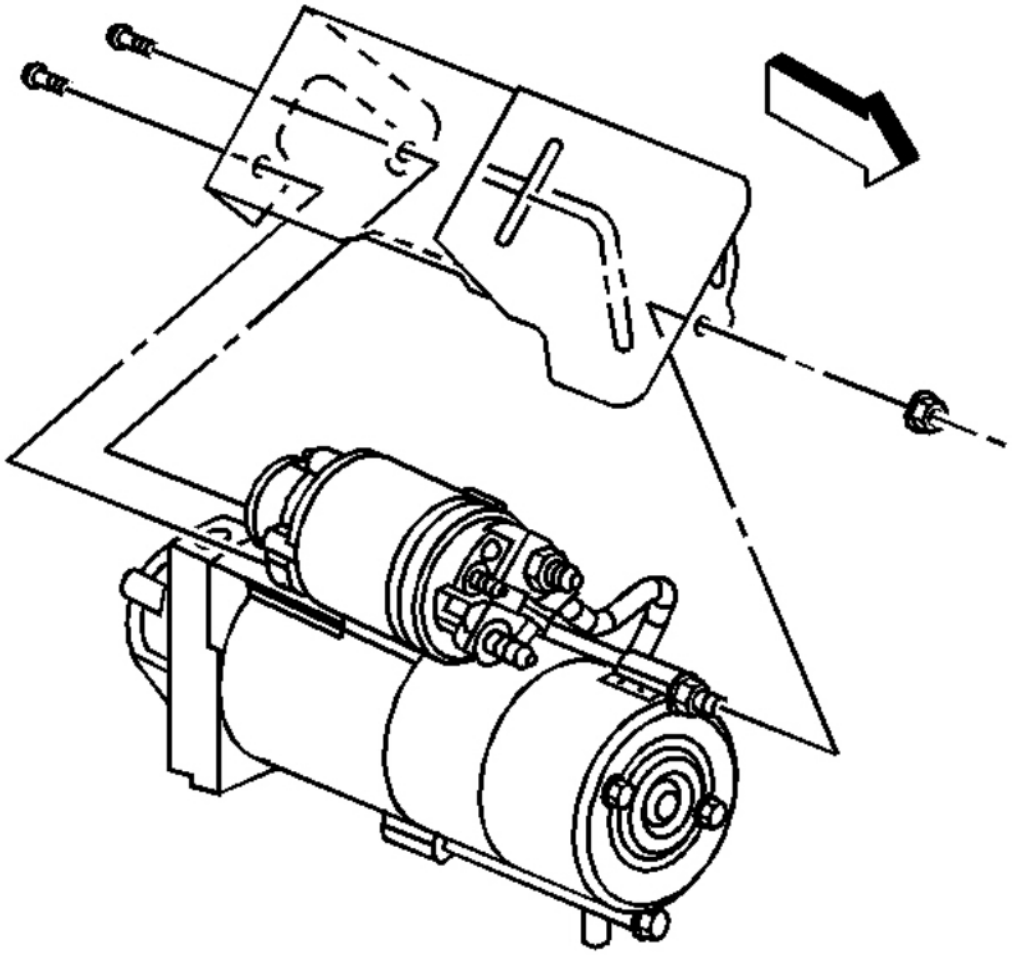

Fig. 79: View of Starter Heat Shield, Bolts, & Nuts
Courtesy of GENERAL MOTORS CORP.

NOTE: Refer to Fastener Notice in Cautions and Notices.

1. If necessary, install the starter heat shield, nut and bolts.

Tighten:

- Tighten the bolts to 3 N.m (35 lb in).
- Tighten the nut to 5 N.m (44 lb in).

cardiagn.com

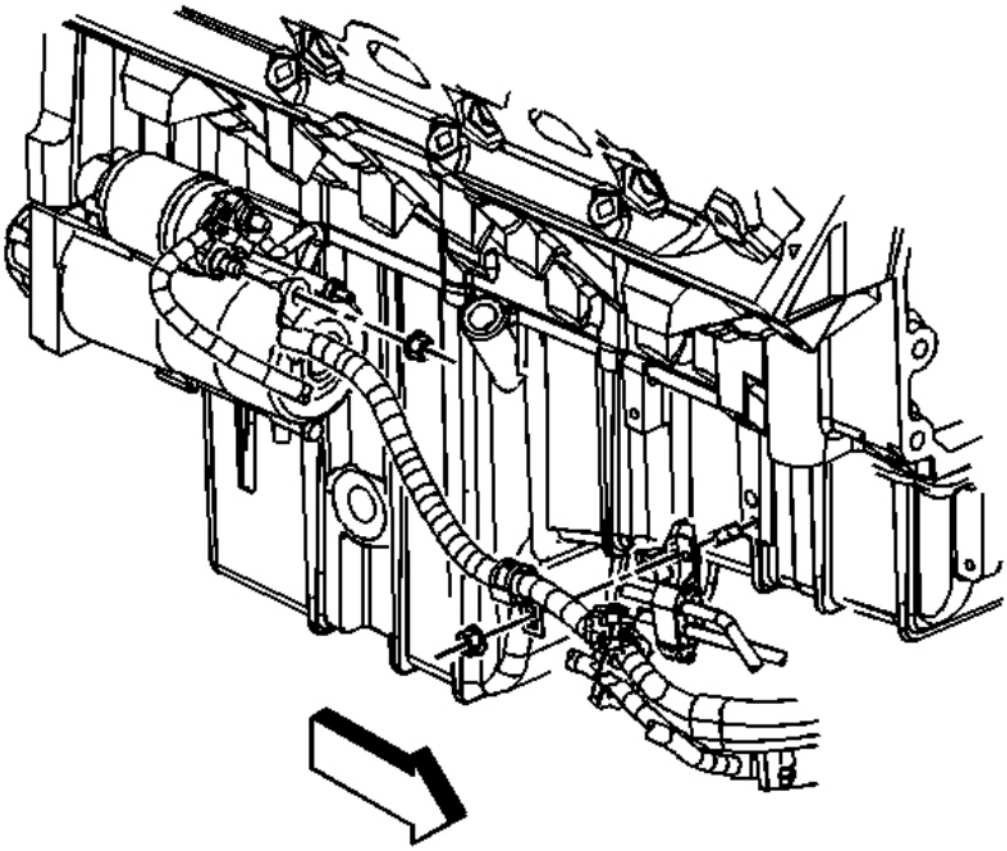

Fig. 80: View Of Positive Cable & Nut (8.1L)
Courtesy of GENERAL MOTORS CORP.

2. Install the positive cable to the starter.
3. Install the positive cable nut.

Tighten: Tighten the nut to 9 N.m (80 lb in).

cardiagn.com

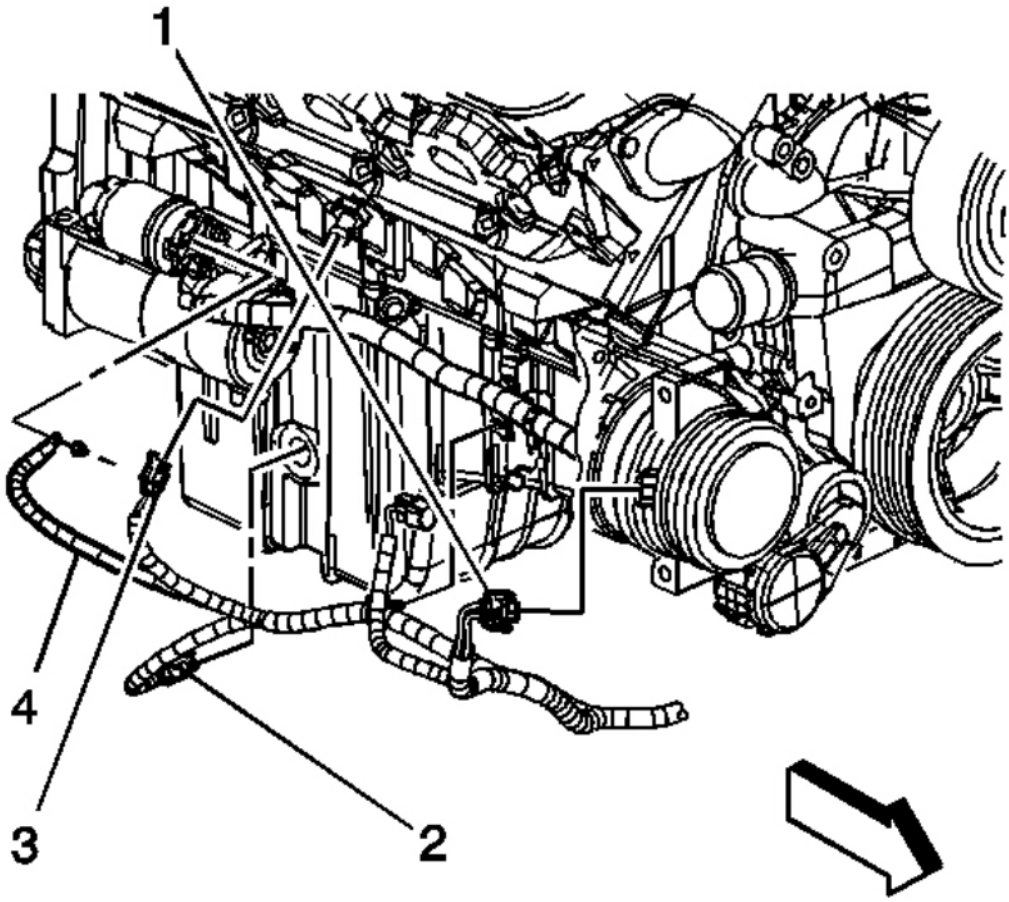

Fig. 81: View Of Starter Lead & Nut (8.1L)
Courtesy of GENERAL MOTORS CORP.

4. Install the starter lead (4) to the starter.
5. Install the starter lead nut.

Tighten: Tighten the nut to 3.4 N.m (30 lb in).

cardiagn.com

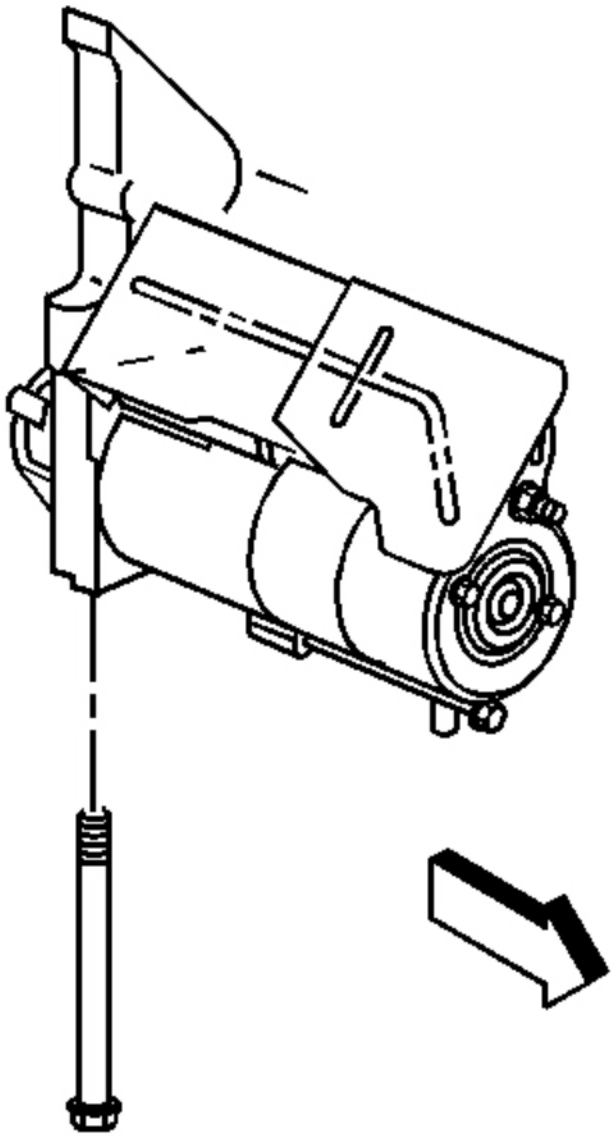

Fig. 82: View Of Starter Motor (8.1L)
Courtesy of GENERAL MOTORS CORP.

6. Position the starter into place.
7. Install the starter bolts.

Tighten: Tighten the bolts to 50 N.m (37 lb ft).

cardiagn.com

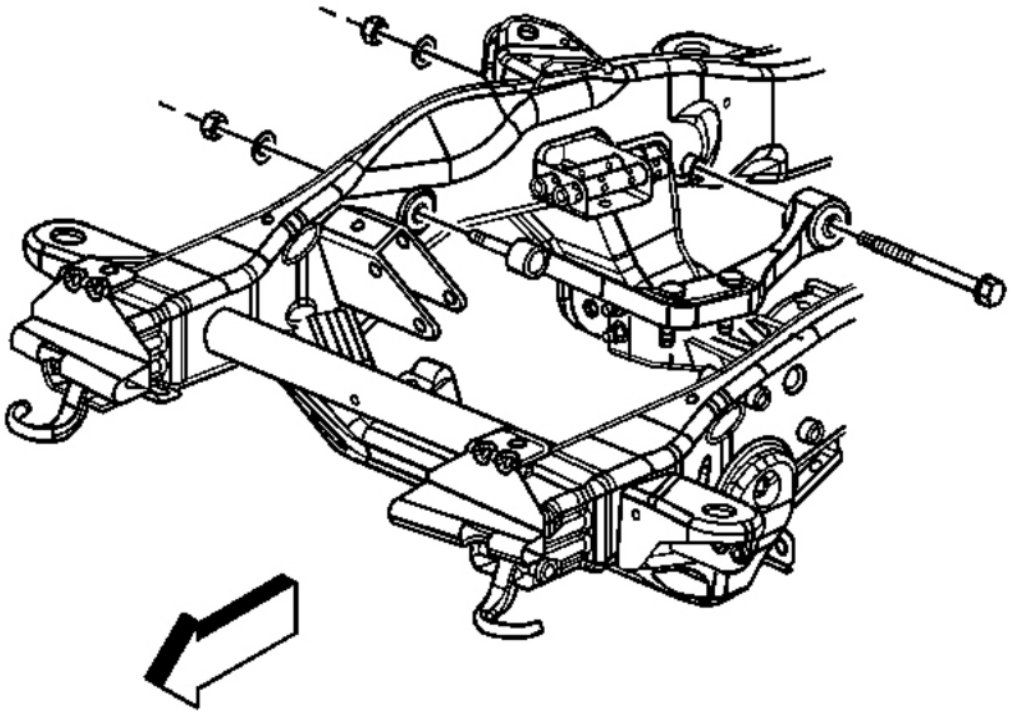

Fig. 83: View Of Front Axle Mounting Bracket Nuts & Bolt (4WD)
Courtesy of GENERAL MOTORS CORP.

8. If equipped with 4WD, position the front axle mounting bracket bolt until the bolt is fully seated.
9. If equipped with 4WD, install the front axle mounting bracket nuts.

   Tighten: Tighten the nuts to 95 N.m (70 lb ft).

10. Lower the vehicle.
11. Connect the negative battery cable. Refer to **Battery Negative Cable Disconnect/Connect Procedure**.

STARTER SHIELD REPLACEMENT

Removal Procedure

cardiagn.com

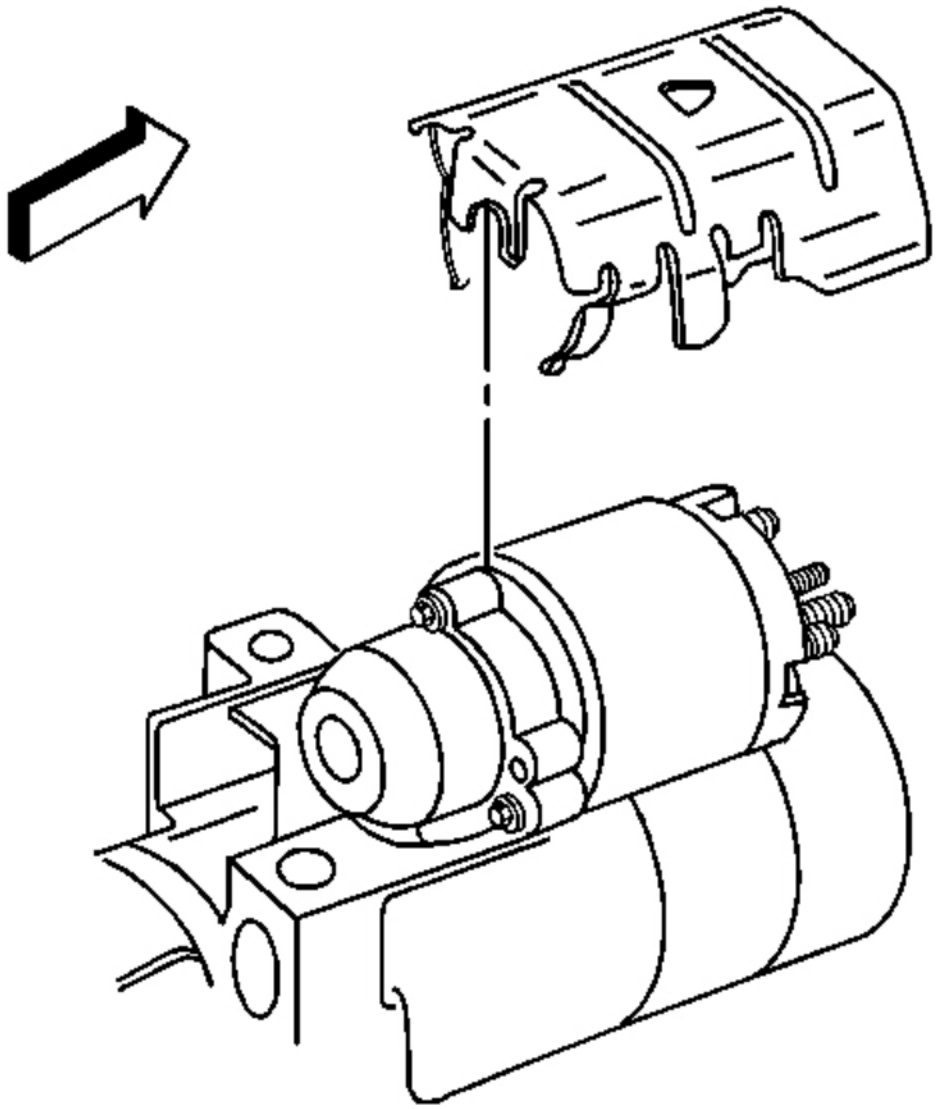

Fig. 84: View Of Starter & Heat Shield
Courtesy of GENERAL MOTORS CORP.

1. Remove the starter motor. Refer to **Starter Motor Replacement (4.8L, 5.3L, and 6.0L Engines)** or **Starter Motor Replacement (8.1L Engine)**.
2. If equipped with a 4.8L, 5.3L, or 6.0L engine, remove the starter heat shield.

cardiagn.com

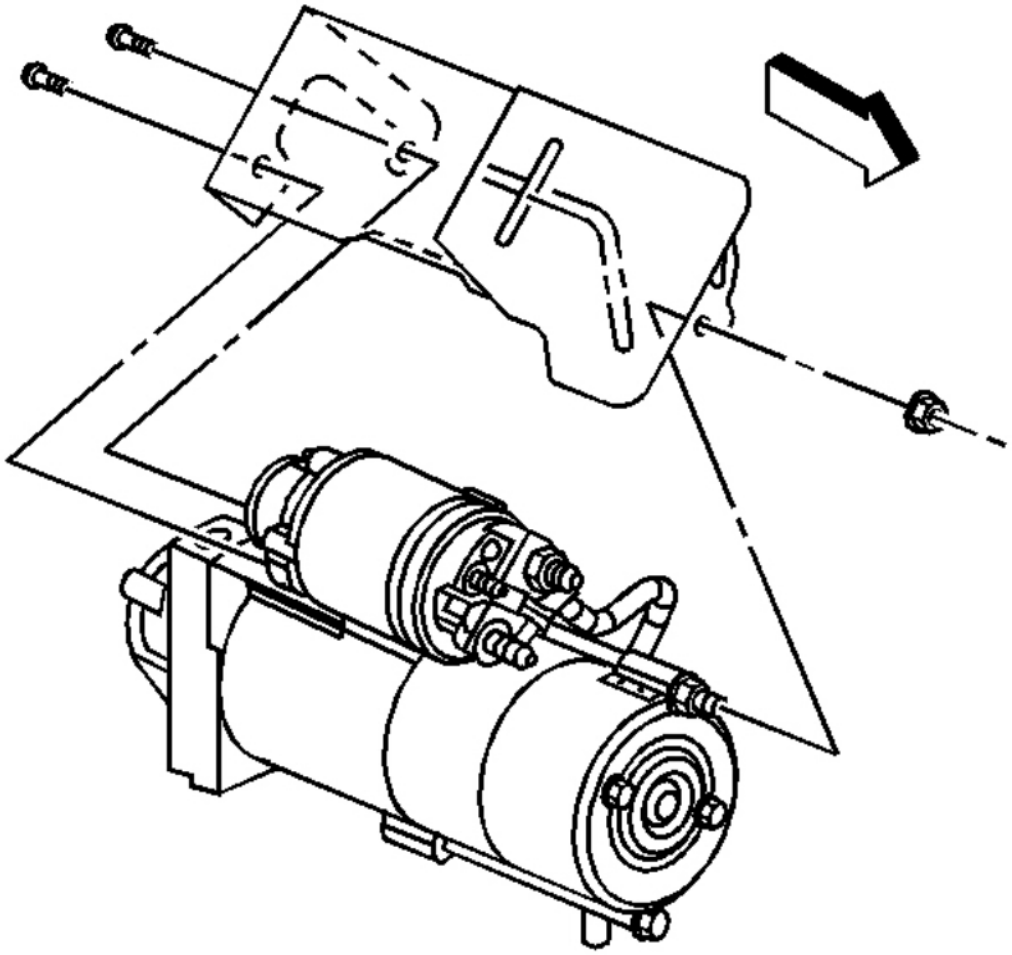

Fig. 85: View of Starter Heat Shield, Bolts, & Nuts
Courtesy of GENERAL MOTORS CORP.

3. If equipped with a 8.1L engine, remove the starter heat shield bolts, and nut.
4. Remove the starter heat shield.

Installation Procedure

cardiagn.com

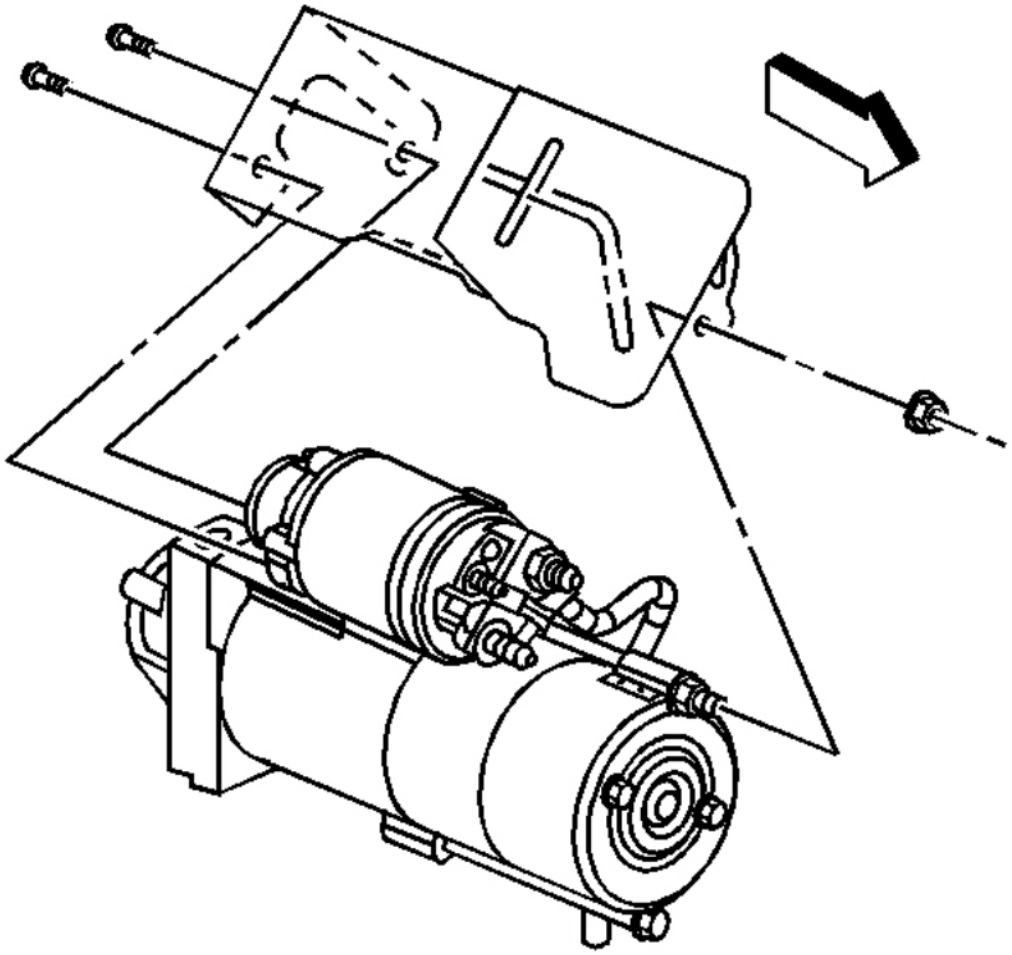

Fig. 86: View of Starter Heat Shield, Bolts, & Nuts
Courtesy of GENERAL MOTORS CORP.

NOTE: Refer to Fastener Notice in Cautions and Notices.

1. If equipped with a 8.1L engine, install the starter heat shield.
2. Install the starter heat shield bolts, and nut.

Tighten:

- Tighten the bolts to 3 N.m (35 lb in).
- Tighten the nut to 5 N.m (44 lb in).

cardiagn.com

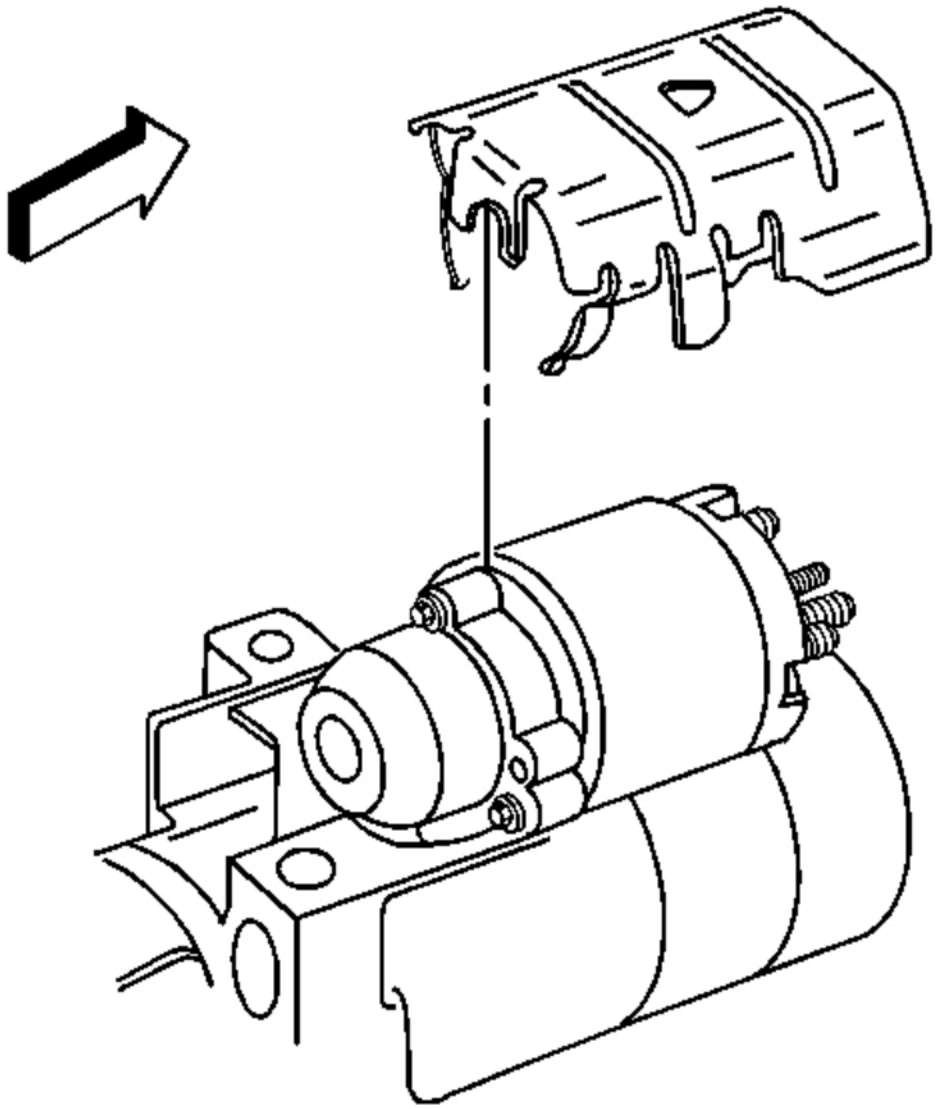

Fig. 87: View Of Starter & Heat Shield
Courtesy of GENERAL MOTORS CORP.

3. If equipped with a 4.8L, 5.3L, or 6.0L engine, install the starter heat shield.
4. Install the starter motor. Refer to **Starter Motor Replacement (4.8L, 5.3L, and 6.0L Engines)** or **Starter Motor Replacement (8.1L Engine)**.

GENERATOR BRACKET REPLACEMENT (4.8L, 5.3L, AND 6.0L ENGINES)

cardiagn.com

Removal Procedure

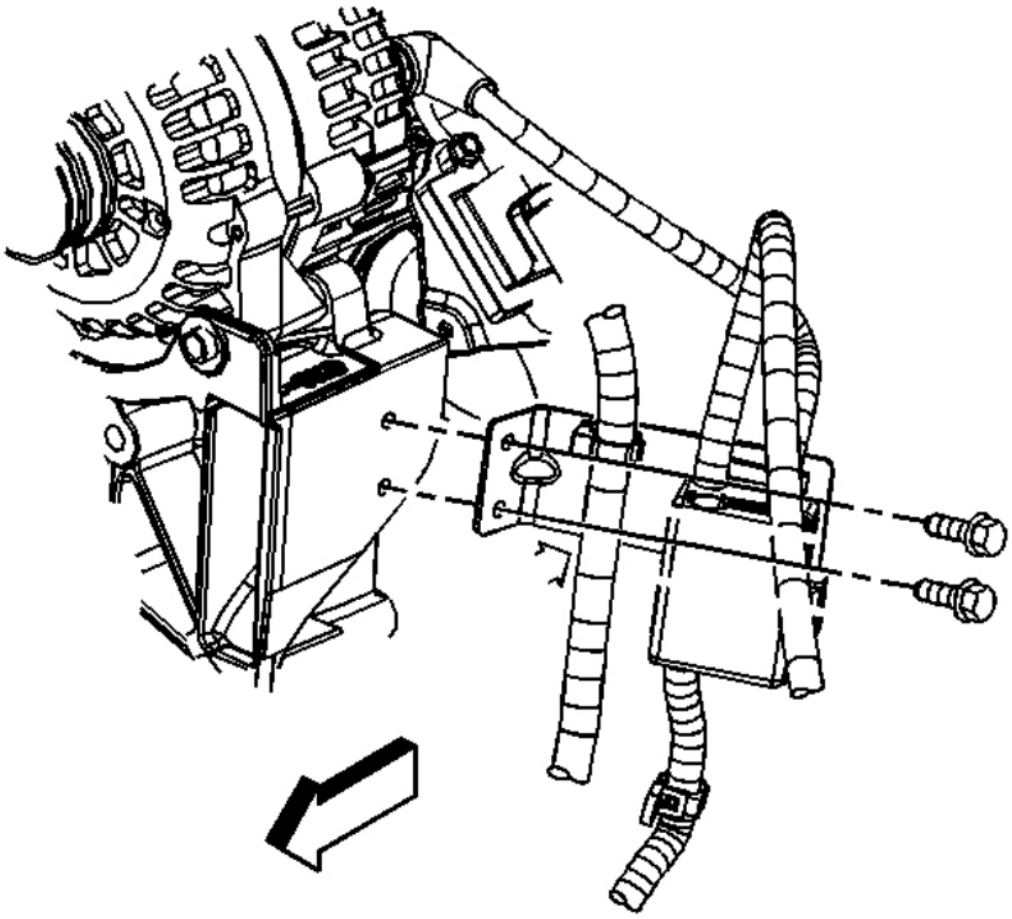

Fig. 88: View Of Battery Cable Junction Block Bracket Bolts (4.8L, 5.3L & 6.0L)
Courtesy of GENERAL MOTORS CORP.

1. Remove the battery cable junction block bracket bolts.

cardiagn.com

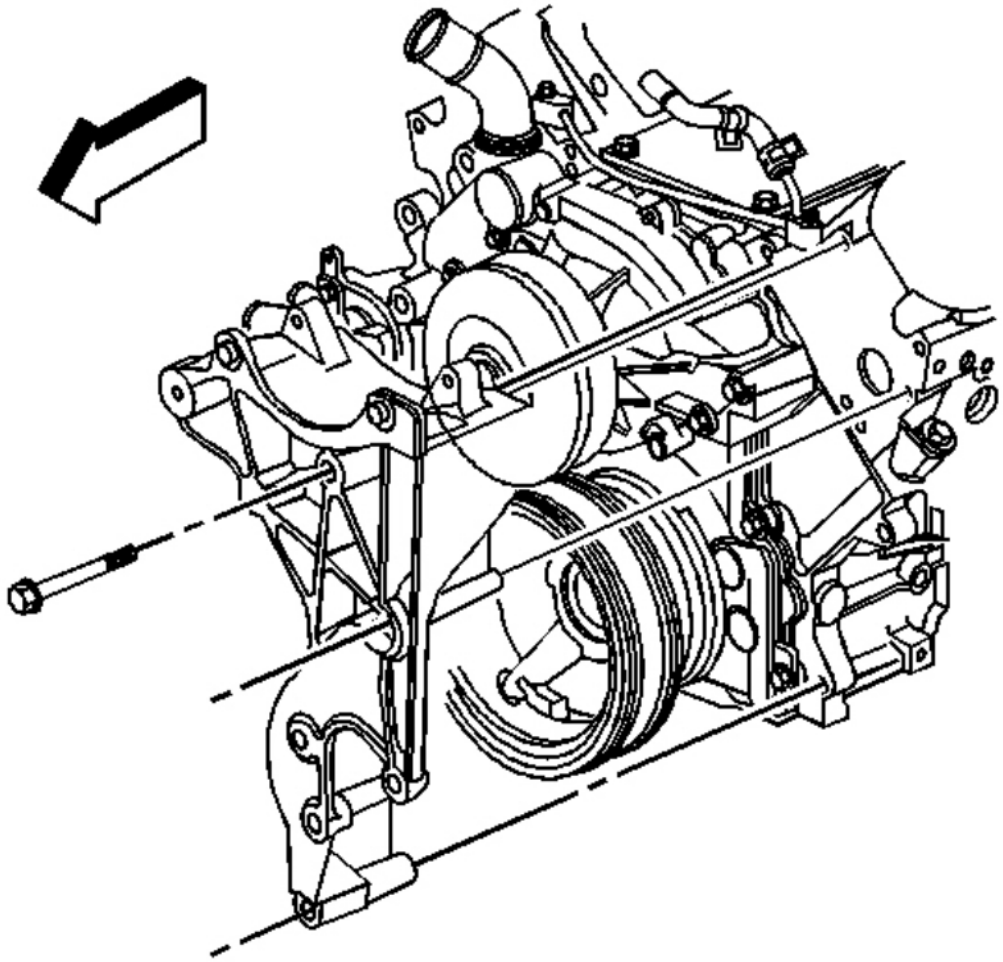

Fig. 89: View Of Generator Bracket & Bolts (4.8L, 5.3L & 6.0L)
Courtesy of GENERAL MOTORS CORP.

2. Remove the generator. Refer to **Generator Replacement (4.8L, 5.3L, and 6.0L Engines)** or **Generator Replacement (8.1L Engine)**.
3. Remove the power steering pump. Refer to **Power Steering Pump Replacement (4.8L, 5.3L and 6.0L)** or **Power Steering Pump Replacement (8.1L)** in Power Steering System.
4. Remove the generator bracket bolts.
5. Remove the generator bracket.

Installation Procedure

cardiagn.com

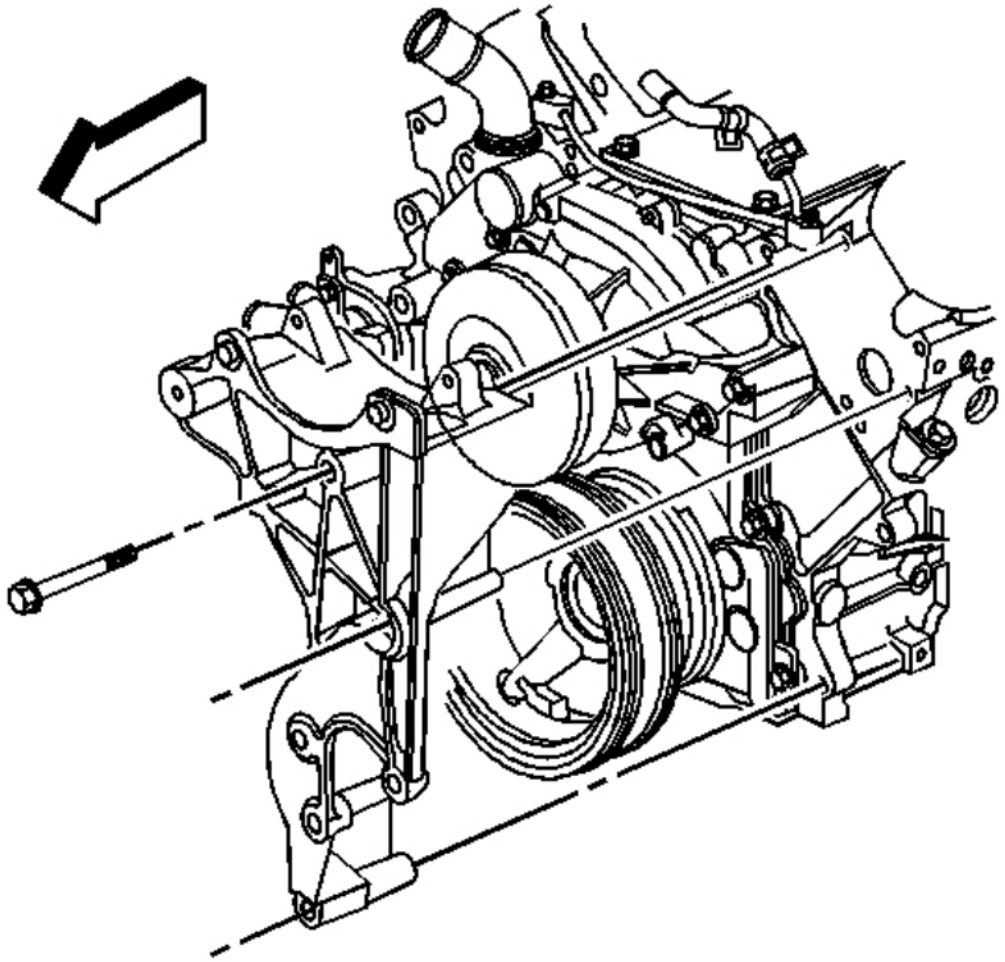

Fig. 90: View Of Generator Bracket & Bolts (4.8L, 5.3L & 6.0L)
Courtesy of GENERAL MOTORS CORP.

NOTE: **Refer to Fastener Notice in Cautions and Notices.**

1. Install the generator bracket.
2. Install the generator bracket bolts.

   Tighten: Tighten the bolts to 50 N.m (37 lb ft).

3. Install the power steering pump. Refer to **Power Steering Pump Replacement (4.8L, 5.3L and 6.0L)** or **Power Steering Pump Replacement (8.1L)** in Power Steering System.

cardiagn.com

4. Install the generator. Refer to **Generator Replacement (4.8L, 5.3L, and 6.0L Engines)** or **Generator Replacement (8.1L Engine)**.

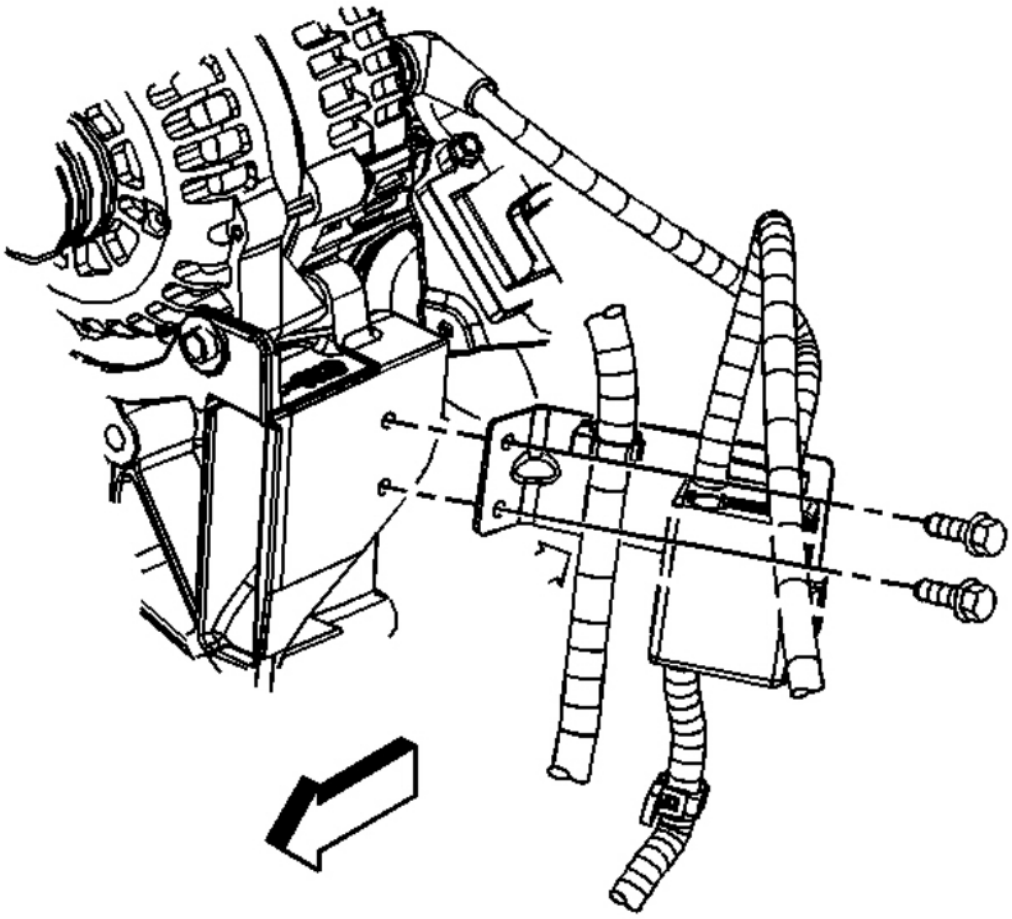

Fig. 91: View Of Battery Cable Junction Block Bracket Bolts (4.8L, 5.3L & 6.0L)
Courtesy of GENERAL MOTORS CORP.

5. Install the battery cable junction block bracket bolts.

   Tighten: Tighten the bolts to 9 N.m (80 lb in).

GENERATOR BRACKET REPLACEMENT (8.1L ENGINE)

Removal Procedure

cardiagn.com

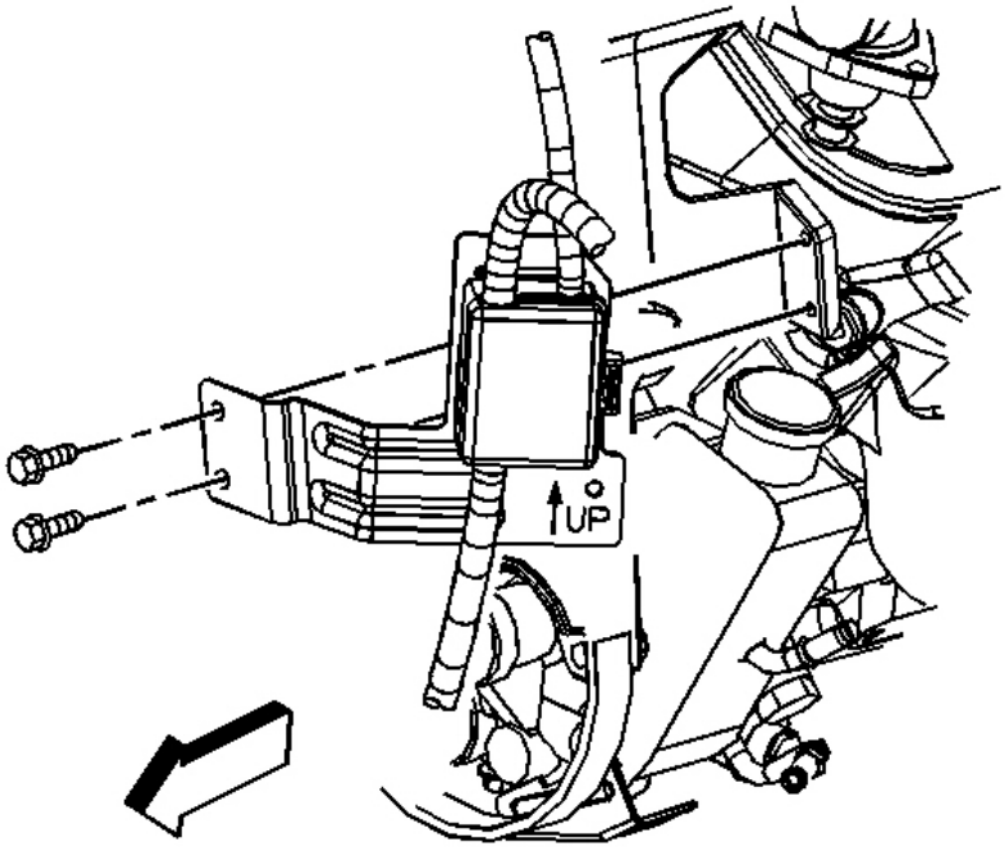

Fig. 92: View Of Battery Cable Junction Block Bracket Bolts (8.1L)
Courtesy of GENERAL MOTORS CORP.

1. Remove the battery cable junction block bracket bolts.

cardiagn.com

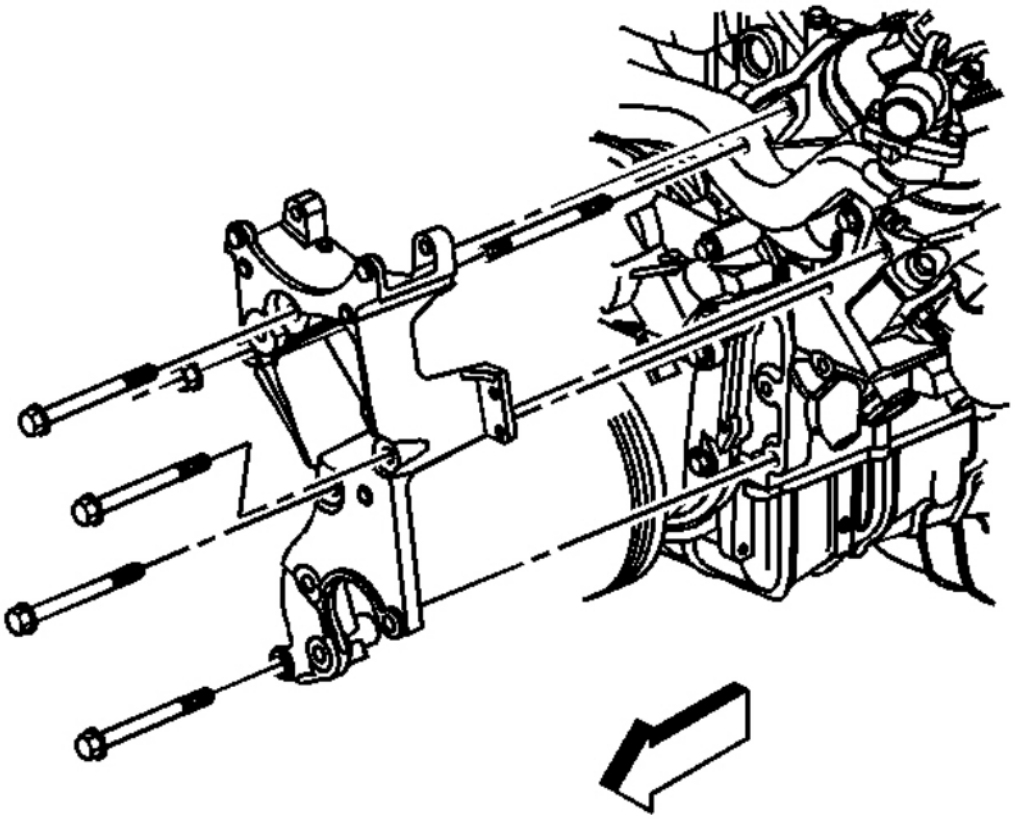

Fig. 93: View Of Generator Bracket, Bolts, Nut & Stud (8.1L)
Courtesy of GENERAL MOTORS CORP.

2. Remove the fan and clutch. Refer to **Fan Clutch Replacement** in Engine Cooling.
3. Remove the drive belt idler pulley. Refer to **Drive Belt Idler Pulley Replacement** in Engine Mechanical - 8.1L.
4. Remove the generator. Refer to **Generator Replacement (4.8L, 5.3L, and 6.0L Engines)** or **Generator Replacement (8.1L Engine)**.
5. Remove the generator bracket bolts and nut.
6. Remove the generator bracket stud.
7. Remove the generator bracket.

Installation Procedure

cardiagn.com

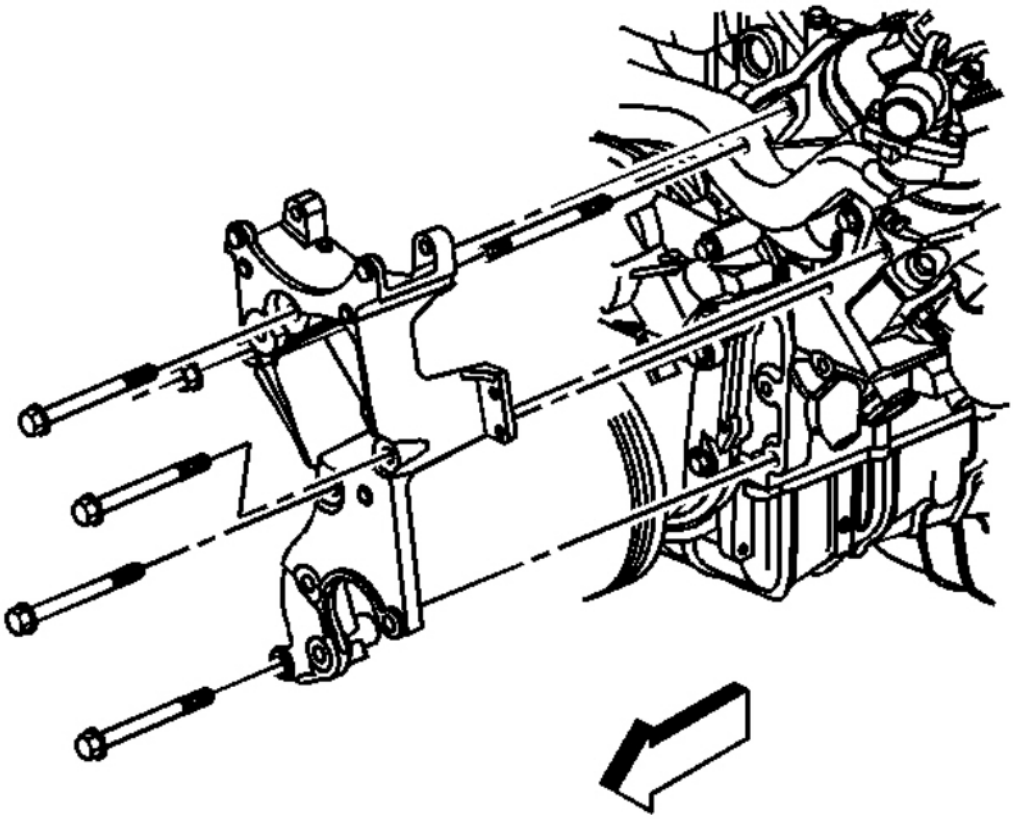

Fig. 94: View Of Generator Bracket, Bolts, Nut & Stud (8.1L)
Courtesy of GENERAL MOTORS CORP.

NOTE: Refer to Fastener Notice in Cautions and Notices.

1. Install the generator bracket.
2. Install the generator bracket stud.

   Tighten: Tighten the stud to 20 N.m (15 lb ft).

3. Install the generator bracket bolts and nut.

   Tighten: Tighten the bolts and nut to 50 N.m (37 lb ft)

4. Install the generator. Refer to **Generator Replacement (4.8L, 5.3L, and 6.0L Engines)** or **Generator Replacement (8.1L Engine)**.

cardiagn.com

5. Install the drive belt idler pulley. Refer to **Drive Belt Idler Pulley Replacement** in Engine Mechanical - 8.1L.
6. Install the fan and clutch. Refer to **Fan Clutch Replacement** in Engine Cooling.

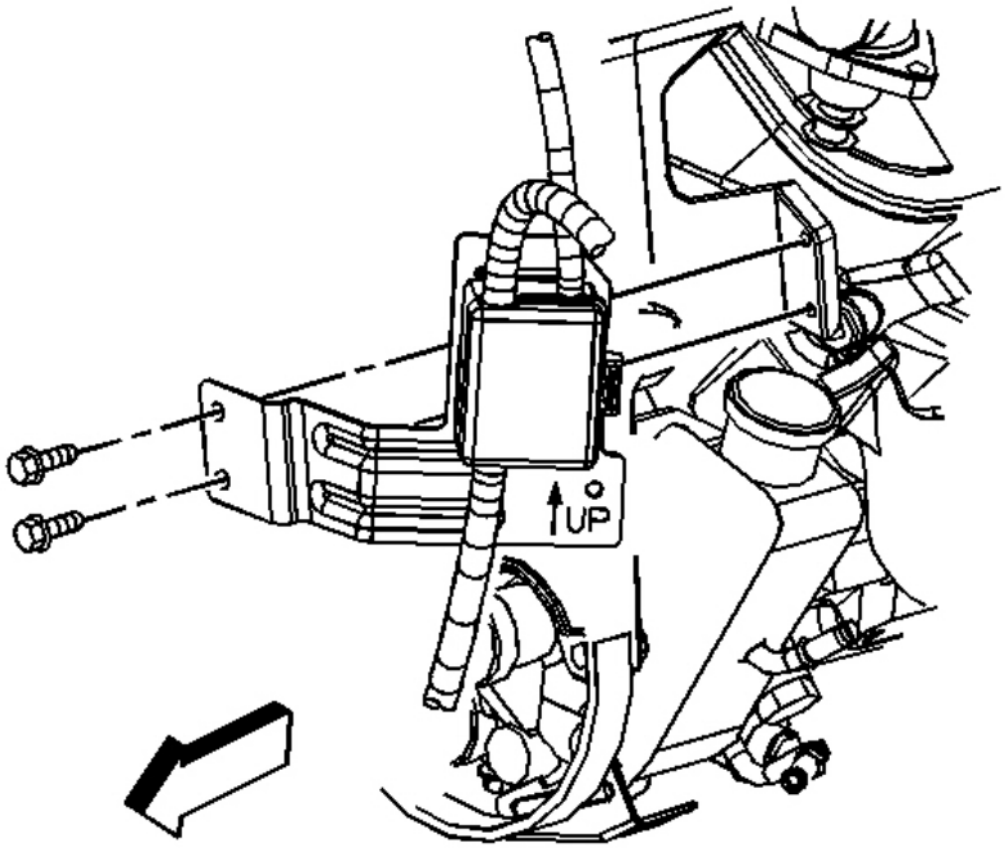

Fig. 95: View Of Battery Cable Junction Block Bracket Bolts (8.1L)
Courtesy of GENERAL MOTORS CORP.

7. Install the battery cable junction block bracket bolts.

   Tighten: Tighten the bolts to 9 N.m (80 lb in).

GENERATOR REPLACEMENT (4.8L, 5.3L, AND 6.0L ENGINES)

Removal Procedure

cardiagn.com

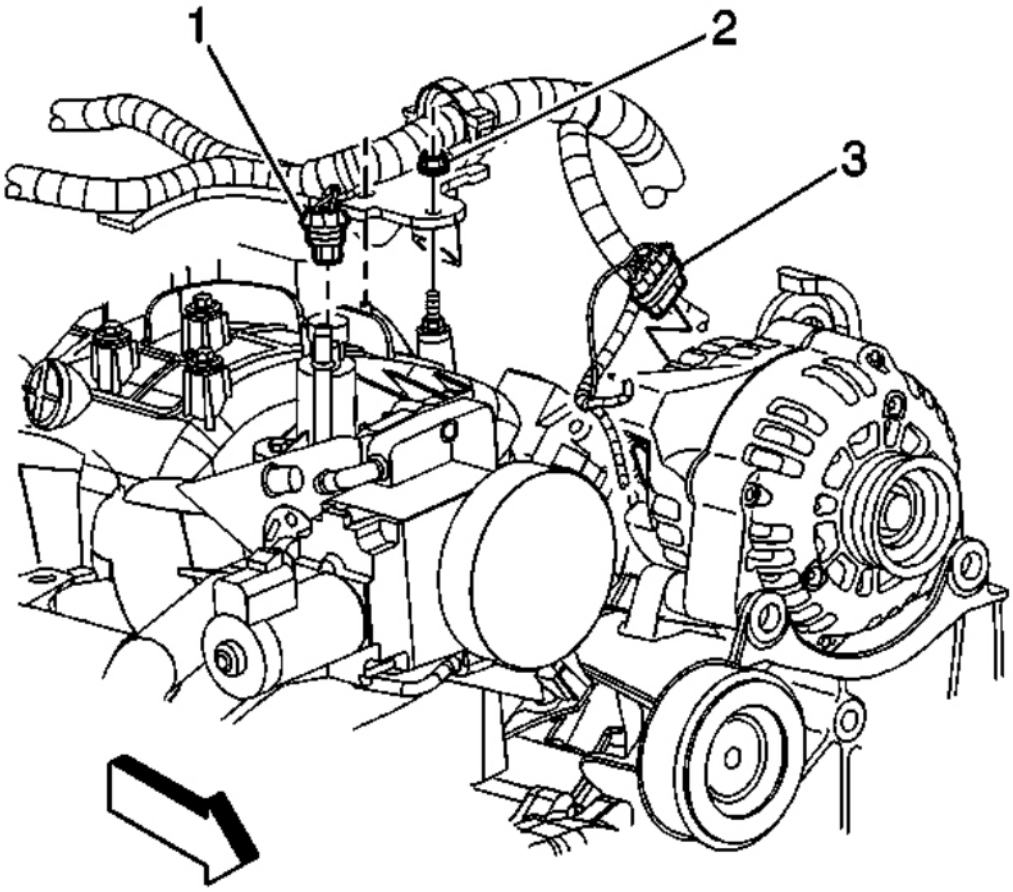

Fig. 96: Identifying Purge Solenoid Electrical Connector, Wiring Harness Nut & Generator Electrical Connector
Courtesy of GENERAL MOTORS CORP.

1. Disconnect the negative battery cable. Refer to **Battery Negative Cable Disconnect/Connect Procedure**.
2. Remove the accessory drive belt. Refer to **Drive Belt Replacement - Accessory** in Engine Mechanical - 4.8L, 5.3L, and 6.0L.
3. If necessary, remove the engine sight shield. Refer to **Engine Sight Shield Replacement (4.8L, 5.3L, and 6.0L (RPO LQ4))** or **Engine Sight Shield Replacement (6.0L (RPO LQ9))** in Engine Mechanical - 4.8L, 5.3L, and 6.0L.
4. Disconnect the generator electrical connector (3).

cardiagn.com

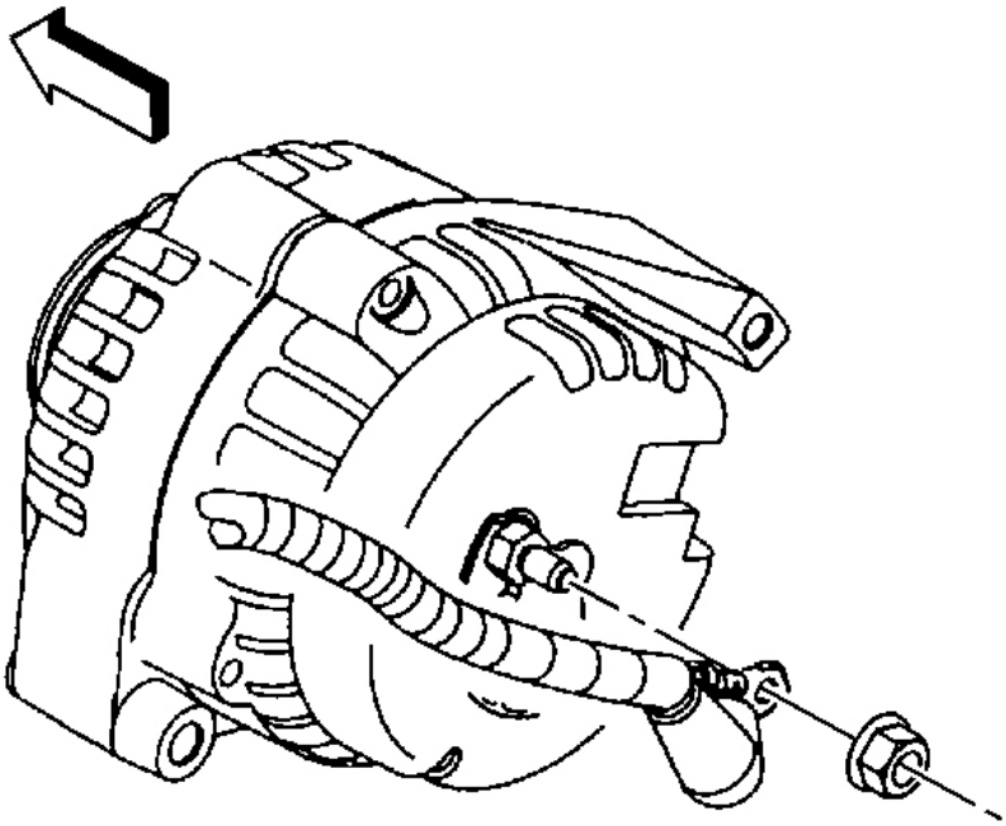

Fig. 97: View Of Generator Cable & Nut
Courtesy of GENERAL MOTORS CORP.

5. Remove the generator cable from the generator, perform the following:
    1. Slide the boot down revealing the terminal stud.
    2. Remove the generator cable nut from the terminal stud.
    3. Remove the generator cable.

cardiagn.com

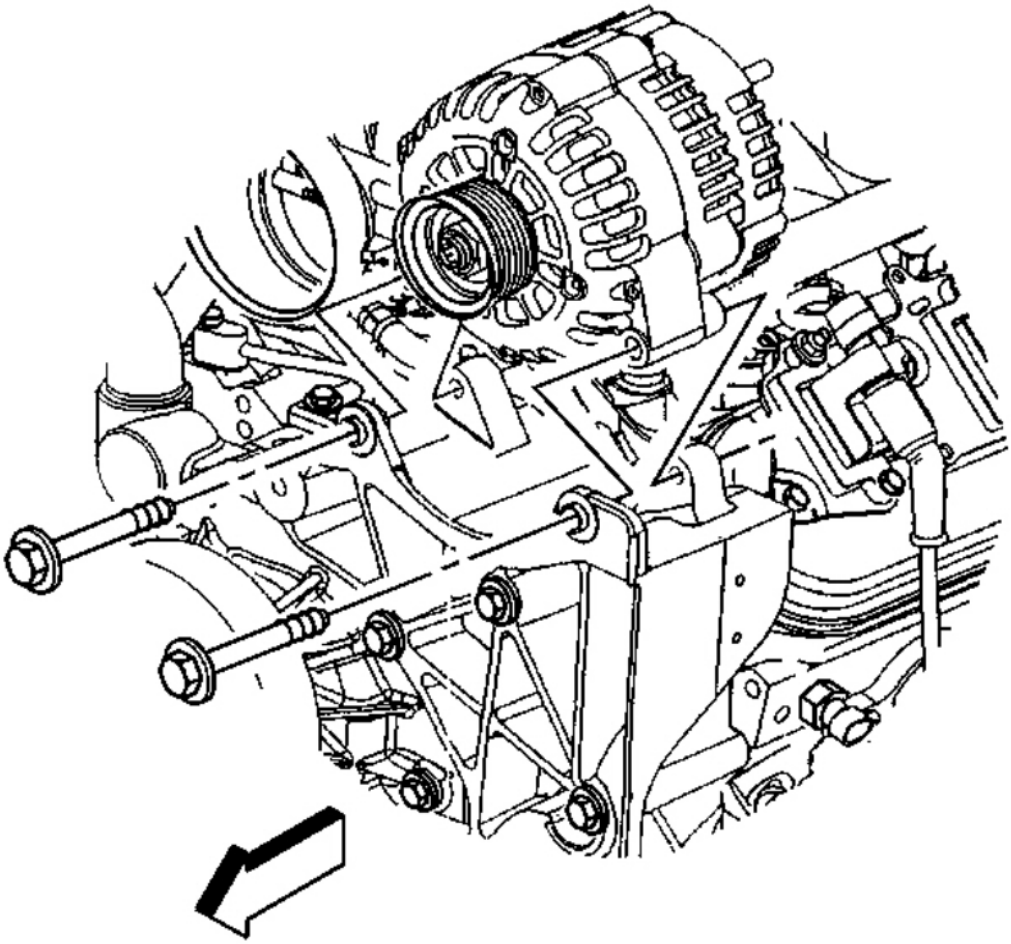

Fig. 98: View Of Generator & Bolts (4.8L, 5.3L & 6.0L)
Courtesy of GENERAL MOTORS CORP.

6. Remove the generator bolts.
7. Remove the generator.

Installation Procedure

cardiagn.com

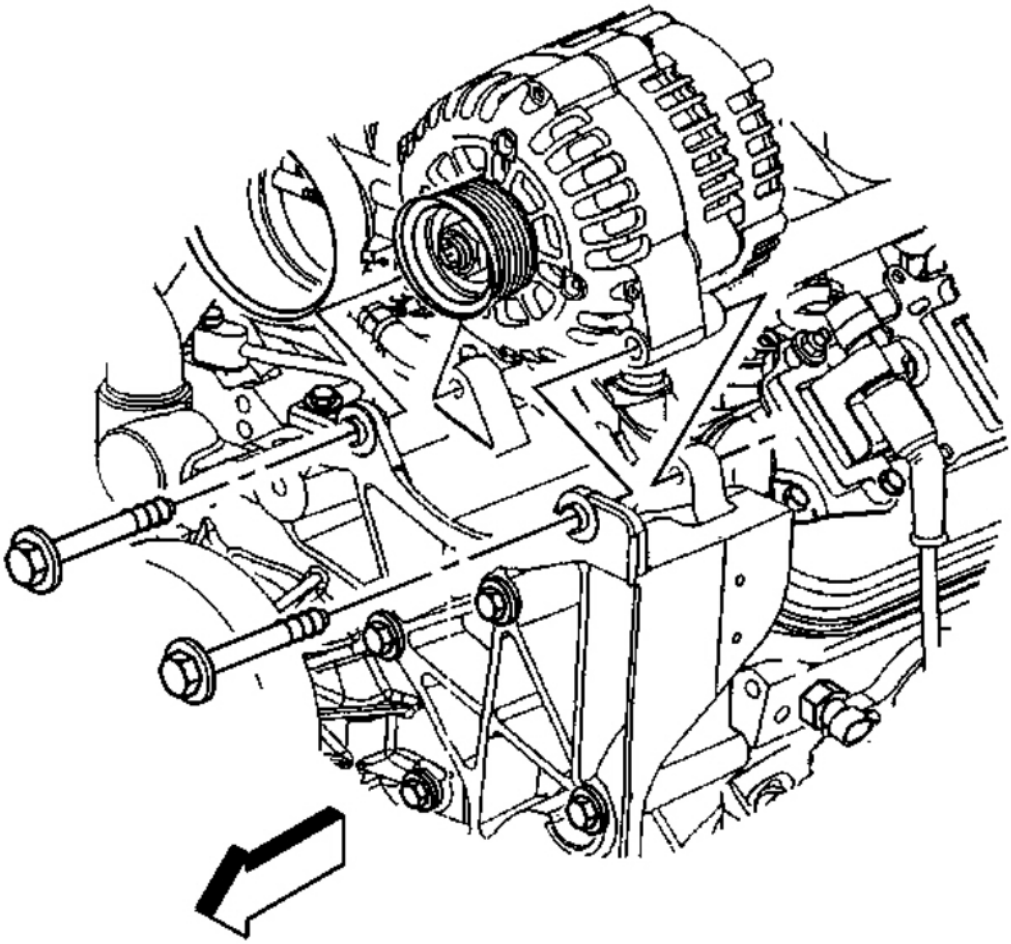

Fig. 99: View Of Generator & Bolts (4.8L, 5.3L & 6.0L)
Courtesy of GENERAL MOTORS CORP.

NOTE: **Refer to Fastener Notice in Cautions and Notices.**

1. Install the generator.
2. Install the generator bolts.

Tighten: Tighten the bolts to 50 N.m (37 lb ft).

cardiagn.com

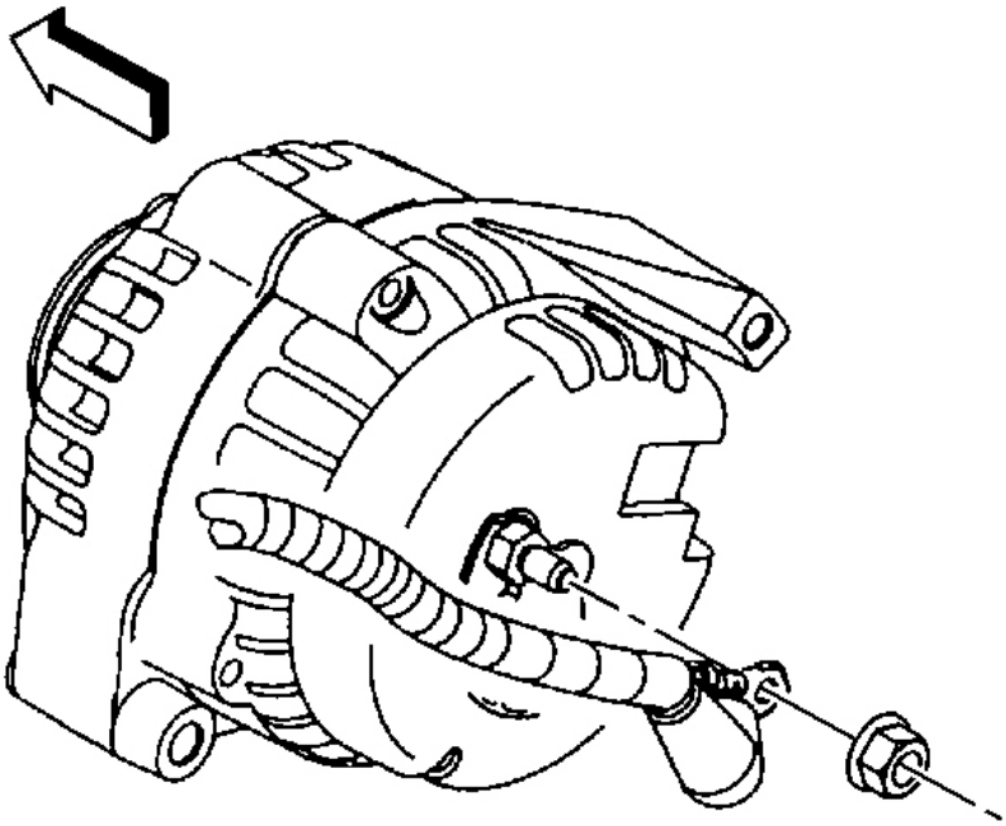

Fig. 100: View Of Generator Cable & Nut
Courtesy of GENERAL MOTORS CORP.

3. Install the generator cable to the generator, perform the following:
   1. Install the generator cable.
   2. Install the generator cable nut to the terminal stud.

      Tighten: Tighten the nut to 9 N.m (80 lb in).

   3. Slide the boot over the terminal stud.

cardiagn.com

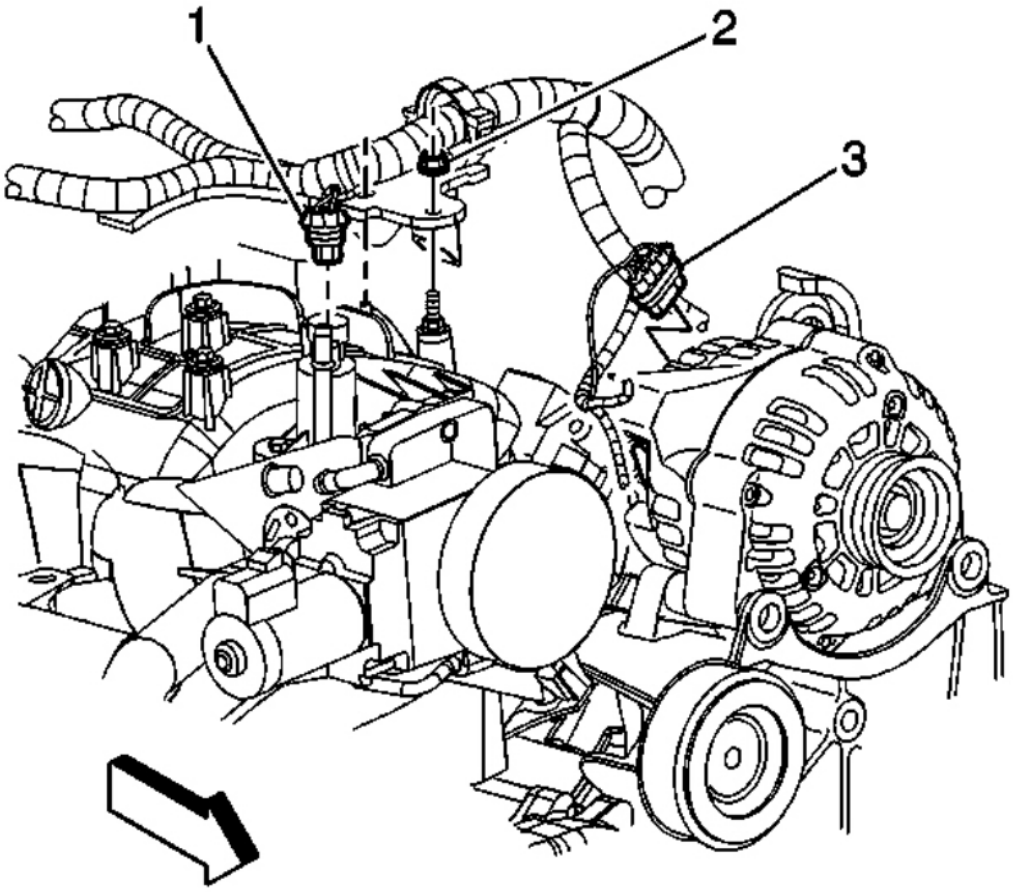

Fig. 101: Identifying Purge Solenoid Electrical Connector, Wiring Harness Nut & Generator Electrical Connector
Courtesy of GENERAL MOTORS CORP.

4. Connect the generator electrical connector (3).
5. If necessary, install the engine sight shield. Refer to **Engine Sight Shield Replacement (4.8L, 5.3L, and 6.0L (RPO LQ4))** or **Engine Sight Shield Replacement (6.0L (RPO LQ9))** in Engine Mechanical - 4.8L, 5.3L, and 6.0L.
6. Install the accessory drive belt. Refer to **Drive Belt Replacement - Accessory** in Engine Mechanical - 4.8L, 5.3L, and 6.0L.
7. Connect the negative battery cable. Refer to **Battery Negative Cable Disconnect/Connect Procedure**.

GENERATOR REPLACEMENT (8.1L ENGINE)

Removal Procedure

cardiagn.com

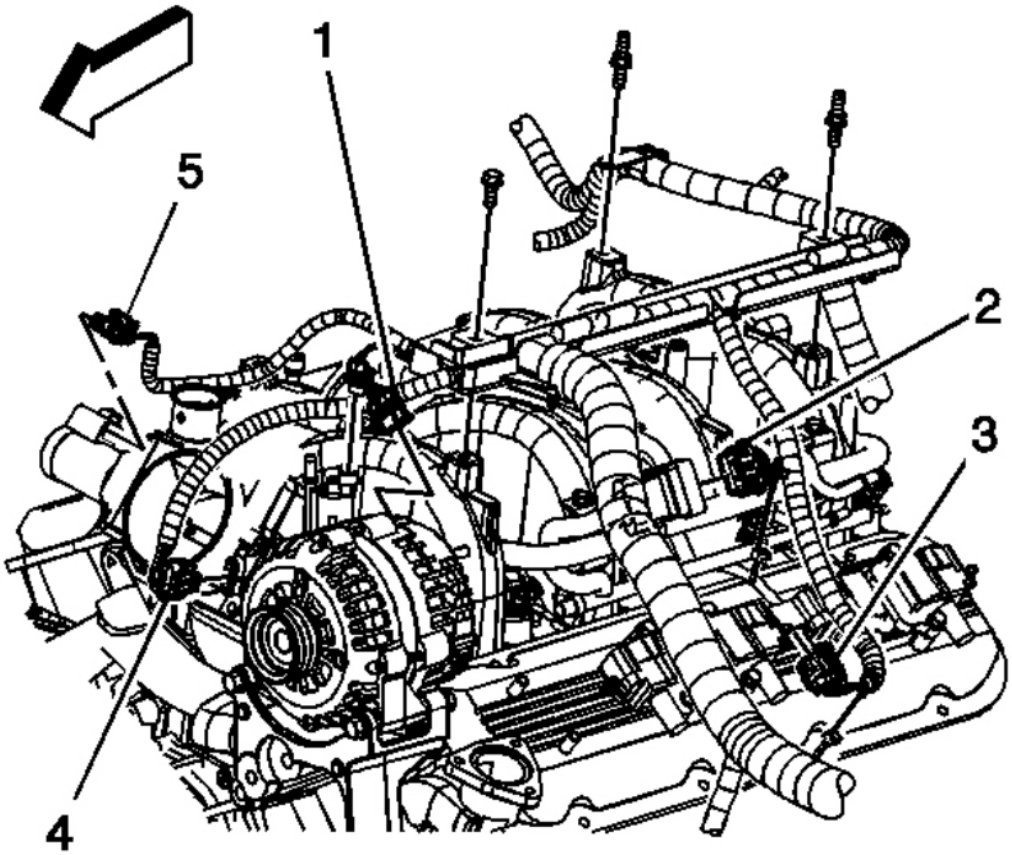

Fig. 102: View Of Generator Electrical Connector (8.1L)
Courtesy of GENERAL MOTORS CORP.

1. Disconnect the negative battery cable. Refer to **Battery Negative Cable Disconnect/Connect Procedure**.
2. Remove the drive belt. Refer to **Drive Belt Replacement - Accessory** in Engine Mechanical - 8.1 L.
3. Disconnect the generator electrical connector (1).

cardiagn.com

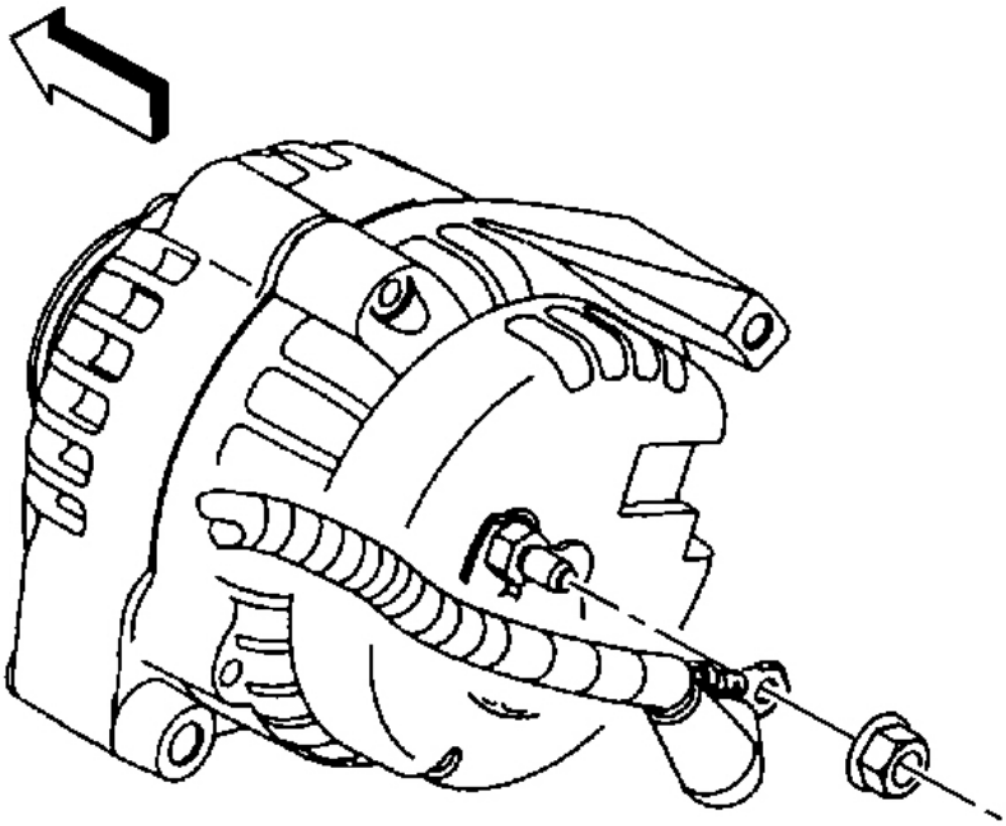

Fig. 103: View Of Generator Cable & Nut
Courtesy of GENERAL MOTORS CORP.

4. Remove the generator cable from the generator, perform the following:
   - Slide the boot down revealing the terminal stud.
   - Remove the generator cable nut from the terminal.
   - Remove the generator cable.

cardiagn.com

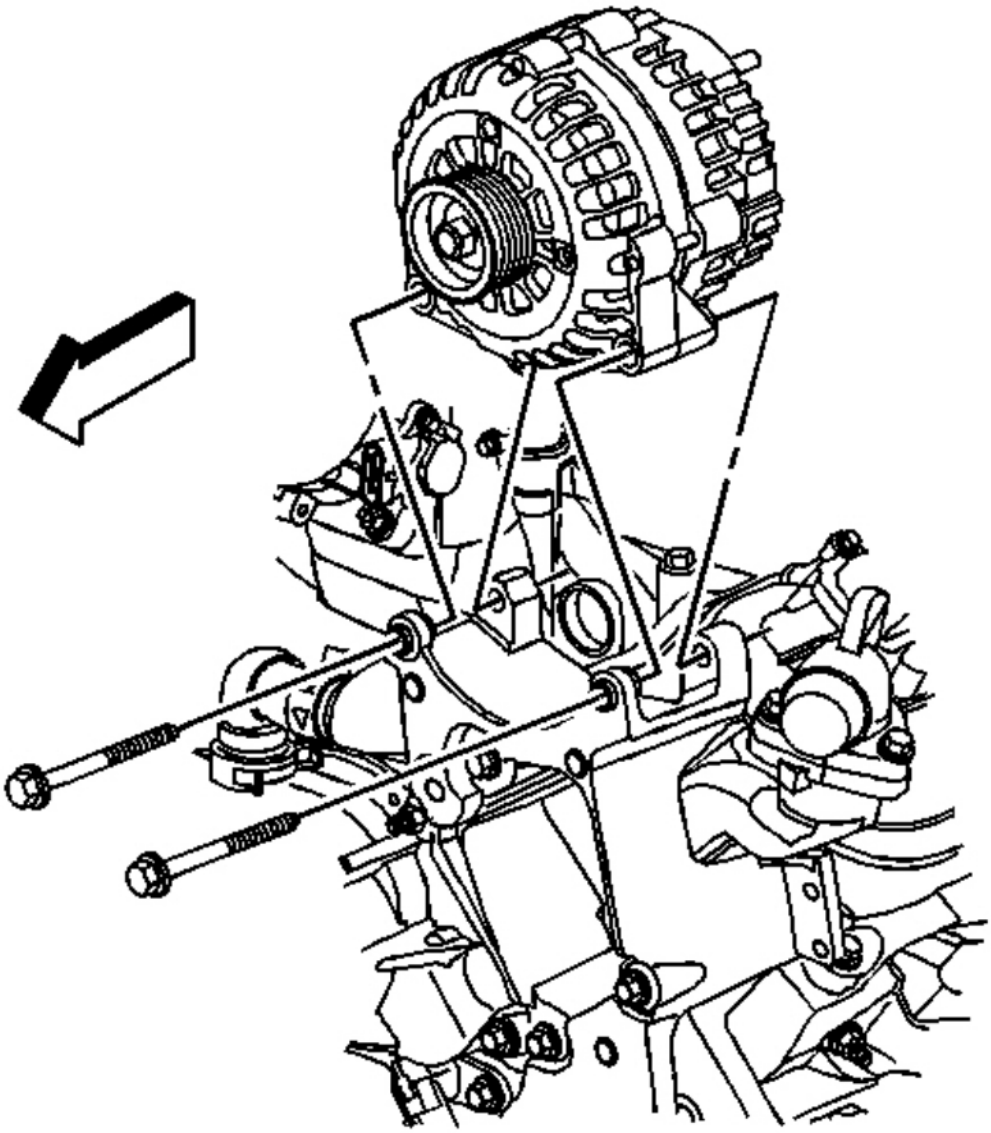

Fig. 104: View Of Generator & Bolts (8.1L)
Courtesy of GENERAL MOTORS CORP.

5. Remove the generator bolts.
6. Remove the generator.

Installation Procedure

cardiagn.com

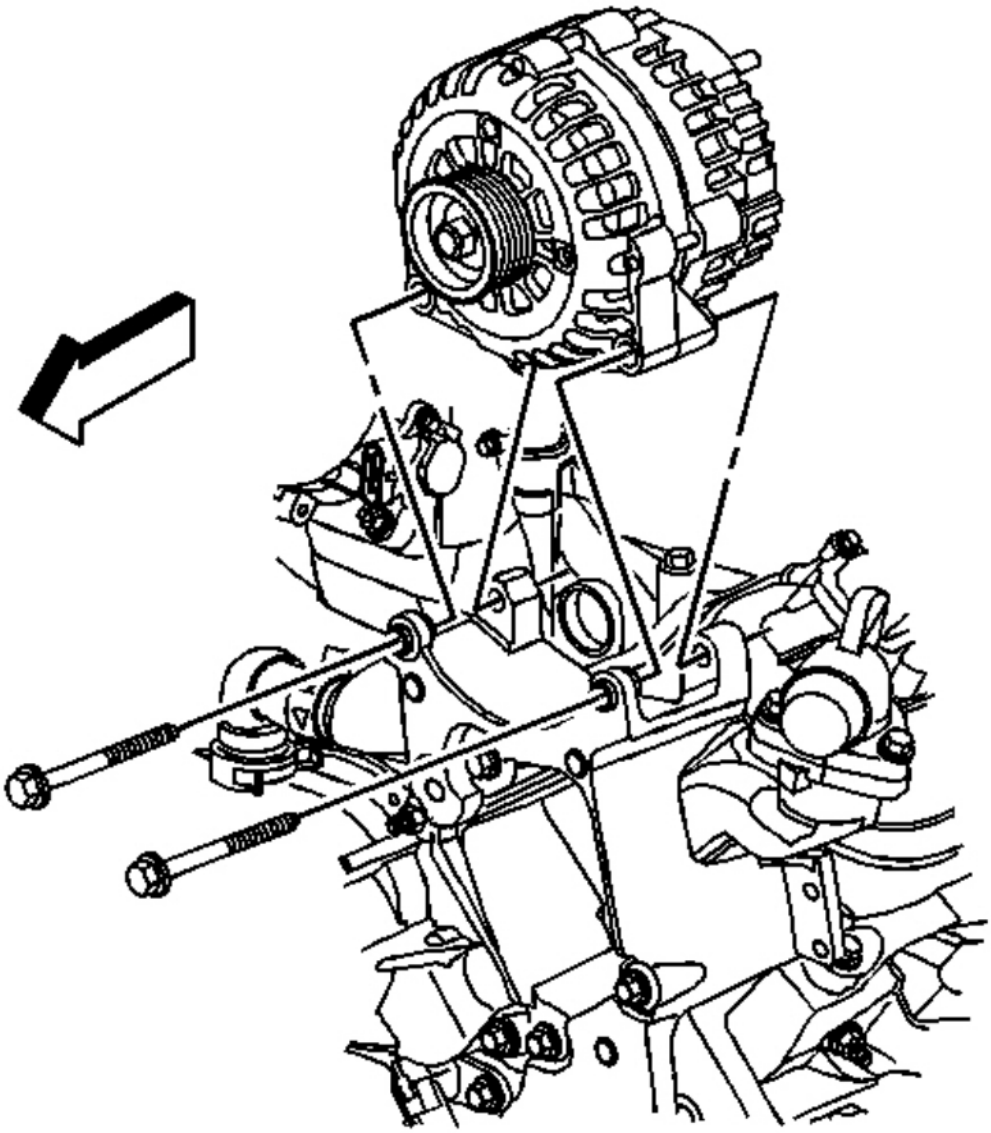

Fig. 105: View Of Generator & Bolts (8.1L)
Courtesy of GENERAL MOTORS CORP.

NOTE: **Refer to Fastener Notice in Cautions and Notices.**

1. Install the generator.
2. Install the generator bolts.

cardiagn.com

Tighten: Tighten the bolts to 50 N.m (37 lb ft).

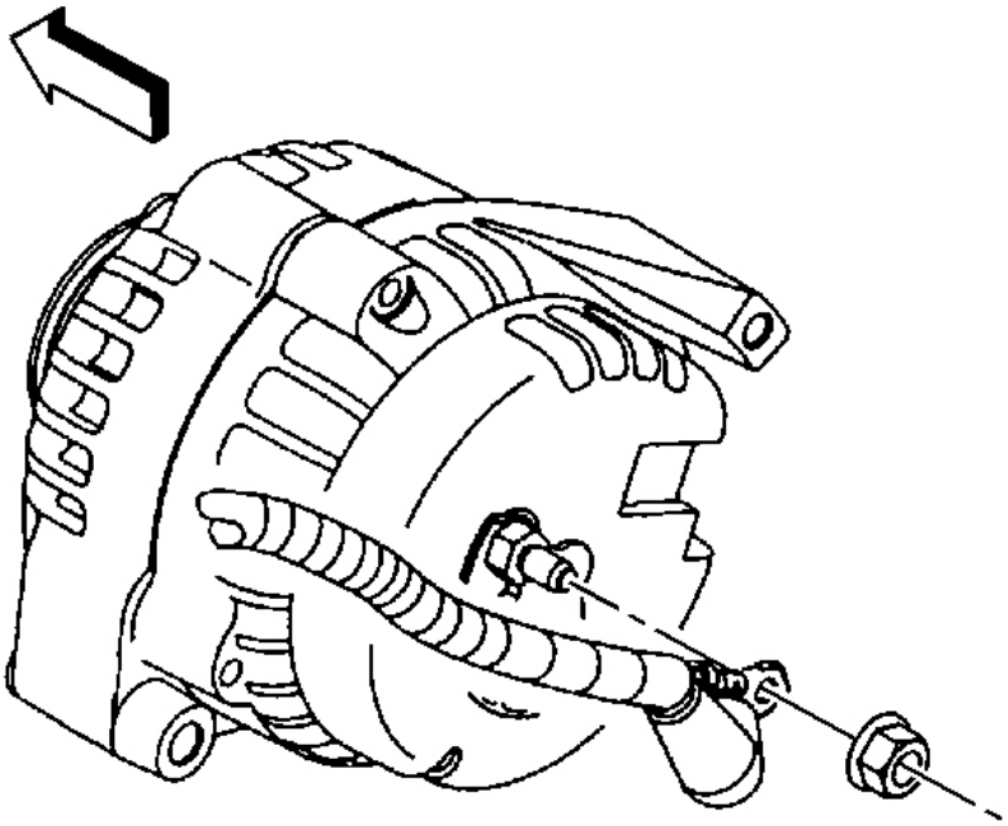

Fig. 106: View Of Generator Cable & Nut
Courtesy of GENERAL MOTORS CORP.

3. Install the generator cable to the generator, perform the following:
   1. Install the generator cable.
   2. Install the generator cable nut to the terminal.

      Tighten: Tighten the nut to 9 N.m (80 lb in).

   3. Slide the boot over the terminal stud.

cardiagn.com

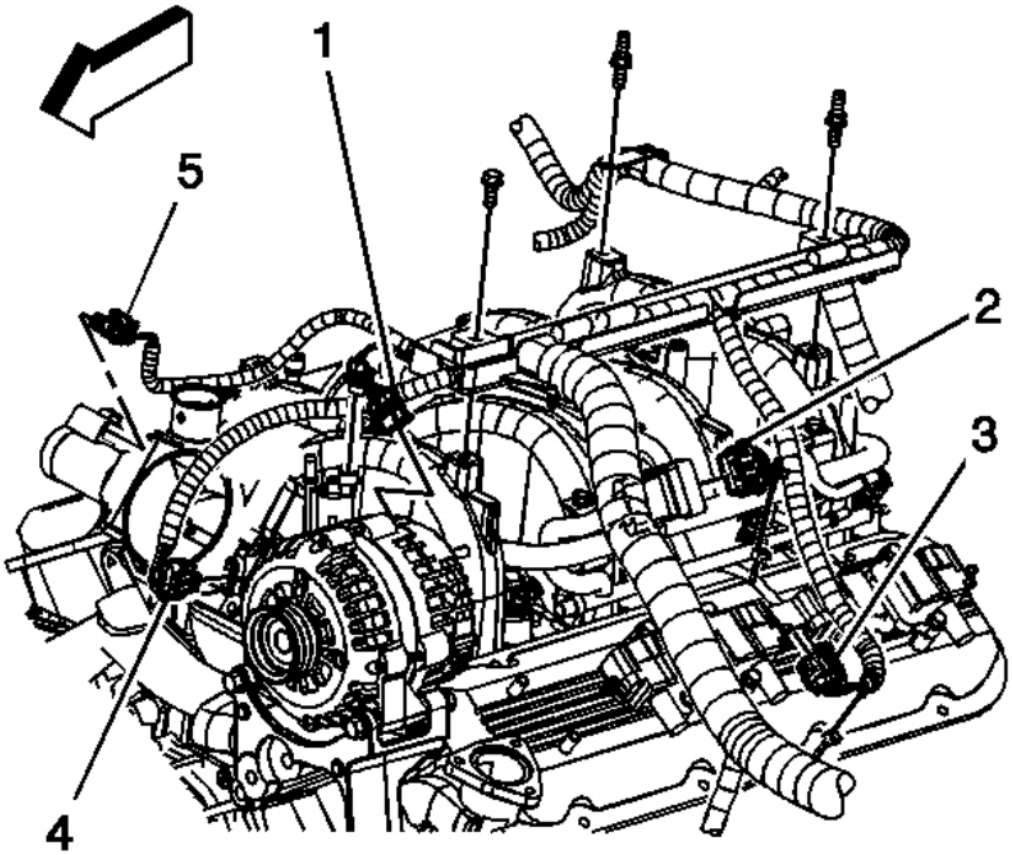

Fig. 107: View Of Generator Electrical Connector (8.1L)
Courtesy of GENERAL MOTORS CORP.

4. Connect the generator electrical connector (1).
5. Install the drive belt. Refer to **Drive Belt Replacement - Accessory** in Engine Mechanical - 8.1 L.
6. Connect the negative battery cable. Refer to **Battery Negative Cable Disconnect/Connect Procedure**.

DESCRIPTION AND OPERATION

BATTERY DESCRIPTION AND OPERATION

cardiagn.com

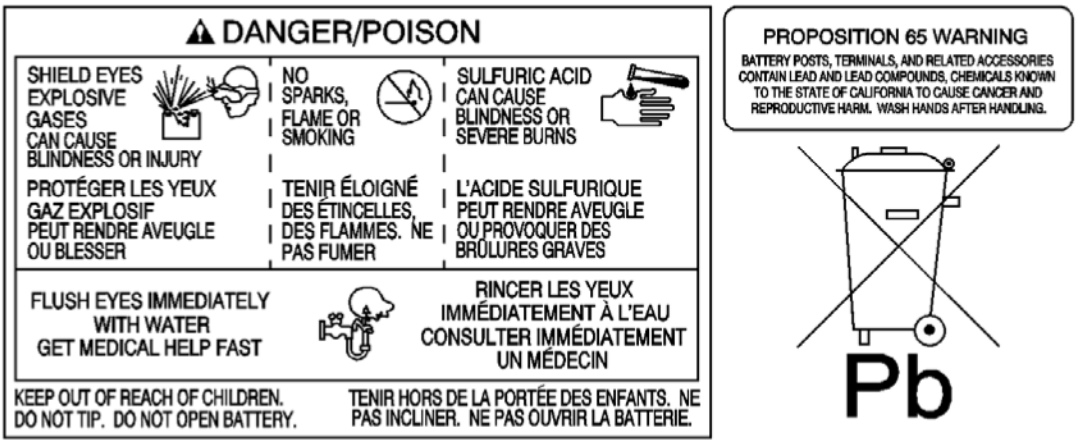

Fig. 108: View Of Battery Danger Label
Courtesy of GENERAL MOTORS CORP.

CAUTION: Batteries produce explosive gases, contain corrosive acid, and supply levels of electrical current high enough to cause burns. Therefore, to reduce the risk of personal injury when working near a battery:

- **Always shield your eyes and avoid leaning over the battery whenever possible.**
- **Do not expose the battery to open flames or sparks.**
- **Do not allow the battery electrolyte to contact the eyes or the skin. Flush immediately and thoroughly any contacted areas with water and get medical help.**
- **Follow each step of the jump starting procedure in order.**
- **Treat both the booster and the discharged batteries carefully when using the jumper cables.**

The maintenance free battery is standard. There are no vent plugs in the cover. The battery is completely sealed except for 2 small vent holes in the side. These vent holes allow the small amount of gas that is produced in the battery to escape.

The battery has 3 functions as a major source of energy:

- Engine cranking
- Voltage stabilizer
- Alternate source of energy with generator overload

The battery specification label, example below, contains information about the following:

cardiagn.com

- The test ratings
- The original equipment catalog number
- The recommended replacement model number

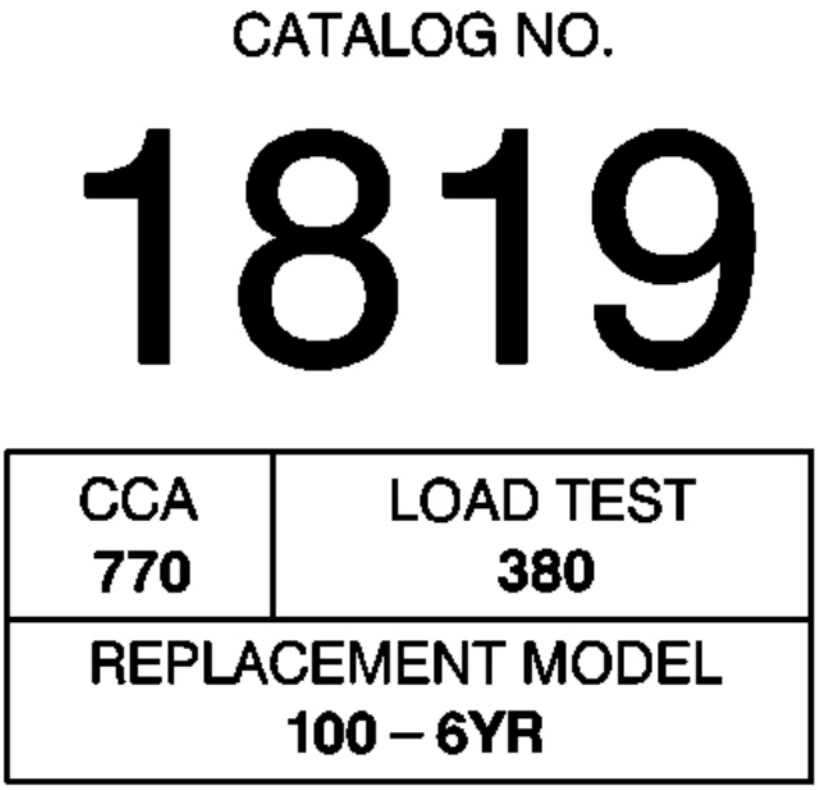

Fig. 109: View Of Battery Specification Label
Courtesy of GENERAL MOTORS CORP.

Battery Ratings

A battery has 2 ratings:

- Reserve capacity
- Cold cranking amperage

When a battery is replaced use a battery with similar ratings. Refer to the battery specification label on the original battery or refer to **Battery Usage**.

cardiagn.com

Reserve Capacity

Reserve capacity is the amount of time in minutes it takes a fully charged battery, being discharged at a constant rate of 25 amperes and a constant temperature of 27°C (80°F) to reach a terminal voltage of 10.5 volts. Refer to **Battery Usage** for the reserve capacity rating of the original equipment battery.

Cold Cranking Amperage

The cold cranking amperage is an indication of the ability of the battery to crank the engine at cold temperatures. The cold cranking amperage rating is the minimum amperage the battery must maintain for 30 seconds at -18°C (0°F) while maintaining at least 7.2 volts. Refer to **Battery Usage** for the cold cranking amperage rating for this vehicle.

Auxiliary Battery

Auxiliary batteries are an available option on vehicles where many accessories can be utilized such as TVs, radios, lights, computers, etc. The charging of these batteries is explained in charging system description and operation. Also, the auxiliary battery is only for accessory use and not part of the starting system.

CHARGING SYSTEM DESCRIPTION AND OPERATION (W/O GENERATOR/BATTERY CONTROL MODULE)

Generator

The AD-230 and AD-244 generators are non-repairable. They are electrically similar to earlier models. The generators feature the following major components:

- The delta stator
- The rectifier bridge
- The rotor with slip rings and brushes
- A conventional pulley
- Dual internal fans
- A voltage regulator

The pulley and the fan cool the slip ring and the frame.

The AD stands for Air-cooled Dual internal fan; the 2 is an electrical design designator; the 30/44 denotes the outside diameter of the stator laminations in millimeters, over 100 millimeters. The generators is rated at 102 and 130 amperes respectively.

The generator features permanently lubricated bearings. Service should only include the tightening of mounting components. Otherwise, the generator is replaced as a complete unit.

Regulator

The voltage regulator controls the field current of the rotor in order to limit system voltage. The regulator

cardiagn.com

switches the current on and off at a rate of 400 cycles per second in order to perform the following functions:

- Radio noise control
- Obtain the correct average current needed for proper system voltage control

At high speeds, the on-time may be 10 percent with the off-time at 90 percent. At low speeds, the on-time may be 90 percent and the off-time 10 percent.

Charging System Indicator

The IPC illuminates the charge indicator in the message center when the following occurs:

- The PCM detects that the generator output is less than 11 volts or greater than 16 volts. The IPC receives a class 2 message from the PCM requesting illumination.
- The IPC determines that the system voltage is less than 11 volts or greater than 16 volts. The IPC receives a class 2 message from the body control module (BCM) indicating the system voltage.
- The IPC performs the displays test at the start of each ignition cycle. The indicator illuminates for approximately 3 seconds.
- The ignition is on, with the engine off.

STARTING SYSTEM DESCRIPTION AND OPERATION

The PG-260M and Hitachi-S14-100B are non-repairable starter motors. It has pole pieces that are arranged around the armature within the starter housing. When the solenoid windings are energized, the pull-in winding circuit is completed to ground through the starter motor. The hold-in winding circuit is completed to ground through the solenoid. The windings work together magnetically to pull in and hold in the plunger. The plunger moves the shift lever. This action causes the starter drive assembly to rotate on the armature shaft spline as it engages with the flywheel ring gear on the engine. At the same time, the plunger closes the solenoid switch contacts in the starter solenoid. Full battery voltage is then applied directly to the starter motor and it cranks the engine.

As soon as the solenoid switch contacts close, current stops flowing thorough the pull-in winding as battery voltage is now applied to both ends of the windings. The hold-in winding remains energized; its magnetic field is strong enough to hold the plunger, shift lever, starter drive assembly, and solenoid switch contacts in place to continue cranking the engine. When the engine starts, the pinion gear overrun sprag protects the armature from excessive speed until the switch is opened.

When the ignition switch is released from the CRANK position, voltage is removed from the starter solenoid S terminal. Current flows from the motor contacts through both windings to ground at the end of the hold-in winding. However, the direction of the current flow through the pull-in winding is now in the opposite direction of the current flow when the winding was first energized.

The magnetic fields of the pull-in and hold-in windings now oppose one another. This action of the windings, along with the help of the return spring, cause the starter drive assembly to disengage and the solenoid switch contacts to open simultaneously. As soon as the contacts open, the starter motor is turned off.

cardiagn.com

SPECIAL TOOLS AND EQUIPMENT

SPECIAL TOOLS

Special Tools

Illustration	Tool Number/Description
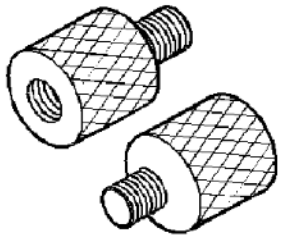	GM P/N 12303040 Battery Side Terminal Adapters
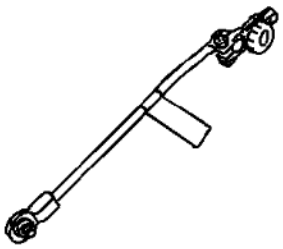	J 38758 Parasitic Draw Test Switch
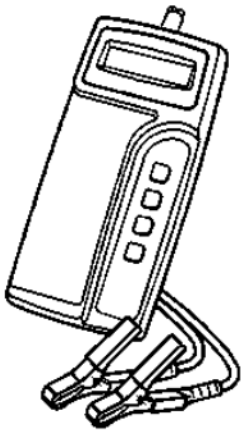	J 42000 Battery Tester

cardiagn.com

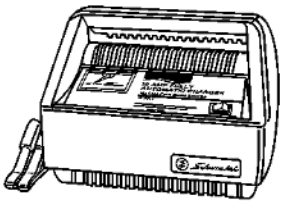	J 42634 Battery Module Charger (HP2)
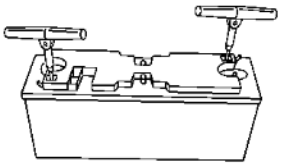	J 43679 Panasonic Battery Removal Tool (HP2)
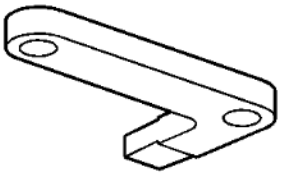	J 46093 Rotor and Flexplate Holding Tool (HP2)
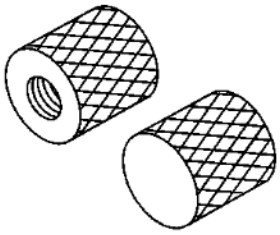	Panasonic Battery Test Terminals (HP2)

cardiagn.com