SPECIFICATIONS

FASTENER TIGHTENING SPECIFICATIONS

Fastener Tightening Specifications

Application	Specification	
	Metric	English
Battery Hold Down Retainer Bolt	18 N.m	13 lb ft
Battery Tray Bolt	12 N.m	106 lb in
Engine Harness Cable Nut	13 N.m	10 lb ft
Generator Bolt	50 N.m	37 lb ft
Generator Bracket Bolt	50 N.m	37 lb ft
Generator Shaft Nut	75 N.m	55 lb ft
Ground Strap Bolt	32 N.m	24 lb ft
Ground Strap Nut	8 N.m	71 lb in
Instrument Panel (IP) Wiring Harness Junction Block Nut	10 N.m	89 lb in
Negative Battery Cable to Battery Bolt	15 N.m	11 lb ft
Negative Battery Cable Ground Nut	8 N.m	71 lb in
Negative Battery Cable Terminal Bolt	8 N.m	71 lb in
Positive Battery Cable Bolt	15 N.m	11 lb ft
Positive Battery Cable Nut (at solenoid)	10 N.m	89 lb in
Positive Battery Cable Nut (at fuse/relay center)	8 N.m	71 lb in
Positive Battery Cable to Starter Motor Stud Nut	15 N.m	11 lb ft
S Terminal Nut	4 N.m	35 lb in
Starter Motor Bolt	50 N.m	37 lb ft

BATTERY USAGE

Battery Usage

Application	Specification
Cold Cranking Amperage (CCA)	590 A
Reserve Capacity	110 Minutes
Replacement Model Number	86-3YR

STARTER MOTOR USAGE

Starter Motor Usage

Application	Starter Model

cardiagn.com

LS1	PG-260L

GENERATOR USAGE

Generator Usage

Application	Specification
Generator Model	Valeo TG15
Rated Output	140 Amps
Load Test Output	98 Amps

SCHEMATIC AND ROUTING DIAGRAMS

STARTING AND CHARGING SCHEMATICS

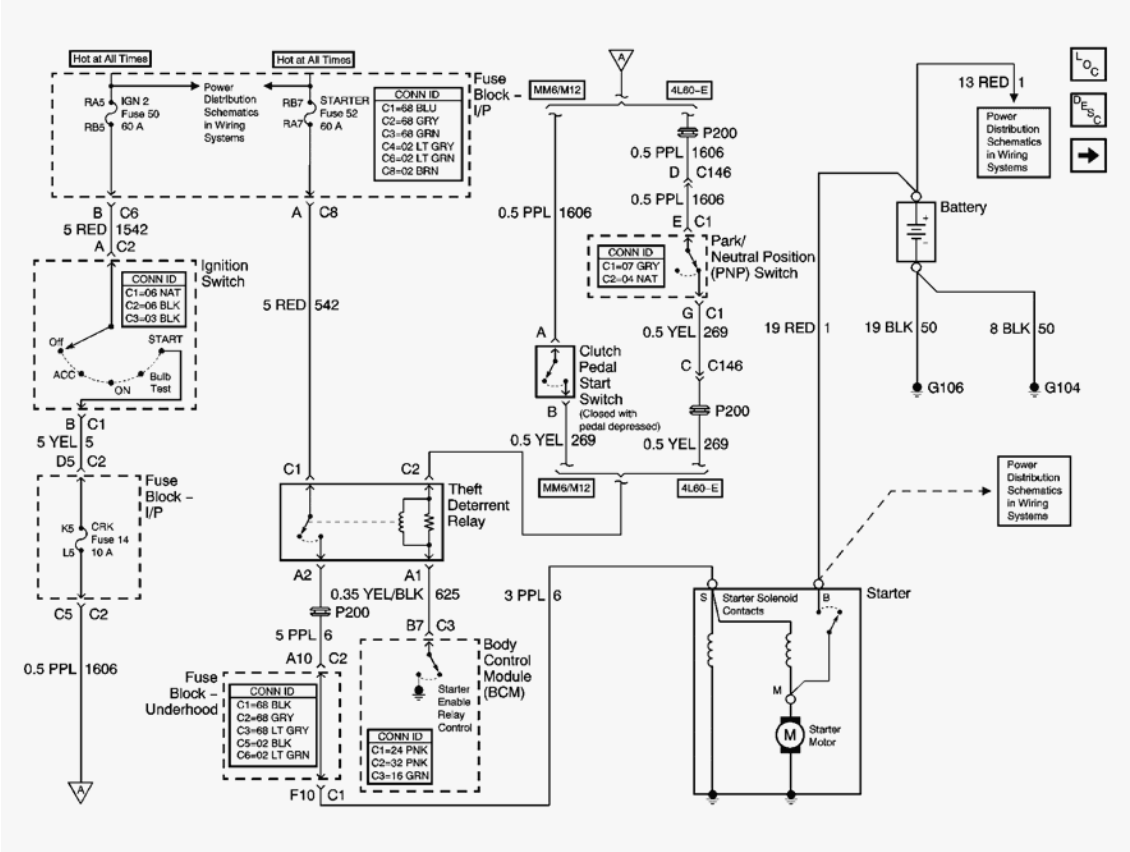

Fig. 1: Starter Schematics
Courtesy of GENERAL MOTORS CORP.

cardiagn.com

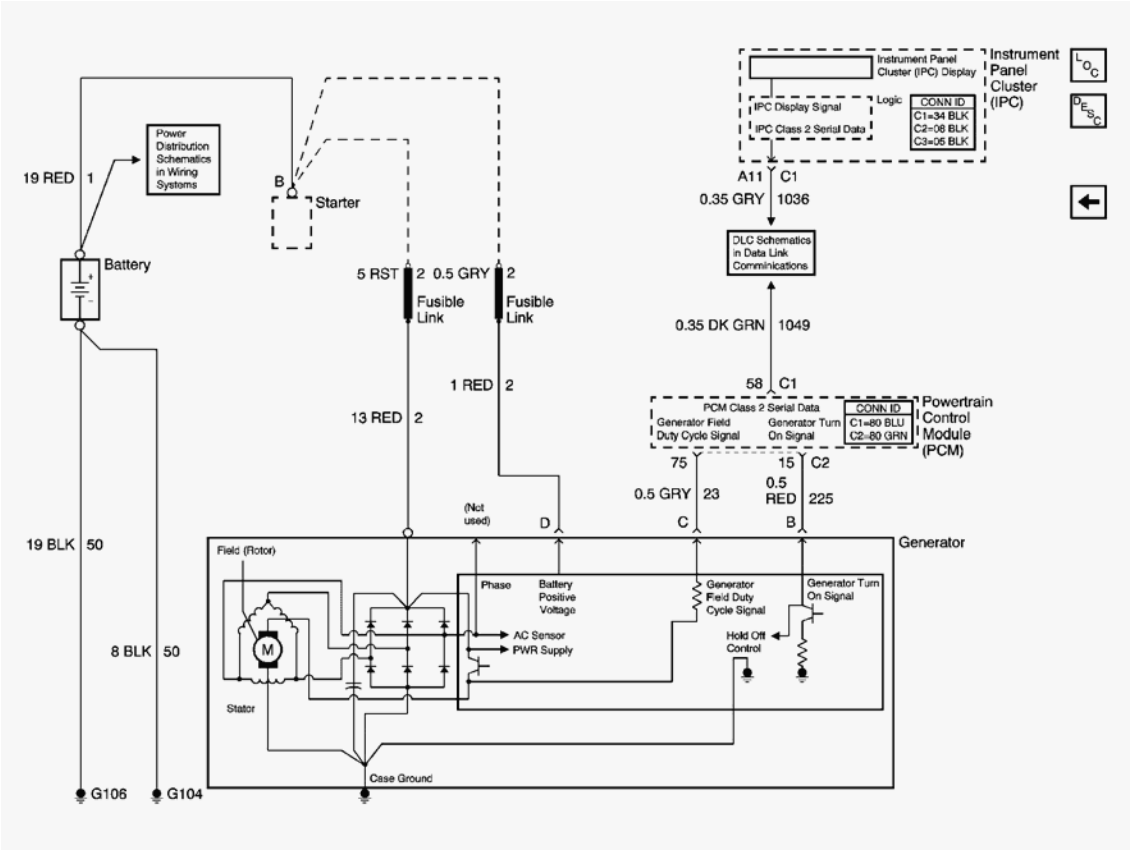

Fig. 2: Generator Schematics
Courtesy of GENERAL MOTORS CORP.

COMPONENT LOCATOR

ENGINE ELECTRICAL COMPONENT VIEWS

cardiagn.com

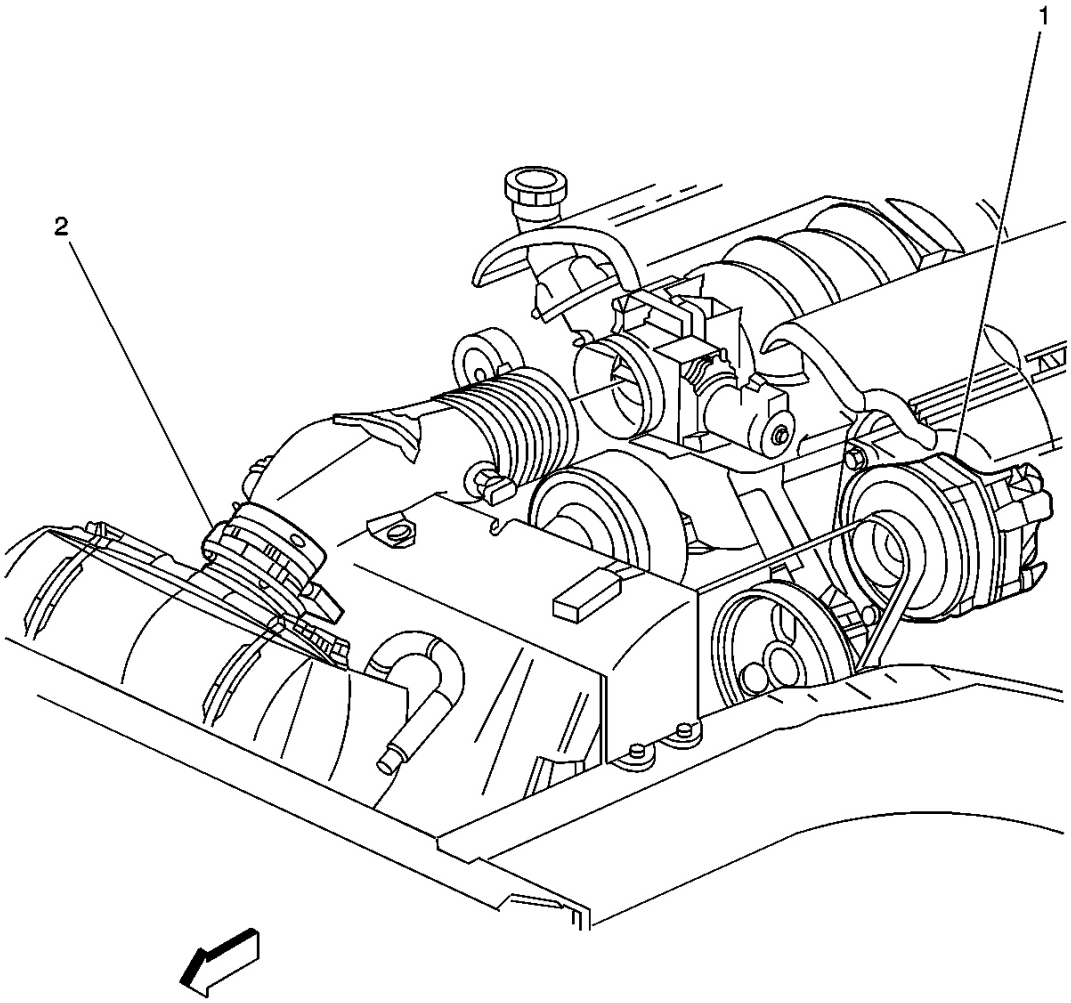

Fig. 3: Front Of Engine Compartment Component View
Courtesy of GENERAL MOTORS CORP.

Callouts For Fig. 3

Callout	Component Name
1	Generator
2	Mass Air Flow (MAF) Sensor

cardiagn.com

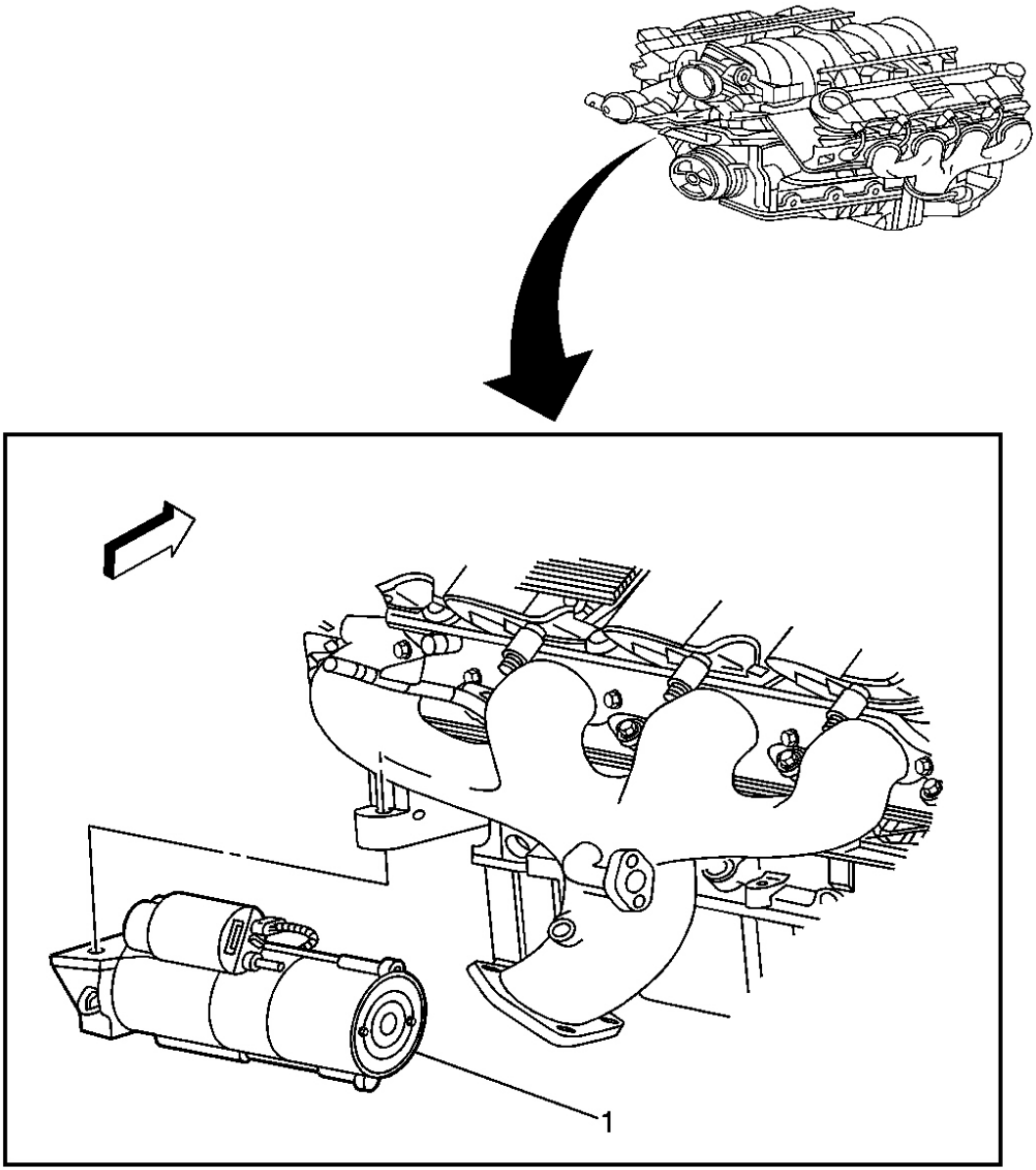

Fig. 4: Right Side Of Engine Component View
Courtesy of GENERAL MOTORS CORP.

Callouts For Fig. 4

Callout	Component Name
1	Starter

cardiagn.com

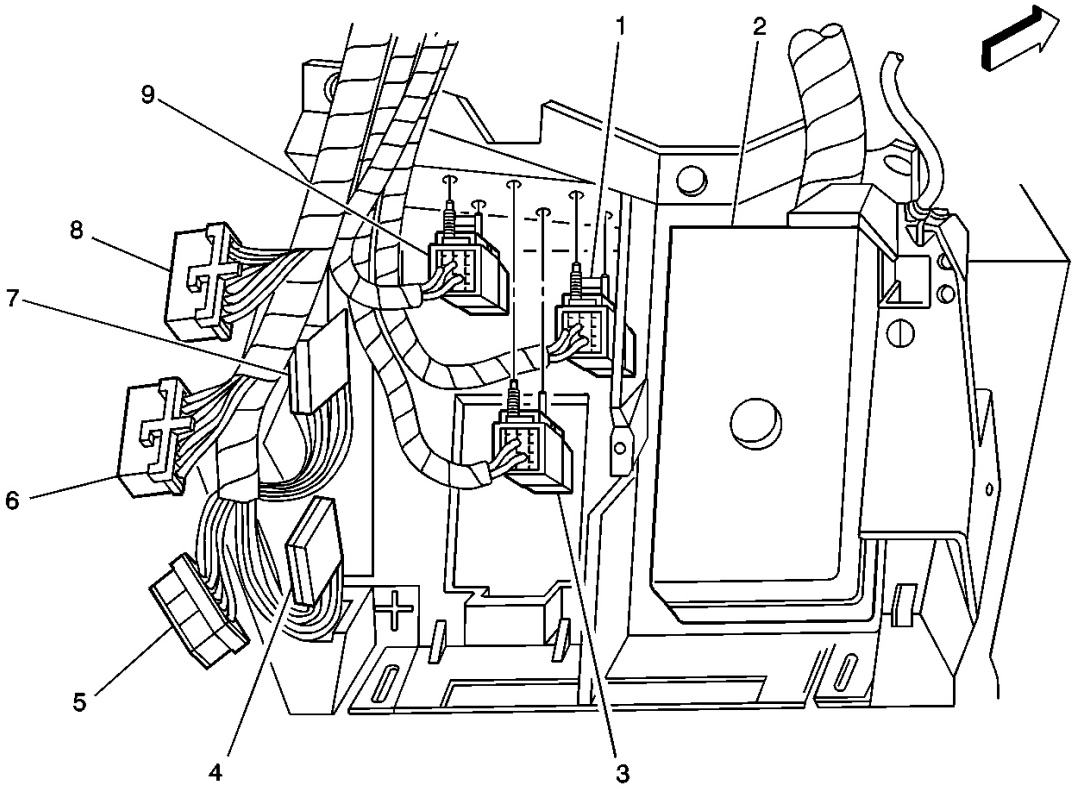

Fig. 5: Under RH Side Of Dash Component View
Courtesy of GENERAL MOTORS CORP.

Callouts For Fig. 5

Callout	Component Name
1	Theft Deterrent Relay
2	Fuse Block-IP
3	Blower Motor Relay
4	Star Connector #2
5	Body Control Module (BCM) C3
6	Body Control Module (BCM) C1
7	Star Connector #1
8	Body Control Module (BCM) C2
9	Steering Column Lock Relay

cardiagn.com

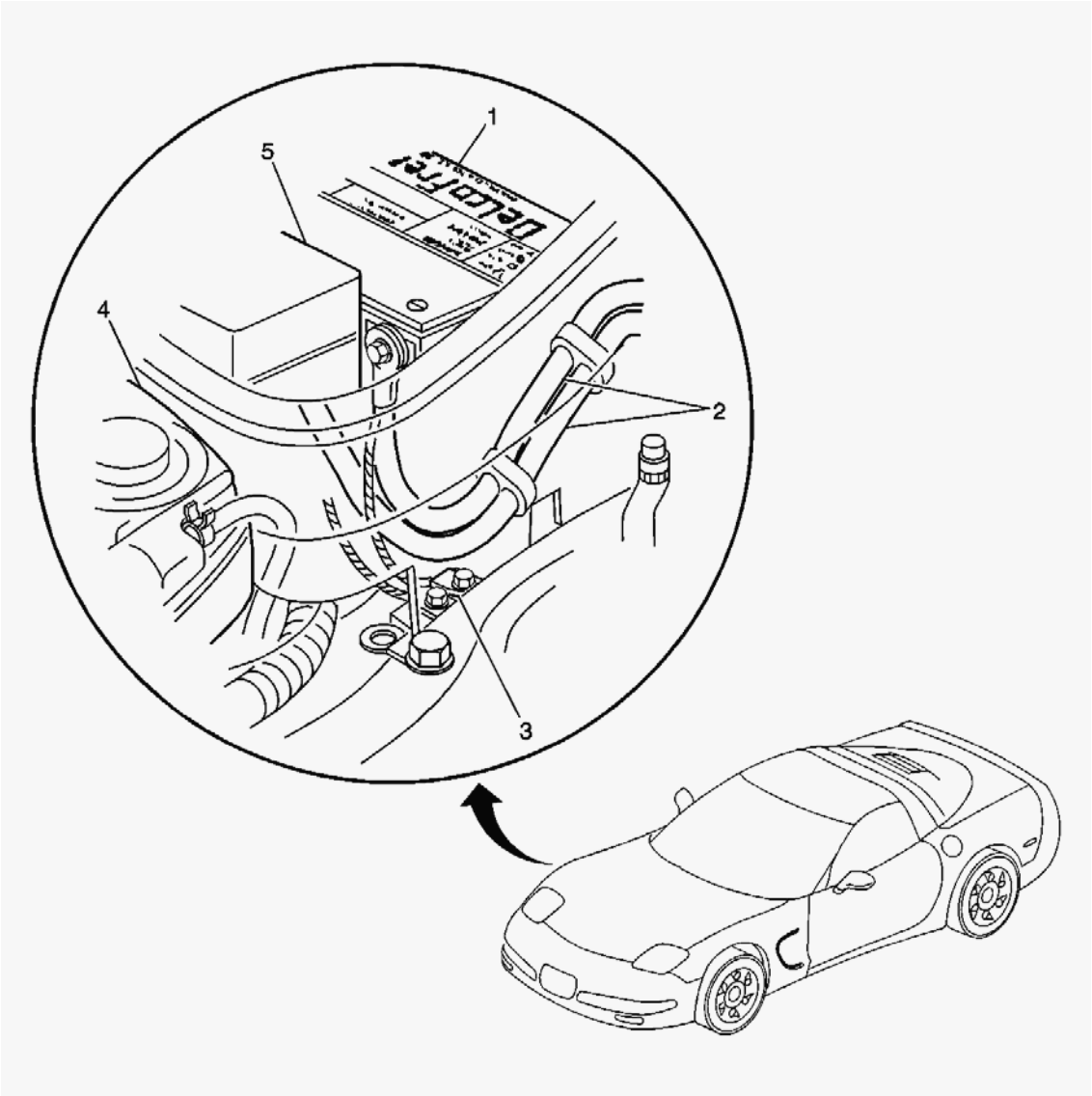

Fig. 6: Engine Compartment Under The Battery Component View
Courtesy of GENERAL MOTORS CORP.

Callouts For Fig. 6

Callout	Component Name
1	Battery
2	Battery Cables
3	G104
4	Engine Coolant Reservoir
5	Fuse Block-Underhood

cardiagn.com

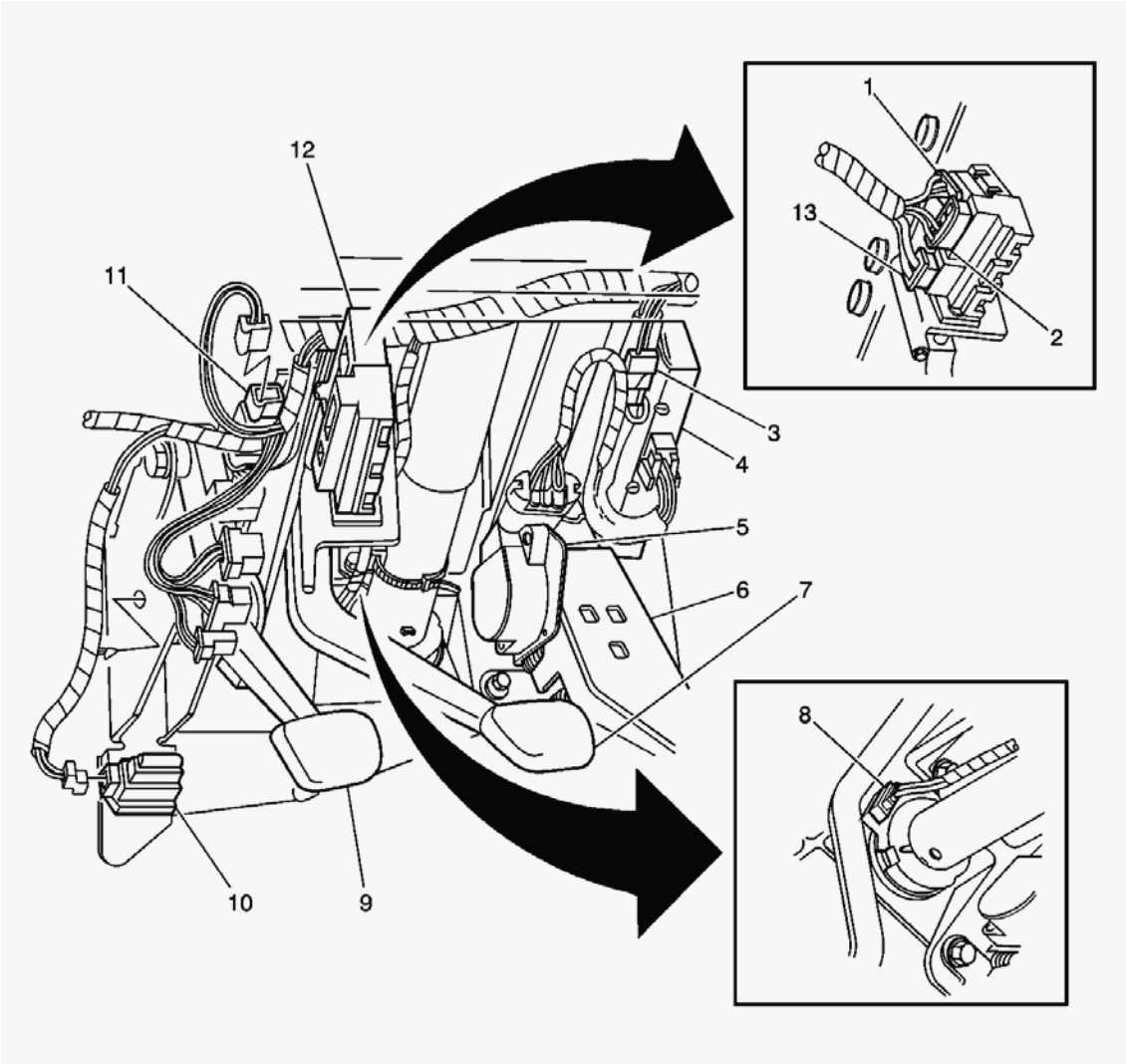

Fig. 7: Under Side Of The Dash Component View - Left
Courtesy of GENERAL MOTORS CORP.

Callouts For Fig. 7

Callout	Component Name
1	Stop Lamp Switch C1
2	Stop Lamp Switch C3
3	C213
4	Bose Signal Processor
5	Accelerator Pedal Position (APP) Sensor
6	Accelerator Pedal
7	Brake Pedal
8	Steering Wheel Position Sensor
9	Clutch Pedal
10	Clutch Pedal Start Switch

cardiagn.com

11	Clutch Pedal Position Switch
12	Stop Lamp Switch
13	Stop Lamp Switch Connector C2

ENGINE ELECTRICAL CONNECTOR END VIEWS

Generator Terminal Identification

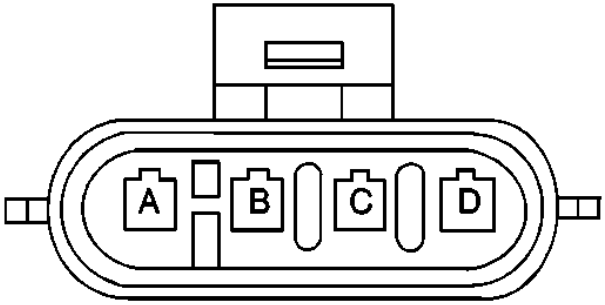

Connector Part Information		• 1204-7950 • 4-Way F Metri-Pack 150 Series (BLK)	
Pin	**Wire Color**	**Circuit No.**	**Function**
A	-	-	Not Used
B	RED	225	Generator Turn On Signal
C	GRY	23	Generator Field Duty Cycle Signal
D	RED	2	Battery Positive Voltage

Clutch Pedal Start Switch Terminal Identification

cardiagn.com

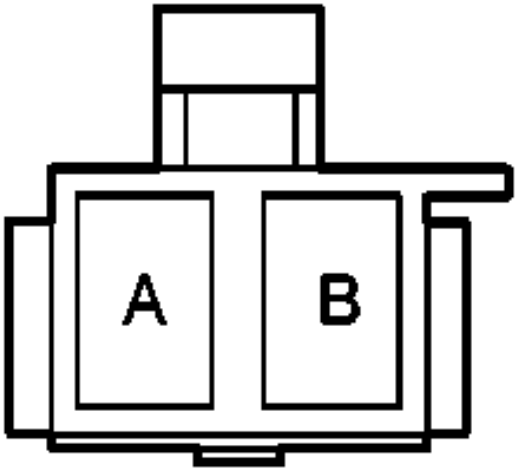

Connector Part Information		• 12034417 • 2-Way F Metri-Pack 480 Series (BLK)	
Pin	**Wire Color**	**Circuit No.**	**Function**
A	PPL	1606	Crank Voltage
B	YEL	269	Starter Enable Relay Coil Supply Voltage

DIAGNOSTIC INFORMATION AND PROCEDURES

DIAGNOSTIC STARTING POINT - ENGINE ELECTRICAL

Begin the system diagnosis with the **Diagnostic System Check - Engine Electrical** . The Diagnostic System Check will provide the following information:

- The identification of the control modules which command the system
- The ability of the control modules to communicate through the serial data circuit
- The identification of any stored diagnostic trouble codes (DTCs) and their status

The use of the Diagnostic System Check will identify the correct procedure for diagnosing the system and where the procedure is located.

DIAGNOSTIC SYSTEM CHECK - ENGINE ELECTRICAL

cardiagn.com

Test Description

The numbers below refer to the step numbers on the diagnostic table.

4: Lack of communication may be because of a partial malfunction of the class 2 serial data circuit or due to a total malfunction of the class 2 serial data circuit. The specified procedure will determine the particular condition.

5: The symptom list in Symptoms will determine the correct diagnostic procedure to use.

6: The presence of DTCs which begin with "U" indicate some other module is not communicating. The specified procedure will collect all the available information before you perform tests.

Diagnostic System Check - Engine Electrical

Step	Action	Yes	No
1	Did you perform the Battery Inspection/Test?	Go to **Step 2**	Go to **Battery Inspection/Test**
2	1. Install a scan tool. 2. Turn ON the ignition, with the engine OFF. Does the scan tool power up?	Go to **Step 4**	Go to **Scan Tool Does Not Power Up** in Data Link Communications
3	**IMPORTANT:** **The engine may start during the following step. Turn OFF the engine as soon as you have observed the Crank power mode.** 1. Access the Class 2 Power Mode in the Diagnostic Circuit Check on the scan tool. 2. Rotate the ignition switch through all positions while observing the Class 2 Power Mode parameter. Does the ignition switch parameter reading match the ignition switch position for all switch positions?	Go to **Step 4**	Go to **Power Mode Mismatch** in Body Control System
4	1. Turn ON the ignition, with the engine OFF. 2. Attempt to communicate with each of the following modules on the class 2 serial data circuit: • Body Control Module (BCM) • Powertrain Control Module (PCM)		Go to **Scan Tool Does Not**

cardiagn.com

	Does the scan tool communicate with all modules on the class 2 serial data circuit?	Go to **Step 5**	**Communicate with Class 2 Device** in Data Link Communications
5	1. Select the Display DTCs function for each module. If using a Tech 2, use the Class 2 DTC Check feature in order to determine which modules have DTCs set. 2. Record all of the displayed DTCs, the DTC status, and the module which set the DTC. Does the scan tool display any DTCs?	Go to **Step 6**	Go to **Symptoms - Engine Electrical**
6	Does the scan tool display any DTCs which begin with a U?	Go to **Scan Tool Does Not Communicate with Class 2 Device** in Data Link Communications	Go to **Step 7**
7	Does the scan tool display DTC B1000?	Go to **Diagnostic Trouble Code (DTC) List** in Body Control System	Go to **Diagnostic Trouble Code (DTC) List**

SCAN TOOL DATA LIST

Body Control Module (BCM)

Scan Tool Parameter	Data List	Units Displayed	Typical Data Value
Ignition ON/Engine OFF			
Battery Volts	Data	Volts	12.6 Volts
Inadvertent Load Monitor	Input Data 1	Active/Inactive	Active

Powertrain Control Module (PCM)

Scan Tool Parameter	Data List	Units Displayed	Typical Data Value
Ignition ON/Engine OFF			
GEN F-Terminal Signal	Engine Data 2	%	0%
GEN L-Terminal Signal	Engine Data 2	Voltage/No Voltage	Voltage
Ignition 1 Signal	Engine Data 1, Engine Data 2	Volts	12.6 Volts

Seat Control Module (SCM)

Scan Tool Parameter	Data List	Units Displayed	Typical Data Value
Ignition ON/Engine OFF			
Battery Volts	Data	Volts	12.6 Volts
Inadvertent Load Monitor	Input Data 1	Active/Inactive	Active

SCAN TOOL DATA DEFINITIONS

cardiagn.com

Battery Volts

The scan tool displays Volts. The scan tool displays the battery voltage received by the module.

GEN F-Terminal Signal

The scan tool displays 0%-100%. The scan tool displays 0%-20% until the engine is started and the PCM receives a variable signal from the generator. This value varies depending on electrical loads

GEN L-Terminal Signal

The scan tool displays Voltage/No Voltage. The scan tool displays Voltage until the engine is running, then No Voltage is displayed.

Ignition 1 Signal

The scan tool displays 0-20 Volts. The scan tool displays the voltage as received on the Ignition 1 circuit to the PCM.

DIAGNOSTIC TROUBLE CODE (DTC) LIST

Diagnostic Trouble Code (DTC) List

DTC	Diagnostic Procedure	Module(s)
P0562	**DTC P0562**	PCM
P0563	**DTC P0563**	PCM
P1637	**DTC P1637**	PCM
P1638	**DTC P1638**	PCM

DTC P0562

Circuit Description

The PCM checks the system voltage to make sure that the voltage stays within the proper range. Damage to components, and incorrect input can occur when the voltage is out of range. The PCM monitors the system voltage over an extended length of time. If the PCM detects an excessively low system voltage, DTC P0562 will set.

Conditions for Running the DTC

- Engine speed above 1,500 RPM.
- Vehicle speed is above 8 km/h (5 mph).

Conditions for Setting the DTC

The PCM detects a system voltage below 8 volts for 10 seconds.

cardiagn.com

Action Taken When the DTC Sets

- The PCM will command a message to be displayed.
- The PCM will not illuminate the Malfunction Indicator Lamp (MIL).
- The PCM will store conditions which were present when the DTC set as Fail Records data only.

Conditions for Clearing the DTC

- The PCM will command the message OFF after one trip in which the diagnostic test has been run and passed.
- The history DTC will clear after 40 consecutive warm-up cycles have occurred without a malfunction.
- The DTC can be cleared by using the scan tool Clear DTC Information function.

DTC P0562

Step	Action	Value (s)	Yes	No
Schematic Reference:Engine Controls Schematics in Engine Controls - 5.7L **Connector End View Reference:Engine Controls Connector End Views** in Engine Controls - 5.7L or**Power and Grounding Connector End Views** in Wiring Systems				
1	Did you perform the Engine Electrical Diagnostic System Check?	-	Go to **Step 2**	Go to **Diagnostic System Check - Engine Electrical**
2	1. Install a scan tool. 2. Start the engine. 3. With a scan tool, monitor the DTC information for DTC P0562 in Engine Controls. Does the scan tool indicate that DTC P0562 has passed?	-	Go to **Testing for Intermittent Conditions and Poor Connections**	Go to **Step 3**
3	1. Turn ON the ignition, with the engine OFF. 2. With a scan tool, observe the Ignition 1 Signal parameter in the PCM data list. Does the scan tool indicate that the Ignition 1 Signal parameter is greater than the specified range?	8.0 V	Go to **Step 7**	Go to **Step 4**
4	Measure the voltage at the battery and compare it with the Ignition 1 Signal parameter in the PCM data list. Are the battery voltage and PCM Ignition 1 readings different by more than the value specified?	0.5 V	Go to **Step 5**	Go to **Charging System Test**

cardiagn.com

5	Test the battery positive voltage circuit of the PCM for a high resistance. Refer to **Circuit Testing** and **Wiring Repairs** in Wiring Systems. Did you find and correct the condition?	-	Go to **Step 8**	Go to **Step 6**
6	Inspect for poor connections at the harness connector of the PCM. Refer to **Testing for Intermittent Conditions and Poor Connections** and **Connector Repairs** in Wiring Systems. Did you find and correct the condition?	-	Go to **Step 8**	Go to **Step 7**
7	**IMPORTANT:** **The replacement PCM must be programmed.** Replace the PCM. Refer to **Powertrain Control Module (PCM) Replacement** in Engine Controls 5.7L.Is action complete?	-	Go to **Step 8**	-
8	1. Review and record the scan tool Fail Records data. 2. Use the scan tool in order to clear the DTC. 3. Operate the vehicle within the Conditions for Running the DTC as specified in the supporting text. 4. Using the scan tool, observe the Specific DTC Information for DTC P0562 until the test runs. Does the scan tool indicate that DTC P0562 failed this ignition?	-	Go to **Step 3**	System OK

DTC P0563

Circuit Description

The PCM checks the system voltage to make sure that the voltage stays within the proper range. Damage to components, and incorrect input can occur when the voltage is out of range. The PCM monitors the system voltage over an extended length of time. If the PCM detects an excessively high system voltage, DTC P0563 will set.

Conditions for Running the DTC

- Engine speed above 1,500 RPM.
- Vehicle speed is above 8 km/h (5 mph).

cardiagn.com

Conditions for Setting the DTC

The PCM detects a system voltage above 18 volts for less than 10 second.

Action Taken When the DTC Sets

- The PCM will command a message to be displayed.
- The PCM will not illuminate the Malfunction Indicator Lamp (MIL).
- The PCM will store conditions which were present when the DTC set as Fail Records data only.

Conditions for Clearing the DTC

- The PCM will command the message OFF after one trip in which the diagnostic test has been run and passed.
- The history DTC will clear after 40 consecutive warm-up cycles have occurred without a malfunction.
- The DTC can be cleared by using the scan tool Clear DTC Information function.

DTC P0563

Step	Action	Value (s)	Yes	No
Schematic Reference:Engine Controls Schematics in Engine Controls - 5.7L				
1	Did you perform the Engine Electrical Diagnostic System Check?	-	Go to **Step 2**	Go to **Diagnostic System Check - Engine Electrical**
2	1. Install a scan tool. 2. Start the engine. 3. With a scan tool, monitor the DTC information for DTC P0562 in Engine Controls. Does the scan tool indicate that DTC P0562 has passed?	-	Go to **Testing for Intermittent Conditions and Poor Connections**	Go to **Step 3**
3	1. Install a scan tool. 2. Turn ON the ignition, with the engine OFF. 3. With a scan tool, observe the Ignition 1 Signal parameter in the PCM data list. Does the scan tool indicate that the Ignition 1 Signal parameter is less than the specified range?	18.0 V	Go to **Step 5**	Go to **Step 4**
	Measure the voltage at the battery and			

cardiagn.com

4	compare it with the Ignition 1 Signal parameter in the PCM data list. Are the battery voltage and PCM Ignition 1 readings different by more than the value specified?	0.5 V	Go to **Step 5**	Go to **Charging System Test**
5	**IMPORTANT:** **The replacement PCM must be programmed.** Replace the PCM. Refer to **Powertrain Control Module (PCM) Replacement** in Engine Controls 5.7L.Is action complete?	-	Go to **Step 6**	-
6	1. Review and record the scan tool Fail Records data. 2. Use the scan tool in order to clear the DTC(s). 3. Operate the vehicle within the Conditions for Running the DTC as specified in the supporting text. 4. Using the scan tool, observe the Specific DTC Information for DTC P0563 until the test runs. Does the scan tool indicate that DTC P0563 failed this ignition?	-	Go to **Step 3**	System OK

DTC P0622

Circuit Description

The powertrain control module (PCM) uses the generator field duty cycle signal circuit to monitor the duty cycle of the generator. The generator field duty cycle signal circuit connects to the high side of the field winding in the generator. A pulse width modulated (PWM) high side driver in the voltage regulator turns the field winding ON and OFF. The PCM uses the PWM signal input to determine the generator load on the engine. This allows the PCM to adjust the idle speed to compensate for high electrical loads.

The PCM monitors the state of the generator field duty cycle signal circuit. When the key is in the RUN position and the engine is OFF, the PCM should detect a duty cycle near 0 percent. However, when the engine is running, the duty cycle should be between 5 percent and 100 percent. The PCM monitors the PWM signal using a key ON test and a RUN test. During the tests, if the PCM detects an out of range PWM signal, DTC P0622 will set. When the DTC sets, the PCM will send a class 2 serial data message to the instrument panel cluster (IPC) to illuminate the charge indicator.

Conditions for Running the DTC

cardiagn.com

Key ON Test

- No generator, CKP sensors, or CMP sensor DTCs are set.
- The key is in the RUN position.
- The engine is not running.

Run Test

- No generator, CKP sensors, or CMP sensor DTCs are set.
- The engine is less than 3,000 RPM.

Conditions for Setting the DTC

- During the key ON test, the PCM detects a PWM signal greater than 65 percent for at least 5 seconds.

  OR

- During the RUN test, the PCM detects a PWM signal less than 5 percent for at least 15 seconds.

Action Taken When the DTC Sets

- The PCM will not illuminate the malfunction indicator lamp (MIL)
- The PCM will store the conditions present when the DTC set as Fail Records data only.

Conditions for Clearing the MIL/DTC

- The history DTC will clear after 40 consecutive warm-up cycles have occurred without a malfunction.
- The DTC can be cleared by using the scan tool Clear DTC Information function.

DTC P0622

Step	Action	Values	Yes	No
Schematic Reference:Starting and Charging Schematics **Connector End View Reference:Engine Electrical Connector End Views**				
1	Did you perform the Engine Electrical Diagnostic System Check?	-	Go to **Step 2**	Go to **Diagnostic System Check - Engine Electrical**
2	1. Install a scan tool. 2. Start the engine. 3. With a scan tool, observe the GEN - F Terminal parameter in the powertrain control module (PCM) data list. Does the scan tool indicate that the GEN	5-95%		

cardiagn.com

	- F Terminal parameter is within the specified range?		Go to **Step 3**	Go to **Step 4**
3	With the scan tool command the generator OFF. Does the GEN - F Terminal equal the specified value?	0%	Go to **Testing for Intermittent Conditions and Poor Connections** in Wiring Systems	Go to **Step 4**
4	1. Turn OFF the ignition. 2. Disconnect the generator connector. 3. Connect test lamp to battery positive voltage. 4. Turn ON the ignition, with the engine OFF. 5. Probe the F-Terminal in the generator connector. 6. Observe the GEN - F Terminal Signal parameter in the PCM data list. Is the GEN - F Terminal Signal parameter near the specified value?	100%	Go to **Charging System Test**	Go to **Step 5**
5	Test the generator field duty cycle signal circuit for a short or open. Refer to **Circuit Testing** and **Wiring Repairs** in Wiring Systems. Did you find and correct the condition?	-	Go to **Step 8**	Go to **Step 6**
6	Inspect for poor connections at the harness connector of the PCM. Refer to **Connector Repairs** in Wiring Systems. Did you find and correct the condition?	-	Go to **Step 8**	Go to **Step 7**
7	**IMPORTANT:** **The replacement PCM must be programmed.** Replace the PCM. Refer to **Powertrain Control Module (PCM) Replacement** in Engine Controls - 5.7L.Did you complete the repair?	-	Go to **Step 8**	-
8	1. Review and record the scan tool Fail Records data. 2. Clear any DTCs. 3. Operate the vehicle within the Fail Records conditions as noted.	-		

cardiagn.com

	4. Using a scan tool, monitor the Specific DTC info for this DTC. Does the scan tool indicate that this DTC failed this ignition?		Go to **Step 2**	System OK

DTC P1637

Circuit Description

The powertrain control module (PCM) uses the generator turn on signal circuit to control the generator. A high side driver within the PCM allows the PCM to turn the generator ON and OFF. When Generator operation is desired, the PCM sends a 5 volt signal to the voltage regulator via the generator turn on signal circuit. This causes the voltage regulator to begin controlling the generator field circuit. Once the Generator is enabled by the PCM, the voltage regulator controls generator output independently of the PCM. Under certain operating conditions, the PCM can turn Off the generator by turning Off the 5 volt signal on the generator turn on signal circuit. The PCM has fault detection circuitry which monitors the state of the generator turn on signal circuit. If the fault detection circuit senses a voltage other than what is expected, this DTC will set. The voltage regulator also contains fault detection circuitry. If the regulator detects a problem, the regulator will ground the generator turn on signal circuit, pulling the voltage low. This also causes the PCM to set the DTC.

Conditions for Running the DTC

Key ON Test

- The Key is in the ON position for 5 seconds.
- The engine is OFF.

Engine Run Test

- The engine is running.
- The engine speed is less than 3000 RPM.

Conditions for Setting the DTC

Key ON Test

1. The ECM detects a high signal voltage on the generator turn on signal circuit for at least 5 seconds.
2. The engine must be started.

During the RUN test, the ECM detects a low signal voltage on the generator turn on signal circuit for at least 5 seconds.

Action Taken When the DTC Sets

- The ECM sends a class 2 message to the IPC to illuminate the charge indicator and/or turn on a message.

cardiagn.com

- The ECM will not illuminate the malfunction indicator lamp (MIL).
- The ECM will store the conditions present when the DTC set as Fail Records data only.

Conditions for Clearing the MIL/DTC

- The history DTC will clear after 40 consecutive warm-up cycles have occurred without a malfunction.
- The DTC can be cleared by using the scan tool Clear DTC Information function.

DTC P1637

Step	Action	Value	Yes	No
Schematic Reference:Starting and Charging Schematics **Connector End View Reference:Engine Controls Connector End Views** in Engine Controls-5.7L, **Power and Grounding Connector End Views** in Wiring Systems, or **Engine Electrical Connector End Views**				
1	Did you perform the Engine Electrical Diagnostic System Check?	-	Go to **Step 2**	Go to **Diagnostic System Check - Engine Electrical**
2	1. Install a scan tool. 2. Turn ON the ignition, with the engine OFF. 3. Wait 5 seconds. 4. Start the engine. 5. With a scant tool, monitor the DTC information for DTC P1637 in Engine Controls. Does the scan tool indicate that DTC P1637 has passed?	-	Go to **Testing for Intermittent Conditions and Poor Connections** in Wiring Systems	Go to **Step 3**
3	1. Turn Off the engine. 2. Disconnect the generator harness connector. 3. Start the engine. 4. Measure the voltage between the generator turn on signal circuit and ground. Does the voltage measure near the specified value?	5.0 V	Go to **Step 5**	Go to **Step 4**
4	Test the generator turn on signal circuit for a short or open. Refer to **Circuit Testing** and **Wiring Repairs** in Wiring Systems. Did you find and correct the condition?	-	Go to **Step 11**	Go to **Step 5**
	Test the generator battery positive voltage			

cardiagn.com

5	sense circuit for a high resistance or open. Refer to **Circuit Testing** and **Wiring Repairs** in Wiring Systems. Did you find and correct the condition?	-	Go to **Step 11**	Go to **Step 6**
6	Test the generator battery positive voltage output circuit for a high resistance or open. Refer to **Circuit Testing** and **Wiring Repairs** in Wiring Systems. Did you find and correct the condition?	-	Go to **Step 11**	Go to **Step 7**
7	Inspect for poor connections at the harness connector of the generator. Refer to **Connector Repairs** in Wiring Systems. Did you find and correct the condition?	-	Go to **Step 11**	Go to **Step 9**
8	Inspect for poor connections at the harness connector of the PCM. Refer to **Testing for Intermittent Conditions and Poor Connections** and **Connector Repairs** in Wiring Systems. Did you find and correct the condition?	-	Go to **Step 11**	Go to **Step 10**
9	Replace the generator. Refer to **Generator Replacement** . Did you complete the replacement?	-	Go to **Step 11**	-
10	**IMPORTANT:** **The replacement PCM must be programmed.** Replace the PCM. Refer to **Powertrain Control Module (PCM) Replacement** in Engine Controls 5.7L.Did you complete the repair?	-	Go to **Step 11**	-
11	1. Use the scan tool in order to clear the DTCs. 2. Operate the vehicle within the Conditions for Running the DTC as specified in the supporting text. Does the DTC reset?	-	Go to **Step 3**	System OK

DTC P1638

Circuit Description

The PCM uses the generator field duty cycle signal circuit to monitor the duty cycle of the generator. The generator field duty cycle signal circuit connects to the high side of the field winding in the generator. A pulse width modulated (PWM) high side driver in the voltage regulator turns the field winding ON and OFF. The

cardiagn.com

PCM uses the PWM signal input to determine the generator load on the engine. This allows the PCM to adjust the idle speed to compensate for high electrical loads.

The PCM monitors the state of the generator field duty cycle signal circuit. When the key is in the RUN position and the engine is OFF, the PCM should detect a duty cycle near 0 percent. However, when the engine is running, the duty cycle should be between 5 percent and 100 percent. The PCM monitors the PWM signal using a key ON test and a RUN test. During the tests, if the PCM detects an out of range PWM signal, DTC P1638 will set. When the DTC sets, the PCM will send a class 2 serial data message to the IPC to illuminate the Charge System Fault message.

Conditions for Running the DTC

Key ON Test

- No generator, CKP sensors, or CMP sensor DTCs are set.
- The key is in the RUN position.
- The engine is not running.

Run Test

- No generator, CKP sensors, or CMP sensor DTCs are set.
- The engine is less than 3,000 RPM.

Conditions for Setting the DTC

- During the key ON test, the PCM detects a PWM signal greater than 65 percent for at least 5 seconds.

  OR

- During the RUN test, the PCM detects a PWM signal less than 5 percent for at least 15 seconds.

Action Taken When the DTC Sets

- The PCM will not illuminate the malfunction indicator lamp (MIL)
- The PCM will store the conditions present when the DTC set as Fail Records data only.

Conditions for Clearing the MIL/DTC

- The history DTC will clear after 40 consecutive warm-up cycles have occurred without a malfunction.
- The DTC can be cleared by using the scan tool Clear DTC Information function.

DTC P1638

Step	Action	Yes	No
Schematic Reference:Starting and Charging Schematics **Connector End View Reference:Engine Controls Connector End Views** in Engine Controls-5.7L,			

cardiagn.com

Power and Grounding Connector End Views in Wiring Systems, or **Engine Electrical Connector End Views**			
1	Did you perform the Engine Electrical Diagnostic System Check?	Go to **Step 2**	Go to **Diagnostic System Check - Engine Electrical**
2	1. Install a scan tool. 2. Start the engine. 3. With a scan tool, monitor the DTC information for DTC P1638 in Engine Controls. Does the scan tool indicate that DTC P1638 has passed?	Go to **Testing for Intermittent Conditions and Poor Connections** in Wiring Systems	Go to **Step 3**
3	1. Turn ON the ignition, leaving the engine OFF. 2. Disconnect the generator harness connector. 3. Connect a test lamp to battery positive voltage and repeatedly probe the generator field duty cycle signal circuit in the harness connector while monitoring the GEN F-Terminal Signal on the scan tool. Is the Generator PWM display affected?	Go to **Step 5**	Go to **Step 4**
4	Test the generator field duty cycle signal circuit for a short or open. Refer to **Circuit Testing** and **Wiring Repairs** in Wiring Systems. Did you find and correct the condition?	Go to **Step 8**	Go to **Step 6**
5	Inspect for poor connections at the harness connector of the generator. Refer to **Connector Repairs** in Wiring Systems. Did you find and correct the condition?	Go to **Step 8**	Go to **Charging System Test**
6	Inspect for poor connections at the harness connector of the PCM. Refer to **Connector Repairs** in Wiring Systems. Did you find and correct the condition?	Go to **Step 8**	Go to **Step 7**
7	**IMPORTANT:** **The replacement PCM must be programmed.** Replace the PCM. Refer to **Powertrain Control Module (PCM) Replacement** in Engine Controls 5.7L.Did you complete the repair?	Go to **Step 8**	-
	1. Review and record the scan tool Fail Records data.		

cardiagn.com

8	2. Clear any DTCs. 3. Operate the vehicle within the Fail Records conditions as noted. 4. Using a scan tool, monitor the Specific DTC info for this DTC. Does the scan tool indicate that this DTC failed this ignition?	Go to **Step 2**	System OK

SYMPTOMS - ENGINE ELECTRICAL

IMPORTANT: The following steps must be completed before using the symptom tables.

- Perform **Diagnostic System Check - Engine Electrical** before using the Symptom Tables in order to verify that all of the following are true:
  - There are no DTCs set.
  - The control modules can communicate via the serial data link.
- Review the system descriptions and operations in order to familiarize yourself with the system functions. Refer to one of the following system operations:
  - **Battery Description and Operation**
  - **Starting System Description and Operation**
  - **Charging System Description and Operation**

Visual/Physical Inspection

- Inspect for aftermarket devices which could affect the operation of the starting and charging systems. Refer to **Checking Aftermarket Accessories** in Wiring Systems.
- Inspect the easily accessible or visible system components for obvious damage or conditions which could cause the symptom.

Intermittent

Faulty electrical connections or wiring may be the cause of intermittent conditions. Refer to **Testing for Intermittent Conditions and Poor Connections** in Wiring Systems.

Symptom List

Refer to a symptom diagnostic procedure from the following list in order to diagnose the symptom:

- **Starter Solenoid Does Not Click**
- **Starter Solenoid Clicks, Engine Does Not Crank**
- **Engine Cranks Slowly**
- **Charge Indicator Always On**

cardiagn.com

- **Charge Indicator Inoperative**
- **Battery Inspection/Test**
- **Battery Electrical Drain/Parasitic Load Test**
- **Battery Common Causes of Failure**
- **Starter Motor Noise Diagnosis**
- **Charging System Test**
- **Generator Noise Diagnosis**

BATTERY INSPECTION/TEST

Tools Required

J 42000 Battery Tester. See **Special Tools and Equipment** .

Diagnostic Aids

CAUTION: Refer to Battery Disconnect Caution in Cautions and Notices.

IMPORTANT: The battery test using the J 42000 requires correct connections to the battery terminals. See Special Tools and Equipment . A failure to obtain the correct connections during the test may result in a failed test on a good battery.

Follow these instructions in order to avoid an incorrect diagnosis because of connections:

- If testing the vehicle with the battery cables still connected, wiggle the **J 42000** clips on the terminal bolt. See **Special Tools and Equipment** . This may cut through any coating or through any oxidation that may be present on the bolt.

  Even new bolts contain a protective coating that may insulate or cause a resistance in the test circuit.

- If correct connections to the battery terminal bolts in the vehicle are in doubt, perform the following steps:
  - Disconnect the negative battery cable.
  - Disconnect the positive battery cable.
  - Install the test adapters on the terminals.
  - Follow the instructions for an Out-of-Vehicle test.
- If the tester displays a REPLACE BATTERY or BAD CELL-REPLACE result for a battery tested in the vehicle with the battery cables connected, perform the following steps:
  - Disconnect the negative battery cable.
  - Disconnect the positive battery cable.
  - Install the tester adapters.

cardiagn.com

- Follow the instructions for an Out-of-Vehicle test.
- Replace the battery only if the Out-of-Vehicle test shows a REPLACE BATTERY or BAD CELL-REPLACE result. This prevents battery replacements that are due only to faulty battery cable connections.

- Use the correct terminal adapters.

  Do not use any common bolts or a combination of bolts, nuts, and or washers as adapters when testing the battery.

  Use the test adapters that are provided with the **J 42000** or P/N 12303040 terminal adapters. See **Special Tools and Equipment** . If the adapters that are provided with the **J 42000** require replacement, use P/N 12303040. See **Special Tools and Equipment** . Any other adapter may not contact the correct areas of the battery terminal, causing a resistance that may result in an invalid battery test result.

Battery Inspection/Test

Step	Action	Values	Yes	No
	CAUTION: **Refer to Battery Disconnect Caution in Cautions and Notices.** **IMPORTANT:** **Always write the test code displayed by the tester on the repair order for any warranty purposes. The number is a unique code that describes the test data for a particular battery at a particular time. The test code may occasionally repeat when you retest the same battery. More often, each test will result in a different code. If the battery is replaced due to failing the test, only an Out-of-Vehicle test code is valid for warranty purposes.**			
1	Inspect the battery for a cracked, broken, or damaged case, which may be indicated by battery acid leakage. Is the battery OK?	-	Go to **Step 2**	Go to **Step 15**
2	Compare the cold cranking amperage (CCA) and reserve capacity (RC) of the battery to the original battery or original equipment (OE) specification. Refer to **Battery Usage** . Does the battery meet or exceed the specifications?	-	Go to **Step 3**	Go to **Step 15**
3	1. Turn OFF the ignition. 2. Attempt to rotate the negative battery cable connector clockwise with light finger pressure. Does the negative connector rotate?	-	Go to **Step 4**	Go to **Step 5**
4	Use a torque wrench in order to verify the torque to loosen the negative battery terminal bolt. Is the torque above the specified value?	10 N.m (88 lb in)	Go to **Step 9**	Go to **Step 8**
5	Attempt to rotate the positive battery cable connector clockwise with light finger pressure. Does the positive connector rotate?	-	Go to **Step 7**	Go to **Step 6**
	IMPORTANT:			

cardiagn.com

6	**Ensure that all of the electrical loads are turned OFF.** 1. Install the **J 42000** Battery Tester. See **Special Tools and Equipment** . 2. Follow the directions supplied with the tester for an In-Vehicle test. 3. Follow any directions displayed on the tester. 4. If the tester calls for charging the battery, refer to **Battery Charging (Non-HP2)** . Did the tester pass the battery?	-	Go to **Step 14**	Go to **Step 8**
7	Use a torque wrench in order to verify the torque to loosen the positive battery terminal bolt. Is the torque above the specified value?	10 N.m (88 lb in)	Go to **Step 10**	Go to **Step 8**
8	1. Disconnect the negative battery cable. 2. Disconnect the positive battery cable. 3. Clean and wire brush the lead face of both battery terminals and the metal contact rings in both cable connectors. 4. Remove the bolts from the cable connectors in order to provide access to the connector rings as needed. 5. If either of the battery terminals or the cable rings are excessively damaged or corroded, replace as needed. Did you complete the repair?	-	Go to **Step 11**	-
9	1. Disconnect the negative battery cable. 2. Inspect for the following conditions and repair as needed: • The cable bolt is too long or deformed at the end. • There is foreign material present inside the nut in the battery terminal • Damage to the battery terminal face or cable connector ring Did you complete the repair?	-	Go to **Step 10**	-
10	1. Disconnect the positive battery cable. 2. Inspect for the following conditions and repair as needed: • The cable bolt is too long or deformed at the end • There is foreign material present inside the nut in the battery terminal • Damage to the battery terminal face or cable connector ring	-	Go to	

cardiagn.com

	Did you complete the repair?		**Step 11**	-
11	**IMPORTANT:** **Ensure that both battery cables are disconnected and proper adapters are installed in the battery terminals.** 1. Install the **J 42000** . See **Special Tools and Equipment** . 2. Follow the directions supplied with the tester for an Out-of-Vehicle test. 3. Follow any directions displayed on the tester. 4. If the tester calls for charging the battery, refer to **Battery Charging (Non-HP2)** . Did the tester pass the battery?	-	Go to **Step 12**	Go to **Step 15**
12	1. Press the CODE button on the **J 42000** . See **Special Tools and Equipment** . 2. For warranty purposes, write the displayed code on the repair order. Did you complete this action?	-	Go to **Step 13**	-
13	1. Connect the positive battery cable to the battery's positive terminal. **NOTE:** **Refer to Fastener Notice in Cautions and Notices.** 2. Tighten the positive battery cable bolt to the specified value. 3. Connect the negative battery cable to the battery negative terminal. 4. Tighten the negative battery cable bolt to the specified value. Are the cable bolts properly tightened?	15 N.m (11 lb ft)	Battery OK	-
14	1. Press the CODE button on the **J 42000** . See **Special Tools and Equipment** . 2. For warranty purposes, write the displayed code on the repair order. Did you complete the replacement?	-	Battery OK	-
15	Replace the battery. Refer to **Battery Replacement** . Did you complete the replacement?	-	Battery OK	-

BATTERY CHARGING (NON-HP2)

Tools Required

cardiagn.com

J 42000 Battery Tester. See **Special Tools and Equipment** .

- For best results, use an automatic taper-rate battery charger with a voltage capability of 16 volts.
- The charging area should be well ventilated.
- Do not charge a battery that appears to be frozen; allow the battery to warm to room temperature and test it using the **J 42000** before charging. See **Special Tools and Equipment** .

Charging Time Required

The time required to charge a battery will vary depending upon the following factors:

- The battery charger capacity-The higher the charger's amperage, the less time it will take to charge the battery.
- The state-of-charge of the battery-A completely discharged battery requires more than twice as much charging time as a half charged battery. In a discharged battery with a voltage below 11 volts, the battery has a very high internal resistance and may only accept a very low current at first. Later, as the charging current causes the acid content to increase in the electrolyte, the charging current will increase. Extremely discharged batteries may not activate the reversed voltage protection in some chargers. Refer to the manufacturers instructions for operating this circuitry.
- The temperature of the battery-The colder the battery is, the more time it takes to recharge the battery. The charging current accepted by a cold battery is very low at first. As the battery warms, the charging current will increase.

Charging Procedure

NOTE: **Turn OFF the ignition when connecting or disconnecting the battery cables, the battery charger or the jumper cables. Failure to do so may damage the PCM or other electronic components.**

NOTE: **Refer to Fastener Notice in Cautions and Notices.**

When charging side-terminal batteries with the battery cables connected, connect the charger to the positive cable bolt and to a ground located away from the battery. When charging side-terminal batteries with the battery cables disconnected, install the battery side terminal adapters and connect the charger to the adapters.

Tighten: Tighten the battery side terminal adapters to 15 N.m (11 lb ft).

Use the following procedure to charge the battery:

1. Turn OFF the charger.
2. Ensure that all of the battery terminal connections are clean and tight.
3. Connect the charger positive lead to the battery positive terminal on the Battery or Fuse Block - Underhood.

cardiagn.com

NOTE: **Do not connect the negative charger lead to the housings of other vehicle electrical accessories or equipment. The action of the battery charger may damage such equipment.**

4. Connect the negative charger lead to a solid engine ground or to a ground stud in the engine compartment that is connected directly to the battery negative terminal, but away from the battery. If the negative battery cable is disconnected and a terminal adapter is being used, connect directly to the adapter.
5. Turn ON the charger and set to the highest setting for normal charging.
6. Inspect the battery every half hour after starting the battery charger.
   - Charge the battery until the taper-rate charger indicates that the battery is fully charged.
   - Estimate the battery temperature by feeling the side of the battery. If it feels hot to the touch or its temperature is over 45° C (125° F), discontinue charging and allow the battery to cool before resuming charging.
7. After charging, test the battery. Refer to **Battery Inspection/Test** .

BATTERY ELECTRICAL DRAIN/PARASITIC LOAD TEST

Tools Required

J 38758 Parasitic Draw Test Switch. See **Special Tools and Equipment** .

Diagnostic Aids

- Be sure to rule out any possible obvious influences, such as customer error or aftermarket equipment.
- Customer driving habits, such as regular short trips. This does not allow enough time to properly charge the battery. Refer to **Battery Description and Operation** .
- Verify that the battery and charging system are in proper working order. Refer to **Battery Charging (Non-HP2)** and **Charging System Test** .
- A battery discharging for no apparent reason while the vehicle is parked can be caused by an intermittent draw, such as a module waking up, or a continuous draw, such as a dome light or stuck relay.
- Some systems and modules such as OnStar(R), and regulated voltage control (RVC), if equipped, are designed to wake-up, perform a task, and go back asleep at regular intervals. Refer to **Body Control System Description and Operation** in Body Control System for the system or modules description and operation.
- Remote keyless entry (RKE) will wake up due to an outside input. Refer to **Keyless Entry System Description and Operation** in Keyless Entry.

IMPORTANT: **The battery specification listed below is a generic specification. Refer to Battery Usage when testing the battery.**

- The battery run down time will vary depending on cold cranking amperage (CCA) and reserve capacity (RC). If the CCA and RC are higher, then the battery run down time would be longer. If the CCA and RC are lower, then the battery run down time would be shorter. The graph below indicates roughly how many days a 690 CCA battery with at 110 min. RC (60.5 AH) starting at 80 percent state of charge will last

cardiagn.com

with a constant current draw until it reaches 50 percent state of charge. Differences in battery rating and temperature will affect the results.

Battery Electrical Drain/Parasitic Load Test

Current Drain	Days
25 mA	30.5
50 mA	16.5
75 mA	11
100 mA	8.25
250 mA	3.3
500 mA	1.65
750 mA	1
1 A	0.8
2 A	0.4

CAUTION: Refer to Battery Disconnect Caution in Cautions and Notices.

NOTE: Do not turn the parasitic draw test switch to the OFF position with the engine running. Damage will occur to the vehicle's electrical system.

NOTE: The test switch must be in the ON position when removing the fuses in order to maintain continuity in the electrical system. This avoids damaging the digital multimeter due to accidental overloading, such as a door being opened to change a fuse.

IMPORTANT: The switch knob (1) on the J 38758 is marked ON and OFF. See Special Tools and Equipment . When the switch knob is in the ON position, the circuit is closed and electrical current will pass through the switch. When the switch knob is in the OFF position, the circuit is open and electrical current will not pass through the switch.

1. Disconnect the battery negative cable from the battery negative terminal.
2. Install the male end of the **J 38758** to the battery ground terminal. See **Special Tools and Equipment** .
3. Turn the **J 38758** knob to the OFF position. See **Special Tools and Equipment** .
4. Install the battery negative cable to the female end of the **J 38758** . See **Special Tools and Equipment** .
5. Connect a 10A fused jumper wire to the test switch tool terminals.
6. Turn the **J 38758** knob to the ON position. See **Special Tools and Equipment** .
7. Road test the vehicle and activate ALL of the accessories, including the radio and air conditioning. This may take up to 30 minutes.
8. Park the vehicle. Turn the ignition switch to the OFF position and remove the ignition switch key.

cardiagn.com

9. Turn the **J 38758** knob to the OFF position. See **Special Tools and Equipment** . The current now flows through the jumper wire.
10. Wait 1 minute. If the fuse blows, install an inductive ammeter and go to step 20.
11. Remove the fused jumper wire.
12. Set a digital multimeter to the 10A scale.
13. Connect the digital multimeter to the test switch tool terminals.
14. Turn the **J 38758** knob to the OFF position. See **Special Tools and Equipment** . The current flows now through the digital multimeter.
15. Wait 1 minute. Check and record the current reading.
    1. When there is a current reading on 2A or less, turn the **J 38758** knob to the ON position. See **Special Tools and Equipment** . The electrical current will now pass through the switch.
    2. Then switch the digital multimeter down to the 2A scale for a more accurate reading when the **J 38758** knob is turned OFF. See **Special Tools and Equipment** .
16. Turn the **J 38758** knob to the OFF position. See **Special Tools and Equipment** . Wait 15 minutes for most vehicles.
17. Check and record the current reading.
18. Note the battery reserve capacity, amp hour rating. Refer to **Battery Usage** .
    1. Divide the reserve capacity by 4, amp hour rating by 2.4.
    2. Compare this to the multimeter milliampere reading taken in the previous step. The parasitic current drain should not exceed this number. Example: If a battery has a reserve capacity of 100 minutes, (60 A/H) the current drain should not exceed 28 mA.
19. If excessive current drain is not found at this time and there are no other apparent causes, complete the following:
20. Using the MIN/MAX function of the digital multimeter, monitor the parasitic drain overnight or during the day. This will determine if something has been activated during that time frame.

NOTE: **The test switch must be in the ON position when removing the fuses in order to maintain continuity in the electrical system. This avoids damaging the digital multimeter due to accidental overloading, such as a door being opened to change a fuse.**

IMPORTANT: **Removing fuses, relays, and connectors to determine the failure area may wake up modules. You must wait for these modules to go to sleep or use the sleep function on the scan tool.**

21. When the vehicle has an unacceptable amount of parasitic current drain, remove each fuse one at a time until the current drain falls to an acceptable level. This will indicate which circuit is causing the drain. Refer to **Power Distribution Schematics** in Wiring Systems to diagnose exactly which part of the suspect circuit is causing the parasitic drain. In some cases a non-fused circuit or component, such as a relay, is the cause of excessive parasitic current drain.
22. Repeat the parasitic current drain test procedure after any repair has been completed to make sure that the parasitic current drain is at an acceptable level.

cardiagn.com

23. When the cause of the excessive current drain has been located and repaired, remove the **J 38758** . See **Special Tools and Equipment** .
24. Connect the battery negative cable to the battery negative terminal.

BATTERY COMMON CAUSES OF FAILURE

A battery is not designed to last forever. With proper care, however, the battery will provide years of good service. If the battery tests good but still fails to perform well, the following are some of the more common causes:

- A vehicle accessory was left on overnight.
- The driving speeds have been slow with frequent stops, stop-and-go driving, with many electrical accessories in use, particularly air conditioning, headlights, wipers, heated rear window, cellular telephone, etc.
- The electrical load has exceeded the generator output, particularly with the addition of aftermarket equipment.
- Existing conditions in the charging system, including the following possibilities:
  - A slipping belt
  - A bad generator
- The battery has not been properly maintained, including a loose battery hold down or missing battery insulator if used.
- There are mechanical conditions in the electrical system, such as a short or a pinched wire, attributing to power failure. Refer to **General Electrical Diagnosis Procedures** in Wiring Systems.

Electrolyte Freezing

The freezing point of electrolyte depends on its specific gravity. A fully charged battery will not freeze until the ambient temperature gets below -54° C (-65° F). However, a battery with a low state of charge may freeze at temperatures as high as -7° C (20° F). Since freezing may ruin a battery, the battery should be protected against freezing by keeping it properly charged. As long as the green eye is visible in the hydrometer, the freezing point of the battery will be somewhere below -32° C (-25° F).

Battery Protection During Vehicle Storage

Certain devices on the vehicle maintain a small continuous current drain, parasitic load, on the battery. A battery that is not used for an extended period of time will discharge. Eventually permanent damage will result. Discharged batteries will also freeze in cold weather. Refer to **Battery Inspection/Test** .

In order to maintain the battery state of charge while storing the vehicle for more than 30 days:

1. Ensure that the green dot is visible in the built-in hydrometer.

CAUTION: Refer to Battery Disconnect Caution in Cautions and Notices.

cardiagn.com

2. Disconnect the battery ground cable to protect the battery from discharge by parasitic current drains.

When the battery cannot be disconnected:

1. Maintain a high state of charge.
2. Establish a regular schedule for recharging the battery every 20-45 days.

A battery that has remained in a discharged state for a long period of time is difficult to recharge or may be permanently damaged.

JUMP STARTING IN CASE OF EMERGENCY

CAUTION: Batteries produce explosive gases. Batteries contain corrosive acid. Batteries supply levels of electrical current high enough to cause burns. Therefore, in order to reduce the risk of personal injury while working near a battery, observe the following guidelines:

- **Always shield your eyes.**
- **Avoid leaning over the battery whenever possible.**
- **Do not expose the battery to open flames or sparks.**
- **Do not allow battery acid to contact the eyes or the skin.**
  - **Flush any contacted areas with water immediately and thoroughly.**
  - **Get medical help.**

NOTE: This vehicle has a 12 volt, negative ground electrical system. Make sure the vehicle or equipment being used to jump start the engine is also 12 volt, negative ground. Use of any other type of system will damage the vehicle's electrical components.

1. Position the vehicle with the booster battery so that the jumper cables will reach.
   - Do not let the 2 vehicles touch.
   - Make sure that the jumper cables do not have loose ends, or missing insulation.
2. Place an automatic transmission in PARK. If equipped with a manual transmission, place in NEUTRAL and block the wheels.
3. Turn OFF all electrical loads on both vehicles that are not needed.
4. Turn OFF the ignition on both vehicles.

cardiagn.com

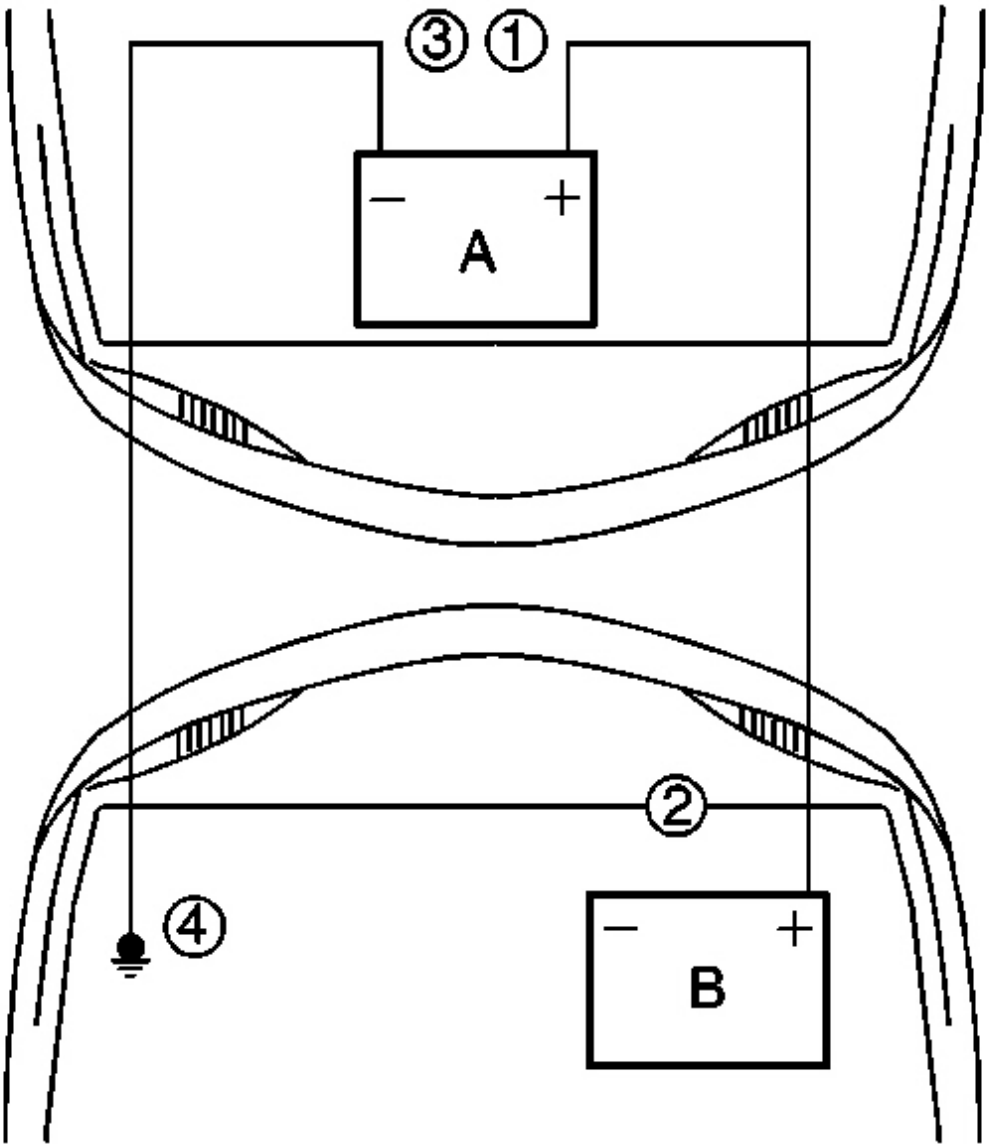

Fig. 8: Connecting Battery Terminal Jumpers
Courtesy of GENERAL MOTORS CORP.

5. Connect the red positive (+) cable to the battery positive (+) terminal (2) of the vehicle with the discharged battery.

   Use a remote positive (+) terminal if the vehicle has one.

cardiagn.com

6. Connect the red positive (+) cable to the positive (+) terminal (1) of the booster battery.

   Use a remote positive (+) terminal if the vehicle has one.

7. Connect the black negative (-) cable to the negative (-) terminal (3) of the booster battery.

   CAUTION: Do not connect a jumper cable directly to the negative terminal of a discharged battery to prevent sparking and possible explosion of battery gases.

8. The final connection is made to a heavy, unpainted metal engine part (4) of the vehicle with the discharged battery.

   This final attachment must be at least 46 cm (18 in) away from the dead battery.

9. Start the engine of the vehicle that is providing the boost.

   NOTE: Never operate the starter motor more than 15 seconds at a time without pausing in order to allow it to cool for at least 2 minutes. Overheating will damage the starter motor.

10. Crank the engine of the vehicle with the discharged battery.
11. The black negative (-) cable must be first disconnected from the vehicle that was boosted (4).
12. Disconnect the black negative (-) cable from the negative (-) terminal (3) of the booster battery.

    NOTE: Do not let the cable end touch any metal. Damage to the battery and other components may result.

13. Disconnect the red positive (+) cable from the positive (+) terminal (1) of the booster battery.
14. Disconnect the red positive (+) cable from the remote positive (+) terminal (2) of the vehicle with the discharged battery.

CHARGING SYSTEM TEST

Test Description

The step(s) below refer to the test step(s) in the diagnostic table.

10: If the test has shown the generator to be OK, however the condition remains, test the PCM or its control circuit(s) to the generator.

Charging System Test

Step	Action	Value (s)	Yes	No

cardiagn.com

1	Did you perform the Diagnostic System Check for Engine Electrical?	-	Go to **Step 2**	Go to **Diagnostic System Check - Engine Electrical**
2	Start the engine, observe the charge indicator on the instrument cluster (IPC) or message in the driver information center (DIC). Does the charge indicator illuminate or the DIC display a charging system message?	-	Go to **Step 3**	Go to **Testing for Intermittent Conditions and Poor Connections**
3	**IMPORTANT:** **The green POWER lamp of the tester should remain illuminated while the tester is being used.** 1. Turn OFF the ignition. 2. Connect the red lead of the **J 41450-B** Generator Electronic Tester to the generator output terminal. See **Special Tools and Equipment** . 3. Connect the black lead of the **J 41450-B** Generator Electronic Tester to the metal generator housing. See **Special Tools and Equipment** . Does the green POWER lamp on the tester illuminate?	-	Go to **Step 6**	Go to **Step 4**
4	Measure the voltage from the output terminal of the generator to the generator metal housing. Does the voltage measure equal to the specified value?	B +	Go to **Step 14**	Go to **Step 5**
5	Measure the voltage from the output terminal of the generator to the battery negative terminal. Does the voltage measure equal to the specified value?	B +	Go to **Step 12**	Go to **Step 11**
6	**CAUTION:** **Make sure that the load is completely turned off before connecting or disconnecting a carbon pile load tester to the battery. Otherwise, sparking could ignite battery gasses which are extremely flammable and may explode violently.** 1. Connect a carbon pile tester to the vehicle. **IMPORTANT:** **Be sure all of generator output circuit wires pass through the inductive probe.** 2. Connect an inductive ammeter to the output circuit of the generator. 3. Disconnect the generator harness connector. 4. Locate the matching harness connector on the **J 41450-B** and connect it to the generator. See **Special**	-		

cardiagn.com

	Tools and Equipment . Does the red DIAGNOSTIC lamp on the tester light?		Go to **Step 7**	Go to **Step 13**
7	1. Start the engine and allow it to idle for 30 seconds. 2. Increase the engine speed to 2500 RPM. Does the red DIAGNOSTIC lamp on the tester illuminate?	-	Go to **Step 15**	Go to **Step 8**
8	1. Maintain the engine speed at 2500 RPM. **IMPORTANT:** **If the generator is not capable of producing the Load Test amps, operate the generator at it's maximum possible output.** 2. Turn ON the load of the carbon pile tester and increase the load until the generator output is greater than or equal to the load test value given in **Generator Usage** . Does the red DIAGNOSTIC lamp on the tester illuminate?	-	Go to **Step 15**	Go to **Step 9**
9	1. Maintain the engine speed at 2500 RPM and continue to operate the generator at the load test value. 2. Measure the voltage drop from the output terminal of the generator to the positive terminal on the battery. Refer to **Circuit Testing** and **Wiring Repairs** in Wiring Systems. Does the voltage measure greater than the specified value?	0.5 V	Go to **Step 11**	Go to **Step 10**
10	1. Maintain the engine speed at 2500 RPM and continue to operate the generator at the load test value. 2. Measure the voltage drop from the battery negative terminal to the metal housing of the generator. Refer to **Circuit Testing** and **Wiring Repairs** in Wiring Systems. Does the voltage measure greater than the specified value?	0.5 V	Go to **Step 12**	Go to **Step 16**
11	Repair the high resistance or an open in the output circuit of the generator. Refer to **Circuit Testing** and **Wiring Repairs** in Wiring Systems. Did you complete the repair?	-	Go to **Step 16**	-
	Repair the high resistance or open in the ground circuit of the generator. Refer to **Circuit Testing** and **Wiring**			

cardiagn.com

12	**Repairs** in Wiring Systems. Did you complete the repair?	-	Go to **Step 16**	-
13	1. Disconnect the **J 41450-B** tester harness connector from the generator, but leave the alligator clips connected so that the green POWER lamp remains illuminated. See **Special Tools and Equipment** . 2. Connect a jumper lead, with an in-line 100-ohm resistor between the **J 41450-B** tester harness connector terminal B and a good ground. See **Special Tools and Equipment** . Refer to **Engine Electrical Connector End Views** . Does the red DIAGNOSTIC lamp illuminate?	-	Go to **Step 15**	Go to **Step 14**
14	There is a problem with the **J 41450-B** . See **Special Tools and Equipment** . Refer to the manufacturers instructions, how to test the **J 41450-B** for proper operation. See **Special Tools and Equipment** . Has the **J 41450-B** tester been replaced? See **Special Tools and Equipment** .	-	Go to **Step 3**	-
15	Replace the generator. Refer to **Generator Replacement** . Did you complete the replacement?	-	Go to **Step 16**	-
16	Operate the vehicle in order to verify the repair. Did you correct the condition?	-	System OK	Go to **Step 2**

CHARGE INDICATOR ALWAYS ON

Charge Indicator Always On

Step	Action	Value	Yes	No
Schematic Reference:Starting and Charging Schematics				
1	Did you perform the Engine Electrical Diagnostic System Check?	-	Go to **Step 2**	Go to **Diagnostic System Check - Engine Electrical**
2	Start the engine. Does the Charge System Fault message remain ON?	-	Go to **Step 3**	Go to **Testing for Intermittent Conditions and Poor Connections** in Wiring Systems
3	1. Install a scan tool. 2. With a scan tool, observe the Ignition 1 Signal parameter in the PCM data list. Is the voltage within the specified value?	11.0-15.5 Volts	Go to **Step 4**	Go to **Charging System Test**
4	1. Turn OFF the ignition. 2. Disconnect the PCM. 3. Turn ON the ignition, with the engine OFF.	-		

cardiagn.com

	Is the Charge System Fault message ON?		Go to **Step 5**	Go to **Step 7**
5	Inspect for poor connections at the harness connector of the IPC. Refer to **Testing for Intermittent Conditions and Poor Connections** and **Connector Repairs** in Wiring Systems. Did you find and correct the condition?	-	Go to **Step 9**	Go to **Step 6**
6	Replace the instrument panel cluster. Refer to **Instrument Panel Cluster (IPC) Replacement** in Instrument Panel, Gages and Console. Did you complete the replacement?	-	Go to **Step 9**	-
7	Inspect for poor connections at the PCM harness connector. Refer to **Testing for Intermittent Conditions and Poor Connections** and **Connector Repairs** in Wiring Systems. Did you find and correct the condition?	-	Go to **Step 9**	Go to **Step 8**
8	**IMPORTANT:** **Perform the set up procedures for the PCM.** Replace the PCM. Refer to **Powertrain Control Module (PCM) Replacement** in Engine Controls - 5.7L.Did you complete the replacement?	-	Go to **Step 9**	-
9	Operate the system for which the symptom occurred. Did you correct the condition?	-	System OK	Go to **Step 2**

CHARGE INDICATOR INOPERATIVE

Charge Indicator Inoperative

Step	Action	Value (s)	Yes	No
1	Did you perform the Engine Electrical Diagnostic System Check?	-	Go to **Step 2**	Go to **Diagnostic System Check - Engine Electrical**
2	1. Turn OFF the ignition. 2. Disconnect the generator. 3. Start the engine. Is the Charge System Fault message displayed?	-	System OK	Go to **Step 3**
3	Replace the instrument panel cluster. Refer to **Instrument Panel Cluster (IPC) Replacement** in Instrument Panel, Gages and Console. Did you complete the replacement?	-	System OK	-

cardiagn.com

GENERATOR NOISE DIAGNOSIS

Diagnostic Aids

Noise from a generator may be due to electrical or mechanical noise. Electrical noise (magnetic whine) usually varies with the electrical load placed on the generator and is a normal operating characteristic of all generators. When diagnosing a noisy generator, it is important to remember that loose or misaligned components around the generator may transmit the noise into the passenger compartment and that replacing the generator may not solve the problem.

Generator Noise Diagnosis

Step	Action	Yes	No
1	Test the generator for proper operation using the Generator Tester. Refer to **Charging System Test** . Is the generator operating properly?	Go to **Step 2**	Go to **Step 11**
2	1. Start the engine. Verify that the noise can be heard. 2. Turn OFF the engine. 3. Disconnect the 4-way connector from the generator. 4. Start the engine. 5. Listen for the noise. Has the noise stopped?	Go to **Step 11**	Go to **Step 3**
3	1. Turn OFF the engine. 2. Remove the drive belt. Refer to **Drive Belt Replacement - Accessory** in Engine Mechanical - 5.7L. 3. Spin the generator pulley by hand. Does the generator shaft spin smoothly and without any roughness or grinding noise?	Go to **Step 4**	Go to **Step 11**
4	Inspect the generator for a loose pulley and/or pulley nut. Is the generator pulley or pulley nut loose?	Go to **Step 11**	Go to **Step 5**
5	1. Loosen all of the generator mounting bolts. 2. Tighten the generator mounting bolts to specifications and in the proper sequence if necessary. Refer to **Generator Replacement** . 3. Install the drive belt. Refer to **Drive Belt Replacement - Accessory** in Engine Mechanical - 5.7L. 4. Start the engine. Has the noise decreased or stopped?	System OK	Go to **Step 6**
	Inspect the generator for the following conditions: • Strained or stretched electrical connections.		

cardiagn.com

6	• Hoses or other vehicle equipment resting on the generator which may cause the noise to be transmitted into the passenger compartment. Are any electrical connections pulling on the generator or are any hoses, etc. resting on the generator?	Go to **Step 7**	Go to **Step 8**
7	1. Reroute the electrical connections to relieve the tension. 2. Reroute the hoses, etc. away from the generator. 3. Start the engine. Has the noise decreased or stopped?	System OK	Go to **Step 8**
8	Inspect the drive belt for proper tension. Refer to **Drive Belt Tensioner Diagnosis** in Engine Mechanical - 5.7L. Is the drive belt loose?	Go to **Step 9**	Go to **Step 10**
9	1. Replace the drive belt tensioner. Refer to **Drive Belt Tensioner Replacement - Accessory** in Engine Mechanical - 5.7L. 2. Start the engine. Has the noise decreased or stopped?	System OK	Go to **Step 11**
10	Compare the vehicle with a known good vehicle. Do both vehicles make the same noise?	System OK	Go to **Step 11**
11	**IMPORTANT:** **If no definite generator problems were found, be sure that all other possible sources of objectionable noise are eliminated before replacing the generator. Replacing the generator may not change the noise level if the noise is a normal characteristic of the generator or the generator mounting.** Replace the generator. Refer to **Generator Replacement** .Has the noise decreased or stopped?	Go to **Step 12**	-
12	Operate the system in order to verify the repair. Did you correct the condition?	System OK	Go to **Step 2**

STARTER SOLENOID DOES NOT CLICK

Starter Solenoid Does Not Click

Step	Action	Yes	No
Schematic Reference:Starting and Charging Schematics **Connector End View Reference:Master Electrical Component List** in Wiring Systems			
1	Did you preform the Engine Electrical Diagnostic System Check?	Go to **Step 2**	Go to **Diagnostic System Check - Engine Electrical**

cardiagn.com

2	Turn the ignition switch to the START position. Does the engine crank?	Go to **Testing for Intermittent Conditions and Poor Connections** in Wiring Systems	Go to **Step 3**
3	Turn the ignition switch to the START position. Does the Theft Deterrent relay click?	Go to **Step 7**	Go to **Step 4**
4	1. Disconnect the Theft Deterrent relay. 2. Connect a test light from the supply voltage circuit of the theft deterrent relay coil circuit to ground. 3. With the transmission in park, or clutch pedal depressed, turn the ignition switch to the start position. Does the test light illuminate?	Go to **Step 5**	Go to **Step 6**
5	1. Connect a test light from the supply voltage circuit of the Theft Deterrent relay coil circuit to the control circuit of the Theft Deterrent relay coil circuit. 2. With the transmission in park, or clutch pedal depressed, turn the ignition switch to the start position. Does the test light illuminate?	Go to **Step 13**	Go to **Step 10**
6	1. Turn OFF the ignition. 2. Disconnect the Park Neutral Position (PNP) switch or Clutch Pedal Position switch. 3. Turn ON the ignition, with the Engine OFF. 4. Connect a 10 amp fused jumper between the Theft Deterrent relay coil control circuits of the PNP switch or Clutch Pedal Position switch. 5. With the transmission in park, or clutch pedal depressed, turn the ignition switch to the start position. Does the test lamp illuminate?	Go to **Step 14**	Go to **Step 11**
7	1. Turn OFF the ignition. 2. Disconnect the Theft Deterrent relay. 3. Connect a test lamp between the battery positive voltage circuit of the Theft Deterrent relay switch circuit and a good ground.		

cardiagn.com

	Does the test lamp illuminate?	Go to **Step 8**	Go to **Step 18**
8	Connect a 30 amp fused jumper between the battery positive voltage circuit of the Theft Deterrent relay switch circuit and the supply voltage circuit of the starter solenoid. Does the engine crank?	Go to **Step 13**	Go to **Step 9**
9	Does the fuse in the jumper open?	Go to **Step 19**	Go to **Step 12**
10	Test the control circuit of the Theft Deterrent relay for an open or high resistance. Refer to **Circuit Testing** and **Wiring Repairs** in Wiring Systems. Did you find and correct the condition?	Go to **Step 25**	Go to **Step 15**
11	Test the supply voltage circuit of the Theft Deterrent relay coil circuit for an open or high resistance. Refer to **Circuit Testing** and **Wiring Repairs** in Wiring Systems. Did you find and correct the condition?	Go to **Step 25**	Go to **Step 16**
12	Test the supply voltage circuit of the starter solenoid for an open or high resistance. Refer to **Circuit Testing** and **Wiring Repairs** in Wiring Systems. Did you find and correct the condition?	Go to **Step 25**	Go to **Step 17**
13	Inspect for poor connections at the Theft Deterrent relay. Refer to **Testing for Intermittent Conditions and Poor Connections** and **Connector Repairs** in Wiring Systems. Did you find and correct the condition?	Go to **Step 25**	Go to **Step 20**
14	• If equipped with an Automatic Transmission Inspect for poor connection at the PNP switch harness connector. Refer to **Testing for Intermittent Conditions and Poor Connections** and **Connector Repairs** in Wiring Systems. • If equipped with a Manual Transmission inspect for poor connection at the Clutch Pedal Position switch harness connector. Refer to **Testing for Intermittent Conditions and Poor Connections** and **Connector Repairs** in Wiring Systems. Did you find and correct the condition?	Go to **Step 25**	Go to **Step 21**
15	Inspect for poor connections at the BCM harness connector. Refer to **Testing for Intermittent Conditions and Poor Connections** and **Connector Repairs** in Wiring Systems. Did you find and correct the condition?	Go to **Step 25**	Go to **Step 22**
	Inspect for poor connections at the ignition switch		

cardiagn.com

16	harness connector. Refer to **Testing for Intermittent Conditions and Poor Connections** and **Connector Repairs** in Wiring Systems. Did you find and correct the condition?	Go to **Step 25**	Go to **Step 23**
17	Inspect for poor connections at the starter solenoid. Refer to **Testing for Intermittent Conditions and Poor Connections** and **Connector Repairs** in Wiring Systems. Did you find and correct the condition?	Go to **Step 25**	Go to **Step 24**
18	Repair the open or high resistance in the battery positive voltage circuit of the Theft Deterrent relay switch circuit. Refer to **Wiring Repairs** in Wiring Systems. Did you complete the repair?	Go to **Step 25**	-
19	Repair the short to ground in the supply voltage circuit of the starter solenoid. Refer to **Wiring Repairs** in Wiring Systems. Did you complete the repair?	Go to **Step 25**	-
20	Replace the Theft Deterrent relay. Did you complete the replacement?	Go to **Step 25**	-
21	Replace the: • PNP switch. Refer to **Park/Neutral Position Switch Replacement** in Automatic Transmission - 4L60 - E. • Clutch Pedal Position switch. Refer to **Clutch Pedal Position Switch Replacement** in Manual Transmission - MM6. Did you complete the replacement?	Go to **Step 25**	-
22	**IMPORTANT:** **Perform the set up procedures for the BCM.** Replace the BCM. Refer to **Body Control Module Replacement** in Body Control System.Did you complete the replacement?	Go to **Step 25**	-
23	Replace the Ignition Switch. Refer to **Ignition Switch Replacement** in Instrument Panel, Gages, and Console. Did you complete the replacement?	Go to **Step 25**	-
24	Replace the starter. Refer to **Starter Motor Replacement** . Did you complete the replacement?	Go to **Step 25**	-
	Operate the system for which the symptom occurred.		

cardiagn.com

25	Did you correct the condition?	System OK	Go to **Step 2**

STARTER SOLENOID CLICKS, ENGINE DOES NOT CRANK

Test Description

The number below refers to the step number on the diagnostic table.

3: Inspect the engine for mechanical failure, or the binding of driven components including driveline related components.

Starter Solenoid Clicks, Engine Does Not Crank

Step	Action	Yes	No
Schematic Reference:Starting and Charging Schematics			
1	Did you perform the Engine Electrical Diagnostic System Check?	Go to **Step 2**	Go to **Diagnostic System Check - Engine Electrical**
2	Turn the ignition to the START position. Did the starter solenoid click?	Go to **Step 3**	Go to **Starter Solenoid Does Not Click**
3	Inspect the engine and belt drive system for mechanical binding (seized engine, seized generator). Does the engine move freely?	Go to **Step 4**	Go to **Engine Will Not Crank - Crankshaft Will Not Rotate** in Engine Mechanical - 5.7L
4	Test the battery positive cable between the underhood fuse block and starter motor for an open or high resistance. Refer to **Circuit Testing** and **Wiring Repairs** in Wiring Systems. Did you find and correct the condition?	Go to **Step 8**	Go to **Step 5**
5	Test the ground circuit of the starter motor between the battery and the starter motor for a high resistance. Refer to **Circuit Testing** and **Wiring Repairs** in Wiring Systems. Did you find and correct the condition?	Go to **Step 8**	Go to **Step 6**
6	Inspect for poor connections at the starter motor. Refer to **Testing for Intermittent Conditions and Poor Connections** and **Connector Repairs** in Wiring Systems. Did you find and correct the condition?	Go to **Step 8**	Go to **Step 7**
7	Replace the Starter Motor. Refer to **Starter Motor Replacement** . Did you complete the replacement?	Go to **Step 8**	-
8	Operate the system in order to verify the repair. Did you correct the condition?	System OK	Go to **Step 2**

ENGINE CRANKS SLOWLY

Inspect the following items:

cardiagn.com

- Battery - Perform the Battery Inspection/Test. Refer to **Battery Inspection/Test** .
- Wiring - Inspect the wiring for damage. Inspect all connections to the starter motor, the solenoid, the battery, and all ground connections. Refer to **Circuit Testing** , **Wiring Repairs** , **Testing for Intermittent Conditions and Poor Connections** , and **Connector Repairs** in Wiring Systems.
- Engine - Verify that the engine is not seized.

If the battery, the wiring, and the engine are functioning properly, and the engine continues to crank slowly, replace the starter motor. Refer to **Starter Motor Replacement** .

STARTER MOTOR NOISE DIAGNOSIS

Diagnostic Aids

- Inspect the flywheel ring gear for damage or unusual wear.
- Shim the starter as required.
- In order to add pinion to ring gear clearance a full size shim must be used. Do not shim only one starter mounting bolt. There are three shims available in different shapes, for clearance, all are 1 mm (0.039 in) thick.

Starter Motor Noise Diagnosis

Step	Action	Yes	No
1	Did you perform the Diagnostic System Check for Engine Electrical?	Go to **Step 2**	Go to **Diagnostic System Check - Engine Electrical**
2	Start the engine. Does the starter operate normally?	Go to **Testing for Intermittent Conditions and Poor Connections** in Wiring Systems	Go to **Step 3**
3	Start the engine while listening to the starter motor turn. Is there a loud "whoop" (it may sound like a siren if the engine is revved while the starter is engaged) after the engine starts, but while the starter is still held in the engaged position?	Go to **Step 6**	Go to **Step 4**
4	Do you hear a "rumble", a "growl", or, in some cases, a "knock" as the starter is coasting down to a stop after starting the engine?	Go to **Step 7**	Go to **Step 5**
5	**IMPORTANT:** **This is often diagnosed as a starter drive gear hang-in or a weak solenoid.** When the engine is cranked, do you hear a high-pitched whine after the engine cranks and starts normally?	Go to **Step 8**	Go to **Step 7**

cardiagn.com

6	Inspect the flywheel ring gear for the following: • Chipped gear teeth • Missing gear teeth • Milled teeth Is the flywheel bent, or does it have damaged teeth?	Go to **Step 9**	Go to **Step 10**
7	1. Remove the starter motor. Refer to **Starter Motor Replacement** . 2. Inspect the starter motor bushings and clutch gear. Does the clutch gear have chipped or milled teeth or worn bushings?	Go to **Step 10**	Go to **Step 9**
8	Shim the starter motor away from the flywheel by adding shims between the starter motor and the engine block one at a time. Flywheel runout may make this noise appear to be intermittent. Did you complete the repair?	Go to **Step 11**	-
9	Replace the flywheel. Refer to **Engine Flywheel Replacement** in Engine Mechanical 5.7L. Did you complete the replacement?	Go to **Step 11**	-
10	Replace the starter motor. Refer to **Starter Motor Replacement** . Did you complete the replacement?	Go to **Step 11**	-
11	Operate the system in order to verify the repair. Did you correct the condition?	System OK	Go to **Step 3**

REPAIR INSTRUCTIONS

BATTERY NEGATIVE CABLE DISCONNECT/CONNECT PROCEDURE

Removal Procedure

CAUTION: When performing service on or near the SIR components or the SIR wiring, the SIR system must be disabled. Refer to SIR Disabling and Enabling Zones. Failure to observe the correct procedure could cause deployment of the SIR components, personal injury, or unnecessary SIR system repairs.

CAUTION: Before servicing any electrical component, the ignition key must be in the

cardiagn.com

OFF or LOCK position and all electrical loads must be OFF, unless instructed otherwise in these procedures. If a tool or equipment could easily come in contact with a live exposed electrical terminal, also disconnect the negative battery cable. Failure to follow these precautions may cause personal injury and/or damage to the vehicle or its components.

1. Record all of the vehicle preset radio stations.
2. Record the radio Theftlock(R) code (if applicable). Refer to **Radio/Audio System Description and Operation** in Entertainment.
3. Turn OFF all the lamps and the accessories.
4. Make sure the ignition switch is in the OFF position.

cardiagn.com

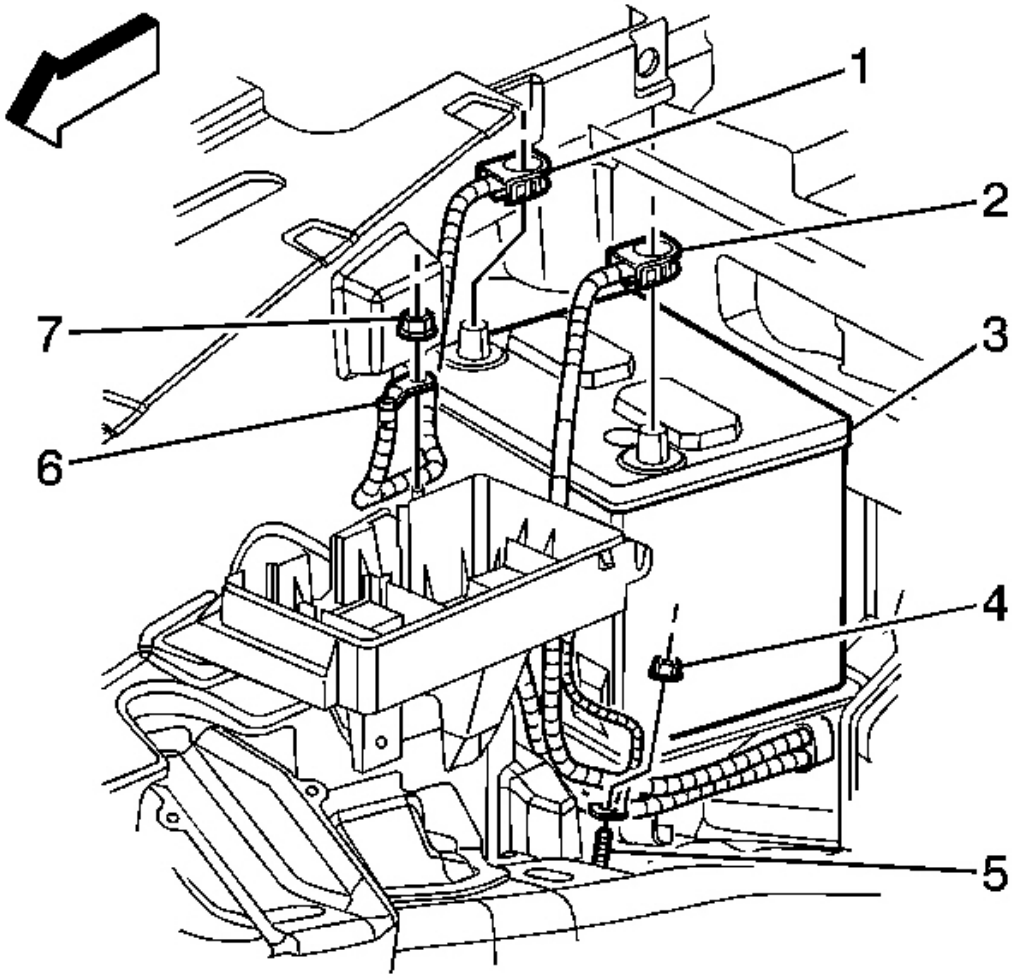

Fig. 9: Battery & Negative Cable
Courtesy of GENERAL MOTORS CORP.

5. Disconnect the battery negative cable (2) from the battery.

Installation Procedure

cardiagn.com

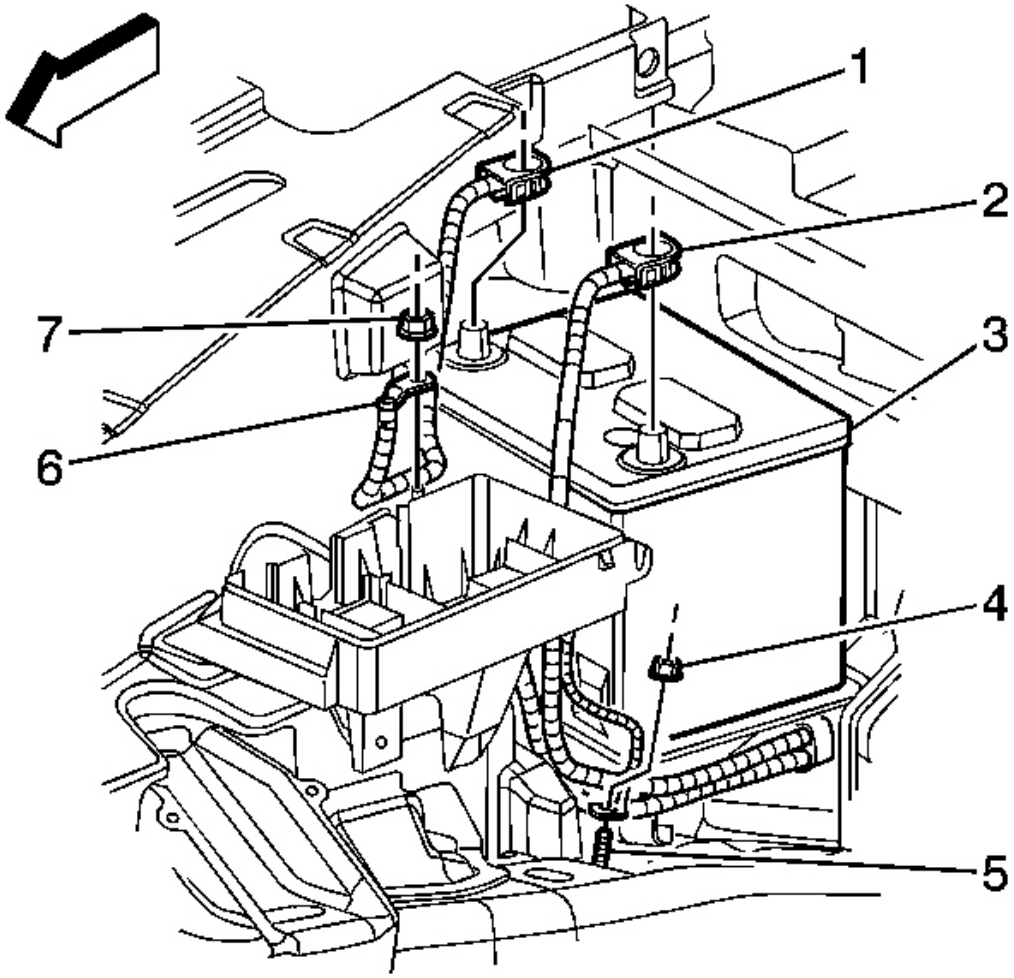

Fig. 10: Battery & Negative Cable
Courtesy of GENERAL MOTORS CORP.

NOTE: **Refer to Fastener Notice in Cautions and Notices.**

IMPORTANT: Clean any existing oxidation from the contact surface of the battery cable using a wire brush before installing the battery cable to the battery.

1. Connect the battery negative cable (2) to the battery.

   Tighten: Tighten the battery negative terminal bolt to 16 N.m (12 lb ft).

cardiagn.com

2. Unlock the Theftlock(R) radio (if applicable).
3. Program the radio stations back into the radio as recorded at the beginning of the procedure.
4. Set the clock to the current time. Refer to **Radio/Audio System Description and Operation** in Entertainment.

BATTERY NEGATIVE CABLE REPLACEMENT

Removal Procedure

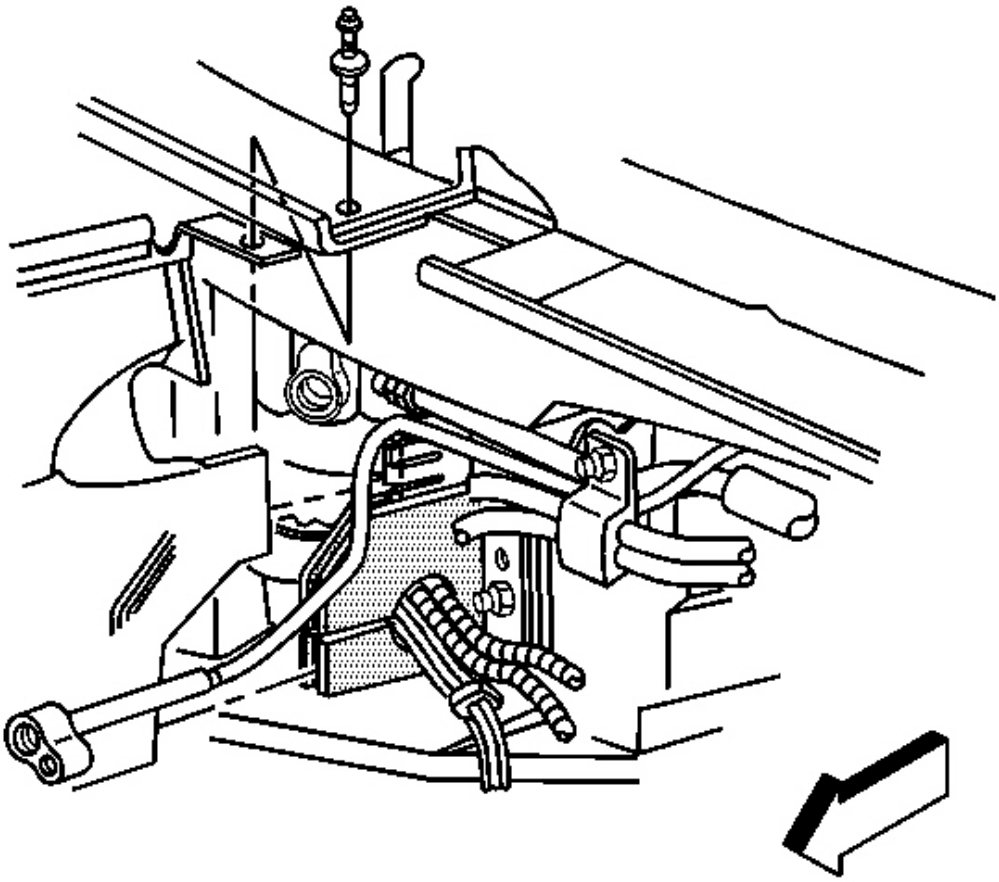

Fig. 11: Upper Plenum Heat Shield Retainer
Courtesy of GENERAL MOTORS CORP.

1. Remove the battery tray. Refer to **Battery Tray Replacement** .
2. Remove the heat shield retainer at the upper plenum.

cardiagn.com

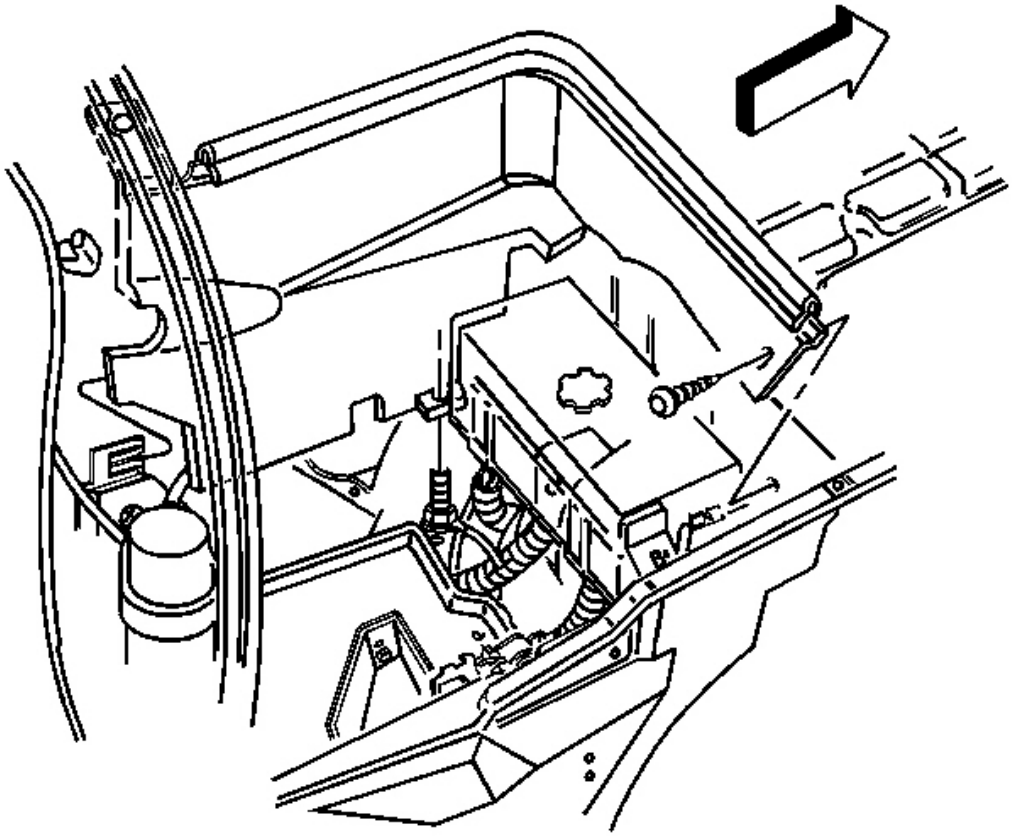

Fig. 12: Battery Heat Shield
Courtesy of GENERAL MOTORS CORP.

3. Remove the heat shield retainer at the wheelhouse panel.
4. Remove the battery heat shield.
5. Remove the right rear spark plug wire.

cardiagn.com

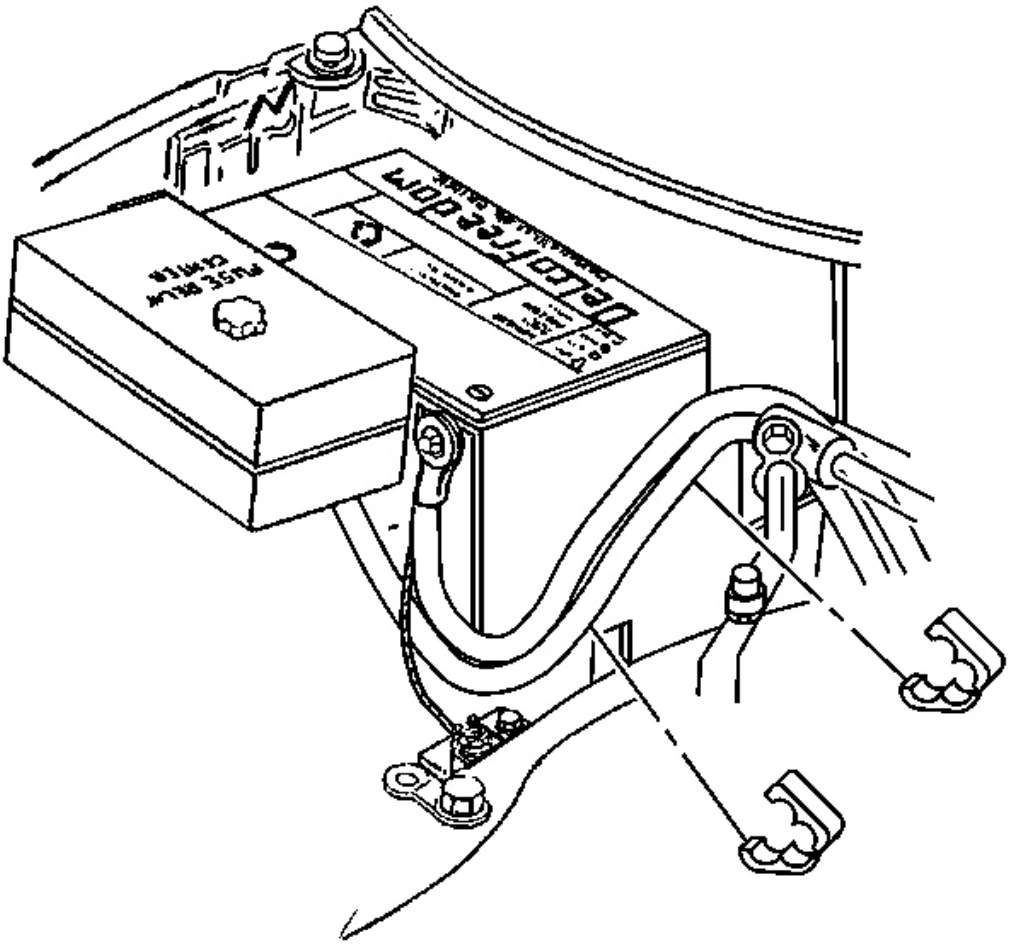

Fig. 13: Battery Cable Clips
Courtesy of GENERAL MOTORS CORP.

6. Remove the battery cable clips.

cardiagn.com

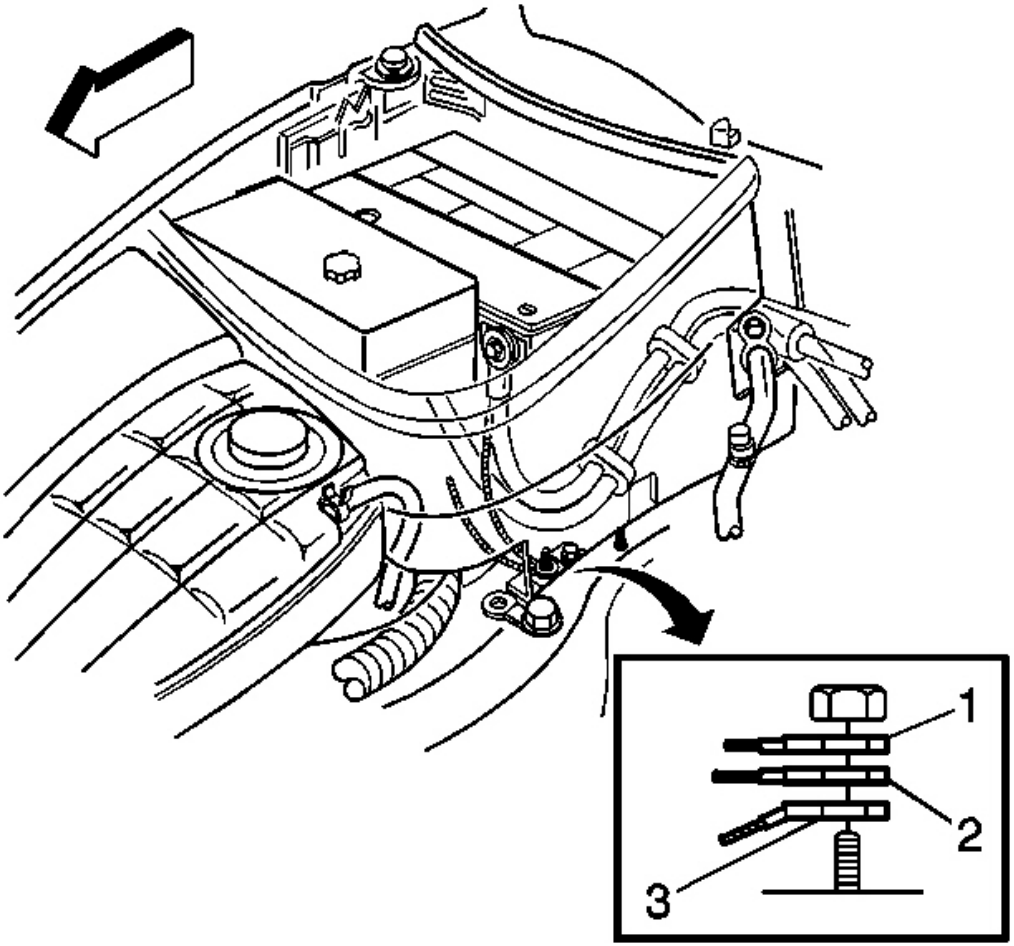

Fig. 14: Negative Battery Cable Ground Lead
Courtesy of GENERAL MOTORS CORP.

7. Remove the negative battery cable ground nut.
8. Remove the negative battery cable ground lead (1).

cardiagn.com

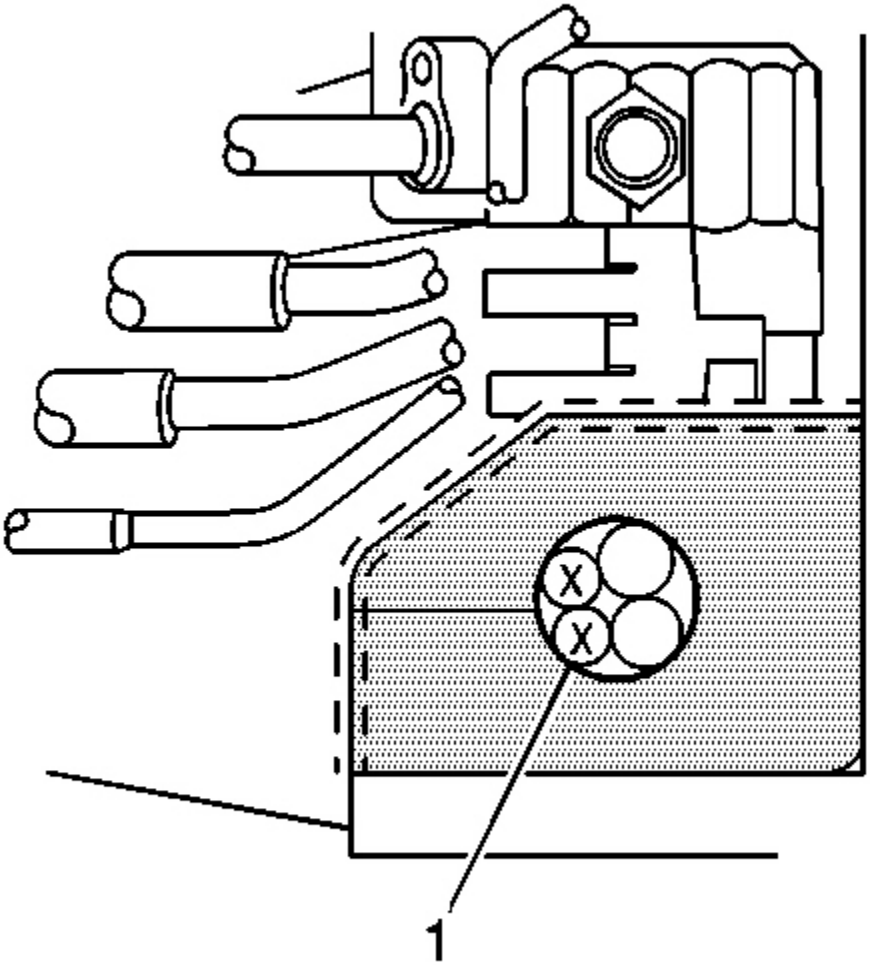

Fig. 15: Locating Battery Cables In Engine Wiring Harness Insulator
Courtesy of GENERAL MOTORS CORP.

9. Remove the battery cables (1) from the engine wiring harness insulator.
10. Raise and suitably support the vehicle. Refer to **Lifting and Jacking the Vehicle** in General Information.

cardiagn.com

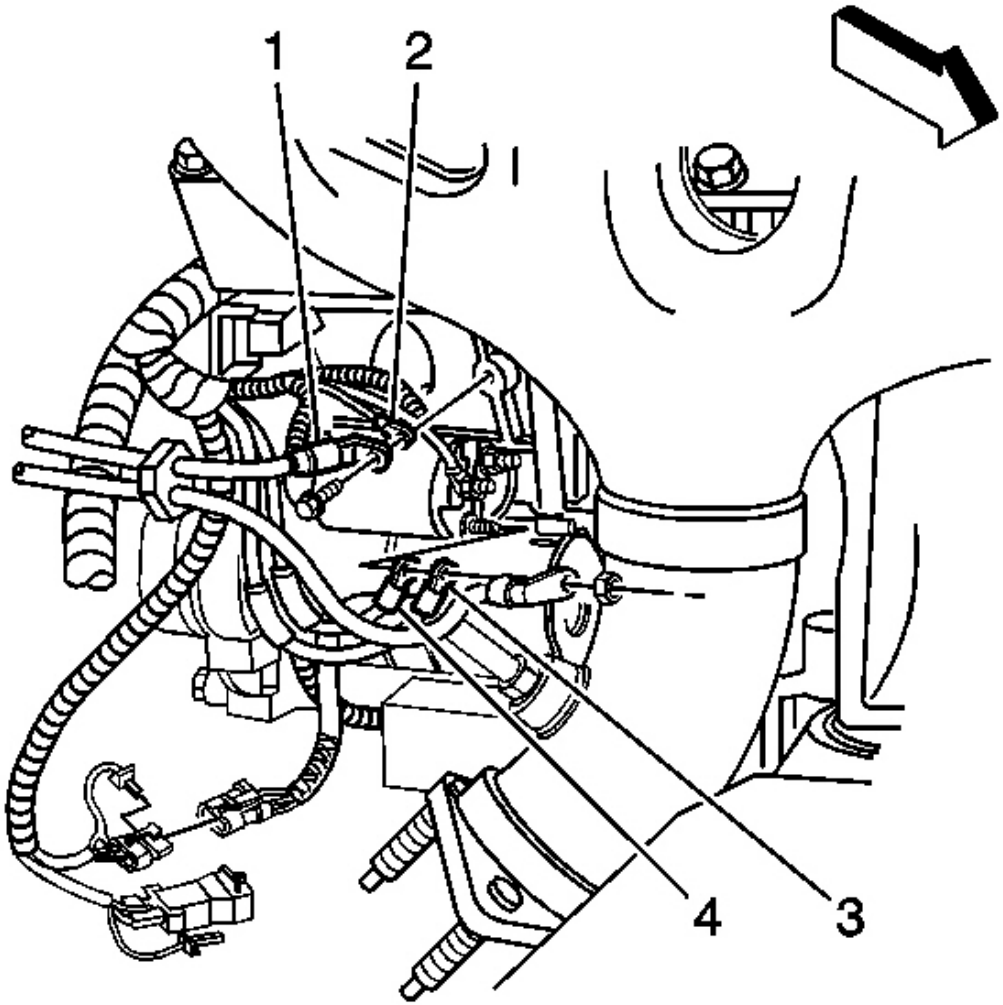

Fig. 16: Negative Battery Cable Terminal Bolt & Terminal
Courtesy of GENERAL MOTORS CORP.

11. Remove the negative battery cable terminal bolt and terminal (1).
12. Lower the vehicle.
13. Remove the negative battery cable.

Installation Procedure

cardiagn.com

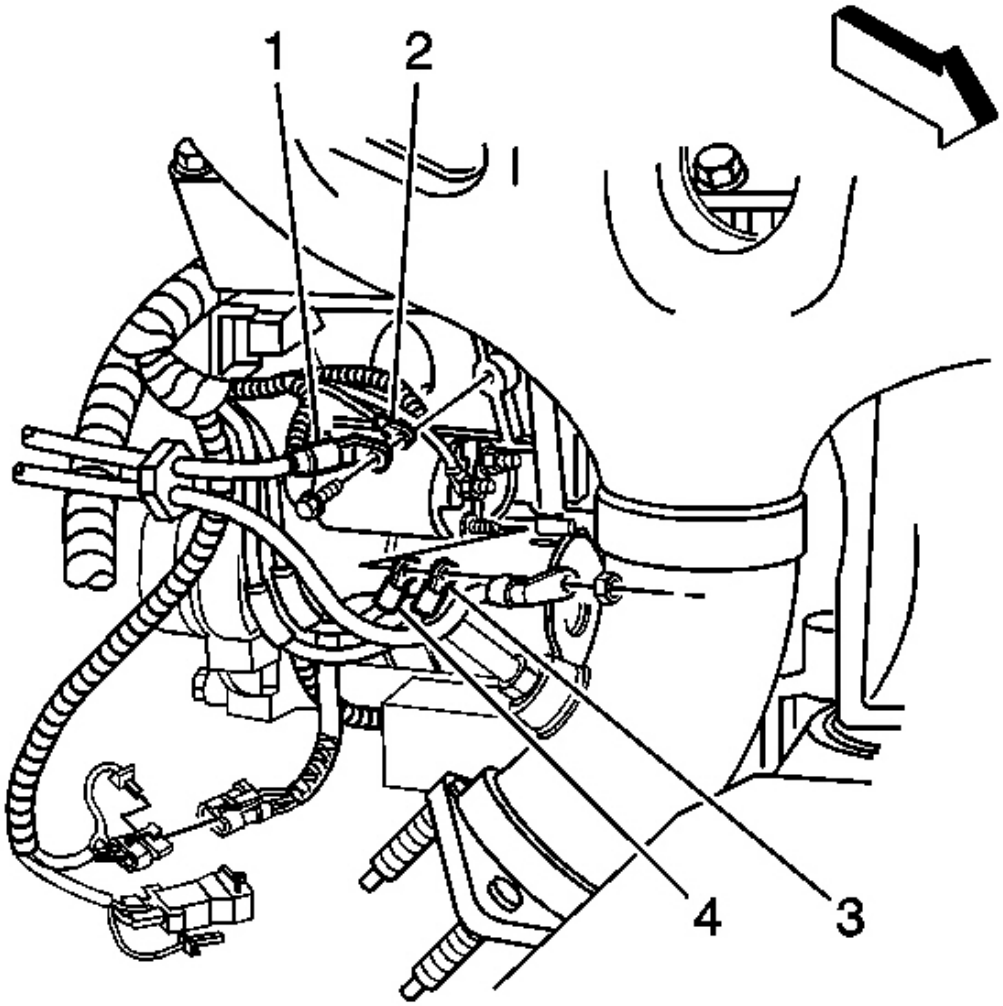

Fig. 17: Negative Battery Cable Terminal Bolt & Terminal
Courtesy of GENERAL MOTORS CORP.

1. Install the negative battery cable.
2. Raise the vehicle.

NOTE: **Refer to Fastener Notice in Cautions and Notices.**

IMPORTANT: **Ensure that the engine harness ground terminal is positioned behind the negative cable terminal prior to bolt installation.**

cardiagn.com

3. Install the negative battery cable terminal (1) and bolt.

   Tighten: Tighten the negative battery cable terminal bolt to 8 N.m (71 lb in).

4. Lower the vehicle.

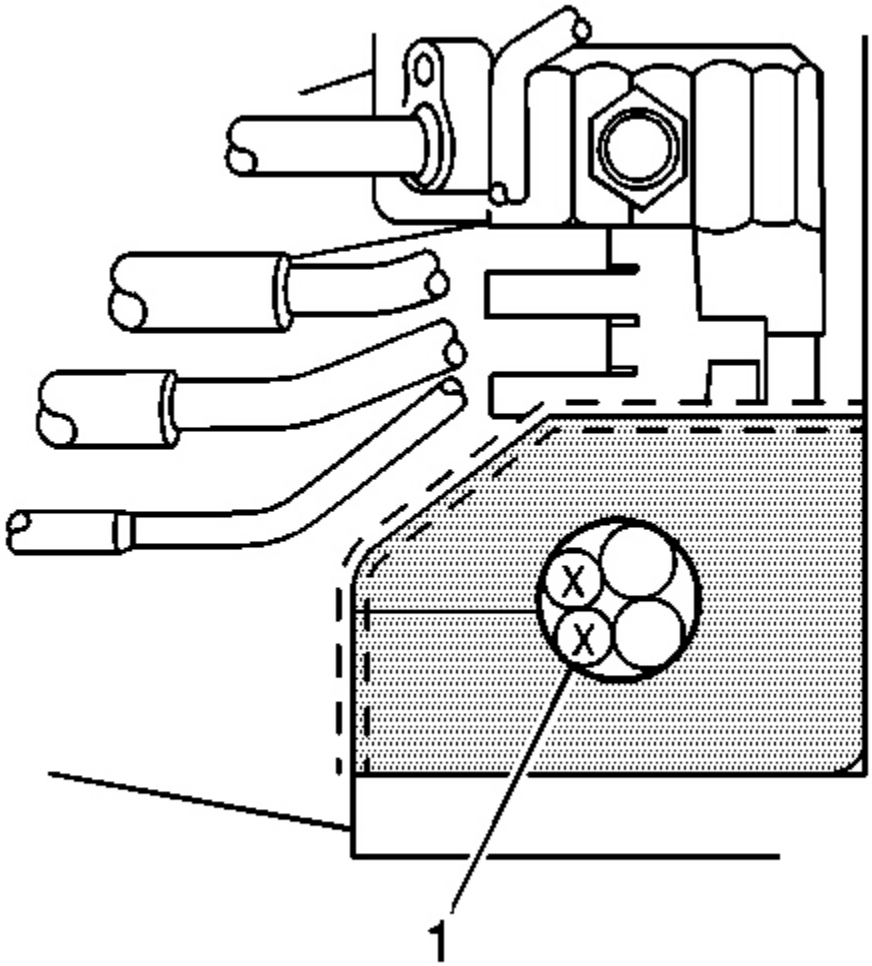

Fig. 18: Locating Battery Cables In Engine Wiring Harness Insulator
Courtesy of GENERAL MOTORS CORP.

5. Install the battery cables (1) to the engine wiring harness insulator.

cardiagn.com

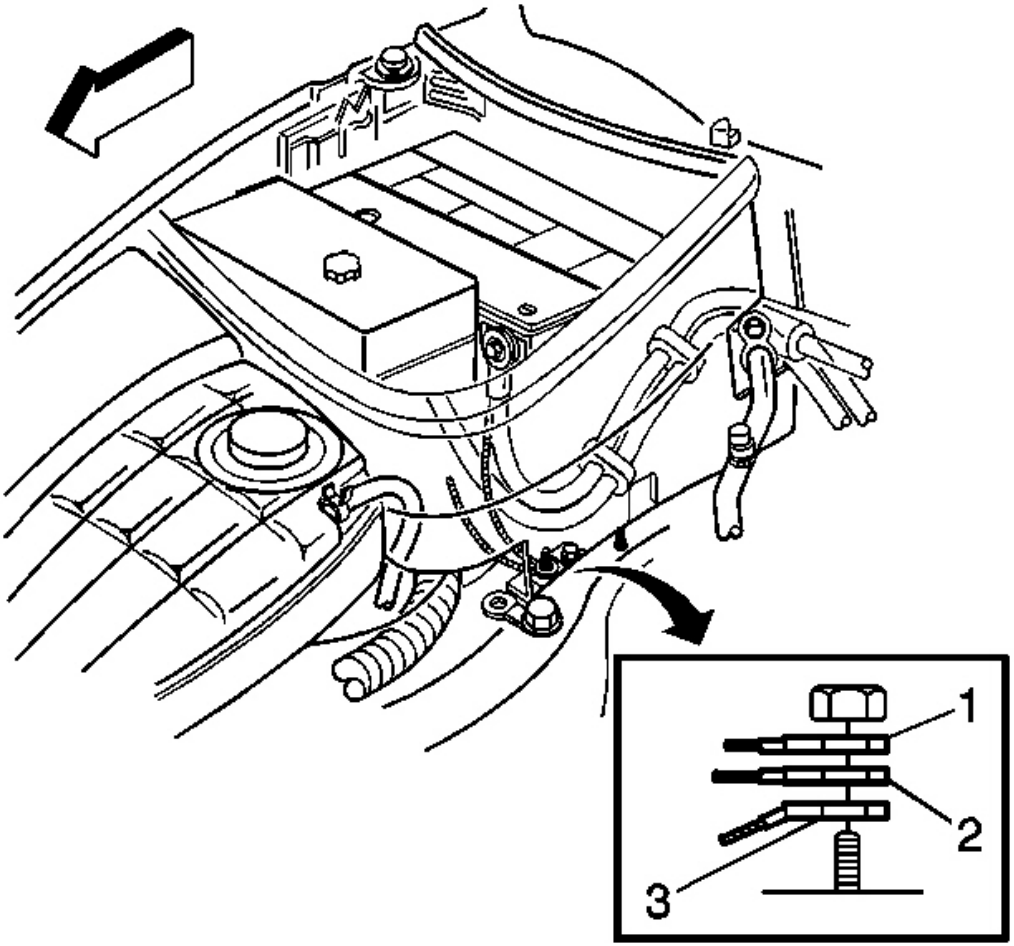

Fig. 19: Negative Battery Cable Ground Lead
Courtesy of GENERAL MOTORS CORP.

6. Install the negative battery cable ground lead (1).
7. Install the negative battery cable ground nut.

Tighten: Tighten the negative battery cable ground nut to 8 N.m (71 lb in).

cardiagn.com

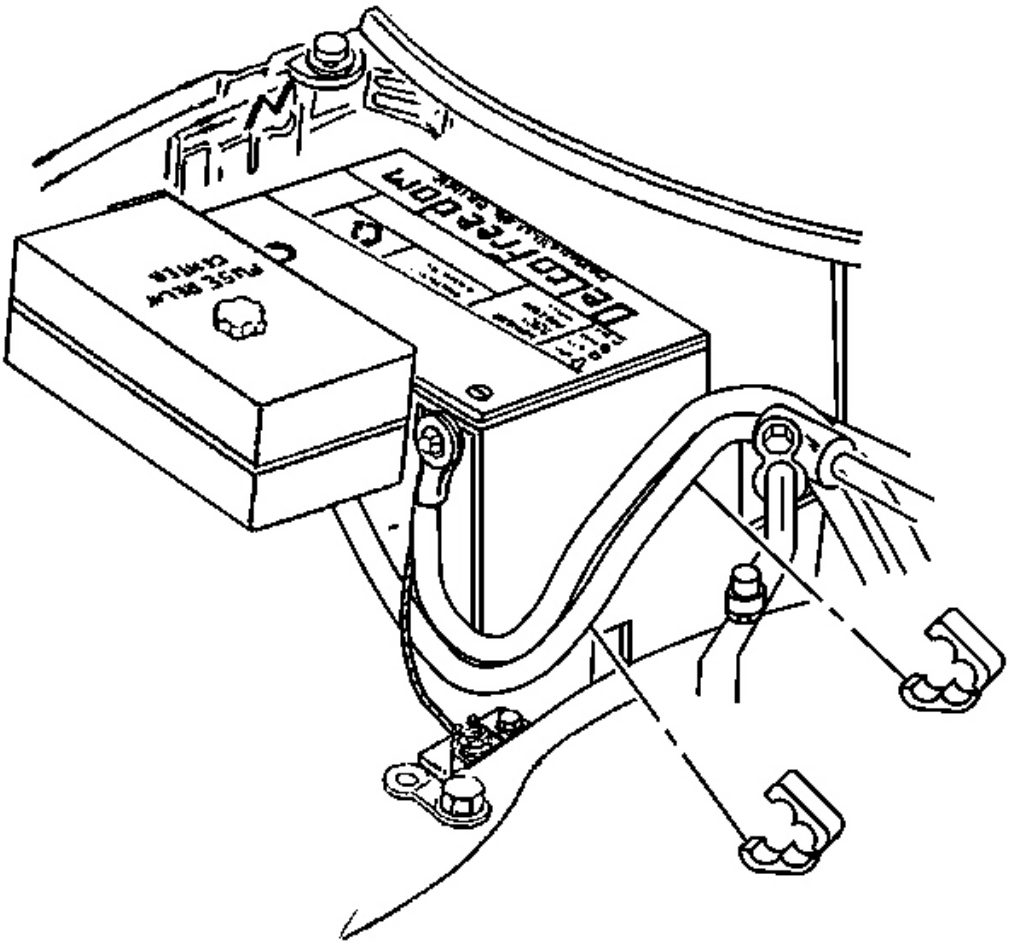

Fig. 20: Battery Cable Clips
Courtesy of GENERAL MOTORS CORP.

8. Install the battery cable clips.
9. Install the right rear spark plug wire.

cardiagn.com

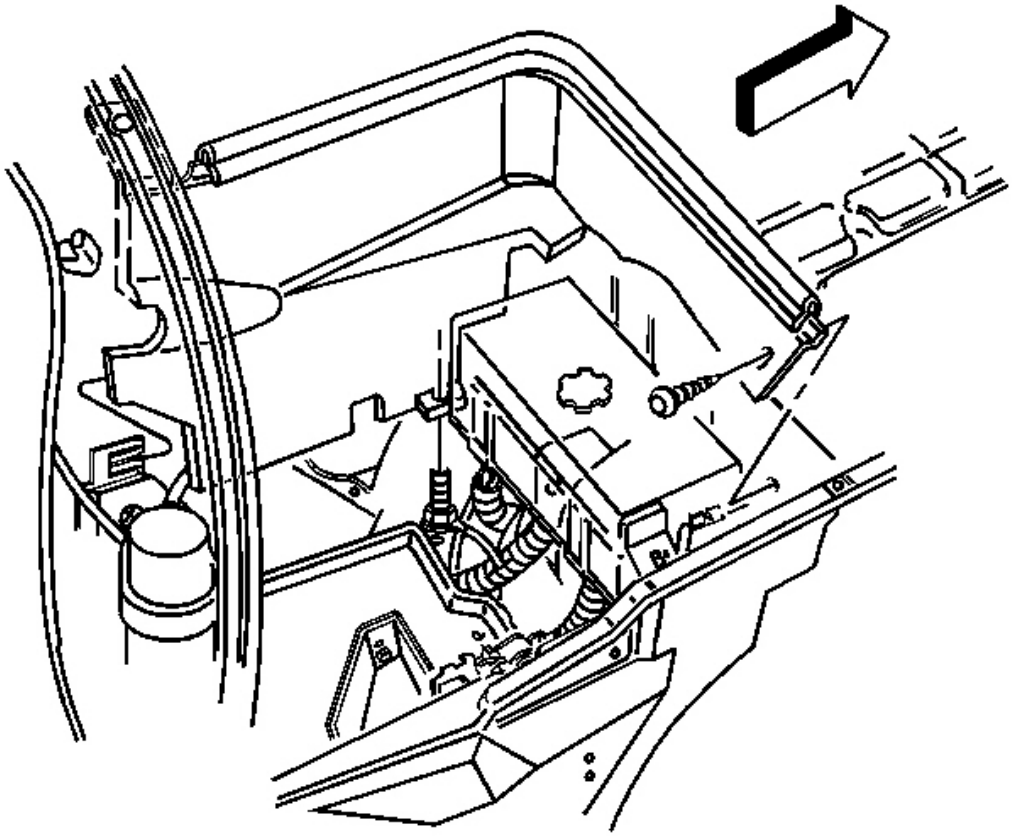

Fig. 21: Battery Heat Shield
Courtesy of GENERAL MOTORS CORP.

IMPORTANT: Ensure that two fingers of the heat shield bracket are on either side of the heat shield, and the shield is inserted into the notch in the insulator.

10. Install the battery heat shield.
11. Install the heat shield retainer at the wheelhouse panel.

cardiagn.com

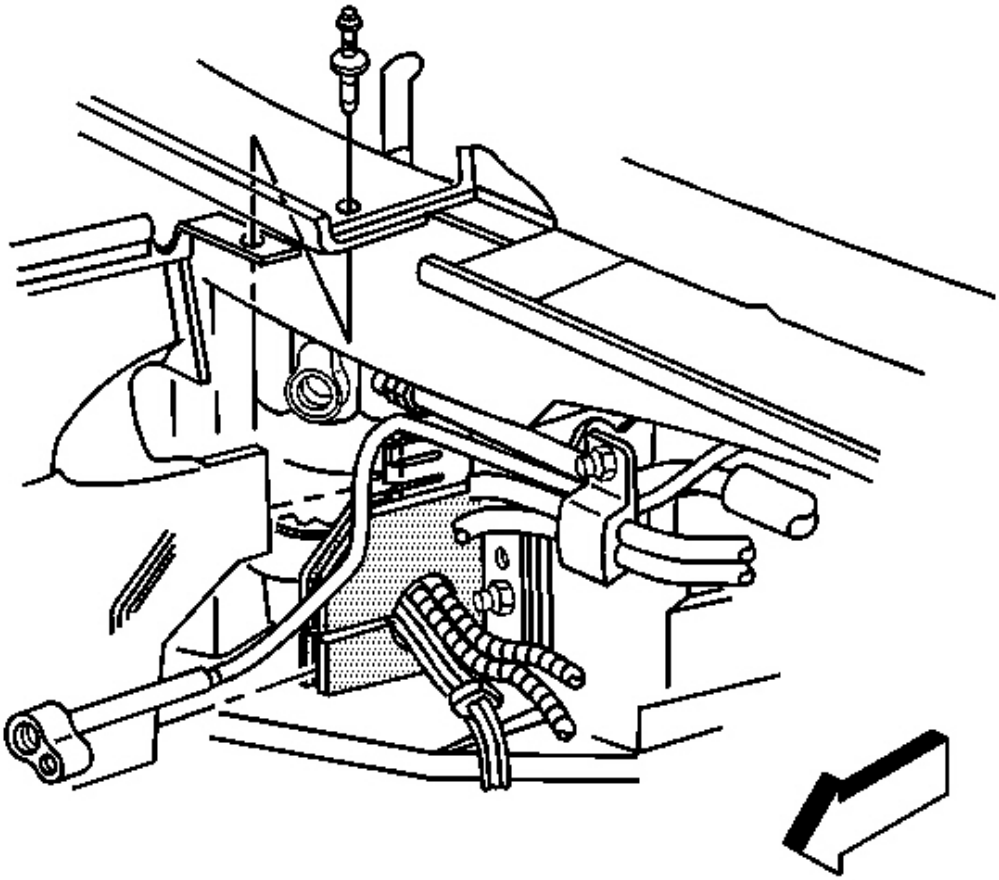

Fig. 22: Upper Plenum Heat Shield Retainer
Courtesy of GENERAL MOTORS CORP.

12. Install the heat shield retainer at the upper plenum.
13. Install the battery tray. Refer to **Battery Tray Replacement** .

BATTERY POSITIVE CABLE REPLACEMENT

Removal Procedure

cardiagn.com

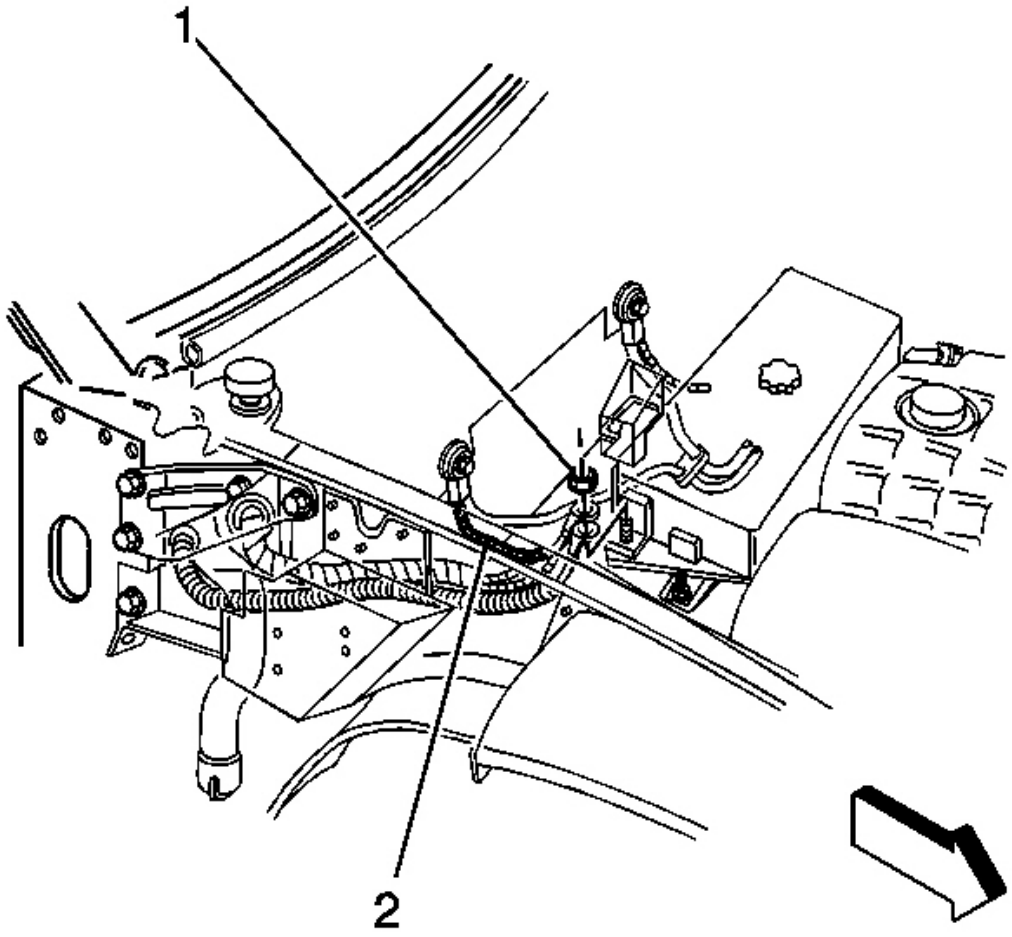

Fig. 23: Fuse/Relay Center Stud & Positive Battery Cable Lead
Courtesy of GENERAL MOTORS CORP.

1. Remove the battery tray. Refer to **Battery Tray Replacement** .
2. Open the stud cover on the fuse/relay center.
3. Remove the positive battery cable nut from the fuse/relay center stud.
4. Remove the positive battery cable lead (2) from the fuse/relay center stud.

cardiagn.com

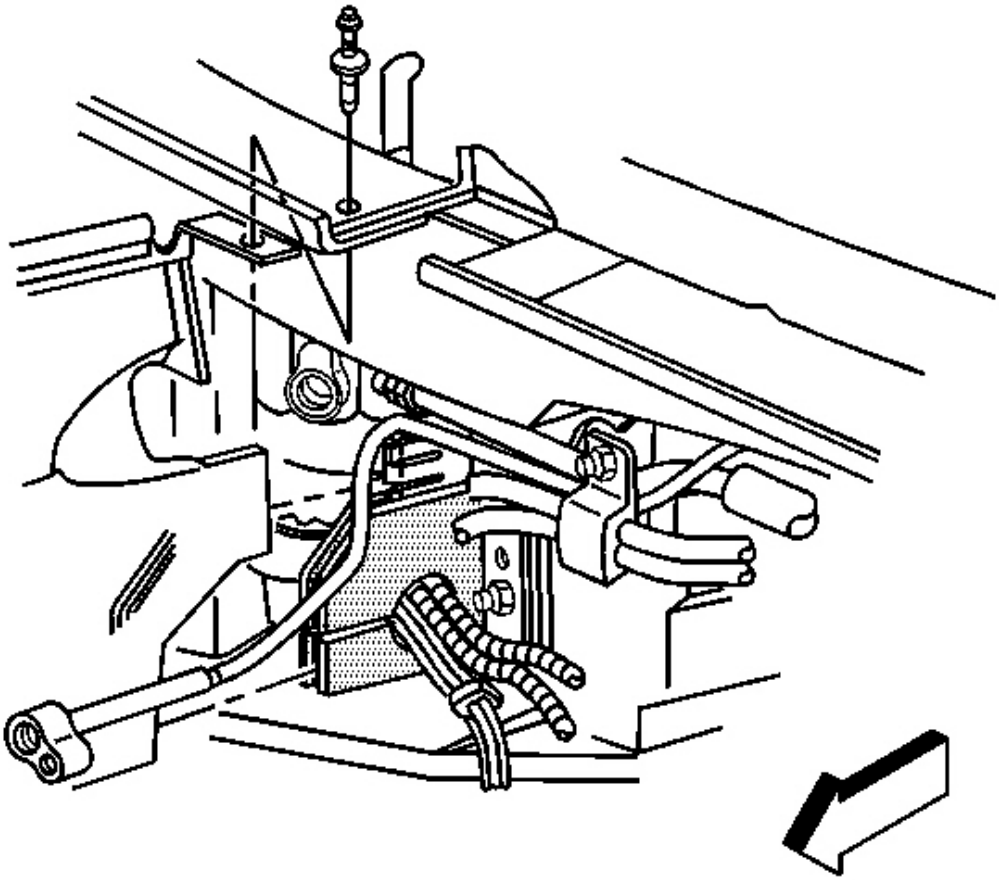

Fig. 24: Upper Plenum Heat Shield Retainer
Courtesy of GENERAL MOTORS CORP.

5. Remove the heat shield retainer at the upper plenum.

cardiagn.com

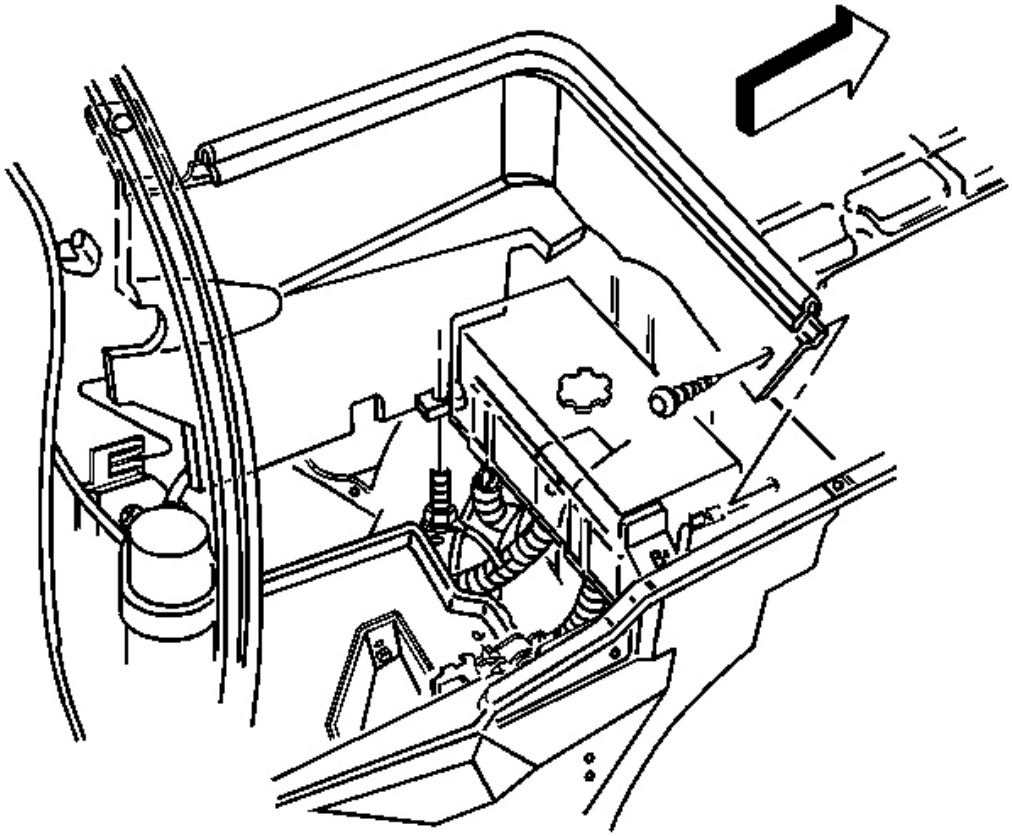

Fig. 25: Battery Heat Shield
Courtesy of GENERAL MOTORS CORP.

6. Remove the battery heat shield retainer and the battery heat shield.
7. Remove the right rear spark plug wire.

cardiagn.com

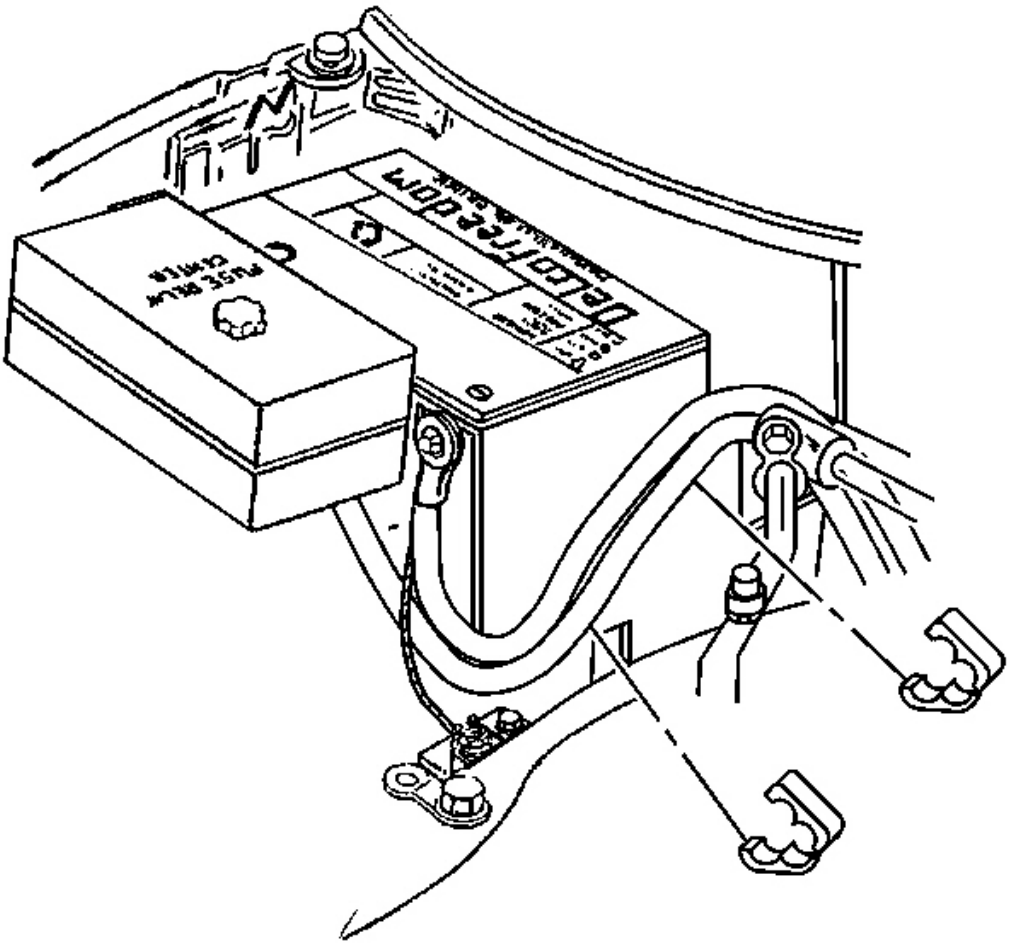

Fig. 26: Battery Cable Clips
Courtesy of GENERAL MOTORS CORP.

8. Remove the battery cable clips.

cardiagn.com

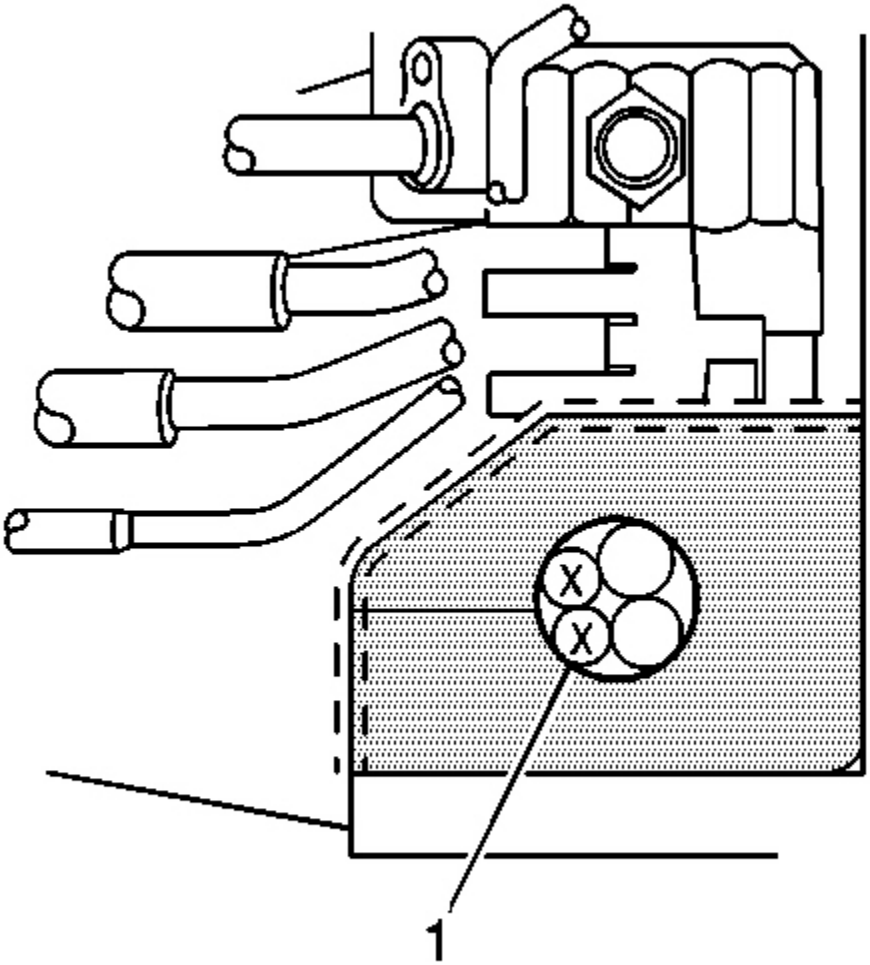

Fig. 27: Locating Battery Cables In Engine Wiring Harness Insulator
Courtesy of GENERAL MOTORS CORP.

9. Remove the battery cables (1) from the engine wiring harness insulator.
10. Raise and suitably support the vehicle. Refer to **Lifting and Jacking the Vehicle** in General Information.

cardiagn.com

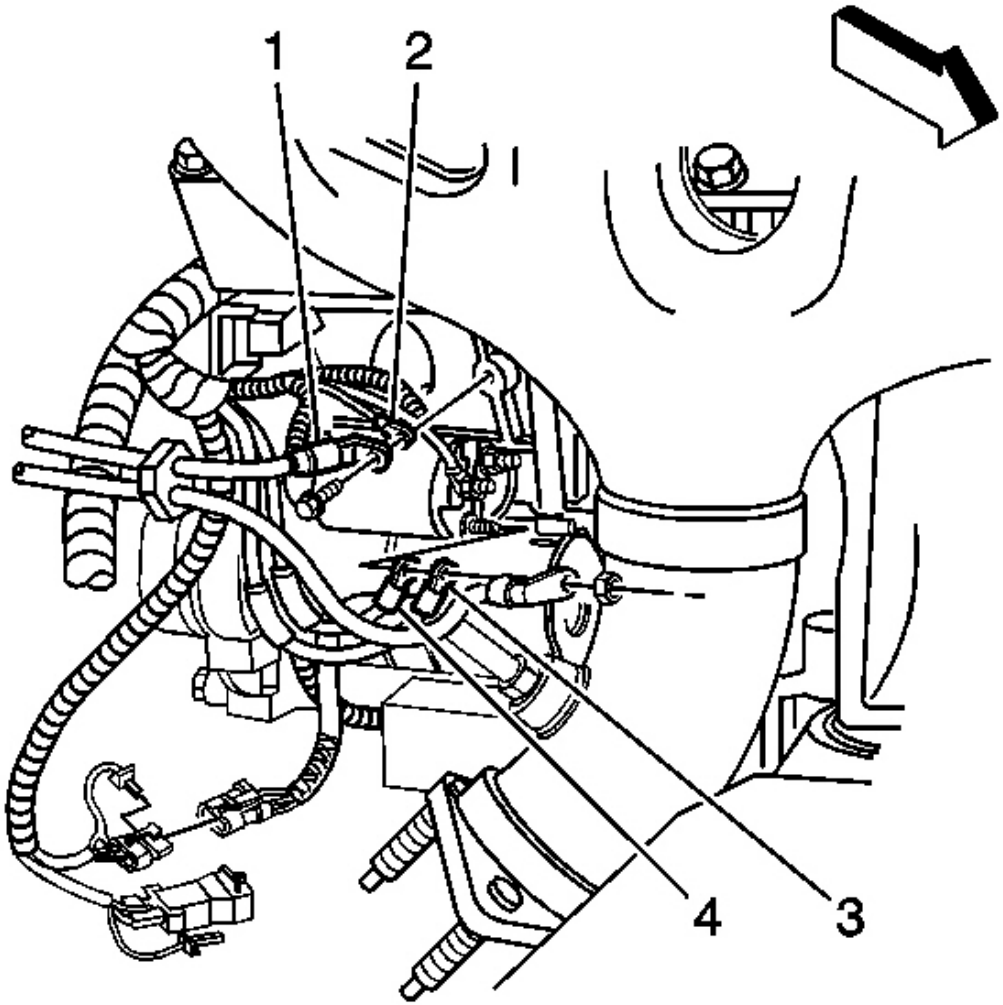

Fig. 28: Negative Battery Cable Terminal Bolt & Terminal
Courtesy of GENERAL MOTORS CORP.

11. Remove the positive battery cable terminal nut and terminals (3, 4) from the starter solenoid.
12. Lower the vehicle.
13. Remove the positive battery cable.

Installation Procedure

cardiagn.com

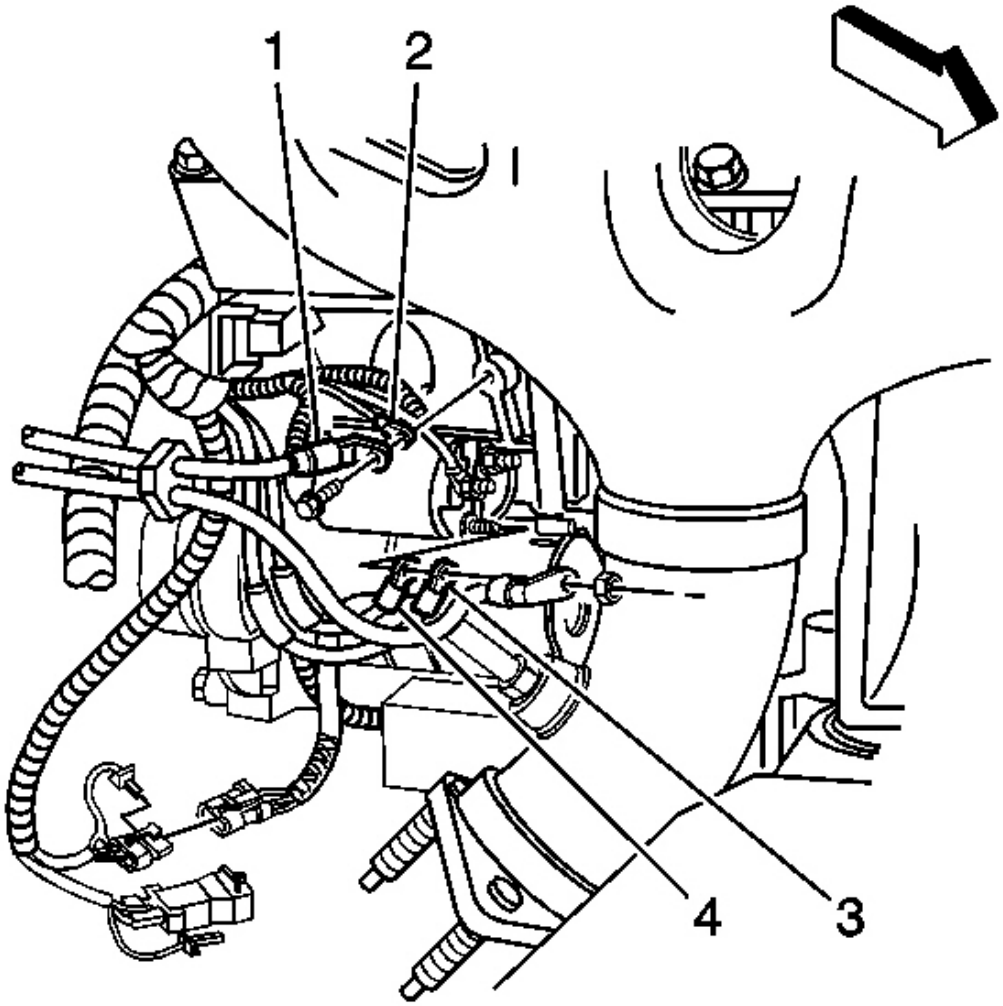

Fig. 29: Negative Battery Cable Terminal Bolt & Terminal
Courtesy of GENERAL MOTORS CORP.

1. Install the positive battery cable.
2. Raise the vehicle.

NOTE: **Refer to Fastener Notice in Cautions and Notices.**

IMPORTANT: **Ensure that the engine harness leads (3, 4) are positioned on the solenoid prior to the positive cable terminal being installed.**

cardiagn.com

3. Install the positive battery cable terminals (3, 4) and nut to the starter solenoid.

   Tighten: Tighten the positive battery cable nut to 8 N.m (71 lb in).

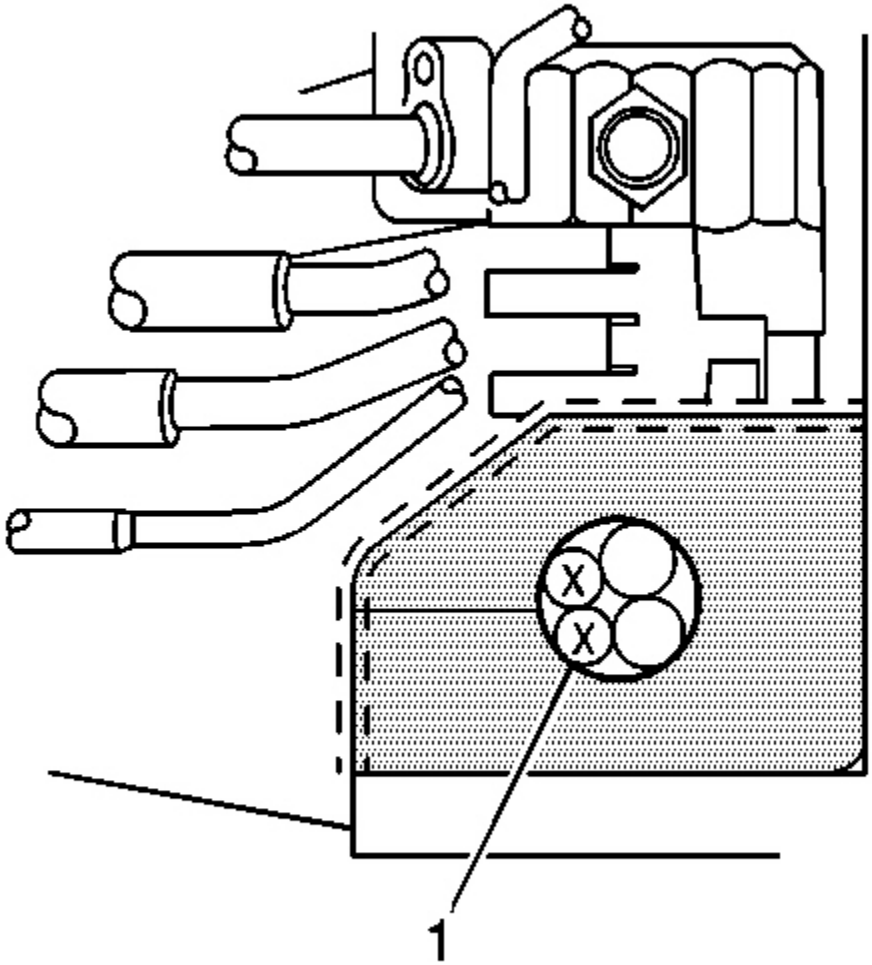

Fig. 30: Locating Battery Cables In Engine Wiring Harness Insulator
Courtesy of GENERAL MOTORS CORP.

4. Install the battery cables (1) to the engine wiring harness insulator.

cardiagn.com

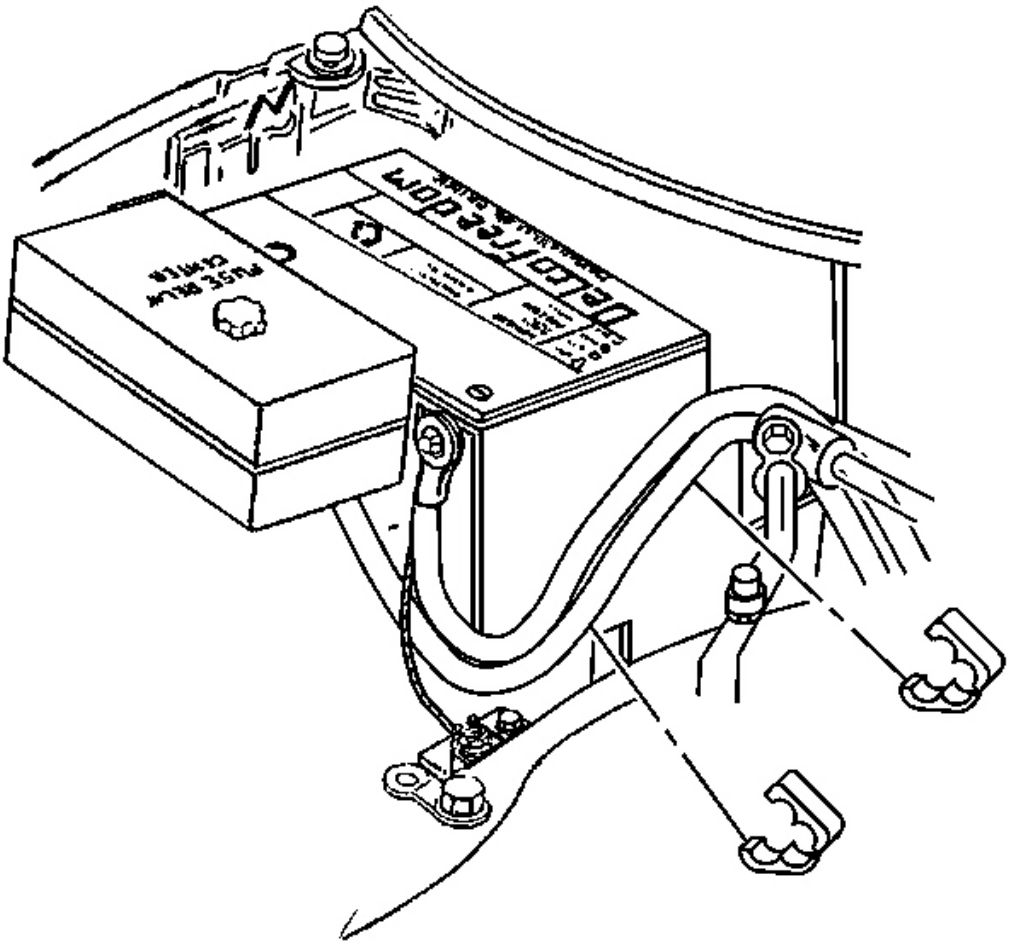

Fig. 31: Battery Cable Clips
Courtesy of GENERAL MOTORS CORP.

5. Install the battery cable clips.
6. Install the right rear spark plug wire.

cardiagn.com

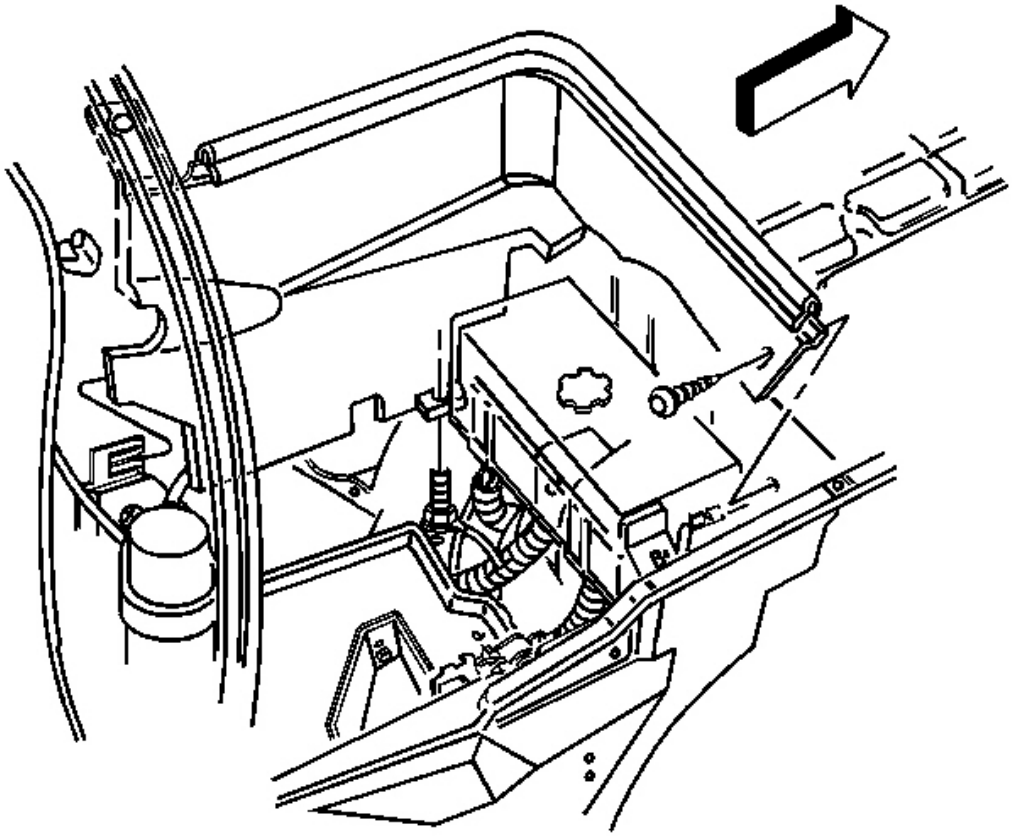

Fig. 32: Battery Heat Shield
Courtesy of GENERAL MOTORS CORP.

IMPORTANT: Ensure that two fingers of the heat shield bracket are on either side of the heat shield, and the shield is inserted into the notch in the insulator.

7. Install the battery heat shield.
8. Install the heat shield retainer at the wheelhouse panel.

cardiagn.com

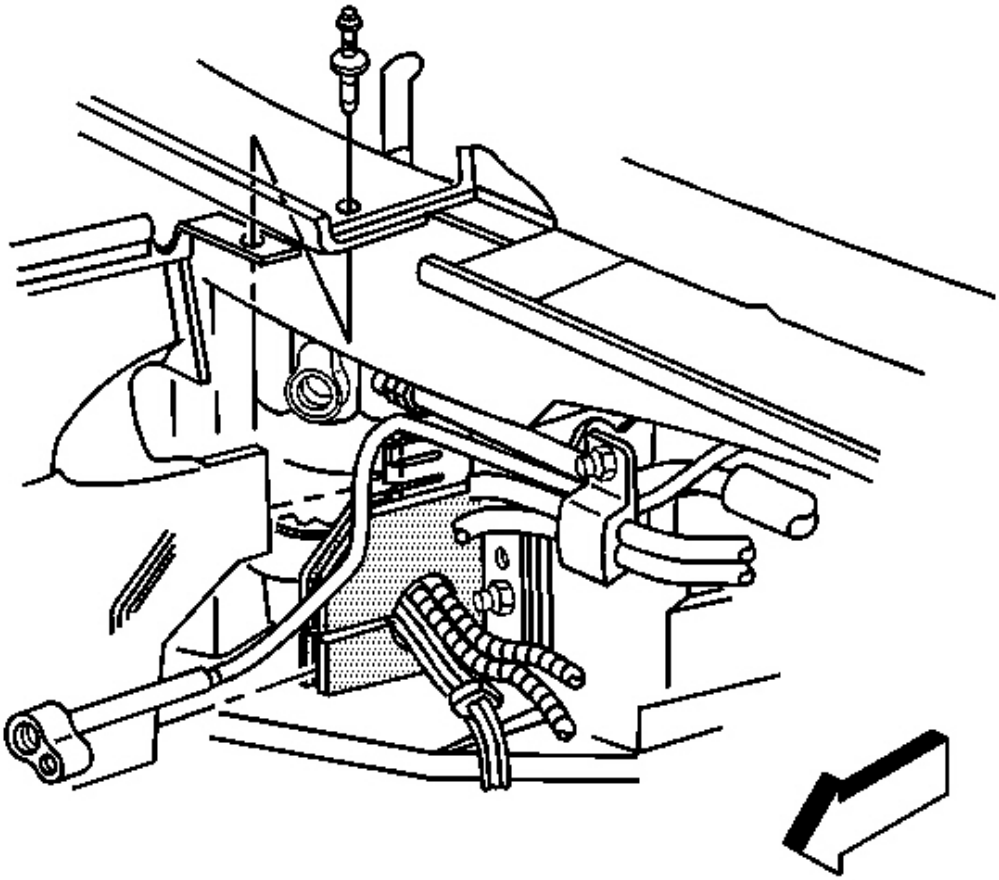

Fig. 33: Upper Plenum Heat Shield Retainer
Courtesy of GENERAL MOTORS CORP.

9. Install the heat shield retainer at the upper plenum.

cardiagn.com

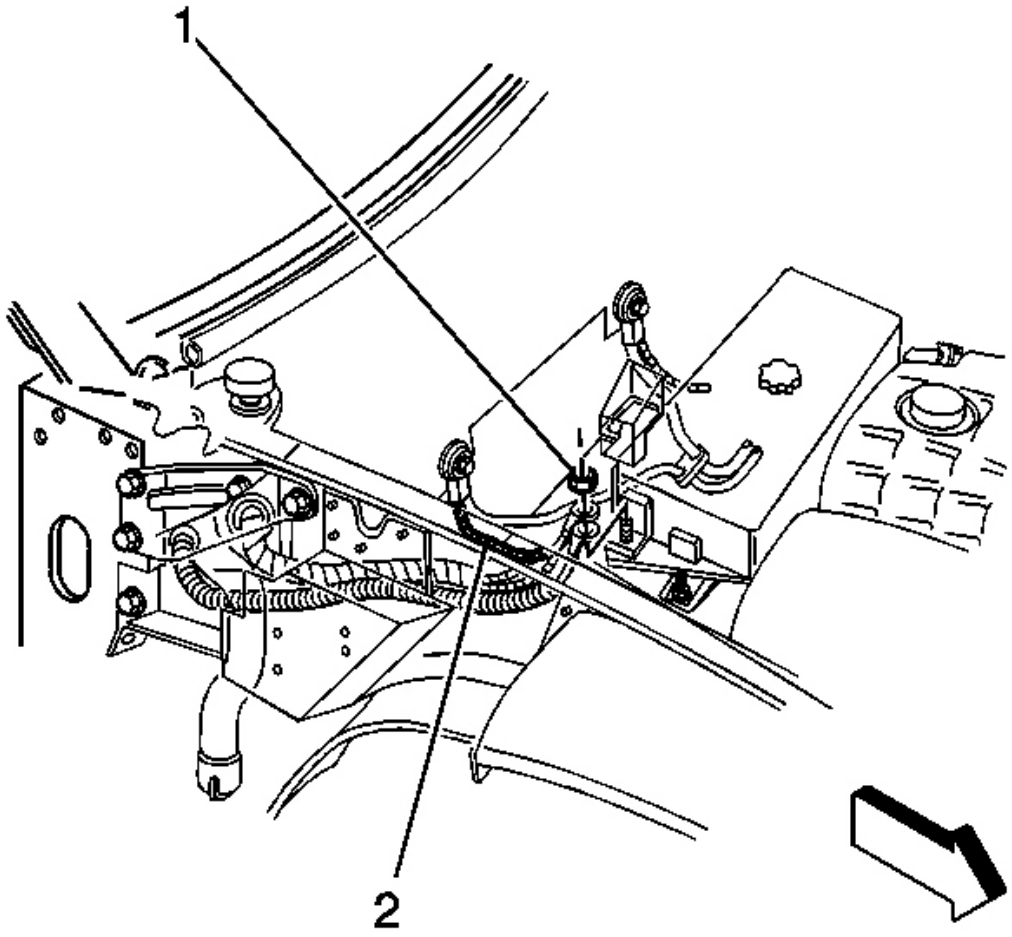

Fig. 34: Fuse/Relay Center Stud & Positive Battery Cable Lead
Courtesy of GENERAL MOTORS CORP.

10. Install the positive battery cable lead (2) to the fuse/relay center stud.
11. Install the positive battery cable nut to the fuse/relay center stud.

    Tighten: Tighten the positive battery cable nut to 10 N.m (89 lb in).

12. Close the stud cover on the fuse/relay center.
13. Install the battery tray. Refer to **Battery Tray Replacement** .

BATTERY POSITIVE FUSE BLOCK CABLE REPLACEMENT

cardiagn.com

Removal Procedure

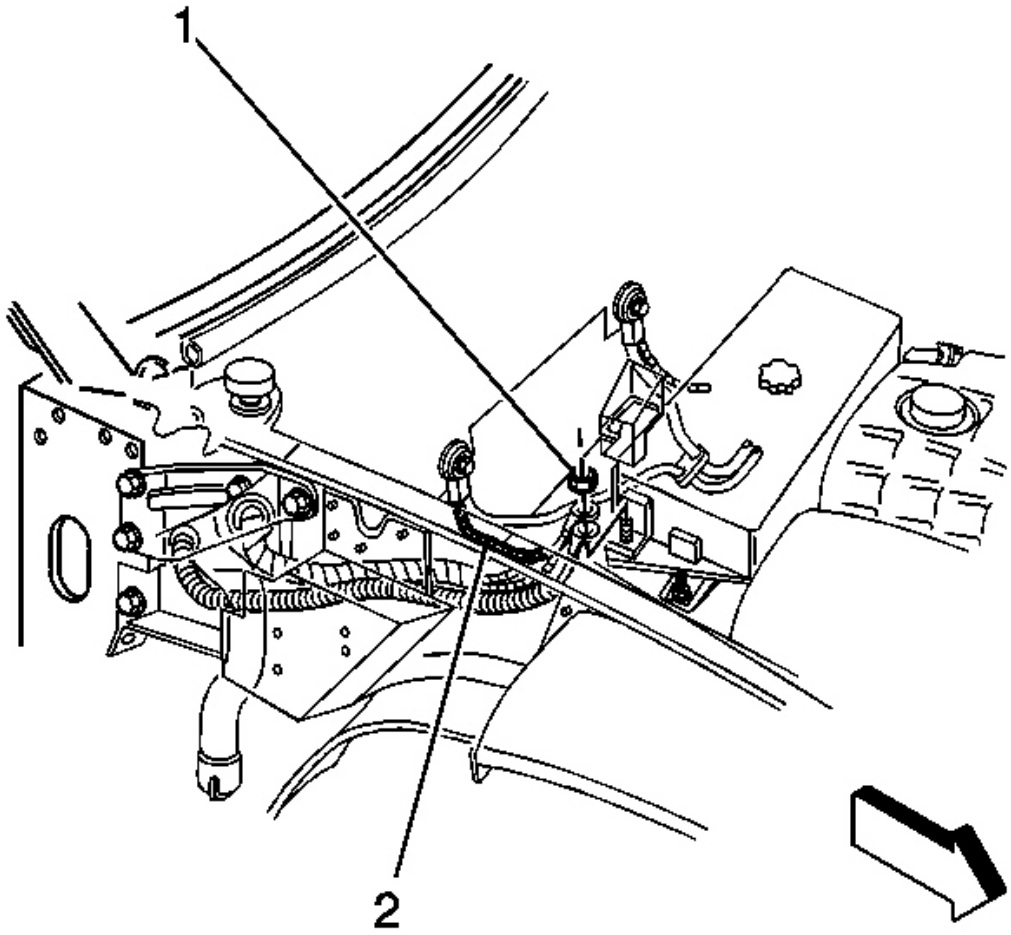

Fig. 35: Fuse/Relay Center Stud & Positive Battery Cable Lead
Courtesy of GENERAL MOTORS CORP.

1. Remove the battery tray. Refer to **Battery Tray Replacement** .
2. Open the stud cover on the fuse/relay center cover.
3. Remove the positive battery cable nut (1).
4. Remove the positive battery cable lead from the stud.
5. Remove the battery positive fuse block cable from the stud.

cardiagn.com

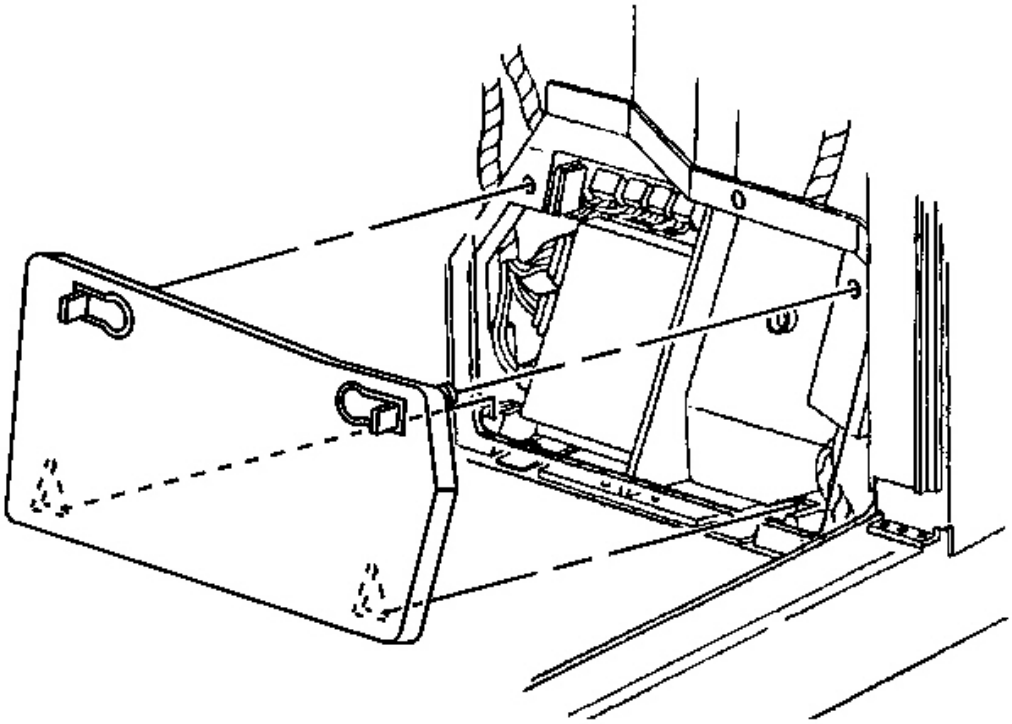

Fig. 36: Kick-Up Panel Latches & Multi-Use Relay Bracket
Courtesy of GENERAL MOTORS CORP.

6. Disengage the kick-up panel latches inside the vehicle.
7. Open the panel.
8. Lift the panels bottom edge up and out of the slots in the multi-use relay bracket.
9. Remove the kick-up panel.

cardiagn.com

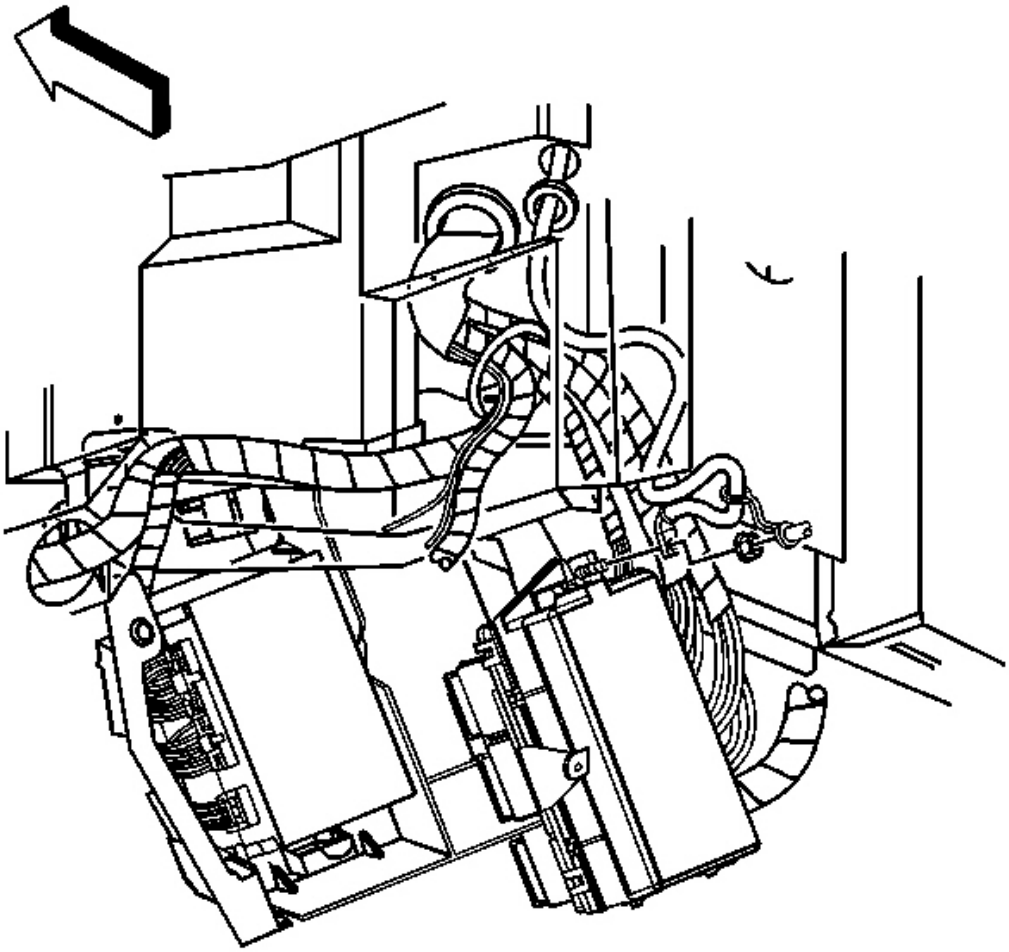

Fig. 37: I/P Wiring Harness Junction Block & Nut
Courtesy of GENERAL MOTORS CORP.

10. Unsnap the junction block from the bracket.
11. Reposition the junction block nut boot.
12. Remove the instrument panel (I/P) wiring harness junction block nut.
13. Remove the battery positive fuse block cable from the stud.
14. Route the fuse block cable through the front of dash and remove the cable.

Installation Procedure

cardiagn.com

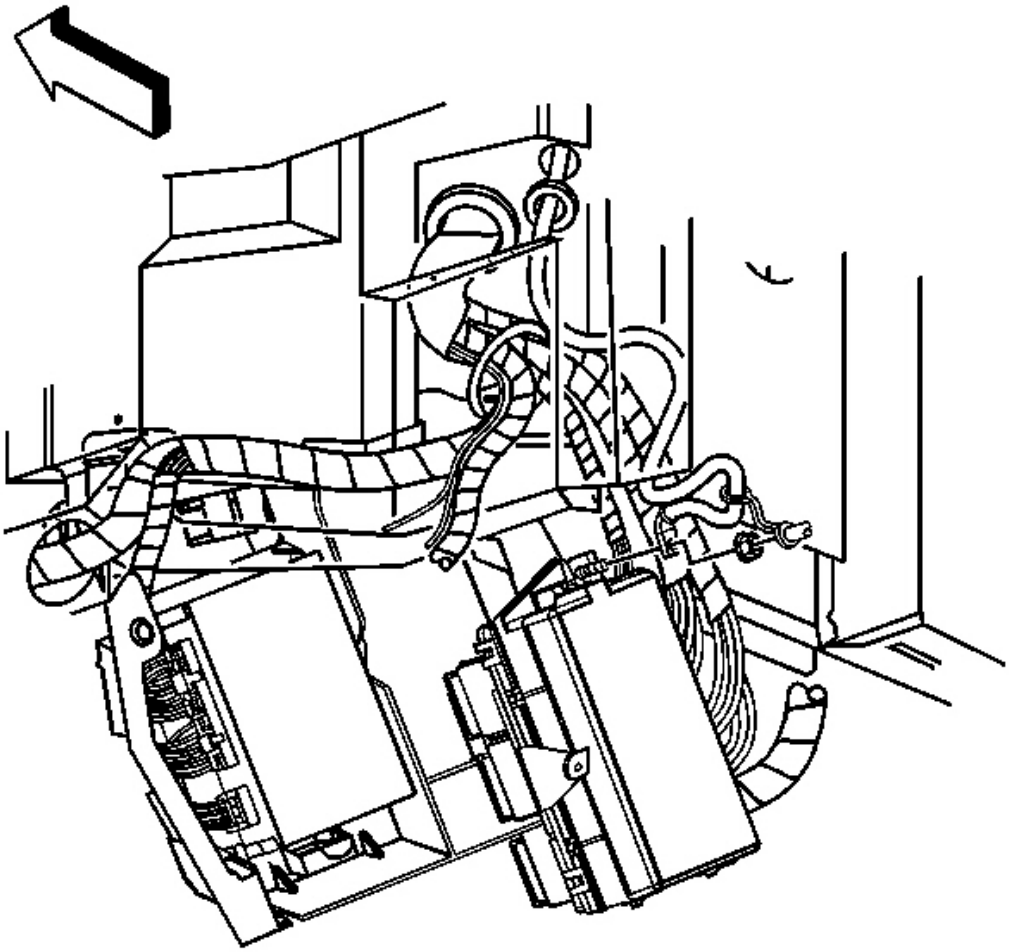

Fig. 38: I/P Wiring Harness Junction Block & Nut
Courtesy of GENERAL MOTORS CORP.

1. Install and route the fuse block cable through the front of dash.
2. Install the battery positive fuse block cable to the stud.

NOTE: **Refer to Fastener Notice in Cautions and Notices.**

3. Install the I/P wiring harness junction block nut.

   Tighten: Tighten the I/P wiring harness junction block nut to 10 N.m (89 lb in).

4. Reposition the junction block nut boot.

cardiagn.com

5. Snap the junction block to the bracket.

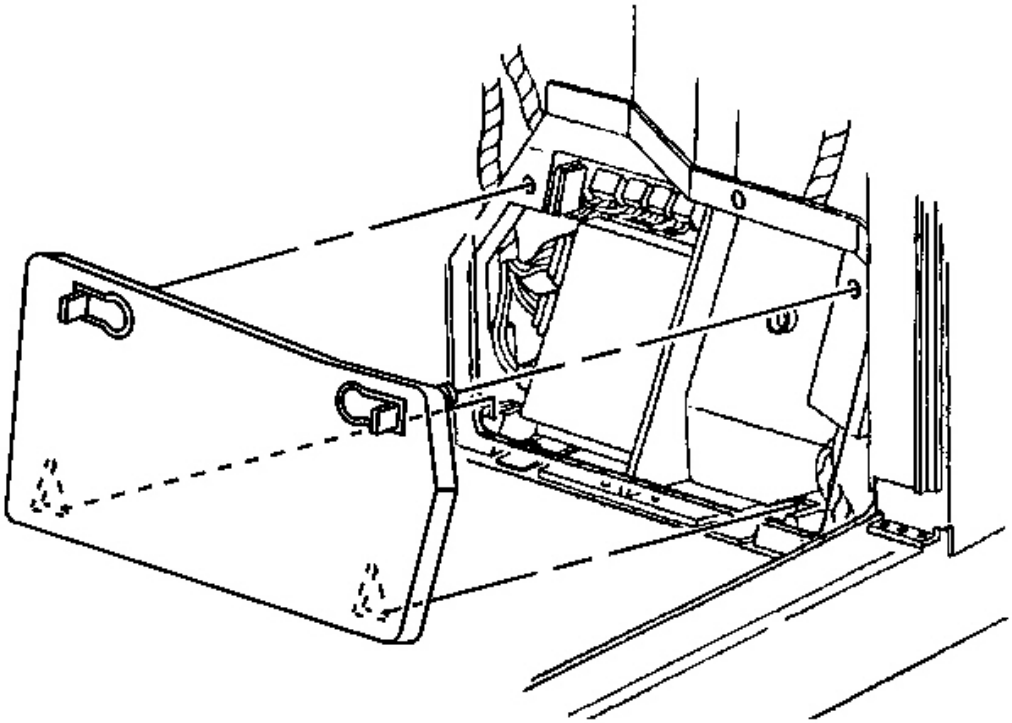

Fig. 39: Kick-Up Panel Latches & Multi-Use Relay Bracket
Courtesy of GENERAL MOTORS CORP.

6. Ensure the latches on the kick-up panel are open.
7. Insert the kick-up panel lower tabs into the slots in the bracket.
8. Close the panel and push the latches into the holes.

cardiagn.com

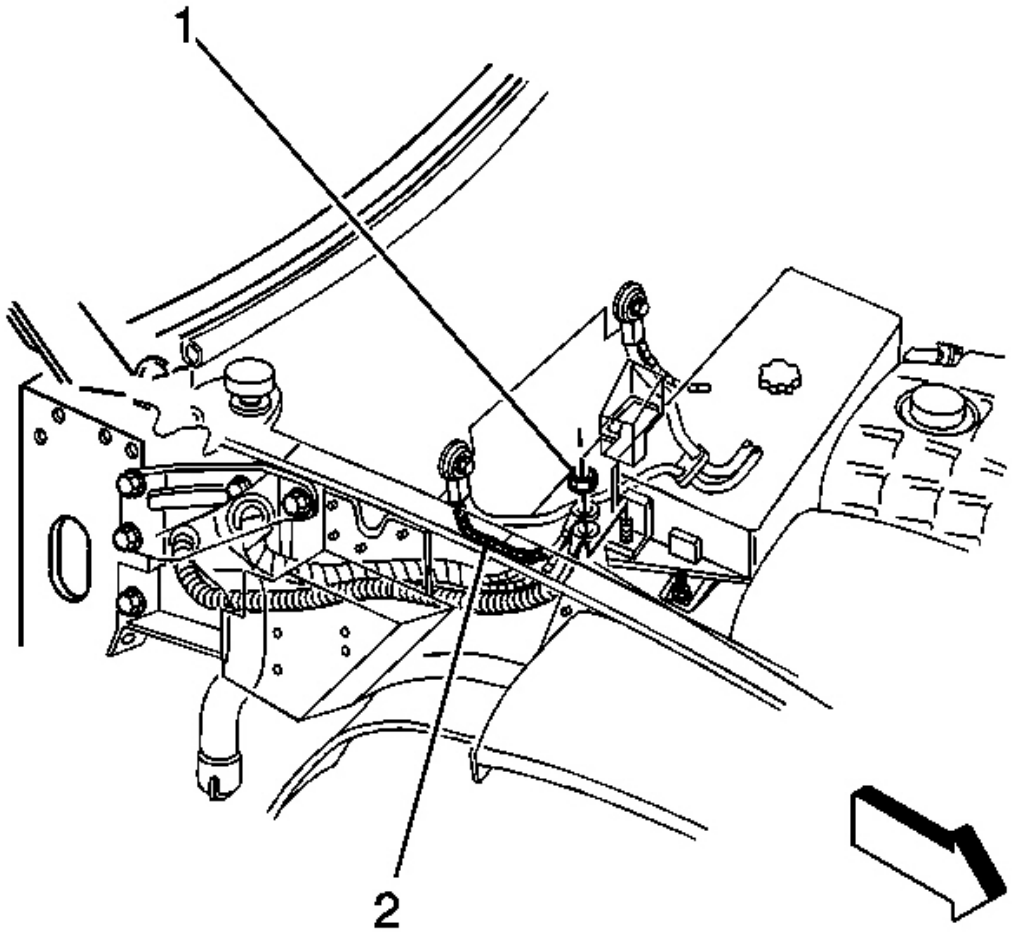

Fig. 40: Fuse/Relay Center Stud & Positive Battery Cable Lead
Courtesy of GENERAL MOTORS CORP.

9. Install the battery positive fuse block cable to the stud.
10. Install the positive battery cable lead to the stud.
11. Install the positive battery cable nut (1).

    Tighten: Tighten the positive battery cable nut to 10 N.m (89 lb in).

12. Close the stud cover on the fuse/relay center cover.
13. Install the battery tray. Refer to **Battery Tray Replacement** .

BATTERY REPLACEMENT

cardiagn.com

Removal Procedure

CAUTION: Refer to Battery Disconnect Caution in Cautions and Notices.

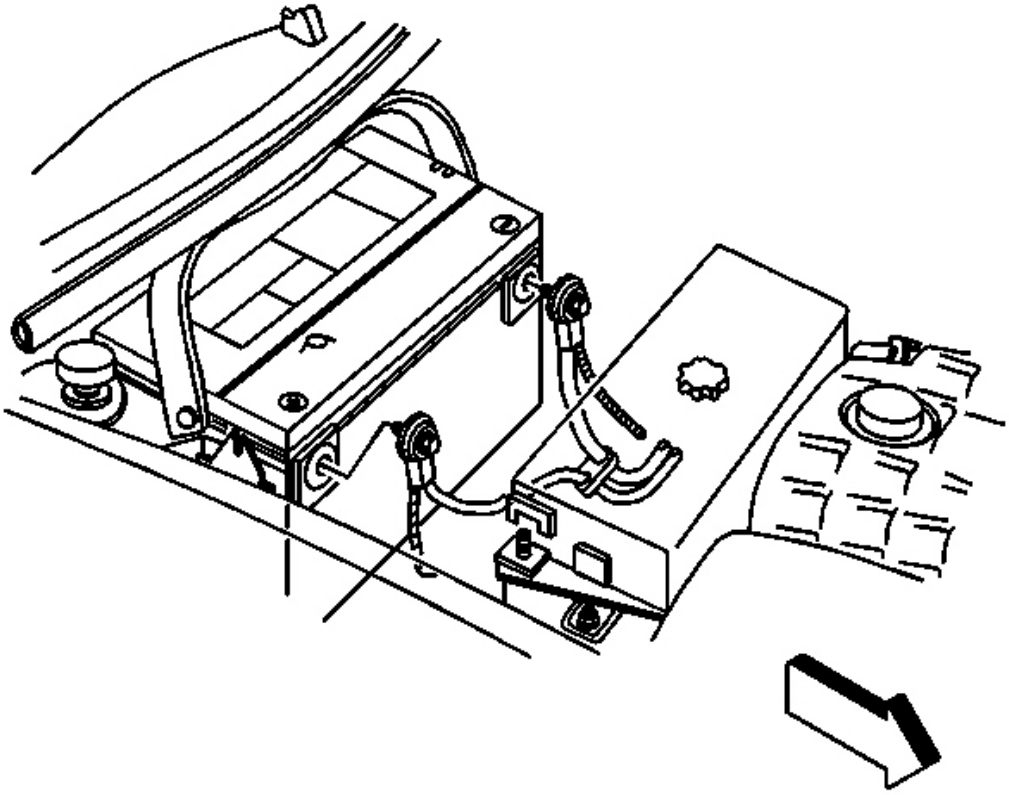

Fig. 41: Positive & Negative Battery Cable
Courtesy of GENERAL MOTORS CORP.

1. Disconnect the negative battery cable. Refer to **Battery Negative Cable Disconnect/Connect Procedure** .
2. Disconnect the positive battery cable.

cardiagn.com

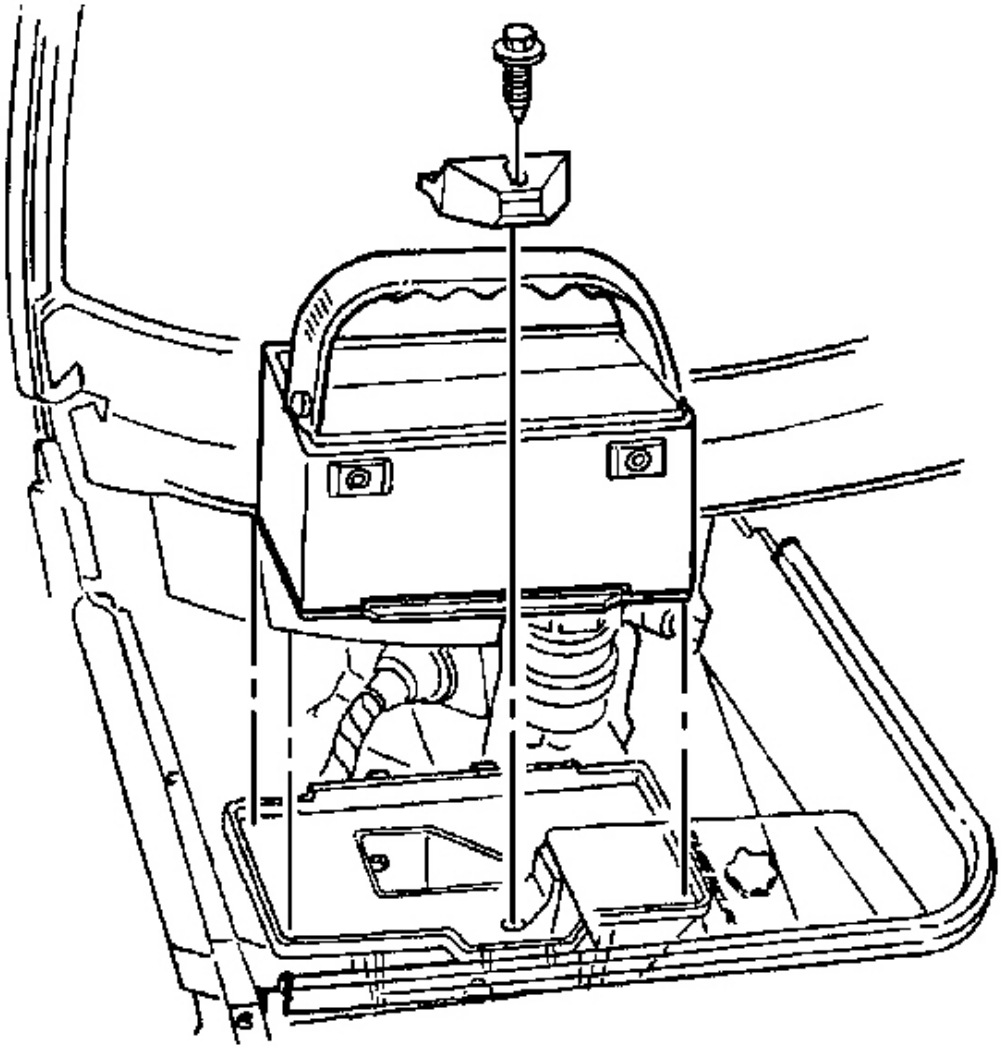

Fig. 42: Battery Hold Down Retainer Bolt & Retainer
Courtesy of GENERAL MOTORS CORP.

3. Remove the battery hold down retainer bolt and retainer.
4. Remove the battery.

Installation Procedure

cardiagn.com

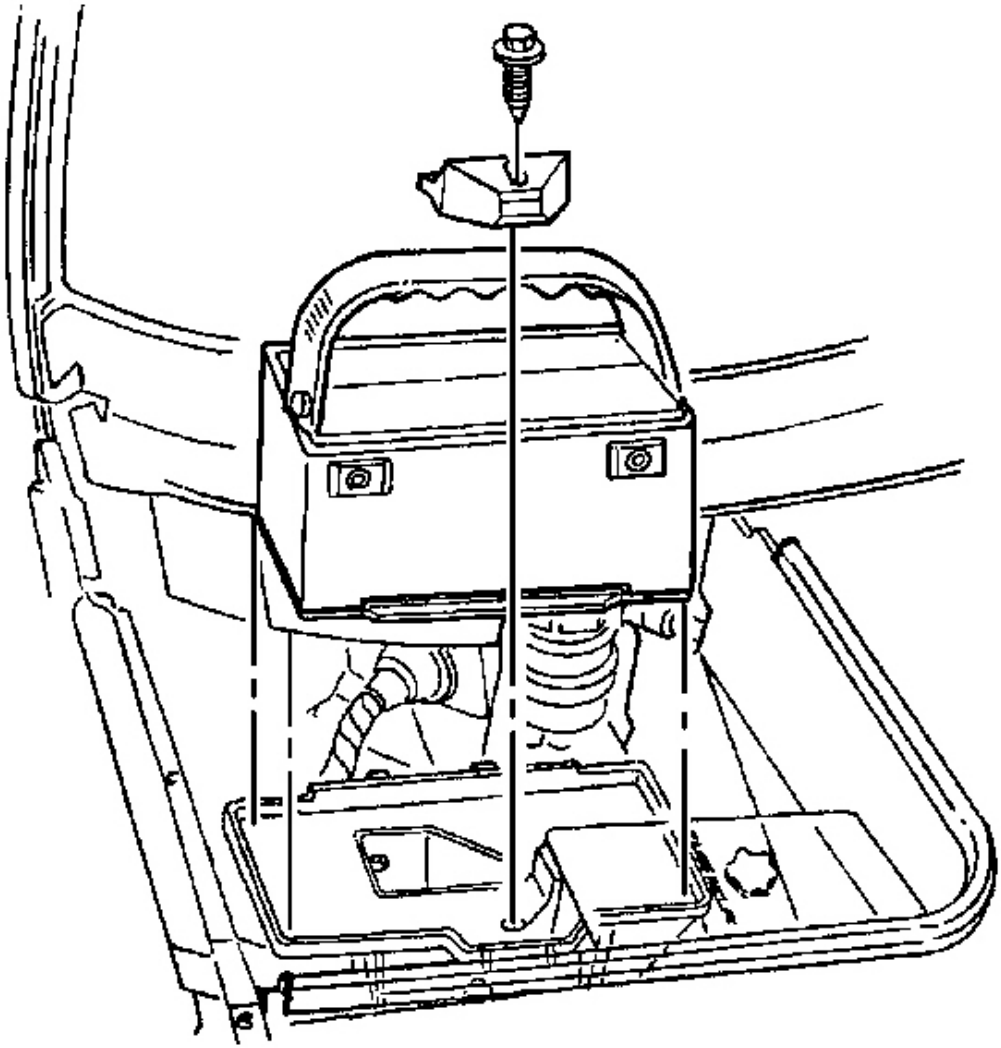

Fig. 43: Battery Hold Down Retainer Bolt & Retainer
Courtesy of GENERAL MOTORS CORP.

NOTE: Refer to Fastener Notice in Cautions and Notices.

1. Install the battery.
2. Install the battery hold down retainer and bolt.

Tighten: Tighten the battery hold down retainer bolt to 18 N.m (13 lb ft).

cardiagn.com

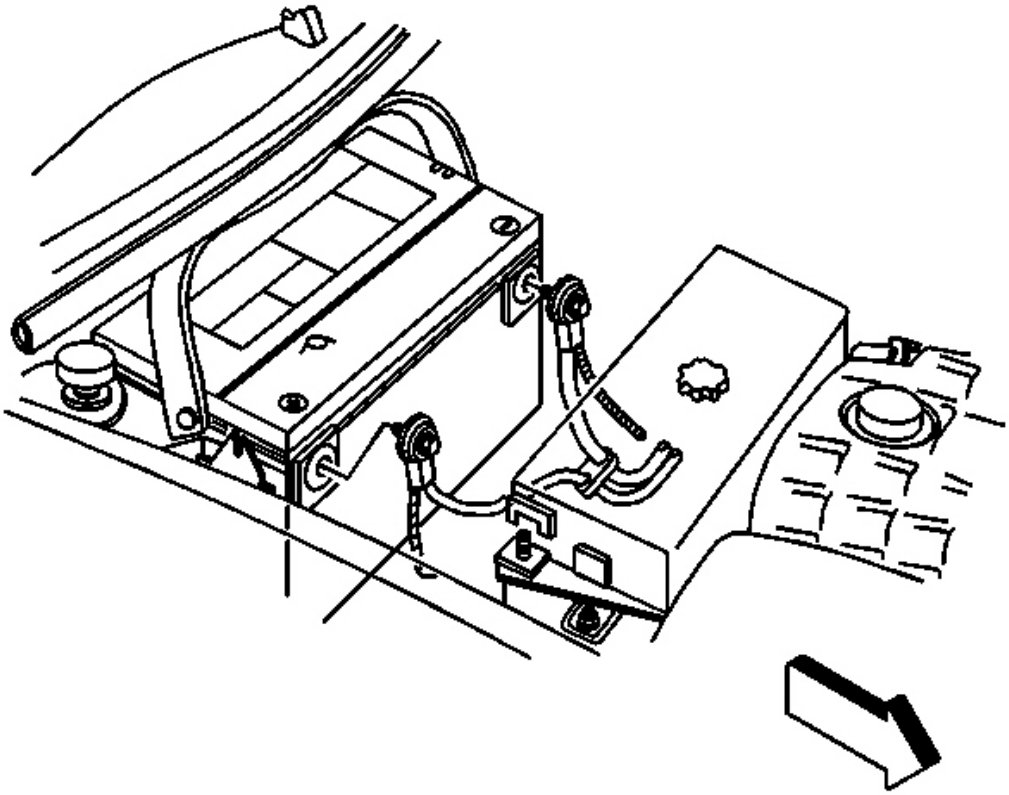

Fig. 44: Positive & Negative Battery Cable
Courtesy of GENERAL MOTORS CORP.

3. Connect the positive battery cable.

   Tighten: Tighten the positive battery cable bolt to 15 N.m (11 lb ft).

4. Connect the negative battery cable. Refer to **Battery Negative Cable Disconnect/Connect Procedure** .

BATTERY TRAY REPLACEMENT

Removal Procedure

cardiagn.com

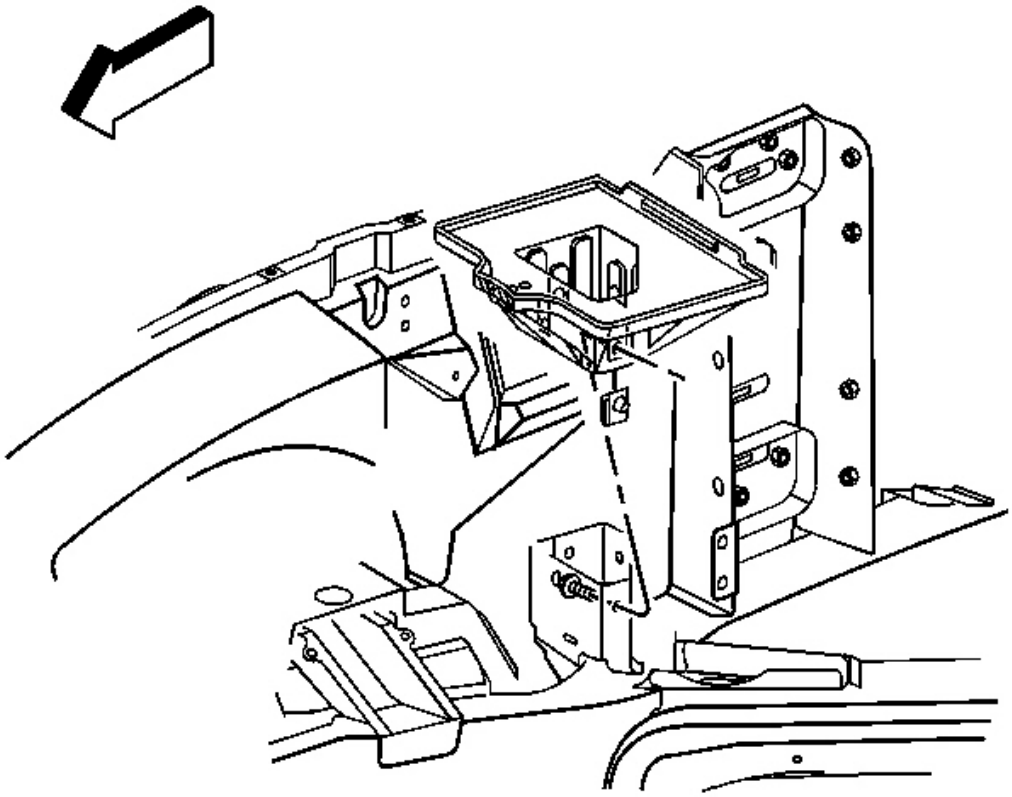

Fig. 45: Battery Tray Bolts
Courtesy of GENERAL MOTORS CORP.

1. Remove the battery. Refer to **Battery Replacement** .
2. Remove the battery tray bolts.
3. Remove the battery tray.

Installation Procedure

cardiagn.com

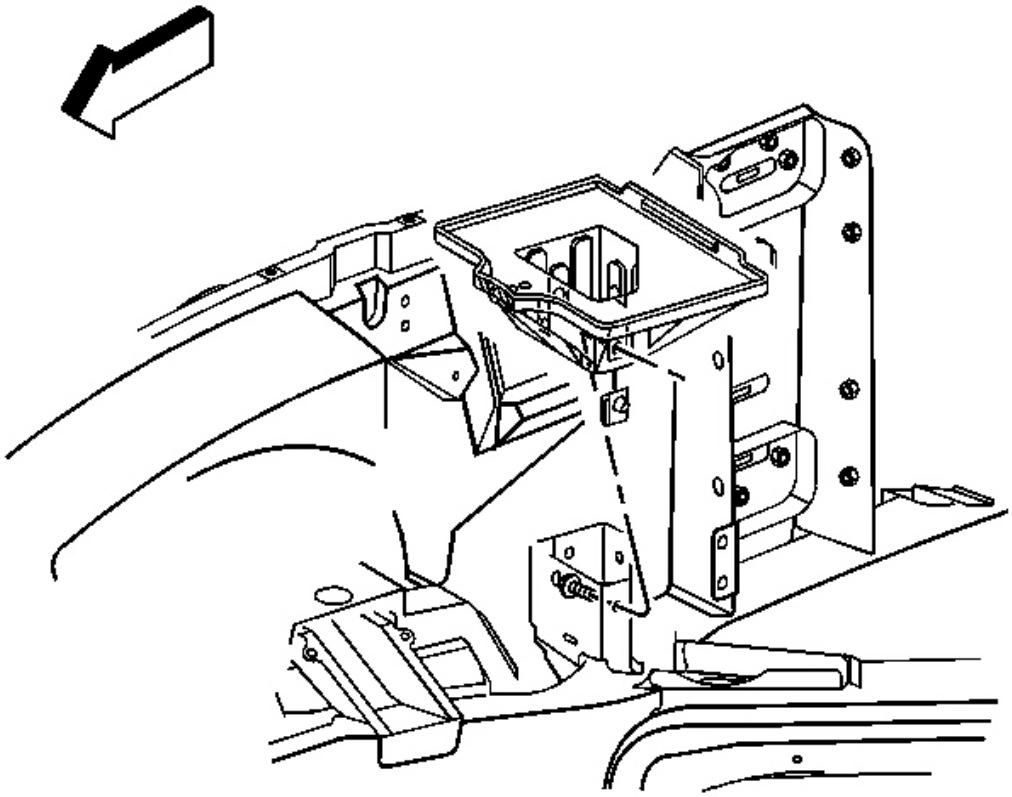

Fig. 46: Battery Tray Bolts
Courtesy of GENERAL MOTORS CORP.

NOTE: Refer to Fastener Notice in Cautions and Notices.

1. Install the battery tray.
2. Install the battery tray bolts.

   Tighten: Tighten the battery tray bolts to 12 N.m (106 lb in).

3. Install the battery. Refer to **Battery Replacement** .

BATTERY HEAT SHIELD REPLACEMENT

Removal Procedure

cardiagn.com

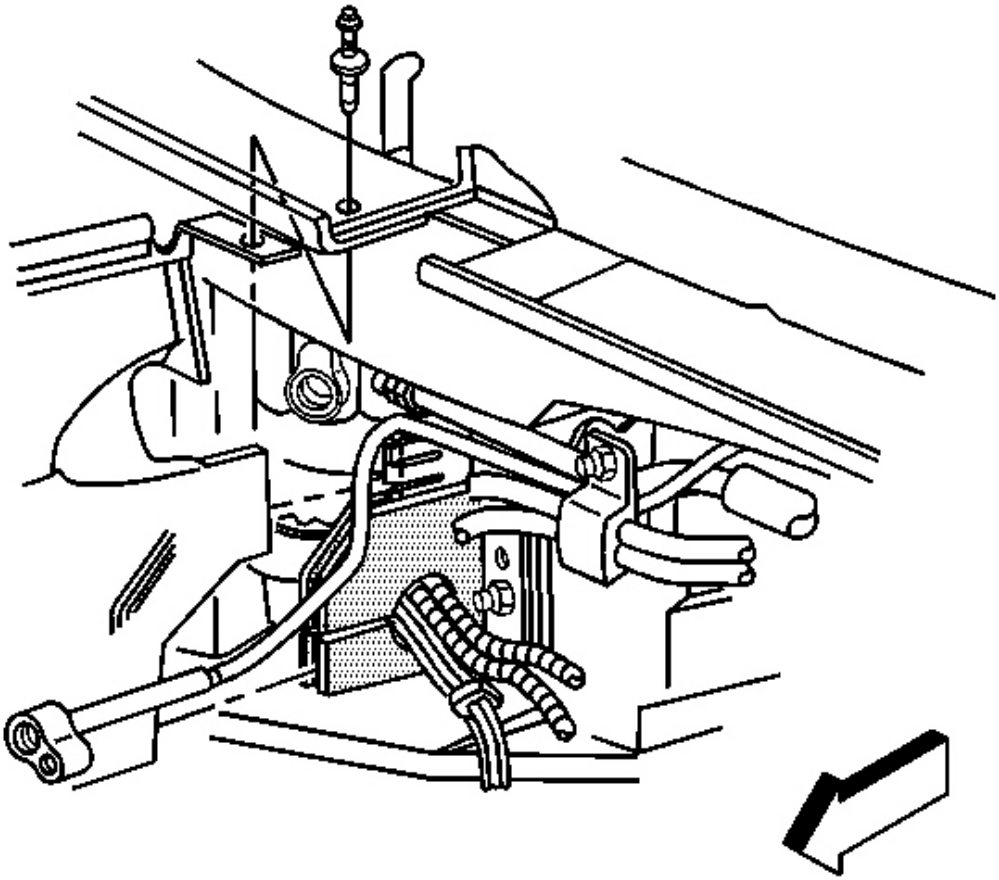

Fig. 47: Upper Plenum Heat Shield Retainer
Courtesy of GENERAL MOTORS CORP.

1. Remove the push-in retainer attaching the air inlet screen and battery heat shield to the plenum panel.

cardiagn.com

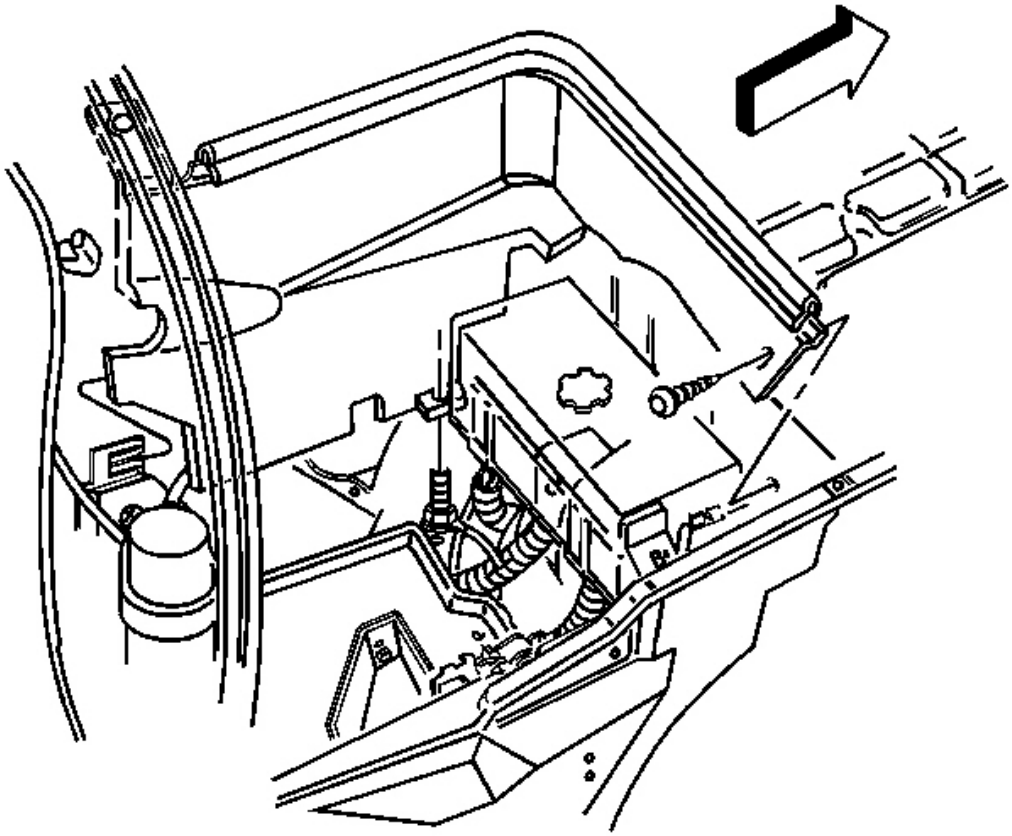

Fig. 48: Battery Heat Shield
Courtesy of GENERAL MOTORS CORP.

2. Remove the push-in retainer attaching the battery heat shield to the wheelhouse panel.
3. Lift the battery heat shield from the ground stud and remove the shield.

Installation Procedure

cardiagn.com

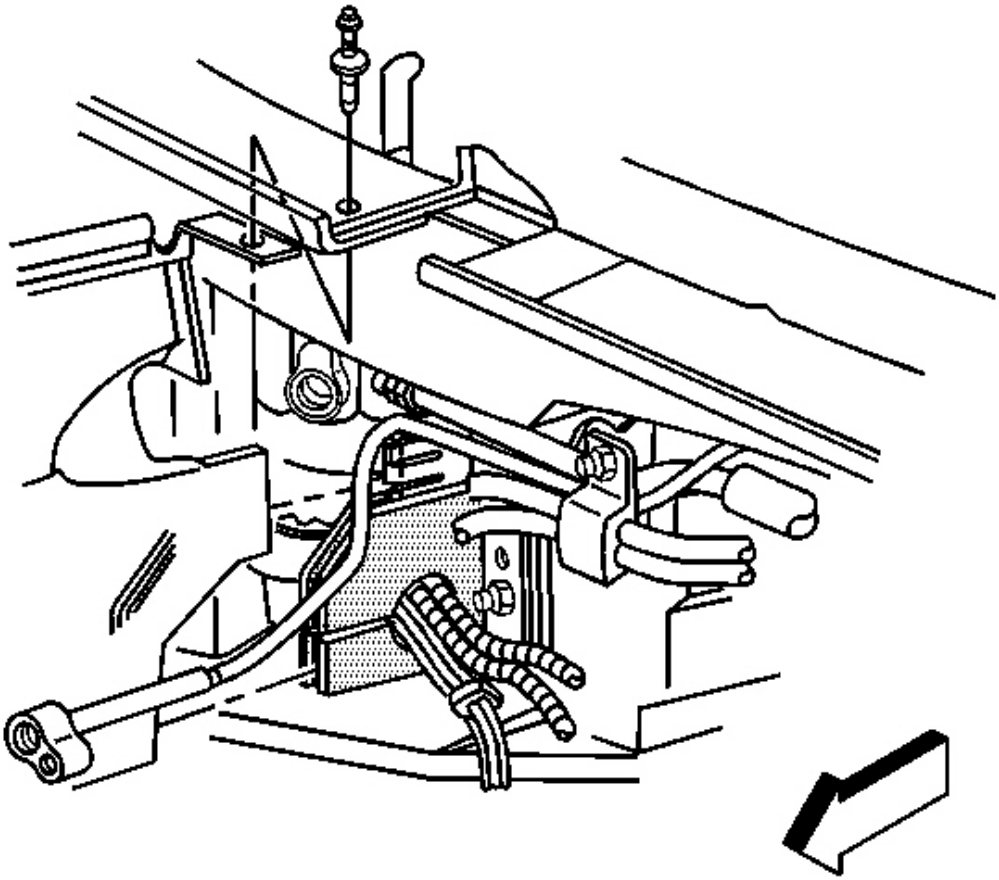

Fig. 49: Upper Plenum Heat Shield Retainer
Courtesy of GENERAL MOTORS CORP.

1. Position the heat shield with the rearward edge between the retention fingers.
2. Position the shield onto the ground stud.
3. Install the push-in retainer attaching the heat shield to the wheelhouse panel.

cardiagn.com

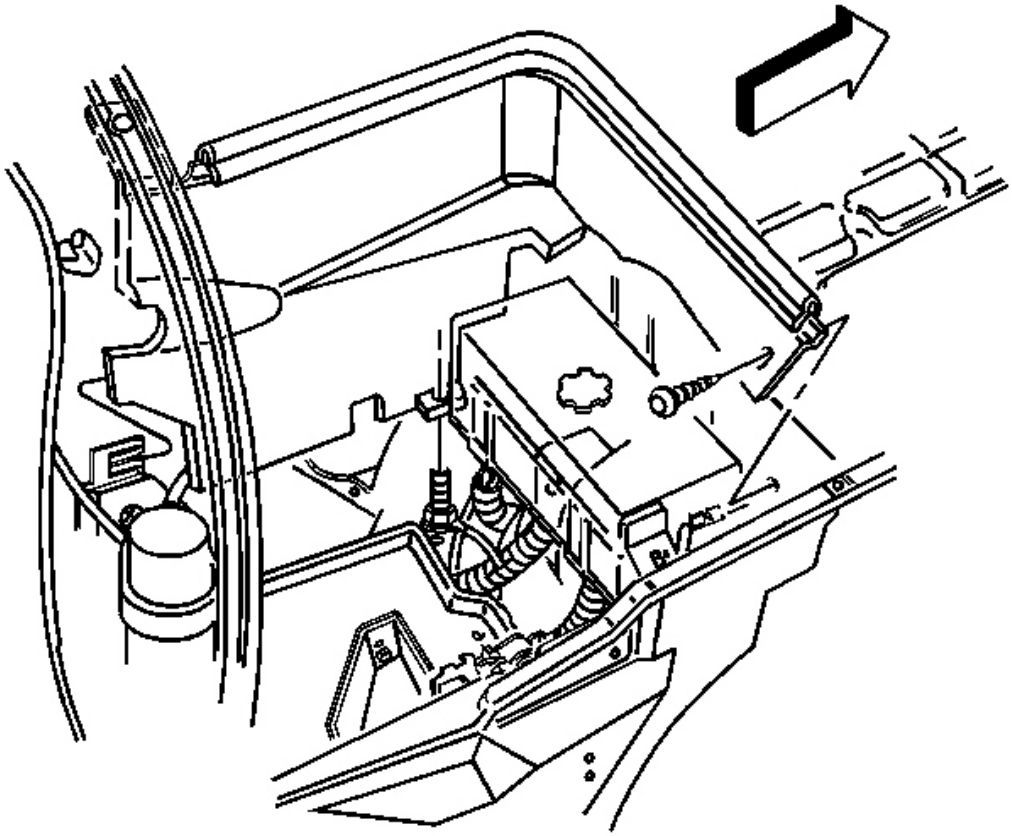

Fig. 50: Battery Heat Shield
Courtesy of GENERAL MOTORS CORP.

4. Install the push-in retainer attaching the air inlet screen and the battery heat shield to the plenum panel.

GROUND STRAP REPLACEMENT

Removal Procedure

cardiagn.com

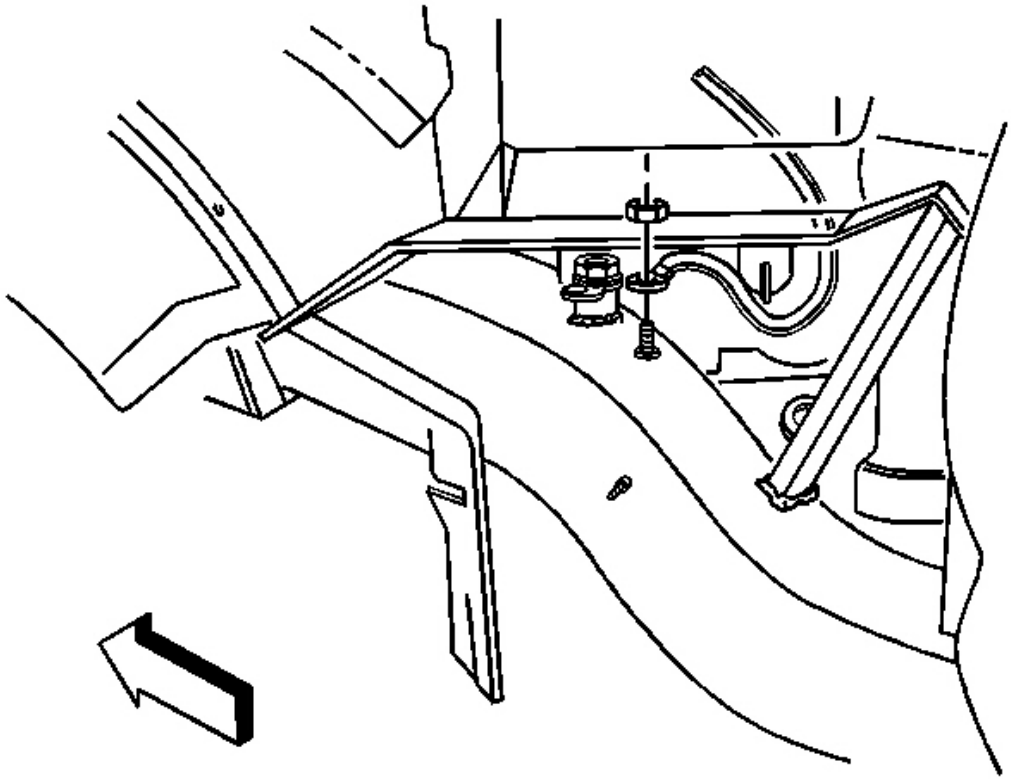

Fig. 51: Ground Strap Terminal At Frame Stud
Courtesy of GENERAL MOTORS CORP.

1. Remove the ground strap nut and terminal from the stud on the frame.
2. Raise and suitably support the vehicle. Refer to **Lifting and Jacking the Vehicle** in General Information.

cardiagn.com

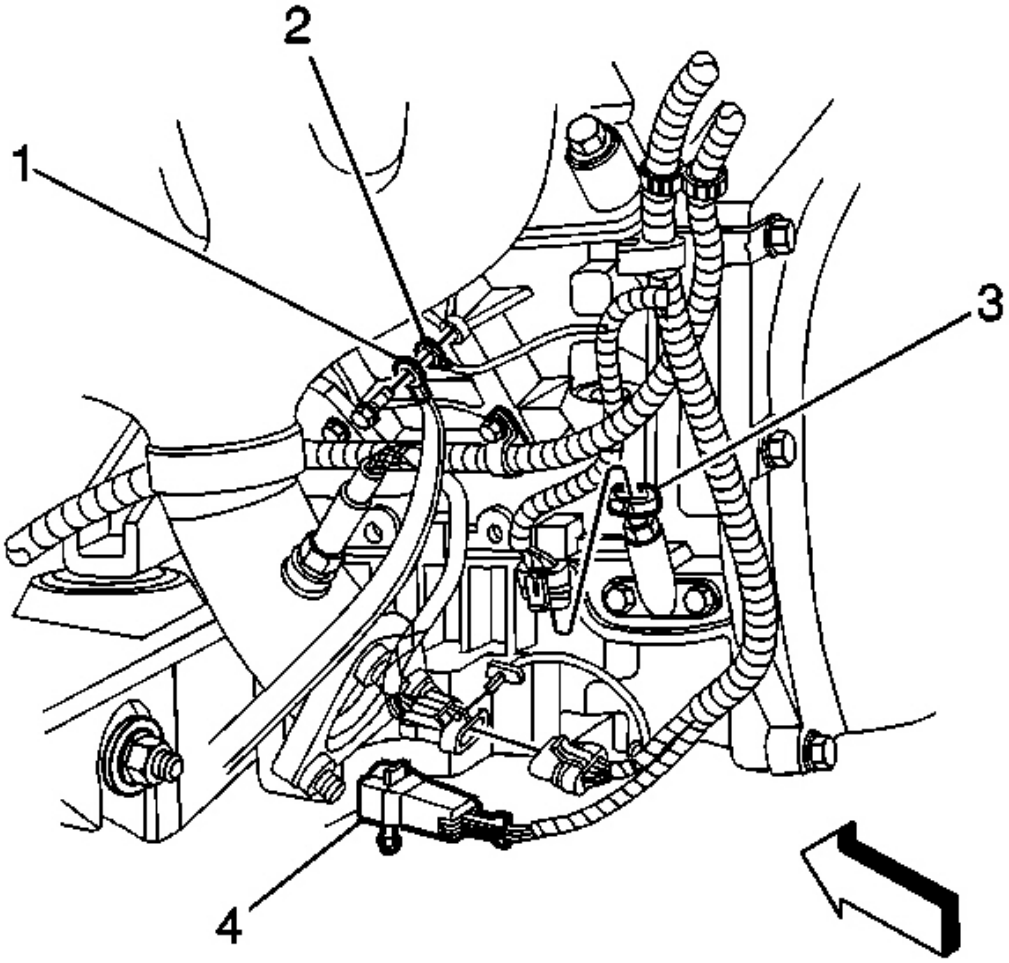

Fig. 52: Ground Strap Bolt & Engine Harness Ground
Courtesy of GENERAL MOTORS CORP.

3. Remove the ground strap bolt, strap (1) and engine harness ground.
4. Remove the ground strap.

Installation Procedure

cardiagn.com

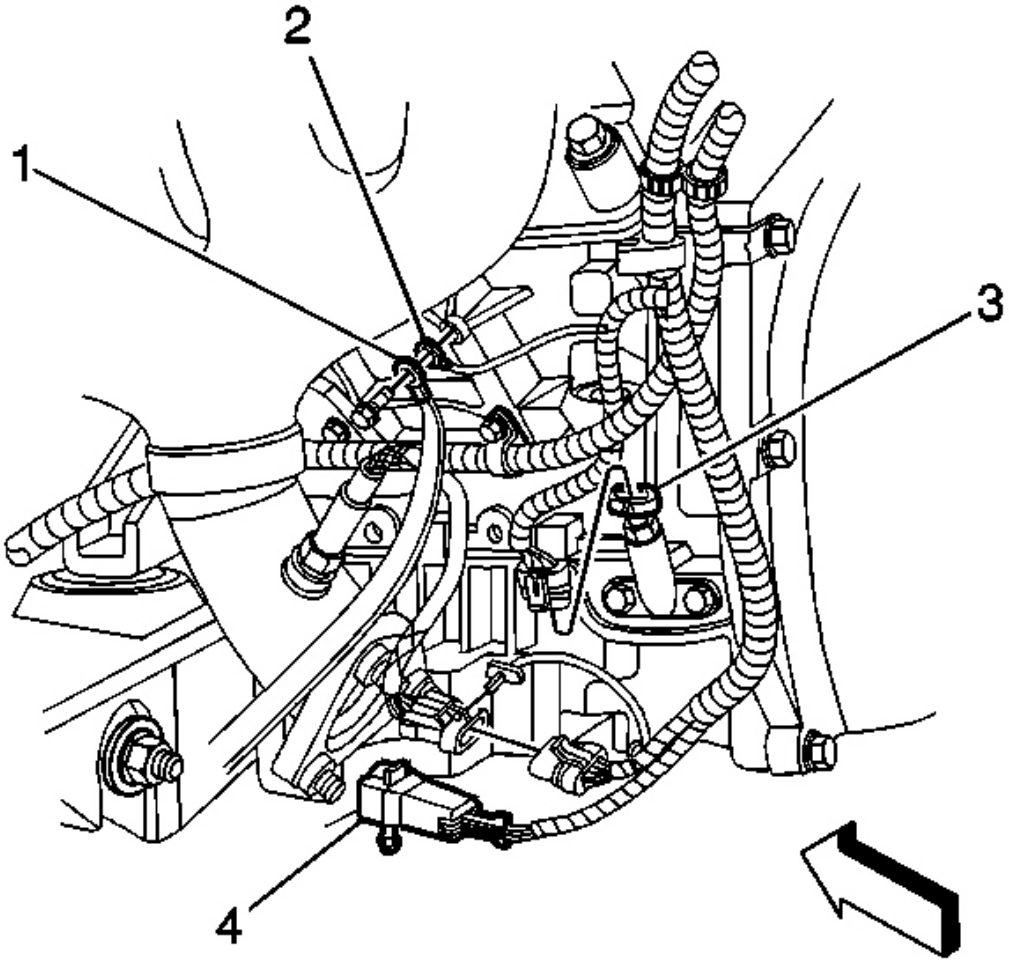

Fig. 53: Ground Strap Bolt & Engine Harness Ground
Courtesy of GENERAL MOTORS CORP.

NOTE: Refer to Fastener Notice in Cautions and Notices.

1. Position the ground strap terminal (1) and engine harness ground to the block.
2. Install the ground strap bolt.

Tighten: Tighten the ground strap bolt to 32 N.m (24 lb ft).

cardiagn.com

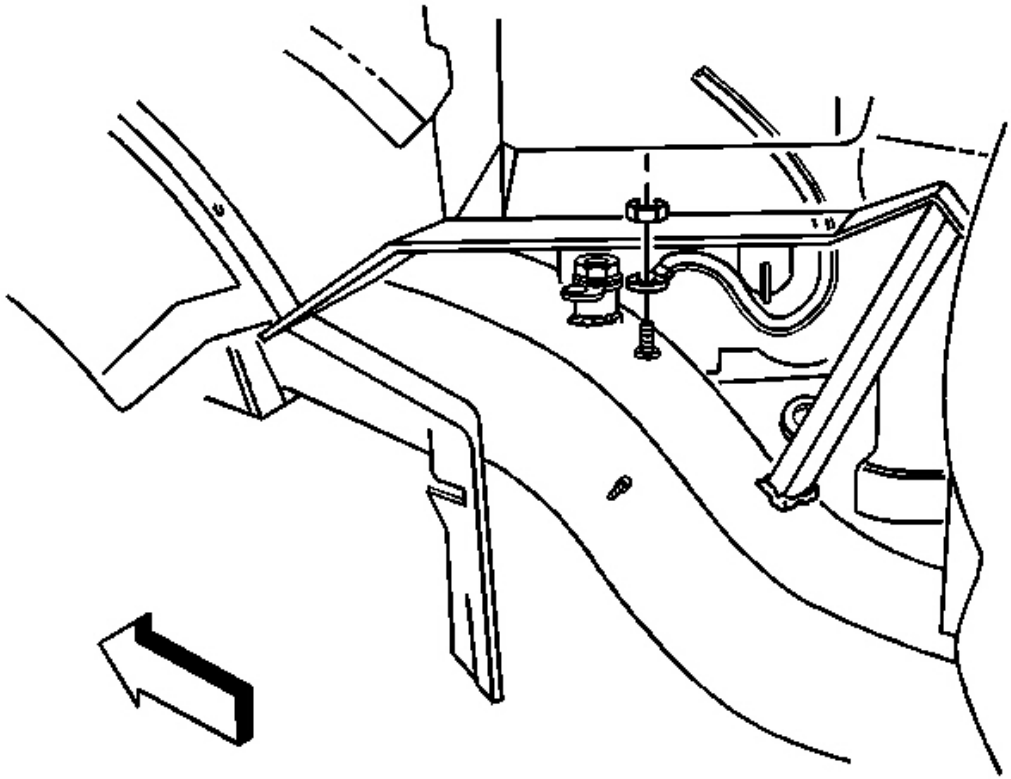

Fig. 54: Ground Strap Terminal At Frame Stud
Courtesy of GENERAL MOTORS CORP.

3. Lower the vehicle.
4. Install the ground strap terminal and nut to the stud.

   Tighten: Tighten the ground strap nut to 8 N.m (71 lb in).

STARTER MOTOR REPLACEMENT

Removal Procedure

CAUTION: Refer to Battery Disconnect Caution in Cautions and Notices.

cardiagn.com

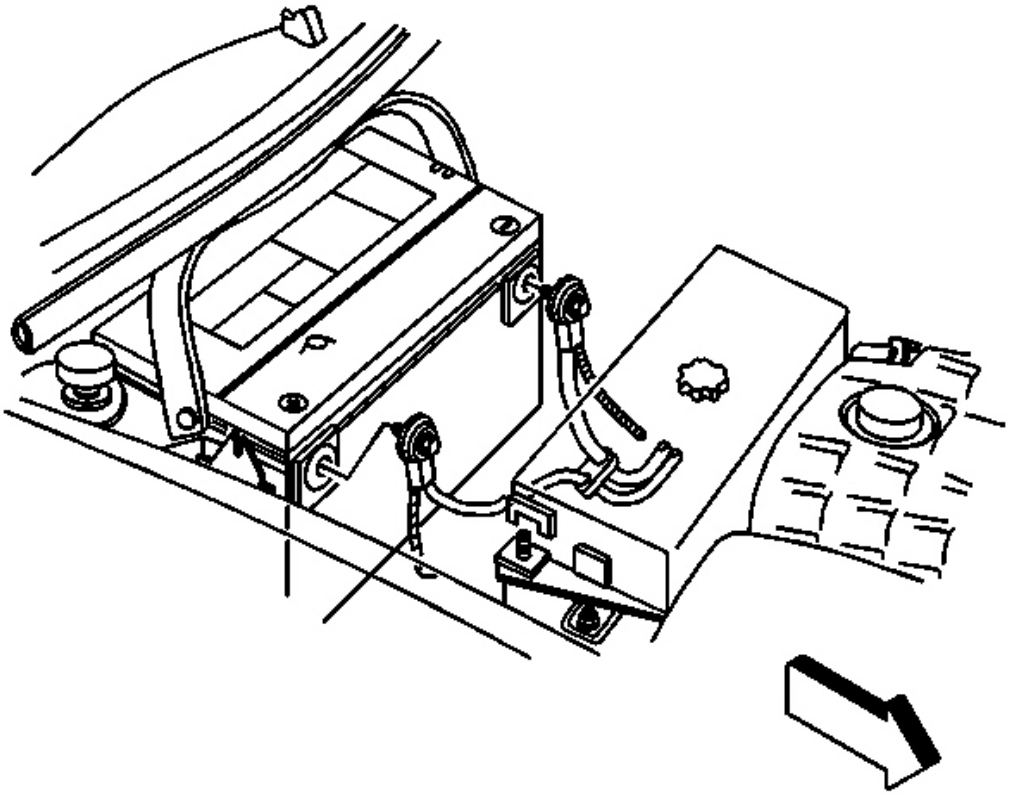

Fig. 55: Positive & Negative Battery Cable
Courtesy of GENERAL MOTORS CORP.

1. Disconnect the negative battery cable. Refer to **Battery Negative Cable Disconnect/Connect Procedure** .
2. Remove the catalytic converter. Refer to **Catalytic Converter Replacement** in Engine Exhaust.

cardiagn.com

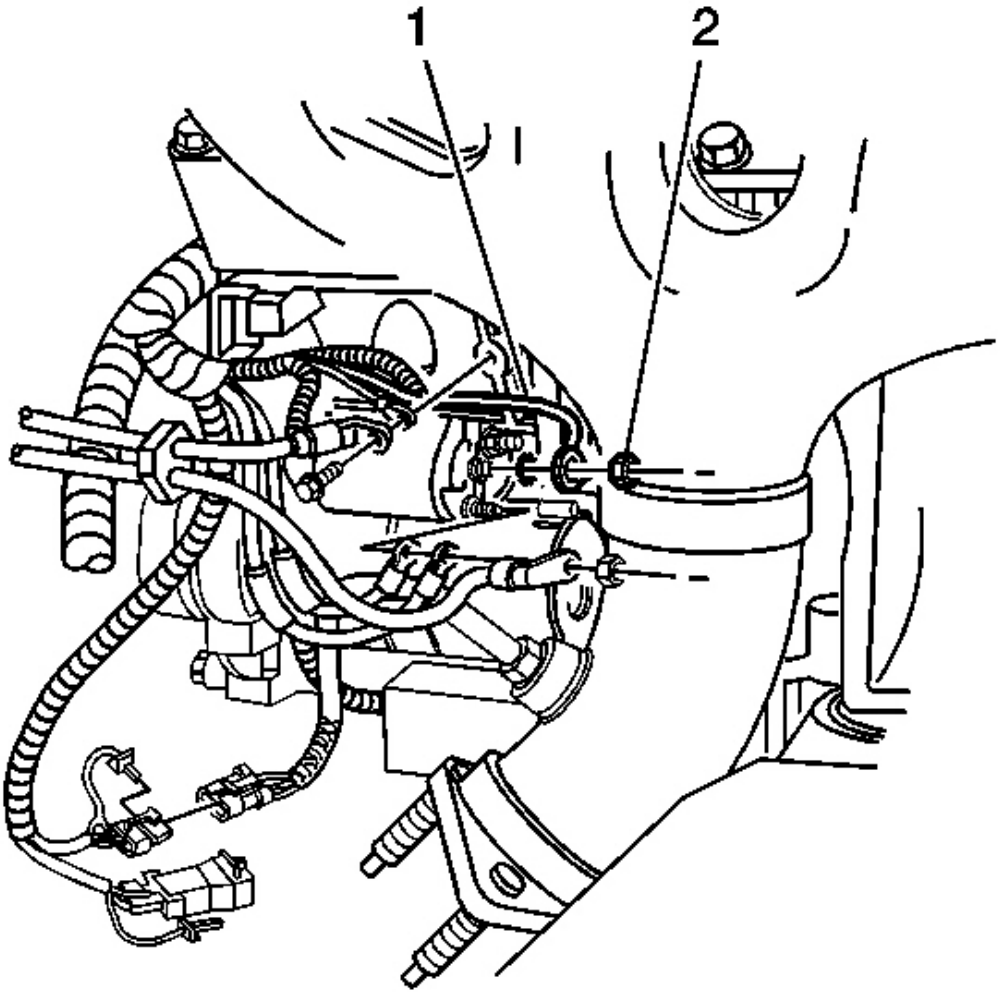

Fig. 56: Solenoid Engine Harness Leads & Positive Battery Cable Terminal
Courtesy of GENERAL MOTORS CORP.

3. Remove the positive battery cable nut.
4. Remove the positive battery cable terminal and the engine harness leads from the solenoid.
5. Remove the S terminal nut (2).
6. Remove the purple wire lead (1) and washer from the solenoid.

cardiagn.com

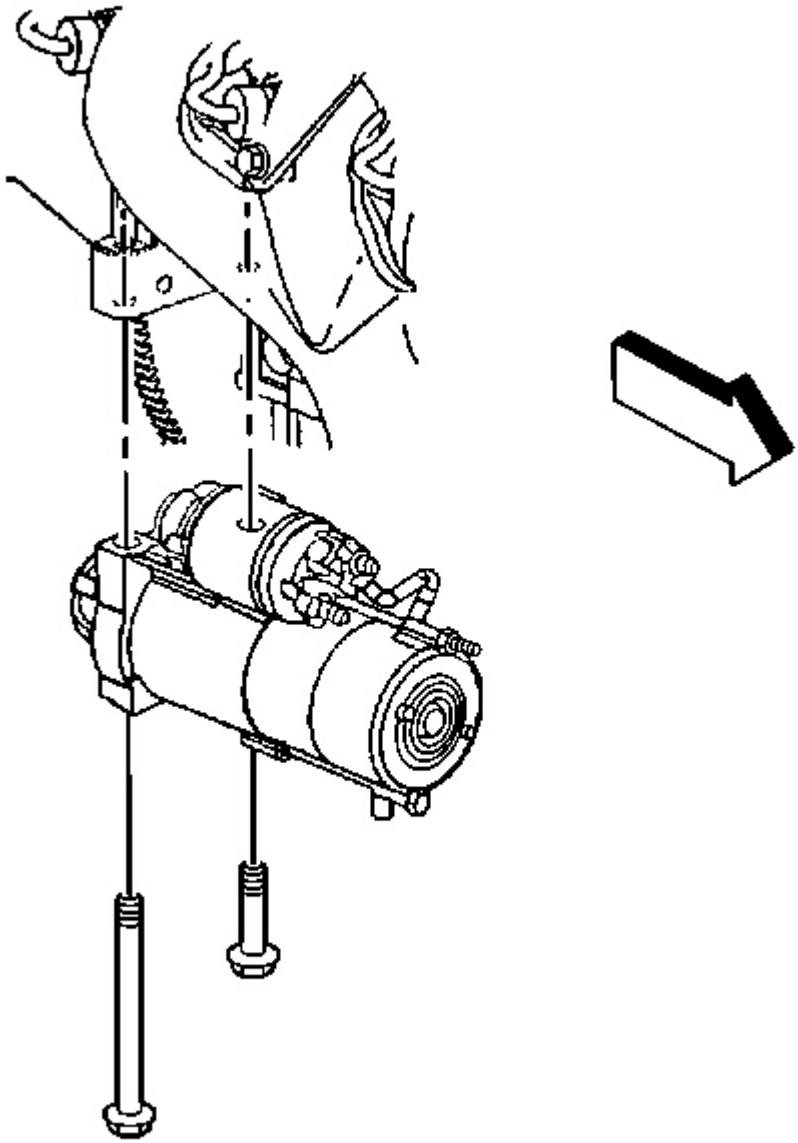

Fig. 57: Starter Motor Bolts
Courtesy of GENERAL MOTORS CORP.

7. Support the starter motor.
8. Remove the starter motor bolts.
9. Remove the starter motor.

cardiagn.com

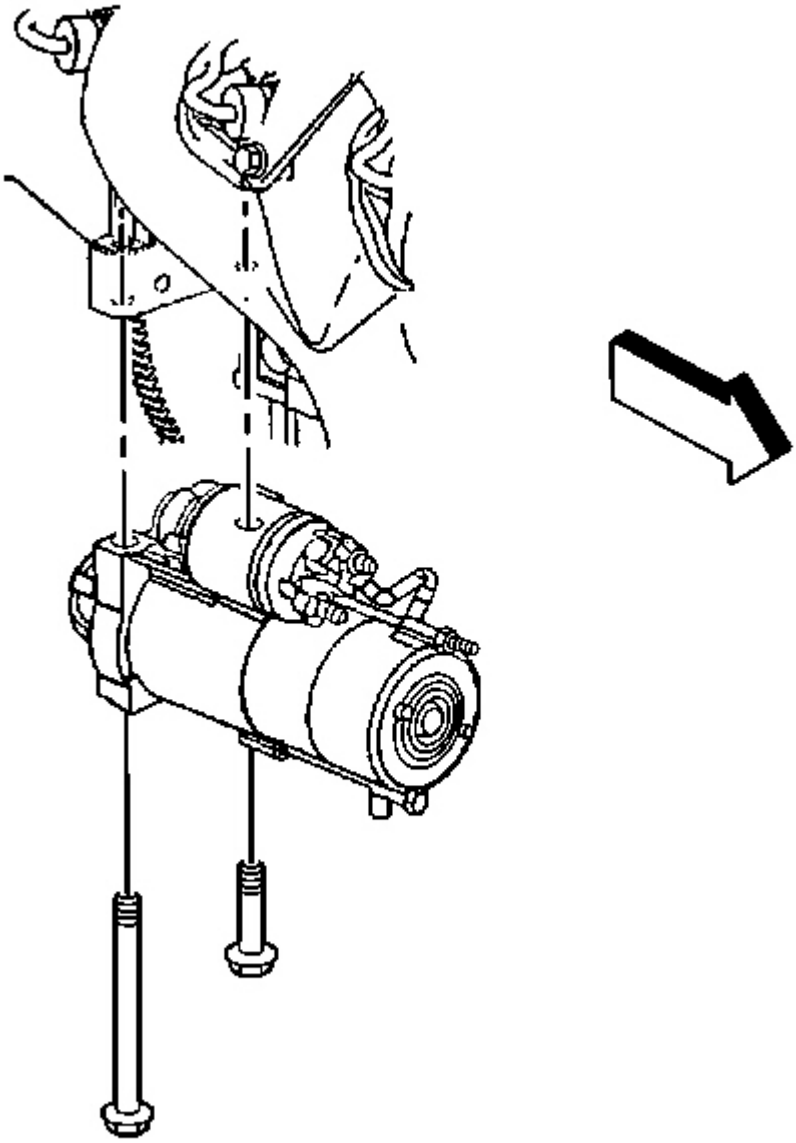

Fig. 58: Starter Motor Bolts
Courtesy of GENERAL MOTORS CORP.

NOTE: **Refer to Fastener Notice in Cautions and Notices.**

cardiagn.com

1. Position the starter motor to the block.
2. Install the starter motor bolts.

   Tighten: Tighten the starter motor bolts to 50 N.m (37 lb ft).

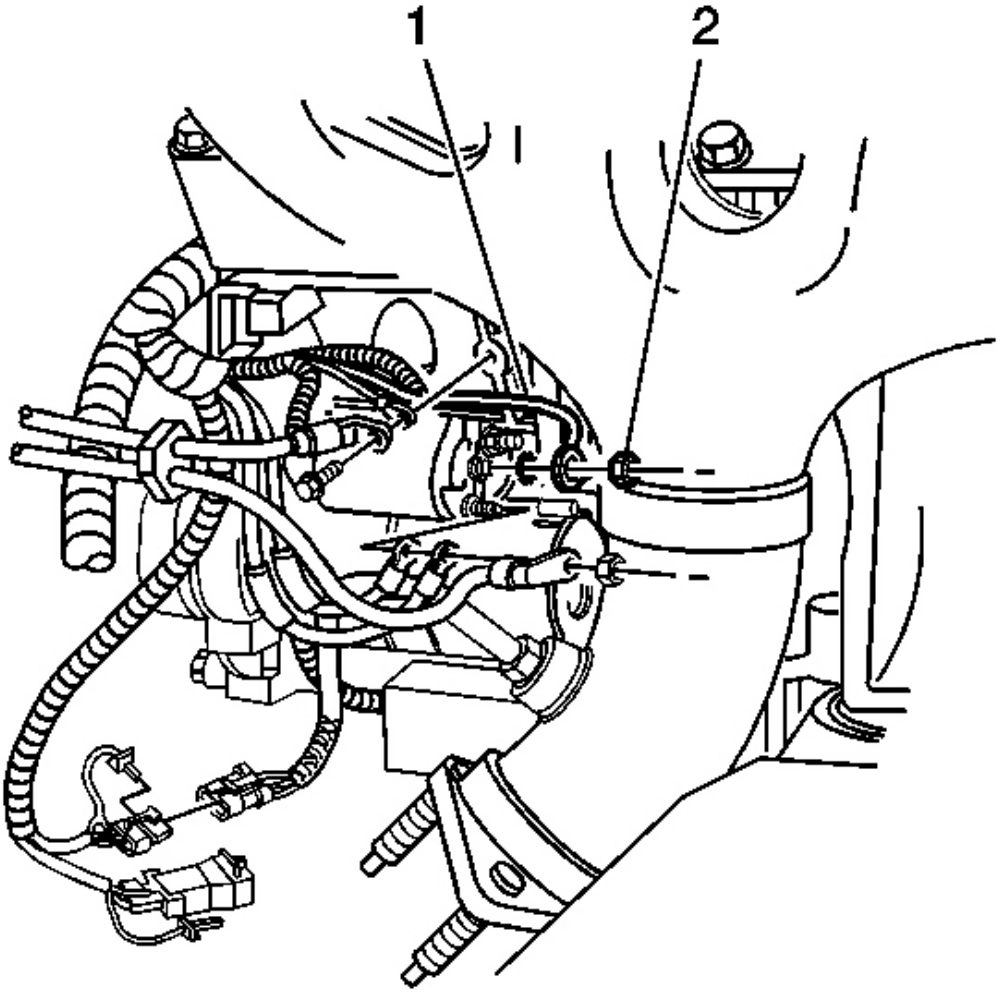

Fig. 59: Solenoid Engine Harness Leads & Positive Battery Cable Terminal
Courtesy of GENERAL MOTORS CORP.

IMPORTANT: Orient the purple lead wire to the 10 o'clock position when installing.

3. Install the starter motor S terminal washer and purple lead wire (1).

cardiagn.com

4. Install the S terminal nut (2).

   Tighten: Tighten the S terminal nut to 4 N.m (35 lb in).

   IMPORTANT: Orient gray and rust harness leads to the 6 o'clock and 7 o'clock position.

5. Install the gray and rust harness leads to the solenoid.
6. Install the positive battery cable terminal to the solenoid.
7. Install the positive battery cable nut.

   Tighten: Tighten the positive battery cable nut to 8 N.m (71 lb in).

8. Install the catalytic converter. Refer to **Catalytic Converter Replacement** in Engine Exhaust.

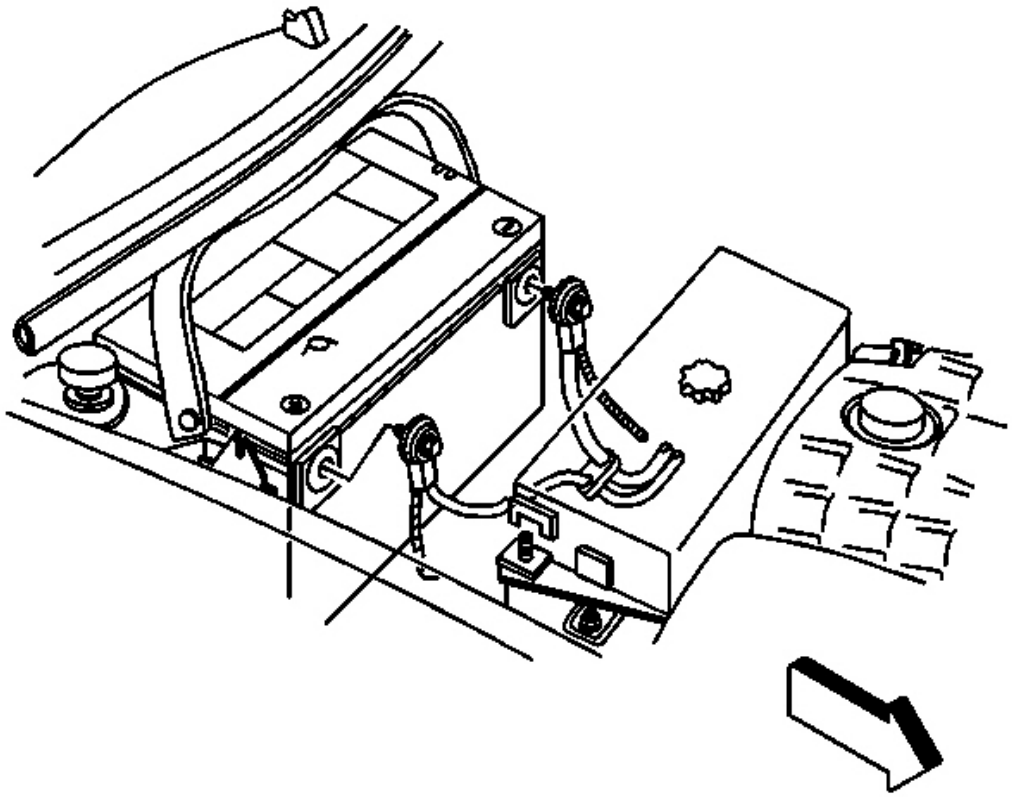

Fig. 60: Positive & Negative Battery Cable
Courtesy of GENERAL MOTORS CORP.

cardiagn.com

9. Connect the negative battery cable. Refer to **Battery Negative Cable Disconnect/Connect Procedure** .

GENERATOR BRACKET REPLACEMENT

Removal Procedure

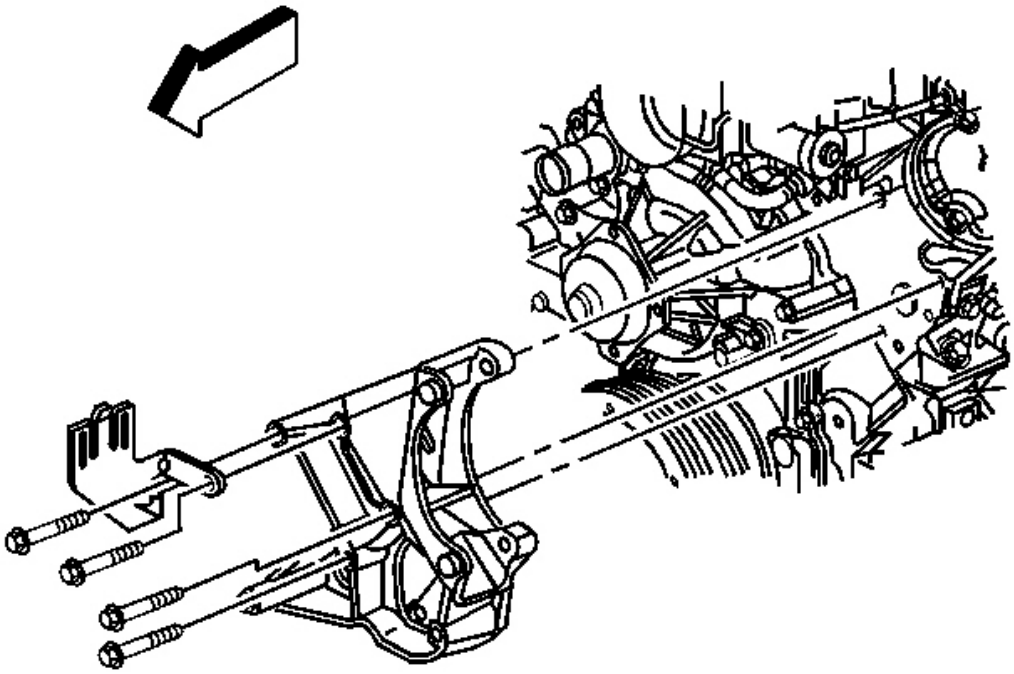

Fig. 61: Generator Bracket Bolts & Power Steering Reservoir Bracket
Courtesy of GENERAL MOTORS CORP.

1. Remove the generator. Refer to **Generator Replacement** .
2. Remove the power steering pump. Refer to **Power Steering Pump Replacement** in Power Steering System.
3. Remove the generator bracket bolts, bracket, and power steering reservoir bracket.

Installation Procedure

cardiagn.com

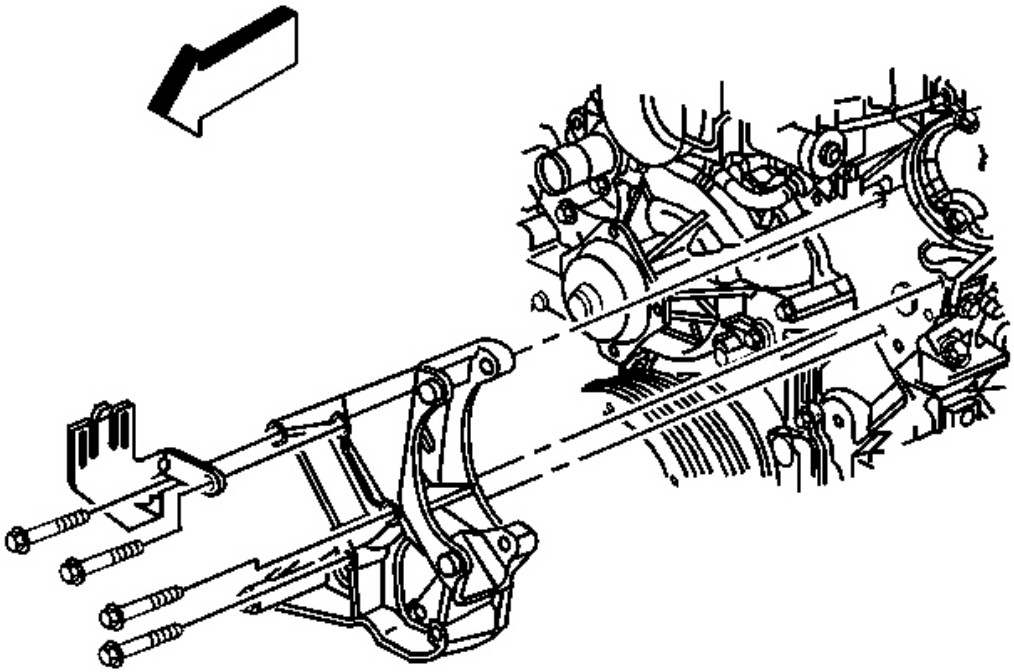

Fig. 62: Generator Bracket Bolts & Power Steering Reservoir Bracket
Courtesy of GENERAL MOTORS CORP.

NOTE: Refer to Fastener Notice in Cautions and Notices.

1. Install the generator bracket, power steering reservoir bracket and generator bracket bolts to the cylinder head.

   Tighten: Tighten the generator bracket bolts to 50 N.m (37 lb ft).

2. Install the power steering pump. Refer to **Power Steering Pump Replacement** in Power Steering System.
3. Install the generator. Refer to **Generator Replacement** .

GENERATOR REPLACEMENT

Removal Procedure

CAUTION: Refer to Battery Disconnect Caution in Cautions and Notices.

cardiagn.com

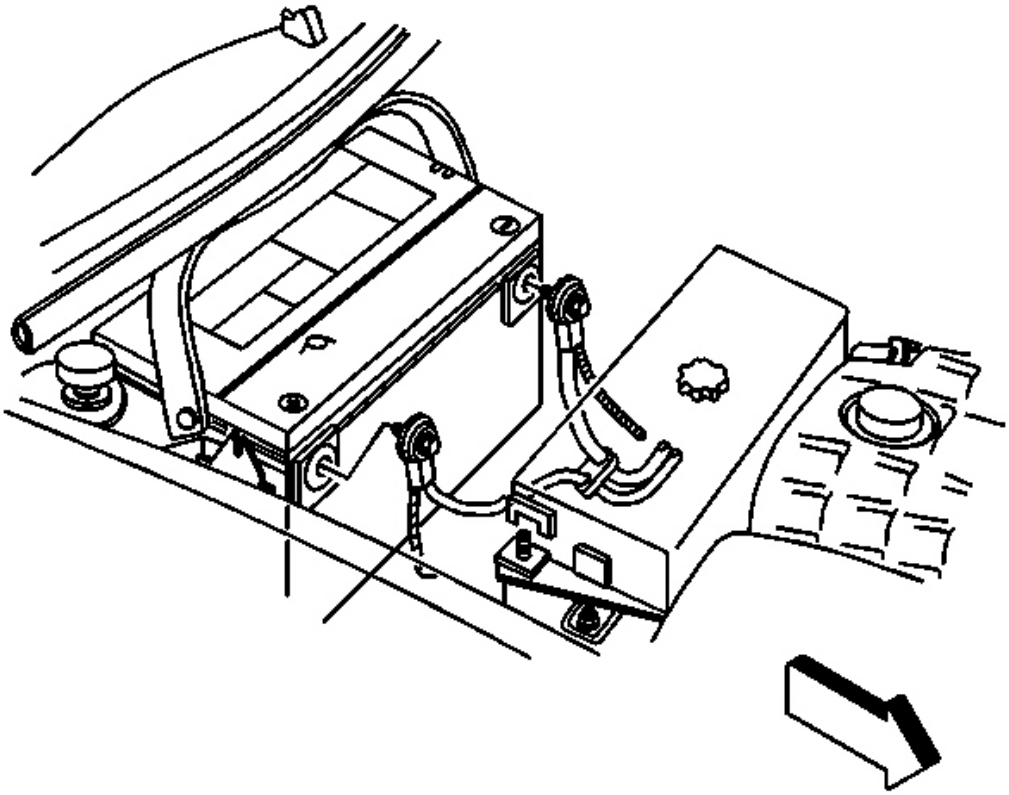

Fig. 63: Positive & Negative Battery Cable
Courtesy of GENERAL MOTORS CORP.

1. Remove the accessory drive belt. Refer to **Drive Belt Replacement - Accessory** in Engine Mechanical - 5.7 L.
2. Disconnect the negative battery cable. Refer to **Battery Negative Cable Disconnect/Connect Procedure** .

cardiagn.com

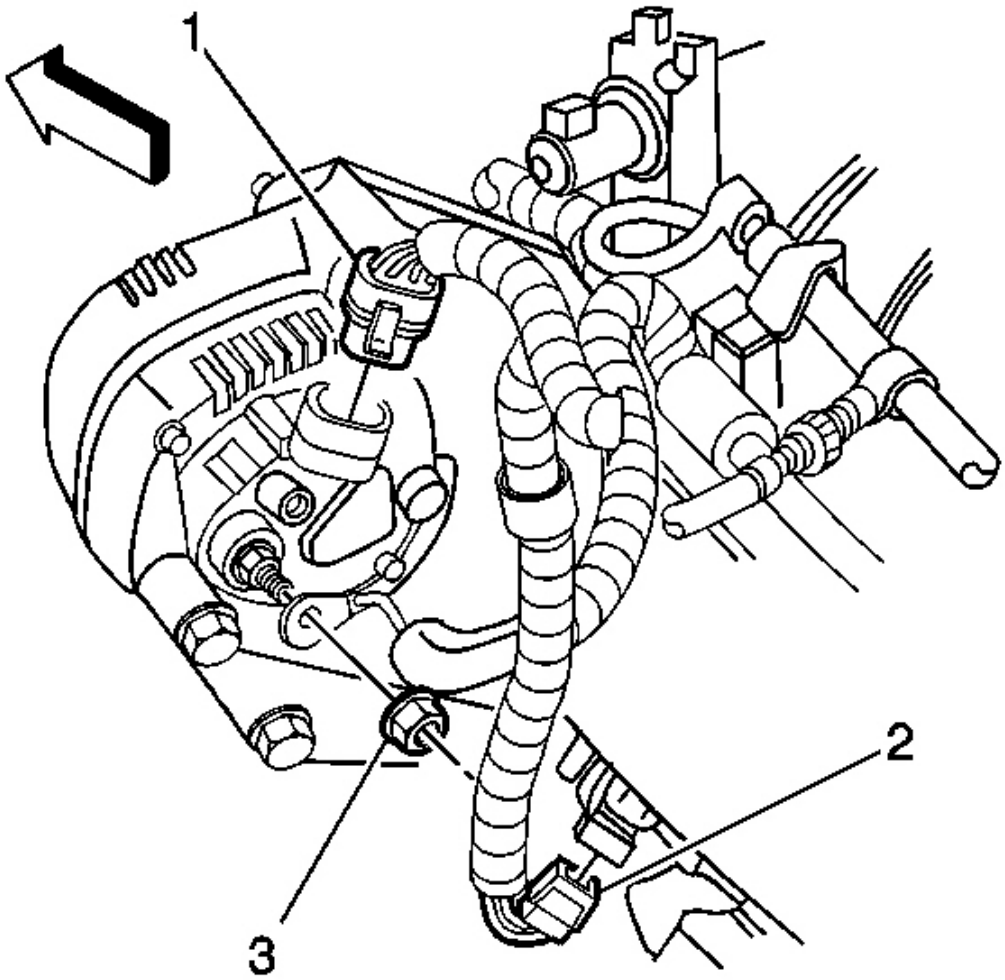

Fig. 64: Generator Electrical Connector Engine Harness Terminal
Courtesy of GENERAL MOTORS CORP.

3. Disconnect the generator electrical connector (1).
4. Remove the engine harness terminal from the generator:
    1. Slide the boot back along the cable.
    2. Remove the engine harness cable nut (3).
    3. Remove the engine harness terminal from the stud.

cardiagn.com

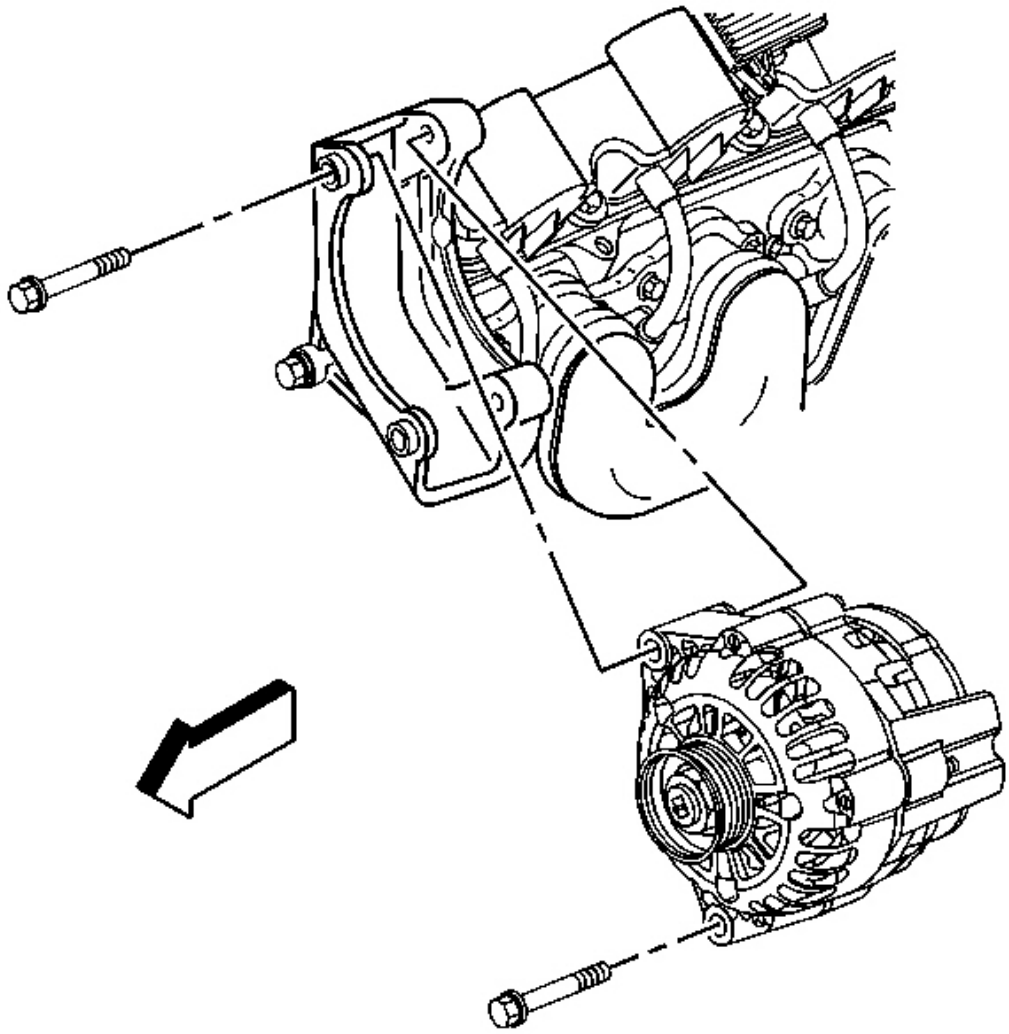

Fig. 65: Generator Bolts & Generator
Courtesy of GENERAL MOTORS CORP.

5. Remove the generator bolts and the generator.

Installation Procedure

cardiagn.com

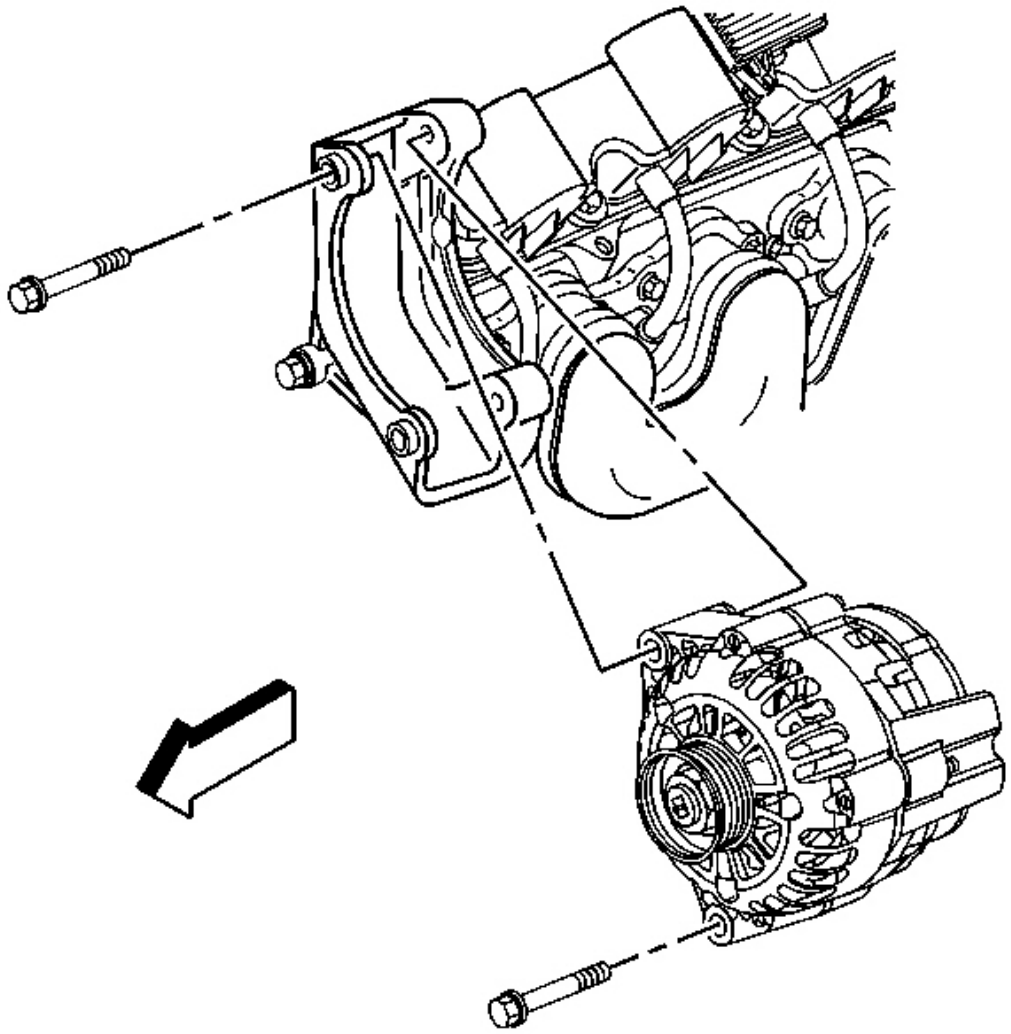

Fig. 66: Generator Bolts & Generator
Courtesy of GENERAL MOTORS CORP.

NOTE: Refer to Fastener Notice in Cautions and Notices.

1. Install the generator.
2. Install the generator bolts.

Tighten: Tighten the generator bolts to 50 N.m (37 lb ft).

cardiagn.com

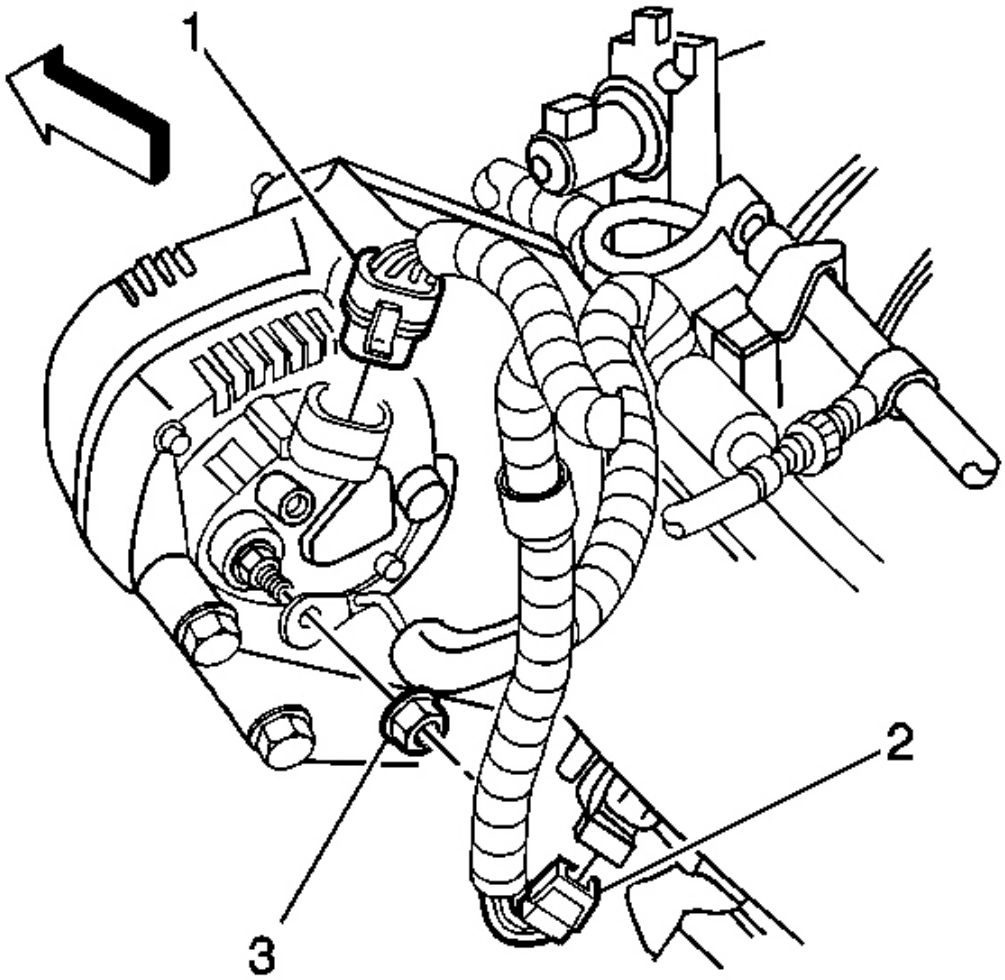

Fig. 67: Generator Electrical Connector Engine Harness Terminal
Courtesy of GENERAL MOTORS CORP.

3. Install the engine harness terminal to the generator:
    1. Install the engine harness terminal to the stud.
    2. Install the engine harness cable nut (3).

       Tighten: Tighten the engine harness cable nut to 13 N.m (10 lb ft).

    3. Slide the boot over the generator stud.
4. Connect the generator electrical connector (1).

cardiagn.com

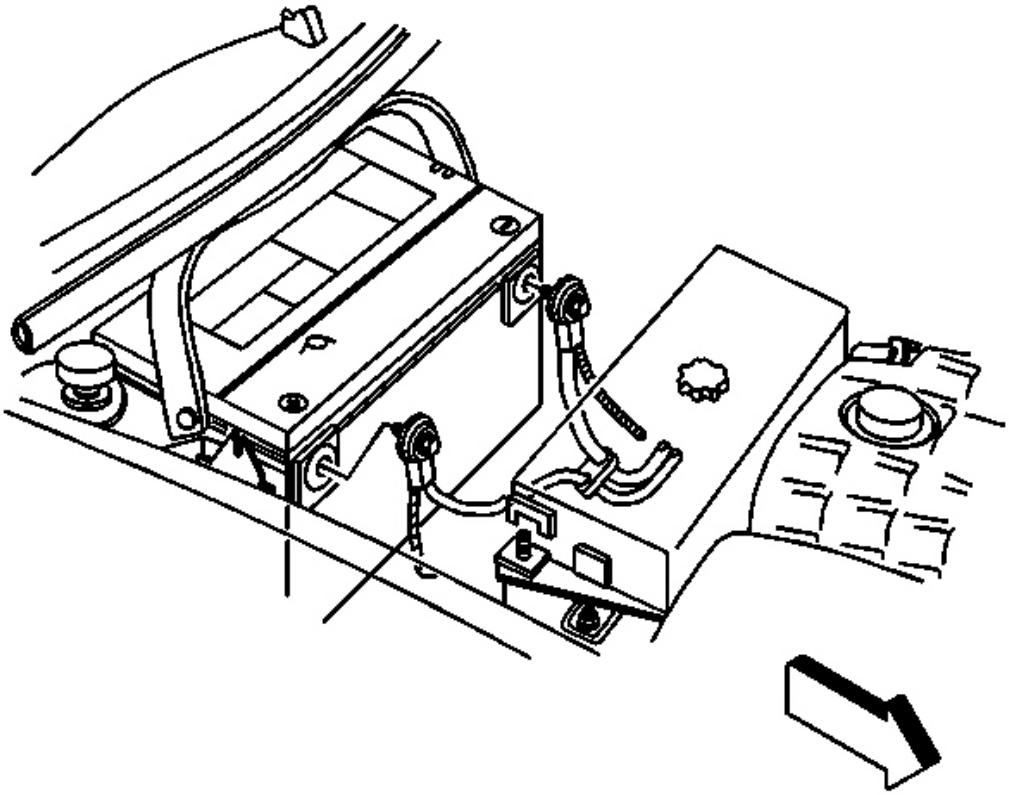

Fig. 68: Positive & Negative Battery Cable
Courtesy of GENERAL MOTORS CORP.

5. Connect the negative battery cable. Refer to **Battery Negative Cable Disconnect/Connect Procedure** .
6. Install the accessory drive belt. Refer to **Drive Belt Replacement - Accessory** in Engine Mechanical - 5.7 L.

DESCRIPTION AND OPERATION

BATTERY DESCRIPTION AND OPERATION

cardiagn.com

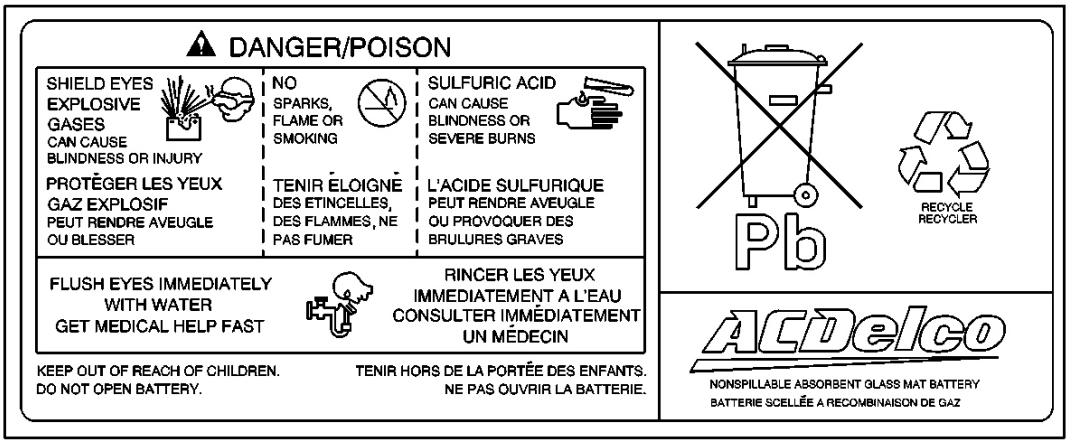

Fig. 69: Battery Label
Courtesy of GENERAL MOTORS CORP.

CAUTION: Batteries produce explosive gases, contain corrosive acid, and supply levels of electrical current high enough to cause burns. Therefore, to reduce the risk of personal injury when working near a battery:

- **Always shield your eyes and avoid leaning over the battery whenever possible.**
- **Do not expose the battery to open flames or sparks.**
- **Do not allow the battery electrolyte to contact the eyes or the skin. Flush immediately and thoroughly any contacted areas with water and get medical help.**
- **Follow each step of the jump starting procedure in order.**
- **Treat both the booster and the discharged batteries carefully when using the jumper cables.**

IMPORTANT: Because of the materials used in the manufacture of automotive lead-acid batteries, dealers and service shops that handle them are subject to various regulations issued by OSHA, EPA, DOT, and various state or local agencies. Other regulations may also apply in other locations. Always know and follow these regulations when handling batteries.

Batteries that are no longer wanted must be disposed of by an approved battery recycler and must never be thrown in the trash or sent to a landfill.

Batteries that are not part of the vehicle itself, not the battery under the hood, must only be transported on public streets for business purposes via approved hazardous material transportation procedures.

cardiagn.com

Battery storage, charging, and testing facilities in repair shops must meet various requirements for ventilation, safety equipment, material segregation, etc.

The maintenance-free battery is standard. There are no vent plugs in the cover. The battery is completely sealed except for 2 small vent holes in the side. These vent holes allow the small amount of gas that is produced in the battery to escape.

The battery has 3 functions as a major source of energy:

- Engine cranking
- Voltage stabilizer
- Alternate source of energy with generator overload

The battery specification label, example below, contains information about the following:

- The test ratings
- The original equipment catalog number
- The recommended replacement model number

cardiagn.com

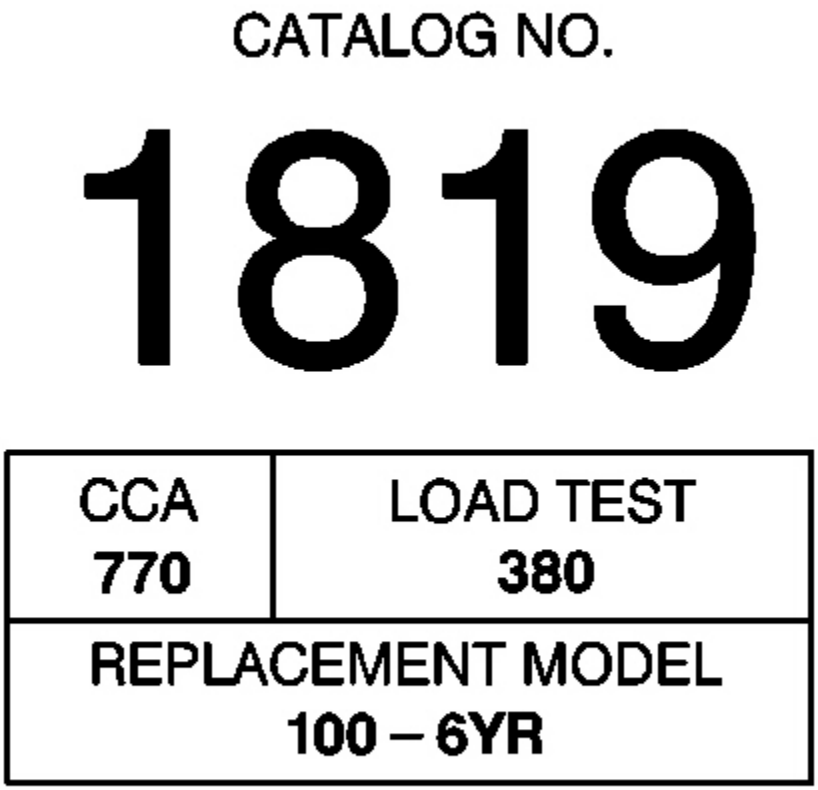

Fig. 70: Battery Specification Label
Courtesy of GENERAL MOTORS CORP.

Battery Ratings

A battery may have 3 ratings:

- Amp hour
- Reserve capacity
- Cold cranking amperage

When a battery is replaced, use a battery with similar ratings. Refer to the battery specification label on the original battery or refer to **Battery Usage** .

Amp Hour

cardiagn.com

The amp hour rating of a battery is the amount of time it takes a fully charged battery, being discharged at a constant rate of 1 amperes and a constant temperature of 27° C (80° F), to reach a terminal voltage of 10.5 volts. Refer to **Battery Usage** for the amp hour rating of the original equipment battery.

Reserve Capacity

Reserve capacity is the amount of time in minutes it takes a fully charged battery, being discharged at a constant rate of 25 amperes and a constant temperature of 27° C (80° F), to reach a terminal voltage of 10.5 volts. Refer to **Battery Usage** for the reserve capacity rating of the original equipment battery.

Cold Cranking Amperage

The cold cranking amperage is an indication of the ability of the battery to crank the engine at cold temperatures. The cold cranking amperage rating is the minimum amperage the battery must maintain for 30 seconds at -18° C (0° F) while maintaining at least 7.2 volts. Refer to **Battery Usage** for the cold cranking amperage rating for this vehicle.

CHARGING SYSTEM DESCRIPTION AND OPERATION

Generator

The Valeo generator is electrically similar to earlier models. The generator features the following major components:

- The delta stator
- The rectifier bridge
- The rotor with slip rings and brushes
- A conventional pulley
- The regulator

The pulley and the fan cool the slip ring and the frame.

The generator features permanently lubricated bearings. Service should only include tightening of mount components. Otherwise, replace the generator as a complete unit.

Regulator

The voltage regulator controls the rotor field current in order to limit the system voltage. When the field current is on, the regulator switches the current on and off at a rate of 400 cycles per second in order to perform the following functions:

- Radio noise control
- Obtain the correct average current needed for proper system voltage control

At high speeds, the on-time may be 10 percent with the off-time at 90 percent. At low speeds, the on-time may be 90 percent and the off-time 10 percent.

cardiagn.com

Circuit Description

The generator provides voltage to operate the vehicle's electrical system and to charge its battery. A magnetic field is created when current flows through the rotor. This field rotates as the rotor is driven by the engine, creating an AC voltage in the stator windings. The AC voltage is converted to DC by the rectifier bridge and is supplied to the electrical system at the battery terminal.

When the engine is running, the generator turn-on signal is sent to the generator from the PCM, turning on the regulator. The generator's voltage regulator controls current to the rotor, thereby controlling the output voltage. The rotor current is proportional to the electrical pulse width supplied by the regulator. When the engine is started, the regulator senses generator rotation by detecting AC voltage at the stator through an internal wire. Once the engine is running, the regulator varies the field current by controlling the pulse width. This regulates the generator output voltage for proper battery charging and electrical system operation. The generator F terminal is connected internally to the voltage regulator and externally to the PCM. When the voltage regulator detects a charging system problem, it grounds this circuit to signal the PCM that a problem exists. The PCM monitors the generator field duty cycle signal circuit. The system voltage sense circuit receives B+ voltage that is Hot At All Times through a fuse link that is connected to the starter. This voltage is used by the regulator as the reference for system voltage control.

Charging System Indicator(s)

CHARGE SYSTEM FAULT

The IPC illuminates the CHARGE SYSTEM FAULT indicator in the message center when the following occurs:

- The PCM detects that there is a problem with the electrical charging system. The IPC receives a class 2 message from the PCM.
- If the tachometer is less than 500 RPM and the power mode state is in the crank mode then this message will not be displayed. Instead the CHECK GAGES indicator will illuminate.

HIGH VOLTAGE

The IPC illuminates the HIGH VOLTAGE indicator in the message center when the IPC detects that the ignition is in RUN and battery voltage is greater than 15.75 V for more than 5 seconds.

LOW VOLTAGE

The IPC illuminates the LOW VOLTAGE indicator in the message center when the IPC detects that the ignition is in RUN and battery voltage is less than 10 V for more than 5 seconds.

STARTING SYSTEM DESCRIPTION AND OPERATION

The PG starter motors are non-repairable starter motor. They have pole pieces that are arranged around the armature. Both solenoid windings are energized. The pull-in winding circuit is completed to the ground through the starter motor. The windings work together magnetically to pull and hold in the plunger. The plunger moves the shift lever. This action causes the starter drive assembly to rotate on the armature shaft spline as it engages

cardiagn.com

with the flywheel ring gear on the engine. Moving at the same time, the plunger also closes the solenoid switch contacts in the starter solenoid. Full battery voltage is applied directly to the starter motor and it cranks the engine.

As soon as the solenoid switch contacts close, current stops flowing thorough the pull-in winding because battery voltage is applied to both ends of the windings. The hold-in winding remains energized; its magnetic field is strong enough to hold the plunger, shift lever, starter drive assembly, and solenoid switch contacts in place to continue cranking the engine. When the engine starts, pinion overrun protects the armature from excessive speed until the switch is opened.

When the ignition switch is released from the START position, the START relay opens and battery voltage is removed from the starter solenoid S terminal. Current flows from the motor contacts through both windings to the ground at the end of the hold-in winding. However, the direction of the current flow through the pull-in winding is now opposite the direction of the current flow when the winding was first energized.

The magnetic fields of the pull-in and hold-in windings now oppose one another. This action of the windings, along with the help of the return spring, causes the starter drive assembly to disengage and the solenoid switch contacts to open simultaneously. As soon as the contacts open, the starter circuit is turned off.

Circuit Description

Moving the ignition switch to the START position sends a 12 V signal to the PCM Ignition Crank Sense. The PCM verifies that the transmission is in the PARK or NEUTRAL position. The PCM then grounds the control circuit of the START relay. When the START relay is energized it allows voltage to the starter solenoid S terminal.

SPECIAL TOOLS AND EQUIPMENT

SPECIAL TOOLS

Special Tools

Illustration	Tool Number/Description
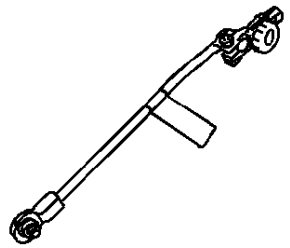	J 38758 Parasitic Draw Test Switch

cardiagn.com

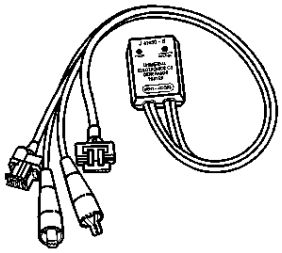	J 41450-B Universal CS Generator Test Harness
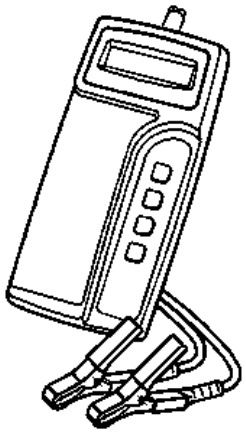	J 42000 Battery Tester

cardiagn.com