2010 TRANSMISSION

Automatic Transmission - 6L45/6L50/6L80/6L90 - Camaro

REPAIR INSTRUCTIONS - ON VEHICLE

TRANSMISSION CONTROL LEVER KNOB REPLACEMENT

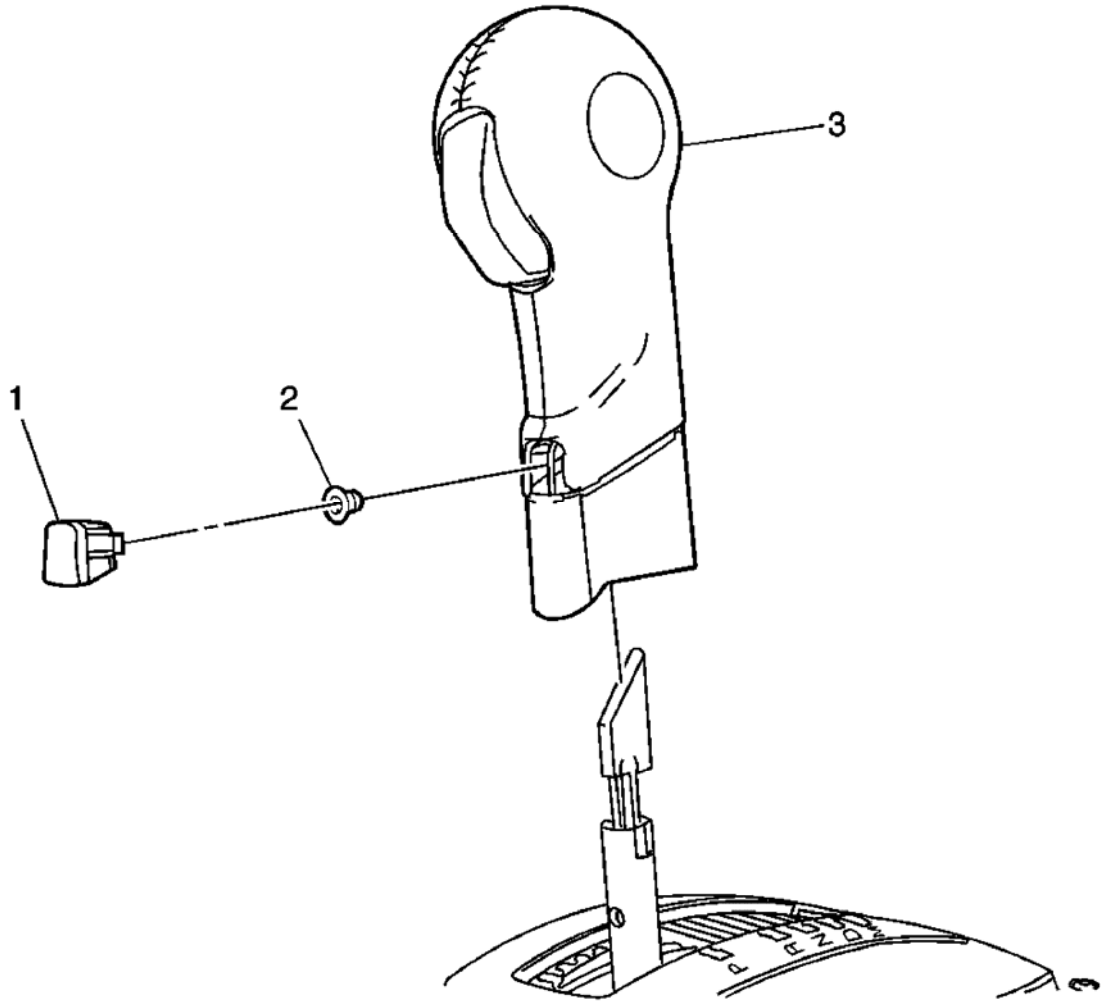

Fig. 1: Transmission Control Lever Knob
Courtesy of GENERAL MOTORS CORP.

Callout	Component Name
1	Transmission Control Lever Knob Cover **Procedure:** Use a flat-bladed plastic trim tool to remove the knob cover.
	Transmission Control Lever Knob Fastener

2	**CAUTION:** **Refer to Fastener Caution .** **Tighten:** 3 N.m (27 lb in)
3	Transmission Control Lever Knob **Procedure** 1. Pull up on the transmission control level knob to remove. 2. Transfer components as necessary.

SHIFT CONTROL LINKAGE REPLACEMENT

Removal Procedure

1. Position the shift lever in PARK.
2. Raise and support the vehicle. Refer to **Lifting and Jacking the Vehicle** .

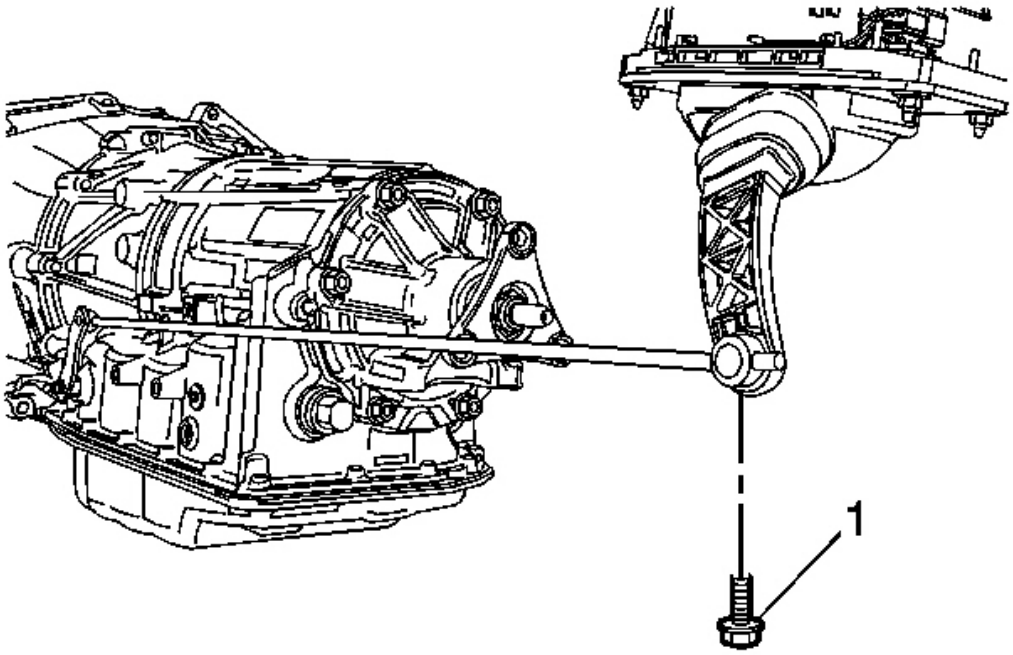

Fig. 2: Shift Control Linkage Rod Bolt
Courtesy of GENERAL MOTORS CORP.

3. Remove the bolt (1) from the shift control linkage rod.
4. Disconnect the shift control linkage rod from the shift control assembly.

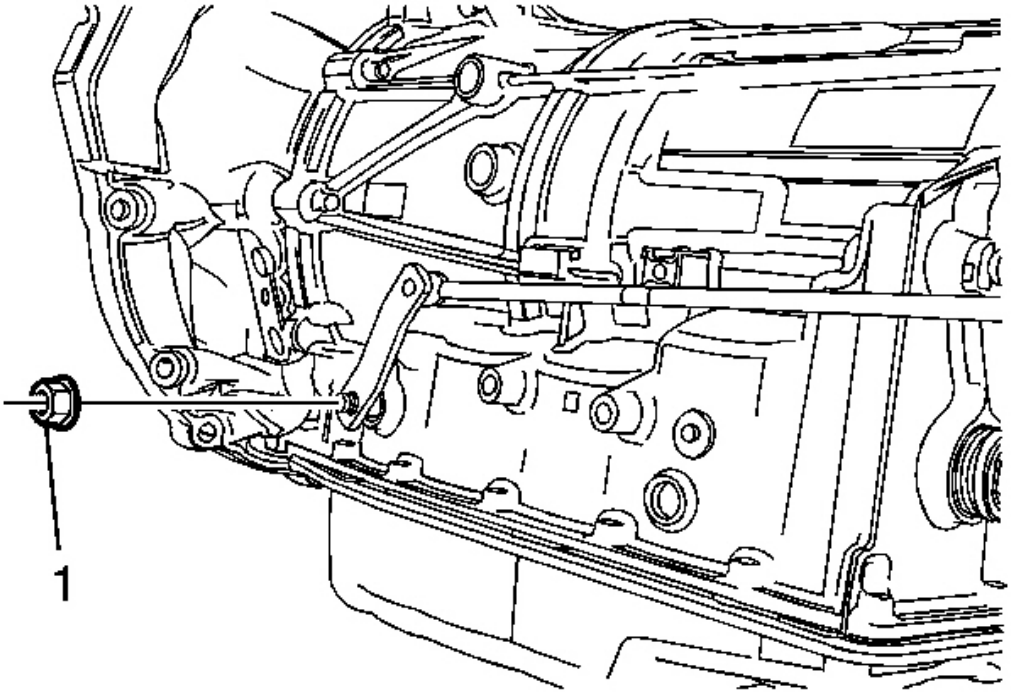

Fig. 3: Manual Shift Shaft Nut
Courtesy of GENERAL MOTORS CORP.

5. Remove the manual shift shaft nut (1).
6. Remove the shift control linkage from the vehicle.

Installation Procedure

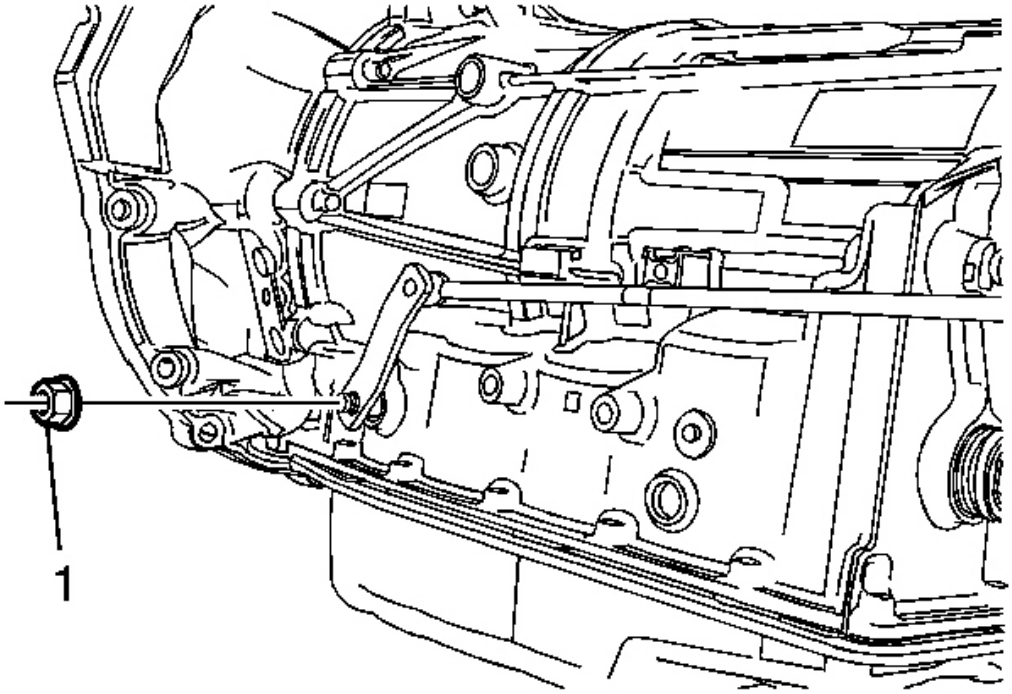

Fig. 4: Manual Shift Shaft Nut
Courtesy of GENERAL MOTORS CORP.

1. Install the shift control linkage to the vehicle.

CAUTION: Refer to Fastener Caution .

2. Install the manual shift shaft nut (1) and tighten to 15 N.m (11 lb ft).

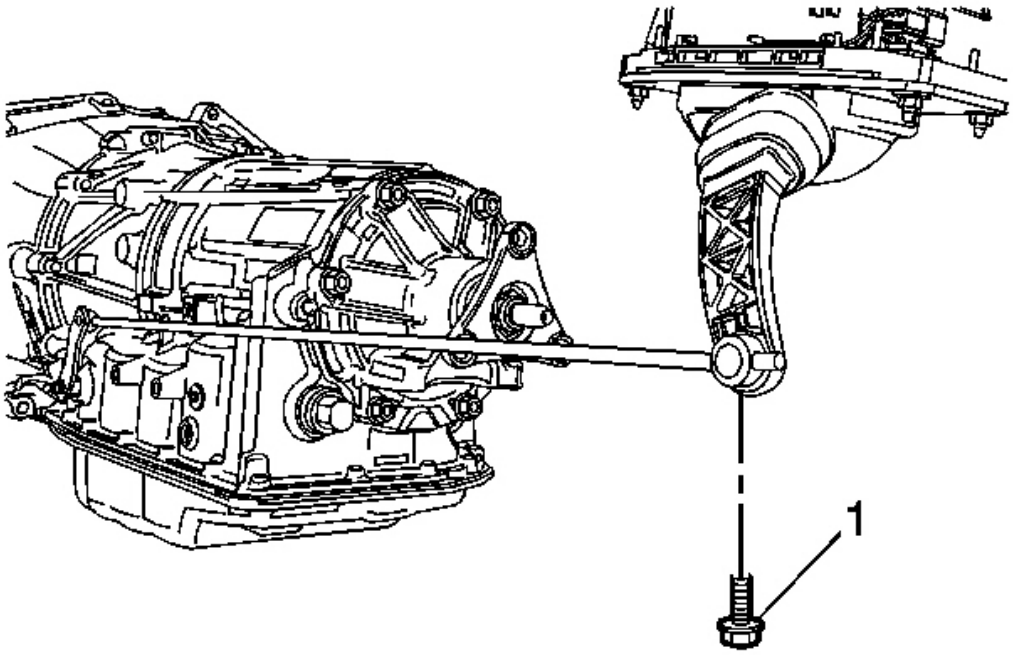

Fig. 5: Shift Control Linkage Rod Bolt
Courtesy of GENERAL MOTORS CORP.

3. Connect the shift control linkage rod to the shift control assembly.
4. Install the bolt (1) to the shift control linkage rod.
5. Adjust the shift control linkage.
6. Lower the vehicle.

SHIFT CONTROL LINKAGE ADJUSTMENT

1. Position the shift lever in PARK.
2. Raise and support the vehicle. Refer to **Lifting and Jacking the Vehicle**

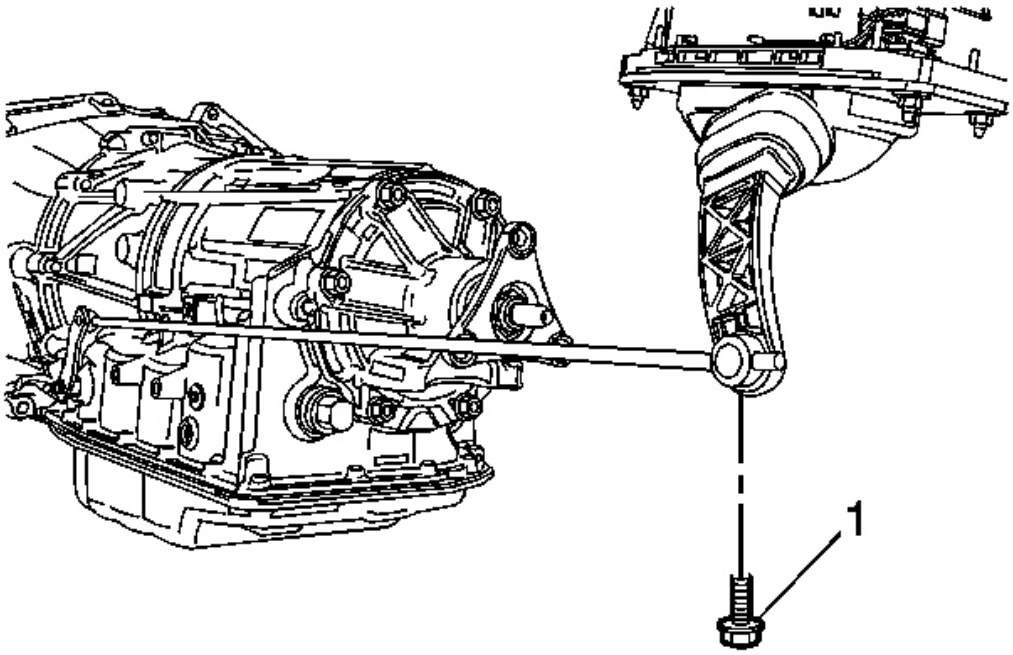

Fig. 6: Shift Control Linkage Rod Bolt
Courtesy of GENERAL MOTORS CORP.

3. Loosen the shift control linkage adjustment bolt (1) to allow the adjuster to slide freely.

CAUTION: Refer to Fastener Caution .

4. Hold the selector lever on transmission against the rear stop to eliminate any play. Tighten the shift control linkage adjustment nut to 9 N.m (80 lb in).
5. Lower the vehicle.
6. Inspect the operation of the starting system with the shift lever in each position. The engine should only crank when the lever is in the PARK or NEUTRAL position.
7. Ensure that the shifter detents align with the gear indicators.
8. Return to the PARK position and check for proper engagement. PARK position should feel solid and not spongy. The shift lever should not be bottomed out on the stop bumper when engaging the PARK position. Readjust and retest if necessary.
9. With the ignition on and the engine not running, ensure a smooth transition from position D to tap mode and back. Ensure that the odometer changes to the gear indicator mode. If the odometer does not change to gear indicator mode, or any binding or rough spots are felt, repeat the linkage adjustment procedure

and retest the system.

10. Tighten the shift linkage adjusting bolt to 30 N.m (22 lb ft).

TRANSMISSION CONTROL REPLACEMENT

Removal Procedure

1. Raise and support the vehicle. Refer to **Lifting and Jacking the Vehicle** .

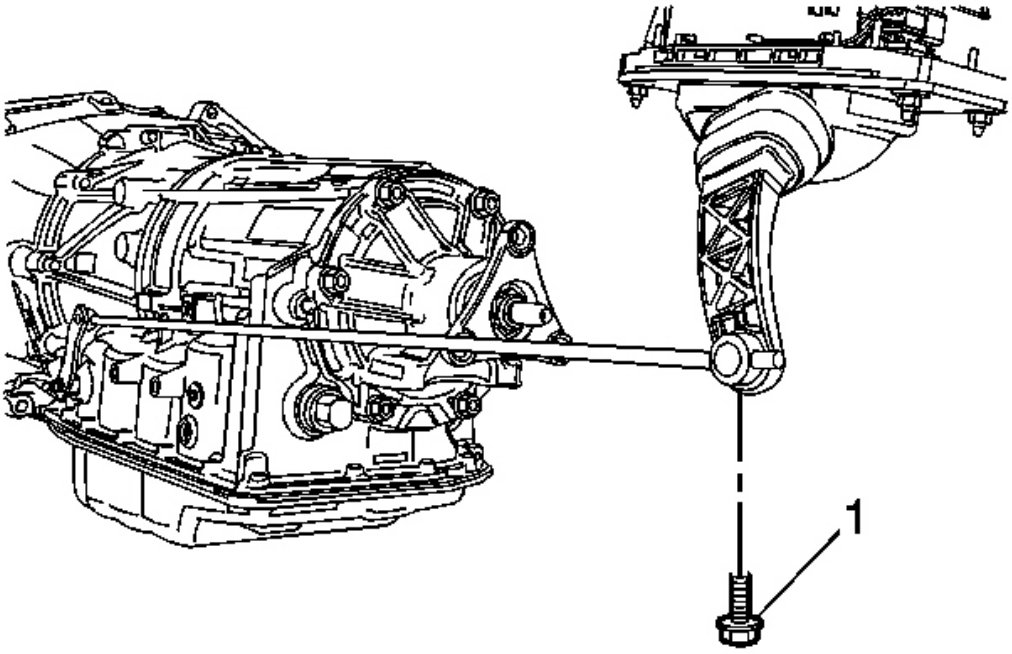

Fig. 7: Shift Control Linkage Rod Bolt
Courtesy of GENERAL MOTORS CORP.

2. Remove the shift control linkage adjustment bolt (1).
3. Disconnect the shift control linkage rod from the shift control assembly.

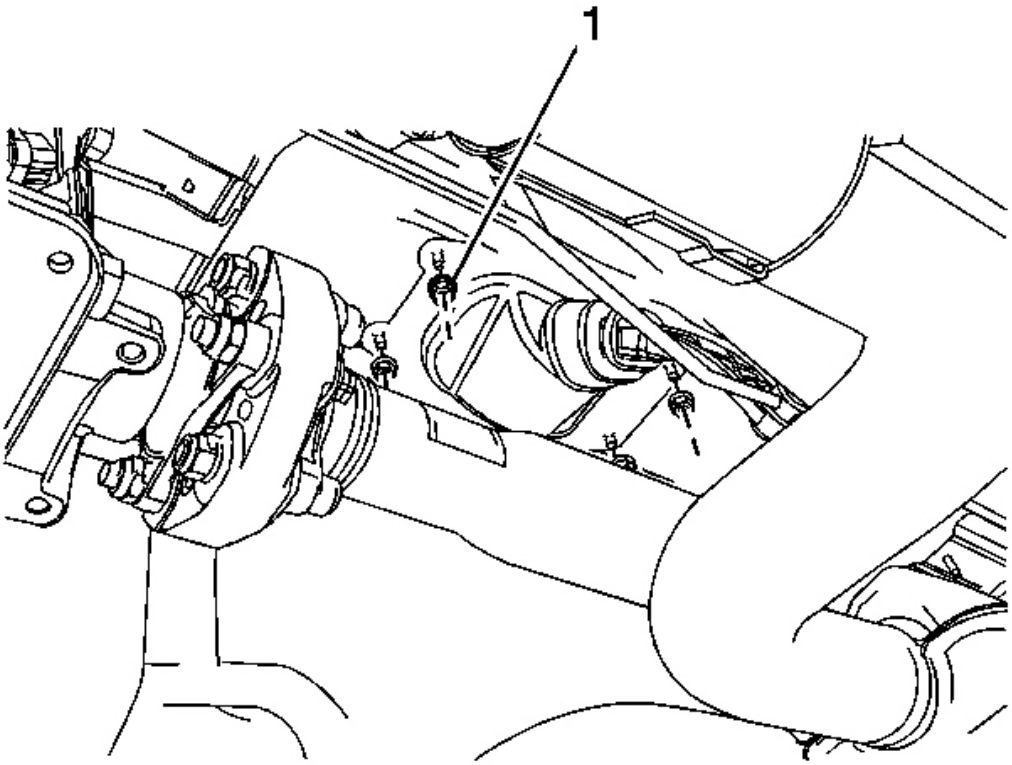

Fig. 8: Shift Control Retaining Nuts
Courtesy of GENERAL MOTORS CORP.

4. Remove the four shift control retaining nuts (1)
5. Lower the vehicle.
6. Remove the front floor console cover. Refer to **Front Floor Console Front Cover Replacement (Without UMQ)** or **Front Floor Console Front Cover Replacement (With UMQ)** .

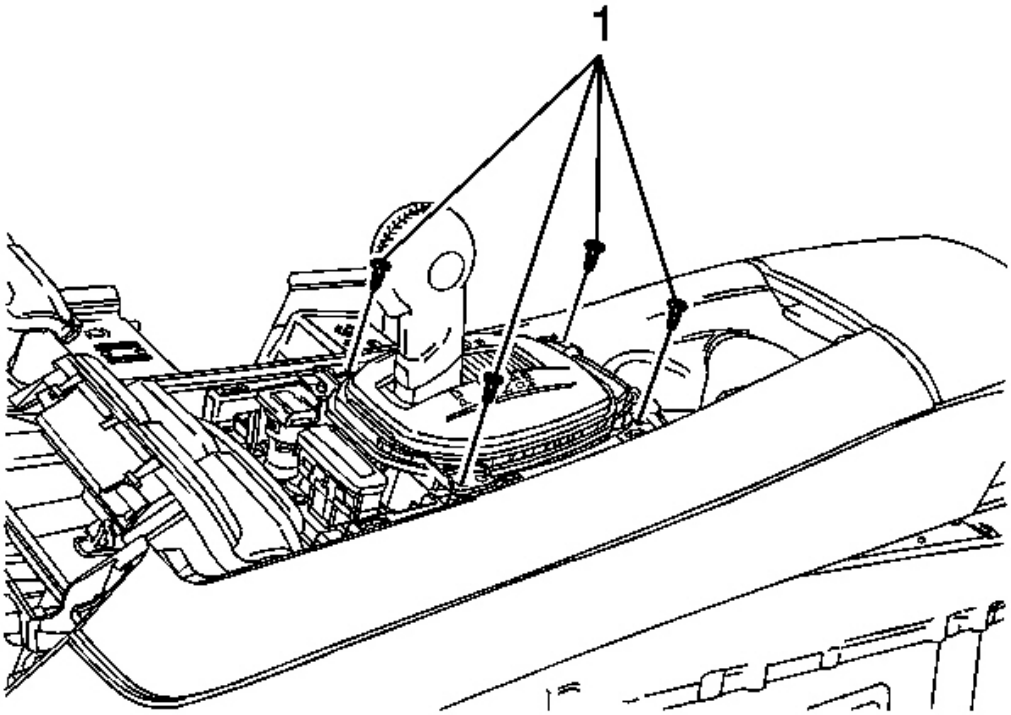

Fig. 9: Retainer Screws
Courtesy of GENERAL MOTORS CORP.

7. Remove the four retainer screws (1).
8. Disconnect the electrical connector from the shift control assembly.
9. Remove the shift control assembly from the tunnel reinforcement.

Installation Procedure

1. Install the shift control assembly to the tunnel reinforcement.

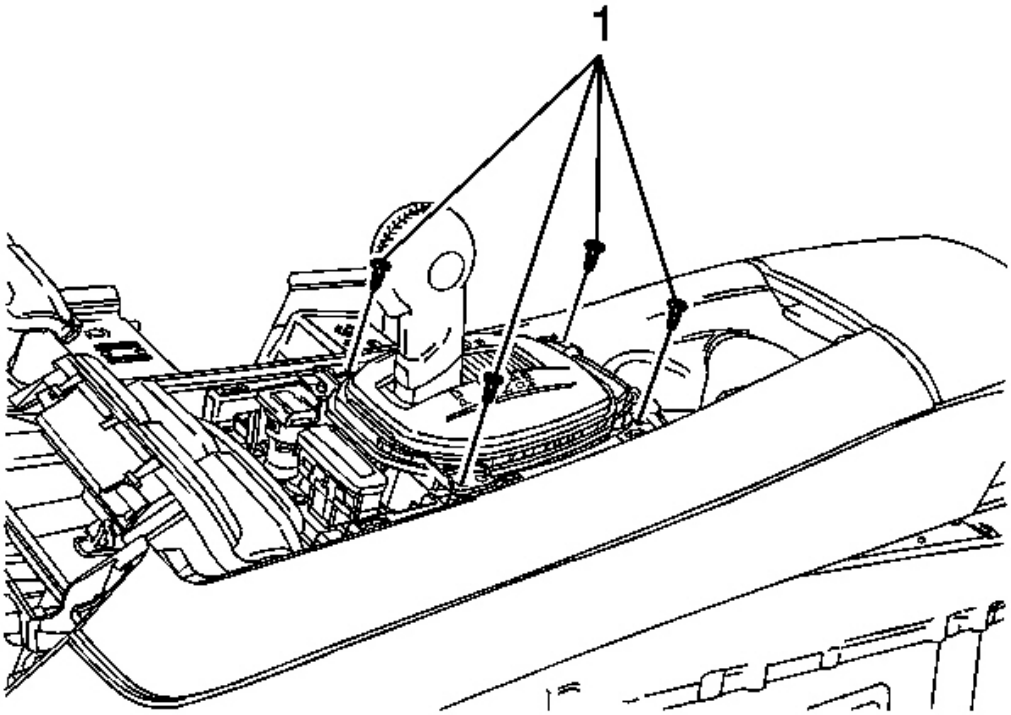

Fig. 10: Retainer Screws
Courtesy of GENERAL MOTORS CORP.

CAUTION: Refer to Fastener Caution .

2. Install the shift control assembly retaining screws (1) and tighten to 30 N.m (22 lb ft).
3. Install the electrical connector to the shift control assembly.
4. Install the front floor console cover. Refer to **Front Floor Console Front Cover Replacement (Without UMQ)** or **Front Floor Console Front Cover Replacement (With UMQ)** .
5. Raise and support the vehicle. Refer to **Lifting and Jacking the Vehicle** .

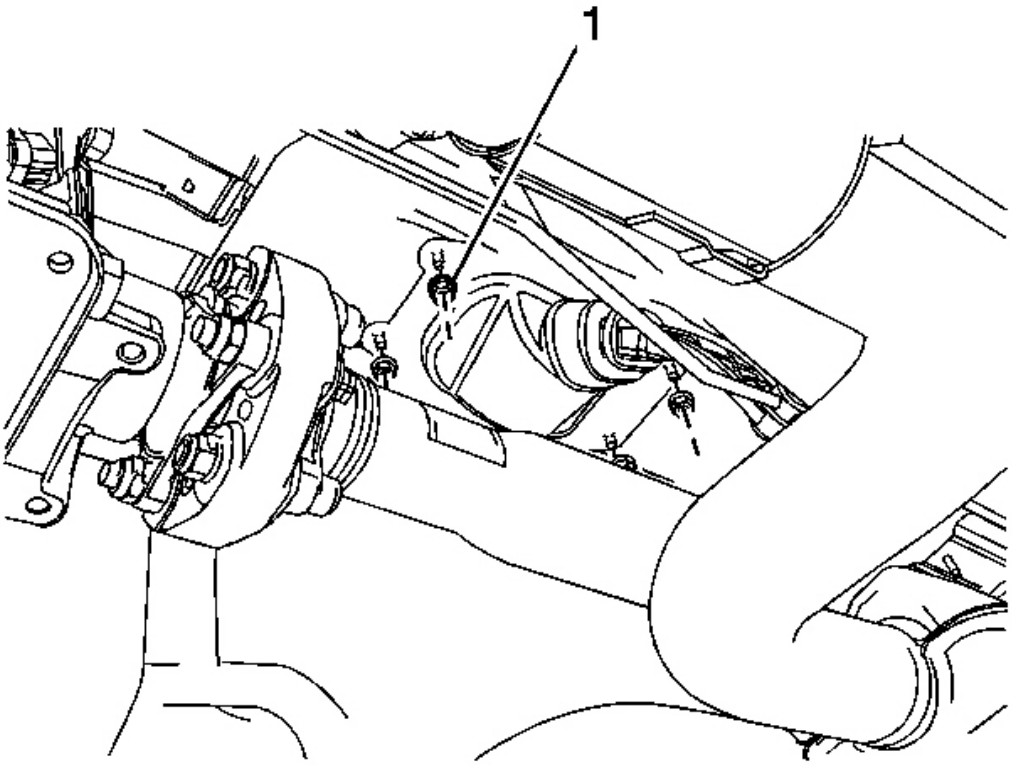

Fig. 11: Shift Control Retaining Nuts
Courtesy of GENERAL MOTORS CORP.

6. Install the shift control assembly retaining nuts (1) and tighten to 30 N.m (22 lb ft).

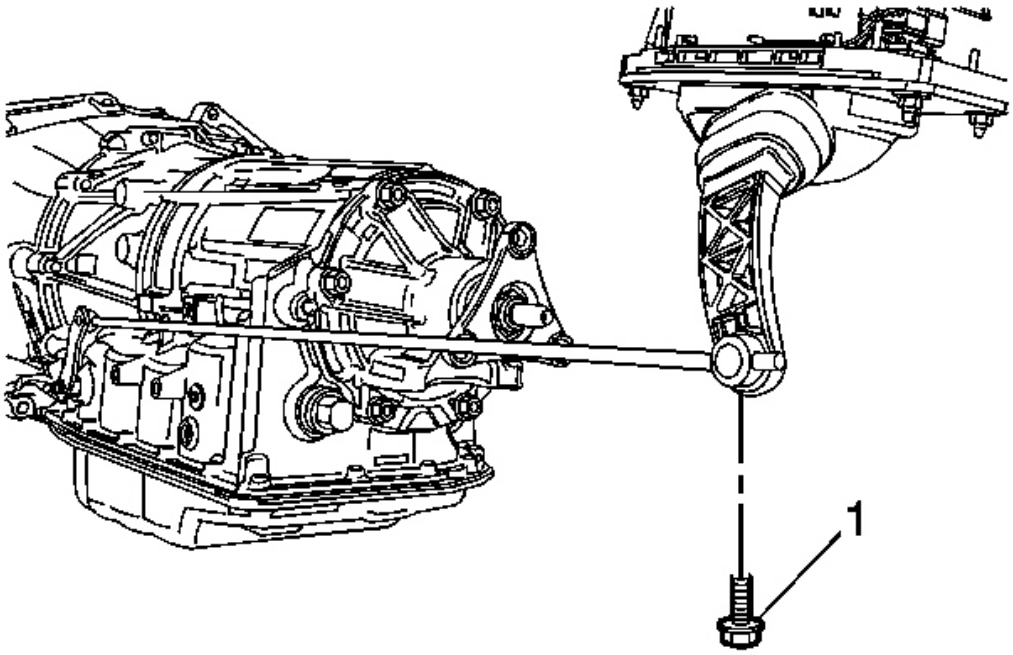

Fig. 12: Shift Control Linkage Rod Bolt
Courtesy of GENERAL MOTORS CORP.

7. Connect the shift control linkage rod to the shift control assembly.
8. Install the shift control linkage adjustment bolt finger tight.
9. Adjust the shift control linkage. Refer to **Shift Control Linkage Adjustment**.
10. Lower the vehicle.

MANUAL SHIFT AUXILIARY POSITION SWITCH REPLACEMENT - STEERING WHEEL

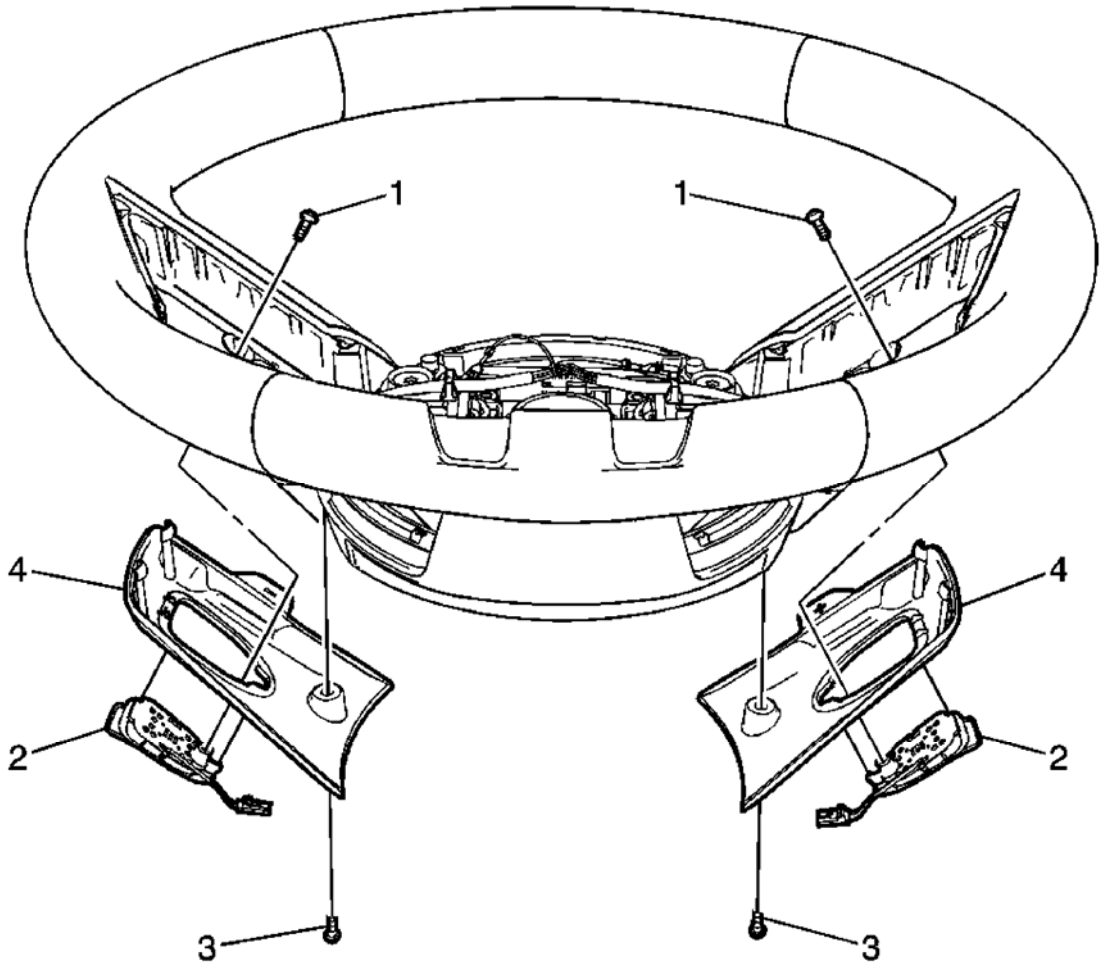

Fig. 13: Manual Shift Auxiliary Position Switch - Steering Wheel
Courtesy of GENERAL MOTORS CORP.

Callout	Component Name
Preliminary Procedures 1. On the left side of the steering wheel, remove the cruise control switch. Refer to **Cruise Control Switch Replacement** . 2. On the right side of the steering wheel, remove the radio and telephone control switch. Refer to **Radio and Telephone Control Switch Replacement** .	
1	Automatic Transmission Manual Shift Auxiliary Position Switch Bolt (Qty: 2) **CAUTION:** **Refer to Fastener Caution .**
	Automatic Transmission Manual Shift Auxiliary Position Switch (Qty: 2) **Procedure**

2	1. Disconnect any electrical connectors as necessary. 2. Ensure the switch is properly seated on the steering wheel during installation.
3	Accessory Switch Mounting Plate Bolt (Qty: 2) **Procedure:** Turn the steering wheel in order to access the bolt.
4	Accessory Switch Mounting Plate (Qty: 2) **Procedure:** Release the 2 retainers in order to remove the plate.

TRANSMISSION FLUID COOLER HOSE/PIPE QUICK-CONNECT FITTING DISCONNECTION AND CONNECTION

Removal Procedure

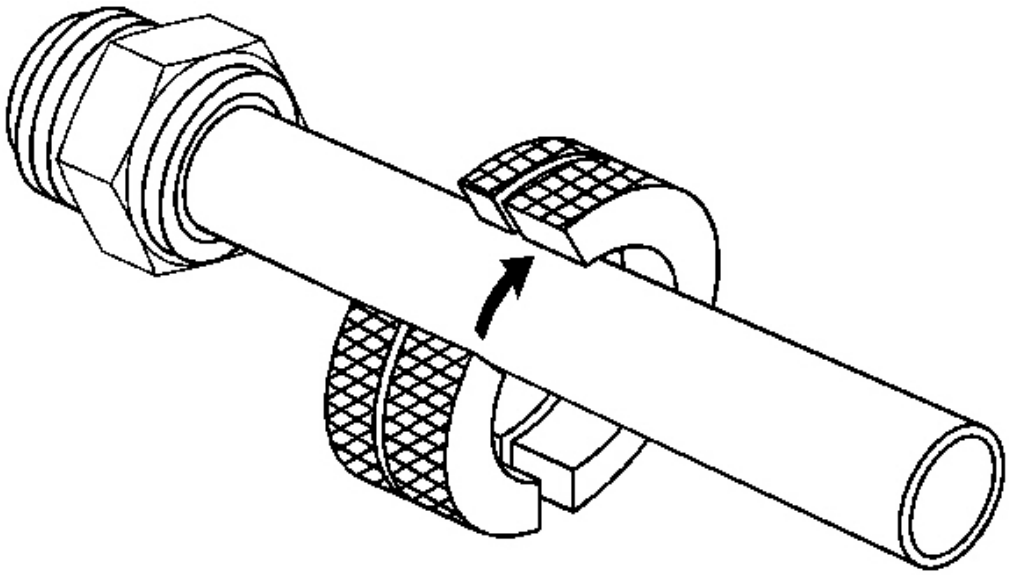

Fig. 14: Installing J 41623-B Onto Transmission Oil Cooler Pipe
Courtesy of GENERAL MOTORS CORP.

1. Install the **J 41623-B** onto the transmission oil cooler (TOC) pipe.

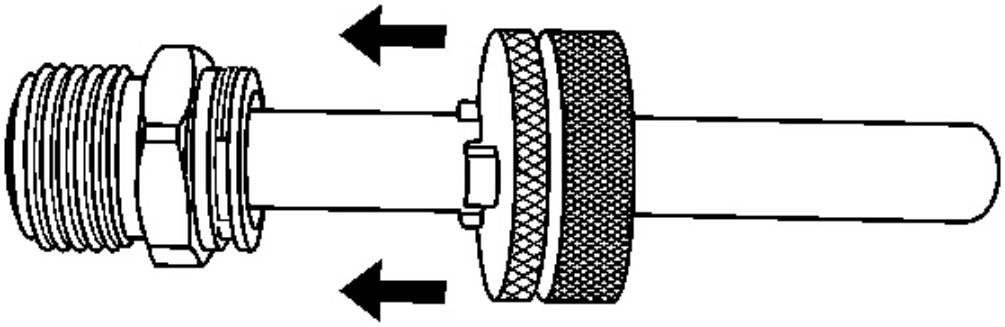

Fig. 15: Sliding J 41623-B Toward TOC Pipe Fitting
Courtesy of GENERAL MOTORS CORP.

2. Slide the **J 41623-B** toward the TOC pipe fitting.

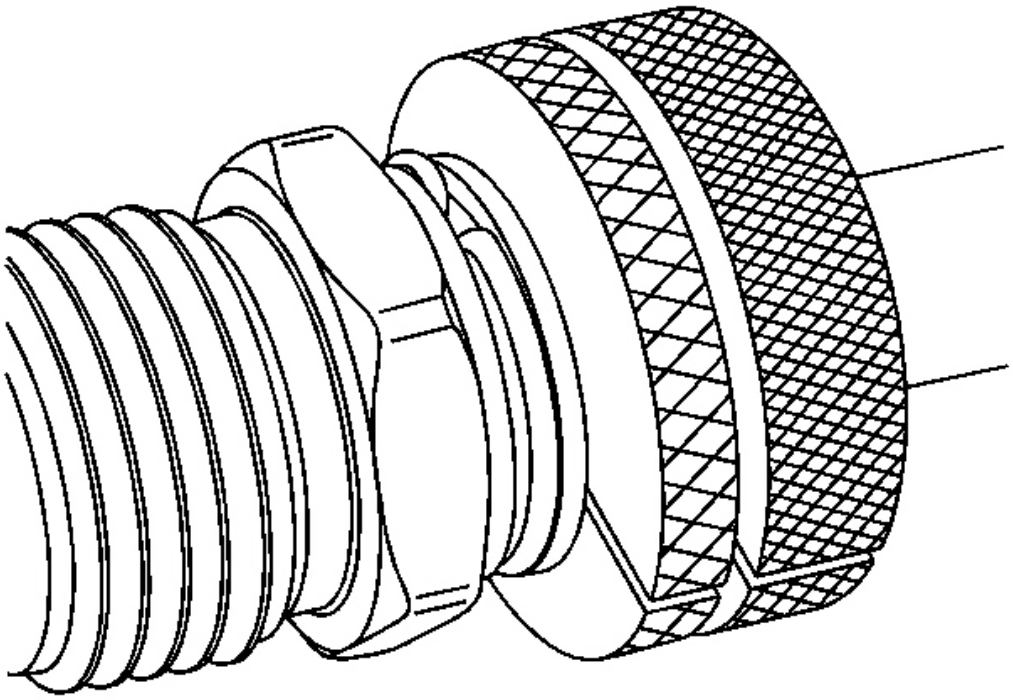

Fig. 16: J 41623-B & TOC Pipe Fitting
Courtesy of GENERAL MOTORS CORP.

IMPORTANT: Rotate the J 41623-B to engage the TOC pipe fitting's retainer slots. The J 41623-B should be nearly flush with the fitting.

3. Connect the **J 41623-B** onto the TOC pipe fitting.

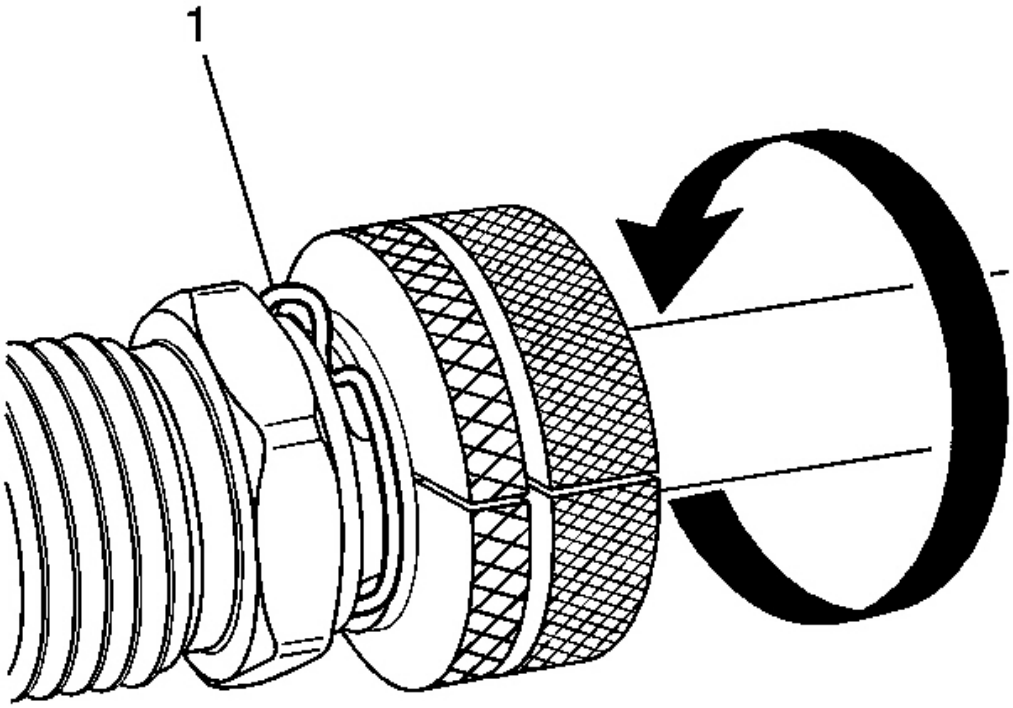

Fig. 17: Identifying Retainer Clip
Courtesy of GENERAL MOTORS CORP.

4. Rotate the **J 41623-B** until the retainer clip (1) rises above the fitting retainer seat.

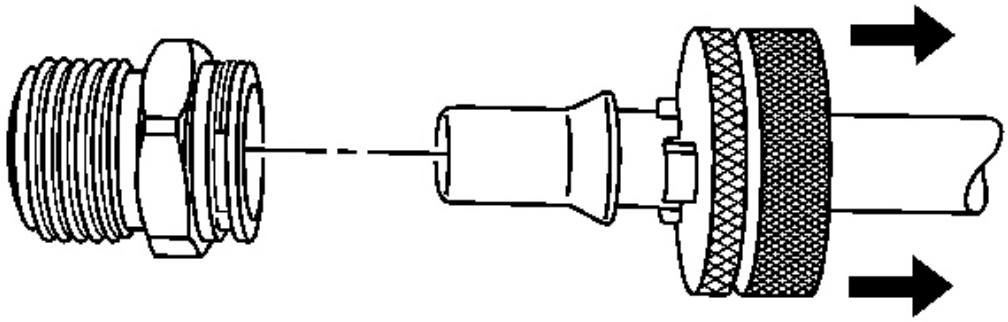

Fig. 18: Disengaging Pipe From TOC Pipe Fitting
Courtesy of GENERAL MOTORS CORP.

5. Pull back on the TOC pipe to disengage the pipe from the TOC pipe fitting.
6. Remove the **J 41623-B** from the TOC pipe.

Installation Procedure

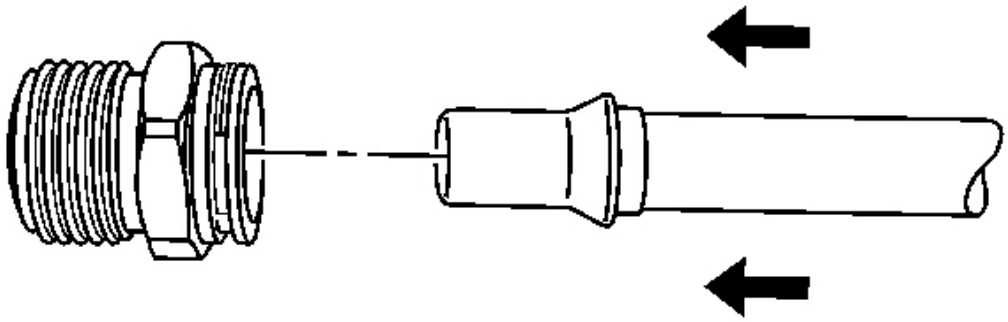

Fig. 19: Installing TOC Pipe Into TOC Pipe Fitting
Courtesy of GENERAL MOTORS CORP.

IMPORTANT: Inspect the TOC pipe fitting and retaining clip for signs of wear or damage. Replace the components if necessary.

1. Install the TOC pipe into the TOC pipe fitting.

   A distinct snap should be heard or felt when assembling the TOC pipe to the fitting.

2. To ensure the cooler line is properly installed, give the cooler pipe a gentle pull.

TRANSMISSION FLUID COOLER HOSE/PIPE REPLACEMENT

Removal Procedure

1. Raise and support the vehicle. Refer to **Lifting and Jacking the Vehicle** .
2. Remove transmission fluid cooler inlet pipe. Refer to **Transmission Fluid Cooler Inlet Pipe Replacement**.
3. Remove transmission fluid cooler outlet pipe (if equipped). Refer to **Transmission Fluid Cooler Outlet Pipe Replacement**.

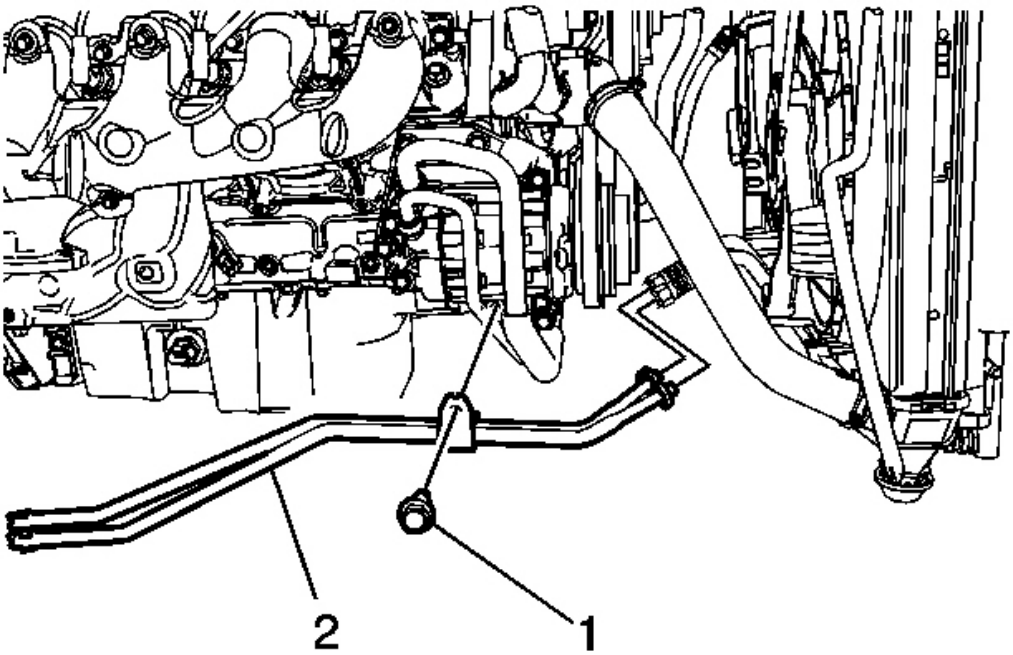

Fig. 20: Transmission Fluid Cooler Hose/Pipe & Bolt At Air Conditioning Bracket
Courtesy of GENERAL MOTORS CORP.

4. Remove transmission fluid cooler hose/pipe bolt (1).
5. Remove transmission fluid cooler hose/pipe (2) from air conditioning bracket.

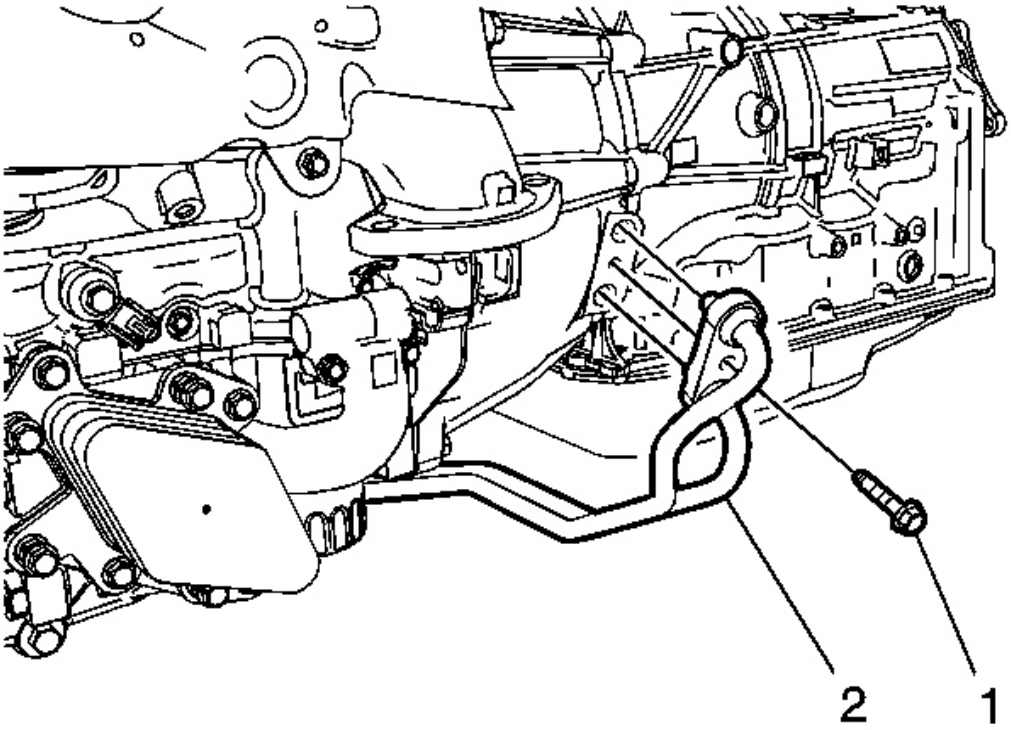

Fig. 21: Transmission Fluid Cooler Hose/Pipe & Bolt At Transmission
Courtesy of GENERAL MOTORS CORP.

6. Remove transmission fluid cooler hose/pipe bolt (1).
7. Remove transmission fluid collar hose/pipe (2) from transmission and discard old seals.

Installation Procedure

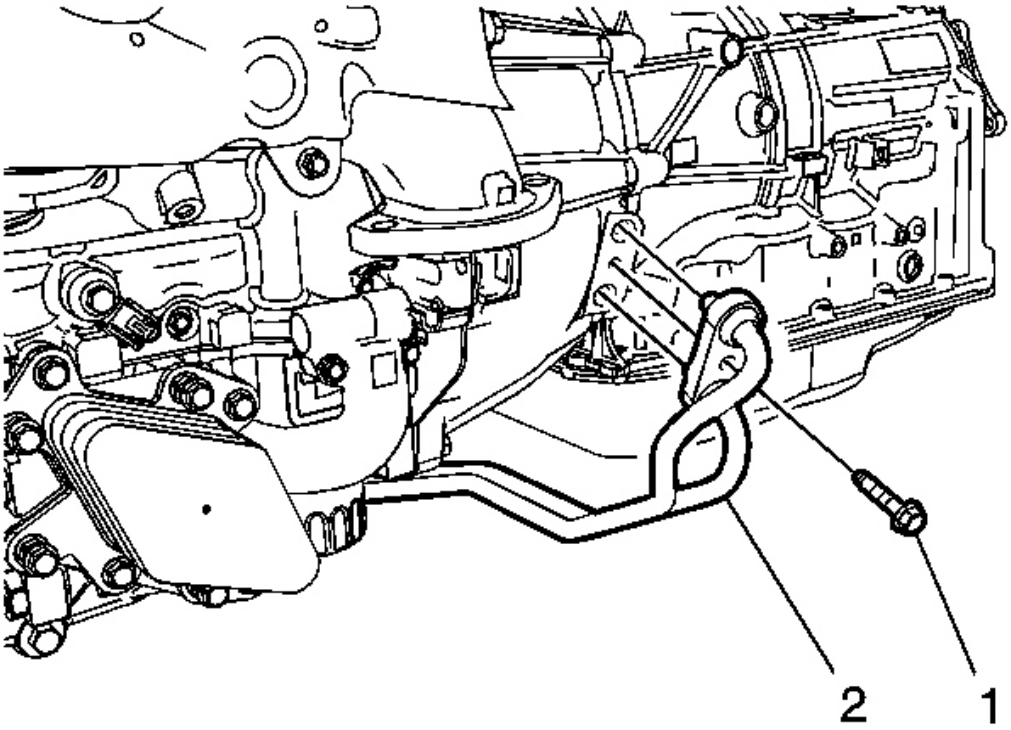

Fig. 22: Transmission Fluid Cooler Hose/Pipe & Bolt At Transmission
Courtesy of GENERAL MOTORS CORP.

1. Install transmission fluid collar hose/pipe (2) to the transmission with new seals.
2. Install transmission fluid cooler hose/pipe bolt (1) and tighten to 22 N.m (16 lb ft).

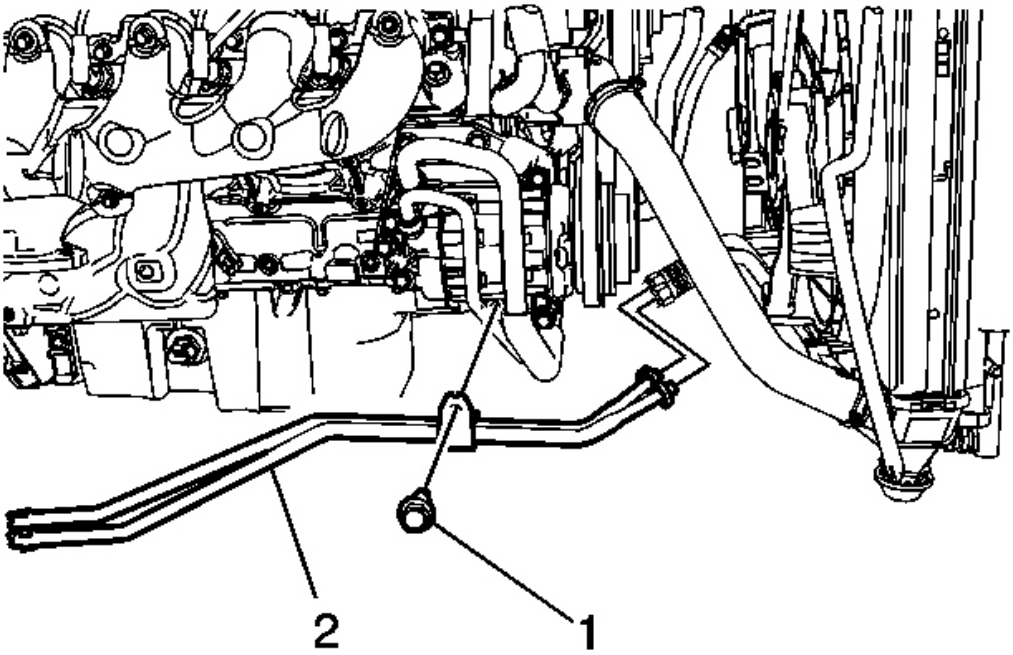

Fig. 23: Transmission Fluid Cooler Hose/Pipe & Bolt At Air Conditioning Bracket
Courtesy of GENERAL MOTORS CORP.

3. Install transmission fluid collar hose/pipe (2) to the air conditioning bracket.
4. Install transmission fluid cooler hose/pipe bolt (1) and tighten to 22 N.m (16 lb ft)
5. Install transmission fluid cooler outlet pipe (if equipped). Refer to **Transmission Fluid Cooler Outlet Pipe Replacement**.
6. Install transmission fluid cooler inlet pipe. Refer to **Transmission Fluid Cooler Inlet Pipe Replacement**.
7. Lower the vehicle.

TRANSMISSION FLUID COOLER INLET PIPE REPLACEMENT

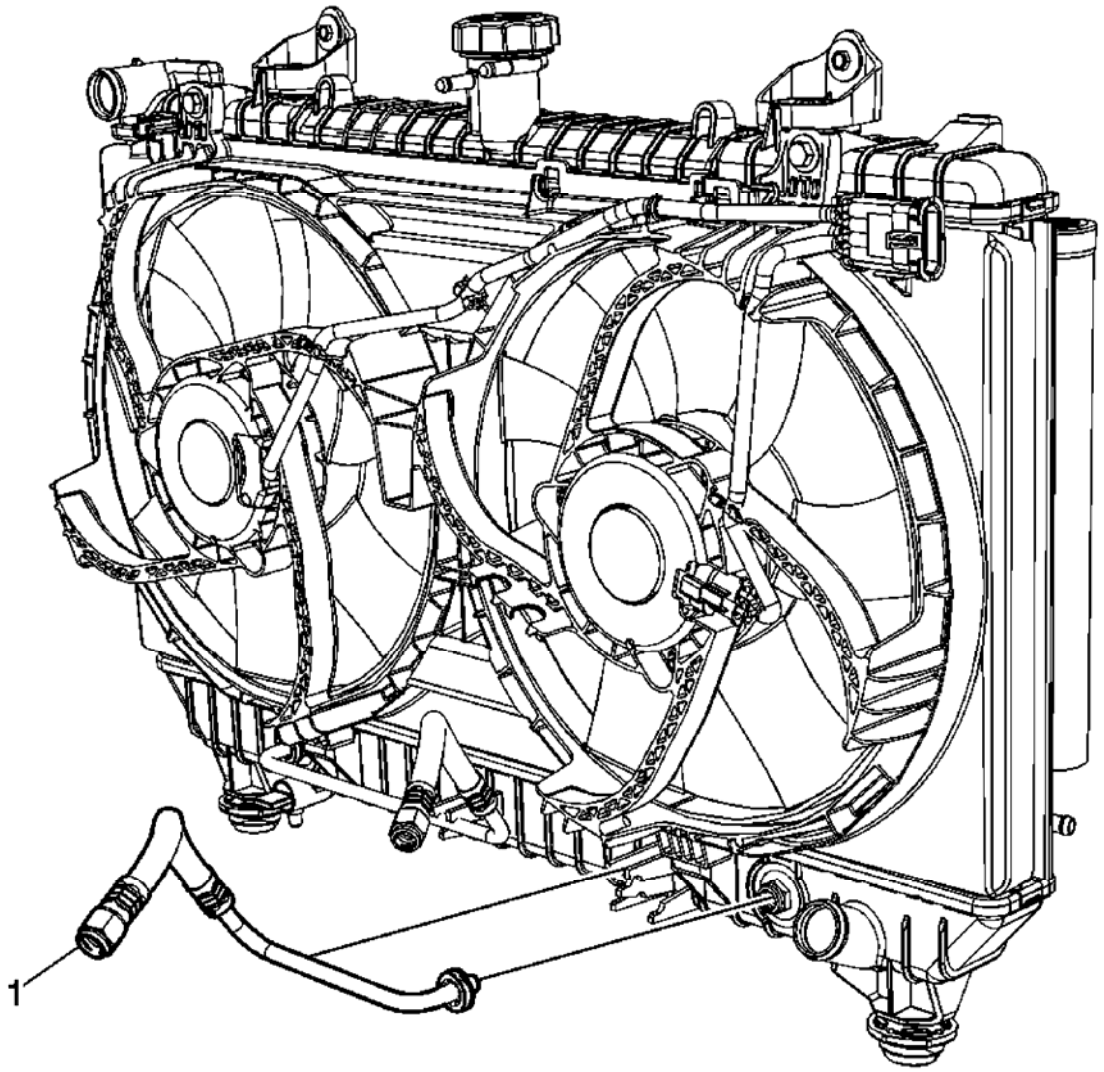

Fig. 24: Transmission Fluid Cooler Inlet Pipe
Courtesy of GENERAL MOTORS CORP.

Callout	Component Name
Preliminary Procedures 1. Raise and support the vehicle. Refer to **Lifting and Jacking the Vehicle** . 2. Remove transmission fluid cooler hose/pipe. Refer to **Transmission Fluid Cooler Hose/Pipe Replacement**.	
1	Transmission Fluid Cooler Inlet Pipe **Procedure:** Disconnect the transmission line from the radiator. Refer to **Transmission Fluid Cooler Hose/Pipe Quick-Connect Fitting Disconnection and Connection**.

TRANSMISSION FLUID COOLER OUTLET PIPE REPLACEMENT

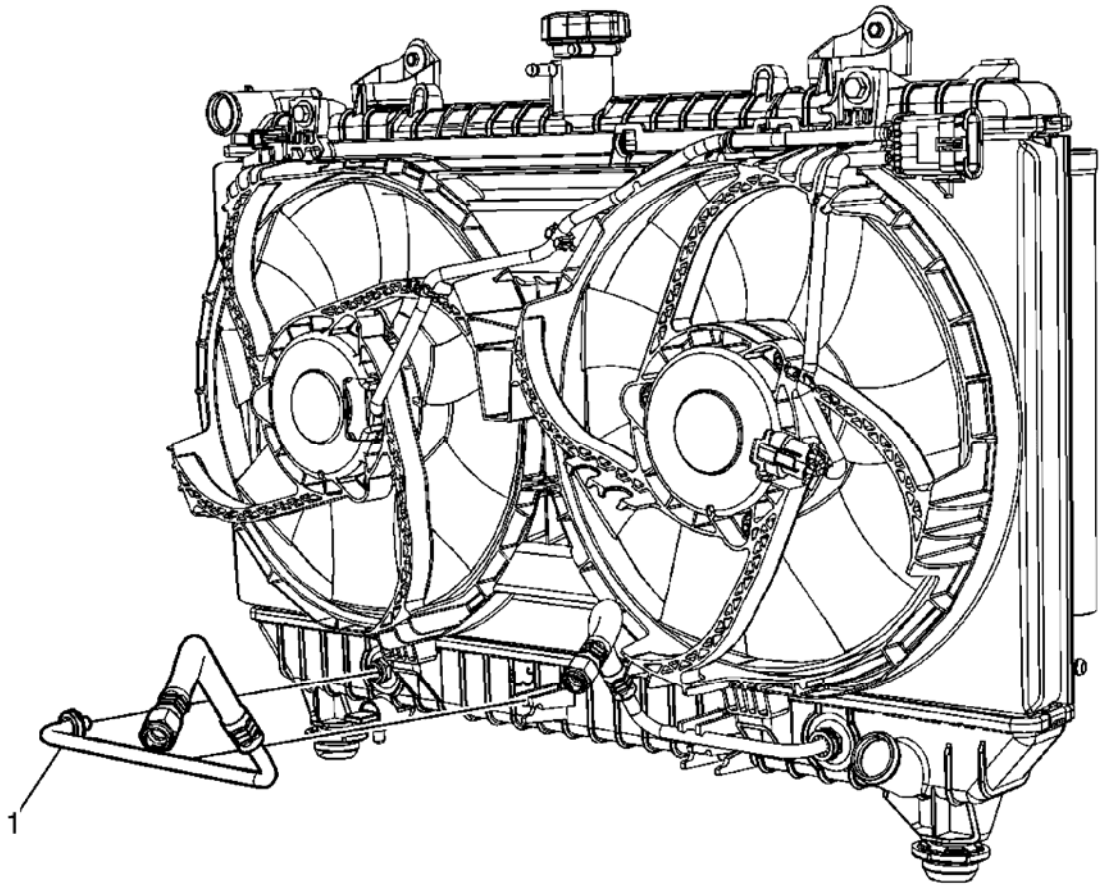

Fig. 25: Transmission Fluid Cooler Outlet Pipe
Courtesy of GENERAL MOTORS CORP.

Callout	Component Name
Preliminary Procedures 1. Raise and support the vehicle. Refer to **Lifting and Jacking the Vehicle** . 2. Remove transmission fluid cooler hose/pipe. Refer to **Transmission Fluid Cooler Hose/Pipe Replacement**.	
1	Transmission Fluid Cooler Outlet Pipe **Procedure:** Disconnect the transmission line from the radiator. Refer to **Transmission Fluid Cooler Hose/Pipe Quick-Connect Fitting Disconnection and Connection**.

AUTOMATIC TRANSMISSION FLUID PRESSURE TEST HOLE PLUG REPLACEMENT

Removal Procedure

1. Raise and support the vehicle. Refer to **Lifting and Jacking the Vehicle**

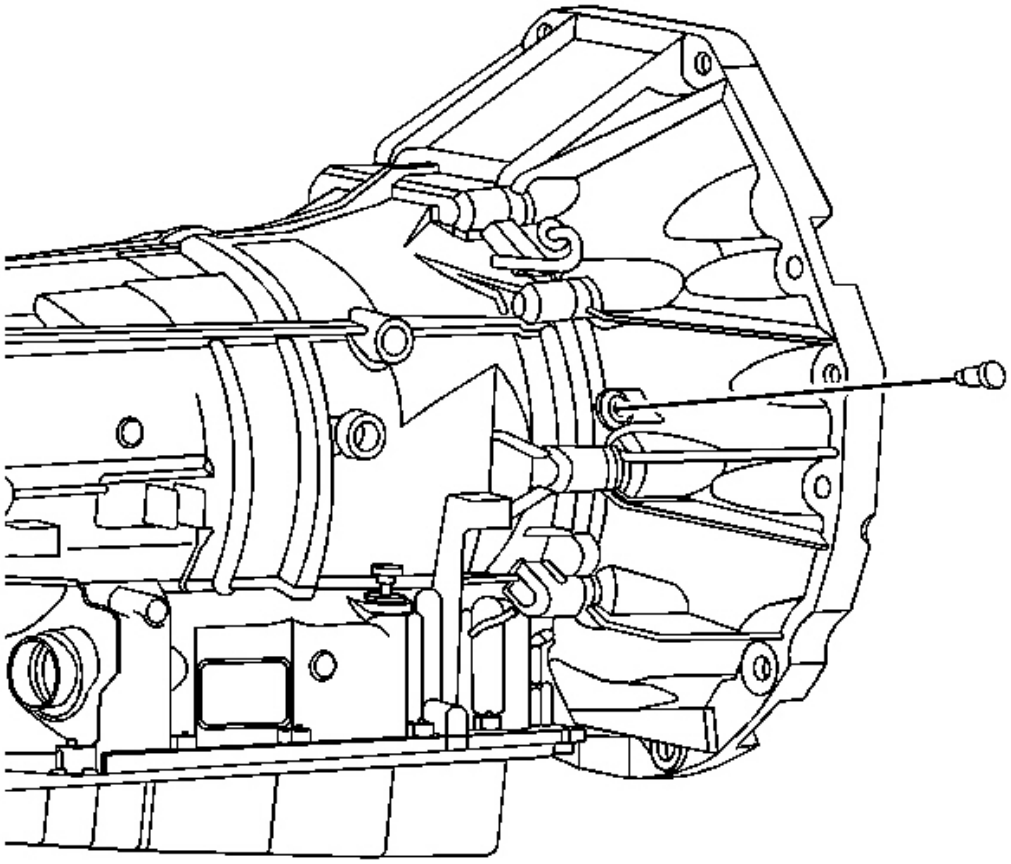

Fig. 26: View Of Oil Pressure Test Plug
Courtesy of GENERAL MOTORS CORP.

2. Clean the surrounding area of the oil pressure test plug.
3. Remove the oil pressure test plug.

Installation Procedure

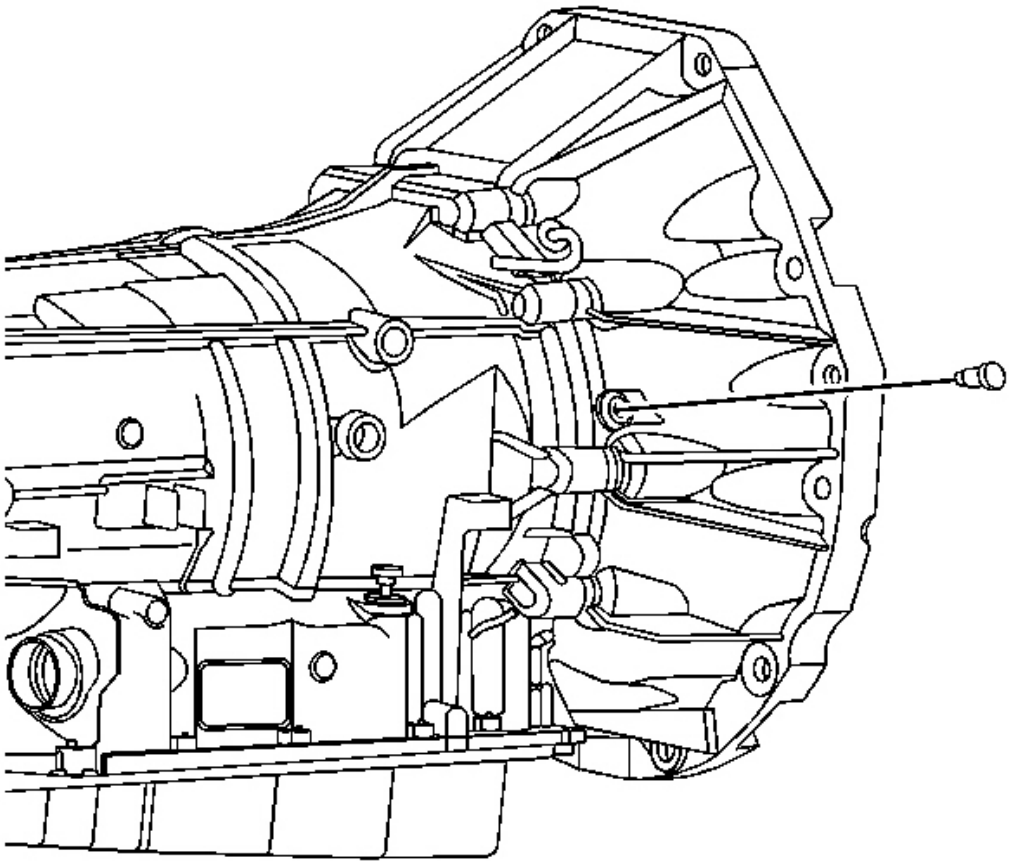

Fig. 27: View Of Oil Pressure Test Plug
Courtesy of GENERAL MOTORS CORP.

CAUTION: Refer to Fastener Caution .

1. Install the oil pressure test plug and tighten to 11 N.m (97 lb in).
2. Check the transmission fluid level (fill if necessary).
3. Lower the vehicle.

AUTOMATIC TRANSMISSION ELECTRICAL CONNECTOR PASSAGE SLEEVE REPLACEMENT

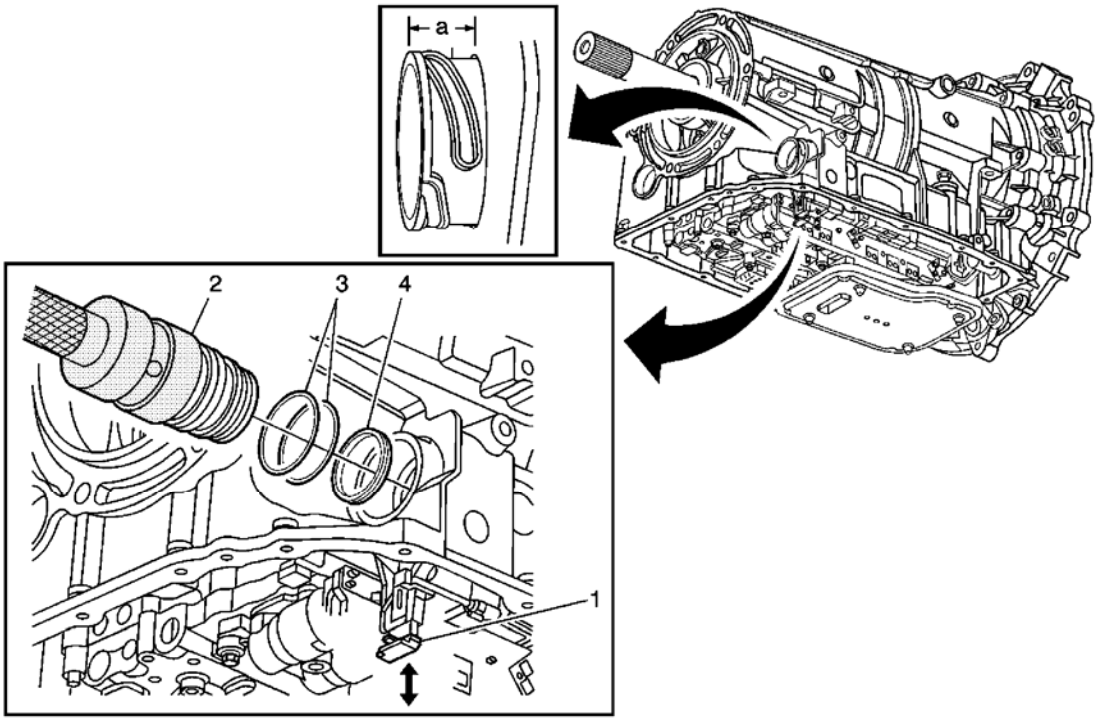

Fig. 28: Automatic Transmission Electrical Connector Passage Sleeve
Courtesy of GENERAL MOTORS CORP.

Callout	Component Name
CAUTION: **Orientate the alignment tab inside the passage sleeve with the slot in the electrical connector of the control solenoid valve assembly. Push the sleeve straight into the case bore and connector. Do NOT rotate the sleeve at any time. Ensure the sleeve is fully seated into the case. When the sleeve is properly installed, the distance from the case surface to the end of the sleeve should be 14-16 mm. Even though the correct electrical connections may still be maintained, failure to ensure proper installation of the sleeve may result in a fluid leak around the sleeve lip seal and into the sleeve cavity.** **Preliminary Procedures** 1. Raise and support the vehicle. Refer to **Lifting and Jacking the Vehicle** 2. Remove the transmission oil pan. Refer to **Automatic Transmission Fluid, Fluid Pan and/or Filter Replacement** 3. Disconnect the vehicle wire harness electrical connector from the transmission electrical connector passage sleeve.	
1	Electrical Connector Slide Lock **Tip:** Pull down on the slide lock to remove the sleeve. Push up on the slide lock after sleeve installation.
	Electrical Connector Passage Sleeve

2	**Tip:** • Use the **DT 47715** Electrical Connector Passage Sleeve Remover/Installer and **J 42183** Driver Handle to remove and install the electrical connector passage sleeve. • The distance (a) from the case surface to the end of the sleeve should be 14-16 mm. **Special Tools** • **DT 47715** Electrical Connector Passage Sleeve Remover/Installer. See **Special Tools** . • **J 42183** Driver Handle
3	O-Ring Seal (Qty: 2) **Tip:** Use a NEW O-ring seal.
4	Lip Seal **Tip:** Use a NEW lip seal.

AUTOMATIC TRANSMISSION FLUID, FLUID PAN AND/OR FILTER REPLACEMENT

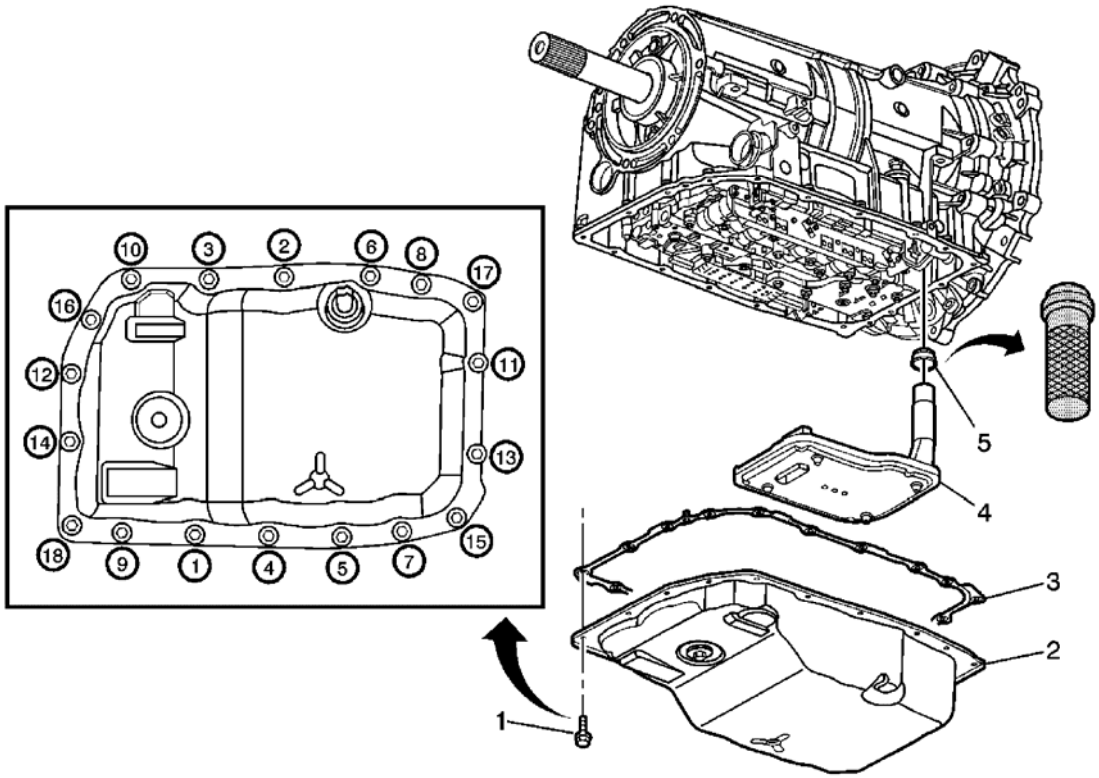

Fig. 29: Automatic Transmission Fluid, Fluid Pan And/Or Filter
Courtesy of GENERAL MOTORS CORP.

Callout	Component Name

Preliminary Procedures

1. Raise and support the vehicle. Refer to **Lifting and Jacking the Vehicle**
2. Place a suitable drain pan under the transmission.

1	Transmission Fluid Pan Bolt (Qty: 18) **CAUTION:** **Refer to Fastener Caution .** **Tip:** Tighten the bolts in the sequence shown and tighten to 9 N.m (80 lb in).
2	Transmission Fluid Pan Assembly **Tip:** • Check the condition of the draining fluid. • Fill the transmission with the proper fluid. • Fill the transmission with the proper amount of transmission fluid.
3	Transmission Fluid Pan Gasket **Tip:** The fluid pan gasket is reusable. Inspect the gasket to determine if it may be reused.
4	Fluid Filter Assembly **Tip:** • Pull the fluid filter assembly straight out. Do not bend or twist the filter neck. • Use a new fluid filter assembly.
5	Fluid Filter Seal Assembly **CAUTION:** **Do not damage the case sealing surface when removing the filter seal assembly.** **Tip:** • Use a screwdriver or snap ring pliers to remove the filter seal. • Use the **DT 47848** and the **J 42183** to install the filter seal. See **Special Tools** . • Use a new fluid filter seal assembly. • Lubricate the filter seal with transmission fluid before installing the filter. **Special Tools** • **DT 47848** Seal Installer. See **Special Tools** . • **J 42183** Driver Handle

TRANSMISSION MOUNT INSPECTION

CAUTION: In order to avoid oil pan damage and possible engine failure, insert a block of wood that spans the width of the oil pan bottom between the oil pan and the jack support.

1. Raise the transmission/transaxle in order to remove the weight from the transmission/transaxle mount and create slight tension in the rubber.
2. Observe the transmission/transaxle mount while raising the transmission/transaxle. Replace the transmission/transaxle mount if the transmission/transaxle mount exhibits any of the following conditions:

   NOTE: Black paint on the rubber will crack with time, this does no constitute a failure.

   - The hard rubber surface is covered with heat check cracks.
   - The rubber is separated from the metal plate of the transmission/transaxle mount.
   - The rubber is split through the center of the transmission/transaxle mount.
3. If there is movement between the metal plate of the transmission/transaxle mount and its attaching points, lower the transmission/transaxle on the transmission/transaxle mount. Tighten the bolts or nuts attaching the transmission/transaxle mount to the frame or transmission/transaxle mount bracket.

TRANSMISSION MOUNT REPLACEMENT

Removal Procedure

1. Raise and support the vehicle. Refer to **Lifting and Jacking the Vehicle**

   NOTE: The engine mounts must NOT bend or deflect from the vertical position, damage to the mount will occur.

2. Support the transmission with a suitable jack and a block of wood.
3. Remove the transmission mount nuts.
4. Remove the transmission support retaining bolts, then remove the transmission support from the vehicle

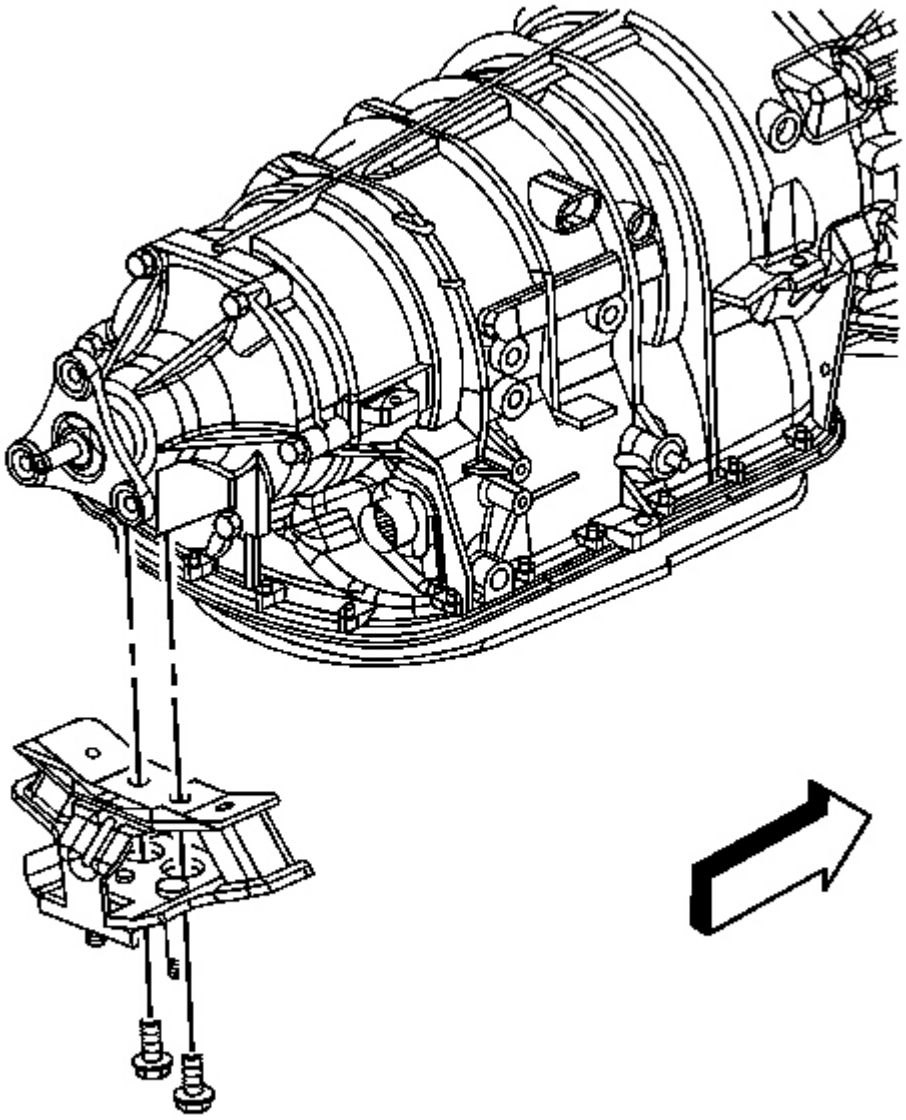

Fig. 30: Identifying Transmission Mount Bolts
Courtesy of GENERAL MOTORS CORP.

5. Remove the transmission mount bolts.
6. Remove the transmission mount from the transmission.

Installation Procedure

NOTE: **The engine mounts must NOT bend or deflect from the vertical position, damage to the mount will occur.**

1. Install the transmission mount to the transmission.

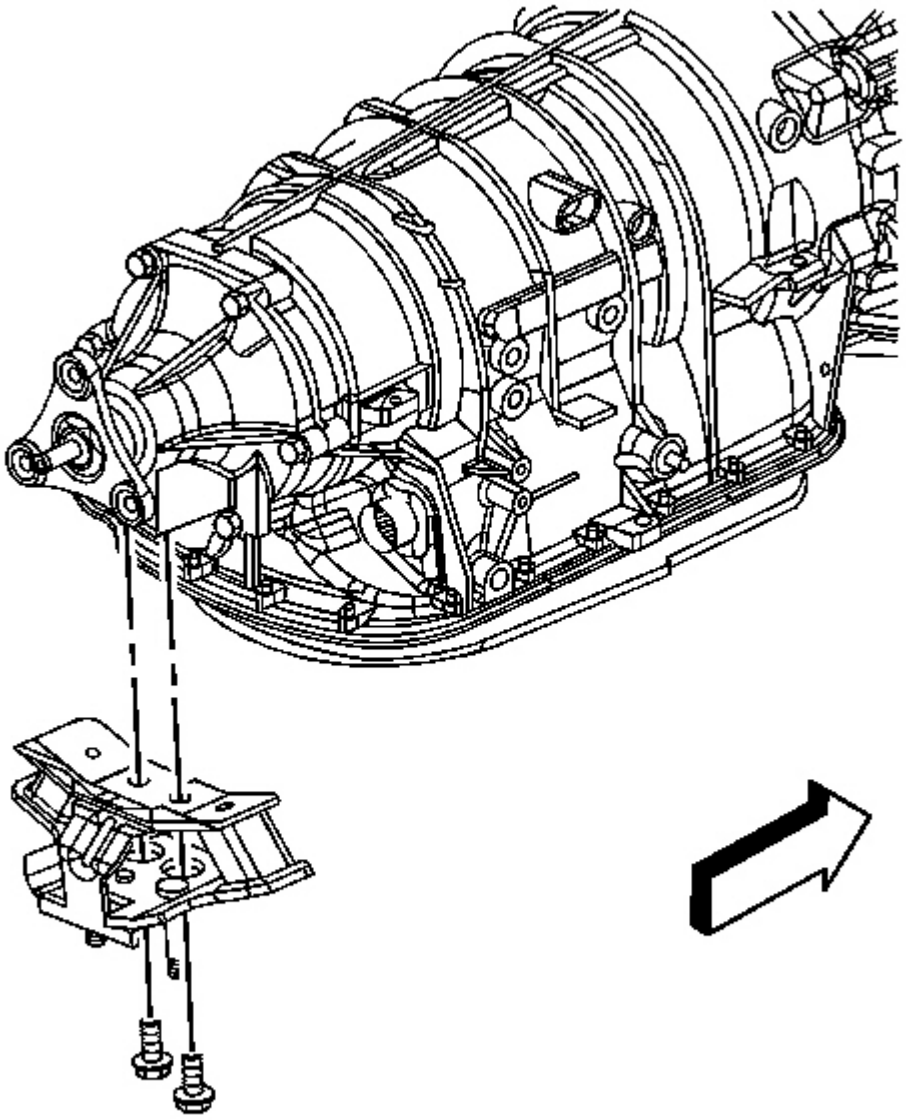

Fig. 31: Identifying Transmission Mount Bolts
Courtesy of GENERAL MOTORS CORP.

CAUTION: Refer to Fastener Caution .

2. Install the transmission mount bolts and tighten to 58 N.m (43 lb ft).
3. Install the transmission support.
4. Install the transmission support bolts and tighten to 58 N.m (43 lb ft)
5. Install the transmission mount nuts and tighten to 58 N.m (43 lb ft)
6. Remove the support from under the transmission.
7. Lower the vehicle.

CASE EXTENSION AND GASKET REPLACEMENT

Special Tools

J 45012 Holding Fixture

Removal Procedure

1. Raise and support the vehicle. Refer to **Lifting and Jacking the Vehicle**
2. Remove the exhaust system. Refer to **Exhaust Muffler with Resonator, Exhaust, and Tail Pipe Replacement (H-Pipe)** or **Exhaust Muffler with Resonator, Exhaust, and Tail Pipe Replacement (Vehicle Service)**
3. Remove the propeller shaft. Refer to **Two-Piece Propeller Shaft Replacement**
4. Support the transmission with a suitable jack.
5. Remove the transmission mount assembly. Refer to **Transmission Mount Replacement**

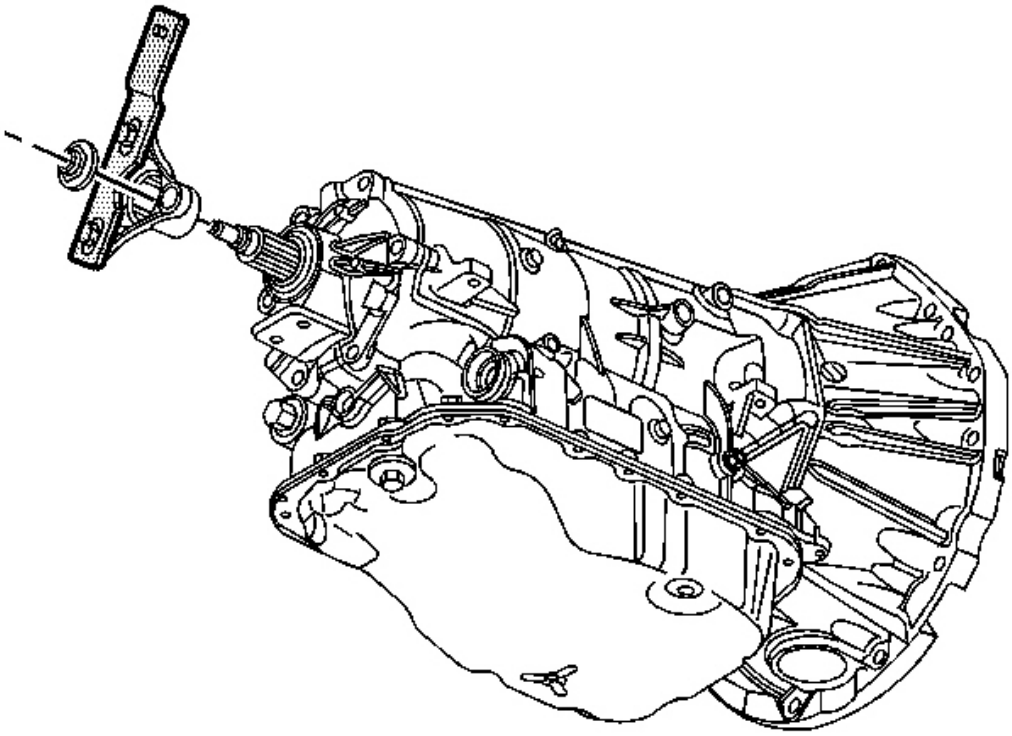

Fig. 32: View Of J 45012
Courtesy of GENERAL MOTORS CORP.

6. Install the propeller shaft flange holding fixture **J 45012** .

CAUTION: Do not reuse the flange nut. Reusing the flange nut may cause damage to the transmission.

7. Remove and discard the propeller shaft flange nut.
8. Remove the propeller shaft flange. Refer to **Propeller Shaft Transmission Flange Removal (6L50)** or **Propeller Shaft Transmission Flange Removal (6L80)**

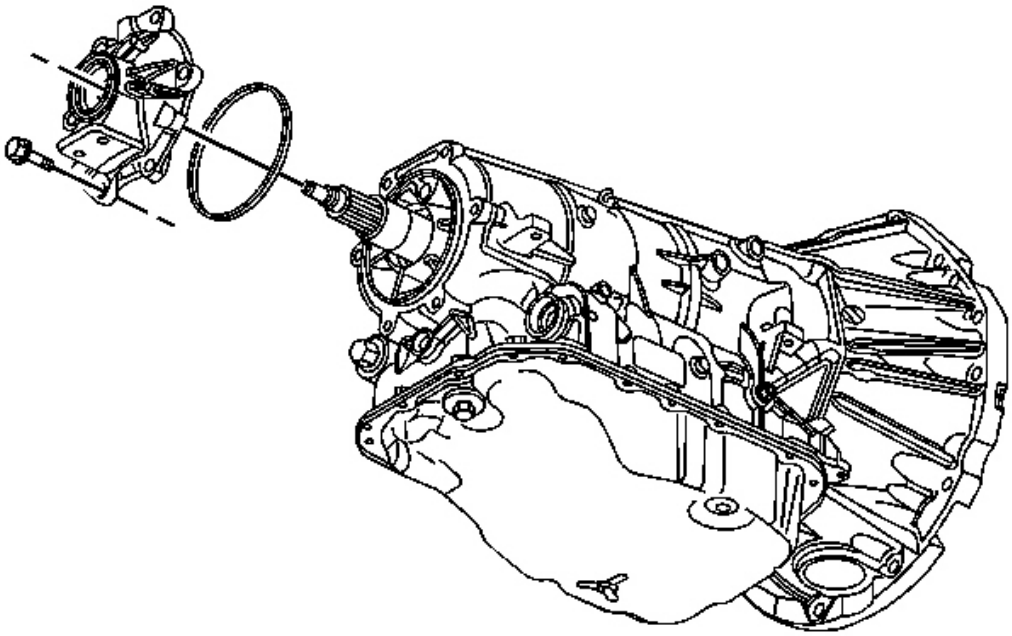

Fig. 33: View Of Case Extension Housing Seal
Courtesy of GENERAL MOTORS CORP.

9. Remove the case extension housing bolts.
10. Remove the case extension housing.
11. Remove the case extension housing seal.

Installation Procedure

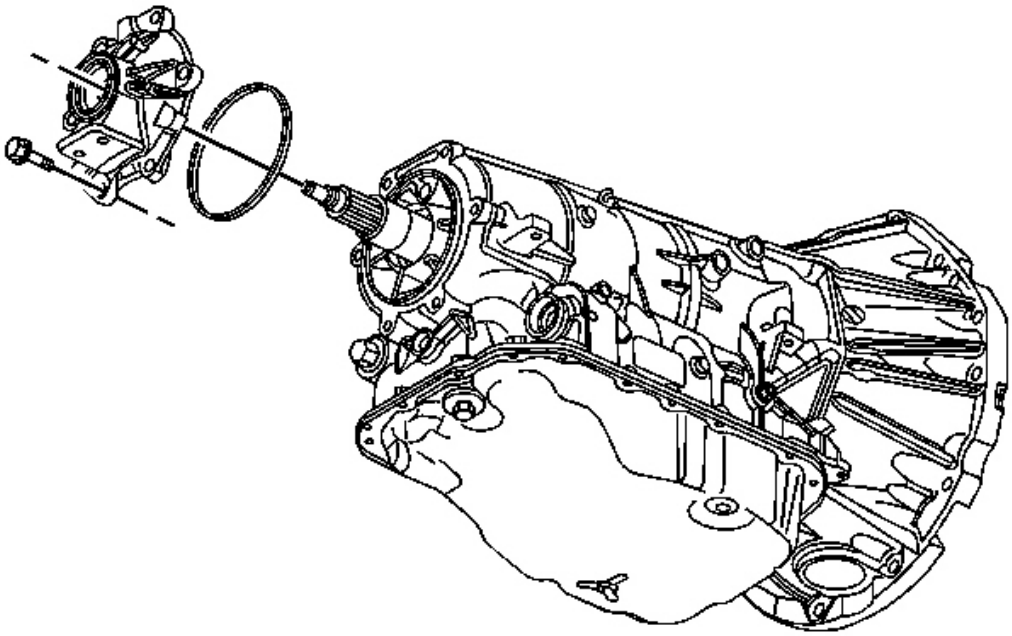

Fig. 34: View Of Case Extension Housing Seal
Courtesy of GENERAL MOTORS CORP.

1. Install the case extension housing seal.
2. Install the case extension housing.
3. Install by hand the case extension housing bolts.

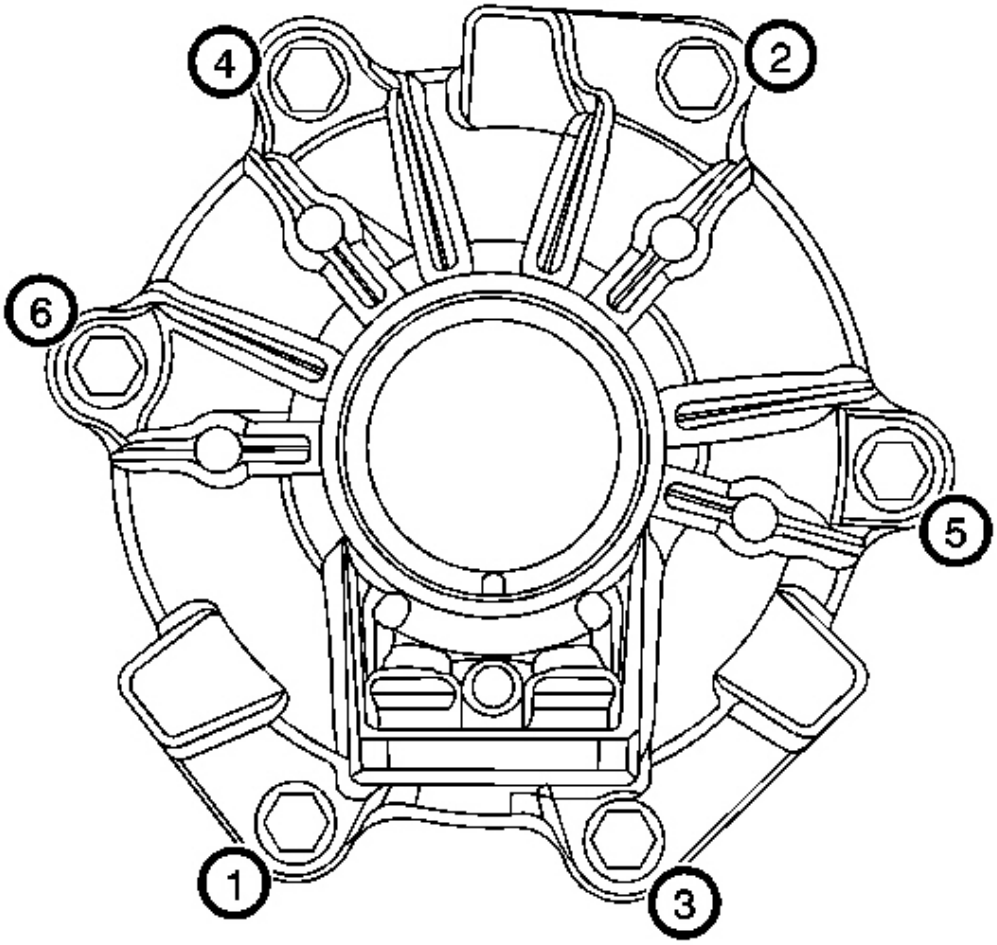

Fig. 35: Identifying Case Extension Housing Bolt Tightening Sequence
Courtesy of GENERAL MOTORS CORP.

CAUTION: Refer to Fastener Caution .

4. Secure the case extension housing bolts in the specified sequence and tighten to 50 N.m (37 lb ft).

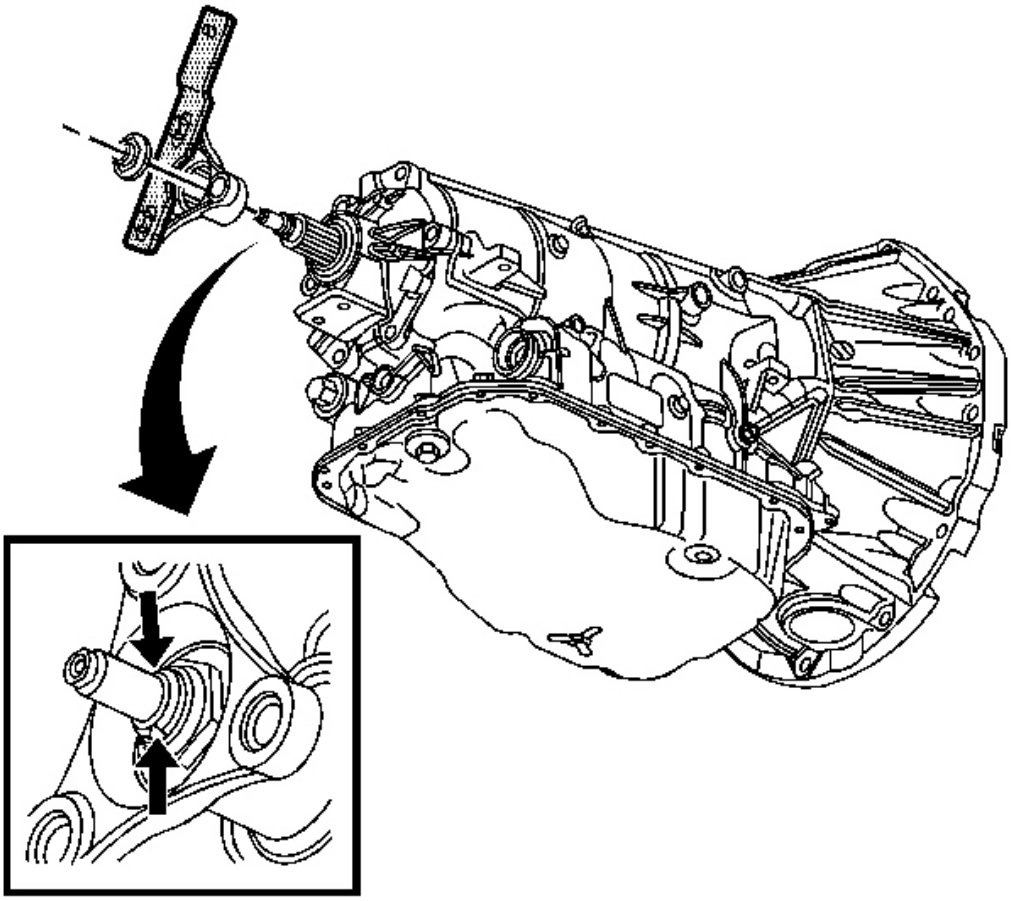

Fig. 36: View Of J 45012
Courtesy of GENERAL MOTORS CORP.

5. Install the prop shaft flange. Refer to **Propeller Shaft Transmission Flange Removal (6L50)** or **Propeller Shaft Transmission Flange Removal (6L80)**

CAUTION: Stake the flange nut onto the output shaft. Use the two staking grooves on the shaft to locate the staking points. Failure to stake the flange nut may result in damage to the transmission.

NOTE: Use a NEW propeller shaft flange nut.

6. Install the NEW propeller shaft flange nut and tighten to 105 N.m (77 lb ft).
7. Remove the propeller shaft flange holding fixture **J 45012** .

8. Install the transmission mount assembly. Refer to **Transmission Mount Replacement**
9. Remove the transmission jack.
10. Install the propeller shaft. Refer to **Two-Piece Propeller Shaft Replacement**
11. Install the exhaust system. Refer to **Exhaust Muffler with Resonator, Exhaust, and Tail Pipe Replacement (H-Pipe)** or **Exhaust Muffler with Resonator, Exhaust, and Tail Pipe Replacement (Vehicle Service)**
12. Lower the vehicle.

TRANSMISSION OUTPUT SHAFT SEAL REPLACEMENT

Special Tools

- **J 45012** Holding Fixture
- **J 45000** Seal Remover
- **J 37212** Front Output Shaft Seal Installer. See **Special Tools** .

Removal Procedure

1. Raise and support the vehicle. Refer to **Lifting and Jacking the Vehicle** .
2. Remove the exhaust system. Refer to **Exhaust Muffler with Resonator, Exhaust, and Tail Pipe Replacement (H-Pipe)** or **Exhaust Muffler with Resonator, Exhaust, and Tail Pipe Replacement (Vehicle Service)** .
3. Remove the drive shaft.
4. Remove the propeller shaft. Refer to **Two-Piece Propeller Shaft Replacement** .
5. Support the transmission with a suitable jack.
6. Remove the transmission mount assembly. Refer to **Transmission Mount Replacement**.

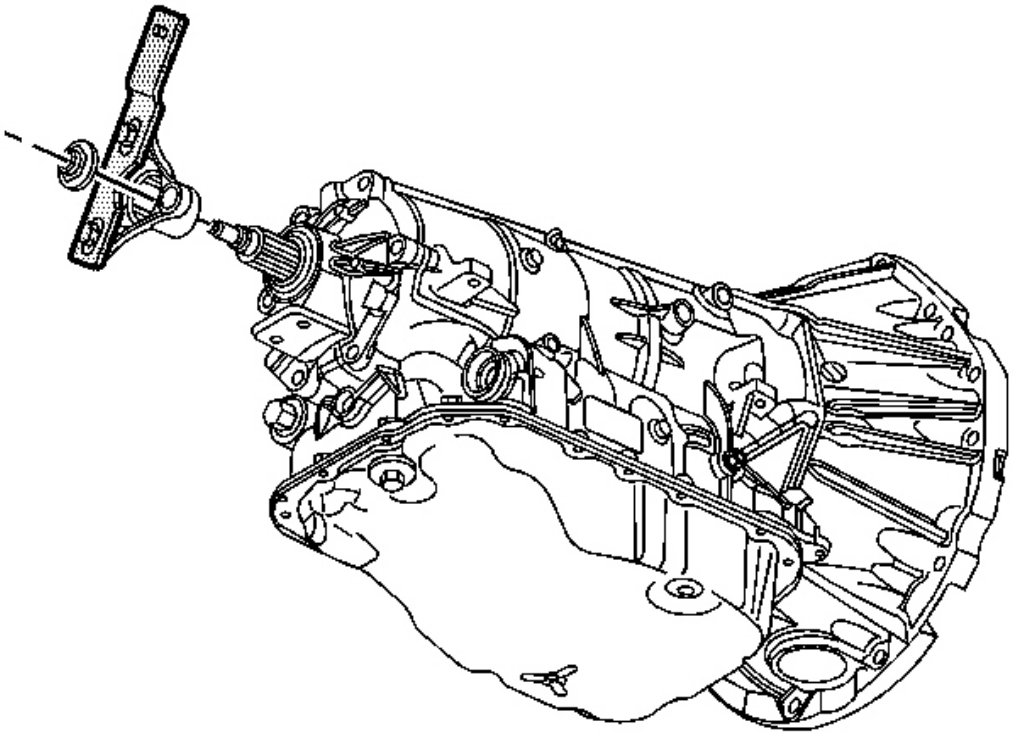

Fig. 37: View Of J 45012
Courtesy of GENERAL MOTORS CORP.

7. Install the propeller shaft flange holding fixture **J 45012** .

CAUTION: Do not reuse the flange nut. Reusing the flange nut may cause damage to the transmission.

8. Remove and discard the propeller shaft flange nut.
9. Remove the propeller shaft flange. Refer to **Propeller Shaft Transmission Flange Removal (6L50)** or **Propeller Shaft Transmission Flange Removal (6L80)** .

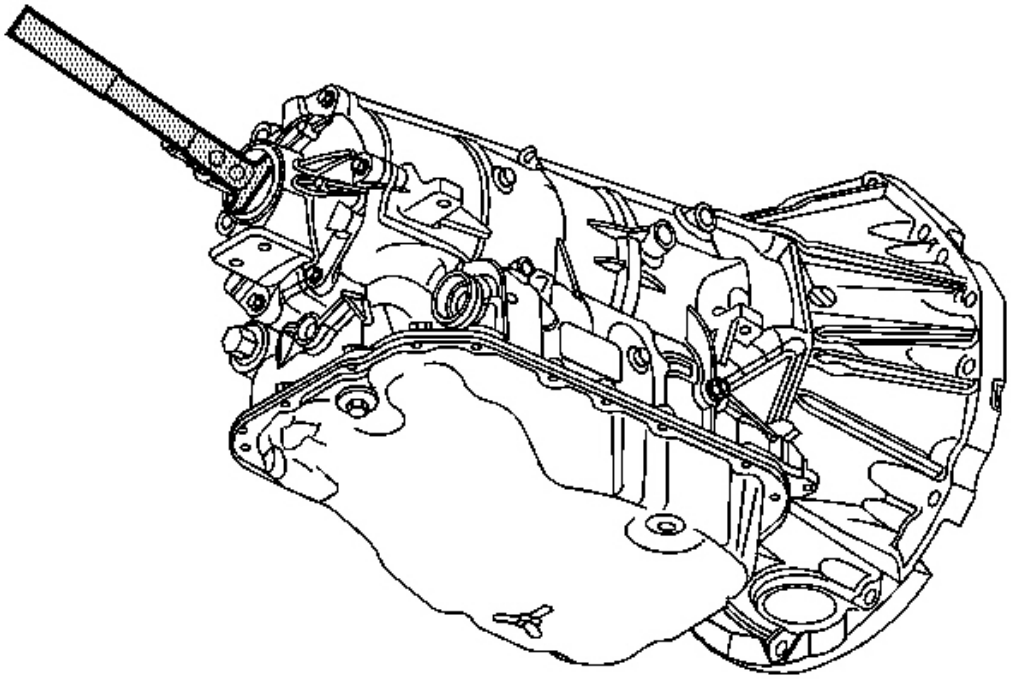

Fig. 38: View Of J 45000
Courtesy of GENERAL MOTORS CORP.

NOTE: **Be careful not to scrape or gouge the case extension housing while removing the output shaft seal.**

10. Use the **J 45000** to remove the output shaft seal from the case extension housing.

Installation Procedure

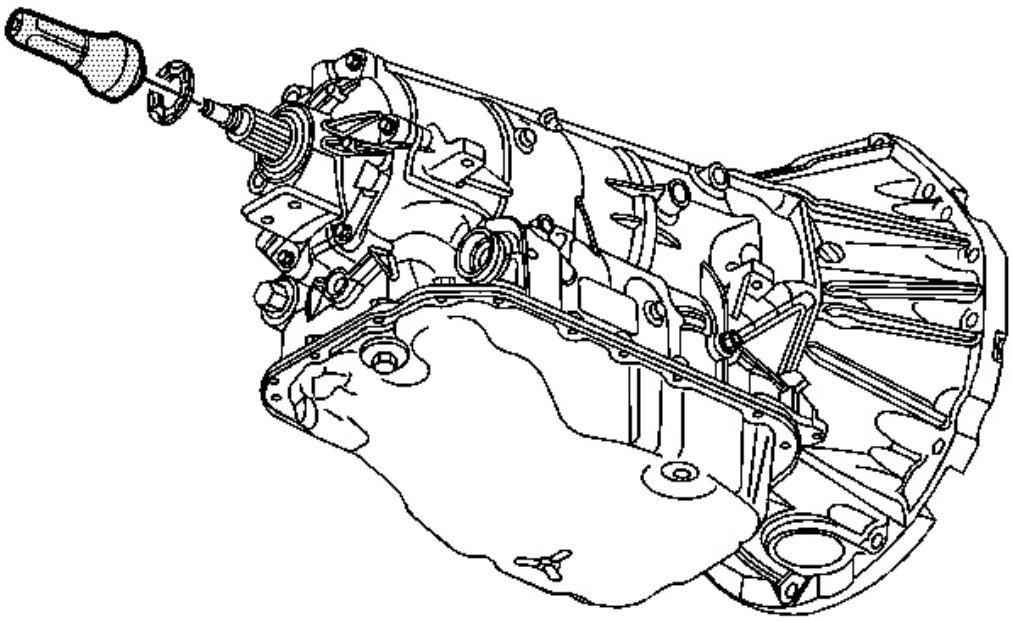

Fig. 39: View Of J 37212
Courtesy of GENERAL MOTORS CORP.

1. Lubricate the new seal with clean transmission fluid.
2. Use the **J 37212** to install the output shaft seal to the case extension housing. See **Special Tools** .

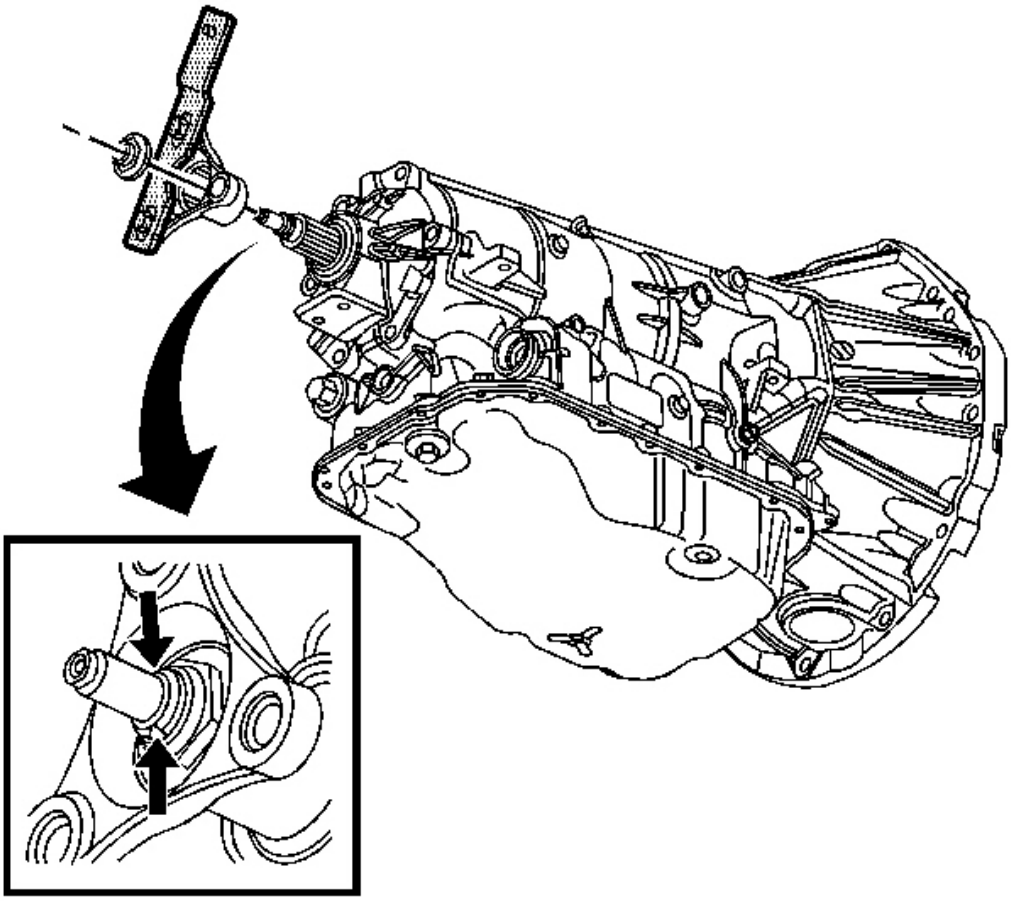

Fig. 40: View Of J 45012
Courtesy of GENERAL MOTORS CORP.

3. Install the prop shaft flange. Refer to **Propeller Shaft Transmission Flange Removal (6L50)** or **Propeller Shaft Transmission Flange Removal (6L80)** .

CAUTION: Stake the flange nut onto the output shaft. Use the two staking grooves on the shaft to locate the staking points. Failure to stake the flange nut may result in damage to the transmission.

CAUTION: Refer to Fastener Caution .

NOTE: Use a NEW propeller shaft flange nut.

4. Install the NEW propeller shaft flange nut and tighten to 105 N.m (77 lb ft).
5. Remove the propeller shaft flange holding fixture **J 45012** .
6. Install the transmission mount assembly. Refer to **Transmission Mount Replacement**.
7. Remove the transmission jack.
8. Install the propeller shaft. Refer to **Two-Piece Propeller Shaft Replacement** .
9. Install the exhaust system. Refer to **Exhaust Muffler with Resonator, Exhaust, and Tail Pipe Replacement (H-Pipe)** or **Exhaust Muffler with Resonator, Exhaust, and Tail Pipe Replacement (Vehicle Service)** .
10. Lower the vehicle.

MANUAL SHIFT SHAFT AND SEAL REPLACEMENT

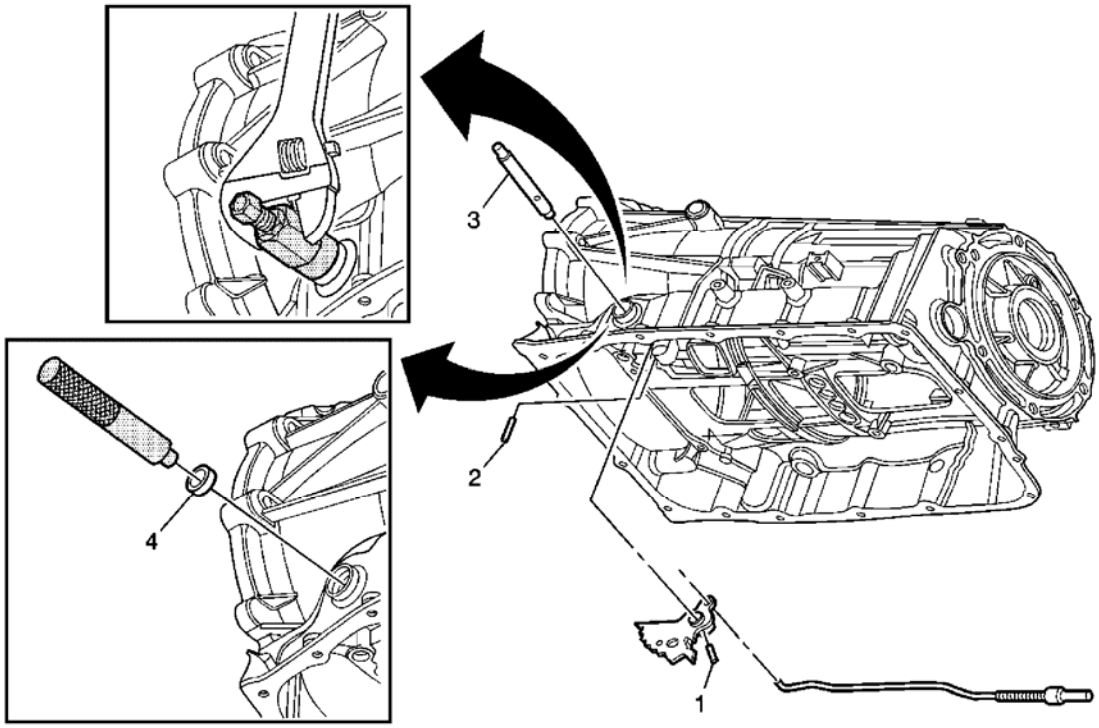

Fig. 41: Manual Shift Shaft & Seal
Courtesy of GENERAL MOTORS CORP.

Callout	Component Name
Preliminary Procedures	
1. Raise and support the vehicle. Refer to **Lifting and Jacking the Vehicle**	
2. Remove the transmission fluid pan. Refer to **Transmission Fluid Pan Installation (6L50)** or **Transmission Fluid Pan Installation (6L80)**	
3. Remove the manual shaft detent assembly roller.	

1	Manual Shaft Detent Lever Hub Pin **Procedure** 1. Discard the pin. Replace with a NEW pin. 2. "Walk" the pin out using side cutters.
2	Manual Shift Shaft Pin **Procedure** 1. Discard the pin. Replace with a NEW pin. 2. "Walk" the pin out using side cutters.
3	Manual Shift Shaft
4	Manual Shift Shaft Seal **Procedure** 1. The manual shaft must be removed to replace the manual shaft seal. 2. Use the **J 45201** to remove the seal from the transmission case. See **Special Tools** . 3. Use the **DT 47770** to install the seal into the transmission case. See **Special Tools** . **Special Tools** • **DT 47770** Seal Installer. See **Special Tools** . • **J 45201** Cooler Line Seal Remover. See **Special Tools** .

MANUAL SHIFT SHAFT POSITION SWITCH REPLACEMENT

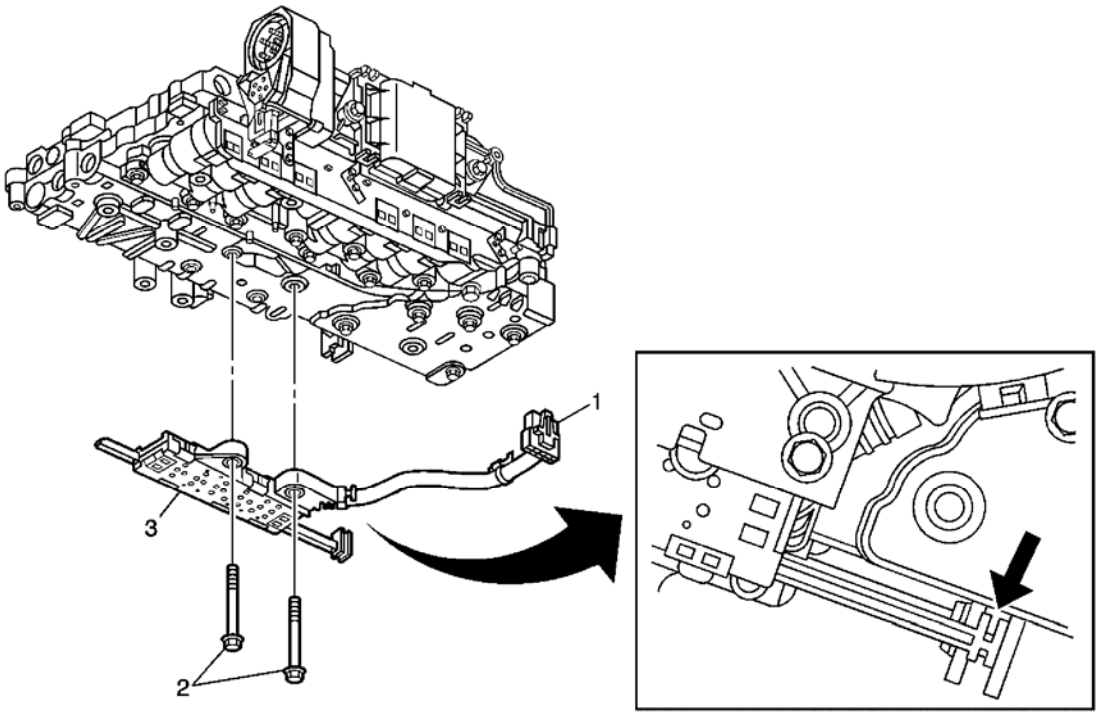

Fig. 42: Manual Shift Shaft Position Switch
Courtesy of GENERAL MOTORS CORP.

Callout	Component Name
Preliminary Procedures 1. Raise and support the vehicle. Refer to **Lifting and Jacking the Vehicle** 2. Remove the transmission fluid pan and filter. Refer to **Automatic Transmission Fluid, Fluid Pan and/or Filter Replacement**	
1	Manual Shift Shaft Position Switch Assembly Electrical Connector **Tip:** • Release the connector lock before disconnecting. Engage the connector lock after connecting. • The wiring harness clip near the connector does not need to be replaced if broken or missing. The clip is used during manufacturing to keep the wire harness clear during an automated bolt installation process. If the clip is damaged, simply remove and discard.
2	Manual Shift Shaft Position Switch Assembly Bolt **CAUTION:** **Refer to Fastener Caution .**

	Tighten: 8 N.m (71 lb in)
3	Manual Shift Shaft Position Switch Assembly **Procedure:** Align the switch activator slide with the manual valve link.

CONTROL SOLENOID VALVE AND TRANSMISSION CONTROL MODULE ASSEMBLY REPLACEMENT

Removal Procedure

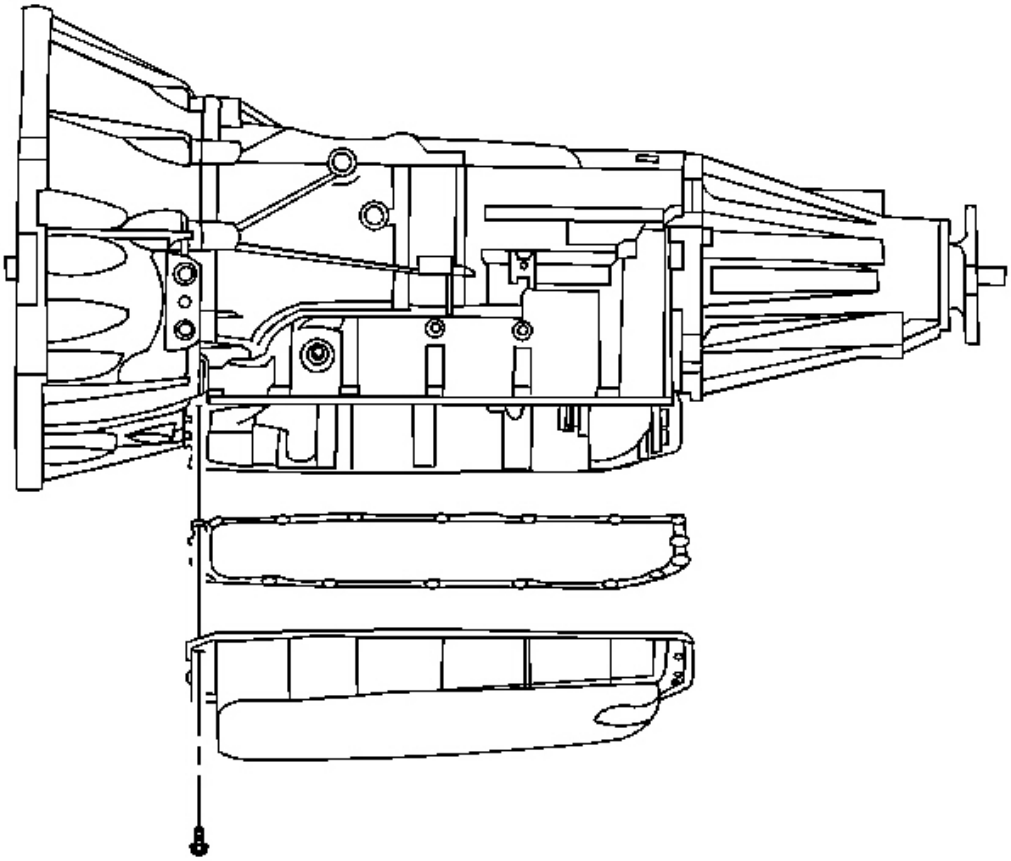

Fig. 43: View Of Transmission Oil Pan & Filter
Courtesy of GENERAL MOTORS CORP.

NOTE: **The valve body must be removed from the transmission to replace the control solenoid valve and transmission control module assembly.**

1. Remove the transmission oil pan and filter. Refer to **Automatic Transmission Fluid, Fluid Pan and/or Filter Replacement**.
2. Remove the electrical connector passage sleeve. Refer to **Automatic Transmission Electrical Connector Passage Sleeve Replacement**.

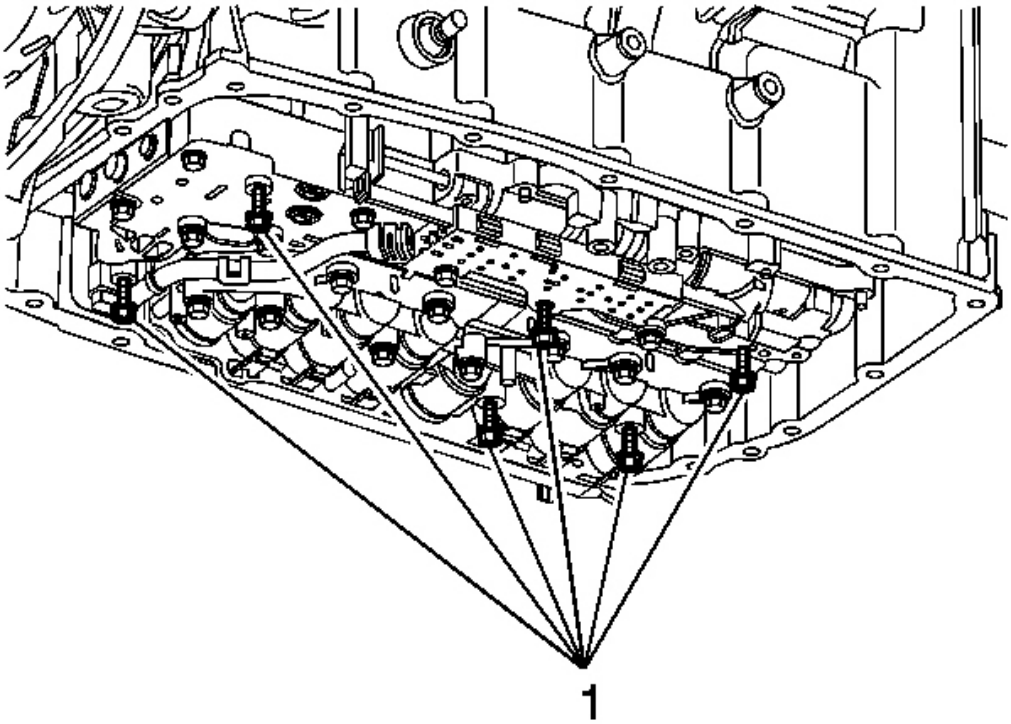

Fig. 44: View Of Valve Body Bolts
Courtesy of GENERAL MOTORS CORP.

3. Remove the valve body bolts (1).

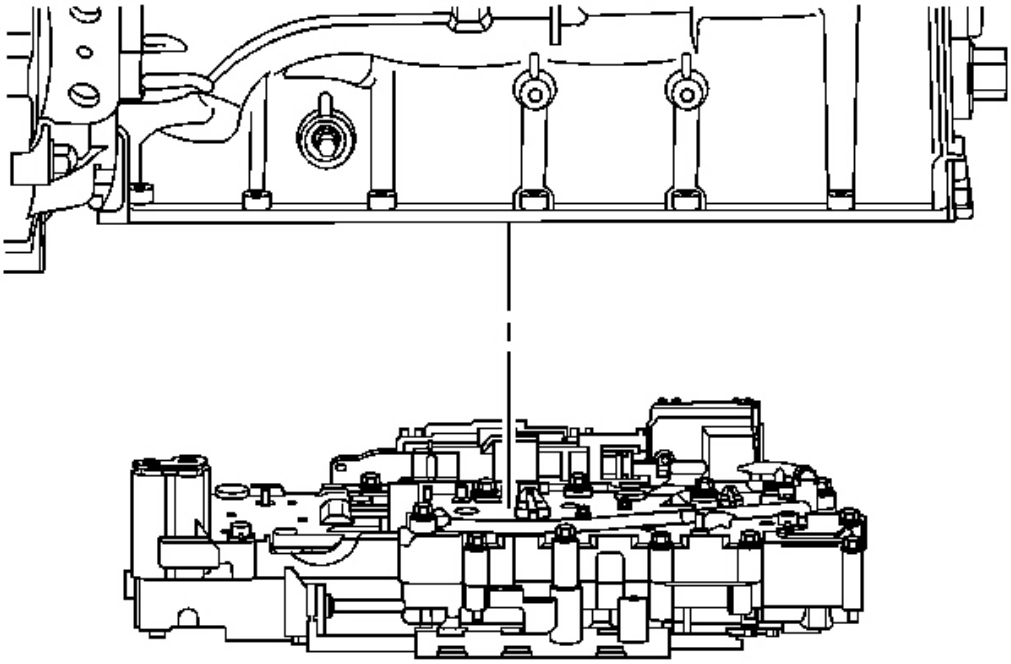

Fig. 45: Valve Body Assembly
Courtesy of GENERAL MOTORS CORP.

4. Remove the upper and lower control valve body assembly.

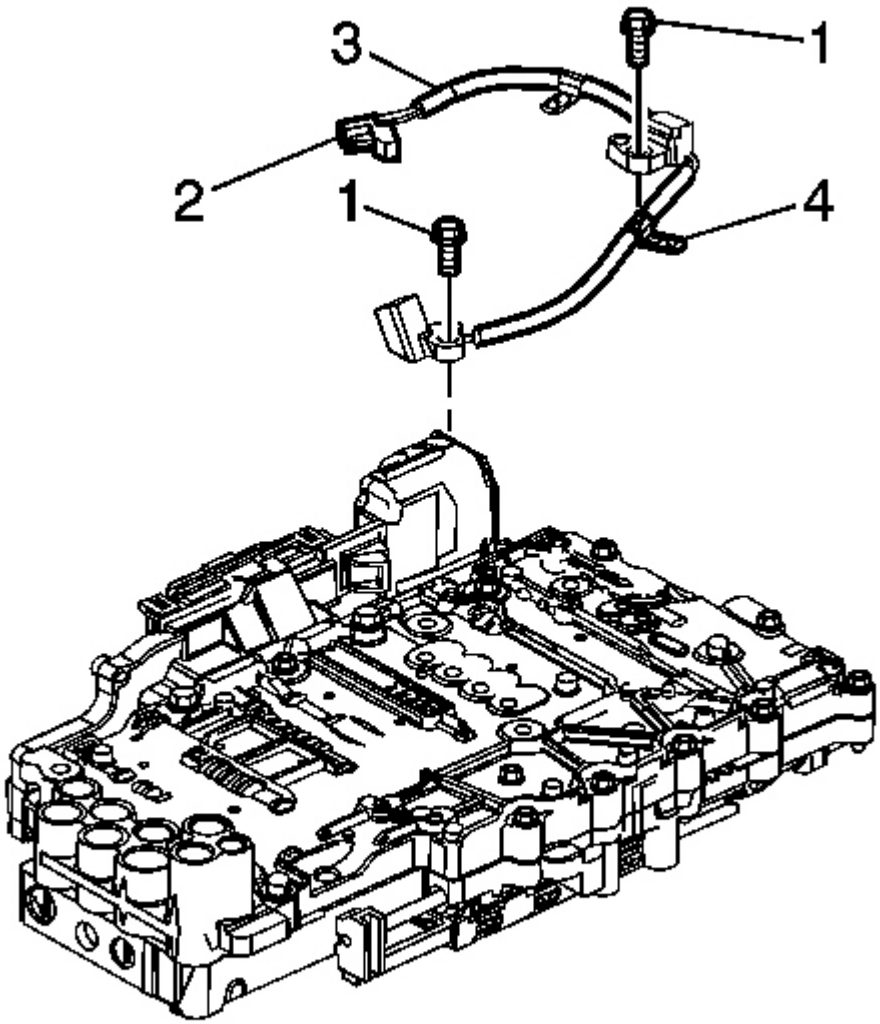

Fig. 46: View Of Speed Sensor Electrical Connector
Courtesy of GENERAL MOTORS CORP.

5. Disconnect the speed sensor electrical connector (2) from the control solenoid valve assembly.
6. Turn the control valve body assembly over.

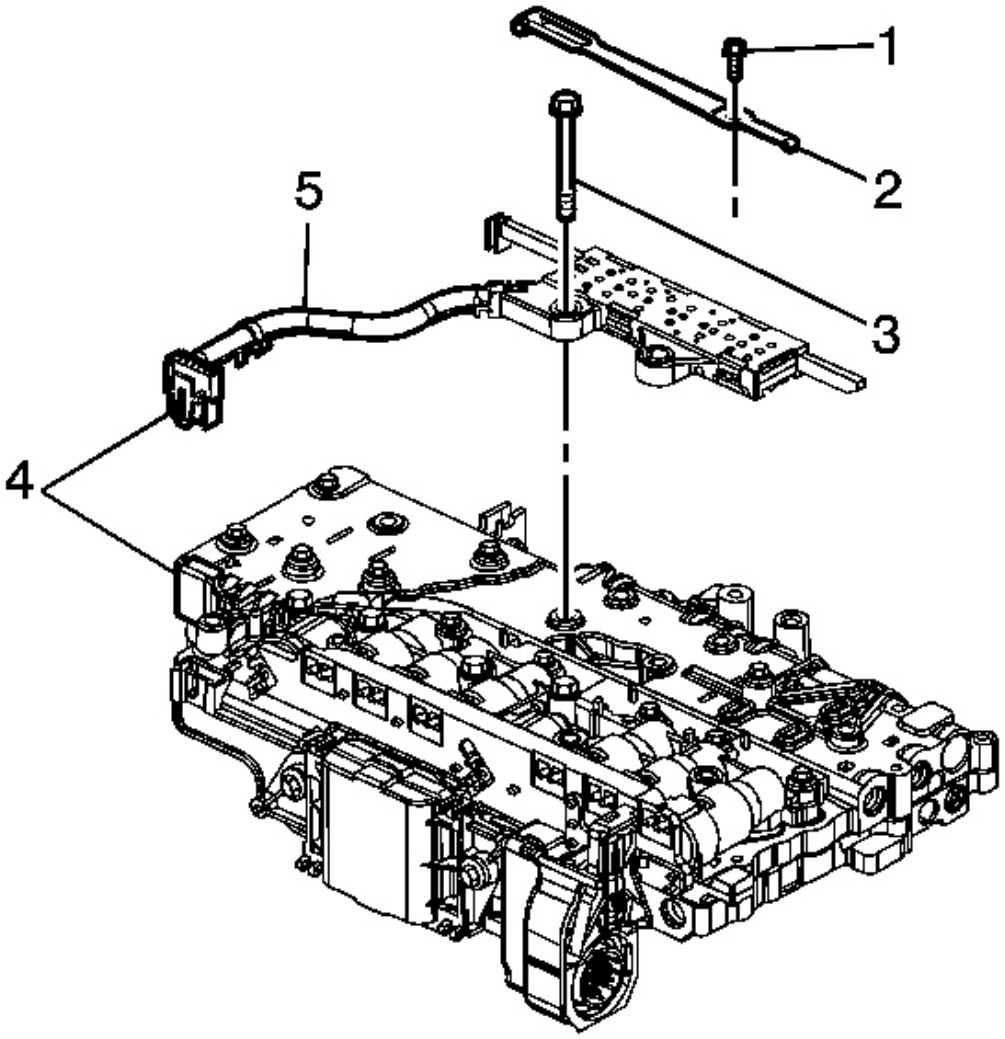

Fig. 47: Manual Shift Shaft Position Switch Connector
Courtesy of GENERAL MOTORS CORP.

NOTE: Release the connector lock before disconnecting.

7. Disconnect the manual shift shaft position switch connector (4) from the control solenoid valve assembly.
8. Remove the bolt (3) and remove the manual shift shaft position switch assembly.

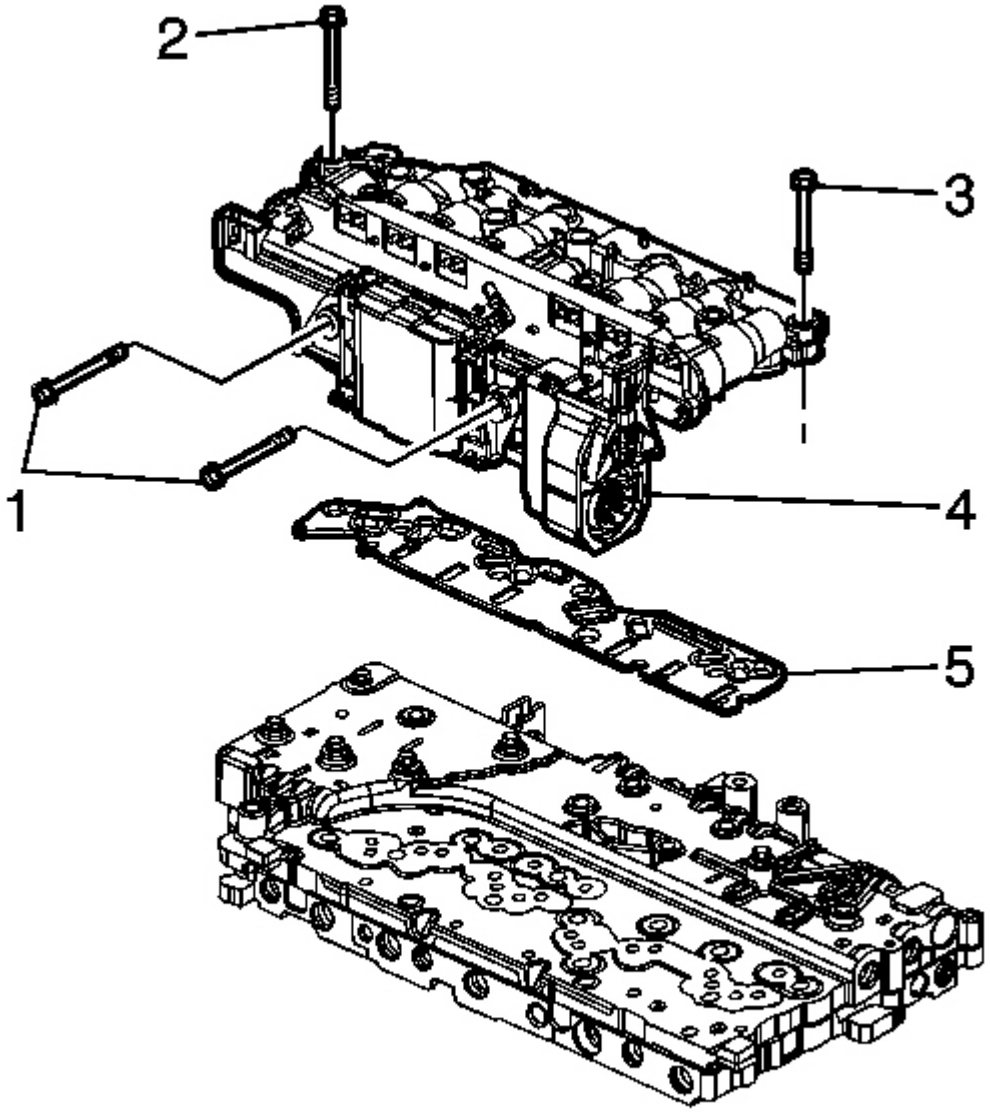

Fig. 48: View Of Control Valve Body Assembly
Courtesy of GENERAL MOTORS CORP.

9. Remove the 2 bolts (1) from the "heat sink" side of the control solenoid valve assembly.

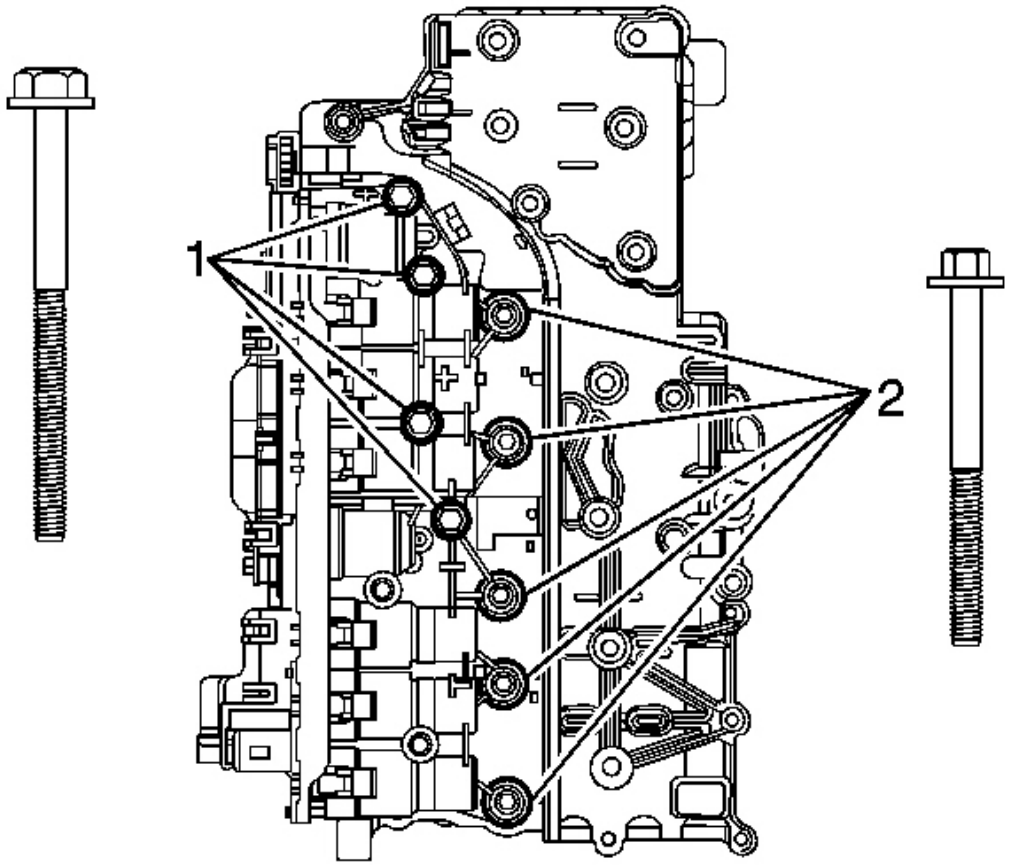

Fig. 49: View Of Bolts
Courtesy of GENERAL MOTORS CORP.

10. Remove the 5 bolts (2) and the 4 bolts (1) securing the control solenoid valve assembly to the control valve body assembly.

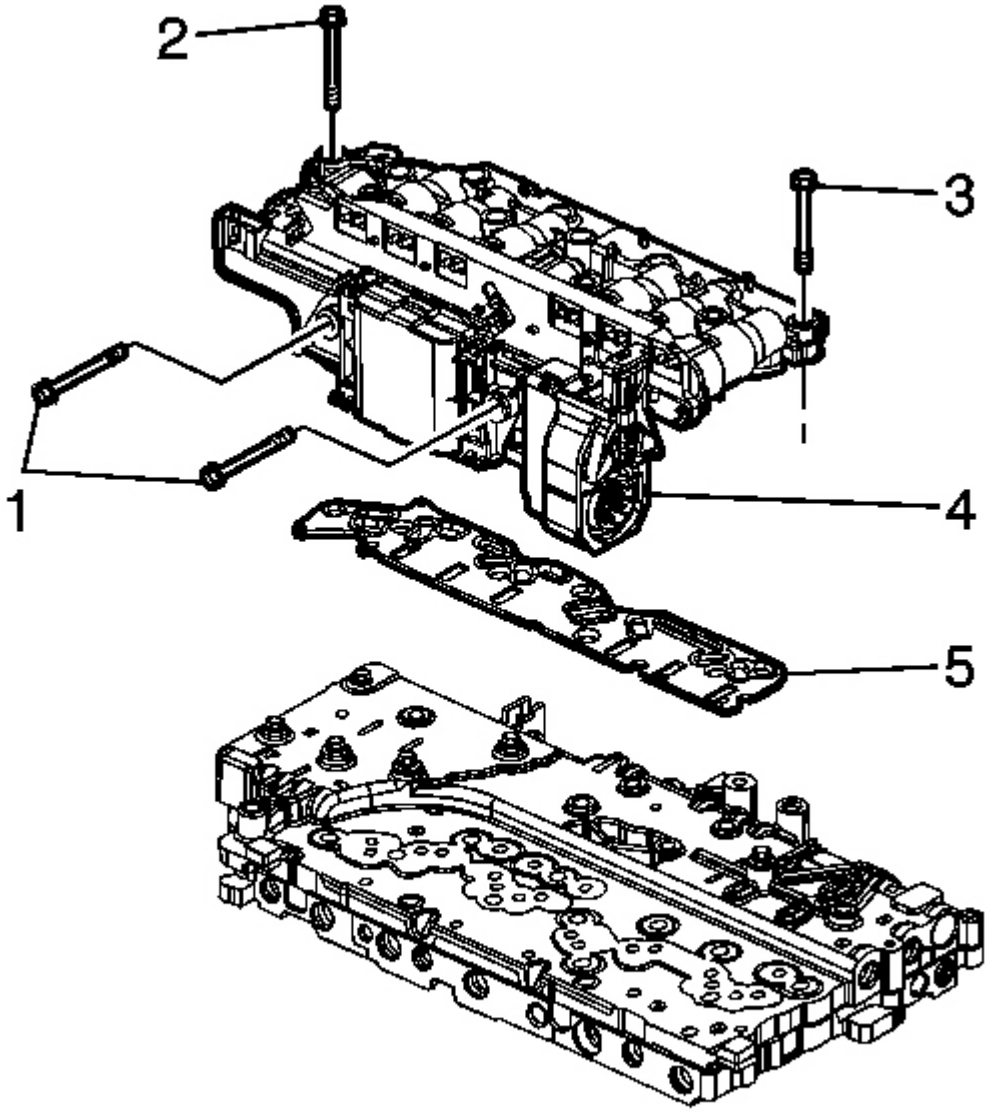

Fig. 50: View Of Control Valve Body Assembly
Courtesy of GENERAL MOTORS CORP.

11. Remove the control valve body assembly.

CAUTION: Use care when removing or installing the filter plate assembly. A broken or missing retaining tab may not adequately secure the filter

plate to the control solenoid valve assembly, resulting in possible damage or contamination.

12. Carefully remove and discard the filter plate assembly (5).

Installation Procedure

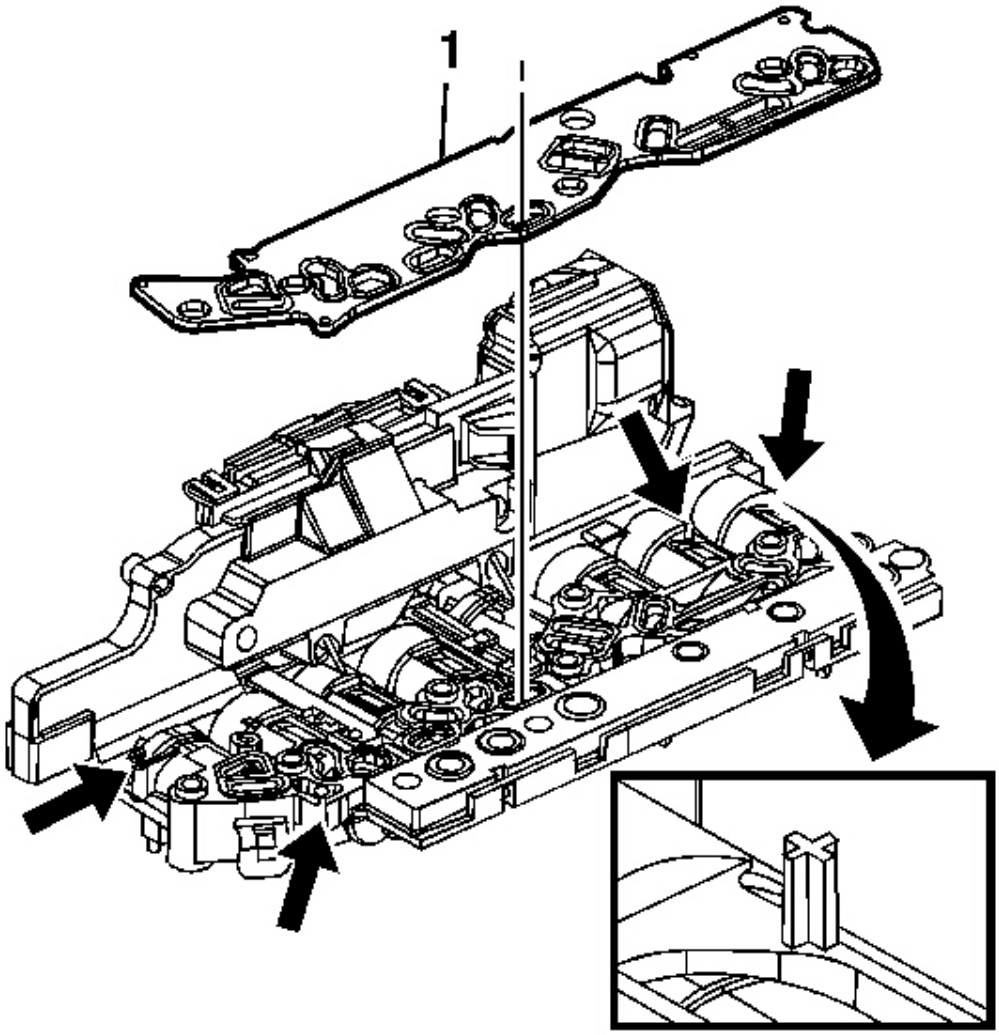

Fig. 51: View Of Filter Plate Assembly
Courtesy of GENERAL MOTORS CORP.

NOTE: **Inspect the 4 filter plate retaining tabs on the control solenoid valve assembly. A broken or missing tab may not adequately secure the filter plate to the control solenoid valve assembly.**

1. Install a NEW filter plate assembly (1).

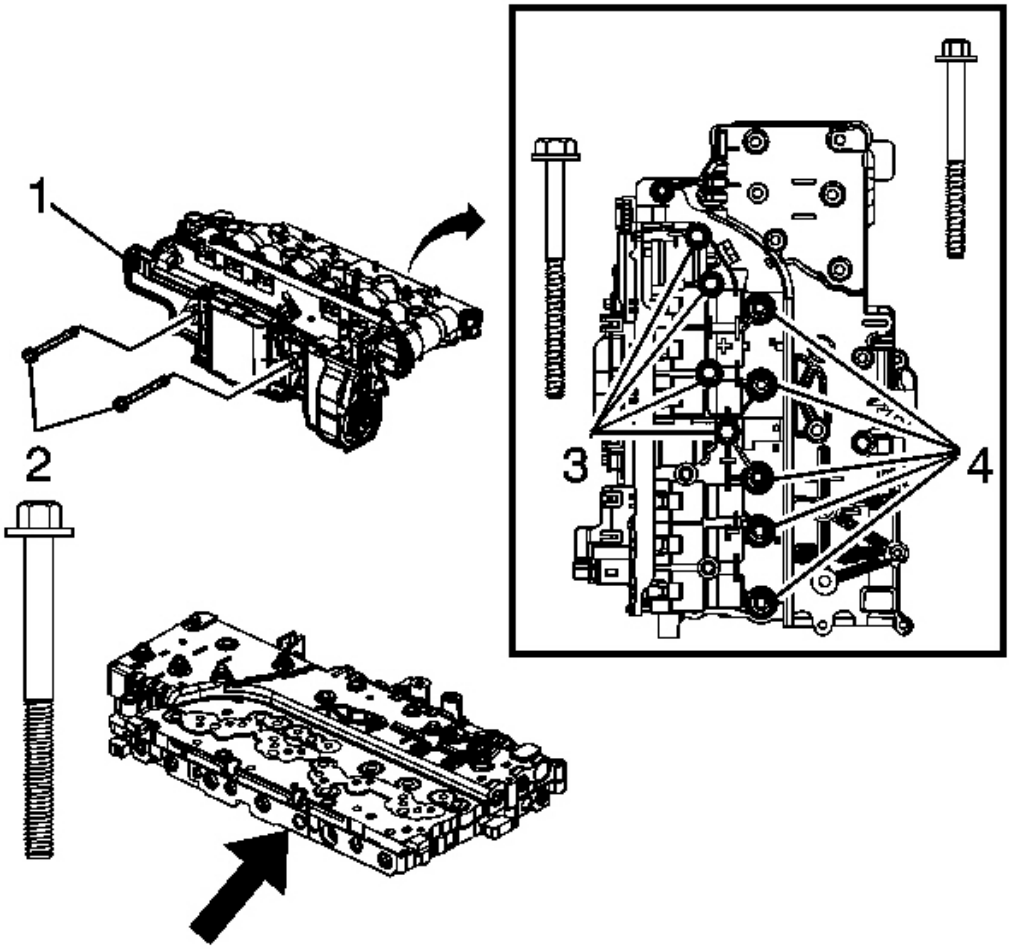

Fig. 52: View Of Control Solenoid Valve Assembly Bolts
Courtesy of GENERAL MOTORS CORP.

NOTE: **Note the locator pin on the control valve lower body assembly.**

2. Align the control solenoid valve assembly (1) to the control valve lower body assembly.
3. Install the 2 bolts (2), through the "heat sink" side of the control solenoid valve assembly (1). Hand

tighten only.

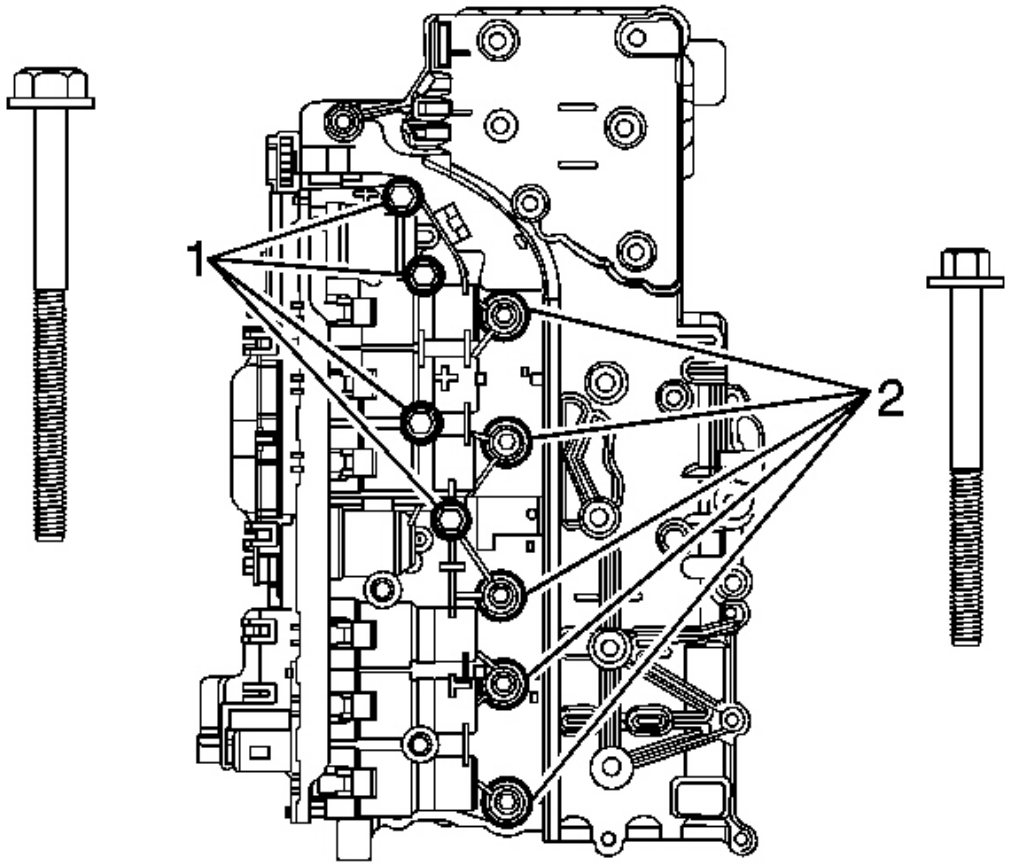

Fig. 53: View Of Bolts
Courtesy of GENERAL MOTORS CORP.

4. Install the 4 bolts (1) and 5 bolts (2) securing the control solenoid valve assembly to the control valve lower body assembly. Hand tighten only.

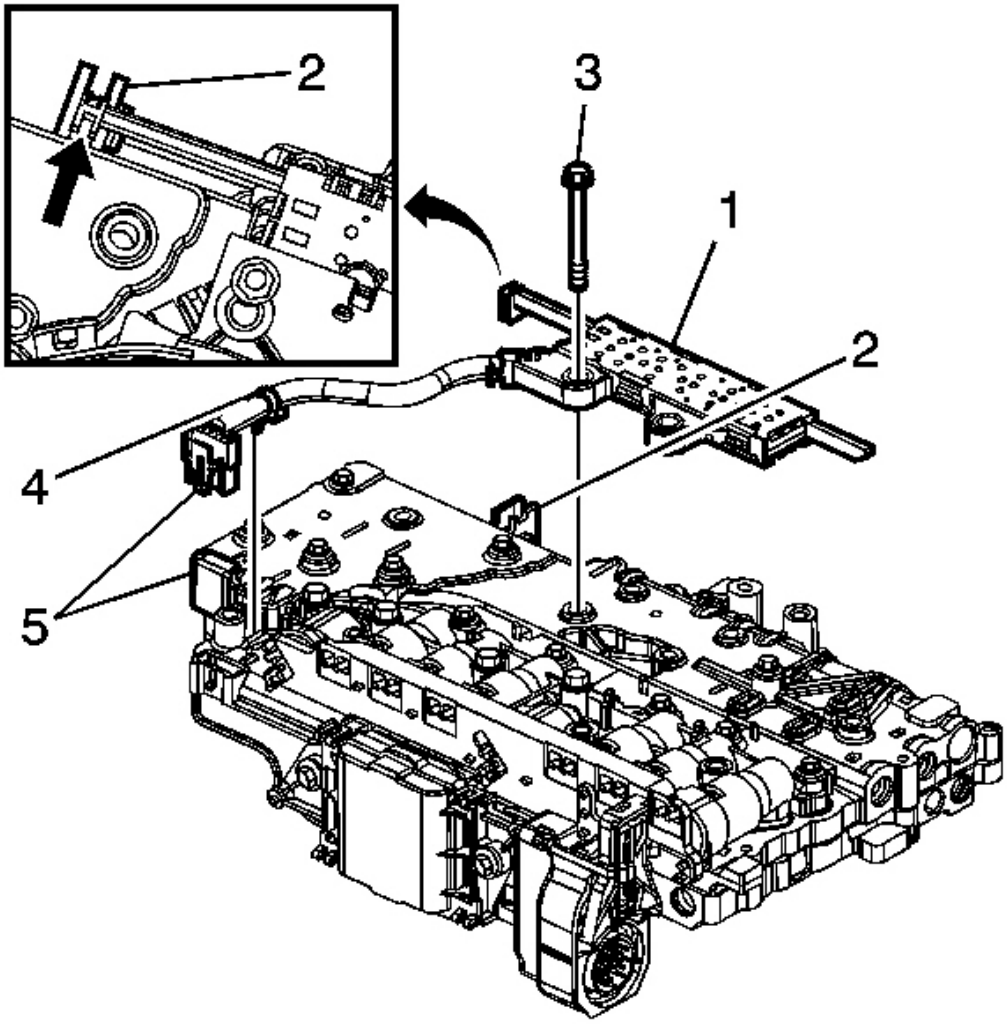

Fig. 54: View Of Manual Shift Shaft Position Switch Assembly
Courtesy of GENERAL MOTORS CORP.

5. Install the manual shift shaft position switch assembly (1). Align the switch activator slide with the manual valve link. Secure with 1 bolt (3). Hand tighten only.

NOTE: **The wiring harness clip (4) on the manual shift shaft position switch does not need to be replaced if damaged or missing. The clip functions only as a manufacturing assembly aid to keep the harness clear during an automated bolt installation process. If the clip is damaged, simply remove and discard.**

6. Connect and lock the manual shift shaft position switch electrical connector (5) to the control solenoid valve assembly and attach the wiring harness clip (4).

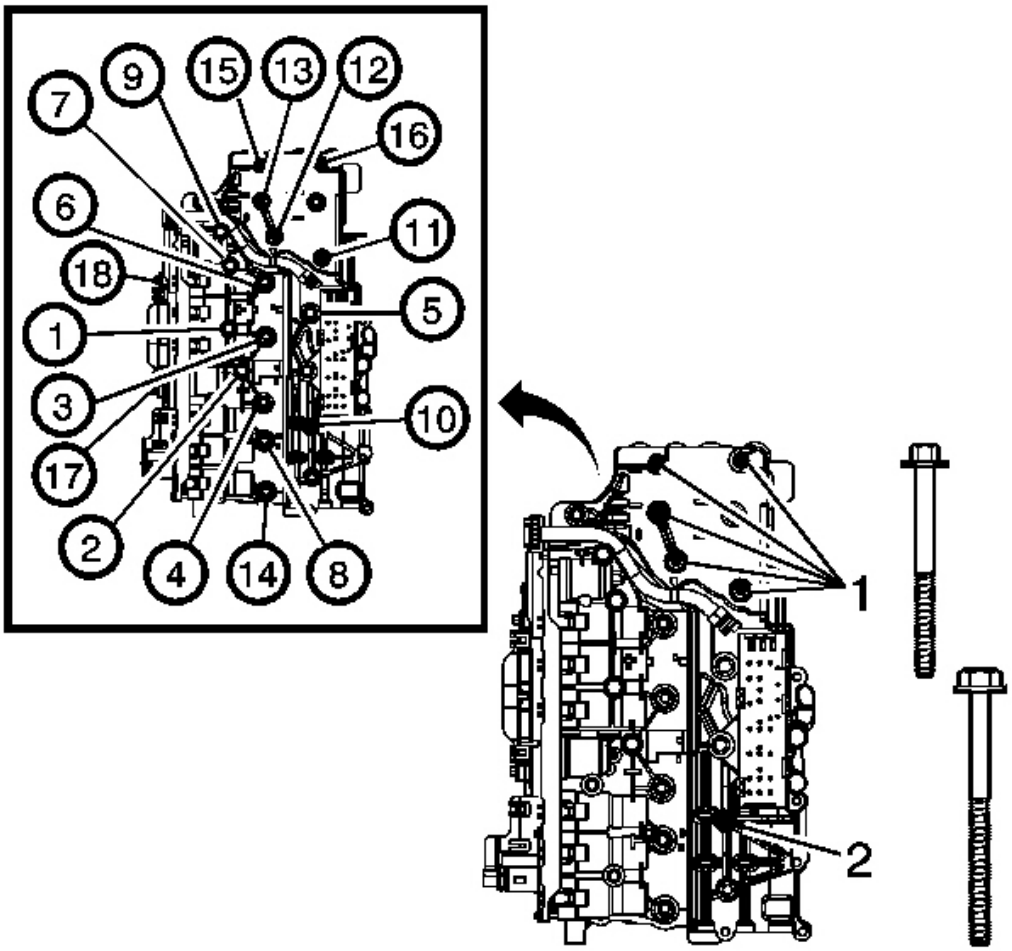

Fig. 55: Bolt Tightening Sequence
Courtesy of GENERAL MOTORS CORP.

7. Install the 5 remaining bolts (1) and 1 remaining bolt (2). Hand tighten only.

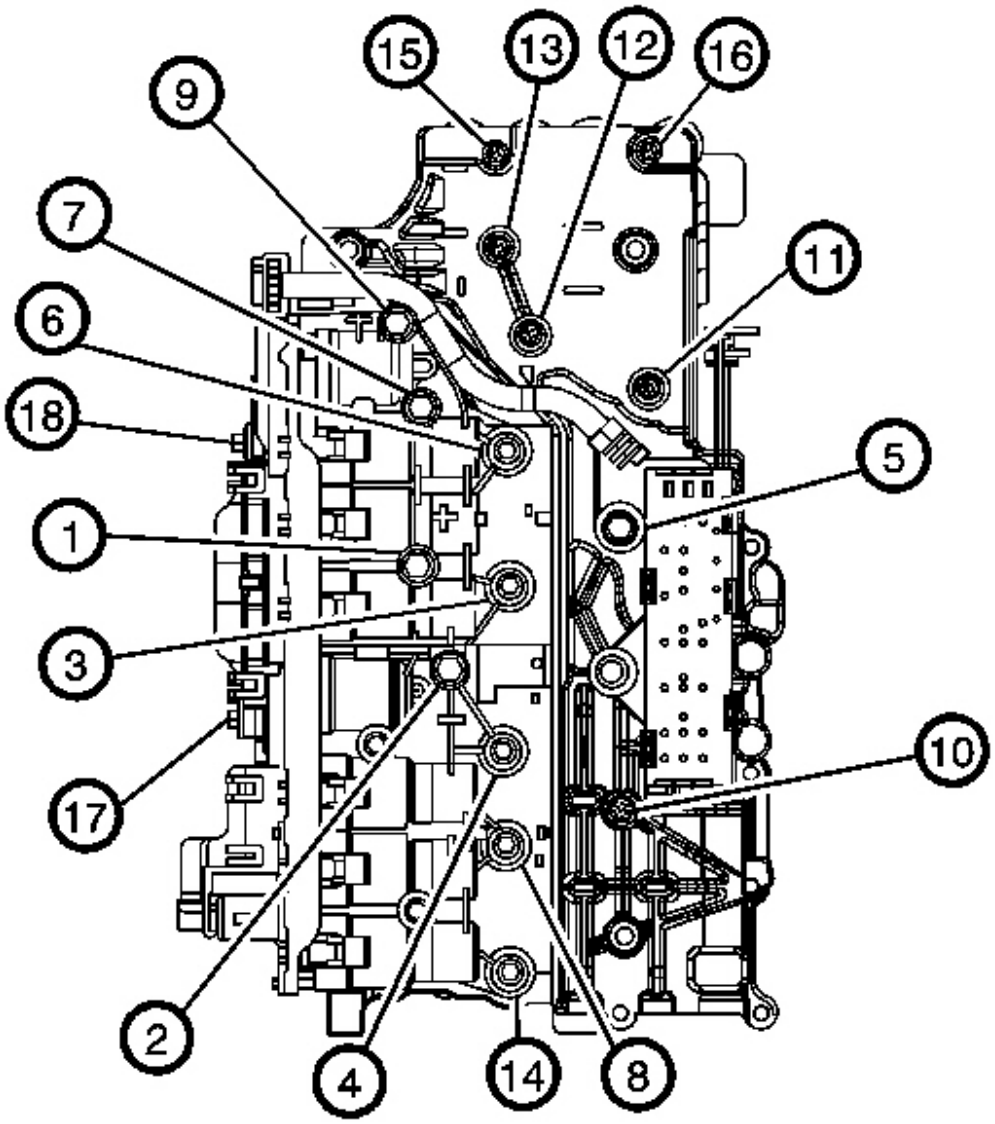

Fig. 56: Identifying Control Solenoid Valve Assembly Bolt Tightening Sequence
Courtesy of GENERAL MOTORS CORP.

CAUTION: Bolt torque sequencing is critical to the proper function of the control solenoid valve assembly. Failure to follow the required sequencing may result in transmission malfunction.

CAUTION: Refer to Fastener Caution .

8. Tighten all bolts in the sequence shown. The 2 "heat sink" bolts (17, 18) must be tightened last.

   Tighten bolts to 8 N.m (6 lb ft).

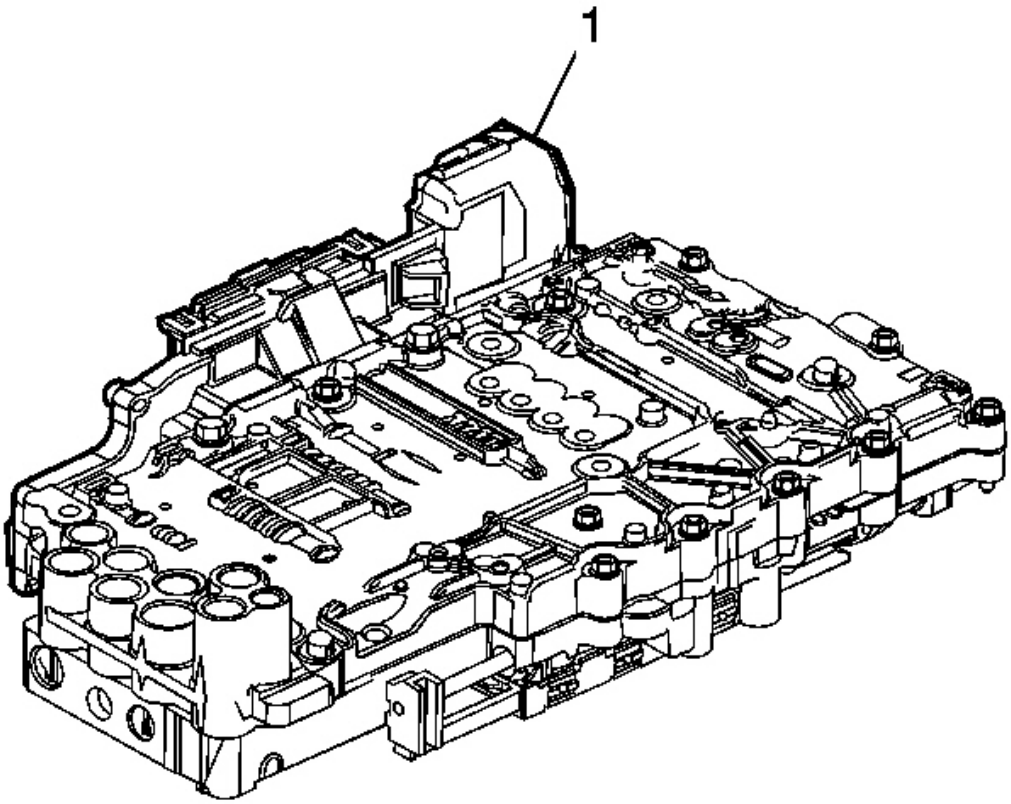

Fig. 57: View Of Control Solenoid Valve Assembly
Courtesy of GENERAL MOTORS CORP.

9. Inspect the contact area between the "heat sink" area of the control solenoid valve assembly (1) and the valve body. There should be no visible gap. If a gap exists, loosen all 18 bolts and retighten in the sequence shown.

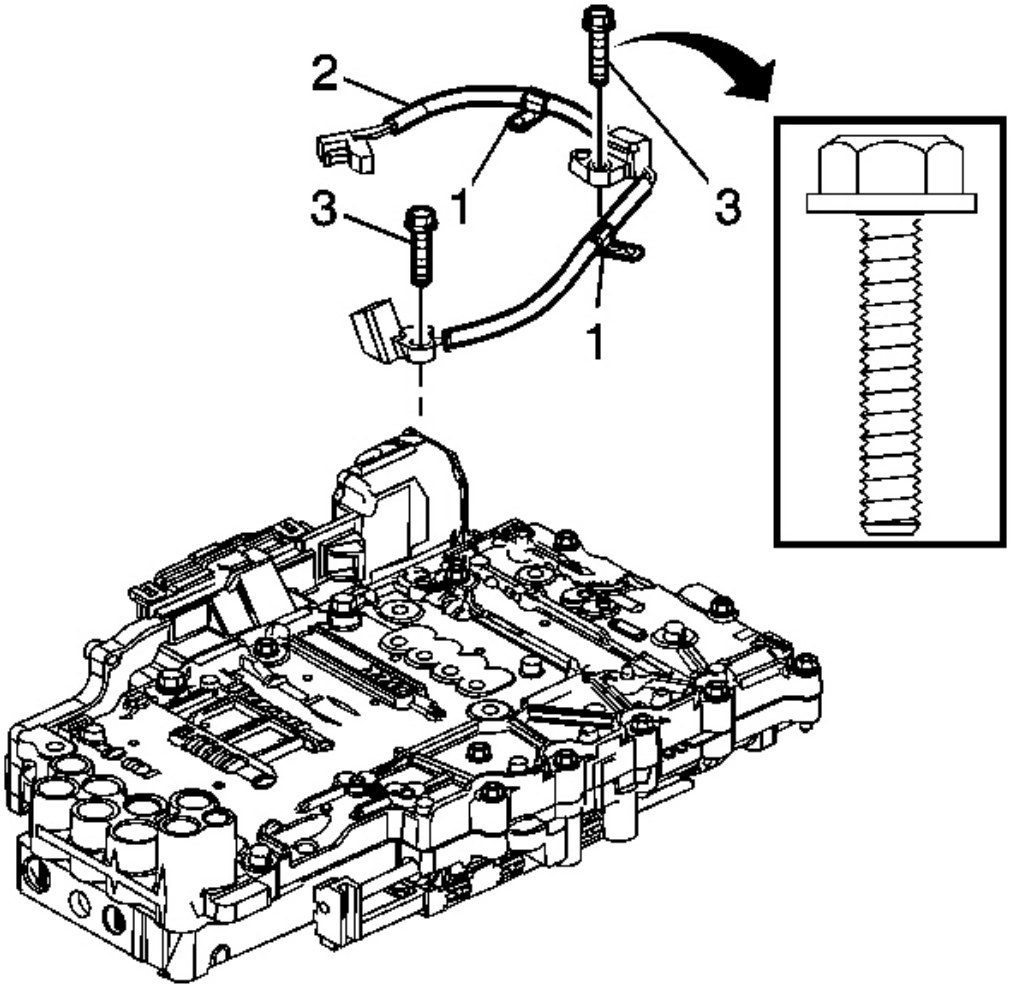

Fig. 58: View Of Output Speed Sensor Wiring Harness
Courtesy of GENERAL MOTORS CORP.

10. Inspect the 2 input and output speed sensor wiring harness clips (1) for damage. Replace if damaged.

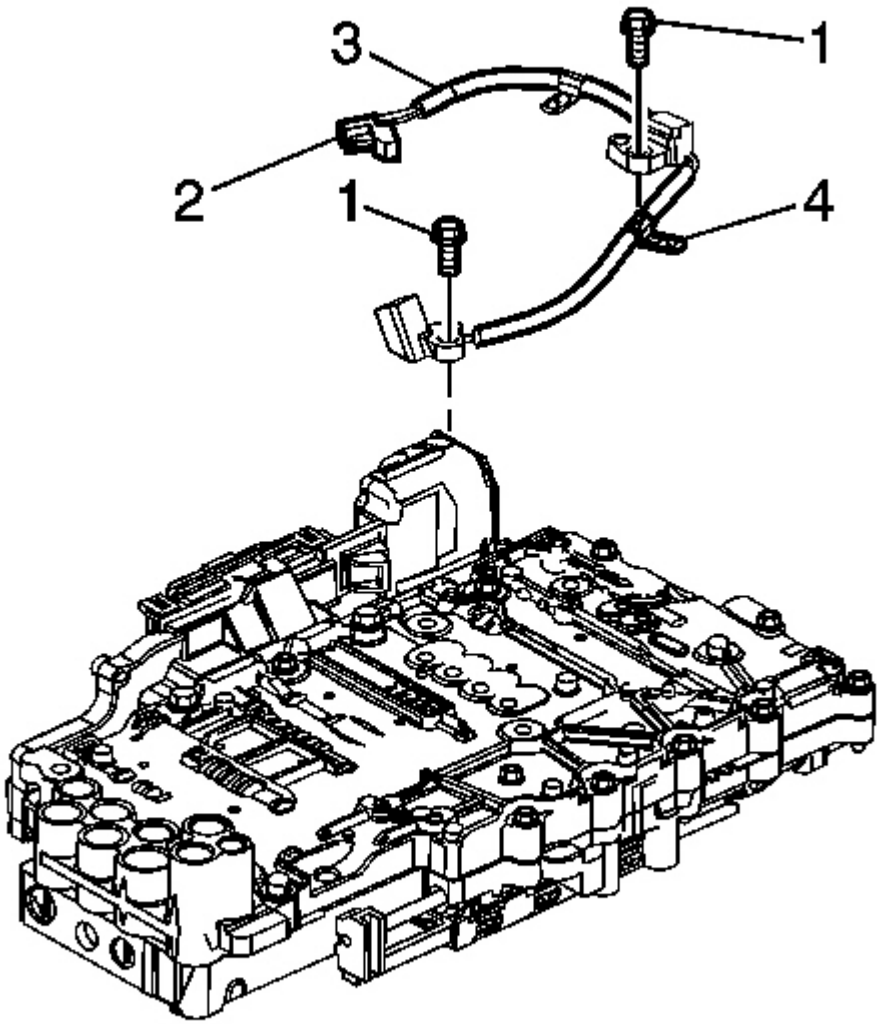

Fig. 59: View Of Speed Sensor Electrical Connector
Courtesy of GENERAL MOTORS CORP.

11. Connect the speed sensor electrical connector (2) to the control solenoid valve assembly.

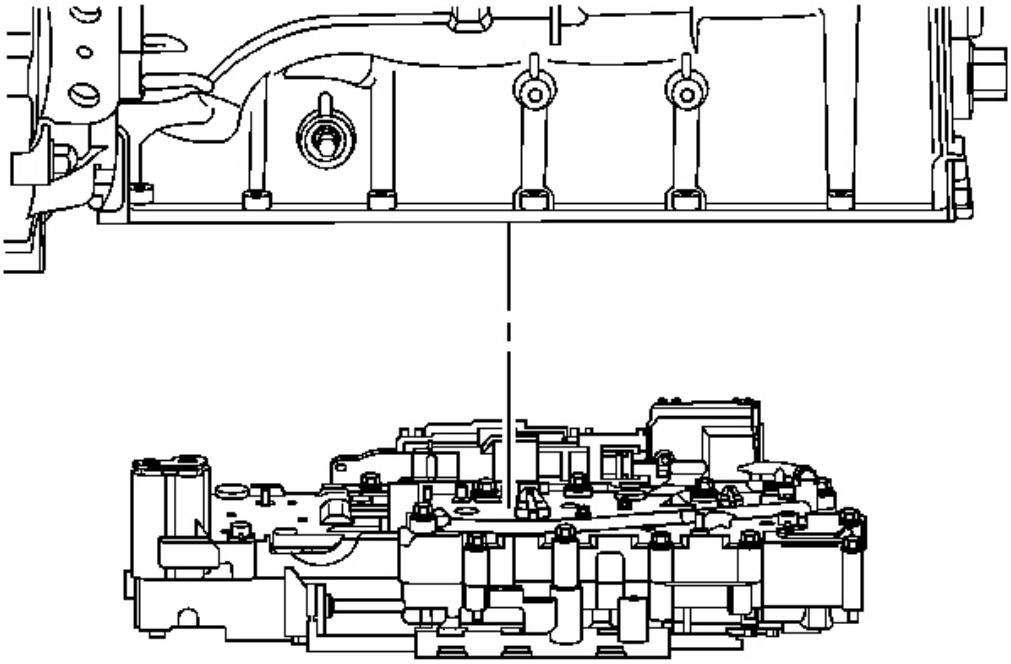

Fig. 60: Valve Body Assembly
Courtesy of GENERAL MOTORS CORP.

12. Install the upper and lower control valve body assembly. Refer to **Control Valve Lower Body and Upper Body Replacement**.
13. Install the electrical connector passage sleeve. Refer to **Automatic Transmission Electrical Connector Passage Sleeve Replacement**.

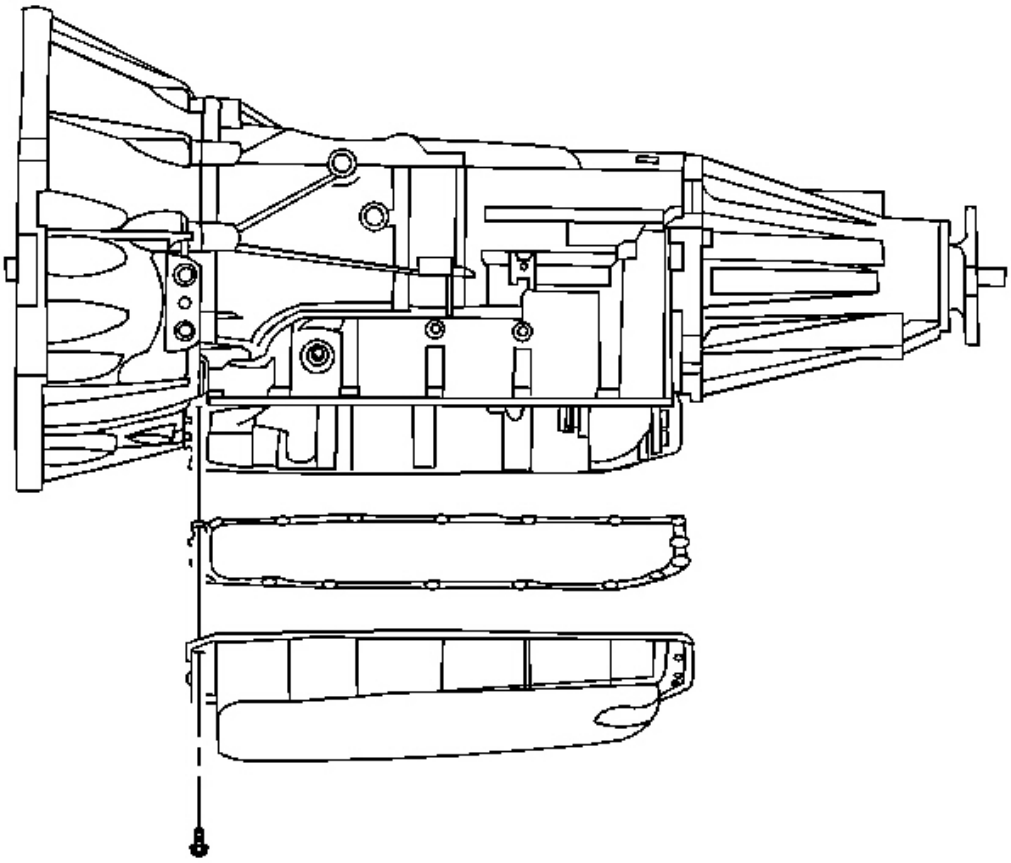

Fig. 61: View Of Transmission Oil Pan & Filter
Courtesy of GENERAL MOTORS CORP.

14. Install the transmission oil pan and filter. Refer to **Automatic Transmission Fluid, Fluid Pan and/or Filter Replacement**.

NOTE: **After an internal transmission repair or internal part replacement, the Service Fast Learn Adapt procedure should be performed. Refer to Service Fast Learn Adapts .**

15. Reset the transmission TAP values. Refer to **Service Fast Learn Adapts** .
16. Reprogram the transmission control module. Refer to **Control Module References** .

CONTROL VALVE LOWER BODY AND UPPER BODY REPLACEMENT

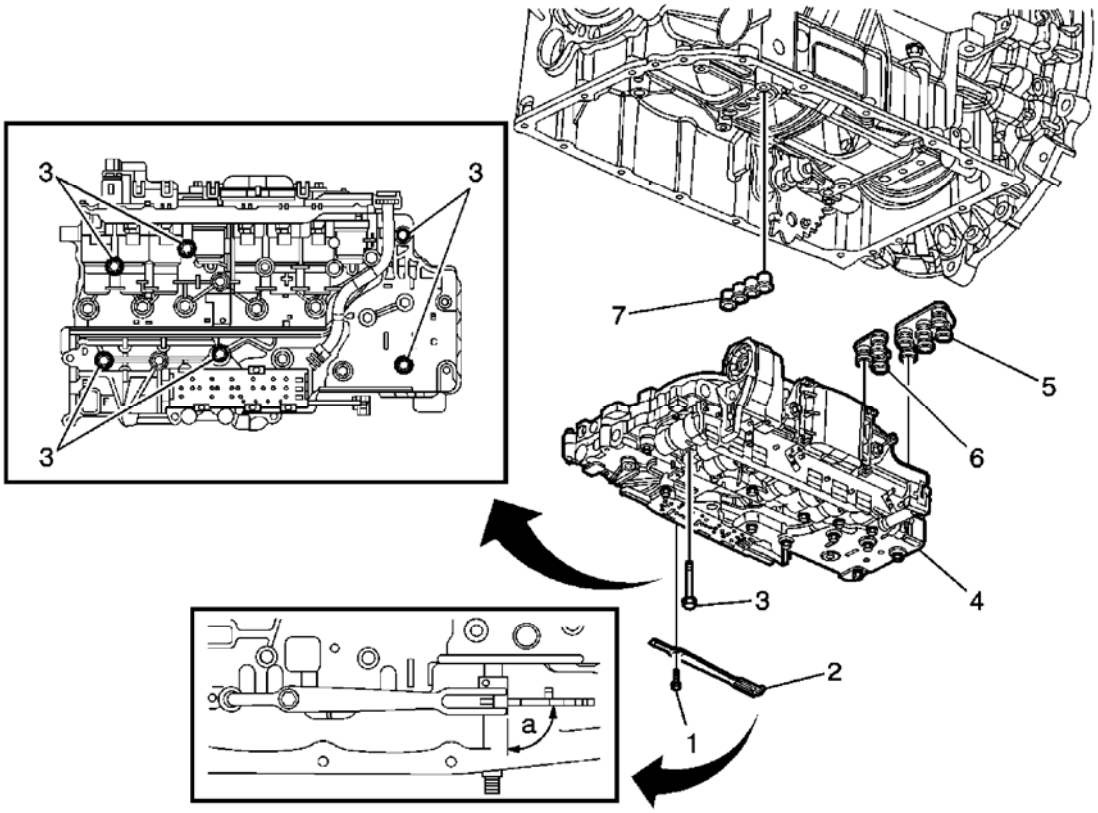

Fig. 62: Control Valve Lower Body & Upper Body
Courtesy of GENERAL MOTORS CORP.

Callout	Component Name
Preliminary Procedures 1. Raise and support the vehicle. Refer to **Lifting and Jacking the Vehicle** . 2. Remove the transmission fluid pan, gasket and filter. Refer to **Automatic Transmission Fluid, Fluid Pan and/or Filter Replacement**. 3. Remove the electrical connector sleeve. Refer to **Automatic Transmission Electrical Connector Passage Sleeve Replacement**.	
1	Manual Shaft Detent Assembly Bolt **CAUTION:** **Refer to Fastener Caution .** **Tighten:** 12 N.m (106 lb in)
2	Manual Shaft Detent Assembly **Tip:** Ensure the manual shaft detent assembly roller is centered (A) over the manual shaft detent lever assembly. Failure to center the roller may cause hard or no shift lever operation.

3	Control Valve Assembly Bolt (Qty: 6) **Tip:** Tighten the bolts in the proper order. Refer to **Control Valve Body Assembly Installation** . **Tighten:** 8 N.m (71 lb in)
4	Control Valve Assembly **Tip:** • Do not remove all the bolts in the control valve body assembly. Remove only the bolts indicated. • For control valve body disassembly, refer to **Control Valve Body Assembly Disassemble** . • For control valve body cleaning and inspection, refer to **Control Valve Lower Body Assembly Cleaning and Inspection** . • For ball check valve locations, refer to **Ball Check Valve Locations** . • For control valve body assembly, refer to **Control Valve Body Assembly Assemble** . • Align the manual shift shaft position switch activator slide with the detent lever guide pin during control valve body installation.
5	Fluid Pump Seal Assembly **Tip:** Do not reuse the seal assembly.
6	Fluid Pump Seal Assembly **Tip:** Do not reuse the seal assembly.
7	Center Support Fluid Passage Seal Assembly **Procedure:** It is recommended that transmission adaptive pressure (TAP) information be reset. Resetting the TAP values using a scan tool will erase all learned values in all cells. As a result, the engine control module (ECM), powertrain control module (PCM) or transmission control module (TCM) will need to relearn TAP values. Transmission performance may be affected as new TAP values are learned. Reset the TAP values. Refer to **Service Fast Learn Adapts** . **Tip:** Do not reuse the seal assembly.

INPUT AND OUTPUT SPEED SENSOR REPLACEMENT

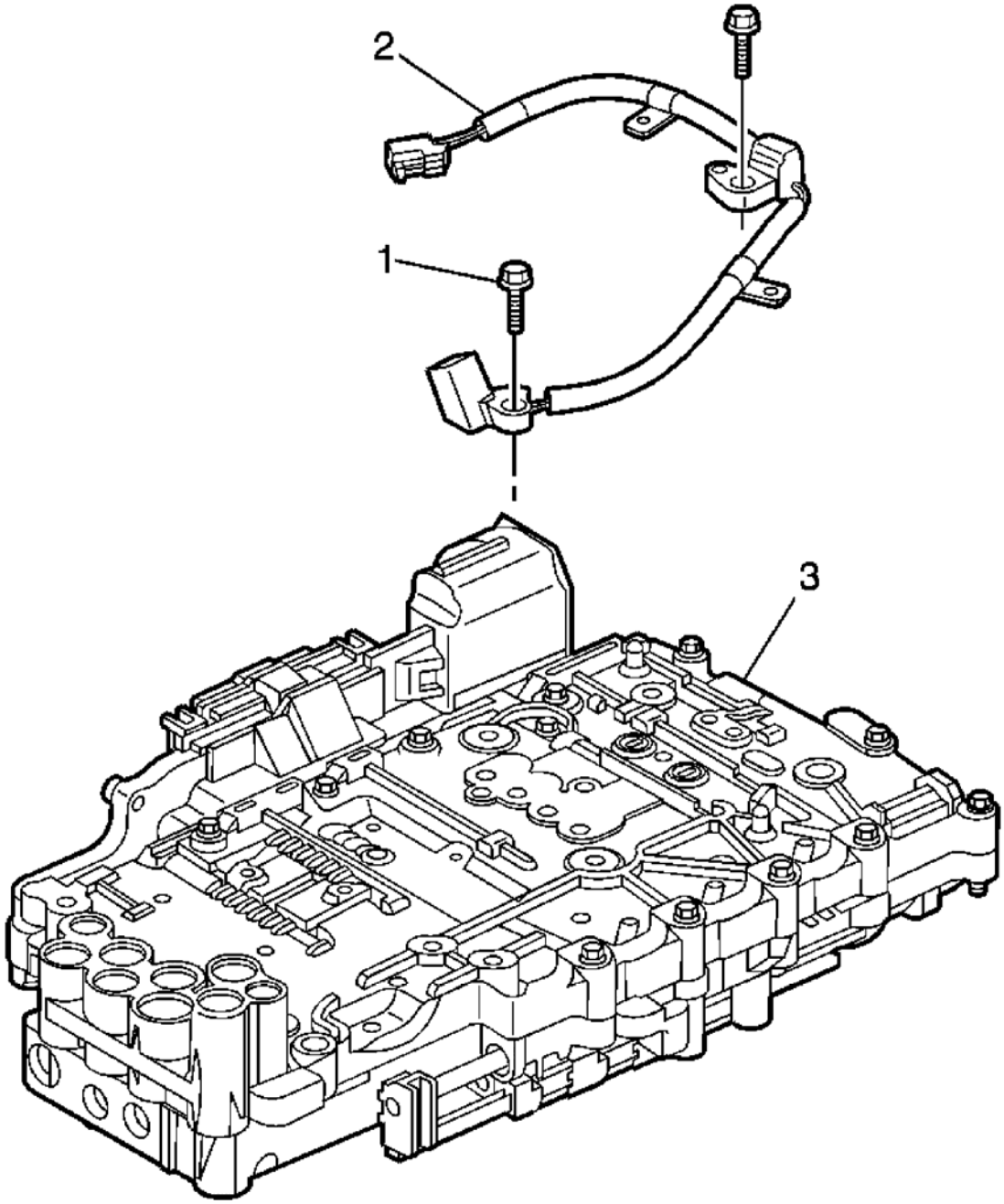

Fig. 63: Input & Output Speed Sensor
Courtesy of GENERAL MOTORS CORP.

Callout	Component Name

Preliminary Procedures

1. Raise and support the vehicle. Refer to **Lifting and Jacking the Vehicle** .

2. Remove the transmission fluid pan and filter. Refer to **Automatic Transmission Fluid, Fluid Pan and/or Filter Replacement**. 3. Remove the upper and lower valve body assembly. Refer to **Control Valve Lower Body and Upper Body Replacement**. 4. Disconnect the speed sensor electrical connector from the control solenoid valve assembly.	
1	Input and Output Speed Sensor Assembly Bolt (Qty: 2) **CAUTION:** **Refer to Fastener Caution .** **Tighten:** 12 N.m (106 lb in)
2	Input and Output Speed Sensor Assembly **Procedure** 1. Disconnect the speed sensor wiring harness clips. 2. Inspect the clips for damage. 3. Replace if damaged.
3	Control Valve Body Assembly

TRANSMISSION REPLACEMENT

NOTE: **NEW cooler pipe O-rings and torque converter bolts will be required each time the transmission is removed and installed.**

Removal Procedure

1. Remove the exhaust system. Refer to **Exhaust Muffler with Resonator, Exhaust, and Tail Pipe Replacement (H-Pipe)** or **Exhaust Muffler with Resonator, Exhaust, and Tail Pipe Replacement (Vehicle Service)** .
2. Remove the catalytic converters. Refer to **Catalytic Converter Replacement - Left Side (LLT)** or **Catalytic Converter Replacement - Left Side (L99/LS3)** and **Catalytic Converter Replacement - Right Side (LLT)** or **Catalytic Converter Replacement - Right Side (L99/LS3)** .
3. Remove the propeller shaft. Refer to **Two-Piece Propeller Shaft Replacement** .
4. Disconnect the shift linkage from the transmission.

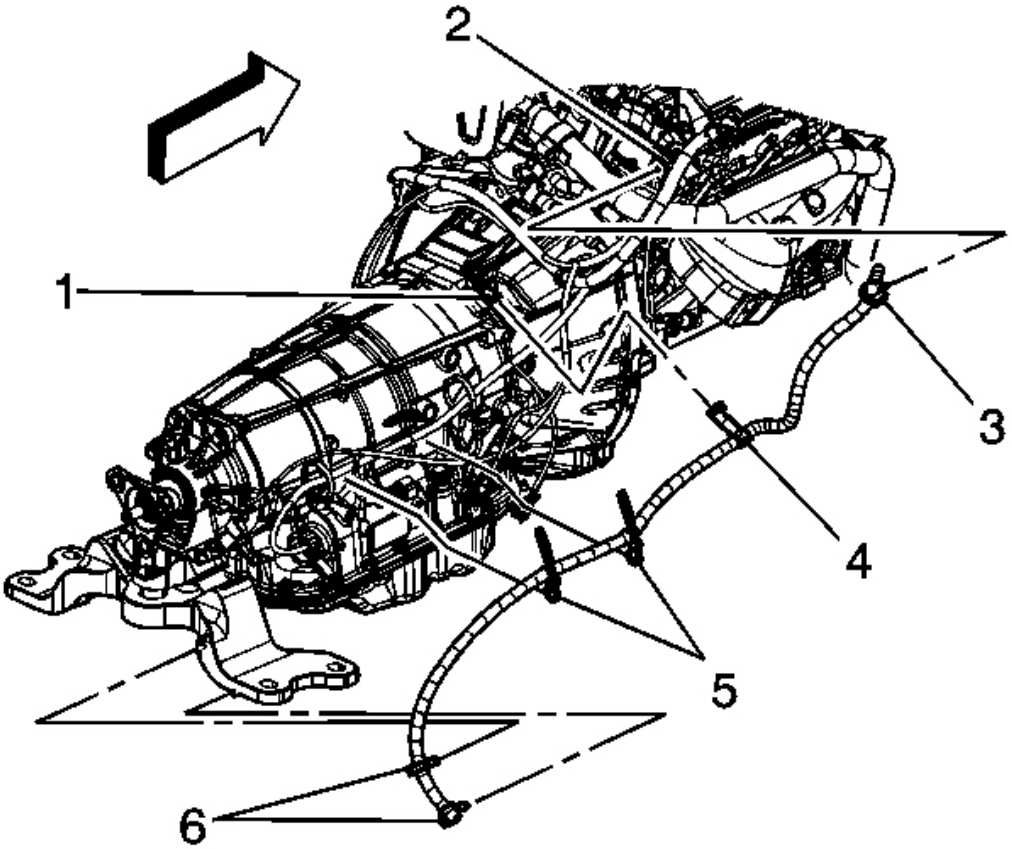

Fig. 64: View Of Vent Hose Assembly
Courtesy of GENERAL MOTORS CORP.

5. Remove the transmission vent hose from the retaining clips (6) on the transmission support.

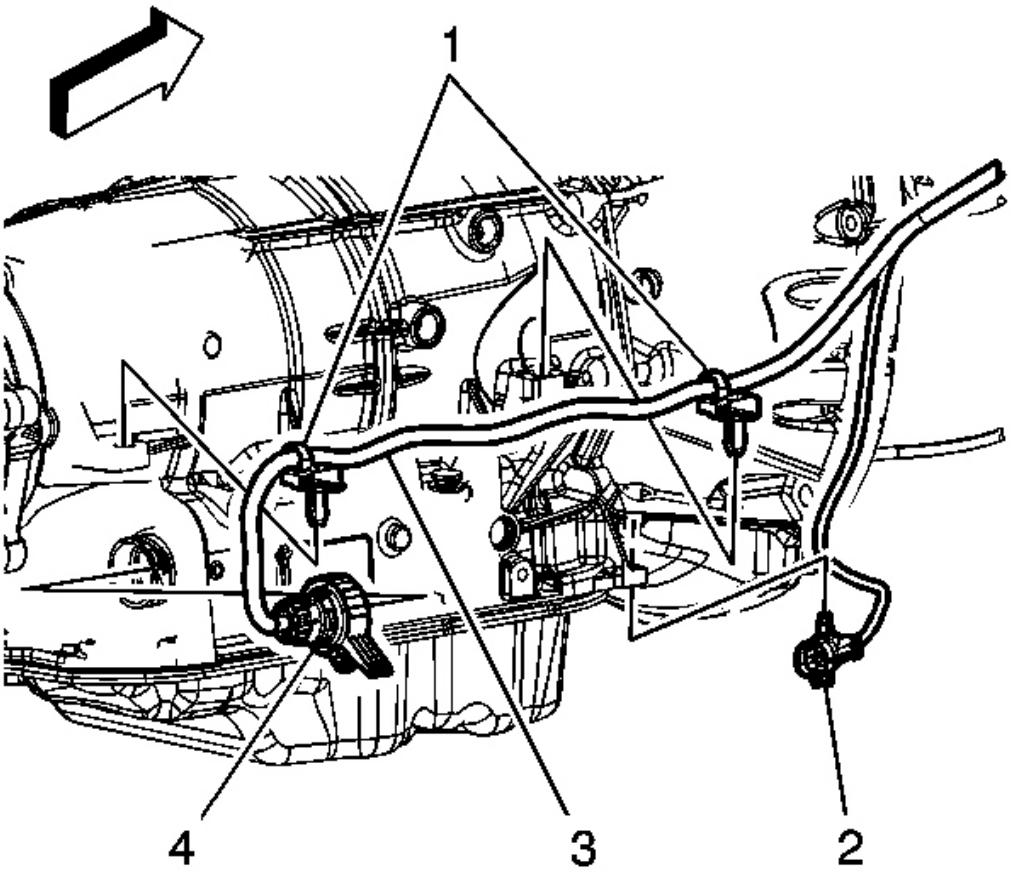

Fig. 65: View Of Oxygen Sensor Wiring Harness Connector, Retainers
Courtesy of GENERAL MOTORS CORP.

6. Disconnect the transmission wiring harness connector (4) from the transmission by releasing the locking mechanism and rotating the latch counterclockwise.
7. Remove the wiring harness retainers (1) from the transmission.
8. Remove the oxygen sensor wiring harness connector (2) from the transmission.
9. Place an oil drain pan under the transmission fluid cooler pipes.

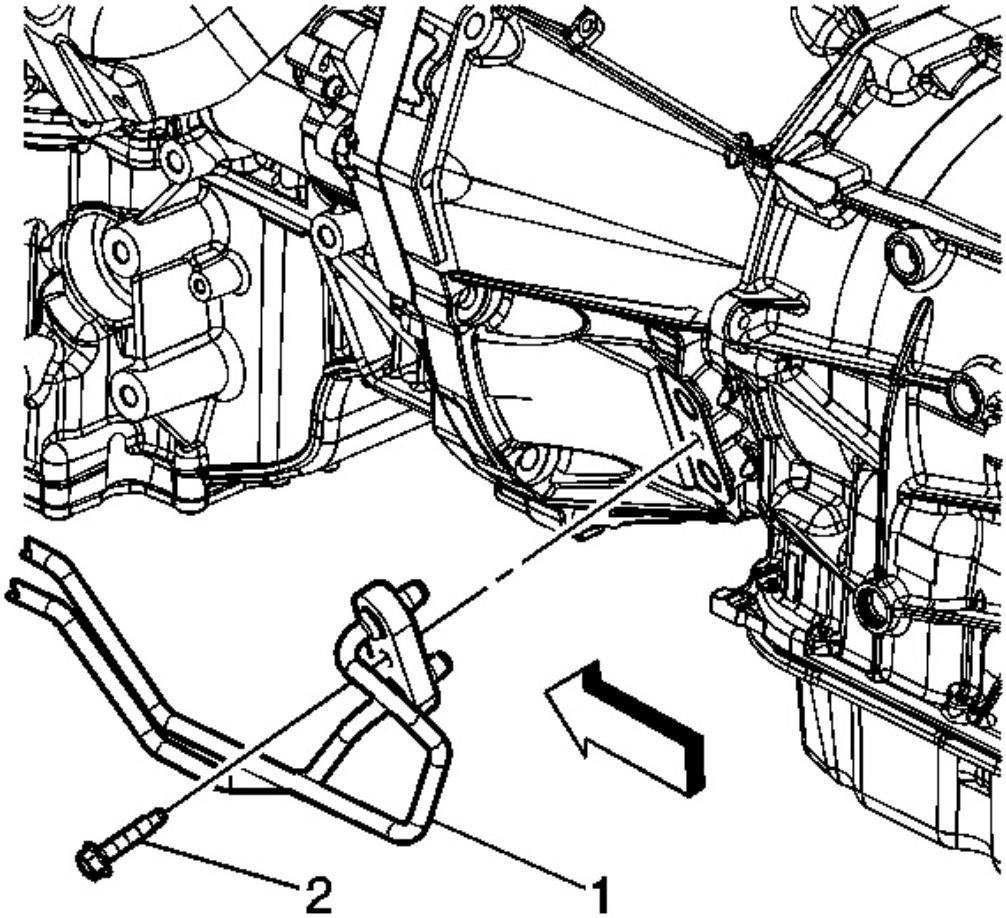

Fig. 66: View of Transmission Fluid Cooler Pipes
Courtesy of GENERAL MOTORS CORP.

10. Remove the transmission fluid cooler pipes (1) from the transmission, and position aside.
11. Remove and discard the O-rings. Do NOT reuse the O-rings.
12. Plug the open outlet ports to prevent fluid loss and contamination.

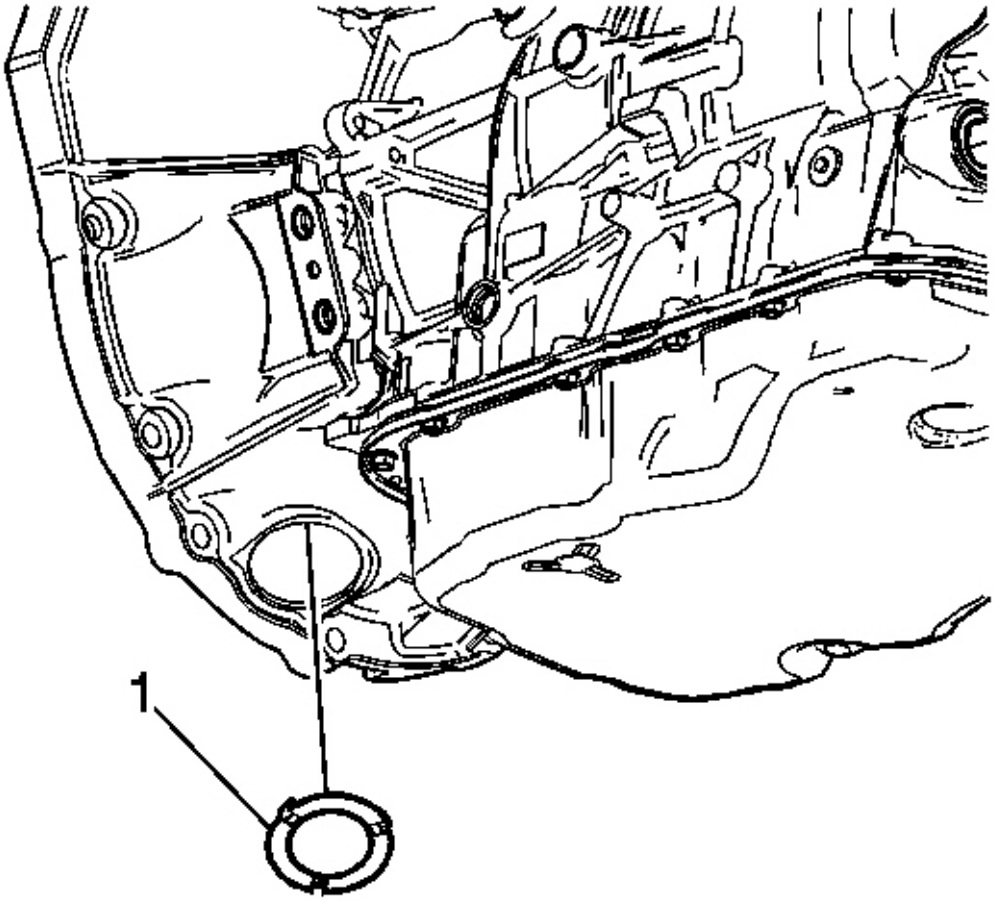

Fig. 67: Identifying Transmission Close Out Plug
Courtesy of GENERAL MOTORS CORP.

13. Remove the transmission close out plug (1).
14. Mark the torque converter to flexplate/flywheel orientation to ensure proper realignment.
15. Remove the starter motor. Refer to **Starter Replacement (LLT)** or **Starter Replacement (LS3/L99)** .
16. Remove the right side transmission torque converter cover.

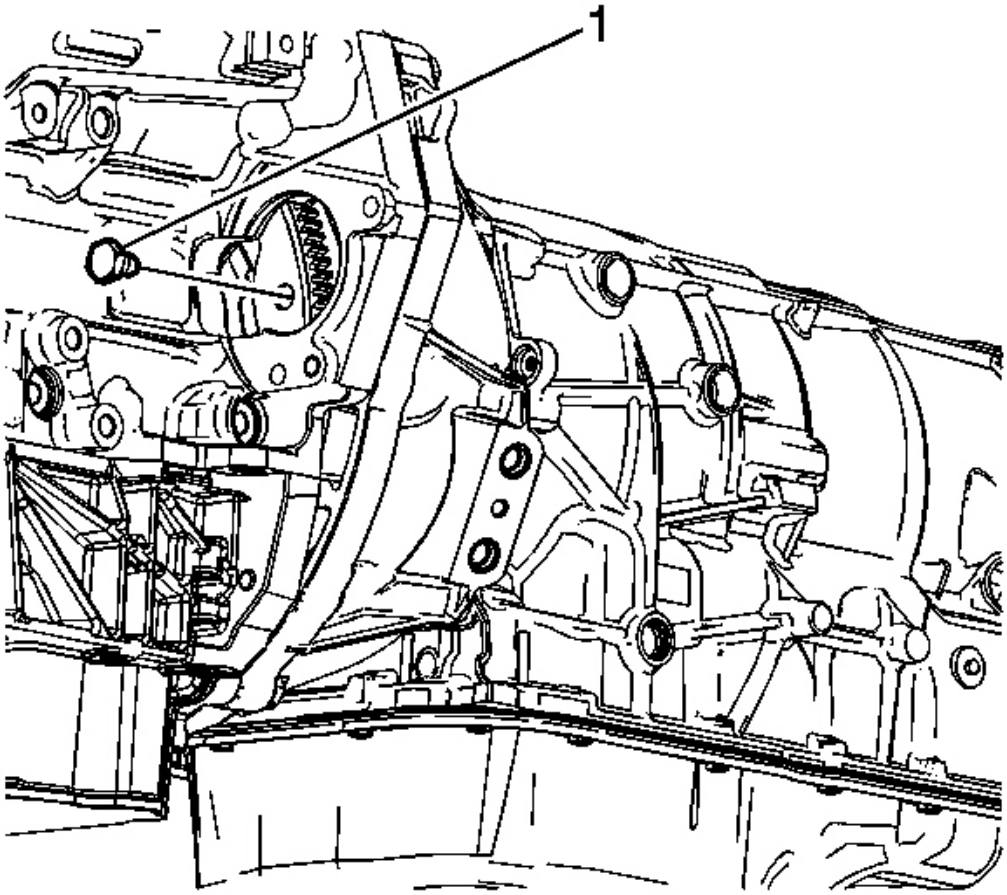

Fig. 68: Identifying Torque Converter Bolts
Courtesy of GENERAL MOTORS CORP.

17. Repeat the following steps for all torque converter bolts (1):
    1. Rotate the harmonic balancer center bolt clockwise ONLY, in order to align the torque converter bolt with the access hole.
    2. Remove and discard the torque converter bolts.
18. Support the transmission with a suitable transmission jack.
19. Remove the transmission support. Refer to **Transmission Mount Replacement**.
20. Slightly lower the transmission to gain access to the upper transmission retaining bolts.

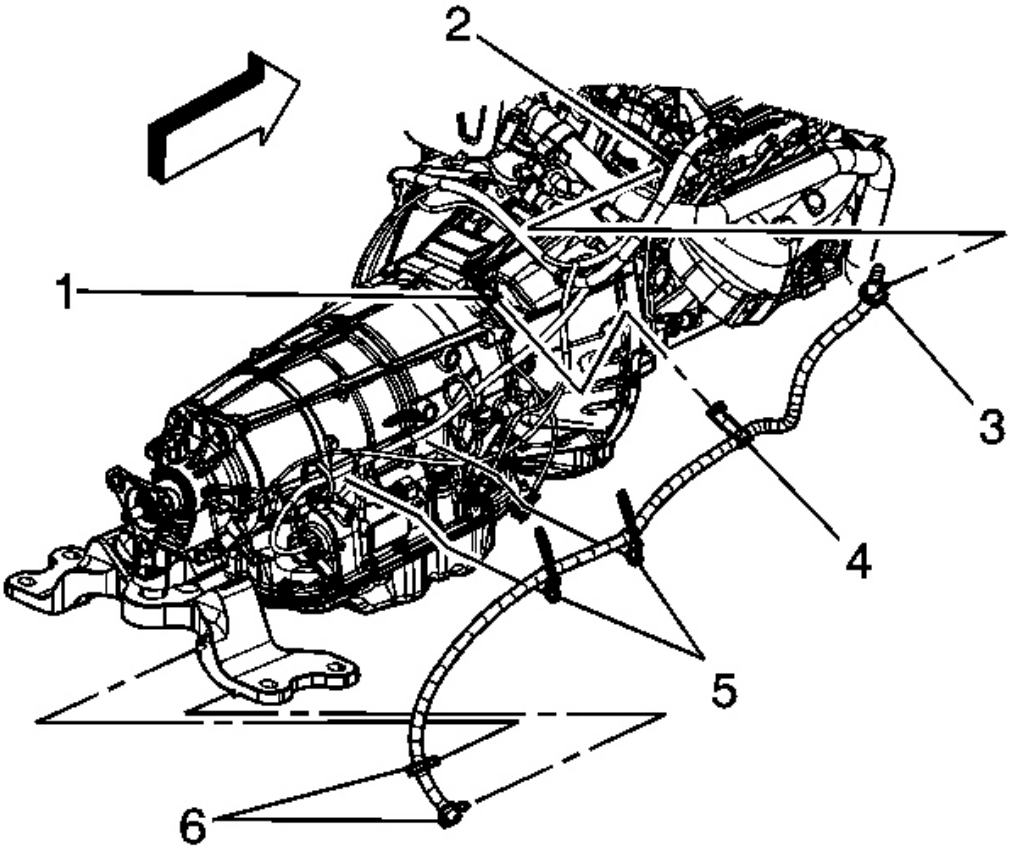

Fig. 69: View Of Vent Hose Assembly
Courtesy of GENERAL MOTORS CORP.

21. Disconnect the transmission vent hose (4) from the transmission vent pipe (1).

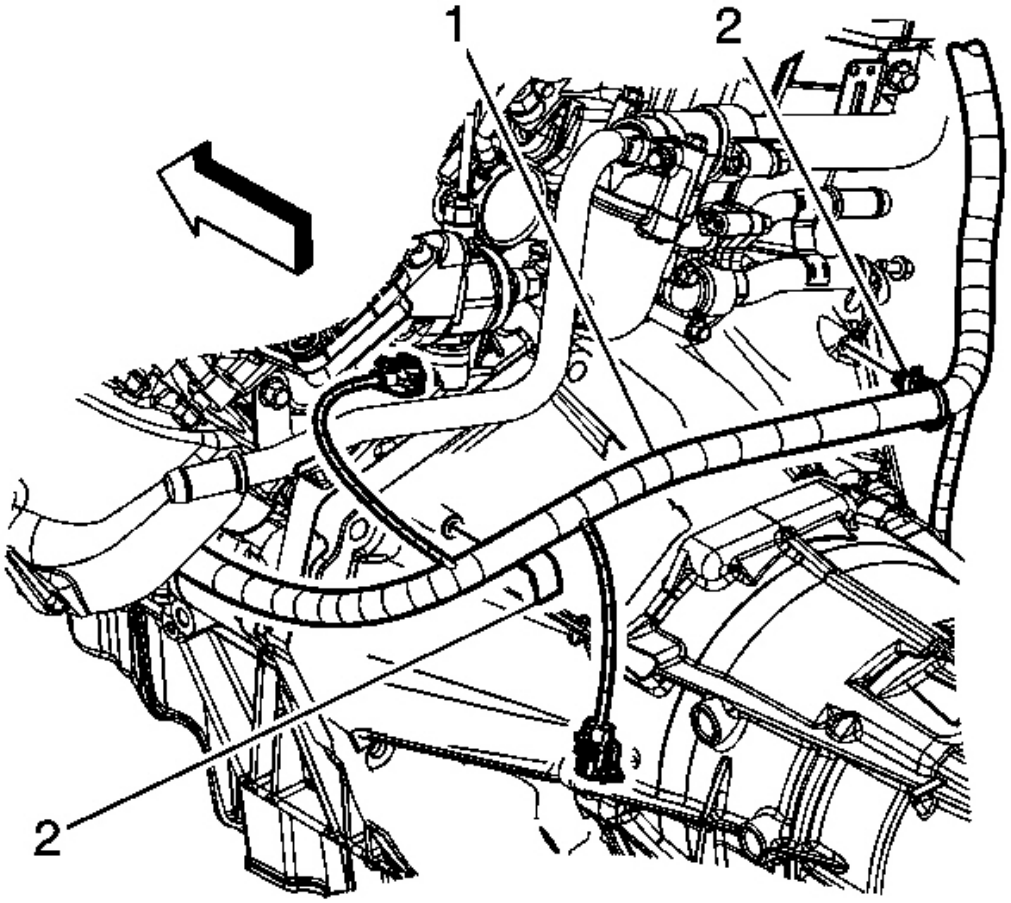

Fig. 70: Wiring Harness Retainers
Courtesy of GENERAL MOTORS CORP.

22. Remove the wiring harness retainers (2) from the transmission.
23. Position the transmission wiring harness (1) and vent tube out of the way.
24. On V6 models, remove the heater inlet and outlet pipe to access the top transmission bolt. Refer to **Heater Inlet And Outlet Pipe Replacement (LLT)** .

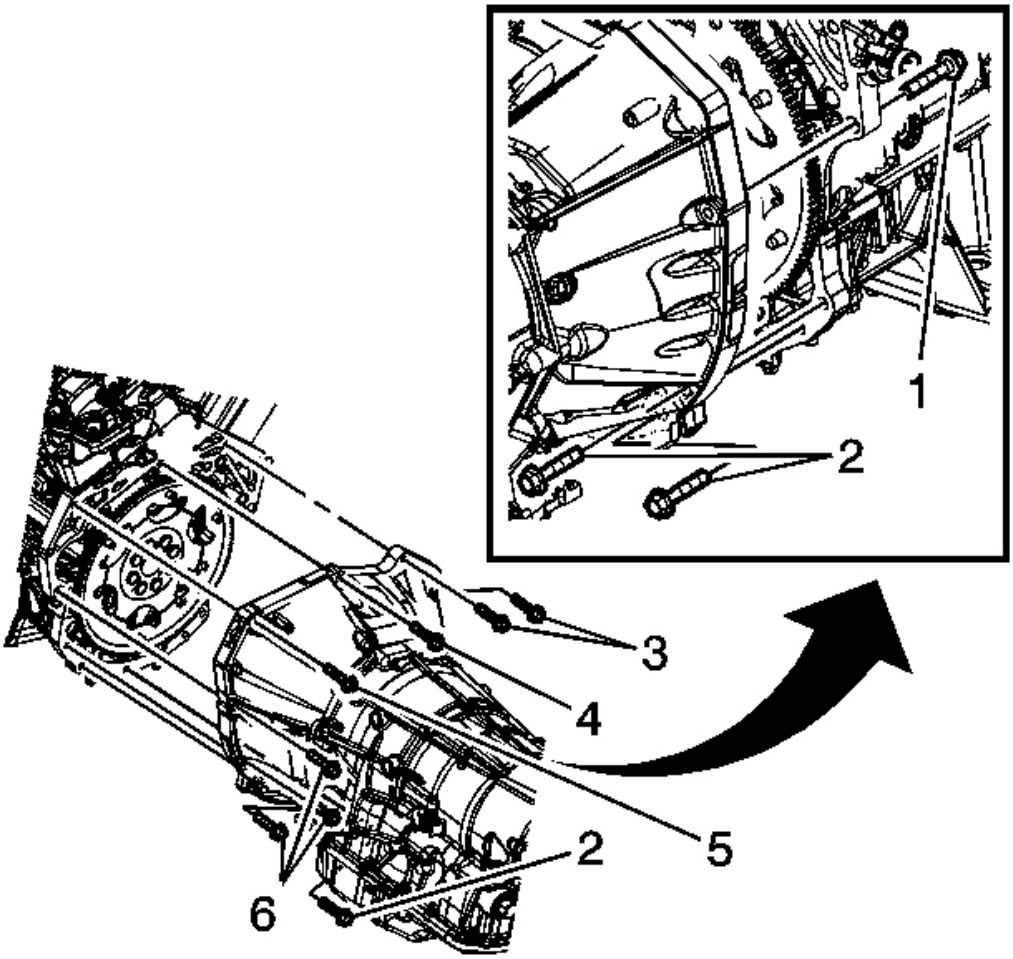

Fig. 71: Transmission Mounting Bolts
Courtesy of GENERAL MOTORS CORP.

25. Remove the transmission mounting bolts (1-6).
26. Remove the remaining two transmission bolts from the transmission.
27. Pull the transmission free from the engine dowels.

NOTE: **Ensure clearance is maintained between the transmission and the following:**

- **The wiring harness**
- **The vent tube**

- **The cooler pipes**

28. Carefully lower the transmission from the vehicle.
29. Flush the transmission oil cooler lines. Refer to **Transmission Fluid Cooler Flushing and Flow Test** .

Installation Procedure

NOTE: **Ensure clearance is maintained between the transmission and the following:**

- **The wiring harness**
- **The vent tube**
- **The cooler pipes**

1. Using the transmission jack, carefully raise the transmission to the engine.

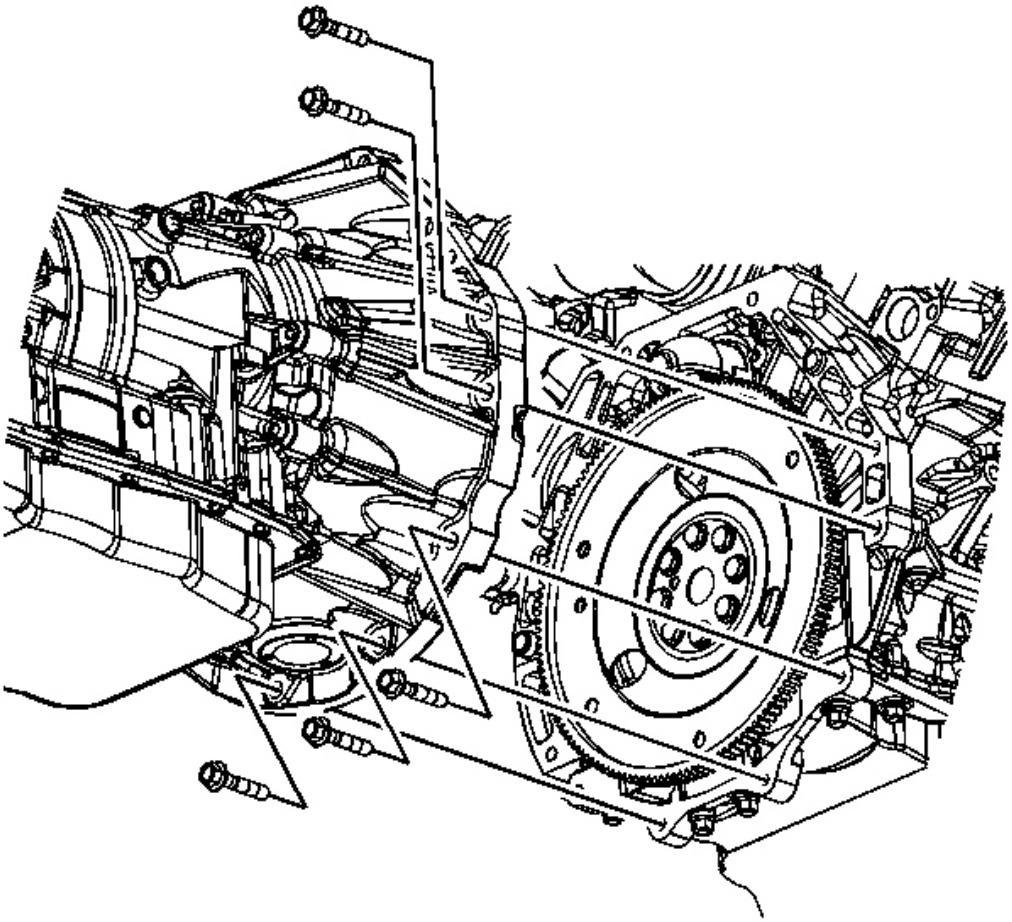

Fig. 72: Transmission Mounting Bolts
Courtesy of GENERAL MOTORS CORP.

2. Align the transmission with the engine dowels.

CAUTION: Refer to Fastener Caution .

3. Install the transmission mounting bolts and tighten to 50 N.m (37 lb ft).

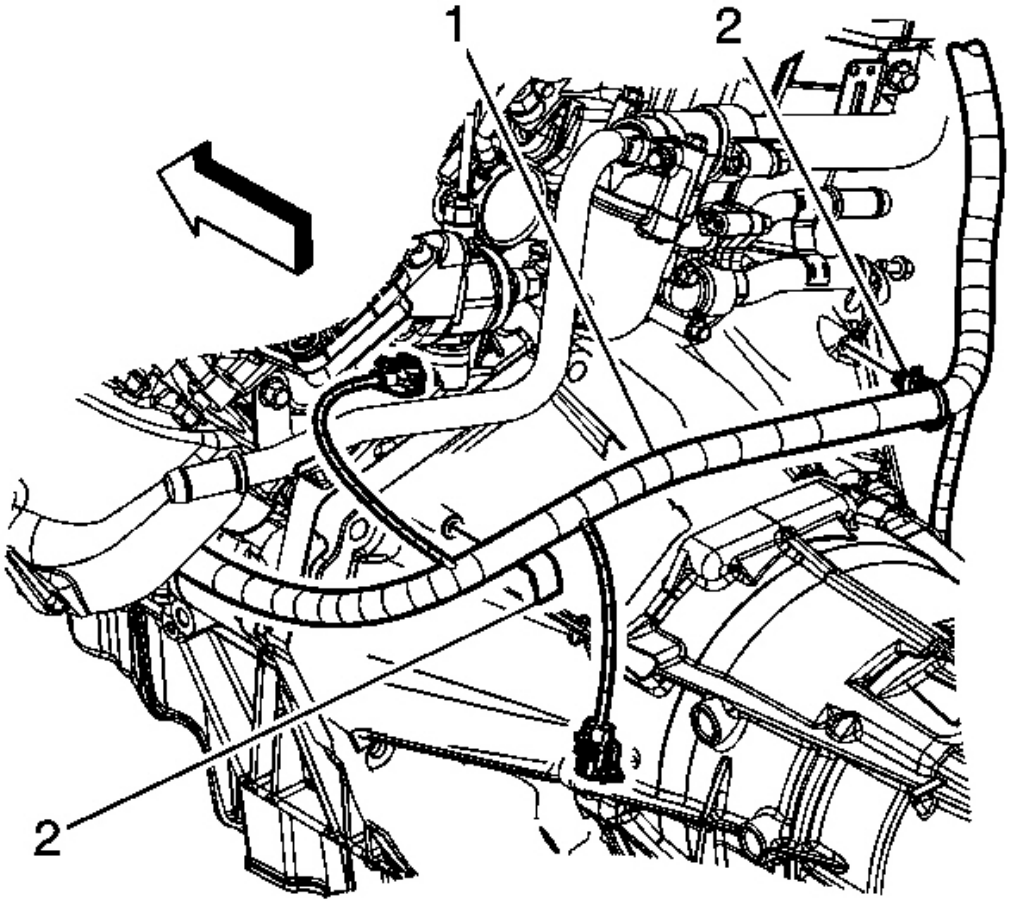

Fig. 73: Wiring Harness Retainers
Courtesy of GENERAL MOTORS CORP.

4. Position the engine wiring harness (1) to the original location.
5. Install the wiring harness retainers (2) to the transmission.

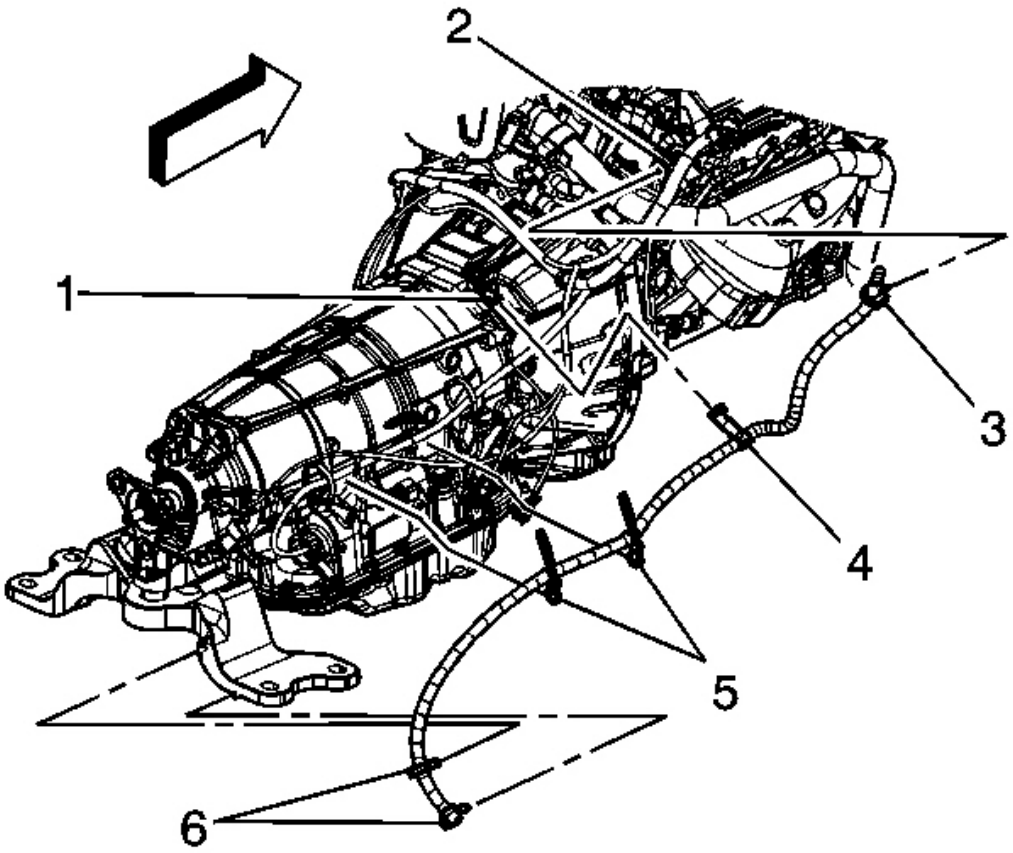

Fig. 74: View Of Vent Hose Assembly
Courtesy of GENERAL MOTORS CORP.

6. Connect the transmission vent hose (4) to the transmission vent pipe (1).
7. Raise the transmission to the installed position.
8. Install the transmission support. Refer to **Transmission Mount Replacement**.
9. Remove the jack from under the transmission.
10. Align the torque converter to flexplate/flywheel orientation marks made during the removal procedure.

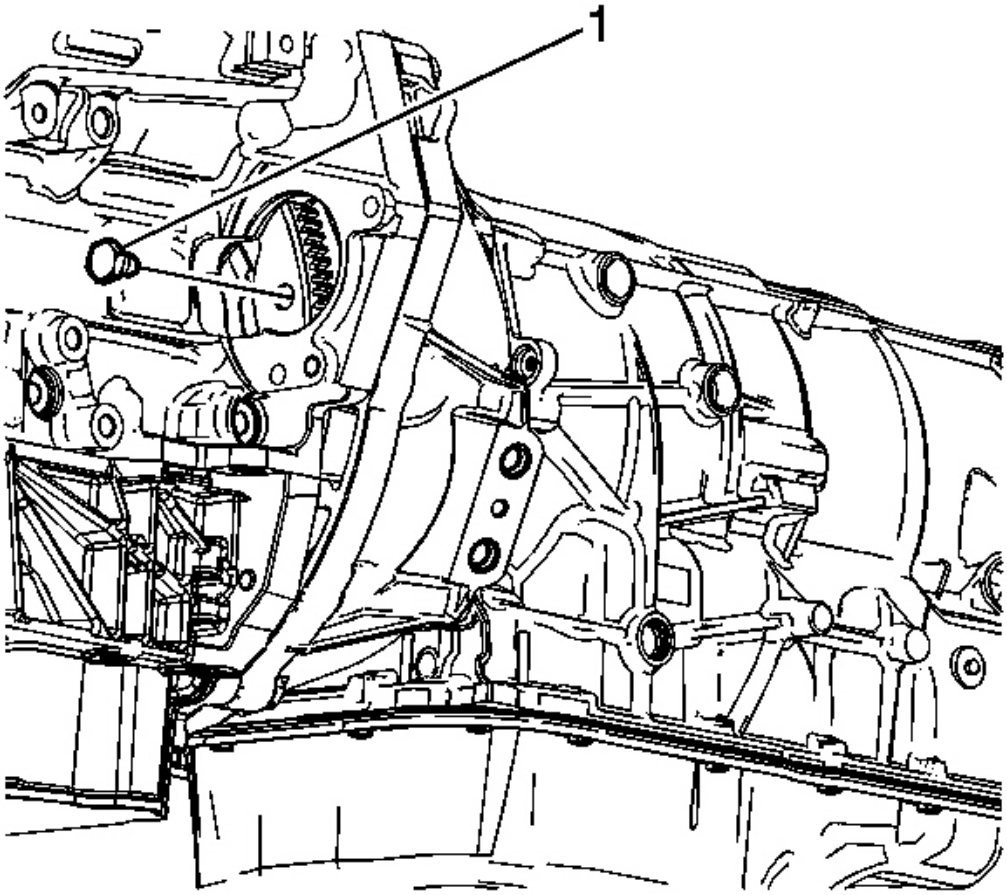

Fig. 75: Identifying Torque Converter Bolts
Courtesy of GENERAL MOTORS CORP.

NOTE: Torque converter bolts are self locking and must be replaced with NEW torque converter bolts every time the bolts are removed.

11. Complete the following steps for all torque converter bolts (1):
    1. Rotate the harmonic balancer center bolt clockwise ONLY, in order to align the torque converter bolt holes in the flexplate/flywheel with the access hole in the engine block.
    2. To aid in alignment of the torque converter to the flexplate/flywheel. Install all NEW torque converter bolts before fully tightening to 65 N.m (48 lb ft).
12. Install the starter motor. Refer to **Starter Replacement (LLT)** or **Starter Replacement (LS3/L99)** .
13. Install the right side transmission torque converter cover.

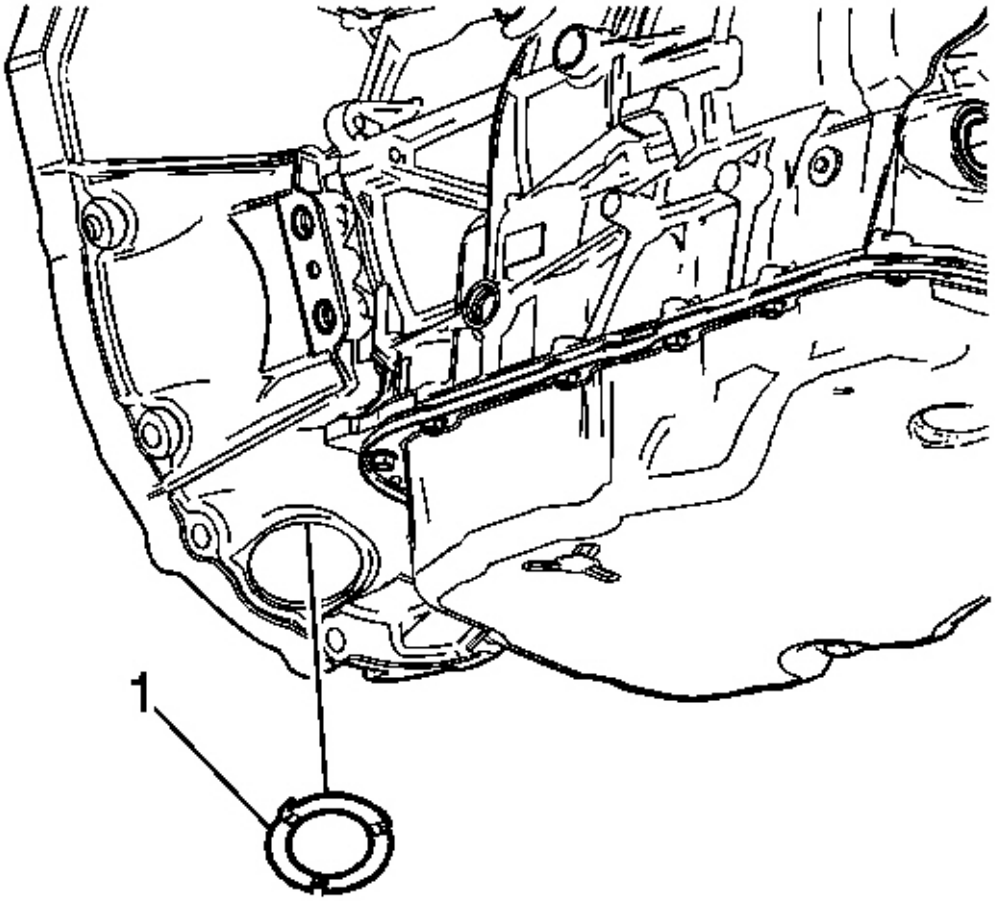

Fig. 76: Identifying Transmission Close Out Plug
Courtesy of GENERAL MOTORS CORP.

14. Install the transmission close out plug (1).

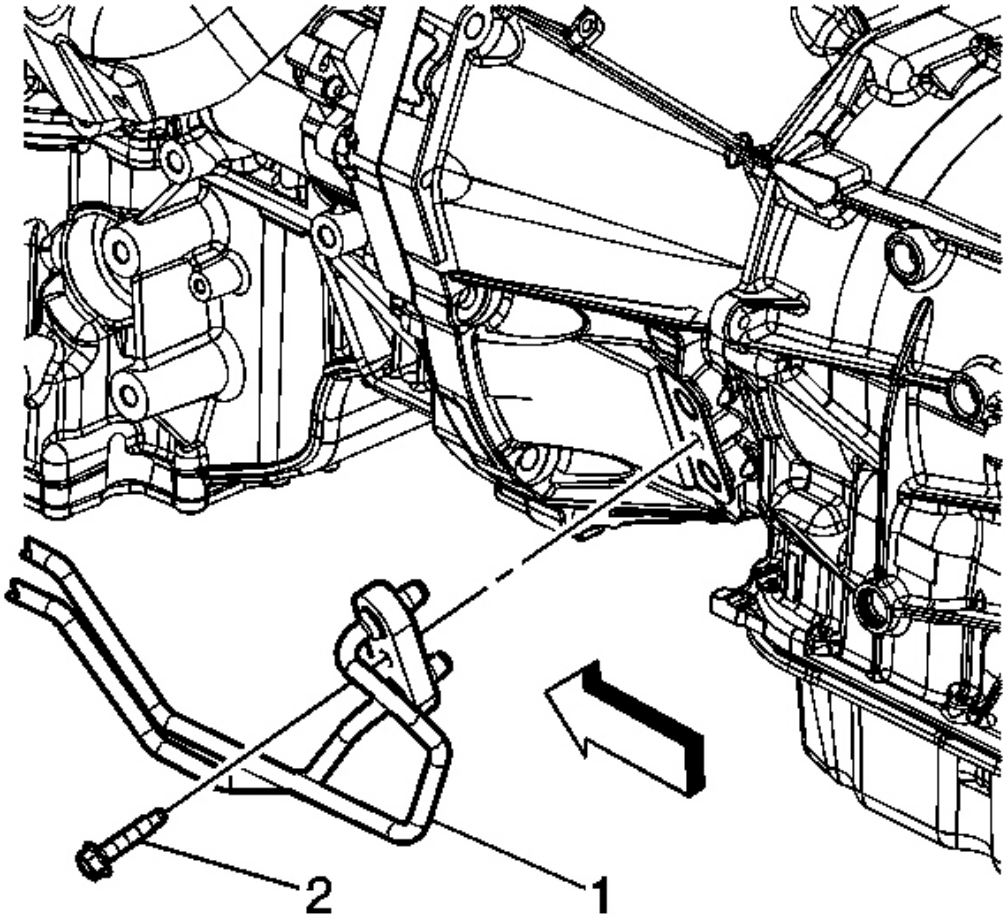

Fig. 77: View of Transmission Fluid Cooler Pipes
Courtesy of GENERAL MOTORS CORP.

15. Place NEW O-rings over the transmission fluid cooler pipes.
16. Install the transmission fluid cooler pipes (1) to the transmission.

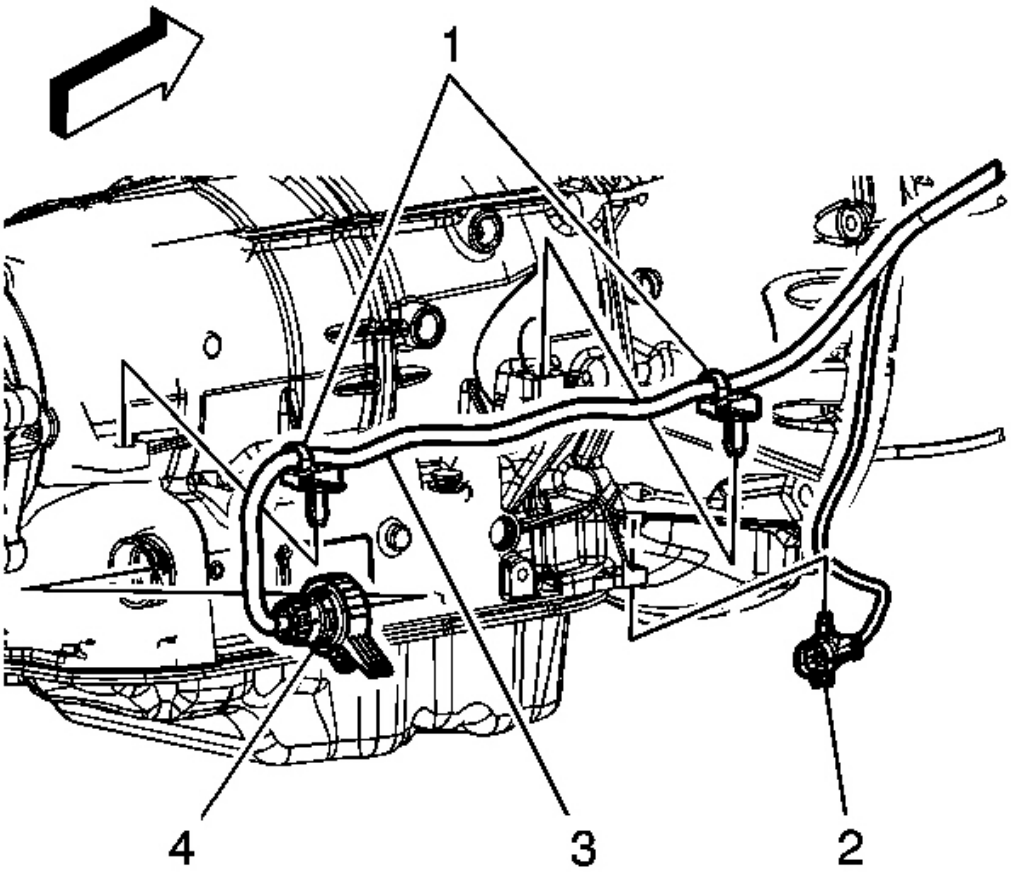

Fig. 78: View Of Oxygen Sensor Wiring Harness Connector, Retainers
Courtesy of GENERAL MOTORS CORP.

17. Install the oxygen sensor wiring harness connector (2) to the transmission.
18. Install the wiring harness retainers (1) to the transmission.
19. Connect the transmission wiring harness connector (5) to the transmission by rotating the locking latch clockwise.

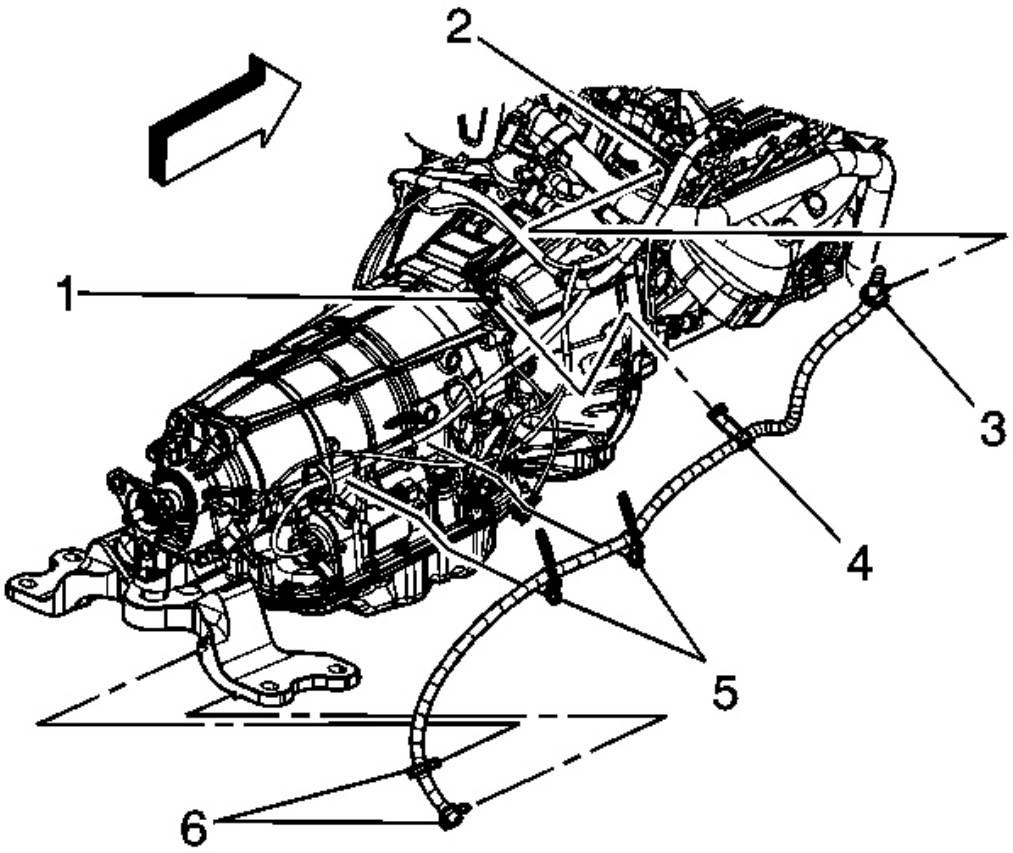

Fig. 79: View Of Vent Hose Assembly
Courtesy of GENERAL MOTORS CORP.

20. Install the transmission vent hose to the retaining clips (6) on the transmission support.
21. On V6 models, install the heater inlet and outlet pipe. Refer to **Heater Inlet And Outlet Pipe Replacement (LLT)** .

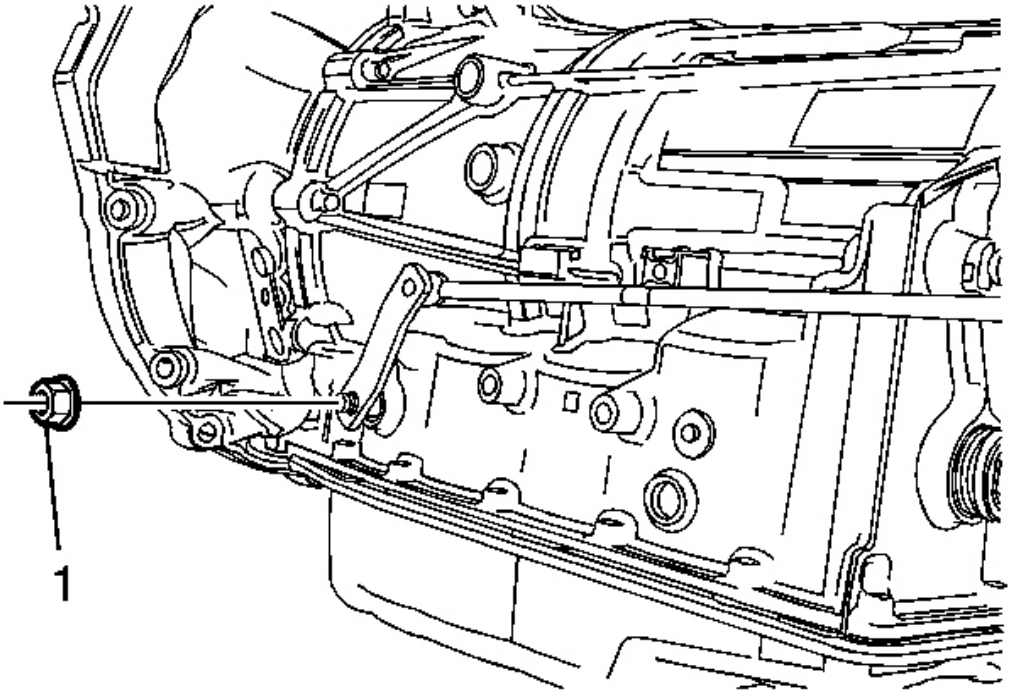

Fig. 80: Manual Shift Shaft Nut
Courtesy of GENERAL MOTORS CORP.

22. Install the shift linkage to the transmission. Refer to **Shift Control Linkage Replacement**.
23. Install the propeller shaft. Refer to **Two-Piece Propeller Shaft Replacement** .
24. Install the catalytic converters. Refer to **Catalytic Converter Replacement - Left Side (LLT)** or **Catalytic Converter Replacement - Left Side (L99/LS3)** and **Catalytic Converter Replacement - Right Side (LLT)** or **Catalytic Converter Replacement - Right Side (L99/LS3)** .
25. Install the exhaust system. Refer to **Exhaust Muffler with Resonator, Exhaust, and Tail Pipe Replacement (H-Pipe)** or **Exhaust Muffler with Resonator, Exhaust, and Tail Pipe Replacement (Vehicle Service)** .
26. Lower the vehicle.
27. Check the transmission fluid level and fill if necessary.
28. Adjust the shift control linkage. Refer to **Shift Control Linkage Adjustment**.

Transmission Final Test and Inspection

Complete the following procedure after the transmission is installed in the vehicle:

1. With the ignition OFF or disconnected, crank the engine several times. Listen for any unusual noises or evidence that any parts are binding.
2. Start the engine and listen for abnormal conditions.
3. While the engine continues to idle, raise and support the vehicle.
4. Inspect for fluid leaks while the engine is idling.
5. Perform a final inspection for the proper fluid level.
6. Lower the vehicle.
7. Calibrate the transmission control module (DTM). Refer to **Control Module References** .

NOTE: **It is recommended that transmission adaptive pressure (TAP) information be reset.**
Resetting the TAP values using a scan tool will erase all learned values in all cells. As a result, The ECM, PCM or TCM will need to relearn TAP values. Transmission performance may be affected as new TAP values are learned.

8. Reset the TAP values. Refer to **Service Fast Learn Adapts** .
9. Road test the vehicle. Refer to **Road Test** .