Fastener Tightening Specifications

Application	Specification	
	Metric	English
A/C		
Compressor Bolt	50 N·m	37 lb ft
Compressor Hose Assembly Bolt	16 N·m	12 lb ft
Barometric (BARO) Sensor Bolt	10 N·m	89 lb in
Camshaft Cap Bolt	10 N·m	89 lb in
Camshaft Cover Bolt	10 N·m	89 lb in
Camshaft Intermediate Drive Sprocket Bolt - Idler Sprocket	58 N·m	43 lb ft
Camshaft Position Actuator		
Camshaft Bolt	58 N·m	43 lb ft
Oil Control Valve Bolt	10 N·m	89 lb in
Camshaft Position Sensor Bolt	10 N·m	89 lb in
Catalytic Converter		
Exhaust Manifold Nut	50 N·m	37 lb ft
Close Out Cover Bolt	10 N·m	89 lb in
Connecting Rod Bolt		
First Pass	30 N·m	22 lb ft
Second Pass - Counterclockwise	Back Off to Zero	
Third Pass	25 N·m	18 lb ft
Final Pass	110 Degrees	
Coolant Outlet Bolt	10 N·m	89 lb in
Crankshaft Balancer Bolt		
First Pass	100 N·m	74 lb ft
Final Pass	150 Degrees	
Crankshaft Main Bearing Bolt		
Inner		
First Pass	20 N·m	15 lb ft
Final Pass	80 degrees	
Outer		
First Pass	15 N·m	10 lb ft
Final Pass	110 Degrees	
Side		
First Pass	30 N·m	22 lb ft
Final Pass	60 Degrees	
Crankshaft Position Sensor Bolt	10 N·m	89 lb in
Crankshaft Position Sensor/Right Exhaust Manifold Lower Heat Shield		

cardiagn.com

ı M10 - Bolt	50 N·m	37 lb ft
Crankshaft Rear Oil Seal Housing Bolt	10 N·m	89 lb in
Cylinder Head Bolt - M8		
ı First Pass	15 N·m	11 lb ft
ı Final Pass	75 Degrees	
Cylinder Head Bolt - M11		
ı First Pass	30 N·m	22 lb ft
ı Final Pass	150 degrees	
Cylinder Head Core Hole Plug	75 N·m	55 lb ft
Drive Belt		
ı Idler Pulley Bolt	50 N·m	37 lb ft
ı Tensioner Bracket Bolt	23 N·m	17 lb ft
Engine Control Module (ECM)		
ı Bolt	10 N·m	89 lb in
ı Bracket Bolt - Front	23 N·m	17 lb ft
ı Bracket Bolt - Side	10 N·m	89 lb in
ı Grounding Bolt	4.5 N·m	40 lb in
Engine Coolant Temperature (ECT) Sensor	30 N·m	22 lb ft
Engine Flywheel Bolt		
ı First Pass	30 N·m	22 lb ft
ı Final Pass	45 Degrees	
Engine Front Cover Bolt	23 N·m	17 lb ft
Engine Mount		
ı Bracket Bolt to Engine Block - M8	38 N·m	28 lb ft
ı Bracket Bolt to Engine Block - M10	60 N·m	45 lb ft
ı Nut to Engine Mount Bracket	80 N·m	59 lb ft
ı Nut to Frame	80 N·m	59 lb ft
Engine Mount Bracket Bolt	58 N·m	43 lb ft
Engine Mount Lower Nut	47 N·m	35 lb ft
Engine Mount Strut Bracket Bolts - to Engine	50 N·m	37 lb ft
Engine Mount Strut Bracket Bolts - to Radiator Support	26 N·m	19 lb ft
Engine Mount Strut Nut	48 N·m	35 lb ft
Engine Mount Upper Nut	53 N·m	39 lb ft
Engine Wiring Harness Bracket		
ı Bolt - Cylinder Head Rear	10 N·m	89 lb in
ı Bolt - ECM Bracket Side	23 N·m	17 lb ft
ı Bolt - ECM Bracket Top	10 N·m	89 lb in
ı Bolt - Left Side Oil Pan	10 N·m	89 lb in
ı Bolt - Left Side Oil Filter Adapter	10 N·m	89 lb in

cardiagn.com

Bolt - Right Side Block Front	23 N·m	17 lb ft
Bolt - Right Side Head Front	10 N·m	89 lb in
Engine Wiring Harness Ground		
Bolt - ECM Bracket Top	10 N·m	89 lb in
Bolt - Left Cylinder Head Side	10 N·m	89 lb in
Bolt - Right Cylinder Head Rear	10 N·m	89 lb in
Evaporative (EVAP) Purge Valve Bolt/Ball Stud	10 N·m	89 lb in
Exhaust Crossover Pipe Nuts	34 N·m	25 lb ft
Exhaust Manifold		
Bolt	20 N·m	15 lb ft
Heat Shield Bolt	10 N·m	89 lb in
Studs	6 N·m	53 lb in
Fuel Rail Bolt	25 N·m	18 lb ft
Fuel Rail Support Bracket	10 N·m	89 lb in
Generator		
Bolt	50 N·m	37 lb ft
Cable Nut	10 N·m	89 lb in
Ground Cable Bolt	50 N·m	37 lb ft
Heater Inlet/Outlet Pipe Assembly Bolt	10 N·m	89 lb in
Ignition Coil Bolt	10 N·m	89 lb in
Intake Manifold		
Tuning Valve Bolt	10 N·m	89 lb in
Upper-to-Cylinder Head Bolt - Long	23 N·m	17 lb ft
Upper-to-Cylinder Head Bolt - Short	23 N·m	17 lb ft
Upper-to-Lower Intake Manifold Bolt	23 N·m	17 lb ft
Knock Sensor Bolt	23 N·m	17 lb ft
Oil Drain Plug	25 N·m	18 lb ft
Oil Filter	25 N·m	18 lb ft
Oil Filter Housing Adapter Bolt	23 N·m	17 lb ft
Oil Gallery Plug	31 N·m	23 lb ft
Oil Level Indicator Tube Bolt	10 N·m	89 lb in
Oil Pan		
Bolt - Block M8	23 N·m	17 lb ft
Bolt - Crankshaft Rear Oil Seal Housing M6	10 N·m	89 lb in
Windage Tray Bolt	10 N·m	89 lb in
Oil Pressure Sender	20 N·m	15 lb ft
Oil Pump		
Bolt	23 N·m	17 lb ft
Cover Bolt	13 N·m	115 lb in

cardiagn.com

Pump Converter Pipe	40 N·m	30 lb ft
PCV Tube Bracket Bolt/Ball Stud	10 N·m	89 lb in
Piston Oil Cooling Nozzle Bolt	10 N·m	89 lb in
Power Steering Pump		
Bracket to Engine Bolt	50 N·m	37 lb ft
Reservoir Stud	25 N·m	18 lb ft
Primary Camshaft Drive Chain		
Left Lower Guide Bolt - Oil Pump - Second Design	23 N·m	17 lb ft
Tensioner Bolt	23 N·m	17 lb ft
Upper Guide Bolt	23 N·m	17 lb ft
Radiator Inlet Support Bracket Bolt	50 N·m	37 lb ft
Radiator Outlet Pipe Assembly Bolt	10 N·m	89 lb in
Secondary Camshaft Drive Chain		
Guide Bolt	23 N·m	17 lb ft
Shoe Bolt	23 N·m	17 lb ft
Tensioner Bolt	23 N·m	17 lb ft
Spark Plug	18 N·m	13 lb ft
Starter Motor		
Bolt	50 N·m	37 lb ft
Cable Nut	10 N·m	89 lb in
Suction Tube Bolt	10 N·m	89 lb in
Suction Screen Bolt	10 N·m	89 lb in
Thermostat Housing Bolt	10 N·m	89 lb in
Throttle Body Bolt	10 N·m	89 lb in
Torque Converter Bolt	60 N·m	44 lb ft
Transmission		
Mount Bolt to Transmission - RPO	60 N·m	45 lb ft
Range Selector Lever Nut	9.5 N·m	84 lb in
To Engine Bolt	50 N·m	37 lb ft
Water Pump		
Bolt	10 N·m	89 lb in
Pulley Bolt	10 N·m	89 lb in

cardiagn.com

Engine Mechanical Specifications (LY7)

Application	Specification	
	Metric	English
General		
Engine Type	V-6	
Displacement	3.6 Liter	217 cu in
RPO	LY7	
VIN	7	
Bore	94 mm	3.7008 in
Stroke	85.6 mm	3.37 in
Compression Ratio	10.2:1	
Cranking RPM - at 40° C (104°F)	80 RPM	
Idle Speed	600 A/C Off - 700 A/C On	
Firing Order	1-2-3-4-5-6	
Spark Plug Gap	1.1 mm	0.0433 in
Block		
Crankshaft Main Bearing Bore Diameter	72.867-72.881 mm	2.8688-2.8693 in
Cylinder Bore Diameter	93.992-94.008 mm	3.7005-3.7011 in
Cylinder Bore Out-of-Round - Production Max.	0.013 mm	0.0005 in
Camshaft		
Camshaft Bearing Inside Diameter - Front Number 1	35.000-35.020 mm	1.3779-1.3787 in
Camshaft Bearing Inside Diameter - Middle and Rear Number 2-4	27.000-27.020 mm	1.0630-1.0638 in
Camshaft End Play	0.045-0.215 mm	0.0018-0.0085 in
Camshaft Journal Diameter - Front Number 1	34.936-34.960 mm	1.3754-1.3764 in
Camshaft Journal Diameter - Middle and Rear Number 2-4	26.936-26.960 mm	1.0605-1.0614 in
Camshaft Journal Out-of-Round	0.006 mm	0.0002 in
Camshaft Journal to Bore Clearance	0.040-0.084 mm	0.0016-0.0033 in
Camshaft Lobe Duration - Exhaust @ 0.150 mm (0.0059 in) Lift	238 degrees	
Camshaft Lobe Duration - Intake @ 0.150 mm (0.0059 in) Lift	237 degrees	
Camshaft Lobe Lift - Exhaust	42.425-42.725 mm	1.6703-1.6821 in

cardiagn.com

Camshaft Lobe Overlap @ 0.150 mm (0.0059 in) Lift	0 degrees	
Camshaft Runout - Front and Rear Number 1 and 4	0.025 mm	0.0010 in
Camshaft Runout - Middle 2 and 3	0.050 mm	0.0020 in
Camshaft Timing @ 0.15 mm (0.0059 in) Lift		
Valve Opens - Exhaust	-229 degrees BTDC	
Valve Opens - Intake	14 degrees BTDC	
Centerline - Exhaust	111 degrees BTDC	
Centerline - Intake	132 degrees ATDC	
Valve Closes - Exhaust	9 degrees ATDC	
Valve Closes - Intake	251 degrees ATDC	
Valve Lift - Exhaust	10.8 mm	0.4252 in
Valve Lift - Intake	10.8 mm	0.4252 in
Cooling System		
Thermostat Full Open Temperature	95°C	203°F
Connecting Rod		
Connecting Rod Bearing Clearance	0.010-0.070 mm	0.0004-0.0028 in
Connecting Rod Bore Diameter - Bearing End	59.620-59.636 mm	2.3472-2.3479 in
Connecting Rod Bore Diameter - Pin End	24.007-24.021 mm	0.9452-0.9457 in
Connecting Rod Length - Center to Center	150.400 mm	5.9212 in
Connecting Rod Side Clearance	0.095-0.355 mm	0.0374-0.0140 in
Connecting Rod Width - Bearing End		
Production	21.775 mm	0.8573 in
Service	21.725-21.825 mm	0.8553-0.8593 in
Connecting Rod Width - Pin End		
Production	21.775 mm	0.8573 in
Service	21.725-21.825 mm	0.8553-0.8593 in
Crankshaft		
Connecting Rod Journal Diameter	55.992-56.008 mm	2.2044-2.2050 in
Connecting Rod Journal Out-of-Round	0.005 mm	0.0002 in
Connecting Rod Journal Taper	0.005 mm	0.0002 in
Connecting Rod Journal Width		
Production	22.000 mm	0.8661 in

cardiagn.com

Crankshaft End Play	0.100-0.330 mm	0.0039-0.0130 in
Crankshaft Main Bearing Clearance	0.010-0.060 mm	0.0004-0.0024 in
Crankshaft Main Journal Diameter	67.992-68.008 mm	2.6768-2.6775 in
Crankshaft Main Journal Out-of-Round	0.005 mm	0.0002 in
Crankshaft Main Journal Taper	0.005 mm	0.0002 in
Crankshaft Main Journal Thrust Wall		
Runout	0.000-0.040 mm	0.0000-0.0016 in
Square	0.000-0.010 mm	0.0000-0.0004 in
Crankshaft Main Journal Width, #2, 4		
Production	24.000 mm	0.9449 in
Service	23.900-24.100 mm	0.9409-0.9488 in
Crankshaft Main Journal Width, #3		
Production	24.400 mm	0.9606 in
Service	24.360-24.440 mm	0.9591-0.9622 in
Crankshaft Pilot Bearing Bore Diameter	20.965-20.995 mm	0.8254-0.8266 in
Crankshaft Rear Flange Runout	0.025 mm	0.0010 in
Crankshaft Reluctor Ring Runout - Maximum	1.500 mm	0.0591 in
Crankshaft Runout	0.030 mm	0.0012 in
Crankshaft Thrust Bearing Clearance	0.076-0.305 mm	0.0030-0.0120 in
Crankshaft Thrust Surface - Height Diameter	95.000 mm	3.7401 in
Crankshaft Thrust Surface Runout	0.040 mm	0.0016 in
Cylinder Head		
Combustion Chamber Volume	53.407 cc	3.259 cu in
Valve Guide Bore - Exhaust	6.000-6.020 mm	0.2362-0.2370 in
Valve Guide Bore - Intake	6.000-6.020 mm	0.2362-0.2370 in
Valve Guide Installed Height	14.050-14.550 mm	0.5531-0.5728 in
Valve Lifter Bore Diameter	12.008-12.030 mm	0.4728-0.4736 in
Lubrication System		
Oil Capacity - with New Dry Oil Filter	5.2 Liters	5.5 Quarts

cardiagn.com

Oil Pressure - Minimum @ Idle	69 kPa	10 psi
Oil Pressure - Minimum @ 2,000 RPM	138 kPa	20 psi
Piston Cooling Jet Valve Opening Pressure	1.7-2.3 bar	25-33 psi
Oil Pump		
Gear Diameter - Outer	87.095-87.175 mm	3.4289-3.4321 in
Gear Pocket - Depth	15.565-15.600 mm	0.6128-0.6142 in
Gear Pocket - Diameter	87.275-87.325 mm	3.4360-3.4380 in
Gear Thickness - Drive/Driven	15.511-15.536 mm	0.6107-0.6117 in
Gear-to-Cover Clearance - Drive/Driven	0.030-0.085 mm	0.0012-0.0033 in
Gear-to-Housing Clearance - Drive/Driven	0.100-0.230 mm	0.0039-0.0091 in
Inner Gear Tip Clearance	0.075-0.180 mm	0.0030-0.0071 in
Crankshaft Clearance to Housing	0.040-0.130 mm	0.0016-0.0051 in
Inner Gerotor Hub Diameter	53.310-53.335 mm	2.0988-2.0998 in
Housing Hub Diameter	53.380-53.420 mm	2.1016-2.1031 in
Inner Gerotor Hub Clearance to Housing	0.045-0.110 mm	0.0018-0.0043 in
Piston Rings		
Piston Ring End Gap		
First Compression Ring	0.150-0.300 mm	0.0059-0.0118 in
Second Compression Ring	0.280-0.480 mm	0.0110-0.0189 in
Oil Control Ring	0.150-0.600 mm	0.0059-0.0236 in
Piston Ring to Groove Clearance		
First Compression Ring	0.030-0.065 mm	0.0012-0.0026 in
Second Compression Ring	0.015-0.060 mm	0.0006-0.0024 in
Oil Control Ring	0.030-0.170 mm	0.0012-0.0067 in
Piston Ring Thickness		
First Compression Ring	1.175-1.190 mm	0.0463-0.0469 in

cardiagn.com

Oil Control Ring	2.360-2.480 mm	0.0929-0.0976 in
Pistons and Pins		
Piston		
Piston Diameter	93.956-93.974 mm	3.6990-3.6998 in
Piston Pin Bore Diameter	24.004-24.009 mm	0.9450-0.9452 in
Piston Ring Groove Width - First Compression Ring	1.220-1.240 mm	0.0480-0.0488 in
Piston Ring Groove Width - Second Compression Ring	1.510-1.530 mm	0.0595-0.0602 in
Piston Ring Groove Width - Oil Control Ring	2.510-2.530 mm	0.0988-0.0996 in
Piston to Bore Clearance	0.026-0.052 mm	0.0010-0.0021 in
Pin		
Piston Pin Clearance to Connecting Rod Bore	0.007-0.024 mm	0.0003-0.0010 in
Piston Pin Clearance to Piston Pin Bore	0.004-0.012 mm	0.0002-0.0005 in
Piston Pin Diameter	23.997-24.000 mm	0.9448-0.9449 in
Piston Pin Length	60.600-61.100 mm	2.3858-2.4055 in
Valve System		
Valves		
Valve Face Angle	44.25 degrees	
Valve Face Runout	0.038 mm	0.0015 in
Valve Face Width - Exhaust	2.750 mm	0.1083 in
Valve Face Width - Intake	2.180 mm	0.0858 in
Valve Head Diameter - Exhaust	30.470-30.730 mm	1.1996-1.2098 in
Valve Head Diameter - Intake	36.830-37.090 mm	1.4500-1.4602 in
Valve Installed Height	35.23-36.69 mm	1.3870-1.4445 in
Valve Length - Exhaust	97.110 mm	3.8232 in
Valve Length - Intake	101.230 mm	3.9854 in
Valve Seat Angle - Seating Surface	45 degrees	
Valve Seat Angle - Relief Surface	30 degrees	
Valve Seat Angle - Undercut Surface	60 degrees	

cardiagn.com

Valve Seat Width - Exhaust Seating Surface	1.400-1.800 mm	0.0551-0.0709 in
Valve Seat Width - Exhaust Relief Surface	0.700-0.900 mm	0.0276-0.0354 in
Valve Seat Width - Intake Seating Surface	1.000-1.400 mm	0.0394-0.0551 in
Valve Seat Width - Intake Relief Surface	0.500-0.700 mm	0.0197-0.0276 in
Valve Stem Diameter - Exhaust	5.945-5.965 mm	0.2341-0.2348 in
Valve Stem Diameter - Intake	5.955-5.975 mm	0.2344-0.2352 in
Valve Stem-to-Guide Clearance - Exhaust	0.035-0.075 mm	0.0014-0.0030 in
Valve Stem-to-Guide Clearance - Intake	0.025-0.065 mm	0.0010-0.0026 in
Valve Lifters		
Valve Lifter Diameter	11.489-12.000 mm	0.4523-0.4724 in
Valve Lifter-to-Bore Clearance	0.037-0.041 mm	0.0015-0.0016 in
Rocker Arms		
Valve Rocker Arm Ratio	1.68 to 1	
Valve Rocker Arm Roller Diameter	17.750-17.800 mm	0.6988-0.7008 in
Valve Springs		
Valve Spring Coil Thickness	3.250 x 3.900 mm	0.1280 x 0.1535 in
Valve Spring Diameter - Inside Top	12.090-12.590 mm	0.4760-0.4957 in
Valve Spring Diameter - Outside Top	20.140 mm	0.7929 in
Valve Spring Diameter - Inside Bottom	17.950-18.450 mm	0.7067-0.7264 in
Valve Spring Diameter - Outside Bottom	26.000 mm	1.0236 in
Valve Spring Free Length	42.050-44.850 mm	1.6555-1.7657 in
Valve Spring Installed Height - Closed	35.000 mm	1.3779 in
Valve Spring Installed Height - Open	24.000 mm	0.9449 in
Valve Spring Load - Closed	247-273 N	56-61 lb
Valve Spring Load - Open	598-662 N	134-149 lb
Valve Spring Total Number of Coils	7.1	

cardiagn.com

Engine Mechanical Specifications (LCS)

Application	Specification	
	Metric	English
General		
Engine Type	V-6	
Displacement	3.6 Liter	217 cu in
RPO	LCS	
VIN	B	
Bore	94 mm	3.7008 in
Stroke	85.6 mm	3.37 in
Compression Ratio	10.2:1	
Cranking RPM - at 40° C (104°F)	80 RPM	
Idle Speed	600 A/C Off - 700 A/C On	
Firing Order	1-2-3-4-5-6	
Spark Plug Gap	1.1 mm	0.0433 in
Block		
Crankshaft Main Bearing Bore Diameter	72.867-72.881 mm	2.8688-2.8693 in
Cylinder Bore Diameter	93.992-94.008 mm	3.7005-3.7011 in
Cylinder Bore Out-of-Round - Production Max.	0.013 mm	0.0005 in
Camshaft		
Camshaft Bearing Inside Diameter - Front Number 1	35.000-35.020 mm	1.3779-1.3787 in
Camshaft Bearing Inside Diameter - Middle and Rear Number 2-4	27.000-27.020 mm	1.0630-1.0638 in
Camshaft End Play	0.045-0.215 mm	0.0018-0.0085 in
Camshaft Journal Diameter - Front Number 1	34.936-34.960 mm	1.3754-1.3764 in
Camshaft Journal Diameter - Middle and Rear Number 2-4	26.936-26.960 mm	1.0605-1.0614 in
Camshaft Journal Out-of-Round	0.006 mm	0.0002 in
Camshaft Journal to Bore Clearance	0.040-0.084 mm	0.0016-0.0033 in
Camshaft Lobe Duration - Exhaust @ 0.150 mm (0.0059 in) Lift	238 degrees	
Camshaft Lobe Duration - Intake @ 0.150 mm (0.0059 in) Lift	237 degrees	
Camshaft Lobe Lift - Exhaust	42.425-42.725 mm	1.6703-1.6821 in

cardiagn.com

Camshaft Lobe Overlap @ 0.150 mm (0.0059 in) Lift	0 degrees	
Camshaft Runout - Front and Rear Number 1 and 4	0.025 mm	0.0010 in
Camshaft Runout - Middle 2 and 3	0.050 mm	0.0020 in
Camshaft Timing @ 0.15 mm (0.0059 in) Lift		
Valve Opens - Exhaust	-229 degrees BTDC	
Valve Opens - Intake	14 degrees ATDC	
Centerline - Exhaust	111 degrees ATDC	
Centerline - Intake	132 degrees ATDC	
Valve Closes - Exhaust	9 degrees ATDC	
Valve Closes - Intake	251 degrees ATDC	
Valve Lift - Exhaust	10.8 mm	0.4252 in
Valve Lift - Intake	10.8 mm	0.4252 in
Cooling System		
Thermostat Full Open Temperature	95°C	203°F
Connecting Rod		
Connecting Rod Bearing Clearance	0.010-0.070 mm	0.0004-0.0028 in
Connecting Rod Bore Diameter - Bearing End	59.620-59.636 mm	2.3472-2.3479 in
Connecting Rod Bore Diameter - Pin End	24.007-24.021 mm	0.9452-0.9457 in
Connecting Rod Length - Center to Center	150.400 mm	5.9212 in
Connecting Rod Side Clearance	0.095-0.355 mm	0.0374-0.0140 in
Connecting Rod Width - Bearing End		
Production	21.775 mm	0.8573 in
Service	21.725-21.825 mm	0.8553-0.8593 in
Connecting Rod Width - Pin End		
Production	21.775 mm	0.8573 in
Service	21.725-21.825 mm	0.8553-0.8593 in
Crankshaft		
Connecting Rod Journal Diameter	55.992-56.008 mm	2.2044-2.2050 in
Connecting Rod Journal Out-of-Round	0.005 mm	0.0002 in
Connecting Rod Journal Taper	0.005 mm	0.0002 in
Connecting Rod Journal Width		
Production	22.000 mm	0.8661 in

cardiagn.com

Crankshaft End Play	0.100-0.330 mm	0.0039-0.0130 in
Crankshaft Main Bearing Clearance	0.010-0.060 mm	0.0004-0.0024 in
Crankshaft Main Journal Diameter	67.992-68.008 mm	2.6768-2.6775 in
Crankshaft Main Journal Out-of-Round	0.005 mm	0.0002 in
Crankshaft Main Journal Taper	0.005 mm	0.0002 in
Crankshaft Main Journal Thrust Wall		
Runout	0.000-0.040 mm	0.0000-0.0016 in
Square	0.000-0.010 mm	0.0000-0.0004 in
Crankshaft Main Journal Width, #2, 4		
Production	24.000 mm	0.9449 in
Service	23.900-24.100 mm	0.9409-0.9488 in
Crankshaft Main Journal Width, #3		
Production	24.400 mm	0.9606 in
Service	24.360-24.440 mm	0.9591-0.9622 in
Crankshaft Pilot Bearing Bore Diameter	20.965-20.995 mm	0.8254-0.8266 in
Crankshaft Rear Flange Runout	0.025 mm	0.0010 in
Crankshaft Reluctor Ring Runout - Maximum	1.500 mm	0.0591 in
Crankshaft Runout	0.030 mm	0.0012 in
Crankshaft Thrust Bearing Clearance	0.076-0.305 mm	0.0030-0.0120 in
Crankshaft Thrust Surface - Height Diameter	95.000 mm	3.7401 in
Crankshaft Thrust Surface Runout	0.040 mm	0.0016 in
Cylinder Head		
Combustion Chamber Volume	53.6 cc	3.271 cu in
Valve Guide Bore - Exhaust	6.000-6.020 mm	0.2362-0.2370 in
Valve Guide Bore - Intake	6.000-6.020 mm	0.2362-0.2370 in
Valve Guide Installed Height	14.050-14.550 mm	0.5531-0.5728 in
Valve Lifter Bore Diameter	12.008-12.030 mm	0.4728-0.4736 in
Lubrication System		
Oil Capacity - with Filter	5.68 Liters	6 Quarts

cardiagn.com

Oil Pressure - Minimum @ Idle	69 kPa	10 psi
Oil Pressure - Minimum @ 2,000 RPM	138 kPa	20 psi
Piston Cooling Jet Valve Opening Pressure	1.7-2.3 bar	25-33 psi
Oil Pump		
Gear Diameter - Outer	87.095-87.175 mm	3.4289-3.4321 in
Gear Pocket - Depth	15.565-15.600 mm	0.6128-0.6142 in
Gear Pocket - Diameter	87.275-87.325 mm	3.4360-3.4380 in
Gear Thickness - Drive/Driven	15.511-15.536 mm	0.6107-0.6117 in
Gear-to-Cover Clearance - Drive/Driven	0.030-0.085 mm	0.0012-0.0033 in
Gear-to-Housing Clearance - Drive/Driven	0.100-0.230 mm	0.0039-0.0091 in
Inner Gear Tip Clearance	0.075-0.180 mm	0.0030-0.0071 in
Crankshaft Clearance to Housing	0.040-0.130 mm	0.0016-0.0051 in
Inner Gerotor Hub Diameter	53.310-53.335 mm	2.0988-2.0998 in
Housing Hub Diameter	53.380-53.420 mm	2.1016-2.1031 in
Inner Gerotor Hub Clearance to Housing	0.045-0.110 mm	0.0018-0.0043 in
Piston Rings		
Piston Ring End Gap		
First Compression Ring	0.150-0.300 mm	0.0059-0.0118 in
Second Compression Ring	0.280-0.480 mm	0.0110-0.0189 in
Oil Control Ring	0.150-0.600 mm	0.0059-0.0236 in
Piston Ring to Groove Clearance		
First Compression Ring	0.030-0.065 mm	0.0012-0.0026 in
Second Compression Ring	0.015-0.060 mm	0.0006-0.0024 in
Oil Control Ring	0.030-0.170 mm	0.0012-0.0067 in
Piston Ring Thickness		
First Compression Ring	1.175-1.190 mm	0.0463-0.0469 in

cardiagn.com

Oil Control Ring	2.360-2.480 mm	0.0929-0.0976 in
Pistons and Pins		
Piston		
Piston Diameter	93.956-93.974 mm	3.6990-3.6998 in
Piston Pin Bore Diameter	24.004-24.009 mm	0.9450-0.9452 in
Piston Ring Groove Width - First Compression Ring	1.220-1.240 mm	0.0480-0.0488 in
Piston Ring Groove Width - Second Compression Ring	1.510-1.530 mm	0.0595-0.0602 in
Piston Ring Groove Width - Oil Control Ring	2.510-2.530 mm	0.0988-0.0996 in
Piston to Bore Clearance	0.026-0.052 mm	0.0010-0.0021 in
Pin		
Piston Pin Clearance to Connecting Rod Bore	0.007-0.024 mm	0.0003-0.0010 in
Piston Pin Clearance to Piston Pin Bore	0.004-0.012 mm	0.0002-0.0005 in
Piston Pin Diameter	23.997-24.000 mm	0.9448-0.9449 in
Piston Pin Length	60.600-61.100 mm	2.3858-2.4055 in
Valve System		
Valves		
Valve Face Angle	44.25 degrees	
Valve Face Runout	0.038 mm	0.0015 in
Valve Face Width - Exhaust	2.750 mm	0.1083 in
Valve Face Width - Intake	2.180 mm	0.0858 in
Valve Head Diameter - Exhaust	30.470-30.730 mm	1.1996-1.2098 in
Valve Head Diameter - Intake	36.830-37.090 mm	1.4500-1.4602 in
Valve Installed Height	35.23-36.69 mm	1.3870-1.4445 in
Valve Length - Exhaust	97.110 mm	3.8232 in
Valve Length - Intake	101.230 mm	3.9854 in
Valve Seat Angle - Seating Surface	45 degrees	
Valve Seat Angle - Relief Surface	30 degrees	
Valve Seat Angle - Undercut Surface	60 degrees	

cardiagn.com

Valve Seat Runout - Maximum	0.080 mm	0.0032 in
Valve Seat Width - Exhaust Seating Surface	1.400-1.800 mm	0.0551-0.0709 in
Valve Seat Width - Exhaust Relief Surface	0.700-0.900 mm	0.0276-0.0354 in
Valve Seat Width - Intake Seating Surface	1.000-1.400 mm	0.0394-0.0551 in
Valve Seat Width - Intake Relief Surface	0.500-0.700 mm	0.0197-0.0276 in
Valve Stem Diameter - Exhaust	5.945-5.965 mm	0.2341-0.2348 in
Valve Stem Diameter - Intake	5.955-5.975 mm	0.2344-0.2352 in
Valve Stem-to-Guide Clearance - Exhaust	0.035-0.075 mm	0.0014-0.0030 in
Valve Stem-to-Guide Clearance - Intake	0.025-0.065 mm	0.0010-0.0026 in
Valve Lifters - Stationary Hydraulic Lifter Assembly (SHLA)		
Valve Lifter (SHLA) Diameter	12.008-12.030 mm	0.4728-0.4736 in
Valve Lifter (SHLA)-to-Bore Clearance	0.037-0.041 mm	0.0015-0.0016 in
Rocker Arms		
Valve Rocker Arm Ratio	1.68 to 1	
Valve Rocker Arm Roller Diameter	17.750-17.800 mm	0.6988-0.7008 in
Valve Springs		
Valve Spring Coil Thickness	3.250 x 3.900 mm	0.1280 x 0.1535 in
Valve Spring Diameter - Inside Top	12.090-12.590 mm	0.4760-0.4957 in
Valve Spring Diameter - Outside Top	20.140 mm	0.7929 in
Valve Spring Diameter - Inside Bottom	17.950-18.450 mm	0.7067-0.7264 in
Valve Spring Diameter - Outside Bottom	26.000 mm	1.0236 in
Valve Spring Free Length	42.050-44.850 mm	1.6555-1.7657 in
Valve Spring Installed Height - Closed	35.000 mm	1.3779 in
Valve Spring Installed Height - Open	24.000 mm	0.9449 in
Valve Spring Load - Closed	247-273 N	56-61 lb
Valve Spring Load - Open	598-662 N	134-149 lb
Valve Spring Total Number of Coils	7.1	

cardiagn.com

Adhesives, Fluids, Lubricants, and Sealers

Application	Type of Material	GM Part Number	
		United States	Canada
Camshaft Prelube	Lubricant	12345501	993362
Coolant and Oil Plug Threads	Sealant	12346004	10953480
Crankshaft Prelube	Lubricant	1052367	992869
Engine Oil	5W-30 Oil	12345610	993193
Oil Pan, Engine Front Cover, Crankshaft Rear Oil Seal Housing, Expansion Plugs	Sealant	12378521	88901148

cardiagn.com

Thread Repair Specifications

Table 1: Left Cylinder Head Camshaft Cover Face (LY7)
Table 2: Left Cylinder Head Camshaft Cover Face (LCS)
Table 3: Left Cylinder Head Front Face
Table 4: Left Cylinder Head Intake Face (LY7)
Table 5: Left Cylinder Head Intake Face (LCS)
Table 6: Left Cylinder Head Exhaust Face (LY7)
Table 7: Left Cylinder Head Exhaust Face (LCS)
Table 8: Left Cylinder Head Rear Face (LY7)
Table 9: Left Cylinder Head Rear Face (LCS)
Table 10: Right Cylinder Head Camshaft Cover Face
Table 11: Right Cylinder Head Front Face
Table 12: Right Cylinder Head Intake Face
Table 13: Right Cylinder Head Exhaust Face
Table 14: Right Cylinder Head Rear Face
Table 15: Engine Block Front
Table 16: Engine Block Left Side
Table 17: Engine Block Right Side
Table 18: Engine Block Rear
Table 19: Engine Block Bottom
Table 20: Engine Block Left Deck Face
Table 21: Engine Block Right Deck Face
Table 22: Engine Front Cover
Table 23: Upper Intake Manifold - Top (LY7)
Table 24: Upper Intake Manifold - Top (LCS)
Table 25: Upper Intake Manifold - Front (LY7)
Table 26: Upper Intake Manifold - Front (LCS)
Table 27: Upper Intake Manifold - Rear
Table 28: Lower Intake Manifold - Top
Table 29: Intake Manifold - Left (LCS)
Table 30: Intake Manifold - Right (LCS)
Table 31: Oil Pan Front
Table 32: Oil Pan Left Side
Table 33: Oil Pan Right Side
Table 34: Oil Pan Rear
Table 35: Oil Pan Bottom
Table 36: Oil Pan Top

Left Cylinder Head Camshaft Cover Face (LY7)

cardiagn.com

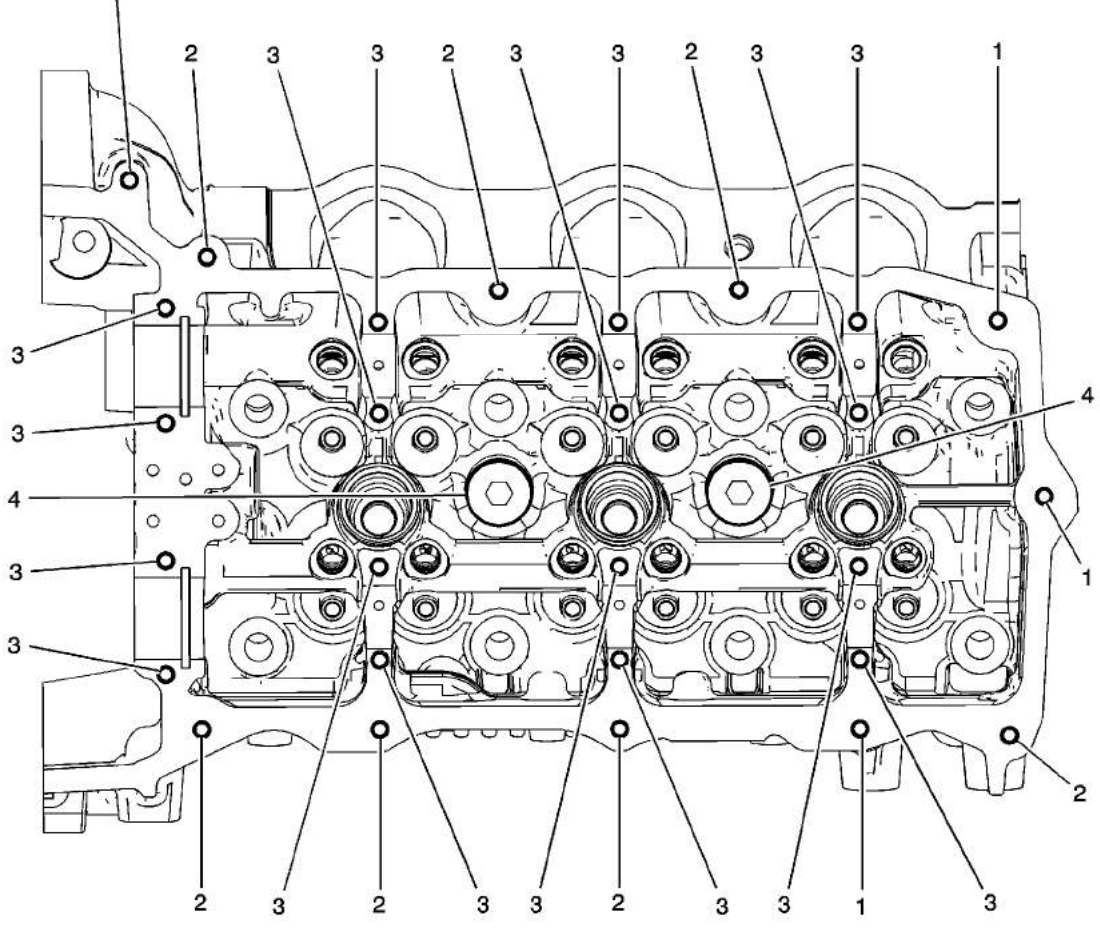

Left Cylinder Head Camshaft Cover Face (LY7)

Hole Location	Thread Size	Drill	Counter Bore Tool	Stop Collar	Tap	Driver	Insert	Drill Depth (Maximum)		Tap Depth (Minimum)	
		J 42385-						MM	(IN)	MM	(IN)
1	M6 x 1.0	201	202	N/A	203	204	205	22.5	0.8858	18.0	0.7087
2	M6 x 1.0	201	202	N/A	203	204	205	THRU		THRU	
3	M6 x 1.0	701	N/A	N/A	203	204	205	28.5	1.1220	24.0	0.9449
4	M20 x 1.5	715	716	N/A	717	718	719	25.0	0.9842	17.0	0.6693

Left Cylinder Head Camshaft Cover Face (LCS)

cardiagn.com

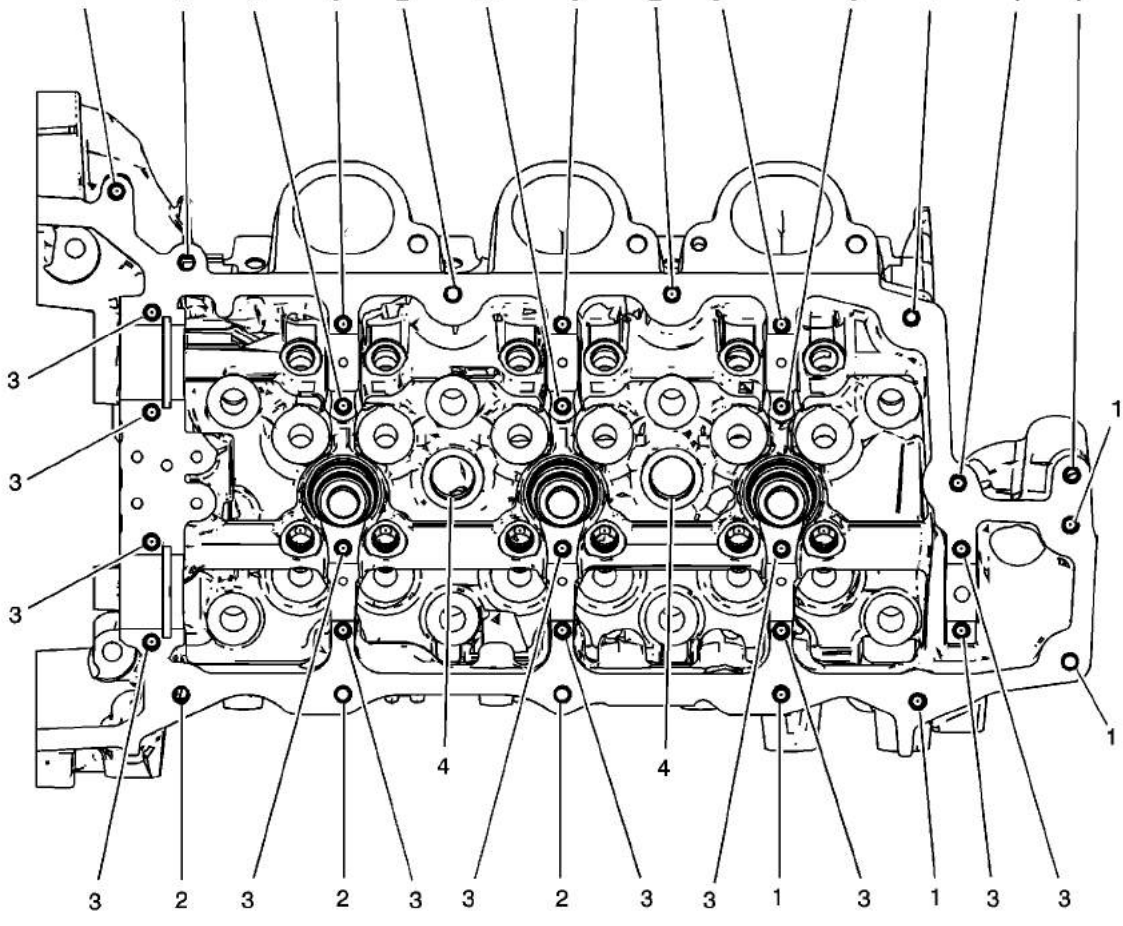

Left Cylinder Head Camshaft Cover Face (LCS)

Hole Location	Thread Size	Drill	Counter Bore Tool	Stop Collar	Tap	Driver	Insert	Drill Depth (Maximum)		Tap Depth (Minimum)	
		J 42385-						MM	(IN)	MM	(IN)
1	M6 x 1.0	201	202	N/A	203	204	205	22.5	0.8858	18.0	0.7087
2	M6 x 1.0	201	202	N/A	203	204	205	THRU		THRU	
3	M6 x 1.0	701	N/A	N/A	203	204	205	28.5	1.1220	24.0	0.9449
4	M20 x 1.5	715	716	N/A	717	718	719	25.0	0.9842	17.0	0.6693

Left Cylinder Head Front Face

cardiagn.com

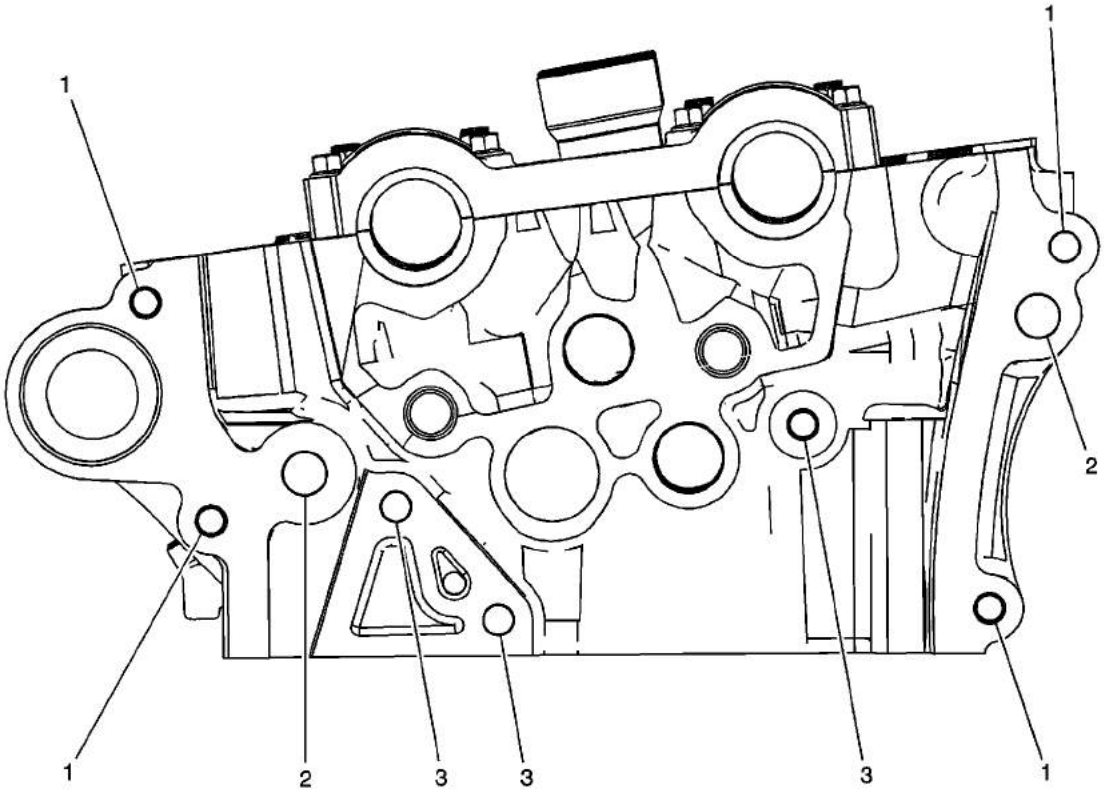

Left Cylinder Head Front Face

Hole Location	Thread Size	Drill	Counter Bore Tool	Stop Collar	Tap	Driver	Insert	Drill Depth (Maximum)		Tap Depth (Minimum)	
		J 42385-						MM	(IN)	MM	(IN)
1	M8 x 1.25	206	207	N/A	208	209	210	THRU		THRU	
2	M12 x 1.75	856	857	N/A	858	859	416	40.0	1.5748	32.5	1.2795
3	M8 x 1.25	206	207	N/A	208	209	210	18.0	0.7087	22.5	0.8858

Left Cylinder Head Intake Face (LY7)

cardiagn.com

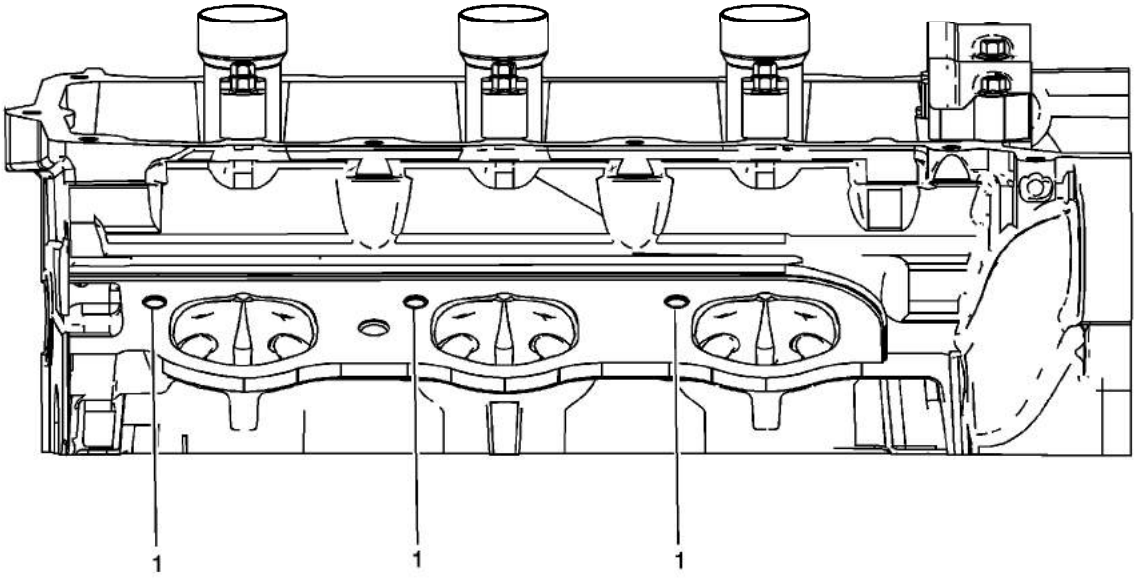

Left Cylinder Head Intake Face (LY7)

Hole Location	Thread Size	Drill	Counter Bore Tool	Stop Collar	Tap	Driver	Insert	Drill Depth (Maximum)		Tap Depth (Minimum)	
		J 42385-						MM	(IN)	MM	(IN)
1	M8 x 1.25	206	207	N/A	208	209	210	28.5	1.1220	23.0	0.9055

Left Cylinder Head Intake Face (LCS)

cardiagn.com

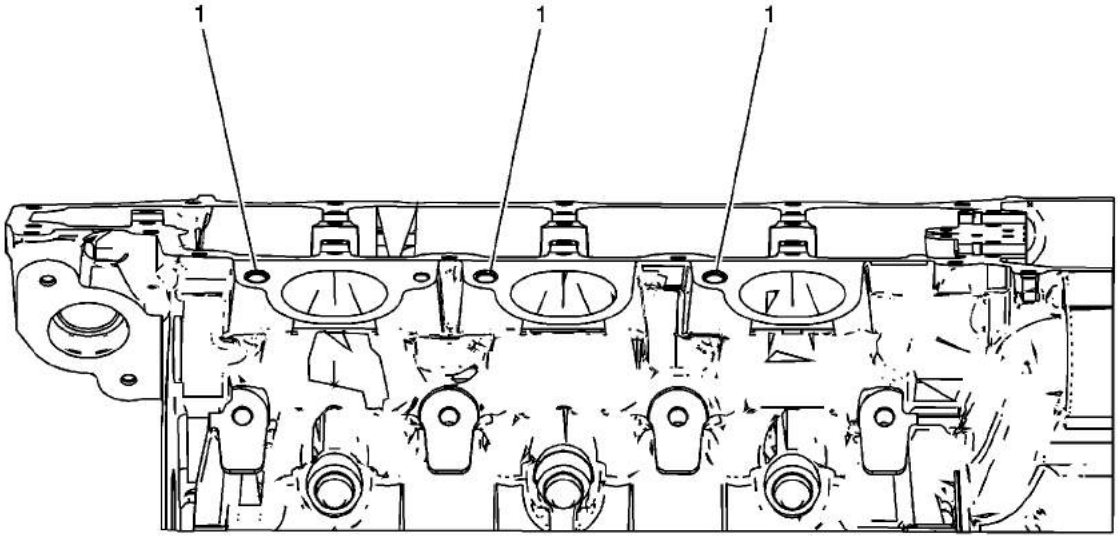

Left Cylinder Head Intake Face (LCS)

Hole Location	Thread Size	Drill	Counter Bore Tool	Stop Collar	Tap	Driver	Insert	Drill Depth (Maximum)		Tap Depth (Minimum)	
		J 42385-						MM	(IN)	MM	(IN)
1	M8 x 1.25	206	207	N/A	208	209	210	28.5	1.1220	23.0	0.9055

Left Cylinder Head Exhaust Face (LY7)

cardiagn.com

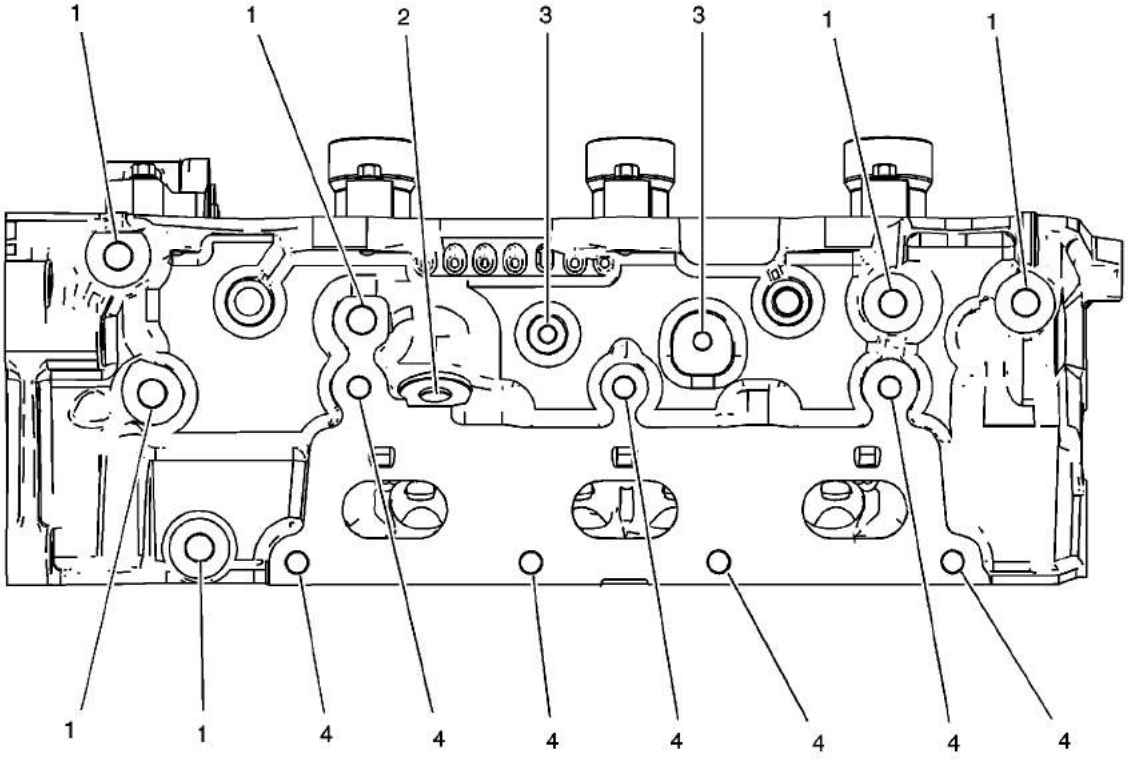

Left Cylinder Head Exhaust Face (LY7)

Hole Location	Thread Size	Drill	Counter Bore Tool	Stop Collar	Tap	Driver	Insert	Drill Depth (Maximum)		Tap Depth (Minimum)	
		J 42385-						MM	(IN)	MM	(IN)
1	M10 x 1.5	211	212	N/A	213	214	215	33.5	1.3189	27.0	1.0630
2	M12 x 1.5	705	706	N/A	707	708	709	27.5	1.0827	13.0	0.5118
3	M6 x 1.0	201	202	N/A	203	204	205	22.5	0.8858	18.0	0.0000
4	M8 x 1.25	206	207	N/A	208	209	210	28.5	1.1220	23.0	0.9055

Left Cylinder Head Exhaust Face (LCS)

cardiagn.com

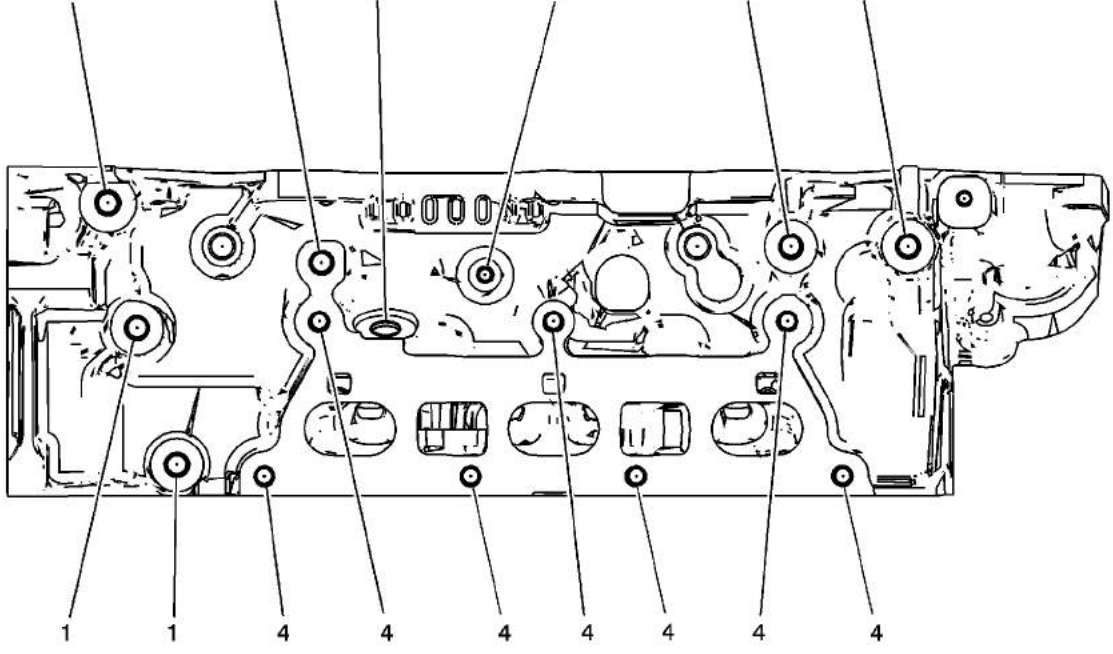

Left Cylinder Head Exhaust Face (LCS)

Hole Location	Thread Size	Drill	Counter Bore Tool	Stop Collar	Tap	Driver	Insert	Drill Depth (Maximum)		Tap Depth (Minimum)	
		J 42385-						MM	(IN)	MM	(IN)
1	M10 x 1.5	211	212	N/A	213	214	215	33.5	1.3189	27.0	1.0630
2	M12 x 1.5	705	706	N/A	707	708	709	27.5	1.0827	13.0	0.5118
3	M6 x 1.0	201	202	N/A	203	204	205	22.5	0.8858	18.0	0.0000
4	M8 x 1.25	206	207	N/A	208	209	210	28.5	1.1220	23.0	0.9055

Left Cylinder Head Rear Face (LY7)

cardiagn.com

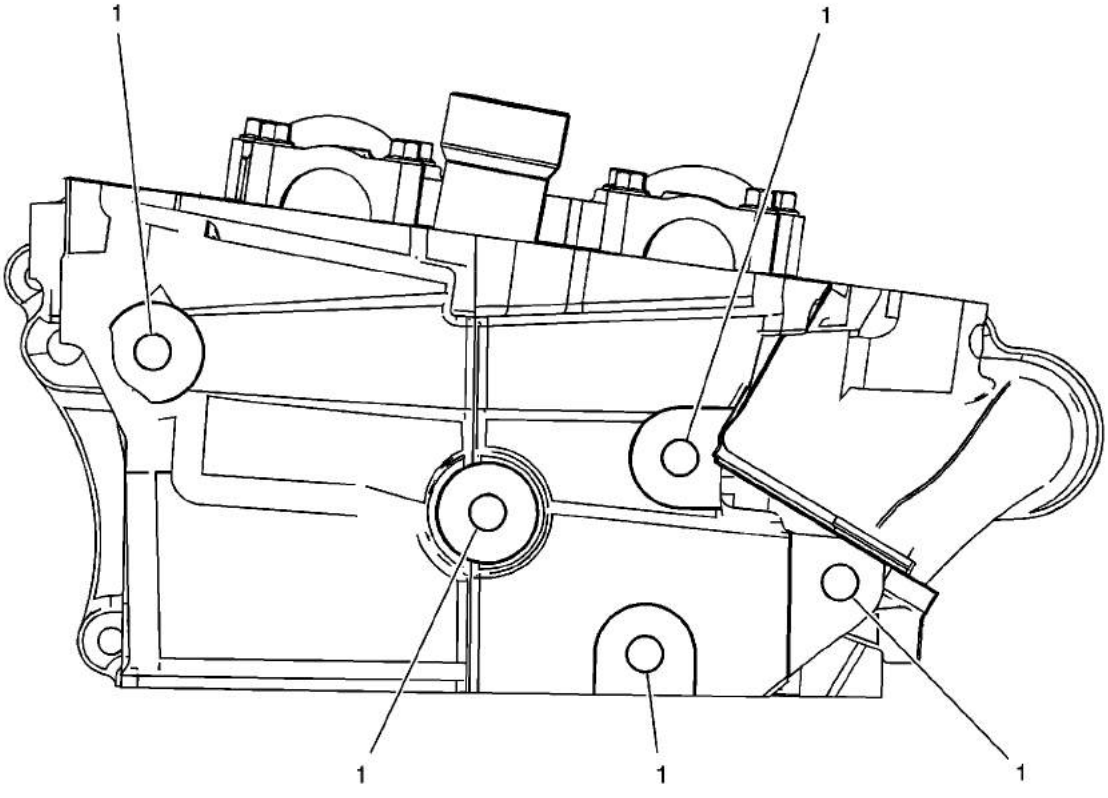

Left Cylinder Head Rear Face (LY7)

Hole Location	Thread Size	Drill	Counter Bore Tool	Stop Collar	Tap	Driver	Insert	Drill Depth (Maximum)		Tap Depth (Minimum)	
		J 42385-						MM	(IN)	MM	(IN)
1	M10 x 1.5	211	212	N/A	213	214	215	33.5	1.3189	27.0	1.0630

Left Cylinder Head Rear Face (LCS)

cardiagn.com

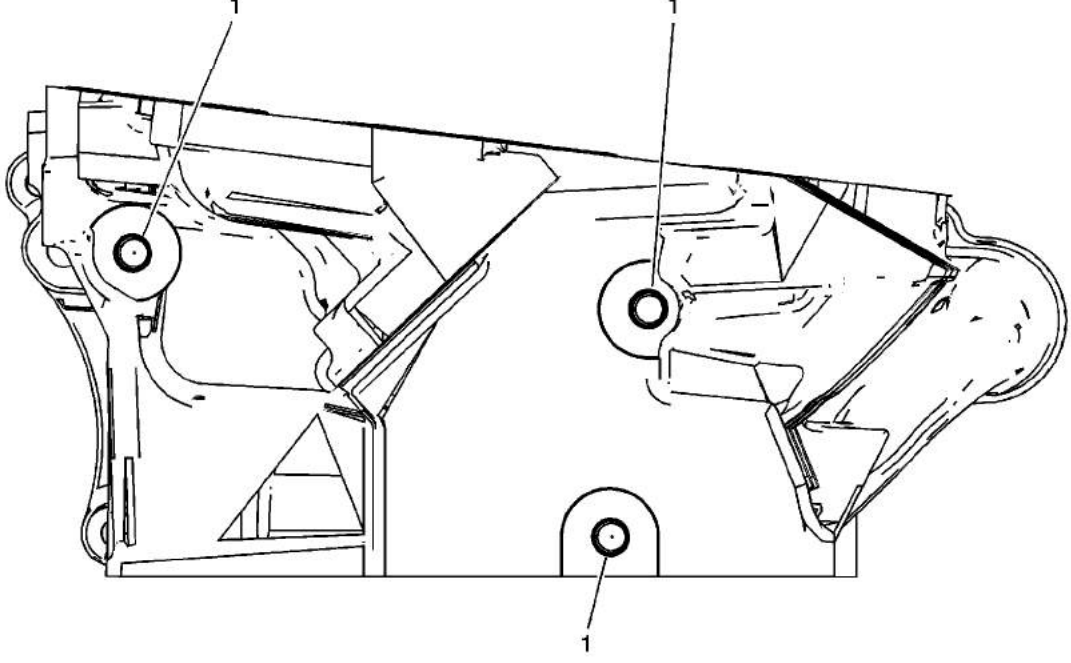

Left Cylinder Head Rear Face (LCS)

Hole Location	Thread Size	Drill	Counter Bore Tool	Stop Collar	Tap	Driver	Insert	Drill Depth (Maximum)		Tap Depth (Minimum)	
		J 42385-						MM	(IN)	MM	(IN)
1	M10 x 1.5	211	212	N/A	213	214	215	33.5	1.3189	27.0	1.0630

Right Cylinder Head Camshaft Cover Face

cardiagn.com

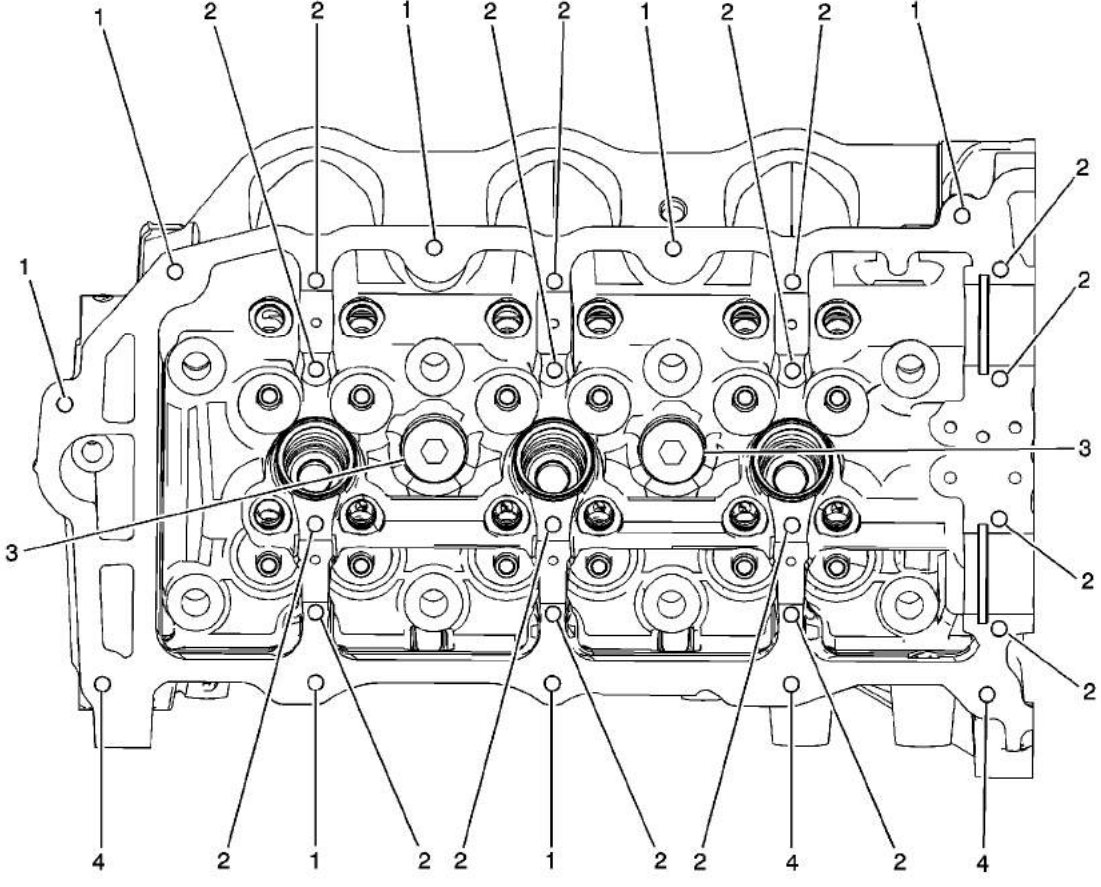

Right Cylinder Head Camshaft Cover Face

Hole Location	Thread Size	Drill	Counter Bore Tool	Stop Collar	Tap	Driver	Insert	Drill Depth (Maximum)		Tap Depth (Minimum)	
		J 42385-						MM	(IN)	MM	(IN)
1	M6 x 1.0	201	202	N/A	203	204	205	THRU		THRU	
2	M6 x 1.0	701	N/A	N/A	203	204	205	28.5	1.1220	24.0	0.9449
3	M20 x 1.5	715	716	N/A	717	718	719	25.0	0.9842	17.0	0.6693
4	M6 x 1.0	201	202	N/A	203	204	205	22.5	0.8858	18.0	0.7087

Right Cylinder Head Front Face

cardiagn.com

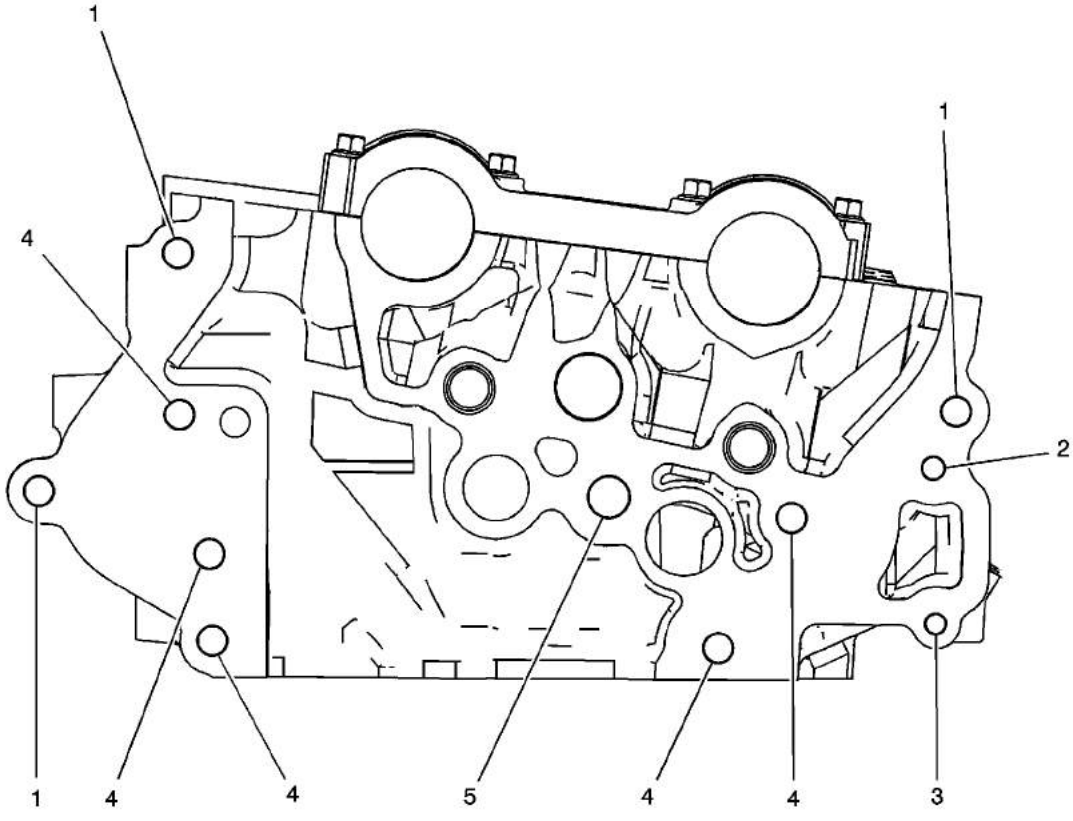

Right Cylinder Head Front Face

Hole Location	Thread Size	Drill	Counter Bore Tool	Stop Collar	Tap	Driver	Insert	Drill Depth (Maximum)		Tap Depth (Minimum)	
		J 42385-						MM	(IN)	MM	(IN)
1	M8 x 1.25	206	207	N/A	208	209	210	THRU		THRU	
2	M6 x 1.0	201	202	N/A	203	204	205	22.5	0.8880	18.0	0.7087
3	M6 x 1.0	201	202	N/A	203	204	205	THRU		THRU	
4	M8 x 1.25	206	207	N/A	208	209	210	28.5	1.1220	23.0	0.9055
5	M12 x 1.75	856	857	N/A	858	859	416	40.0	1.5748	32.5	1.2795

Right Cylinder Head Intake Face

cardiagn.com

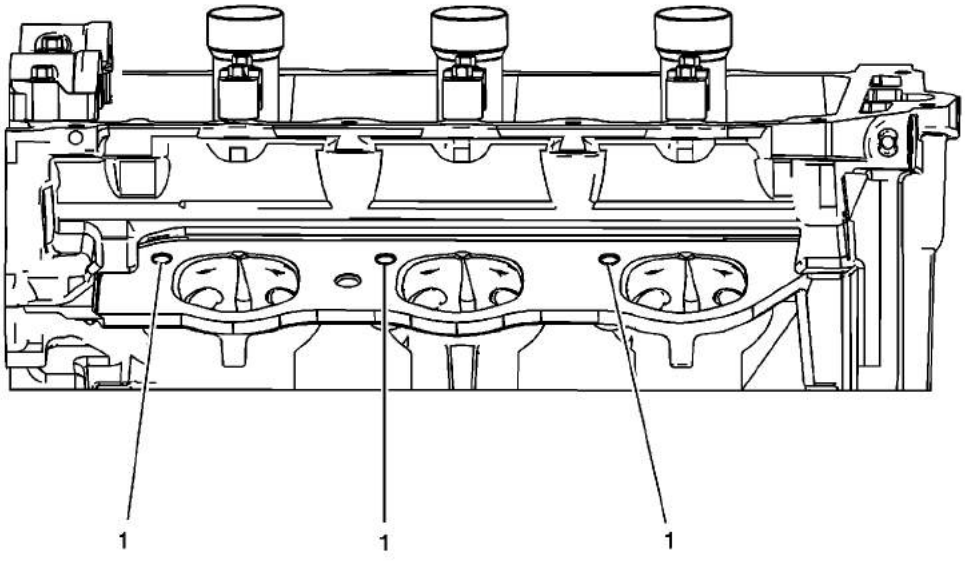

Right Cylinder Head Intake Face

Hole Location	Thread Size	Drill	Counter Bore Tool	Stop Collar	Tap	Driver	Insert	Drill Depth (Maximum)		Tap Depth (Minimum)	
		J 42385-						MM	(IN)	MM	(IN)
1	M8 x 1.25	206	207	N/A	208	209	210	28.5	1.1220	23.0	0.9055

Right Cylinder Head Exhaust Face

cardiagn.com

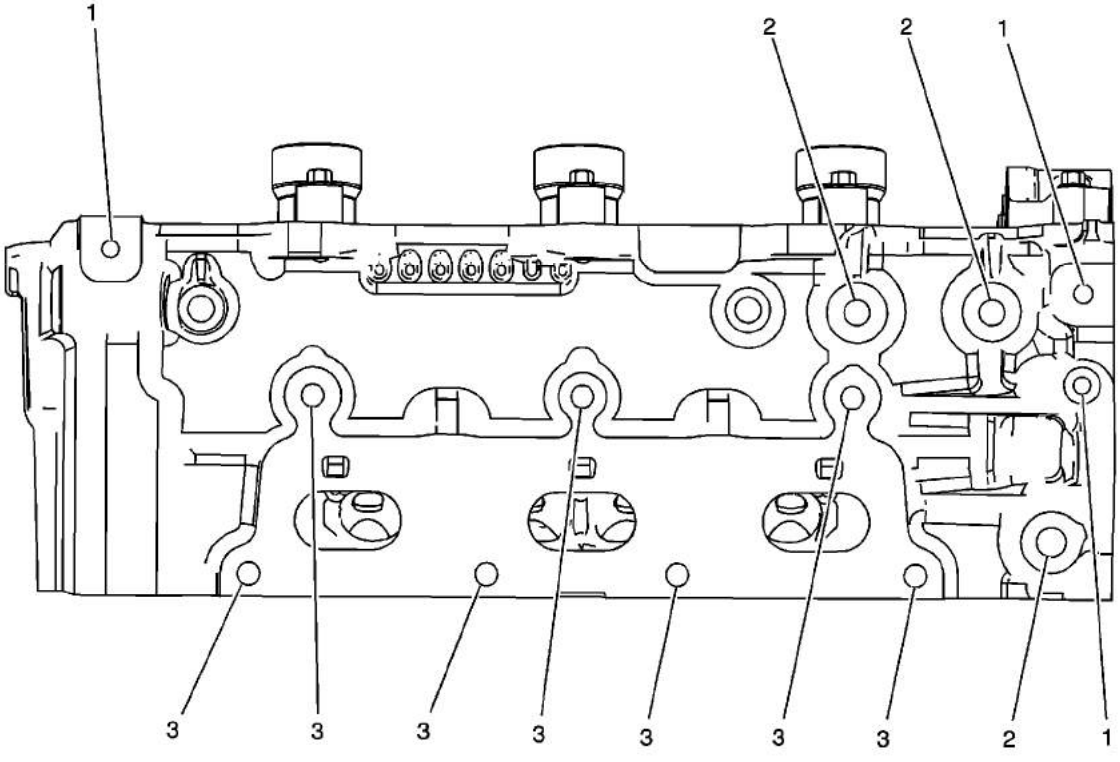

Right Cylinder Head Exhaust Face

Hole Location	Thread Size	Drill	Counter Bore Tool	Stop Collar	Tap	Driver	Insert	Drill Depth (Maximum)		Tap Depth (Minimum)	
		J 42385-						MM	(IN)	MM	(IN)
1	M6 x 1.0	201	202	N/A	203	204	205	22.5	0.8858	18.0	0.0000
2	M10 x 1.5	211	212	N/A	213	214	215	33.5	1.3189	27.0	1.0630
3	M8 x 1.25	206	207	N/A	208	209	210	28.5	1.1220	23.0	0.9055

Right Cylinder Head Rear Face

cardiagn.com

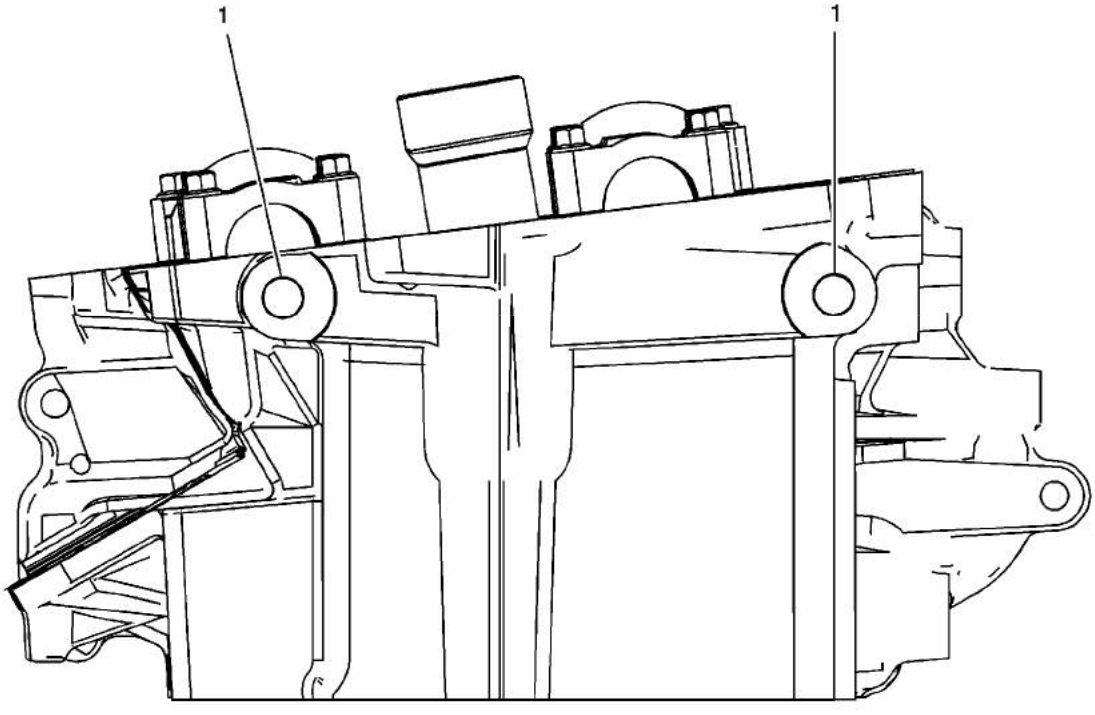

Right Cylinder Head Rear Face

Hole Location	Thread Size	Drill	Counter Bore Tool	Stop Collar	Tap	Driver	Insert	Drill Depth (Maximum)		Tap Depth (Minimum)	
		J 42385-						MM	(IN)	MM	(IN)
1	M10 x 1.5	211	212	N/A	213	214	215	33.5	1.3189	27.0	1.0630

Engine Block Front

cardiagn.com

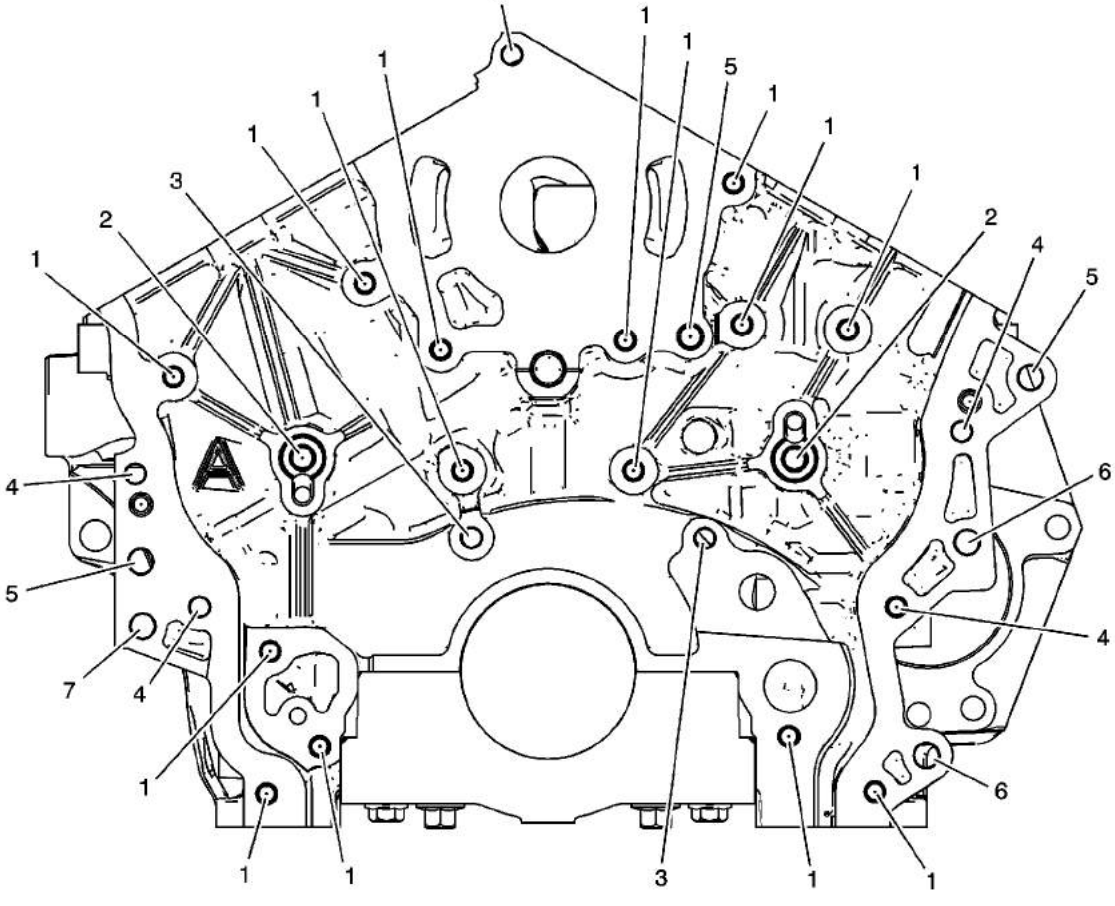

Engine Block Front

Hole Location	Thread Size	Drill	Counter Bore Tool	Stop Collar	Tap	Driver	Insert	Drill Depth (Maximum)		Tap Depth (Minimum)	
		J 42385-						MM	(IN)	MM	(IN)
1	M8 x 1.25	206	207	N/A	208	209	210	28.5	1.1220	23.0	0.9055
2	M10 x 1.5	211	212	N/A	213	214	215	33.5	1.3189	27.0	1.0630
3	M8 x 1.25	206	207	N/A	208	209	210	THRU		23.0	0.9055
4	M8 x 1.25	206	207	N/A	208	209	210	THRU		THRU	
5	M10 x 1.5	211	212	N/A	213	214	215	28.0	1.1024	28.0	1.1024
6	M10 x 1.5	211	212	N/A	213	214	215	THRU		20.0	0.7874

cardiagn.com

Engine Block Left Side

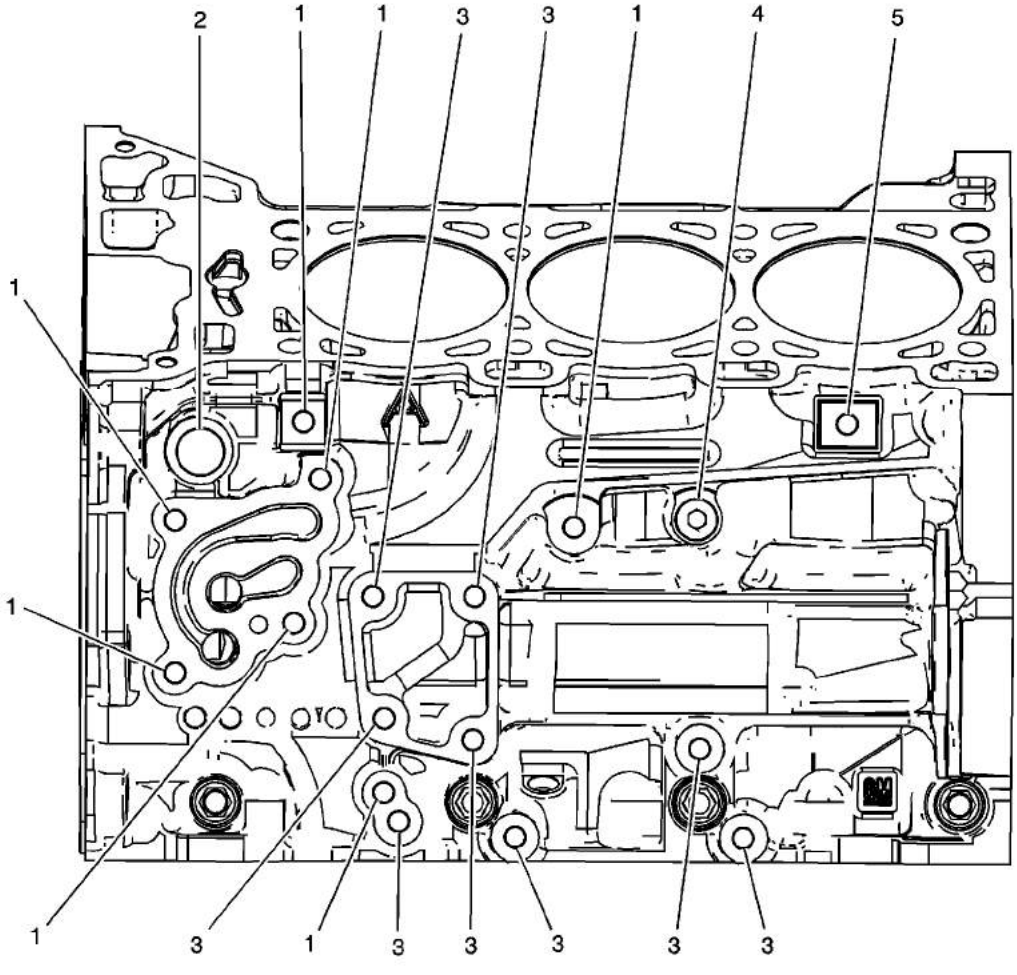

Engine Block Left Side

Hole Location	Thread Size	Drill	Counter Bore Tool	Stop Collar	Tap	Driver	Insert	Drill Depth (Maximum)		Tap Depth (Minimum)	
		J 42385-						MM	(IN)	MM	(IN)
1	M8 x 1.25	206	207	N/A	208	209	210	28.5	1.1220	23.0	0.9055
2	M20 x 1.5	715	716	N/A	717	718	719	30.0	1.1810	20.0	0.7874
3	M10 x 1.5	211	212	N/A	213	214	215	33.5	1.3190	27.0	1.0630

cardiagn.com

5	M8 x 1.25	206	207	N/A	208	209	415	16.5	0.6496	11.0	0.4331

Engine Block Right Side

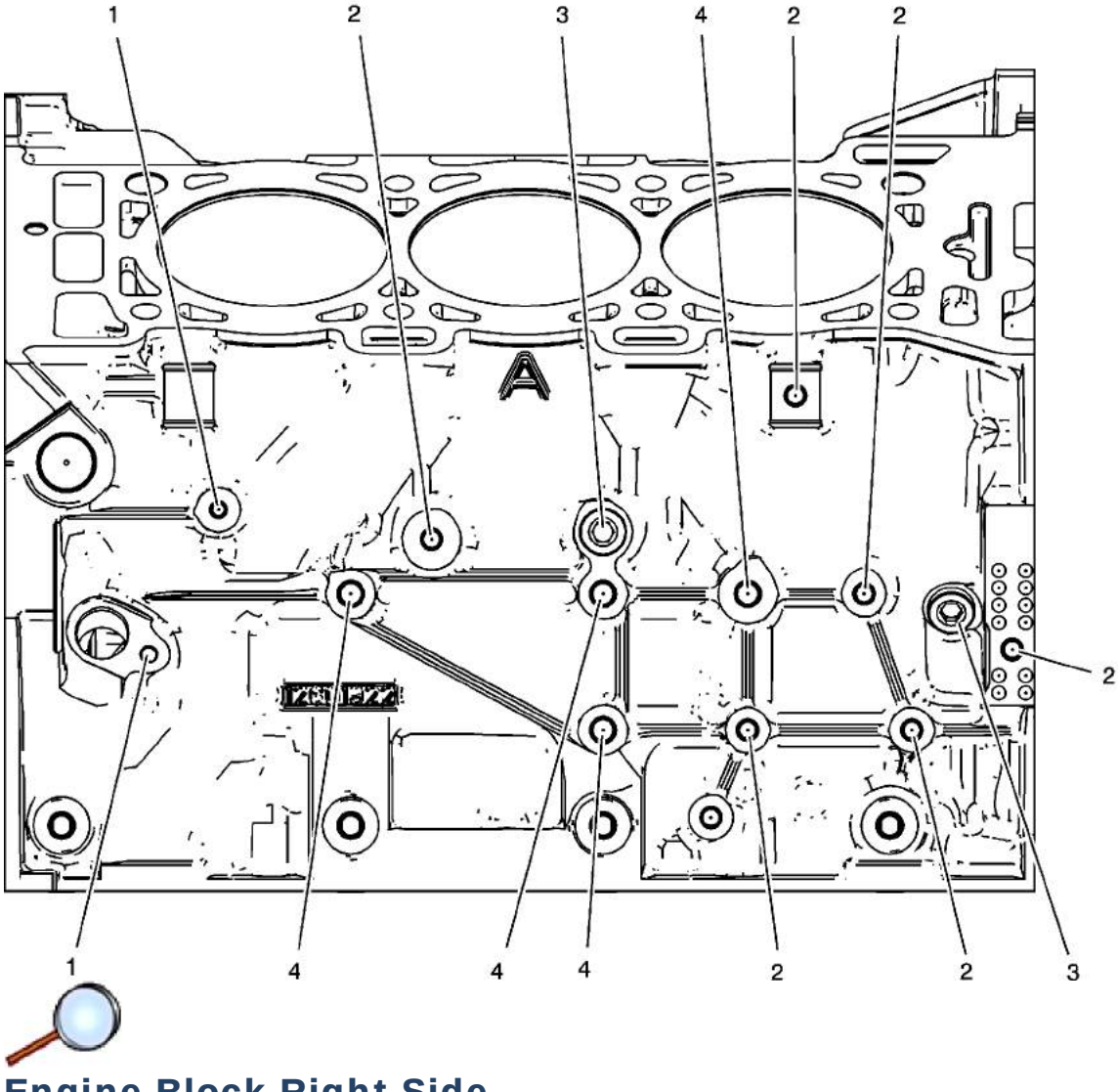

Engine Block Right Side

Hole Location	Thread Size	Drill	Counter Bore Tool	Stop Collar	Tap	Driver	Insert	Drill Depth (Maximum)		Tap Depth (Minimum)	
		J 42385-						MM	(IN)	MM	(IN)
1	M6 x 1.0	201	202	N/A	203	204	205	22.5	0.8858	18.0	0.7087
2	M8 x 1.25	206	207	N/A	208	209	210	28.5	1.1220	23.0	0.9055

cardiagn.com

4	M10 x 1.5	211	212	N/A	213	214	215	33.5	1.3190	27.0	1.0630

Engine Block Rear

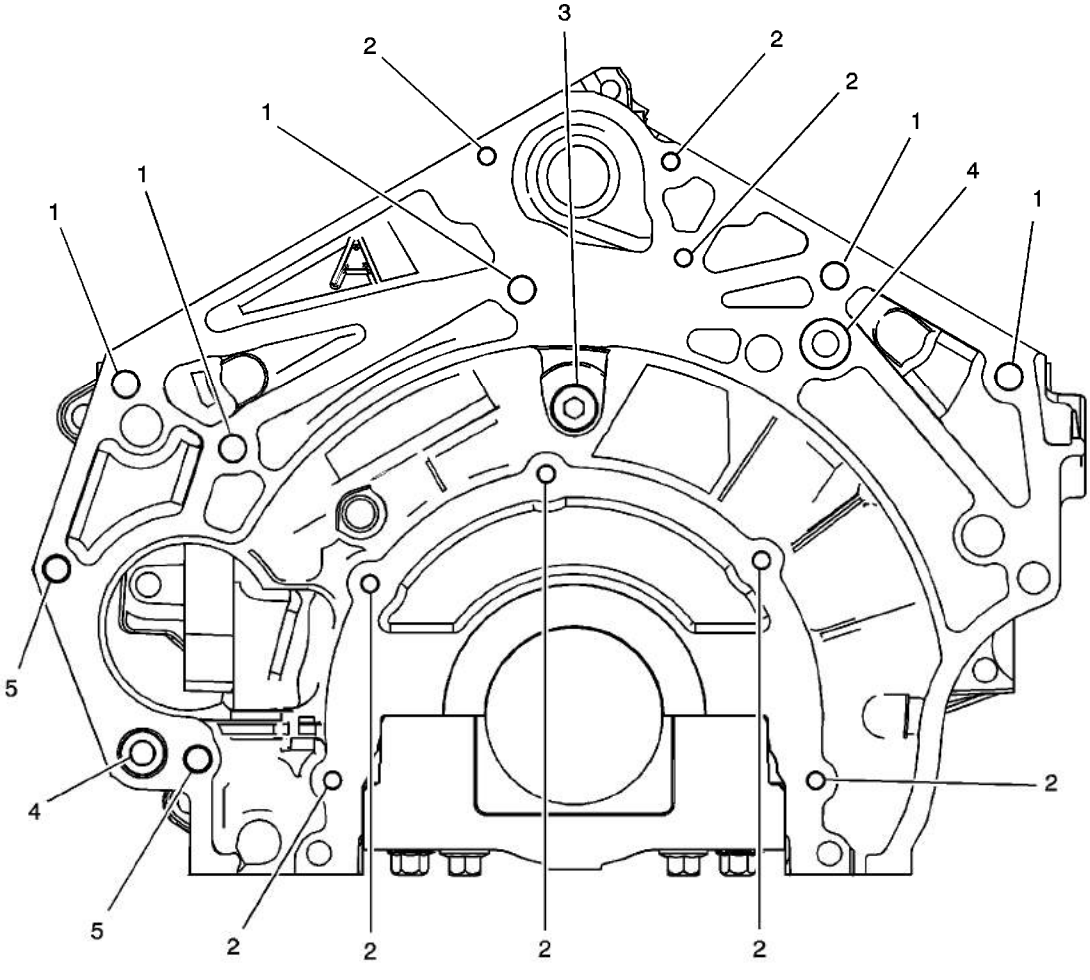

Engine Block Rear

Hole Location	Thread Size	Drill	Counter Bore Tool	Stop Collar	Tap	Driver	Insert	Drill Depth (Maximum)		Tap Depth (Minimum)	
		J 42385-						MM	(IN)	MM	(IN)
1	M10 x 1.5	211	212	N/A	213	214	420	33.5	1.3190	27.0	1.0630
2	M6 x 1.0	201	202	N/A	203	204	205	22.5	0.8858	18.0	0.7087

cardiagn.com

4	M10 x 1.5	211	212	N/A	213	214	216	39.5	1.5551	33.0	1.2992
5	M10 x 1.5	211	212	N/A	213	214	420	THRU		THRU	

Engine Block Bottom

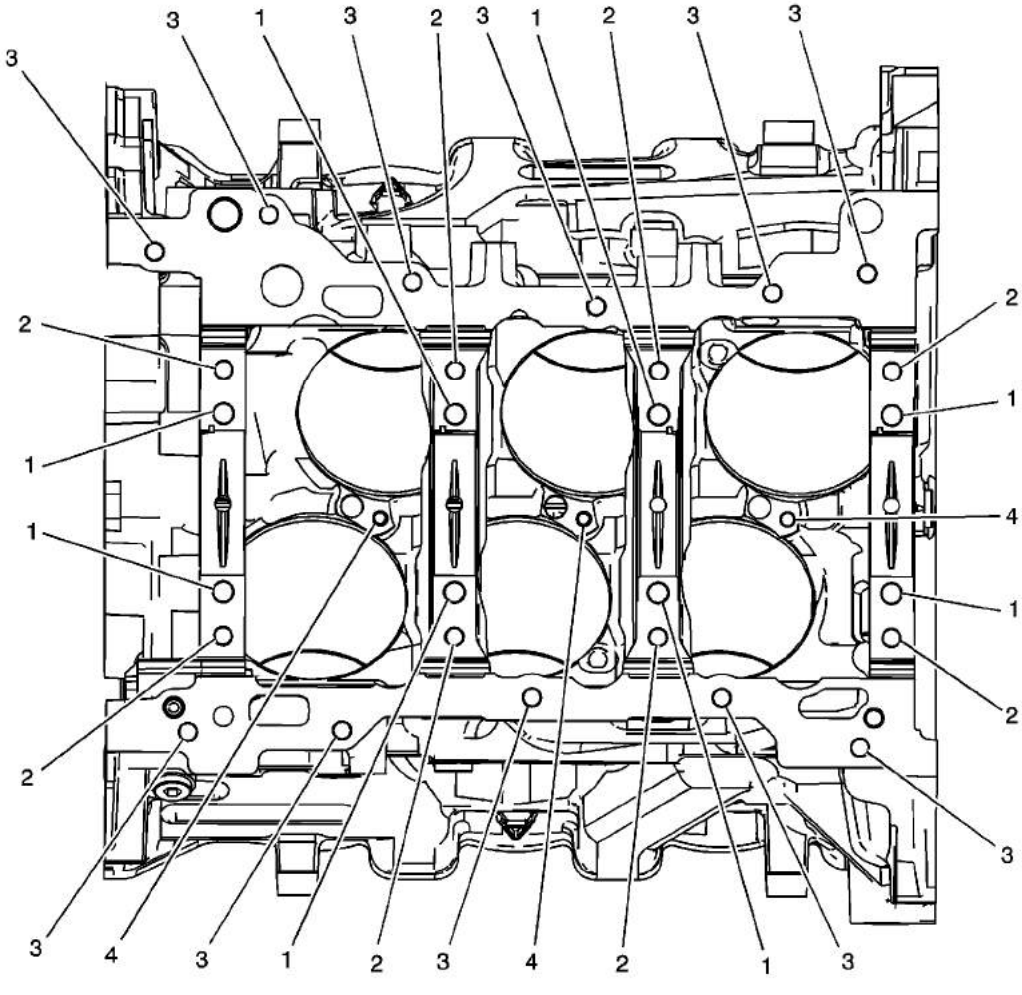

Engine Block Bottom

Hole Location	Thread Size	Drill	Counter Bore Tool	Stop Collar	Tap	Driver	Insert	Drill Depth (Maximum)		Tap Depth (Minimum)	
		J 42385-						MM	(IN)	MM	(IN)
1	M10 x 2.0	720	N/A	N/A	721	722	104	56.0	2.2047	49.0	1.9291

cardiagn.com

3	M8 x 1.25	206	207	N/A	208	209	210	28.5	1.1220	23.0	0.9055
4	M6 x 1.0	201	202	N/A	203	204	205	THRU		THRU	

Engine Block Left Deck Face

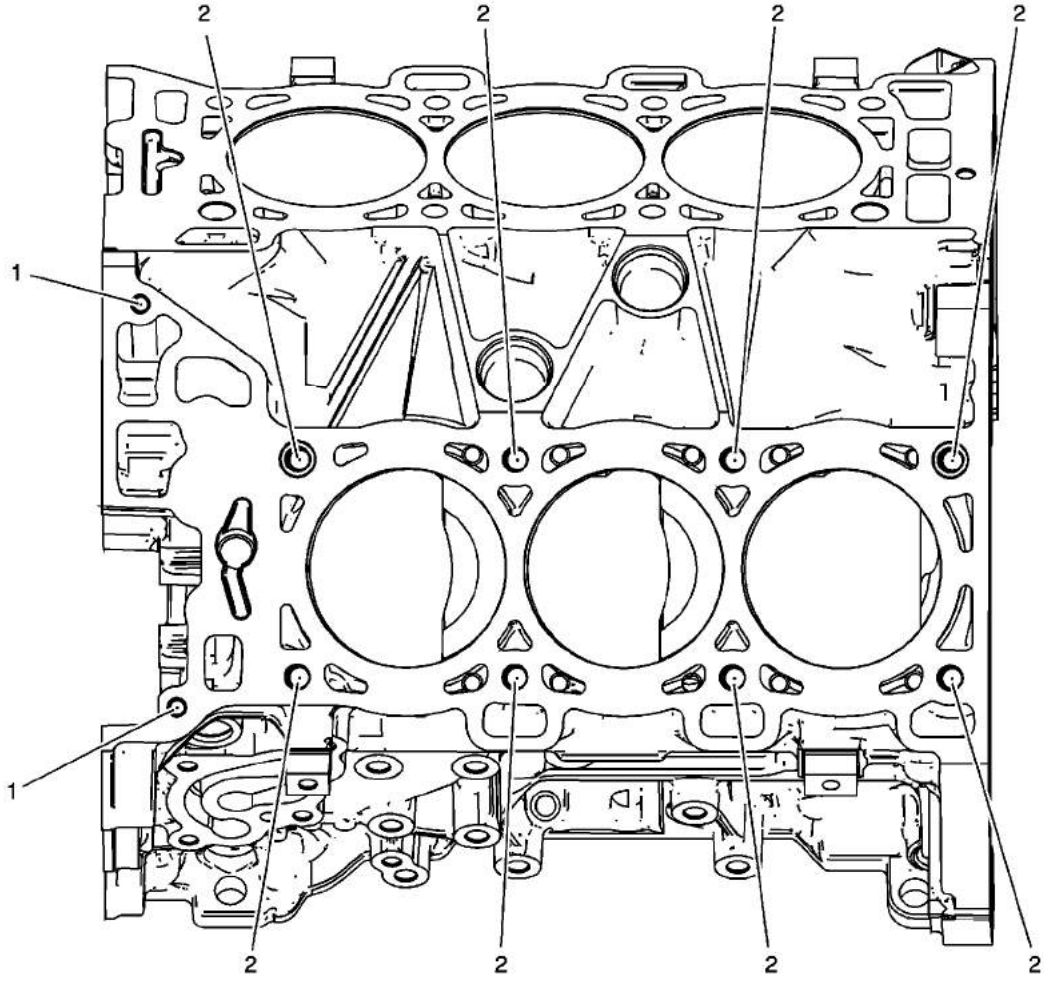

Engine Block Left Deck Face

Hole Location	Thread Size	Drill	Counter Bore Tool	Stop Collar	Tap	Driver	Insert	Drill Depth (Maximum)		Tap Depth (Minimum)	
		J 42385-						MM	(IN)	MM	(IN)
1	M8 x 1.25	206	207	N/A	208	209	210	28.5	1.1220	23.0	0.9055

cardiagn.com

Engine Block Right Deck Face

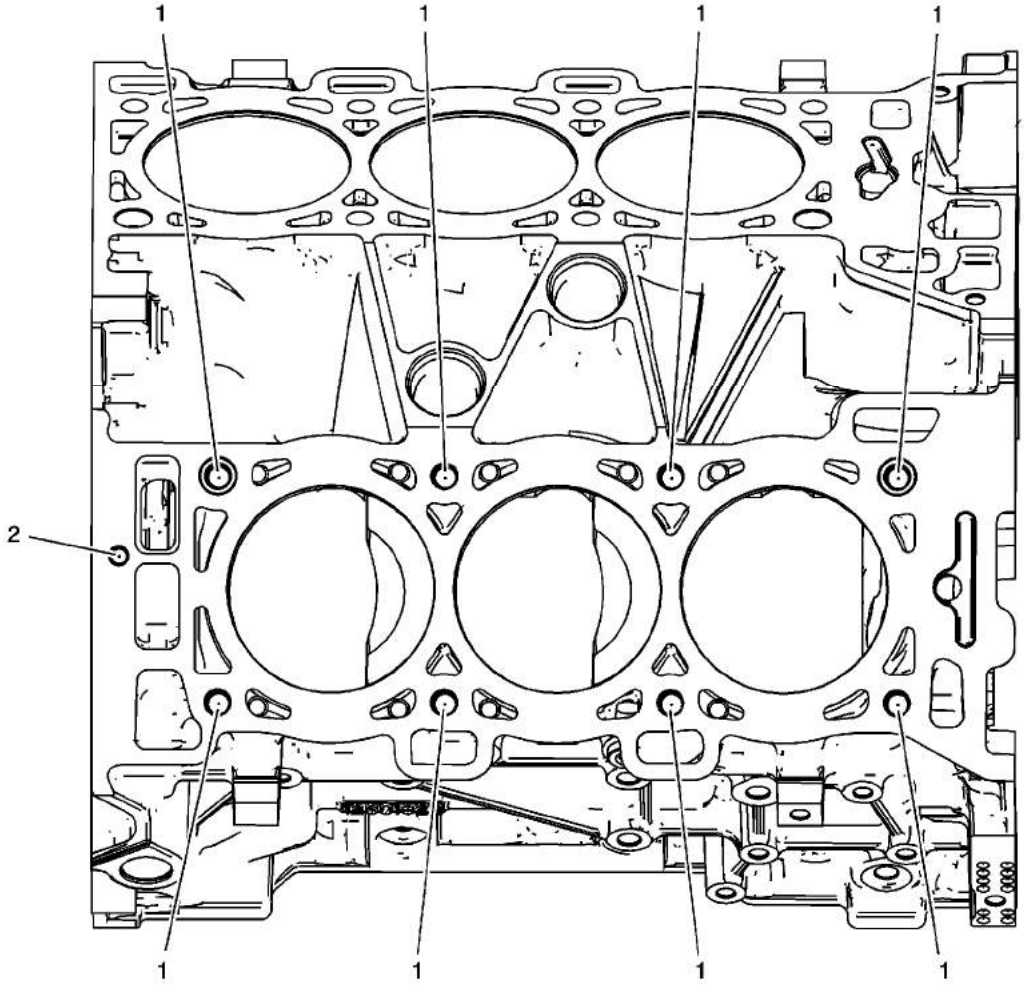

Engine Block Right Deck Face

Hole Location	Thread Size	Drill	Counter Bore Tool	Stop Collar	Tap	Driver	Insert	Drill Depth (Maximum)		Tap Depth (Minimum)	
		J 42385-						MM	(IN)	MM	(IN)
1	M11 x 2.0	723	N/A	N/A	724	725	108	102.5	4.0354	94.0	3.7008
2	M8 x 1.25	206	207	N/A	208	209	210	28.5	1.1220	23.0	0.9055

Engine Front Cover

cardiagn.com

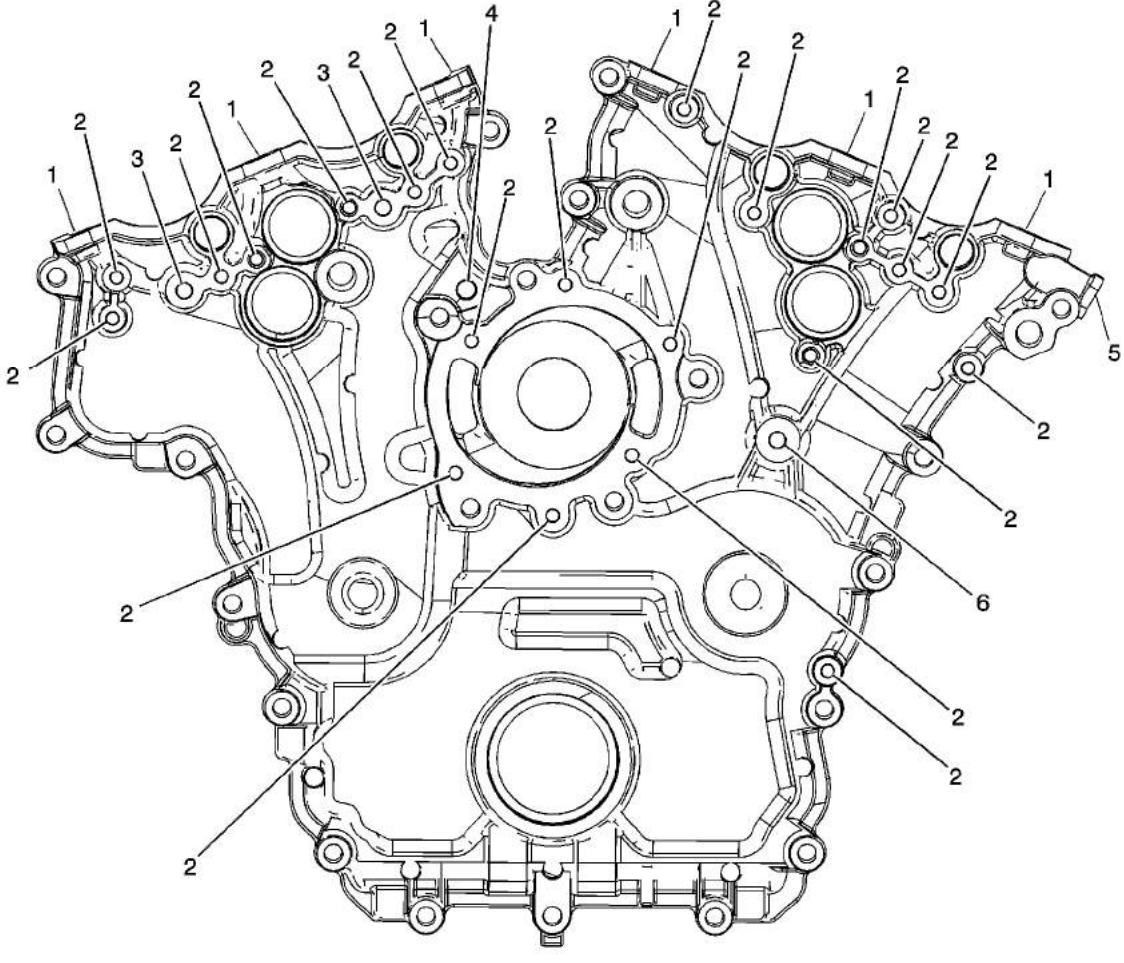

Engine Front Cover

Hole Location	Thread Size	Drill	Counter Bore Tool	Stop Collar	Tap	Driver	Insert	Drill Depth (Maximum)		Tap Depth (Minimum)	
		J 42385-						MM	(IN)	MM	(IN)
1	M6 x 1.0	201	202	N/A	203	204	205	THRU		THRU	
2	M6 x 1.0	201	202	N/A	203	204	205	21.5	0.8465	18.0	0.7087
3	M8 x 1.25	206	207	N/A	208	209	210	28.5	1.1220	23.0	0.9055
4	M10 x 1.5	211	212	N/A	213	214	420	THRU		THRU	
5	M10 x 1.5	211	212	N/A	213	214	420	33.5	1.3189	27.0	1.0630
6	M8 x 1.25	206	207	N/A	208	209	210	27.5	1.0827	23.0	0.9055

cardiagn.com

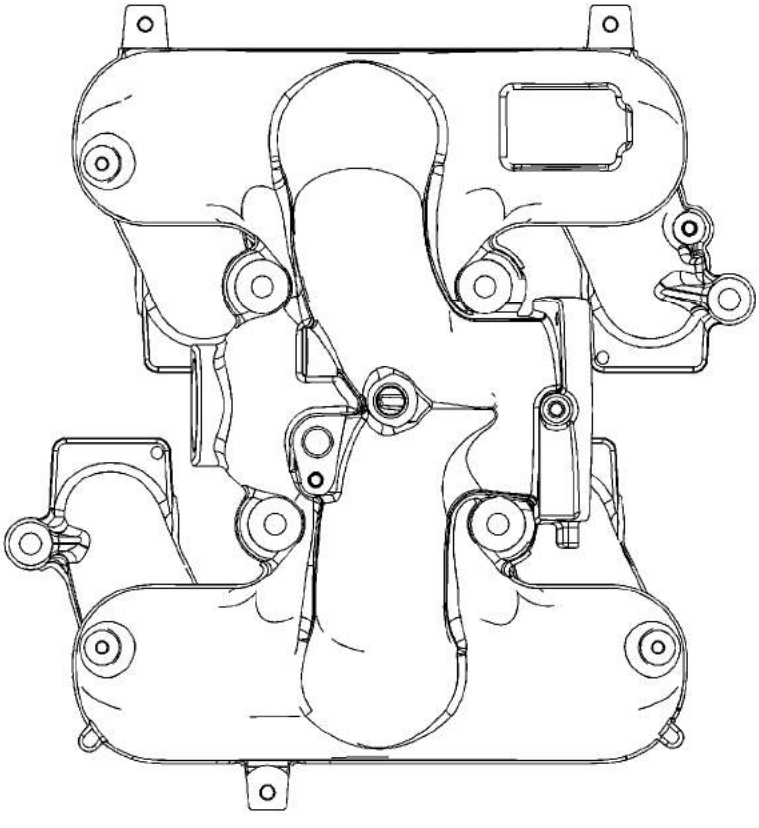

Upper Intake Manifold - Top (LY7)

Hole Location	Thread Size	Drill	Counter Bore Tool	Stop Collar	Tap	Driver	Insert	Drill Depth (Maximum)		Tap Depth (Minimum)	
		J 42385-						MM	(IN)	MM	(IN)
1	M6 x 1.0	201	202	N/A	203	204	205	THRU		THRU	

Upper Intake Manifold - Top (LCS)

cardiagn.com

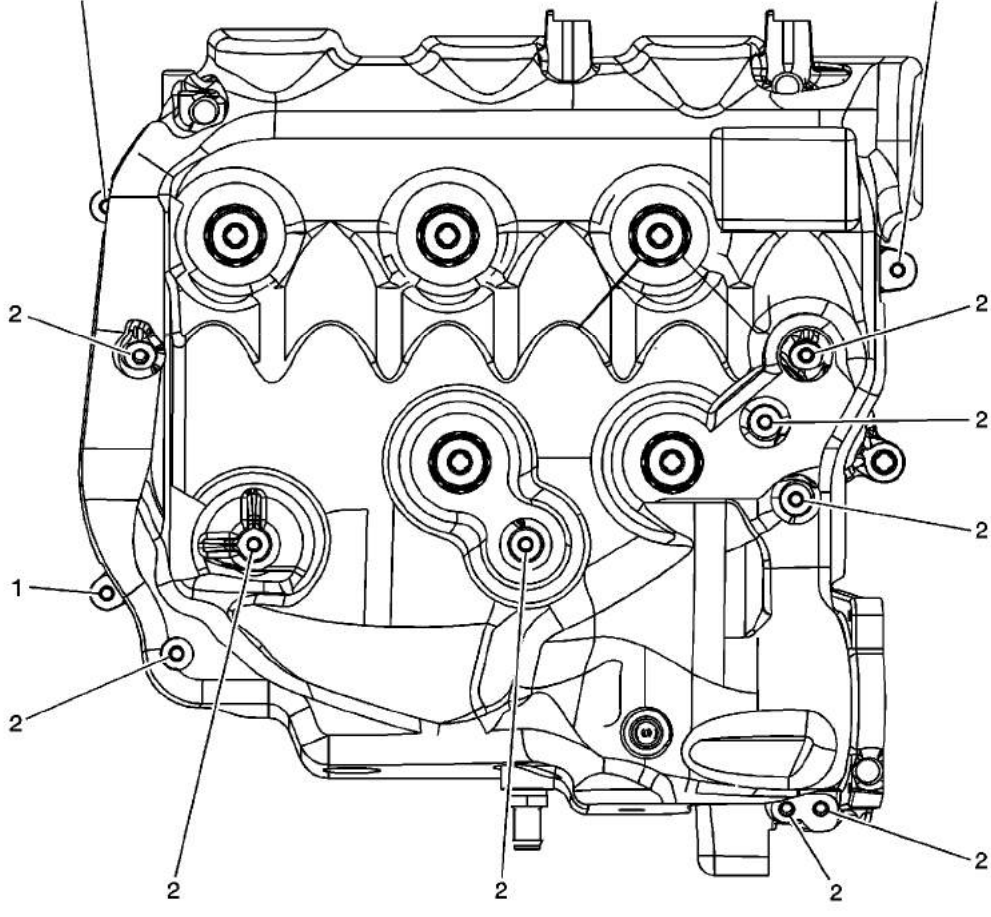

Upper Intake Manifold - Top (LCS)

Hole Location	Thread Size	Drill	Counter Bore Tool	Stop Collar	Tap	Driver	Insert	Drill Depth (Maximum)		Tap Depth (Minimum)	
		J 42385-						MM	(IN)	MM	(IN)
1	M6 x 1.0	201	202	N/A	203	204	205	THRU		THRU	

Upper Intake Manifold - Front (LY7)

cardiagn.com

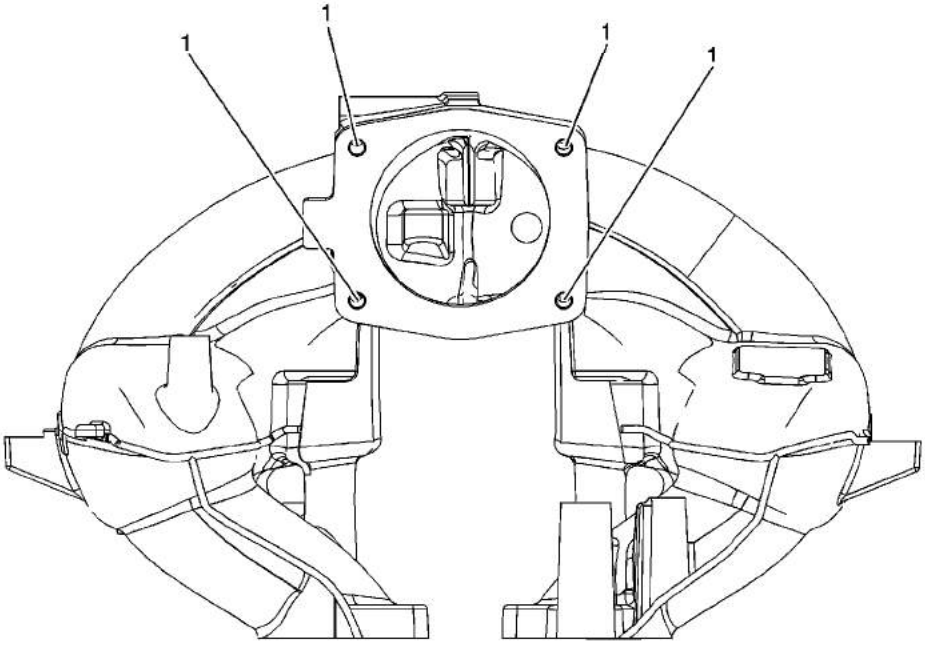

Upper Intake Manifold - Front (LY7)

Hole Location	Thread Size	Drill	Counter Bore Tool	Stop Collar	Tap	Driver	Insert	Drill Depth (Maximum)		Tap Depth (Minimum)	
		J 42385-						MM	(IN)	MM	(IN)
1	M6 x 1.0	201	202	N/A	203	204	205	THRU		THRU	

Upper Intake Manifold - Front (LCS)

cardiagn.com

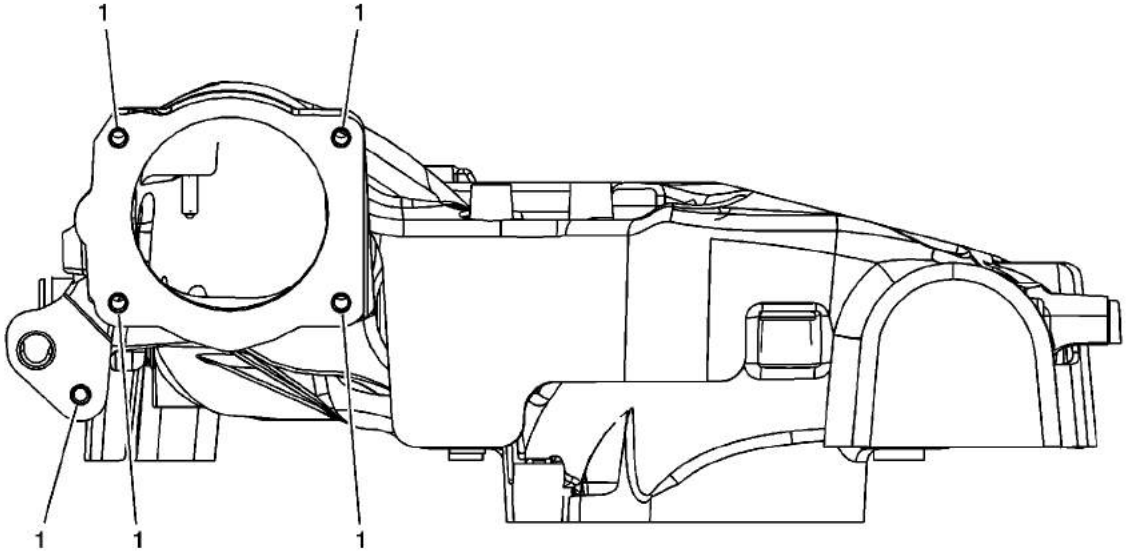

Upper Intake Manifold - Front (LCS)

Hole Location	Thread Size	Drill	Counter Bore Tool	Stop Collar	Tap	Driver	Insert	Drill Depth (Maximum)		Tap Depth (Minimum)	
		J 42385-						MM	(IN)	MM	(IN)
1	M6 x 1.0	201	202	N/A	203	204	205	THRU		THRU	

Upper Intake Manifold - Rear

cardiagn.com

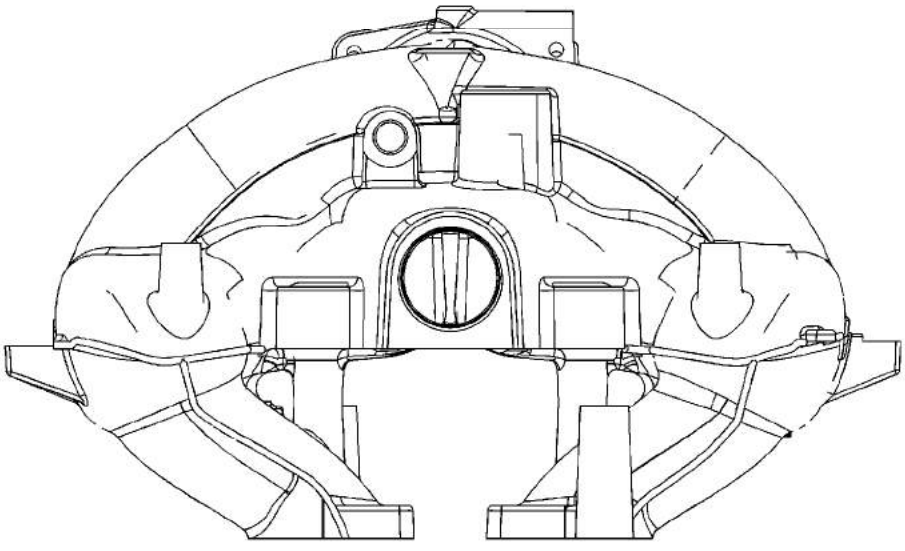

Upper Intake Manifold - Rear

Hole Location	Thread Size	Drill	Counter Bore Tool	Stop Collar	Tap	Driver	Insert	Drill Depth (Maximum)		Tap Depth (Minimum)	
		J 42385-						MM	(IN)	MM	(IN)
1	M6 x 1.0	201	202	N/A	203	204	205	THRU		THRU	

Lower Intake Manifold - Top

cardiagn.com

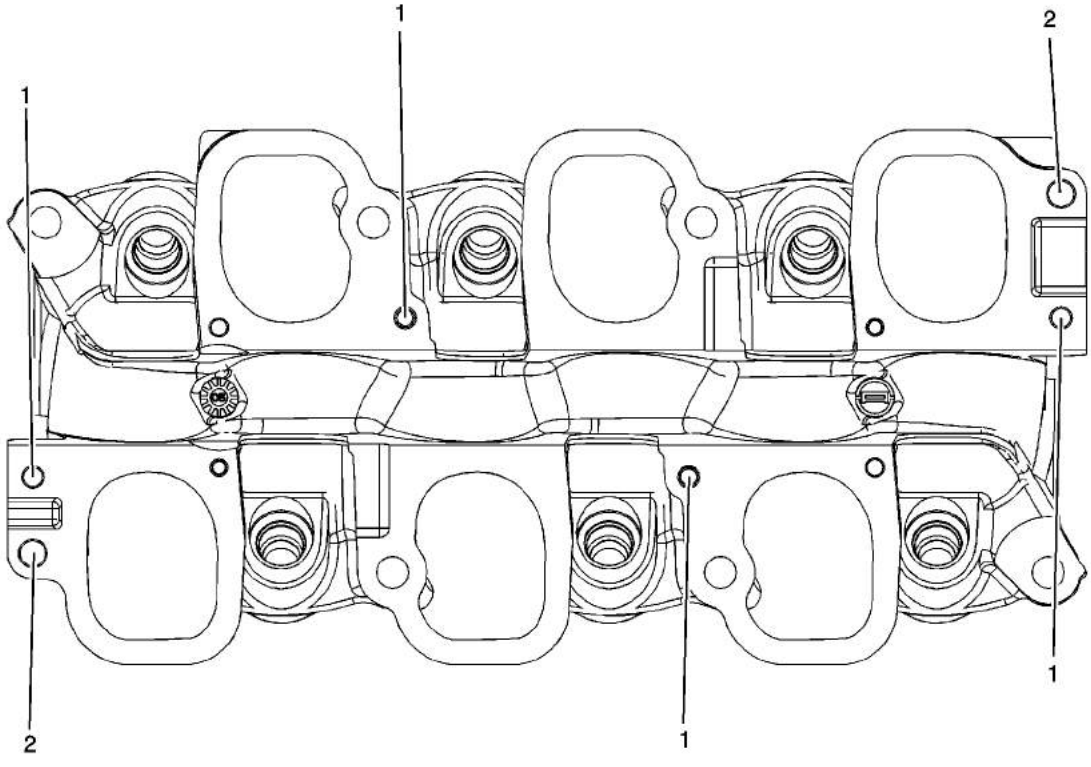

Lower Intake Manifold - Top

Hole Location	Thread Size	Drill	Counter Bore Tool	Stop Collar	Tap	Driver	Insert	Drill Depth (Maximum)		Tap Depth (Minimum)	
		J 42385-						MM	(IN)	MM	(IN)
1	M6 x 1.0	201	202	N/A	203	204	205	THRU		THRU	
2	M8 x 1.25	206	207	N/A	208	209	210	THRU		THRU	

Intake Manifold - Left (LCS)

cardiagn.com

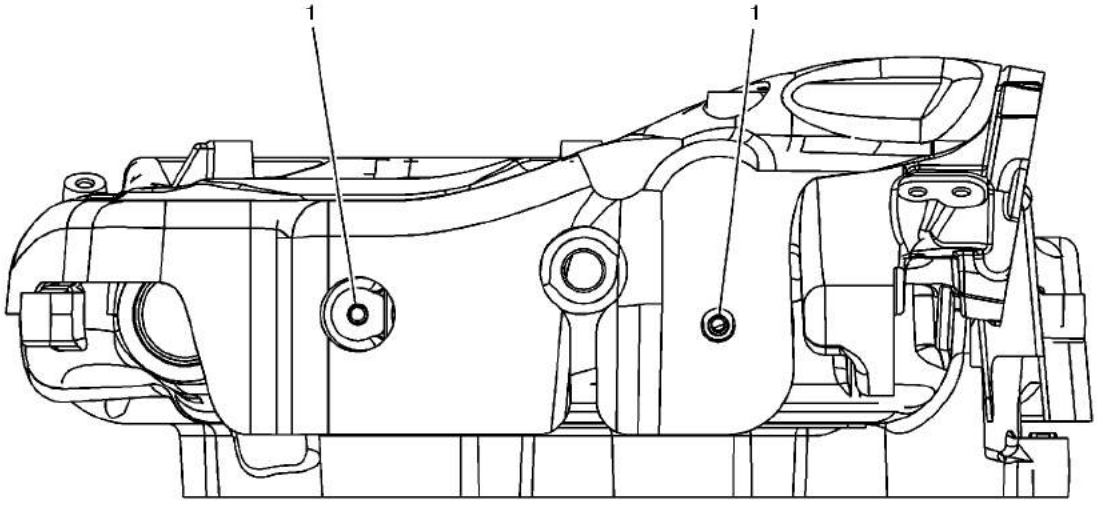

Intake Manifold - Left (LCS)

Hole Location	Thread Size	Drill	Counter Bore Tool	Stop Collar	Tap	Driver	Insert	Drill Depth (Maximum)		Tap Depth (Minimum)	
		J 42385-						MM	(IN)	MM	(IN)
1	M6 x 1.0	201	202	N/A	203	204	205	21.5	0.8465	18.0	0.7087

Intake Manifold - Right (LCS)

cardiagn.com

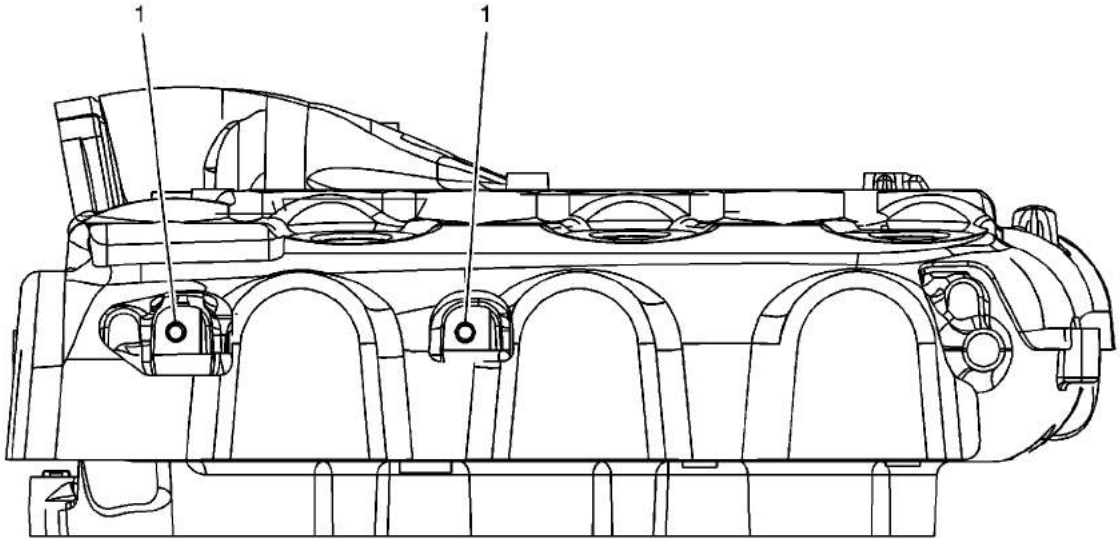

Intake Manifold - Right (LCS)

Hole Location	Thread Size	Drill	Counter Bore Tool	Stop Collar	Tap	Driver	Insert	Drill Depth (Maximum)		Tap Depth (Minimum)	
		J 42385-						MM	(IN)	MM	(IN)
1	M6 x 1.0	201	202	N/A	203	204	205	21.5	0.8465	18.0	0.7087

Oil Pan Front

cardiagn.com

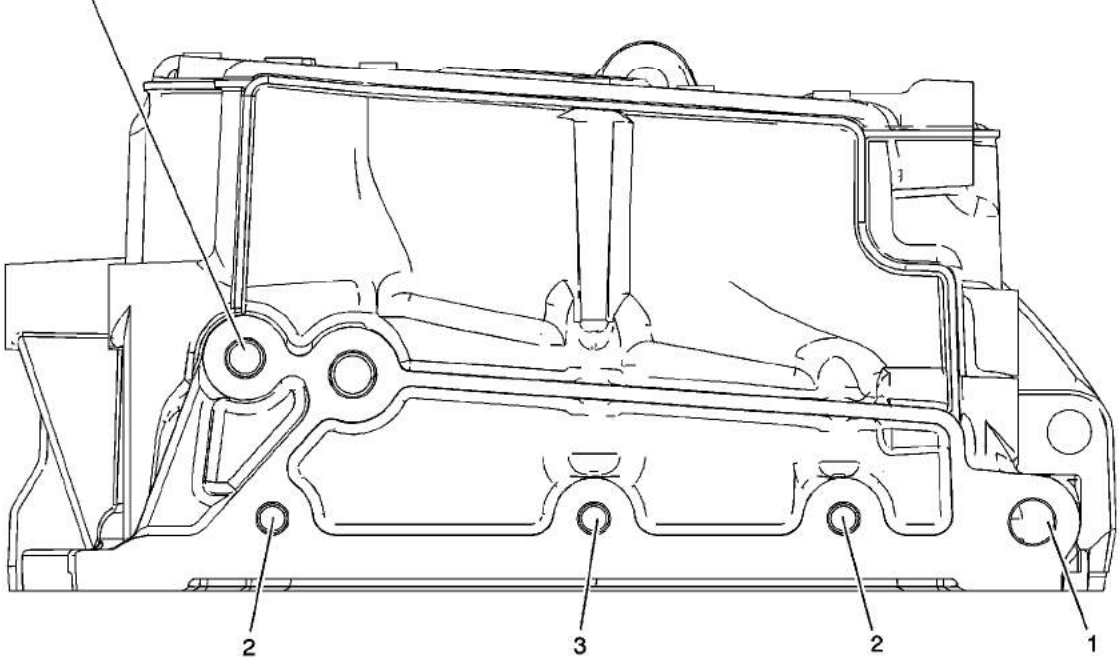

Oil Pan Front

Hole Location	Thread Size	Drill	Counter Bore Tool	Stop Collar	Tap	Driver	Insert	Drill Depth (Maximum)		Tap Depth (Minimum)	
		J 42385-						MM	(IN)	MM	(IN)
1	M10 x 1.5	211	212	N/A	213	214	420	33.5	1.3189	27.0	1.0630
2	M8 x 1.25	206	207	N/A	208	209	210	28.5	1.1220	23.0	0.9055
3	M8 x 1.25	610	N/A	N/A	208	209	620	37.5	1.4764	32.0	1.2598

Oil Pan Left Side

cardiagn.com

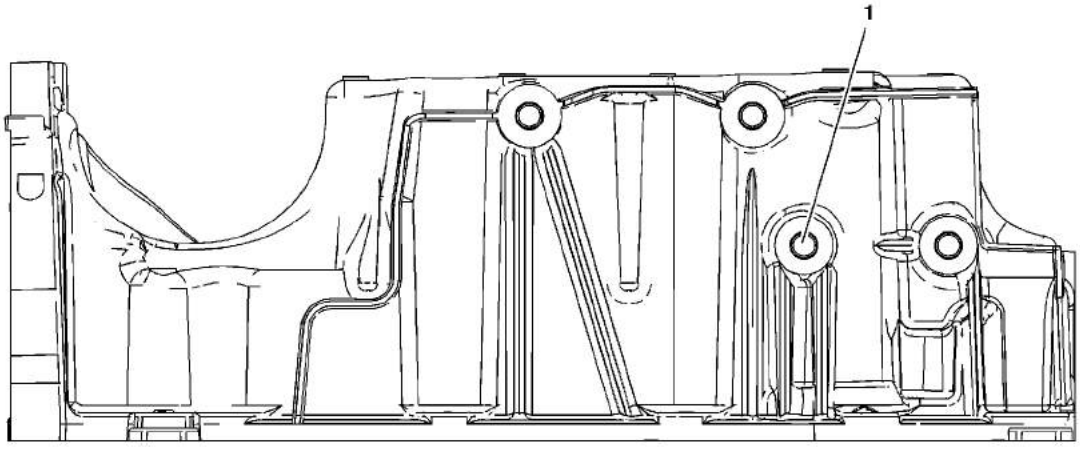

Oil Pan Left Side

Hole Location	Thread Size	Drill	Counter Bore Tool	Stop Collar	Tap	Driver	Insert	Drill Depth (Maximum)		Tap Depth (Minimum)	
		J 42385-						MM	(IN)	MM	(IN)
1	M10 x 1.5	211	212	N/A	213	214	420	33.5	1.3189	27.0	1.0630

Oil Pan Right Side

cardiagn.com

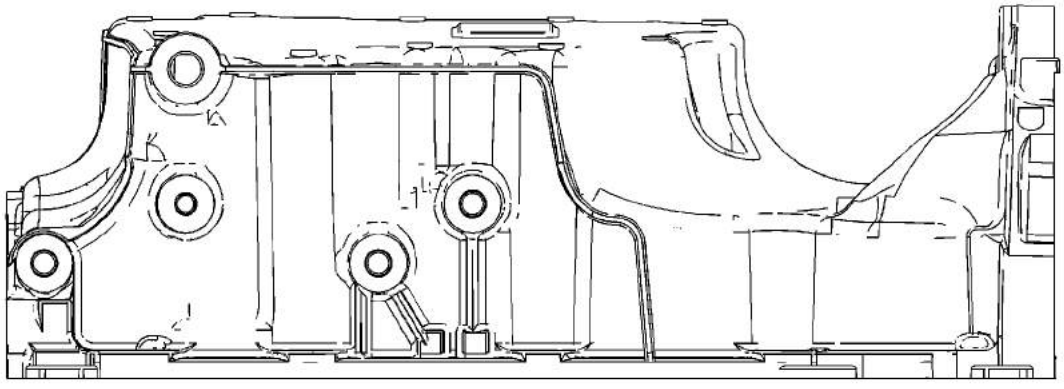

Oil Pan Right Side

Hole Location	Thread Size	Drill	Counter Bore Tool	Stop Collar	Tap	Driver	Insert	Drill Depth (Maximum)		Tap Depth (Minimum)	
		J 42385-						MM	(IN)	MM	(IN)
1	M12 x 1.75	856	857	N/A	858	859	416	THRU		THRU	

Oil Pan Rear

cardiagn.com

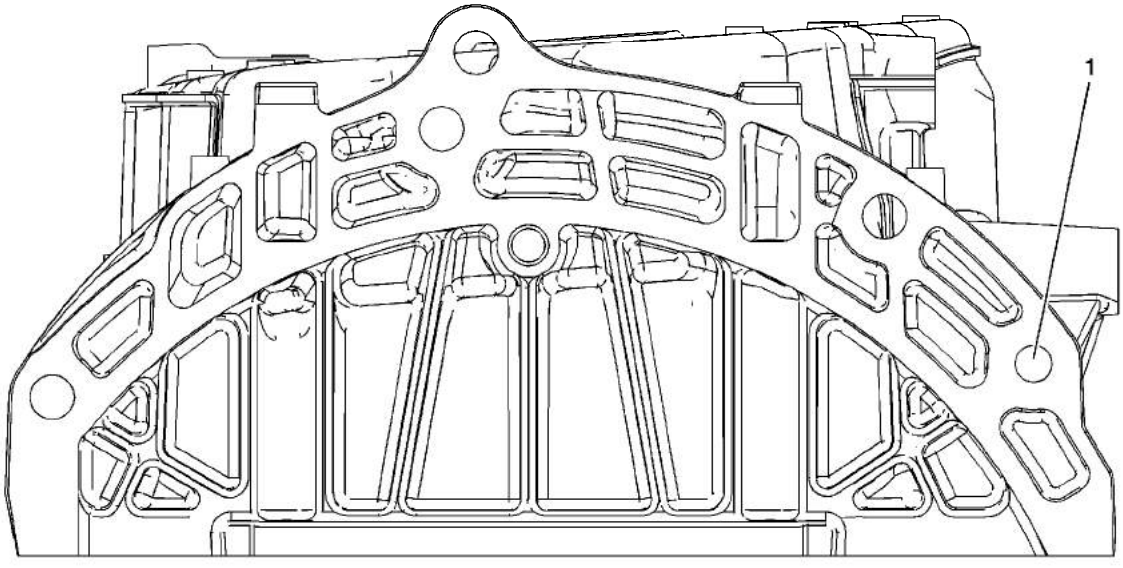

Oil Pan Rear

Hole Location	Thread Size	Drill	Counter Bore Tool	Stop Collar	Tap	Driver	Insert	Drill Depth (Maximum)		Tap Depth (Minimum)	
		J 42385-						MM	(IN)	MM	(IN)
1	M10 x 1.5	211	212	N/A	213	214	420	33.5	1.3189	27.0	1.0630

Oil Pan Bottom

cardiagn.com

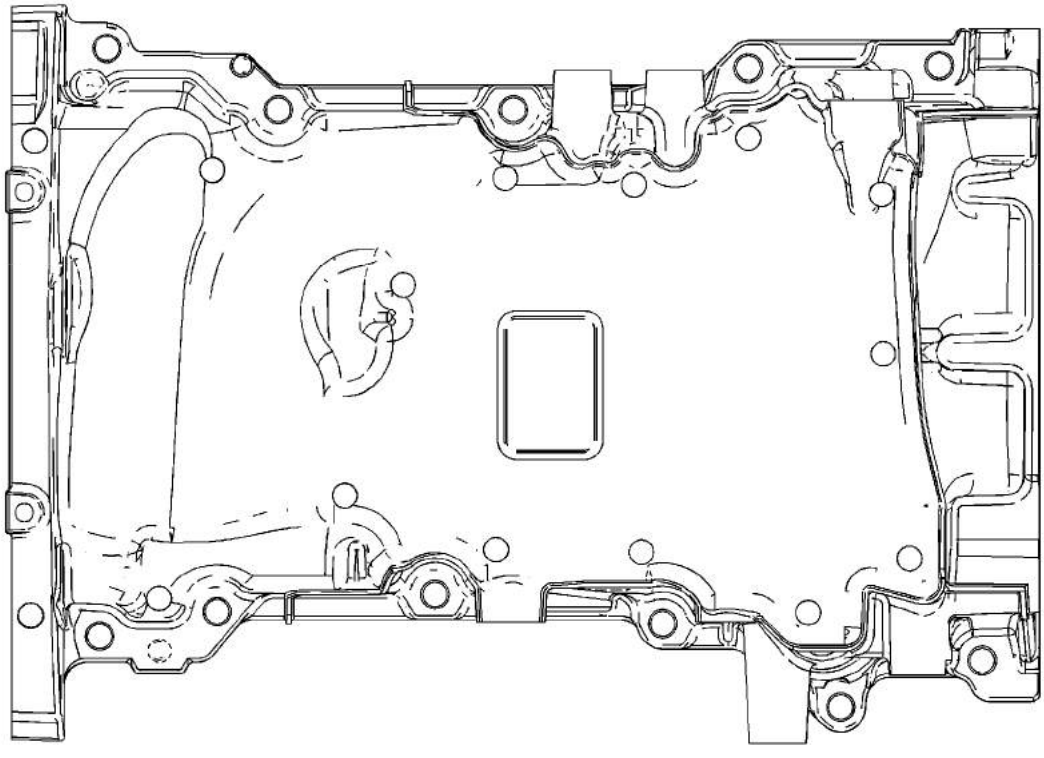

Oil Pan Bottom

Hole Location	Thread Size	Drill	Counter Bore Tool	Stop Collar	Tap	Driver	Insert	Drill Depth (Maximum)		Tap Depth (Minimum)	
		J 42385-						MM	(IN)	MM	(IN)
1	M10 x 1.5	211	212	N/A	213	214	420	33.5	1.3189	27.0	1.0630

Oil Pan Top

cardiagn.com

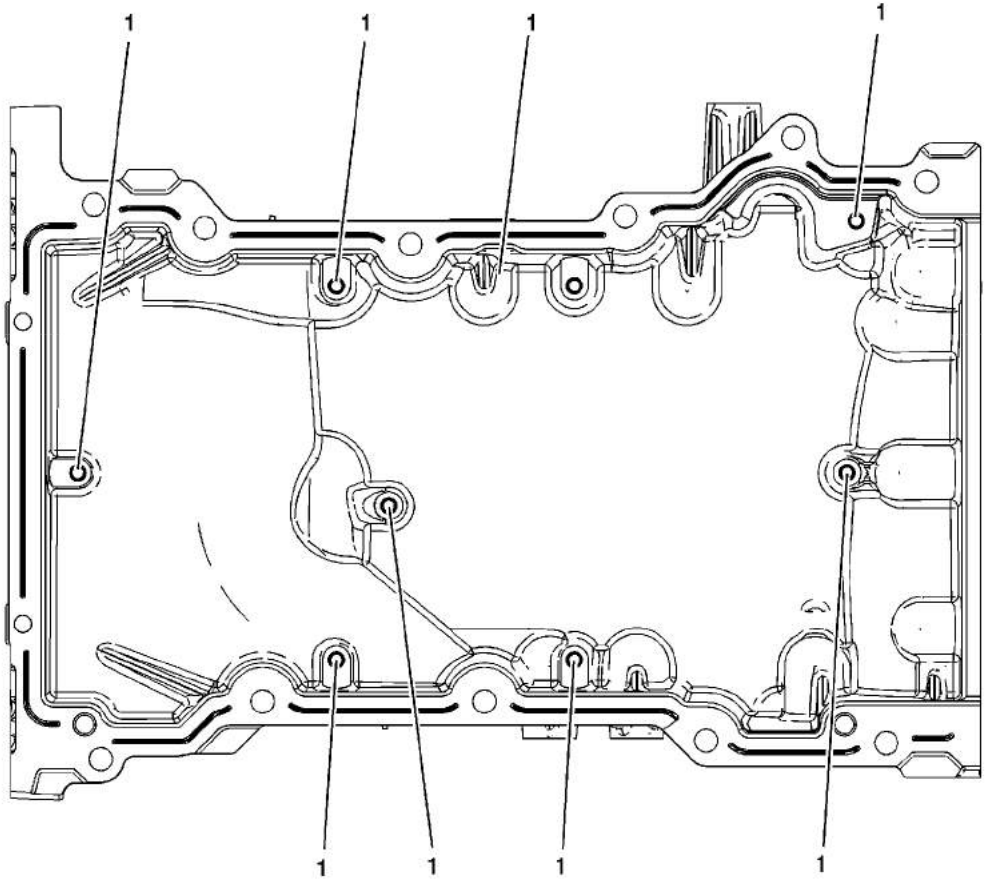

Oil Pan Top

Hole Location	Thread Size	Drill	Counter Bore Tool	Stop Collar	Tap	Driver	Insert	Drill Depth (Maximum)		Tap Depth (Minimum)	
		J 42385-						MM	(IN)	MM	(IN)
1	M6 x 1.0	701	N/A	N/A	203	204	205	28.0	1.1024	23.5	0.9252

cardiagn.com

Camshaft Position Actuator Timing Marks

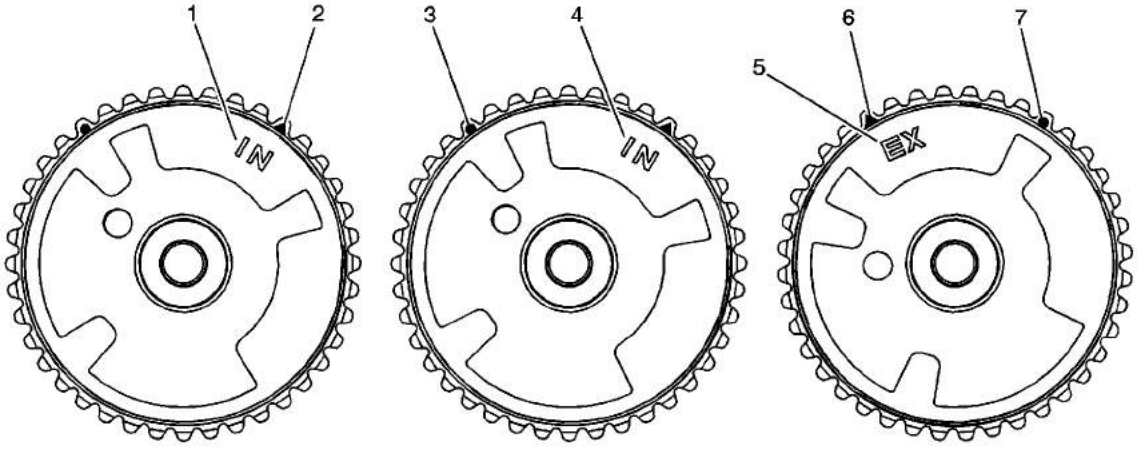

(1) Right Intake Camshaft Position Actuator Identifier
(2) Right Intake Camshaft Position Actuator Right Side Timing Mark - Triangle
(3) Left Intake Camshaft Position Actuator Left Side Timing Mark - Circle
(4) Left Intake Camshaft Position Actuator Identifier
(5) Exhaust Camshaft Position Actuator Identifier
(6) Exhaust Camshaft Position Actuator Right Side Timing Mark - Triangle
(7) Exhaust Camshaft Position Actuator Left Side Timing Mark - Circle

cardiagn.com

Stage One

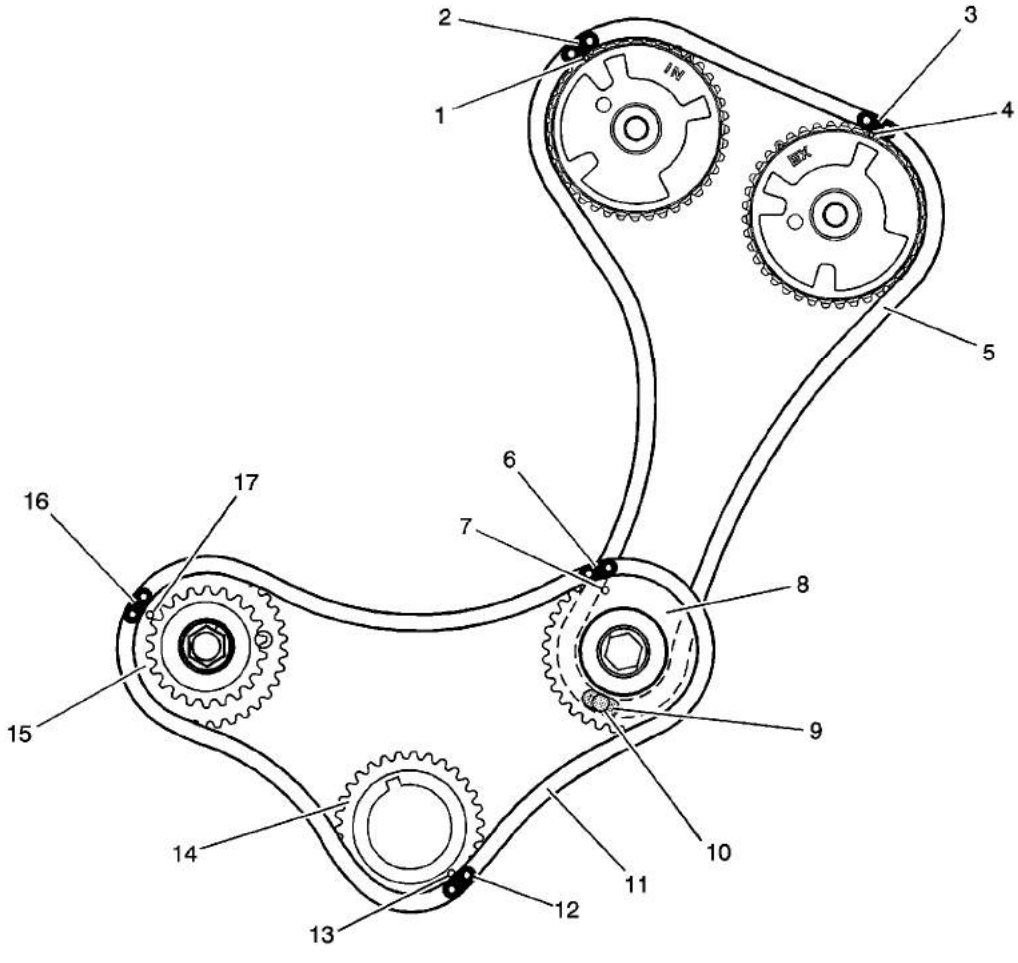

(1) Left Intake Camshaft Position (CMP) Actuator Timing Mark - Circle
(2) Left Intake Secondary Camshaft Timing Drive Chain Timing Link
(3) Left Exhaust Secondary Camshaft Timing Drive Chain Timing Link
(4) Left Exhaust Camshaft Position (CMP) Actuator Timing Mark - Circle
(5) Left Secondary Camshaft Timing Drive Chain
(6) Primary Camshaft Drive Chain Timing Link for the Left Primary Camshaft Intermediate Drive Chain Sprocket
(7) Left Primary Camshaft Intermediate Drive Chain Sprocket Timing Mark for the Primary Camshaft Drive Chain
(8) Left Primary Camshaft Intermediate Drive Chain Sprocket
(9) Left Secondary Camshaft Timing Drive Chain Timing Link for the Left Primary Camshaft Intermediate Drive Chain Sprocket, behind hole in sprocket

cardiagn.com

(11) Primary Camshaft Drive Chain
(12) Primary Camshaft Drive Chain Timing Link for the Crankshaft Sprocket
(13) Crankshaft Sprocket Timing Mark
(14) Crankshaft Sprocket
(15) Right Primary Camshaft Intermediate Drive Chain Sprocket
(16) Primary Camshaft Drive Chain Timing Link for the Right Primary Camshaft Intermediate Drive Chain Sprocket
(17) Right Primary Camshaft Intermediate Drive Chain Sprocket Timing Mark

cardiagn.com

Stage Two

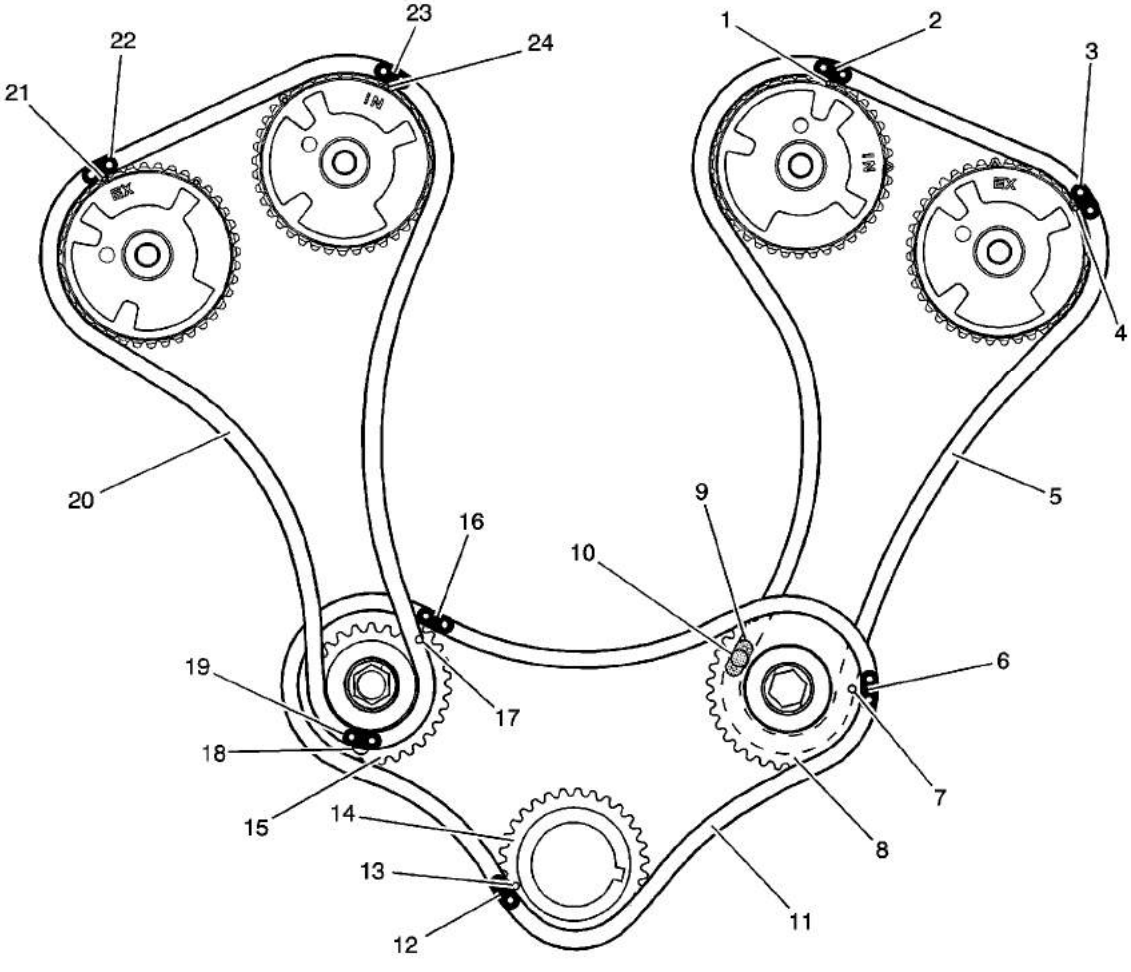

(1) Left Intake Camshaft Position (CMP) Actuator Timing Mark - Circle
(2) Left Intake Secondary Camshaft Timing Drive Chain Timing Link
(3) Left Exhaust Secondary Camshaft Timing Drive Chain Timing Link
(4) Left Exhaust Camshaft Position (CMP) Actuator Timing Mark - Circle
(5) Left Secondary Camshaft Timing Drive Chain
(6) Primary Camshaft Drive Chain Timing Link for the Left Primary Camshaft Intermediate Drive Chain Sprocket
(7) Left Primary Camshaft Intermediate Drive Chain Sprocket Timing Mark for the Primary Camshaft Drive Chain
(8) Left Primary Camshaft Intermediate Drive Chain Sprocket
(9) Left Secondary Camshaft Timing Drive Chain Timing Link for the Left Primary Camshaft Intermediate Drive Chain Sprocket, behind hole in sprocket

cardiagn.com

(12) Primary Camshaft Drive Chain Timing Link for the Crankshaft Sprocket
(13) Crankshaft Sprocket Timing Mark
(14) Crankshaft Sprocket
(15) Right Primary Camshaft Intermediate Drive Chain Sprocket
(16) Primary Camshaft Drive Chain Timing Link for the Right Primary Camshaft Intermediate Drive Chain Sprocket
(17) Right Primary Camshaft Intermediate Drive Chain Sprocket Timing Mark for the Primary Camshaft Drive Chain
(18) Right Primary Camshaft Intermediate Drive Chain Sprocket Timing Mark/Window for the Right Secondary Camshaft Timing Drive Chain
(19) Right Secondary Camshaft Timing Drive Chain Timing Link for the Right Primary Camshaft Intermediate Drive Chain Sprocket
(20) Right Secondary Camshaft Timing Drive Chain
(21) Right Exhaust Camshaft Position (CMP) Actuator Timing Mark - Triangle
(22) Right Exhaust Secondary Camshaft Timing Drive Chain Timing Link
(23) Right Intake Secondary Camshaft Timing Drive Chain Timing Link
(24) Right Intake Camshaft Position (CMP) Actuator Timing Mark - Triangle

cardiagn.com

Engine Identification

Vehicle Identification Number

The Vehicle Identification Number (VIN) Derivative is located in two places on the engine and is a nine digit number stamped or laser etched onto the block at the vehicle assembly plant. If reading the identification number the following information can be obtained:

- The first digit identifies the vehicle division.
- The second digit is the model year.
- The third digit identifies the assembly plant.
- The fourth through ninth digits are the last six digits of the Vehicle Identification Number (VIN).

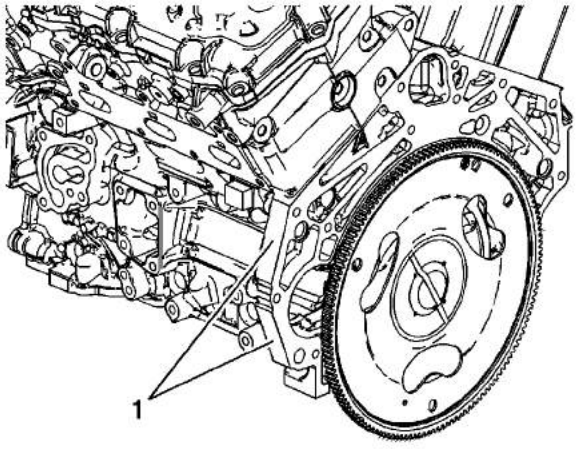

The engine block is marked with the VIN on a pad area on the left rear side (1).

cardiagn.com

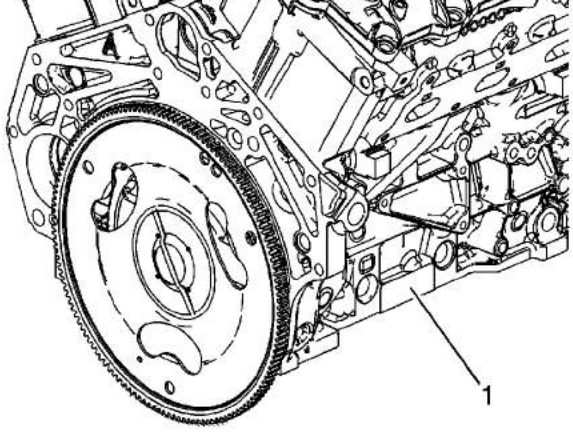

The engine block is marked with the VIN on a pad area on the center lower right side (1).

Engine Traceability Label

The engine traceability label is located in two places on the engine and consists of the broadcast code, bar code and sequence number.

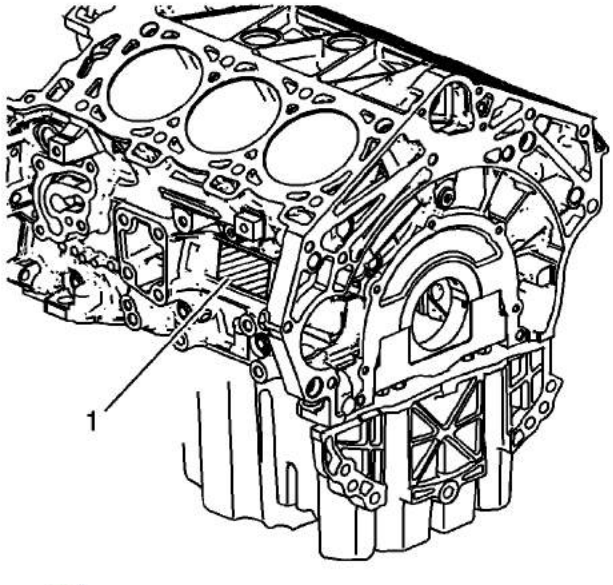

One engine traceability label (1) is located on the left rear side of the engine block.

cardiagn.com

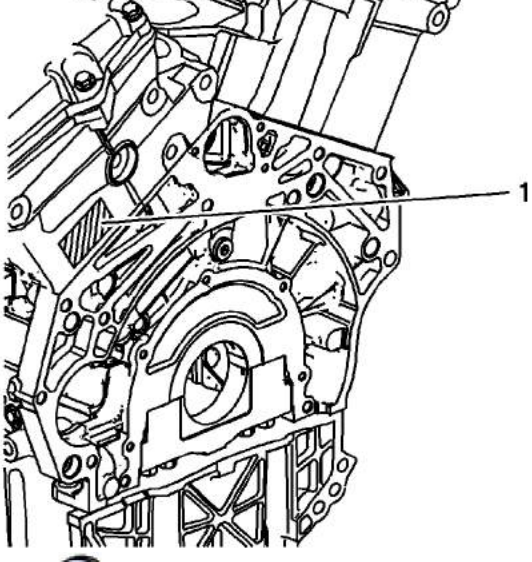

Another engine traceability label (1) is located on the rear of the left cylinder head.

Engine Verification Label

The engine verification label is located in two places on the engine and consists of the broadcast code and bar code.

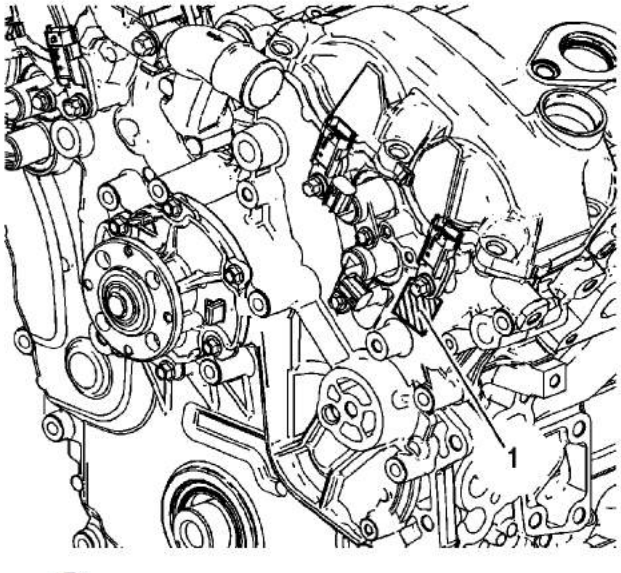

One engine verification label (1) is located on the left side of the engine front cover below the

cardiagn.com

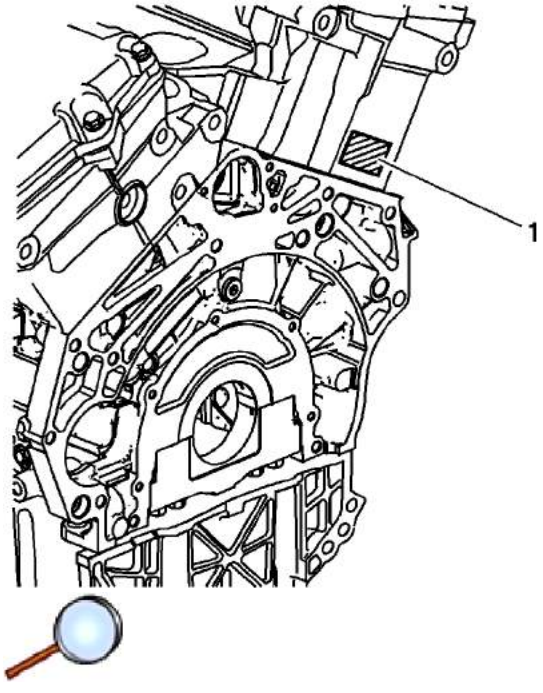

Another engine verification label (1) is located on the rear of the right cylinder head.

cardiagn.com