ANTI-THEFT

Fig 1: Forced Entry Circuit (1 of 4)

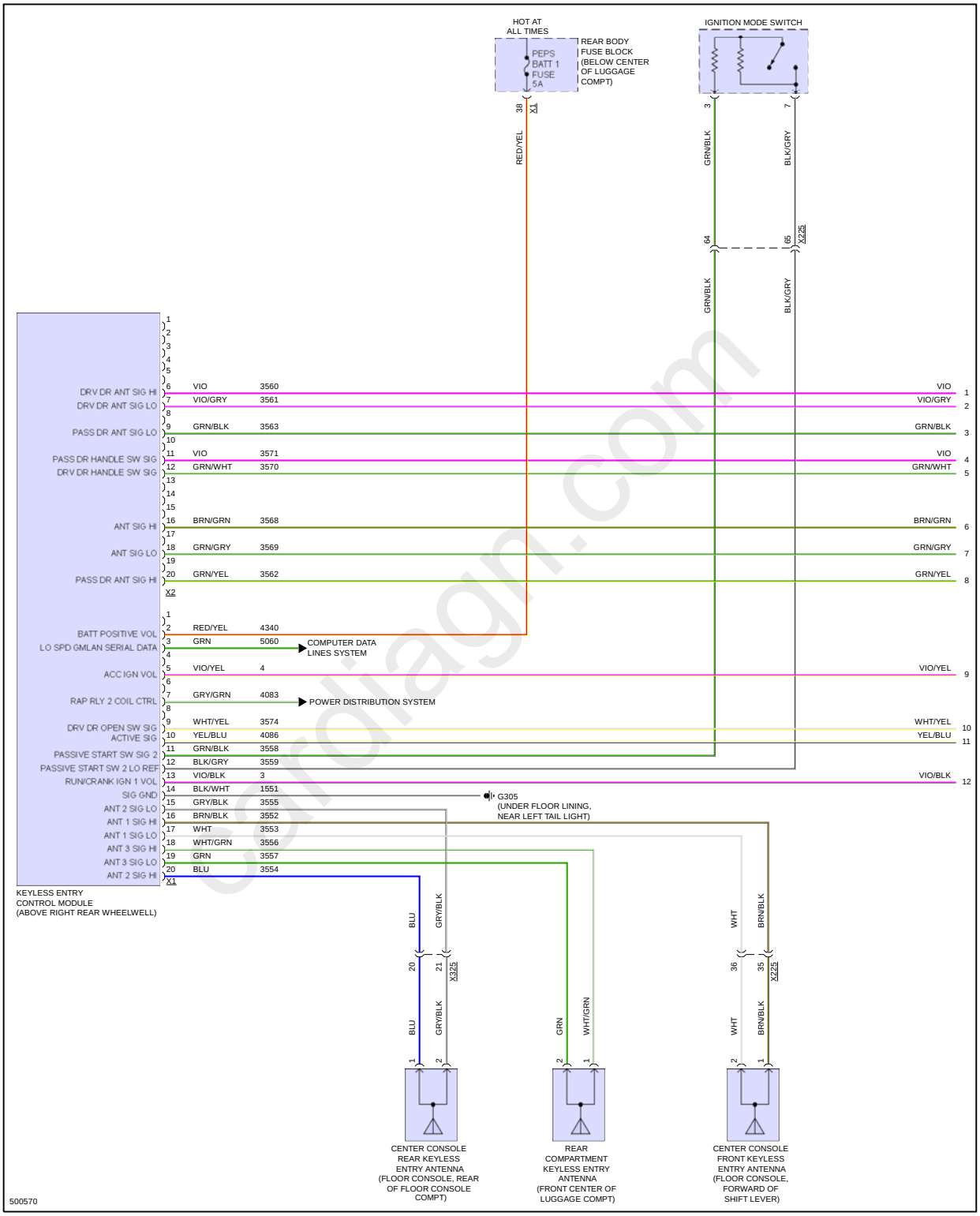

Fig 2: Forced Entry Circuit (2 of 4)

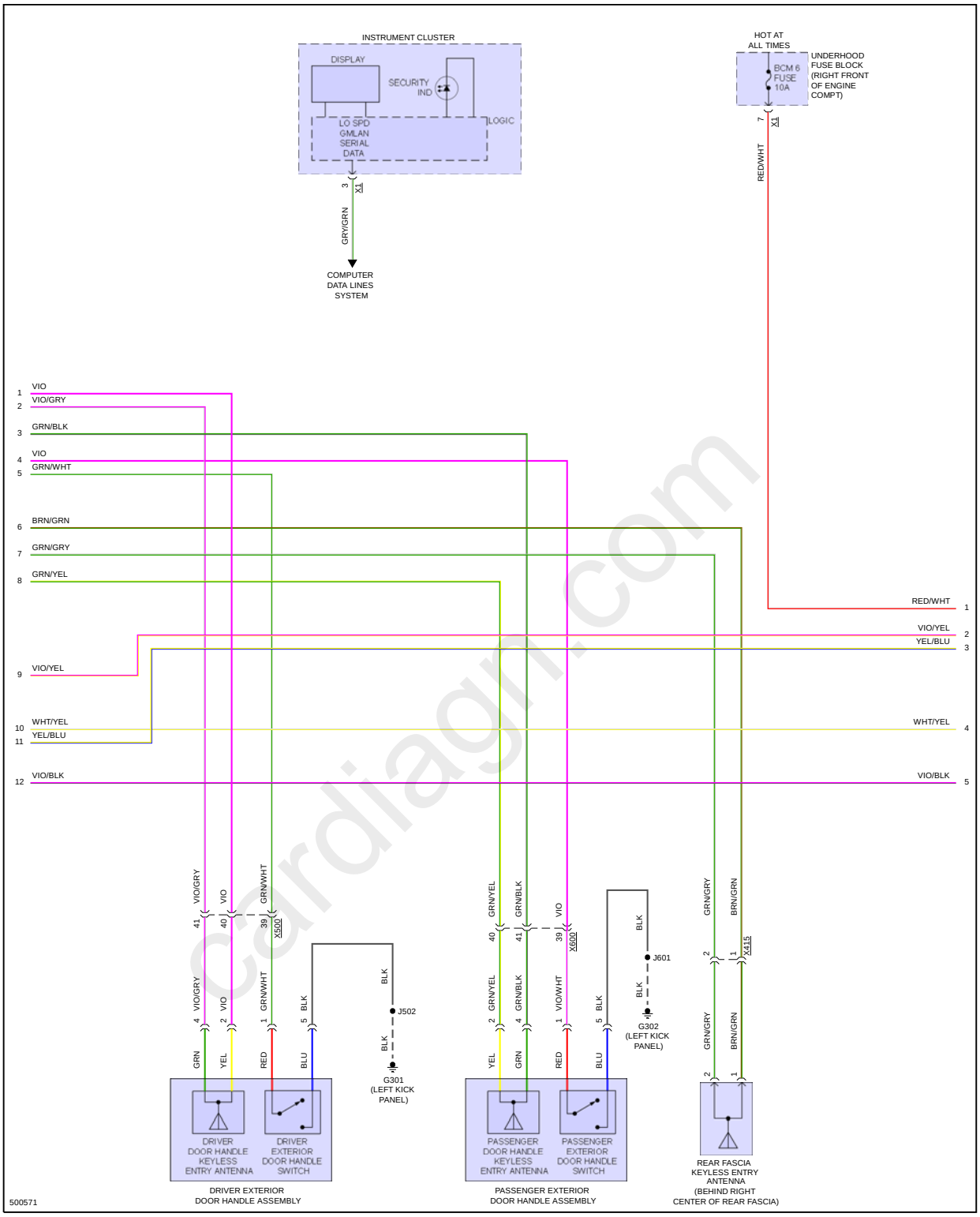

Fig 3: Forced Entry Circuit (3 of 4)

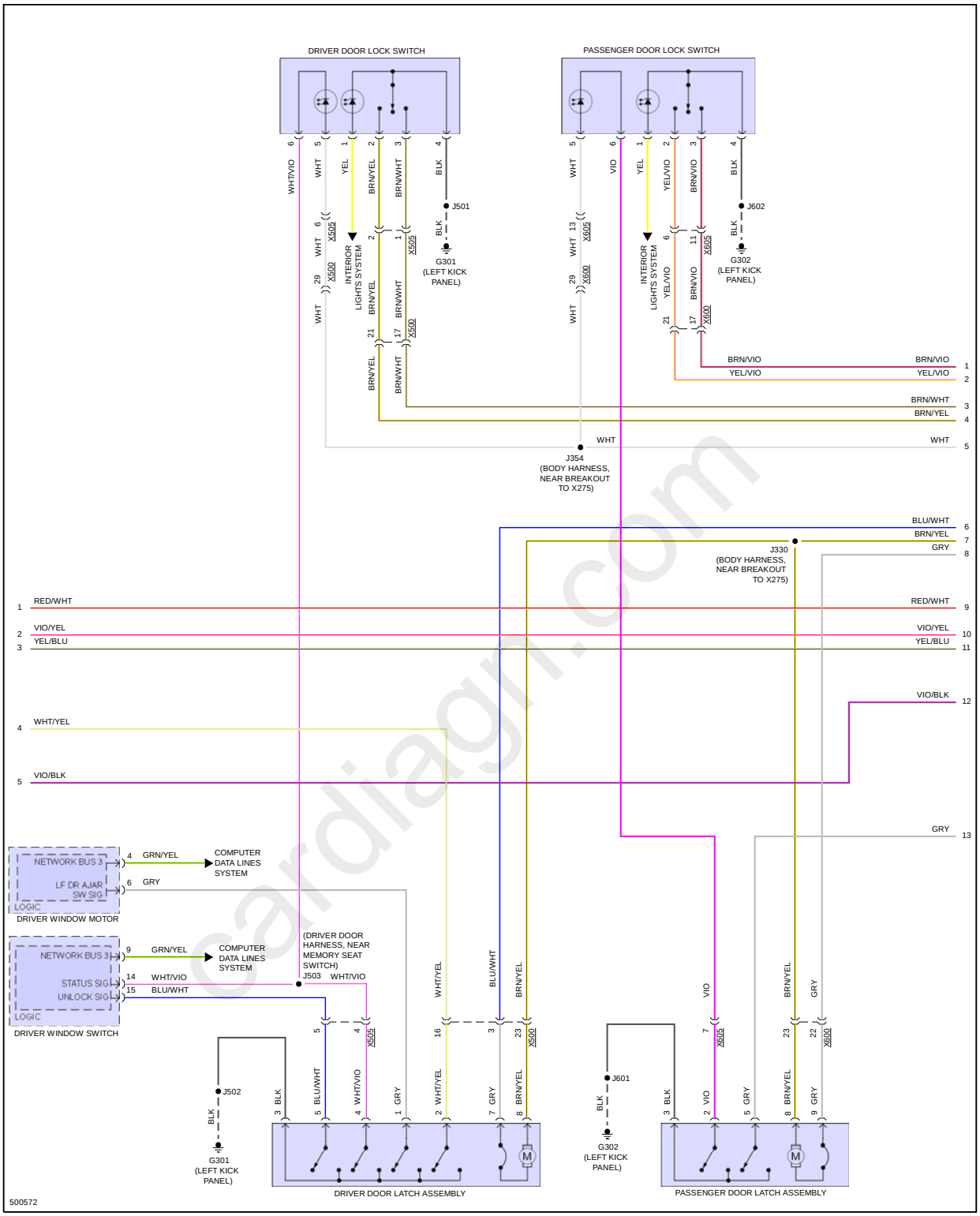

Fig 4: Forced Entry Circuit (4 of 4)

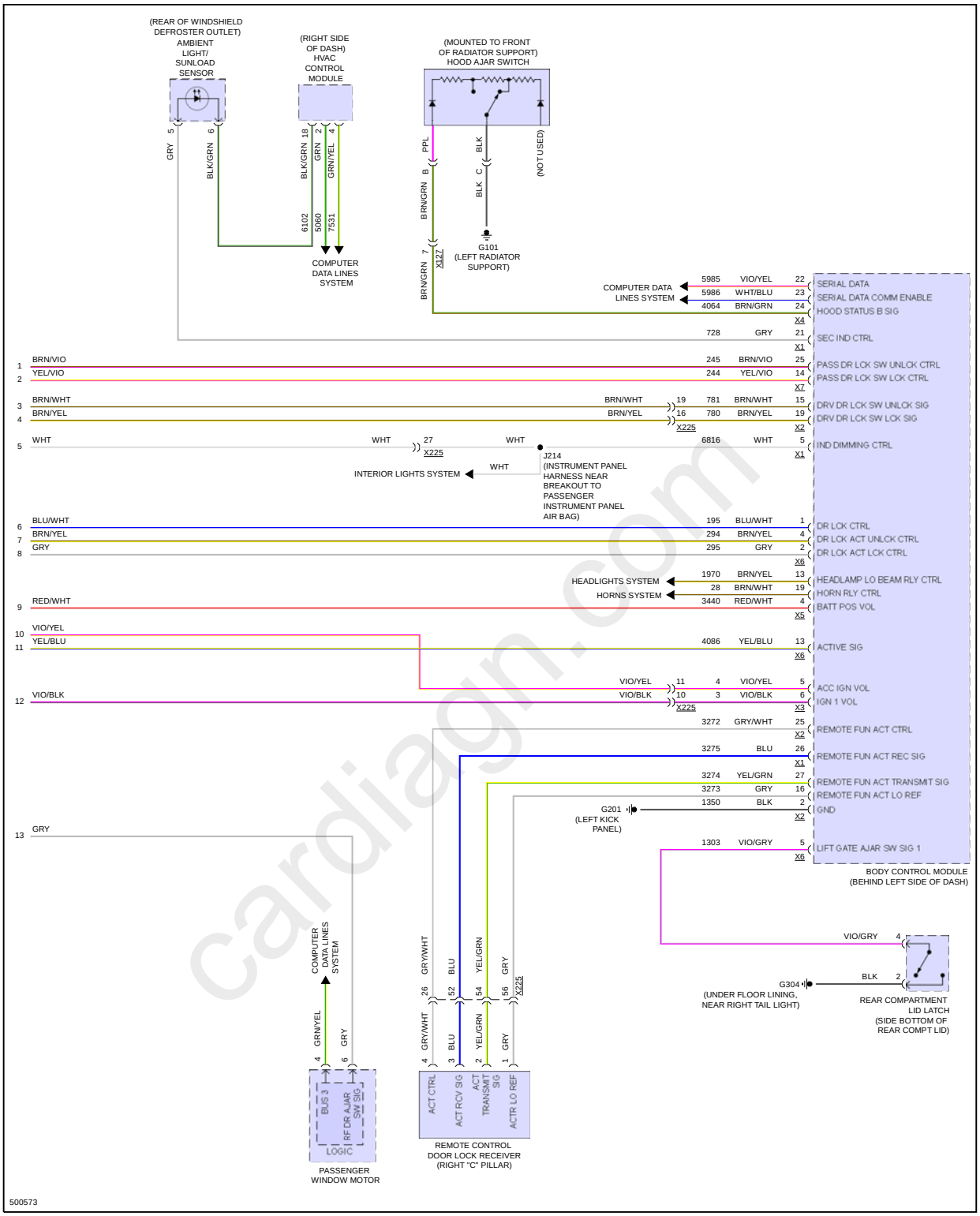

cardiagn.com

Fig 5: Pass-Key Circuit

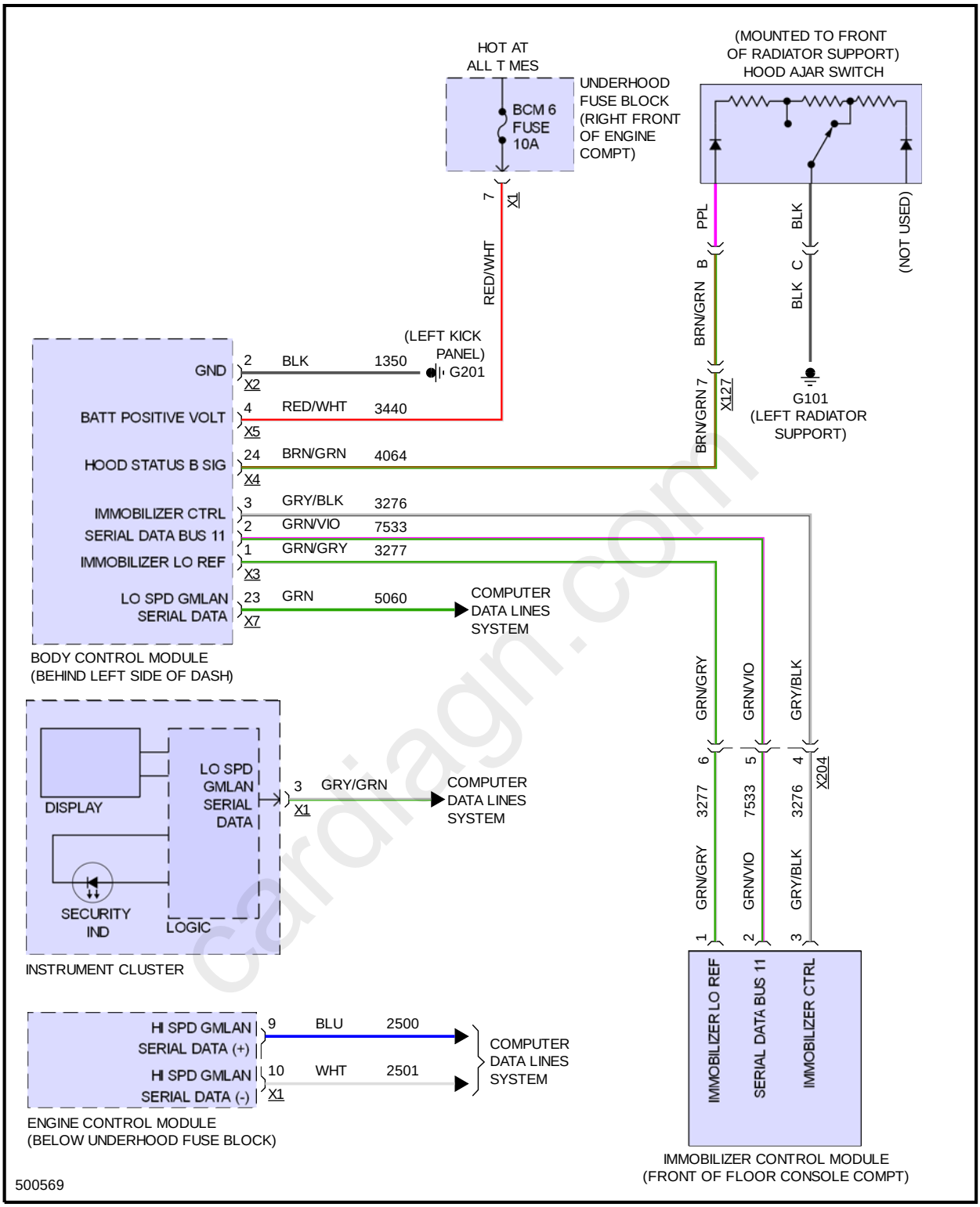

cardiagn.com