REPAIR INSTRUCTIONS

WATER PUMP CLEANING AND INSPECTION

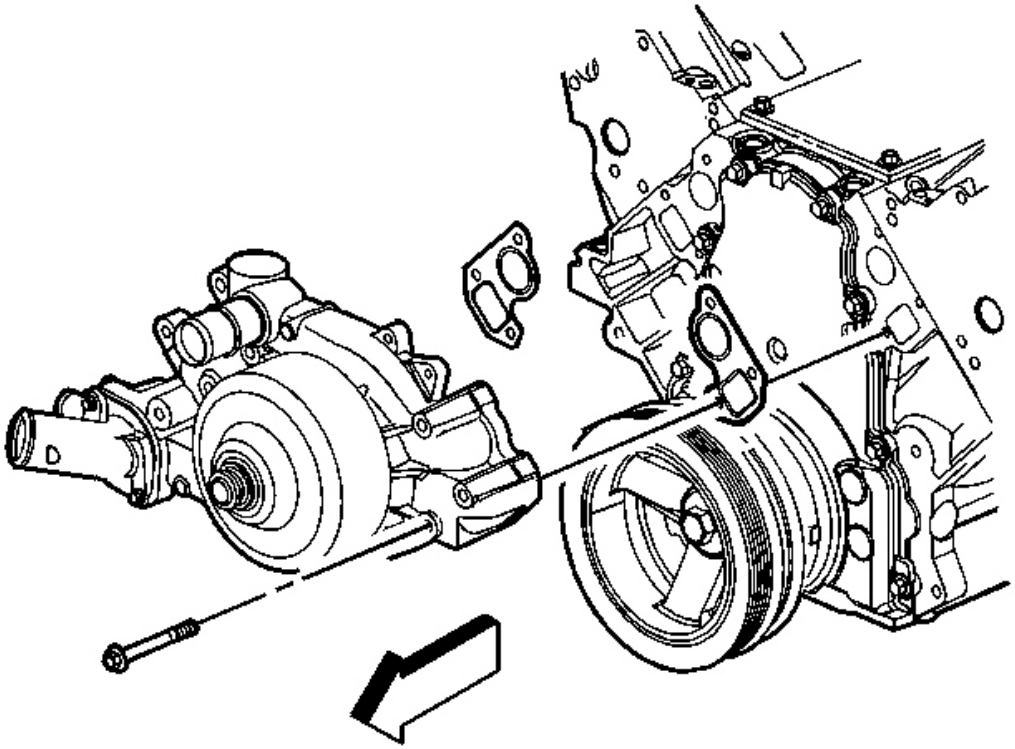

Fig. 1: Old Gasket & Water Pump Sealing
Courtesy of GENERAL MOTORS CORP.

1. Remove the old gasket from the water pump sealing surfaces. Refer to **Replacing Engine Gaskets** .
2. Clean all dirt and debris from the water pump housing.
3. Inspect the water pump for the following:
   - Gasket sealing surfaces for excessive scratches or gouging
   - Hose sealing surfaces for scratches or gouging
   - Restrictions within the internal coolant passages

cardiagn.com

- Excessive side-to-side play in the pulley shaft
- A loose belt pulley or a pulley with excessive wear or scoring on the belt tracking area
- Leakage at the water outlet housing or rear cover gasket
- Leakage at the water pump vent hole

  A stain around the vent hole is acceptable. If leakage occurs, such as dripping, with the engine running and the cooling system pressurized, replace the water pump.

THREAD REPAIR

Tools Required

- **J 42385-100** Head/Main Bolt Thread Repair Kit
- **J 42385-200** General Threads Kit
- **J 42385-300** Fixtures/Hardware Kit

General Thread Repair

cardiagn.com

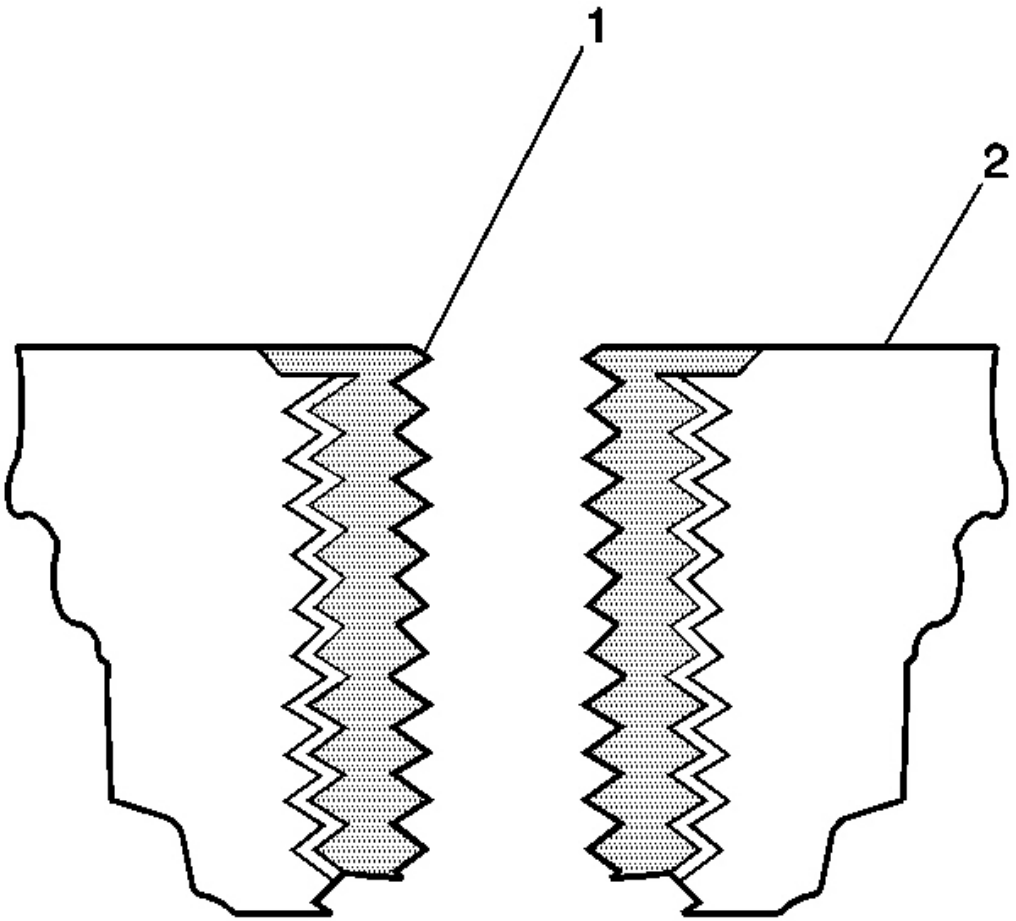

Fig. 2: View Of Bushing Type Insert & Base Material
Courtesy of GENERAL MOTORS CORP.

The thread repair process involves a solid, thin walled, self-locking, carbon steel, bushing type insert (1). During the bushing installation process, the driver tool expands the bottom external threads of the insert into the base material (2). This action mechanically locks the insert in place. Also, when installed to the proper depth, the flange of the insert will be seated against the counterbore of the repaired hole.

cardiagn.com

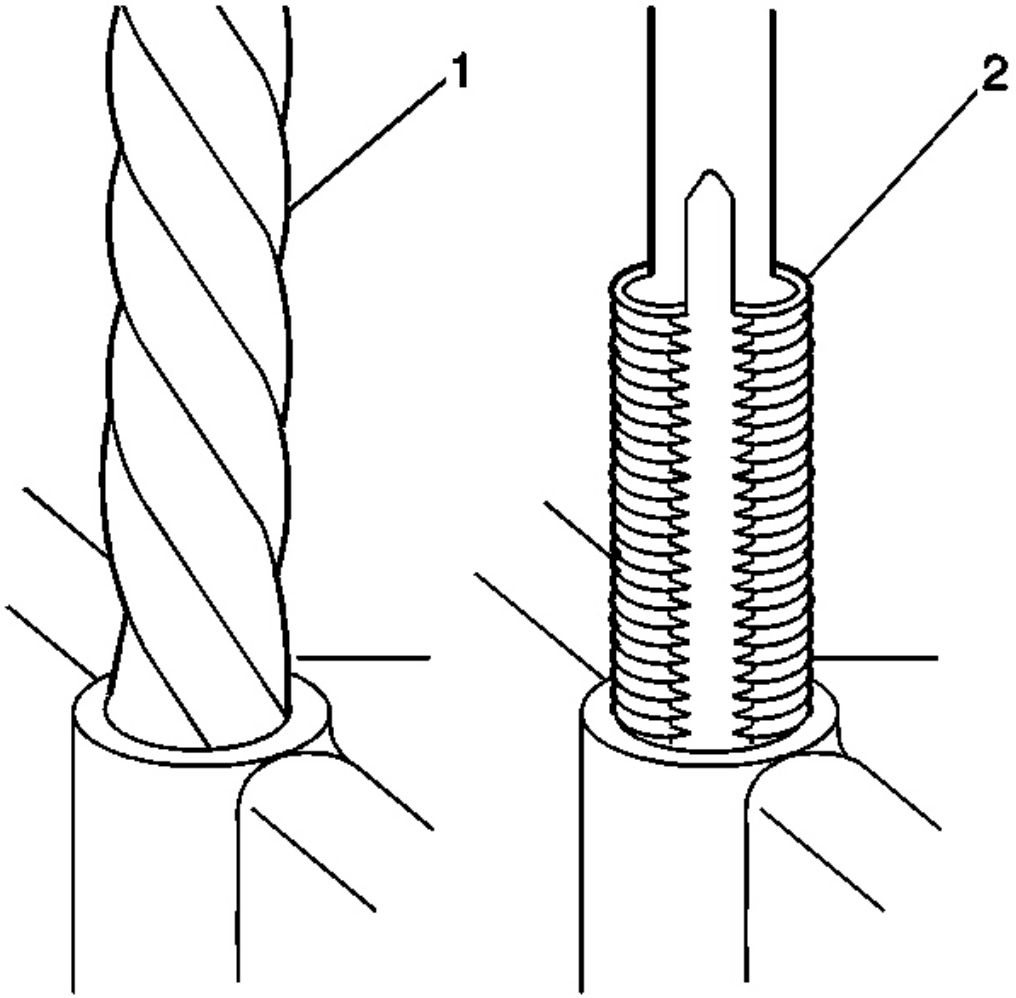

Fig. 3: Removing Damaged Threads
Courtesy of GENERAL MOTORS CORP.

CAUTION: Refer to Safety Glasses Caution in Cautions and Notices.

IMPORTANT:

- **The use of a cutting type fluid GM P/N 1052864 (Canadian P/N 992881), WD 40(R), or equivalent is recommended when performing the drilling, counterboring, and tapping procedures.**
- **Driver oil MUST be used on the installer driver tool.**

cardiagn.com

- **The tool kits are designed for use with either a suitable tap wrench or drill motor.**

1. Drill out the threads of the damaged hole (1).
    - M6 inserts require a minimum drill depth of 15 mm (0.59 in).
    - M8 inserts require a minimum drill depth of 20 mm (0.79 in).
    - M10 inserts require a minimum drill depth of 23.5 mm (0.93 in).
2. Using compressed air, clean out any chips.

cardiagn.com

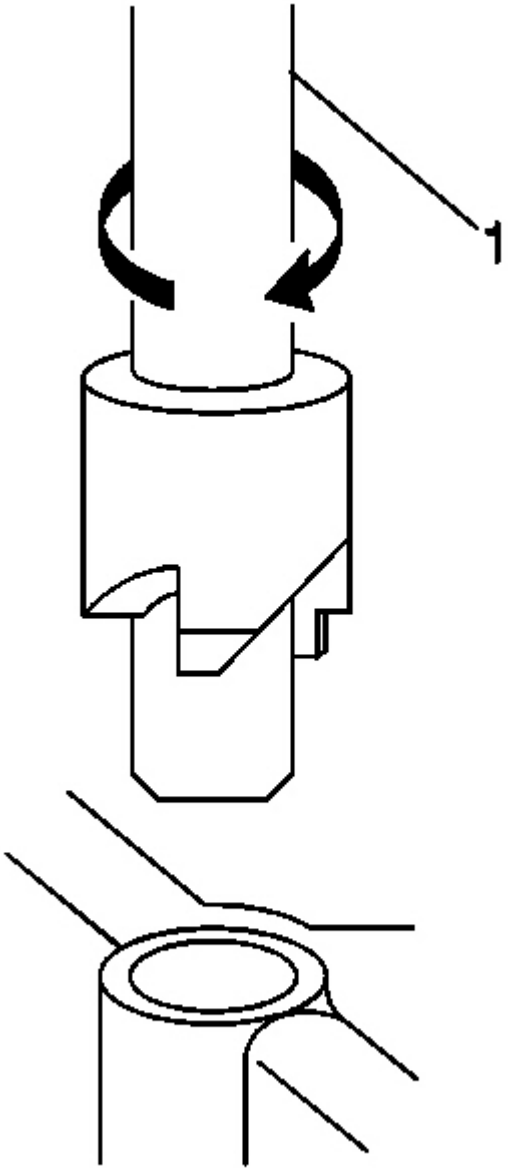

Fig. 4: View Of Counterbore Drill
Courtesy of GENERAL MOTORS CORP.

3. Counterbore the hole to the full depth permitted by the tool (1).
4. Using compressed air, clean out any chips.

cardiagn.com

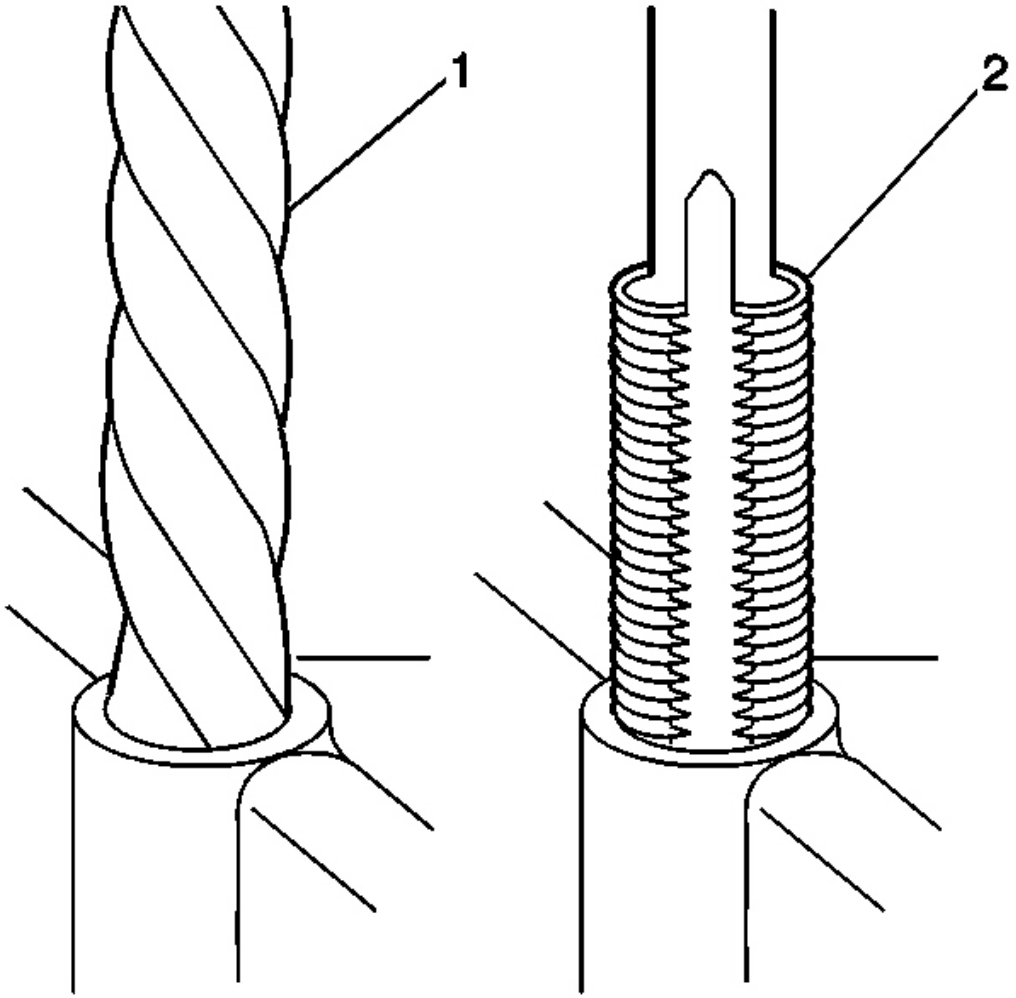

Fig. 5: Removing Damaged Threads
Courtesy of GENERAL MOTORS CORP.

5. Using a tap wrench (2), tap the threads of the drilled hole.
    - M6 inserts require a minimum tap depth of 15 mm (0.59 in).
    - M8 inserts require a minimum tap depth of 20 mm (0.79 in).
    - M10 inserts require a minimum tap depth of 23.5 mm (0.93 in).
6. Using compressed air, clean out any chips.
7. Spray cleaner GM P/N 12346139 (Canadian P/N 10953463), GM P/N 12377981 (Canadian P/N 10953463) or equivalent into the hole.
8. Using compressed air, clean any cutting oil and chips out of the hole.

cardiagn.com

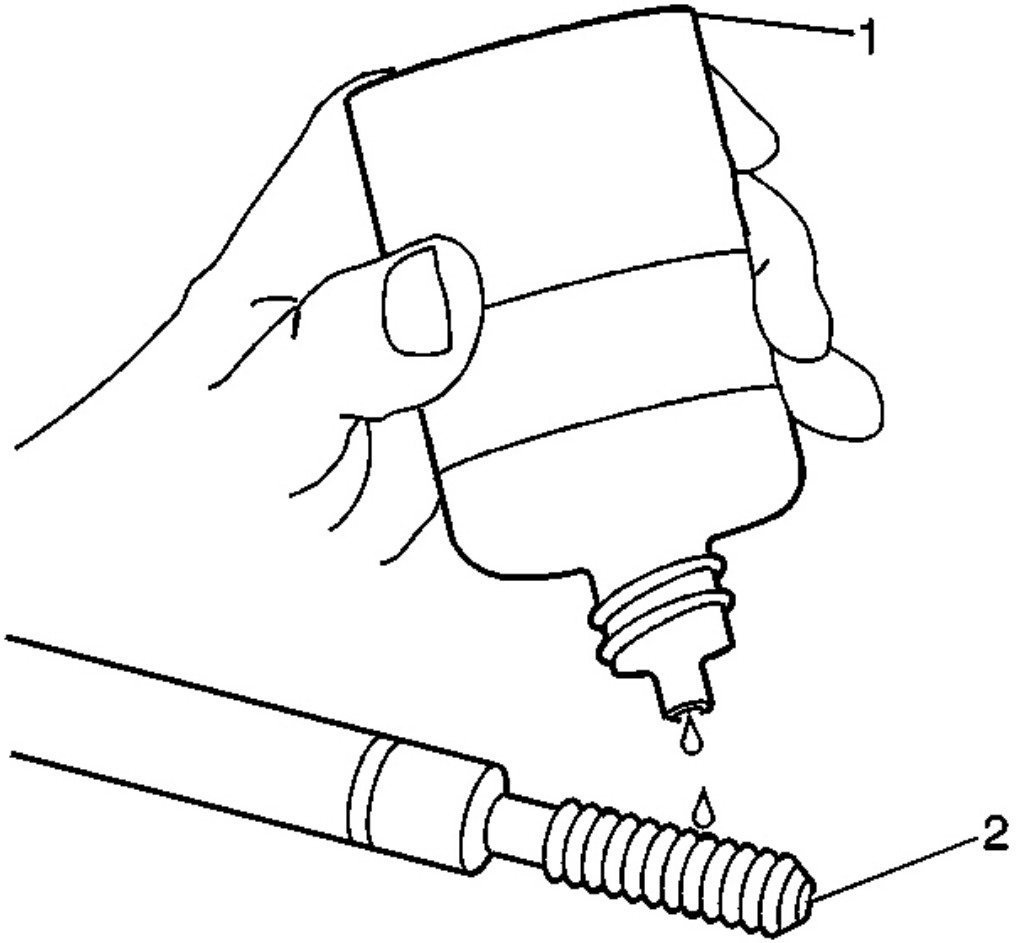

Fig. 6: Lubricating Installer Tool Using Driver Oil
Courtesy of GENERAL MOTORS CORP.

IMPORTANT: Do not allow oil or other foreign material to contact the outside diameter (OD) of the insert.

9. Lubricate the threads of the installer tool (2) with the driver oil (1).

cardiagn.com

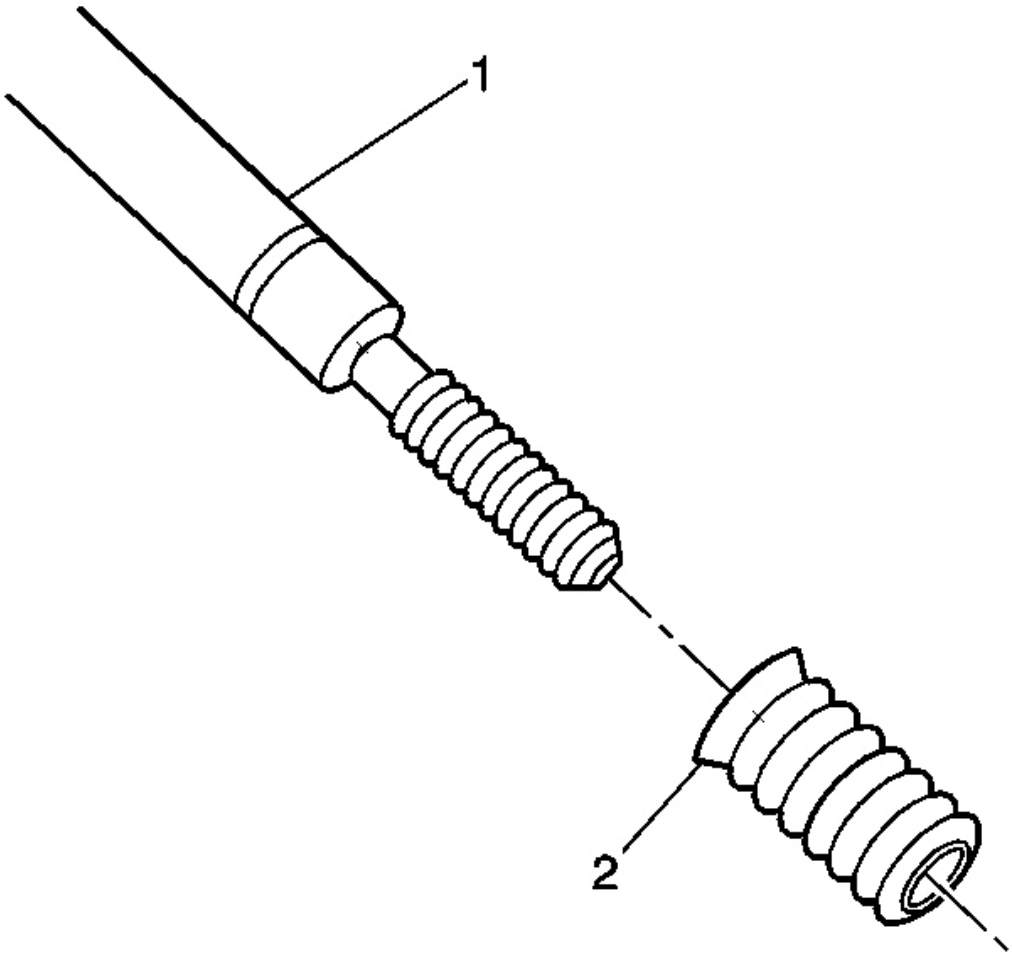

Fig. 7: View of Bushing Type Insert
Courtesy of GENERAL MOTORS CORP.

10. Install the insert (2) onto the driver tool (1).

cardiagn.com

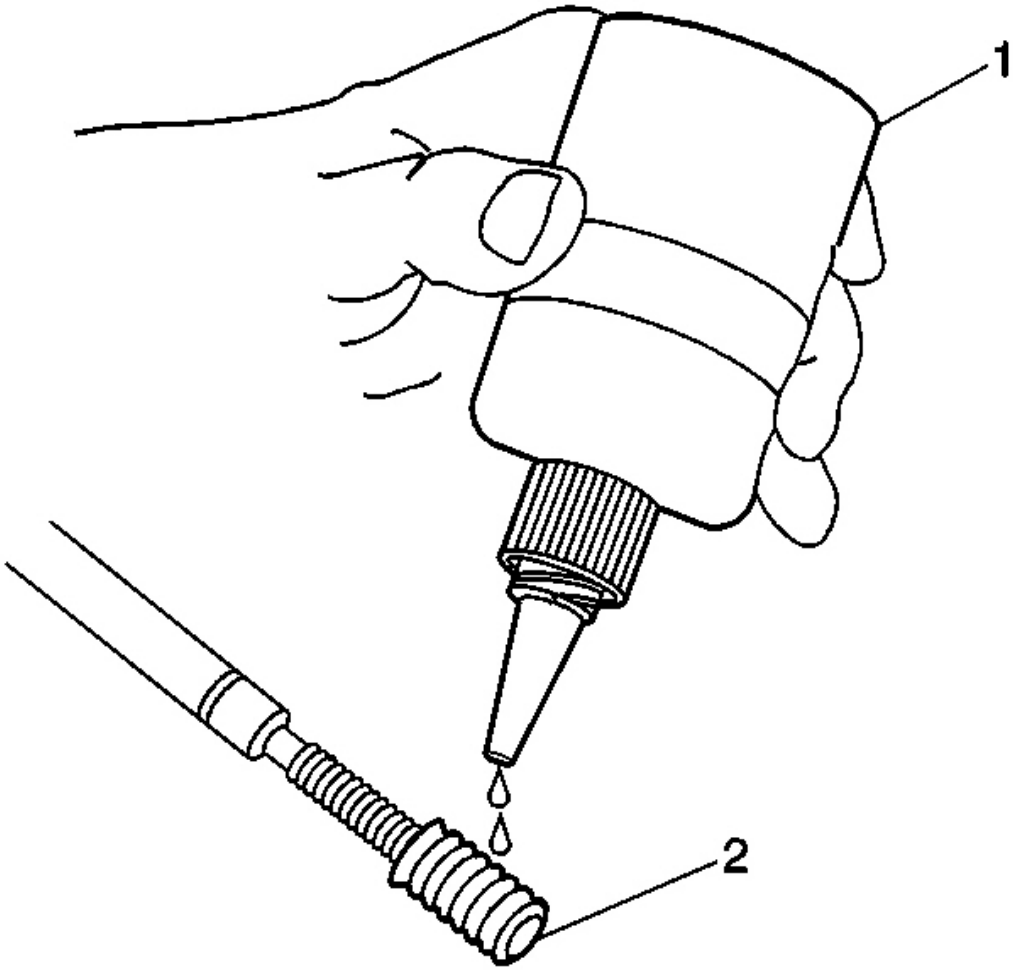

Fig. 8: Applying Threadlock LOCTITE(tm) 277, J 42385-109 To Insert
Courtesy of GENERAL MOTORS CORP.

11. Apply threadlock LOCTITE(tm) 277, J 42385-109 (1), or equivalent to the insert OD threads (2).

cardiagn.com

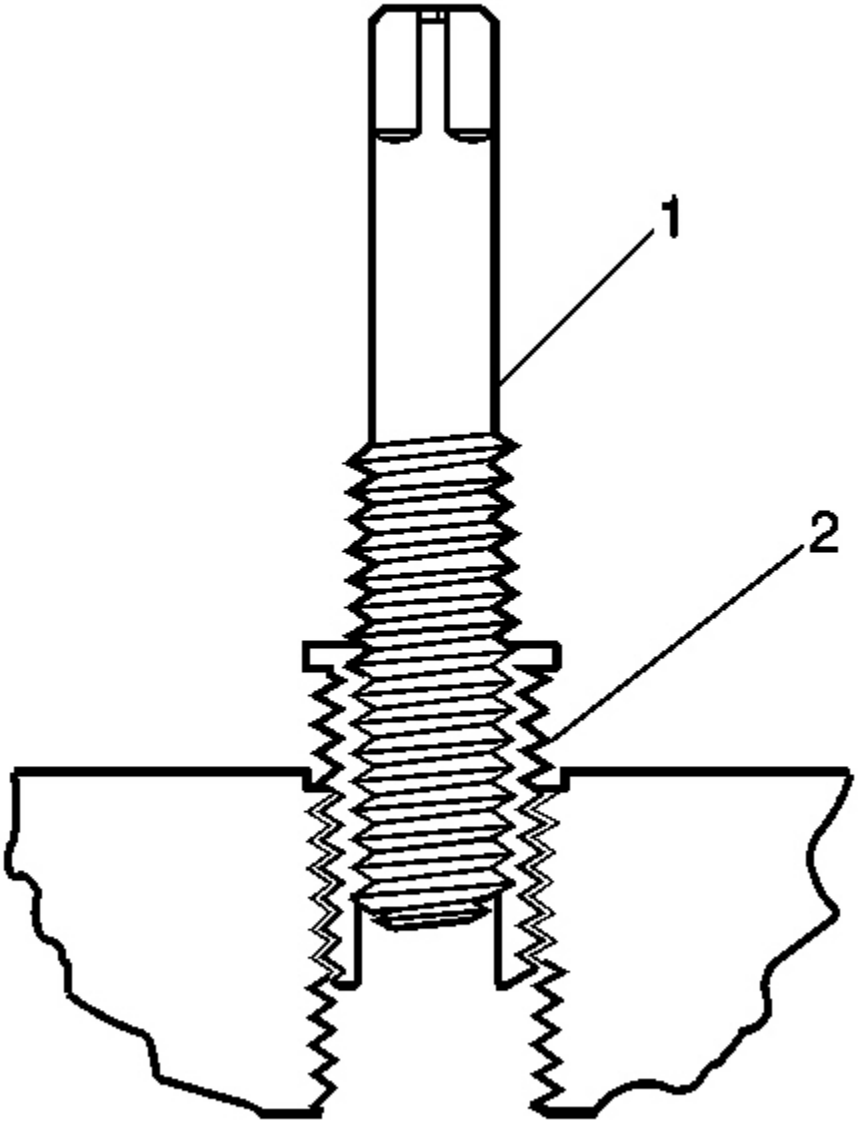

Fig. 9: Installing Insert Into Bolt Hole Using Installer Tool
Courtesy of GENERAL MOTORS CORP.

12. Install the insert (2) into the hole.

    Install the insert until the flange of the insert contacts the counterbored surface. Continue to rotate the installer tool (1) through the insert.

cardiagn.com

The installer tool will tighten up before screwing completely through the insert. This is acceptable. You are forming the bottom threads of the insert and mechanically locking the insert to the base material threads.

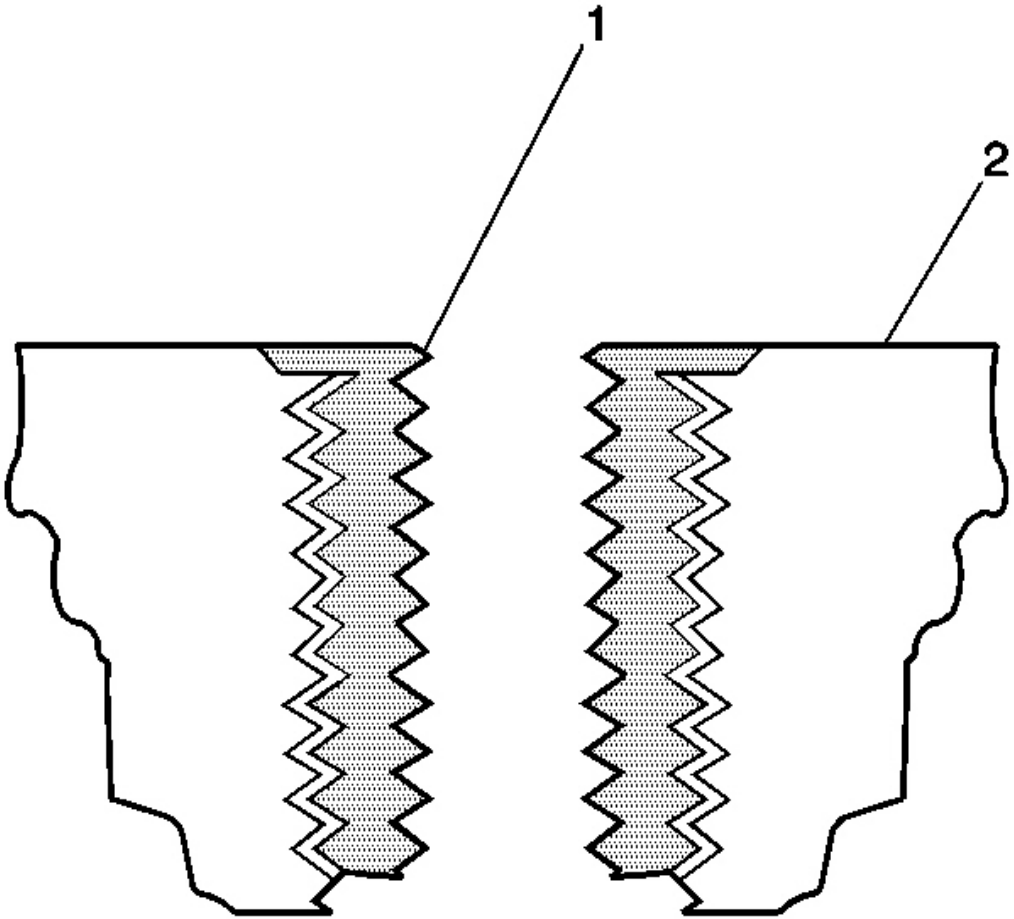

Fig. 10: View Of Bushing Type Insert & Base Material
Courtesy of GENERAL MOTORS CORP.

13. Inspect the insert for proper installation into the hole.

    A properly installed insert (1) will be either flush or slightly below flush with the surface of the base material (2).

Cylinder Head Bolt Hole Thread Repair

cardiagn.com

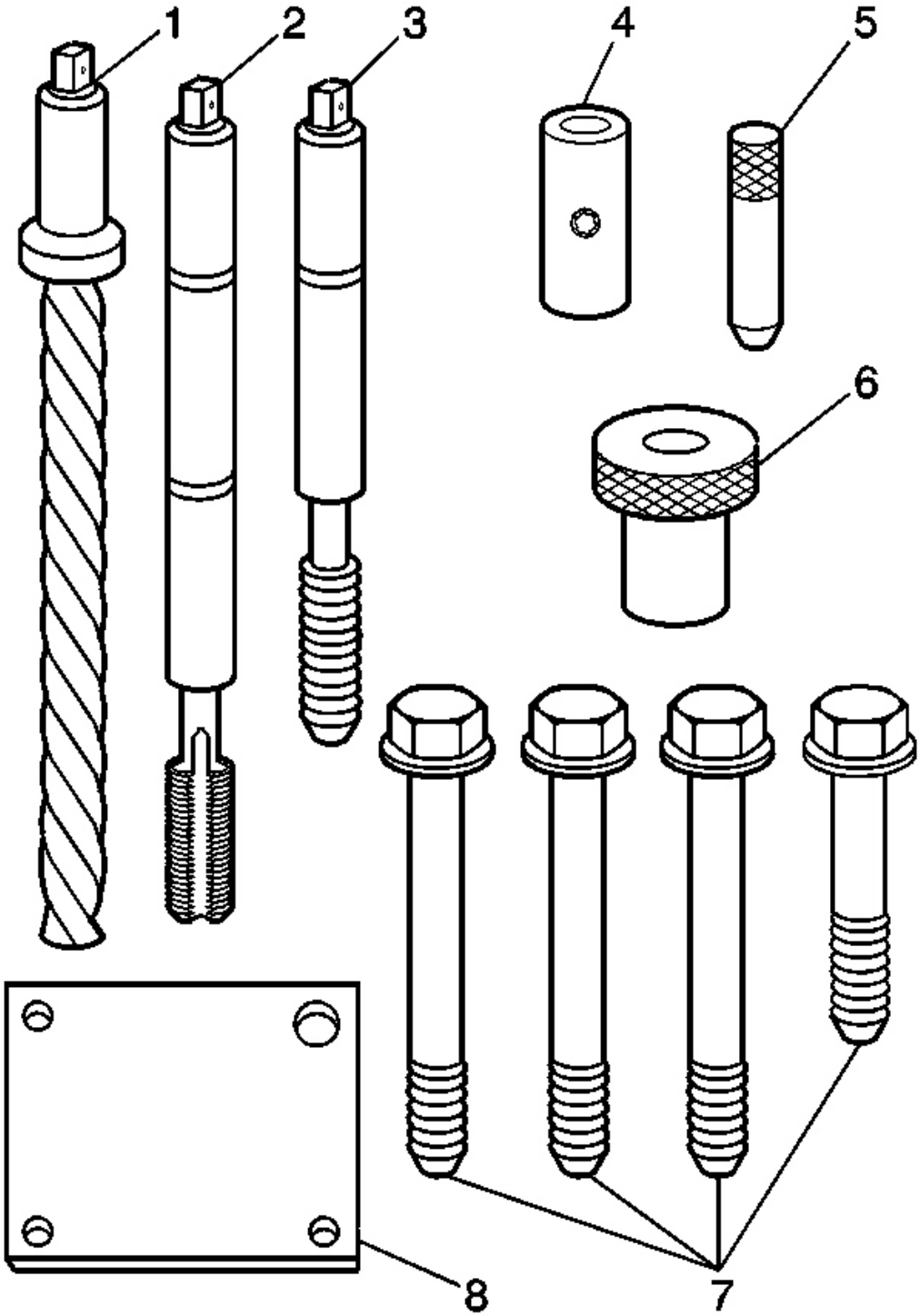

cardiagn.com

Fig. 11: View Of Cylinder Head Bolt Hole Thread Repair Kit
Courtesy of GENERAL MOTORS CORP.

1. The cylinder head bolt hole thread repair kit consists of the following items:
   - The drill (1)
   - The tap (2)
   - The installer (3)
   - The sleeve (4)
   - The alignment pin (5)
   - The bushing (6)
   - The bolts (7)
   - The fixture plate (8)

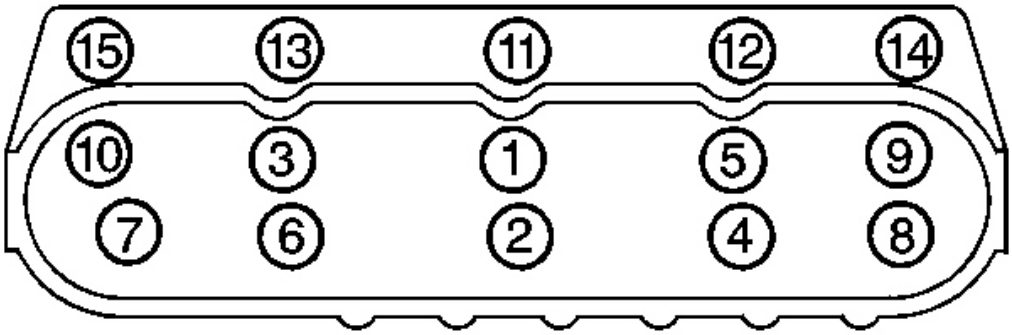

Fig. 12: Cylinder Head Bolt Tightening Sequence (Right)
Courtesy of GENERAL MOTORS CORP.

IMPORTANT: First design engine blocks have different drill and tap depths using both medium length 100 mm (3.94 in) and long 155 mm (6.1 in) M11 cylinder head bolts. Second design engine blocks use only the medium length 100 mm (3.94 in) bolt with a common drill and tap depth.

2. Measure the depth of the cylinder head bolt holes (1-10) to determine the proper drill and tap depths. Refer to **Thread Repair Specifications** .

cardiagn.com

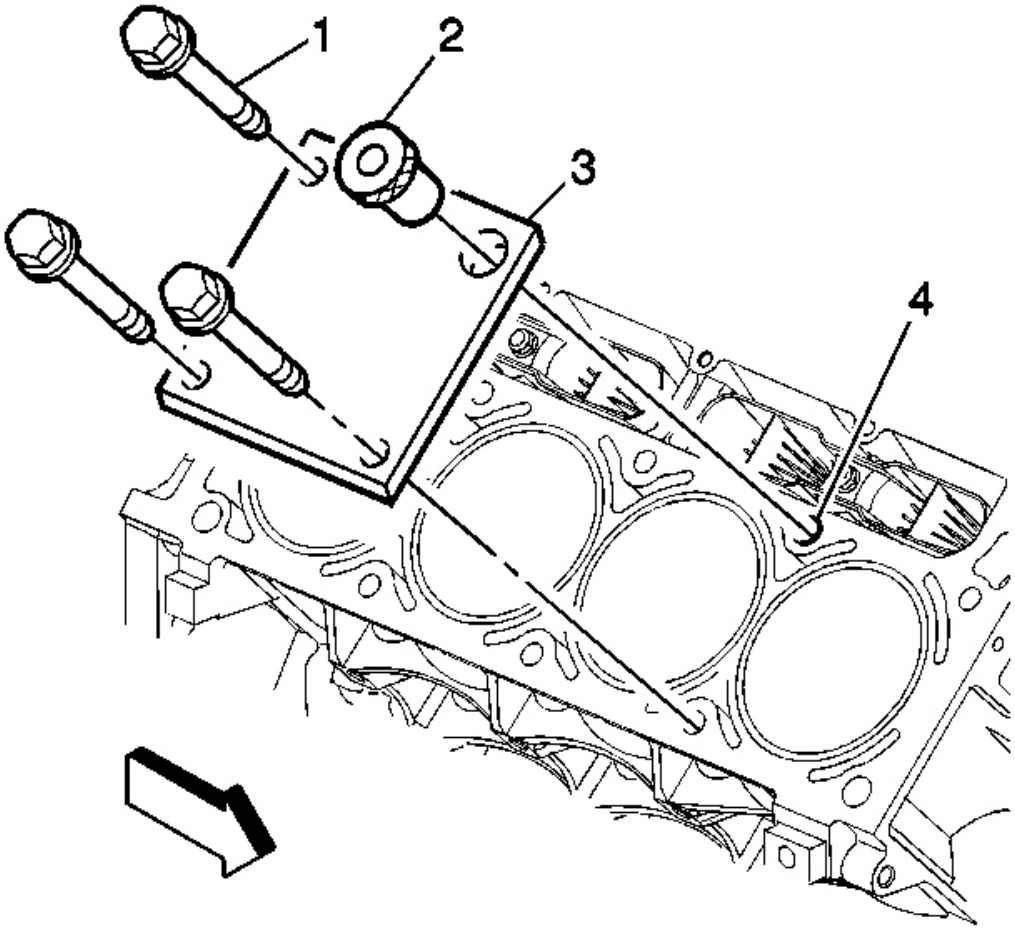

Fig. 13: View Of Fixture Plate, Bolts, Bushing & Cylinder Hole
Courtesy of GENERAL MOTORS CORP.

CAUTION: Refer to Safety Glasses Caution in Cautions and Notices.

IMPORTANT:

- **The use of a cutting type fluid GM P/N 1052864 (Canadian P/N 992881), WD 40(R), or equivalent is recommended when performing the drilling and tapping procedures.**
- **Driver oil MUST be used on the installer driver tool.**
- **The tool kits are designed for use with either a suitable tap wrench or drill motor.**

cardiagn.com

3. Install the fixture plate (3), bolts (1), and bushing (2) onto the engine block deck.

   Position the fixture plate and bushing over the hole that is to be repaired (4).

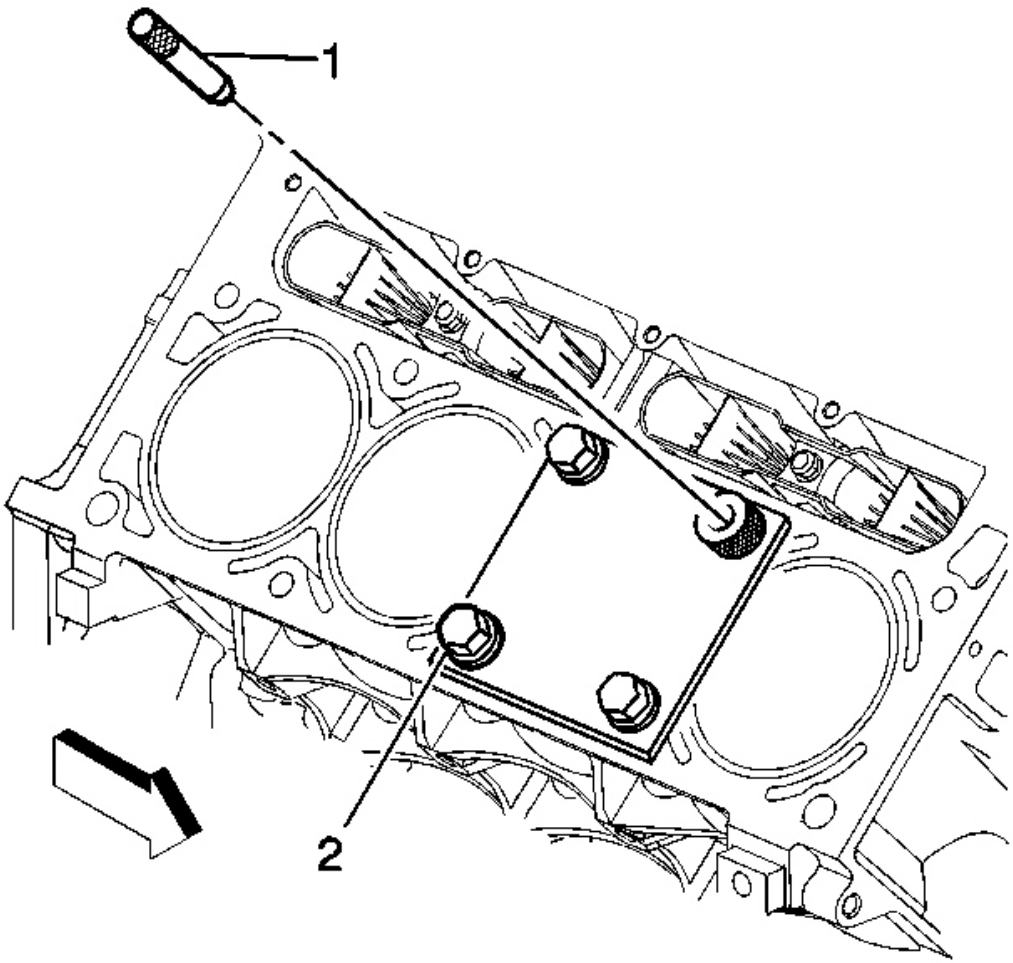

Fig. 14: View Of Alignment Pin & Fixture Retaining Bolt
Courtesy of GENERAL MOTORS CORP.

4. Position the alignment pin (1) through the bushing and into the hole.
5. With the alignment pin in the desired hole, tighten the fixture retaining bolts (2).
6. Remove the alignment pin from the hole.

cardiagn.com

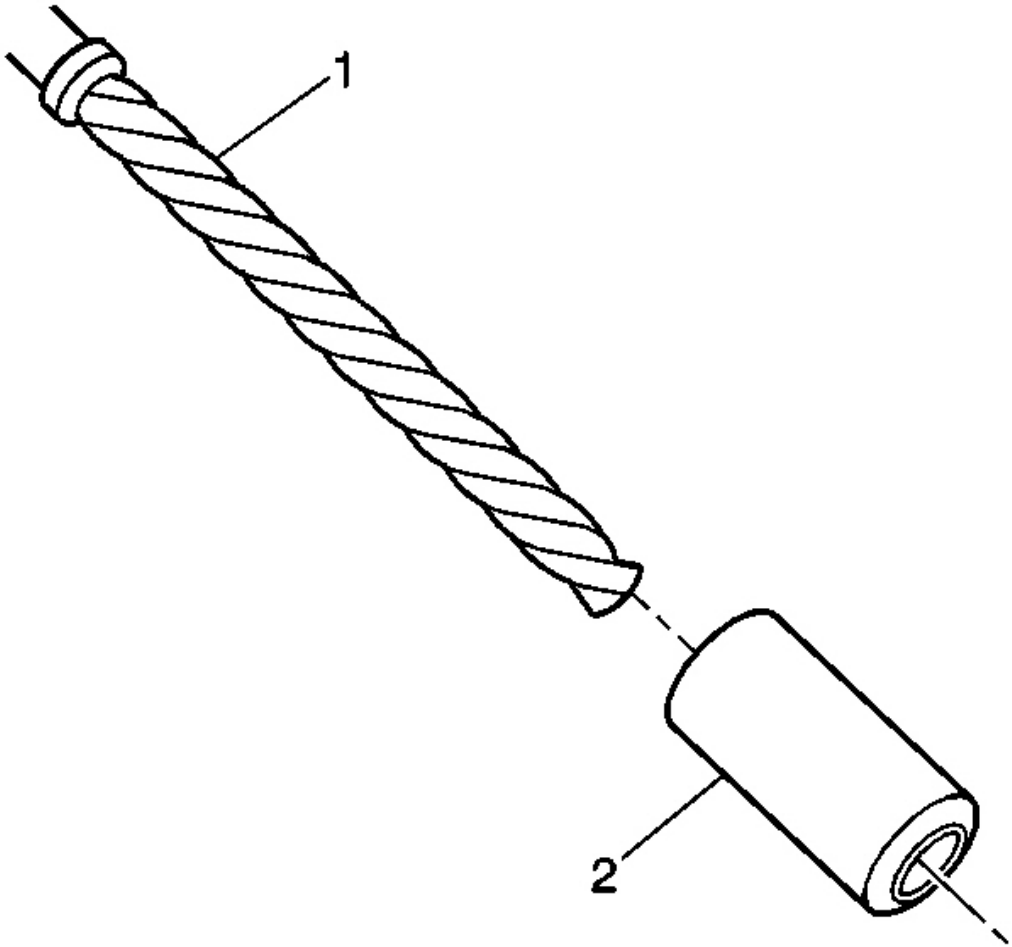

Fig. 15: Installing Sleeve Onto Drill
Courtesy of GENERAL MOTORS CORP.

7. Install the sleeve (2) onto the drill (1), if required.

cardiagn.com

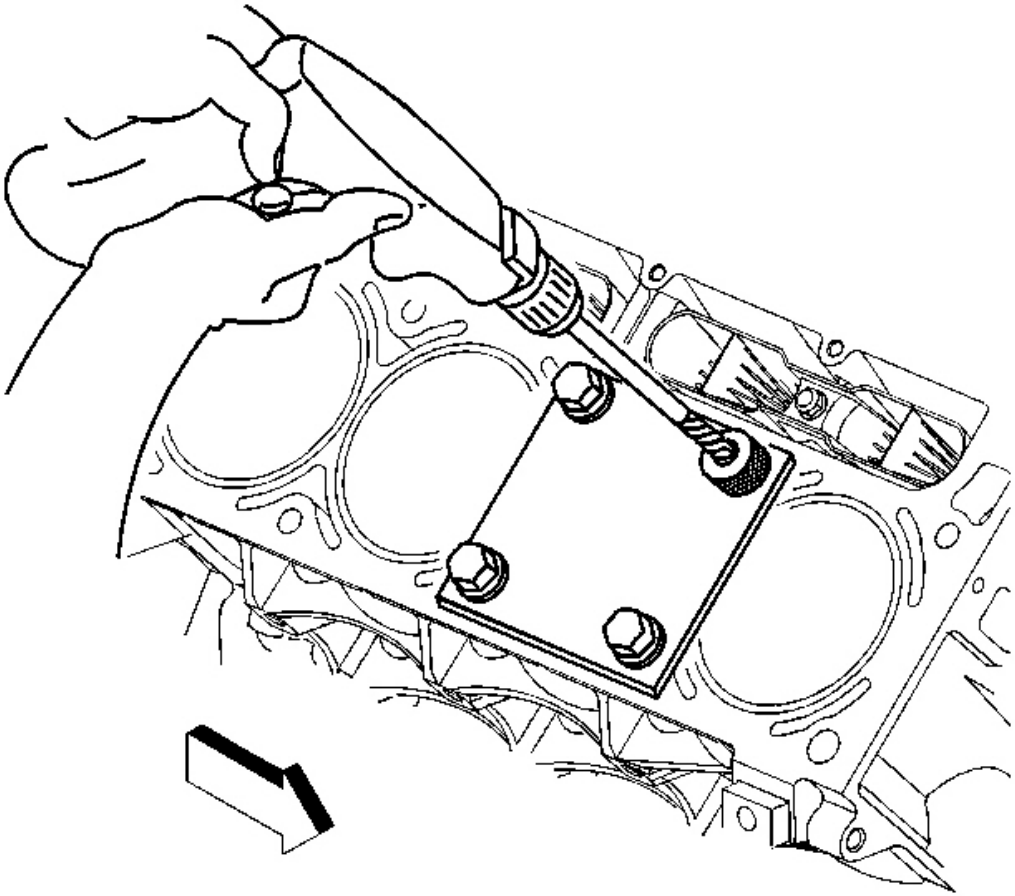

Fig. 16: Drilling Cylinder Head Bolt Hole
Courtesy of GENERAL MOTORS CORP.

IMPORTANT: During the reaming process, it is necessary to repeatedly remove the drill and clean the chips from the hole.

8. Drill out the threads of the damaged hole.

   Drill the hole until the stop collar of the drill bit or the sleeve contacts the bushing.

9. Using compressed air, clean out any chips.

cardiagn.com

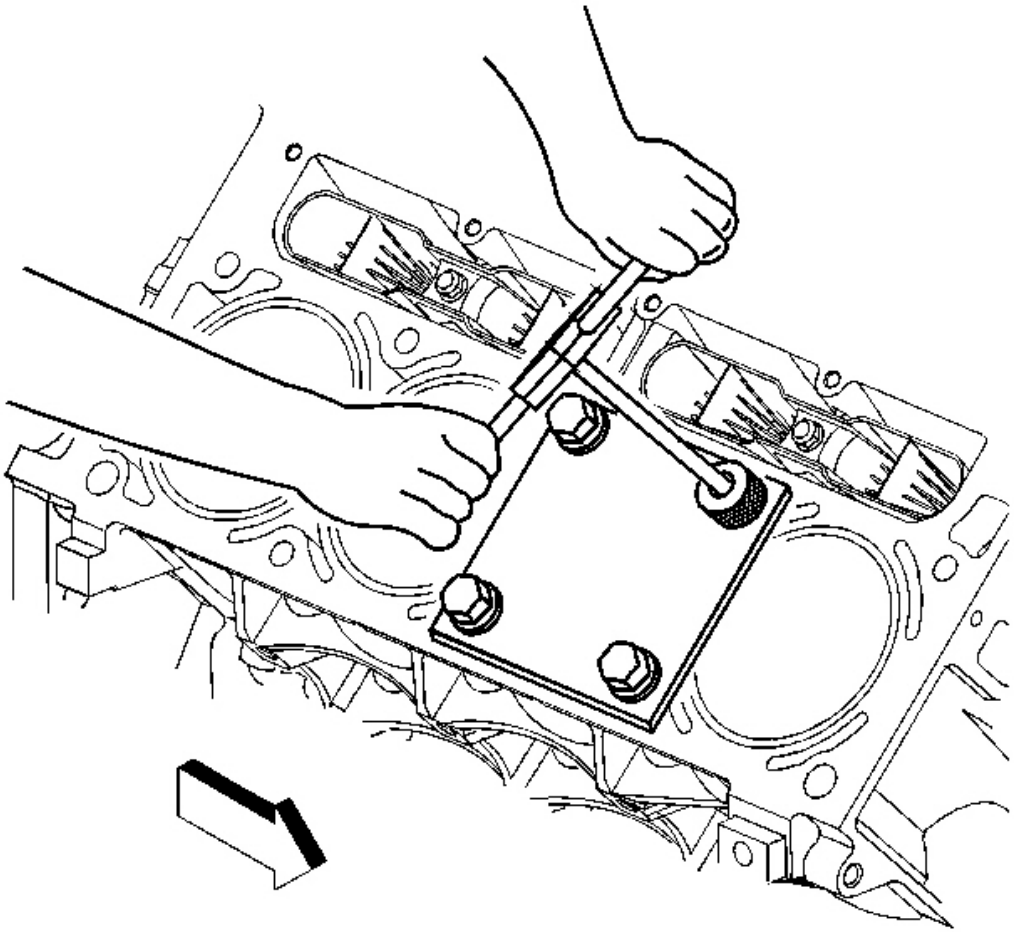

Fig. 17: Tapping Cylinder Head Drilled Hole Using Tap Wrench
Courtesy of GENERAL MOTORS CORP.

10. Using a tap wrench, tap the threads of the drilled hole.

cardiagn.com

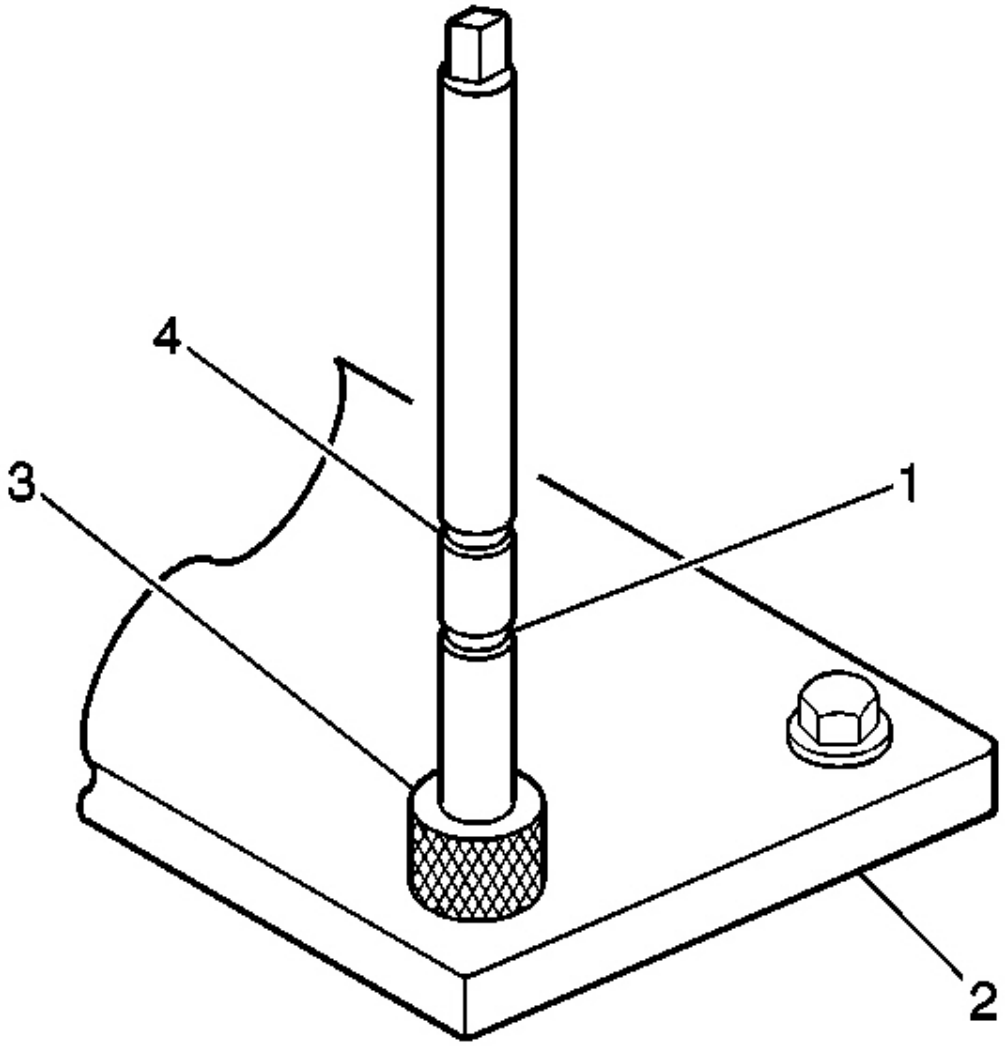

Fig. 18: View Of Tap Upper & Lower Marks, Fixture Plate Bushing
Courtesy of GENERAL MOTORS CORP.

11. In order to tap the new threads to the proper depth, rotate the tap into the hole until the marks (1 or 4) on the tap align with the top of the drill bushing (3).

    For the deeper cylinder head bolt holes, rotate the tap until the upper mark on the tap (4) aligns with the top of the drill bushing.

    For the shallower cylinder head bolt holes, rotate the tap until the lower mark on the tap (1) aligns with

cardiagn.com

the top of the drill bushing.

12. Remove the fixture plate (2), bushing (3), and bolts.
13. Using compressed air, clean out any chips.
14. Spray cleaner GM P/N 12346139 (Canadian P/N 10953463), GM P/N 12377981 (Canadian P/N 10953463) or equivalent into the hole.
15. Using compressed air, clean any cutting oil and chips out of the hole.

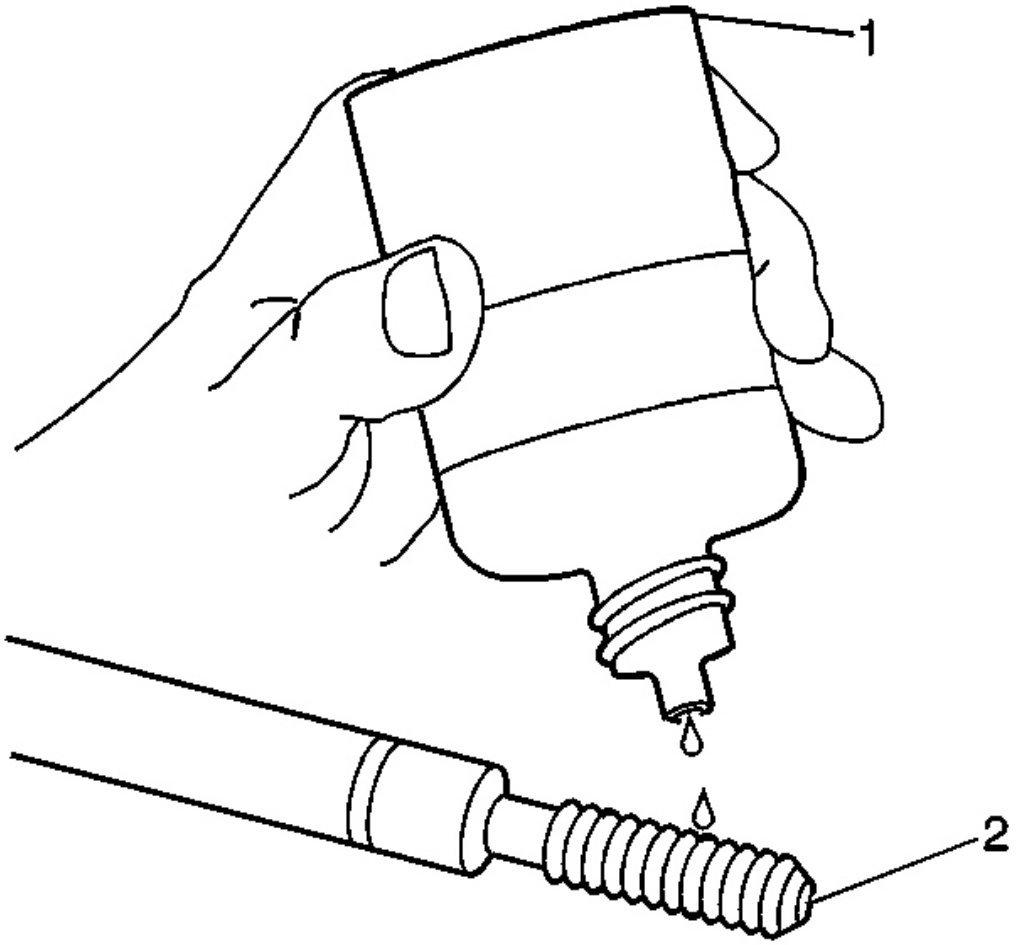

Fig. 19: Lubricating Installer Tool Using Driver Oil
Courtesy of GENERAL MOTORS CORP.

IMPORTANT: Do not allow oil or other foreign material to contact the outside diameter (OD) of the insert.

cardiagn.com

16. Lubricate the threads of the installer tool (2) with the driver oil (1).

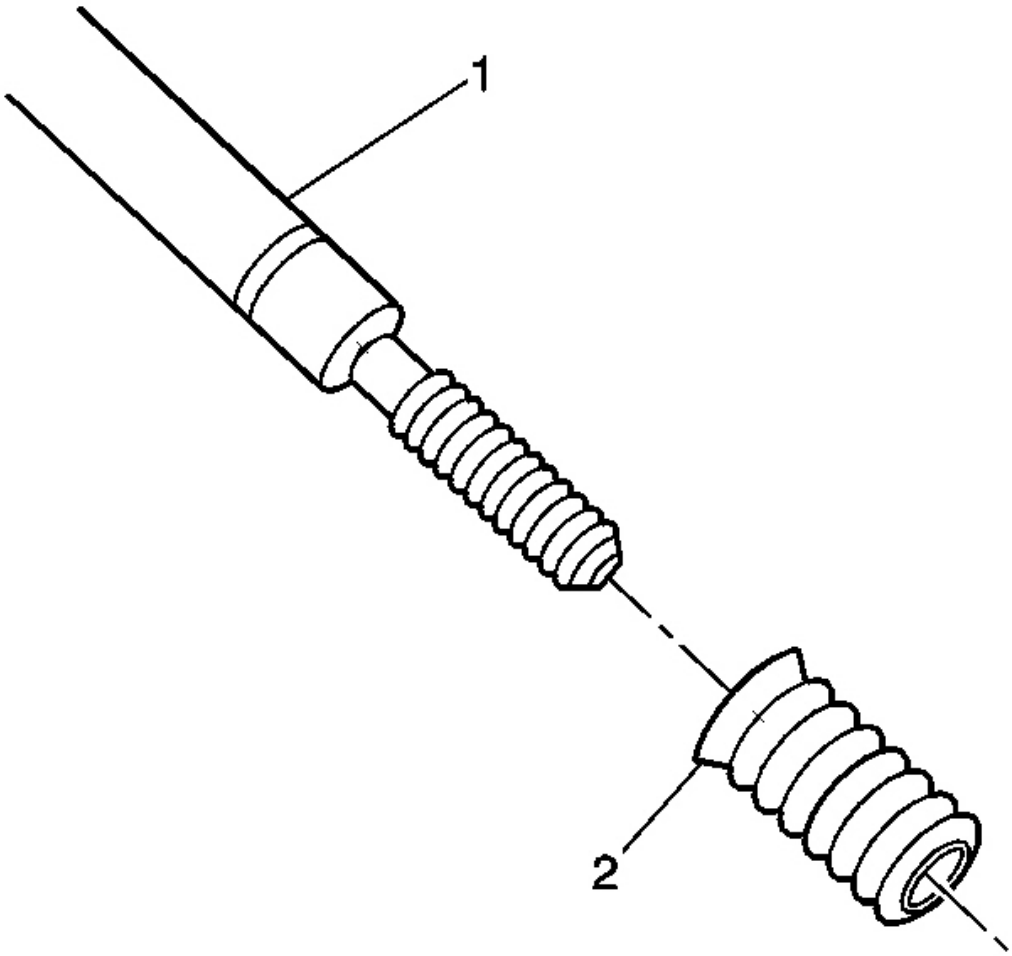

Fig. 20: View of Bushing Type Insert
Courtesy of GENERAL MOTORS CORP.

17. Install the insert (2) onto the driver tool (1).

cardiagn.com

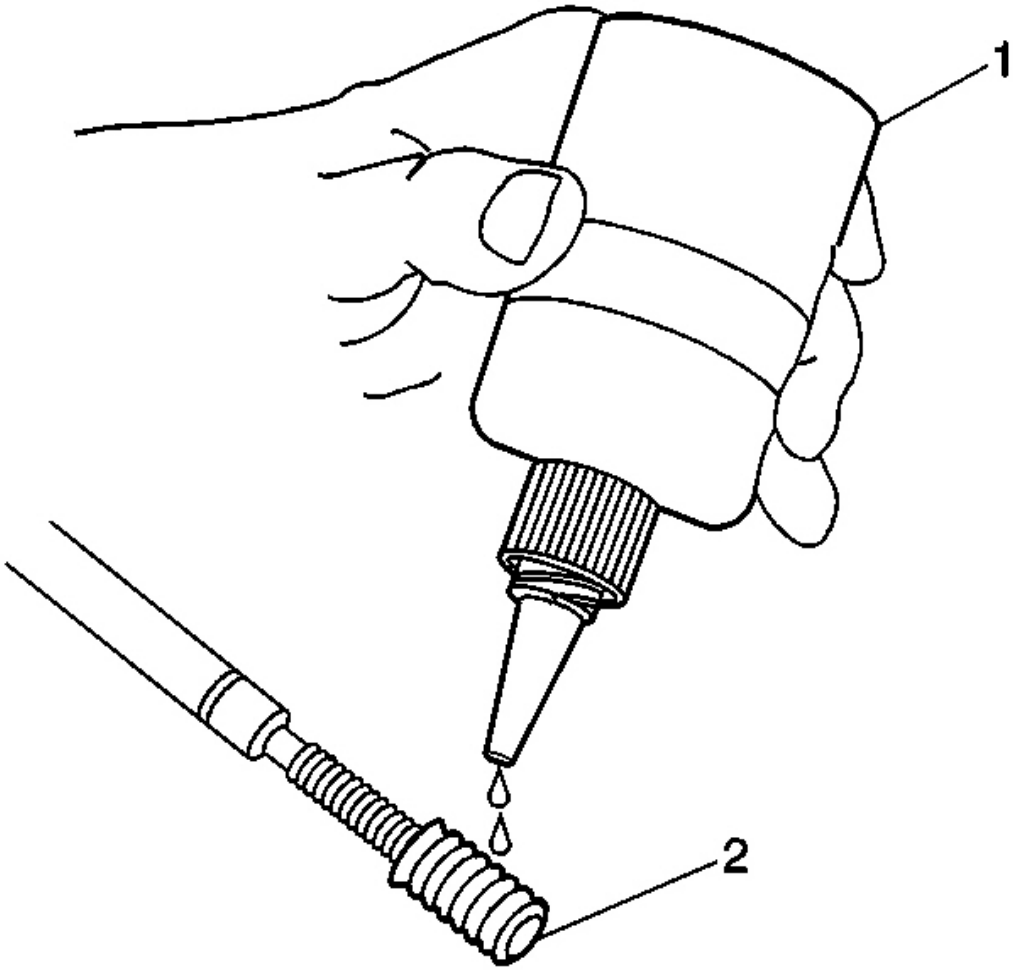

Fig. 21: Applying Threadlock LOCTITE(tm) 277, J 42385-109 To Insert
Courtesy of GENERAL MOTORS CORP.

18. Apply threadlock LOCTITE(tm) 277, J 42385-109 (1), or equivalent to the insert OD threads (2).

cardiagn.com

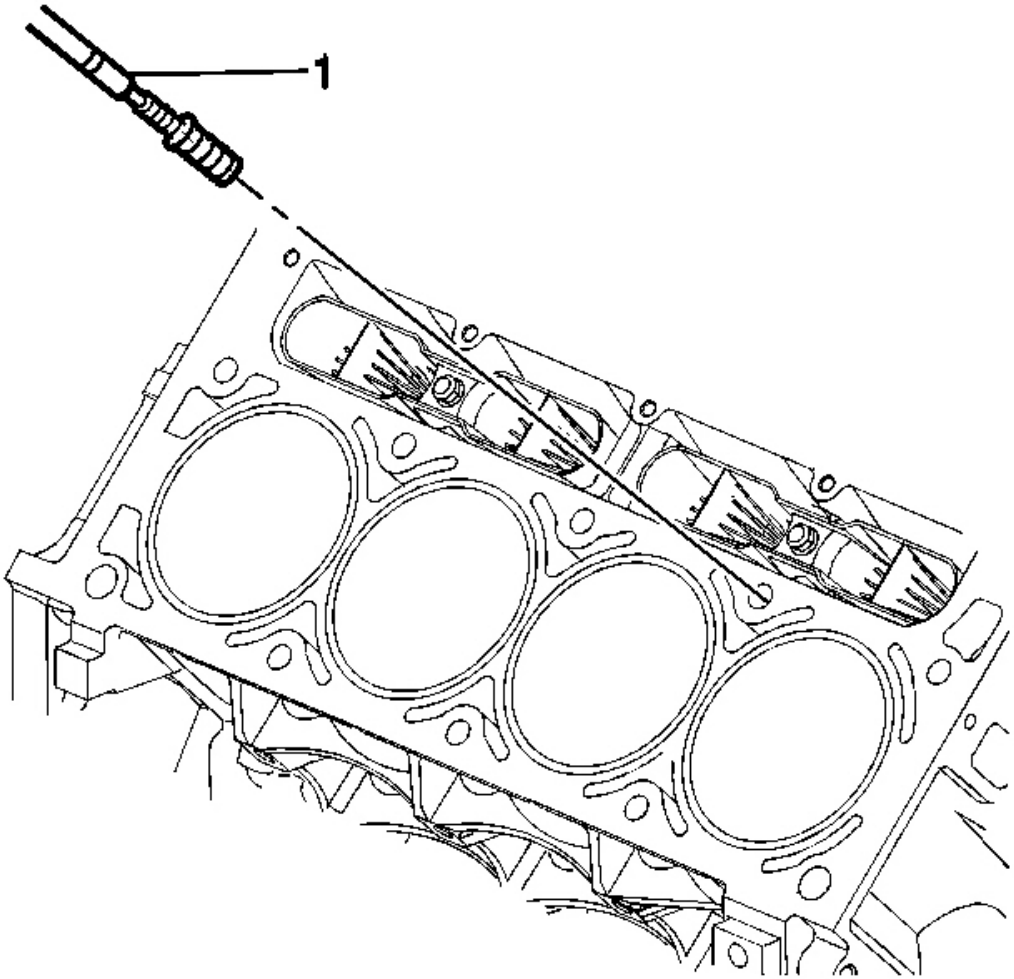

Fig. 22: Installing Insert & Driver Into Cylinder Bolt Hole
Courtesy of GENERAL MOTORS CORP.

19. Install the insert and driver (1) into the hole.

    Rotate the driver tool until the mark on the tool aligns with the deck surface of the engine block.

    The installer tool will tighten up before screwing completely through the insert. This is acceptable. You are forming the bottom threads of the insert and mechanically locking the insert to the base material threads.

Main Cap Bolt Hole Thread Repair

cardiagn.com

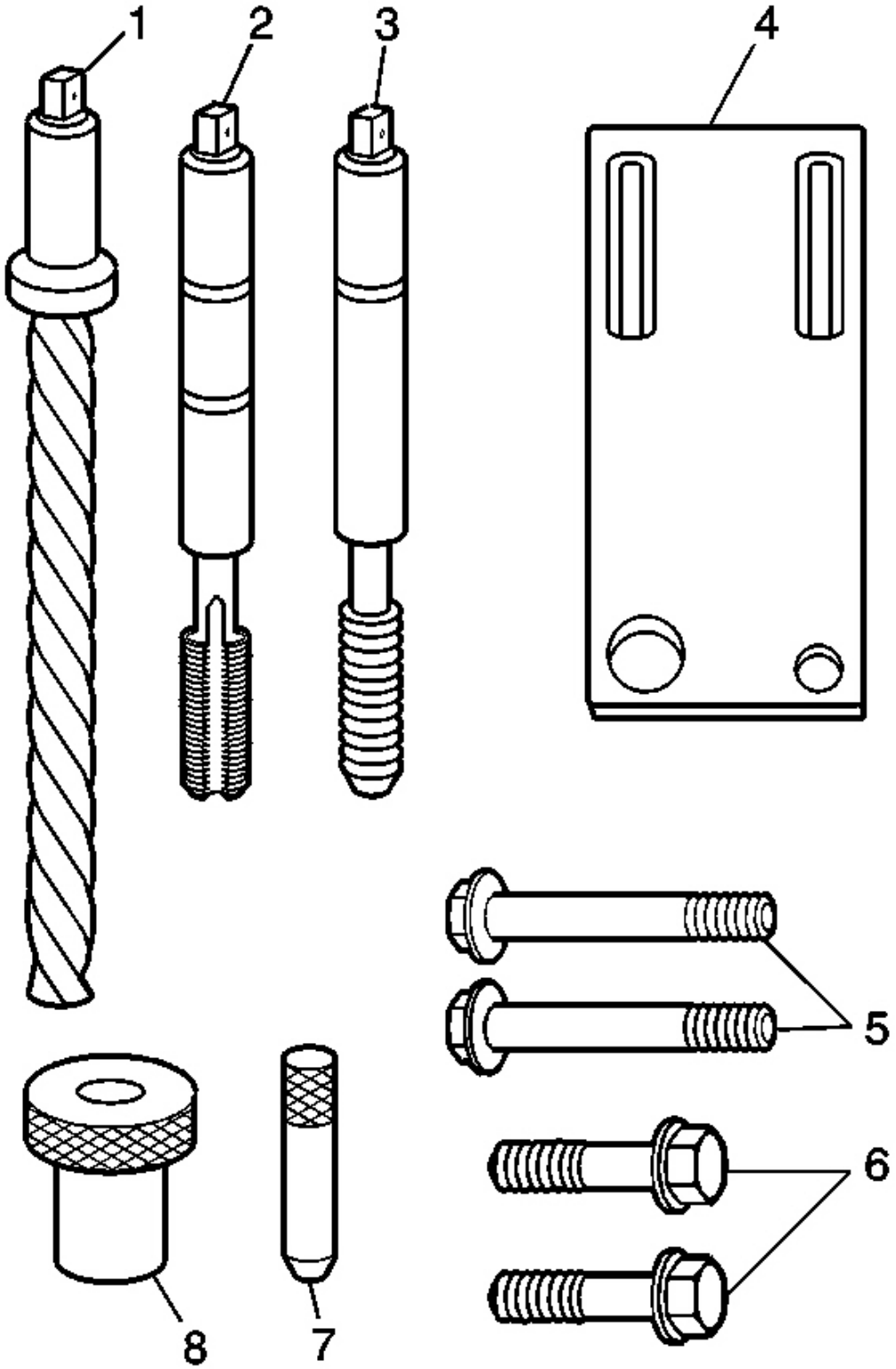

cardiagn.com

Fig. 23: Exploded View Of Main Cap Bolt Hole Thread Repair Kit
Courtesy of GENERAL MOTORS CORP.

1. The main cap bolt hole thread repair kit consists of the following items:
    - The drill (1)
    - The tap (2)
    - The installer (3)
    - The fixture plate (4)
    - The long bolts (5)
    - The short bolts (6)
    - The alignment pin (7)
    - The bushing (8)

cardiagn.com

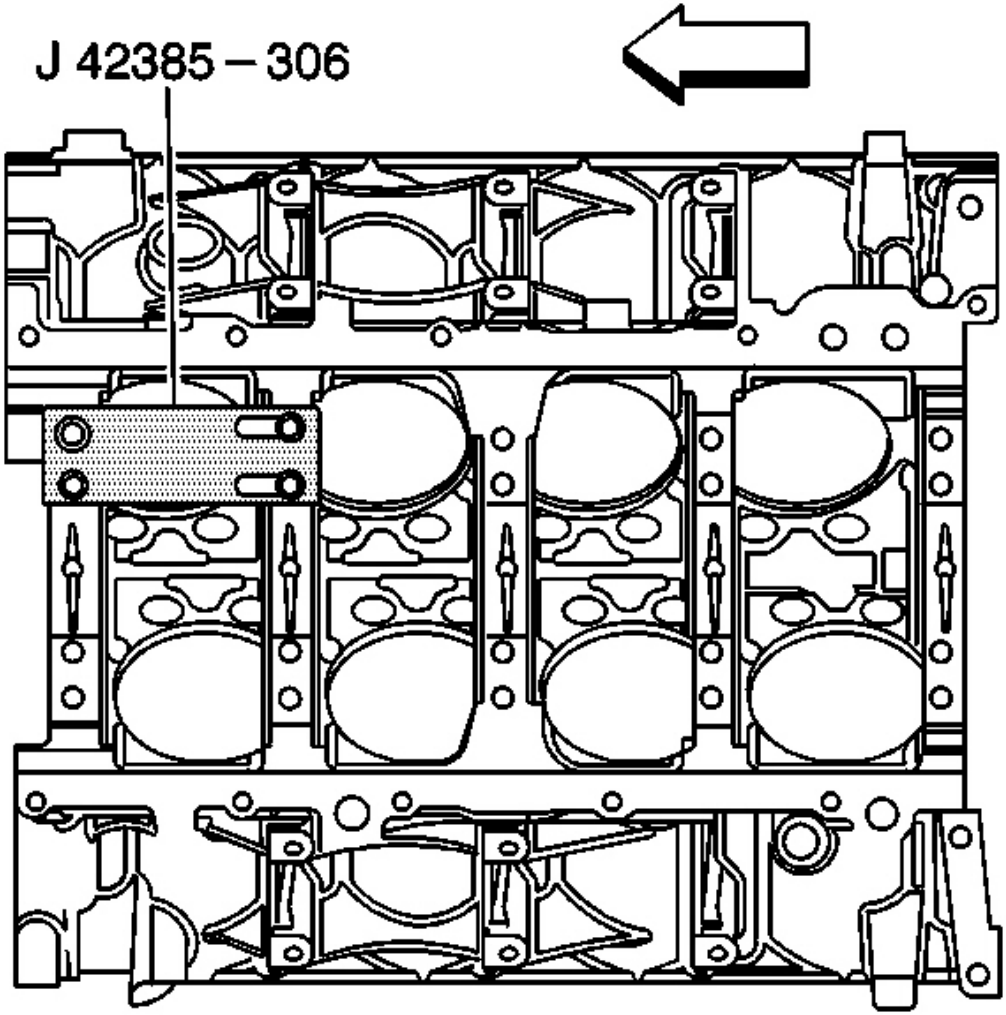

Fig. 24: View Of Fixture Plate, Bolt & Bushing
Courtesy of GENERAL MOTORS CORP.

2. Install the fixture plate, bolt, and bushing, onto the engine block.

   Position the fixture plate and bushing over the hole that is to be repaired.

3. Position the alignment pin in the desired hole and tighten the fixture retaining bolts.

cardiagn.com

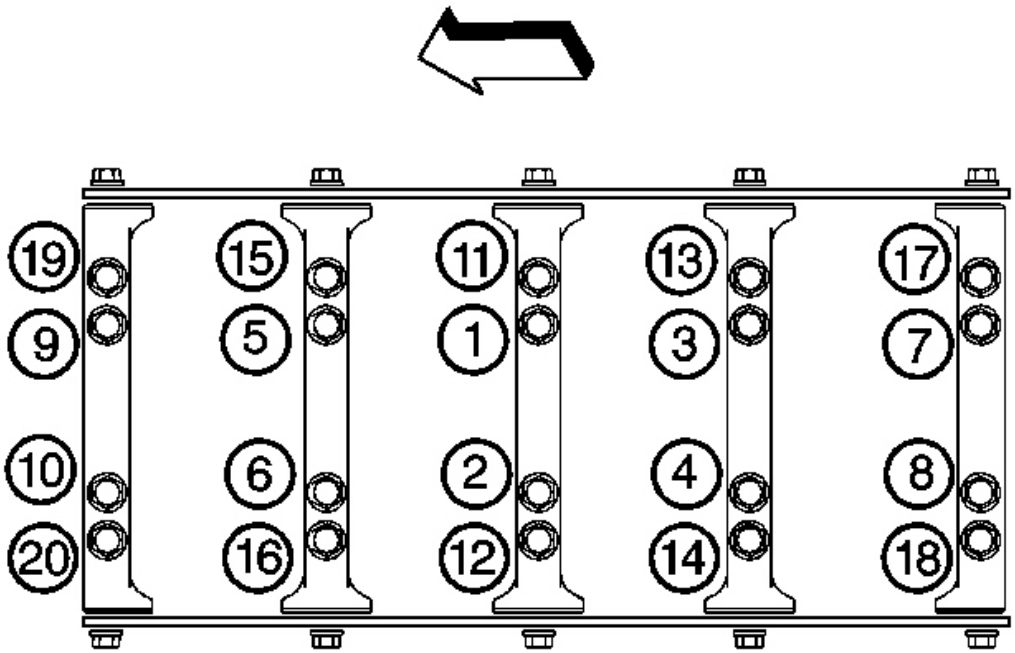

Fig. 25: Main Cap Bolt Hole Tightening Sequence
Courtesy of GENERAL MOTORS CORP.

4. Drill out the damaged hole.

   The outer bolt hole locations (11-20) have the shallower counterbores. Use sleeve J 42385-316 with the drill.

   Drill until the stop collar of the drill bit or the sleeve contacts the bushing.

5. Using compressed air, clean out any chips.

cardiagn.com

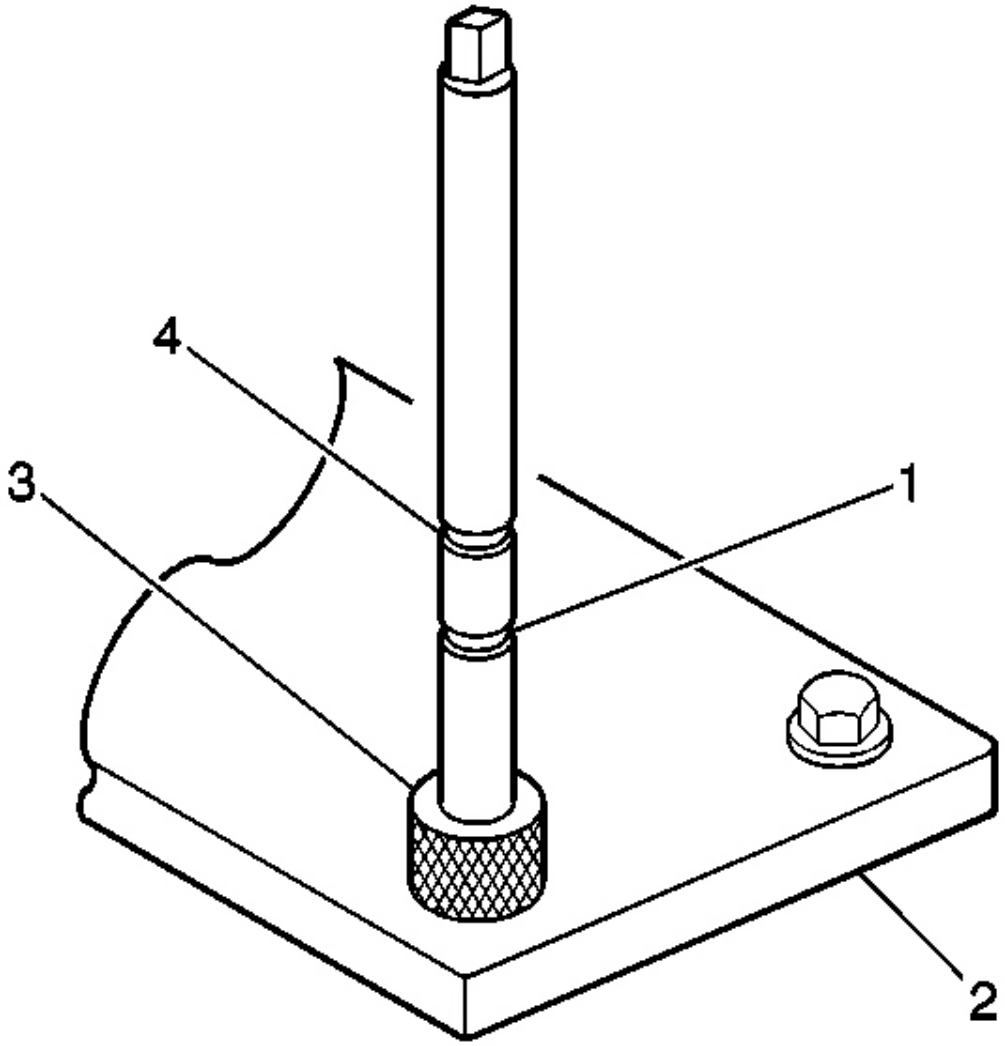

Fig. 26: View Of Tap Upper & Lower Marks, Fixture Plate Bushing
Courtesy of GENERAL MOTORS CORP.

6. Using a tap wrench, tap the threads of the drilled hole.

   In order to tap the new threads to the proper depth, rotate the tap into the hole until the mark on the tap aligns with the top of the bushing.

   For the deeper main cap holes (1-10), rotate the tap until the upper mark (4) on the tap aligns with the top of the bushing (3).

cardiagn.com

For the shallower main cap holes (11-20), rotate the tap until the lower mark (1) on the tap aligns with top of the bushing (3).

7. Using compressed air, clean out any chips.
8. Spray cleaner GM P/N 12346139 (Canadian P/N 10953463) or equivalent into the hole.
9. Using compressed air, clean any cutting oil and chips out of the hole.

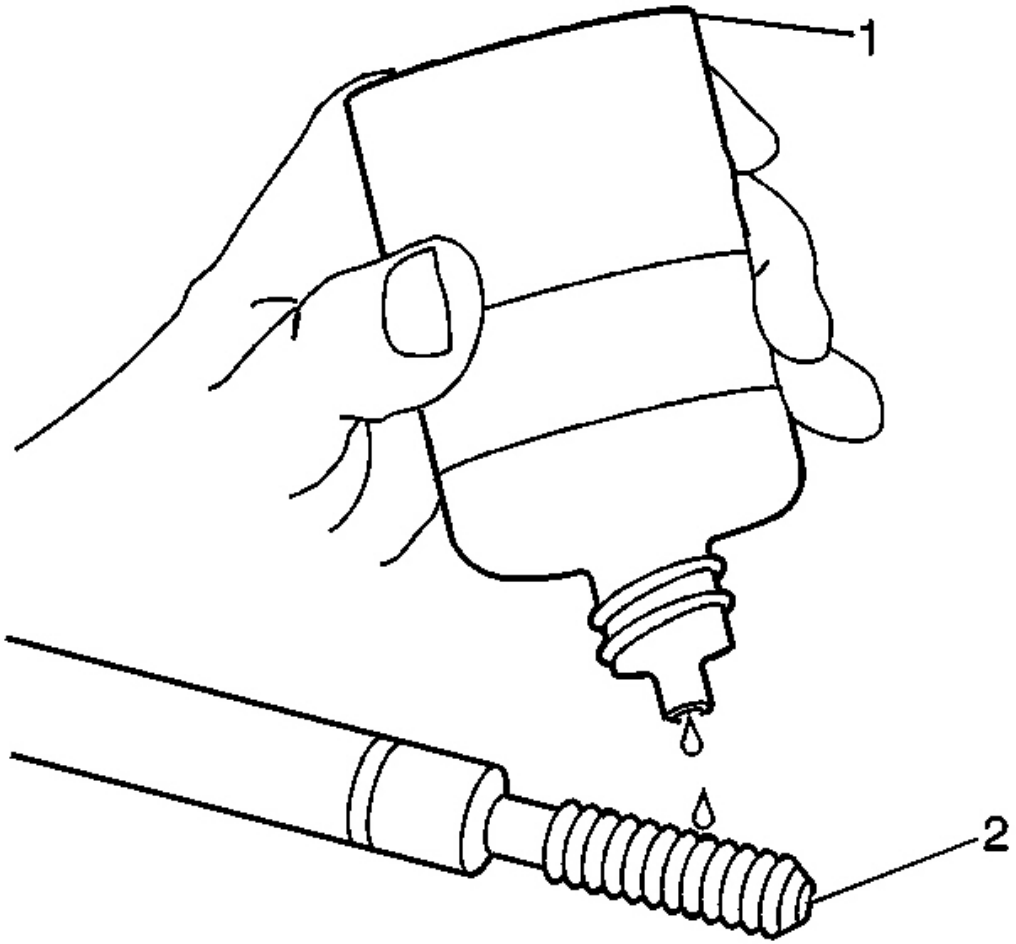

Fig. 27: Lubricating Installer Tool Using Driver Oil
Courtesy of GENERAL MOTORS CORP.

IMPORTANT: Do not allow oil or other foreign material to contact the outside diameter (OD) of the insert.

cardiagn.com

10. Lubricate the threads of the installer tool (2) with the driver oil (1).

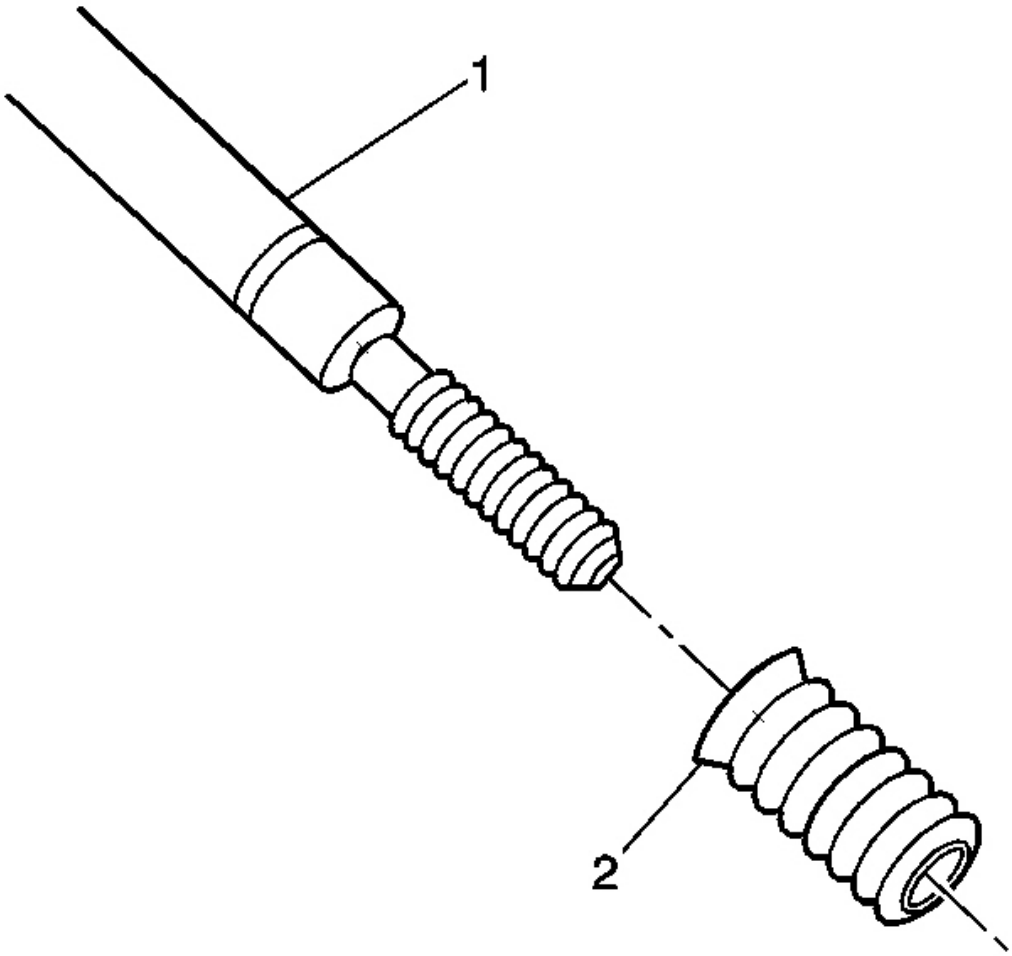

Fig. 28: View of Bushing Type Insert
Courtesy of GENERAL MOTORS CORP.

11. Install the insert (2) onto the driver tool (1).

cardiagn.com

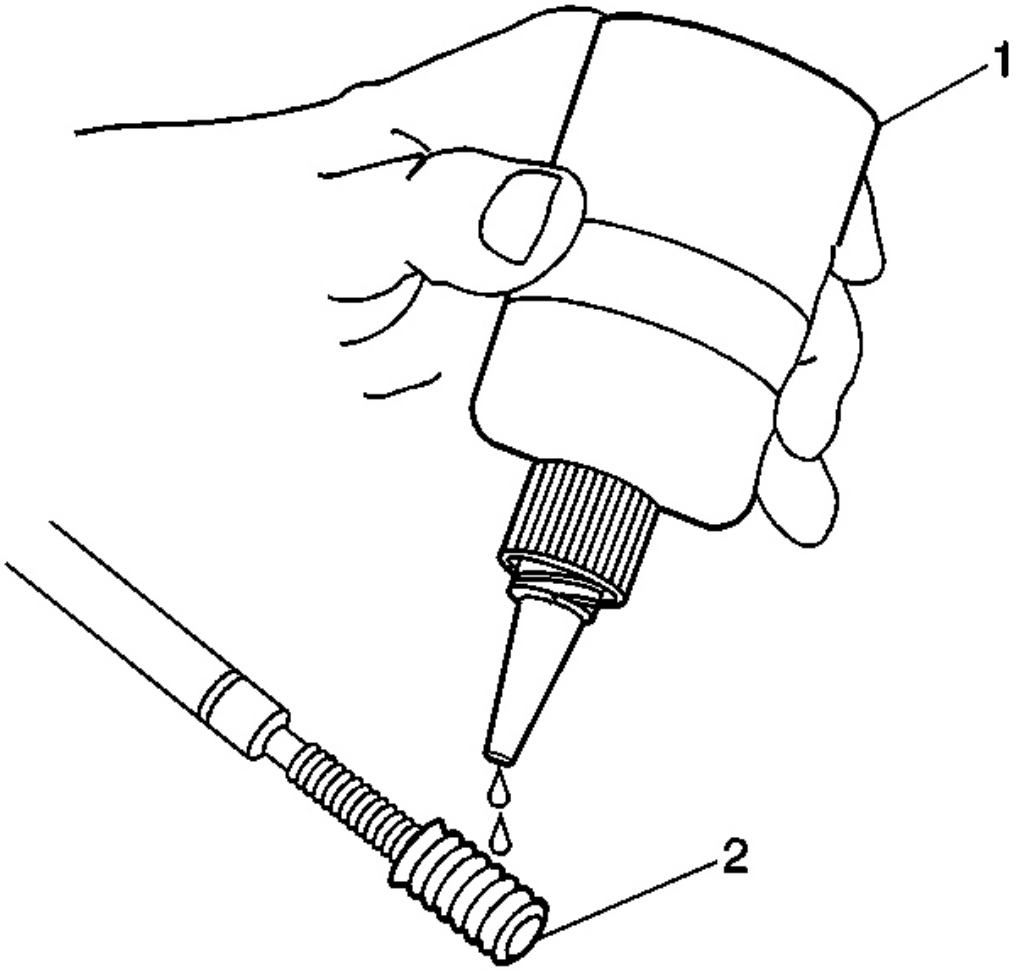

Fig. 29: Applying Threadlock LOCTITE(tm) 277, J 42385-109 To Insert
Courtesy of GENERAL MOTORS CORP.

12. Apply threadlock LOCTITE(tm) 277, J 42385-109 (1), or equivalent to the insert OD threads (2).

cardiagn.com

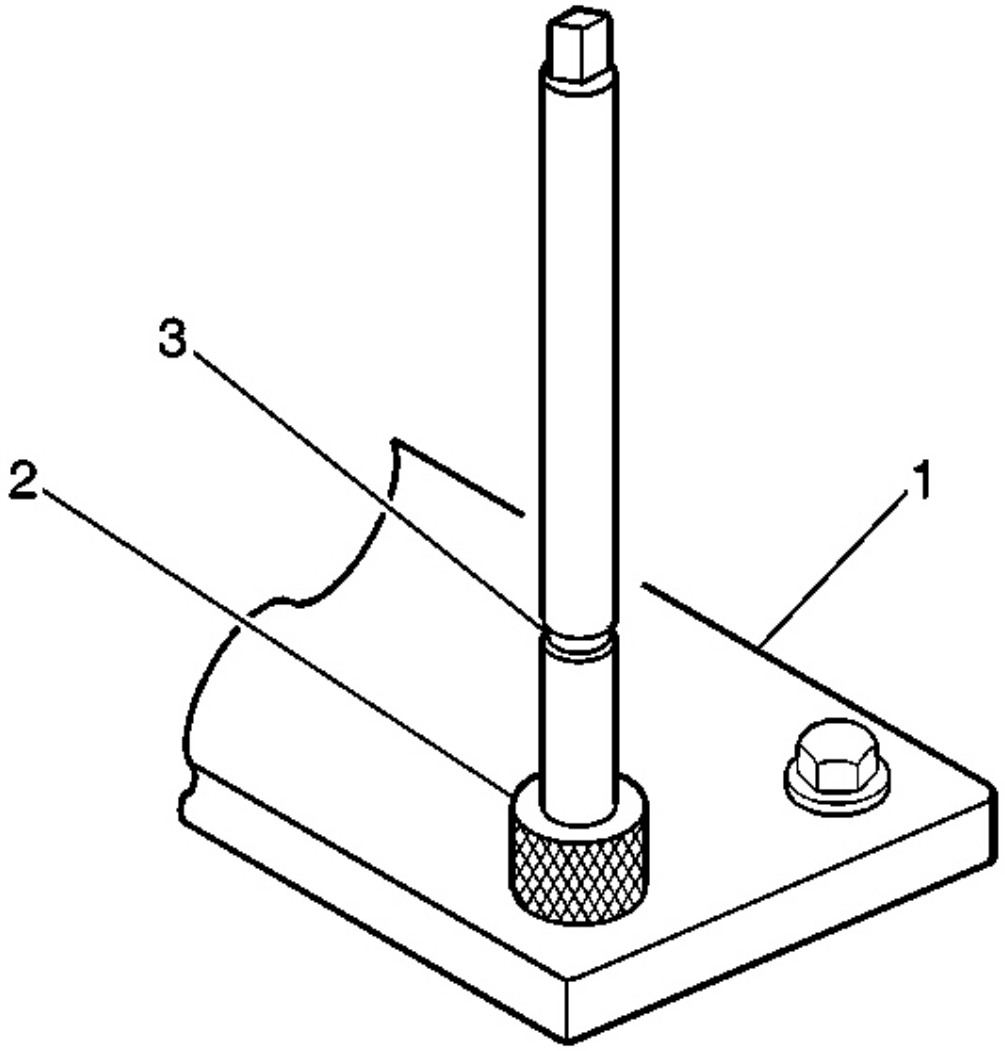

Fig. 30: Insert & Driver, Driver Tool & Top Of Bushing
Courtesy of GENERAL MOTORS CORP.

IMPORTANT: The fixture plate and bushing remains installed onto the engine block during the insert installation procedure.

13. Install the insert and driver (1) through the fixture plate and bushing and into the hole.

    Rotate the driver tool until the mark on the tool (3) aligns with the top of the bushing (2).

cardiagn.com

The installer tool will tighten up before screwing completely through the insert. This is acceptable. You are forming the bottom threads of the insert and mechanically locking the insert to the base material threads.

SERVICE PRIOR TO ASSEMBLY

- Dirt or debris will cause premature wear of the rebuilt engine. Clean all the components. Refer to **Cleanliness and Care** .
- Use the proper tools to measure components when checking for excessive wear. Components that are not within the manufacturers specifications must be repaired or replaced.
- When the components are installed into an engine, return the components to their original location, position and direction. Refer to **Separating Parts** .
- During assembly, lubricate all the moving parts with clean engine oil. This will provide initial lubrication when the engine is first started.

ENGINE PRELUBING

Tools Required

J 45299 Engine Preluber

cardiagn.com

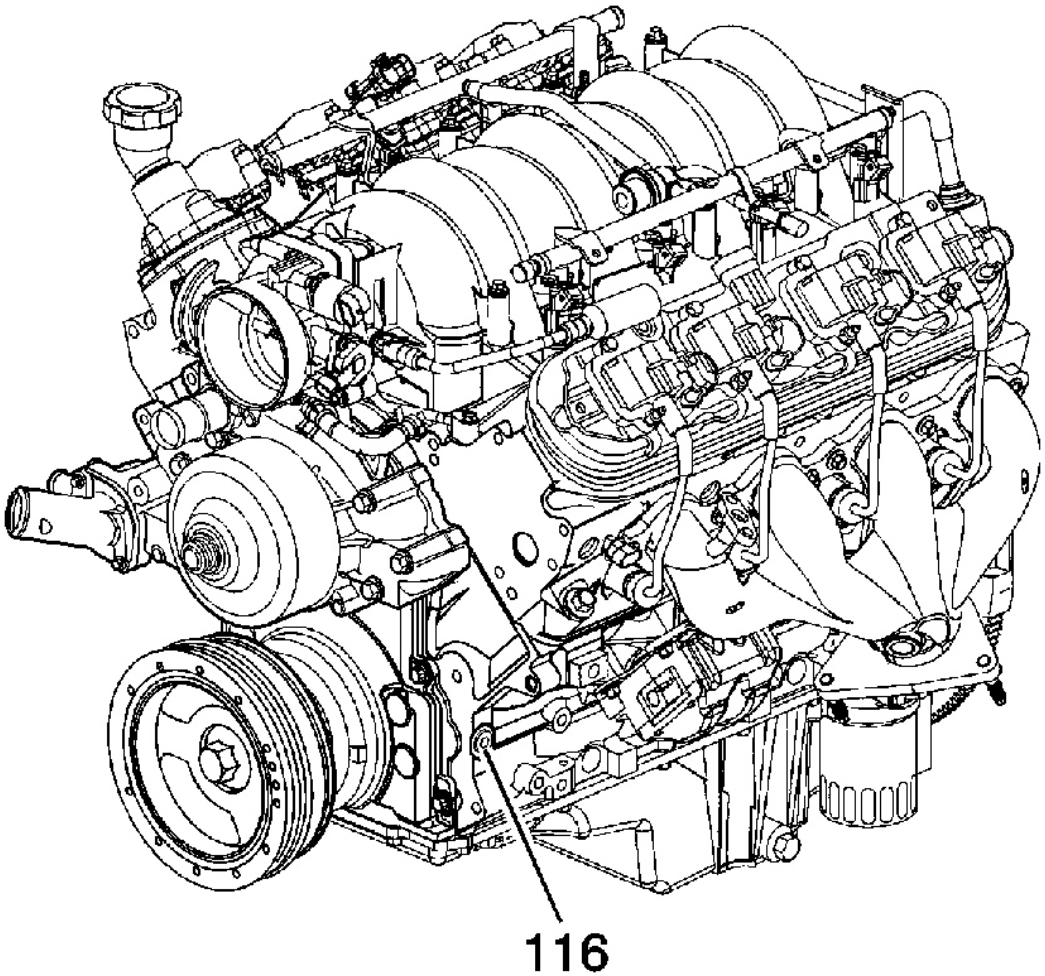

Fig. 31: Engine Oil Filter
Courtesy of GENERAL MOTORS CORP.

IMPORTANT: A constant and continuous flow of clean engine oil is required in order to properly prime the engine. Be sure to use an approved engine oil as specified in the owners manual.

1. Remove the engine oil filter and fill with clean engine oil.

NOTE: Refer to Fastener Notice in Cautions and Notices.

2. Install the oil filter.

Tighten: Tighten the oil filter to 30 N.m (22 lb ft).

cardiagn.com

3. Locate the engine block left front oil gallery plug (116).
4. Install the M16 x 1.5 adapter P/N 509375.

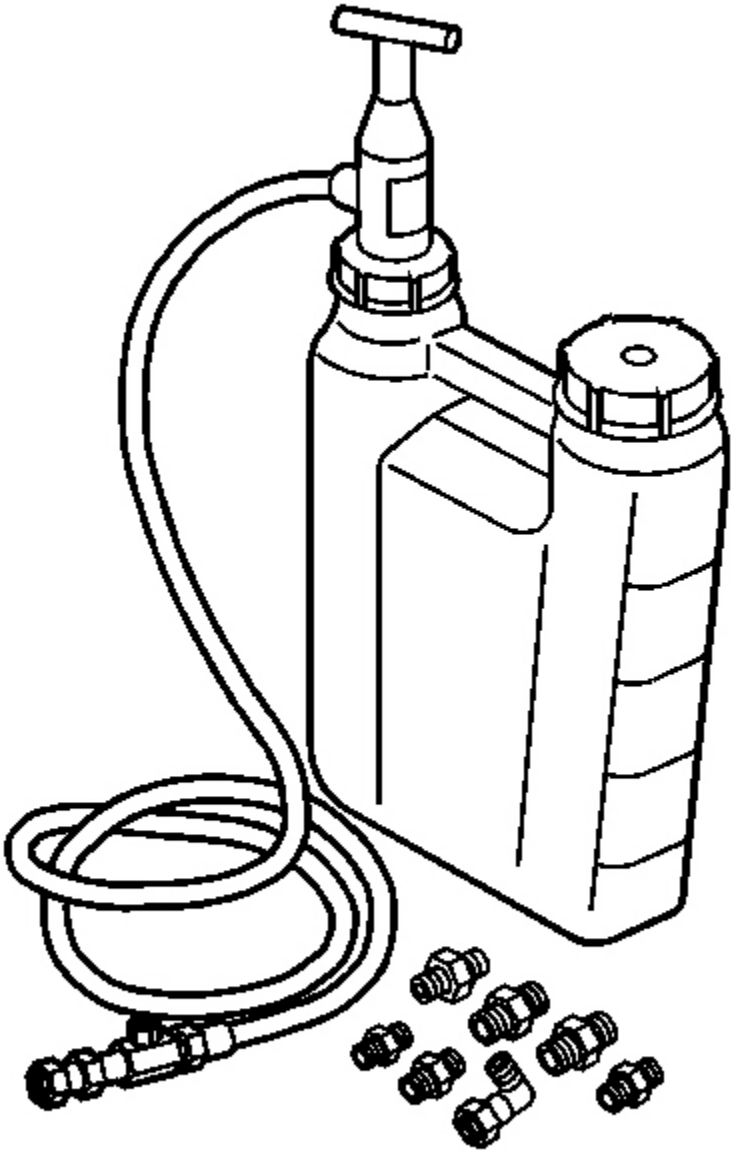

Fig. 32: Flexible Hose, Adapter & Gallery Plugs
Courtesy of GENERAL MOTORS CORP.

cardiagn.com

5. Install the flexible hose to the adapter and open the valve.
6. Pump the handle on the **J 45299** in order to flow a minimum of 1-1.9 liters (1-2 quarts) engine oil. Observe the flow of engine oil through the flexible hose and into the engine assembly.
7. Close the valve and remove the flexible hose and adapter from the engine.
8. Install the gallery plug to the engine.

   Tighten: Tighten the oil gallery plug to 60 N.m (44 lb ft).

9. Top-off the engine oil to the proper level.

ENGINE BLOCK PLUG INSTALLATION

Tools Required

J 41712 Oil Pressure Switch Socket

cardiagn.com

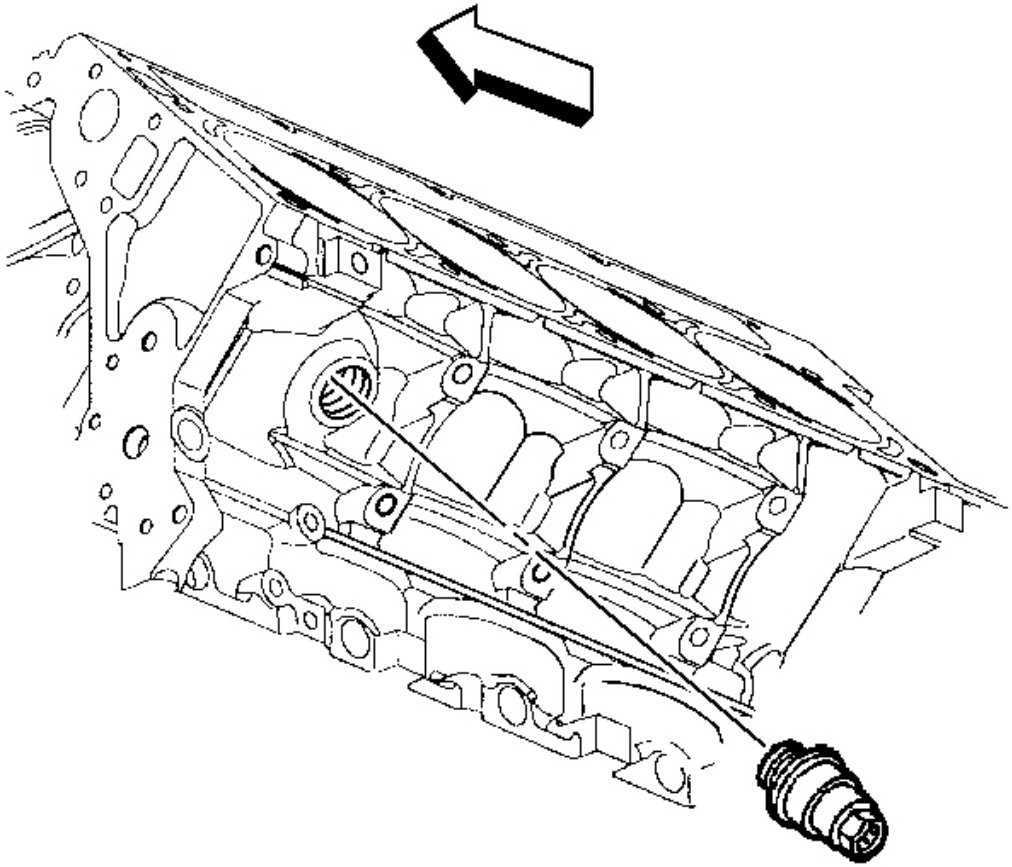

Fig. 33: View Of Engine Block Coolant Heater
Courtesy of GENERAL MOTORS CORP.

IMPORTANT:

- **Engine block plug, including oil gallery, and coolant, and coolant heater, sealing washers may be used again if not bent, scored or otherwise damaged.**
- **Apply the proper amount and type of sealant to the sealing washer as recommended in the service procedure.**

1. Apply a 3.175 mm (0.125 in) bead of sealant GM P/N 12346004 (Canadian P/N 10953480) or equivalent to the engine block coolant heater sealing washer, if applicable.

NOTE: **Refer to Fastener Notice in Cautions and Notices.**

cardiagn.com

2. Install the engine block coolant heater to the engine block, if applicable.

   Tighten: Tighten the block coolant heater to 40 N.m (30 lb ft).

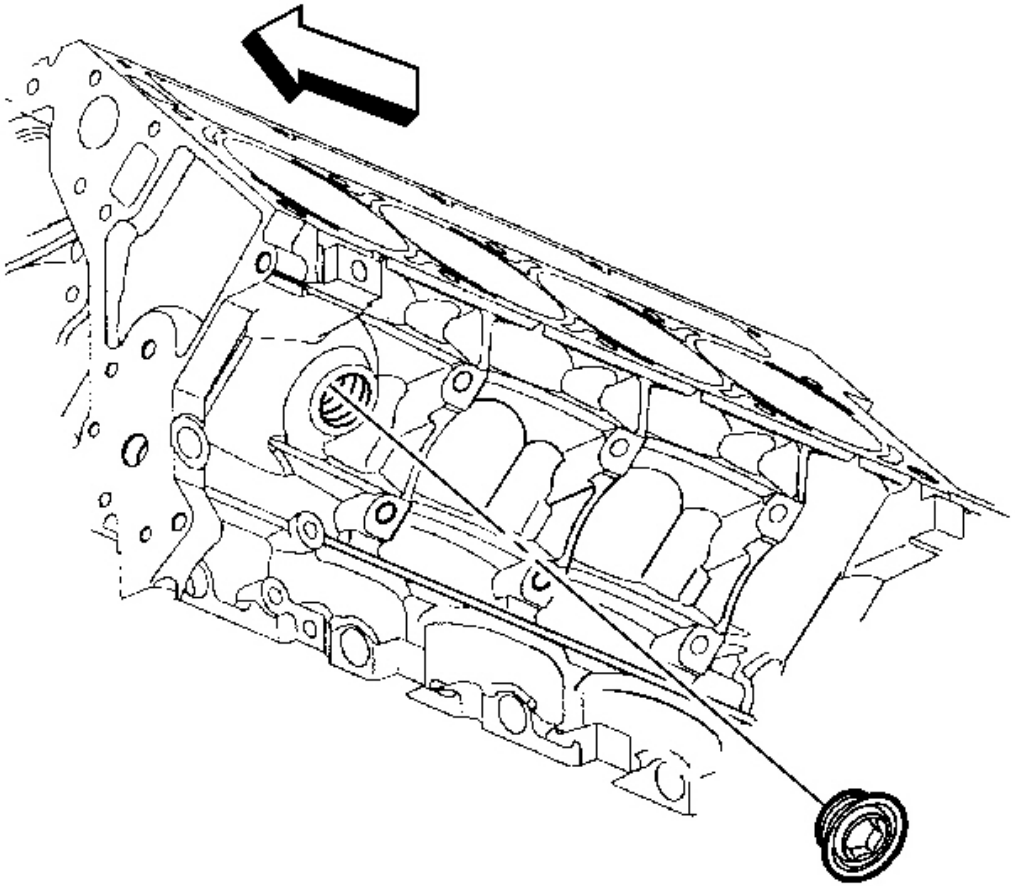

Fig. 34: View Of Engine Block Left Rear Coolant Drain Hole Plug
Courtesy of GENERAL MOTORS CORP.

3. Apply a 3.175 mm (0.125 in) bead of sealant GM P/N 12346004 (Canadian P/N 10953480) or equivalent to the engine block left side coolant drain hole plug sealing washer, if applicable.
4. Install the engine block left side coolant drain hole plug, if applicable.

   Tighten: Tighten the block left front coolant drain plug to 60 N.m (44 lb ft).

cardiagn.com

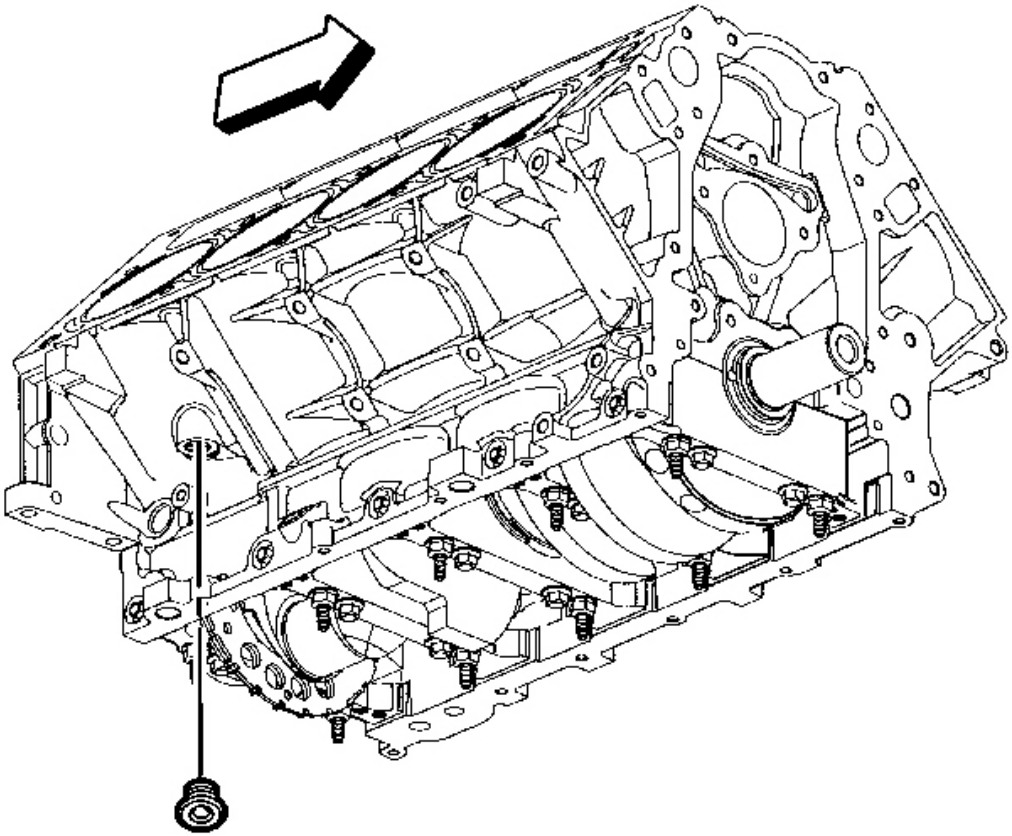

Fig. 35: Identifying Plug Location On Underside Of Block
Courtesy of GENERAL MOTORS CORP.

5. Apply a 3.175 mm (0.125 in) bead of sealant GM P/N 12346004 (Canadian P/N 10953480) or equivalent to the engine block right side coolant drain hole plug sealing washer.
6. Install the engine block right side coolant drain hole plug.

   Tighten: Tighten the block right side coolant drain hole plug to 60 N.m (44 lb ft).

cardiagn.com

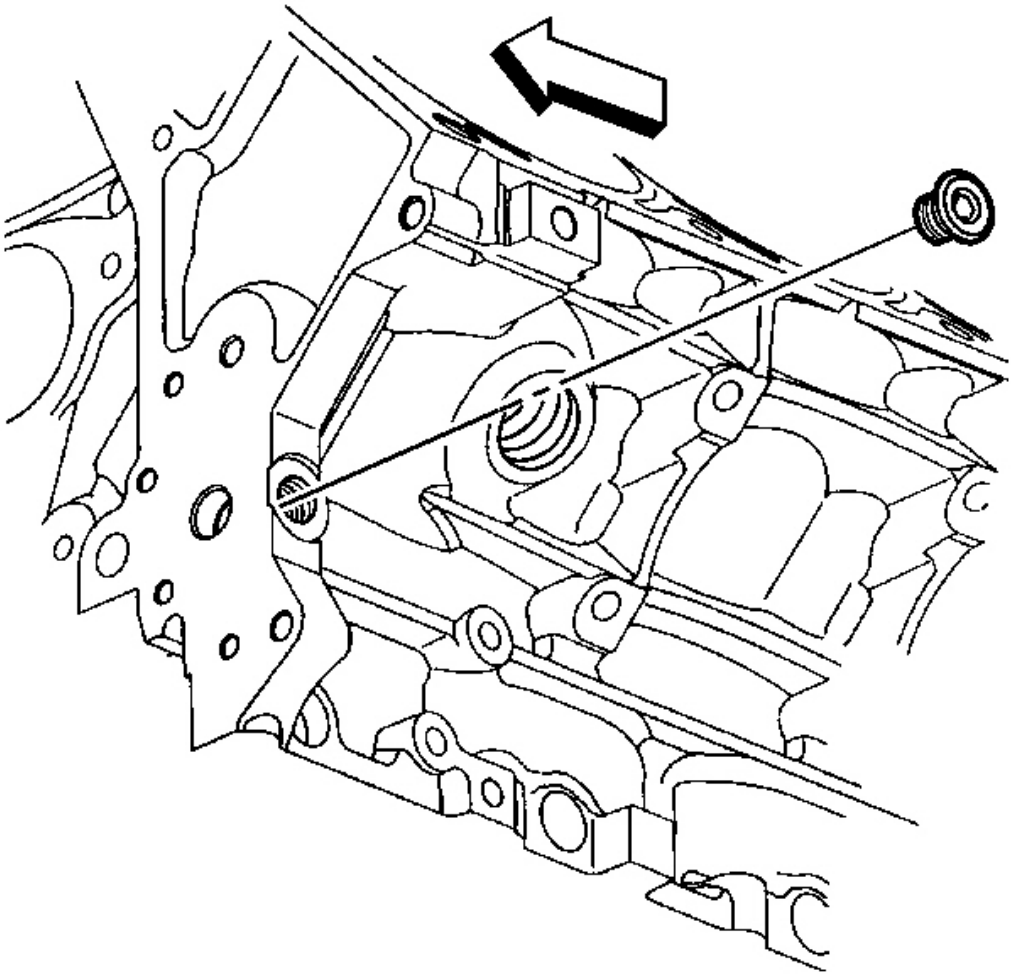

Fig. 36: View Of Engine Block Left Front Oil Gallery Plug
Courtesy of GENERAL MOTORS CORP.

7. Apply a 3.175 mm (0.125 in) bead of sealant GM P/N 12346004 (Canadian P/N 10953480) or equivalent to the engine block left front oil gallery plug sealing washer.
8. Install the engine block left front oil gallery plug.

   Tighten: Tighten the block left front oil gallery plug to 60 N.m (44 lb ft).

cardiagn.com

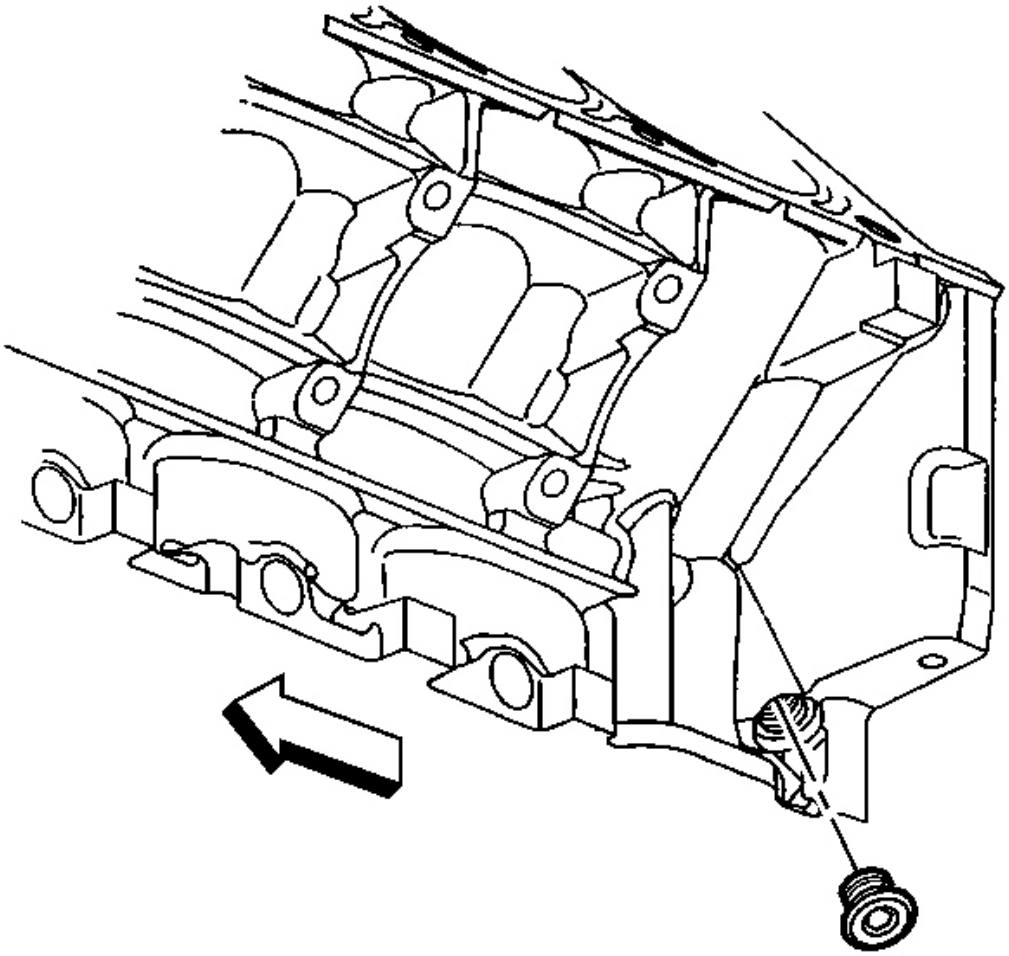

Fig. 37: View Engine Block Left Rear Oil Gallery Plug
Courtesy of GENERAL MOTORS CORP.

9. Apply a 3.175 mm (0.125 in) bead of sealant GM P/N 12346004 (Canadian P/N 10953480) or equivalent to the engine block left rear oil gallery plug sealing washer.
10. Install the engine block left rear oil gallery plug.

    Tighten: Tighten the block left rear oil gallery plug to 60 N.m (44 lb ft).

cardiagn.com

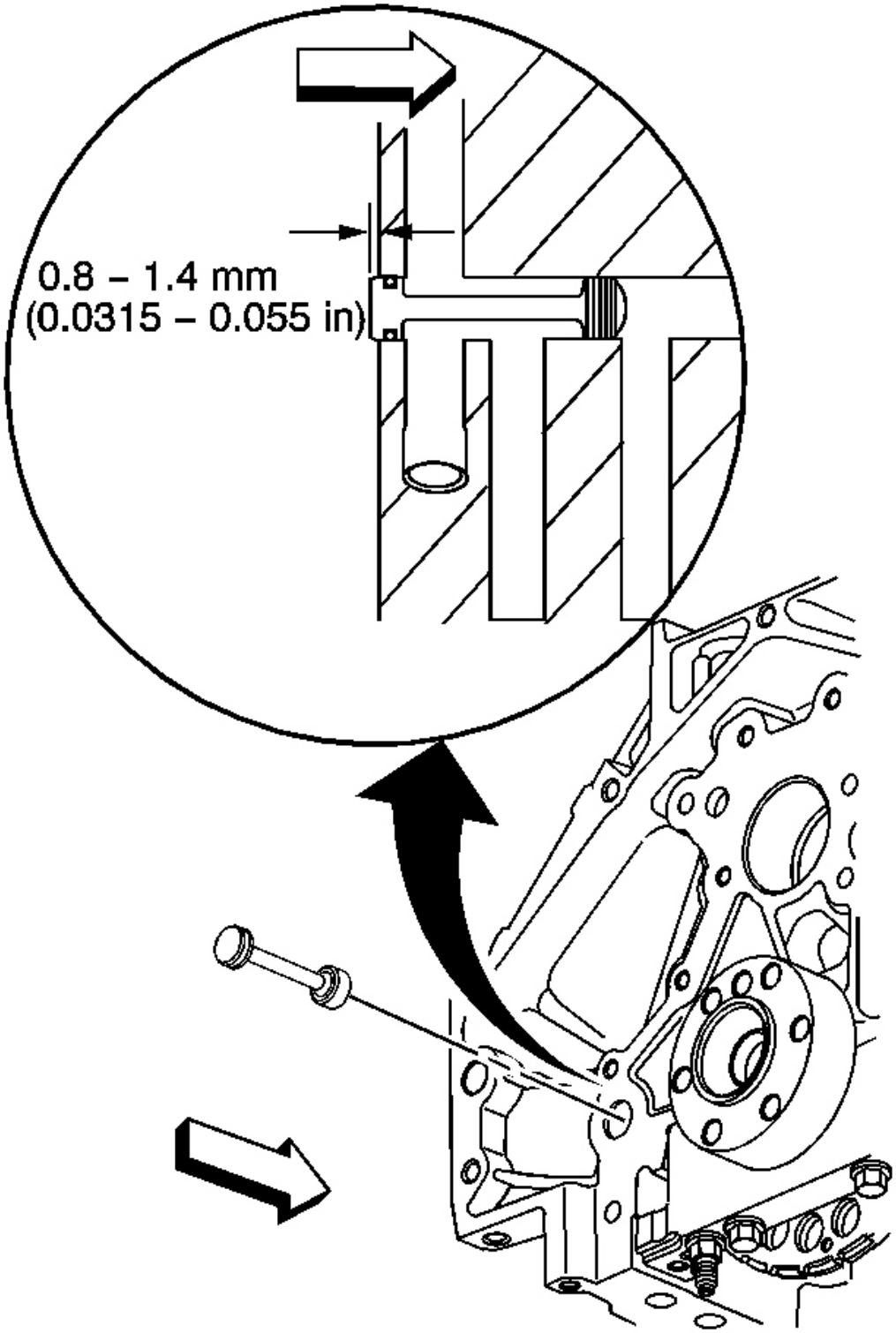

cardiagn.com

Fig. 38: View Of Engine Block Rear Oil Gallery Plug
Courtesy of GENERAL MOTORS CORP.

11. Inspect the engine block rear oil gallery plug and O-ring seal. If the O-ring seal on the plug is not cut or damaged, the rear oil gallery plug may be used again.
12. Lubricate the O-ring seal with clean engine oil.
13. Install the block rear oil gallery plug into the oil gallery bore. A properly installed block plug will protrude 0.8-1.4 mm (0.0315-0.055 in) beyond the rear face of the block.

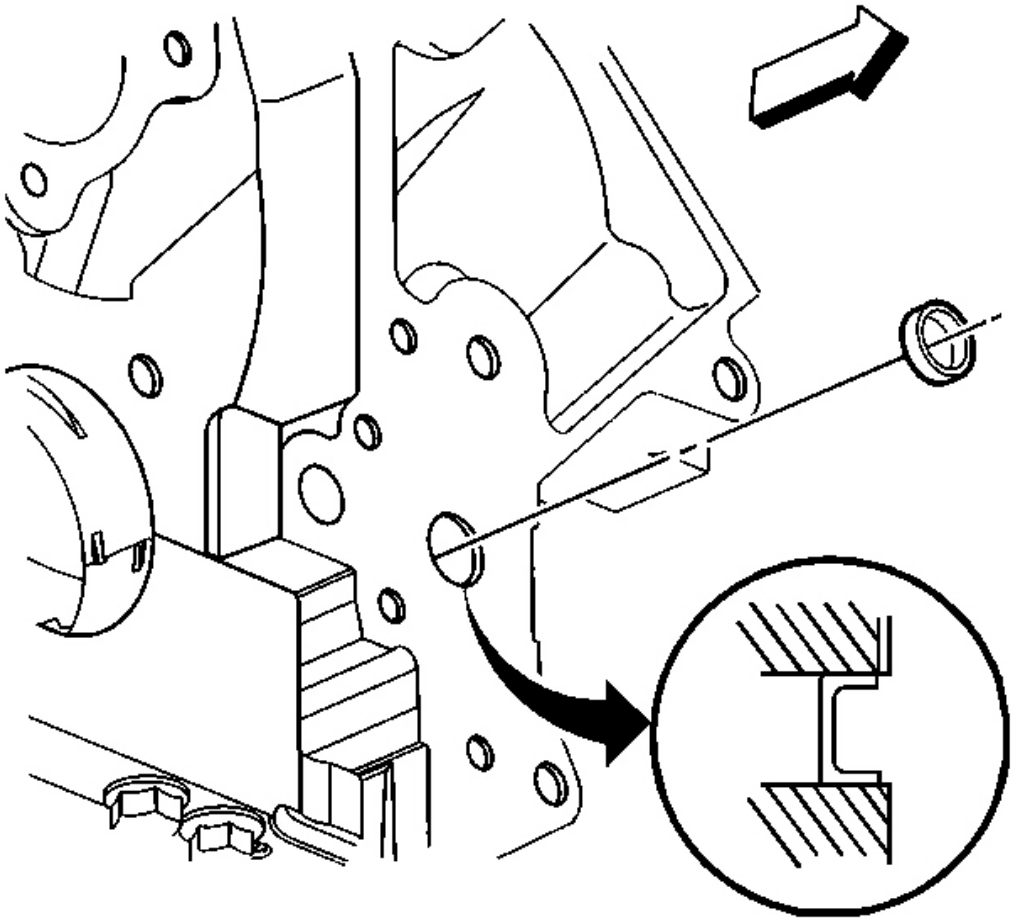

Fig. 39: View Of Engine Block Front Oil Gallery Plug
Courtesy of GENERAL MOTORS CORP.

IMPORTANT: The engine block front oil gallery plug should not be removed unless service is required.

cardiagn.com

14. Apply sealant GM P/N 12345382 (Canadian P/N 10953489) or equivalent to the sides of the NEW front oil gallery plug.
15. Install a NEW engine block front oil gallery plug, if required. Install the front oil gallery plug into the oil gallery bore 2.2-2.8 mm (0.0086-0.011 in) below flush.

    Do not install the plug more than the recommended depth.

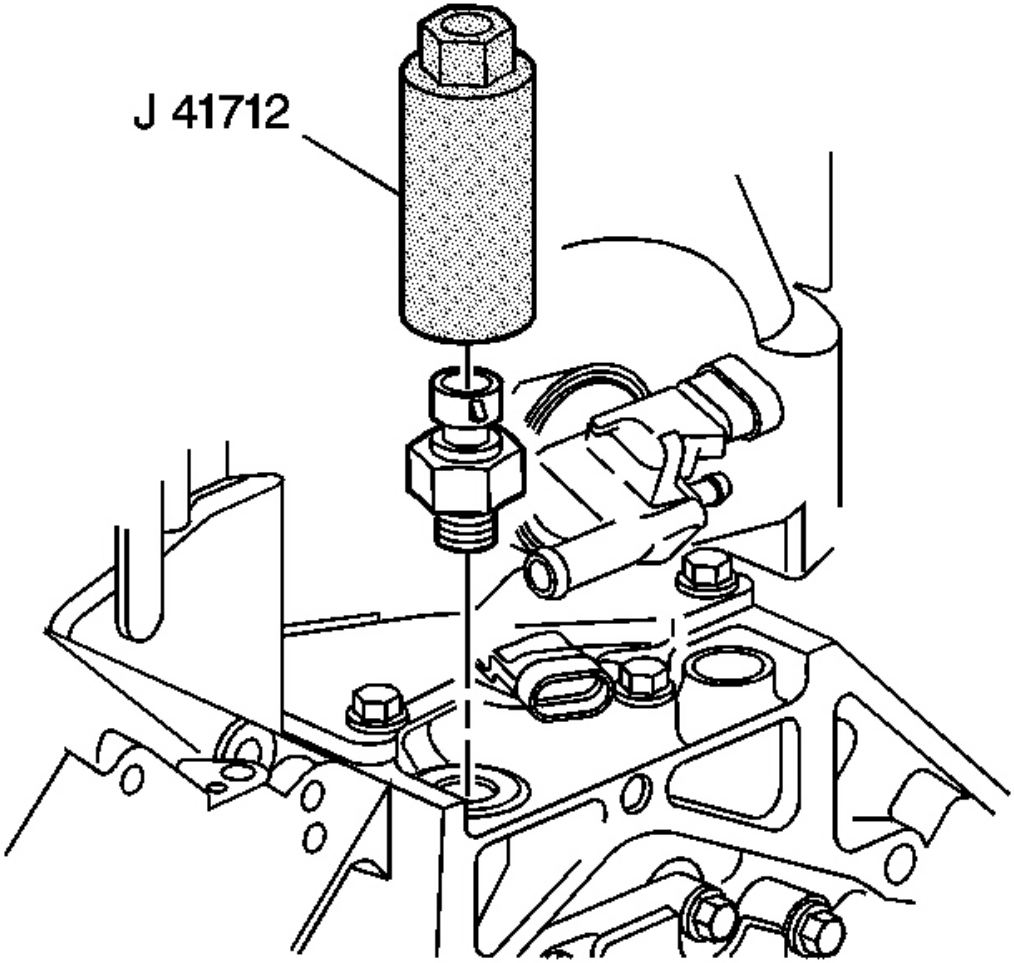

Fig. 40: Install J 41712 Oil Pressure Sensor
Courtesy of GENERAL MOTORS CORP.

16. Apply sealant GM P/N 12346004 (Canadian P/N 10953480) or equivalent to the threads of the oil pressure sensor.

cardiagn.com

17. Use the J 41712 or equivalent in order to install the oil pressure sensor, if required.

    Tighten: Tighten the oil pressure sensor to 20 N.m (15 lb ft).

CRANKSHAFT AND BEARINGS INSTALLATION

Tools Required

J 45059 Angle Meter

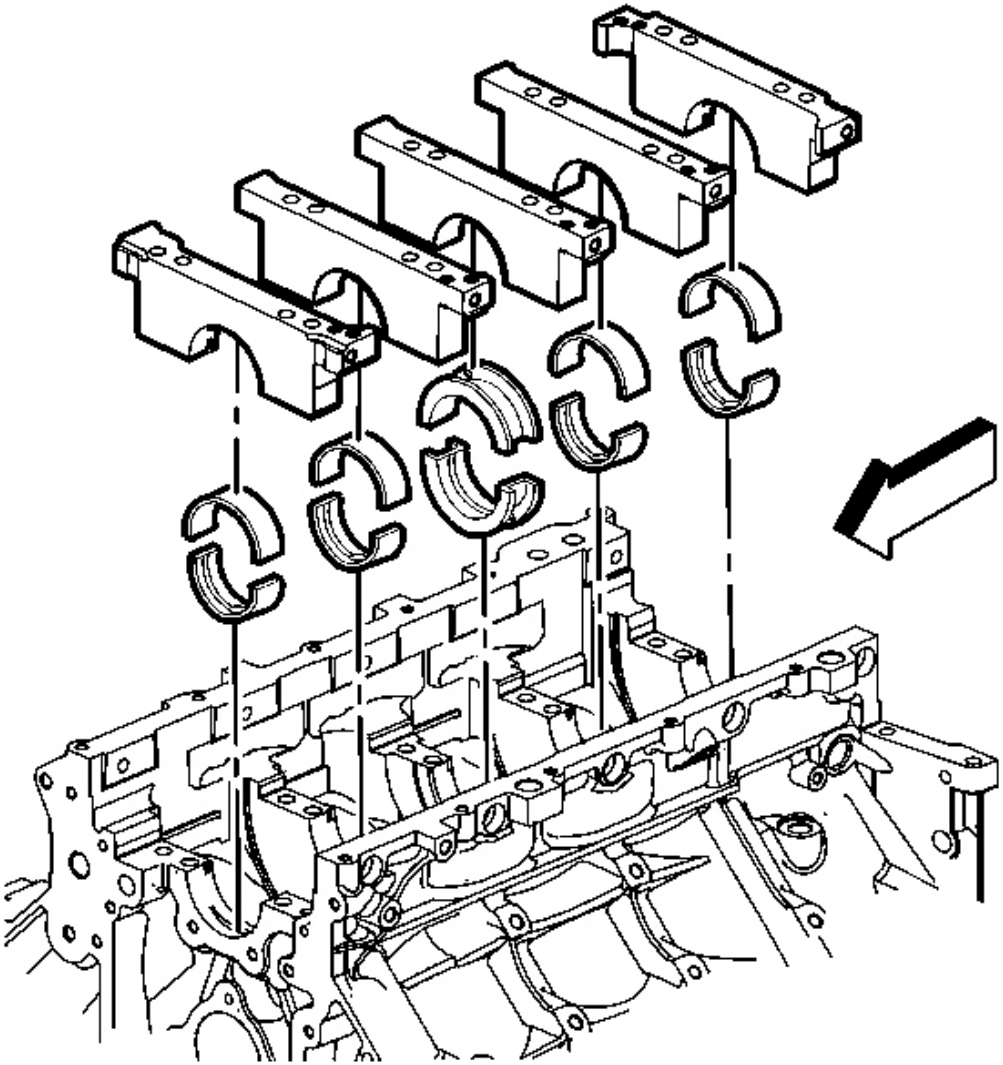

cardiagn.com

Fig. 41: View Of Crankshaft Bearings & Bearing Caps
Courtesy of GENERAL MOTORS CORP.

IMPORTANT:

- **Crankshaft bearing clearances are critical. Excessive crankshaft bearing clearance may effect crankshaft position (CKP) sensor signals and/or On-Board Diagnostics (OBD) II system performance.**
- **Crankshaft bearing caps must be installed to the proper location and direction.**
- **When installing the crankshaft bearings, align the locating tabs on the bearings with the locating notches in the engine block journal bore and the bearing cap.**
- **Always install crankshaft bearings with their machined partner. Do not file bearings or mix bearing halves.**
- **To prevent engine block oil leakage, install NEW M8 crankshaft bearing cap side bolts.**

  The crankshaft bearing cap M8 side bolts have a sealant patch applied to the bolt flange.

1. Install the crankshaft thrust bearings to the engine block and center bearing cap.
2. Install the remaining crankshaft bearings to the engine block and bearing caps.
3. Lubricate the bearing surfaces and crankshaft journals with clean engine oil.

cardiagn.com

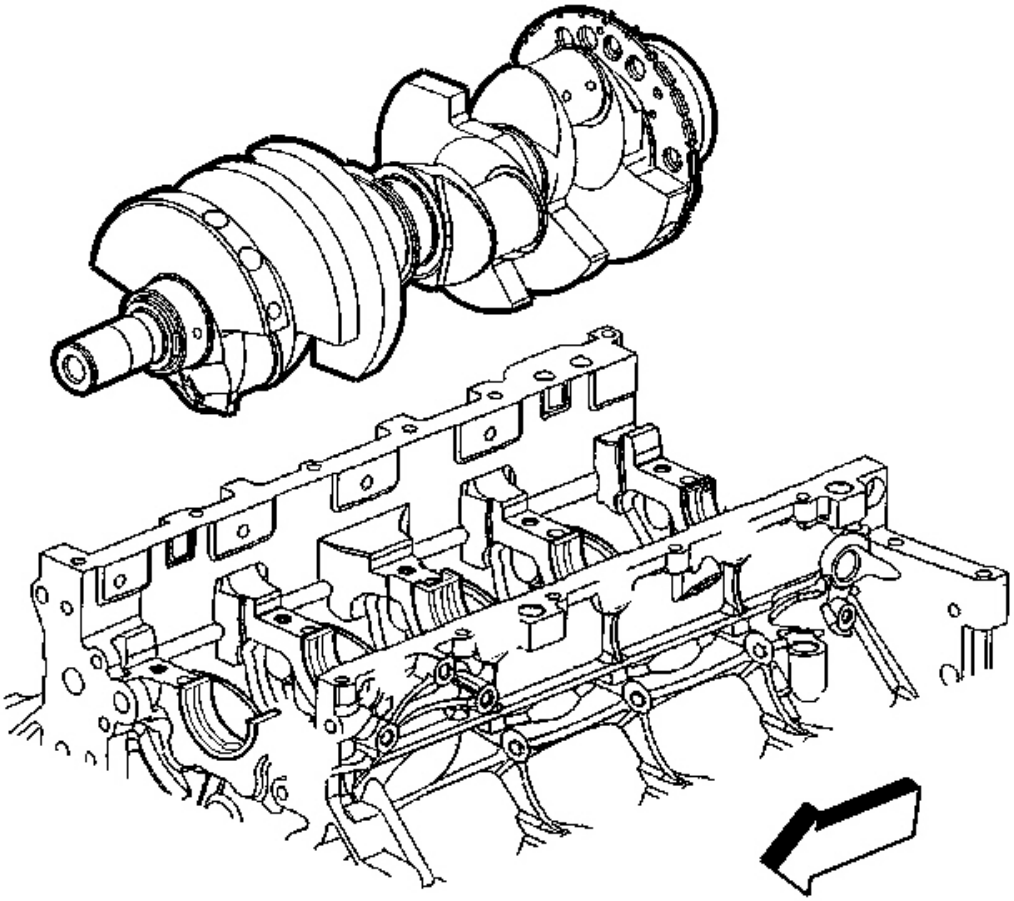

Fig. 42: View Of Crankshaft & Engine Block
Courtesy of GENERAL MOTORS CORP.

NOTE: **To maintain proper crankshaft end play, use extreme care during crankshaft installation. Avoid scoring or damaging the thrust bearing.**

4. Install the crankshaft.

cardiagn.com

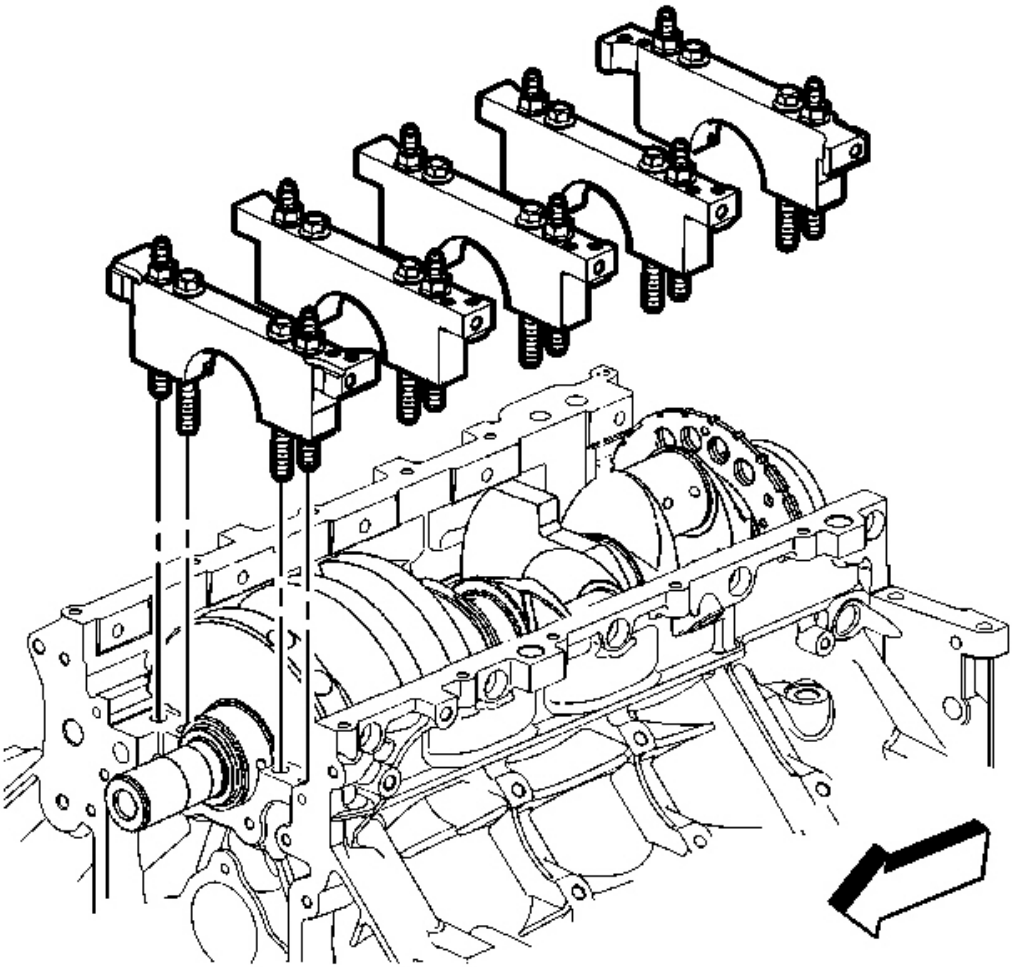

Fig. 43: View Of Bearing Caps
Courtesy of GENERAL MOTORS CORP.

IMPORTANT: The bearing caps must be installed in the proper location and direction.

5. Install the crankshaft bearing caps, with bearings, into the engine block.
6. Start the M10 bolts and studs.
7. Tap the bearing caps into place with a plastic-face hammer.

cardiagn.com

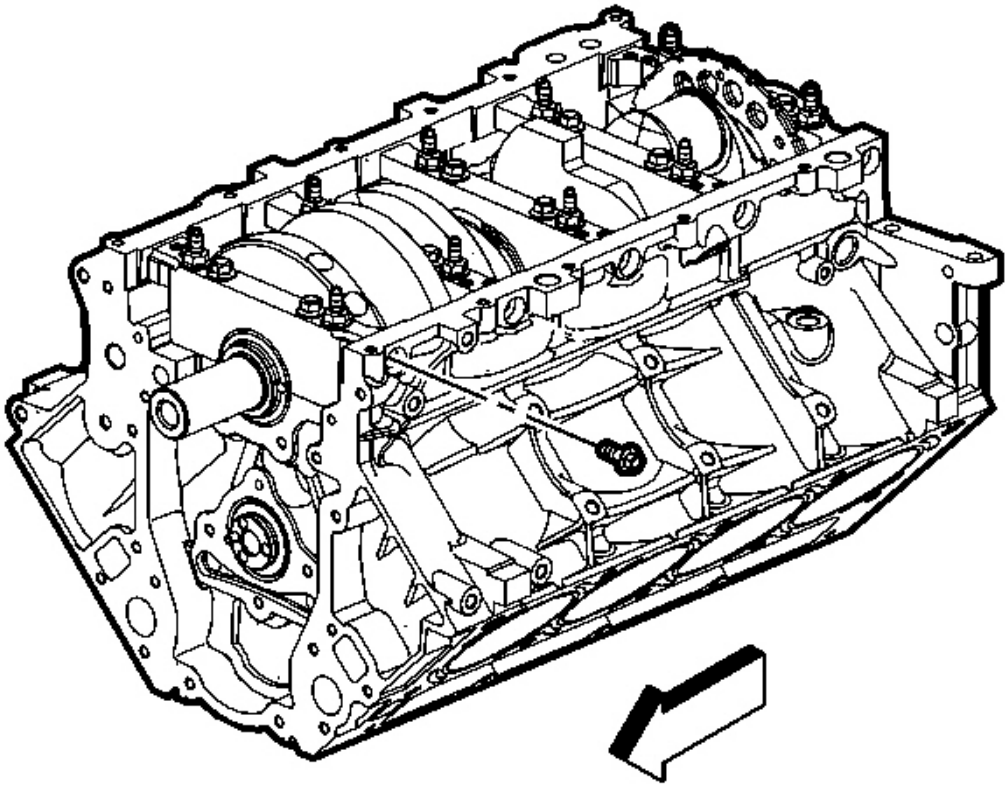

Fig. 44: View Of Bearing Cap Bolts & Studs
Courtesy of GENERAL MOTORS CORP.

8. Install the NEW M8 bearing cap side bolts.

cardiagn.com

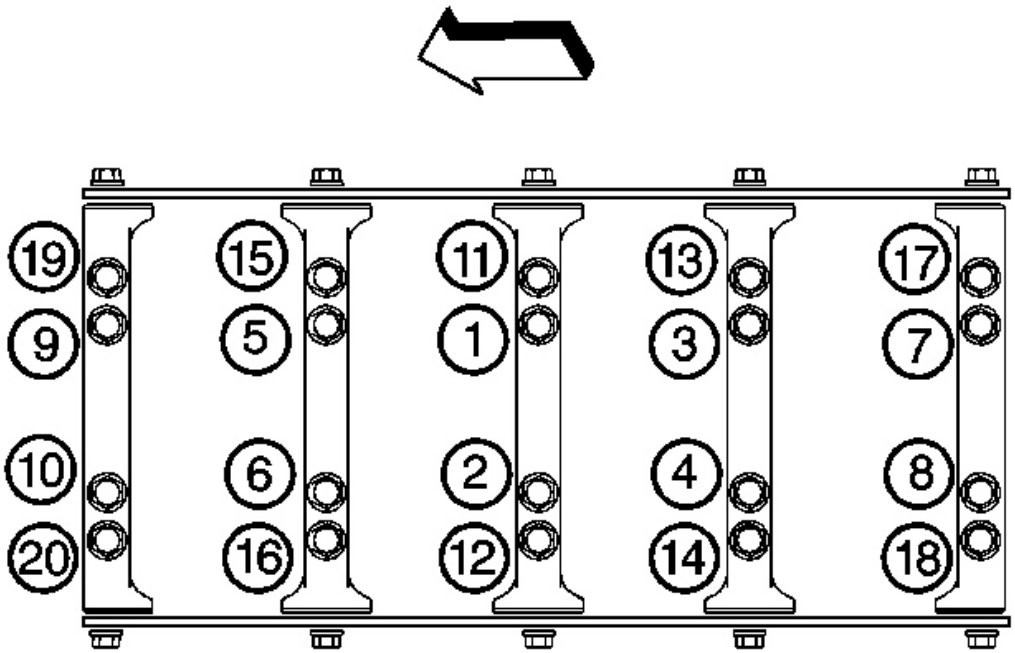

Fig. 45: Main Cap Bolt Hole Tightening Sequence
Courtesy of GENERAL MOTORS CORP.

NOTE: Refer to Fastener Notice in Cautions and Notices.

9. Tighten the bearing cap M10 bolts and studs.

   Tighten: Tighten the M10 bolts (1-10) a first pass in sequence to 20 N.m (15 lb ft).

IMPORTANT: To properly align the crankshaft thrust bearings, the final thrust of the crankshaft MUST be in the forward direction.

10. Using a plastic faced hammer, tap the crankshaft rearward then forward to align the thrust bearings.

    Tighten:
    1. Tighten the M10 bolts (1-10) a final pass in sequence 80 degrees using the **J 45059** .
    2. Tighten the M10 studs (11-20) a first pass in sequence to 20 N.m (15 lb ft).
    3. Tighten the M10 studs (11-20) a final pass in sequence 51 degrees using the **J 45059** .
    4. Tighten the M8 bolts to 25 N.m (18 lb ft).

cardiagn.com

Tighten the bolt on one side of the bearing cap and then tighten the bolt on the opposite side of the same bearing cap.

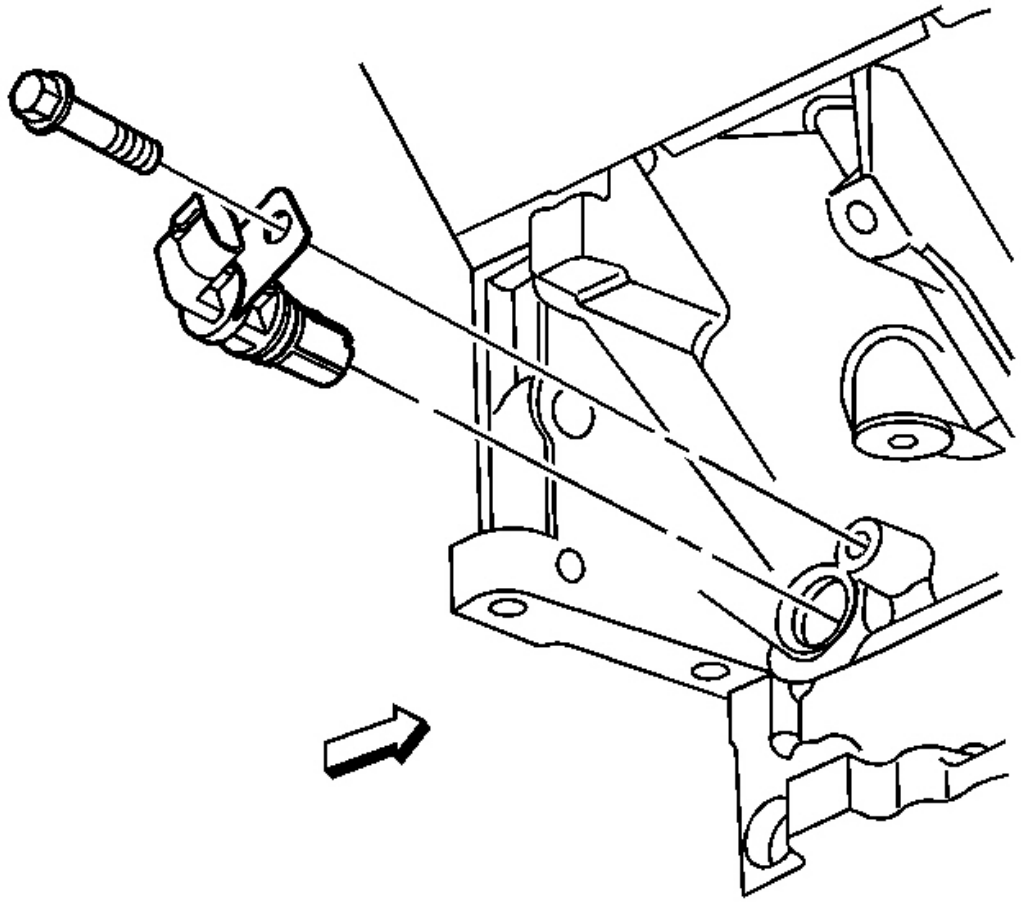

Fig. 46: View Of CKP Sensor & Bolt
Courtesy of GENERAL MOTORS CORP.

11. Install the CKP sensor.
    1. Inspect the CKP sensor O-ring seal. If the O-ring seal is not cut or damaged, it may be used.
    2. Coat the O-ring seal with clean engine oil.
    3. Install the sensor. Align the notch in the sensor retaining bracket with the bolt hole in the block.
    4. Install the sensor bolt.

       Tighten: Tighten the CKP sensor bolt to 25 N.m (18 lb ft).

cardiagn.com

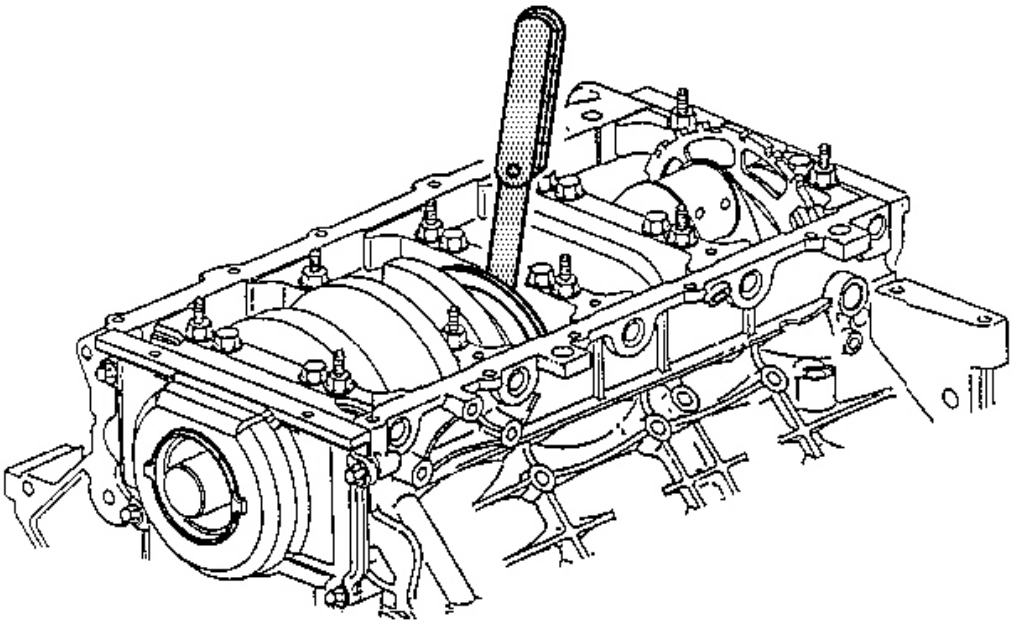

Fig. 47: Measuring Crankshaft End Play
Courtesy of GENERAL MOTORS CORP.

12. Measure the crankshaft end play.
    1. Thrust the crankshaft forward or rearward.
    2. Insert a feeler gage between the center crankshaft bearing and the bearing surface of the crankshaft and measure the bearing clearance.

       The proper crankshaft end play clearance is 0.04-0.2 mm (0.0015-0.0078 in).

    3. If the bearing clearance is not within specifications, inspect the thrust surfaces for nicks, gouges or raised metal. Minor imperfections may be removed with a fine stone.

PISTON, CONNECTING ROD, AND BEARING INSTALLATION

Tools Required

- **J 8037** Piston Ring Compressor
- **J 8087** Cylinder Bore Gage
- **J 41556** Connecting Rod Guide
- **J 45059** Angle Meter

cardiagn.com

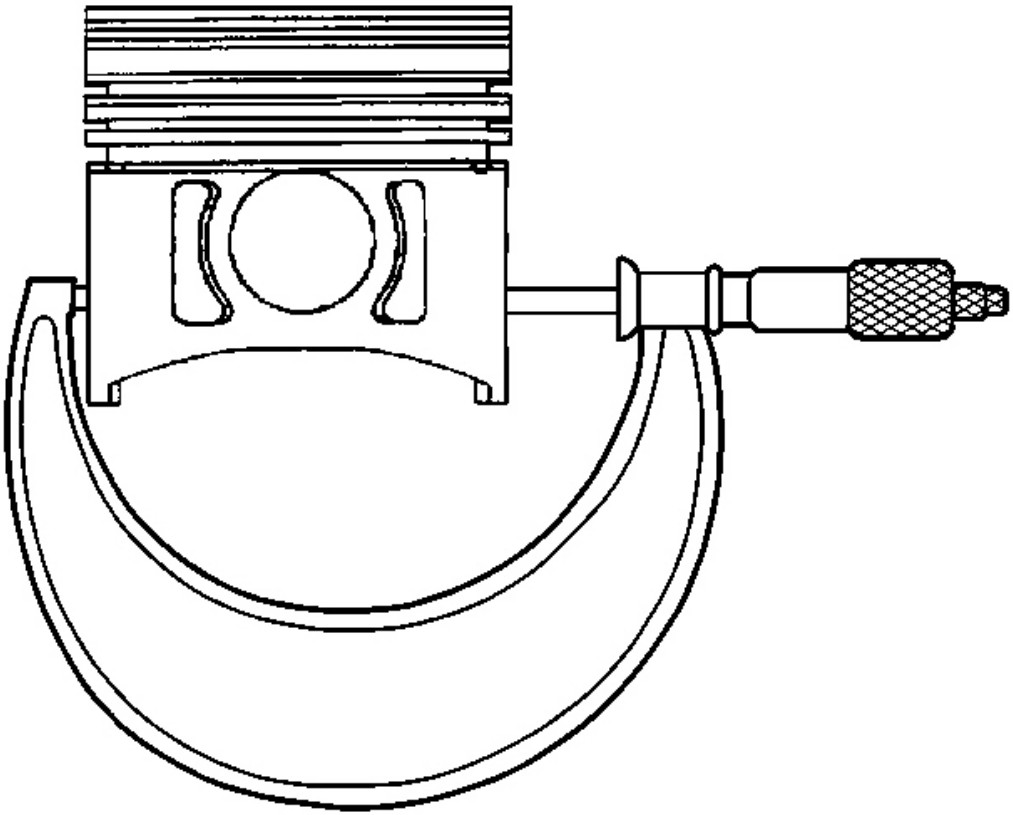

Fig. 48: Measuring Piston
Courtesy of GENERAL MOTORS CORP.

IMPORTANT: Measurements of all components should be taken with the components at normal room temperature. For proper piston fit, the engine block cylinder bores must not have excessive wear or taper. A used piston, pin, and connecting rod assembly may be installed if, after inspection is within specifications.

1. With a micrometer at a right angle, measure the piston outside diameter (OD). Measure the diameter 43 mm (1.69 in) from the top of the piston. Refer to **Engine Mechanical Specifications (LS1)** or **Engine Mechanical Specifications (LS6)** .
2. Record the piston OD.

cardiagn.com

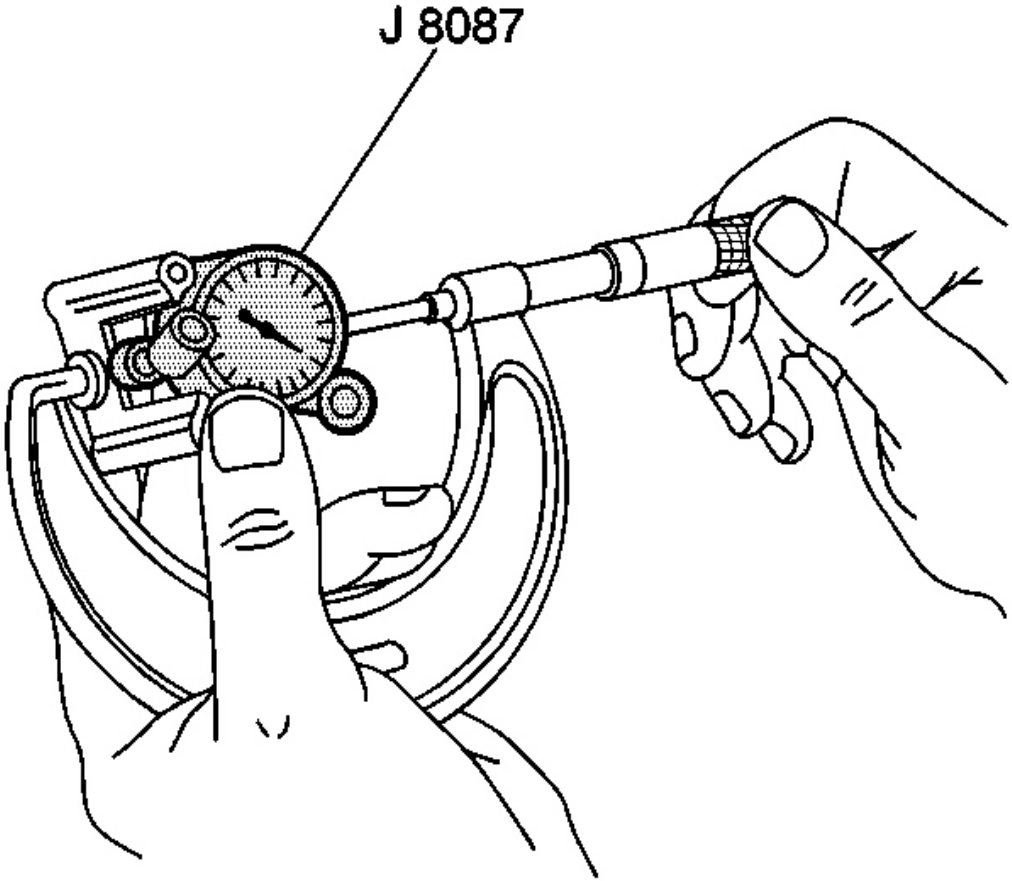

Fig. 49: Measuring J 8087 Dimension
Courtesy of GENERAL MOTORS CORP.

3. Adjust the micrometer to the recorded piston OD.
4. Insert the **J 8087** into the micrometer and zero the gage dial.

cardiagn.com

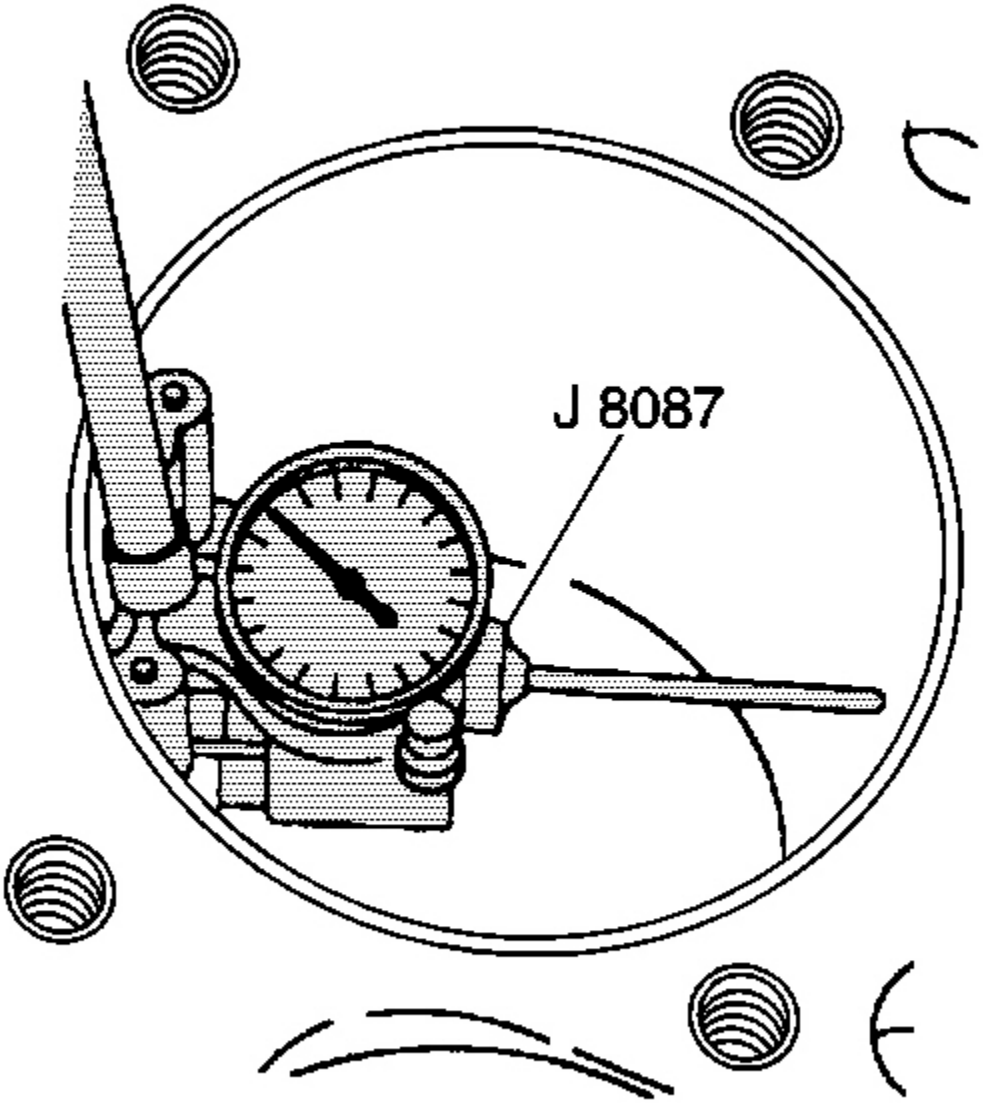

Fig. 50: Determining The Cylinder Bore Out-Of-Round Using J 8087
Courtesy of GENERAL MOTORS CORP.

5. Using the **J 8087** , measure the cylinder bore inside diameter (ID). Measure at a point 64 mm (2.5 in) from the top of the cylinder.
6. Record the cylinder bore ID.
7. Subtract the piston OD from the cylinder bore ID to determine the piston-to-bore clearance. Refer to

cardiagn.com

Engine Mechanical Specifications (LS1) or **Engine Mechanical Specifications (LS6)** .

8. If the proper clearance cannot be obtained, select another piston, pin, and connecting rod assembly and again measure the clearances. If the proper fit cannot be obtained, the cylinder bore may require honing for an oversize piston.

Piston, Pin, and Connecting Rod Installation

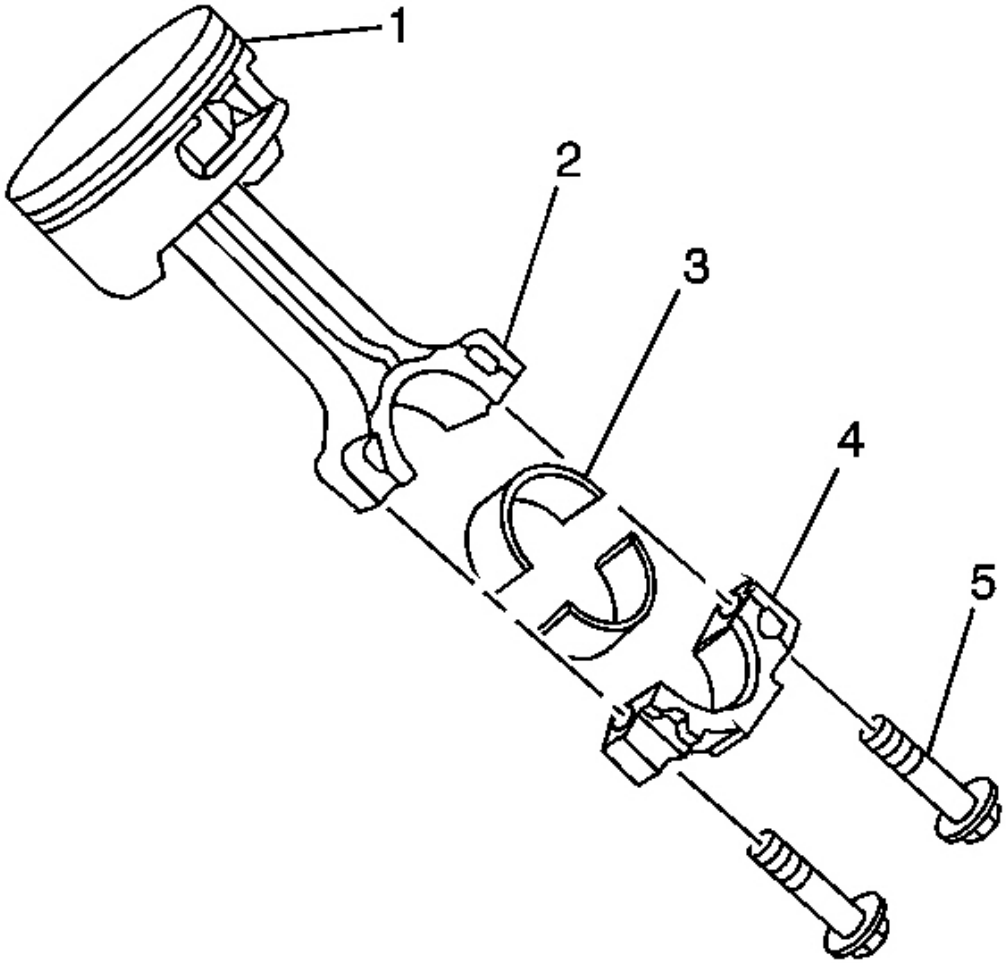

Fig. 51: View Of Piston & Connecting Rod Components
Courtesy of GENERAL MOTORS CORP.

1. Lightly lubricate the following components with clean engine oil:
   - Piston (1)

cardiagn.com

- Piston rings
- Cylinder bore
- Bearings (3) and bearing surfaces

2. Position the oil control ring end gaps a minimum of 25 mm (1.0 in) from each other.
3. Position the compression ring end gaps 180 degrees opposite each other.

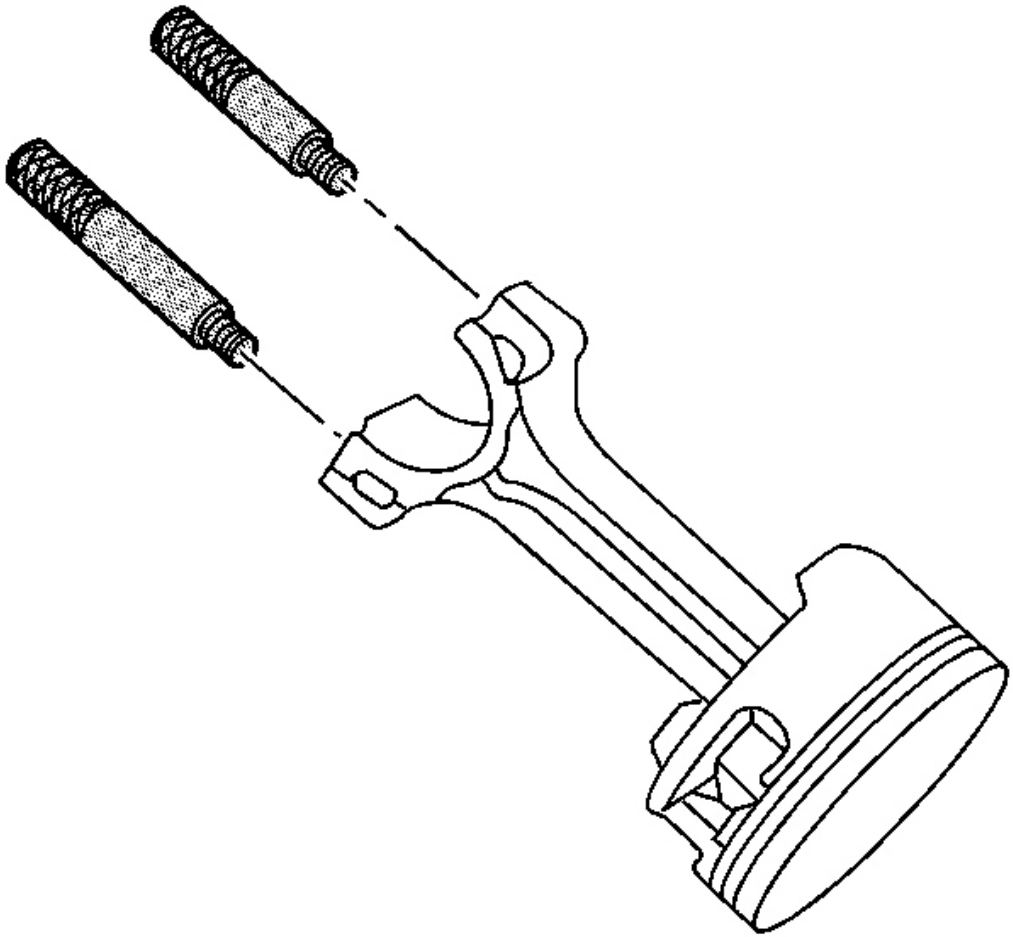

Fig. 52: View Of J 41556 & Connecting Rod
Courtesy of GENERAL MOTORS CORP.

4. Install the **J 41556** to the connecting rod.

cardiagn.com

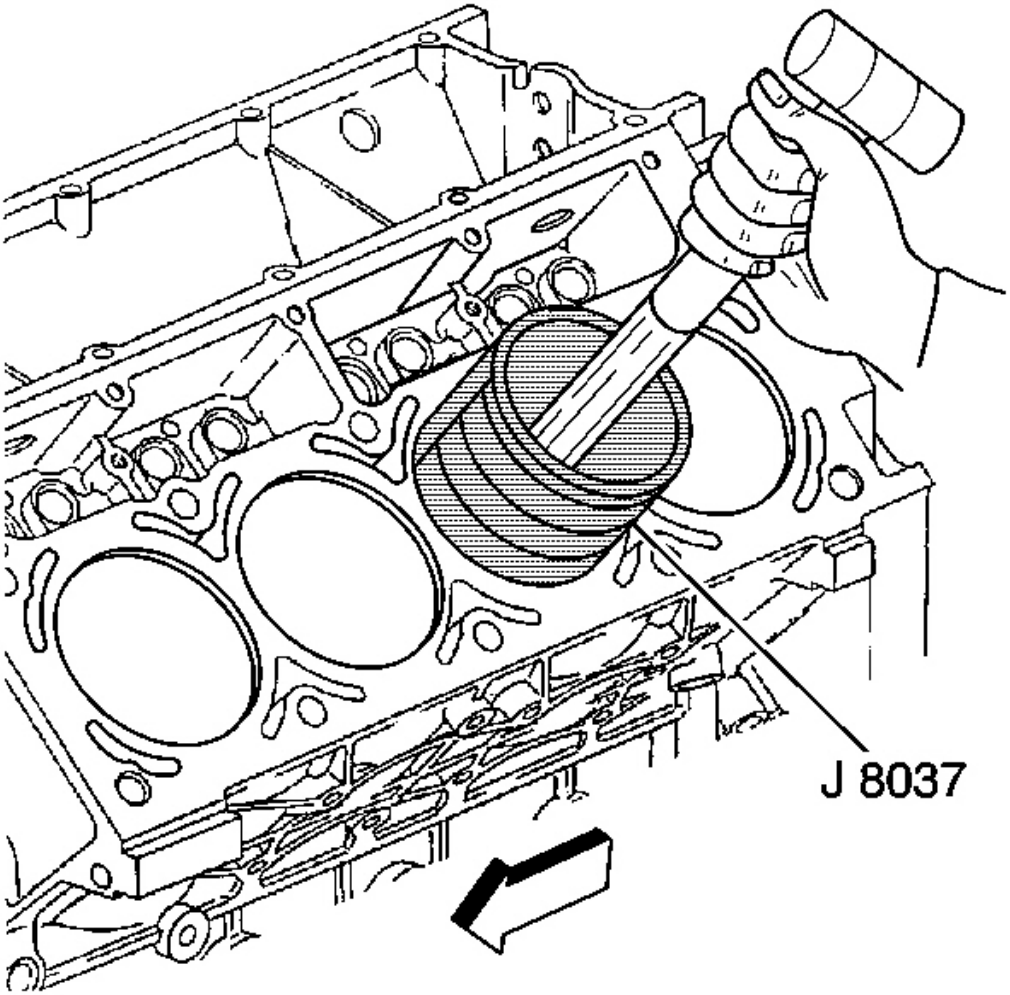

Fig. 53: Installing Piston Using J 8037
Courtesy of GENERAL MOTORS CORP.

5. Install the **J 8037** onto the piston and compress the piston rings.

IMPORTANT: The piston alignment mark MUST face the front of the engine block.

6. Install the piston, pin, and connecting rod assembly into the cylinder bore. Hold the piston ring compressor firmly against the engine block. Using a wooden hammer handle, lightly tap the top of the piston until all the piston rings have entered the cylinder bore.

cardiagn.com

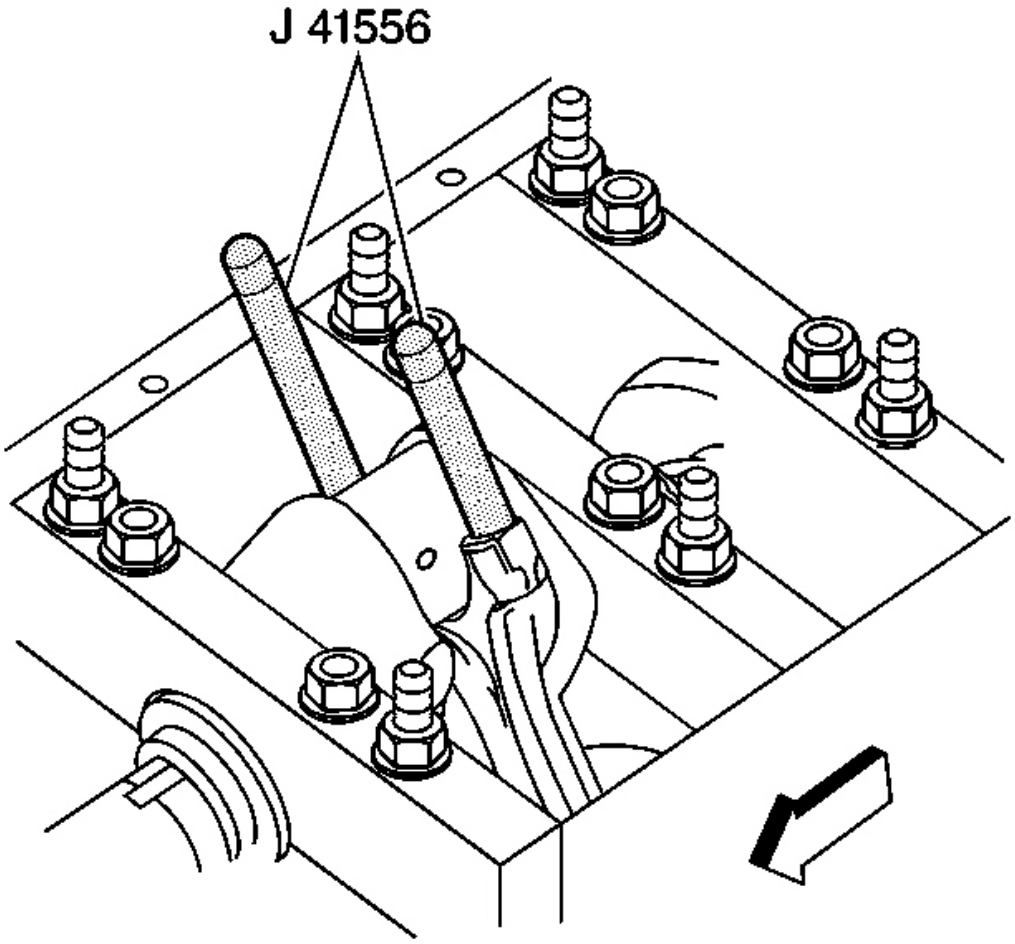

Fig. 54: View Of J 41556
Courtesy of GENERAL MOTORS CORP.

7. Use the **J 41556** to guide the connecting rod onto the crankshaft journal.
8. Remove the **J 41556** from the connecting rod.

cardiagn.com

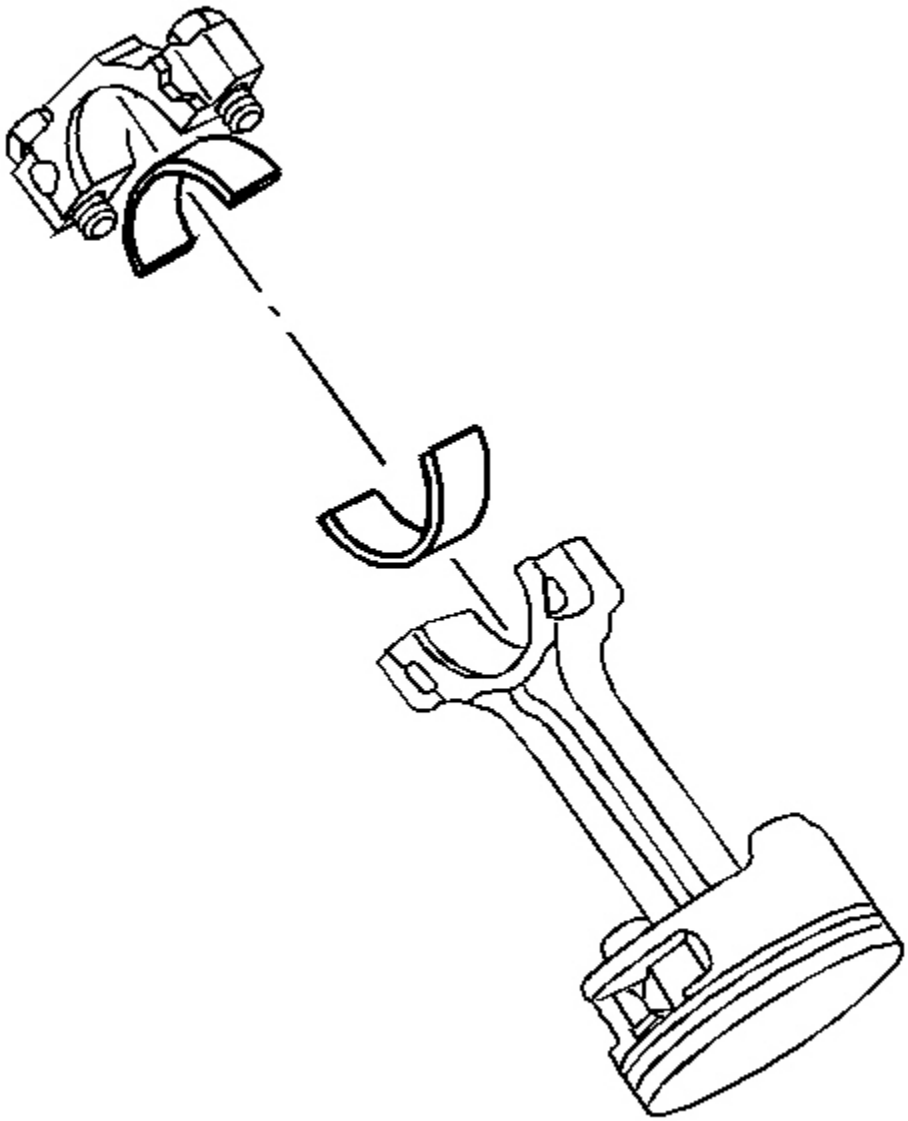

Fig. 55: View Of Connecting Rod & Bolts
Courtesy of GENERAL MOTORS CORP.

NOTE: **Use the correct fastener in the correct location. Replacement fasteners must be the correct part number for that application. Fasteners requiring replacement or fasteners requiring the use of thread locking compound or sealant are identified in the service procedure. Do not use paints,**

cardiagn.com

lubricants, or corrosion inhibitors on fasteners or fastener joint surfaces unless specified. These coatings affect fastener torque and joint clamping force and may damage the fastener. Use the correct tightening sequence and specifications when installing fasteners in order to avoid damage to parts and systems.

IMPORTANT: The connecting rod and cap must be assembled with the mating surfaces properly aligned.

9. Install the bearing cap, bearing half, and bolts.

Tighten:

1. Tighten the bolts a first pass to 20 N.m (15 lb ft).
2. Tighten the bolts a final pass to 75 degrees using the **J 45059** .

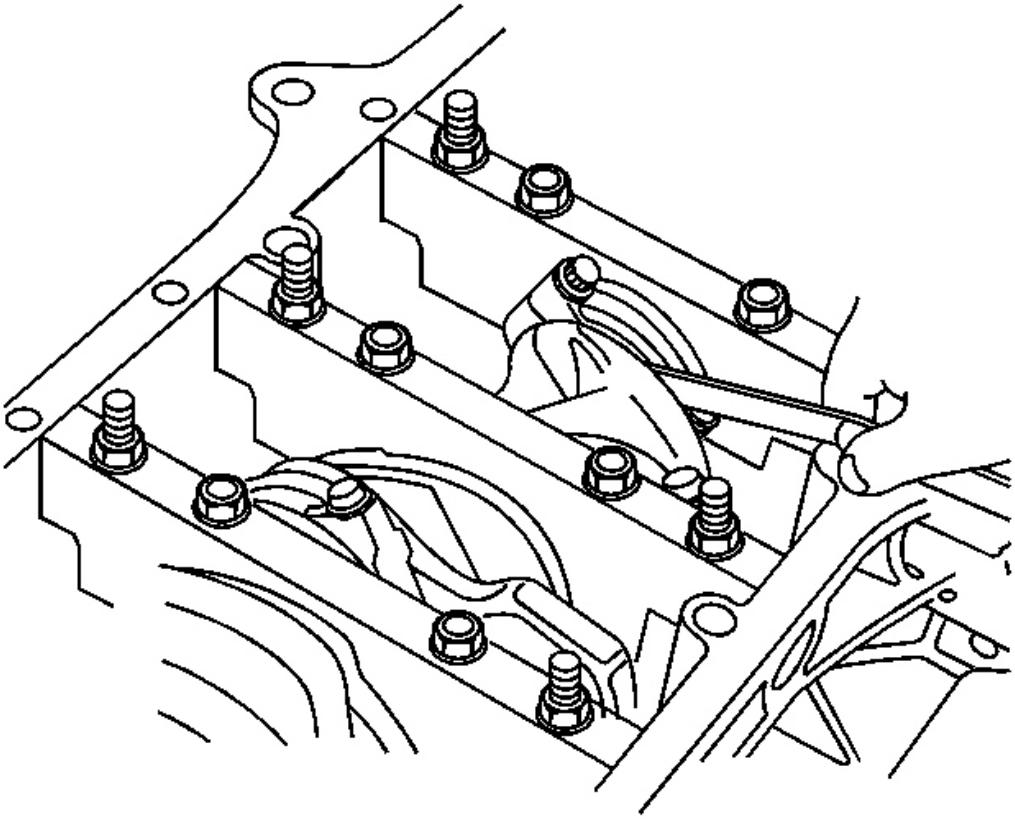

Fig. 56: Measuring The Connecting Rods For Proper Side Clearance

cardiagn.com

Courtesy of GENERAL MOTORS CORP.

10. Measure the connecting rods for the proper side clearance. Refer to **Engine Mechanical Specifications (LS1)** or **Engine Mechanical Specifications (LS6)** .

CAMSHAFT INSTALLATION

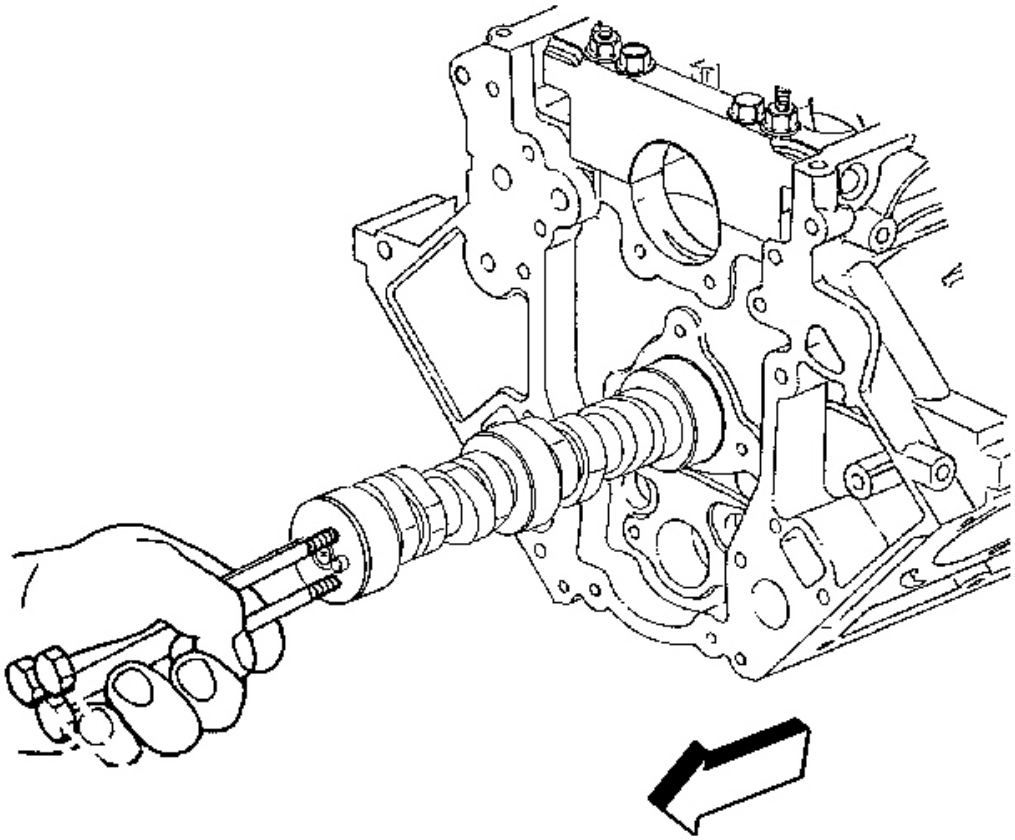

Fig. 57: View Of Bolts installed In Camshaft Front Bolt Holes
Courtesy of GENERAL MOTORS CORP.

IMPORTANT: If camshaft replacement is required, the valve lifters must also be replaced.

1. Lubricate the camshaft journals and the bearings with clean engine oil.
2. Install 3 M8 - 1.25 x 100 mm (M8 - 1.25 x 4.0 in) bolts into the camshaft front bolt holes.

cardiagn.com

NOTE: **All camshaft journals are the same diameter, so care must be used in removing or installing the camshaft to avoid damage to the camshaft bearings.**

3. Using the bolts as a handle, carefully install the camshaft into the engine block.
4. Remove the 3 bolts from the front of the camshaft.

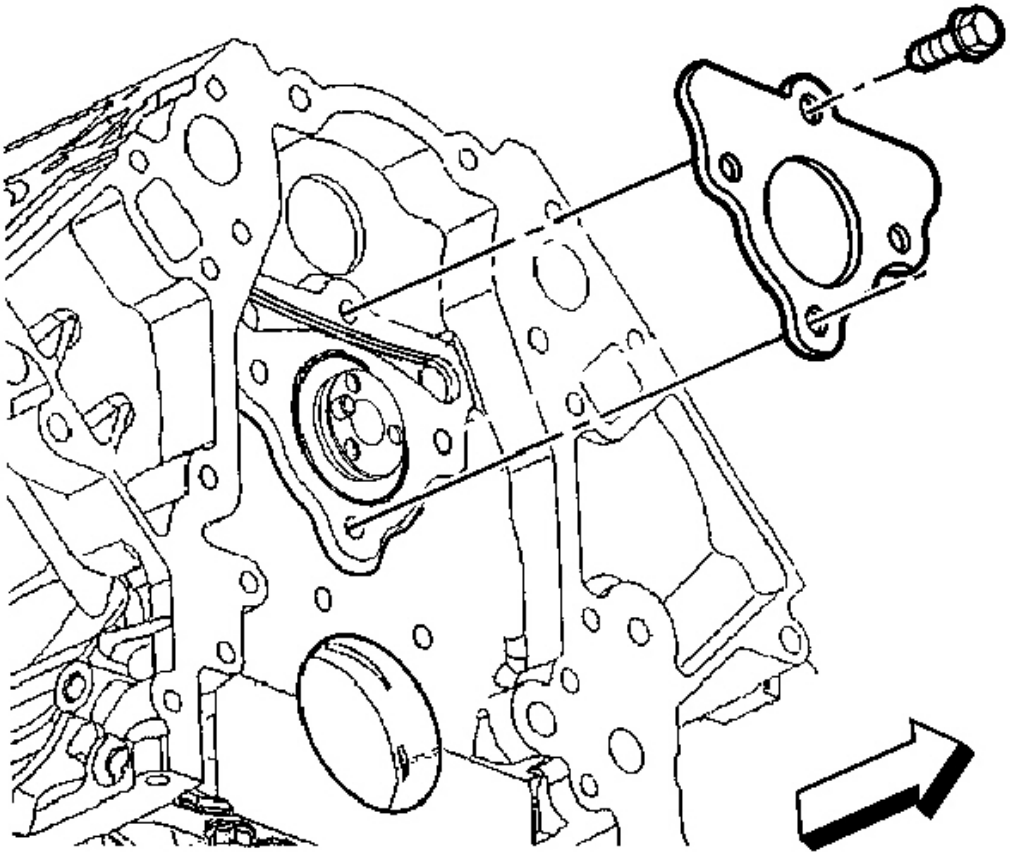

Fig. 58: View Of Camshaft Retainer & Bolts
Courtesy of GENERAL MOTORS CORP.

NOTE: **Refer to Fastener Notice in Cautions and Notices.**

IMPORTANT:

- **Install the retainer plate with the sealing gasket facing the engine block.**

cardiagn.com

- **The gasket surface on the engine block should be clean and free of dirt or debris.**

5. Install the camshaft retainer and the bolts.

   Tighten: Tighten the camshaft retainer bolts to 25 N.m (18 lb ft).

6. Inspect the camshaft sensor O-ring seal. If the O-ring seal is not cut or damaged, it may be used again.
7. Lubricate the O-ring seal with clean engine oil.

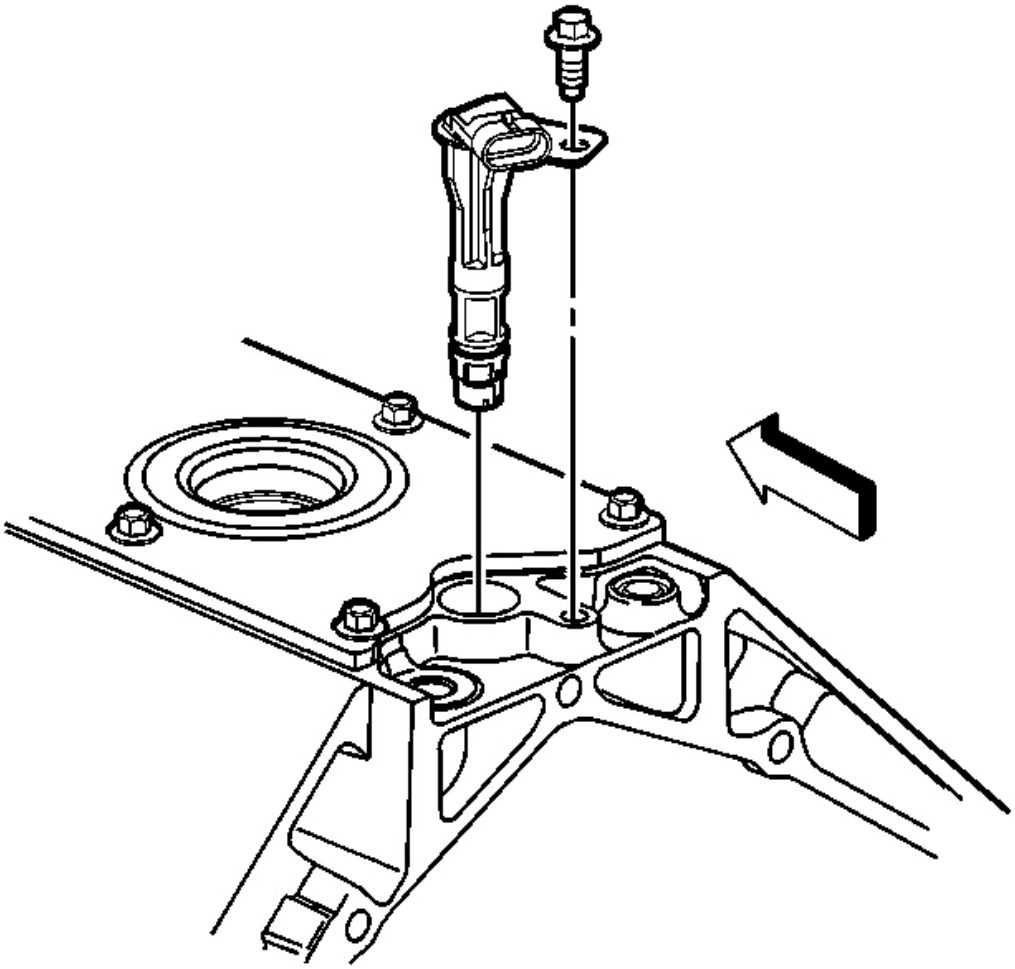

Fig. 59: View Of Camshaft Sensor & Bolt
Courtesy of GENERAL MOTORS CORP.

cardiagn.com

8. Install the camshaft position (CMP) sensor and bolt.

   Tighten: Tighten the CMP sensor bolt to 25 N.m (18 lb ft).

TIMING CHAIN AND SPROCKETS INSTALLATION

Tools Required

J 41665 Crankshaft Balancer and Sprocket Installer

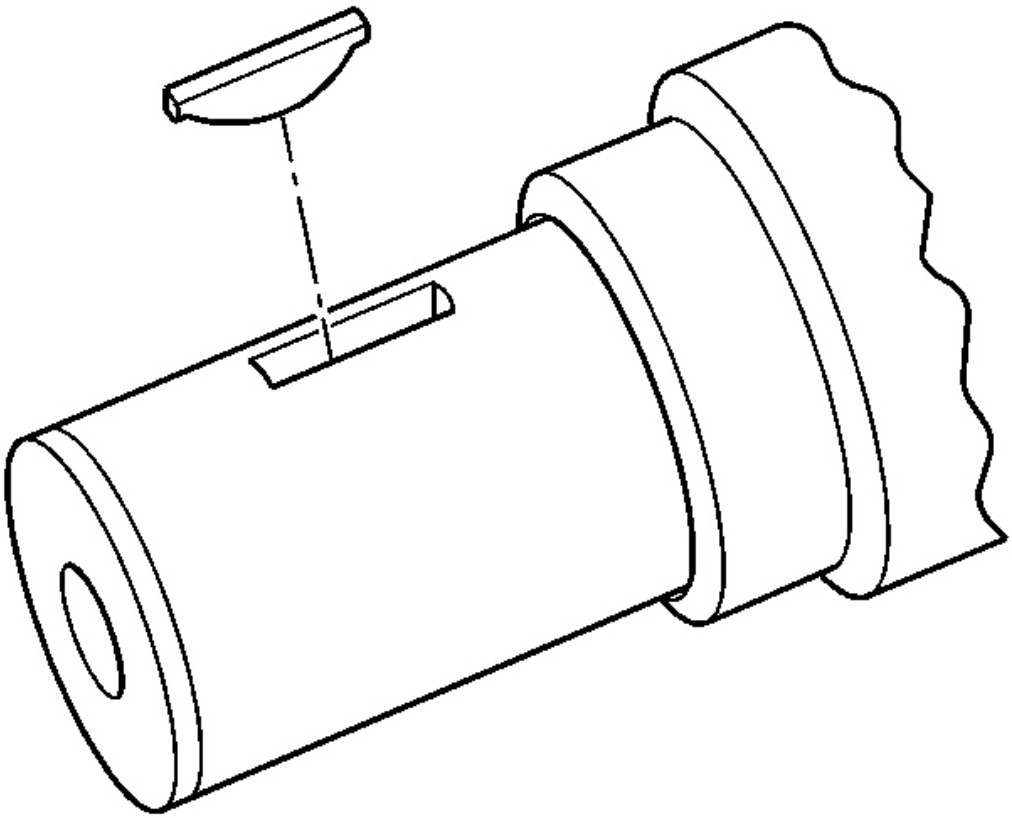

Fig. 60: View Of Crankshaft Sprocket Key
Courtesy of GENERAL MOTORS CORP.

1. Install the key into the crankshaft keyway, if previously removed.

cardiagn.com

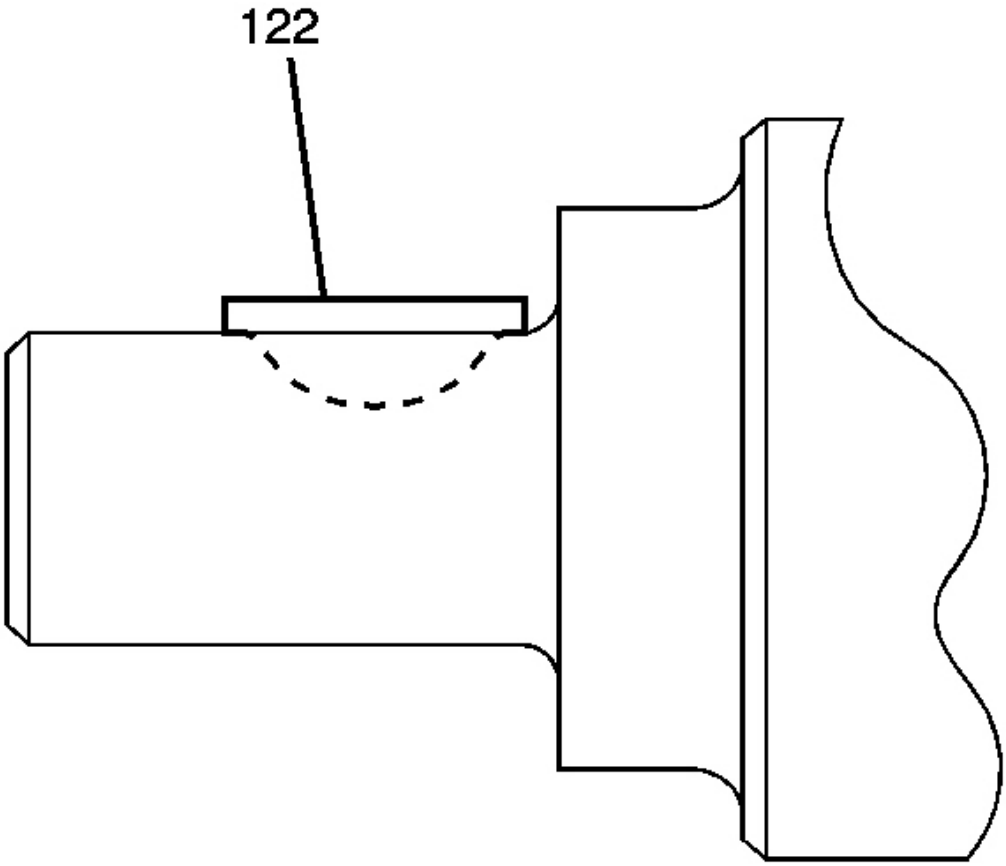

Fig. 61: View Of Installed Crankshaft Key
Courtesy of GENERAL MOTORS CORP.

2. Tap the key (122) into the keyway until both ends of the key bottom onto the crankshaft.

cardiagn.com

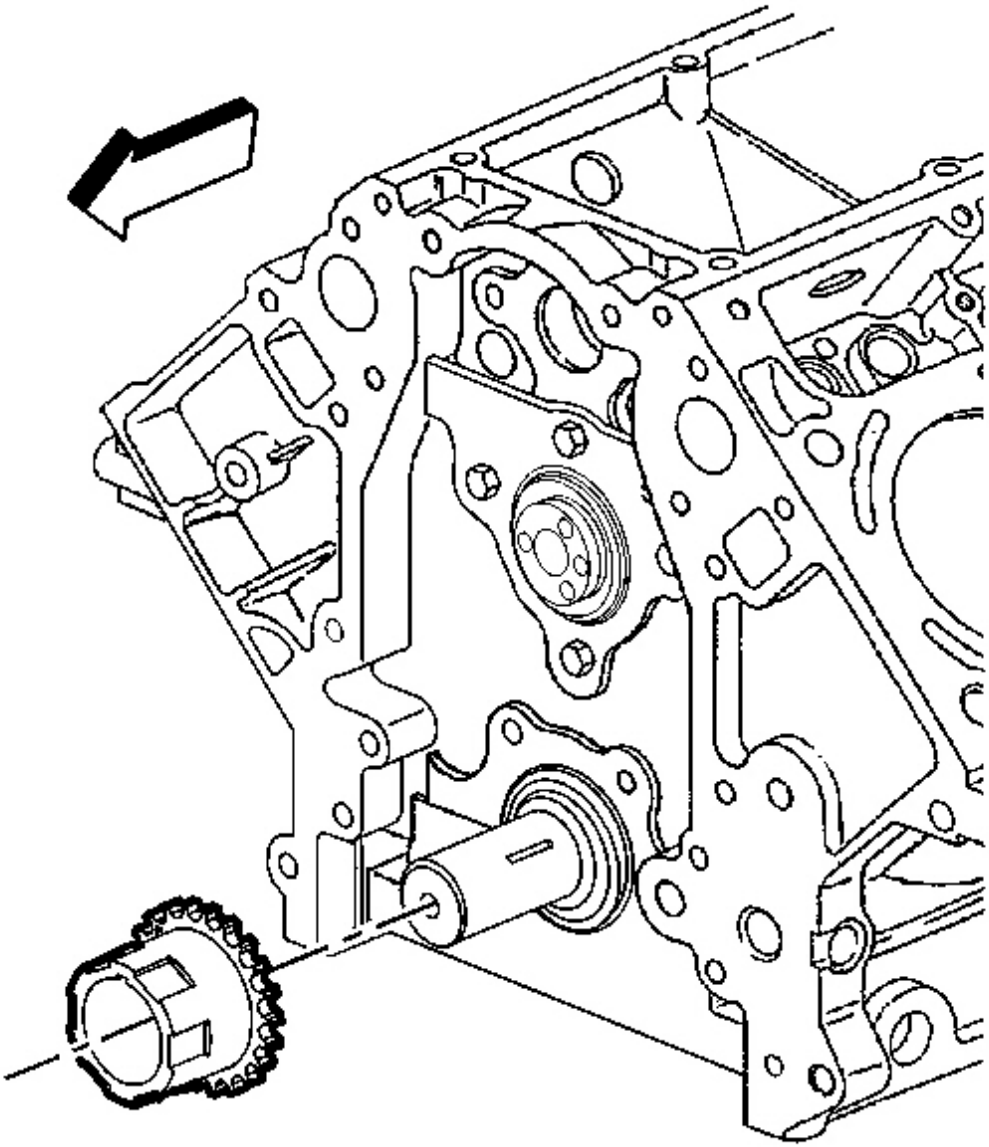

Fig. 62: View Of Crankshaft Sprocket
Courtesy of GENERAL MOTORS CORP.

3. Install the crankshaft sprocket onto the front of the crankshaft. Align the crankshaft key with the crankshaft sprocket keyway.

cardiagn.com

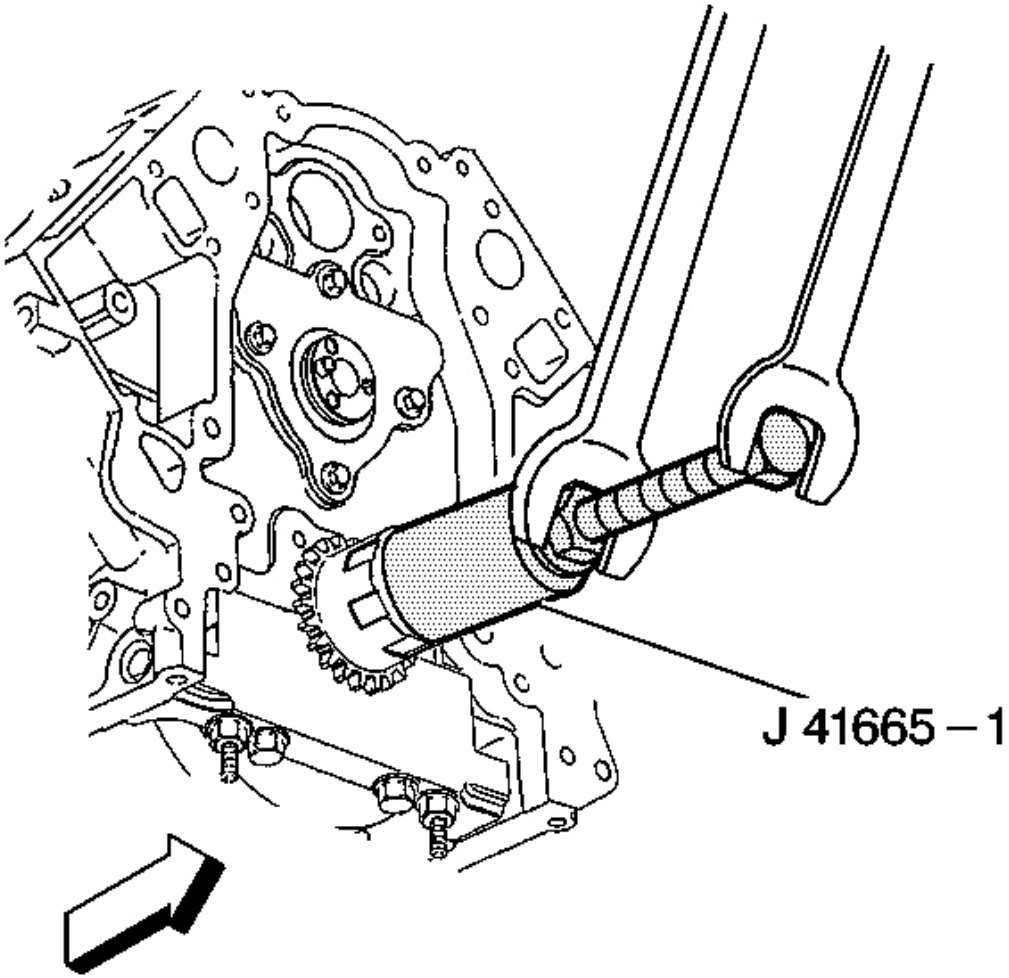

Fig. 63: Installing Crankshaft Sprocket Using J 41665
Courtesy of GENERAL MOTORS CORP.

4. Use the **J 41665** in order to install the crankshaft sprocket.

   Install the sprocket onto the crankshaft until fully seated against the crankshaft flange.

5. Rotate the crankshaft sprocket until the alignment mark is in the 12 o'clock position.

cardiagn.com

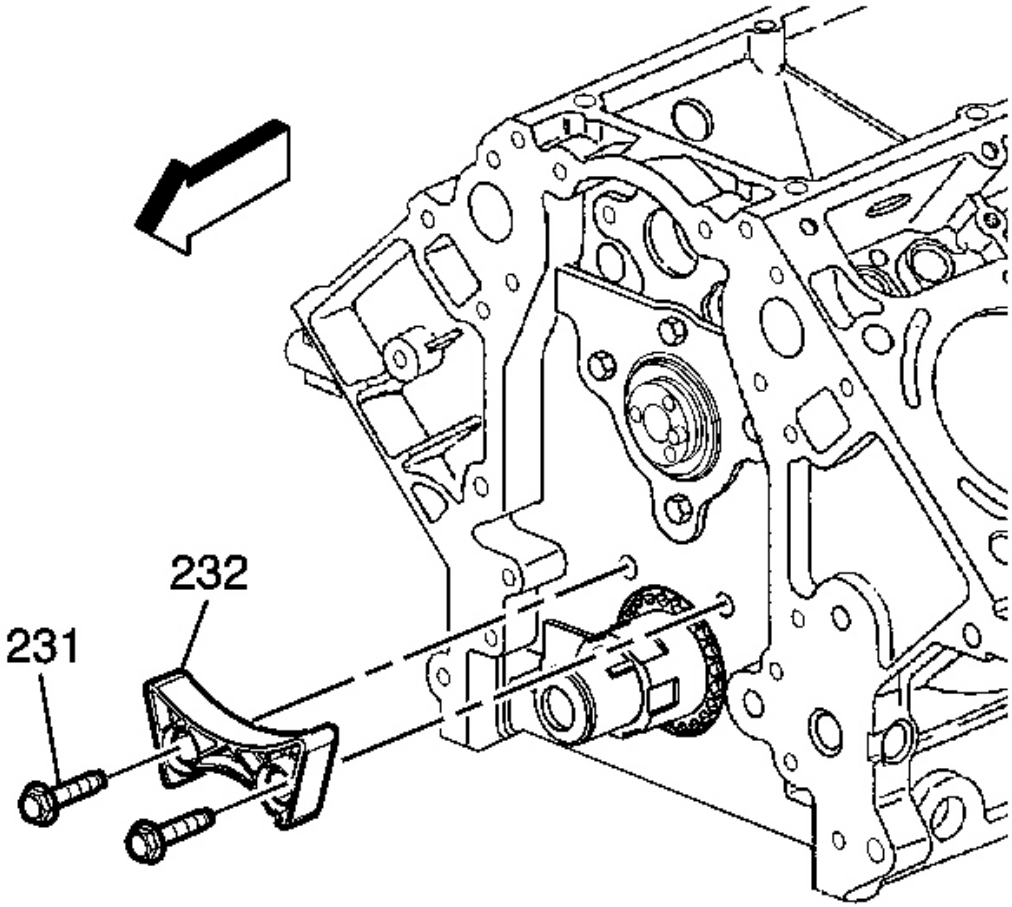

Fig. 64: Chain Dampener & Bolts
Courtesy of GENERAL MOTORS CORP.

NOTE: Refer to Fastener Notice in Cautions and Notices.

6. Install the chain dampener (232) and bolts (231).

   Tighten: Tighten the bolts to 35 N.m (26 lb ft).

cardiagn.com

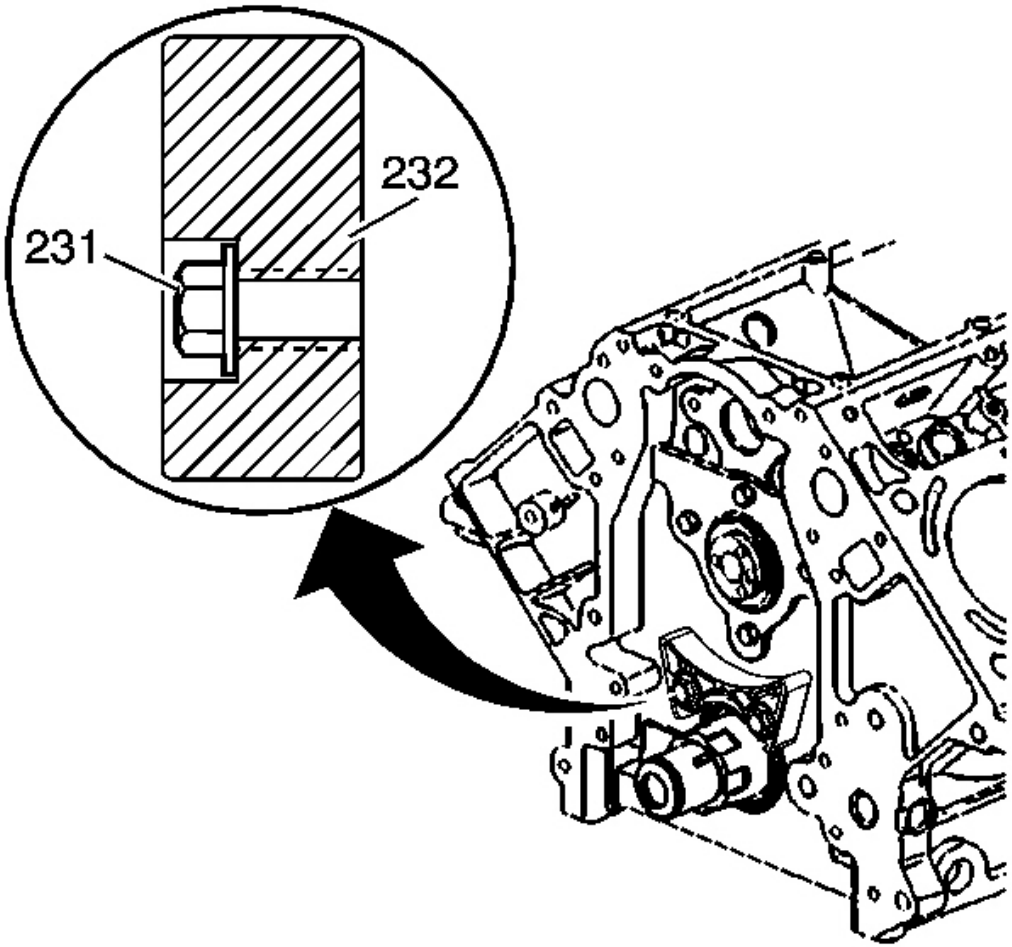

Fig. 65: Chain Dampener & Heads Of Bolts
Courtesy of GENERAL MOTORS CORP.

7. With the chain dampener properly installed, the heads of the bolts (231) should install to flush or below the face of the dampener (232).

cardiagn.com

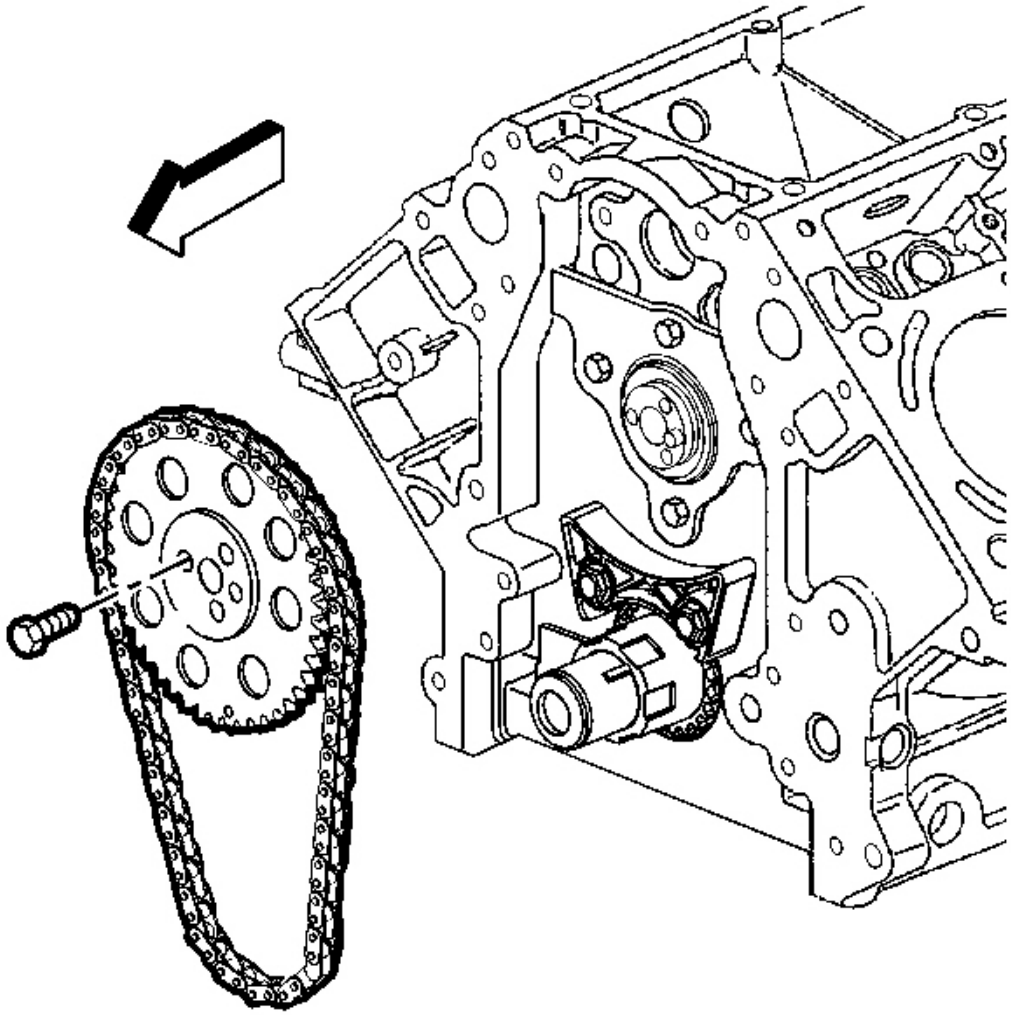

Fig. 66: Camshaft Sprocket & Timing Chain
Courtesy of GENERAL MOTORS CORP.

IMPORTANT:

- **Properly locate the camshaft sprocket locating pin with the camshaft sprocket alignment hole.**
- **The sprocket teeth and timing chain must mesh.**
- **The camshaft and the crankshaft sprocket alignment marks MUST be aligned properly.**
- **Locate the camshaft sprocket alignment mark in the 6 o'clock position.**

cardiagn.com

8. Install the camshaft sprocket and timing chain.

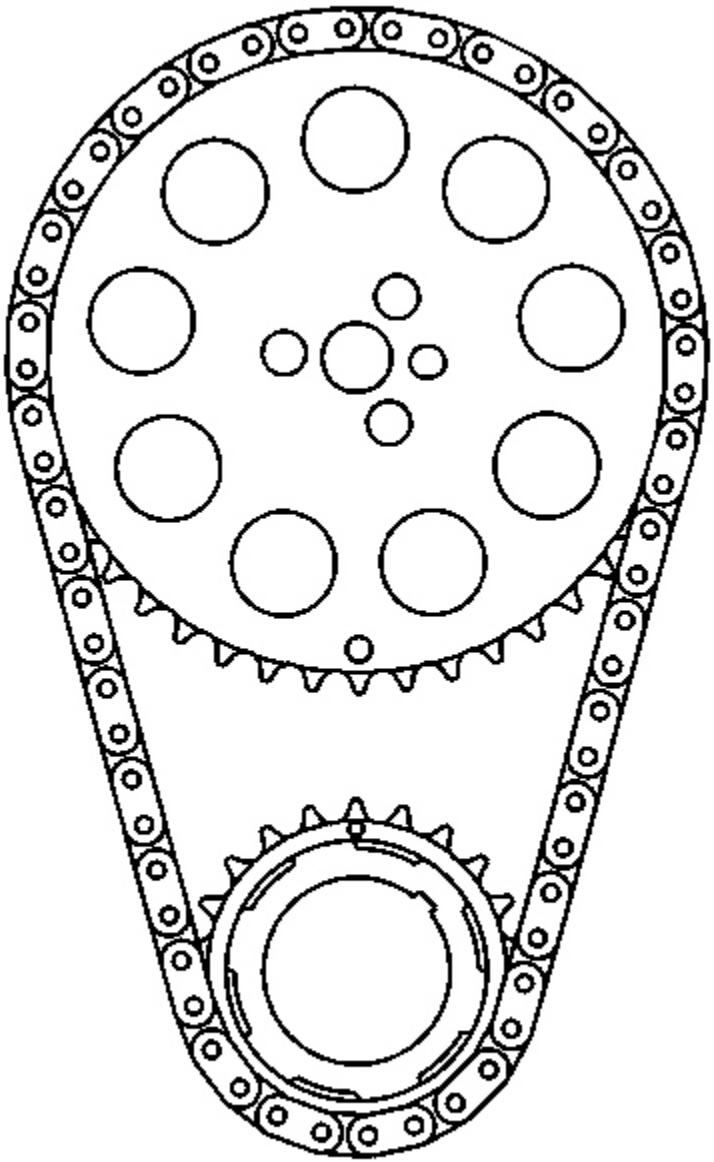

Fig. 67: View Of Camshaft & Crankshaft Sprockets Aligned
Courtesy of GENERAL MOTORS CORP.

9. If necessary, rotate the camshaft or crankshaft sprockets in order to align the timing marks.

cardiagn.com

10. Install the camshaft sprocket bolts.

    Tighten: Tighten the camshaft sprocket bolts to 35 N.m (26 lb ft).

OIL PUMP, PUMP SCREEN AND DEFLECTOR INSTALLATION

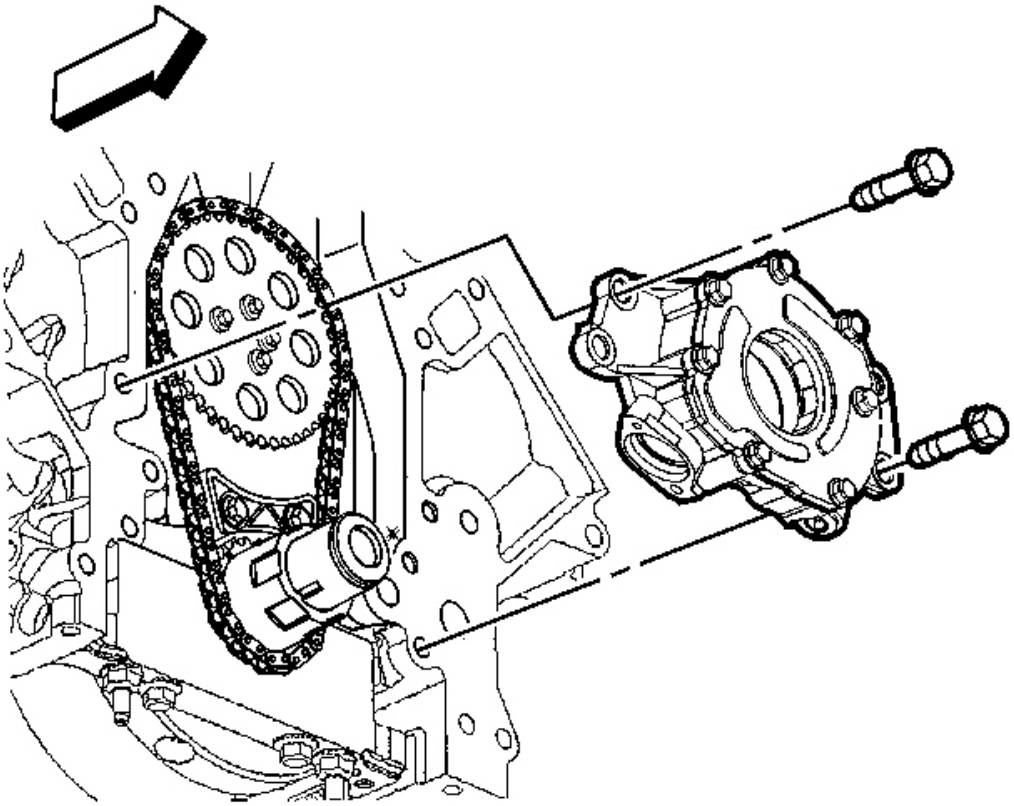

Fig. 68: Crankshaft Sprocket & Oil Pump Drive Gear
Courtesy of GENERAL MOTORS CORP.

IMPORTANT: Inspect the oil pump and engine block oil gallery passages. These surfaces must be clear and free of debris or restrictions.

1. Align the splined surfaces of the crankshaft sprocket and the oil pump drive gear and install the oil pump.
2. Install the oil pump onto the crankshaft sprocket until the pump housing contacts the face of the engine block.

cardiagn.com

NOTE: **Refer to Fastener Notice in Cautions and Notices.**

3. Install the oil pump bolts.

   Tighten: Tighten the oil pump bolts to 25 N.m (18 lb ft).

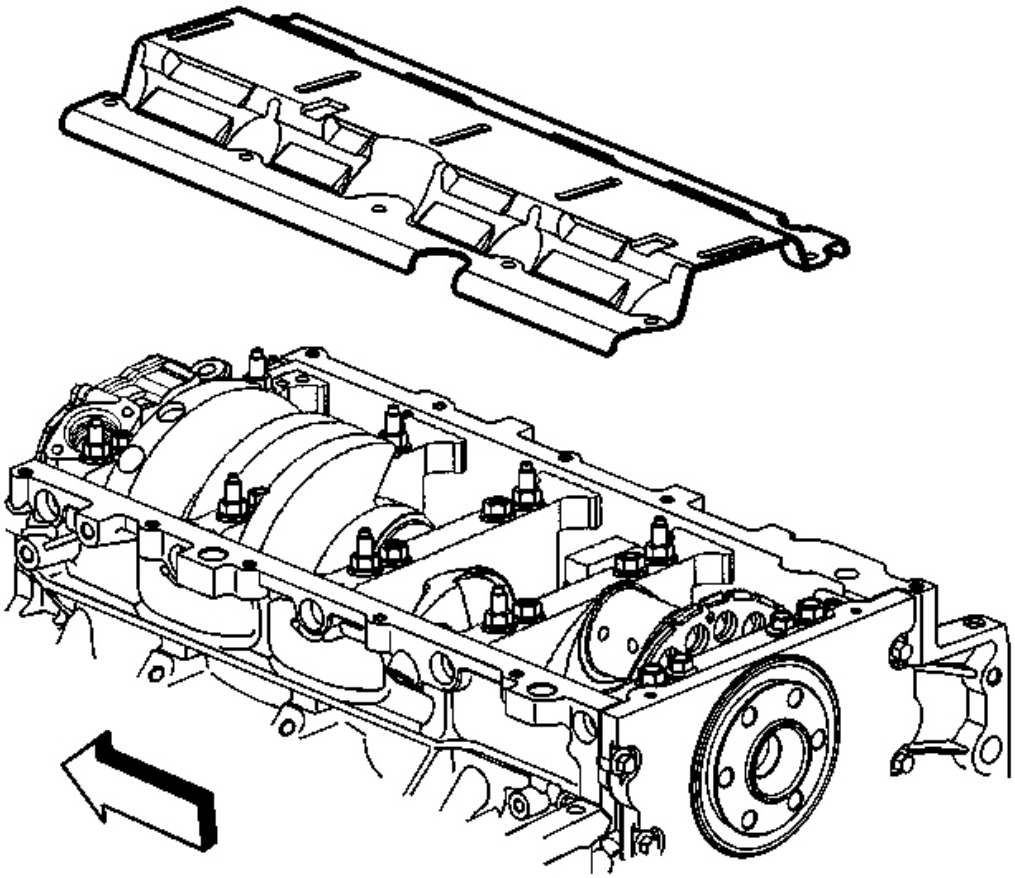

Fig. 69: Crankshaft Oil Deflector
Courtesy of GENERAL MOTORS CORP.

4. Install the crankshaft oil deflector.
5. Lubricate a NEW oil pump screen O-ring seal with clean engine oil.
6. Install the NEW O-ring seal onto the oil pump screen.

cardiagn.com

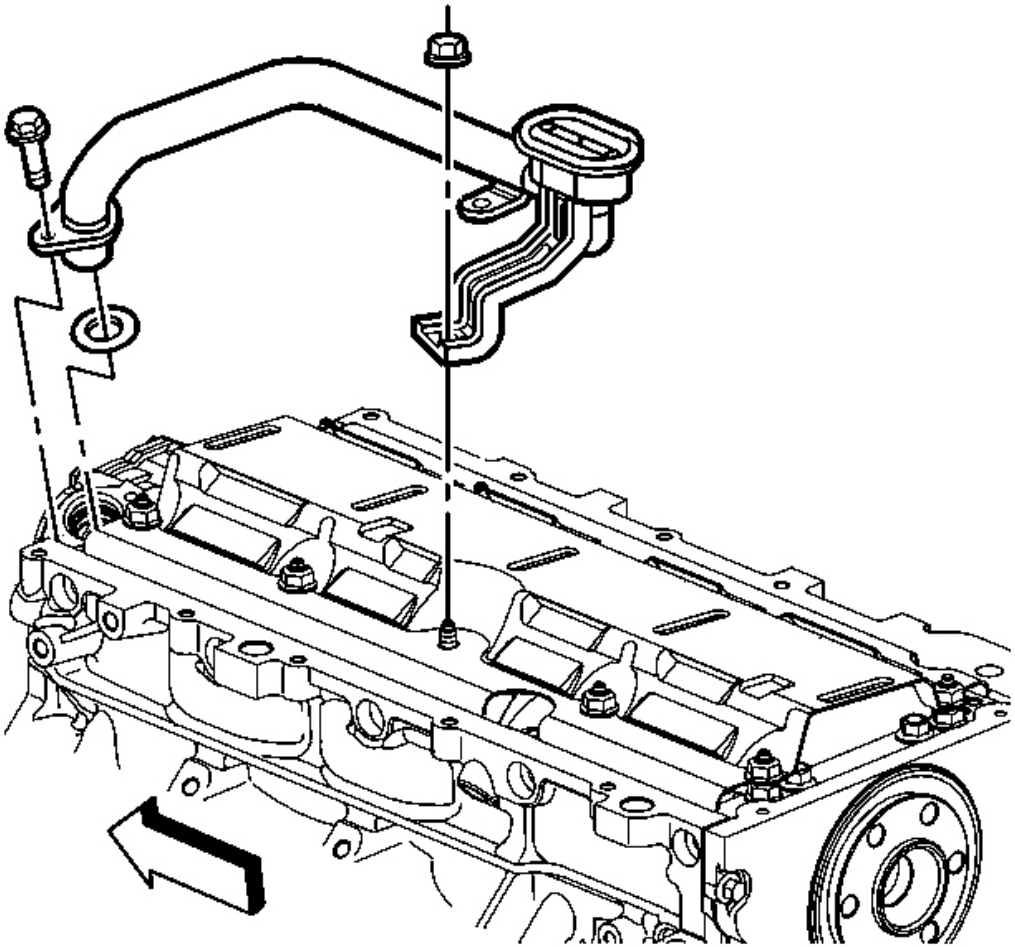

Fig. 70: View Of Oil Pump Screen
Courtesy of GENERAL MOTORS CORP.

IMPORTANT:

- **Push the oil pump screen tube completely into the oil pump prior to tightening the bolt. Do not allow the bolt to pull the tube into the pump.**
- **Align the oil pump screen mounting brackets with the correct crankshaft bearing cap studs.**

7. Install the oil pump screen.
8. Install the oil pump screen bolt and the deflector nuts.

Tighten:

cardiagn.com

1. Tighten the oil pump screen bolt to 12 N.m (106 lb in).
2. Tighten the crankshaft oil deflector nuts to 25 N.m (18 lb ft).

ENGINE REAR COVER INSTALLATION

Tools Required

- **J 41480** Front and Rear Cover Alignment - Oil Pan Surface
- **J 41476** Front and Rear Cover Alignment Tool - Crankshaft Oil Seal Area

cardiagn.com

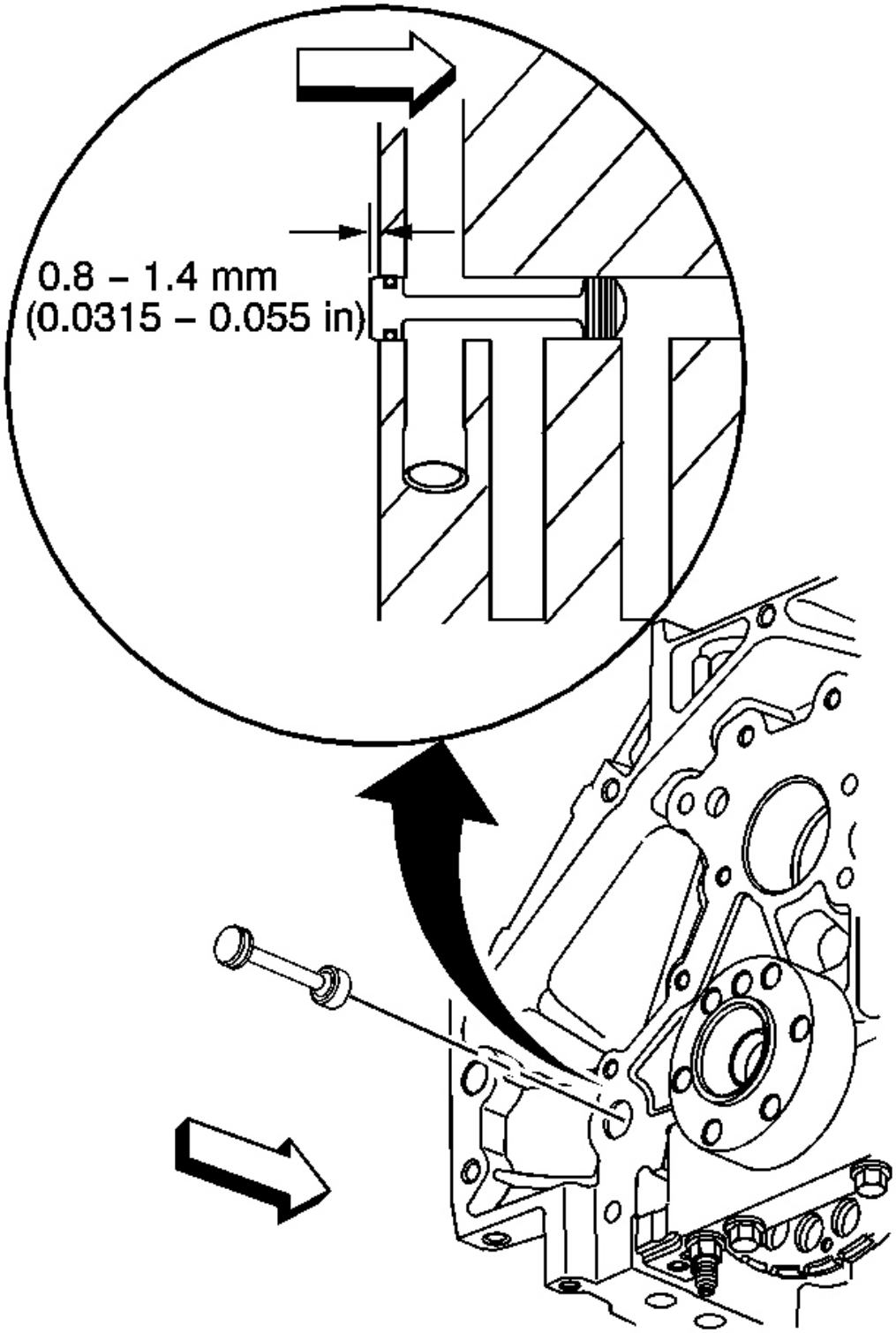

cardiagn.com

Fig. 71: View Of Engine Block Rear Oil Gallery Plug
Courtesy of GENERAL MOTORS CORP.

IMPORTANT:

- **Do not use the crankshaft rear oil seal or the engine rear cover gasket again.**
- **Do not apply any type sealant to the rear cover gasket, unless specified.**
- **The special tools in this procedure are used to properly align the engine rear cover at the oil pan surface and to center the crankshaft rear oil seal.**
- **The crankshaft rear oil seal will be installed after the rear cover has been installed and aligned. Install the rear cover without the crankshaft oil seal.**
  - **The crankshaft rear oil seal MUST be centered in relation to the crankshaft.**
  - **The oil pan sealing surface at the rear cover and engine block MUST be aligned within specifications.**
  - **An improperly aligned rear cover may cause premature rear oil seal wear and/or engine assembly oil leaks.**

1. Inspect the rear oil gallery plug for proper installation.

cardiagn.com

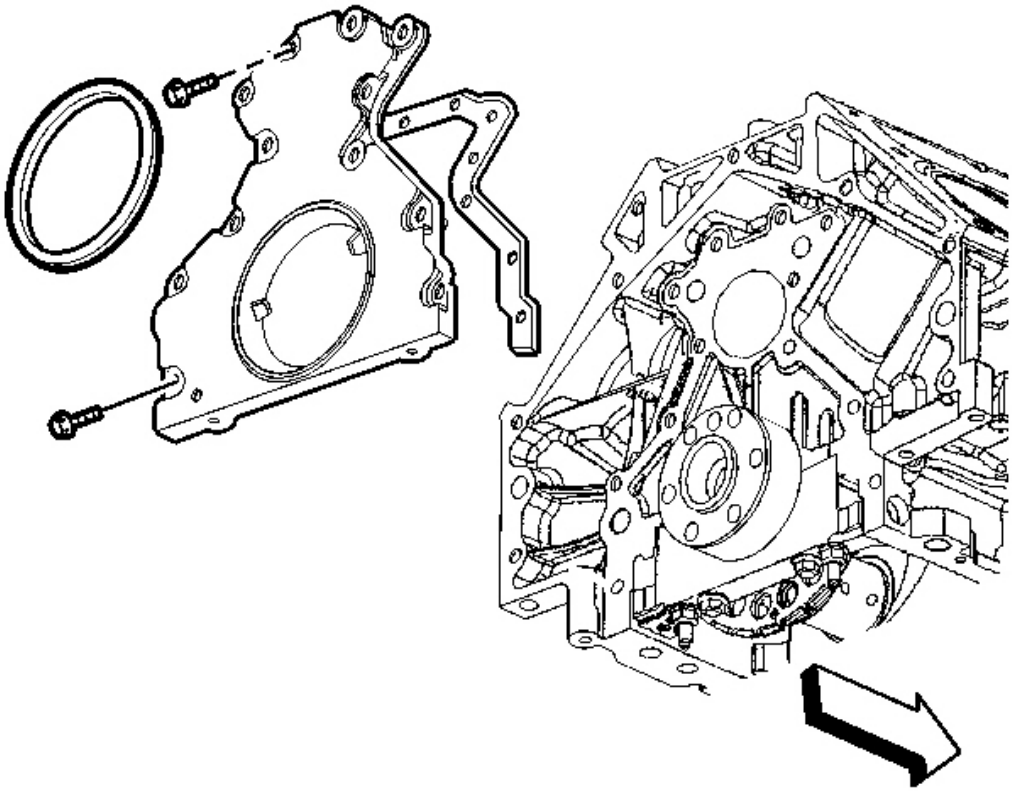

Fig. 72: View Of Rear Cover, Bolts & Gasket
Courtesy of GENERAL MOTORS CORP.

2. Install the rear cover gasket, rear cover and bolts.
3. Tighten the bolts finger tight. Do not overtighten.

cardiagn.com

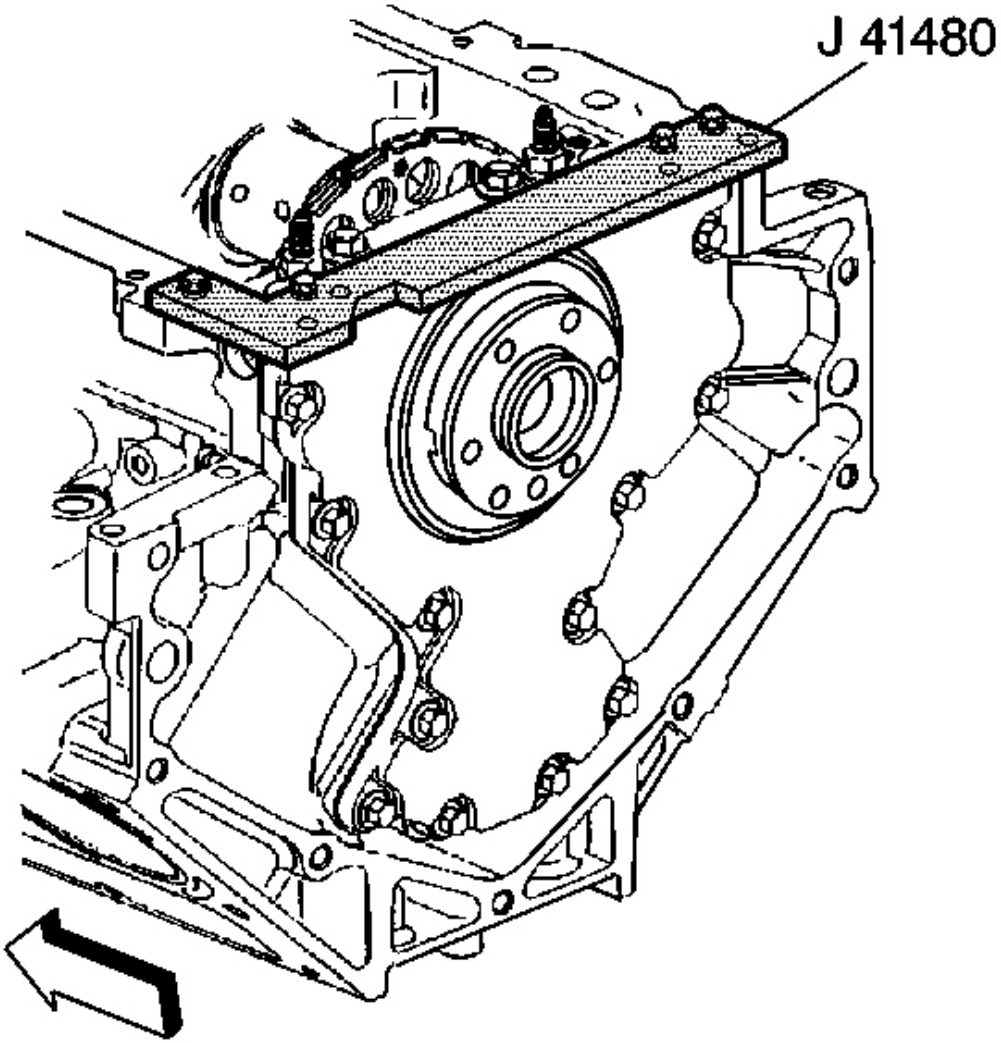

Fig. 73: View Of J 41480 & Bolts
Courtesy of GENERAL MOTORS CORP.

NOTE: **Refer to Fastener Notice in Cautions and Notices.**

IMPORTANT: **Start the J 41480 tool-to-rear cover bolts. Do not tighten the bolts at this time.**

4. Install the **J 41480** and bolts.

cardiagn.com

Tighten: Tighten the tool-to-engine block bolts to 25 N.m (18 lb ft).

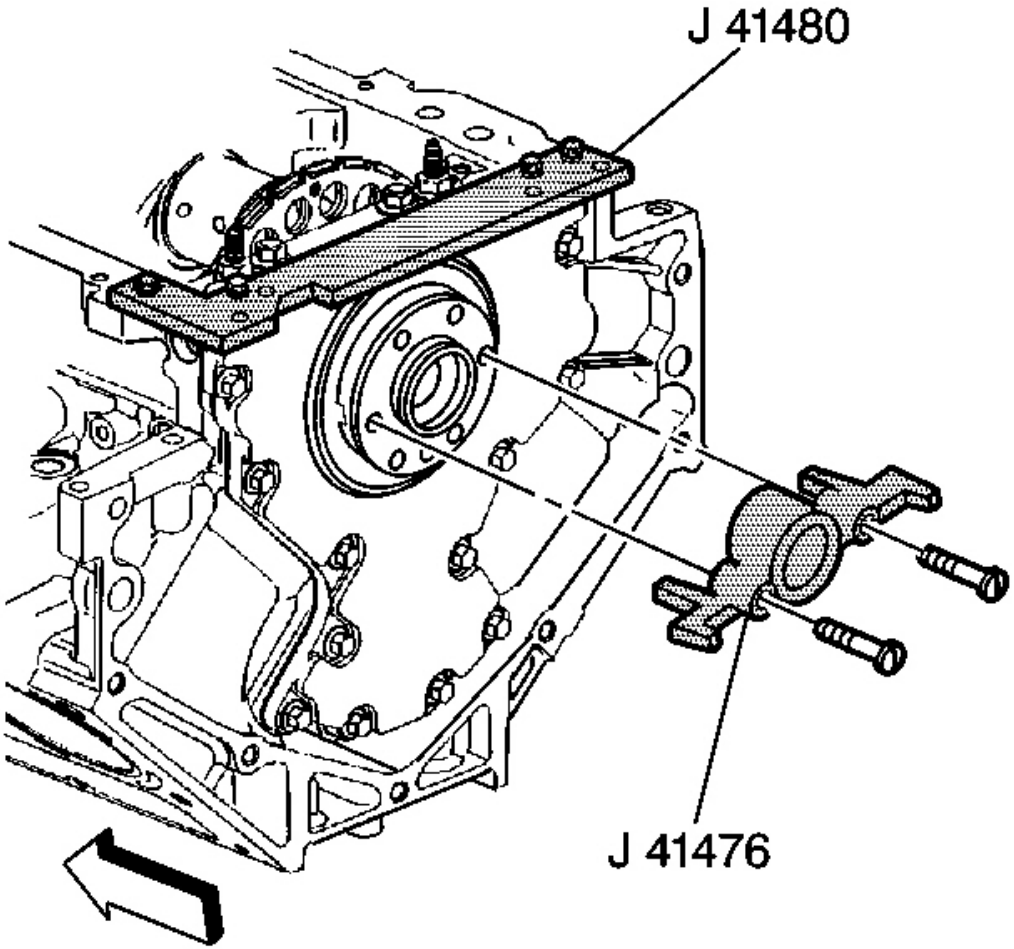

Fig. 74: View Of J 41480 & J 41476 Removed
Courtesy of GENERAL MOTORS CORP.

IMPORTANT: To properly align the rear cover, the J 41476 must be installed onto the rear of the crankshaft with the tool mounting bolts parallel to the oil pan surface.

5. Rotate the crankshaft until 2 opposing flywheel bolt holes are parallel to the oil pan surface.

cardiagn.com

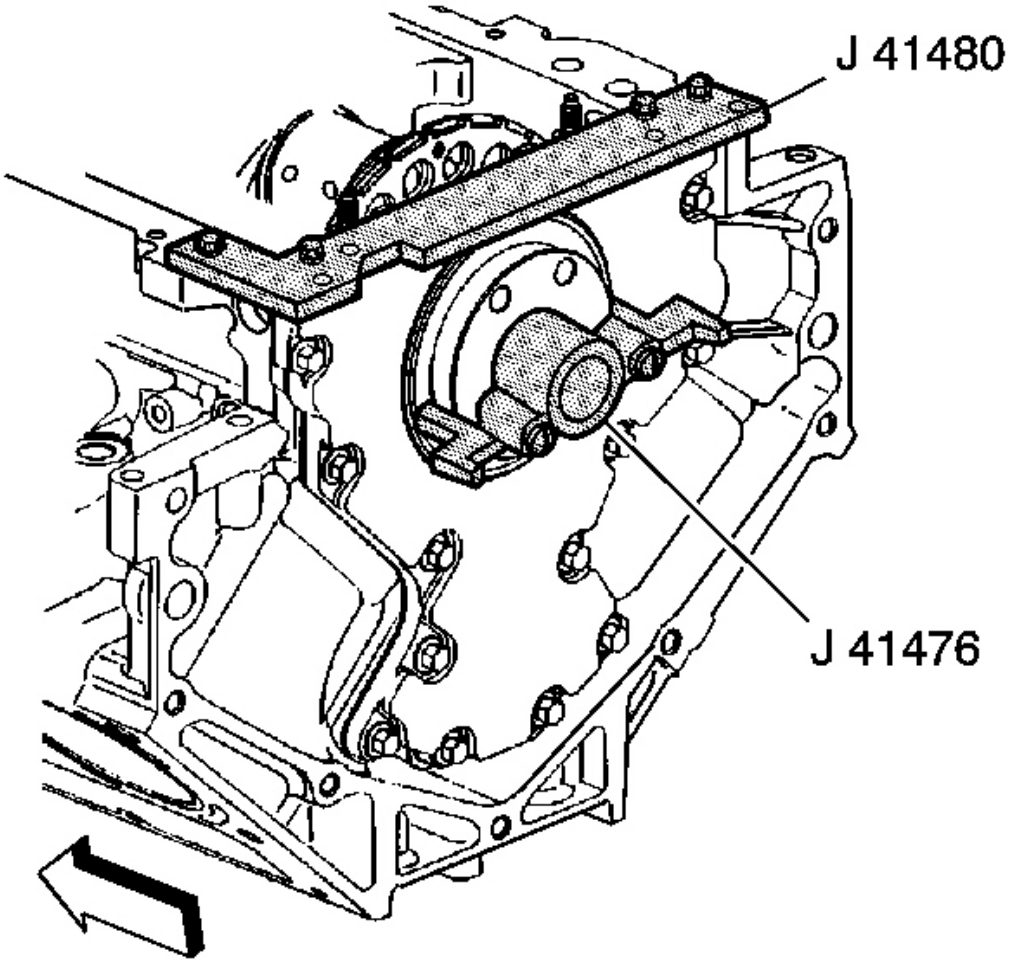

Fig. 75: View Of J 41480 & J 41476 Installed
Courtesy of GENERAL MOTORS CORP.

IMPORTANT: The tapered legs of the alignment tool must enter the rear cover oil seal bore.

6. Install the **J 41476** and bolts onto the rear of the crankshaft.

Tighten:

1. Tighten the tool mounting bolts until snug. Do not overtighten.
2. Tighten the **J 41480** tool-to-rear cover bolts evenly to 12 N.m (106 lb in).
3. Tighten the rear cover bolts to 25 N.m (18 lb ft).

cardiagn.com

7. Remove the tools.

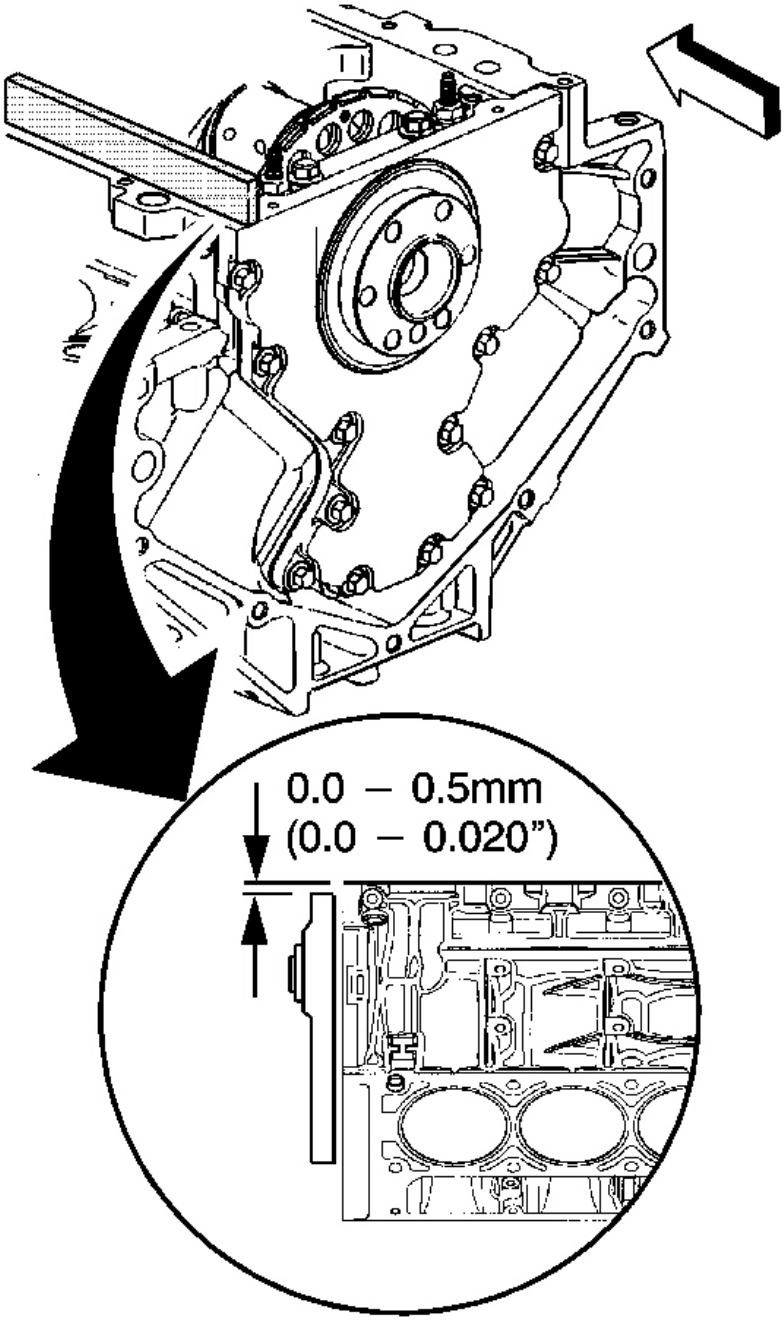

Fig. 76: Measuring The Rear Cover-To-Engine Block Oil Pan Surface For Flatness
Courtesy of GENERAL MOTORS CORP.

cardiagn.com

8. Measure the rear cover-to-engine block oil pan surface for flatness.
    1. Place a straight edge onto the engine block and rear cover oil pan sealing surfaces.

       Avoid contact with the portion of the gasket that protrudes into the oil pan surface.

    2. Insert a feeler gage between the rear cover and the straight edge. The cover must be flush with the oil pan or no more than 0.5 mm (0.02 in) below flush.
9. If the rear cover-to-engine block oil pan surface alignment is not within specifications, repeat the cover alignment procedure.
10. If the correct rear cover-to-engine block alignment at the oil pan surface cannot be obtained, replace the rear cover.

CRANKSHAFT REAR OIL SEAL INSTALLATION

Tools Required

J 41479 Crankshaft Rear Oil Seal Installer

cardiagn.com

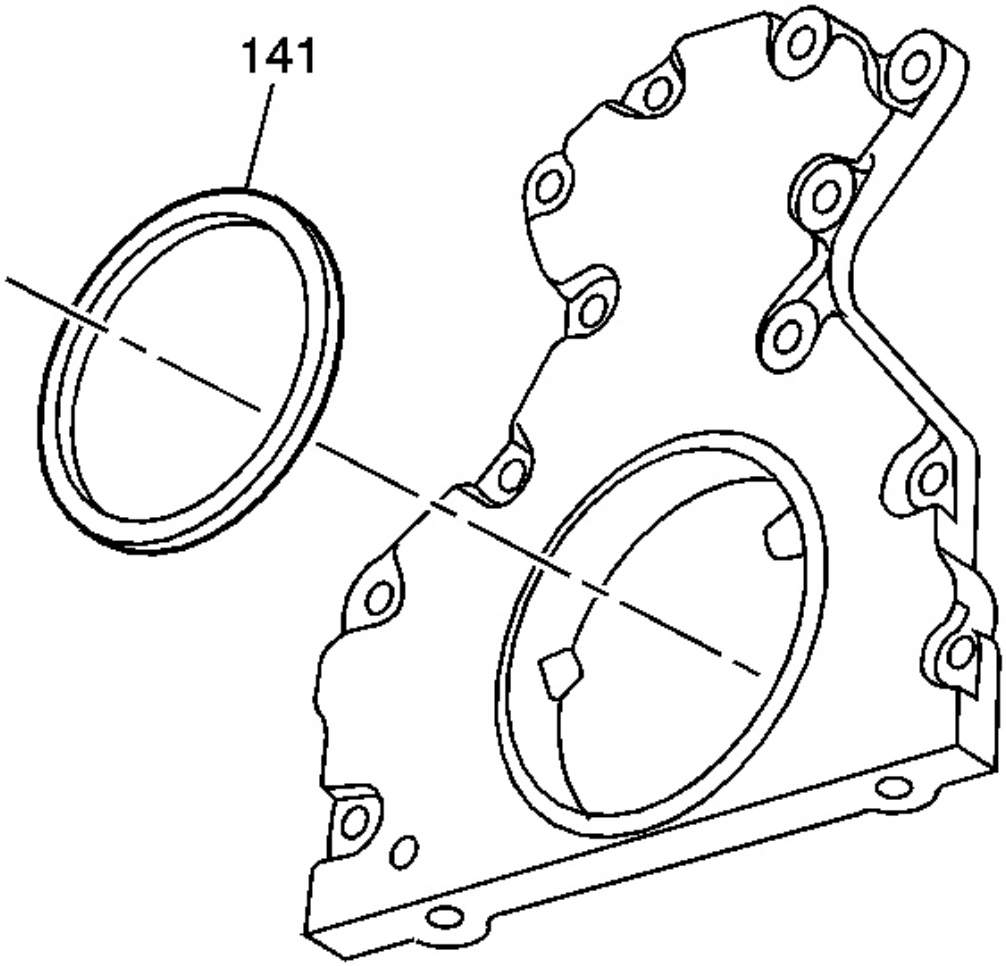

Fig. 77: View Of Crankshaft Rear Oil Seal
Courtesy of GENERAL MOTORS CORP.

IMPORTANT:

- **Do not lubricate the oil seal inside diameter (ID) or the crankshaft surface.**
- **Do not use the crankshaft rear oil seal again.**

1. Lubricate the outside diameter (OD) of the oil seal (141) with clean engine oil.

   DO NOT allow oil or other lubricants to contact the seal surface.

2. Lubricate the rear cover oil seal bore with clean engine oil.

cardiagn.com

DO NOT allow oil or other lubricants to contact the crankshaft surface.

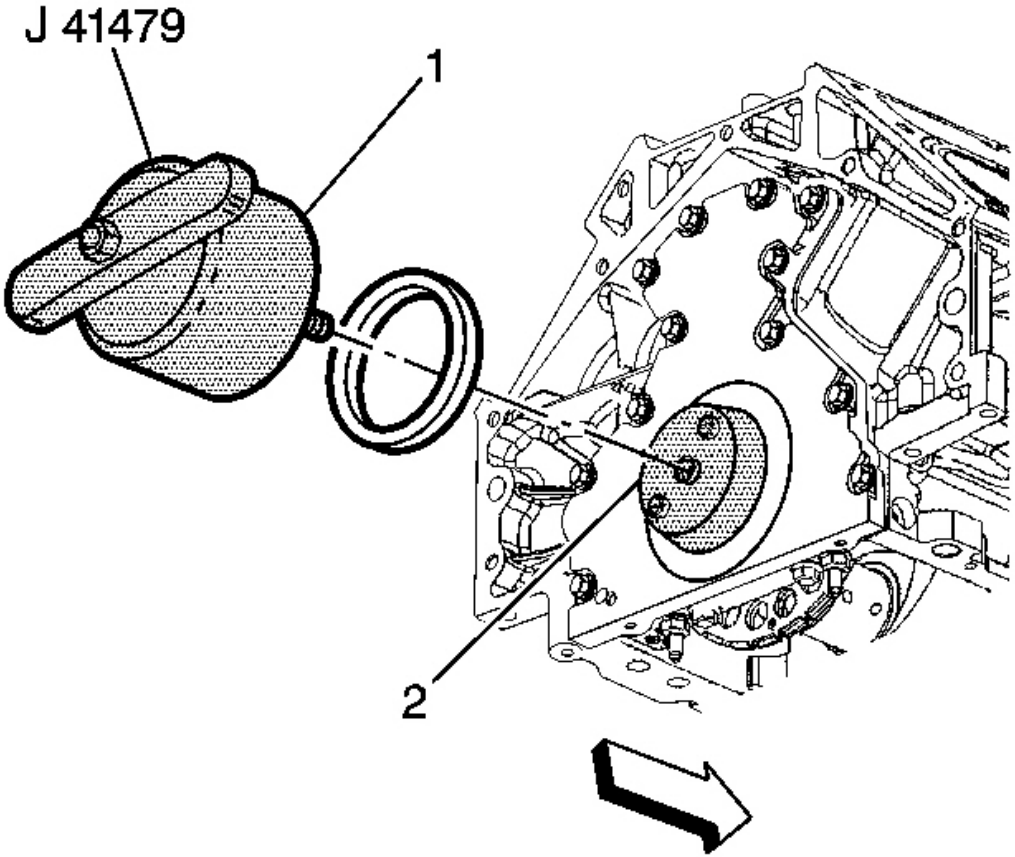

Fig. 78: View Of J 41479
Courtesy of GENERAL MOTORS CORP.

3. Install the **J 41479** cone (2) and bolts onto the rear of the crankshaft.
4. Tighten the bolts until snug. Do not overtighten.
5. Install the rear oil seal onto the tapered cone (2) and push the seal to the rear cover bore.
6. Thread the **J 41479** threaded rod into the tapered cone until the tool (1) contacts the oil seal.
7. Align the oil seal onto the tool (1).
8. Rotate the handle of the tool (1) clockwise until the seal enters the rear cover and bottoms into the cover bore.
9. Remove the tool.

ENGINE FRONT COVER INSTALLATION

cardiagn.com

Tools Required

- **J 41480** Front and Rear Cover Alignment - Oil Pan Surface
- **J 41476** Front and Rear Cover Alignment Tool - Crankshaft Oil Seal Area

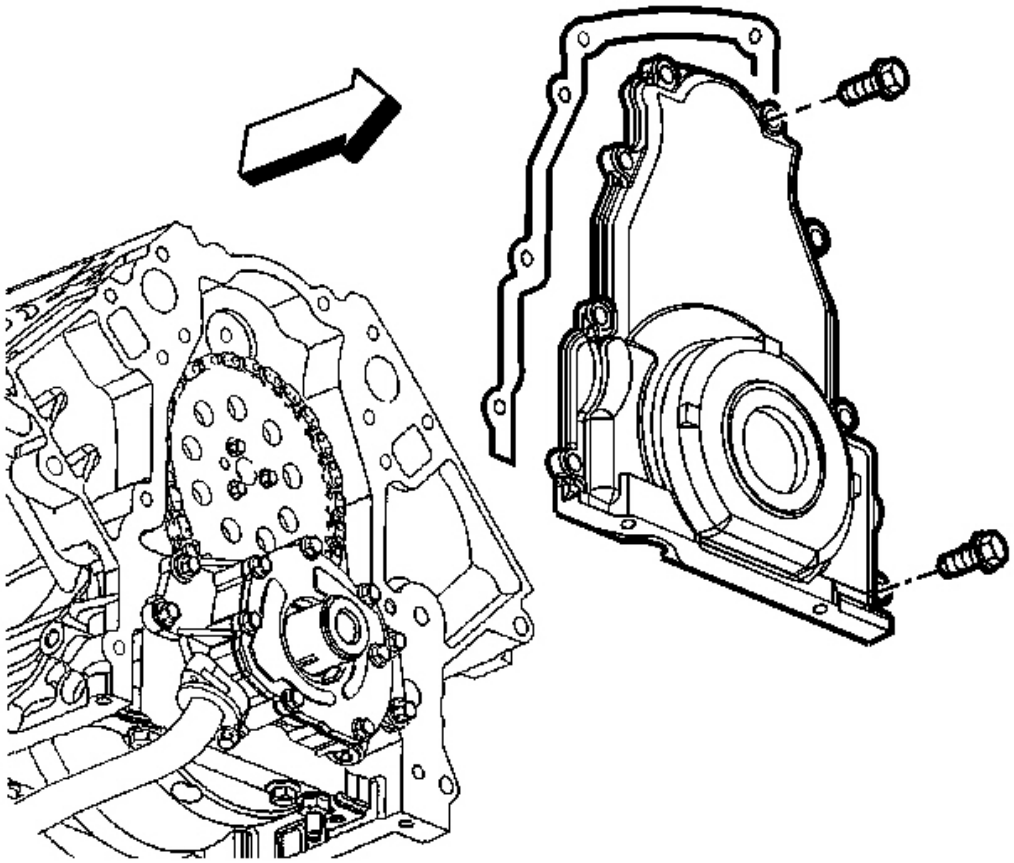

Fig. 79: View Of Front Cover & Gasket
Courtesy of GENERAL MOTORS CORP.

IMPORTANT:

- **Do not use the crankshaft oil seal or the engine front cover gasket again.**
- **Do not apply any type sealant to the front cover gasket, unless specified.**
- **The special tools in this procedure are used to properly align the engine front cover at the oil pan surface and to center the crankshaft front oil seal.**

cardiagn.com

- **All gasket surfaces should be free of oil or other foreign material during assembly.**

  The crankshaft front oil seal MUST be centered in relation to the crankshaft.

- **The oil pan sealing surface at the front cover and engine block MUST be aligned within specifications.**
- **An improperly aligned front cover may cause premature front oil seal wear and/or engine assembly oil leaks.**

1. Install the front cover gasket, cover, and bolts onto the engine.
2. Tighten the cover bolts finger tight. Do not overtighten.

cardiagn.com

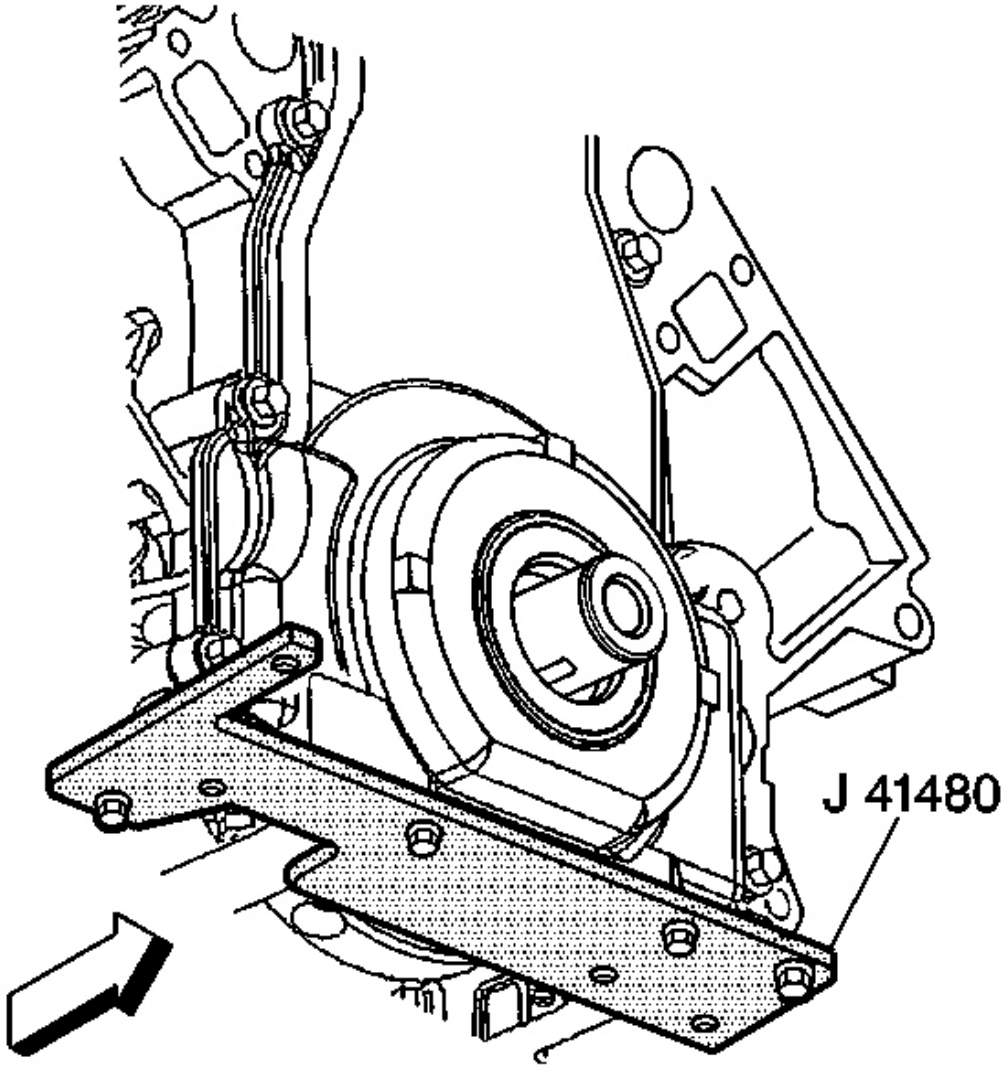

Fig. 80: View Of J 41480 Installed
Courtesy of GENERAL MOTORS CORP.

NOTE: **Refer to Fastener Notice in Cautions and Notices.**

IMPORTANT: Start the tool-to-front cover bolts. Do not tighten the bolts at this time.

3. Install the **J 41480** .

cardiagn.com

Tighten: Tighten the tool-to-engine block bolts to 25 N.m (18 lb ft).

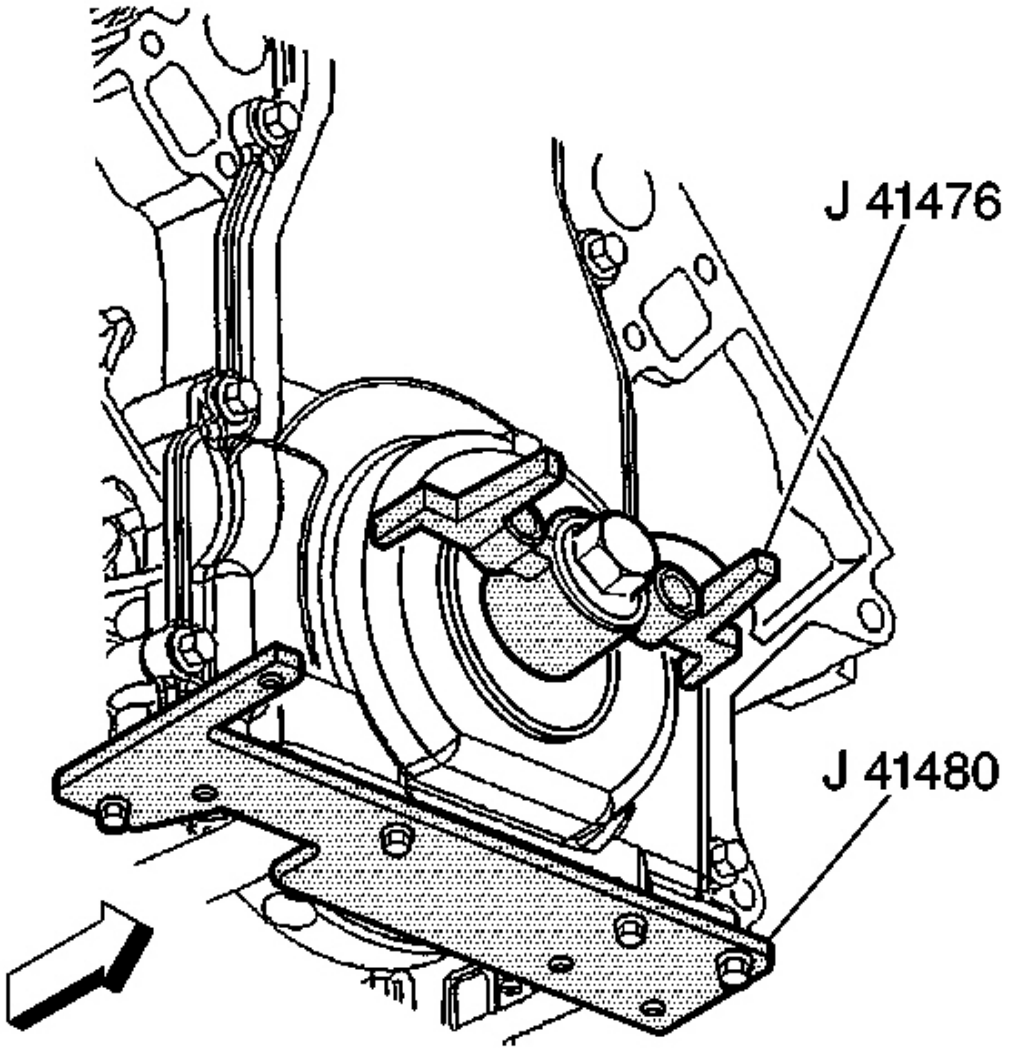

Fig. 81: View Of J 41476 & J 41480 Installed
Courtesy of GENERAL MOTORS CORP.

IMPORTANT: Align the tapered legs of the tool with the machined alignment surfaces on the front cover.

4. Install the **J 41476** .
5. Install the crankshaft balancer bolt.

cardiagn.com

Tighten:

1. Tighten the crankshaft balancer bolt by hand until snug. Do not overtighten.
2. Tighten the **J 41480** .
3. Tighten the engine front cover bolts to 25 N.m (18 lb ft).

6. Remove the tools.

cardiagn.com

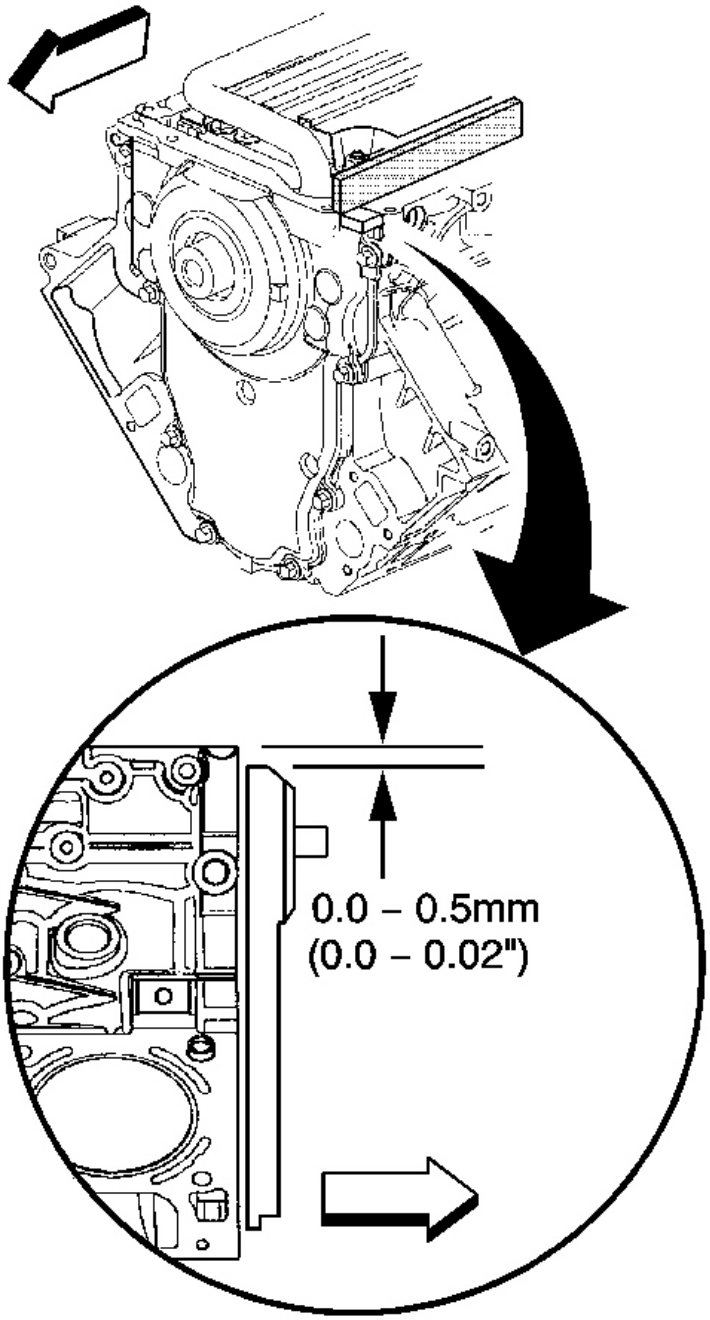

Fig. 82: Measuring The Oil Pan Surface Flatness, Front Cover-To-Engine Block
Courtesy of GENERAL MOTORS CORP.

7. Measure the oil pan surface flatness, front cover-to-engine block.

cardiagn.com

1. Place a straight edge across the engine block and front cover oil pan sealing surfaces.

   Avoid contact with the portion of the gasket that protrudes into the oil pan surface.

2. Insert a feeler gage between the front cover and the straight edge tool. The cover must be flush with the oil pan surface or no more than 0.5 mm (0.02 in) below flush.

8. If the front cover-to-engine block oil pan surface alignment is not within specifications, repeat the cover alignment procedure.
9. If the correct front cover-to-engine block alignment cannot be obtained, replace the front cover.

CRANKSHAFT FRONT OIL SEAL INSTALLATION

Tools Required

J 41478 Crankshaft Front Oil Seal Installer

cardiagn.com

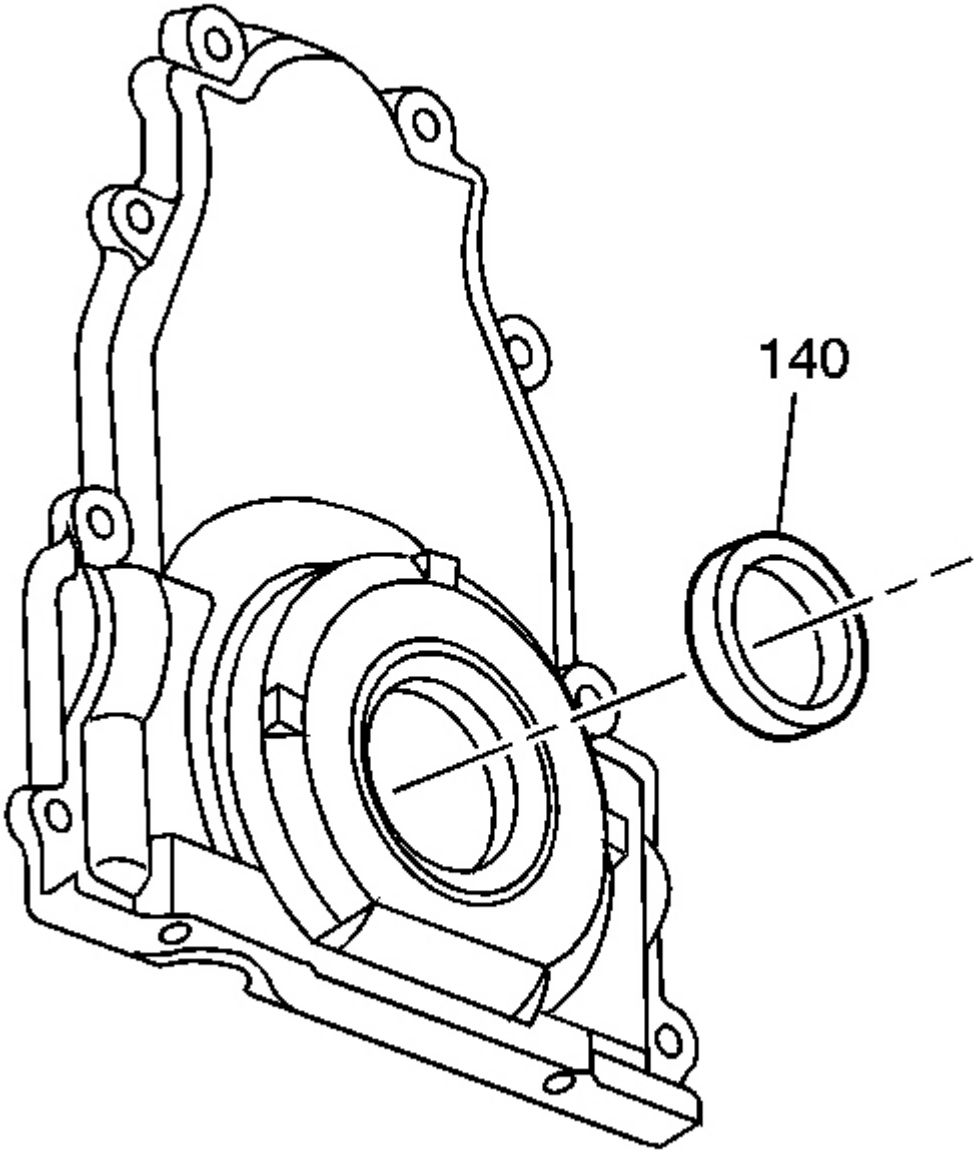

Fig. 83: View Of Crankshaft Front Oil Seal
Courtesy of GENERAL MOTORS CORP.

IMPORTANT:

- **Do not lubricate the oil seal sealing surface.**
- **Do not use the crankshaft front oil seal again.**

cardiagn.com

1. Lubricate the outer edge of the oil seal (140) with clean engine oil.
2. Lubricate the front cover oil seal bore with clean engine oil.

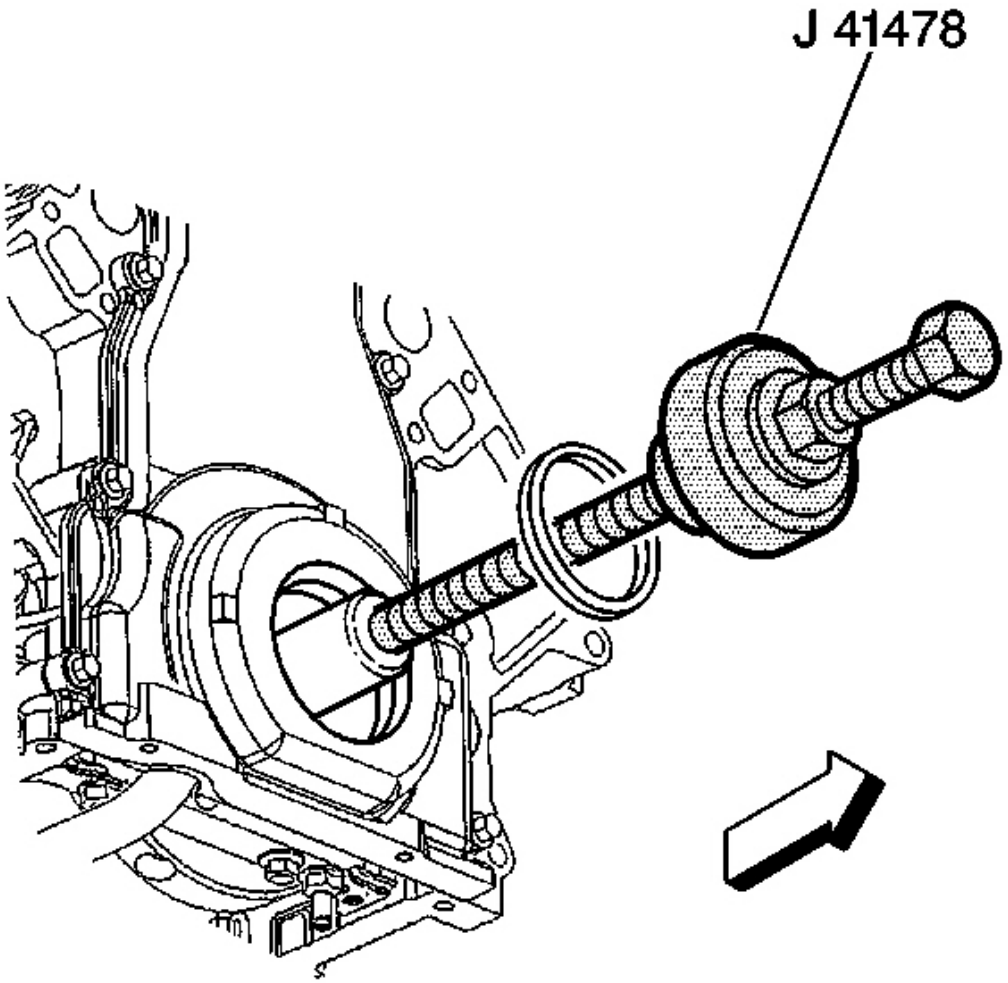

Fig. 84: View Of J 41478
Courtesy of GENERAL MOTORS CORP.

3. Install the crankshaft front oil seal onto the **J 41478** guide.
4. Install the **J 41478** threaded rod, with nut, washer, guide, and oil seal, into the end of the crankshaft.
5. Use the **J 41478** in order to install the oil seal into the cover bore.
    1. Use a wrench and hold the hex on the installer bolt.
    2. Use a second wrench and rotate the installer nut clockwise until the seal bottoms in the cover bore.

cardiagn.com

3. Remove the tool.
4. Inspect the oil seal for proper installation. The oil seal should be installed evenly and completely into the front cover bore.

OIL PAN INSTALLATION

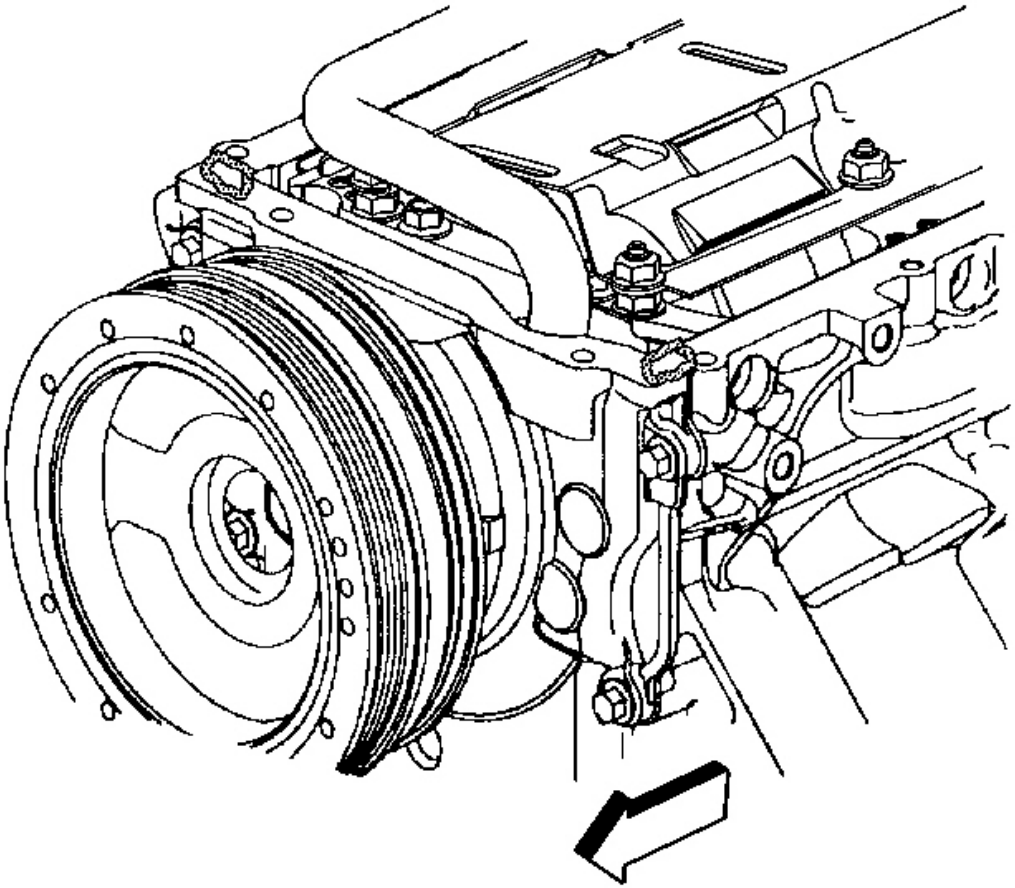

Fig. 85: Front Cover Gasket That Protrude & Oil Pan Surface
Courtesy of GENERAL MOTORS CORP.

IMPORTANT:

- **All gasket surfaces should be free of oil or other foreign material during assembly.**
- **The alignment of the structural oil pan is critical. The rear bolt hole locations of the oil pan provide mounting points for the transmission housing. To ensure the rigidity of the powertrain and correct**

cardiagn.com

transmission alignment, it is important that the rear of the block and the rear of the oil pan are flush or even. The rear of the oil pan must NEVER protrude beyond the engine block and transmission housing plane.

- **DO NOT use the oil pan gaskets again.**
- **It is not necessary to rivet the NEW gasket to the oil pan.**
- **It is not necessary to remove the oil level sensor prior to oil pan installation.**

1. Apply a 5 mm (0.2 in) bead of sealant GM P/N 12378190 or equivalent 20 mm (0.8 in) long to the engine block. Apply the sealant directly onto the tabs of the front cover gasket that protrude into the oil pan surface.

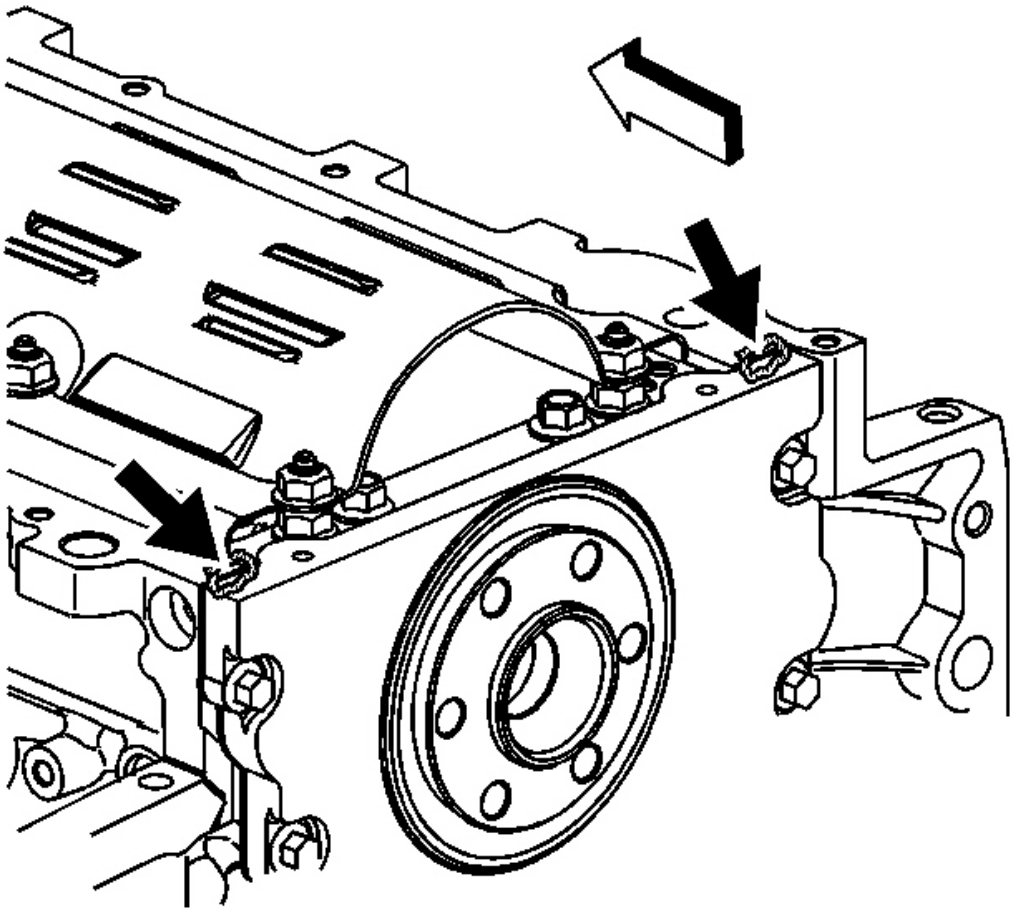

Fig. 86: View Of Sealant On Engine Rear Cover Gasket Tabs

cardiagn.com

Courtesy of GENERAL MOTORS CORP.

2. Apply a 5 mm (0.2 in) bead of sealant GM P/N 12378190 or equivalent 20 mm (0.8 in) long to the engine block. Apply the sealant directly onto the tabs of the rear cover gasket that protrude into the oil pan surface.

cardiagn.com

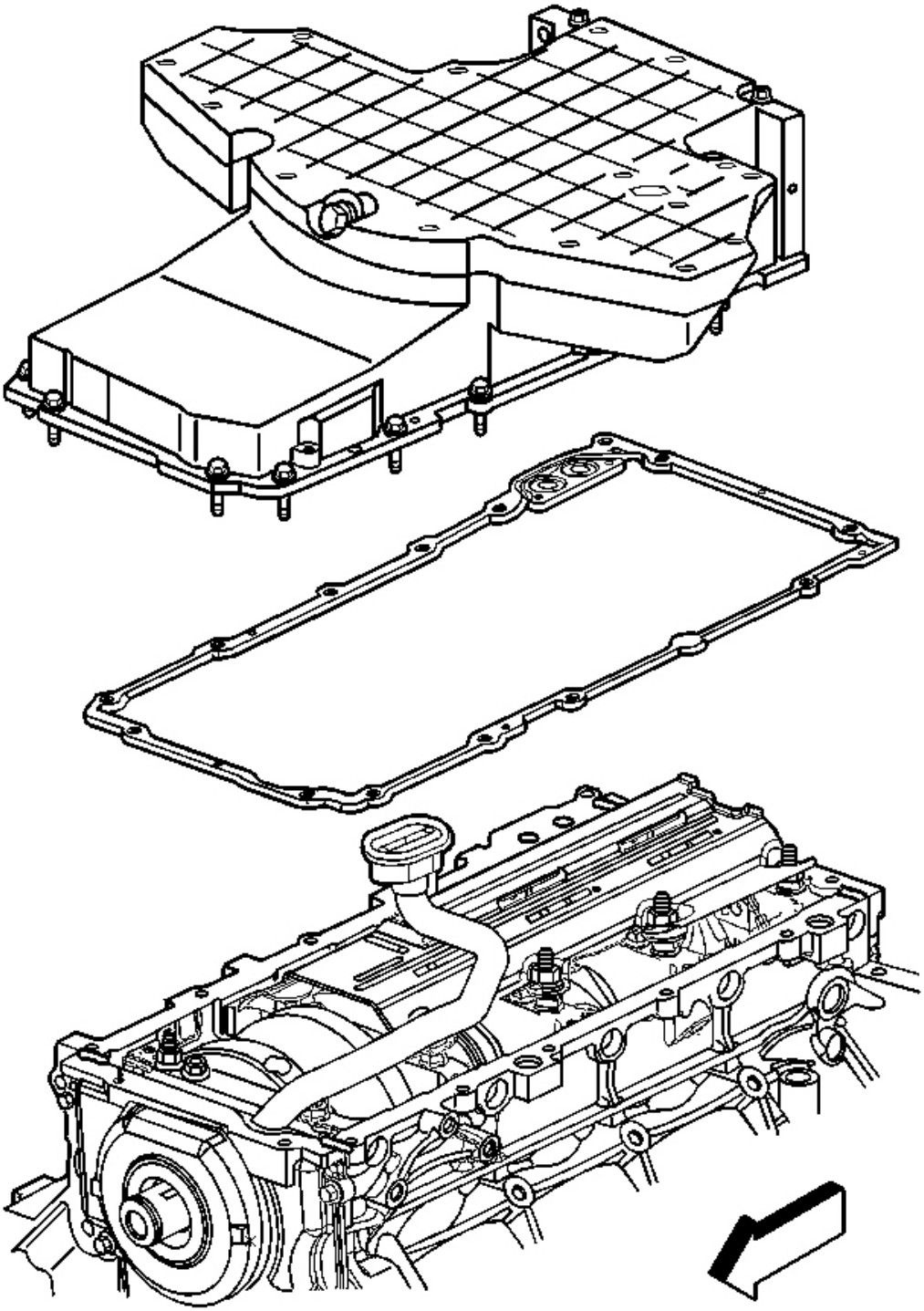

cardiagn.com

Fig. 87: Oil Pan, Upper Gasket, Bolts & Engine Block
Courtesy of GENERAL MOTORS CORP.

IMPORTANT: Be sure to align the oil gallery passages in the oil pan and engine block properly with the oil pan gasket.

3. Pre-assemble the oil pan gasket to the pan, upper.
    1. Install the gasket onto the oil pan, upper.
    2. Install the oil pan bolts to the pan and through the gasket.
4. Install the oil pan, upper, gasket and bolts to the engine block.
5. Tighten bolts finger tight. Do not overtighten.
6. Place a straight edge across the rear of the engine block and the rear of the oil pan at the transmission housing mounting surfaces.

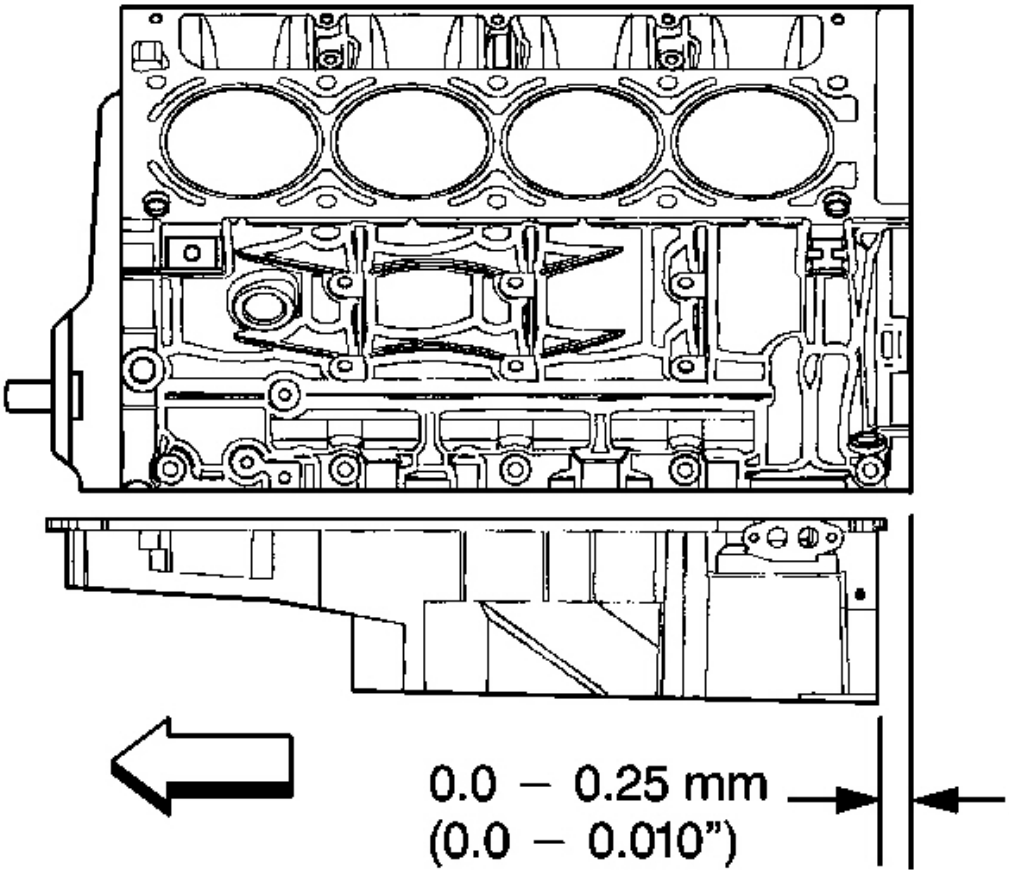

cardiagn.com

Fig. 88: Measuring The Oil Pan-To-Engine Block Alignment
Courtesy of GENERAL MOTORS CORP.

NOTE: Refer to Fastener Notice in Cautions and Notices.

7. Align the oil pan - upper - until the rear of engine block and rear of oil pan are flush or even.

   Tighten:
   1. Tighten the oil pan-to-block and oil pan-to-front cover bolts to 25 N.m (18 lb ft).
   2. Tighten the oil pan-to-rear cover bolts to 12 N.m (106 lb in).

8. Measure the oil pan-to-engine block alignment.
   1. Place a straight edge across the rear of the engine block and rear of oil pan at the transmission housing mounting surfaces.

      IMPORTANT: The rear of the oil pan must NEVER protrude beyond the engine block and transmission housing mounting surfaces.

   2. Insert a feeler gage between the straight edge and the oil pan transmission housing mounting surface and check to make sure that there is no more than a 0.25 mm (0.01 in) gap between the pan and straight edge.
   3. If the oil pan alignment is not within specifications, remove the oil pan and repeat the above procedure.

cardiagn.com

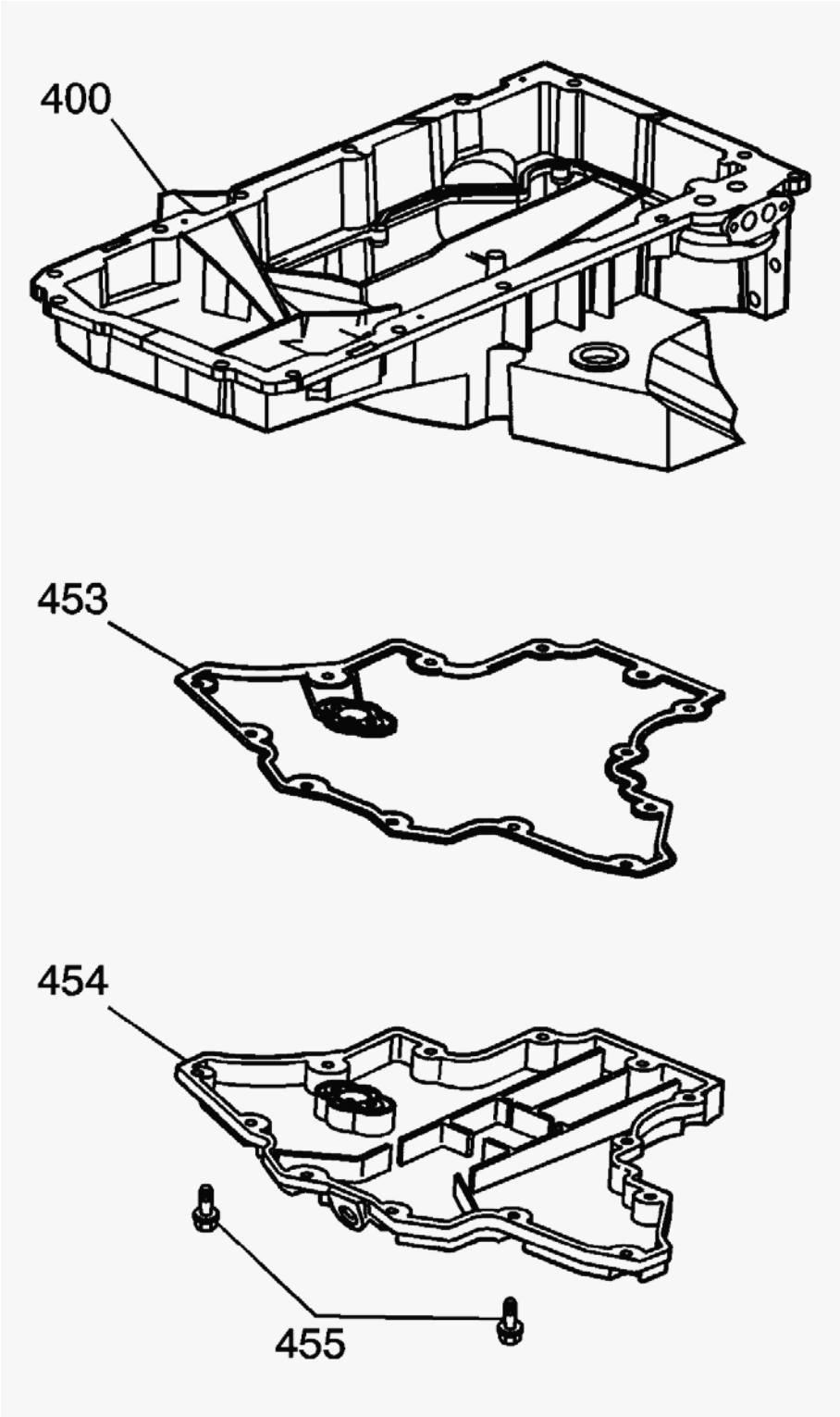

Fig. 89: Oil Pan, Lower & Gasket
Courtesy of GENERAL MOTORS CORP.

9. Install the oil pan, lower (454), and gasket (453).

cardiagn.com

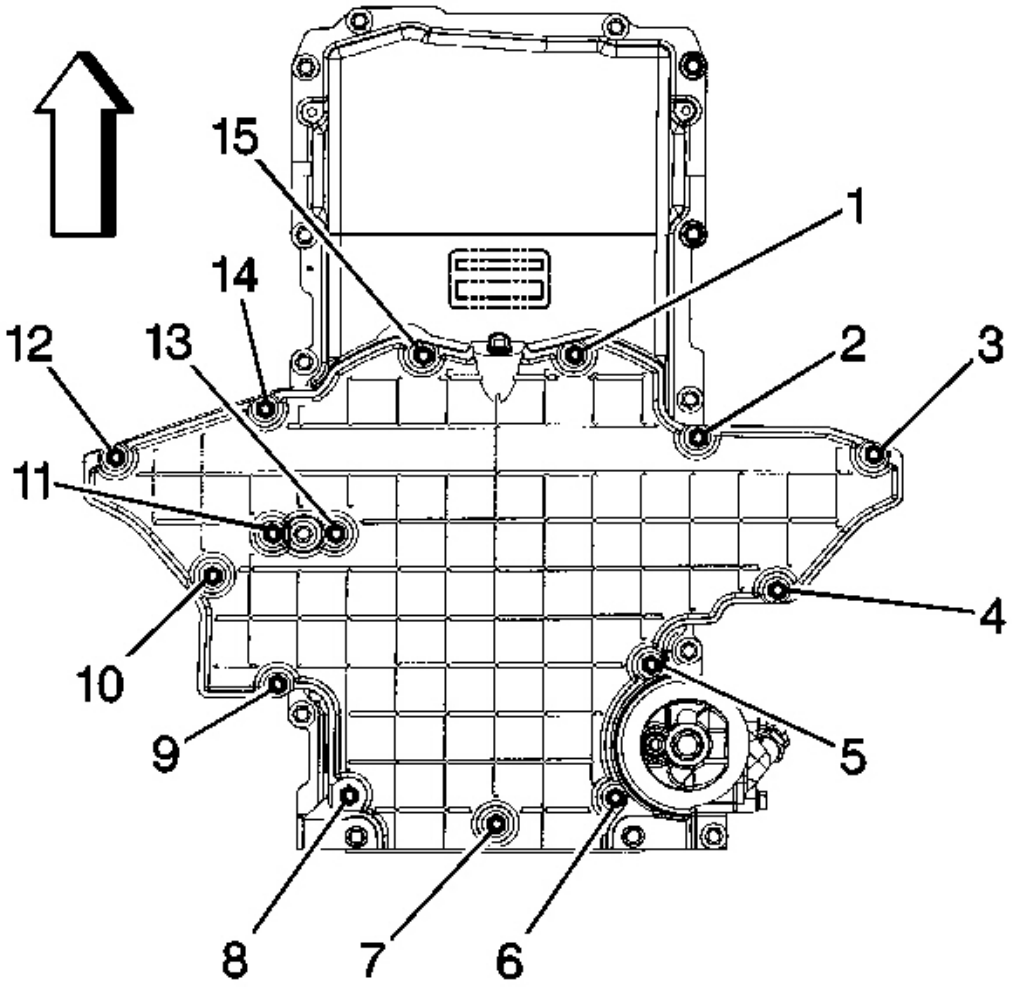

Fig. 90: Oil Pan & Lower Bolts
Courtesy of GENERAL MOTORS CORP.

10. Install the oil pan, lower bolts (1-15).

    Tighten: Tighten the oil pan, lower bolts to 12 N.m (106 lb in).

    Tighten the bolts in a crossing pattern, alternating from side to side.

cardiagn.com

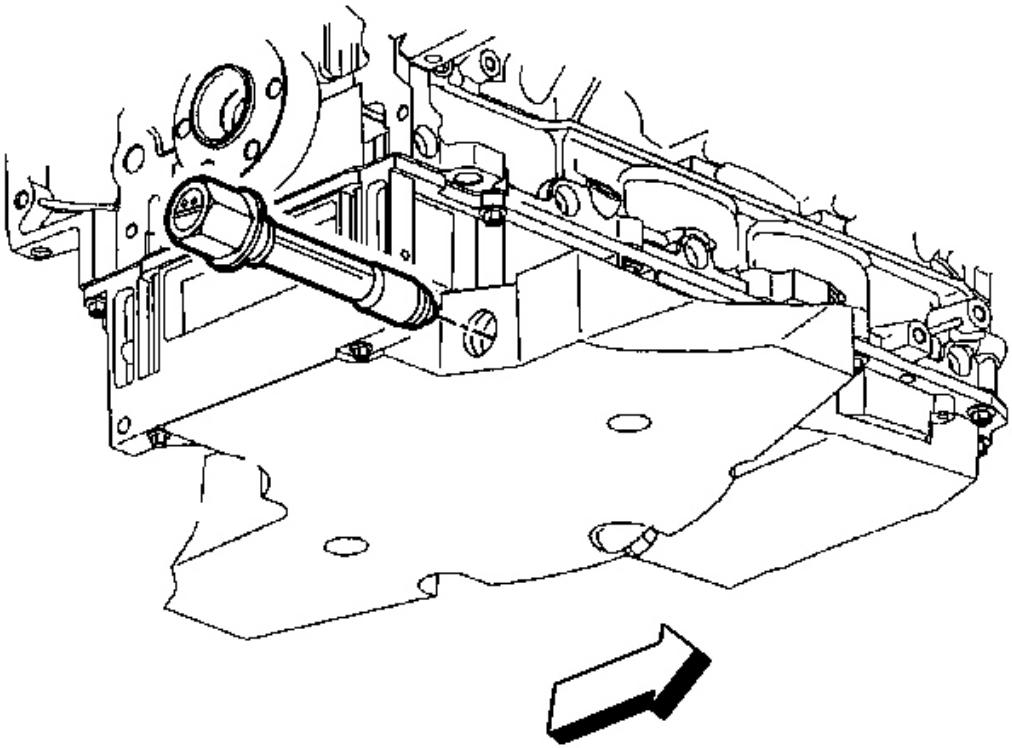

Fig. 91: Oil Level Sensor
Courtesy of GENERAL MOTORS CORP.

11. Install the oil level sensor.

    Tighten: Tighten the oil level sensor to 13 N.m (115 lb in).

cardiagn.com

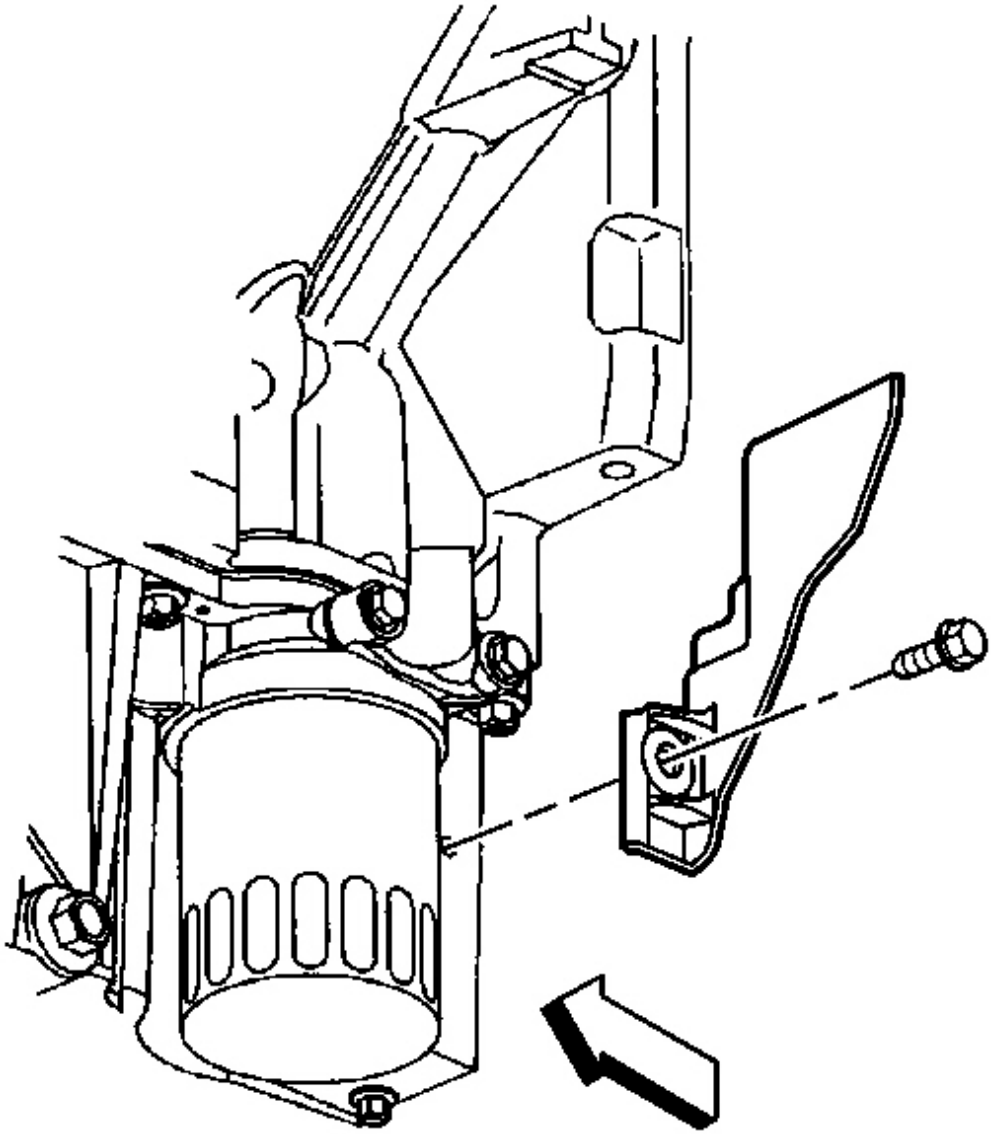

Fig. 92: View Of Left Closeout Cover & Bolt
Courtesy of GENERAL MOTORS CORP.

12. Install the left closeout cover and bolt.

    Tighten: Tighten the closeout cover bolt to 12 N.m (106 lb in).

cardiagn.com

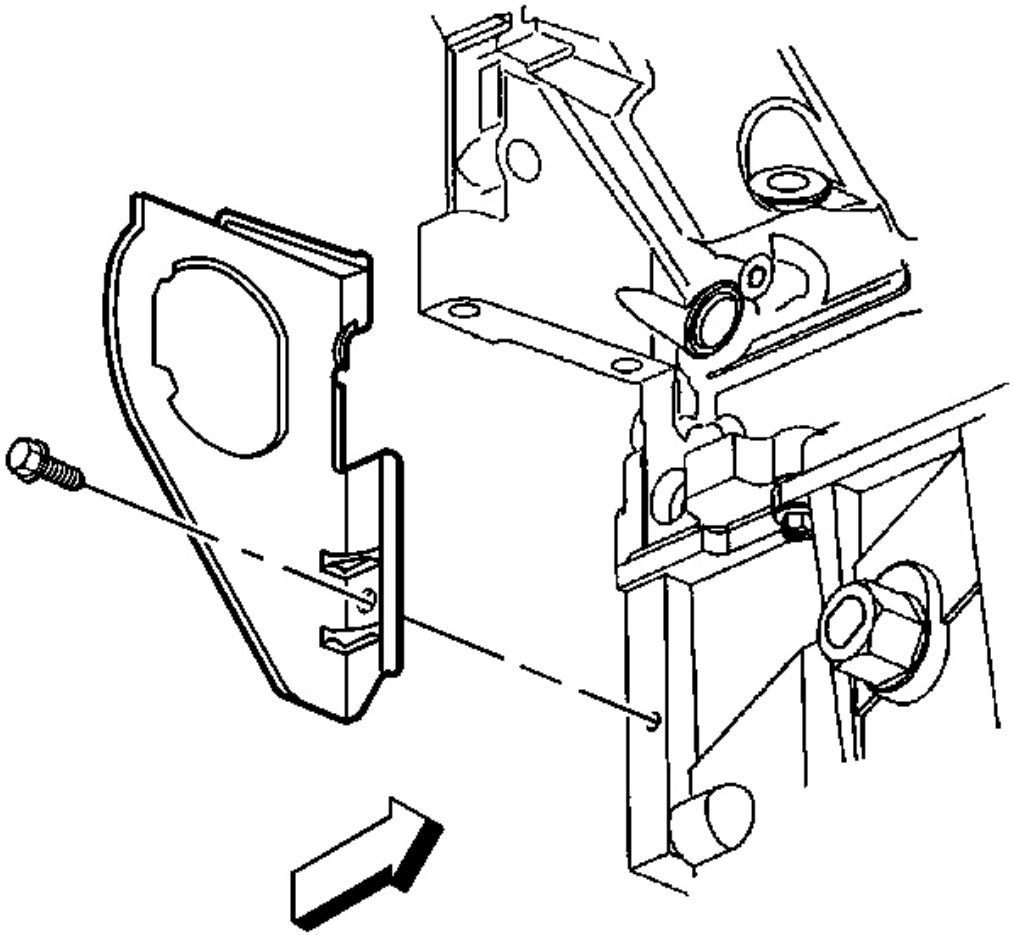

Fig. 93: View Of Right Closeout Cover & Bolt
Courtesy of GENERAL MOTORS CORP.

13. Install the right closeout cover and bolt.

    Tighten: Tighten the closeout cover bolt to 12 N.m (106 lb in).

OIL FILTER, ADAPTER, PAN COVER INSTALLATION

cardiagn.com

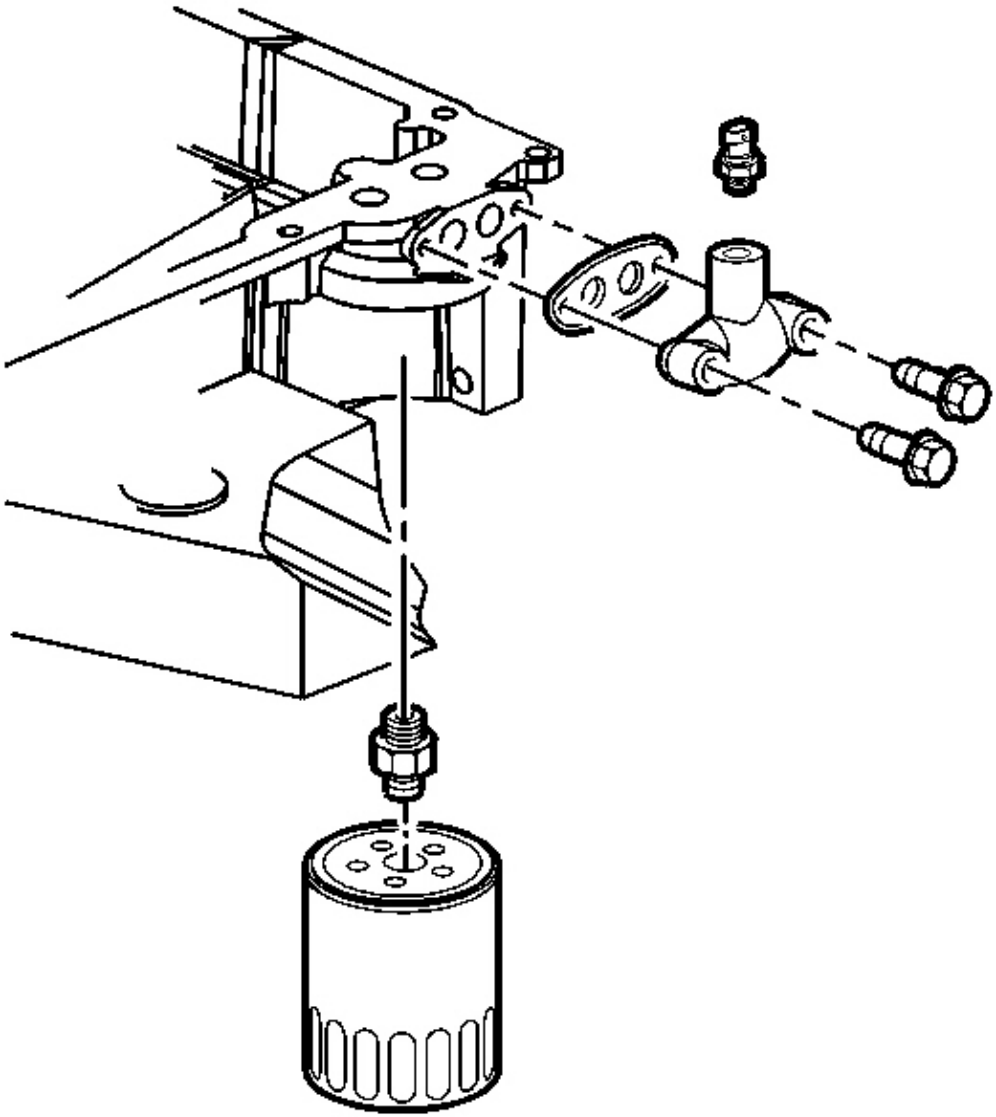

Fig. 94: Oil Pan Cover Gasket & Oil Temperature Sensor
Courtesy of GENERAL MOTORS CORP.

NOTE: Refer to Fastener Notice in Cautions and Notices.

1. Install a NEW oil pan cover gasket, the transfer cover and the bolts.

   Tighten: Tighten the oil pan cover bolts to 12 N.m (106 lb in).

cardiagn.com

2. Install the oil temperature sensor.

   Tighten: Tighten the oil temperature sensor to 20 N.m (15 lb ft).

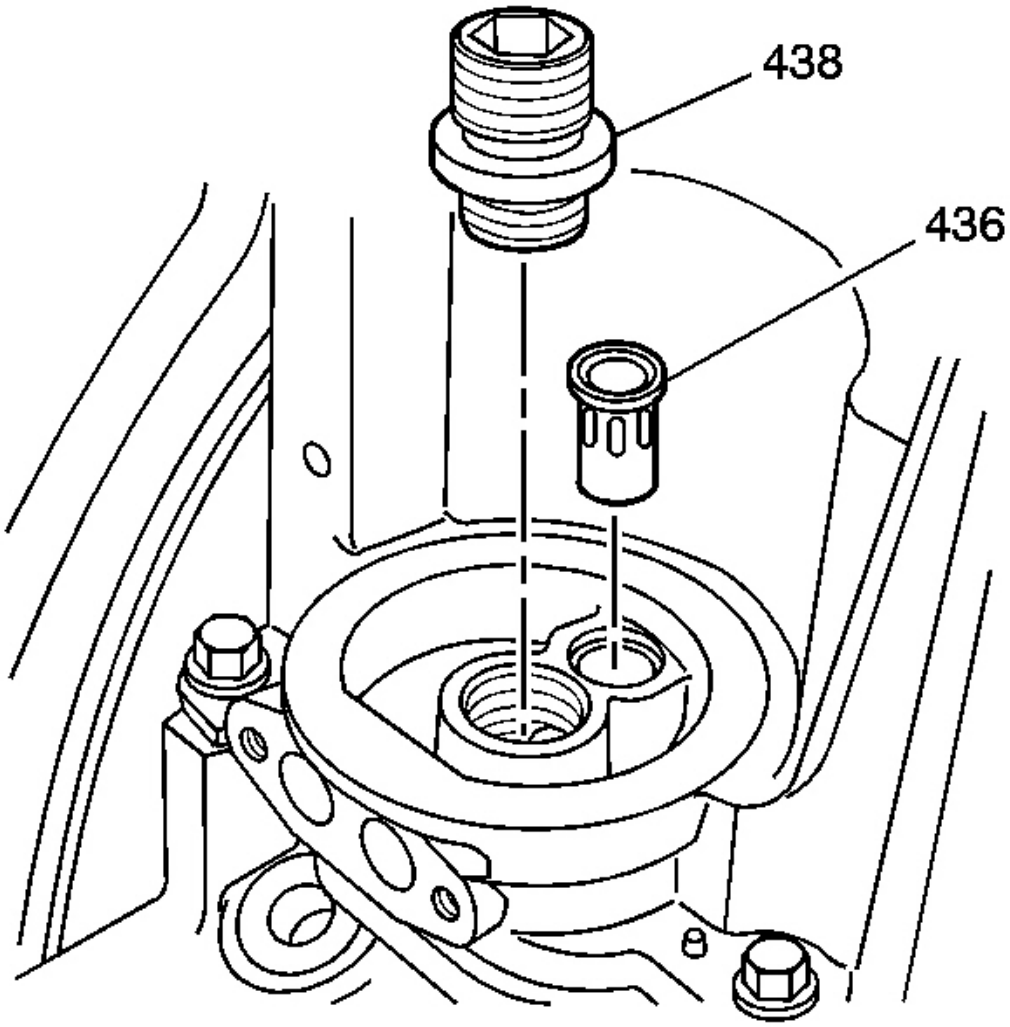

Fig. 95: View Of Oil Filter Fitting & Bypass Valve
Courtesy of GENERAL MOTORS CORP.

3. Install a new oil filter bypass valve (436) into the oil pan, if required.
4. Install the oil filter fitting (438).

   Tighten: Tighten the oil filter to 55 N.m (40 lb ft).

cardiagn.com

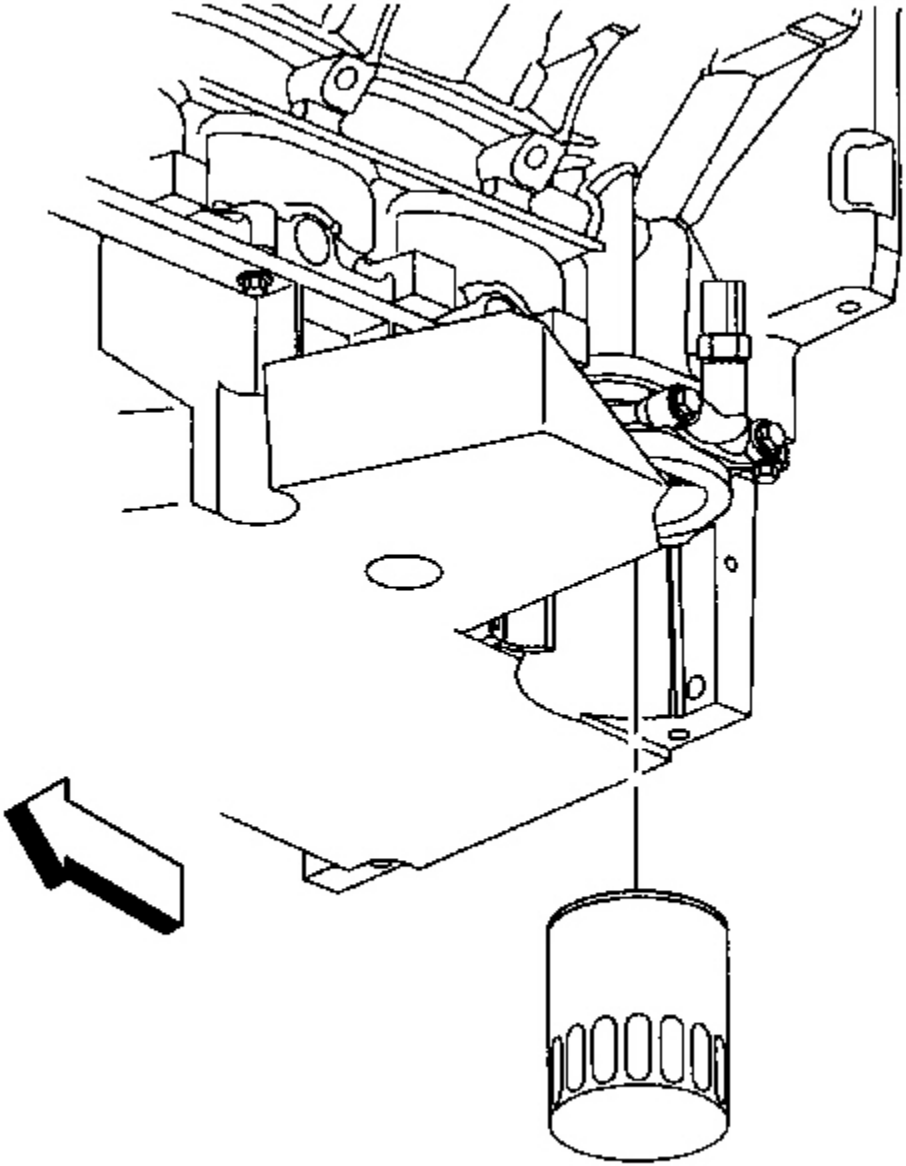

Fig. 96: Oil Filter
Courtesy of GENERAL MOTORS CORP.

5. Install the oil filter.

   Tighten: Tighten the oil filter to 30 N.m (22 lb ft).

cardiagn.com

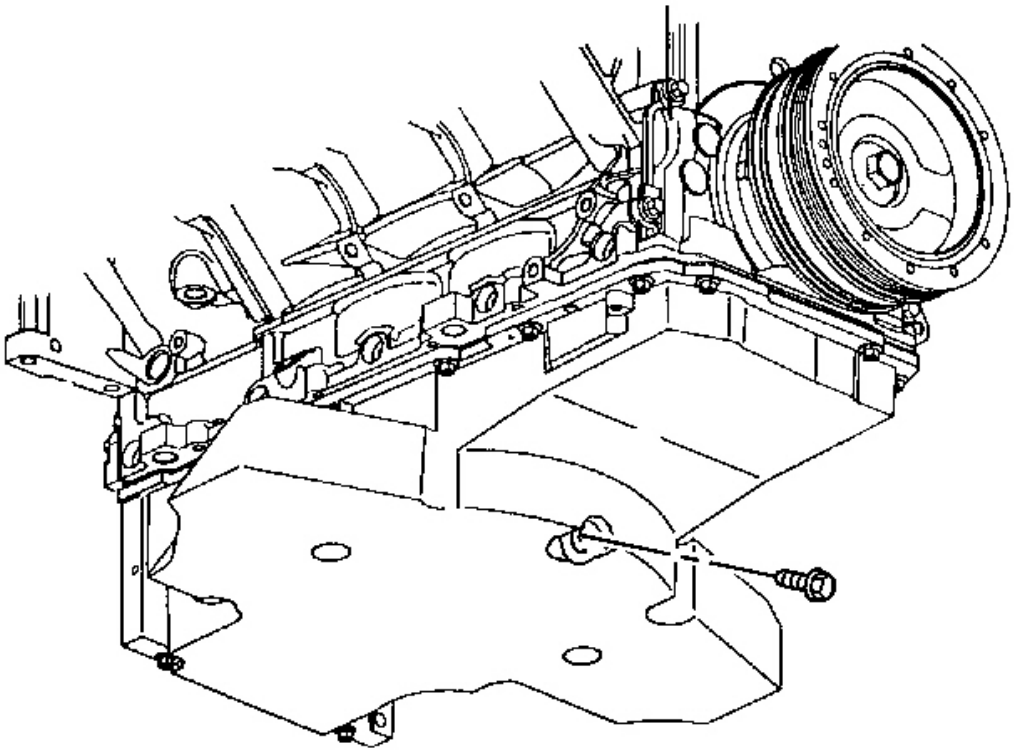

Fig. 97: Oil Pan Drain Plug
Courtesy of GENERAL MOTORS CORP.

6. Install the oil pan drain plug.

   Tighten: Tighten the oil pan drain plug to 25 N.m (18 lb ft).

VALVE LIFTER INSTALLATION

cardiagn.com

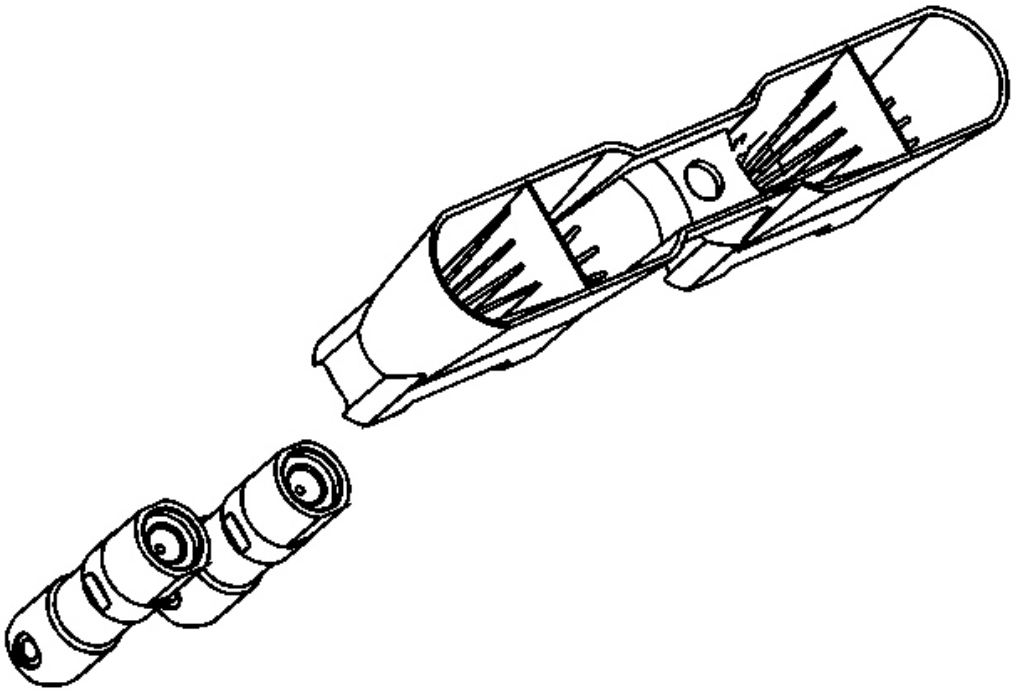

Fig. 98: View Of Valve Lifters Removed From Guide
Courtesy of GENERAL MOTORS CORP.

IMPORTANT:

- **When using the valve lifters again, install the lifters to their original locations.**
- **If camshaft replacement is required, the valve lifters must also be replaced.**

1. Lubricate the valve lifters and engine block valve lifter bores with clean engine oil.
2. Insert the valve lifters into the lifter guides.

   Align the flat area on the top of the lifter with the flat area in the lifter guide bore. Push the lifter completely into the guide bore.

cardiagn.com

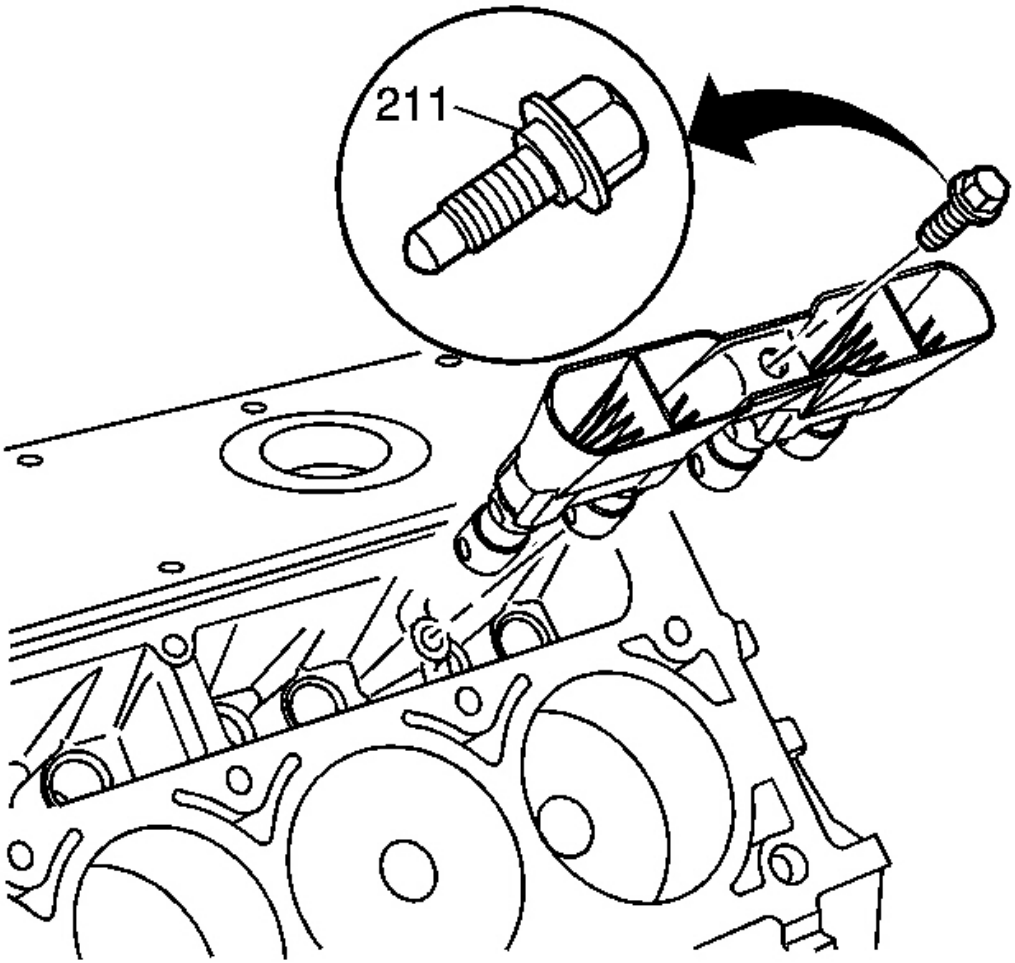

Fig. 99: View Of Valve Lifters, Guide & Guide Bolts
Courtesy of GENERAL MOTORS CORP.

3. Install the valve lifters and guide assembly to the engine block.

NOTE: **Refer to Fastener Notice in Cautions and Notices.**

4. Install the valve lifter guide bolt (211).

Tighten: Tighten the valve lifter guide bolt to 12 N.m (106 lb in).

CYLINDER HEAD INSTALLATION - LEFT

cardiagn.com

Tools Required

- **J 42385-100** Head/Main Bolt Thread Repair Kit
- **J 45059** Angle Meter

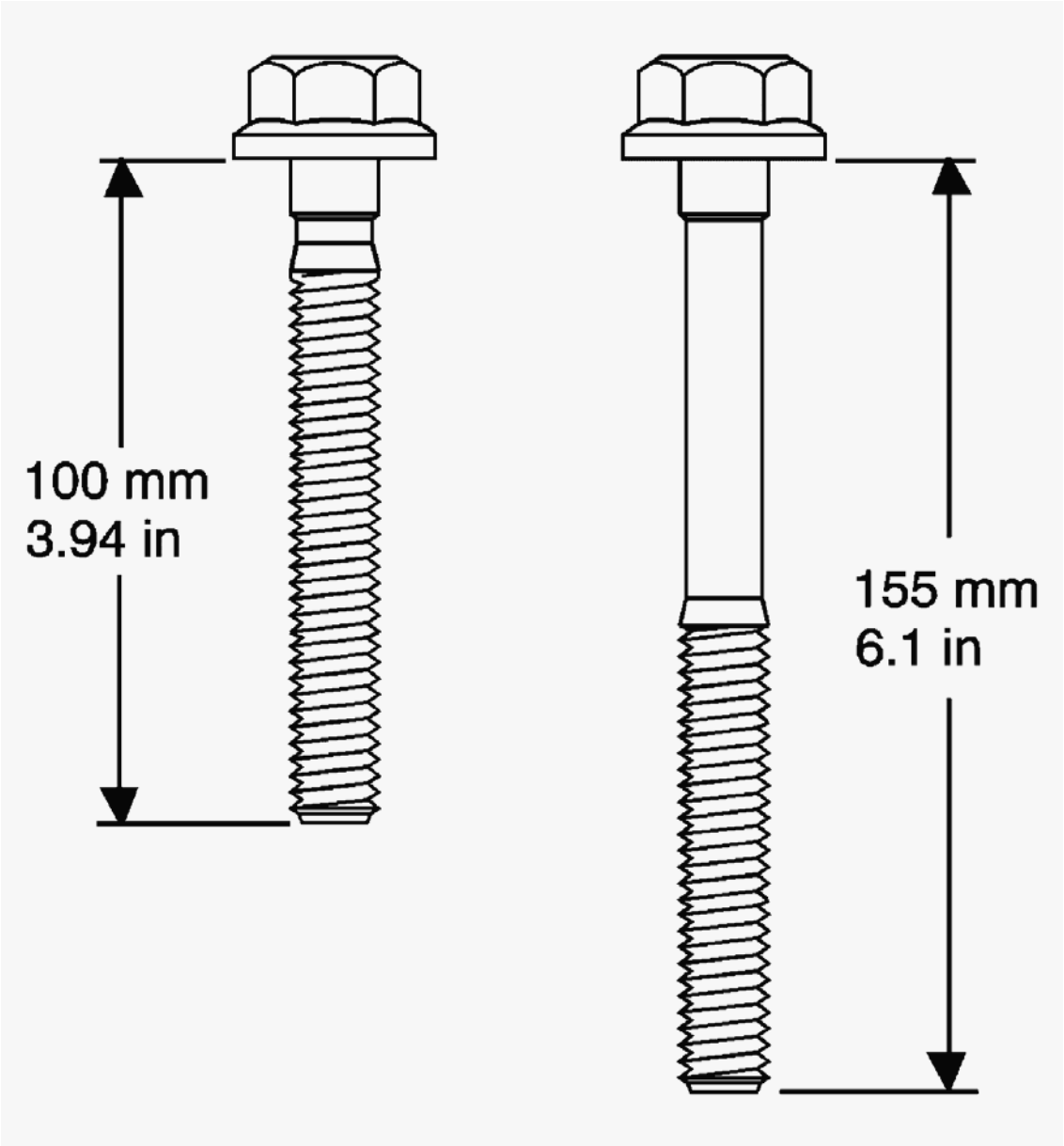

Fig. 100: View Of 100 mm & 155 mm Bolts
Courtesy of GENERAL MOTORS CORP.

CAUTION: Refer to Safety Glasses Caution in Cautions and Notices.

cardiagn.com

NOTE: **Clean all dirt, debris, and coolant from the engine block cylinder head bolt holes. Failure to remove all foreign material may result in damaged threads, improperly tightened fasteners or damage to components.**

IMPORTANT:

- **Do not use the cylinder head bolts again. Install NEW cylinder head bolts during assembly.**
- **Do not use any type sealant on the cylinder head gasket, unless specified.**
- **The cylinder head gaskets must be installed in the proper direction and position.**

1. Clean the engine block cylinder head bolt holes, if required.

   Thread repair tool J 42385-107 may be used to clean the threads of old threadlocking material.

2. Spray cleaner GM P/N 12346139, GM P/N 12377981 (Canadian P/N 10953463) or equivalent into the hole.
3. Clean the cylinder head bolt holes with compressed air.

IMPORTANT: **First design engine blocks have different drill and tap depths using both medium length 100 mm (3.94 in) and long 155 mm (6.1 in) M11 cylinder head bolts. Second design engine blocks use only the medium length 100 mm (3.94 in) bolt with a common drill and tap depth.**

4. Measure the depth of the cylinder head bolt holes (1-10) and select the correct length bolts as required.

cardiagn.com

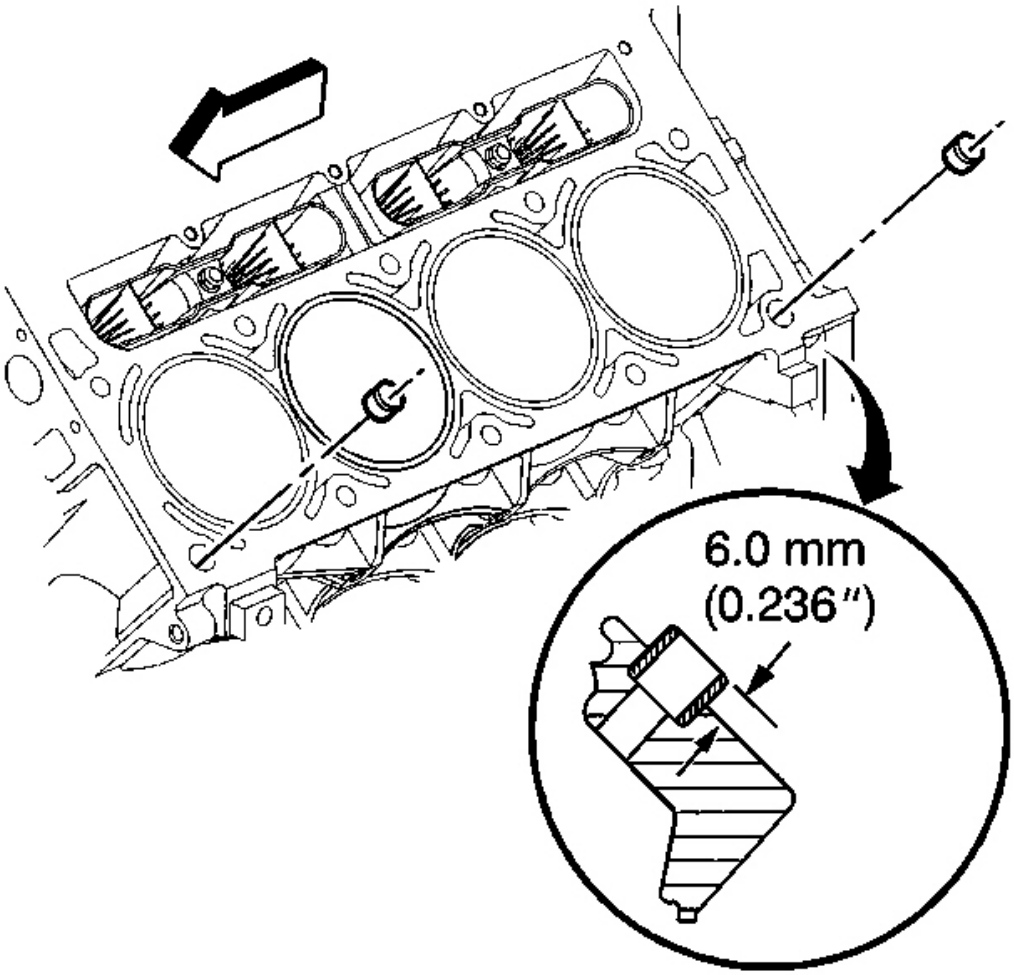

Fig. 101: View Of Cylinder Head Locating Pins Installation Position
Courtesy of GENERAL MOTORS CORP.

5. Check the cylinder head locating pins for proper installation.

cardiagn.com

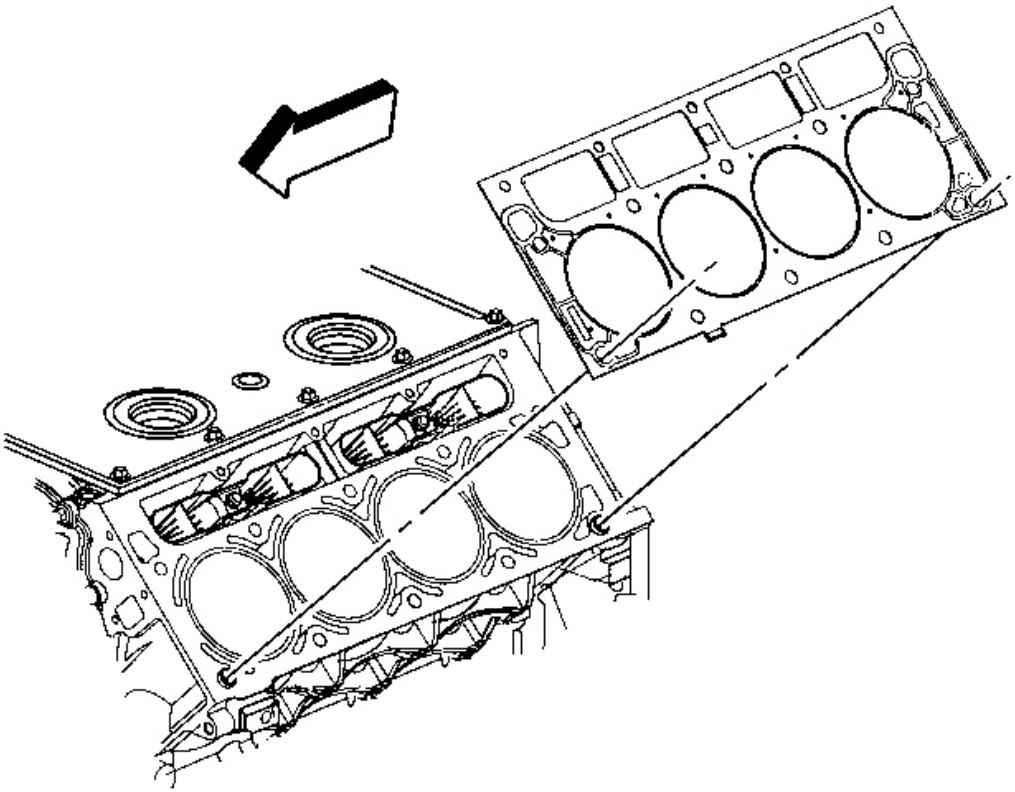

Fig. 102: View Of Cylinder Head Gasket (Left)
Courtesy of GENERAL MOTORS CORP.

6. Install the NEW left cylinder head gasket onto the locating pins.

cardiagn.com

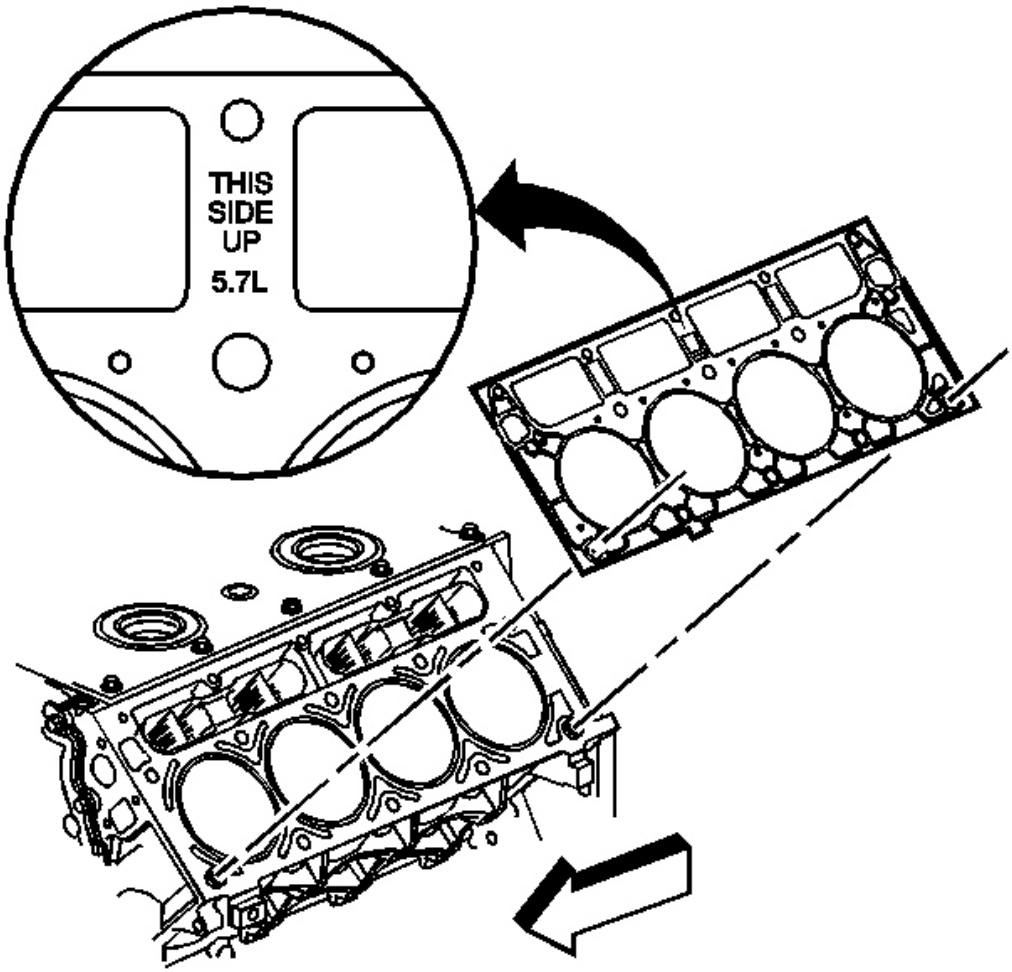

Fig. 103: Left Cylinder Head Gasket
Courtesy of GENERAL MOTORS CORP.

IMPORTANT: When properly installed, the tab on the left cylinder head gasket is located left of center, or closer to the front of the engine, and the words "This Side Up", and the engine displacement, is visible.

7. Inspect the gasket for proper installation.

cardiagn.com

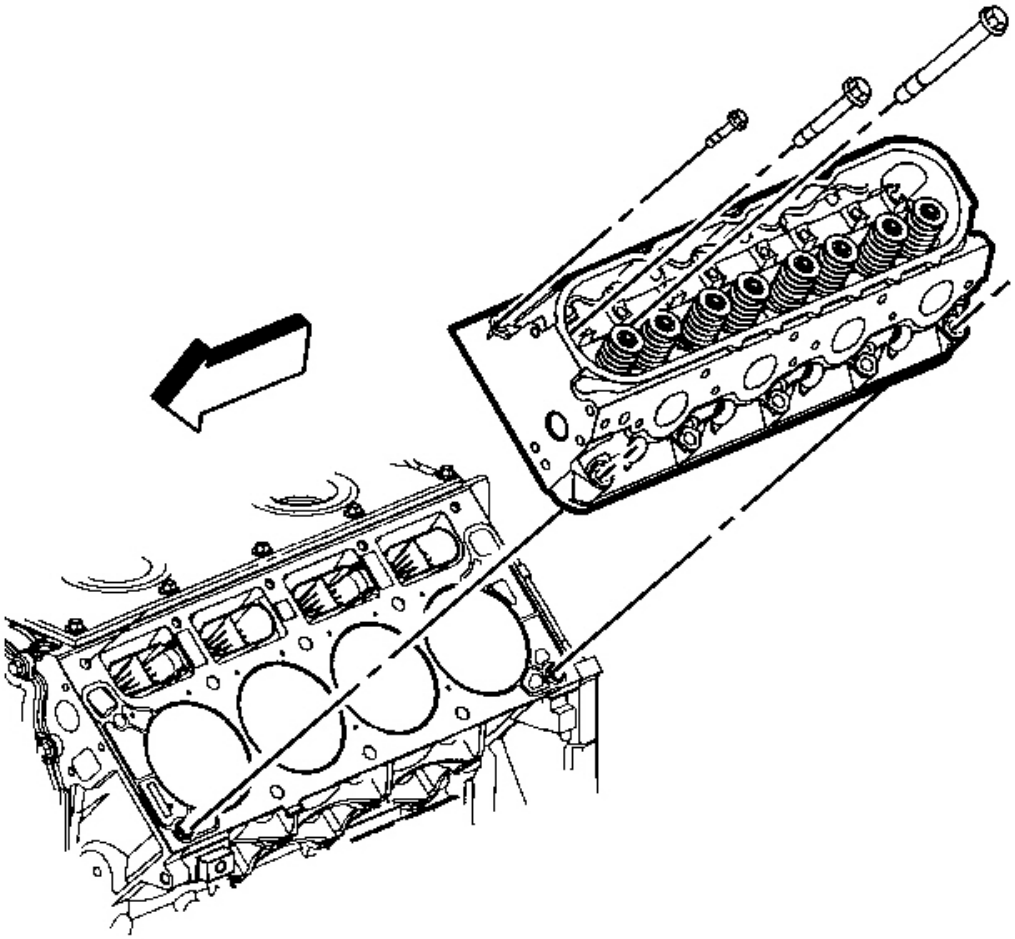

Fig. 104: View Of Cylinder Head & Bolts (Left)
Courtesy of GENERAL MOTORS CORP.

8. Install the cylinder head onto the locating pins and the gasket.
9. Install the NEW cylinder head bolts.

cardiagn.com

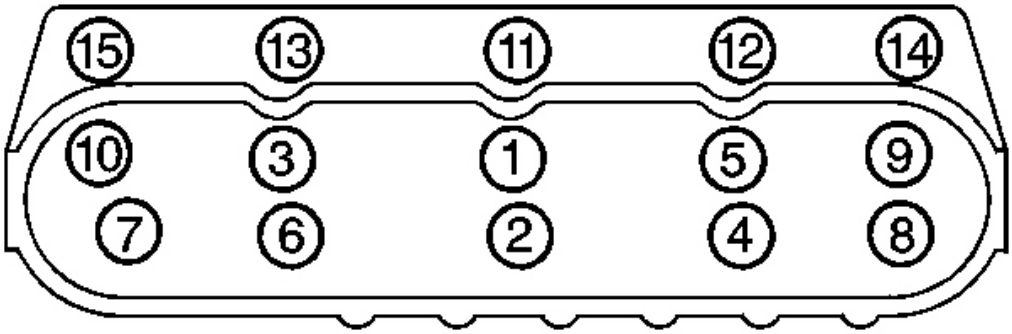

Fig. 105: Cylinder Head Bolt Tightening Sequence (Right)
Courtesy of GENERAL MOTORS CORP.

NOTE: Refer to Fastener Notice in Cautions and Notices.

10. Tighten the first design cylinder head bolts.

    Tighten:

    1. Tighten the first design M11 cylinder head bolts a first pass in sequence to 30 N.m (22 lb ft).
    2. Tighten the first design M11 cylinder head bolts a second pass in sequence to 90 degrees using the **J 45059** .
    3. Tighten the first design M11 cylinder head bolts (1,2,3,4,5,6,7,8) to 90 degrees and the M11 cylinder head bolts (9 and 10) to 50 degrees a final pass in sequence to using the **J 45059** .
    4. Tighten the M8 cylinder head bolts (11,12,13,14,15) to 30 N.m (22 lb ft). Begin with the center bolt (11) and alternating side-to-side, work outward tightening all of the bolts.

11. Tighten the second design engine block cylinder head bolts.

    Tighten:

    1. Tighten the second design M11 cylinder head bolts (1-10) a first pass in sequence to 30 N.m (22 lb ft).
    2. Tighten the second design M11 cylinder head bolts (1-10) a second pass in sequence to 90 degrees using the **J 45059** .
    3. Tighten the second design M11 cylinder head bolts (1-10) a final pass in sequence to 70 degrees using the **J 45059** .
    4. Tighten the M8 cylinder head bolts (11,12,13,14,15) to 30 N.m (22 lb ft). Begin with the center bolt (11) and alternating side-to-side, work outward tightening all of the bolts.

cardiagn.com

CYLINDER HEAD INSTALLATION - RIGHT

Tools Required

- **J 42385-100** Head/Main Bolt Thread Repair Kit
- **J 45059** Angle Meter

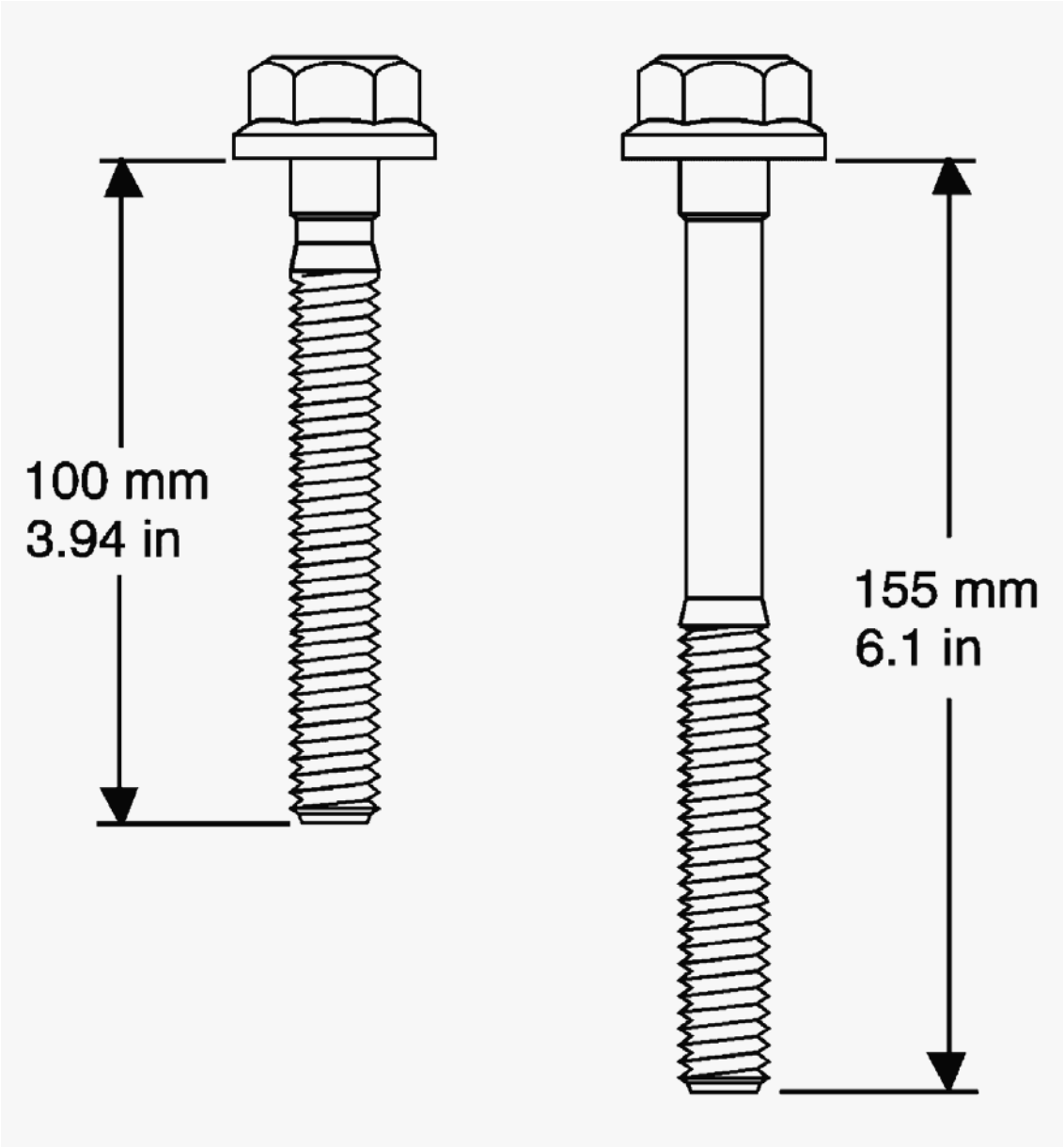

Fig. 106: View Of 100 mm & 155 mm Bolts
Courtesy of GENERAL MOTORS CORP.

CAUTION: Refer to Safety Glasses Caution in Cautions and Notices.

cardiagn.com

NOTE: **Clean all dirt, debris, and coolant from the engine block cylinder head bolt holes. Failure to remove all foreign material may result in damaged threads, improperly tightened fasteners or damage to components.**

IMPORTANT:

- **Do not use the cylinder head bolts again. Install NEW cylinder head bolts during assembly.**
- **Do not use any type sealant on the cylinder head gasket, unless specified.**
- **The cylinder head gaskets must be installed in the proper direction and position.**

1. Clean the engine block cylinder head bolt holes, if required.

   Thread repair tool J 42385-107 may be used to clean the threads of old threadlocking material.

2. Spray cleaner GM P/N 12346139, GM P/N 12377981 (Canadian P/N 10953463) or equivalent into the hole.
3. Clean the cylinder head bolt holes with compressed air.

IMPORTANT: **First design engine blocks have different drill and tap depths using both medium length 100 mm (3.94 in) and long 155 mm (6.1 in) M11 cylinder head bolts. Second design engine blocks use only the medium length 100 mm (3.94 in) bolt with a common drill and tap depth.**

4. Measure the depth of the cylinder head bolt holes (1-10) and select the correct length bolts as required.

cardiagn.com

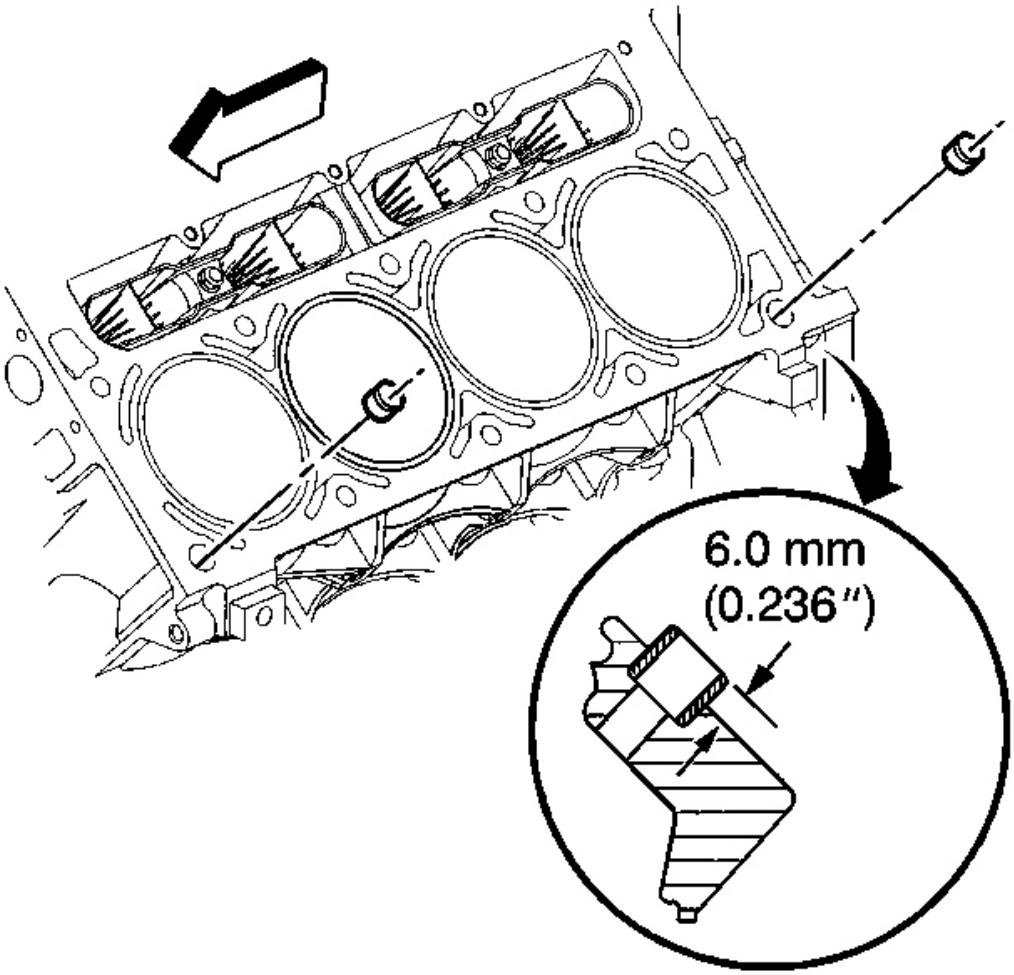

Fig. 107: View Of Cylinder Head Locating Pins Installation Position
Courtesy of GENERAL MOTORS CORP.

5. Check the cylinder head locating pins for proper installation.

cardiagn.com

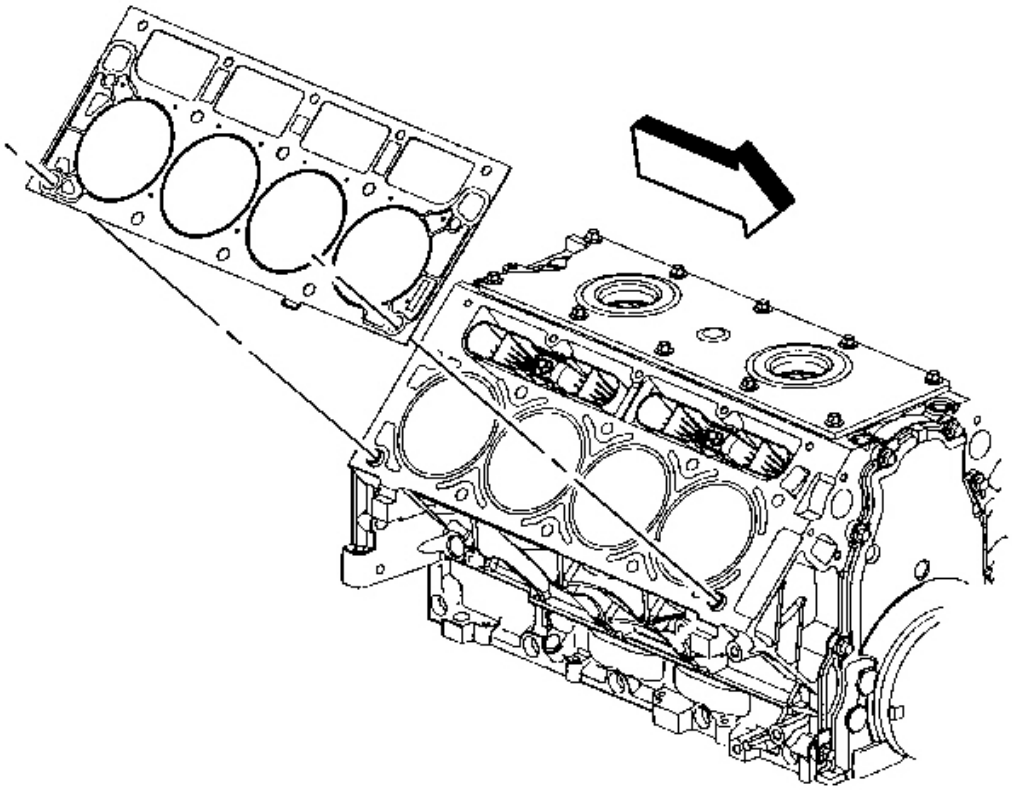

Fig. 108: View Of Cylinder Head Gasket (Right)
Courtesy of GENERAL MOTORS CORP.

6. Install the NEW right cylinder head gasket onto the locating pins.

cardiagn.com

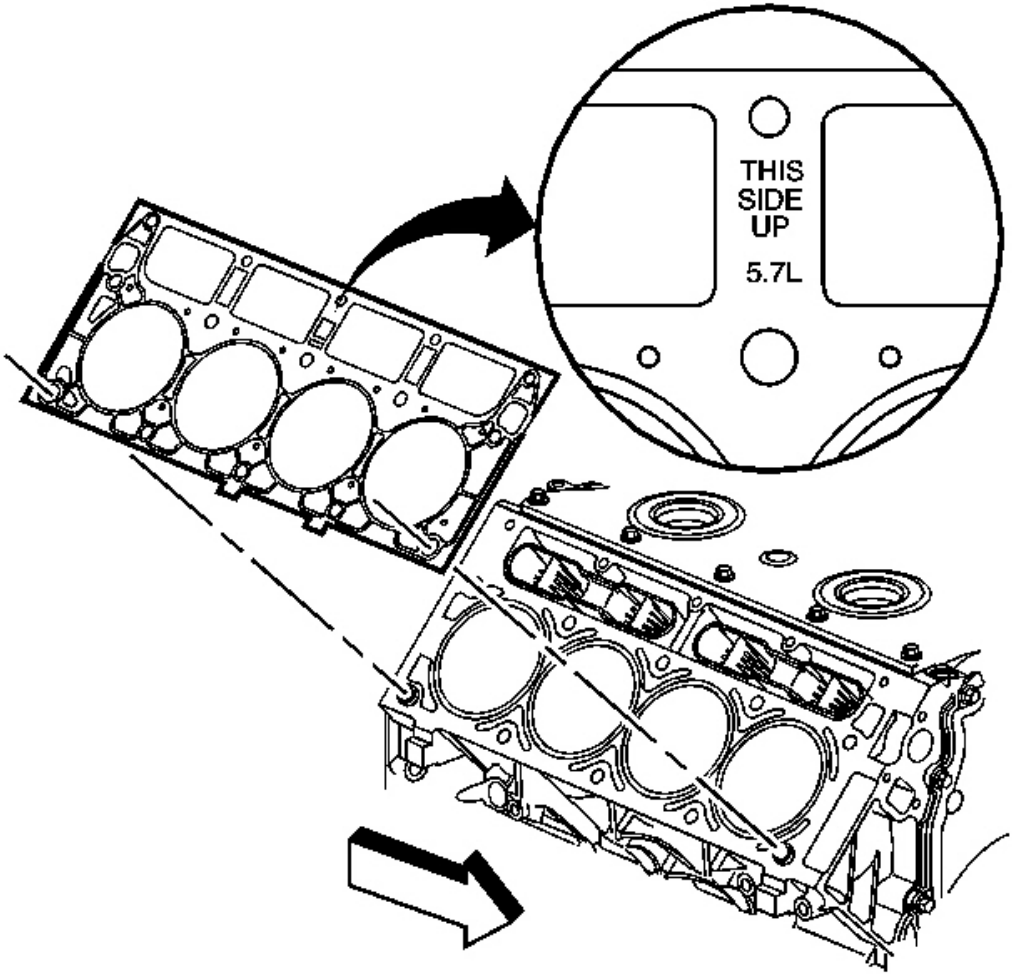

Fig. 109: Right Cylinder Head Gasket
Courtesy of GENERAL MOTORS CORP.

IMPORTANT: When properly installed, the tab on the right cylinder head gasket is located right of center, or closer to the front of the engine, and the words "This Side Up", and the engine displacement is visible.

7. Inspect the gasket for proper installation.

cardiagn.com

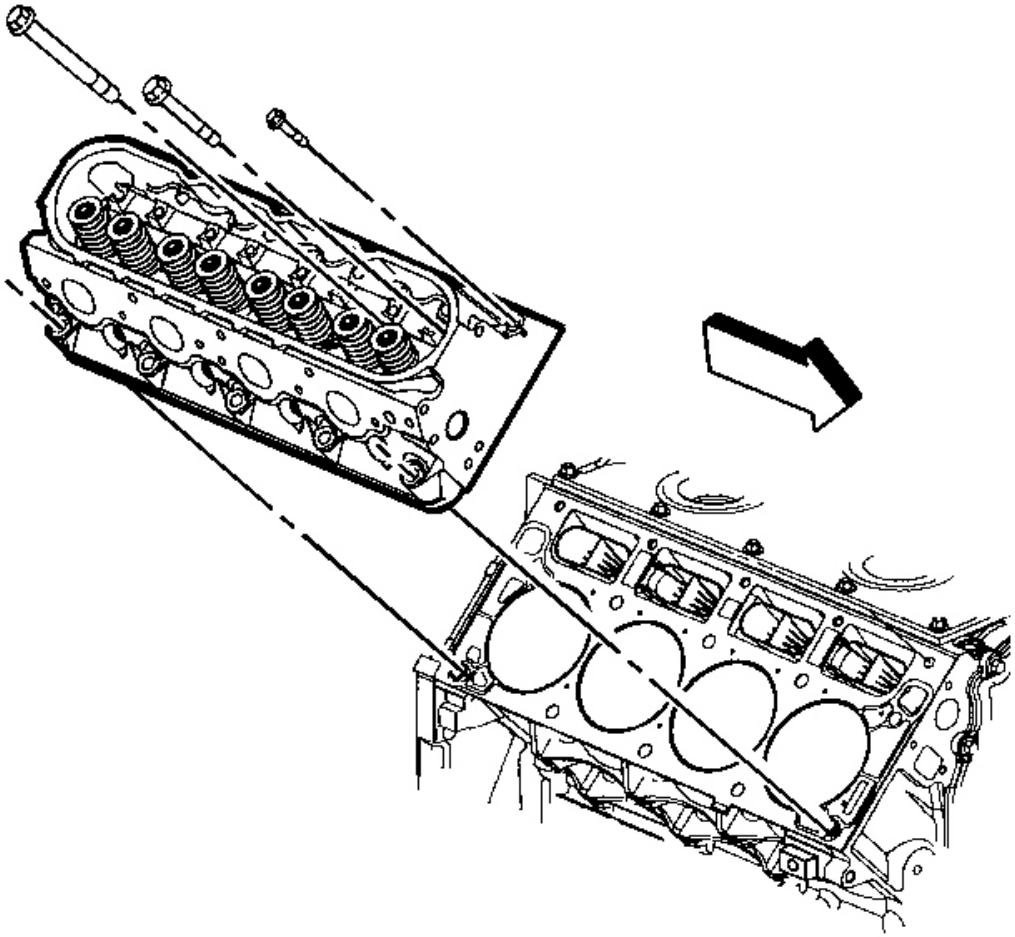

Fig. 110: View Of Cylinder Head & Bolts
Courtesy of GENERAL MOTORS CORP.

8. Install the cylinder head onto the locating pins and the gasket.
9. Install the NEW cylinder head bolts.

cardiagn.com

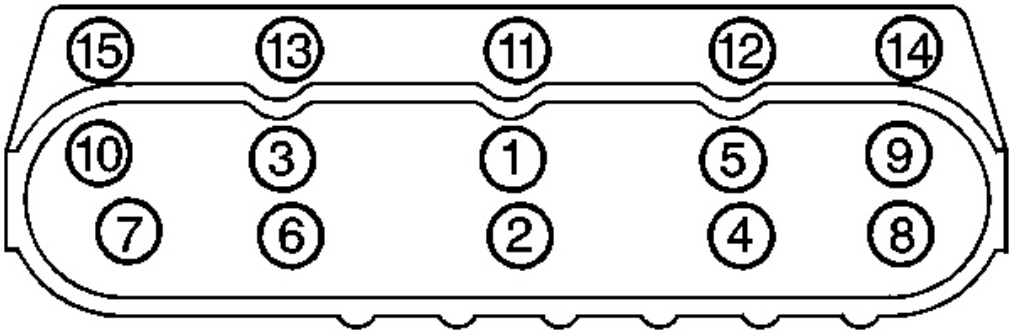

Fig. 111: Cylinder Head Bolt Tightening Sequence (Right)
Courtesy of GENERAL MOTORS CORP.

NOTE: Refer to Fastener Notice in Cautions and Notices.

10. Tighten the first design cylinder head bolts.

    Tighten:

    1. Tighten the first design M11 cylinder head bolts (1-10) a first pass in sequence to 30 N.m (22 lb ft).
    2. Tighten the first design M11 cylinder head bolts (1-10) a second pass in sequence to 90 degrees using the **J 45059** .
    3. Tighten the first design M11 cylinder head bolts (1,2,3,4,5,6,7,8) to 90 degrees and the M11 cylinder head bolts (9 and 10) to 50 degrees a final pass in sequence using the **J 45059** .
    4. Tighten the M8 cylinder head bolts (11,12,13,14,15) to 30 N.m (22 lb ft). Begin with the center bolt (11) and alternating side-to-side, work outward, tightening all of the bolts.

11. Tighten the second design engine block cylinder head bolts.

    Tighten:

    1. Tighten the second design M11 cylinder head bolts (1-10) a first pass in sequence to 30 N.m (22 lb ft).
    2. Tighten the second design M11 cylinder head bolts (1-10) a second pass in sequence to 90 degrees using the **J 45059** .
    3. Tighten the second design M11 cylinder head bolts (1-10) a final pass in sequence to 70 degrees using the **J 45059** .
    4. Tighten the M8 cylinder head bolts (11,12,13,14,15) to 30 N.m (22 lb ft). Begin with the center bolt (11) and alternating side-to-side, work outward, tightening all of the bolts.

cardiagn.com

VALVE ROCKER ARM AND PUSH ROD INSTALLATION

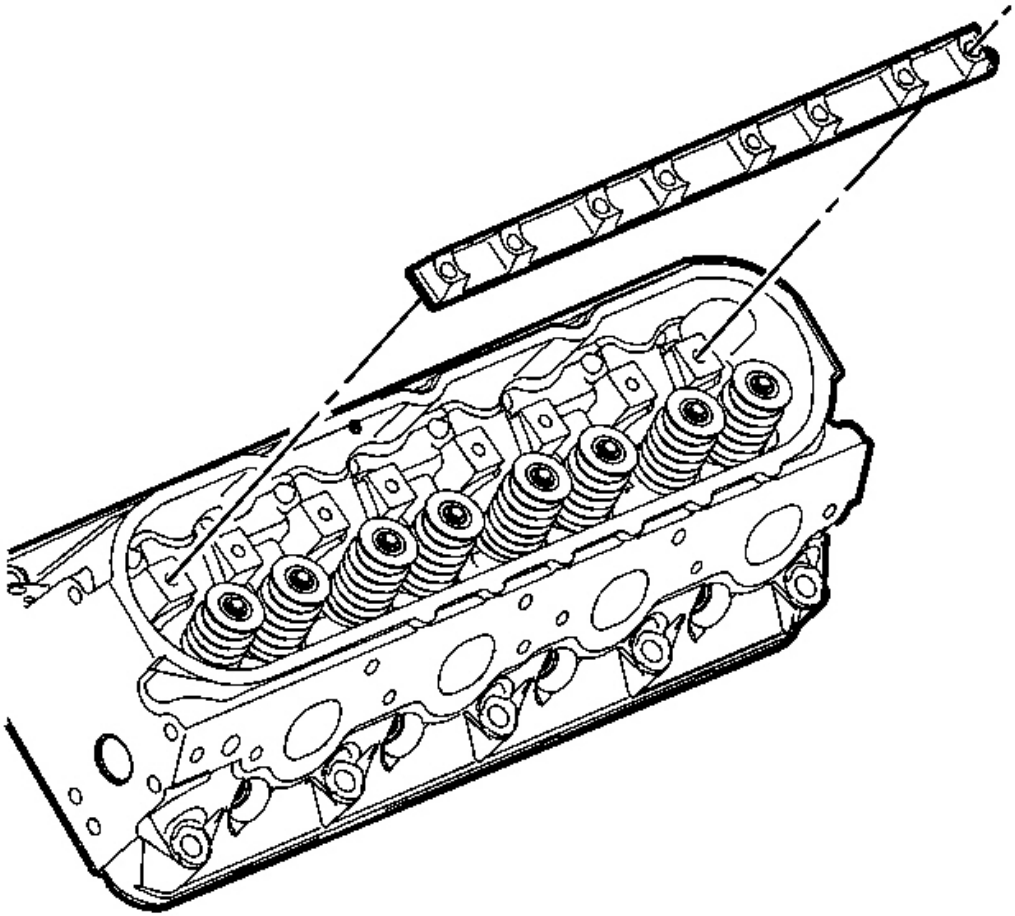

Fig. 112: View Of Valve Rocker Arm Pivot Support
Courtesy of GENERAL MOTORS CORP.

IMPORTANT:

- **When using the valve train components again, always install the components to the original location and position.**
- **Valve lash is net build, no valve adjustment is required.**

1. Lubricate the valve rocker arms and pushrods with clean engine oil.
2. Lubricate the flange of the valve rocker arm bolts with clean engine oil.

   Lubricate the flange or washer surface of the bolt that will contact the valve rocker arm.

cardiagn.com

3. Install the valve rocker arm pivot support.

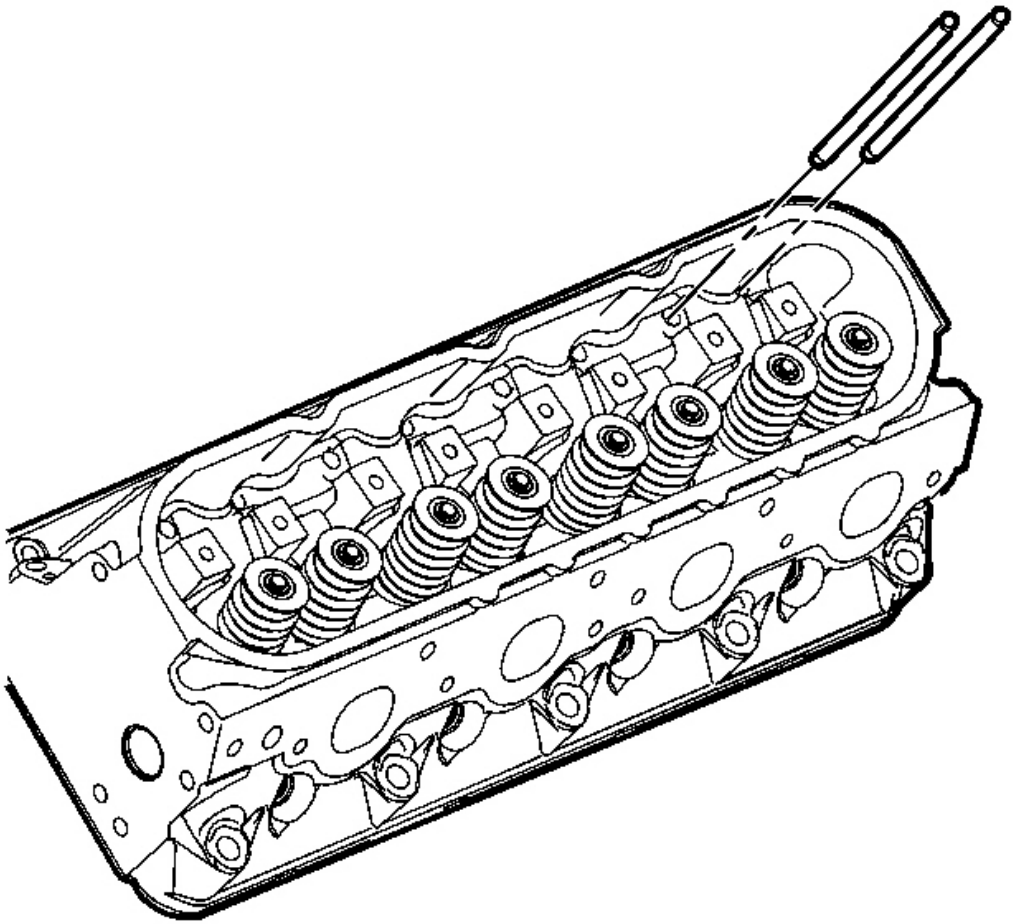

Fig. 113: View Of Pushrods
Courtesy of GENERAL MOTORS CORP.

IMPORTANT: Ensure that the pushrods seat properly to the valve lifter sockets.

4. Install the pushrods.

cardiagn.com

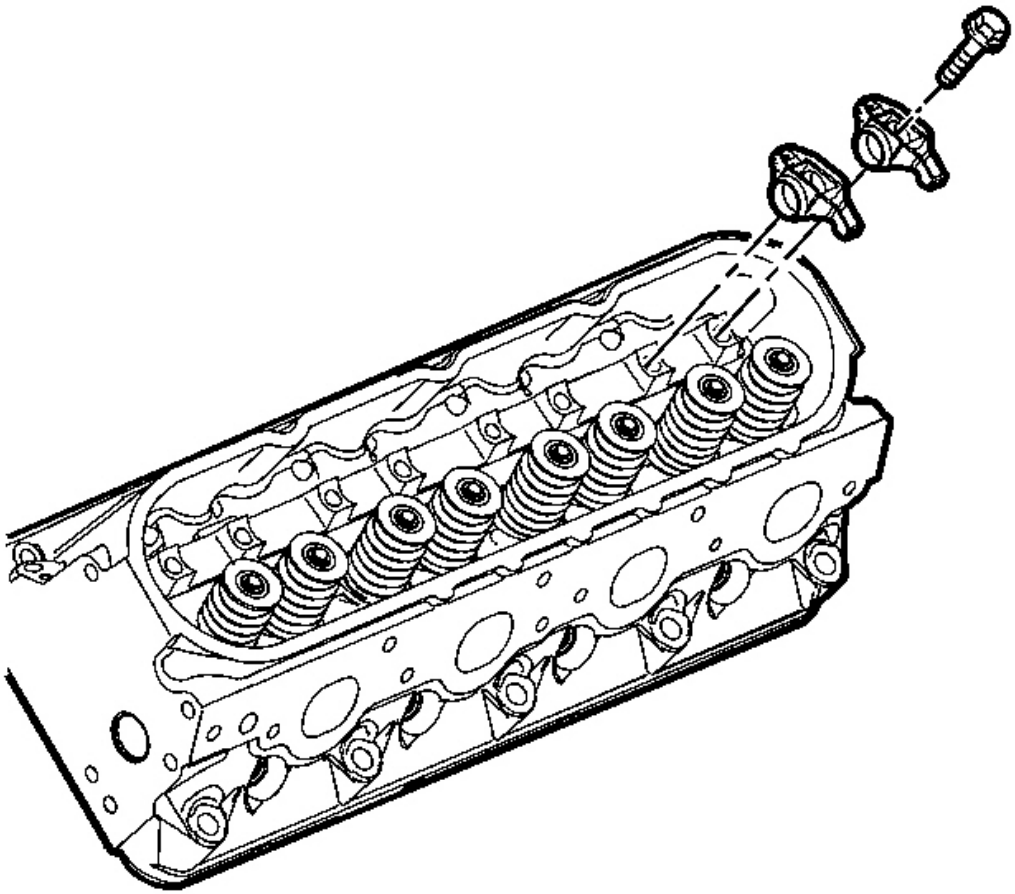

Fig. 114: View Of Valve Rocker Arms
Courtesy of GENERAL MOTORS CORP.

IMPORTANT:

- **Ensure that the pushrods seat properly to the ends of the rocker arms.**
- **DO NOT tighten the rocker arm bolts at this time.**

5. Install the rocker arms and bolts.

cardiagn.com

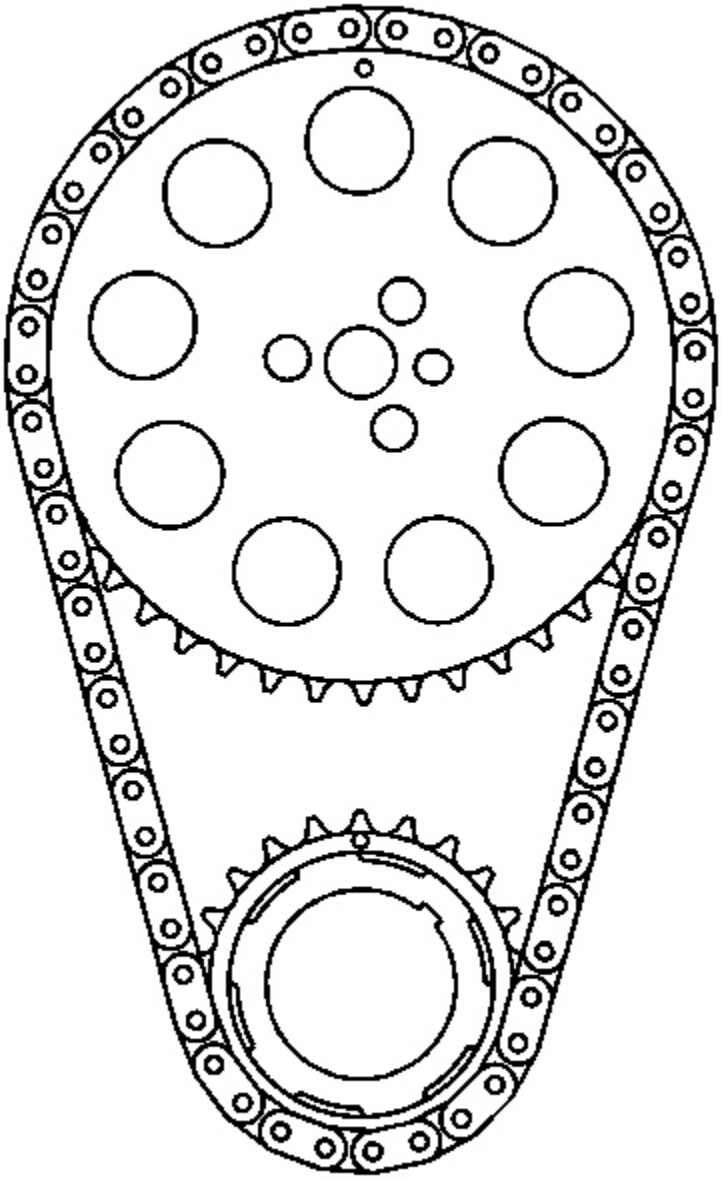

Fig. 115: View of Crankshaft
Courtesy of GENERAL MOTORS CORP.

6. Rotate the crankshaft until number one piston is at top dead center of compression stroke.

   In this position, cylinder number one rocker arms will be off lobe lift, and the crankshaft sprocket key

cardiagn.com

will be at the 1:30 position. If viewing from the rear of the engine, the additional crankshaft pilot hole, non-threaded, will be in the 10:30 position.

The engine firing order is 1, 8, 7, 2, 6, 5, 4, 3.

Cylinders 1, 3, 5 and 7 are left bank.

Cylinders 2, 4, 6, and 8 are right bank.

NOTE: Refer to Fastener Notice in Cautions and Notices.

7. With the engine in the number one firing position, tighten the following valve rocker arm bolts:

   Tighten:
   - Tighten exhaust valve rocker arm bolts 1, 2, 7, and 8 to 30 N.m (22 lb ft).
   - Tighten intake valve rocker arm bolts 1, 3, 4, and 5 to 30 N.m (22 lb ft).

8. Rotate the crankshaft 360 degrees.
9. Tighten the following valve rocker arm bolts:

   Tighten:
   - Tighten exhaust valve rocker arm bolts 3, 4, 5, and 6 to 30 N.m (22 lb ft).
   - Tighten intake valve rocker arm bolts 2, 6, 7, and 8 to 30 N.m (22 lb ft).

VALVE ROCKER ARM COVER INSTALLATION - LEFT

cardiagn.com

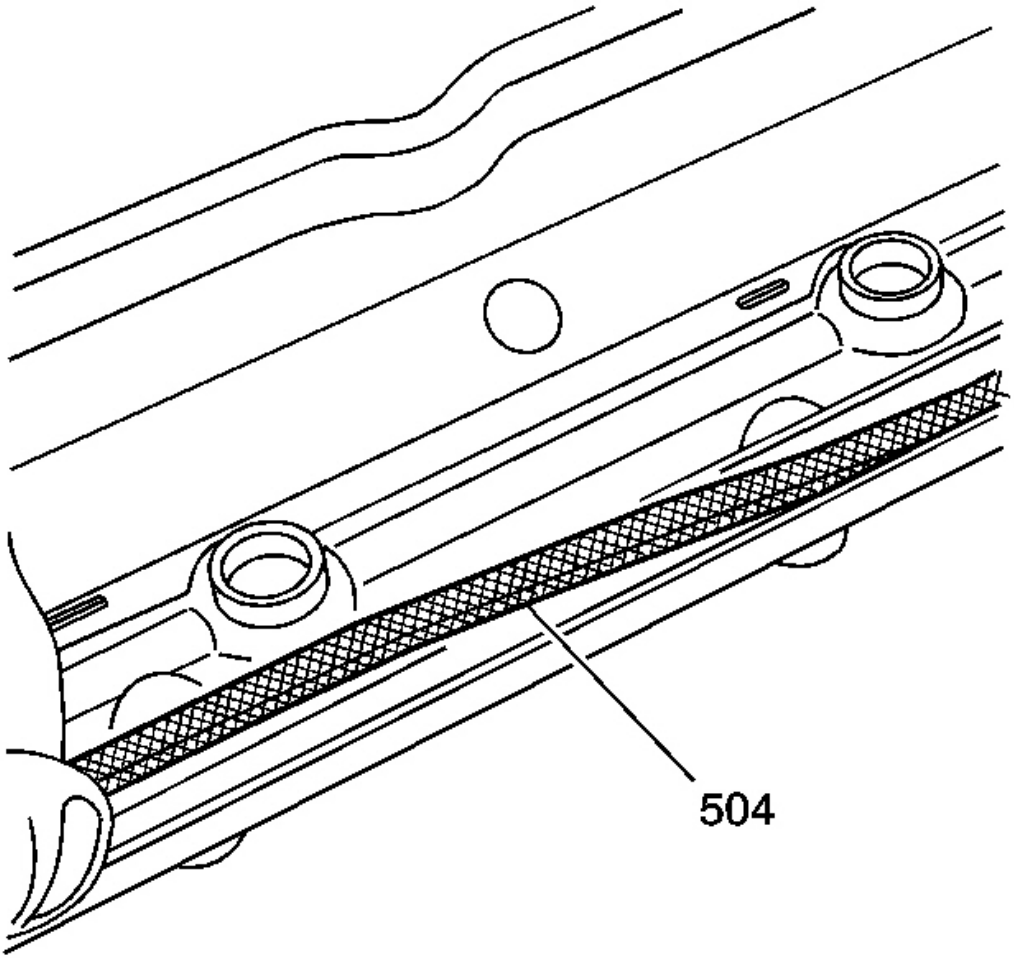

Fig. 116: View Of Valve Rocker Arm Cover Gasket
Courtesy of GENERAL MOTORS CORP.

IMPORTANT:

- **All gasket surfaces should be free of oil or other foreign material during assembly.**
- **DO NOT use the valve rocker arm cover gasket again.**
- **The valve rocker arm cover bolt grommets may be used again.**

1. Install a NEW cover gasket (504) into the valve rocker arm cover.

cardiagn.com

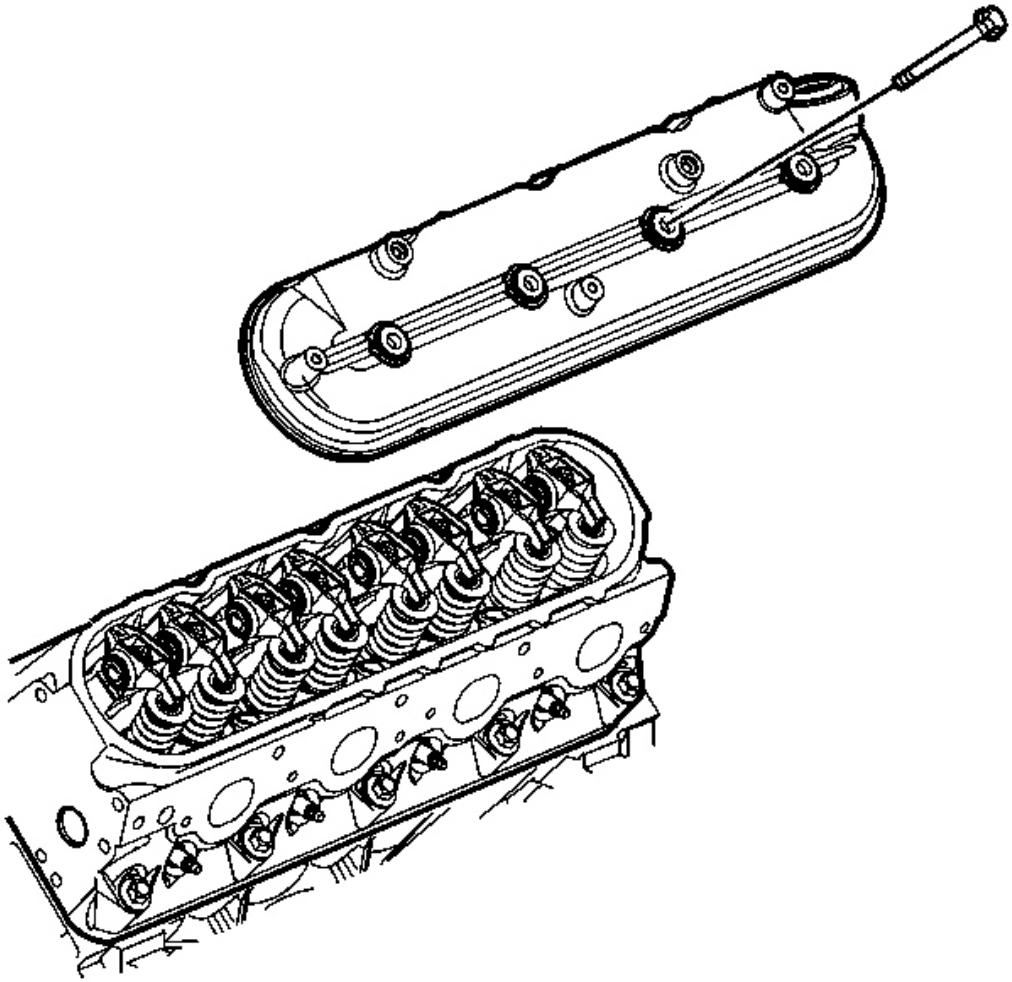

Fig. 117: Valve Cover To Cylinder Head View
Courtesy of GENERAL MOTORS CORP.

2. Install the valve rocker arm cover onto the cylinder head.

NOTE: **Refer to Fastener Notice in Cautions and Notices.**

3. Install the cover bolts with grommets.

Tighten: Tighten the valve rocker arm cover bolts to 12 N.m (106 lb in).

cardiagn.com

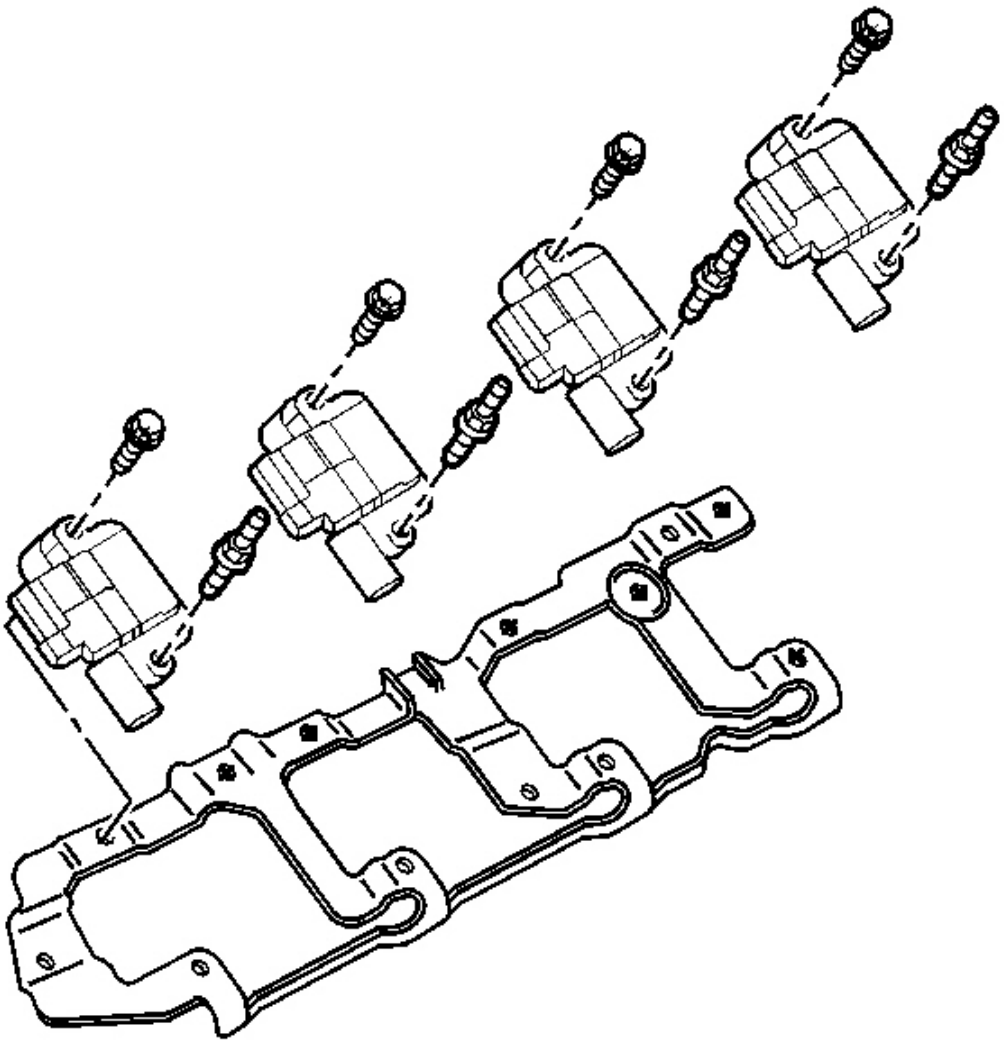

Fig. 118: View Of Ignition Coils
Courtesy of GENERAL MOTORS CORP.

4. Install the ignition coils, wire harness, and bolts onto the mounting bracket.

   Tighten: Tighten the ignition coil bolts to 12 N.m (106 lb in).

cardiagn.com

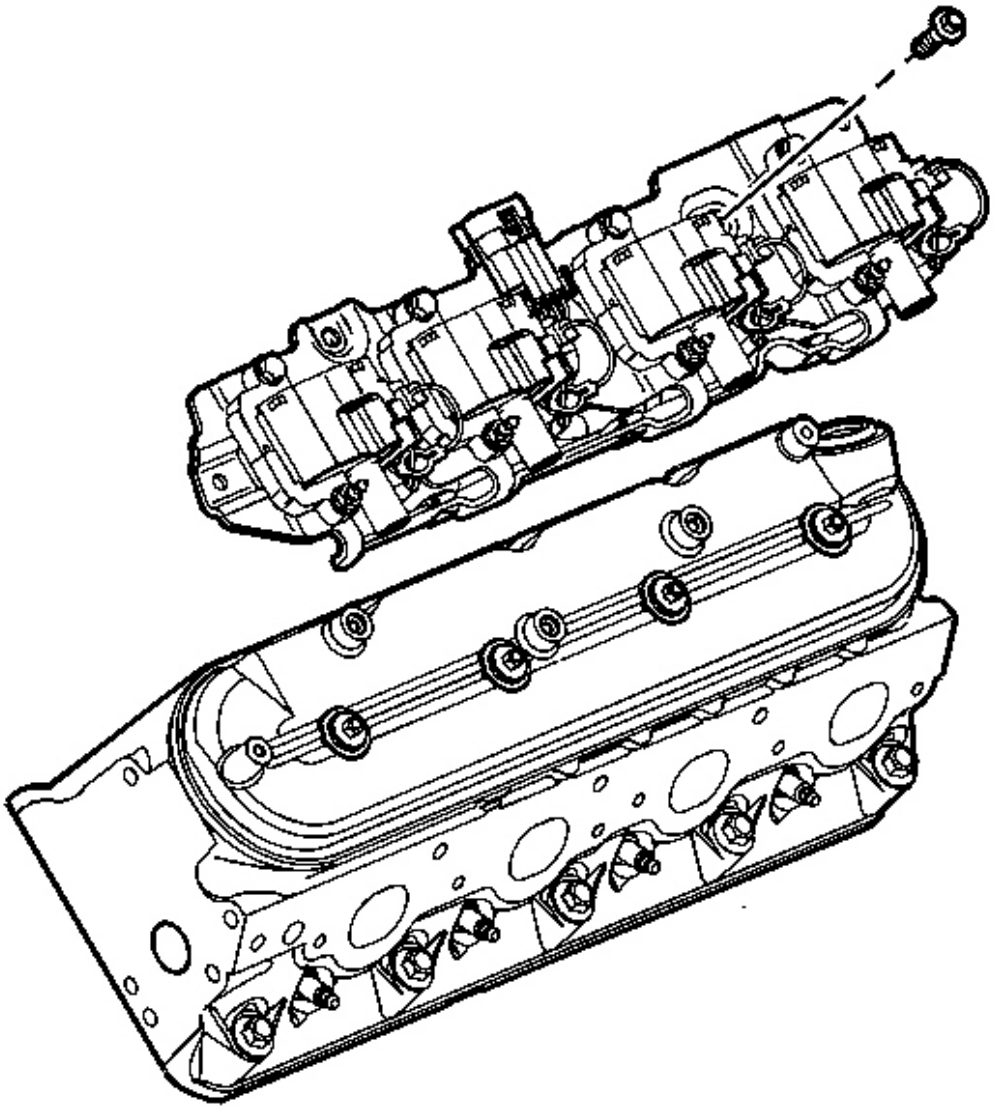

Fig. 119: Ignition Coil Bracket Bolts & Rocker Cover
Courtesy of GENERAL MOTORS CORP.

5. Apply threadlock GM P/N 12345382 (Canadian P/N 10953489) or equivalent to the threads of the bracket bolts.
6. Install the ignition coils and bracket assembly and bolts onto the rocker cover.

Tighten: Tighten the ignition coil bracket bolts to 12 N.m (106 lb in).

cardiagn.com

7. Install the crankcase ventilation hose.

VALVE ROCKER ARM COVER INSTALLATION - RIGHT

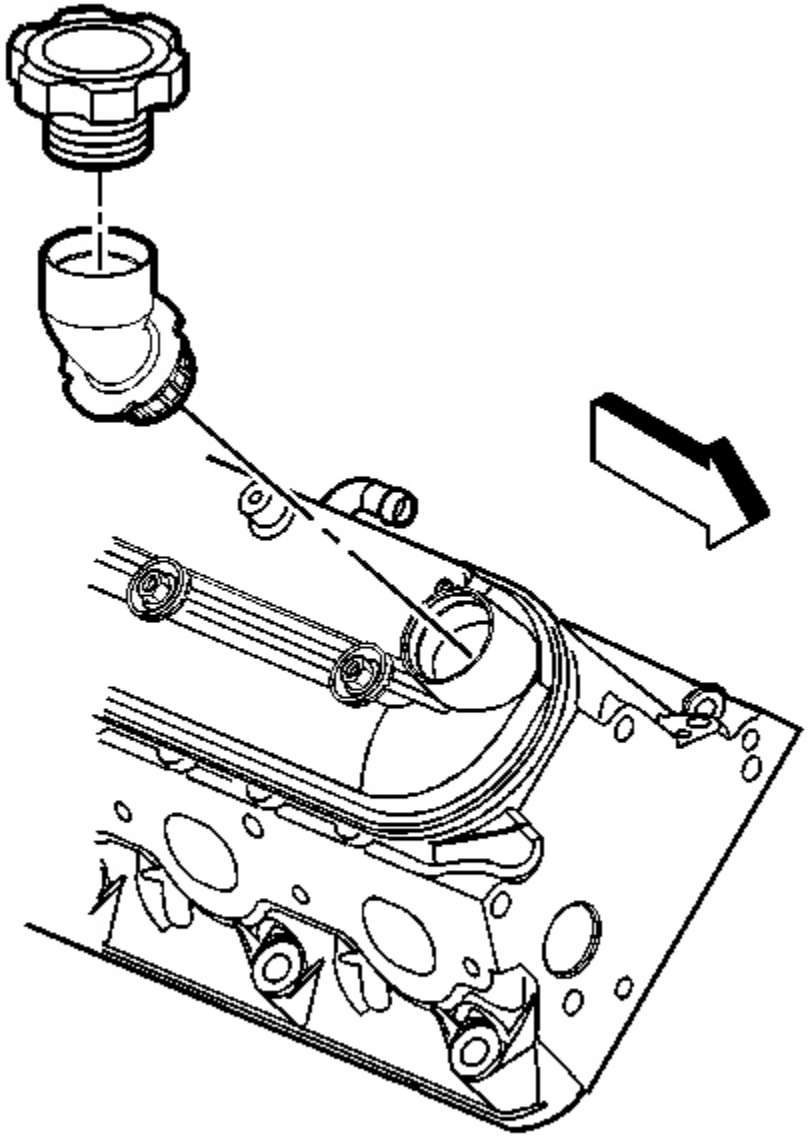

Fig. 120: View Of Oil Fill Tube
Courtesy of GENERAL MOTORS CORP.

cardiagn.com

IMPORTANT:

- **All gasket surfaces should be free of oil or other foreign material during assembly.**
- **DO NOT use the valve rocker arm cover gasket again.**
- **The valve rocker arm cover bolt grommets may be used again.**
- **If the oil fill tube has been removed from the valve rocker arm cover, install a NEW oil fill tube during assembly.**

1. Lubricate the O-ring seal of the NEW oil fill tube with clean engine oil.
2. Insert the NEW oil fill tube into the rocker arm cover and rotate the tube clockwise until locked in the proper position.
3. Install the oil fill cap into the tube and rotate clockwise until locked in the proper position.

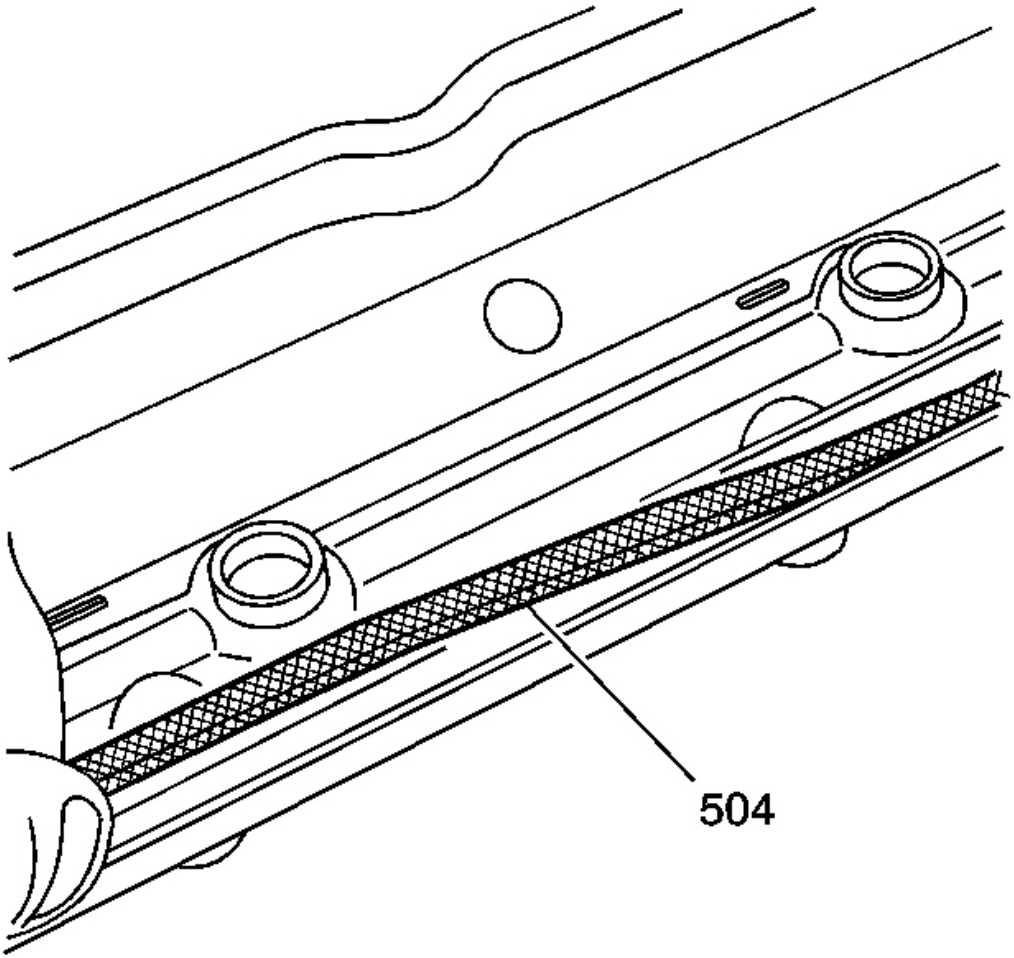

cardiagn.com

Fig. 121: View Of Valve Rocker Arm Cover Gasket
Courtesy of GENERAL MOTORS CORP.

4. Install a NEW gasket (504) into the valve rocker arm cover.

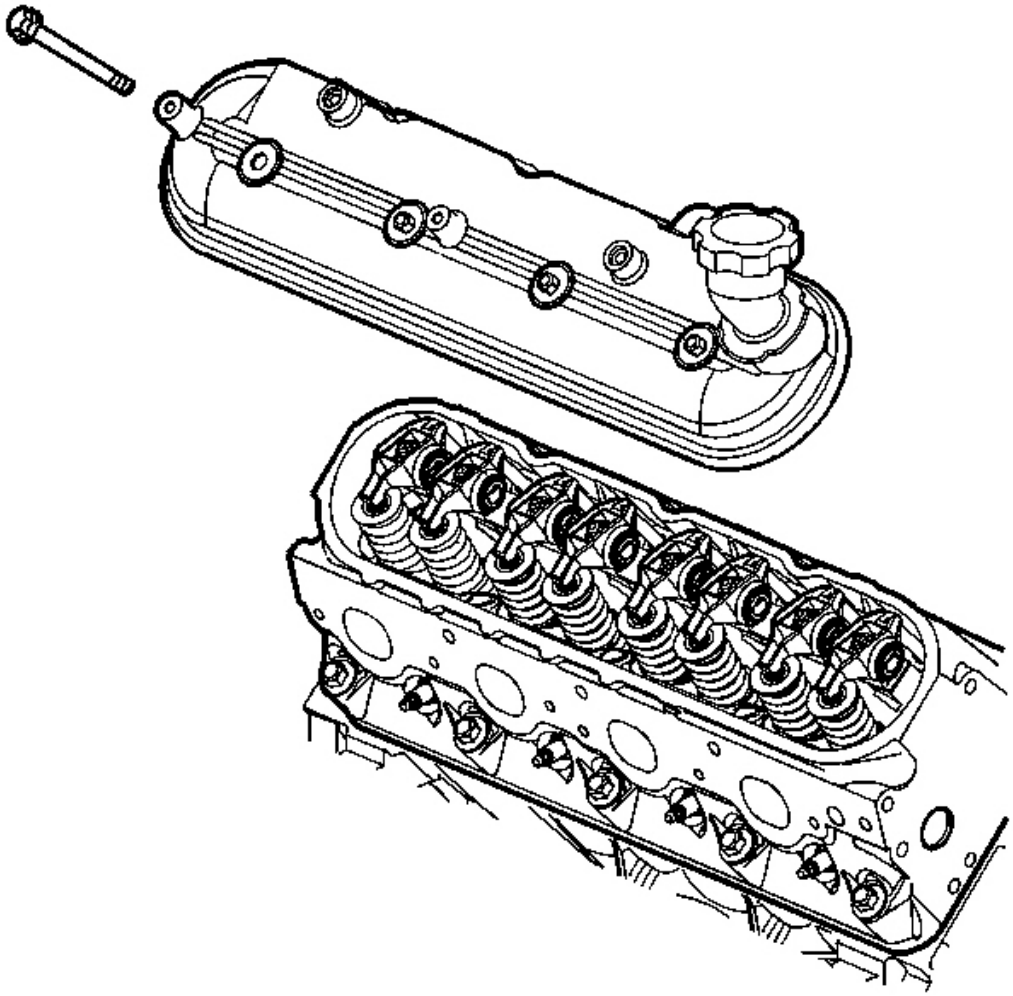

Fig. 122: View Of Valve Rocker Arm Cover & Bolts (Right)
Courtesy of GENERAL MOTORS CORP.

5. Install the valve rocker arm cover onto the cylinder head.

NOTE: Refer to Fastener Notice in Cautions and Notices.

cardiagn.com

6. Install the cover bolts with grommets.

   Tighten: Tighten the valve rocker arm cover bolts to 12 N.m (106 lb in).

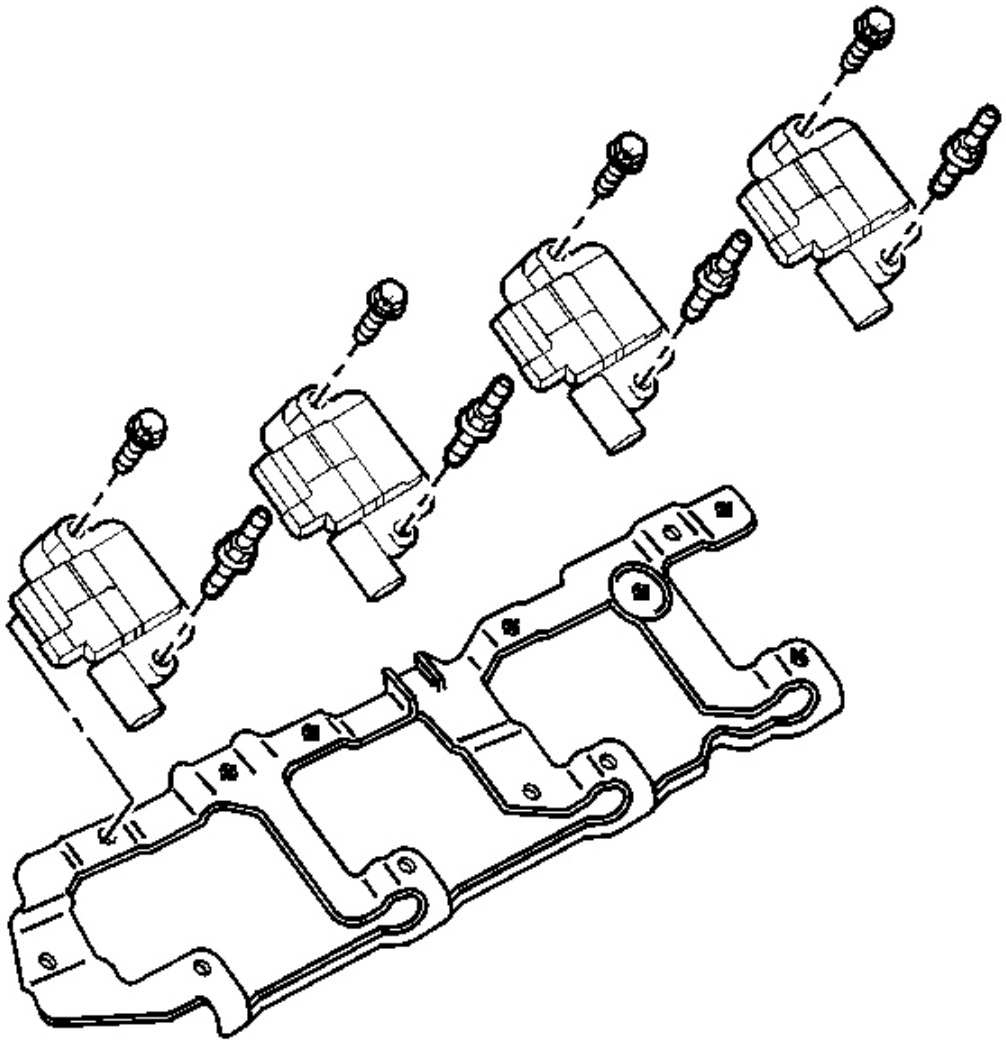

Fig. 123: View Of Ignition Coils
Courtesy of GENERAL MOTORS CORP.

7. Install the ignition coils, wire harness, and bolts onto the mounting bracket.

   Tighten: Tighten the ignition coil bolts to 12 N.m (106 lb in).

cardiagn.com

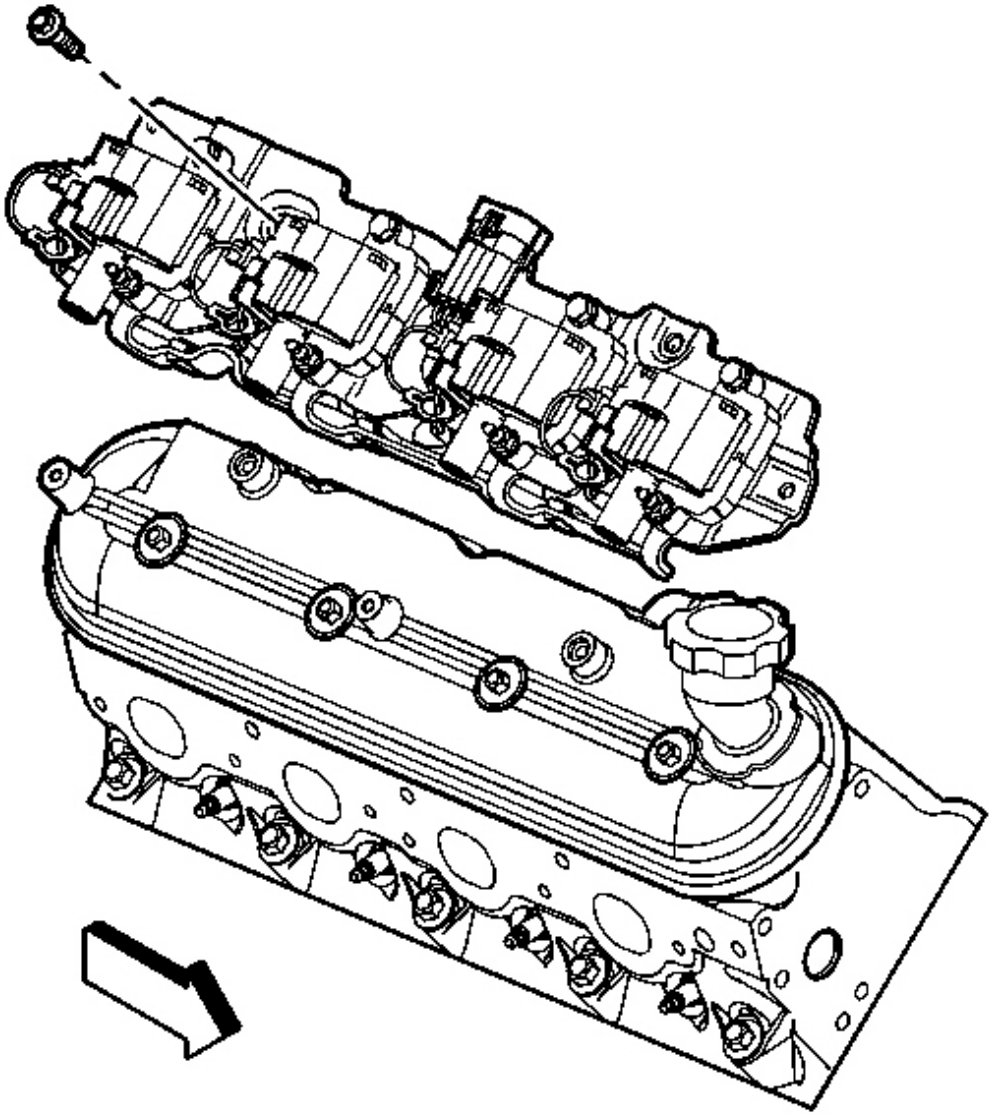

Fig. 124: Ignition Coil Bracket Bolts & Rocker Cover
Courtesy of GENERAL MOTORS CORP.

8. Apply threadlock GM P/N 12345382 (Canadian P/N 10953489) or equivalent to the threads of the bracket bolts.
9. Install the ignition coils and bracket assembly and bolts to the rocker cover.

Tighten: Tighten the ignition coil bracket bolts to 12 N.m (106 lb in).

cardiagn.com

10. Install the crankcase ventilation hoses to the cover.

ENGINE VALLEY COVER INSTALLATION

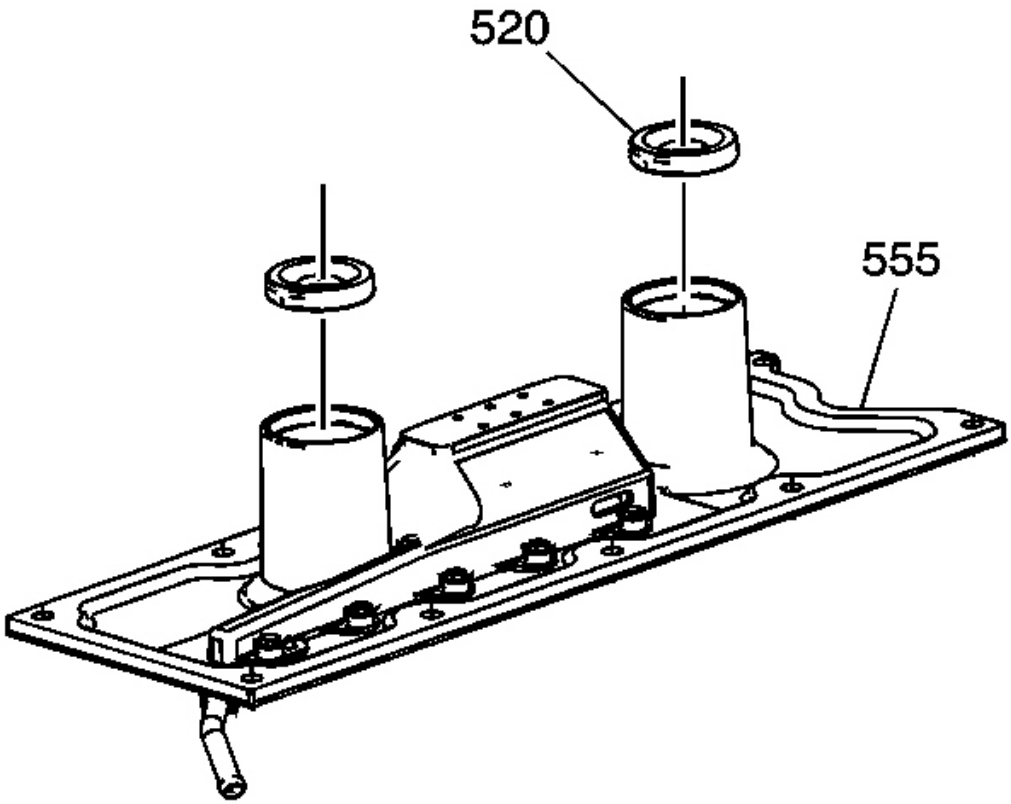

Fig. 125: Knock Sensor Oil Seals & Valley Cover
Courtesy of GENERAL MOTORS CORP.

IMPORTANT: All gasket surfaces should be free of oil or other foreign material during assembly.

1. Install NEW knock sensor oil seals (520) into the valley cover (555).

   Lubricate the seal surfaces with clean engine oil.

cardiagn.com

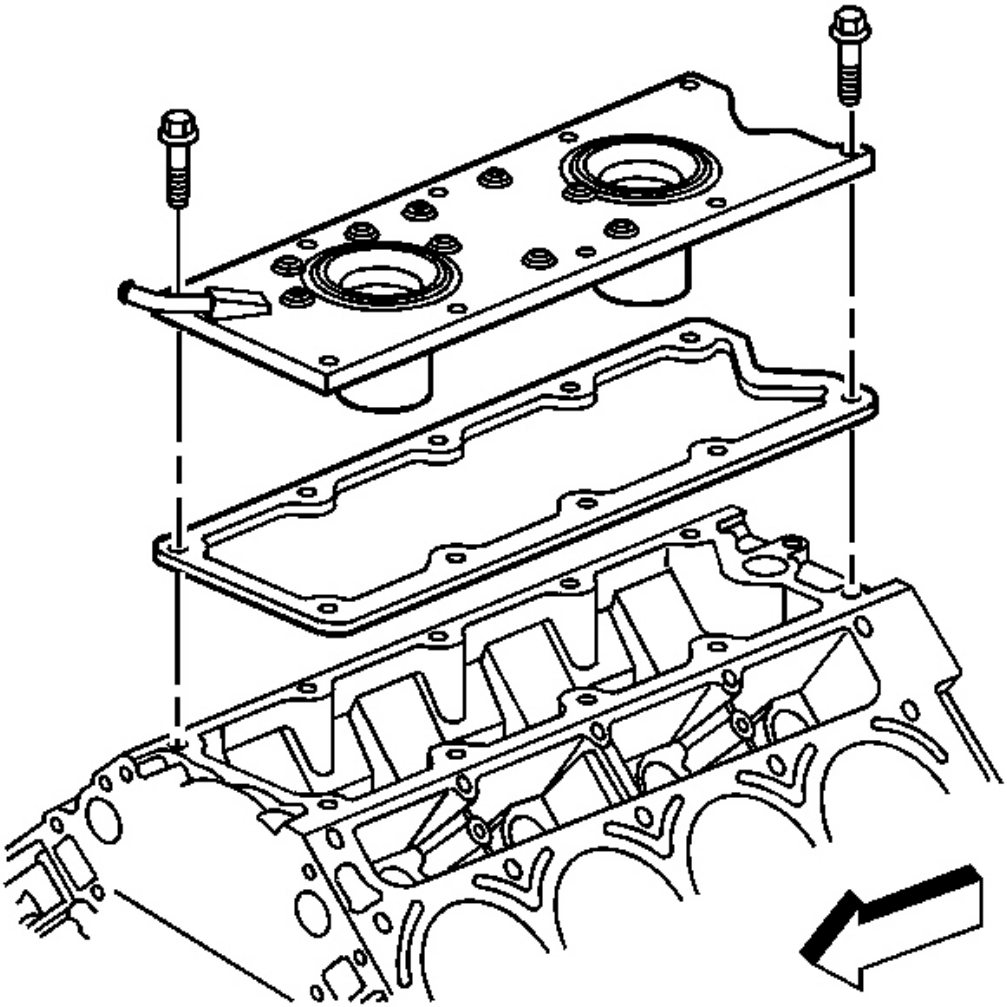

Fig. 126: Valley Cover & Gasket
Courtesy of GENERAL MOTORS CORP.

2. Install the valley cover and NEW gasket.

NOTE: **Refer to Fastener Notice in Cautions and Notices.**

3. Install the valley cover bolts.

Tighten: Tighten the valley cover bolts to 25 N.m (18 lb ft).

cardiagn.com

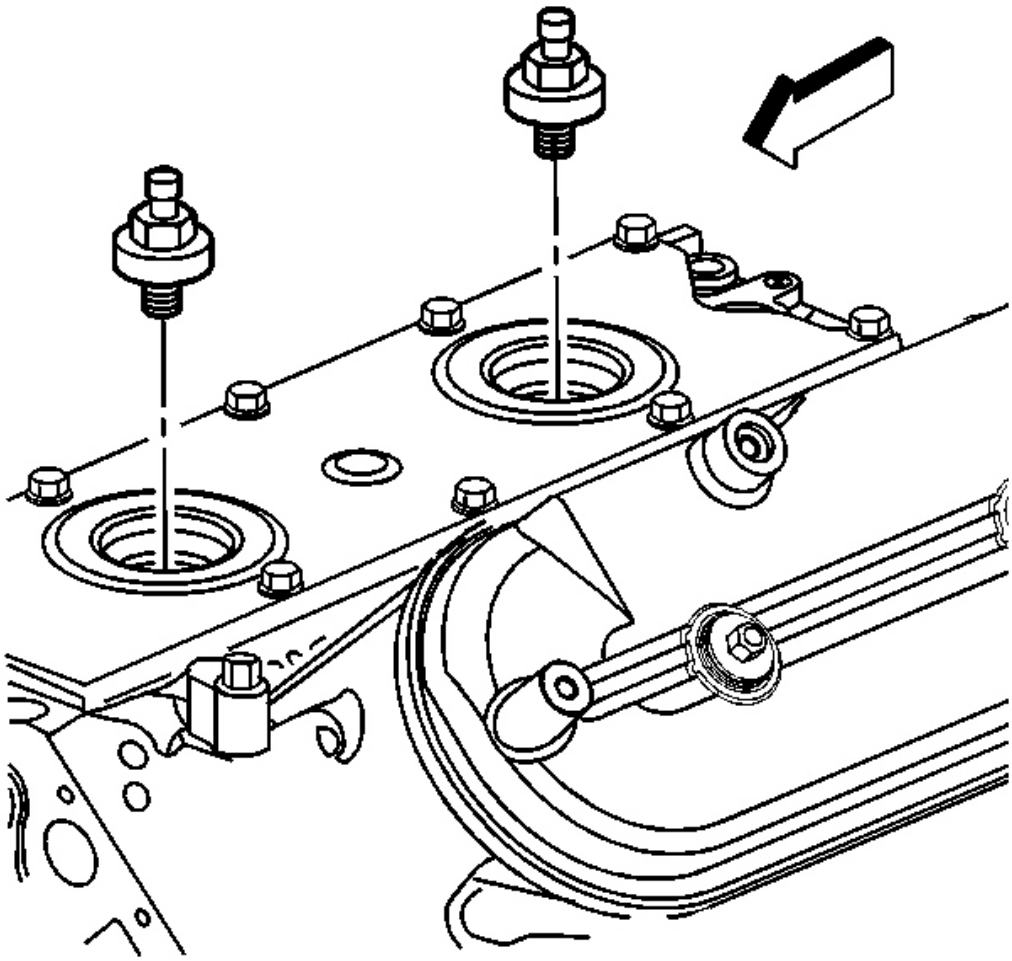

Fig. 127: View Of Knock Sensors
Courtesy of GENERAL MOTORS CORP.

4. Install the knock sensors.

   Tighten: Tighten the knock sensors to 20 N.m (15 lb ft).

cardiagn.com

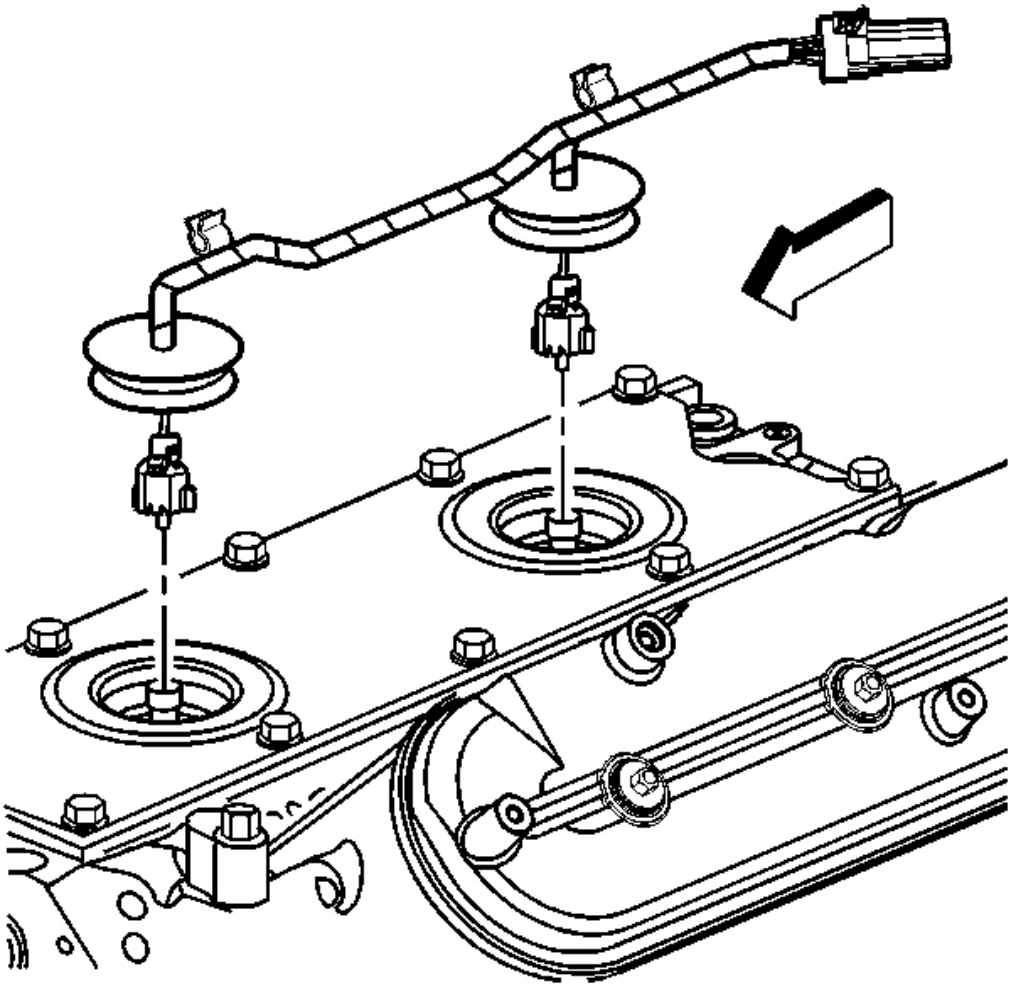

Fig. 128: View Of Knock Sensor Wire Harness
Courtesy of GENERAL MOTORS CORP.

5. Install the knock sensor wire harness.

COOLANT AIR BLEED PIPE INSTALLATION

cardiagn.com

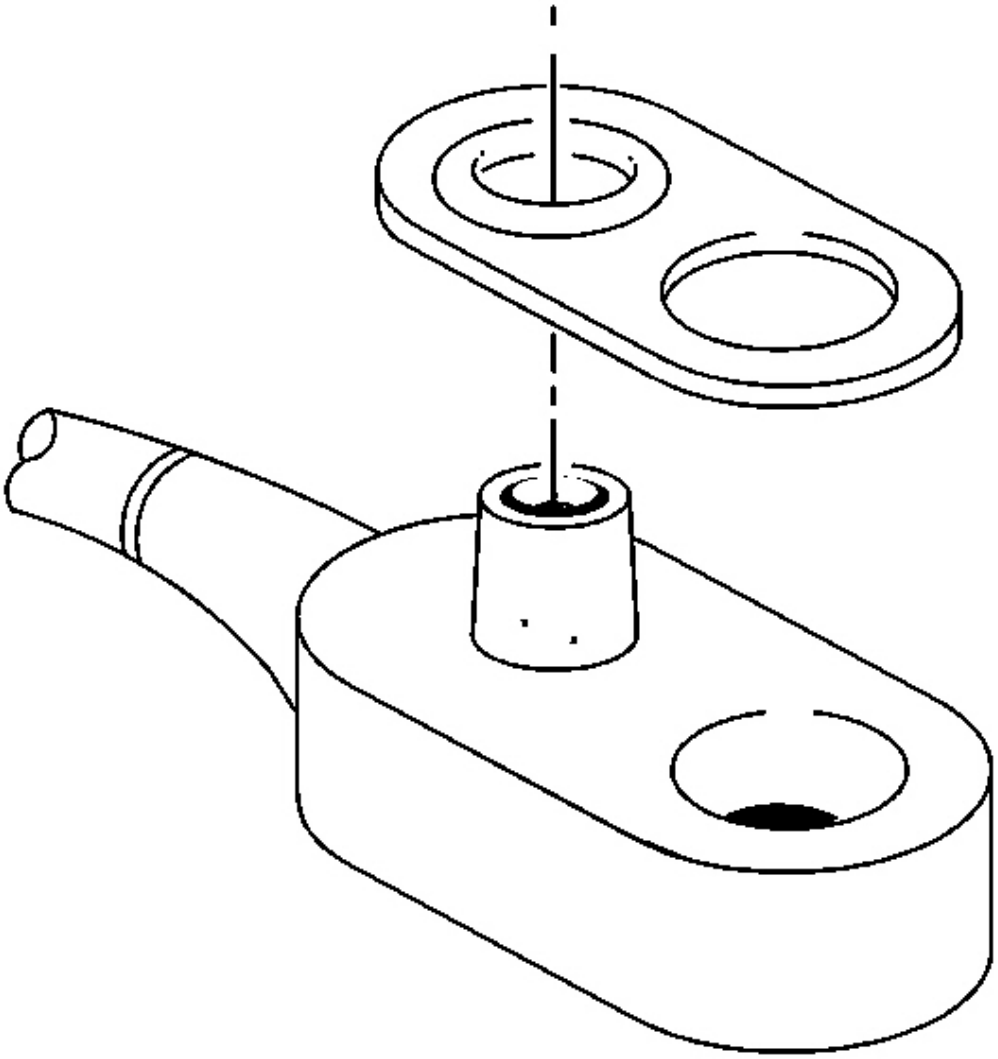

Fig. 129: View Of Pipe & Cover Gasket
Courtesy of GENERAL MOTORS CORP.

IMPORTANT:

- **Install the pipe gaskets properly onto the pipe and covers.**
- **Position the gasket O-ring seal onto the nipple portion of the pipe.**

1. Install the gaskets onto the engine coolant air bleed pipe and covers.

cardiagn.com

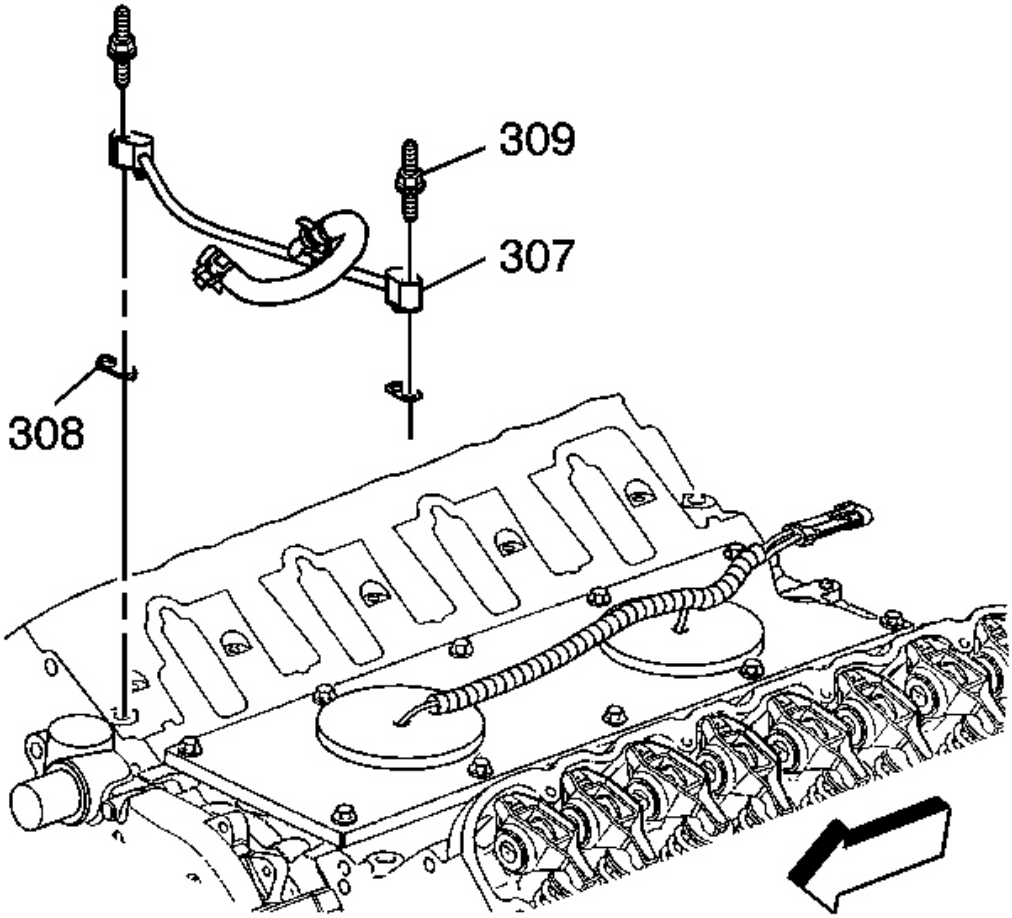

Fig. 130: Pipe, Gaskets & Cylinder Heads
Courtesy of GENERAL MOTORS CORP.

2. Install the pipe (307) and gaskets (308) onto the cylinder heads.

NOTE: **Refer to Fastener Notice in Cautions and Notices.**

3. Install the pipe studs (309).

   Install the two pipe studs to the front of the engine.

   Tighten: Tighten the pipe studs to 12 N.m (106 lb in).

cardiagn.com

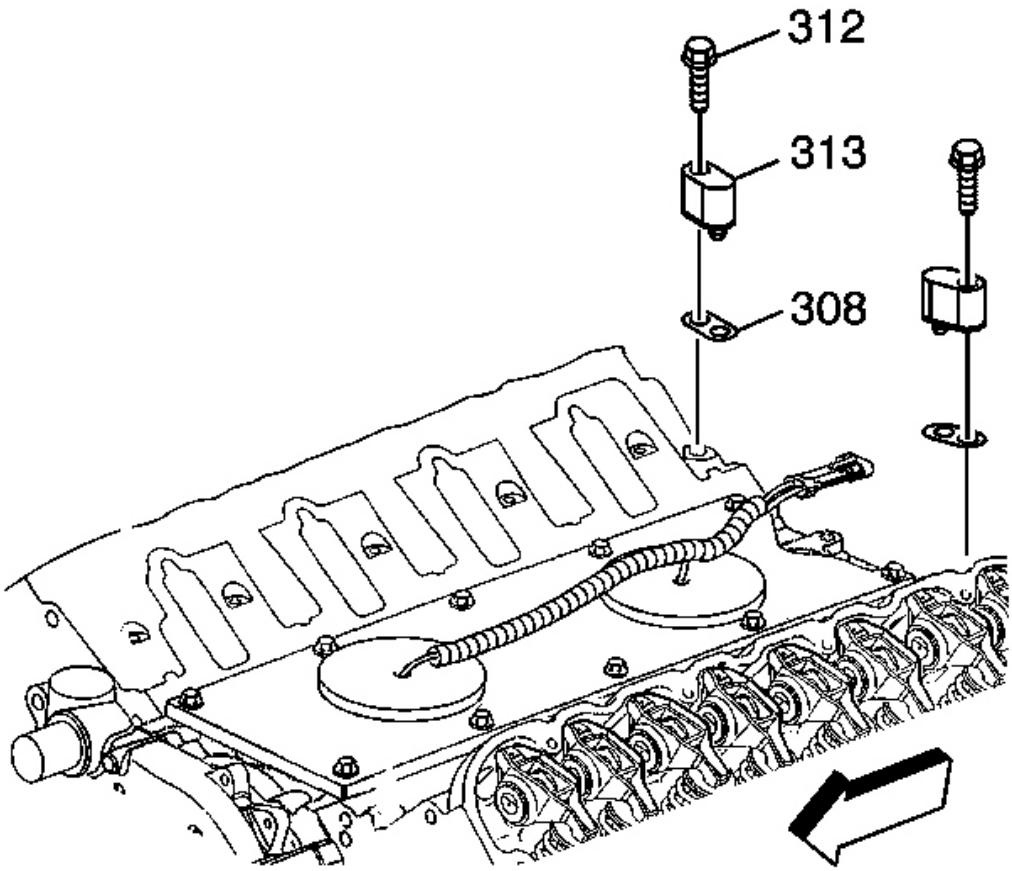

Fig. 131: View Of Engine Coolant Air Bleed Cover, Gasket & Bolts
Courtesy of GENERAL MOTORS CORP.

4. Install the covers (313), gaskets (308), and bolts (312) onto the rear of the engine.

   Tighten: Tighten the cover bolts to 12 N.m (106 lb in).

cardiagn.com

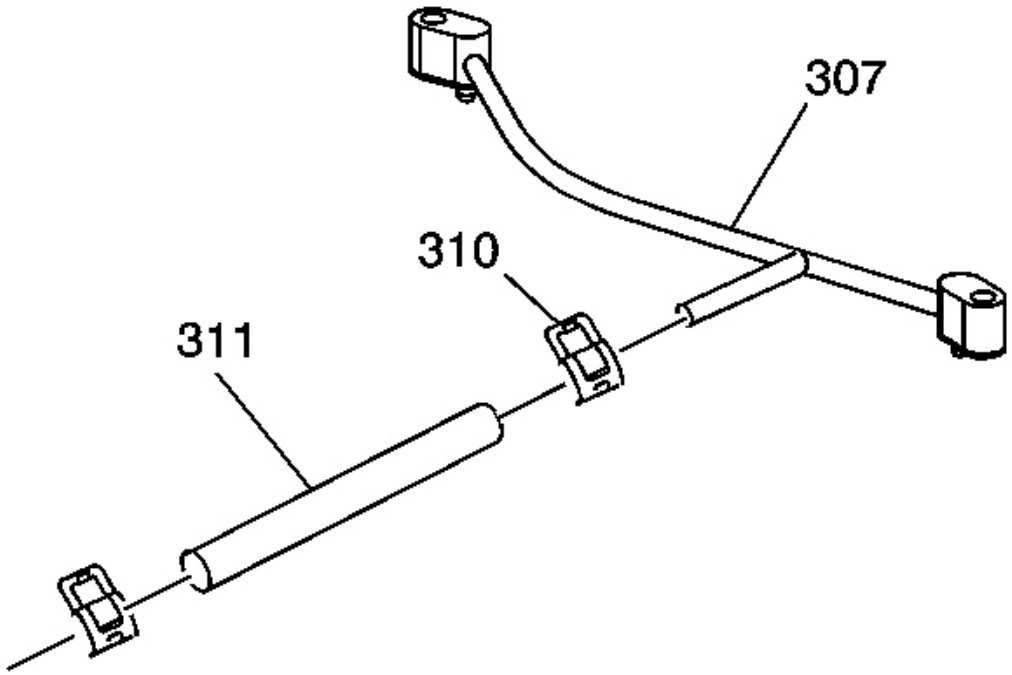

Fig. 132: Hose, Clamps & Pipe
Courtesy of GENERAL MOTORS CORP.

5. Install the hose (311) and clamps (310) onto the pipe (307).

INTAKE MANIFOLD INSTALLATION

cardiagn.com

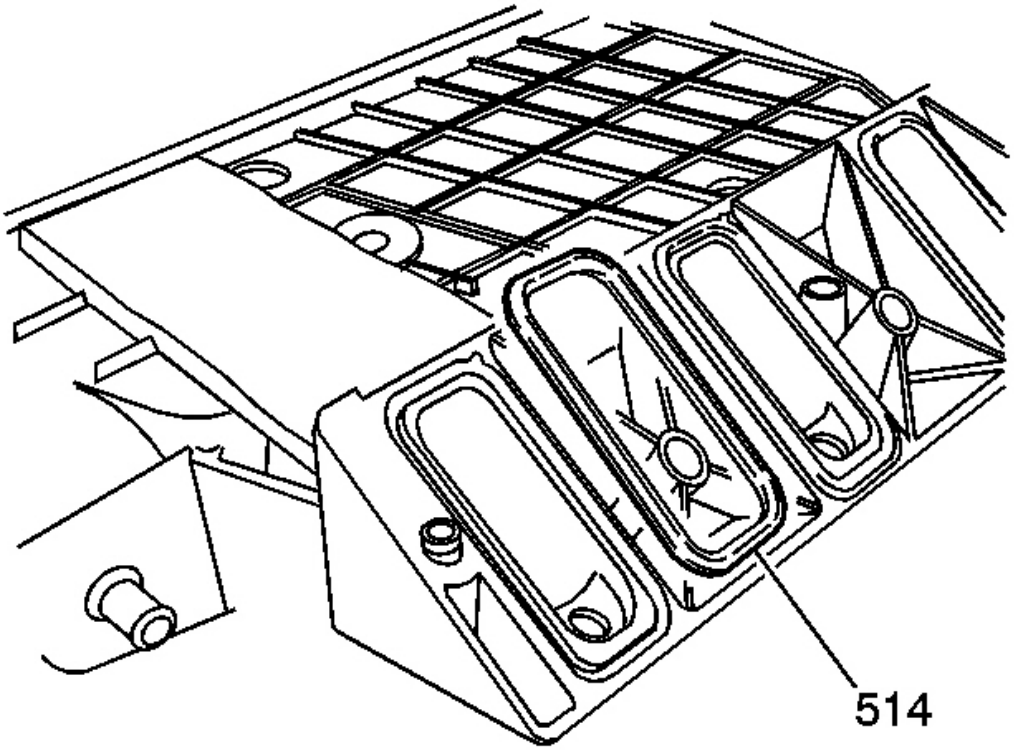

Fig. 133: Manifold-To-Cylinder Head Gaskets
Courtesy of GENERAL MOTORS CORP.

IMPORTANT:

- **The intake manifold, throttle body, fuel injection rail and fuel injectors may be removed as an assembly. If not servicing the individual components, install the intake manifold as a complete assembly.**
- **DO NOT use intake manifold gaskets again. Install NEW intake manifold-to-cylinder head gaskets.**

1. Install NEW intake manifold-to-cylinder head gaskets (514).

cardiagn.com

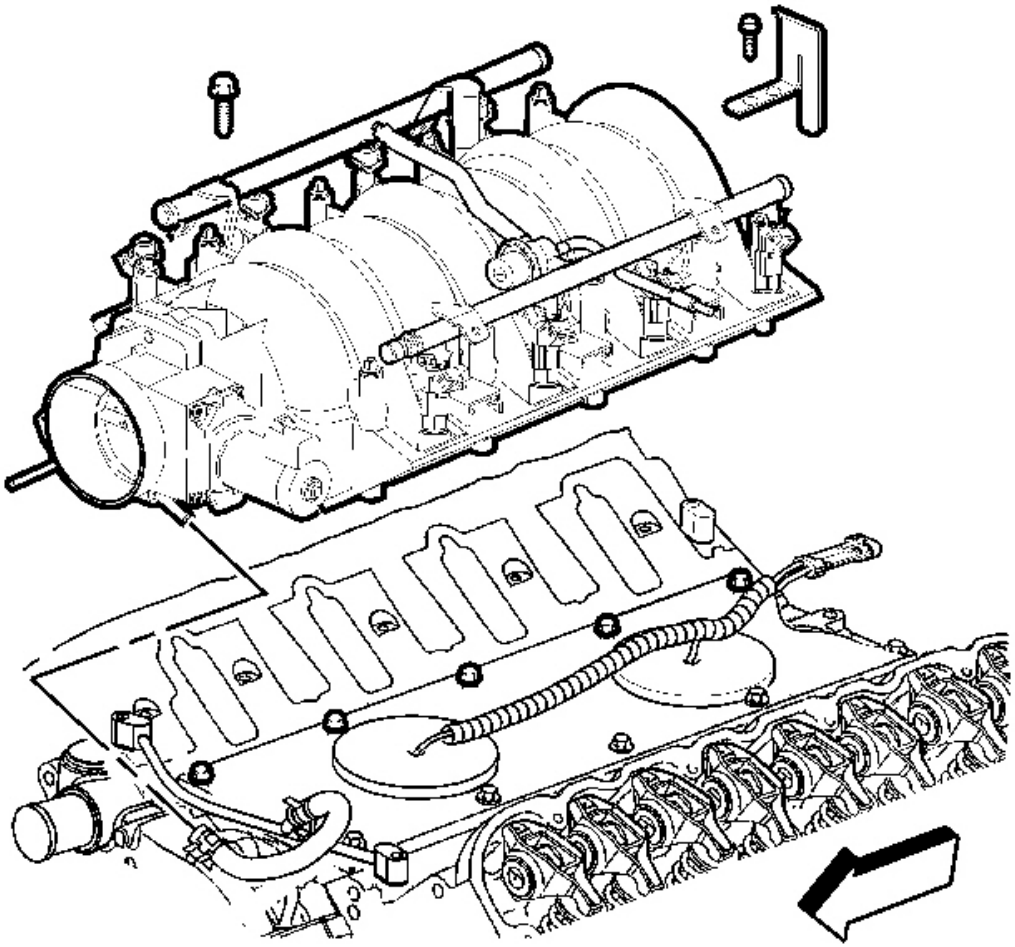

Fig. 134: Intake Manifold & Engine
Courtesy of GENERAL MOTORS CORP.

2. Install the intake manifold to the engine.

cardiagn.com

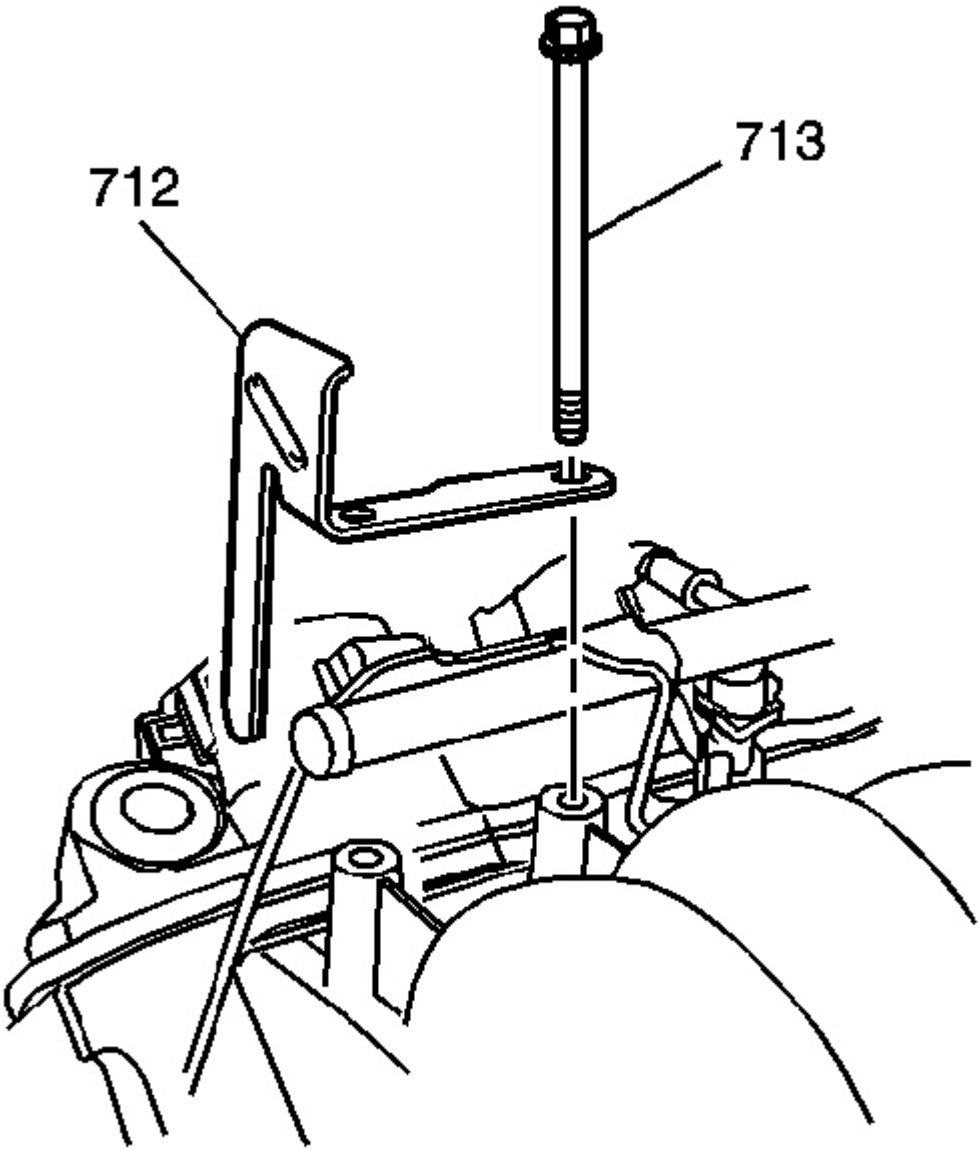

Fig. 135: Fuel Rail Stop Bracket
Courtesy of GENERAL MOTORS CORP.

3. Apply threadlock GM P/N 12345382 (Canadian P/N 10953489) or equivalent to the threads of the intake manifold bolts (713). Refer to **Sealers, Adhesives, and Lubricants** .
4. Install the fuel rail stop bracket (712).

cardiagn.com

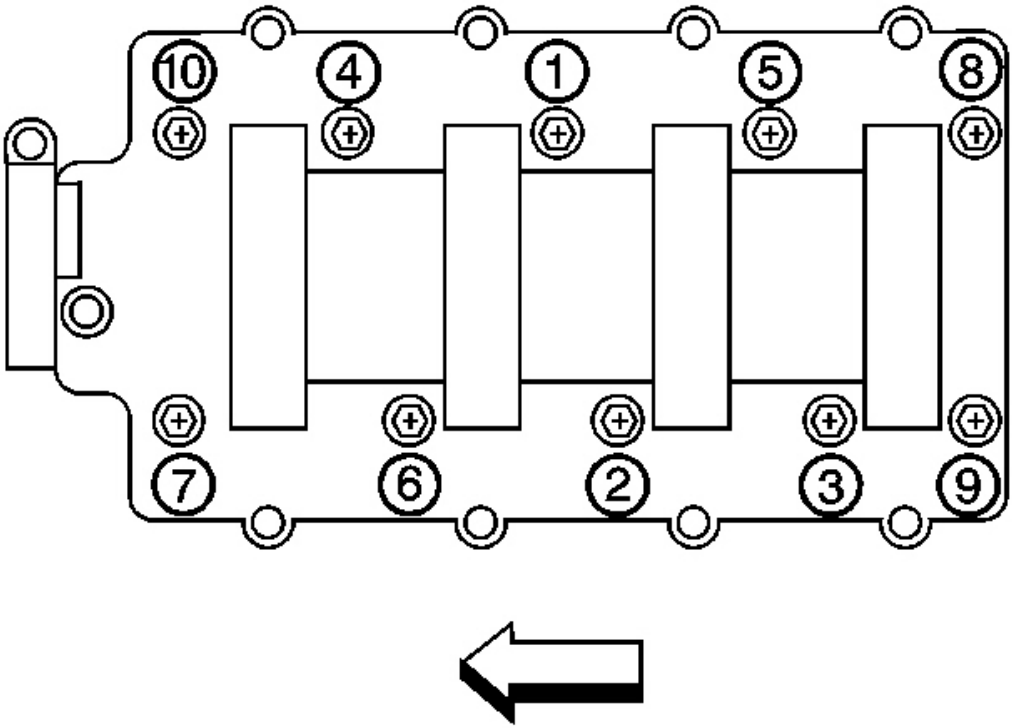

Fig. 136: Intake Manifold Bolt Tightening Sequence
Courtesy of GENERAL MOTORS CORP.

NOTE: Refer to Fastener Notice in Cautions and Notices.

5. Install the manifold bolts.

Tighten:

1. Tighten intake manifold bolts a first pass in sequence to 5 N.m (44 lb in).
2. Tighten intake manifold bolts a final pass in sequence to 10 N.m (89 lb in).

cardiagn.com

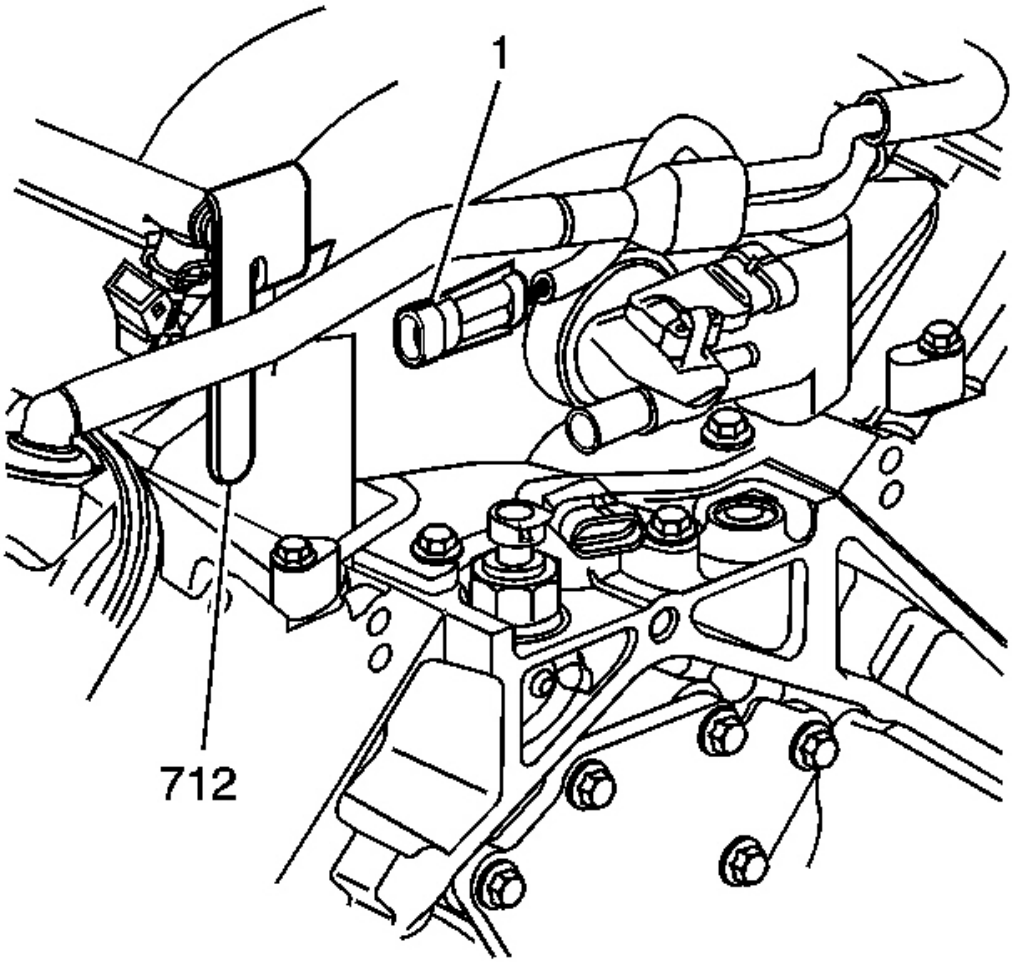

Fig. 137: Knock Sensor Wire Harness Connector & Fuel Rail Stop Bracket
Courtesy of GENERAL MOTORS CORP.

6. Install the knock sensor wire harness connector (1) onto the fuel rail stop bracket (712).

cardiagn.com

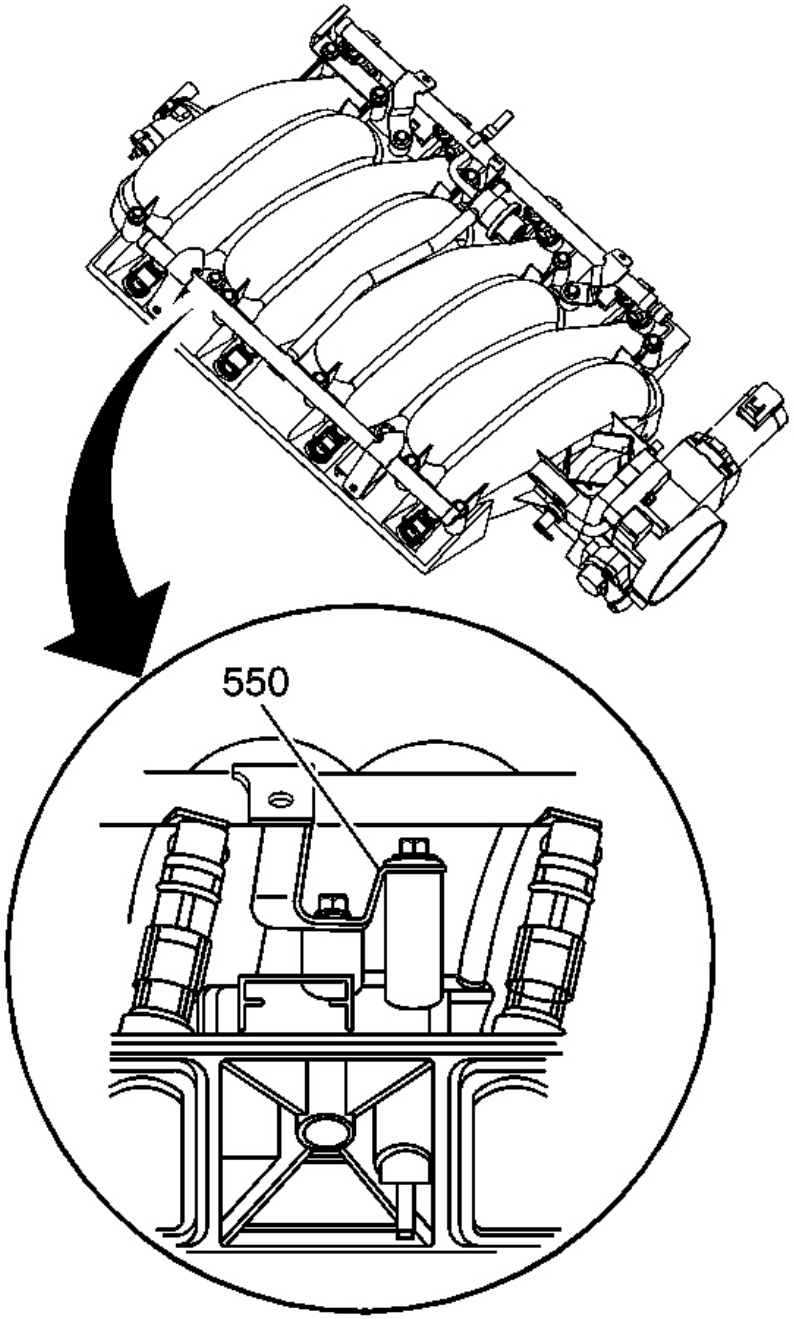

Fig. 138: Fuel Rail Ground Strap & Intake Manifold
Courtesy of GENERAL MOTORS CORP.

7. Note the location of the fuel rail ground strap (550) on the intake manifold.

cardiagn.com

The fuel rail ground strap must be installed during assembly.

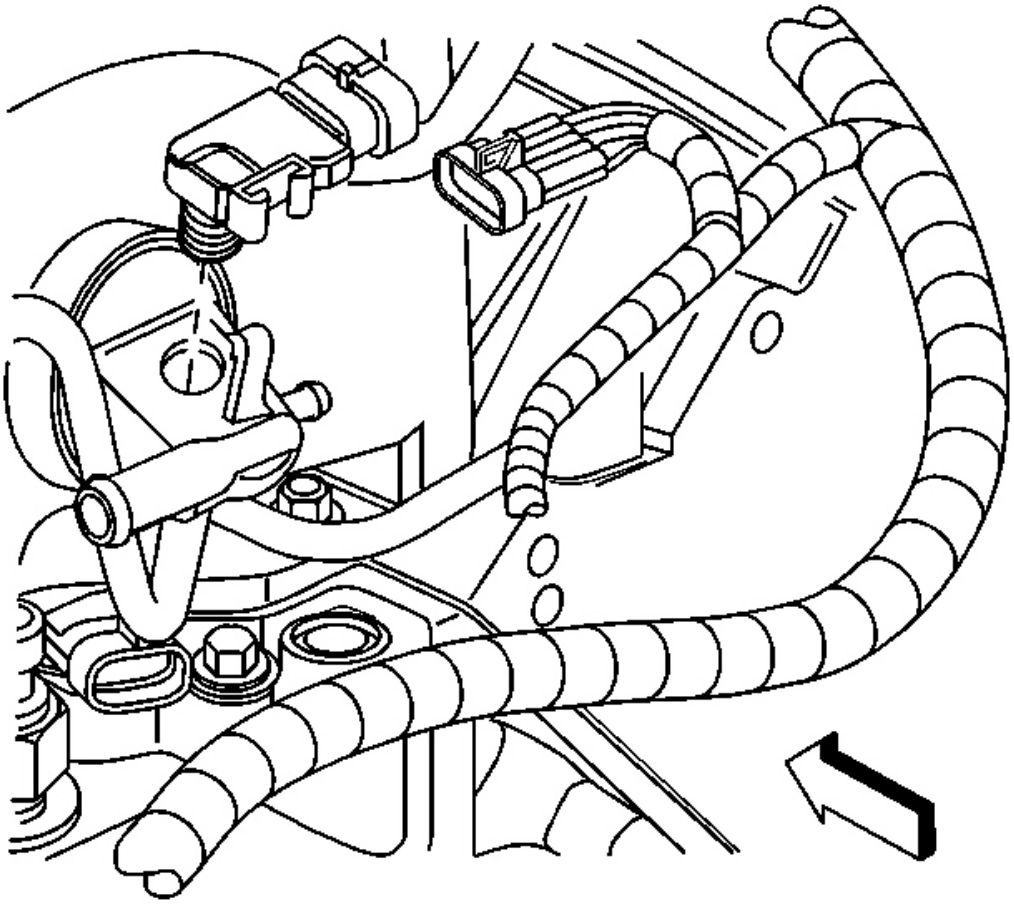

Fig. 139: Manifold Absolute Pressure (MAP) Sensor
Courtesy of GENERAL MOTORS CORP.

8. Install the manifold absolute pressure (MAP) sensor, if previously removed.

cardiagn.com

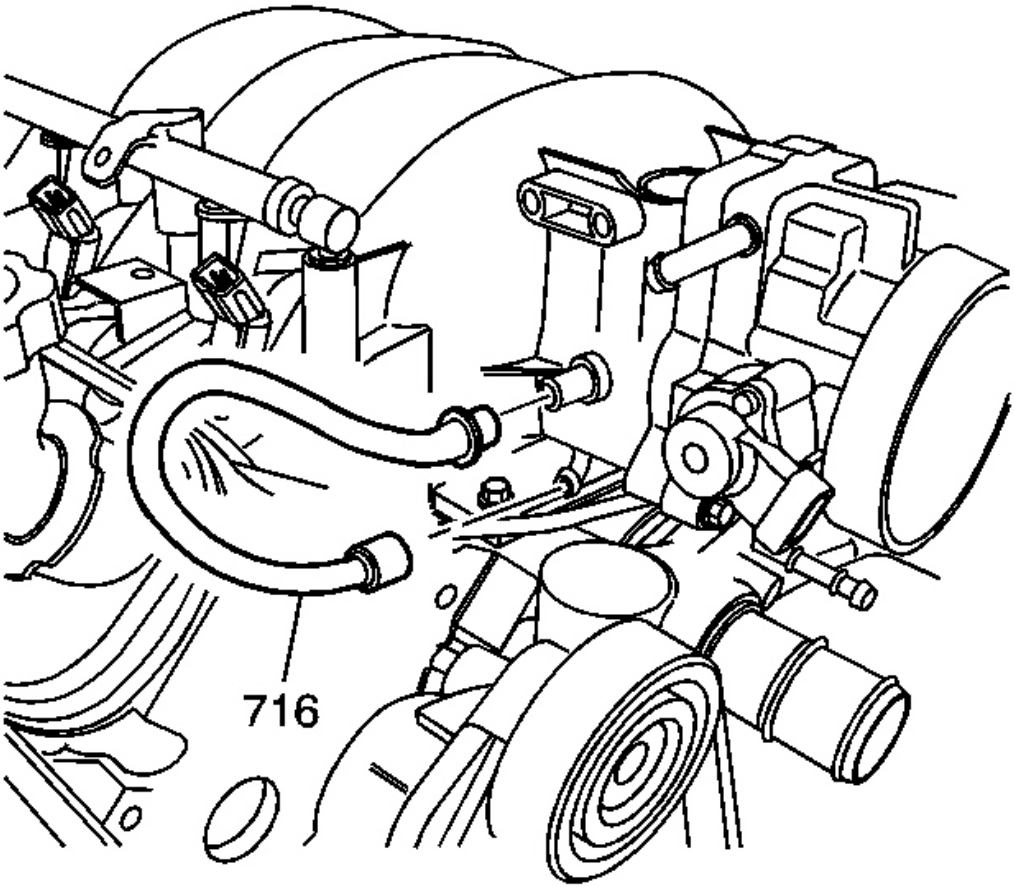

Fig. 140: PCV Dirty Air Pipe, Valley Cover & Intake Manifold
Courtesy of GENERAL MOTORS CORP.

9. Install the positive crankcase ventilation (PCV) pipe - dirty air (716) to the valley cover and intake manifold.

FUEL RAIL AND INJECTORS INSTALLATION

cardiagn.com

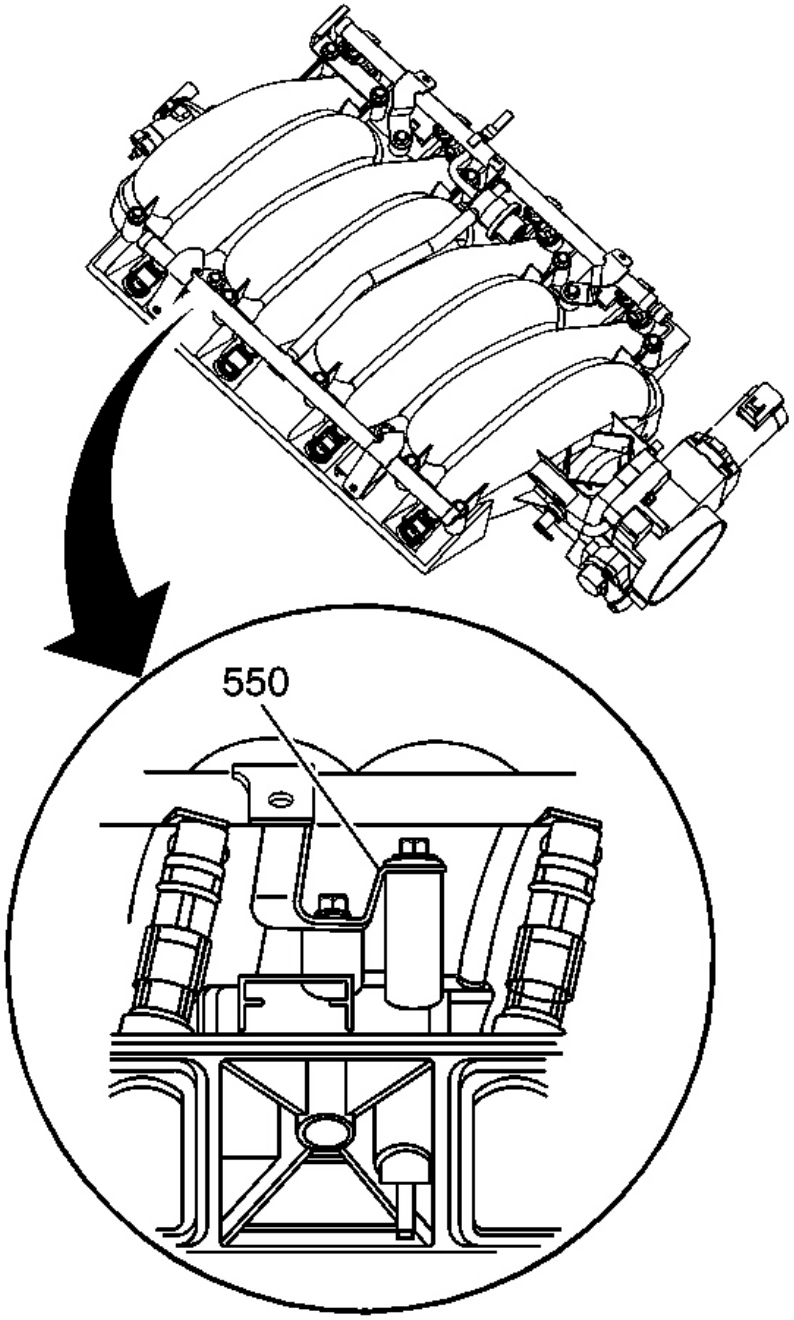

Fig. 141: Fuel Rail Ground Strap & Intake Manifold
Courtesy of GENERAL MOTORS CORP.

IMPORTANT: DO NOT use fuel injector O-ring seals again. Install NEW fuel injector O-

cardiagn.com

ring seals during assembly.

1. Lubricate the NEW fuel injector O-ring seals with clean engine oil.
2. Install the O-ring seals onto the fuel injectors.
3. Note the location of the fuel rail ground strap (550) on the intake manifold.

   The fuel rail ground strap must be installed during assembly.

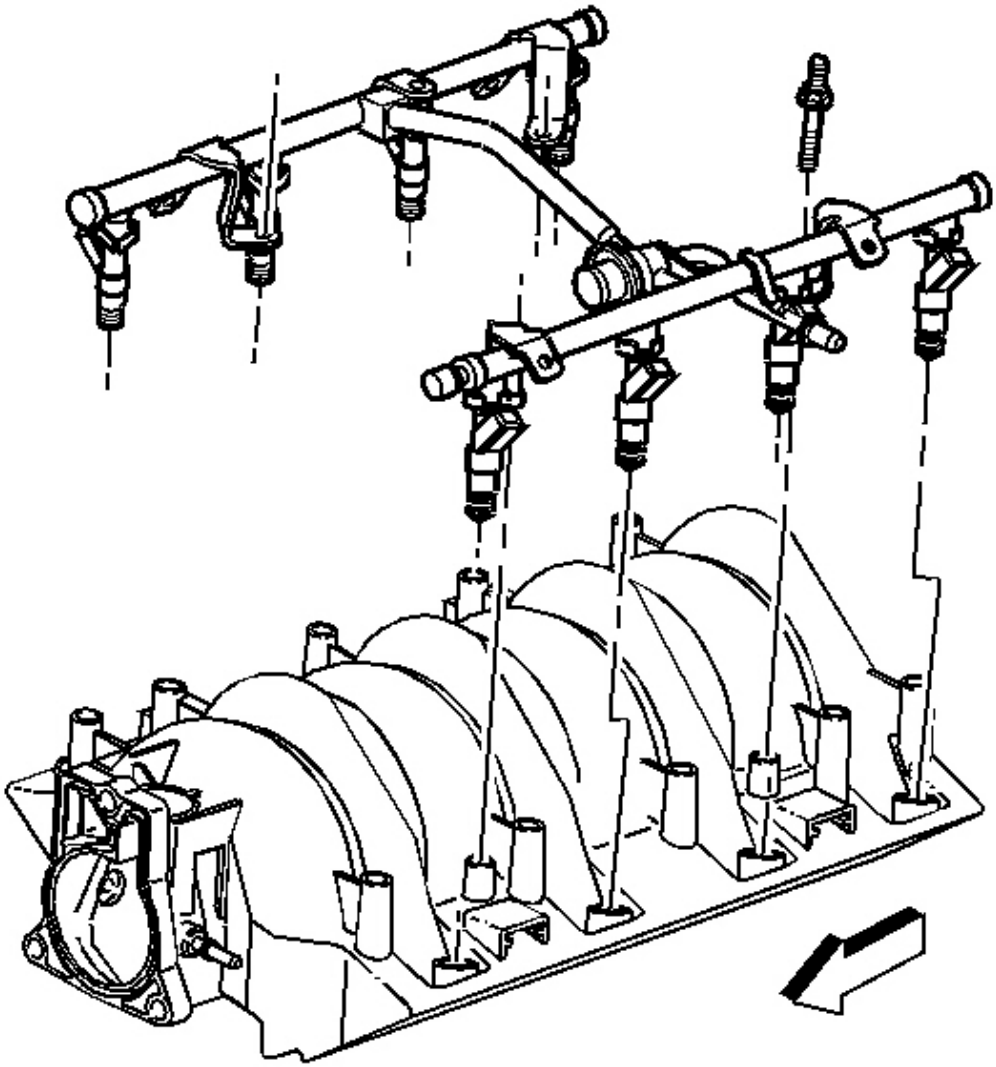

cardiagn.com

Fig. 142: Fuel Rail To Intake Mounting View
Courtesy of GENERAL MOTORS CORP.

4. Install the fuel rail, with fuel injectors, into the intake manifold.

   Press evenly on both sides of the fuel rail until all of the injectors are seated in their bores.

5. Apply a 5 mm (0.2 in) band of threadlock GM P/N 12345382 (Canadian P/N 10953489) or equivalent to the threads of the fuel rail bolts.

CAUTION: Refer to Fuel Rail Stop Bracket Installation Caution in Cautions and Notices.

NOTE: Refer to Fastener Notice in Cautions and Notices.

6. Install the fuel rail bolts.

   Tighten: Tighten the fuel rail bolts to 10 N.m (89 lb in).

THROTTLE BODY INSTALLATION

cardiagn.com

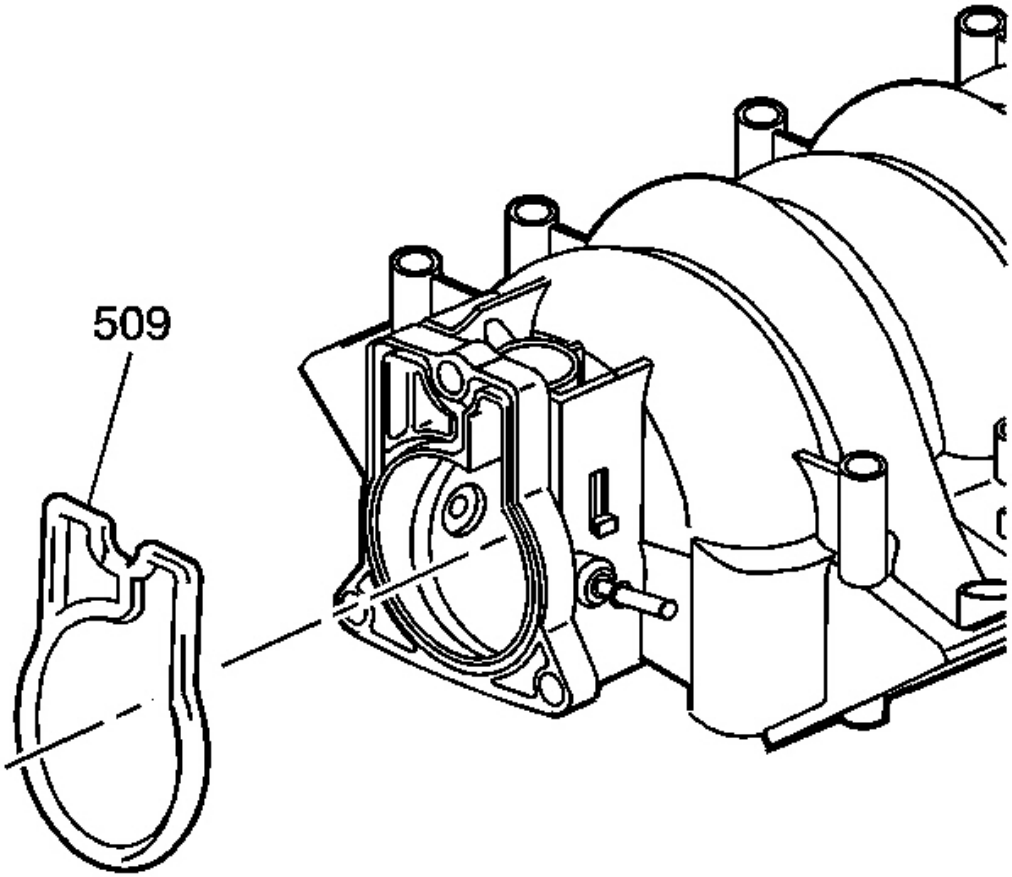

Fig. 143: Throttle Body Gasket & Intake Manifold
Courtesy of GENERAL MOTORS CORP.

NOTE: **Handle the electronic throttle control components carefully. Use cleanliness in order to prevent damage. Do not drop the electronic throttle control components. Do not roughly handle the electronic throttle control components. Do not immerse the electronic throttle control components in cleaning solvents of any type.**

IMPORTANT: **DO NOT use the throttle body gasket again. Install a NEW gasket during assembly.**

1. Install the throttle body gasket (509) to the intake manifold.

cardiagn.com

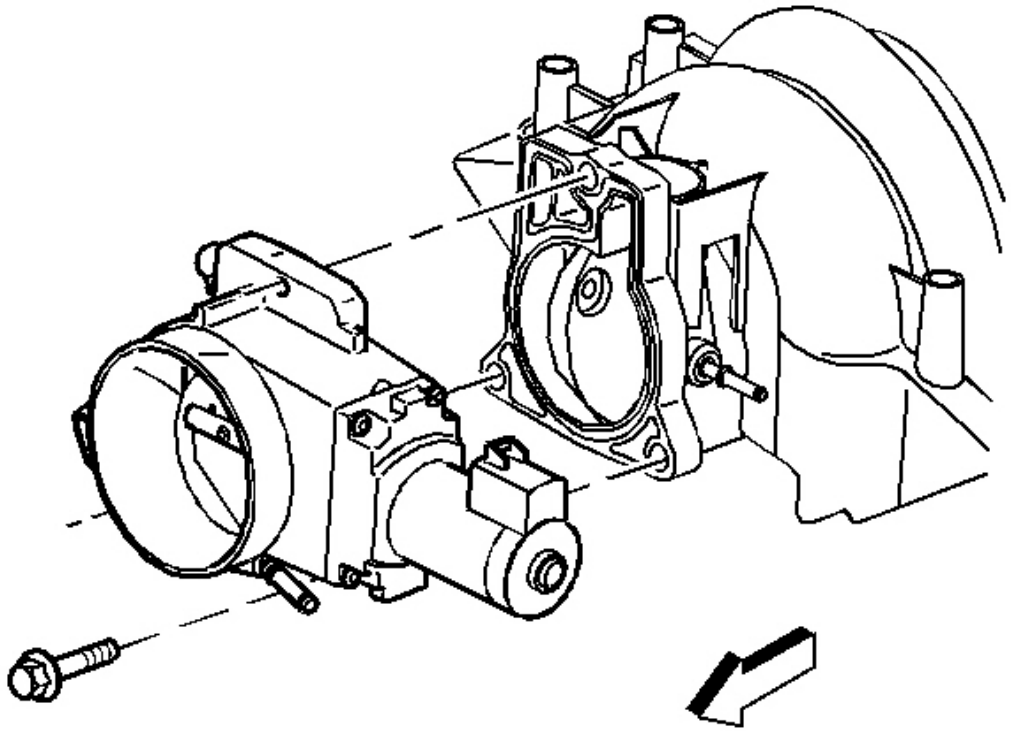

Fig. 144: View Of Throttle Body
Courtesy of GENERAL MOTORS CORP.

NOTE: Refer to Fastener Notice in Cautions and Notices.

2. Install the throttle body and bolts.

   Tighten: Tighten the throttle body bolts to 12 N.m (106 lb in).

3. Install the engine coolant air bleed hose and clamp.

WATER PUMP INSTALLATION

cardiagn.com

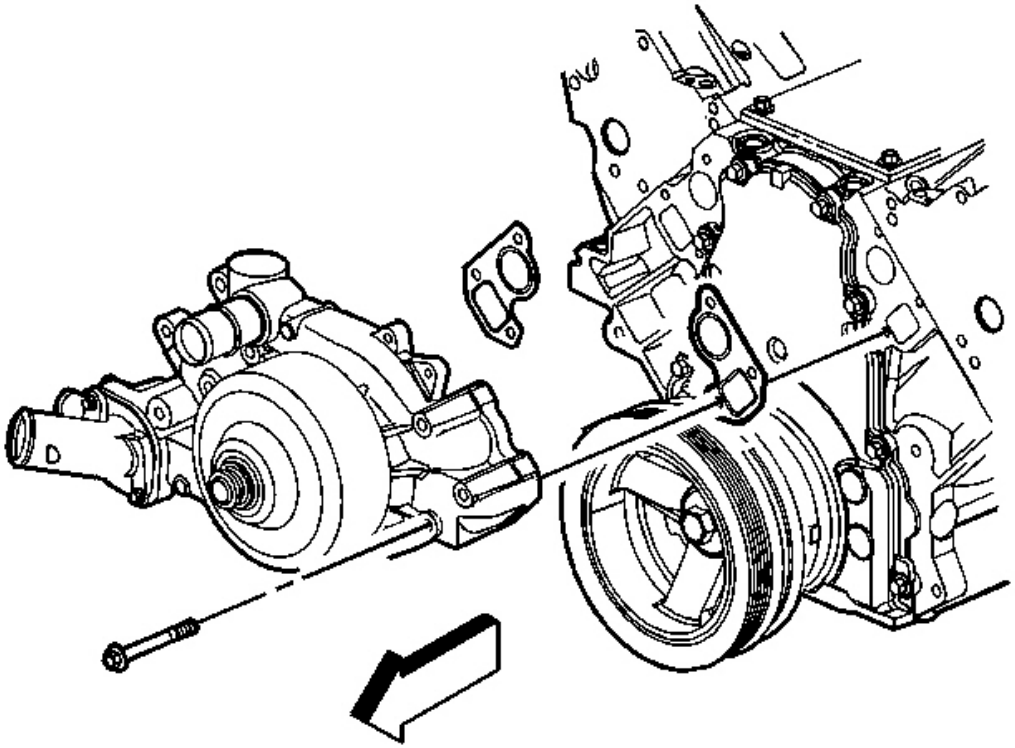

Fig. 145: Old Gasket & Water Pump Sealing
Courtesy of GENERAL MOTORS CORP.

NOTE: **DO NOT use cooling system seal tabs, or similar compounds, unless otherwise instructed. The use of cooling system seal tabs, or similar compounds, may restrict coolant flow through the passages of the cooling system or the engine components. Restricted coolant flow may cause engine overheating and/or damage to the cooling system or the engine components/assembly.**

IMPORTANT: **All gasket surfaces should be free of oil or other foreign material during assembly.**

1. Install the water pump and NEW gaskets.

NOTE: **Refer to Fastener Notice in Cautions and Notices.**

2. Install the water pump bolts.

cardiagn.com

Tighten:

1. Tighten the water pump bolts a first pass to 15 N.m (11 lb ft).
2. Tighten the water pump bolts a final pass to 30 N.m (22 lb ft).

EXHAUST MANIFOLD INSTALLATION - LEFT

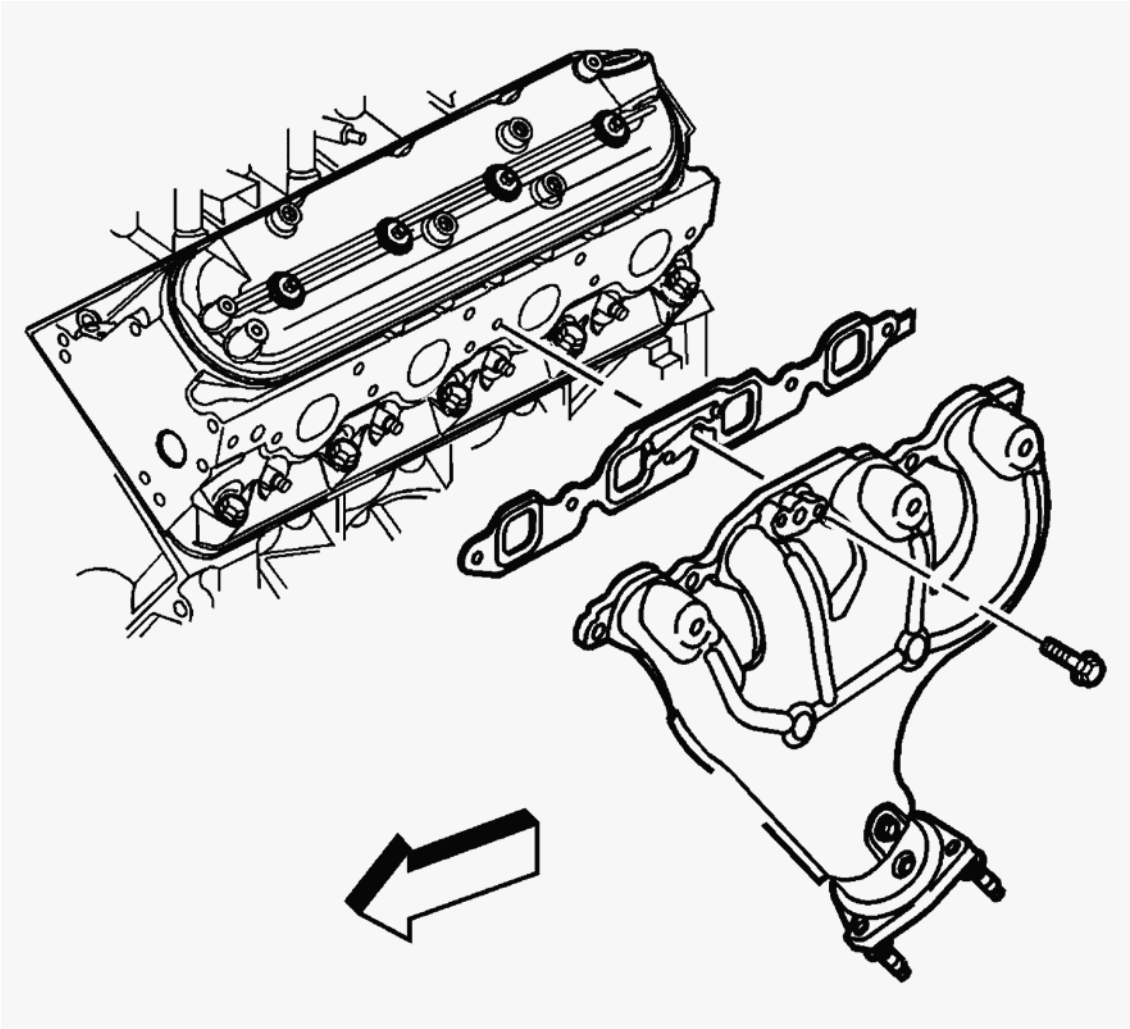

Fig. 146: Exhaust Manifold Gasket & Bolts
Courtesy of GENERAL MOTORS CORP.

IMPORTANT:

- **Tighten the exhaust manifold bolts as specified in the service procedure. Improperly installed and/or leaking exhaust manifold gaskets may effect vehicle emissions and/or On-Board Diagnostics (OBD) II system performance.**
- **The cylinder head exhaust manifold bolt hole threads must be clean and free of debris or threadlocking material.**

1. Apply a 5 mm (0.2 in) wide band of threadlock GM P/N 12345493 (Canadian P/N 10953488) or

cardiagn.com

equivalent to the threads of the exhaust manifold bolts.

2. Install the exhaust manifold and NEW exhaust manifold gasket.

NOTE: Refer to Fastener Notice in Cautions and Notices.

3. Install the exhaust manifold bolts.

   Tighten:

   1. Tighten the exhaust manifold bolts a first pass to 15 N.m (11 lb ft). Tighten the exhaust manifold bolts beginning with the center 2 bolts. Alternate from side-to-side, and work toward the outside bolts.
   2. Tighten the exhaust manifold bolts a final pass to 25 N.m (18 lb ft). Tighten the exhaust manifold bolts beginning with the center 2 bolts. Alternate from side-to-side, and work toward the outside bolts.

4. Using a flat punch, bend over the exposed edge of the exhaust manifold gasket at the rear of the left cylinder head.
5. Install the exhaust manifold heat shield and bolts, if required.

   Tighten: Tighten the heat shield bolts to 9 N.m (80 lb in).

cardiagn.com

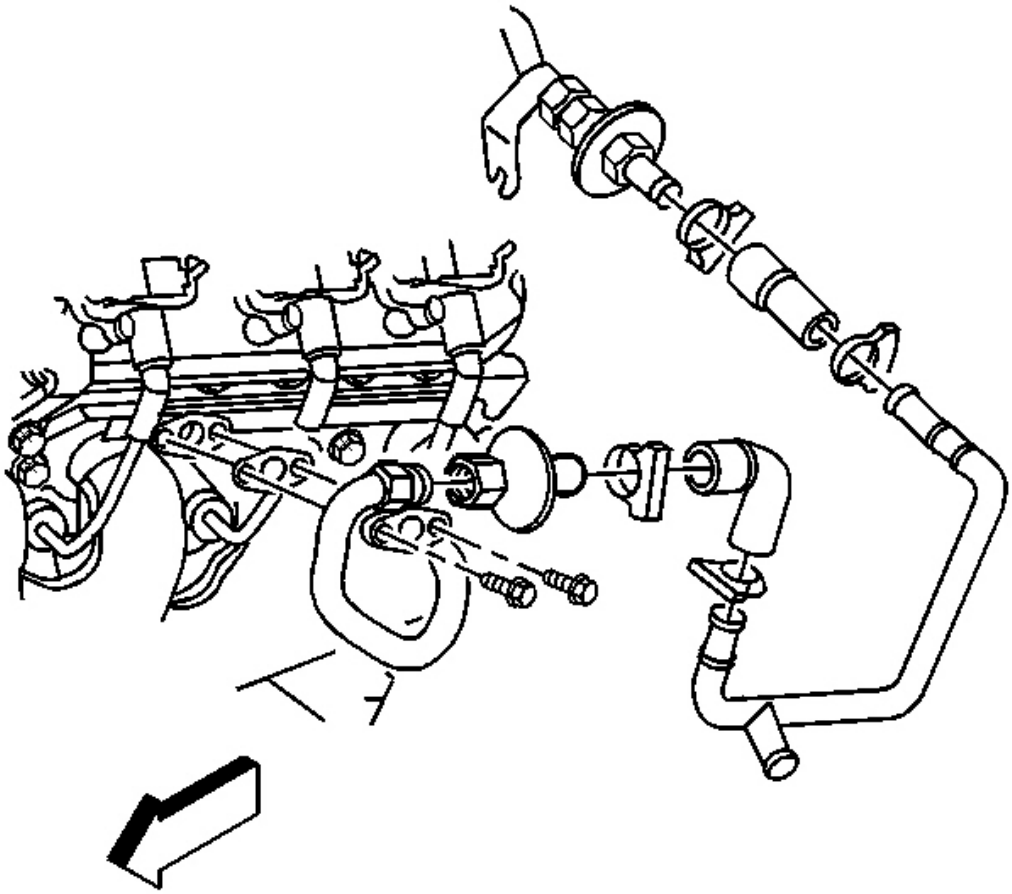

Fig. 147: AIR Pipe & Exhaust Manifold Bolts
Courtesy of GENERAL MOTORS CORP.

6. Install the air injection reaction (AIR) pipe, with check valve, NEW gasket, and bolts.

   Tighten: Tighten the AIR pipe to exhaust manifold bolts to 20 N.m (15 lb ft).

cardiagn.com

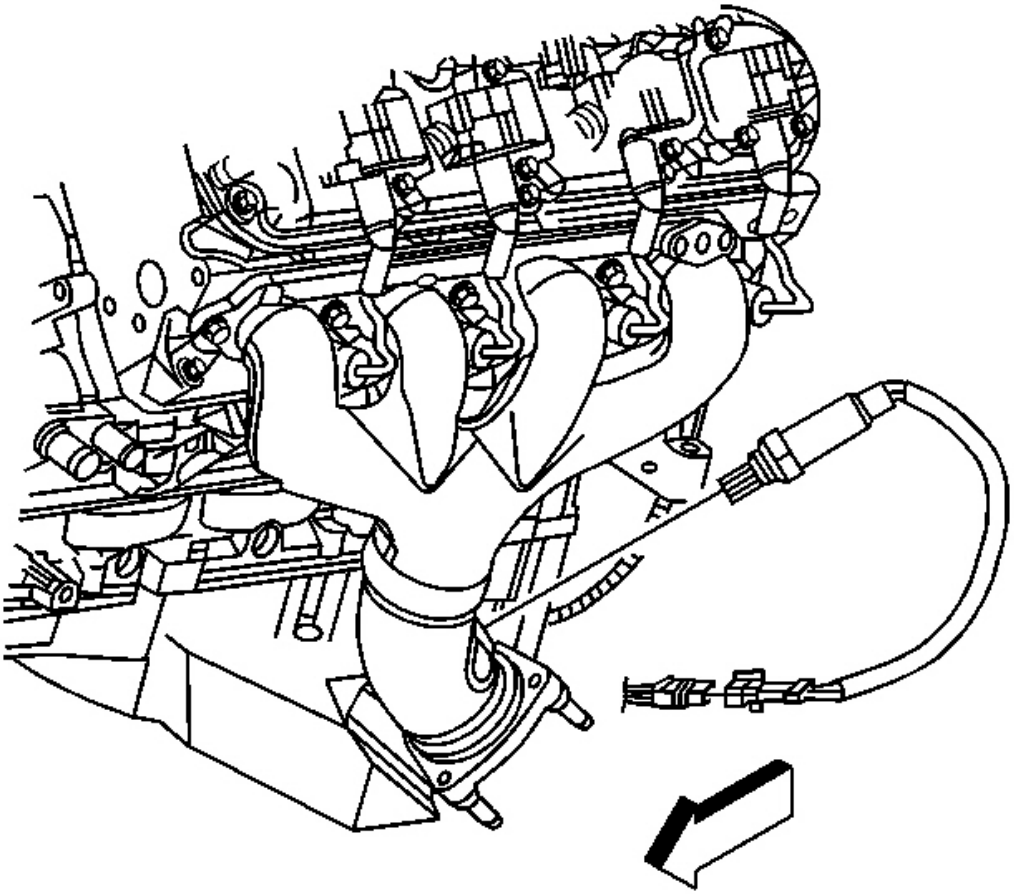

Fig. 148: Oxygen Sensor & Intake Manifold
Courtesy of GENERAL MOTORS CORP.

7. Install the oxygen sensor into the intake manifold.

   Tighten: Tighten the oxygen sensor to 42 N.m (30 lb ft).

EXHAUST MANIFOLD INSTALLATION - RIGHT

cardiagn.com

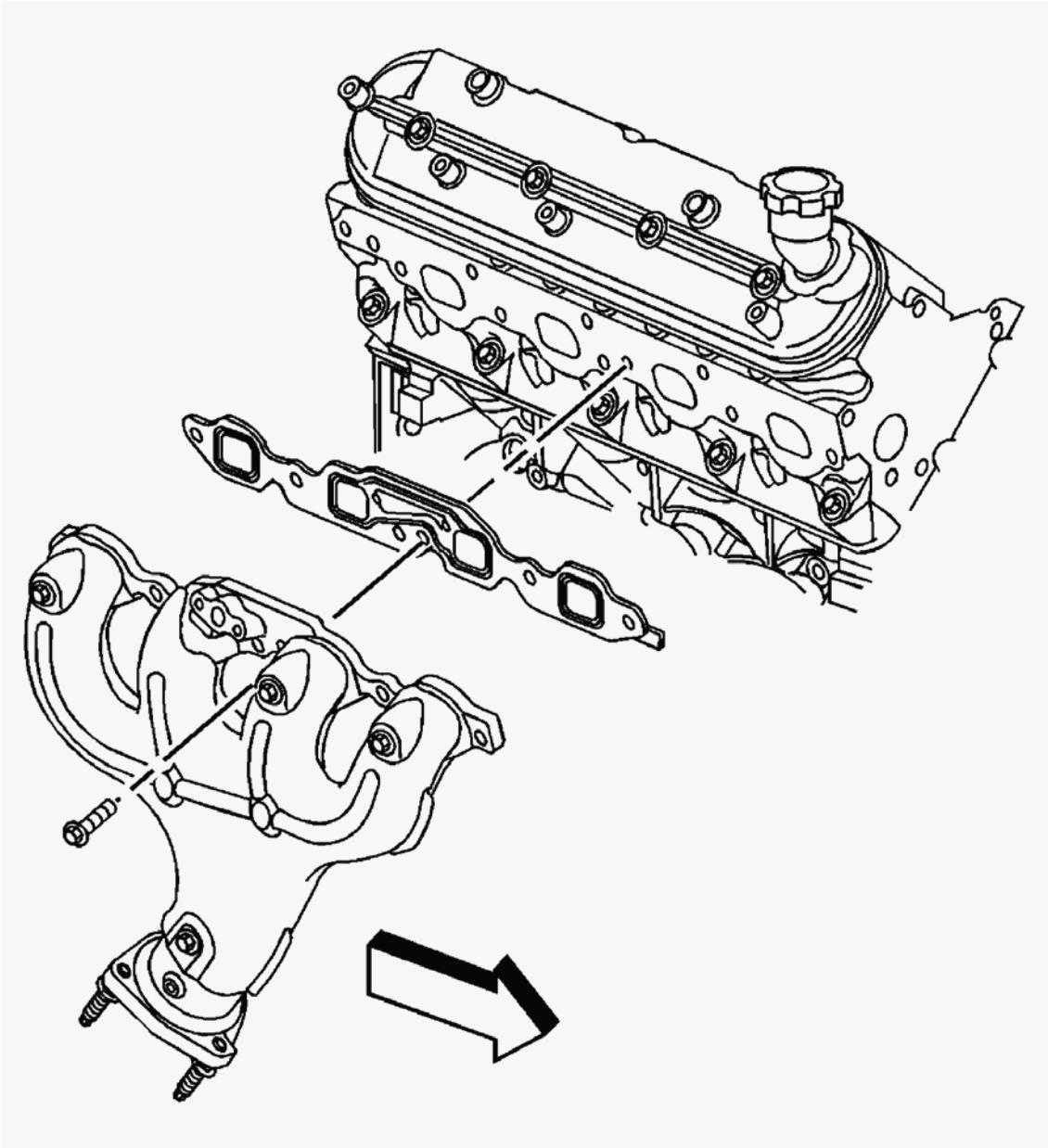

Fig. 149: Exhaust Manifold Gasket & Exhaust Manifold
Courtesy of GENERAL MOTORS CORP.

IMPORTANT:

- **Tighten the exhaust manifold bolts as specified in the service procedure. Improperly installed and/or leaking exhaust manifold gaskets may effect vehicle emissions and/or On-Board Diagnostics (OBD) II system performance.**
- **The cylinder head exhaust manifold bolt hole threads must be clean and free of debris or threadlocking material.**

1. Apply a 5 mm (0.2 in) wide band of threadlock GM P/N 12345493 (Canadian P/N 10953488) or

cardiagn.com

equivalent to the threads of the exhaust manifold bolts.

2. Install the exhaust manifold gasket and exhaust manifold.

NOTE: Refer to Fastener Notice in Cautions and Notices.

3. Install the exhaust manifold bolts.

Tighten:

1. Tighten the exhaust manifold bolts first pass to 15 N.m (11 lb ft). Tighten the exhaust manifold bolts beginning with the center 2 bolts. Alternate from side-to-side, and work toward the outside bolts.
2. Tighten the exhaust manifold bolts final pass to 25 N.m (18 lb ft). Tighten the exhaust manifold bolts beginning with the center 2 bolts. Alternate from side-to-side, and work toward the outside bolts.

4. Using a flat punch, bend over the exposed edge of the exhaust manifold gasket at the front of the right cylinder head.
5. Install the exhaust manifold heat shield and bolts, if required.

Tighten: Tighten the heat shield bolts to 9 N.m (80 lb in).

cardiagn.com

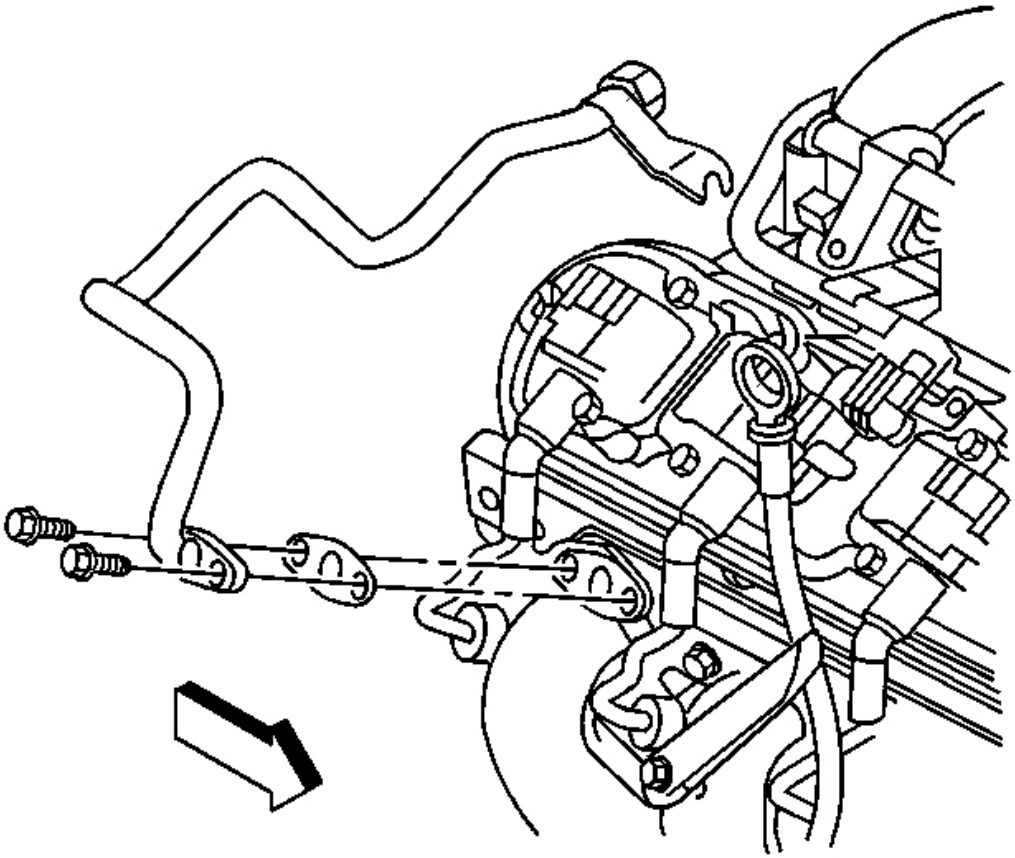

Fig. 150: Air Pipe, Check Valve, Gasket & Bolts
Courtesy of GENERAL MOTORS CORP.

6. Install the air injection reaction (AIR) pipe, with check valve, NEW gasket, and bolts.

cardiagn.com

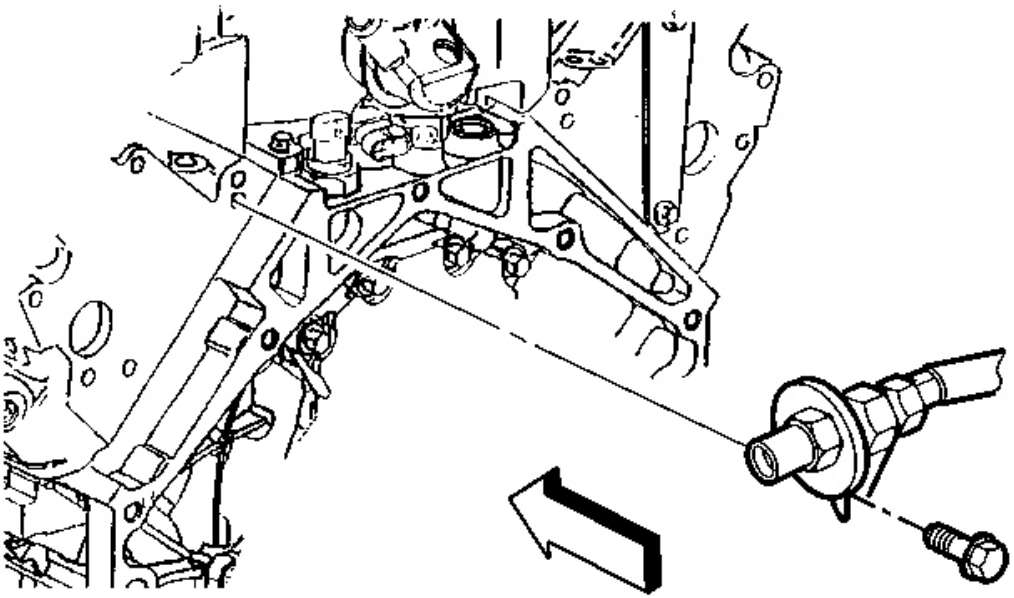

Fig. 151: AIR Tube Bolt To Left Rear Cylinder Head
Courtesy of GENERAL MOTORS CORP.

7. Install the AIR tube bolt to the left rear cylinder head.

   Tighten:
   1. Tighten the AIR pipe to exhaust manifold bolts to 20 N.m (15 lb ft).
   2. Tighten the AIR pipe to left cylinder head bolt to 20 N.m (15 lb ft).

8. Install the oxygen sensor into the intake manifold.

   Tighten: Tighten the oxygen sensor to 42 N.m (30 lb ft).

OIL LEVEL INDICATOR AND TUBE INSTALLATION

cardiagn.com

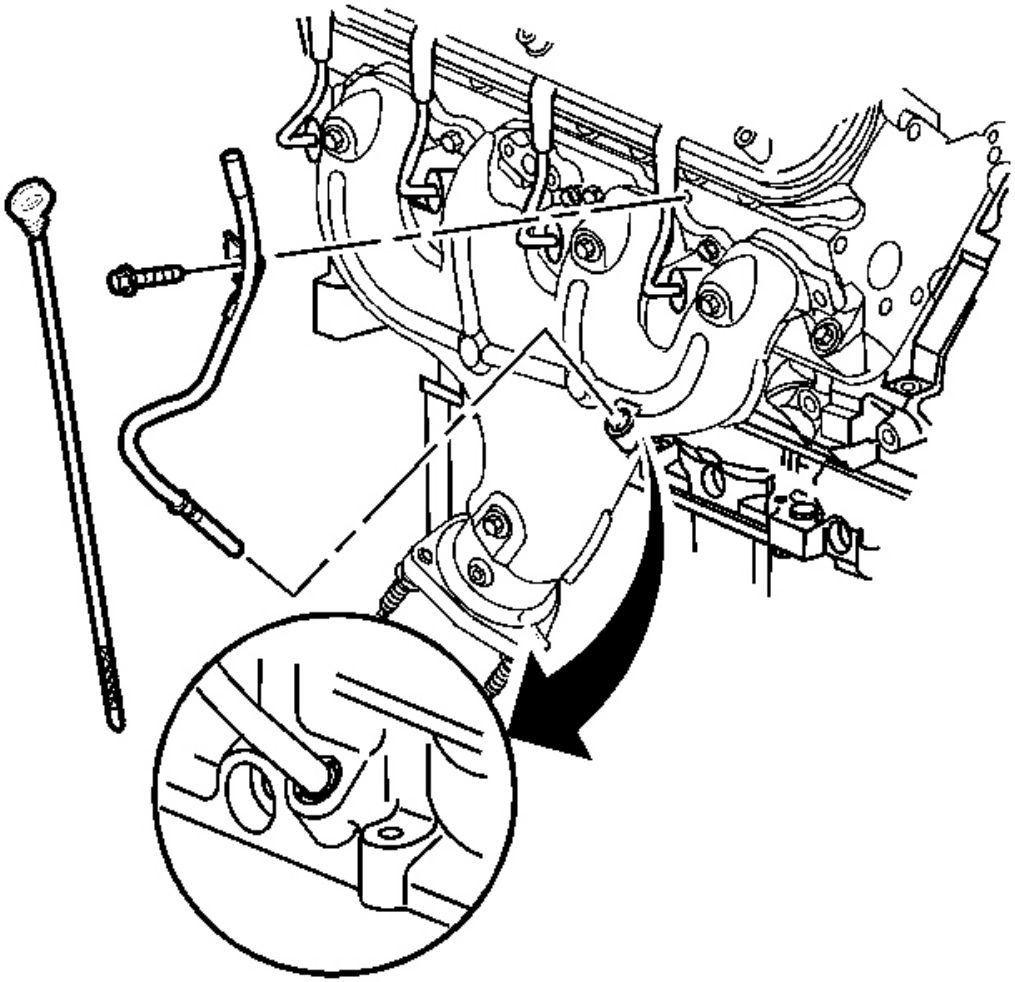

Fig. 152: O-Ring Seal, Oil Level Indicator Tube & Engine Block
Courtesy of GENERAL MOTORS CORP.

1. Inspect the O-ring seal for cuts or damage. If the oil level indicator tube O-ring seal is not cut or damaged, it may be used again.
2. Lubricate the O-ring seal with clean engine oil.
3. Install the O-ring seal onto the oil level indicator tube.
4. Install the oil level indicator tube into the engine block and rotate into proper position.

NOTE: Refer to Fastener Notice in Cautions and Notices.

5. Install the tube bolt to the right cylinder head.

cardiagn.com

Tighten: Tighten the oil level indicator tube bolt to 16 N.m (12 lb ft).

6. Install the oil level indicator into the tube.

CLUTCH PILOT BEARING INSTALLATION

Tools Required

J 38836 Pilot Bushing Installer/Clutch

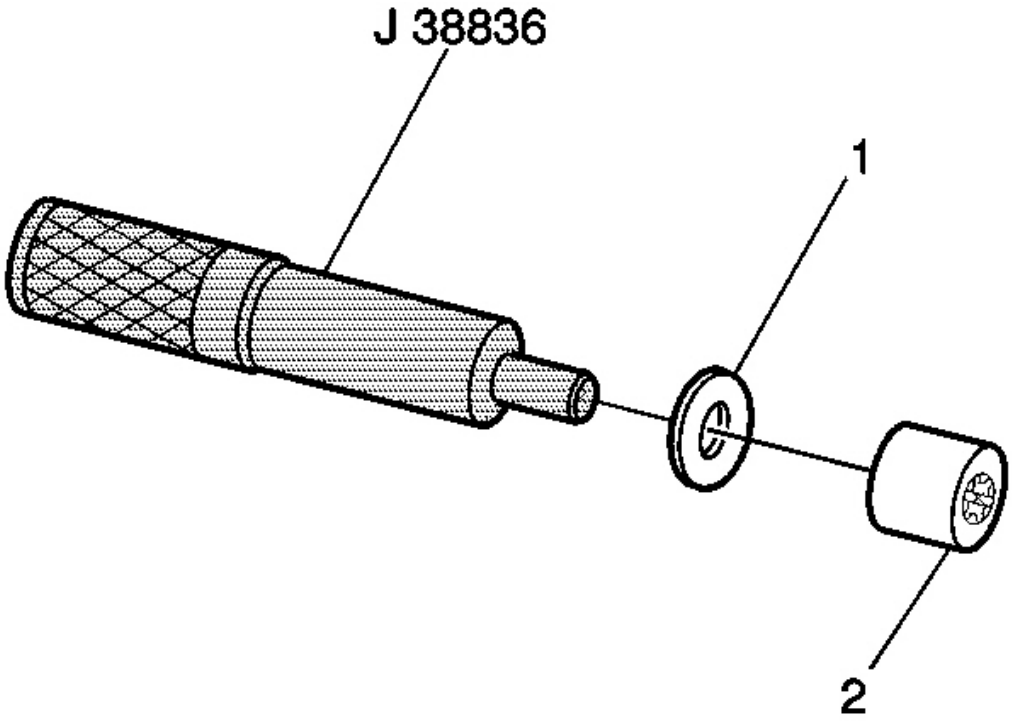

Fig. 153: 5/8 Inch Washer, Pilot Bearing &
Courtesy of GENERAL MOTORS CORP.

1. Install a 5/8 inch washer (1) onto the **J 38836** or equivalent.

   The washer serves as a stop against the crankshaft face and will assist in installing the bearing to the proper depth.

2. Install the new pilot bearing (2) onto the tool.

cardiagn.com

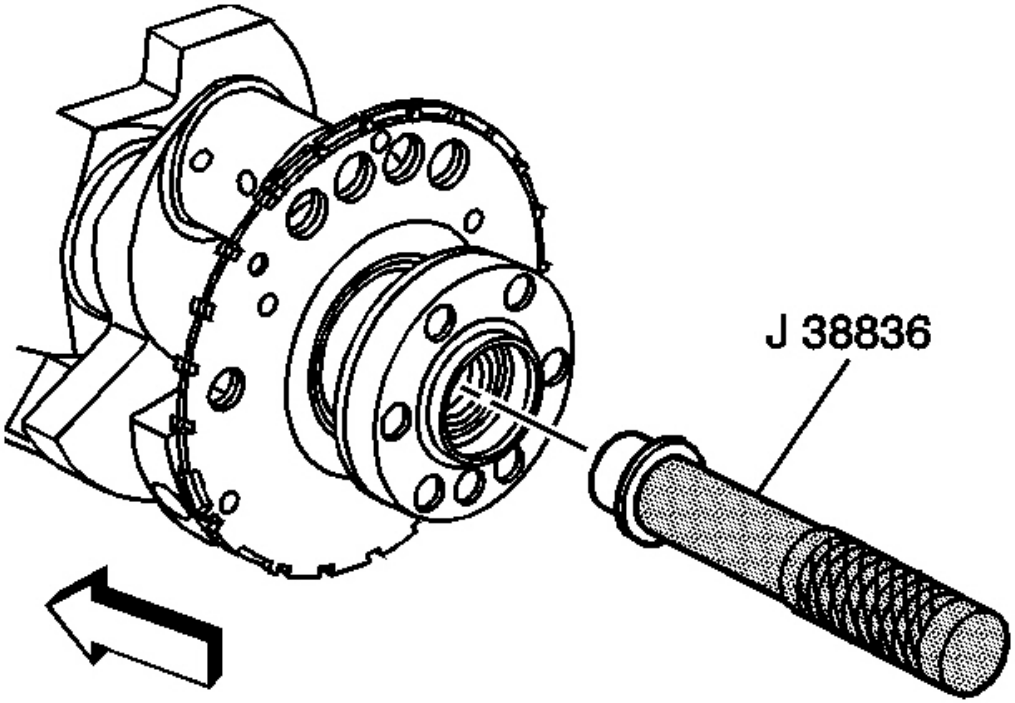

Fig. 154: J 38836 & Pilot Bearing
Courtesy of GENERAL MOTORS CORP.

3. Install the new pilot bearing into the crankshaft using the **J 38836** .

cardiagn.com

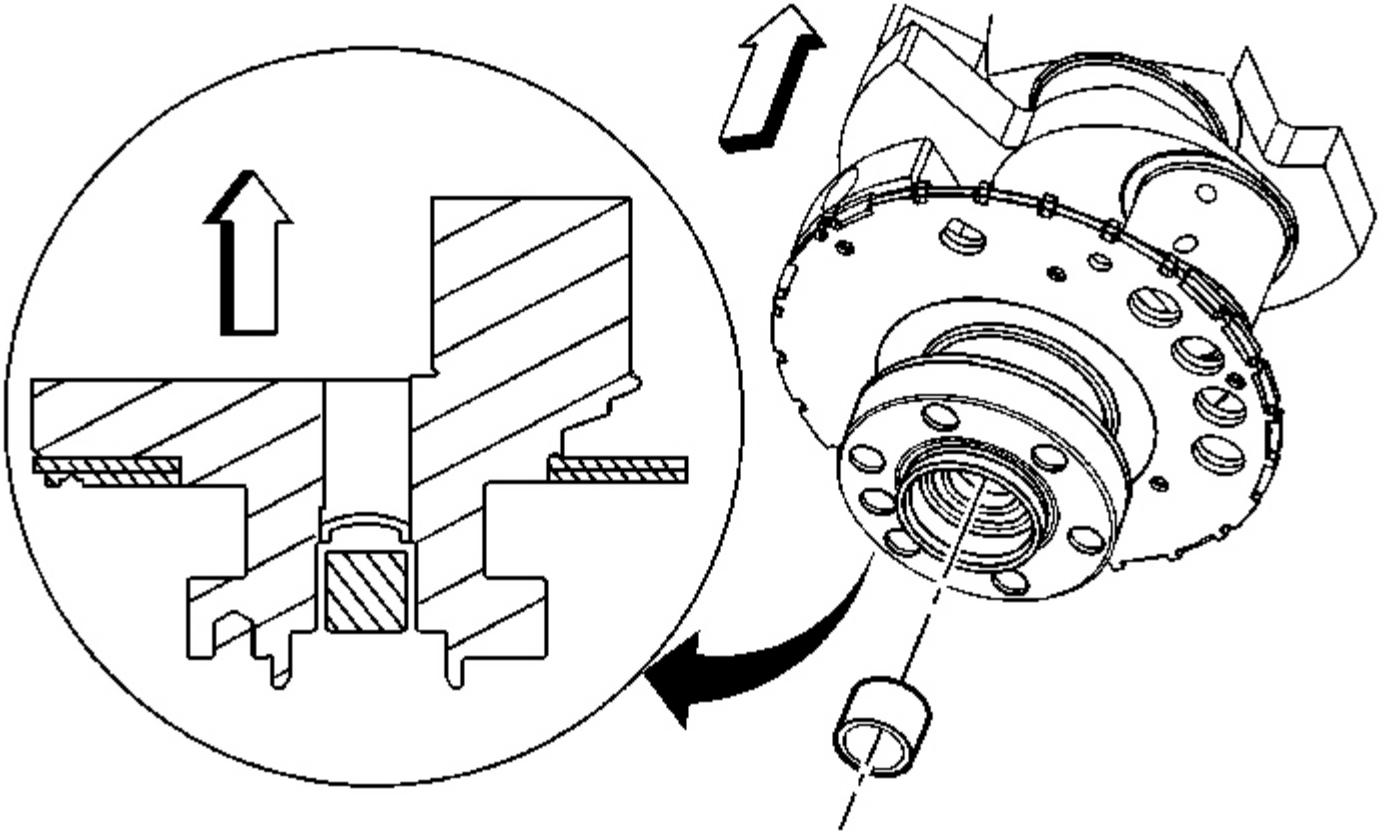

cardiagn.com

Fig. 155: Clutch Pilot Bearing & Rear Face Of Crankshaft
Courtesy of GENERAL MOTORS CORP.

4. Inspect the clutch pilot bearing for proper installation.

   A properly installed clutch pilot bearing will be installed until flush to the rear face of the crankshaft.

ENGINE FLYWHEEL INSTALLATION

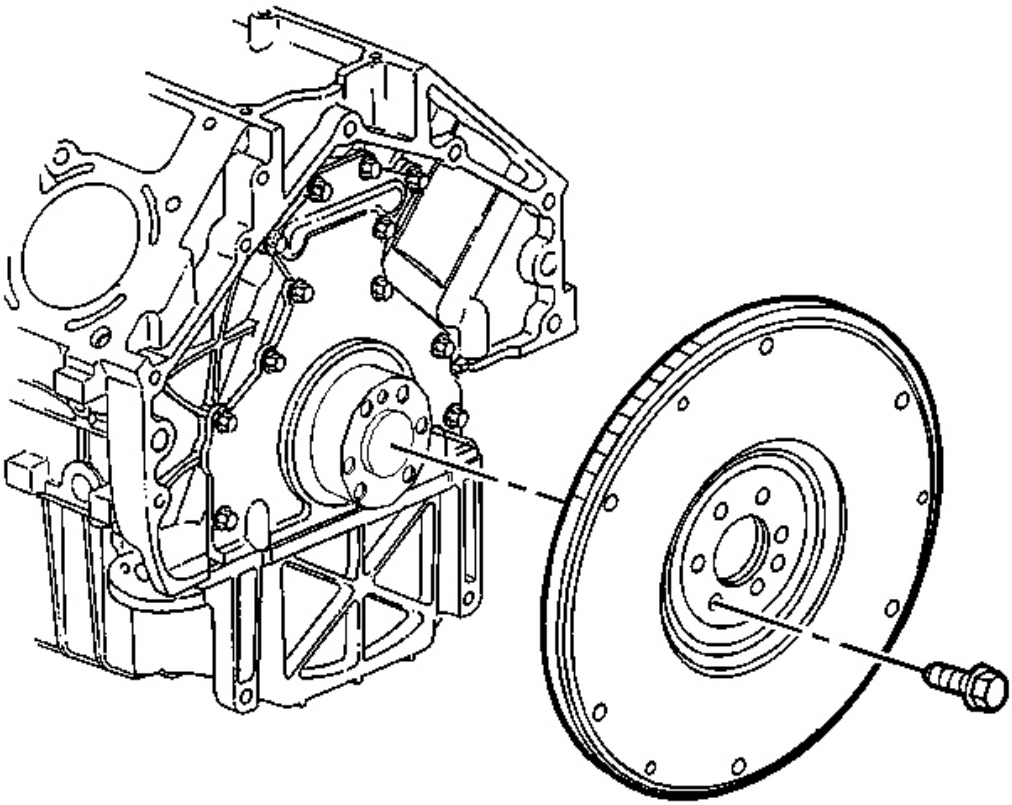

Fig. 156: View Of Engine Flywheel & Bolts (Manual Transmission)
Courtesy of GENERAL MOTORS CORP.

IMPORTANT:

- **For manual transmission applications, note the position and direction of the engine flywheel before removal. The flywheel does not use a locating pin for alignment. Mark or scribe the end of the crankshaft and the flywheel before component removal. The existing manual transmission engine flywheel must be installed to the**

cardiagn.com

original position and direction. The engine flywheel will not initially seat against the crankshaft flange, but will be pulled onto the crankshaft by the engine flywheel bolts. This procedure requires a three stage tightening process.

- **DO NOT remove the propshaft hub or flexplate from the automatic transmission engine flywheel. The flywheel, prop shaft hub, and flex plate are balanced as an assembly. If service is required, the entire flywheel assembly should be replaced.**

1. Install the manual transmission engine flywheel to the crankshaft. Refer to **Engine Balancing** .

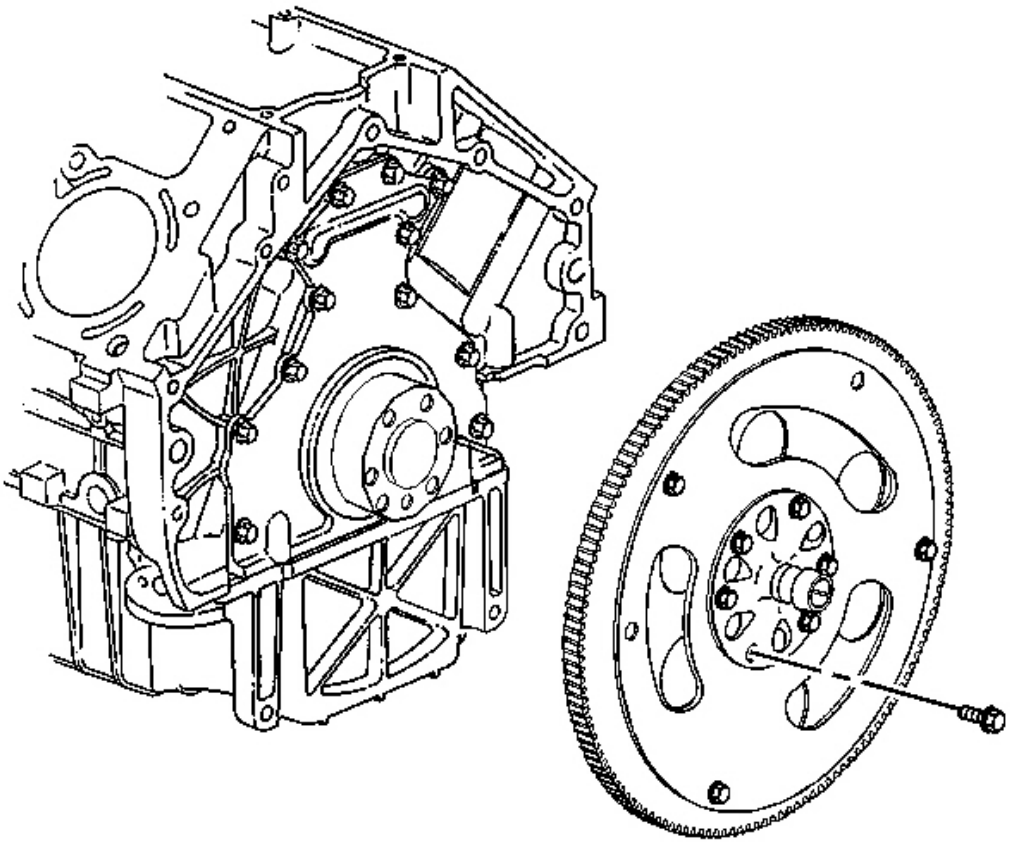

Fig. 157: Automatic Transmission Engine Flywheel & Crankshaft
Courtesy of GENERAL MOTORS CORP.

2. Install the automatic transmission engine flywheel to the crankshaft.

cardiagn.com

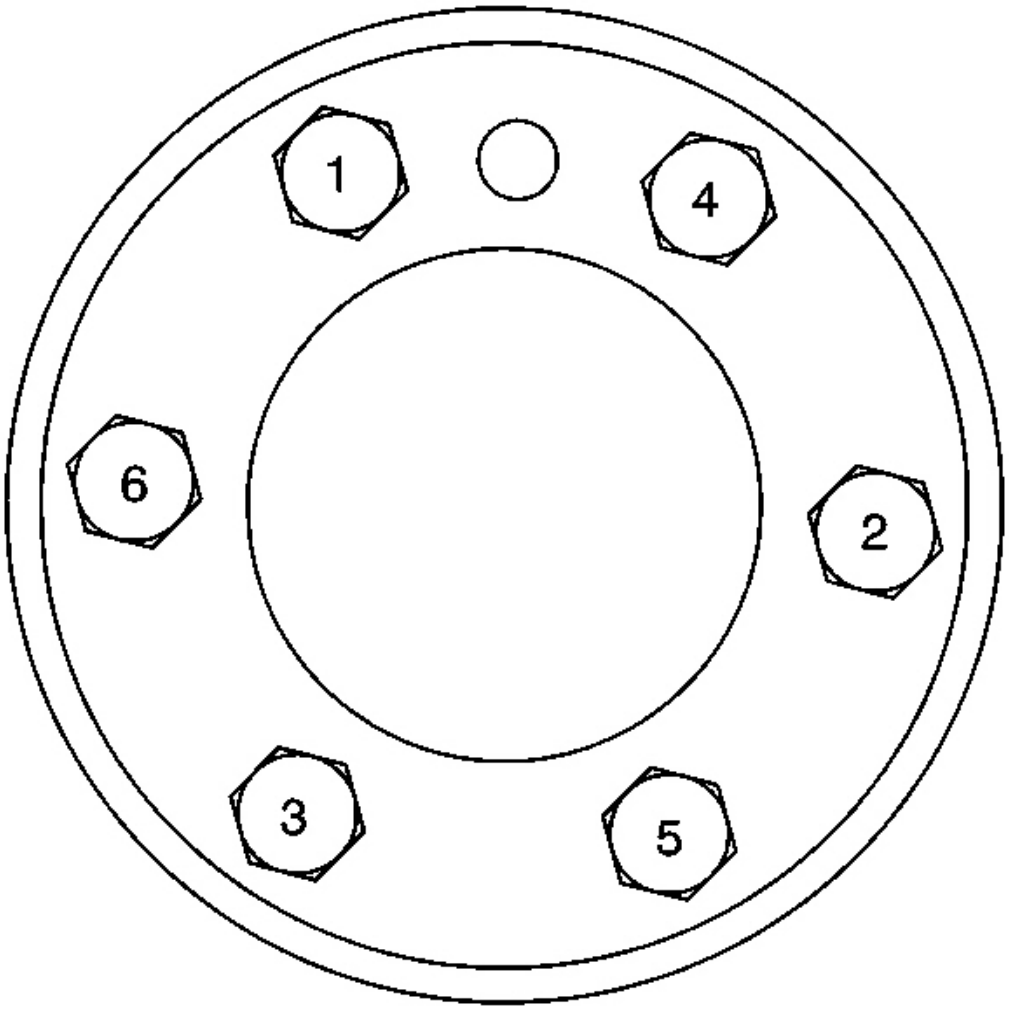

Fig. 158: Flywheel Bolt Tightening Sequence
Courtesy of GENERAL MOTORS CORP.

3. Apply threadlock GM P/N 12345382 (Canadian P/N 10953489) or equivalent to the threads of the flywheel bolts.

NOTE: **Refer to Fastener Notice in Cautions and Notices.**

4. Install the engine flywheel bolts.

Tighten:

cardiagn.com

1. Tighten the engine flywheel bolts first pass in sequence to 20 N.m (15 lb ft).
2. Tighten the engine flywheel bolts second pass in sequence to 50 N.m (37 lb ft).
3. Tighten the engine flywheel bolts final pass in sequence to 100 N.m (74 lb ft).

CRANKSHAFT BALANCER INSTALLATION

Tools Required

- **J 41665** Crankshaft Balancer and Sprocket Installer
- **J 42386-A** Flywheel Holding Tool
- **J 45059** Angle Meter

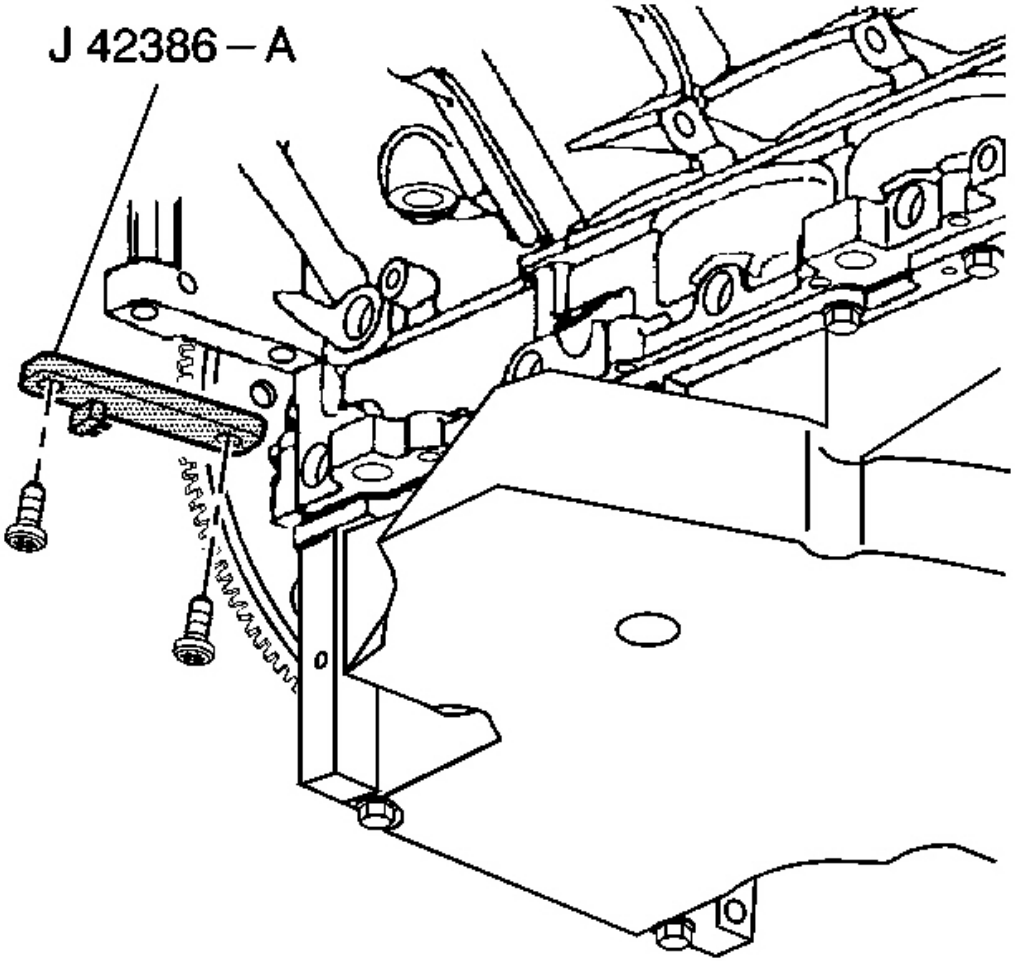

cardiagn.com

Fig. 159: Install J 42386 Crankshaft Balancer
Courtesy of GENERAL MOTORS CORP.

NOTE: **Refer to Fastener Notice in Cautions and Notices.**

IMPORTANT:

- **Note the position of the crankshaft balancer before removal, on manual transmission applications. The balancer does not use a key or keyway for positioning. Mark or scribe the end of the crankshaft and the balancer before removal. The crankshaft balancer must be installed to the original position. If replacing the crankshaft balancer, note the location of any existing balance weights, if applicable. Install new balance weights into the new crankshaft balancer, if applicable. Crankshaft balancer weights must be installed into the new balancer in the same location as the old balancer. A properly installed balance weight will be either flush or below flush with the face of the balancer.**
- **The crankshaft balancer installation and bolt tightening involves a 4 stage tightening process. The first pass ensures that the balancer is installed completely onto the crankshaft. The second, third and fourth passes tighten the new bolt to the proper torque.**
- **The used crankshaft balancer bolt will be used only during the first pass of the balancer installation procedure. Install a NEW crankshaft balancer bolt and tighten as described in the second, third and fourth passes of the balancer bolt tightening procedure.**
- **Ensure the teeth of the tool engage the engine flywheel teeth.**

1. Install the **J 42386-A** and bolts.

   Use 1 M10 - 1.5 x 120 mm and 1 M10 - 1.5 x 45 mm bolt for proper tool operation.

   Tighten: Tighten the **J 42386-A** bolts to 50 N.m (37 lb ft).

cardiagn.com

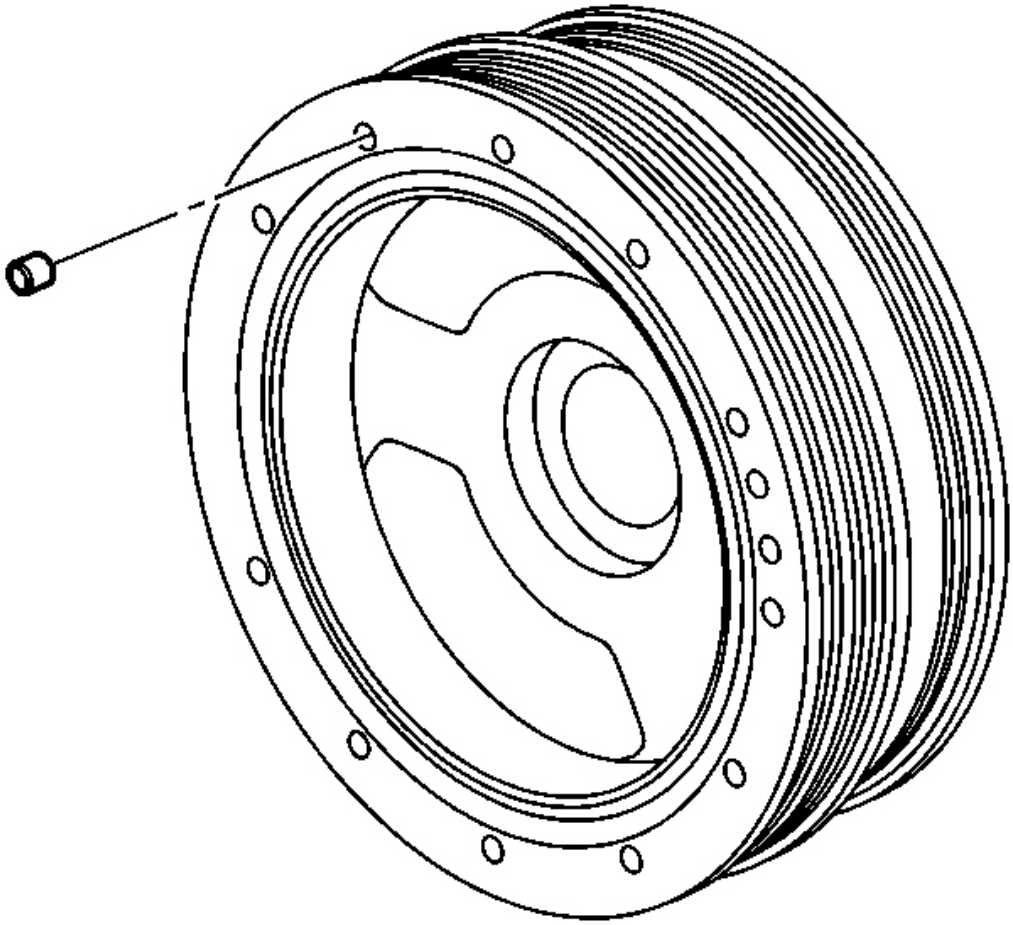

Fig. 160: Balance Weights
Courtesy of GENERAL MOTORS CORP.

2. Using the old balancer as a reference, mark or scribe the NEW balancer in the same location, if required.

   Install balance weights into the NEW balancer, if required. Refer to **Engine Balancing** and **Crankshaft Balancer Cleaning and Inspection** .

cardiagn.com

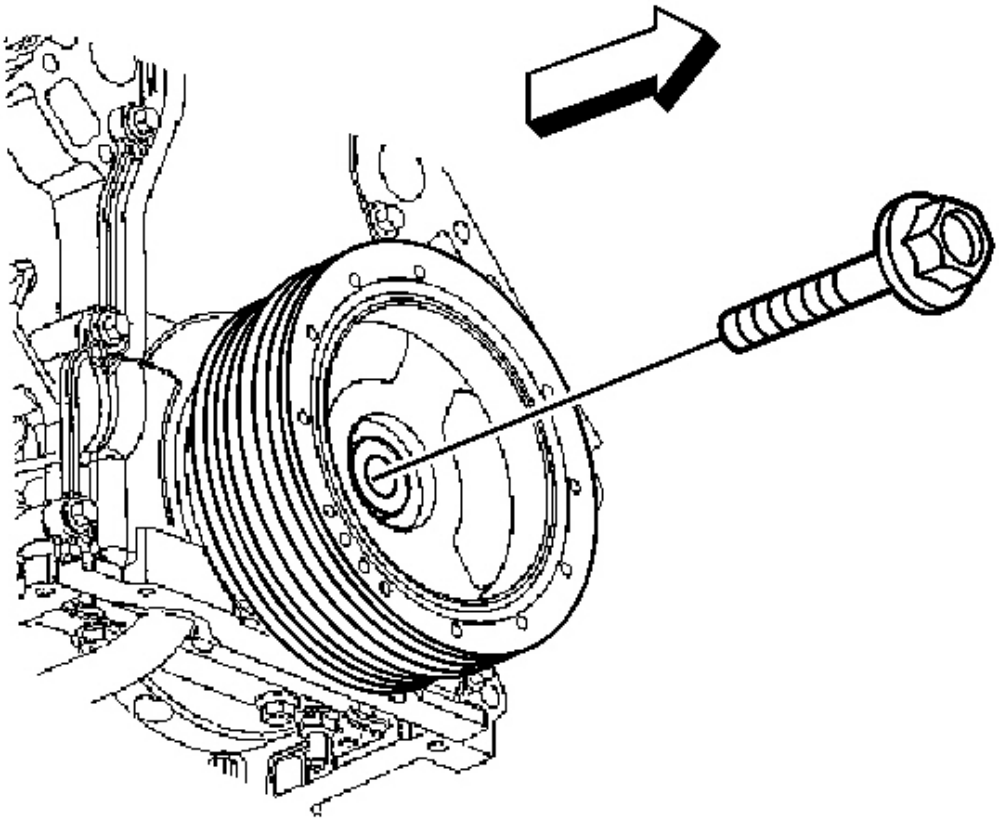

Fig. 161: Identifying Harmonic Balancer Bolt
Courtesy of GENERAL MOTORS CORP.

IMPORTANT:

- **Align the scribe mark on the balancer with the scribe mark on the crankshaft.**
- **The balancer should be positioned onto the end of the crankshaft, as straight as possible, prior to tool installation.**

3. Install the balancer onto the end of the crankshaft.

cardiagn.com

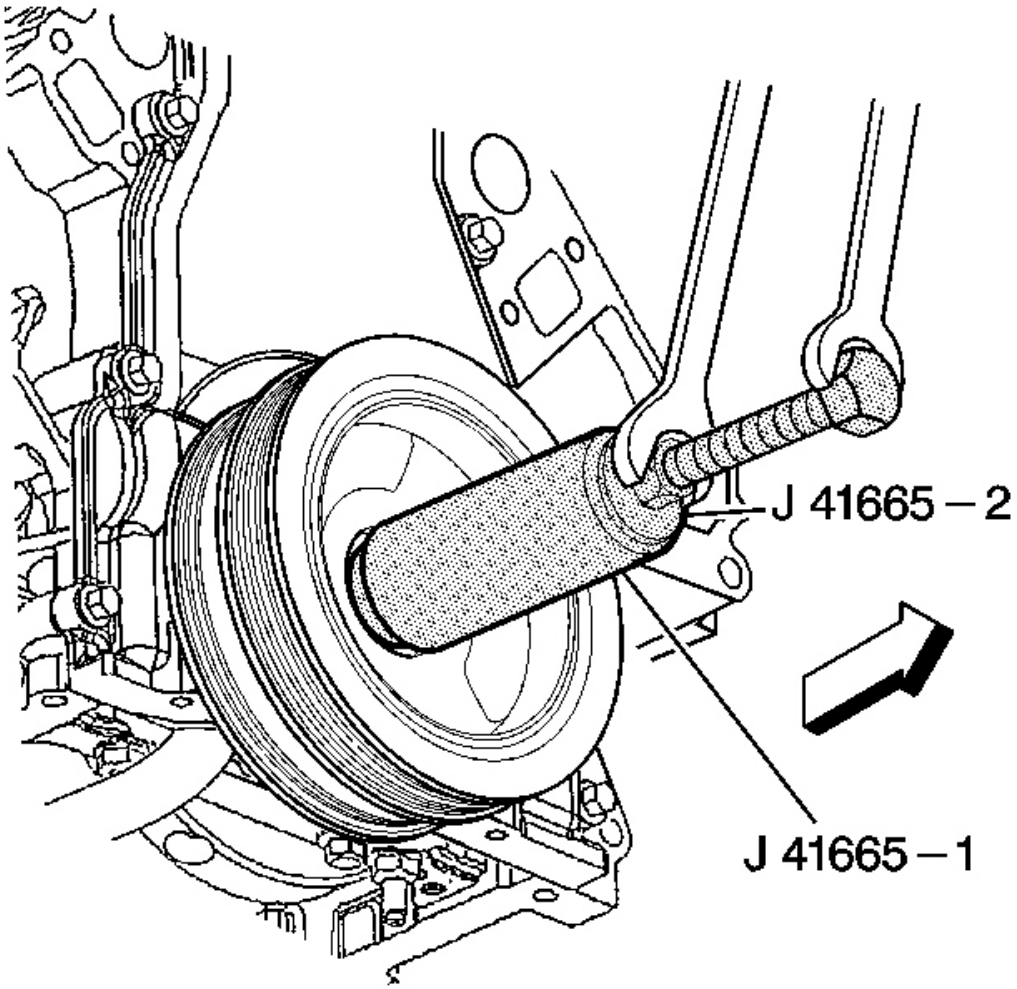

Fig. 162: View Of J 41665
Courtesy of GENERAL MOTORS CORP.

4. Use the **J 41665** in order to install the balancer.
    1. Assemble the threaded rod, nut, washer and installer.

       Insert the smaller end of the installer into the front of the balancer.

    2. Use a wrench and hold the hex end of the threaded rod.
    3. Use a second wrench and rotate the installation tool nut clockwise until the balancer is started onto crankshaft.
    4. Remove the tool and reverse the installation tool.

cardiagn.com

Position the larger end of the installer against the front of the balancer.

5. Use a wrench and hold the hex end of the threaded rod.
6. Use a second wrench and rotate the installation tool nut clockwise until the balancer is installed onto the crankshaft.
7. Remove the balancer installation tool.

cardiagn.com

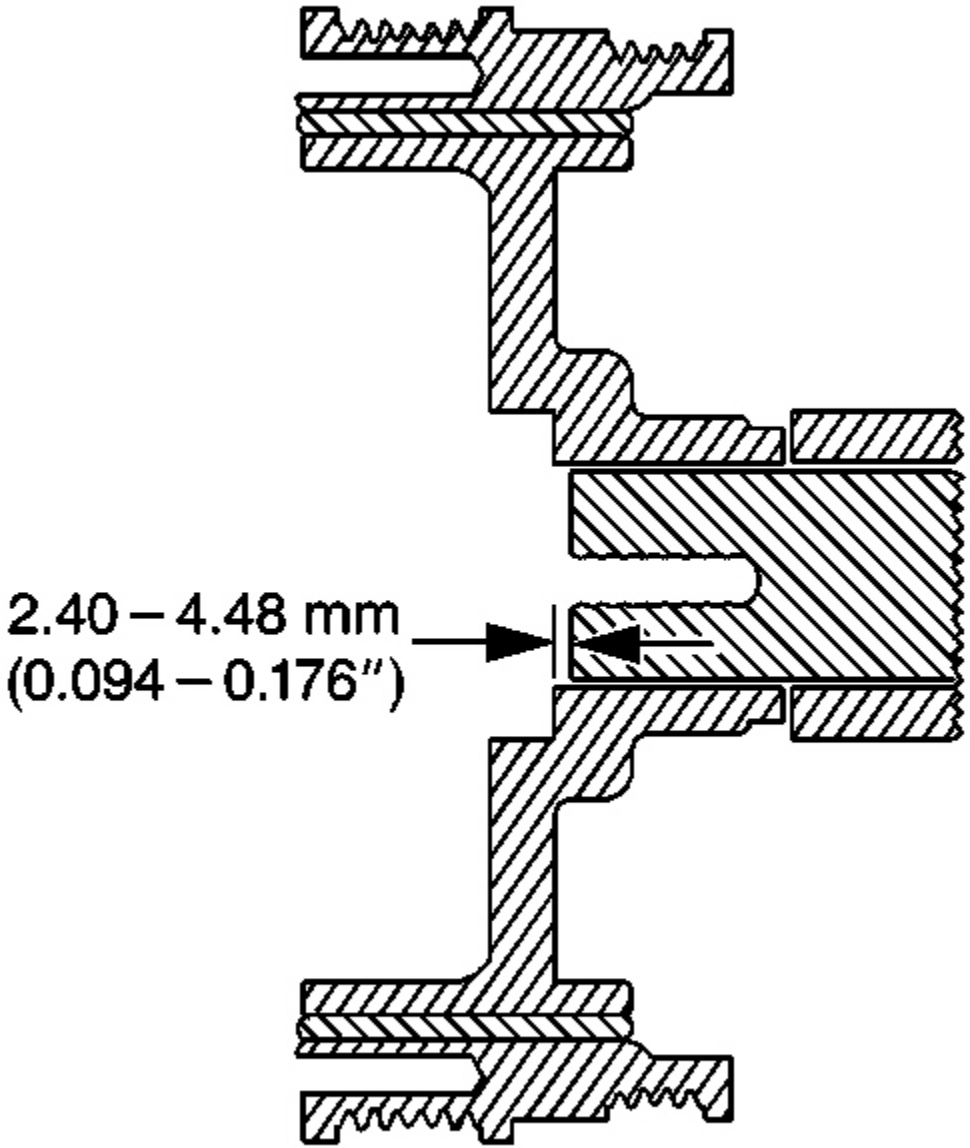

Fig. 163: View Of Balancer Proper Installation Position
Courtesy of GENERAL MOTORS CORP.

5. Install the used crankshaft balancer bolt.

   Tighten: Tighten the crankshaft balancer bolt to 330 N.m (240 lb ft).

cardiagn.com

6. Remove the used crankshaft balancer bolt.

IMPORTANT: The nose of the crankshaft should be recessed 2.40-4.48 mm (0.094-0.176 in) into the balancer bore.

7. Measure for a correctly installed balancer.

   If the balancer is not installed to the proper dimensions, install the **J 41665** and repeat the installation procedure.

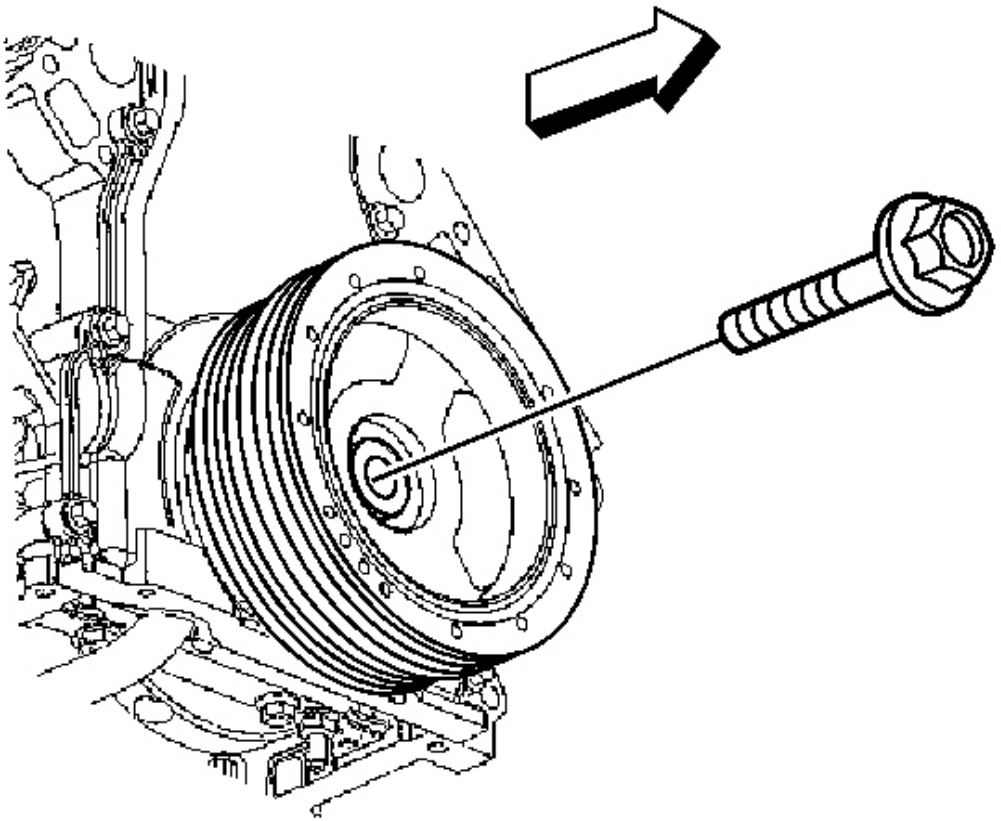

Fig. 164: Identifying Harmonic Balancer Bolt
Courtesy of GENERAL MOTORS CORP.

8. Install the NEW crankshaft balancer bolt.

   Tighten:

cardiagn.com

1. Tighten the crankshaft balancer bolt a first pass to 50 N.m (37 lb ft).
2. Tighten the crankshaft balancer bolt a second pass to 140 degrees using the **J 45059** .

9. Remove the **J 42386-A** .

cardiagn.com