2001 DRIVE AXLES

Axle Shafts - Corvette

DESCRIPTION & OPERATION

AXLE SHAFTS

Axle shafts are flexible assemblies consisting of an inner and outer Constant Velocity (CV) joint connected by an axle shaft. See **Fig. 1** . The inner joint is completely flexible, and can move in and out. The outer joint is also flexible, but cannot move in and out. These drive axles are used to transmit rotational force from the rear axle differential to the rear tire and wheel assemblies.

Boot & Clamp

The axle shaft assemblies use inboard and outboard joint boots made of thermoplastic material, and clamps made of stainless steel. The functions of the boots are as follows:

- The boots protect the internal parts of the inboard and outboard joints.
  - A. They protect the joint lubricating grease from surrounding detrimental atmospheric conditions (such as extreme temperatures, ozone gas, etc.).
  - B. They protect the joint lubricating grease from foreign materials (such as stones, dirt, water, salt, etc.).
- The boots facilitate angular and axial movement of the inboard joint.
- The boots facilitate angular movement of the outboard joint.

The function of the clamps is to provide a leak proof connection at both the housing and the axle shaft for the inboard and outboard joints.

The thermoplastic material performs well against normal handing, operational wear and conditions. This material however, is not strong enough to withstand abusive handling or damage due to objects such as sharp tools or the sharp edge of any other surrounding component on the vehicle.

Inner Joint

The inner joints are of the enhanced double offset design. The inner joints use a female spline which is installed over a stub shaft protruding from the rear axle differential.

Outer Joint

The outer joints are of the Rzeppa joint design. The splined shaft end which mates with the knuckle and hub assembly, incorporates a helical spline to assure a tight, press-type fit. This design assures that no end play will exist between the hub bearing and the axle shaft assembly for added durability and reduced bearing noise.

COMPONENT LOCATION

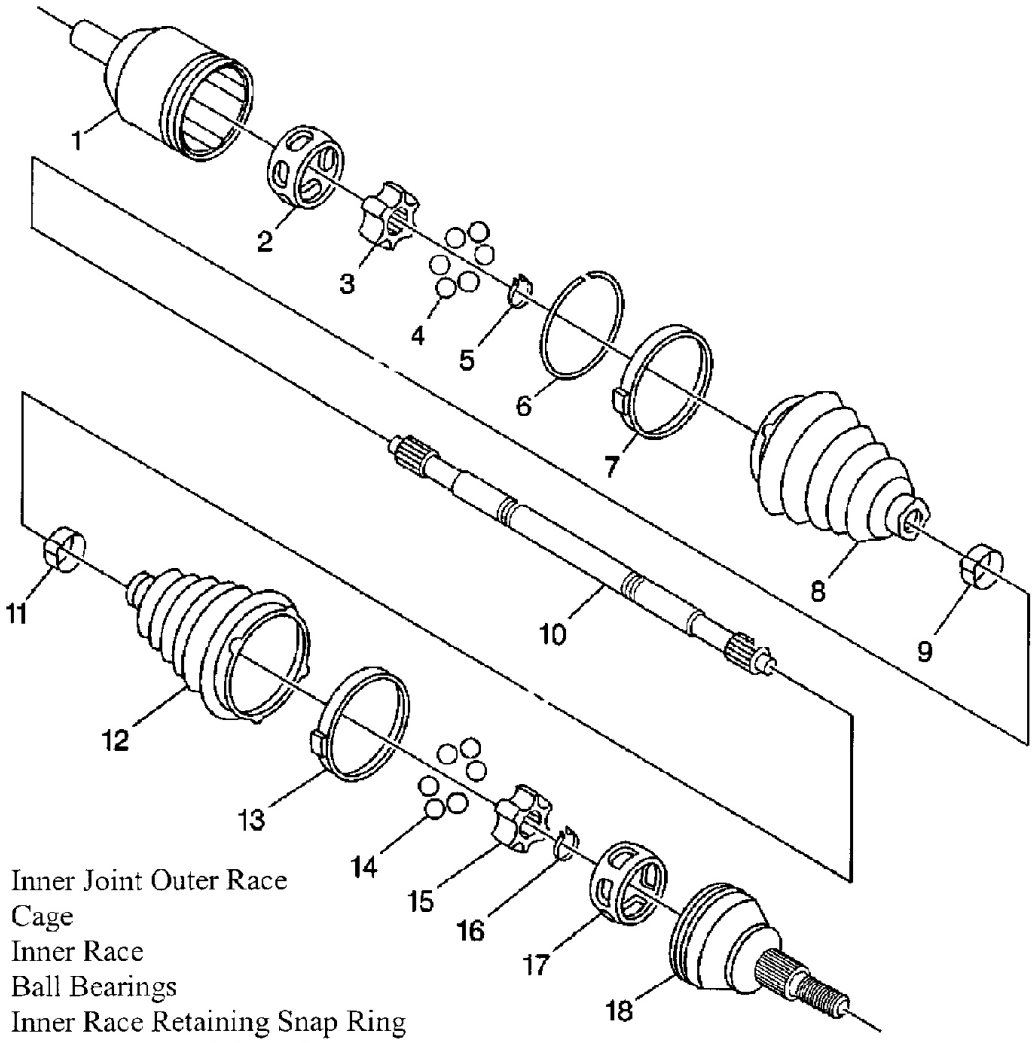

1. Inner Joint Outer Race
2. Cage
3. Inner Race
4. Ball Bearings
5. Inner Race Retaining Snap Ring
6. Outer Race Retaining Ring
7. Large Boot Clamp
8. CV Boot
9. Small Boot Clamp
10. Axle Shaft
11. Small Boot Clamp
12. CV Boot
13. Large Boot Clamp
14. Ball Bearings
15. Outer Joint Inner Race
16. Retaining Ring
17. Cage
18. Outer Race

G00310780

Fig. 1: Exploded View Of Axle Shaft (Typical Independent Rear Suspension)
Courtesy of GENERAL MOTORS CORP.

TROUBLE SHOOTING

DIAGNOSTIC STARTING POINT

Axle Shafts

Begin the axle shaft system diagnosis with VIBRATION DIAGNOSIS & CORRECTION under DIAGNOSTIC STARTING POINT in VIBRATION - DRIVETRAIN article in GENERAL INFORMATION. The use of the Diagnostic Starting Point will determine if the concern is axle shaft related. When instructed to exit the Vibration Diagnosis and Correction diagnostic and return to the Axle Shafts Diagnostic Starting Point, proceed to **AXLE SHAFTS** under DESCRIPTION & OPERATION in order to become familiar with the design of the axle shaft.

The axle shafts in this vehicle may not exhibit the same noise symptoms as axle shafts in front wheel drive vehicles. Since the vehicle is a rear wheel drive design, the axle shafts are not subjected to the same input forces and may not make any discernible noises if they are damaged. Thoroughly inspect the entire axle shaft for visible damage, leaking joint boots, and missing seal clamps. Replace these components as necessary. See **AXLE SHAFT INNER JOINT & BOOT** or **AXLE SHAFT OUTER JOINT & BOOT** under OVERHAUL.

After the inspection reveals no visual signs of wear or damage, it may be necessary to manipulate the inner and outer Constant Velocity (CV) joints in order to detect internal damage. Any binding or impeded movement of the CV joints may indicate damage requiring repair or replacement. See **AXLE SHAFT INNER JOINT & BOOT** or **AXLE SHAFT OUTER JOINT & BOOT** under OVERHAUL.

SYMPTOMS

NOTE: Complete the following steps prior to beginning the axle shaft diagnosis.

1. Review VIBRATION DIAGNOSIS & CORRECTION under DIAGNOSTIC STARTING POINT in VIBRATION - DRIVETRAIN article in GENERAL INFORMATION.
2. Perform the VIBRATION ANALYSIS -- ROAD TESTING in VIBRATION - DRIVETRAIN article in GENERAL INFORMATION in order to effectively diagnose the concern.
3. Review the system operation in order to become familiar with the system function. See **AXLE SHAFTS** in DESCRIPTION & OPERATION.

Visual Inspection

- Inspect for aftermarket equipment and modifications which could affect the operation of the axle shafts or other rotating components.
- Inspect the easily accessible or visible system components for obvious damage or conditions

which could cause the symptom.

- Thoroughly inspect the entire axle shaft for visible damage, leaking joint boots, and missing boot clamps.
- Inspect the axle shaft seals for cuts, tears, or other damage which may allow the loss of lubricant and the entry of contaminates.

Physical Inspection

After performing the Visual/Inspection and no visual signs of damage or other interference impairing the axle shaft function is apparent, it may be necessary to remove the axle shaft from the vehicle and manipulate the joints manually. Any binding or otherwise impeded movement of the joints may indicate damage which could contribute to the concern.

REMOVAL & INSTALLATION

CAUTION: Use the correct fastener in the correct location. Replacement fasteners must be the correct part number for that application. Fasteners requiring replacement or fasteners requiring the use of thread locking compound or sealant are identified in the service procedure. Do not use paints, lubricants, or corrosion inhibitors on fasteners or fastener joint surfaces unless specified. These coatings affect fastener torque and joint clamping force and may damage the fastener. Use the correct tightening sequence and specifications when installing fasteners in order to avoid damage to parts and systems.

AXLE SHAFTS

Removal

NOTE: Special Tools Required: Transverse Spring Compressor (J-33432-A), Slide Hammer (J-2619-01), Extension (J-29794), Axle Shaft Remover (J-42128) & Rear Hub Spindle Remover (J-42129).

1. Shift the transmission into Park (A/T) or Neutral (M/T).
2. Apply the parking brake.
3. Raise and suitably support the vehicle.
4. Remove the tire and wheel assembly.

5. Insert a drift or punch into the brake rotor cooling fins and against the brake caliper to prevent the wheel hub and bearing from turning. See **Fig. 2** .
6. Remove the spindle nut retaining the rear axle shaft to the hub.
7. Remove the drift or punch.
8. Release the parking brake.
9. Refer to the following steps for removal of the rear transverse spring.
   A. Measure the transverse spring stud height. See **Fig. 3** . This measurement will be used in the installation to set-up the vehicle trim height.

   NOTE: During this procedure, use care not to scratch the rear transverse spring.

   B. Install transverse spring compressor to the rear transverse spring, and compress the spring. See **Fig. 4** .
   C. Remove the retainers, nuts, bolts and insulators retaining the transverse spring to the lower control arms. See **Fig. 5** .
   D. Remove the rear transverse spring mounting bolts, spring spacers and insulators from the crossmember.
   E. Remove the rear transverse spring from the vehicle.
   F. If the transverse spring is to be replaced, release and remove transverse spring compressor from the transverse spring.

NOTE: DO NOT loosen the outer tie rod jam nut.

10. Separate the outer tie rod end from the knuckle and reposition the tie rod toward the rear of the vehicle.
11. Disconnect the wheel speed sensor electrical connector.
12. Disconnect the parking brake cable from the parking brake lever. See **Fig. 6** .
13. Remove the parking brake cable from the bracket and reposition toward the rear.
14. Install rear hub spindle remover onto the wheel hub and secure with wheel nuts.
15. Begin to disengage the axle shaft from the wheel hub and bearing. This will provide additional clearance to the lower ball joint nut.
16. Disconnect Electronic Suspension Control (ESC) position sensor link and shock absorber solenoid electrical connector, if equipped, from suspension knuckle. See **Fig. 7** and **Fig. 8** . Remove brake rotor, if necessary. See **REAR BRAKE ROTOR** for 2001 or **REAR BRAKE ROTOR** for 2002 under REMOVAL & INSTALLATION in DISC BRAKES

article in HYDRAULIC - MECHANICAL in BRAKES. Separate the lower ball joint from the suspension knuckle.

17. Disengage the axle shaft completely from the wheel hub and bearing.

NOTE: Be sure to support the axle shaft until it is removed.

18. Support the axle shaft.
19. Support the suspension knuckle and upper control arm and reposition the knuckle toward the front of the vehicle.
20. Assemble the slide hammer, extension and axle shaft remover.
21. Install the axle shaft remover evenly onto the rear beveled surface of the axle shaft inner joint housing.
22. Disengage the axle shaft from the rear axle differential using the tool assembly, then remove the tool assembly.
23. Remove the axle shaft from the vehicle.
24. Remove rear hub spindle remover from the wheel hub.

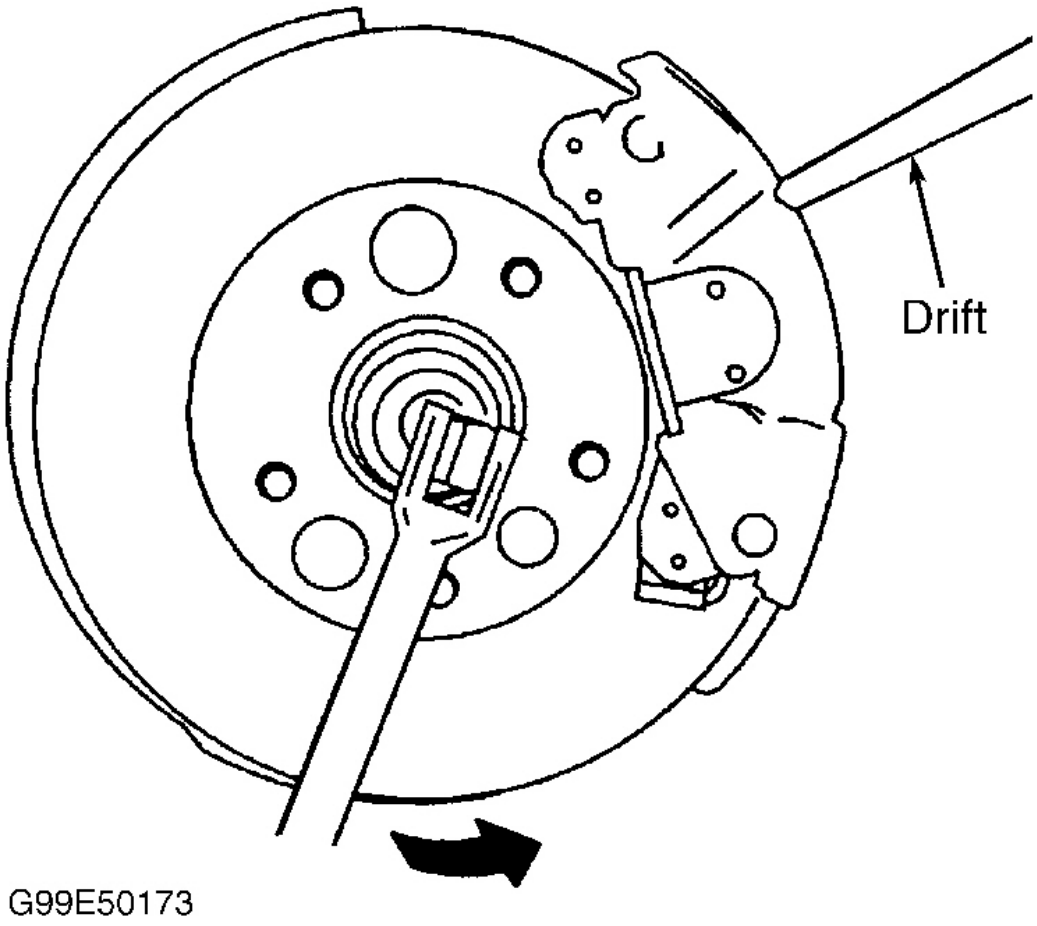

Fig. 2: Removing Axle Shaft Nut & Washer

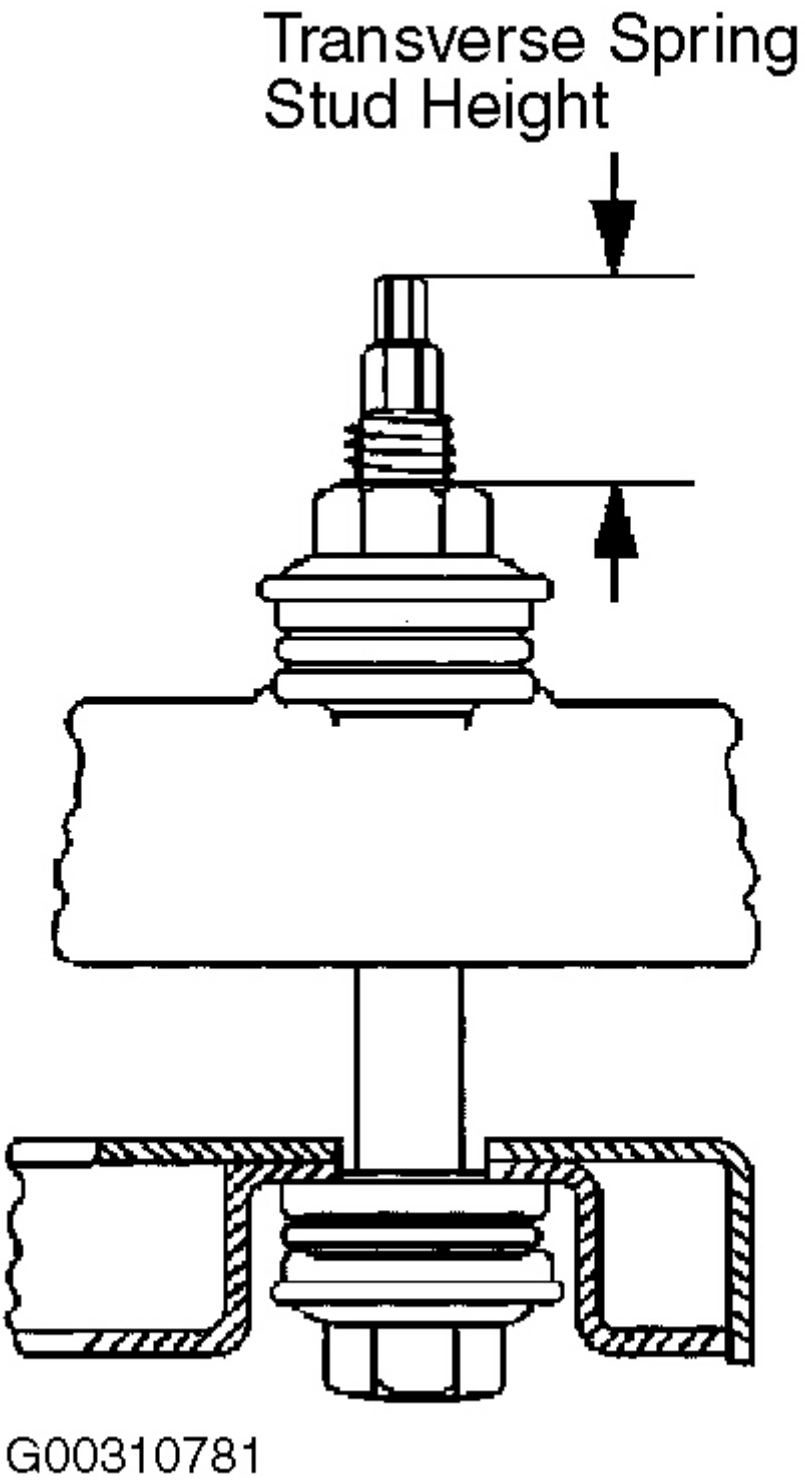
Transverse Spring
Stud Height
G00310781

Fig. 3: Measuring Rear Transverse Spring Height
Courtesy of GENERAL MOTORS CORP.

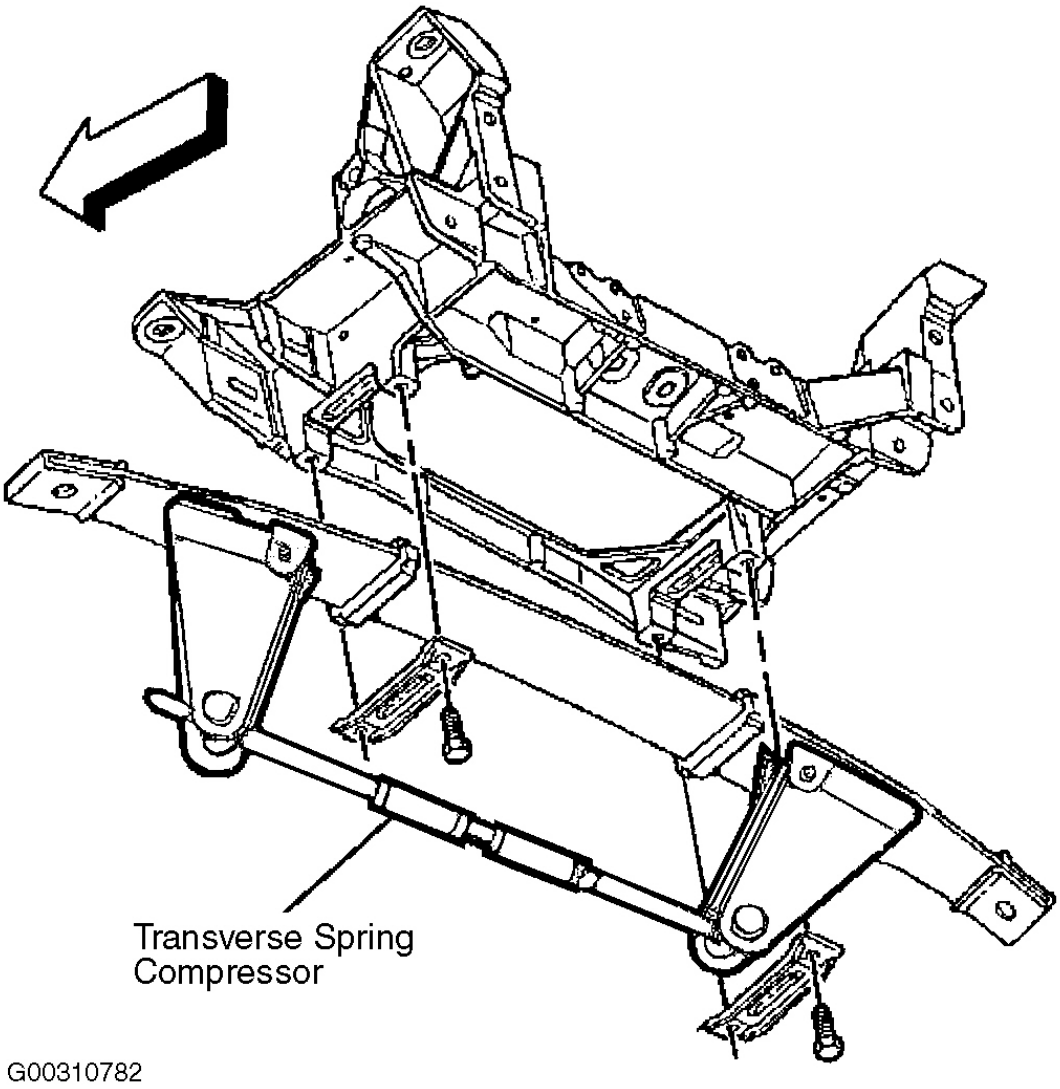

Fig. 4: Installing Transverse Spring Compressor
Courtesy of GENERAL MOTORS CORP.

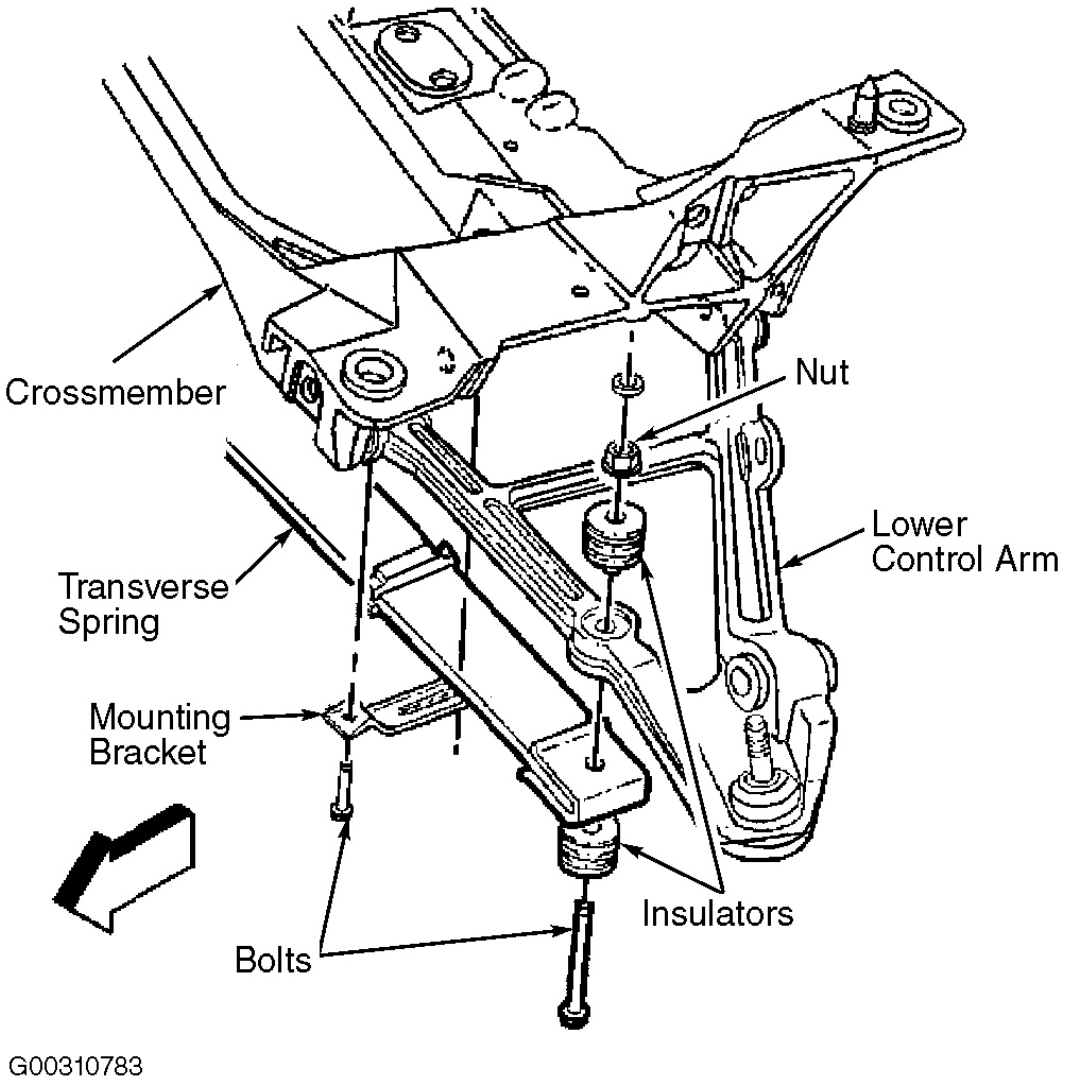

Fig. 5: Identifying Transverse Spring-To-Lower Control Arm Components
Courtesy of GENERAL MOTORS CORP.

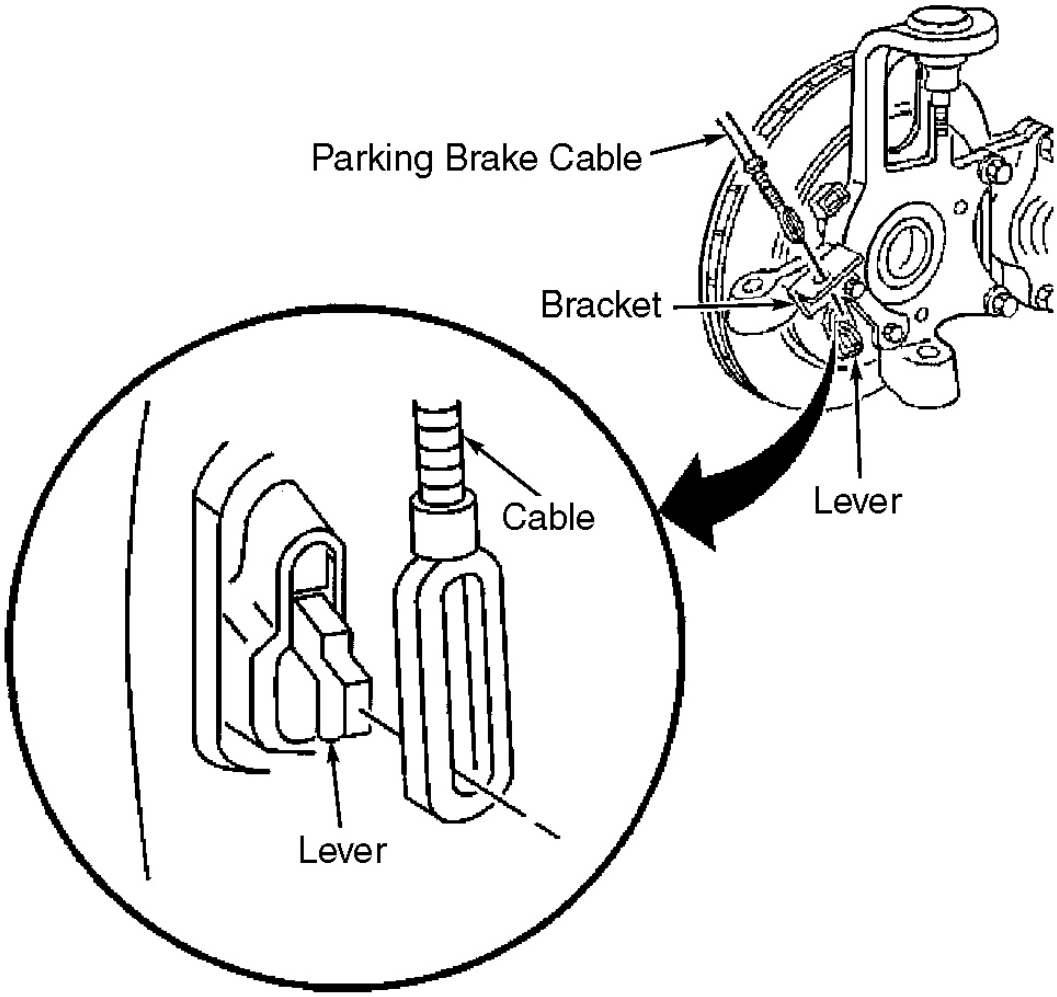

Fig. 6: Identifying Parking Brake Cable
Courtesy of GENERAL MOTORS CORP.

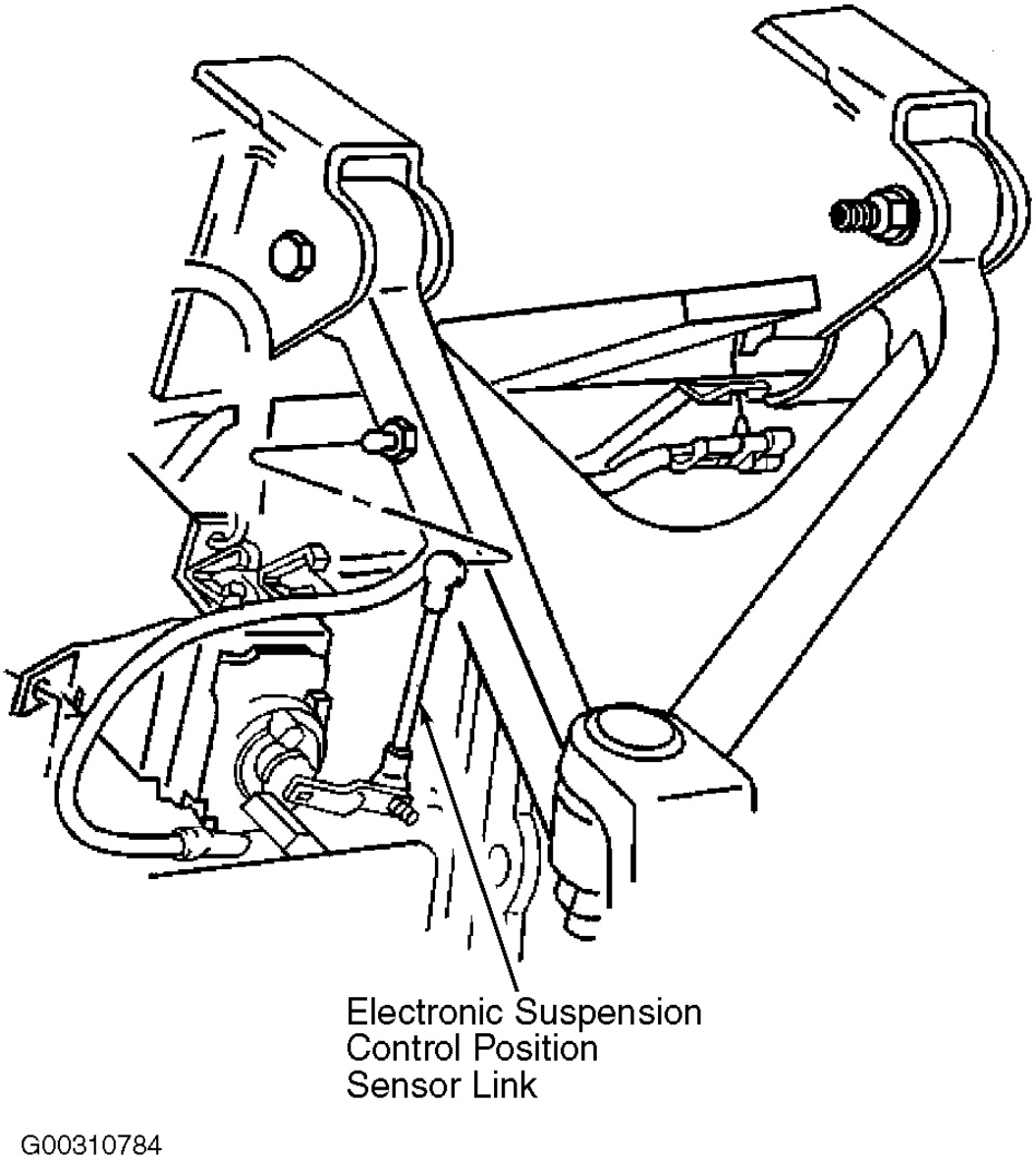

Fig. 7: Identifying Electronic Suspension Control (ESC) Position Control Link
Courtesy of GENERAL MOTORS CORP.

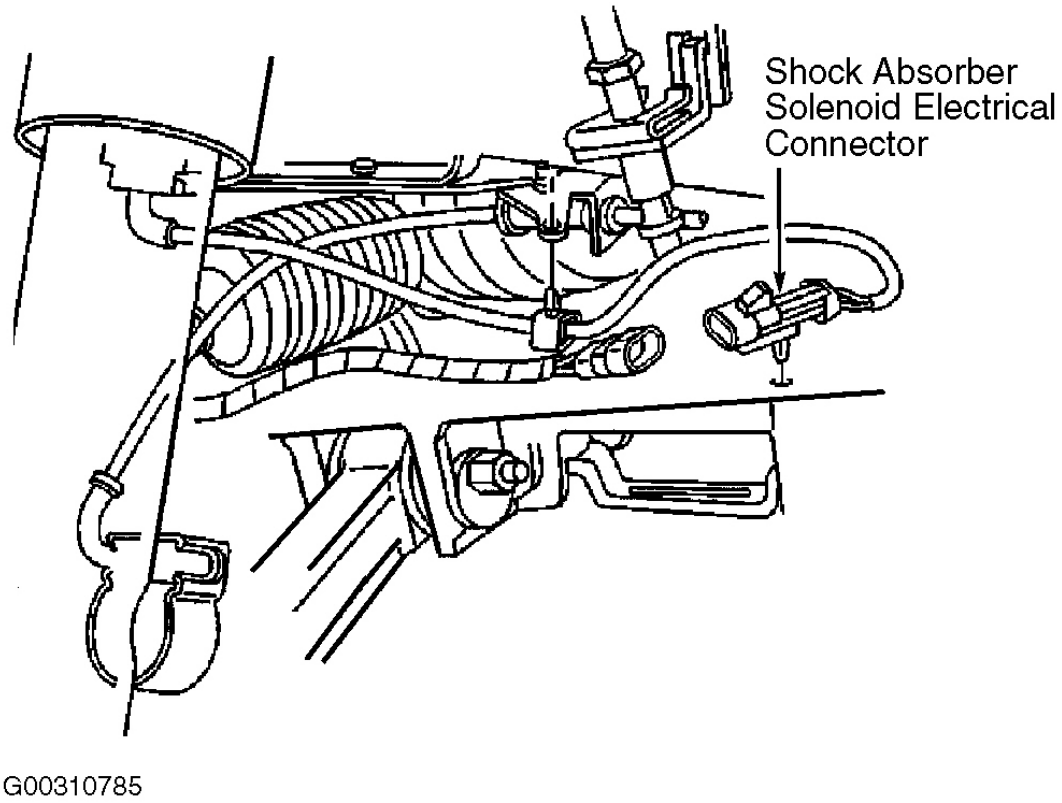

Fig. 8: Identifying Shock Absorber Solenoid Electrical Connector
Courtesy of GENERAL MOTORS CORP.

Installation

1. Clean and inspect the journal on the axle shaft prior to installation.

   NOTE: Be sure to support the axle shaft until it is completely installed.

2. Position the axle shaft to the rear axle differential output shaft.

   NOTE: Use care not to damage the rear axle differential output shaft boot.

3. Carefully align and guide the axle shaft onto the differential output shaft.
4. Engage the axle shaft fully onto the differential output shaft using light force.
5. Check to be certain that the axle shaft is fully seated on the differential output shaft.

6. Begin to position the suspension knuckle to the axle shaft.
7. Align and carefully guide the axle shaft into the wheel hub and bearing but DO NOT seat fully. This will provide additional clearance to the lower ball joint nut.
8. Connect the lower ball joint to the suspension knuckle. Connect Electronic Suspension Control (ESC) position sensor link and shock absorber solenoid electrical connector, if equipped to suspension knuckle. See **Fig. 7** -**Fig. 8** . Install brake rotor, if removed. See **REAR BRAKE ROTOR** for 2001 or **REAR BRAKE ROTOR** for 2002 under REMOVAL & INSTALLATION in DISC BRAKES article in HYDRAULIC - MECHANICAL in BRAKES.
9. Install the parking brake cable into the bracket. See **Fig. 6** .
10. Connect the parking brake cable to the parking brake lever.
11. Connect the wheel speed sensor electrical connector.
12. Connect the outer tie rod end to the suspension knuckle.
13. Refer to the following steps for installation of the rear transverse spring.
    A. If the transverse spring is a replacement, install transverse spring compressor to the transverse spring and compress the spring. See **Fig. 4** .
    B. Install the rear transverse spring to the vehicle.
    C. Install the rear transverse spring spacers, insulators and mounting brackets to the crossmember. See **Fig. 5** . Tighten the rear transverse spring mounting bracket bolts to specification. See **TORQUE SPECIFICATIONS** .
    D. Position the transverse spring to the lower control arms and install the spring bolts, insulators and nuts.
    E. Release and remove transverse spring compressor from the transverse spring.

    NOTE: The rear transverse spring stud bolt must have a minimum of 2 threads showing above the nut.

    F. Set the transverse spring stud height to the height measured during removal. See **Fig. 3** .
    G. Install the retainers to the bolts.
14. Set the parking brake.
15. Insert a drift or punch into the brake rotor cooling fins and against the caliper to prevent the wheel hub and bearing from turning.
16. Begin to install the axle shaft retaining nut onto the axle shaft by hand.
17. Slowly tighten the nut to draw the axle shaft to the wheel hub and bearing. Tighten the axle

shaft spindle nut to specification. See **TORQUE SPECIFICATIONS** .

18. Remove the drift or punch.
19. Release the parking brake.
20. Install the tire and wheel assembly. Tighten wheel lug nuts in a criss-cross pattern to specification. See **TORQUE SPECIFICATIONS** .
21. Lower the vehicle.
22. Adjust the rear wheel toe as necessary and tighten the rear suspension adjustment link lock nut to specification. See **TORQUE SPECIFICATIONS** .

OVERHAUL

CAUTION: Use the correct fastener in the correct location. Replacement fasteners must be the correct part number for that application. Fasteners requiring replacement or fasteners requiring the use of thread locking compound or sealant are identified in the service procedure. Do not use paints, lubricants, or corrosion inhibitors on fasteners or fastener joint surfaces unless specified. These coatings affect fastener torque and joint clamping force and may damage the fastener. Use the correct tightening sequence and specifications when installing fasteners in order to avoid damage to parts and systems.

NOTE: During the 2001 Model Year, there was a first and second design style of large diameter clamp used. The first design uses an Omega style large diameter clamp, while the second design uses a low profile large diameter clamp. This incorporates different tools and instruction to repair. Before following repair procedures, verify the style of clamp used.

AXLE SHAFT INNER JOINT & BOOT

NOTE: This procedure is to be performed only after the axle shaft has been removed from the vehicle. See AXLE SHAFTS under REMOVAL & INSTALLATION.

NOTE: Special Tools Required: Axle Shaft Seal Clamp Pliers (J-42572).

Disassembly (First Design)

1. Wrap a shop towel around the axle shaft. For an exploded view of axle shaft, see **Fig. 1** .
2. Place the axle shaft horizontally in a bench vise.
3. Remove the large boot retaining clamp from the CV joint seal. Use a side cutter or other suitable tool and discard the clamp.
4. Remove the small boot retaining clamp from the joint seal. Use a side cutter or other suitable tool and discard the clamp.
5. Separate the boot from the joint outer race at the large diameter end.
6. Position the boot behind the joint face.
7. Position the axle shaft vertically in the bench vise so the inner joint is up.
8. Slide the joint outer race down toward the vise.
9. Disengage the outer race retaining ring.
   A. Insert a small flat-bladed screwdriver between the retaining ring and the outer race.
   B. Remove the retaining ring from the outer race.
   C. Position the retaining ring along the axle shaft away from the outer race.

NOTE: The balls may fall out of the cage and inner race when the outer race is removed.

10. Remove the outer race from the axle shaft. See **Fig. 9** .
    A. Use the boot to catch any balls which are not retained by grease.
    B. Lift the outer race off the axle shaft.
11. Remove any remaining balls from the cage and inner race. See **Fig. 9** . Remove any balls caught by the boot.
12. Position the axle shaft horizontally in the bench vise.
13. Remove the outer race retaining ring from the axle shaft. See **Fig. 9** .
14. Remove the snap ring from the axle shaft.
15. Align the cage lands with the inner race ball tracks.
16. Reposition the cage along the axle shaft away from the inner race.
17. Wipe the grease from the inner race.
18. Remove the inner race from the axle shaft using a 3 jaw puller. See **Fig. 9** .
19. Remove the cage from the axle shaft.
20. Remove the boot from the axle shaft.

21. Remove the axle shaft from the bench vise.

NOTE: All traces of old grease and any contaminates must be removed.

22. Clean the following thoroughly with clean solvent:
    - The inner race.
    - The outer race.
    - The cage.
    - The balls.
    - The axle shaft exposed end.
23. Thoroughly air dry all the parts.

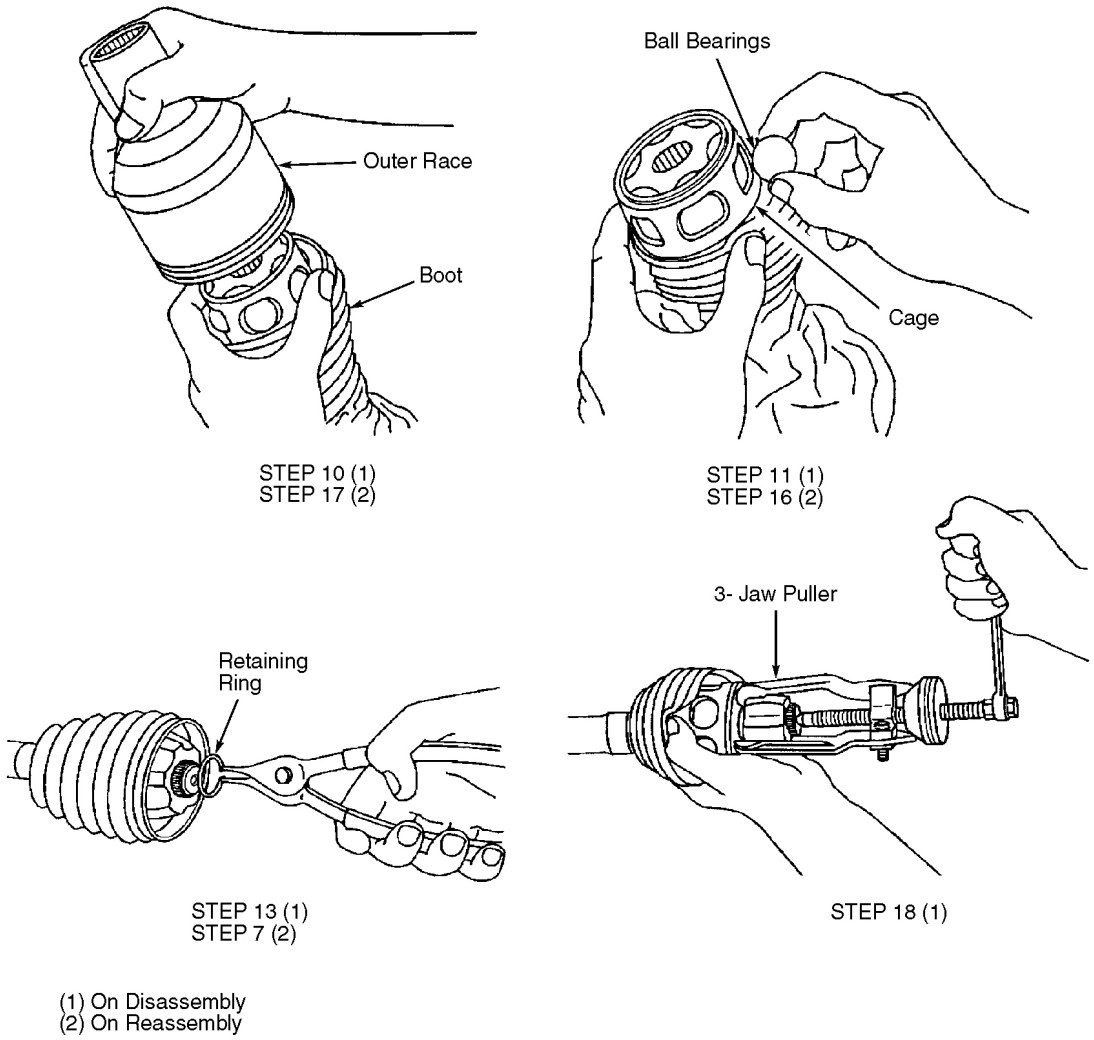

Fig. 9: Disassembling Axle Shaft Inner Joint
Courtesy of GENERAL MOTORS CORP.

Reassembly (First Design)

NOTE: **Axle shaft boots, seals and clamps should be protected from sharp objects any time service is performed on or near the axle shaft(s). Damage to the boot(s), the seal(s) or the clamp(s) may cause lubricant to leak from the joint and lead to increased noise and possible failure of the axle shaft.**

1. Wrap a shop towel around the axle shaft.

2. Place the axle shaft horizontally in a bench vise.
3. Install a NEW small boot retaining clamp onto the axle shaft.
4. Install the boot onto the axle shaft.
5. Install the cage onto the axle shaft so the smaller diameter end faces the vise.

NOTE: The inner race spline relief must face away from the end of the axle shaft.

6. Install the inner race onto the axle shaft.
   A. Engage the inner race splines onto the axle shaft splines. Be sure to install the inner race spline relief side onto the axle shaft first.
   B. Position a wood block squarely over the end of the inner race.
   C. Use a hammer to begin to drive the inner race onto the axle shaft.
   D. Reposition the wood block along the face of the inner race to avoid the axle shaft.
   E. Work evenly around the inner race and continue to drive the inner race, until you feel the inner race seat fully onto the axle shaft.
   F. Inspect to be sure that the axle shaft snap ring groove is exposed.
7. Install the snap ring to the axle shaft. See **Fig. 9** .
8. Position the cage so the cage lands align with the inner race ball tracks.
9. Install the cage onto the inner race.
10. Position the cage windows to align with the inner race ball tracks.
11. Insert approximately 60 percent of the grease from the service kit into the outer race.
12. Position the axle shaft vertically in the bench vise so the inner joint end is up.
13. Apply a small amount of the grease from the service kit to the cage windows and inner race ball tracks.
14. Insert the remaining grease from the service kit into the boot.
15. Install the outer race retaining ring onto the axle shaft. Position the retaining ring below the cage toward the vise.
16. Install the balls through the cage windows to the inner race ball tracks. See **Fig. 9** . Use the boot to keep the balls in position if necessary.
17. Install the outer race onto the axle shaft. See **Fig. 9** .
    A. Be careful not to allow the grease in the outer race to leak out.
    B. Align the outer race ball tracks to the balls.
    C. Slide the outer race down over the balls.

18. Position the axle shaft horizontally in the bench vise.
19. Engage the outer race retaining ring.
    A. Slide the outer race toward the vise.
    B. Insert the outer race retaining ring into the groove along the outer edge of the outer race.
    C. Position the outer race retaining ring so the opening in the ring aligns with an outer race land (not a ball track).
20. Position the large diameter end of the boot onto the outer race.
21. Position the small boot retaining clamp onto the neck of the boot (seal). See **Fig. 10** . Position the boot and small retaining clamp to the axle shaft.
22. Measure the distance of edge of seal-to-edge of the last axle shaft groove. Distance should be 0.10" (2.5 mm). See **Fig. 10** . Adjust to fit accordingly.

NOTE: The boot retaining clamp must not be over-tightened or under-tightened.

23. Crimp the small boot retaining clamp using the axle shaft boot clamp pliers. See **Fig. 11** . Tighten the small seal retaining clamp until the base of the omega (ohms) shape has a gap width (1) between 0.079-0.118" (2-3 mm), with a difference in the gap width from side-to-side no greater than 0.016" (0.4 mm). The clamping hold time must be no less than 2 seconds.
24. Measure the distance (1) between the end of the seal and end of the joint outer race. Adjust the plunging motion of the joint to 8.82-8.98" (224-228 mm).
25. Position the large boot retaining clamp onto the boot.
26. Position the boot and large retaining clamp to the joint outer race. See **Fig. 12** . Measure the distance (1) between the edge of the seal and the edge of the joint outer race last groove closing edge. Adjust fit to 0.03" (0.8 mm).

NOTE: The boot must not be dimpled, stretched or out of shape in any way.

27. Inspect the boot for proper shape. If the boot is not shaped correctly, equalize the pressure in the boot and shape the boot properly by hand.
28. Inspect the boot for damage. If the boot has been cut or punctured during assembly, you must discard and replace the boot.

NOTE: The boot retaining clamp must not be over-tightened or under-

tightened.

29. Crimp the large boot retaining clamp using the axle shaft seal clamp pliers. See **Fig. 11** . Tighten the large seal retaining clamp until the base of the omega (ohms) shape has a gap width (1) between 0.079-0.118" (2-3 mm), with a difference in the gap width from side-to-side no greater than 0.016" (0.4 mm). The clamping hold time must be no less than 2 seconds.
30. Remove axle shaft from bench vise.
31. Distribute the grease within the inner CV joint. Plunge the joint back and forth 4-5 times.
32. Inspect the inner CV joint and axle shaft for smooth operation.
    A. Hold axle shaft vertically, with the outer joint at the bottom.
    B. Rotate axle shaft 4-5 times in a circular motion.

    To install the axle shaft into the vehicle, see **AXLE SHAFTS** under REMOVAL & INSTALLATION.

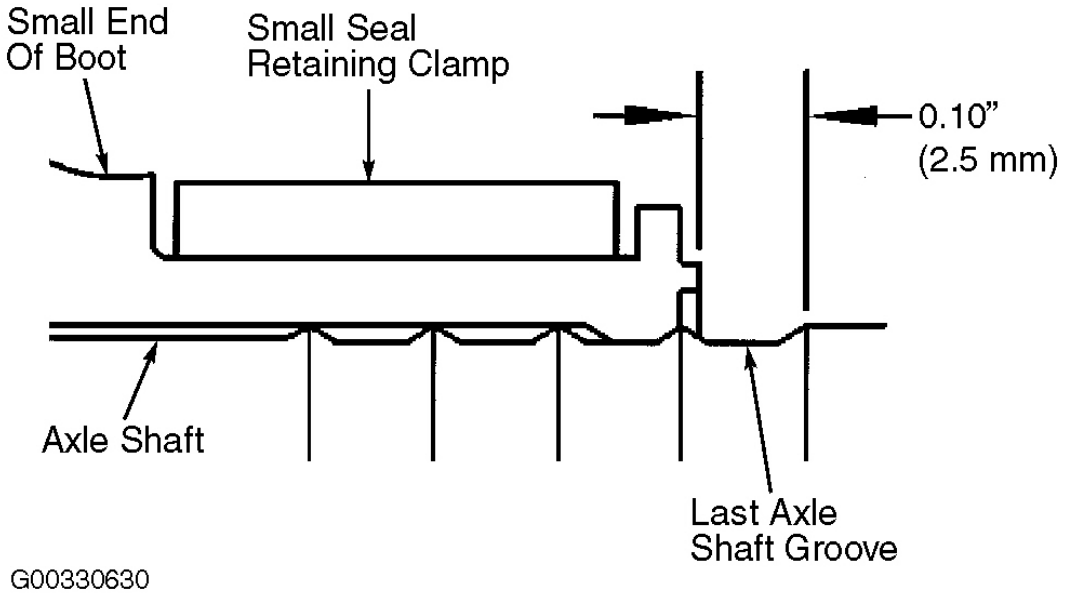

Fig. 10: Positioning Axle Shaft Small Boot Retaining Clamp
Courtesy of GENERAL MOTORS CORP.

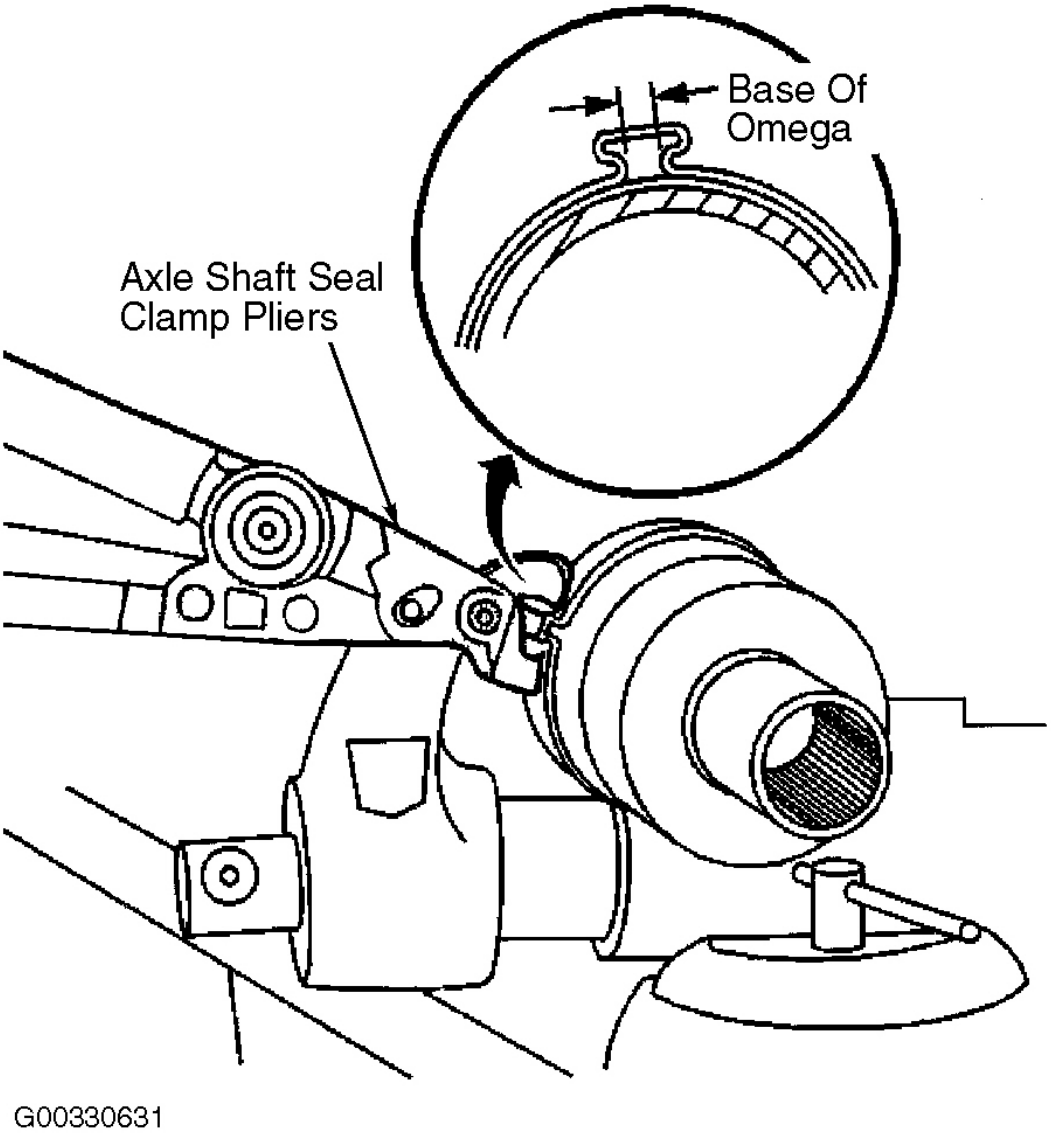

Fig. 11: Identifying Proper Gap Width Of Crimped Boot Clamp (Large Clamp Shown; Small Clamp Is Similar)
Courtesy of GENERAL MOTORS CORP.

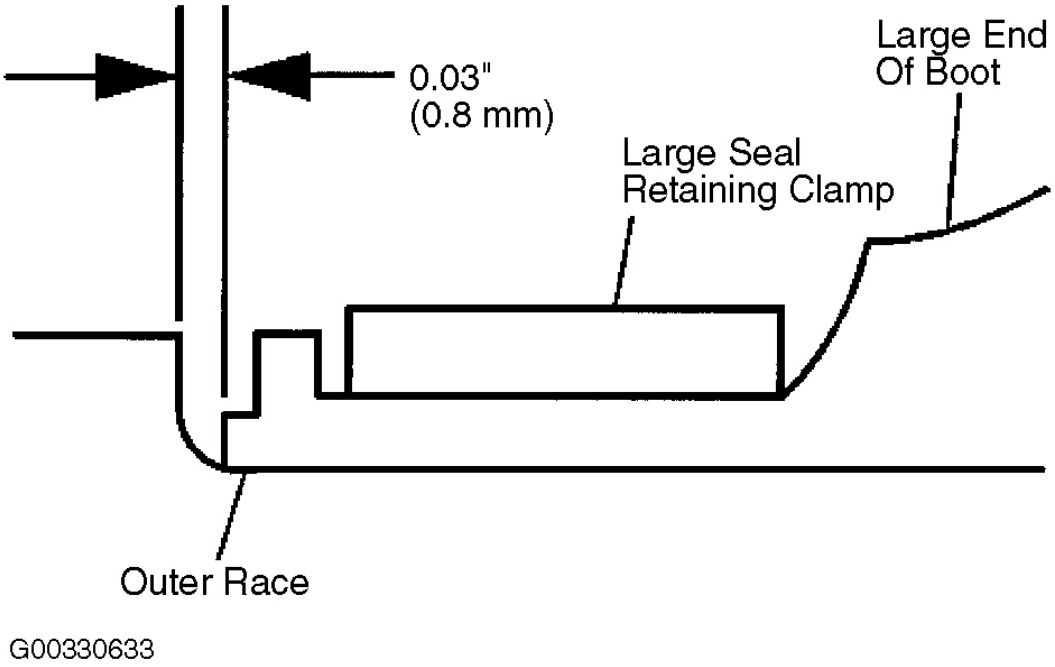

Fig. 12: Positioning Axle Shaft Large Boot Retaining Clamp
Courtesy of GENERAL MOTORS CORP.

Disassembly (Second Design)

NOTE: This procedure is to be performed only after the axle shaft has been removed from the vehicle. See AXLE SHAFTS under REMOVAL & INSTALLATION.

NOTE: Special Tools Required: Axle Shaft Seal Clamp Pliers (J-42572 & J-46588).

1. Wrap a shop towel around the axle shaft. For an exploded view of axle shaft, see **Fig. 1** .
2. Place the axle shaft horizontally in a bench vise.
3. Using axle seal crimp pliers, remove the large boot retaining clamp from the CV joint boot.
4. Remove the small boot retaining clamp from the joint boot. Use a side cutter or other suitable tool and discard the clamp.
5. Separate the boot from the joint outer race at the large diameter end.
6. Position the boot behind the joint face.

7. Position the axle shaft vertically in the bench vise so the inner joint is up.
8. Slide the joint outer race down toward the vise.
9. Disengage the outer race retaining ring.
   A. Insert a small flat-bladed screwdriver between the retaining ring and the outer race.
   B. Remove the retaining ring from the outer race.
   C. Position the retaining ring along the axle shaft away from the outer race.

NOTE: The balls may fall out of the cage and inner race when the outer race is removed.

10. Remove the outer race from the axle shaft. See **Fig. 9** .
    A. Use the boot to catch any balls which are not retained by grease.
    B. Lift the outer race off the axle shaft.
11. Remove any remaining balls from the cage and inner race. See **Fig. 9** . Remove any balls caught by the boot.
12. Position the axle shaft horizontally in the bench vise.
13. Remove the outer race retaining ring from the axle shaft. See **Fig. 9** .
14. Remove the snap ring from the axle shaft.
15. Align the cage lands with the inner race ball tracks.
16. Reposition the cage along the axle shaft away from the inner race.
17. Wipe the grease from the inner race.
18. Remove the inner race from the axle shaft using a 3 jaw puller. See **Fig. 9** .
19. Remove the cage from the axle shaft.
20. Remove the boot from the axle shaft.
21. Remove the axle shaft from the bench vise.

NOTE: All traces of old grease and any contaminates must be removed.

22. Clean the following thoroughly with clean solvent:
    - The inner race.
    - The outer race.
    - The cage.
    - The balls.

- The axle shaft exposed end.

23. Thoroughly air dry all the parts.

Reassembly (Second Design)

1. Wrap a shop towel around the axle shaft.
2. Place the axle shaft horizontally in a bench vise.
3. Install a NEW small boot retaining clamp onto the axle shaft.
4. Install the boot onto the axle shaft.
5. Install the cage onto the axle shaft so the smaller diameter end faces the vise.

NOTE: The inner race spline relief must face away from the end of the axle shaft.

6. Install the inner race onto the axle shaft.
   A. Engage the inner race splines onto the axle shaft splines. Be sure to install the inner race spline relief side onto the axle shaft first.
   B. Position a wood block squarely over the end of the inner race.
   C. Use a hammer to begin to drive the inner race onto the axle shaft.
   D. Reposition the wood block along the face of the inner race to avoid the axle shaft.
   E. Work evenly around the inner race and continue to drive the inner race, until you feel the inner race seat fully onto the axle shaft.
   F. Inspect to be sure that the axle shaft snap ring groove is exposed.
7. Install the snap ring to the axle shaft. See **Fig. 9** .
8. Position the cage so the cage lands align with the inner race ball tracks.
9. Install the cage onto the inner race.
10. Position the cage windows to align with the inner race ball tracks.
11. Insert approximately 60 percent of the grease from the service kit into the outer race.
12. Position the axle shaft vertically in the bench vise so the inner joint end is up.
13. Apply a small amount of the grease from the service kit to the cage windows and inner race ball tracks.
14. Insert the remaining grease from the service kit into the boot.
15. Install the outer race retaining ring onto the axle shaft. Position the retaining ring below the cage toward the vise.
16. Install the balls through the cage windows to the inner race ball tracks. See **Fig. 9** . Use the

boot to keep the balls in position if necessary.

17. Install the outer race onto the axle shaft. See **Fig. 9** .
    A. Be careful not to allow the grease in the outer race to leak out.
    B. Align the outer race ball tracks to the balls.
    C. Slide the outer race down over the balls.
18. Position the axle shaft horizontally in the bench vise.
19. Engage the outer race retaining ring.
    A. Slide the outer race toward the vise.
    B. Insert the outer race retaining ring into the groove along the outer edge of the outer race.
    C. Position the outer race retaining ring so the opening in the ring aligns with an outer race land (not a ball track).
20. Position the large diameter end of the boot onto the outer race.
21. Position the small boot retaining clamp onto the neck of the boot (seal). See **Fig. 10** . Position the boot and small retaining clamp to the axle shaft.
22. Measure the distance (1) between the edge of the seal and edge of the last axle shaft groove closing edge. Adjust fit to 0.10" (2.5 mm). See **Fig. 10** .

NOTE: The boot retaining clamp must not be over-tightened or under-tightened.

23. Crimp the small boot retaining clamp using the axle shaft seal clamp pliers. See **Fig. 11** . Tighten the small seal retaining clamp until the base of the omega (ohms) shape has a gap width (1) between 0.079-0.118" (2-3 mm), with a difference in the gap width from side-to-side no greater than 0.016" (0.4 mm). The clamping hold time must be no less than 2 seconds.
24. Measure the distance (1) between the end of the seal and the end of the joint outer race. Adjust the plunging motion of the joint to 8.82-8.98" (224-228 mm).
25. Position the large boot retaining clamp onto the boot.
26. Position boot and large retaining clamp to the joint outer race. See **Fig. 12** . Measure the distance (1) between the edge of the seal and the edge of the joint outer race last groove closing edge. Adjust fit to 0.03" (0.8 mm).

NOTE: The boot must not be dimpled, stretched or out of shape in any way.

27. Inspect the boot for proper shape. If the boot is not shaped correctly, equalize the pressure in the boot and shape the boot properly by hand.
28. Inspect the boot for damage. If the boot has been cut or punctured during assembly, you must discard and replace the boot.
29. Align the following items while latching:
    - The axle shaft inboard boot.
    - The inboard housing.
    - The large boot retaining clamp.
30. Using the axle seal crimp pliers, latch the large boot retaining clamp. See **Fig. 13** . Ensure that the latching tangs are fully engaged in the large boot clamp band.
31. Remove the axle shaft from the bench vise.
32. Distribute the grease within the inner CV joint. Plunge the joint back and forth 4 or 5 times.
33. Inspect the inner CV joint and axle shaft for smooth operation.
    A. Hold the axle shaft vertically, with the outer joint at the bottom.
    B. Rotate the axle shaft 4 or 5 times in a circular motion.

    To install the axle shaft into the vehicle, see **AXLE SHAFTS** under REMOVAL & INSTALLATION.

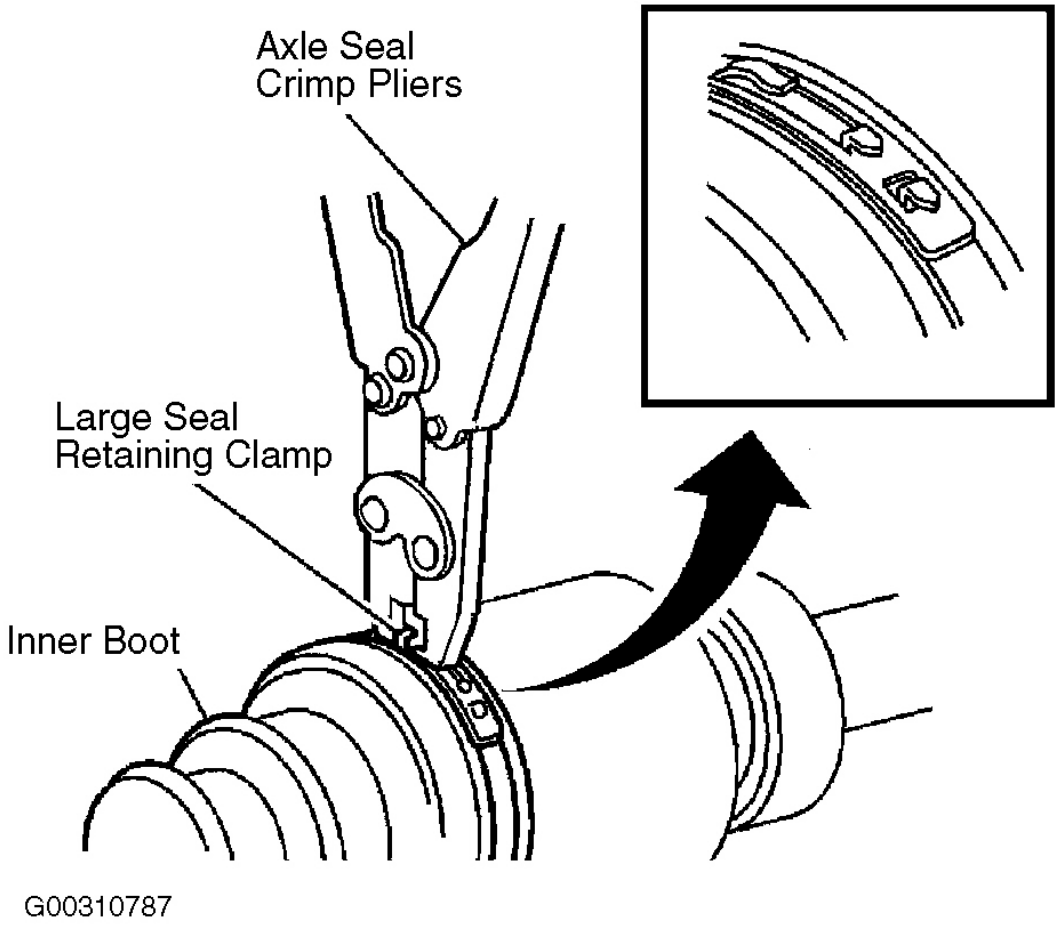

Fig. 13: Latching Large Seal Retaining Clamp
Courtesy of GENERAL MOTORS CORP.

AXLE SHAFT OUTER JOINT & BOOT

NOTE: **This procedure is to be performed only after the axle shaft has been removed from the vehicle. See AXLE SHAFTS under REMOVAL & INSTALLATION.**

NOTE: **During the 2001 Model Year, there was a first and second design style of large diameter clamp used. The first design uses an Omega style large diameter clamp, while the second design uses a low profile large diameter clamp. This incorporates different tools and instruction to repair. Before following repair procedures, verify the**

style of clamp used.

Disassembly (First Design)

NOTE: Special Tools Required: Axle Shaft Seal Clamp Pliers (J-42572).

1. Wrap a shop towel around the axle shaft.
2. Place axle shaft horizontally in a bench vise.
3. Remove large boot retaining clamp from the CV joint seal. Use a side cutter or other suitable tool and discard the clamp.
4. Remove small boot retaining clamp from the joint seal. Use a side cutter or other suitable tool and discard the clamp.
5. Separate boot from the joint outer race at the large diameter end.
6. Position the boot behind the joint face.
7. Wipe the grease from the face of the joint inner race, cage, balls, etc.
8. Remove the outer joint from the axle shaft.
   A. Have an assistant hold the joint housing.
   B. Position a wood block between the boot and the joint (along the joint face).
   C. Strike the wood block with a hammer to compress the axle shaft retaining clip.
   D. Continue to strike the wood block to remove the outer joint from the axle shaft.
9. Remove the axle shaft retaining ring from the axle shaft.
10. Remove the boot from the axle shaft.
11. Remove the axle shaft from the vise.
12. Wrap a shop towel around the joint outer race splined shaft.
13. Place the outer race vertically in a bench vise. See **Fig. 14** .
14. Make a ball accessible for removal. Tap gently on the joint cage, using a brass drift and a hammer, in order to drive a ball toward the bottom of its track. See **Fig. 14** . The opposing ball will be made accessible for removal.
15. Remove the exposed ball. Use a small screwdriver to aid in removal if necessary.
16. Position the cage and inner race so they are level.
17. Repeat steps 14 -16 in the removal sequence as shown until you remove all 6 balls. See **Fig. 15** .
18. Position the cage and the inner race 90 degrees to the centerline of the outer race.
19. Position the cage and the inner race 90 degrees to the centerline of the outer race.

20. Lift to remove the cage and the inner race from the outer race.
21. Position the cage and inner race so that the larger radius corners of the cage windows are up.
22. Rotate the inner race 90 degrees to the centerline of the cage. See **Fig. 16** .
23. Align the lands of the inner race with the windows of the cage.
24. Insert an inner race land into a cage window.
25. Pivot the inner race down and remove it from the cage.

NOTE: All traces of old grease and any contaminates must be removed.

26. Clean the following thoroughly with clean solvent:
    - The inner race.
    - The outer race.
    - The cage.
    - The balls.
    - The axle shaft exposed end.
27. Thoroughly air dry all the parts.

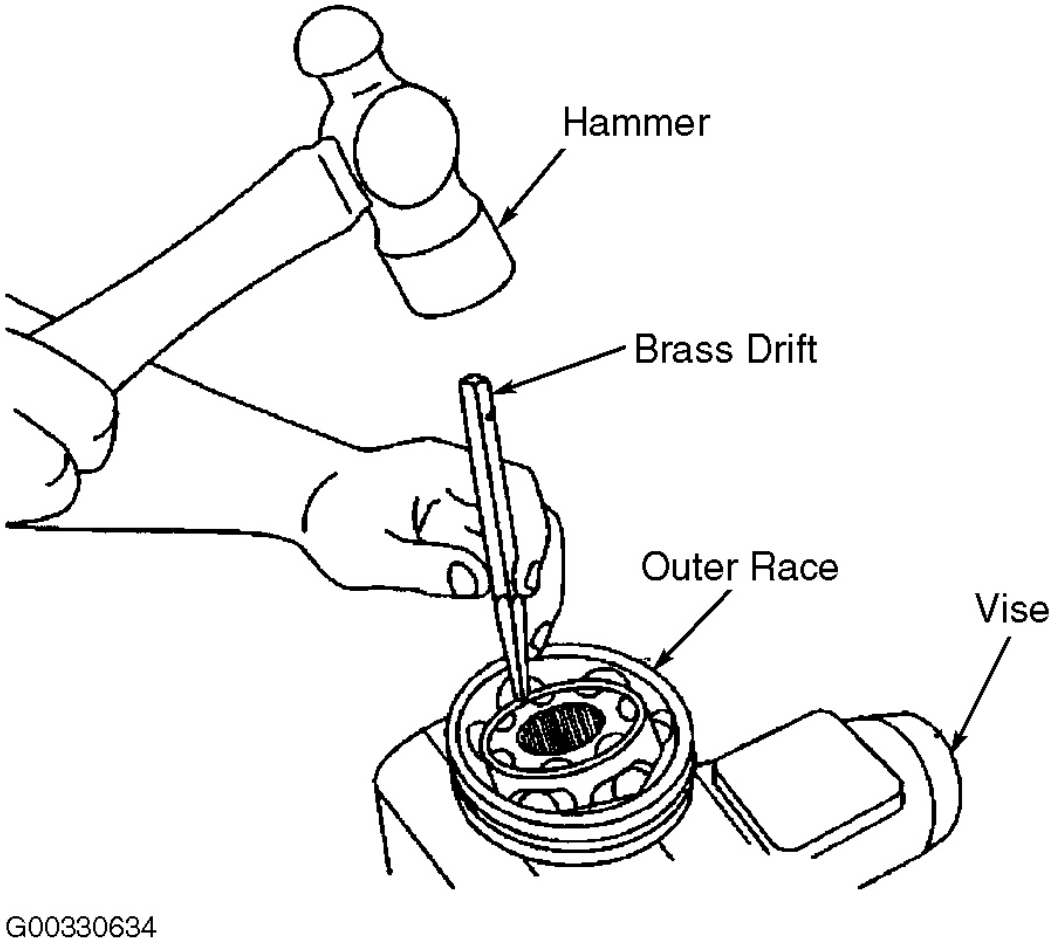

Fig. 14: Exposing Outer CV Joint Ball Bearing For Removal
Courtesy of GENERAL MOTORS CORP.

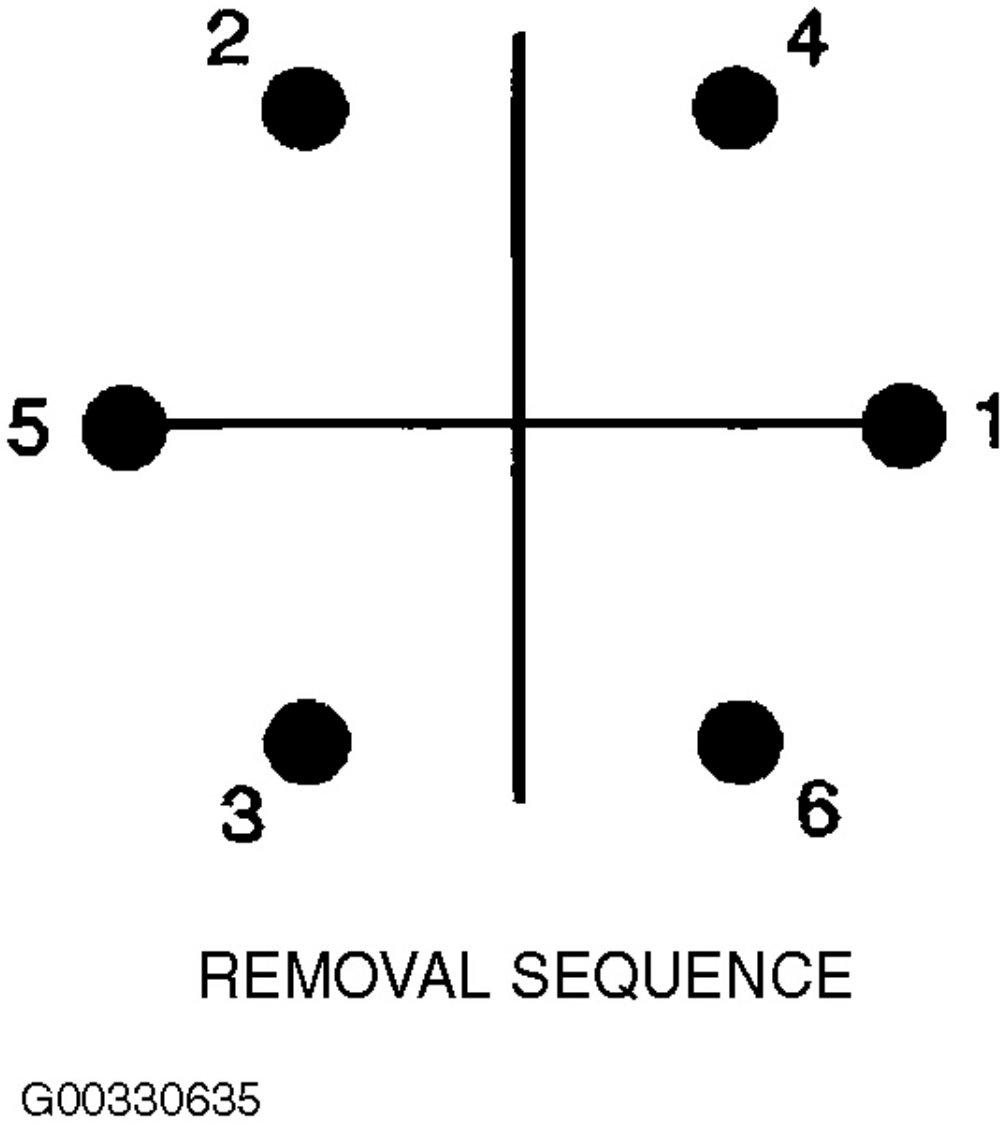

Fig. 15: Removal Sequence Of CV Joint Ball Bearings
Courtesy of GENERAL MOTORS CORP.

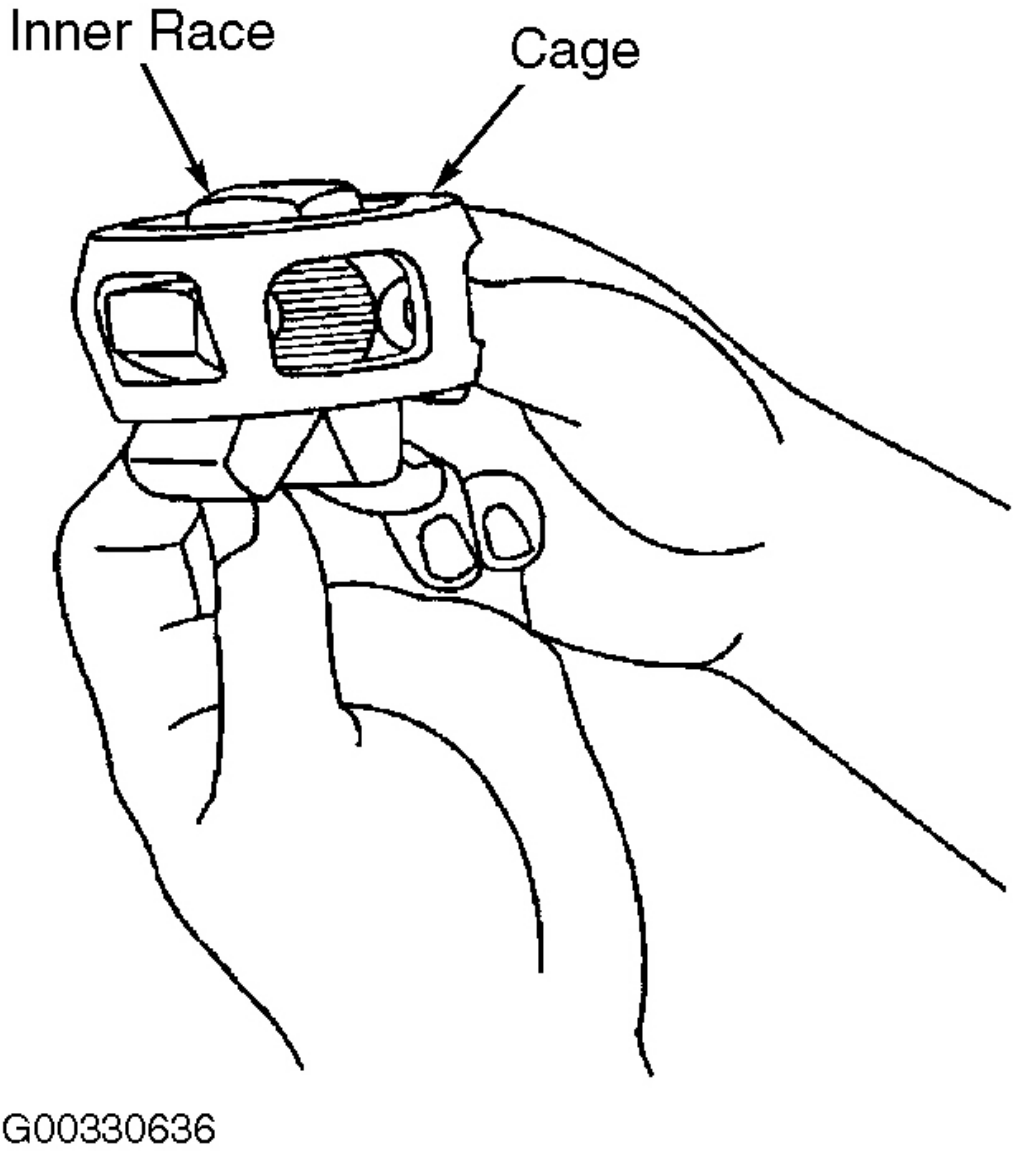

Fig. 16: Positioning Cage & Inner Race For Separation
Courtesy of GENERAL MOTORS CORP.

Reassembly (First Design)

NOTE: **Axle shaft boots, seals and clamps should be protected from sharp objects any time service is performed on or near the axle shaft(s).**

Damage to the boot(s), the seal(s) or the clamp(s) may cause lubricant to leak from the joint and lead to increased noise and possible failure of the axle shaft.

1. Position the cage so the larger radius corners of the cage windows are up.
2. Position the inner race 90 degrees to the centerline of the cage.
3. Begin to insert the inner race up through the bottom of the cage. See **Fig. 16** .
4. Align a land of the inner race to a window of the cage.
5. Insert the inner race land into the cage window.
6. Rotate the remainder of the inner race into the cage.
7. Rotate the inner race within the cage so that the grooved surface of the inner race is facing up.
8. Align the inner race ball tracks with the cage windows.
9. Wrap a shop towel around the joint outer race splined shaft.
10. Place the outer race vertically in a bench vise.
11. Position the cage and inner race 90 degrees to the centerline of the outer race.
12. Align 2 cage windows at zero and 180 degrees. Rotate the inner race and cage assembly in the vertical plane.
13. Align the 2 windows at zero and 180 degrees with 2 of the outer race lands.
14. Insert the cage and inner race into the outer race.

NOTE: The larger radius corners of the cage windows should be positioned up and the grooved surface of the inner race should be visible.

15. Position the cage and inner race so they are level.
16. Align the cage windows and inner race ball tracks with the outer race ball tracks. Rotate the appropriate component(s).
17. Position a cage window and inner race ball track for ball installation.
    A. Press down on the cage following one of the outer race ball tracks. The opposing cage window and inner race ball track will now be accessible for ball installation.
    B. After you install the first ball, you will need to use a brass drift and a hammer to tap gently on the cage, in order to drive the cage and inner race down completely.

NOTE: No gap should exist between the ball and the inner race ball

track.

18. Insert a ball through the cage window onto the inner race ball track. Tap the ball lightly with a plastic tipped hammer.
19. Position the cage and inner race so they are level.

NOTE: The ball installation sequence must be followed as shown. See Fig. 15 .

20. Repeat steps 17 -19 in the installation sequence as shown until you install all 6 balls.
21. Insert approximately 60 percent of the grease from the service kit into the outer joint.
    A. Spread the grease onto the ball tracks, the balls, the cage and the inner race.
    B. Spread the remainder of the grease into the bottom of the outer race.
22. Remove the outer joint from the bench vise.
23. Wrap a shop towel around the axle shaft.
24. Place the axle shaft horizontally in a bench vise.
25. Install a NEW small boot retaining clamp onto the axle shaft.
26. Install the boot onto the axle shaft.
27. Install the axle shaft retaining ring to the axle shaft.
28. Position the outer joint horizontally.
29. Engage the inner race splines onto the axle shaft splines.
30. Compress the axle shaft retaining ring.
    A. Press one end of the retaining ring, using a flat bladed screwdriver or equivalent tool, into the axle shaft groove while firmly pressing the outer joint onto the axle shaft.
    B. Continue to work around the retaining ring until it is compressed.

NOTE: The axle shaft and inner race must be fully seated to each other.

31. Install the outer joint to the axle shaft.
    A. Position a wood block squarely over the end of the outer joint threaded shaft.
    B. Use a hammer to drive the outer joint onto the shaft.
    C. Continue to drive the outer joint until you feel the outer joint seat fully onto the axle shaft.
    D. Inspect to be sure that the axle shaft and the inner race stepped surfaces are fully seated

to each other.

32. Insert the remaining grease from the service kit into the seal.
33. Position the small boot retaining clamp onto the neck of the boot. See **Fig. 10** .
34. Position the boot and small retaining clamp to the axle shaft (2) as shown.
35. Measure the distance (1) between the edge of the seal and the edge of the last axle shaft groove closing edge. Adjust fit to 0.10" (2.5 mm).

NOTE: The boot retaining clamp must not be over-tightened or under-tightened.

36. Crimp the small boot retaining clamp using the axle shaft seal clamp pliers. See **Fig. 11** . Tighten the small seal retaining clamp until the base of the omega (ohms) shape has a gap width (1) between 0.079-0.118" (2-3 mm), with a difference in the gap width from side-to-side no greater than 0.016" (0.4 mm). The clamping hold time must be no less than 2 seconds.
37. Position the large boot retaining clamp onto the boot. See **Fig. 12** . Position the boot and large retaining clamp to the joint outer race.
38. Measure the distance between the edge of the boot and the edge of the joint outer race last groove edge. See **Fig. 12** . Measure distance (1) between the edge of the seal and edge of the joint outer race last groove closing edge. Adjust to 0.03" (0.8 mm).

NOTE: The seal must not be dimpled, stretched or out of shape in any way.

39. Inspect seal for proper shape. If seal is not shaped correctly, equalize the pressure in the seal and shape the seal properly by hand.
40. Inspect the seal for damage. If the seal has been cut or punctured during assembly, you must discard and replace the seal.

NOTE: The seal retaining clamp must not be over-tightened or under-tightened.

41. Crimp the large seal retaining clamp using the axle shaft seal clamp pliers. See **Fig. 11** . Tighten the large seal retaining clamp until the base of the omega (ohms) shape has a gap width (1) between 0.079-0.118" (2-3 mm), with a difference in the gap width from side-to-side no greater than 0.016" (0.4 mm). The clamping hold time must be no less than 2 seconds.
42. Inspect the outer CV joint and axle shaft for smooth operation. This will also distribute the

grease within the joint.

A. Hold the axle shaft vertically, with the outer joint at the bottom.
B. Rotate the axle shaft 4 or 5 times in a circular motion.

To install the axle shaft into the vehicle, see **AXLE SHAFTS** under REMOVAL & INSTALLATION.

Disassembly (Second Design)

NOTE: Special Tools Required: Axle Shaft Seal Clamp Pliers (J-42572) and Axle Seal Crimp Pliers (J-46588).

1. Wrap a shop towel around the axle shaft. For an exploded view of axle shaft, see **Fig. 1** .
2. Place axle shaft horizontally in a bench vise.
3. Using axle seal crimp tool, remove the large seal retaining clamp from the CV joint boot.
4. Remove small seal retaining clamp from the joint boot. Use a side cutter or other suitable tool and discard the clamp.
5. Separate seal from the joint outer race at the large diameter end.
6. Position boot behind the joint face.
7. Wipe the grease from the face of the joint inner race, cage, balls, etc.
8. Remove the outer joint from the axle shaft.
   A. Have an assistant hold the joint housing.
   B. Position a wood block between the boot and the joint along the joint face.
   C. Strike the wood block with a hammer to compress the axle shaft retaining clip.
   D. Continue to strike the wood block to remove the outer joint from the axle shaft.
9. Remove axle shaft retaining ring from the axle shaft.
10. Remove boot from the axle shaft.
11. Remove axle shaft from the vise.
12. Wrap a shop towel around the joint outer race splined shaft.
13. Place the outer race vertically in a bench vise. See **Fig. 14** .
14. Make a ball accessible for removal. Tap gently on the joint cage, using a brass drift and a hammer, in order to drive a ball toward the bottom of its track. See **Fig. 14** . The opposing ball will be made accessible for removal.
15. Remove the exposed ball. Use a small screwdriver to aid in removal if necessary.
16. Position the cage and inner race so they are level.
17. Repeat steps 14 -16 in the removal sequence as shown until you remove all 6 balls. See **Fig.**

15 .

18. Position the cage and the inner race 90 degrees to the centerline of the outer race.
19. Align the cage windows with the lands of the outer race.
20. Lift to remove the cage and the inner race from the outer race.
21. Position the cage and inner race so that the larger radius corners of the cage windows are up.
22. Rotate the inner race 90 degrees to the centerline of the cage. See **Fig. 16** .
23. Align the lands of the inner race with the windows of the cage.
24. Insert an inner race land into a cage window.
25. Pivot the inner race down and remove it from the cage.

NOTE: All traces of old grease and any contaminates must be removed.

26. Clean the following thoroughly with clean solvent:
    - The inner race.
    - The outer race.
    - The cage.
    - The balls.
    - The axle shaft exposed end.
27. Thoroughly air dry all the parts.

Reassembly (Second Design)

NOTE: Axle shaft boots, seals and clamps should be protected from sharp objects any time service is performed on or near the axle shaft(s). Damage to the boot(s), the seal(s) or the clamp(s) may cause lubricant to leak from the joint and lead to increased noise and possible failure of the axle shaft.

1. Position the cage so the larger radius corners of the cage windows are up.
2. Position the inner race 90 degrees to the centerline of the cage.
3. Begin to insert the inner race up through the bottom of the cage. See **Fig. 16** .
4. Align a land of the inner race to a window of the cage.
5. Insert the inner race land into the cage window.

6. Rotate the remainder of the inner race into the cage.
7. Rotate the inner race within the cage so that the grooved surface of the inner race is facing up.
8. Align the inner race ball tracks with the cage windows.
9. Wrap a shop towel around the joint outer race splined shaft.
10. Place outer race vertically in a bench vise.
11. Position cage and inner race 90 degrees to the centerline of the outer race.
12. Align 2 cage windows at zero and 180 degrees. Rotate the inner race and cage assembly in the vertical plane.
13. Align the 2 windows at zero and 180 degrees with 2 of the outer race lands.
14. Insert the cage and inner race into the outer race.

NOTE: The larger radius corners of the cage windows should be positioned up and the grooved surface of the inner race should be visible.

15. Position the cage and inner race so they are level.
16. Align the cage windows and inner race ball tracks with the outer race ball tracks. Rotate the appropriate component(s).
17. Position a cage window and inner race ball track for ball installation.
    A. Press down on the cage following one of the outer race ball tracks. The opposing cage window and inner race ball track will be accessible for ball installation.
    B. After you install the first ball, you will need to use a brass drift and a hammer to tap gently on the cage, in order to drive the cage and inner race down completely.

NOTE: No gap should exist between the ball and the inner race ball track.

18. Insert a ball through the cage window onto the inner race ball track. Tap the ball lightly with a plastic tipped hammer.
19. Position the cage and inner race so they are level.

NOTE: The ball installation sequence must be followed as shown. See Fig. 15 .

20. Repeat steps 17 - 19 in the installation sequence until you install all 6 balls.

21. Insert approximately 60 percent of the grease from the service kit into the outer joint.
    A. Spread the grease onto the ball tracks, the balls, the cage and the inner race.
    B. Spread the remainder of the grease into the bottom of the outer race.
22. Remove the outer joint from the bench vise.
23. Wrap a shop towel around the axle shaft.
24. Place the axle shaft horizontally in a bench vise.
25. Install a NEW small seal retaining clamp onto the axle shaft.
26. Install the boot onto the axle shaft.
27. Install the axle shaft retaining ring to the axle shaft.
28. Position the outer joint horizontally.
29. Engage the inner race splines onto the axle shaft splines.
30. Compress the axle shaft retaining ring.
    A. Press one end of the retaining ring, using a flat bladed screwdriver or equivalent tool, into the axle shaft groove while firmly pressing the outer joint onto the axle shaft.
    B. Continue to work around the retaining ring until it is compressed.

NOTE: The axle shaft and inner race must be fully seated to each other.

31. Install the outer joint to the axle shaft.
    A. Position a wood block squarely over the end of the outer joint threaded shaft.
    B. Use a hammer to drive the outer joint onto the shaft.
    C. Continue to drive the outer joint until you feel the outer joint seat fully onto the axle shaft.
    D. Inspect to be sure that the axle shaft and the inner race stepped surfaces are fully seated to each other.
32. Insert the remaining grease from the service kit into the boot.
33. Position the small seal retaining clamp onto the neck of the boot. See **Fig. 10** . Position the boot and small retaining clamp to the axle shaft.
34. Measure the distance between the edge of the seal and the edge of the last axle shaft groove closing edge. See **Fig. 10** . Measure distance (1) between the edge of the seal and edge of the last axle shaft groove closing edge. Adjust fit to 0.10" (2.5 mm).

NOTE: The seal retaining clamp must not be over-tightened or under-tightened.

35. Crimp the small seal retaining clamp using the axle shaft seal clamp pliers. See **Fig. 11** . Tighten the small seal retaining clamp until the base of the omega (ohms) shape has a gap width (1) between 0.079-0.118" (2-3 mm), with a difference in the gap width from side-to-side no greater than 0.016" (0.4 mm). The clamping hold time must be no less than 2 seconds.
36. Position the large seal retaining clamp onto the boot.
37. Position the seal and large retaining clamp to the joint outer race. See **Fig. 12** .
38. Measure the distance (1) between the edge of the seal and edge of the joint outer race last groove closing edge. Adjust fit to 0.03" (0.8 mm).

NOTE: The boot must not be dimpled, stretched or out of shape in any way.

39. Inspect the boot for proper shape. If the boot is not shaped correctly, equalize the pressure in the boot and shape the boot properly by hand.
40. Inspect the boot for damage. If the boot has been cut or punctured during assembly, you must discard and replace the boot.
41. Align the following items while latching:
    - The axle shaft outer boot.
    - The outer housing
    - The large seal retaining clamp.
42. Using the axle shaft seal crimp pliers, latch the large seal retaining clamp. See **Fig. 13** . Ensure that the latching tangs are fully engaged in the large seal clamp band.
43. Rotate the housing 4 or 5 times in order to distribute the grease throughout the ball bearings.
44. Inspect the outer CV joint and axle shaft for smooth operation. This will also distribute the grease within the joint.
    A. Hold the axle shaft vertically, with the outer joint at the bottom.
    B. Rotate the axle shaft 4 or 5 times in a circular motion.

    To install the axle shaft into the vehicle, see **AXLE SHAFTS** under REMOVAL & INSTALLATION.

TORQUE SPECIFICATIONS

TORQUE SPECIFICATION

Application	Ft. Lbs. (N.m)
Axle Shaft Spindle Nut	118 (160)

Outer Tie Rod End Nut	(1) 15 (20)
Rear Suspension Adjustment Link Lock Nut	44 (60)
Rear Transverse Spring Mounting Bracket Bolt	46 (62)
Wheel Lug Nut	100 (140)
(1) After initial torque, turn the nut an additional 160 degrees. See **Fig. 17** . Recheck the outer tie rod end nut for a minimum torque of 33 Ft. Lbs. (45 N.m).	

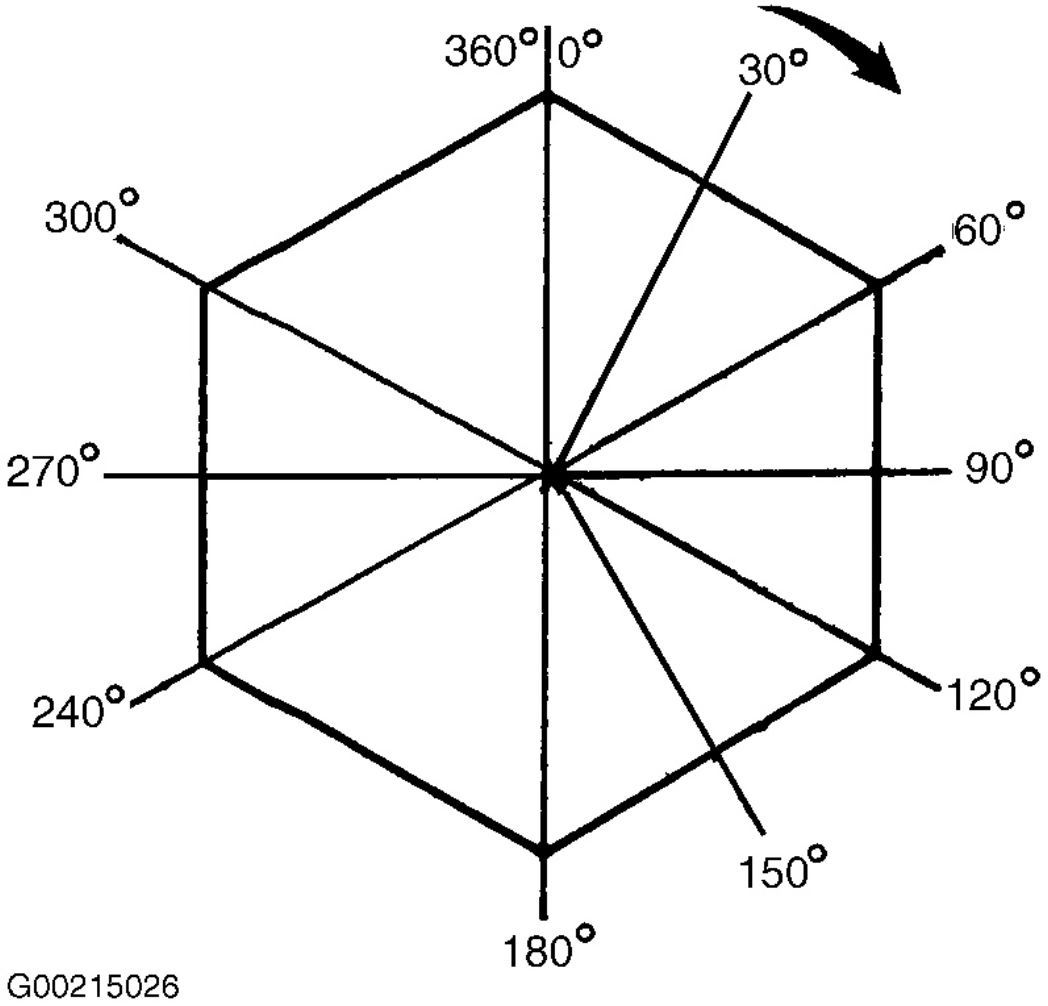

Fig. 17: View Of Torque Angles

SPECIAL TOOLS

Fig. 18: Axle Shaft Remover (J-42128)
Courtesy of GENERAL MOTORS CORP.

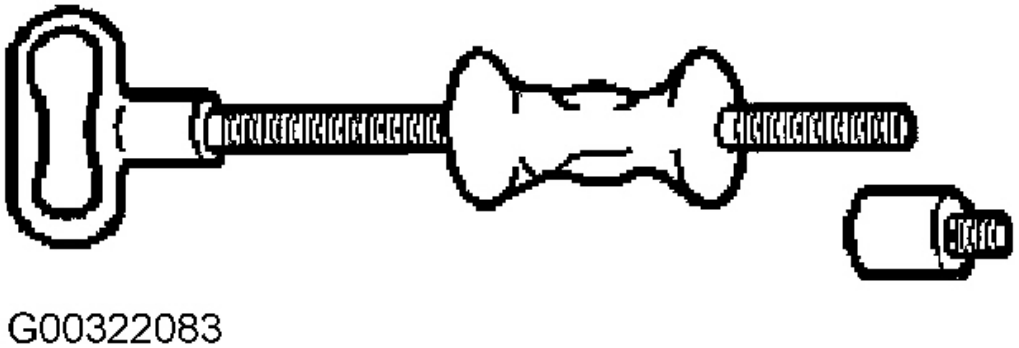

Fig. 19: Identifying Slide Hammer With Adapter (J-2619-01)
Courtesy of GENERAL MOTORS CORP.

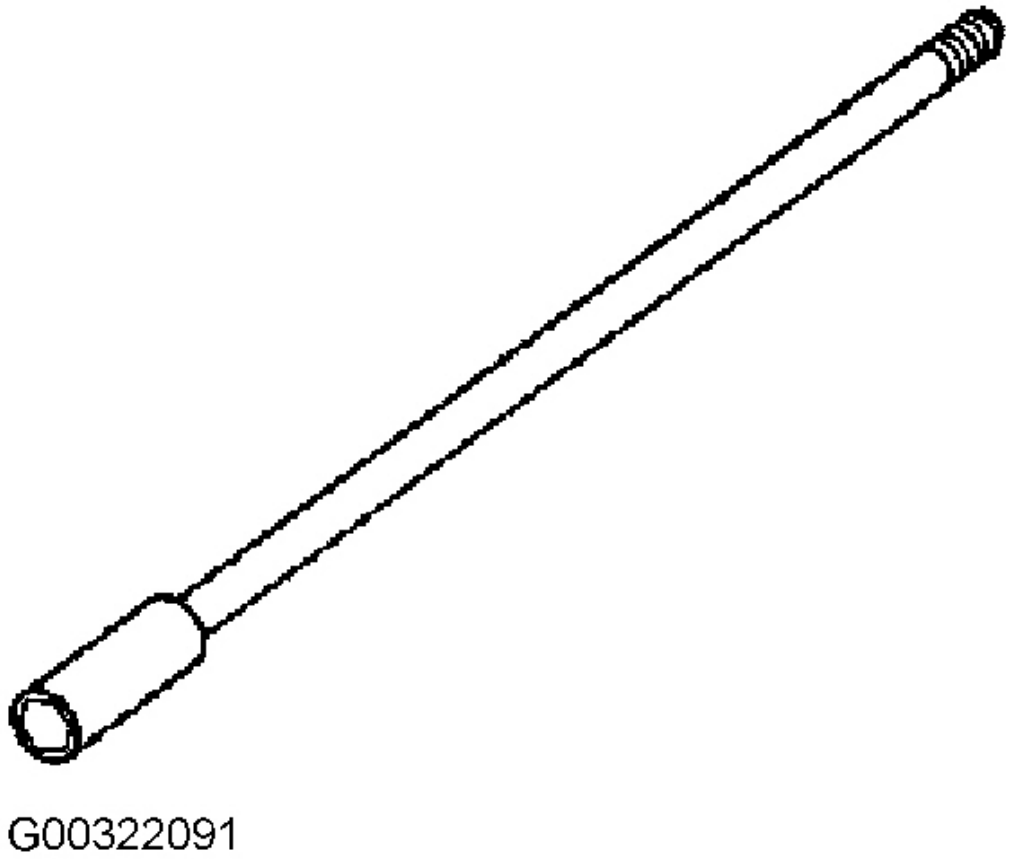

Fig. 20: Slide Hammer Extension (J-29794)
Courtesy of GENERAL MOTORS CORP.

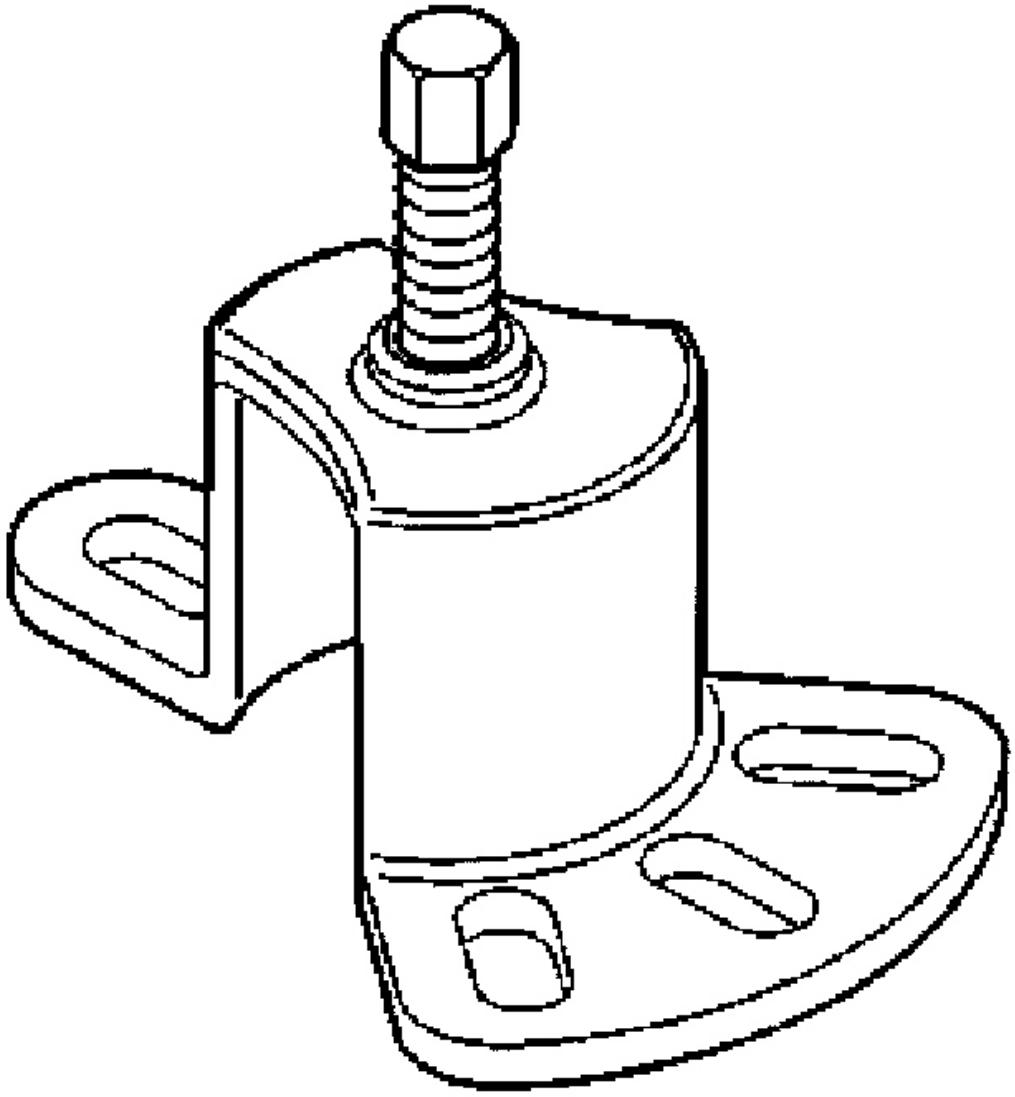

Fig. 21: Wheel Hub Remover (J-42129)
Courtesy of GENERAL MOTORS CORP.