Fastener Tightening Specifications

Application	Specification	
	Metric	English
Battery Negative Cable Ground Nut	10 N·m	89 lb in
Battery Positive and Negative Cable Bracket Bolt	10 N·m	89 lb in
Battery Positive Cable Junction Block Nut	15 N·m	11 lb ft
Battery Retaining Bolt	10 N·m	89 lb in
Battery Tray Support Bolt	25 N·m	18 lb ft
Engine Wiring Harness Ground Bolt	25 N·m	18 lb ft
Generator Bolts (LE5)	22 N·m	16 lb ft
Generator Bolts (LY7, LZ4)	50 N·m	37 lb ft
Generator Stud (LZ4)	50 N·m	37 lb ft
Generator Terminal NUT (LY7, LE5)	10 N·m	89 lb in
Generator Terminal NUT (LZ4)	15 N·m	11 lb ft
Negative Battery Cable Terminal Nut	5 N·m	45 lb in
Negative Cable and Wiring Harness Ground Bolt	25 N·m	18 lb ft
Positive Battery Cable Terminal Nut	5 N·m	45 lb in
Starter Motor Bolts (LY7)	50 N·m	37 lb ft
Starter Motor Bolts (LZ4, LE5)	43 N·m	32 lb ft
Starter Solenoid BAT Terminal Nut	15 N·m	11 lb ft
Transmission Bracket Bolt	50 N·m	37 lb ft

cardiagn.com

Battery Usage

Application	Specification
HP5 12V	
Cold Cranking Amperage (CCA)	600 A
Amp Hours	60 A/H
Reserve Capacity	100 Minutes
Replacement Battery	90-6YR
LE5 (standard)	
Cold Cranking Amperage (CCA)	650 A
Amp Hours	60 A/H
Reserve Capacity	115 Minutes
Replacement Battery	47-7YR
LAT, LE5 (optional), LY7, LZ4	
CCA	730 A or 770 A
Amp Hours	70 A/H
Reserve Capacity	120 Minutes
Replacement Battery	48-7YR

cardiagn.com

Generator Usage

Application	Specification
LE5	
Generator Model	FG-12
Rated Output	130 Amps
Load Test Output	91 Amps
LY7, LZ4	
Generator Model	SC2
Rated Output	150 Amps
Load Test Output	105 Amps

cardiagn.com

Battery Negative Cable Disconnection and Connection

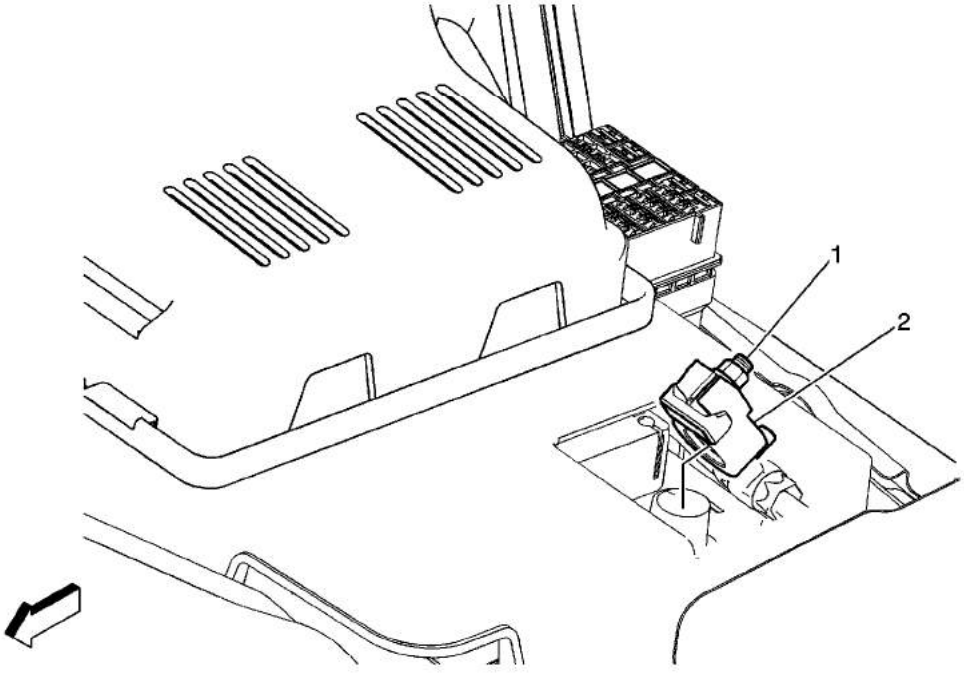

Callout	Component Name
Preliminary Procedures 1. Turn on the radio and record all of the radio station presets. 2. Ensure all lamps and accessories are turned off. 3. Ensure the ignition switch is in the OFF position, and remove the ignition key.	
1	Negative Battery Cable Terminal Nut **Caution:** Refer to Fastener Caution in the Preface section. **Tighten** 5 N·m (45 lb in)
2	Negative Battery Cable Terminal

cardiagn.com

Battery Current Sensor Replacement

Removal Procedure

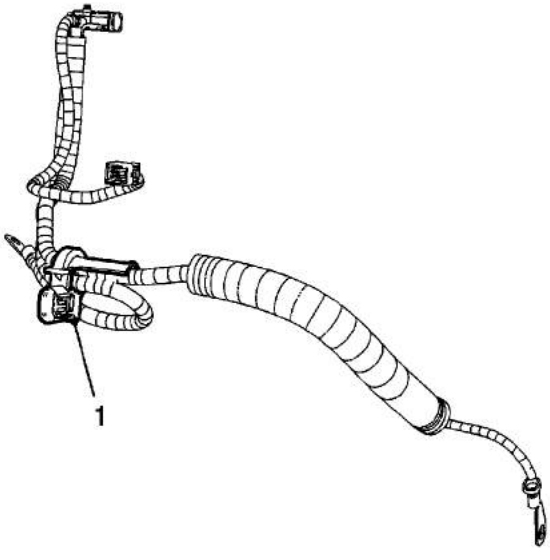

1. Remove the battery positive and negative cable. Refer to Battery Positive and Negative Cable Replacement .
2. Mark the location of the battery current sensor on the battery positive and negative cable with tape for reference during installation.
3. Remove the tape securing the battery current sensor to the battery positive and negative cable.
4. Mark the location of the battery positive and negative cable clips and remove the clips from the cable.
5. Squeeze the battery positive and negative cable branches together.

   Important: Note the orientation of the battery current sensor prior to removal.

6. Slide the battery current sensor (1) off of the battery positive and negative cable.

Installation Procedure

cardiagn.com

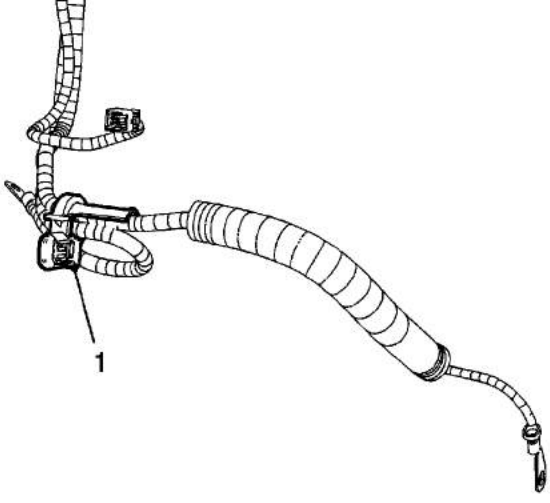

1. Squeeze the battery positive and negative cable branches together.

   Important: Ensure the battery current sensor is installed in the correct direction and location on the battery positive and negative cable.

2. Slide the NEW battery current sensor (1) up onto the battery positive and negative cable to the location previously marked during removal.
3. Wrap electrical tape around the battery current sensor leg in order to secure the sensor to battery positive and negative cable.
4. Install the battery positive/negative cable clips to the locations previously marked during removal.
5. Install the battery positive and negative cable. Refer to Battery Positive and Negative Cable Replacement .

cardiagn.com

Battery Positive and Negative Cable Replacement (LZ4)

Removal Procedure

Warning: Refer to Battery Disconnect Warning in the Preface section.

1. Remove the air cleaner outlet duct. Refer to Air Cleaner Outlet Duct Replacement.
2. Release the electronic control module (ECM) bracket from the battery cover and set it aside with the ECM still connected. Refer to Engine Control Module Replacement.

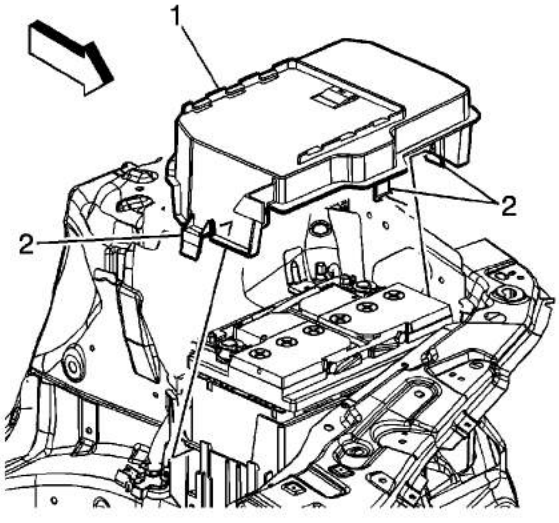

3. Release the battery cover retaining tabs (2) and remove the battery cover (1).

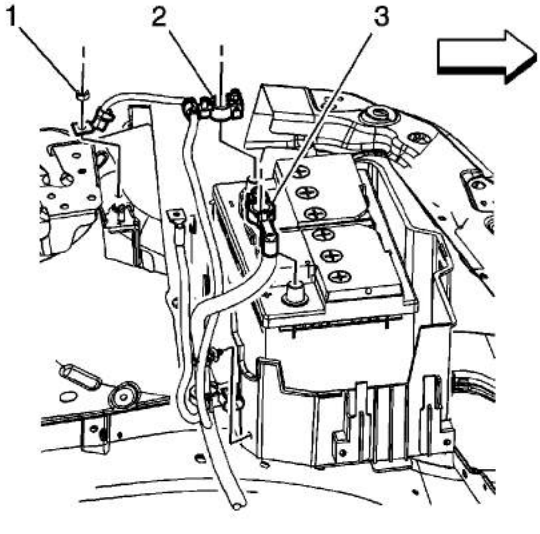

[redacted]

cardiagn.com

5. Remove the battery negative cable ground nut (1) and remove the battery negative cable ground from the body ground stud.

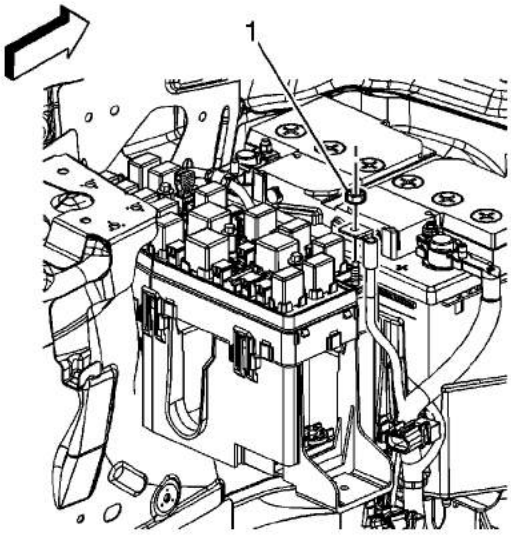

6. Remove the battery positive cable junction block nut (1) and remove the battery positive cable from the junction block.

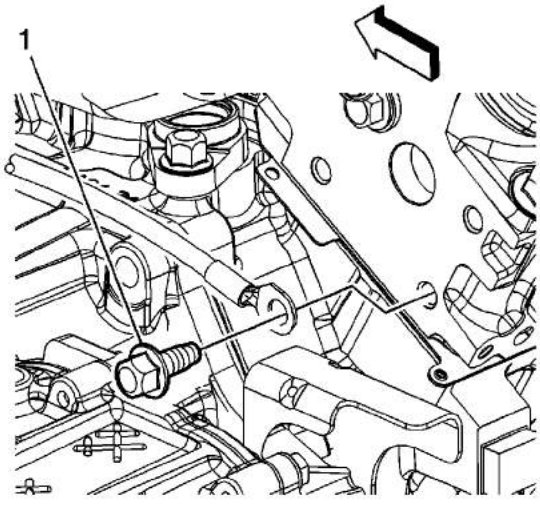

7. Remove the engine wiring harness ground bolt (1) and the battery negative cable ground at the rear of the right side cylinder head.
8. Raise and support the vehicle. Refer to Lifting and Jacking the Vehicle.

cardiagn.com

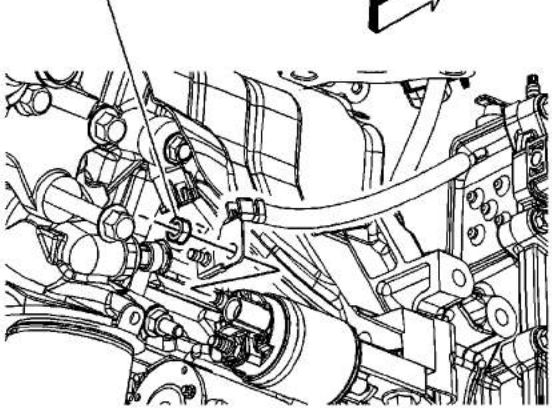

9. Remove the starter solenoid BAT terminal nut (1) and remove the battery positive cable from the starter solenoid BAT stud.
10. Remove the battery positive and negative cable from the vehicle.
11. Transfer the battery current sensor if replacing the battery positive and negative cable. Refer to Battery Current Sensor Replacement.

Installation Procedure

Note: Route the battery positive and negative cable the same way as originally installed.

1. Position the battery positive and negative cable to the vehicle.

Caution: Refer to Fastener Caution in the Preface section.

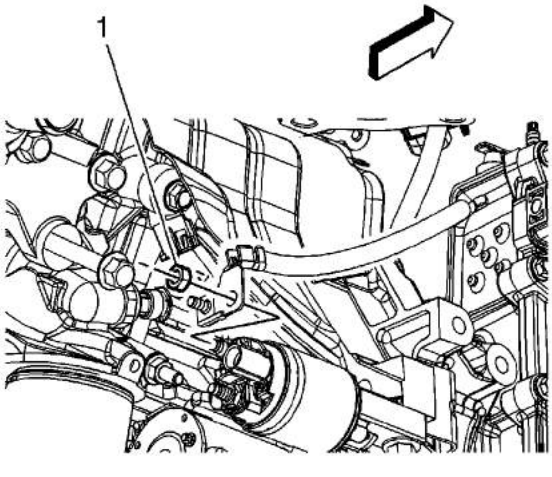

cardiagn.com

2. Install the positive cable to the starter solenoid BAT stud and install the starter solenoid BAT terminal nut (1).

   Tighten the nut to **15 N·m (11 lb ft)**.

3. Lower the vehicle.

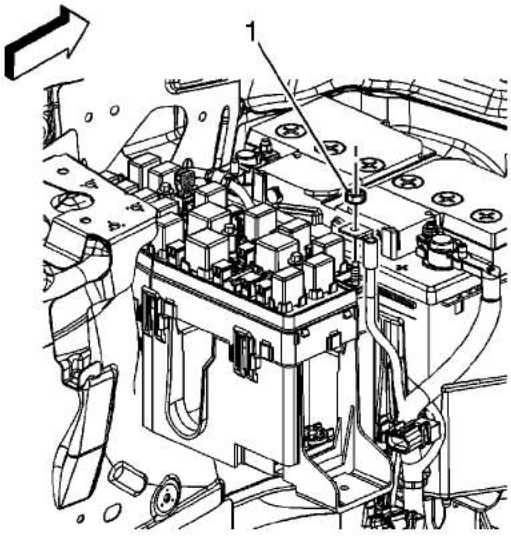

4. Install the positive cable to the junction block and install the positive cable junction block nut (1).

   Tighten the nut to **15 N·m (11 lb ft)**.

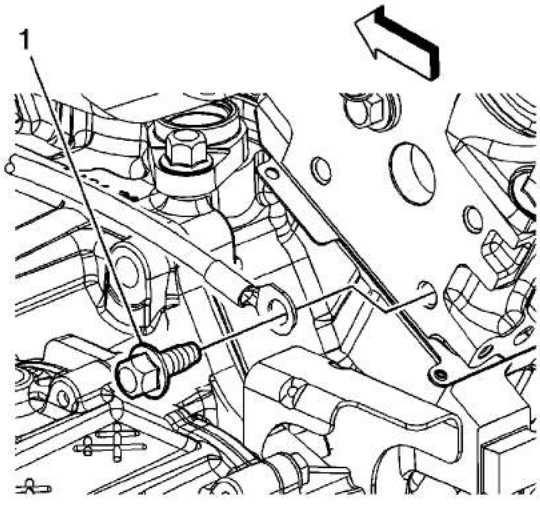

cardiagn.com

5. Install the negative cable ground and engine wiring harness ground bolt (1) at the rear of the right side cylinder head.

   Tighten the bolt to **25 N·m (18 lb ft)**.

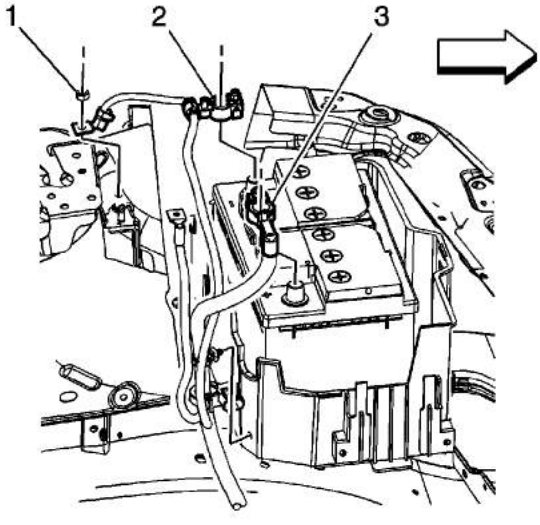

6. Install the negative cable ground to the body ground stud and install the negative cable ground nut (1).

   Tighten the nut to **10 N·m (89 lb in)**.

7. Install the positive cable to the battery and install the positive cable nut (3).

   Tighten the nut to **5 N·m (45 lb in)**.

8. Install the negative cable to the battery. Refer to Battery Negative Cable Disconnection and Connection.

cardiagn.com

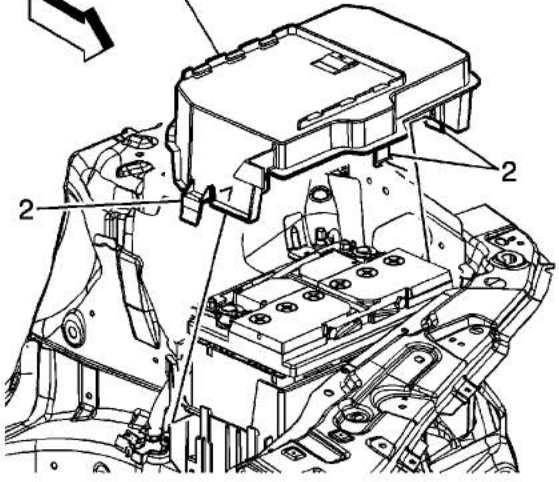

9. Install the battery cover (1) until the battery cover retaining tabs (2) lock into place.
10. Position the ECM bracket in place. Refer to Engine Control Module Replacement.
11. Install the air cleaner outlet duct. Refer to Air Cleaner Outlet Duct Replacement.

cardiagn.com

Battery Positive and Negative Cable Replacement (LY7)

Removal Procedure

Warning: Refer to Battery Disconnect Warning in the Preface section.

1. Release the electronic control module (ECM) bracket from the battery cover and set it aside with the ECM still connected. Refer to Engine Control Module Replacement.

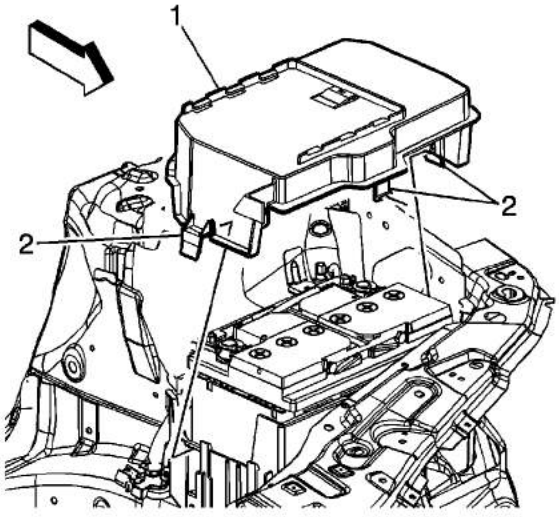

2. Release the battery cover retaining tabs (2) and remove the battery cover (1).

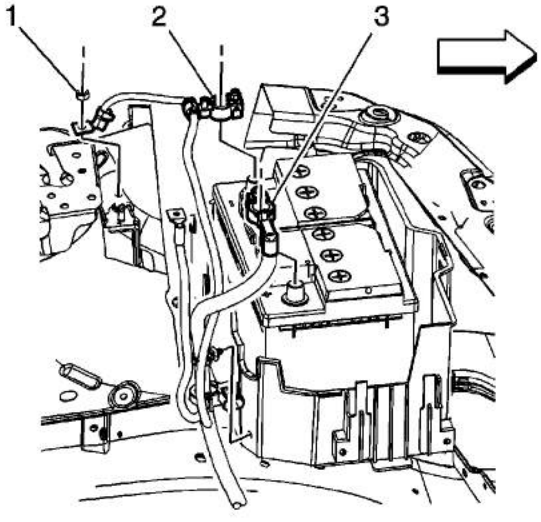

3. Loosen the battery positive cable nut (3) and remove the battery positive cable from the

© 2010 General Motors Corporation. All rights reserved.

cardiagn.com

ground from the body ground stud.

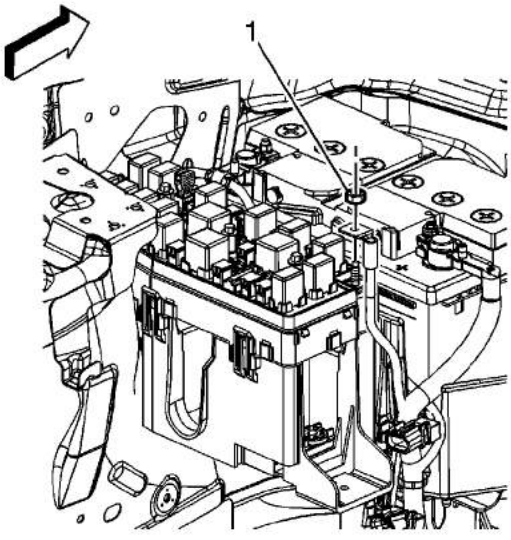

5. Remove the battery positive cable junction block nut (1) and remove the battery positive cable from the junction block.

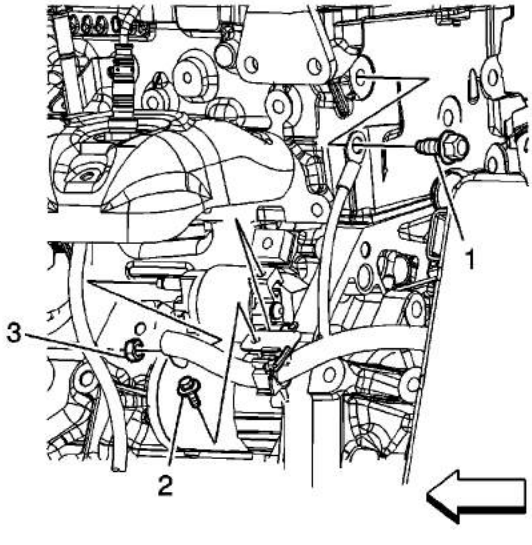

6. Remove the engine wiring harness ground bolt (1) and the battery negative cable ground at the rear of the left side cylinder head.
7. Remove the battery positive and negative cable bracket bolt (2).
8. Raise and support the vehicle. Refer to Lifting and Jacking the Vehicle.
9. Remove the starter solenoid BAT terminal nut (3) and remove the battery positive cable from the starter solenoid BAT stud.
10. Remove the battery positive and negative cable from the vehicle.
11. Transfer the battery current sensor if replacing the battery positive and negative cable. Refer to Battery Current Sensor Replacement.

cardiagn.com

Note: Route the battery positive and negative cable the same way as originally installed.

1. Position the battery positive and negative cable to the vehicle.

   Caution: Refer to Fastener Caution in the Preface section.

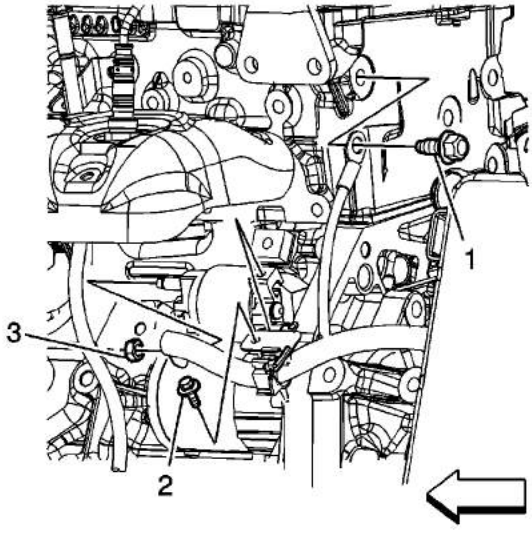

2. Install the battery positive cable to the starter solenoid BAT stud and install the starter solenoid BAT terminal nut (1).

   Tighten the nut to **15 N·m (11 lb ft)**.

3. Lower the vehicle.
4. Install the battery positive and negative cable bracket bolt (2) and tighten to **10 N·m (89 lb in)**.
5. Install the battery negative cable ground and engine wiring harness ground bolt (1) at the back of the left side cylinder head.

   Tighten the bolt to **25 N·m (18 lb ft)**.

cardiagn.com

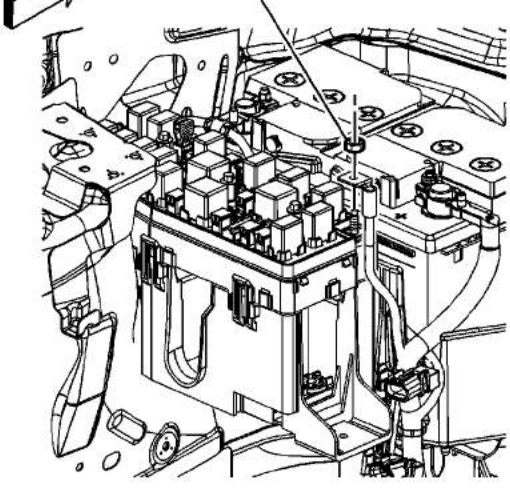

6. Install the battery positive cable to the junction block and install the battery positive cable junction block nut (1).

   Tighten the nut to **15 N·m (11 lb ft)**.

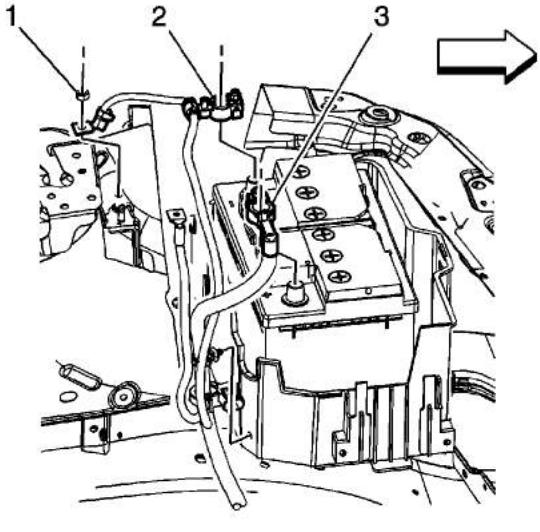

7. Install the battery negative cable ground to the body ground stud and install the battery negative cable ground nut (1).

   Tighten the nut to **10 N·m (89 lb in)**.

8. Install the positive cable to the battery and install the positive cable nut (3).

cardiagn.com

9. Install the negative cable to the battery. Refer to Battery Negative Cable Disconnection and Connection.

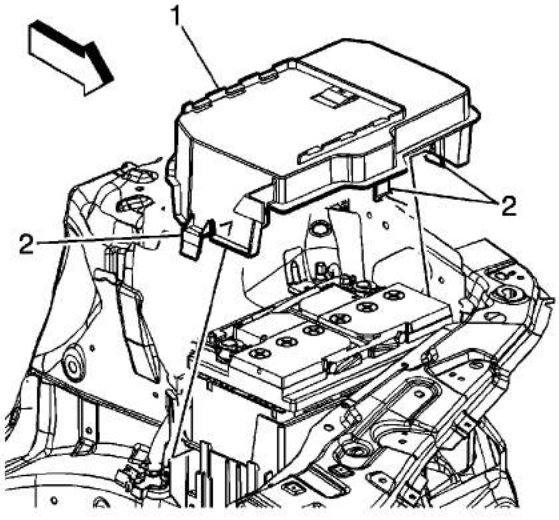

10. Align and install the battery cover (1) until the battery cover retaining tabs (2) lock into place.
11. Position the ECM bracket in place. Refer to Engine Control Module Replacement.

cardiagn.com

Battery Positive and Negative Cable Replacement (LE5)

Removal Procedure

Warning: Refer to Battery Disconnect Warning in the Preface section.

1. Release the electronic control module (ECM) bracket from the battery cover and set it aside with the ECM still connected. Refer to Engine Control Module Replacement.

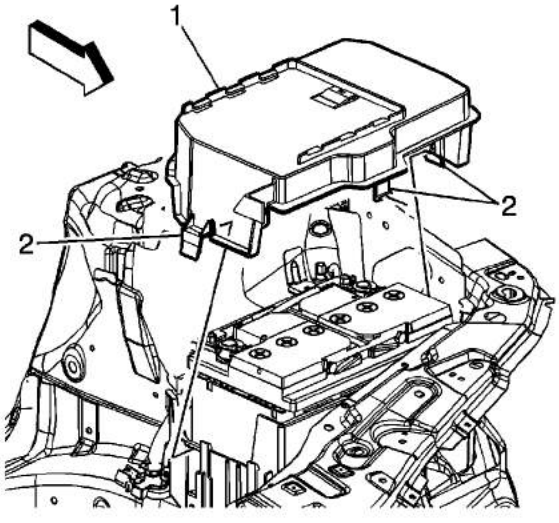

2. Release the battery cover retaining tabs (2) and remove the battery cover (1).

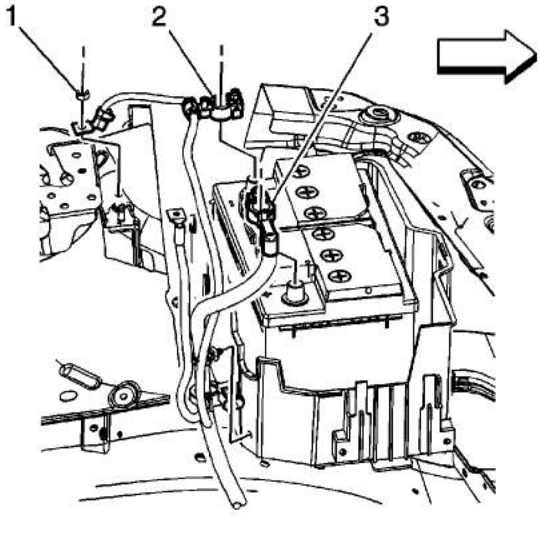

3. Loosen the positive cable nut (3) and remove the battery positive cable from the battery.

© 2010 General Motors Corporation. All rights reserved.

cardiagn.com

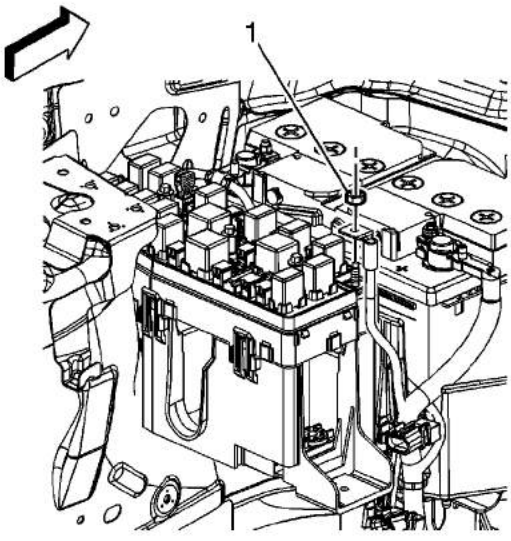

5. Remove the battery positive cable junction block nut (1) and remove the battery positive cable from the junction block.

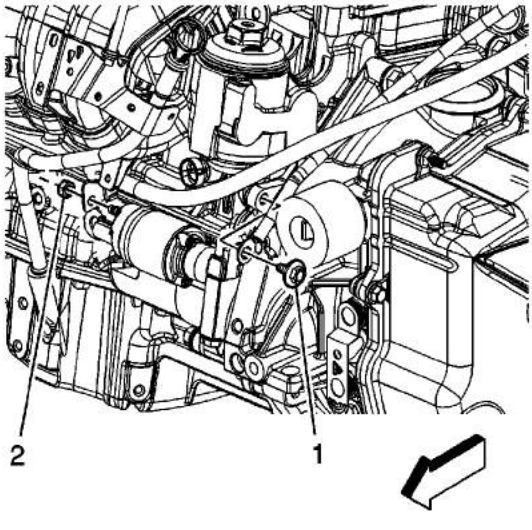

6. Remove the engine wiring harness ground bolt (1) and the battery negative cable ground at the back of the left side of the engine.
7. Raise and support the vehicle. Refer to Lifting and Jacking the Vehicle.
8. Remove the starter solenoid BAT terminal nut (2) and remove the battery positive cable from the starter solenoid BAT stud.
9. Remove the battery positive and negative cable from the vehicle.
10. Transfer the battery current sensor if replacing the battery positive and negative cable. Refer to Battery Current Sensor Replacement.

cardiagn.com

Note: Route the battery positive and negative cable the same way as originally installed.

1. Position the battery positive and negative cable to the vehicle.

   Caution: Refer to Fastener Caution in the Preface section.

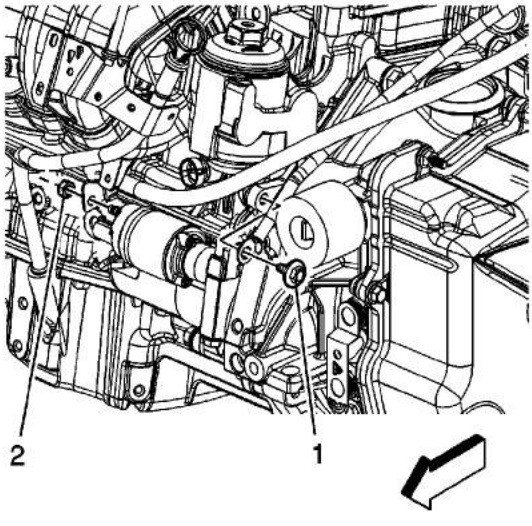

2. Install the battery positive cable to the starter solenoid BAT stud and install the starter solenoid BAT terminal nut (2).

   Tighten the nut to **15 N·m (11 lb ft)**.

3. Lower the vehicle.
4. Install the battery negative cable ground and engine wiring harness ground bolt (1) at the back of the left side of the engine.

   Tighten the bolt to **25 N·m (18 lb ft)**.

cardiagn.com

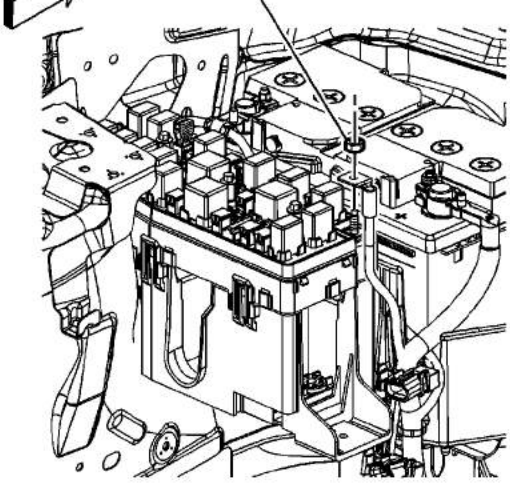

5. Install the battery positive cable to the junction block and install the battery positive cable junction block nut (1).

   Tighten the nut to **15 N·m (11 lb ft)**.

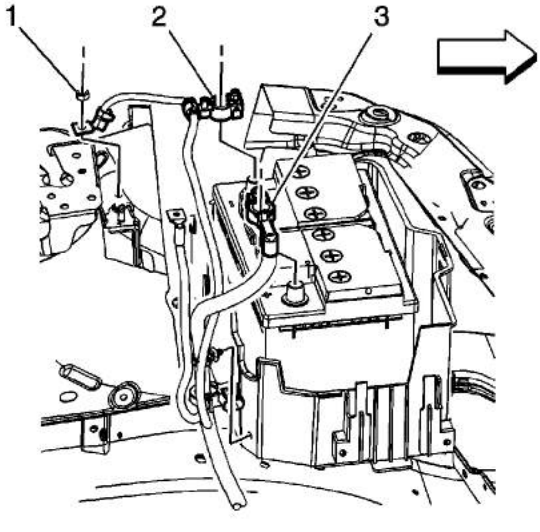

6. Install the battery negative cable ground to the body ground stud and install the battery negative cable ground nut (1).

   Tighten the nut to **10 N·m (89 lb in)**.

7. Install the positive cable to the battery and install the positive cable nut (3).

cardiagn.com

8. Install the negative cable to the battery. Refer to Battery Negative Cable Disconnection and Connection.

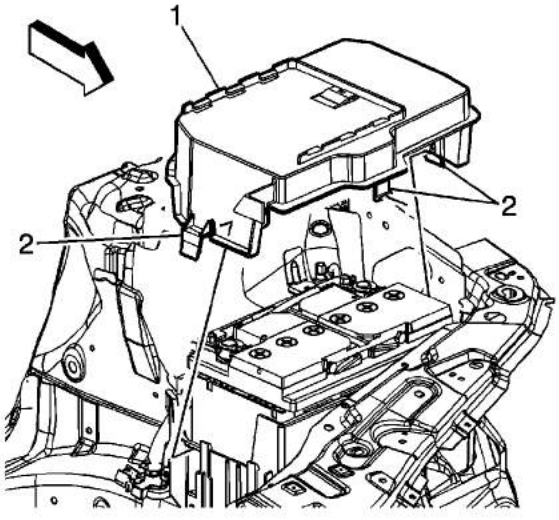

9. Align and install the battery cover (1) until the battery cover retaining tabs (2) lock into place.
10. Position the ECM bracket in place. Refer to Engine Control Module Replacement.

cardiagn.com

Battery Replacement

Removal Procedure

1. Disconnect the negative battery cable. Refer to Battery Negative Cable Disconnection and Connection

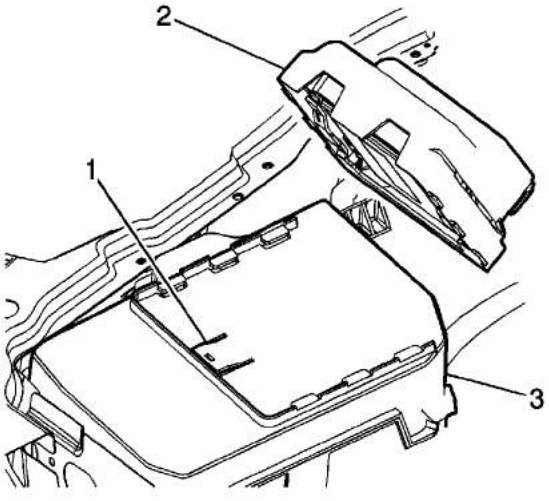

2. Depress the tab (1) retaining the engine control Module (2).
3. Slide the engine control module (2) in order to disengage the engine control module bracket from the battery upper cover (3).
4. Position the engine control module assembly (2) to the side. Do not disconnect the wiring harness.

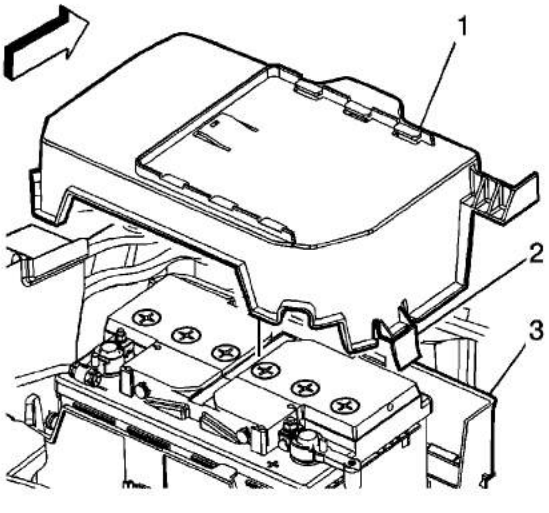

cardiagn.com

5. Release the two tabs (2).
6. Remove the battery upper (1) cover from the battery lower cover (3).

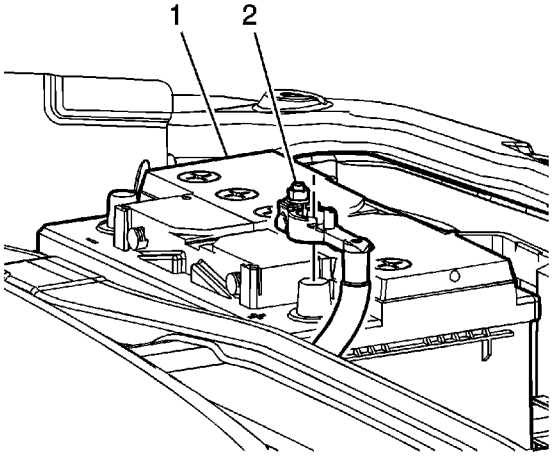

7. Loosen the positive battery cable retaining nut (2).
8. Remove the positive battery cable from the battery (1).

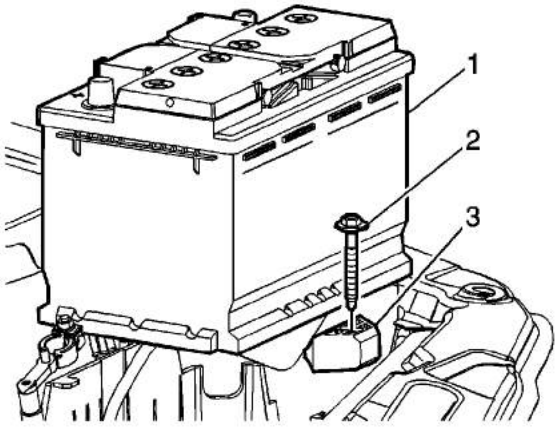

9. Remove the battery retaining bolt (2) and retainer block (3).
10. Remove the battery (1) from the vehicle.

Installation Procedure

cardiagn.com

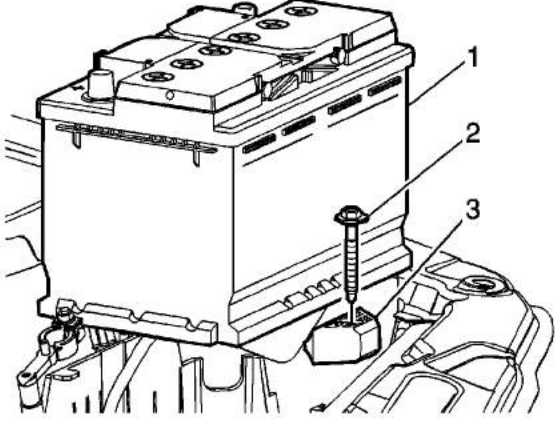

1. Position the battery (1) into the vehicle.

   Caution: Refer to Fastener Caution in the Preface section.

2. Install the battery retaining bolt (2) and retainer block (3) and tighten to **10 N·m (89 lb in)**.

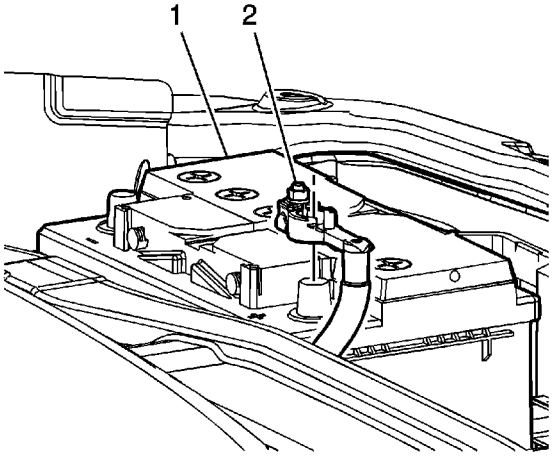

3. Install the positive battery cable to the battery (1).
4. Tighten the positive battery cable retaining nut (2) to **5 N·m (45 lb in).**.

cardiagn.com

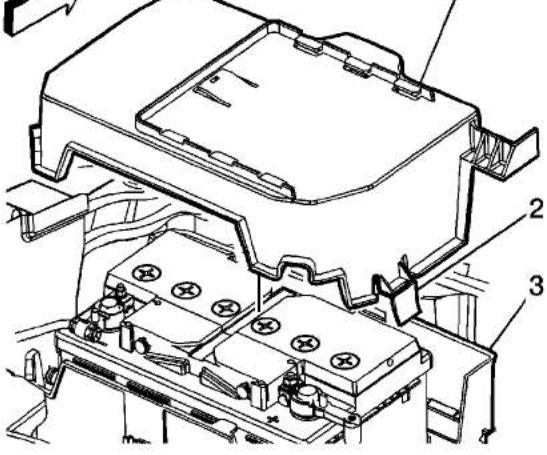

5. Install the battery upper (1) cover to the battery lower cover (3).
6. Ensure that the two retaining tabs (2) are securely latched.

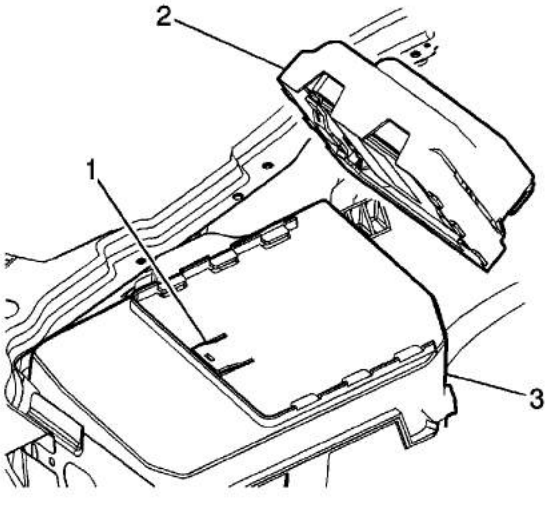

7. Slide the engine control module assembly (2) onto the battery upper cover (3).
8. Ensure that the tab (1) retaining the engine control Module (2) is securely latched.
9. Connect the negative battery cable. Refer to Battery Negative Cable Disconnection and Connection

cardiagn.com

Battery Tray Support Bracket Replacement

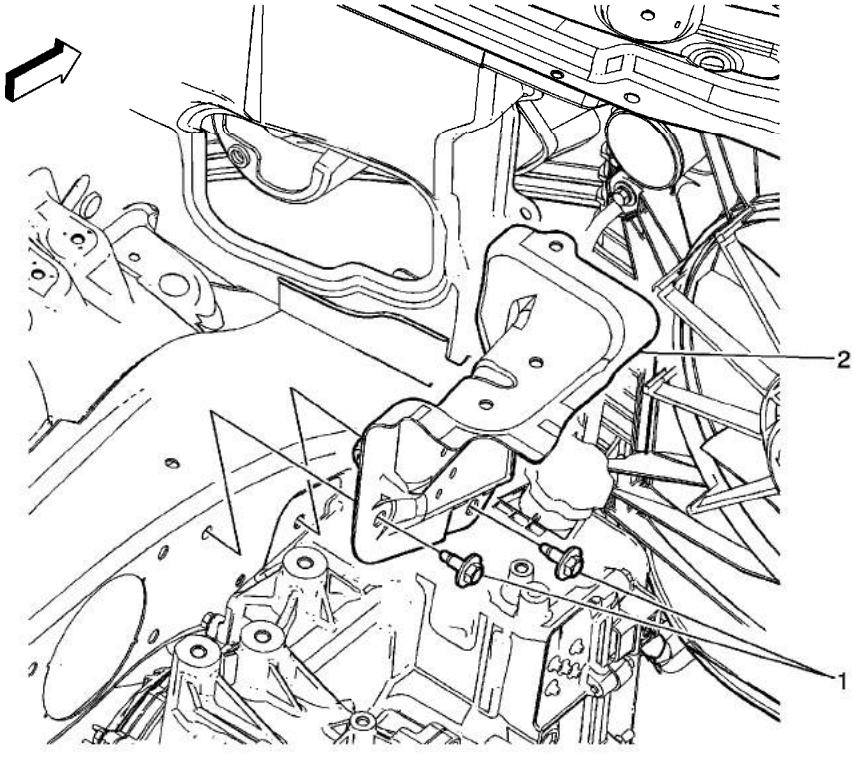

Callout	Component Name
Preliminary Procedure 1. Remove the battery. Refer to Battery Replacement. 2. Remove the battery box. Refer to Battery Box Replacement.	
1	Bolt (Qty: 2) **Caution:** Refer to Fastener Caution in the Preface section. **Tighten** 25 N·m (18 lb ft)
2	Battery Tray Support Bracket

cardiagn.com

Battery Box Replacement

Removal Procedure

1. Remove the battery. Refer to Battery Replacement.

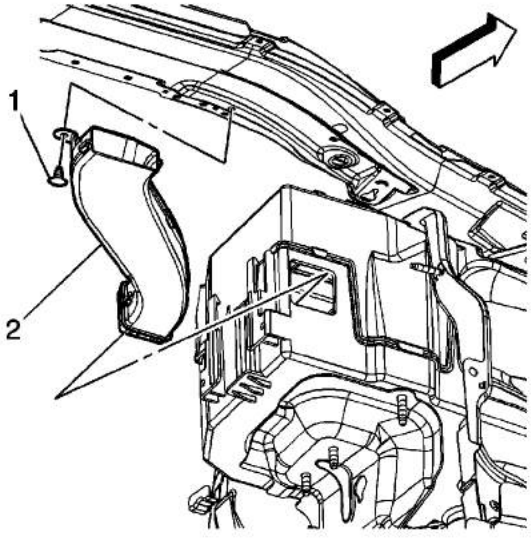

2. Remove the battery cable cooling air inlet duct plastic retainer (1).
3. Remove the battery cable cooling air inlet duct (2).
4. Disconnect any electrical harnesses attached to the battery box.

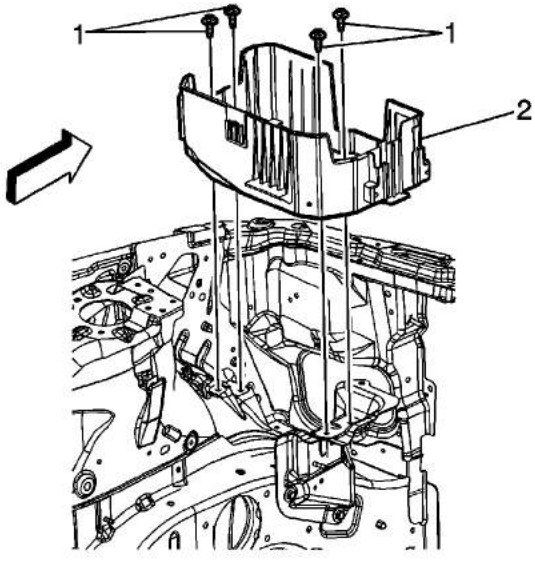

5. Remove the battery box bolts (1).
6. Remove the battery box (2).

© 2010 General Motors Corporation. All rights reserved.

cardiagn.com

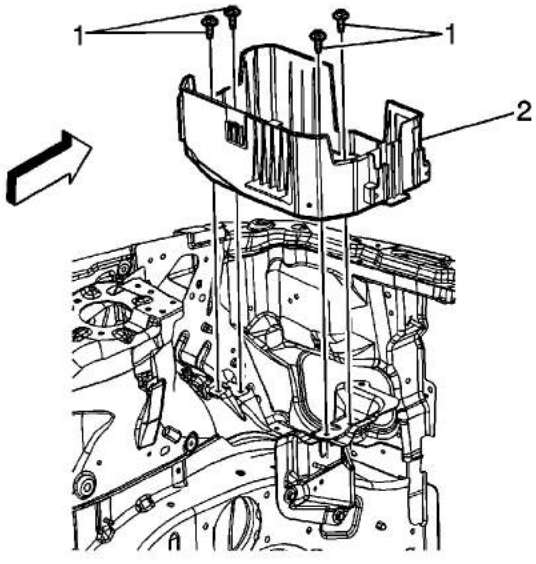

1. Install the battery box (2) to the vehicle.

   Caution: Refer to Fastener Caution in the Preface section.

2. Install the battery box bolts (1) and tighten to **20 N·m (15 lb ft)**.
3. Connect any previously disconnected electrical harnesses to the battery box.

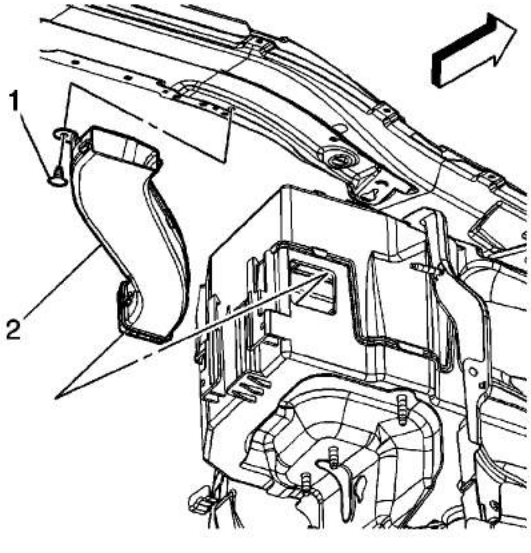

4. Install the battery cable cooling air inlet duct (2).
5. Install the battery cable cooling air inlet duct plastic retainer (1).
6. Install the battery. Refer to Battery Replacement.

cardiagn.com

Starter Replacement (LZ4)

Removal Procedure

1. Disconnect the battery negative cable. Refer to Battery Negative Cable Disconnection and Connection.

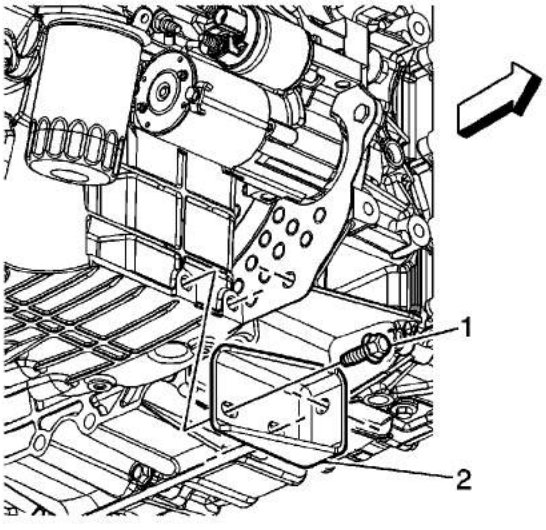

2. Remove the 3 transmission bracket bolts (1).
3. Remove the transmission bracket (2) from the vehicle.

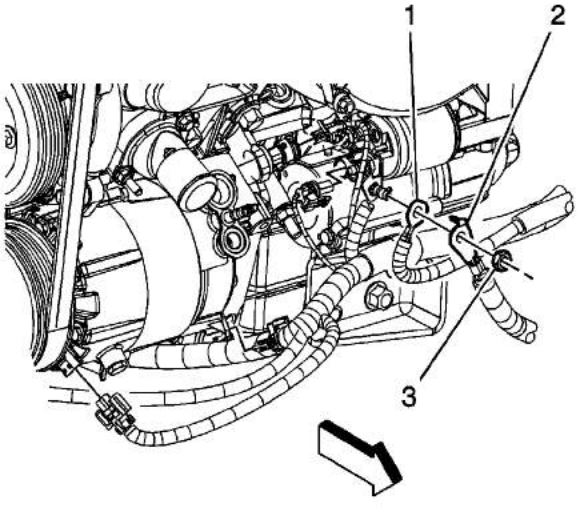

4. Remove the starter solenoid BAT terminal nut (3).
5. Remove the battery positive cable terminal (2) and engine harness terminal (1) from the

© 2010 General Motors Corporation. All rights reserved.

cardiagn.com

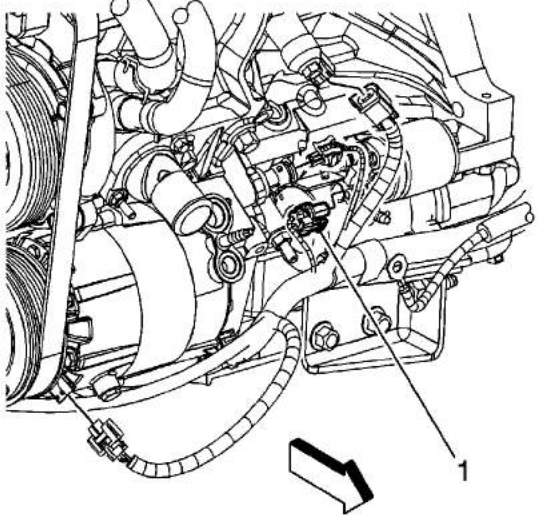

6. Disconnect the starter motor electrical connector (1).

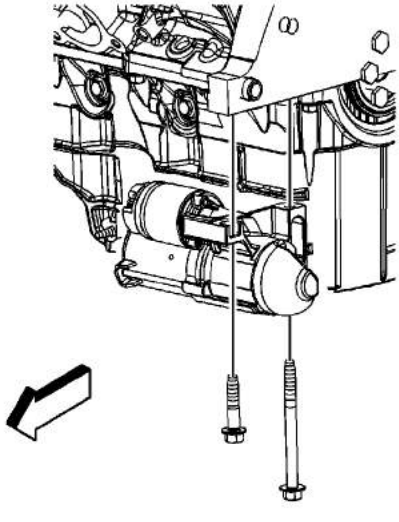

7. Remove the starter motor bolts.
8. Remove the starter motor from the vehicle.

Installation Procedure

1. Position the starter motor to the vehicle.

   Caution: Refer to Fastener Caution in the Preface section.

cardiagn.com

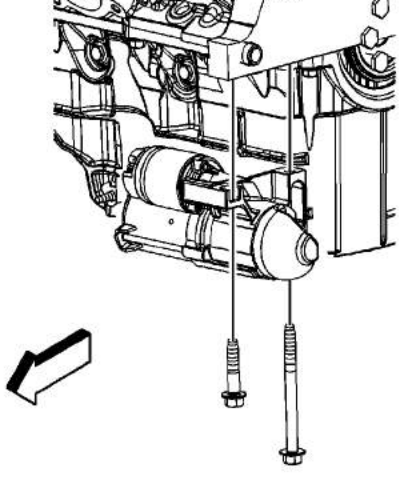

Note: Hand tighten all bolts before finalizing any torques.

2. Install the starter bolts and tighten to **43 N·m (32 lb ft)**.

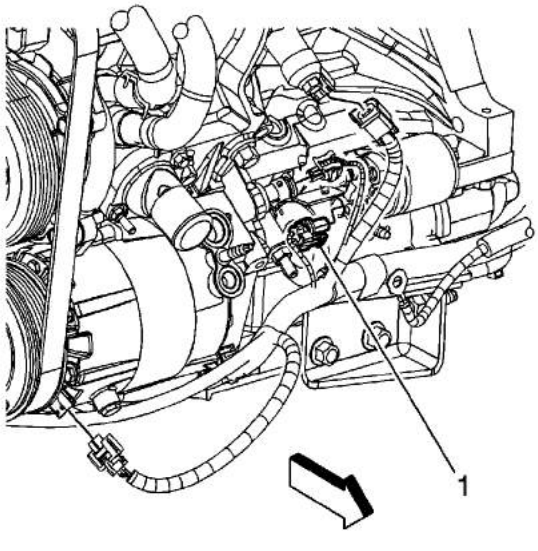

3. Connect the starter motor electrical connector (1).

cardiagn.com

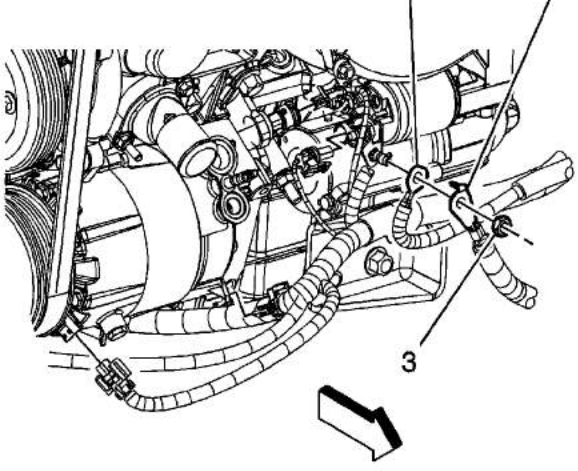

4. Install the engine harness terminal (1) and battery positive cable terminal (2) to the starter. Ensure that the battery positive cable terminal anti-rotation feature is aligned correctly.
5. Install the starter solenoid BAT terminal nut (3) and tighten to **15 N·m (11 lb ft)**.

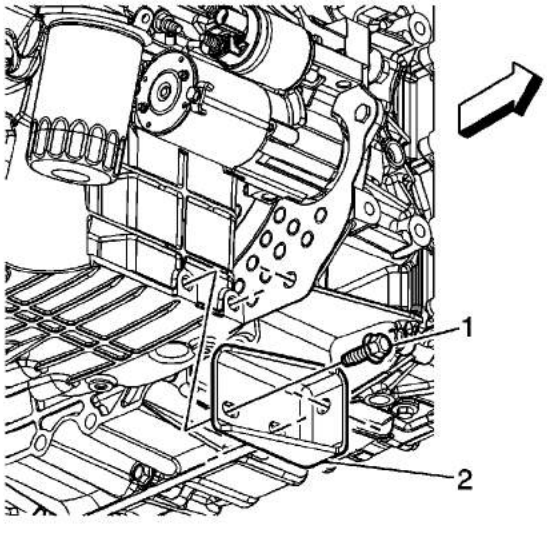

6. Position the transmission bracket (2) to the vehicle.
7. Install the 3 transmission bracket bolts (1) and tighten to **50 N·m (37 lb ft)**.
8. Connect the battery negative cable. Refer to [Battery Negative Cable Disconnection and Connection].

cardiagn.com

Starter Replacement (LE5/LAT)

Removal Procedure

1. Disconnect the battery negative cable. Refer to Battery Negative Cable Disconnection and Connection.
2. Hoist and raise the vehicle. Refer to Lifting and Jacking the Vehicle.

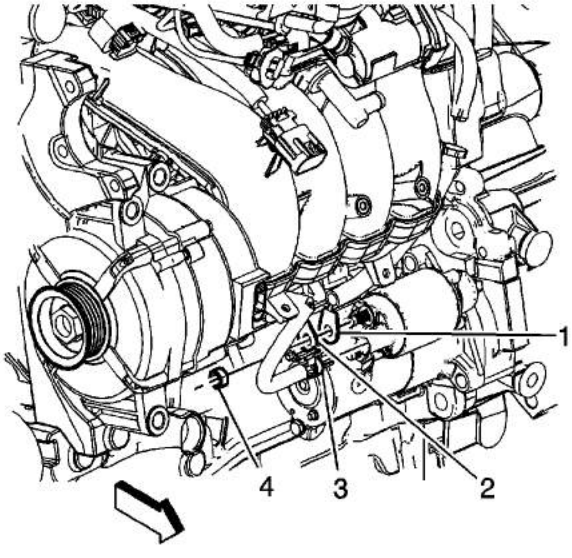

3. Disconnect the starter motor electrical connector (3).
4. Remove the starter solenoid BAT terminal nut (4).
5. Remove the battery positive cable terminal (1) and engine harness terminal (2) from the starter motor.

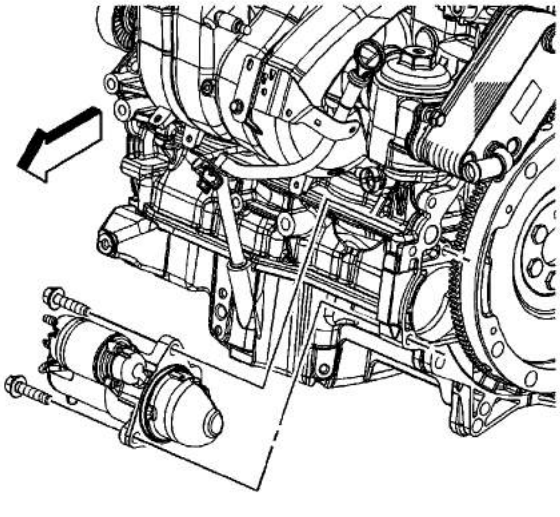

[redacted]

cardiagn.com

6. Remove the starter motor bolts.
7. Remove the starter motor from the vehicle.

Installation Procedure

1. Position the starter motor to the vehicle.

   Caution: Refer to Fastener Caution in the Preface section.

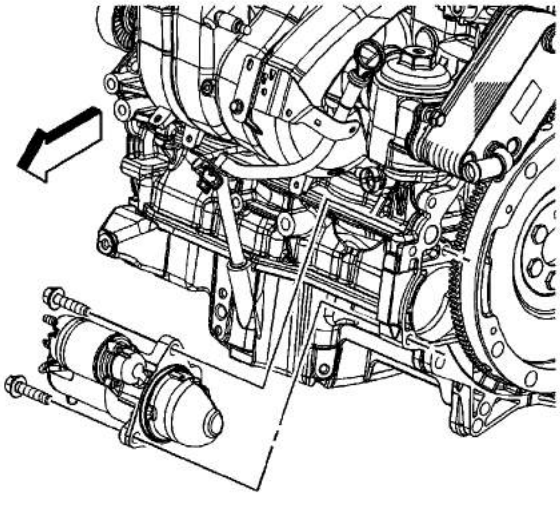

   Note: Hand tighten all bolts before finalizing any torques.

2. Install the starter motor bolts and tighten to **43 N·m (32 lb ft)**.

cardiagn.com

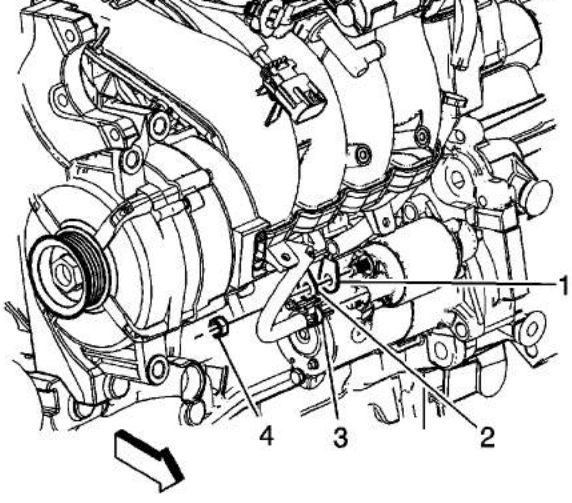

3. Install the engine harness terminal (2) and the battery positive cable terminal (1) to the starter motor. Ensure that the battery positive cable terminal anti-rotation feature is aligned correctly.
4. Install the starter solenoid BAT terminal nut (4) and tighten to **15 N·m (11 lb ft)**.
5. Connect the starter motor electrical connector (3).
6. Connect the battery negative cable. Refer to Battery Negative Cable Disconnection and Connection.

cardiagn.com

Starter Replacement (LY7)

Removal Procedure

1. Disconnect the battery negative cable. Refer to Battery Negative Cable Disconnection and Connection.
2. Remove the left side catalytic convertor. Refer to Catalytic Converter Replacement - Left Side.

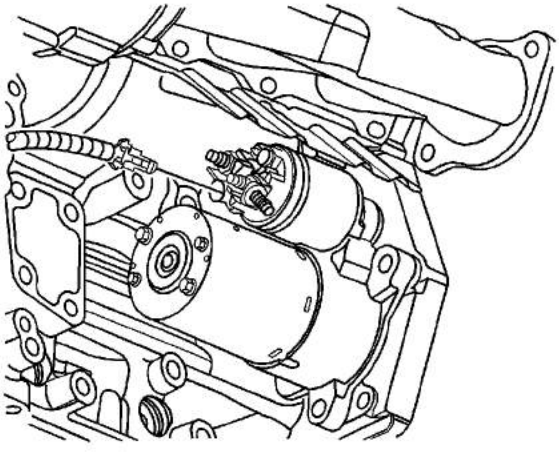

3. Disconnect the starter motor electrical connector.

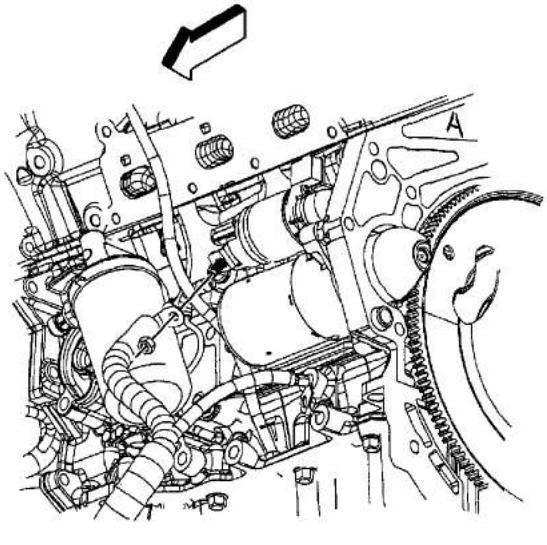

4. Remove the starter solenoid BAT terminal nut.

© 2010 General Motors Corporation. All rights reserved.

cardiagn.com

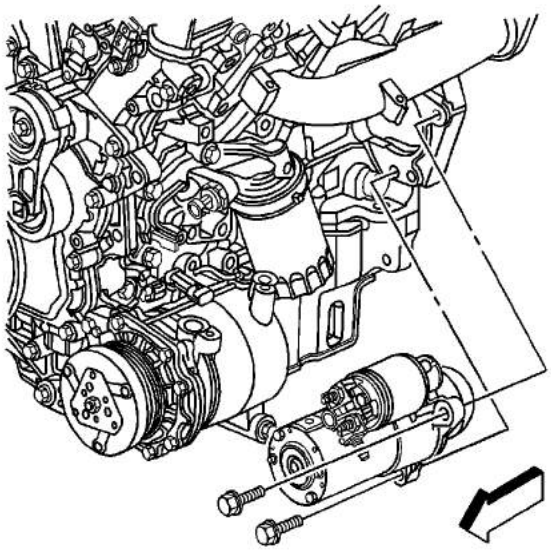

6. Remove the starter motor bolts.
7. Remove the starter motor from the vehicle.

Installation Procedure

1. Install the starter motor to the vehicle.

   Caution: Refer to Fastener Caution in the Preface section.

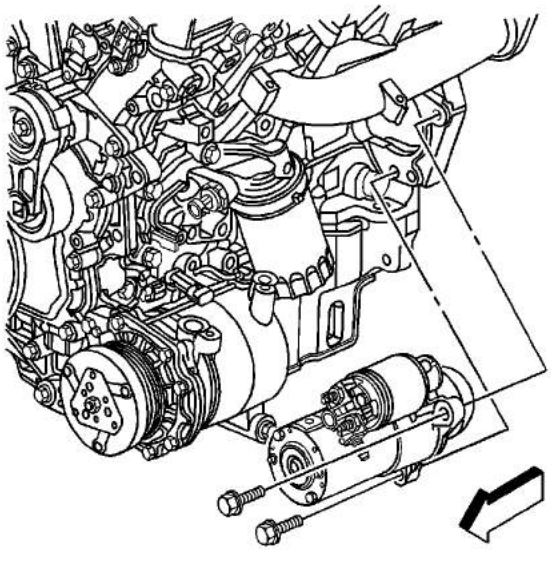

cardiagn.com

2. Install the starter motor bolts and tighten to **50 N·m (37 lb ft)**.
3. Install the engine harness terminal and battery positive cable terminal to the starter motor.

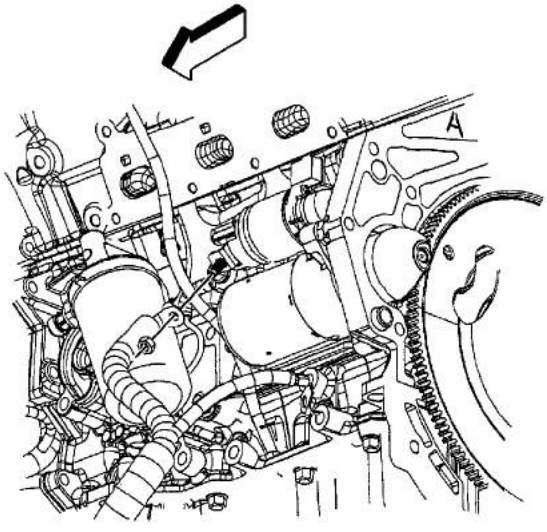

4. Install the starter solenoid BAT terminal nut and tighten to **15 N·m (11 lb in)**.

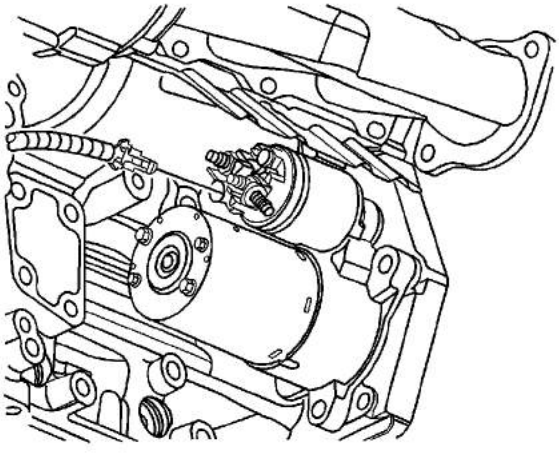

5. Connect the starter motor electrical connector.
6. Install the left side catalytic convertor. Refer to Catalytic Converter Replacement - Left Side.
7. Connect the battery negative cable. Refer to Battery Negative Cable Disconnection and Connection.

cardiagn.com

Generator Replacement (LZ4)

Removal Procedure

1. Disconnect the battery negative cable. Refer to Battery Negative Cable Disconnection and Connection.
2. Remove the drive belt. Refer to Drive Belt Replacement.

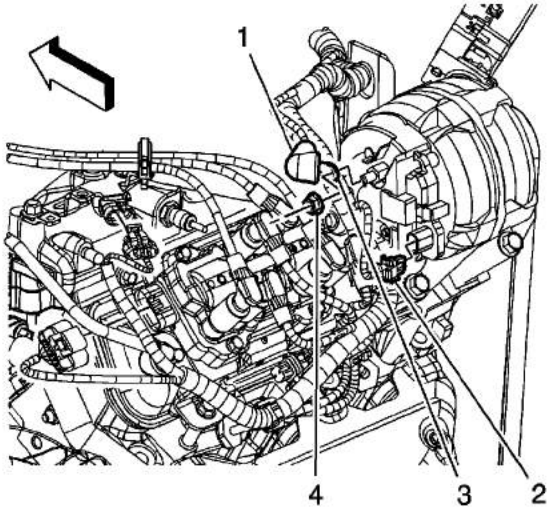

3. Reposition the generator terminal protective boot (1).
4. Remove the generator terminal nut (4).
5. Remove the engine harness terminal (3) from the generator.
6. Disconnect the generator electrical connector (2).

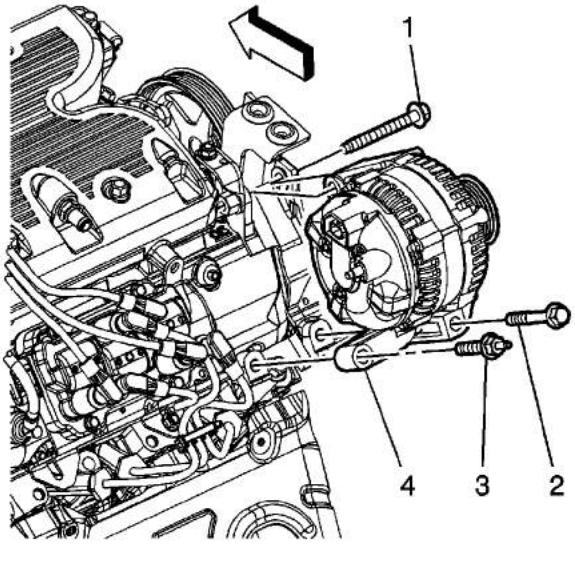

[redacted]

cardiagn.com

7. Remove the generator pivot bolt (1).
8. Remove the generator bolt (2).
9. Remove the generator stud (3).
10. Remove the generator (4) from the vehicle.

Installation Procedure

Caution: Refer to Fastener Caution in the Preface section.

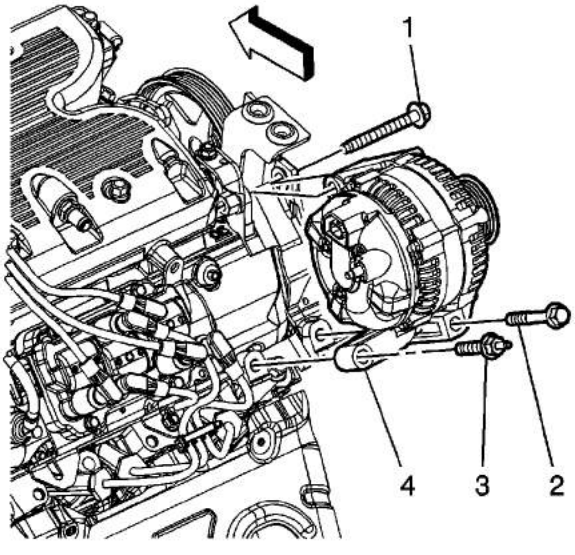

1. Install the generator (4) to the vehicle.

Note: Hand start all bolts before finalizing any torques.

2. Install the generator stud (3) and tighten to **50 N·m (37 lb ft)**.
3. Install the generator bolt (2) and tighten to **50 N·m (37 lb ft)**.
4. Install the generator pivot bolt (1) and tighten to **50 N·m (37 lb ft)**.

cardiagn.com

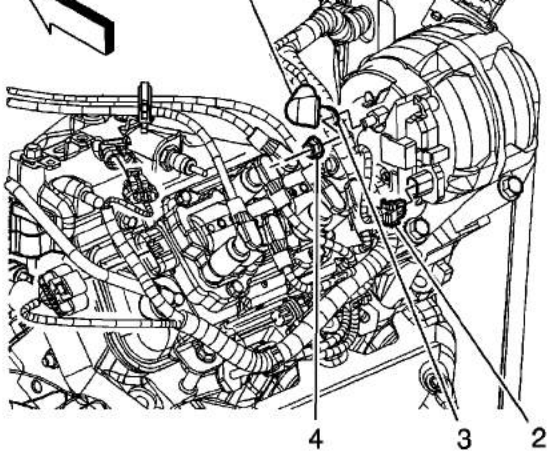

5. Connect the generator electrical connector (2).
6. Install the engine harness terminal (3) to the generator.
7. Install the generator terminal nut (4) and tighten to **15 N·m (11 lb ft)**.
8. Position the generator terminal protective boot (1).
9. Install the drive belt. Refer to Drive Belt Replacement.
10. Connect the battery negative cable. Refer to Battery Negative Cable Disconnection and Connection.

cardiagn.com

Generator Replacement (LE5)

Removal Procedure

1. Disconnect battery negative cable. Refer to Battery Negative Cable Disconnection and Connection.
2. Remove the drive belt. Refer to Drive Belt Replacement.

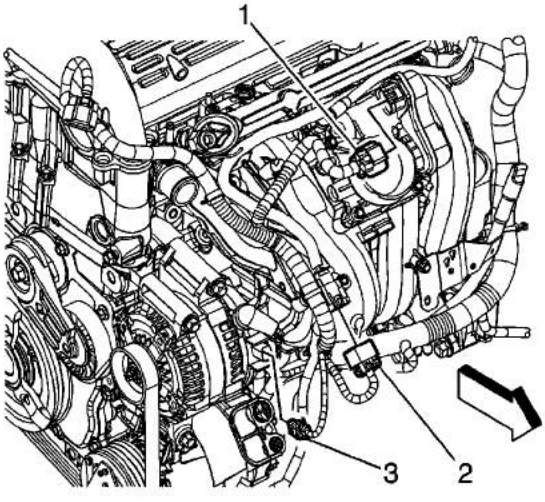

3. Disconnect the generator electrical connector (3).

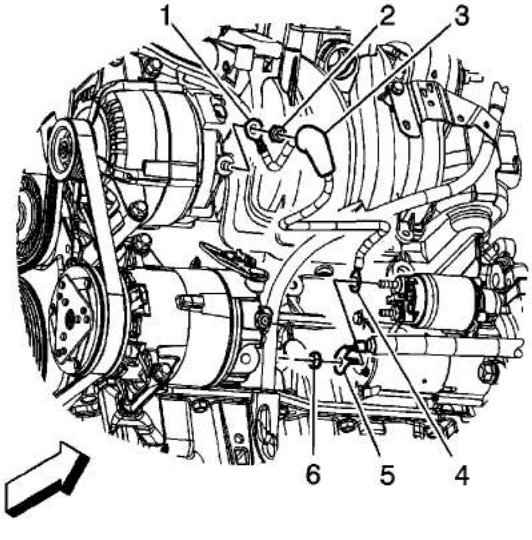

4. Reposition the generator terminal protective boot (3).
5. Remove the generator terminal nut (2).

© 2010 General Motors Corporation. All rights reserved.

cardiagn.com

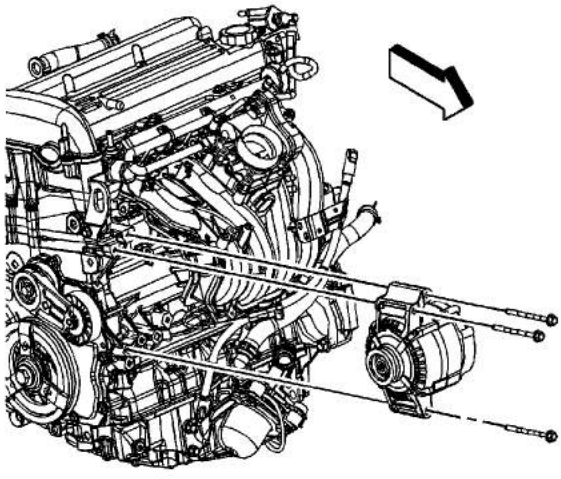

7. Remove the generator bolts.
8. Remove the generator from the vehicle.

Installation Procedure

1. Position the generator to the vehicle.

   Caution: Refer to Fastener Caution in the Preface section.

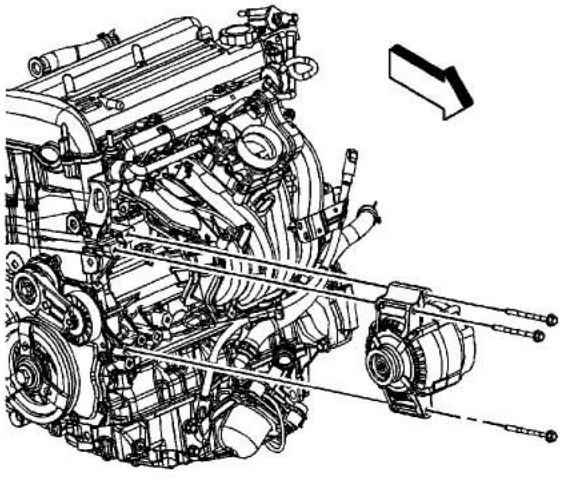

2. Install the generator bolts and tighten to **22 N·m (16 lb ft)**.

cardiagn.com

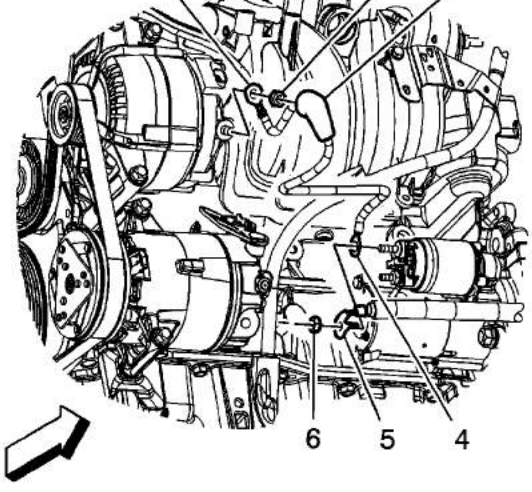

3. Install the engine harness terminal (1) to the generator.
4. Install the generator terminal nut (2) and tighten to **15 N·m (11 lb ft)**.
5. Position the generator terminal protective boot (3).

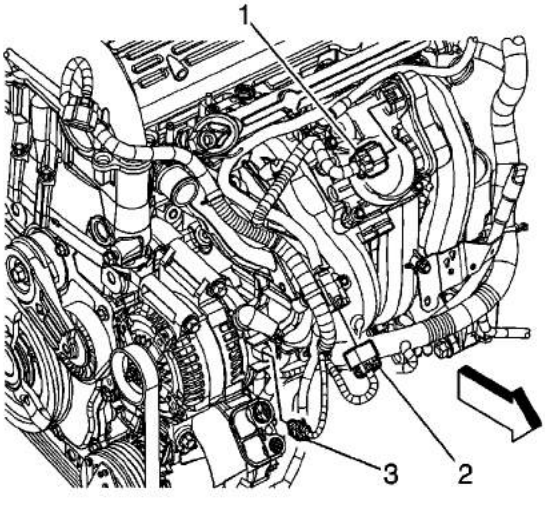

6. Connect the generator electrical connector (3).
7. Install the drive belt. Refer to Drive Belt Replacement.
8. Connect battery negative cable. Refer to Battery Negative Cable Disconnection and Connection.

cardiagn.com

Generator Replacement (LY7)

Removal Procedure

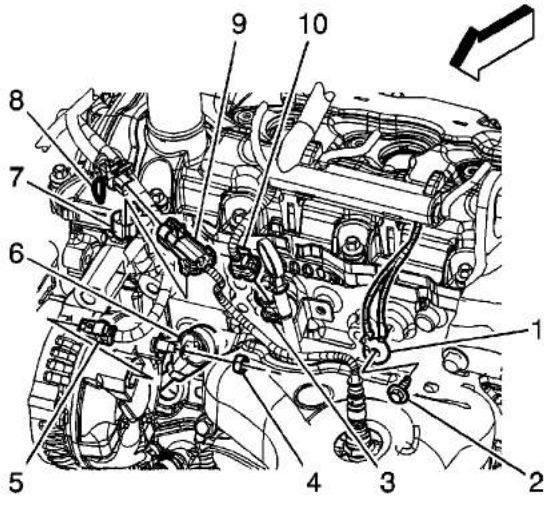

1. Disconnect the battery negative cable. Refer to Battery Negative Cable Disconnection and Connection.
2. Remove the drive belt. Refer to Drive Belt Replacement.
3. Disconnect the engine wiring harness electrical connector (5) from the generator.
4. Reposition the engine wiring harness boot (6).
5. Remove the generator terminal nut (4).
6. Remove the engine harness terminal from the generator.

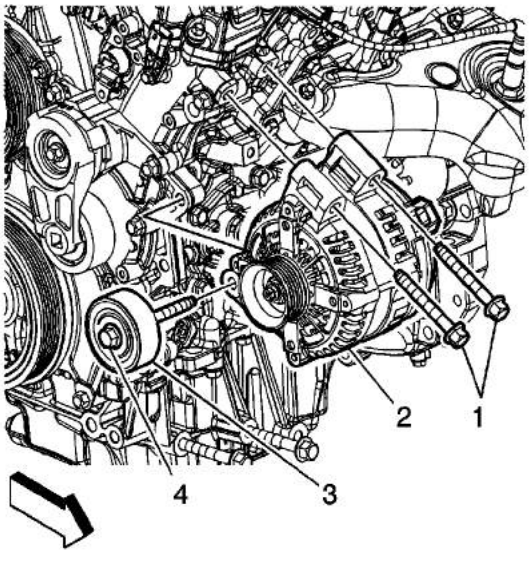

[redacted]

cardiagn.com

7. Loosen the idler pulley bolt (4).
8. Remove the generator bolts (1).
9. Separate the generator from the engine block.
10. Remove the idler pulley (3) from the vehicle.

Note: It may be necessary to maneuver the generator around in the engine compartment to in order to remove it from the vehicle.

11. Remove the generator (2) from the vehicle.

Installation Procedure

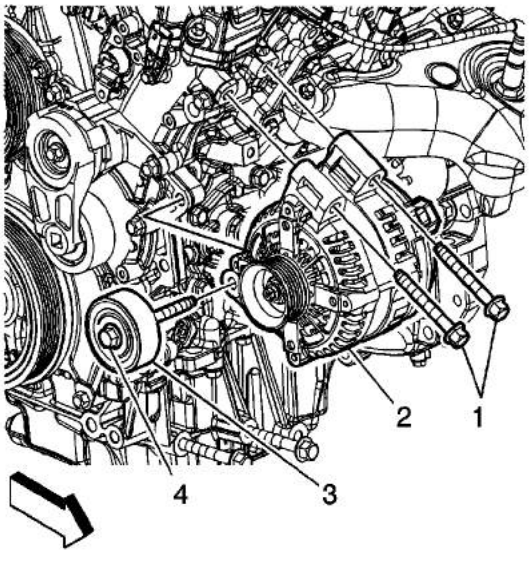

Note: It may be necessary to maneuver the generator around in the engine compartment to in order to install it to the vehicle.

1. Install the generator (2) to the vehicle.
2. Install the idler pulley (3) to the vehicle.
3. Position the generator (2) and idler pulley to the engine block.
4. Install the idler pulley bolt (4) and generator bolts (1) finger tight.

Caution: Refer to Fastener Caution in the Preface section.

5. Tighten the idler pulley bolt first, then the generator bolts to **50 N·m (37 lb ft)**.

cardiagn.com

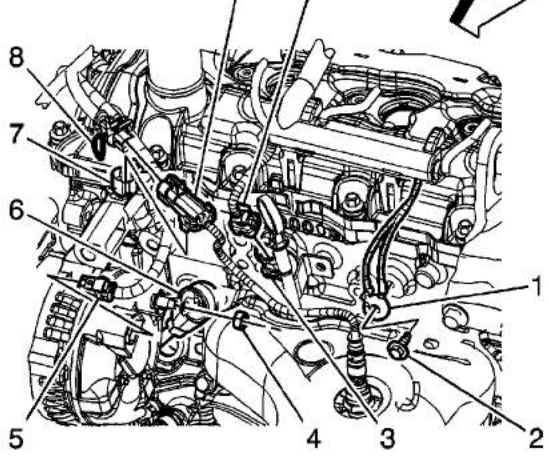

6. Install the engine harness terminal to the generator.
7. Install the generator terminal nut (4) and tighten to **10 N·m (89 lb in)**.
8. Position the engine wiring harness boot (6) over the terminal.
9. Connect the engine wiring harness electrical connector (5) to the generator.
10. Install the drive belt. Refer to Drive Belt Replacement.
11. Connect the battery negative cable. Refer to Battery Negative Cable Disconnection and Connection.

cardiagn.com