Audi A4 1995 ➢

Motronic Fuel Injection and Ignition System (6-cyl. Turbo)									
Engine ID	AGB	AZB							

Edition 12.1997

Protected by copyright. Copying for private or commercial purposes, in part or in whole, is not permitted unless authorised by AUDI AG. AUDI AG does not guarantee or accept any liability with respect to the correctness of information in this document. Copyright by AUDI AG.

List of Workshop Manual Repair GroupsList of Workshop Manual Repair GroupsList of Workshop Manual Repair Groups

Audi A4 1995 ➢

Motronic Fuel Injection and Ignition System (6-cyl. Turbo)

Repair Group

01 - Self-diagnosis

24 - Mixture preparation, Injection

28 - Ignition system

Protected by copyright. Copying for private or commercial purposes, in part or in whole, is not permitted unless authorised by AUDI AG. AUDI AG does not guarantee or accept any liability with respect to the correctness of information in this document. Copyright by AUDI AG.

Technical information should always be available to the foremen and mechanics, because their careful and constant adherence to the instructions is essential to ensure vehicle road-worthiness and safety. In addition, the normal basic safety precautions for working on motor vehicles must, as a matter of course, be observed.

All rights reserved.
No reproduction without prior agreement from publisher.

Copyright © 2010 Audi AG, Ingolstadt

Contents

01 - Self-diagnosis 1
1 Self-diagnosis for the Motronic system 1
1.1 Self-diagnosis for the Motronic system 1
1.2 Technical self-diagnosis data 1
1.3 Significance of the warning lamp for self-diagnosis (exhaust gas warning lamp); For vehicles which conform to emission standard EU III 1
1.4 Connecting vehicle diagnostic, testing and information system VAS 5051 or fault reader V.A.G 1551 and selecting functions 3
2 Interrogating and erasing fault memory 6
2.1 Interrogating and erasing fault memory 6
2.2 Fault table 7
2.3 Fault codes up to fault code P1330 (17738) 8
2.4 Fault codes up to fault code P1854 (18262) 17
3 Final control diagnosis 26
3.1 Final control diagnosis 26
4 Basic setting 30
4.1 Basic setting 30
5 Encoding control unit 32
5.1 Encoding control unit 32
6 Reading measured value block 34
6.1 Reading measured value block 34
7 Readiness code 35
7.1 Readiness code 35
7.2 Reading the readiness code 35
7.3 Producing the readiness code 37

24 - Mixture preparation, Injection 48
1 Servicing Motronic injection system 48
1.1 Servicing Motronic injection system 48
1.2 Safety precautions 48
1.3 Rules for cleanliness 48
1.4 Technical data 49
1.5 Fitting locations overview 49
1.6 Removing and installing intake manifold 59
1.7 Wiring and component check with test box V.A.G 1598/31 64
1.8 Procedure following interruption of voltage supply 67
1.9 Renewing engine control unit 68
1.10 Checking idling speed 70
1.11 Checking fuel pressure regulator and holding pressure 71
1.12 Checking injectors 73
1.13 Testing injection quantity, leak tightness and spray pattern of injectors 76
1.14 Dismantling and assembling fuel manifold with injectors 82
1.15 Test fuel pump relay and activation 84
1.16 Testing air mass meter 86
1.17 Checking intake air system for leaks (unmetered air) 91
2 Checking lambda control 92
2.1 Checking lambda control 92
2.2 Function of lambda control 92
2.3 Checking lambda probe and lambda control before catalytic converter 93
2.4 Checking ageing of lambda probes before catalytic converter (on vehicles which conform to emission standard EU III) 97
2.5 Checking lambda probe and lambda control after catalytic converter (on vehicles which conform to emission standard EU III) 100

Protected by copyright. Copying for private or commercial purposes, in part or in whole, is not permitted unless authorised by AUDI AG. AUDI AG does not guarantee or accept any liability with respect to the correctness of information in this document. Copyright by AUDI AG.

2.6 Checking lambda probe heating 106
2.7 Testing lambda probe signal wiring and activation 109
2.8 Removing and installing lambda probes 114
3 Checking fuel tank breather 115
3.1 Checking fuel tank breather 115
3.2 Testing solenoid valve 1 for activated charcoal filter 115
4 Checking electronic engine power control (electronic throttle) 118
4.1 Checking electronic engine power control (electronic throttle) 118
4.2 Function of the electronic throttle system 118
4.3 Significance of the EPC warning lamp (fault warning lamp for electronic throttle) in instrument cluster 119
4.4 Checking throttle valve control part 120
4.5 Performing adaption of throttle valve control part 121
4.6 Checking angle sender for throttle valve actuator 123
4.7 Checking accelerator position sender 125
4.8 Learning kickdown function 128
5 Vacuum diagram 130
5.1 Vacuum diagram 130
5.2 Air duct, general 130
5.3 Subsystem, boost pressure control 132
5.4 Subsystem, fuel tank breather (ACF-system) 133
5.5 Subsystem air recirculation control (air recirculation thrust control) 134
5.6 Subsystem, crankcase breather 135
6 Checking auxiliary signals 136
6.1 Checking auxiliary signals 136
6.2 Checking engine speed signal 136
6.3 Checking consumption signal for vehicle computer 137
6.4 Checking coolant temperature sender 137
6.5 Check vehicle speed signal 138
6.6 Checking fuel level signal wiring 138
6.7 Checking brake light switch and brake pedal switch 139
6.8 Checking clutch pedal switch -F36 141
6.9 Testing crash signal 142
6.10 Testing rough road detection signal from ABS/EDS control unit 143
6.11 Testing data exchange between engine/ABS/gearbox control unit, instrument cluster 144

28 - Ignition system 148
1 Checking ignition system 148
1.1 Checking ignition system 148
1.2 General notes on ignition system 148
1.3 Safety precautions 148
1.4 Technical data for ignition system 148
1.5 Checking ignition coils 149
1.6 Checking output stages for ignition coils 151
1.7 Checking the intake air temperature sender 153
1.8 Testing engine speed sender 155
1.9 Test coolant temperature sensor 157
1.10 Checking control unit power supply 160
1.11 Checking knock control stop 160
1.12 Checking knock sensors 163
1.13 Checking Hall sender 166
1.14 Testing misfire detection 169

Protected by copyright. Copying for private or commercial purposes, in part or in whole, is not permitted unless authorised by AUDI AG. AUDI AG does not guarantee or accept any liability with respect to the correctness of information in this document. Copyright by AUDI AG.

01 - Self-diagnosis

1 - Self-diagnosis for the Motronic system

1.1 - Self-diagnosis for the Motronic system

1.2 - Technical self-diagnosis data

Features

- The data transfer between control unit and vehicle diagnostic, testing and information system VAS 5051 or fault reader V.A.G 1551 takes place in "Rapid data transfer" mode.
- The fault memory is a non-volatile memory and thus independent of the power supply.
- Stored faults are displayed by calling up the fault display => Page 6 .
- The fault memory must be erased once the faults have been eliminated => Page 6 .

- On vehicles which conform to emission standard EU III: If the engine control unit detect faults which result in deterioration of exhaust emissions, these faults will be indicated by illumination of exhaust gas warning lamp (fault lamp for self-diagnosis -K83). Explanations on this lamp => Page 1 .
- Faults related to EPC are additionally indicated by the warning lamp for the electronic throttle control ("EPC warning lamp") which is situated in the dash panel insert.

Protected by copyright. Copying for private or commercial purposes, in part or in whole, is not permitted unless authorised by AUDI AG. Otherwise this copy is marked as an unauthorised copy and subject to prosecution. Copyright by AUDI AG.

1.3 - Significance of the warning lamp for self-diagnosis (exhaust gas warning lamp); For vehicles which conform to emission standard EU III

Note:

Vehicles which only conform to emission EU II are not equipped with this fault lamp.

If the engine control unit detect faults which result in deterioration of exhaust emissions, these faults will be indicated by illumination of exhaust gas warning lamp.

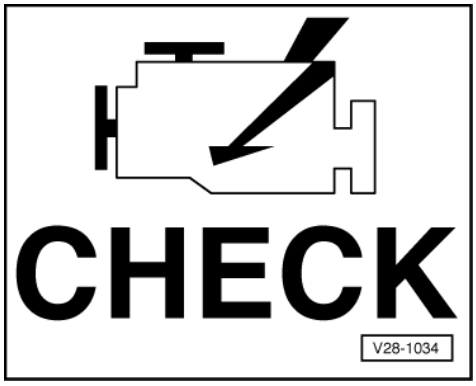

-> -> Fitting location of exhaust gas warning lamp

Note:

When switched on, the exhaust gas warning lamp may flash or illuminate constantly. In every case the fault memory must be interrogated => Page 6 .

- Flashing: A fault is present which under these driving conditions will cause damage to the catalytic converter (e.g. misfiring). In this case driving may only continue at reduced power.

- Continuous illumination: A fault is present which causes deterioration of the exhaust emission. Interrogate fault memory for Motronic-control unit or autom. transmission (if available).
- If an engine running problem is present or a customer complaint is made and the exhaust gas warning lamp does not illuminate, the fault memory must be interrogated, as faults can also be stored which do not immediately illuminate the exhaust gas warning lamp until after the engine has been re-started and the fault re-detected.

Functional check:

- Switch on ignition:
  The exhaust gas warning lamp must illuminate.

If the exhaust gas warning lamp does not illuminate with ignition switched on:

- Check wiring from engine control unit to exhaust gas warning lamp as follows:

Protected by copyright. Copying for private or commercial purposes, in part or in whole, is not permitted unless authorised by AUDI AG. AUDI AG does not guarantee or accept any liability with respect to the correctness of information in this document. Copyright by AUDI AG.

Cause Exhaust gas warning lamp has not been activated or has not illuminated because of an open circuit.	Remedy: Switch off ignition. Connect test box V.A.G 1598/31 =>Page 64 . Bridge sockets 2 and 47 on test box. Switch ignition on. Exhaust gas warning lamp must illuminate. If the exhaust gas warning lamp does not illuminate: Find and rectify short circuit or open circuit between engine control unit and exhaust gas warning lamp with the aid of current flow diagram.
	If no fault is found in wiring to exhaust gas warning lamp:
Cause of fault =>	**Instrument cluster defective => renew instrument cluster**

If the exhaust gas warning lamp illuminates with ignition switched on, continue testing as follows:

- Start engine and run at idling speed:
  The exhaust gas warning lamp must go out after a few seconds.

If the exhaust gas warning lamp does not go out:

- Interrogate fault memory => Page 6 .

If no fault is stored:

Cause Exhaust gas warning lamp is continuously activated by short circuit to earth.	Remedy: Switch off ignition. Connect test box V.A.G 1598/31 => Page 64 . Measure resistance between vehicle earth and socket 47 of test box. Specification: infinite resistance (∞ω) If specification is not attained: Short circuit to earth in actuation wire from engine control unit to exhaust gas warning lamp. Find and rectify this fault with the aid of current flow diagram.
	If specification for infinite resistance (∞ω)is attained, and no short circuit to earth is found:
Cause of fault =>	**Instrument cluster defective => renew instrument cluster.**

Functions which can be selected when using fault reader V.A.G 1551.

The conditions to be met when selecting the desired functions are given in the following table.

Functions on fault reader V.A.G 1551 or V.A.G 1552		Ignition on, engine stopped	Engine running at idle	Vehicle running
Address words				
00	Automatic test sequence	yes	yes	yes
01	Engine electronics	yes	yes	yes
Functions				
01	Check control unit version	yes	yes	yes
02	Interrogating fault memory	yes	yes	yes
03	Final control diagnosis	yes	no	no
04	Basic setting	yes	yes	yes
05	Erasing fault memory	yes	yes	yes
06	End of output	yes	yes	yes
07	Encoding control unit	yes	no	no
08	Reading measured value block	yes	yes	yes

1.4 - Connecting vehicle diagnostic, testing and information system VAS 5051 or fault reader V.A.G 1551 and selecting functions

Test requirements:

- Battery voltage at least 11 V.
- Earth connections on engine and gearbox OK.

Online Only copyright. Copying for private or commercial purposes, in part or in whole, is not permitted unless authorised by AUDI AG. AUDI AG does not guarantee or accept any liability with respect to the correctness of information in this document. Copyright by AUDI AG.

Procedure

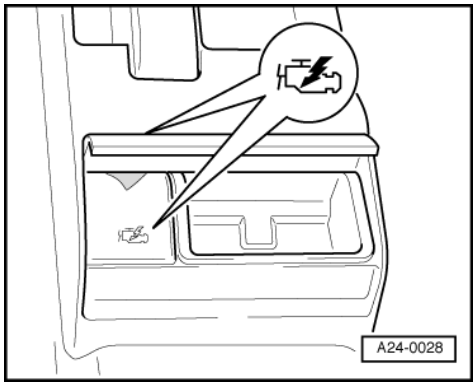

- -> Open rear ashtray and remove cover for diagnostic connector.

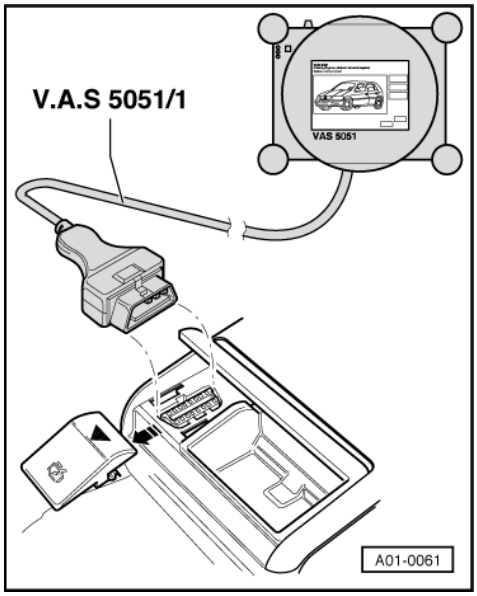

- -> Connect up vehicle diagnostic, testing and information system VAS 5051 with diagnostic wire VAS 5051/1. Alternatively, connect fault reader V.A.G 1551 with diagnostic wire V.A.G 1551/3A.

Important:
- **When driving the vehicle for measurement and test purposes, always secure the vehicle diagnostic, testing and information system VAS 1551 or fault reader V.A.G 1551 to the rear seat and operate it from there.**
- **Observe the safety precautions => Page 48**

Note:

The following describes self-diagnosis using the fault reader V.A.G 1551 only.

When using the vehicle diagnostic, testing and information system VAS 5051, follow the procedures described in equipment's operating instructions.

-> Indicated on display:

```
V.A.G self diagnosis     HELP
1 - Rapid data transfer*
2 - Flash code output*
```

*Displays appear alternately

- If no display appears, check diagnostic wires:

=> "Current Flow Diagrams, Electrical Fault-finding and Fitting Locations" binder; Fault-finding program "Diagnostic wiring"

Protected by copyright. Copying for private or commercial purposes, in part or in whole, is not permitted unless authorised by AUDI AG. AUDI AG does not guarantee or accept any liability with respect to the correctness of information in this document. Copyright by AUDI AG.

Depending on the function required:

- Switch the ignition on.

  or
  start engine => Page 3 , "Selectable functions" table.

- Switch on printer using the Print key (Warning lamp in key lights up).
- Press key 1 for "Rapid data transfer".

-> Indicated on display:

```
Rapid data transfer      HELP
Enter address word XX
```

```
Rapid data transfer     Q
01 - Engine electronics
```

-> Press keys 0 and 1 for address word "Engine electronics" and press the Q key to confirm entry.

-> If the display shows one of the messages reproduced here, run through the fault-finding procedure as described in the Fault-finding Program for diagnostic wiring.

```
Rapid data transfer      HELP
No reply from control unit
```

=> Current Flow Diagrams, Electrical Fault-Finding and Fitting Locations

```
Rapid data transfer      HELP
Communication problem
```

```
Rapid data transfer      HELP
K-wire not switching to earth
```

```
Rapid data transfer      HELP
K-wire not switching to positive
```

Control unit identification (example)

-> The display on fault reader V.A.G 1551 shows the control unit identification code e.g.:

```
8D0907551.. 2.7l     V6/5VT     G
0002
Code 10711     WSC 06388
```

- 8D0907551..	Control unit number (see also spare parts program)
- 2.7l	Engine capacity
- V6/5VT	Engine type (V engine, 6-cylinder, 5-valve, turbo1))
- "G" or no display	Vehicle with or without cruise control
- 0002	Control unit software version
- Code 10711	Engine control unit code
- WSC 06388	Workshop Code from V.A.G 1551 which was used to perform the last coding

1)This engine is a "biturbo" engine, i.e. two turbochargers are installed in the engine. "Bi" (Latin) signifies two or double.

If the coding differs from the vehicle version, then:

- Check control unit coding => Page 32 .
  Encoding engine control unit
- Press the ⇒key.

-> Display readout (relevant chassis number):

```
xxxxxxxxxxxxxxxx      yyyyyyyyyyyyyy
```

- xxxxxxxxxxxxxxxx: 17-digit vehicle identification number (chassis number)
- yyyyyyyyyyyyyy: 14-digit identification number for immobiliser control unit

Audi
Protected by copyright. Copying for private or commercial purposes, in part or in whole, is not permitted unless authorised by AUDI AG. AUDI AG does not guarantee or accept any liability with respect to the correctness of information in this document. Copyright by AUDI AG.

Note:

The additional readout (vehicle and immobiliser identification number) is only displayed if the vehicle is fitted with what is known as "Immobiliser III".

- Press the ⇒key.

-> Display:

```
Rapid data transfer      HELP
Select function XX
```

Note:

Press HELP key to obtain a printout of available functions.

2 - Interrogating and erasing fault memory

2.1 - Interrogating and erasing fault memory

Protected by copyright. Copying for private or commercial purposes, in part or in whole, is not permitted unless authorised by AUDI AG. AUDI AG does not guarantee or accept any liability with respect to the correctness of information in this document. Copyright by AUDI AG.

- Connect the vehicle diagnostic, testing and information system VAS 5051 or fault reader V.A.G 1551 and select the engine electronics control unit with "address word" 01 => Page 3 .
  For this purpose, the engine must be running at idle speed

Only if engine does not start:

- Interrogate fault memory with ignition switched on.

- Switch on printer using the Print key
  (Warning lamp in key lights up).

-> Indicated on display:

```
Rapid data transfer      HELP
Select function XX
```

- Operate fault reader, taking into account the information on the display:
- Press keys 0 and 2 for "Interrogate fault memory" function and press Q key to confirm entry.

-> When adjacent display appears:

```
No fault recognised!
```

- Press the ⇒key.

or

-> When adjacent display appears:

```
X fault(s) detected
```

The stored faults are displayed and printed in sequence when the printer is switched on.

- Locate and eliminate faults listed on printout as per fault table => Page 7 .

- Press the ⇒key.

-> When adjacent display appears:

```
Rapid data transfer      HELP
Select function XX
```

- Enter "05" for the function "Erase fault memory" and confirm entry with Q key.

Notes:

-> When adjacent display appears:

```
Important:
Fault memory has not been interrogated
```

Sequence has not been correctly followed.

- Interrogate fault memory.

The fault memory will also not be erased if :

- The ignition has been switched off after interrogating the fault memory.
- A static fault has not been rectified.

Protected by copyright. Copying for private or commercial purposes, in part or in whole, is not permitted unless authorised by AUDI AG. AUDI AG does not guarantee or accept any liability with respect to the correctness of information in this document. Copyright by AUDI AG.

-> When adjacent display appears:

```
Rapid data transfer
Fault memory is erased
```

- Press the ⇒key.
- Interrogate fault memory again after carrying out the repairs.

Note:

This erases faults that have been stored whilst the fault was being rectified, for example, faults that have arisen as a result of connectors being detached.

End of output

-> When adjacent display appears:

```
Rapid data transfer      HELP
Select function XX
```

- Enter "06" for "End output" function and confirm entry with Q key.

-> When adjacent display appears:

```
Rapid data transfer      HELP
Enter address word XX
```

- Switch off ignition and detach diagnostic connector.

2.2 - Fault table

Notes:

- If faults occur in the monitored sensors and components, these are stored in the fault memory together with an indication of type of fault.
- Faults relating to the electronic throttle system are additionally indicated by the "EPC warning lamp" which is located in the instrument cluster; notes on electronic throttle system =>Page 118 .
- For vehicles which fulfil the emission standard EU III, faults which cause the exhaust gas to deteriorate are indicated by an exhaust gas warning lamp (fault lamp for self-diagnosis) which is also located in the instrument cluster. Some faults cause the exhaust gas warning lamp to switch on immediately after detection. However, some faults may occur which only activate the exhaust warning lamp when redetected after two engine restarts.
- Sporadic faults are marked "SP" (sporadic fault) on the V.A.G 1551 display. The word "sporadic" signifies individually occurring, random faults.
- The fault table is sorted according to the 5-digit fault code on the left.
- If a stored fault does not appear within the next 40 engine starts, the fault code will be automatically erased.
- Do not immediately renew components indicated as faulty by the V.A.G 1551 but
  First check the wiring and connectors of these components according to the current flow diagram.

Also check the earth connections according to the current flow diagram. This is particularly relevant for faults recorded as "occurring sporadically" (SP).

- If the connector is pulled off the engine control unit or if the battery is disconnected, all the stored values in the control unit will be erased. However, the contents of the fault memory are retained. If the engine is then started, it may run rough for a short period. In this case, the engine should be run at idle for a few minutes until the learning process is concluded.

2.3 - Fault codes up to fault code P1330 (17738)

Fault code		Fault readout	Fault remedy
SAE	V.A.G		
P0101	16485	Air mass meter -G70 Implausible signal 2)	Air mass meter => Page 86
P0102	16486	Air mass meter -G70 Signal too small 2)	
P0103	16487	Air mass meter -G70 Signal too great 2)	
P0106	16490	Intake manifold pressure/air pressure =>-G71/-F96 Implausible signal 4)	=> 6-cylinder Engine (5-valve Turbo), Mechanical Components; Repair group 21; Charge air system with turbocharger; Checking boost pressure sender -G31.

Protected by copyright. Copying for private or commercial purposes, in part or in whole, is not permitted unless authorised by AUDI AG. AUDI AG does not guarantee or accept any liability with respect to the correctness of information in this document. Copyright by AUDI AG.

2) With this fault, the engine control unit only switches on the exhaust gas warning lamp (MIL) when the fault has been re-detected after two engine restarts. Significance of MIL warning lamp => 1 .

4) The intake manifold pressure is determined by the boost pressure sender -G31 (in place of displayed -G71), the air pressure is determined by altitude sender -F96 (in engine control unit).

Fault code		Fault readout	Fault remedy
SAE	V.A.G		
P0112	16496	Intake air temperature sender -G42 Signal too small 2)	Checking the intake air temperature sender => Page 153
P0113	16497	Intake air temperature sender -G42 Signal too great 2)	
P0116	16500	Coolant temperature sender -G62 Implausible signal 2)	Test coolant temperature sensor => Page 157
P0117	16501	Coolant temperature sender -G62 Signal too small 2)	
P0118	16502	Coolant temperature sender -G62 Signal too great 2)	

2) With this fault, the engine control unit only switches on the exhaust gas warning lamp (MIL) when the fault has been re-detected after two engine restarts. Significance of MIL warning lamp => 1 .

Fault code		Fault readout	Fault remedy
SAE	V.A.G		
P0130	16514	Bank 1, probe 1 Electrical fault in circuit 2)	Check lambda control and lambda probe heating and wiring connections => Page 92
P0131	16515	Bank 1, probe 1 Voltage too low 2)	
P0132	16516	Bank 1, probe 1 Voltage too high 2)	
P0133	16517	Bank 1, probe 1 Signal too slow 2)	

P0134	16518	Bank 1, probe 1 No activity 2)	

2) With this fault, the engine control unit only switches on the exhaust gas warning lamp (MIL) when the fault has been re-detected after two engine restarts. Significance of MIL warning lamp => 1 .

Fault code		Fault readout	Fault remedy
SAE	V.A.G		
P0136	16520	Bank 1, probe 2 Electrical fault in circuit 2)	Checking lambda probe heating => Page 106
P0137	16521	Bank 1, probe 2 Voltage too low 2)	Testing lambda probe signal wiring and activation => Page 109
P0138	16522	Bank 1, probe 2 Voltage too high 2)	
P0139	16523	Bank 1, probe 2 Signal too slow	Check lambda probe and lambda control after catalytic converter => Page 101
P0140	16524	Bank 1, probe 2 No activity 2)	

Protected by copyright. Copying for private or commercial purposes, in part or in whole, is not permitted unless authorized by AUDI AG. AUDI AG does not guarantee or accept any liability with respect to the correctness of information in this document. Copyright by AUDI AG.

2) With this fault, the engine control unit only switches on the exhaust gas warning lamp (MIL) when the fault has been re-detected after two engine restarts. Significance of MIL warning lamp => 1 .

Fault code		Fault readout	Fault remedy
SAE	V.A.G		
P0150	16534	Bank 2, probe 1 Electrical fault in circuit 2)	Check lambda control and lambda probe heating and wiring connections => Page 92
P0151	16535	Bank 2, probe 1 Voltage too low 2)	
P0152	16536	Bank 2, probe 1 Voltage too high 2)	
P0153	16537	Bank 2, probe 1 Signal too slow 2)	
P0154	16538	Bank 2, probe 1 No activity 2)	

2) With this fault, the engine control unit only switches on the exhaust gas warning lamp (MIL) when the fault has been re-detected after two engine restarts. Significance of MIL warning lamp => 1 .

Fault code		Fault readout	Fault remedy
SAE	V.A.G		
P0156	16540	Bank 2, probe 2 Electrical fault in circuit 2)	Checking lambda probe heating => Page 106
P0157	16541	Bank 2, probe 2 Voltage too low 2)	Test lambda probe signal wiring and activation => Page 109
P0158	16542	Bank 2, probe 2 Voltage too high 2)	
P0159	16543	Bank 2, probe 2 Signal too slow	Check lambda probe and lambda control after catalytic converter => Page 101

P0160	16544	Bank 2, probe 2 No activity 2)	Check lambda probe heating for lambda probe => Page 106

2) With this fault, the engine control unit only switches on the exhaust gas warning lamp (MIL) when the fault has been re-detected after two engine restarts. Significance of MIL warning lamp => 1 .

Fault code		Fault readout	Fault remedy
SAE	V.A.G		
P0236	16620	Boost pressure sender -G31 Implausible signal	=> Mechanical Components; Repair group 21; Charge air system with turbocharger; Checking boost pressure sender -G31. Charge air system with turbocharger; Checking boost pressure sender -G31.
P0237	16621	Boost pressure sender -G31 Signal too small	
P0238	16622	Boost pressure sender -G31 Signal too high	

Fault code		Fault readout	Fault remedy
SAE	V.A.G		
P0300	16684	Misfire detected 2)	- Test misfire detection => Page 169 - Refuel the vehicle
P0301	16685	Cyl. 1 misfire detected 2)	
P0302	16686	Cyl. 2 misfire detected 2)	
P0303	16687	Cyl. 3 misfire detected 2)	
P0304	16688	Cyl. 4 misfire detected 2)	
P0305	16689	Cyl. 5 misfire detected 2)	
P0306	16690	Cyl. 6 misfire detected 2)	

2) With this fault, the engine control unit only switches on the exhaust gas warning lamp (MIL) when the fault has been re-detected after restarting the engine. Significance of MIL warning lamp => 1 .

Exhaust gas warning lamp flashes if engine control unit detects misfires that could damage the catalytic converters.

Notes:

- For errors which may result from lack of fuel, (e.g. misfiring), the fault "P1250, Fuel level too low" is also displayed. This means that misfiring was not detected as a result of a technical defect, but simply due to insufficient fuel in the tank.
- Depending on fault detection, exhaust gas warning lamp illuminates immediately or after confirmation of fault.

Fault code		Fault readout	Fault remedy
SAE	V.A.G		
P0321	16705	Engine speed sender -G28 Implausible signal	Testing engine speed sender => Page 155
P0322	16706	Engine speed sender -G28 No signal 2)	
P0327	16711	Knock sensor 1 -G61 Signal too small	Check knock sensor => Page 163
P0328	16712	Knock sensor 1 -G61 Signal too great	
P0332	16716	Knock sensor 2 -G66 Signal too small	
P0333	16717	Knock sensor 2 -G66 Signal too great	

Protected by copyright. Copying for private or commercial purposes, in part or in whole, is not permitted unless authorised by AUDI AG. AUDI AG does not guarantee or accept any liability with respect to the correctness of information in this document. Copyright by AUDI AG.

P0341	16725	Camshaft position sensor => sender -G40 Implausible signal 2)	Checking Hall sender => Page 166
P0346	16730	Camshaft position sensor => sender -G163 Implausible signal 2)	

2) With this fault, the engine control unit only switches on the exhaust gas warning lamp (MIL) when the fault has been re-detected after two engine restarts. Significance of MIL warning lamp => 1 .

Fault code		Fault readout	Fault remedy
SAE	V.A.G		
P0420	16804	Bank 1, catalytic converter system inefficient 2)	Replace catalytic converter Bank 1. => Mechanical Components; Repair group 26; Removing and installing parts of the exhaust gas system; Removing and installing catalytic converter Removing and installing parts of the exhaust gas system; Removing and installing catalytic converter
P0430	16814	Bank 2, catalytic converter system inefficient 2)	Replace catalytic converter Bank 2. => Mechanical Components; Repair group 26; Removing and installing parts of the exhaust gas system; Removing and installing catalytic converter Removing and installing parts of the exhaust gas system; Removing and installing catalytic converter

2) With this fault, the engine control unit only switches on the exhaust gas warning lamp (MIL) when the fault has been re-detected after two engine restarts. Significance of MIL warning lamp => 1 .

Fault code		Fault readout	Fault remedy
SAE	V.A.G		
P0441	16825	Fuel tank breather system Throughput malfunction	Test solenoid valve 1 for activated charcoal filter, perform final control diagnosis => Page 26

Fault code		Fault readout	Fault remedy
SAE	V.A.G		
P0501	16885	Vehicle speed signal Implausible signal 2)	Check speed signal => Page 138 .
P0506	16890	Idling speed regulation Engine speed below specification	Perform adaption of the throttle valve control part => Page 121
P0507	16891	Idling speed regulation Engine speed above specification	Check system for unmetered air => Page 91
P0560	16944	Voltage supply Implausible signal	Voltage supply Checking => Page 160
P0562	16946	Voltage supply Voltage too low	
P0563	16947	Voltage supply Voltage too high	

Protected by copyright. Copying for private or commercial purposes, in part or in whole, is not permitted unless authorised by AUDI AG. AUDI AG does not guarantee or accept any liability with respect to the correctness of information in this document. Copyright by AUDI AG.

P0571	16955	Brake light switch -F Implausible signal	Check brake light switch and brake pedal switch => Page 139 or => Electrical System; Repair group 01; CCS self-diagnosis; Checking brake light switch CCS self-diagnosis; Checking brake light switch

2) With this fault, the engine control unit only switches on the exhaust gas warning lamp (MIL) when the fault has been re-detected after two engine restarts. Significance of MIL warning lamp => 1 .

Fault code		Fault readout	Fault remedy
SAE	V.A.G		Renewing engine control unit => Page 68
P0601	16985	Control unit defective 2)	
P0604	16988	Control unit defective 2)	
P0605	16989	Control unit defective 2)	
P0606	16990	Control unit faulty	

2) With this fault, the engine control unit only switches on the exhaust gas warning lamp (MIL) when the fault has been re-detected after two engine restarts. Significance of MIL warning lamp => 1 .

Fault code		Fault readout	Fault remedy
SAE	V.A.G		
P1102	17510	Bank 1, lambda probe 1, heating circuit Short to positive 2)	Checking lambda probe heating => Page 106
P1105	17513	Bank 1, probe 2, heating circuit Short to positive 2)	
P1107	17515	Bank 2, lambda probe 1, heating circuit Short to positive 2)	
P1110	17518	Bank 2, probe 2, heating circuit Short to positive 2)	
P1111	17519	Lambda control bank 1 System too lean	Check lambda probe learned values and lambda control => Page 95
P1112	17520	Lambda control bank 1 System too rich	

Protected by copyright. Copying for private or commercial purposes, in part or in whole, is not permitted unless authorised by AUDI AG. AUDI AG does not guarantee or accept any liability with respect to the correctness of information in this document. Copyright by AUDI AG

2) With this fault, the engine control unit only switches on the exhaust gas warning lamp (MIL) when the fault has been re-detected after two engine restarts. Significance of MIL warning lamp => 1 .

Fault code		Fault readout	Fault remedy
SAE	V.A.G		Check lambda probe heating for lambda probe => Page 106 Testing lambda probe signal wiring and activation => Page 109
P1113	17521	Bank 1, probe 1 Internal resistance too high 2)	
P1114	17522	Bank 1, probe 2, Internal resistance too high 2)	
P1115	17523	Bank 1, lambda probe 1, heating circuit Short to earth 2)	Check lambda probe heating for lambda probe => Page 106
P1116	17524	Bank 1, lambda probe 1, heating circuit Open circuit 2)	
P1117	17525	Bank 1, probe 2, heating circuit Short to earth 2)	

P1118	17526	Bank 1, probe 2, heating circuit Open circuit 2)	

2) With this fault, the engine control unit only switches on the exhaust gas warning lamp (MIL) when the fault has been re-detected after two engine restarts. Significance of MIL warning lamp => 1 .

Fault code		Fault readout	Fault remedy
SAE	V.A.G		
P1119	17527	Bank 2, lambda probe 1, heating circuit Short to earth 2)	Check lambda probe heating for lambda probe => Page 106
P1120	17528	Bank 2, lambda probe 1, heating circuit Open circuit 2)	
P1121	17529	Bank 2, probe 2, heating circuit Short to earth 2)	
P1122	17530	Bank 2, probe 2, heating circuit Open circuit 2)	

2) With this fault, the engine control unit only switches on the exhaust gas warning lamp (MIL) when the fault has been re-detected after two engine restarts. Significance of MIL warning lamp => 1 .

Fault code		Fault readout	Fault remedy
SAE	V.A.G		
P1127	17535	Bank 1, mixture adaption (mult.) System too rich 2)	Perform road test (fuel in oil) Check fuel system pressure => Page 71 Test air mass meter => Page 91 . Test lambda probe before catalytic converter => Page 101 Check injectors => Page 76
P1128	17536	Bank 1, mixture adaption (mult.) System too lean 2)	
P1129	17537	Bank 2, mixture adaption (mult.) System too rich 2)	
P1130	17538	Bank 2, mixture adaption (mult.) System too lean 2)	
P1131	17539	Bank 2, probe 1 Internal resistance too high 2)	Check lambda probe heating for lambda probe => Page 109

2) With this fault, the engine control unit only switches on the exhaust gas warning lamp (MIL) when the fault has been re-detected after two engine restarts. Significance of MIL warning lamp => 1 .

Note:

mult. = multiplicative means that the fault occurs throughout the entire speed range and load range.

Fault code		Fault readout	Fault remedy
SAE	V.A.G		
P1136	17544	Bank 1, mixture adaption (add.) System too lean 2)	Perform road test (fuel in engine oil) Check fuel system pressure => Page 71 Test air mass meter => Page 86 Test lambda probe before catalytic converter => Page 115
P1137	17545	Bank 1, mixture adaption (add.) System too rich 2)	
P1138	17546	Bank 2, mixture adaption (add.) System too lean 2)	
P1139	17547	Bank 2, mixture adaption (add.) System too rich 2)	

Protected by copyright. Copying for private or commercial purposes, in part or whole, is not permitted unless authorised by AUDI AG. AUDI AG does not guarantee or accept any liability with respect to the correctness of information in this document. Copyright by AUDI AG.

P1140	17548	Bank 2, probe 2 Internal resistance too high 2)	Check lambda probe heating for lambda probe => Page 109

2) With this fault, the engine control unit only switches on the exhaust gas warning lamp (MIL) when the fault has been re-detected after two engine restarts. Significance of MIL warning lamp => 1 .

Note:

add. = additive means that fault only has effect during idling

Fault code		Fault readout	Fault remedy
SAE	V.A.G		Checking lambda probe learned values and lambda control => Page 95
P1147	17555	Lambda control, bank 2 System too lean	
P1148	17556	Lambda control, bank 2 System too rich	
P1149	17557	Lambda control, bank 1 Implausible control value	Check lambda probe learned values and lambda control => Page 95 Check fuel system pressure => Page 91
P1150	17558	Lambda control, bank 2 Implausible control value	

Protected by copyright. Copying for private or commercial purposes, in part or in whole, is not permitted unless authorised by AUDI AG. AUDI AG does not guarantee or accept any liability with respect to the correctness of information in this document. Copyright by AUDI AG.

Fault code		Fault readout	Fault remedy
SAE	V.A.G		Check angle sender for throttle valve actuator => Page 123 .
P1171	17579	Angle sender 2 for throttle valve actuator -G188 Implausible signal 1) 3)	
P1172	17580	Angle sender 2 for throttle valve actuator -G188 Signal too small 1) 3)	
P1173	17581	Angle sender 2 for throttle valve actuator -G188 Signal too great 1) 3)	

1) With this fault, engine control unit switches on EPC warning lamp in dash panel insert. Significance of EPC warning lamp =>Page 119 .

3) With this fault the engine control unit switches on exhaust gas warning lamp immediately after detecting fault. Significance of MIL warning lamp => 1 .

Fault code		Fault readout	Fault remedy
SAE	V.A.G		Check lambda probe ageing of lambda probe before catalytic converter => Page 97
P1176	17584	Bank 1, lambda correction after catalytic converter Control limit reached	
P1177	17585	Bank 2, lambda correction after catalytic converter Control limit reached	Check lambda probe and lambda control after catalytic converter => Page 101
P1198	17606	Bank 1, probe 2, heating circuit Electrical fault 2)	Check lambda probe heating for lambda probe => Page 106
P1199	17607	Bank 2, probe 2, heating circuit Electrical fault 2)	Check lambda probe heating for lambda probe => Page 106

2) With this fault, the engine control unit only switches on the exhaust gas warning lamp (MIL) when the fault has been re-detected after two engine restarts. Significance of MIL warning lamp => 1 .

Fault code		Fault readout	Fault remedy
SAE	V.A.G		

P1201	17609	Injector, cylinder 1 -N30 Electrical fault in circuit 2)	Checking injectors =>Page 73
P1202	17610	Injector, cylinder 2 -N31 Electrical fault in circuit 2)	
P1203	17611	Injector, cylinder 3 -N32 Electrical fault in circuit 2)	
P1204	17612	Injector, cylinder 4 N33 Electrical fault in circuit 2)	
P1205	17613	Injector, cylinder 5 -N83 Electrical fault in circuit 2)	
P1206	17614	Injector, cylinder 6 -N84 Electrical fault in circuit 2)	

2) With this fault, the engine control unit only switches on the exhaust gas warning lamp (MIL) when the fault has been re-detected after two engine restarts. Significance of MIL warning lamp => 1 .

Fault code		Fault readout	Fault remedy
SAE	V.A.G		
P1213	17621	Injector, cylinder 1 -N30 Short to positive 2)	Checking injectors =>Page 73
P1214	17622	Injector, cylinder 2 -N31 Short to positive 2)	
P1215	17623	Injector, cylinder 3 -N32 Short to positive 2)	
P1216	17624	Injector, cylinder 4 -N33 Short to positive 2)	
P1217	17625	Injector, cylinder 5 -N83 Short to positive 2)	
P1218	17626	Injector, cylinder 6 -N84 Short to positive 2)	

Protected by copyright. Copying for private or commercial purposes, in part or in whole, is not permitted unless authorised by AUDI AG. AUDI AG does not guarantee or accept any liability with respect to the correctness of information in this document. Copyright by AUDI AG.

2) With this fault, the engine control unit only switches on the exhaust gas warning lamp (MIL) when the fault has been re-detected after two engine restarts. Significance of MIL warning lamp => 1 .

Fault code		Fault readout	Fault remedy
SAE	V.A.G		
P1225	17633	Injector, cylinder 1 -N30 Short to earth 2)	Check injectors =>Page 73
P1226	17634	Injector, cylinder 2 -N31 Short to earth 2)	
P1227	17635	Injector, cylinder 3 -N32 Short to earth 2)	
P1228	17636	Injector, cylinder 4 -N33 Short to earth 2)	
P1229	17637	Injector, cylinder 5 -N83 Short to earth 2)	
P1230	17638	Injector, cylinder 6 -N84 Short to earth 2)	

2) With this fault, the engine control unit only switches on the exhaust gas warning lamp (MIL) when the fault has been re-detected after two engine restarts. Significance of MIL warning lamp => 1 .

Fault code		Fault readout	Fault remedy
SAE	V.A.G		

P1237	17645	Injector, cylinder 1 -N30 Open circuit 2)	Checking injectors =>Page 73
P1238	17646	Injector, cylinder 2 -N31 Open circuit 2)	
P1239	17647	Injector, cylinder 3 -N32 Open circuit 2)	
P1240	17648	Injector, cylinder 4 -N33 Open circuit 2)	
P1241	17649	Injector, cylinder 5 -N83 Open circuit 2)	
P1242	17650	Injector, cylinder 6 -N84 Open circuit 2)	

2) With this fault, the engine control unit only switches on the exhaust gas warning lamp (MIL) when the fault has been re-detected after two engine restarts. Significance of MIL warning lamp => 1 .

Fault code		Fault readout	Fault remedy
SAE	V.A.G		
P1250	17658	Fuel level too low	- Resulting fault, see note Refuel vehicle, erase fault memory Interrogate fault memory of dash panel insert => Electrical System; Repair group 01; Dash panel insert self-diagnosis Dash panel insert self-diagnosis

Note:

The information "Fuel level too low" is stored only in conjunction with misfiring or faults concerning lambda control if too little fuel is or was in the tank. The fault is stored in the control unit as static fault and is not set as a sporadic fault even if the vehicle is refuelled in the meantime e.g. by the customer.

Fault code		Fault readout	Fault remedy
SAE	V.A.G		
P1287	17695	Air recirculation valve for turbo-charger -N249 Open circuit	=> Mechanical Components; Repair group 21; Charge air system with turbocharger; Testing air recirculation valve for turbocharger -N249. Charge air system with turbocharger; Testing air recirculation valve for turbocharger -N249.
P1288	17696	Air recirculation valve for turbo-charger -N249 Short to positive	
P1289	17697	Air recirculation valve for turbo-charger -N249 Short to earth	
P1296	17704	Fault in coolant system 2)	Check coolant temperature sender => Page 157 Check coolant thermostat => Mechanical Components; Repair group 19; Cooling system; Parts of cooling system on front engine side Cooling system; Parts of cooling system on front engine side

Protected by Copyright. Copying for private or commercial purposes, in part or in whole, is not permitted unless authorised by AUDI AG. AUDI AG does not guarantee or accept any liability with respect to the correctness of information in this document. Copyright by AUDI AG.

2) With this fault, the engine control unit only switches on the exhaust gas warning lamp (MIL) when the fault has been re-detected after two engine restarts. Significance of MIL warning lamp => 1 .

Fault code		Fault readout	Fault remedy
SAE	V.A.G		Check knock control
P1325	17733	Knock control, cylinder 1 Control limit reached	

P1326	17734	Knock control, cylinder 2 Control limit reached	=> Page 160
P1327	17735	Knock control, cylinder 3 Control limit reached	
P1328	17736	Knock control, cylinder 4 Control limit reached	
P1329	17737	Knock control, cylinder 5 Control limit reached	
P1330	17738	Knock control, cylinder 6 Control limit reached	

2.4 - Fault codes up to fault code P1854 (18262)

Protected by copyright. Copying for private or commercial purposes, in part or in whole, is not permitted unless authorised by AUDI AG. AUDI AG does not guarantee or accept any liability with respect to the correctness of information in this document. Copyright by AUDI AG.

Fault code		Fault readout	Fault remedy
SAE	V.A.G		
P1335	17743	Engine torque monitoring 2 Control limit exceeded 1)	Check hoses (pressure hoses, hose clamps that may have become loose) => Page 157 .

1) With this fault, engine control unit switches on EPC warning lamp in dash panel insert. Significance of EPC warning lamp => 119 .

Fault code		Fault readout	Fault remedy
SAE	V.A.G		
P1336	17744	Engine torque monitoring Control limit exceeded	Check hoses (pressure hoses, hose clamps that may have become loose) => Page 157 . If the above operations were carried out successfully, replace engine control unit

Fault code		Fault readout	Fault remedy
SAE	V.A.G		
P1337	17745	Bank 1, camshaft position sensor => - G40 Short to earth 2)	Check Hall sender
P1338	17746	Bank 1, camshaft position sensor => - G40 Open circuit/ short to positive 2)	=> Page 166
P1340	17748	Camshaft/ crankshaft position sensor Incorrect assignment 2)	Check phase position of Hall sender => Page 166

P1347	17755	Bank 2, camshaft/crankshaft position sensor Incorrect assignment 2)	

2) With this fault, the engine control unit only switches on the exhaust gas warning lamp (MIL) when the fault has been re-detected after two engine restarts. Significance of MIL warning lamp => 1 .

Note:

Camshaft position sensor at fault code 17748 refers to bank 1 sensor.

Fault code		Fault readout	Fault remedy
SAE	V.A.G		
P1355	17763	Ignition actuation cyl. 1 Open circuit 2)	Check actuation of output stages => Page 152
P1356	17764	Ignition actuation cyl. 1 Short to positive 2)	
P1357	17765	Ignition actuation cyl. 1 Short to earth 2)	
P1358	17766	Ignition actuation cyl. 2 Open circuit 2)	
P1359	17767	Ignition actuation cyl. 2 Short to positive 2)	
P1360	17768	Ignition actuation cyl. 2 Short to earth 2)	

Protected by copyright. Copying for private or commercial purposes, in part or in whole, is not permitted unless authorised by AUDI AG. AUDI AG does not guarantee or accept any liability with respect to the correctness of information in this document. Copyright by AUDI AG.

2) With this fault, the engine control unit only switches on the exhaust gas warning lamp (MIL) when the fault has been re-detected after two engine restarts. Significance of MIL warning lamp => 1 .

Fault code		Fault readout	Fault remedy
SAE	V.A.G		
P1361	17769	Ignition actuation cyl. 3 Open circuit 2)	Check actuation of output stages => Page 152
P1362	17770	Ignition actuation cyl. 3 Short to positive 2)	
P1363	17771	Ignition actuation cyl. 3 Short to earth 2)	

P1364	17772	Ignition actuation cyl. 4 Open circuit 2)	
P1365	17773	Ignition actuation cyl. 4 Short to positive 2)	
P1366	17774	Ignition actuation cyl. 4 Short to earth 2)	

2) With this fault, the engine control unit only switches on the exhaust gas warning lamp (MIL) when the fault has been re-detected after two engine restarts. Significance of MIL warning lamp => 1 .

Fault code		Fault readout	Fault remedy
SAE	V.A.G		
P1367	17775	Ignition actuation cyl. 5 Open circuit 2)	Check actuation of output stages => Page 152
P1368	17776	Ignition actuation cyl. 5 Short to positive 2)	
P1369	17777	Ignition actuation cyl. 5 Short to earth 2)	
P1370	17778	Ignition actuation cyl. 6 Open circuit 2)	
P1371	17779	Ignition actuation cyl. 6 Short to positive 2)	
P1372	17780	Ignition actuation cyl. 6 Short to earth 2)	

2) With this fault, the engine control unit only switches on the exhaust gas warning lamp (MIL) when the fault has been re-detected after restarting the engine. Significance of MIL warning lamp => 1 .

Fault code		Fault readout	Fault remedy
SAE	V.A.G		
P1386	17794	Control unit faulty	Renewing engine control unit => Page 68
P1387	17795	Control unit defective 2)	

Protected by copyright. Copying for private or commercial purposes, in part or in whole, is not permitted unless authorised by AUDI AG. AUDI AG does not guarantee or accept any liability with respect to the correctness of information in this document. Copyright by AUDI AG.

P1388	17796	Control unit defective 1)	

1) With this fault, engine control unit switches on EPC warning lamp in dash panel insert. Significance of EPC warning lamp => 119 .

2) With this fault, the engine control unit only switches on the exhaust gas warning lamp (MIL) when the fault has been re-detected after two engine restarts. Significance of MIL warning lamp => 1 .

Fault code		Fault readout	Fault remedy
SAE	V.A.G		
P1391	17799	Bank 2, camshaft position sensor => -G163 Short to earth 2)	Checking Hall sender => Page 166
P1392	17800	Bank 2, camshaft position sensor => -G163 Open circuit/ short to positive2)	
P1409	17817	Tank breather valve -N80 Electrical fault in circuit 2)	Check solenoid valve 1 for activated charcoal filter => Page 115
P1410	17818	Tank breather valve -N80 Short to positive 2)	
P1425	17833	Tank breather valve -N80 Short to earth 2)	
P1426	17834	Tank breather valve -N80 Open circuit 2)	

Protected by copyright. Copying for private or commercial purposes, in part or in whole, is not permitted unless authorised by AUDI AG. AUDI AG does not guarantee or accept any liability with respect to the correctness of information in this document. Copyright by AUDI AG.

2) With this fault, the engine control unit only switches on the exhaust gas warning lamp (MIL) when the fault has been re-detected after two engine restarts. Significance of MIL warning lamp => 1 .

Fault code		Fault readout	Fault remedy
SAE	V.A.G		
P1453	17861	Exhaust gas temperature sender 1 -G235 Open circuit / short to positive	=> Mechanical Components; Repair group 26; Testing exhaust gas temperature sender 1 -G235 Testing exhaust gas temperature sender 1 -G235
P1454	17862	Exhaust gas temperature sender 1 -G235 Short to earth	
P1455	17863	Exhaust gas temperature sender 1 -G235 Implausible signal	
P1456	17864	Exhaust gas temperature control, bank 1 Control limit reached	=> Mechanical Components; Repair group 26; Testing exhaust gas temperature control Testing exhaust gas temperature control

Fault code	Fault readout	Fault remedy

SAE	V.A.G		
P1457	17865	Exhaust gas temperature sender 2 -G235 Open circuit / short to positive	=> Mechanical Components; Repair group 26; Testing exhaust gas temperature sender 2 -G236 Testing exhaust gas temperature sender 2 -G236
P1458	17866	Exhaust gas temperature sender 2 -G235 Short to earth	
P1459	17867	Exhaust gas temperature sender 2 -G235 Implausible signal	
P1460	17868	Exhaust gas temperature control, bank 2 Control limit reached	=> Mechanical Components; Repair group 26; Testing exhaust gas temperature control Testing exhaust gas temperature control
P1461	17869	Exhaust gas temperature control, bank 1 Implausible signal	=> Mechanical Components; Repair group 26; Testing exhaust gas temperature control Testing exhaust gas temperature control
P1462	17870	Exhaust gas temperature control, bank 2 Implausible signal	

Fault code		Fault readout	Fault remedy
SAE	V.A.G		
P1500	17908	Fuel pump relay -J17 Electrical fault in circuit 2)	Check fuel pump relay => Page 84 .
P1501	17909	Fuel pump relay -J17 Short to earth 2)	
P1502	17910	Fuel pump relay -J17 Short to positive 2)	

2) With this fault, the engine control unit only switches on the exhaust gas warning lamp (MIL) when the fault has been re-detected after two engine restarts. Significance of MIL warning lamp => 1 .

Fault code		Fault readout	Fault remedy
SAE	V.A.G		
P1519	17927	Bank 1, camshaft adjustment Malfunction	=> Mechanical Components; Repair group 15; Checking camshaft adjustment; Checking function of camshaft adjustment Checking camshaft adjustment; Checking function of camshaft adjustment
P1522	17930	Bank 2, camshaft adjustment Malfunction	
P1523	17931	Crash signal from airbag control unit Implausible signal	Test crash signal => Page 142
P1525	17933	Bank 1, camshaft adjustment -N205 Electrical fault in circuit	=> Mechanical Components; Repair group 15; Checking camshaft adjustment; Checking valve 1 for camshaft adjustment -N205 Checking camshaft adjustment; Checking valve 1 for camshaft adjustment -N205
P1526	17934	Bank 1, camshaft adjustment -N205 Short to positive	
P1527	17935	Bank 1, camshaft adjustment -N205 Short to earth	

Protected by copyright. Copying for private or commercial purposes, in part or in whole, is not permitted unless authorised by AUDI AG. AUDI AG does not guarantee or accept any liability with respect to the correctness of information in this document. Copyright by AUDI AG.

P1528	17936	Bank 1, camshaft adjustment - N205 Open circuit.	

Fault code		Fault readout	Fault remedy
SAE	V.A.G		
P1533	17941	Bank 2, camshaft adjustment - N208 Electrical fault in circuit	
P1534	17942	Bank 2, camshaft adjustment - N208 Short to positive	=> Mechanical Components; Repair group 15; Checking camshaft adjustment; Checking valve 2 for camshaft adjustment -N208 Checking camshaft adjustment; Checking valve 2 for camshaft adjustment -N208
P1535	17943	Bank 2, camshaft adjustment - N208 Short to earth	
P1536	17944	Bank 2, camshaft adjustment - N208 Open circuit.	
P1539	17947	Clutch pedal switch -F36 Implausible signal	- Test clutch pedal switch => Page 141

Fault code		Fault readout	Fault remedy
SAE	V.A.G		
P1542	17950	Angle sender for throttle valve actuator -G187 Implausible signal 1) 3)	Checking angle sender for throttle valve actuator => Page 123
P1543	17951	Angle sender for throttle valve actuator -G187 Signal too small 1) 3)	
P1544	17952	Angle sender for throttle valve actuator -G187 Signal too great 1) 3)	Test angle sender for throttle valve actuator => Page 123
P1545	17953	Throttle valve control Malfunction 1) 3)	Check throttle valve control part => Page 120

Protected by copyright. Copying for private or commercial purposes, in part or in whole, is not permitted unless authorised by AUDI AG. AUDI AG does not guarantee or accept any liability with respect to the correctness of information in this document. Copyright by AUDI AG.

Note on fault code 17953:

Check the throttle valve for dirt or stiffness. Check the intake tract to the throttle valve for foreign bodies which could obstruct the throttle valve when opening and closing. This particularly applies to sporadic faults.

1) With this fault, engine control unit switches on EPC warning lamp in dash panel insert. Significance of EPC warning lamp => 119 .

3) With this fault the engine control unit switches on exhaust gas warning lamp immediately after detecting fault. Significance of MIL warning lamp => 1 .

Fault code		Fault readout	Fault remedy
SAE	V.A.G		
P1546	17954	Boost pressure limitation solenoid valve -N75 Short to positive	
P1547	17955	Boost pressure limitation solenoid valve -N75 Short to earth	=> Mechanical Components; Repair group 21; Charge air system with turbocharger Charge air system with turbocharger

P1548	17956	Boost pressure limitation solenoid valve -N75 Open circuit.	
P1555	17963	Maximum boost pressure exceeded	=> Mechanical Components; Repair group 21; Charge air system with turbocharger Charge air system with turbocharger
P1556	17964	Boost pressure control Control limit not reached	=> Mechanical Components; Repair group 21; Charge air system with turbocharger Charge air system with turbocharger
P1557	17965	Boost pressure control Control limit exceeded	- If there are indications of a leak on the pressure side of the charge system, the rubber seal in front of the throttle valve may be torn (please remove and perform visual inspection)

Fault code		Fault readout	Fault remedy
SAE	V.A.G		
P1558	17966	Throttle valve actuator -G186 Electrical fault in circuit 1) 3)	Check throttle valve control part => Page 120 .
P1559	17967	Throttle valve control part -J338 Fault in basic setting 2)	Perform adaption => Page 121 .
P1560	17968	Maximum engine speed exceeded	Rectify possible mechanical damage
P1564	17972	Throttle valve control part -J338 Undervoltage during basic setting	Charge battery, repeat basic setting or adaption => Page 121 .
P1565	17973	Throttle valve control part -J338 Lower stop not reached 1) 3)	Check throttle valve control part => Page 120 .
P1568	17976	Throttle valve control part -J338 Mechanical fault 1) 3)	

1) With this fault, engine control unit switches on EPC warning lamp in dash panel insert. Significance of EPC warning lamp =>Page 119 .

2) With this fault, the engine control unit only switches on the exhaust gas warning lamp (MIL) when the fault has been re-detected after two engine restarts. Significance of MIL warning lamp => 1 .

3) With this fault the engine control unit switches on exhaust gas warning lamp immediately after detecting fault. Significance of MIL warning lamp => 1 .

Fault code		Fault readout	Fault remedy
SAE	V.A.G		
P1569	17977	CCS switch -E45 Implausible signal	Test cruise control system switch => Electrical System; Repair group 01; Self-diagnosis for cruise control system (CCS)
P1570	17978	Engine control unit disabled	Adapt electronic immobiliser to engine control unit => Electrical System; Repair group 01; Self-diagnosis for immobiliser
P1579	17987	Throttle valve control part -J338 Adaption not started	- Perform adaption of throttle valve control part in accordance with preconditions => Page 121 .
P1600	18008	Voltage supply, terminal 15 Voltage too low	Check supply voltage to engine control unit => Page 160 .
P1602	18010	Voltage supply, terminal 30 Voltage too low	

Printed by Copyright by Audi AG. Reproduction or transmission of the copyright owner, or other personal purposes, in part or in whole, is not permitted unless authorized by AUDI AG. AUDI AG does not guarantee or accept any liability with respect to the correctness of information in this document. Copyright by AUDI AG.

Fault code		Fault readout	Fault remedy
SAE	V.A.G		
P1603	18011	Control unit faulty	Renewing engine control unit => Page 68 .

P1604	18012	Control unit defective 1)	
P1606	18014	Rough-road detection/engine specified torque from ABS control unit Electrical fault in circuit	Check cable connection to ABS control unit => Page 143 .
P1609	18017	Crash cut-off was activated	Accident involving activation of airbag or a final control diagnosis was carried out in airbag control unit, which caused a fault entry in engine control unit (erase fault memory); Notes on crash cut-off => Page 142 .
P1612	18020	Engine control unit incorrectly co-ded 1) 3)	Check coding or code engine control unit => Page 32 .

1) With this fault, engine control unit switches on EPC warning lamp in dash panel insert. Significance of EPC warning lamp => 119 .

3) With this fault the engine control unit switches on exhaust gas warning lamp immediately after detecting fault. Significance of MIL warning lamp => 1 .

Protected by copyright. Copying for private or commercial purposes, in part or in whole, is not permitted unless authorised by AUDI AG. AUDI AG does not guarantee or accept any liability with respect to the correctness of information in this document. Copyright by AUDI AG.

Fault code		Fault readout	Fault remedy
SAE	V.A.G		Check coolant temperature signal =>Page 137 .
P1620	18028	Coolant temperature signal Open circuit / short to positive	
P1621	18029	Coolant temperature signal Short to earth	
P1622	18030	Coolant temperature signal Implausible signal	

Note on fault codes P1620, P1621 and P1622:

Engine control unit receives "coolant temperature signal" from dash panel insert. If engine control unit detects this signal, boost pressure is reduced.

Fault code		Fault readout	Fault remedy
SAE	V.A.G		Exhaust-related fault from gearbox control unit, exhaust gas warning lamp (MIL) is switched on by gearbox control unit Read out fault memory of gearbox control unit => Automatic Gearbox; Repair group 01; Performing self-diagnosis Performing self-diagnosis
P1624	18032	Request fault lamp on, active	
P1626	18034	Data bus drive, no message from gearbox CU	Testing data exchange between engine/ABS/ gearbox control unit =>Page 144 .

Note on fault code P1624:

- The "fault lamp" refers to the exhaust warning lamp (MIL). The engine control unit switches on the "MIL" (for short) when faults which cause the exhaust gas to deteriorate are detected.
- The "MIL" is usually switched on by the engine control unit.
- However, faults which cause deterioration in the exhaust gases can also be detected by the gearbox control unit. These faults are also indicated by activation of the "MIL."
- If a fault which causes deterioration of the engine exhaust gases is detected by the gearbox control unit, the gearbox control unit sends a message to the engine control unit. The engine control unit then switches on the "MIL". At the same time, the engine control unit stores the "fault" P1624 as a reminder that the "MIL" has not been switched on due to an engine problem, but due to a gearbox problem.

Fault code		Fault readout	Fault remedy
SAE	V.A.G		

P1630	18038	Accelerator position sender -G79 Signal too small 1) 3)	Checking accelerator position sender =>Page 125 .
P1631	18039	Accelerator position sender -G79 Signal too great 1) 3)	
P1633	18041	Accelerator position sender 2 -G185 Signal too small 1) 3)	
P1634	18042	Accelerator position sender 2 -G185 Signal too great 1) 3)	

1) With this fault, engine control unit switches on EPC warning lamp in dash panel insert. Significance of EPC warning lamp => 119 .

3) With this fault the engine control unit switches on exhaust gas warning lamp immediately after detecting fault. Significance of MIL warning lamp => 1 .

Fault code		Fault readout	Fault remedy
SAE	V.A.G		
P1639	18047	Accelerator position sender -G79/G185 Implausible signal 1) 3)	Checking accelerator position sender =>Page 125 .
P1640	18048	Control unit Defective 2)	Renewing engine control unit => Page 68 .
P1645	18053	Drive data bus No message from four-wheel drive electronics	Testing data exchange between engine/ABS/ gearbox control unit =>Page 144 .
P1648	18056	Drive data bus Defective 2)	

1) With this fault, engine control unit switches on EPC warning lamp in dash panel insert. Significance of EPC warning lamp => 119 .

2) With this fault, the engine control unit only switches on the exhaust gas warning lamp (MIL) when the fault has been re-detected after two engine restarts. Significance of MIL warning lamp => 1 .

3) With this fault the engine control unit switches on exhaust gas warning lamp immediately after detecting fault. Significance of MIL warning lamp => 1 .

Fault code		Fault readout	Fault remedy
SAE	V.A.G		
P1649	18057	Drive data bus No message from ABS control unit	Interrogate ABS fault memory => Running Gear Self-diagnosis for ABS, ESP; Repair group 01; Interrogating fault memory Testing data exchange between engine/ABS/ gearbox control unit =>Page 144 .
P1650	18058	Drive data bus No message from dash panel	Check data exchange via bus system =>Page 144 .
P1654	18062	Read out fault memory of instrument cluster	Read out fault memory of instrument cluster

Protected by copyright. Copying for private or commercial purposes, in part or in whole, is not permitted unless authorised by AUDI AG. AUDI AG does not guarantee or accept any liability with respect to the correctness of information in this document. Copyright by AUDI AG.

Fault code		Fault readout	Fault remedy
SAE	V.A.G		
P1676	18084	Electrical throttle actuator fault lamp -K132 Electrical fault in circuit 1)	Significance of the EPC warning lamp => Page 119 .

P1677	18085	Electrical throttle actuator fault lamp -K132 Short to positive 1)	
P1690	18098	Fault lamp for self-diagnosis - K83 Electrical fault in circuit 2)	Check wiring from engine control unit to exhaust gas warning lamp => Page 1 .
P1693	18101	Fault lamp for self-diagnosis - K83 Short to positive 2)	

1) With this fault, engine control unit switches on EPC warning lamp in dash panel insert. Significance of EPC warning lamp => 119 .

2) With this fault, the engine control unit only switches on the exhaust gas warning lamp (MIL) when the fault has been re-detected after restarting the engine. Significance of MIL warning lamp => 1 .

Note:

The fault lamp for electrical throttle activation -K132 is also known as the EPC warning lamp.

Fault code		Fault readout	Fault remedy
SAE	V.A.G		
P1851	18259	Data bus drive, no message from ABS CU	
P1853	18261	Drive data bus Implausible message from ABS CU	Interrogate ABS fault memory => Running Gear Self-diagnosis for ABS, ESP; Repair group 01; Interrogating fault memory
P1854	18262	Data bus drive hardware defective	Testing data exchange between engine/ABS/ gearbox control unit =>Page 144 .
P3262	19718	Exhaust gas bank 1/2 Lambda probes after catalytic converter interchanged	Check connectors of lambda probe after catalytic converter

Protected by copyright. Copying for private or commercial purposes, in part or in whole, is not permitted unless authorised by AUDI AG. AUDI AG does not guarantee or accept any liability with respect to the correctness of information in this document. Copyright by AUDI AG.

3 - Final control diagnosis

3.1 - Final control diagnosis

Notes:

- The final control diagnosis can only be performed with the engine stopped and the ignition switched on.
- The final control diagnosis is terminated if the engine is started or if an engine speed pulse is detected.
- During final control diagnosis, the individual control elements are operated in turn for about one minute (except injectors) unless the next control element is selected by pressing the ⇒ key.
- The control elements can be checked acoustically or by way of touch.
- Engine must be started before repeating the final control diagnosis. (Engine control unit has to have recognised a speed greater than 300 rpm.)
- The electric fuel pump runs throughout the final control diagnosis.

The final control diagnosis activates the following components in the stated order:

Actuation sequence
1 Solenoid valve 1 for activated charcoal filter -N80 (Tank breather valve -N80)
2 Boost pressure limitation solenoid valve -N75
3 Camshaft timing control

Actuation sequence
4 Air recirculation valve for turbocharger -N249
5 Injector, cylinder 1 -N30
6 Injector, cylinder 4 -N33
7 Injector, cylinder 3 -N32
8 Injector, cylinder 6 -N84
9 Injector, cylinder 2 -N31
10 Injector, cylinder 5 -N83

Test conditions

- Fuses for engine electronics OK
- Fuel pump relay OK.

- Connect the vehicle diagnostic, testing and information system VAS 5051 or fault reader V.A.G 1551 and select the engine electronics control unit with "address word" 01 => Page 3 .
  For this purpose, the ignition must be switched on.

-> Indicated on display:

```
Rapid data transfer      HELP
Select function XX
```

- Press keys 0 and 3 for "Final control diagnosis" function

-> Indicated on display:

```
Rapid data transfer     Q
03 - Final control diagnosis
```

Actuation of activated charcoal filter system solenoid valve (tank breather valve)

- Confirm input with Q key.

-> Indicated on display:

```
Final control diagnosis
Tank breather valve -N80
```

This solenoid valve is actuated (clicks) for approx. one minute unless the ⇒ key is pressed to switch to the next control element.

If the valve is not actuated (does not click).

- Check solenoid valve 1 for activated charcoal filter -N80 => Page 115 .

Activating solenoid valve for boost pressure limitation -N75

Protected by copyright. Copying or publication or distribution of this document is not permitted unless authorised by AUDI AG. AUDI AG does not guarantee or accept any liability with respect to the correctness of information in this document. Copyright by AUDI AG.

- Press the ⇒key.

-> Indicated on display:

```
Final control diagnosis
Solenoid valve for boost pressure
limitation
-N75
```

This solenoid valve is actuated (clicks) for approx. one minute unless the ⇒ key is pressed to switch to the next control element.

If the solenoid valve for boost pressure limitation does not click:

=> Mechanical Components; Repair group 21; Charge air system with turbocharger; Checking boost pressure limitation solenoid valve -N75. Charge air system with turbocharger Checking boost pressure limitation solenoid valve -N75.

Actuation of camshaft adjustment valves

- Press the ⇒key.

-> Indicated on display:

```
Final control diagnosis
Camshaft adjustment 1
```

- Valves 1 and 2 for camshaft adjustment are actuated (click) for approx. one minute unless the ⇒key is pressed to switch to the next control element.

If the valve is not actuated (does not click).

=> Mechanical Components; Repair group 15; Checking camshaft adjustment; Checking camshaft adjustment solenoid valves Checking camshaft adjustment Checking camshaft adjustment solenoid valves

Actuating air recirculation valve for turbocharger

- Press the ⇒key.

-> Indicated on display:

```
Final control diagnosis
Air recirculation valve for turbocharger
-N249
```

This solenoid valve is actuated (clicks) for approx. one minute unless the ⇒ key is pressed to switch to the next control element.

If the valve is not actuated (does not click).

=> Mechanical Components; Repair group 21; Charge air system with turbocharger; Testing air recirculation valve for turbocharger -N249 Charge air system with turbocharger Testing air recirculation valve for turbo-charger -N249

Actuating injectors

Note:

The injectors are activated according to the firing sequence, i.e. cyl. 1, cyl. 4, cyl. 3, cyl 6, cyl. 2, cyl 5.

- Press the ⇒key.

-> Indicated on display:

```
Final control diagnosis
Injector, cylinder 1 -N30
```

- Press the ⇒key.

Protected by copyright. Copying for private or commercial purposes, in part or in whole, is not permitted unless authorised by AUDI AG. AUDI AG does not guarantee or accept any liability with respect to the correctness of information in this document. Copyright by AUDI AG.

-> Indicated on display:

```
Final control diagnosis
Injector, cylinder 1 -N30
```

After the arrow key is pressed, the injector must click five times.

If the injector does not click:

- Test injectors => Page 73 .
- Press the ⇒key.

-> Indicated on display:

```
Final control diagnosis
Injector, cylinder 4 -N33
```

- Press the ⇒key.

-> Indicated on display:

```
Final control diagnosis
Injector, cylinder 4 -N33
```

After the arrow key is pressed, the injector must click five times.

If the injector does not click:

- Test injectors => Page 73 .

- Press the ⇒key.

-> Indicated on display:

```
Final control diagnosis
Injector, cylinder 3 -N32
```

- Press the ⇒key.

-> Indicated on display:

```
Final control diagnosis
Injector, cylinder 3 -N32
```

After the arrow key is pressed, the injector must click five times.

If the injector does not click:

- Test injectors => Page 73 .
- Press the ⇒key.

-> Indicated on display:

```
Final control diagnosis
Injector, cylinder 6 -N84
```

Protected by copyright. Copying for private or commercial purposes, in part or in whole, is not permitted unless authorised by AUDI AG. AUDI AG does not guarantee or accept any liability with respect to the correctness of information in this document. Copyright by AUDI AG.

- Press the ⇒key.

-> Indicated on display:

```
Final control diagnosis
Injector, cylinder 6 -N84
```

After the arrow key is pressed, the injector must click five times.

If the injector does not click:

- Test injectors => Page 73 .
- Press the ⇒key.

-> Indicated on display:

```
Final control diagnosis
Injector, cylinder 2 -N31
```

- Press the ⇒key.

-> Indicated on display:

```
Final control diagnosis
Injector, cylinder 2 -N31
```

After the arrow key is pressed, the injector must click five times.

If the injector does not click:

- Test injectors => Page 73 .
- Press the ⇒key.

-> Indicated on display:

```
Final control diagnosis
Injector, cylinder 5 -N83
```

- Press the ⇒key.

-> Indicated on display:

```
Final control diagnosis
Injector, cylinder 5 -N83
```

After the arrow key is pressed, the injector must click five times.

If the injector does not click:

- Test injectors => Page 73 .
- Press the ⇒key.

-> Indicated on display:

```
Final control diagnosis
END
```

- Press the ⇒key.

-> Indicated on display (function selection):

```
Rapid data transfer       HELP
Select function XX
```

Protected by copyright. Copying for private or commercial purposes, in part or in whole, is not permitted unless authorised by AUDI AG. AUDI AG does not guarantee or accept any liability with respect to the correctness of information in this document. Copyright by AUDI AG.

Important note:

The final control diagnosis can only then be started again after the engine has started and the ignition has been switched off and on again.

4 - Basic setting

4.1 - Basic setting

With engine stopped and ignition switched on, the following operation can be carried out with the "Function 04" basic setting:

- Adaption of the throttle valve control part to the engine control unit =>Display group 60 (=>Page 121)
- Vehicles with automatic gearbox:Learning kickdown function of accelerator position sender to engine control unit =>Display group 63 (=>Page 128)

With the engine running, the following operations can be performed with the basic setting function:

- Learning process for lambda control
  => each display group
- Fault finding by selective activation and deactivation of the lambda control => display group 99 (please note relevant instructions on page 94).

Test conditions for operations with engine running

- No fault stored in fault memory
- Coolant temperature at least 80 °C (display group 4, display zone 3).
- Electrical consumers switched off (radiator fan must not run during the check)
- Air conditioner switched off

- Connect the vehicle diagnostic, testing and information system VAS 5051 or fault reader V.A.G 1551 and select the engine electronics control unit with "address word" 01 => Page 3 .
  For this purpose, the engine must be running at idle speed.
- Interrogating and erasing fault memory.
  => Page 6 . No faults must be stored (if necessary, rectify fault, erase fault memory, switch off and re-start engine, perform test drive and interrogate the fault memory again as a check.
- Leave engine idling.

Protected by copyright. Copying for private or commercial purposes, in part or in whole, is not permitted unless authorised by AUDI AG. AUDI AG does not guarantee or accept any liability with respect to the correctness of information in this document. Copyright by AUDI AG.

-> Indicated on display:

```
Rapid data transfer      HELP
Select function XX
```

- Press keys 0 and 4

(04 is used to select the function "Basic Setting")

-> Indicated on display:

```
Rapid data transfer     Q
04 - Basic setting
```

- Confirm entry with Q key.

-> Indicated on display:

```
Basic setting      Q
Enter display group number     XXX
```

Note:

Display group number 000 is used here as an example to demonstrate the procedure.

- Press key 0 three times.

(000 is used to select the function "Display group 000").

Note:

After the display group number is selected, the activated charcoal filter valve is closed and the air conditioner compressor is switched off.

-> Indicated on display:

```
Basic setting      Q
Enter display group number     000
```

- Confirm entry with Q key.

-> Indicated on display:

```
Basic setting 0     Q
1     2     3     4     5     6     7
8     9     10
```

Display group 000 (decimal readouts)			
▪ Engine idling (coolant temperature not less than 80 °C)			
Display zones		Specification	Corresponds to
1 2 3 4 5 6 7 8 9 10	Learned value for mixture formation bank 2	108...148	-4...4 %

Display group 000 (decimal readouts)		
Learned value for mixture formation bank 1	108...148	-4...4 %
Control value for mixture formation, bank 2 (if outside tolerance, perform test drive)	122...136	-4...4 %
Control value for mixture formation, bank 1 (if outside tolerance, perform test drive)	122...136	-4...4 %
Learned value for torque loss at idle	124...145	-3...5 %
Idling torque	126...135	-1.5...1.5 %
Throttle valve angle	1...7	0.4...2.75 %
Engine speed (idling speed)	77...83	750...850 rpm
Engine load (no consumption units)	21...34	15...26%
Coolant temperature (requirement for basic setting)	177...203	85...105 °C

1) Current values:

=> Exhaust Emissions Check binder

- Run engine at idling speed for a few minutes, coolant temperature at least 80 °C.

Notes:

- Each time the PRINT key is pressed, the current display readout is printed out.
- Press the C key before selecting further display groups.

- If specifications are achieved in all display zones, press the ⇒ key.

-> Indicated on display:

```
Rapid data transfer      HELP
Select function XX
```

- Press keys 0 and 6

(06 is used to select the function "End of output".)

-> Indicated on display:

```
Rapid data transfer     Q
06 - End of      output
```

- Confirm entry with Q key.

-> Indicated on display:

```
Rapid data transfer      HELP
Select function XX
```

Protected by copyright. Copying for private or commercial purposes, in part or in whole, is not permitted unless authorised by AUDI AG. AUDI AG does not guarantee or accept any liability with respect to the correctness of information in this document. Copyright by AUDI AG.

5 - Encoding control unit

5.1 - Encoding control unit

Note:

- If engine control unit is replaced, the new unit must be subsequently checked to determine whether it has the correct coding.

- Connect the vehicle diagnostic, testing and information system VAS 5051 or fault reader V.A.G 1551 and select the engine electronics control unit with "address word" 01 => Page 3 .

For this purpose, the ignition must be switched on.

-> The display on fault reader V.A.G 1551 shows the control unit identification code e.g.:

```
8D0907551.. 2.7l     V6/5VT     G
0002
Code 10711     WSC 06388
```

The code corresponding to the vehicle must be displayed, see encoding table
=> Page 33 .

Coding variants for the engine control unit

Country/emissions	Drive/auxiliary functions	Gearbox	Model
05 = Emission standard Euro II-D3 (Identification: Vehicles with a total of 2 lambda probes)	6 = Four-wheel drive without electronic stability program (ESP)	1 = 6-speed manual gearbox	1 = Audi A4
08 = CIS/China			
10 = Emission standard Euro III (Identification: Vehicles with a total of 4 lambda probes)	7 = Four-wheel drive with electronic stability program (with CAN bus system) and Audi Allroad vehicles without additional shift stage (low range)		
25 = South Africa			
26 = Mexico/Taiwan			
27 = Brazil			

Notes:

- Traction control system is often shortened to "TCS". Electronic stability program is shortened to "ESP".
- If the vehicle is fitted with "ESP", this is shown by the "ESP" switch in the centre console.

The displayed code number is composed as follows (example):

Emission standard Euro III	10
Four-wheel drive with electronic stability program (ESP)	7
6-speed manual gearbox	1
Audi A4	1
Code number	10 7 1 1

Protected by copyright. Copying for private or commercial purposes, in part or in whole, is not permitted unless authorised by AUDI AG. AUDI AG does not guarantee or accept any liability with respect to the correctness of information in this document. Copyright by AUDI AG.

If the corresponding vehicle code is not displayed:

- Press the ⇒key.

-> When adjacent display appears:

```
Rapid data transfer     HELP
Select function XX
```

- Enter "07" for the function "Encode control unit" and confirm entry with Q key.

-> When adjacent display appears:

```
Code control unit     Q
Enter code number XXXXX     (0-32000)
```

- Enter the corresponding vehicle control unit code as per encoding table and press the Q key => Page 33 .

-> If following message is displayed on tester:

```
Function unknown or cannot
be carried out at the moment
```

Please check that the correct engine control unit is installed according to the parts catalogue (part number; it may not be possible to encode the control unit). It is also possible that an unreleased code has been entered. If necessary, please repeat the encoding process.

- Press the ⇒key.

-> Indicated on display:

```
Rapid data transfer      HELP
Select function XX
```

- Press keys 0 and 6 for the "End output" function and press the Q key to confirm entry.

6 - Reading measured value block

6.1 - Reading measured value block

Test conditions

- Coolant temperature at least 80 °C
- Electrical consumers switched off (radiator fan must not run during the check)
- Air conditioner switched off

- Connect the vehicle diagnostic, testing and information system VAS 5051 or fault reader V.A.G 1551 and select the engine electronics control unit with "address word" 01 => Page 3 .
  For this purpose, the engine must be running at idle speed.

-> Indicated on display:

```
Rapid data transfer      HELP
Select function XX
```

- Press keys 0 and 8 for the function "Read measured value block" and confirm entry with Q key.

-> Indicated on display:

```
Read measured value block 08
Enter display group number XXX
```

- Enter relevant display group number (3 figures) and confirm entry by pressing Q.

Note:

The choice of display group depends on the particular functions and components to be tested.

Protected by copyright. Copying for private or commercial purposes, in part or in whole, is not
with respect to the correctness of information in this document. Copyright by AUDI AG.

-> Indicated on display (for example):

```
Read measured value block 0
1     2     3     4     5     6     7
8     9     10
```

Note:

To change to another display group, proceed as follows:

Display group	V.A.G 1551	VAS 5051
Higher	Press key 3	Press s-key
Lower	Press key 1	Press tkey

7 - Readiness code

7.1 - Readiness code

Note:

The readiness code only exists for engines which fulfil the emission standard EU III.

The readiness code appears as an 8-digit display on measured value block 086, display zone 1. Each of the 8 digits is allocated to a particular emission-related system.

The function of each of these systems is checked by the self-diagnosis and the relevant position for the system in the 8-digit display is changed from "1" to "0" in a test sequence which must be fully completed.

The readiness code produced after successful completion of the test sequence is then "0 0 0 0 0 0 0 0" (measured value block 086, display zone 1).

If an individual test has been completed, but is "not OK", a fault is entered in the fault memory. Interrogating fault memory
=> Page 6 .

The readinesss code is set to

"0 1 1 0 0 1 0 1" if:

- the fault memory has been erased,
- a new engine control unit has been installed

In this case the readiness code must be reproduced =>Page 37 .

Note:

Protected by copyright. Copying for private or commercial purposes, in part or in whole, is not permitted unless authorised by AUDI AG. AUDI AG does not guarantee or accept any liability with respect to the correctness of information in this document. Copyright by AUDI AG.

When driving in various load situations, the emission-related tests are induced by the control unit during a "short trip" and the readiness code is then automatically produced. However, in this case the final checking option is not available, i.e. it is not possible to see whether all digits of the readiness code have been set to "0".

7.2 - Reading the readiness code

Test sequence

- Connect the vehicle diagnostic, testing and information system VAS 5051 or fault reader V.A.G 1551 and select the engine electronics control unit with "address word" 01 => Page 3 .
  For this purpose, the ignition must be switched on.

-> Indicated on display:

```
Rapid data transfer     HELP
Select function XX
```

- Enter "08" to select the function "Reading measured value block" and confirm entry with Q key.

-> When adjacent display appears:

```
Reading measured value block     Q
Enter display group number XXX
```

- Enter "086" for "display group number 086" and confirm entry with Q key.

-> Indicated on display:

```
Read measured value block 86
     1     2     3     4
```

- Check readiness code in display zone 1
  - Specification: 0 0 0 0 0 0 0 0

	Display zones			
	1	2	3	4
Display group 086:Readiness code				
Display	0 0 0 0 0 0 0 0	X X X X X X X X	X X X X X X X X	X X X X X X X X
Display	Ready bits Completed tests	Individual tests performed	Individual tests performed	Individual tests performed
Range	1 = not completed 0 = completed	1 = not completed 0 = completed	1 = not completed 0 = completed	1 = not completed 0 = completed
Specification	0 0 0 0 0 0 0 0	X X X X X X X X	X X X X X X X X	X X X X X X X X
Note:	Explanation of readiness code => Page 36			

Protected by copyright. Copying for private or commercial purposes, in part or in whole, is not permitted unless authorised by AUDI AG. AUDI AG does not guarantee or accept any liability with respect to the correctness of information in this document. Copyright by AUDI AG.

Note on display zone 1:

Display zone 1 is the most important. This display indicates which system has been checked by the self-diagnosis since the last time the fault memory was erased or since installation of a new control unit. After erasing the fault memory, all testable values are set to "1" and then to "0" after successful completion of the test.

X	X	X	X	X	X	X	X	Notes on display group 086, display zone 1
								Catalytic converter diagnosis - Display 0 =test successfully completed - Display 1 =test not (or not successfully) completed - (Producing readiness code => Page 37)
								Display always 0
								Activated charcoal filter system - Display 0 =test successfully completed - Display 1 =test not (or not successfully) completed - (Producing readiness code => Page 37)
								Secondary air system (display always 0, as no secondary air system available for this engine).
								Display always 0
								Lambda probes - Display 0 =test successfully completed - Display 1 =test not (or not successfully) completed - (Producing readiness code => Page 37)
								Lambda probe heater - Display 0 =test successfully completed - Display 1 =test not (or not successfully) completed - (Producing readiness code => Page 37)
								Display always 0

Note:

The readiness code is only produced when all display digits in display zone 1 are set to "0".

If the specification "0 0 0 0 0 0 0 0" is achieved in display zone 1:

- Press ⇒key.

-> Display (function selection):

```
Rapid data transfer      HELP
Select function XX
```

- Interrogate fault memory to check =>Page 6 (there must not be any stored faults).

If specification is not attained:

- Produce the readiness code => Page 37 .

7.3 - Producing the readiness code

Special tools and workshop equipment required

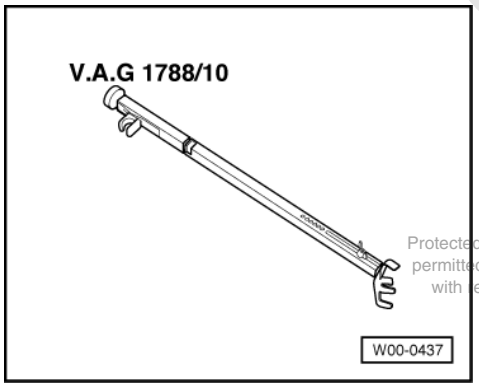

- Engine speed controller V.A.G 1788/10

Protected by copyright. Copying for private or commercial purposes, in part or in whole, is not permitted unless authorised by AUDI AG. AUDI AG does not guarantee or accept any liability with respect to the correctness of information in this document. Copyright by AUDI AG.

Preconditions:

- Vehicle stationary.
- Vehicles with automatic gearbox: Selector lever in position P or N.
- Electrical consumers switched off (radiator fan must not run during the test).
- Air conditioning switched off.
- Coolant temperature at least 80 °C=>display group 004, display zone 3). Important: Warm up engine as far as possible by means of a road test.

Note:

If the test result is immediately displayed as "OK" after selecting a display group during an operation, the test has already been performed and you can continue with the next operation.

Operation 1: Interrogating fault memory

Test conditions

- Engine stopped, ignition switched on

- Connect the vehicle diagnostic, testing and information system VAS 5051 or fault reader V.A.G 1551 and select the engine electronics control unit with "address word" 01 => Page 3 .

-> When adjacent display appears:

```
Rapid data transfer      HELP
Select function XX
```

- Enter "02" for the function "Interrogate fault memory" and confirm entry with Q key.

-> The display shows the number of stored faults or "No fault detected!"

```
X fault(s) detected
```

If a fault is stored:

- Rectify fault and erase the fault memory. Perform a road test and interrogate the fault memory again to check.

If no fault is stored:

- Press ⇒key.

Operation 2: Erasing fault memory

Test conditions

Protected by copyright. Copying for private or commercial purposes, in part or in whole, is not permitted unless authorised by AUDI AG. AUDI AG does not guarantee or accept any liability with respect to the correctness of information in this document. Copyright by AUDI AG.

- Engine stopped, ignition switched on

-> When adjacent display appears:

```
Rapid data transfer     HELP
Select function XX
```

- Enter "05" for the function "Erase fault memory" and confirm entry with Q key.

Note:

The readiness code is reset when the fault memory is erased and must therefore be reproduced.

-> Indicated on display:

```
Rapid data transfer
Fault memory is erased
```

- Press ⇒key.

Operation 3: Adapting the throttle valve control part to the engine control unit

Test conditions

- Engine stopped, ignition switched on

-> When adjacent display appears:

```
Rapid data transfer     HELP
Select function XX
```

- Enter "04" to select "Start basic setting" and confirm with Q key.

-> When adjacent display appears:

```
Basic setting      Q
Enter display group number XXX
```

- Enter "060" for "display group number 060" and confirm entry with Q key.

-> Indicated on display:

```
System in basic setting     60
     1     2     3     4
```

- Check specification in display zone 4:

	Display zones			
	1	2	3	4
Display group 060: Adaption of throttle valve control part				

	Display zones			
Display	xx %	xx %	x	---
Display	Throttle valve angle (angle sender 1)	Throttle valve angle (angle sender 2)	Learning stage counter	Adaption status
Range	0...100 %	0...100 %	0...8	ADP process running ADP OK ERROR
Specification	3...93 %	97...3 %	8	ADP process OK
Note:			The learning stage counter reaches the number 8 after adaption (some numbers may also be skipped).	If "ERROR" is displayed: Interrogate fault memory => Page 122 .

Note on display zone 3:

During adaption, various digits are displayed in display zone 3 which represent the relevant adaption status. The most crucial factor is not the way in which the learning stage counter (display zone 3) behaves during the adaption process, but that the specification "ADP OK" is displayed after adaption in display zone 4.

If specification "ADP OK" is attained:

- Press C key.

Operation 4: Checking operating status of lambda control

Protected by copyright. Copying for private or commercial purposes, in part or in whole, is not permitted unless authorised by AUDI AG. AUDI AG does not guarantee or accept any liability with respect to the correctness of information in this document. Copyright by AUDI AG.

- Start the engine (for vehicles with manual gearbox: press clutch pedal).

Note:

If necessary, you must reselect the engine control unit with the "address word" 01 and initiate the "basic setting" function after starting the engine.

- Install the engine speed controller V.A.G 1788/10 on the accelerator and increase the engine speed to 2200 rpm.

Test conditions

- Engine running at 2200 rpm.

-> Indicated on display:

```
Basic setting      Q
Enter display group number XXX
```

- Enter "030" for "display group number 030" and confirm entry with Q key.

-> Indicated on display:

```
System in basic setting 30
     1     2     3     4
```

- Check the lambda probe status in display zones 1 to 4.

Note:

It may take a few minutes until the result of the diagnosis is obtained.

	Display zones			
	1	2	3	4
Display group 030: Lambda probe status				
Display	XXX	XXX	XXX	XXX

	Display zones			
Display	Lambda probe status, bank 1, probe 1	Lambda probe status, bank 1, probe 2	Lambda probe status, bank 2, probe 1	Lambda probe status, bank 2, probe 2
Range	0 = off 1 = on	0 = off 1 = on	0 = off 1 = on	0 = off 1 = on
Specification	1 1 1	1 1 0	1 1 1	1 1 0

Significance of 3-digit readout of display group 030			
X	X	X	Display zones 1...4
		X	Lambda control0 = not active, 1 = active
	X		Lambda probe condition: 0 = not active; 1 = active
X			Condition of lambda probe heating: 0 = not active; 1 = active

Notes:

- The first digit of the 3-digit display (heating) fluctuates between 0 and 1 at certain operating points.
- The lambda control for lambda probes after catalytic converter (bank 1, probe 2 and bank 2, probe 2) is not active without engine load, i.e. the last digit of the 3-digit display is 0.

- Only continue the test when the displays have achieved "111" in display zones 1 and 3 and "110" in display zones 2 and 4.

Protected by copyright. Copying for private or commercial purposes, in part or in whole, is not permitted unless authorised by AUDI AG. AUDI AG does not guarantee or accept any liability with respect to the correctness of information in this document. Copyright by AUDI AG.

Operation 5: Diagnosis of lambda probe ageing before catalytic converter

- Press C key.

Test conditions

- Engine continues to run at 2200 rpm.

-> When adjacent display appears:

```
Basic setting      Q
Enter display group number XXX
```

- Enter "034" for "display group number 034" and confirm entry with Q key.

-> Indicated on display:

```
System in basic setting 34
     1     2     3     4
```

- Check specification in display zone 4:

Note:

It may take a few minutes until the result of the diagnosis is obtained.

	Display zones			
	1	2	3	4
Display group 034:Diagnosis of lambda probe ageing, lambda probe before catalytic converter (bank 1)				
Display	xxxx rpm	xxx °C	x.x s	---
Display	Engine speed	Exhaust gas temperature	Period Lambda probe before catalytic converter	Diagnosis status
Range	670...6800 rpm	70...850 °C	0...3.0 s	Test OFF Test ON B1-P1 OK B1-P1 NOK

	Display zones			
Specification	2200 rpm	Above 380 °C	0.1...1.8 s	B1-P1 OK
Note:				**If "B1-P1 NOK" is displayed: Interrogate fault memory => Page 6 .**

If specification "B1-P1 OK" is obtained:

- Press C key.

-> When adjacent display appears:

```
Basic setting      Q
Enter display group number XXX
```

Protected by copyright. Copying for private or commercial purposes, in part or in whole, is not permitted unless authorised by AUDI AG. AUDI AG does not guarantee or accept any liability with respect to the correctness of information in this document. Copyright by AUDI AG.

- Enter "035" for "display group number 035" and confirm entry with Q key.

-> Indicated on display:

```
System in basic setting     35
     1     2     3     4
```

- Check specification in display zone 4:

	Display zones			
	1	2	3	4
Display group 035:Diagnosis of lambda probe ageing, lambda probe before catalytic converter (bank 2)				
Display	xxxx rpm	xxx °C	x.x s	---
Display	Engine speed	Exhaust gas temperature	Period Lambda probe before catalytic converter	Diagnosis status
Range	670...6800 rpm	70...850 °C	0...3.0 s	Test OFF Test ON B2-P1 OK B2-P1 NOK
Specification	2200 rpm	Above 380 °C	0.1...1.8 s	B2-P1 OK
Note:				**If "B2-P1 NOK" is displayed: Interrogate fault memory => Page 6 .**

If specification "B2-P1 OK" is attained:

- Press C key.

Operation 6: Diagnosis of lambda probe condition after catalytic converter

Test conditions

- Engine continues to run at 2200 rpm.

-> Indicated on display:

```
Basic setting      Q
Enter display group number XXX
```

- Enter "036" for "display group number 036" and confirm entry with Q key.

-> Indicated on display:

```
System in basic setting     36
     1     2     3     4
```

- Check specifications in display zones 2 and 4:

	Display zones			
	1	2	3	4
Display group 036:Condition of lambda probe after catalytic converter (banks 1 and 2)				
Display	x.xxx V	---	x.xxx V	---
Display	Voltage of lambda probe after catalytic converter, bank 1	**Diagnosis status**	Voltage of lambda probe after catalytic converter, bank 2	**Diagnosis status**
Range	0.100...1.000 V	**Test OFF Test ON B1-P2 OK B1-P2 NOK**	0.100...1.000 V	**Test OFF Test ON B2-P2 OK B2-P2 NOK**
Specification	less than 0.4 V or greater than 0.5 V	**B1-P2 OK**	less than 0.4 V or greater than 0.5 V	**B2-P2 OK**
Note:		**If "B1-S2 NOK" is displayed: Interrogate fault memory => Page 6 .**		**If "B2-S2 NOK" is displayed: Interrogate fault memory => Page 6 .**

If specifications are attained:

- Press C key.

Operation 7: Diagnosis of lambda control system

Test conditions

- Engine continues to run at 2200 rpm.

-> Indicated on display:

```
Basic setting      Q
Enter display group number XXX
```

- Enter "037" for "display group number 037" and confirm entry with Q key.

-> Indicated on display:

```
System in basic setting     37
     1     2     3     4
```

- Check specification in display zone 4:

Reproduction, copyright or other protection of commercial purposes, in part or in whole, is not permitted unless authorised by AUDI AG. AUDI AG does not guarantee or accept any liability with respect to the correctness of information in this document. Copyright by AUDI AG.

	Display zones			
	1	2	3	4
Display group 037: Lambda control system diagnosis (bank 1)				
Display	xxx %	x.xxx Volt	xxx ms	---
Display	Load	Voltage of lambda probe after catalytic converter, bank 1	Lambda correction value between probes 1 and 2 (bank 1)	Diagnosis status
Range	7...175 %	0.100...1.000 V	-800...800 ms	**Test OFF Test ON Syst. OK Syst. NOK**
Specification	12...26 %	0.100...1.000 V	-800...800 ms	Syst. OK

	Display zones			
Note:				**If "Syst. NOK" is displayed: Interrogate fault memory => Page 6 .**

If specification "Syst. OK" is attained:

- Press C key.

-> Indicated on display:

```
Basic setting      Q
Enter display group number XXX
```

- Enter "038" for "display group number 038" and confirm entry with Q key.

-> Indicated on display:

```
System in basic setting     38
     1     2     3     4
```

- Check specification in display zone 4:

Protected by copyright. Copying for private or commercial purposes, in part or in whole, is not permitted unless authorised by AUDI AG. AUDI AG does not guarantee or accept any liability with respect to the correctness of information in this document. Copyright by AUDI AG.

	Display zones			
	1	2	3	4
Display group 038: Lambda control system diagnosis (bank 2)				
Display	xxx %	x.xxx Volt	xxx ms	---
Display	Load	Voltage of lambda probe after catalytic converter, bank 2	Lambda correction value between probes 1 and 2 (bank 2)	Diagnosis status
Range	7...175 %	0.100...1.000 V	-800...800 ms	**Test OFF Test ON Syst. OK Syst. NOK**
Specification	12...26 %	0.100...1.000 V	-800...800 ms	Syst. OK
Note:				**If "Syst. NOK" is displayed: Interrogate fault memory => Page 6 .**

Note:

If there are considerable differences in the lambda correction values (display zones 3) between cylinder bank 1 (display group 37) and cylinder bank 2 (display group 38) (e.g. +500 ms in display groups 37 and -500 ms in display group 38), check that the post-catalytic converter probes of the respective cylinder bank have not been interchanged.

If specification "Syst. OK" is attained:

- Press C key.

Operation 8: Diagnosis of lambda probe ageing after catalytic converter

Test conditions

- Engine continues to run at 2200 rpm.

-> Indicated on display:

```
Basic setting      Q
Enter display group number XXX
```

- Enter "043" for "display group number 043" and confirm entry with Q key.

-> Indicated on display:

```
System in basic setting      43
     1     2     3     4
```

- Check specification in display zone 4:

	Display zones			
	1	2	3	4
Display group 043:Diagnosis of lambda probe ageing, lambda probe after catalytic converter (bank 1)				
Display	xxxx rpm	xxx °C	x.x s	---
Display	Engine speed	Exhaust gas temperature	Voltage of lambda probe after catalytic converter, bank 1	Diagnosis status
Range	750...6800 rpm	70...850 °C	0.100...1.000 V	Test OFF Test ON B1-P2 OK B1-P2 NOK
Specification	2200 rpm	Greater than 380 °C	0.100...1.000 V	B1-P2 OK
Note:				**If "B1-S2 NOK" is displayed: Interrogate fault memory => Page 6 .**

Protected by copyright. Copying for private or commercial purposes, in part or in whole, is not permitted unless authorised by AUDI AG. AUDI AG does not guarantee or accept any liability with respect to the correctness of information in this document. Copyright by AUDI AG.

If specification "B1-P2 OK" is attained:

- Press C key.

-> Indicated on display:

```
Basic setting      Q
Enter display group number XXX
```

- Enter "044" for "display group number 044" and confirm entry with Q key.

-> Indicated on display:

```
System in basic setting      44
     1     2     3     4
```

- Check specification in display zone 4:

	Display zones			
	1	2	3	4
Display group 044:Diagnosis of lambda probe ageing, lambda probe after catalytic converter (bank 2)				
Display	xxxx rpm	xxx °C	x.x s	---
Display	Engine speed	Exhaust gas temperature	Voltage of lambda probe after catalytic converter, bank 2	Diagnosis status
Range	750...6800 rpm	70...850 °C	0.100...1.000 V	Test OFF Test ON B2-P2 OK B2-P2 NOK
Specification	2200 rpm	Above 380 °C	0.100...1.000 V	B2-P2 OK
Note:				**If "B2-S2 NOK" is displayed: Interrogate fault memory => Page 6 .**

If specification "B2-P2 OK" is attained:

- Press C key.

Operation 9: Catalytic converter diagnosis

Test conditions

- Engine continues to run at 2200 rpm.

-> Indicated on display:

```
Basic setting      Q
Enter display group number XXX
```

- Enter "046" for "display group number 046" and confirm entry with Q key.

Protected by copyright. Copying for private or commercial purposes, in part or in whole, is not permitted unless authorised by AUDI AG. AUDI AG does not guarantee or accept any liability with respect to the correctness of information in this document. Copyright by AUDI AG.

-> Indicated on display:

```
System in basic setting     46
     1     2     3     4
```

- Check specification in display zone 4:

Note:

The test duration for the catalytic converter diagnosis is approx. 60 seconds.

	Display zones			
	1	2	3	4
Display group 046:Catalytic converter diagnosis (bank 1)				
Display	xxxx rpm	xxx °C	x.xx	---
Display	Engine speed	Exhaust gas temperature	Measurement Catalytic conversion	Diagnosis status
Range	750...6800 rpm	70...850 °C		Test OFF Test ON Cat. B1 OK Cat. B1 NOK
Specification	2200 rpm	Above 420 °C		Cat. B1 OK
Note:				**If "Cat. B1 NOK" is displayed: Interrogate fault memory => Page 6 . If no fault is stored, replace the catalytic converter.**

If specification "Cat. B1 OK" is attained:

- Press C key.

-> Indicated on display:

```
Basic setting      Q
Enter display group number XXX
```

- Enter "047" for "display group number 047" and confirm entry with Q key.

-> Indicated on display:

```
System in basic setting     47
     1     2     3     4
```

- Check specification in display zone 4:

	Display zones			
	1	2	3	4

	Display zones			
Display group 047:Catalytic converter diagnosis (bank 2)				
Display	xxxx rpm	xxx °C	x.xx	---
Display	Engine speed	Exhaust gas temperature	Measurement Catalytic conversion	Diagnosis status
Range	750...6800 rpm	70...850 °C		Test OFF Test ON Cat. B2 OK Cat. B2 NOK
Specification	2200 rpm	Above 420 °C		Cat. B2 OK
Note:				**If "Cat. B2 NOK" is displayed: Interrogate fault memory => Page 6 . If no fault is stored, replace the catalytic converter.**

If specification "Cat. B2 OK" is attained:

- Press C key.

Operation 10: Diagnosis of fuel tank breather valve

Test conditions

Protected by copyright. Copying for private or commercial purposes, in part or in whole, is not permitted unless authorised by AUDI AG. AUDI AG does not guarantee or accept any liability with respect to the correctness of information in this document. Copyright by AUDI AG.

- Engine running at idling speed

-> Indicated on display:

```
Basic setting      Q
Enter display group number XXX
```

- Enter "070" for "display group number 070" and confirm entry with Q key.

-> Indicated on display:

```
System in basic setting     70
     1     2     3     4
```

- Check specification in display zone 4:

Note:

If the test is not initiated or the display jumps from "Test ON" to "Test OFF", accelerate briefly to repeat the test.

	Display zones			
	1	2	3	4
Display group 070:Diagnosis of fuel tank breather valve				
Display	xx %	xx %	x.xx g/s	---
Display	Opening angle of fuel tank breather valve	Lambda control Diagnosis value	Idling speed control deviation	**Diagnosis status**
Range	0...99 %			**Test OFF Test ON FTBV OK FTBV NOK Cancel**
Specification	0...99 %			**FTBV OK**
Note:				**If "FTBV NOK" is displayed: Interrogate fault memory => Page 115 .**

If specification "FTBV OK" is attained:

- Press ⇒key.

-> Indicated on display (function selection):

```
Rapid data transfer      HELP
Select function XX
```

Operation 11: Reading out the readiness code

- Read out the readiness code => Page 35 .

Protected by copyright. Copying for private or commercial purposes, in part or in whole, is not permitted unless authorised by AUDI AG. AUDI AG does not guarantee or accept any liability with respect to the correctness of information in this document. Copyright by AUDI AG.

24 - Mixture preparation, Injection

1 - Servicing Motronic injection system

1.1 - Servicing Motronic injection system

1.2 - Safety precautions

Note the following points if testers and measuring instruments have to be used during a road test:

- Testers and measuring instruments must always be secured to the rear seat and operated by a 2nd person from this location.

  If test equipment were operated from the front passenger seat, the person sitting there could be injured if the front passenger airbag were triggered in the event of an accident.

Important:
Secure fault reader to the rear seat and operate from this location.

Protected by copyright. Copying for private or commercial purposes, in part or in whole, is not permitted unless authorised by AUDI AG. AUDI AG does not guarantee or accept any liability with respect to the correctness of information in this document. Copyright by AUDI AG.

To prevent injuries to persons and/or damage to the fuel injection and ignition system, the following must be noted:

- Always switch off the ignition before connecting or disconnecting injection or ignition system wiring or tester cables.

- To run engine at starting speed without actually starting it (for example, in order to test compression), unplug connector from the output stages of the ignition coils and also the connectors on the injectors.
- During certain tests it is possible that faults are detected and stored by the control unit. At the end of all tests and repairs, therefore, the fault memory should be interrogated and, if necessary, erased.
- Always switch off the ignition before washing the engine.
- Always switch off the ignition before connecting or disconnecting the battery, otherwise the engine control unit may be damaged.

Important:
The fuel system is pressurised! Before loosening hose connections or opening the test connection (to measure fuel pressure), place a cloth around the connection. Then release pressure by carefully loosening the connection.

1.3 - Rules for cleanliness

When working on the fuel supply/injection system, pay careful attention to the following 6 cleanliness rules:

- Thoroughly clean all unions and the adjacent areas before disconnecting.
- Place removed parts on a clean surface and cover. Use lint-free cloths.
- Carefully cover or seal open components if repairs cannot be carried out immediately.
- Only install clean components:
  Only remove replacement parts from packaging immediately prior to installation.
  Do not use parts that have been stored loose (e.g. in toolboxes etc.).
- When the system is open:
  Do not work with compressed air if this can be avoided.
  Do not move vehicle unless absolutely necessary.
- Separated electrical connections:
  Protect from dirt and moisture.

Ensure that connections are dry when connecting.

1.4 - Technical data

Engine code letters	**AGB (2.7 ltr. V6/5V / 195 kW biturbo engine / without secondary air inlet / satisfies emission standard Euro II-D3) AZB (2.7 ltr. V6/5V / 195 kW biturbo engine / without secondary air inlet / satisfies emission standard Euro III) 2)**	
Idling speed Not adjustable - controlled by the idling speed stabilisation	750...850 rpm	
Engine speed limitation by deactivation of injectors	approx. 6800 rpm	
Fuel pressure at idling speed	Vacuum hose connected	approx. 3.5 bar
	Vacuum hose disconnected	approx. 4 bar
Holding pressure after 10 minutes	at least 2.5 bar	
Injectors	Spray pattern	Same for all injectors
	Injection quantity (30s)	135...165 ml
	Resistance (room temperature) 1)	13.5...15.5 ω

1) When the engine is at operating temperature the resistance of the injectors is increased by approx. 4...6 ω.

2) The "AZB" engine satisfies the EU III emission standard without secondary air inlet.

1.5 - Fitting locations overview

Components A to H are not shown in the following exploded views.

A - Brake light switch (F) and brake pedal switch (F47)

- In footwell at pedal bracket near brake pedal (incorrect adjustment of or defects in the brake light/brake pedal switch may lead to reduced engine power)

B - Diagnosis plug

- In rear ashtray on central console

C - Fuel pump relay

- At relay position 4 of the central electronics beneath dash panel

D - Clutch pedal switch (F36)

- In footwell on pedal bracket near brake pedal

E - Sender for accelerator position (G79) and sender 2 for accelerator position (G185)

- In footwell on accelerator pedal (both senders are accommodated in one housing)

F - "EPC" warning lamp

- In dash panel insert (significance of lamp =>Page 119

G - Bank 1, lambda probe 2 -G130 with lambda probe heating-Z29

- This lambda probe is accessible from below after raising vehicle.

H - Bank 2, lambda probe 2 -G131 with lambda probe heating-Z30

Protected by copyright. Copying for private or commercial purposes, in part or in whole, is not permitted unless authorised by AUDI AG. AUDI AG does not guarantee or accept any liability with respect to the correctness of information in this document. Copyright by AUDI AG.

- This lambda probe is accessible from below after raising vehicle.

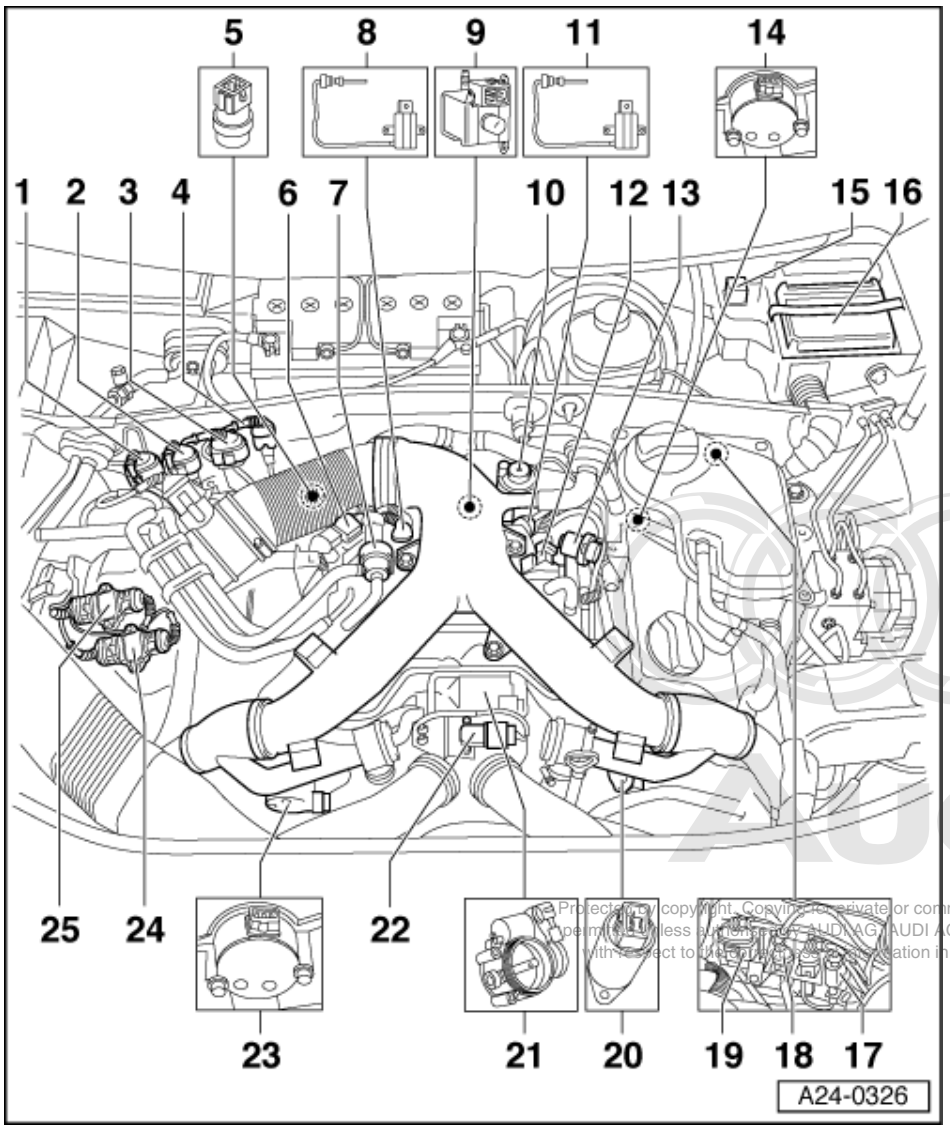

Protected by copyright. Copying for private or commercial purposes, in part or in whole, is not permitted unless authorized by AUDI AG. AUDI AG does not guarantee or accept any liability with respect to the correctness of information in this document. Copyright by AUDI AG.

1 Connector for bank 1, lambda probe 2 -G130 and lambda probe heating -Z29
- 4-pin/green

2 Connector for bank 2, lambda probe 2 -G131 and lambda probe heating -Z30
- 4-pin/brown

3 Connector for bank 1, lambda probe 1 -G39 and lambda probe heating -Z19
- 4-pin/black

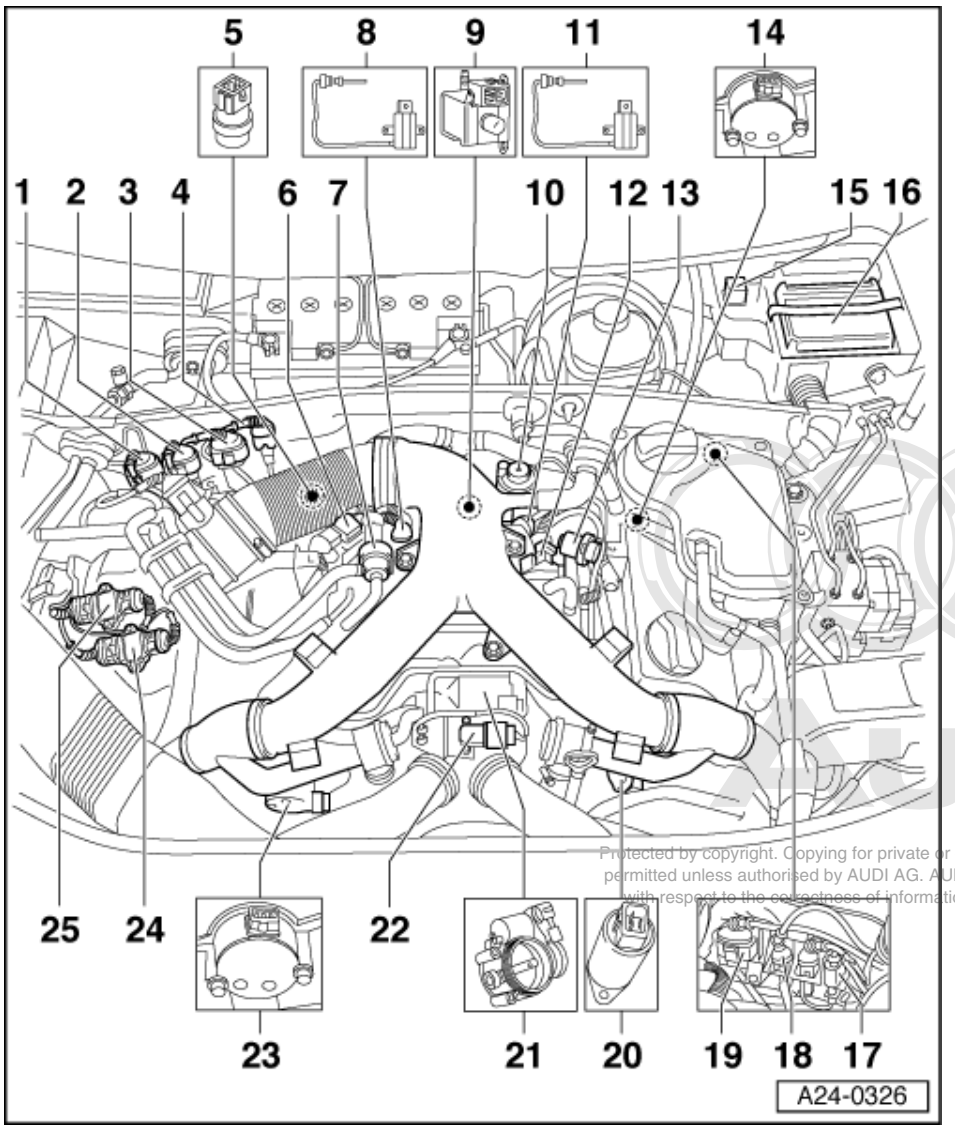

Protected by copyright. Copying for private or commercial purposes, in part or in whole, is not permitted unless authorised by AUDI AG. AUDI AG does not guarantee or accept any liability with respect to the correctness of information in this document. Copyright by AUDI AG.

4 3-pin connector

- For knock sensor 1 (G61)

5 Coolant temperature sender (G62)

- On coolant pipe behind cylinder head, bank 1

6 Solenoid valve for boost pressure limitation (N75)

7 Activated charcoal filter solenoid valve 1 (N80)

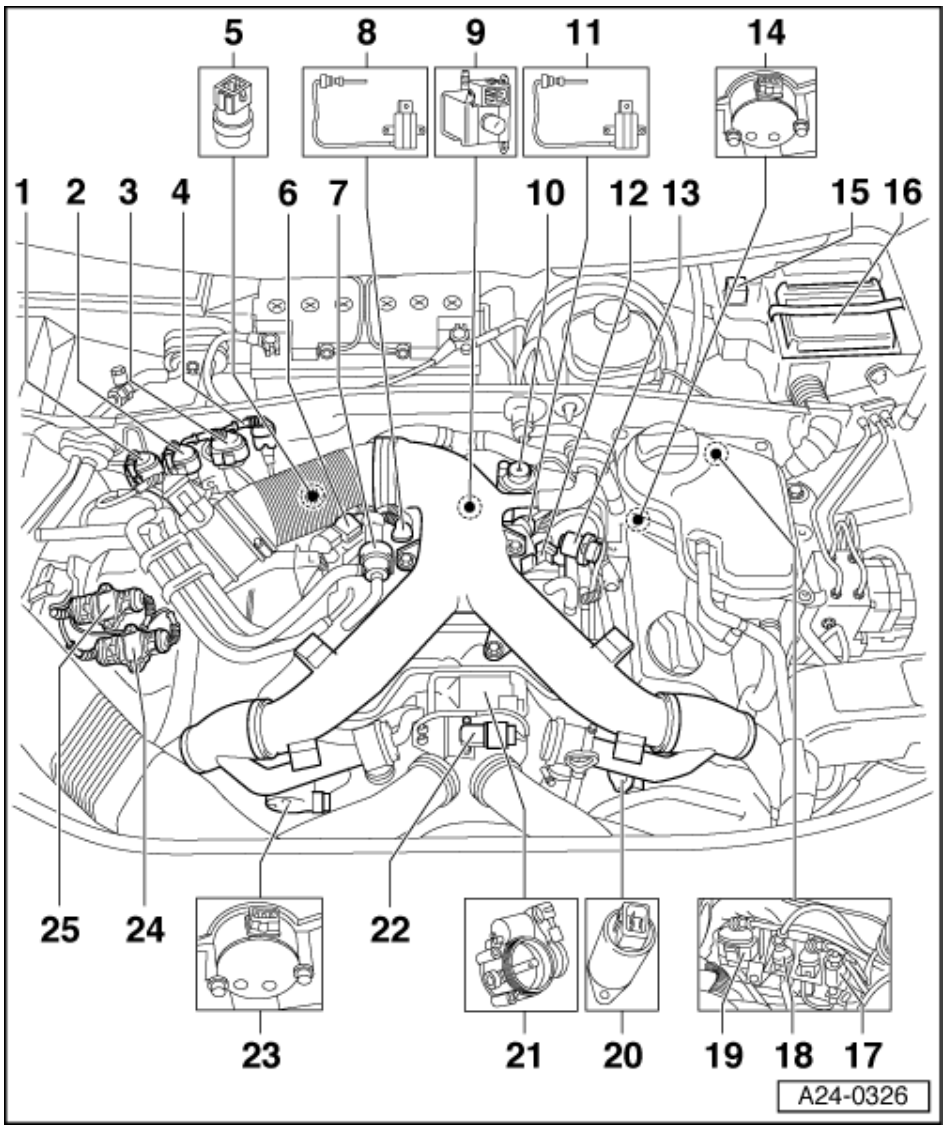

8 Exhaust gas temperature sensor 1 (G235)

- At rear left of intake manifold (viewed from inside of engine compartment); for vehicles which fulfil the EU III standard, sender 2 for exhaust gas temperature (G236) is also located at this position, see Page 59 .

9 Checking secondary air inlet valve -N112

- Not available for this engine

Protected by copyright. Copying for private or commercial purposes, in part or in whole, is not permitted unless authorised by AUDI AG. AUDI AG does not guarantee or accept any liability with respect to the correctness of information in this document. Copyright by AUDI AG.

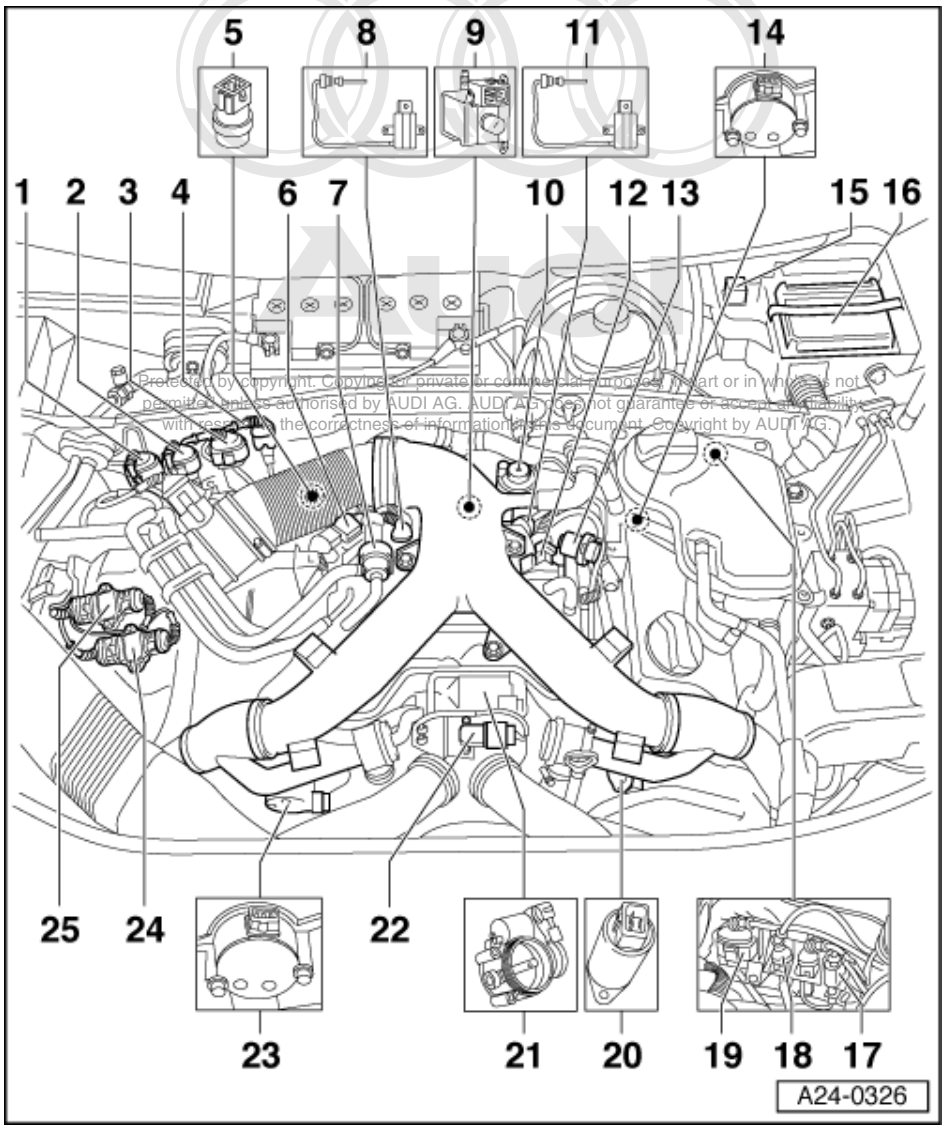

Protected by copyright. Copying for private or commercial purposes, in part or in whole, is not permitted unless authorised by AUDI AG. AUDI AG does not guarantee or accept any liability with respect to the correctness of information in this document. Copyright by AUDI AG.

10 Secondary air pump motor -V101

- Not available for this engine

11 Exhaust gas temperature sensor 2 (G235)

- For vehicles which fulfil the EU III emission standard, this sender is located together with sender 1 for exhaust gas temperature (G235) at position -8-. Both senders are then arranged consecutively, see Page 59 .

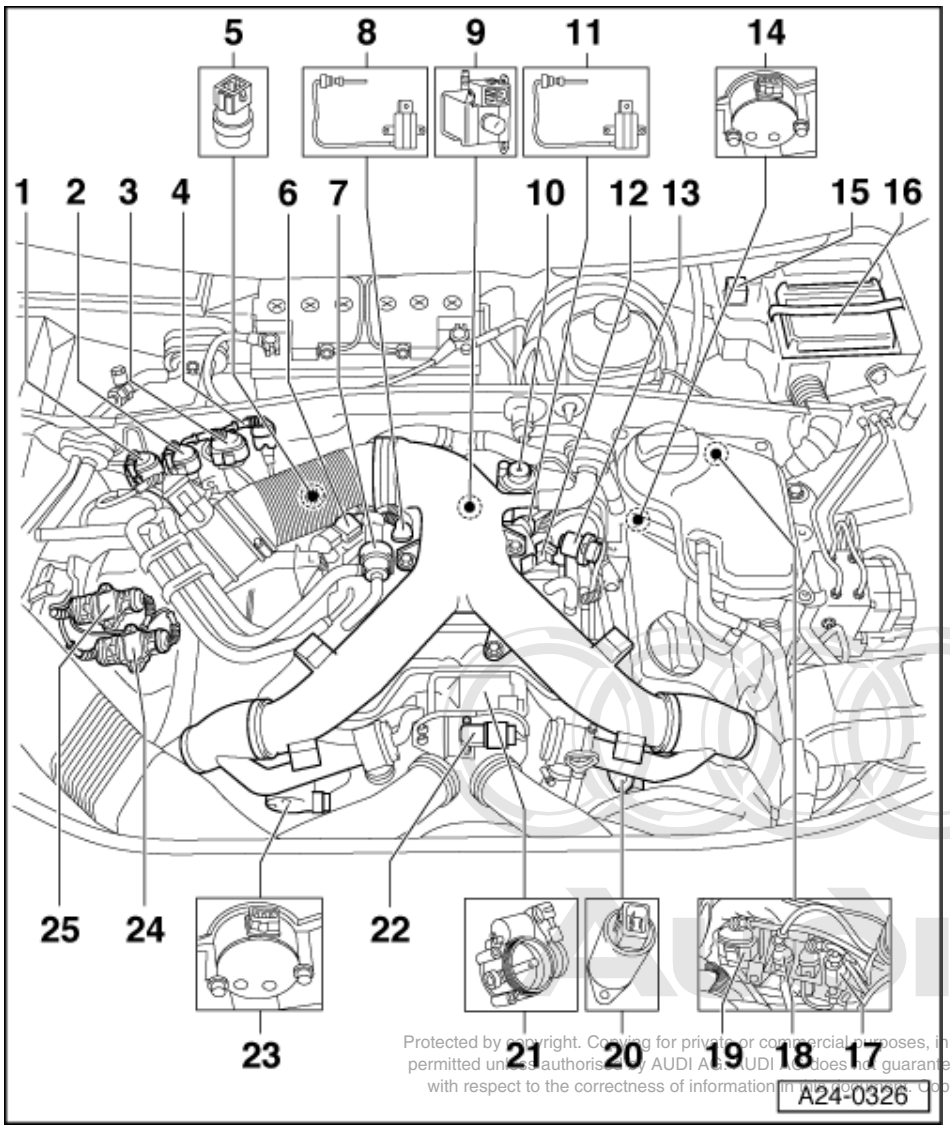

Protected by copyright. Copying for private or commercial purposes, in part or in whole, is not permitted unless authorised by AUDI AG. AUDI AG does not guarantee or accept any liability with respect to the correctness of information in this document. Copyright by AUDI AG.

12 Air recirculation valve for turbocharger (N249)

13 Fuel pressure regulator

14 Hall sender (G163)

- Cylinder bank 2

15 Secondary air pump relay (J299)

- Not available for this engine

16 Engine control unit (J220)

17 3-pin connector

- For engine speed sender (G28)
- Grey

18 3-pin connector

- For knock sensor 2 (G66)

19 Connector for bank 2, lambda probe 1 -G108 and lambda probe heating -Z28

- 4-pin/black

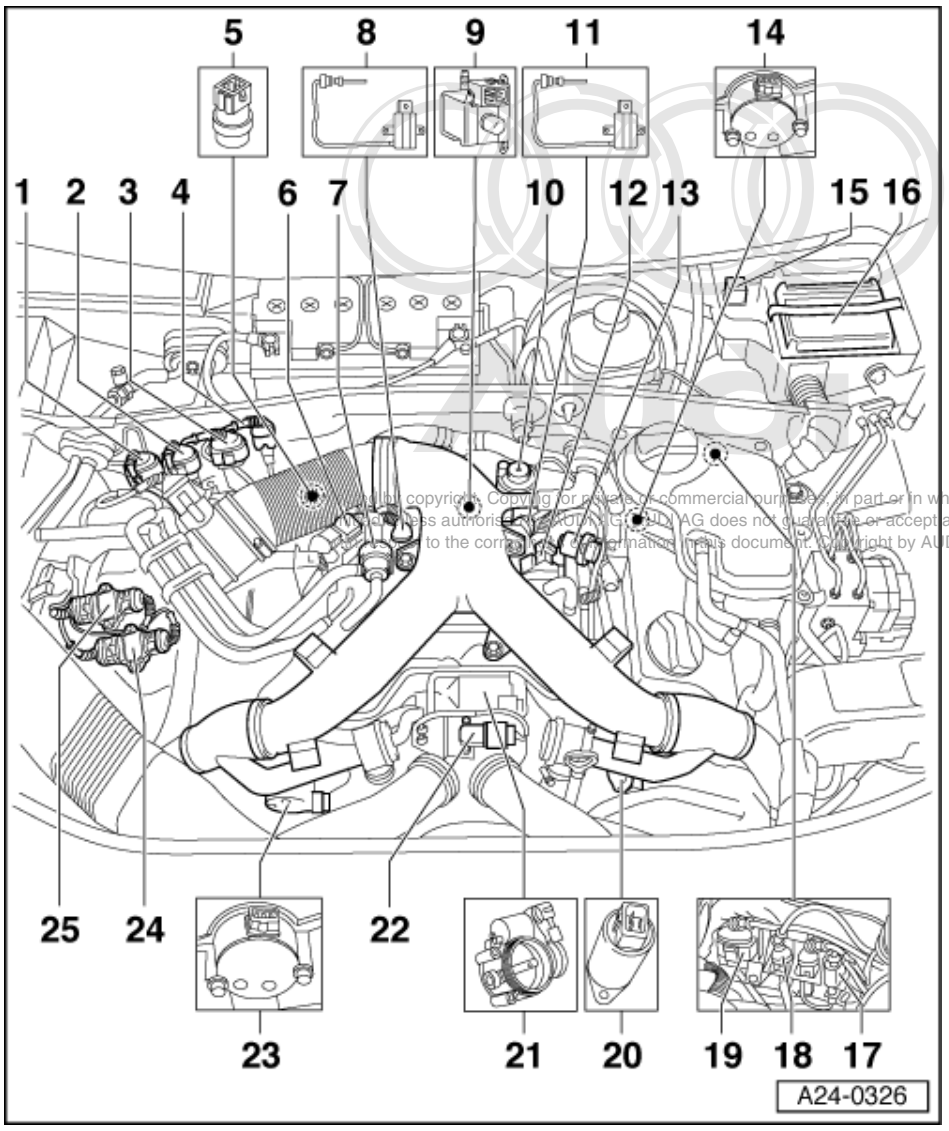

...ght by copyright. Copying for private or commercial purposes, in part or in whole, is not ...ermitted unless authorised by AUDI AG. AUDI AG does not guarantee or accept any liability ... to the correctness of information in this document. Copyright by AUDI AG.

20 Valve 2 for camshaft adjustment (N208)

21 Throttle valve control part (J338)

- With throttle valve actuator (G186), angle sender for throttle valve actuator (G187) and angle sender 2 for throttle valve actuator (G188)

22 Boost pressure sender -G31

- In rubber piece in front of the throttle valve control part

23 Hall sender (G40)

- Cylinder bank 1

24 Output stage 2 (N192)

- For ignition coils, cylinder bank 2

25 Output stage (N122)

- For ignition coils, cylinder bank 1

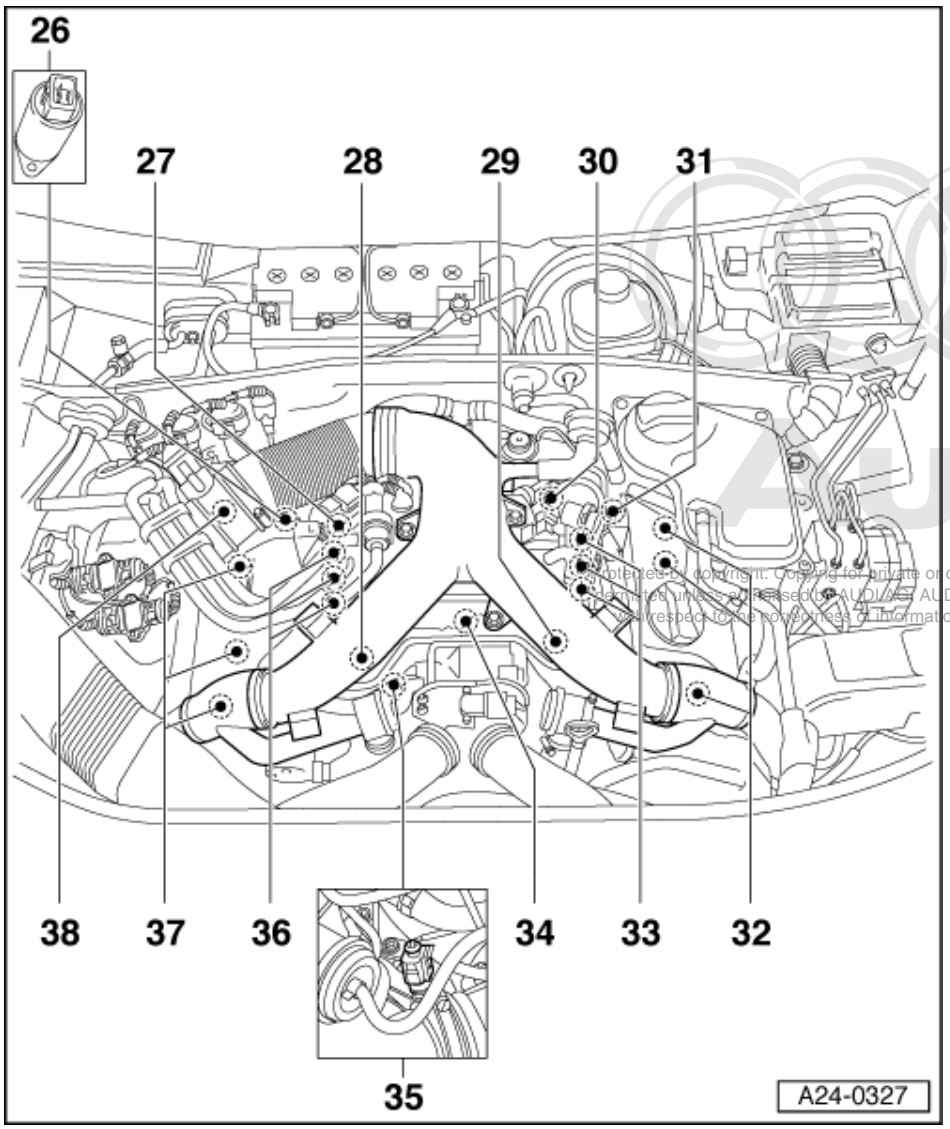

Protected by copyright. Copying for private or commercial purposes, in part or in whole, is not permitted unless authorised by AUDI AG. AUDI AG does not guarantee or accept any liability with respect to the correctness of information in this document. Copyright by AUDI AG.

26 Valve 1 for camshaft adjustment (N205)

27 Bank 1, lambda probe 1 -G39 with lambda probe heating -Z19

28 Knock sensor 1 (G61)

29 Knock sensor 2 (G66)

30 Engine speed sender (G28)

- In gearbox casing above sender disc

31 Bank 2, lambda probe 1 -G108 with lambda probe heating -Z28

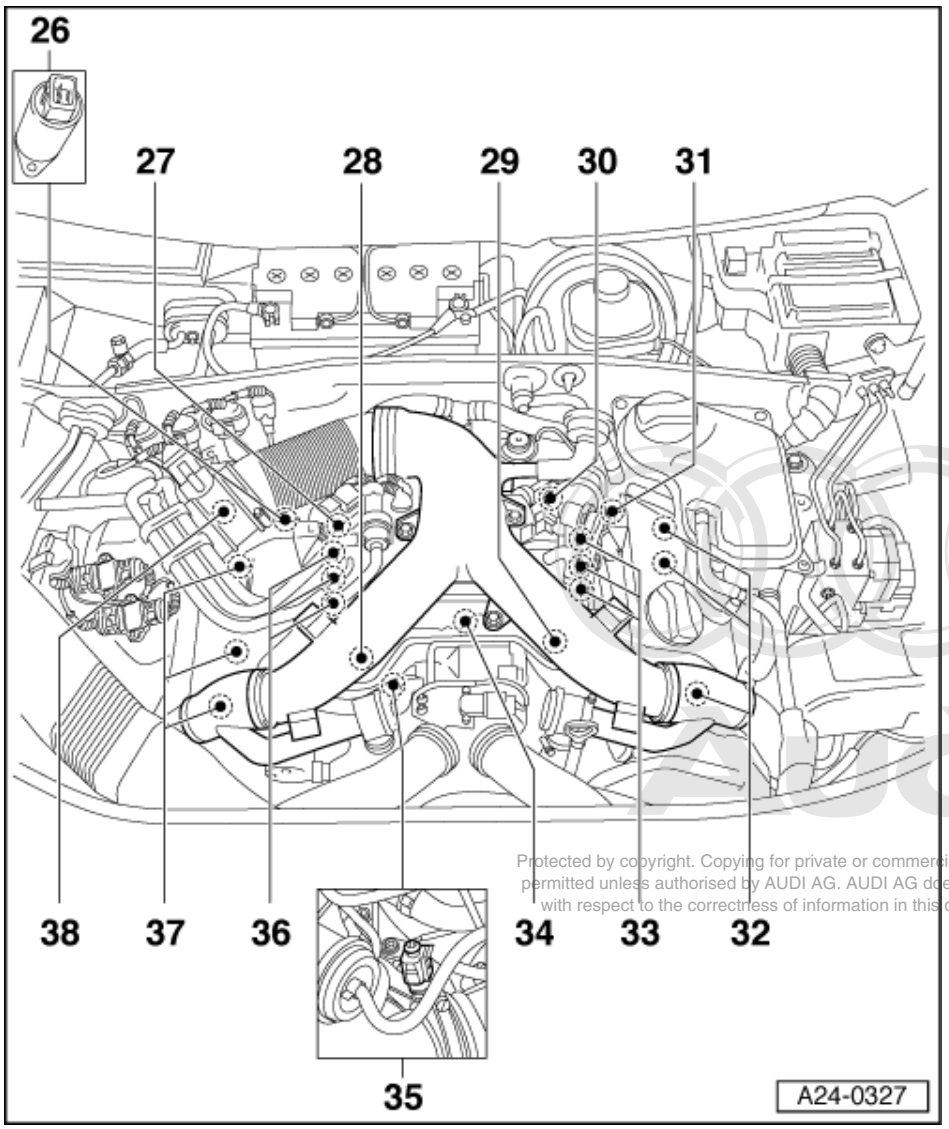

Protected by copyright. Copying for private or commercial purposes, in part or in whole, is not permitted unless authorised by AUDI AG. AUDI AG does not guarantee or accept any liability with respect to the correctness of information in this document. Copyright by AUDI AG.

32 Ignition coils, cylinder bank 2

- Cylinder 4 -N163
- Cylinder 5 -N164
- Cylinder 6 -N189

33 Injectors

- Cylinder bank 2
  Cylinder 4 (N33)
  Cylinder 5 (N83)
  Cylinder 6 (N84)

34 Intake air temperature sender (G42)

- Under the intake manifold at the front, near the throttle control unit

35 2-pin connector

- For intake air temperature sender (measurements to be carried out at this connector)

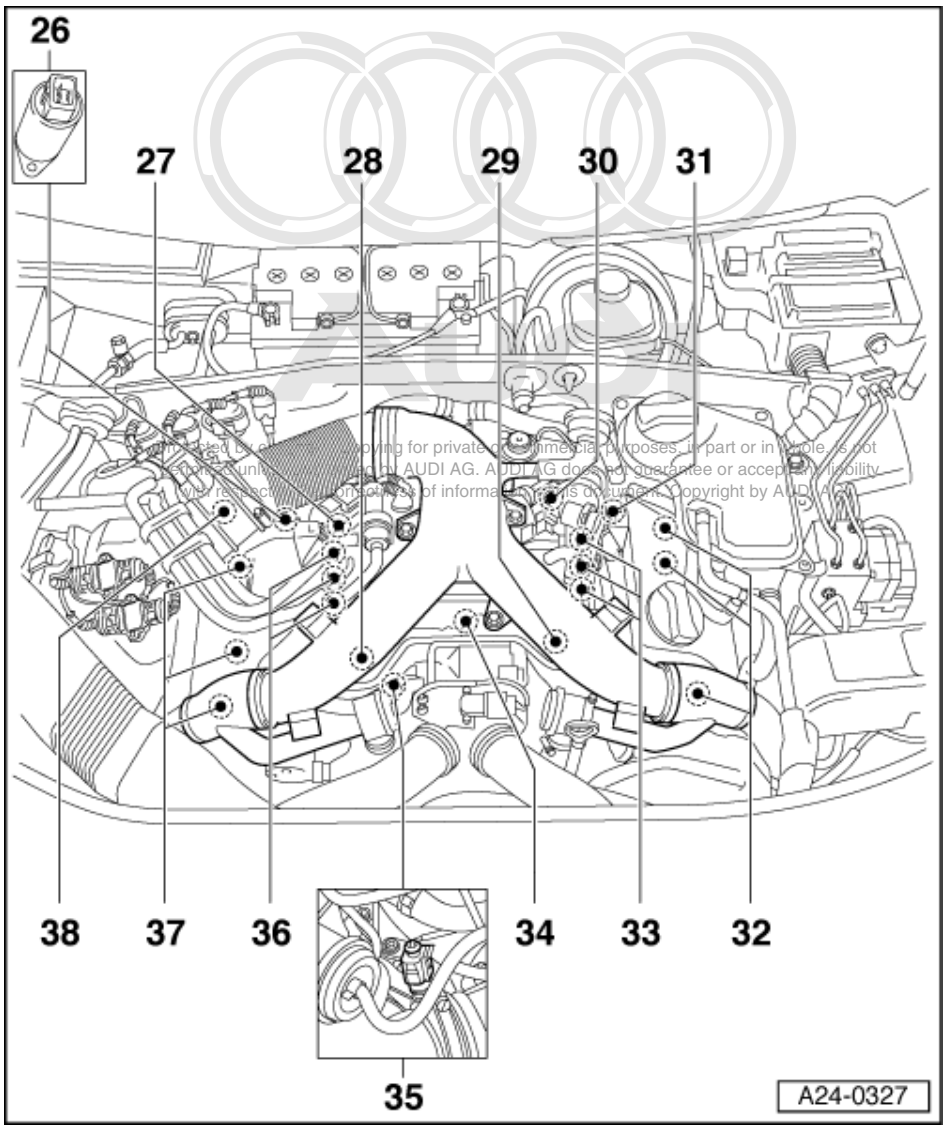

36 Injectors

- Cylinder bank 1
  Cylinder 1 (N30)
  Cylinder 2 (N31)
  Cylinder 3 (N32)

37 Ignition coils, cylinder bank 1

- Cylinder 1 -N
- Cylinder 2 -N128
- Cylinder 3 -N158

38 Air mass meter (G70)

Fitting location of exhaust gas temperature sender

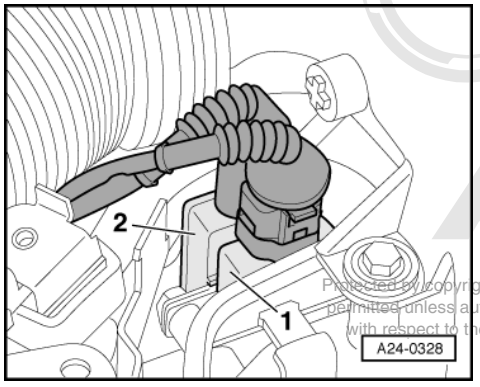

Protected by copyright. Copying for private or commercial purposes, in part or in whole, is not permitted unless authorised by AUDI AG. AUDI AG does not guarantee or accept any liability with respect to the correctness of information in this document. Copyright by AUDI AG.

-> Fig.1 Fitting location of exhaust gas temperature sender in vehicles which fulfil EU-III emission standard.

-1- = Exhaust gas temperature sender -G235

-2- = Exhaust gas temperature sender -G236

1.6 - Removing and installing intake manifold

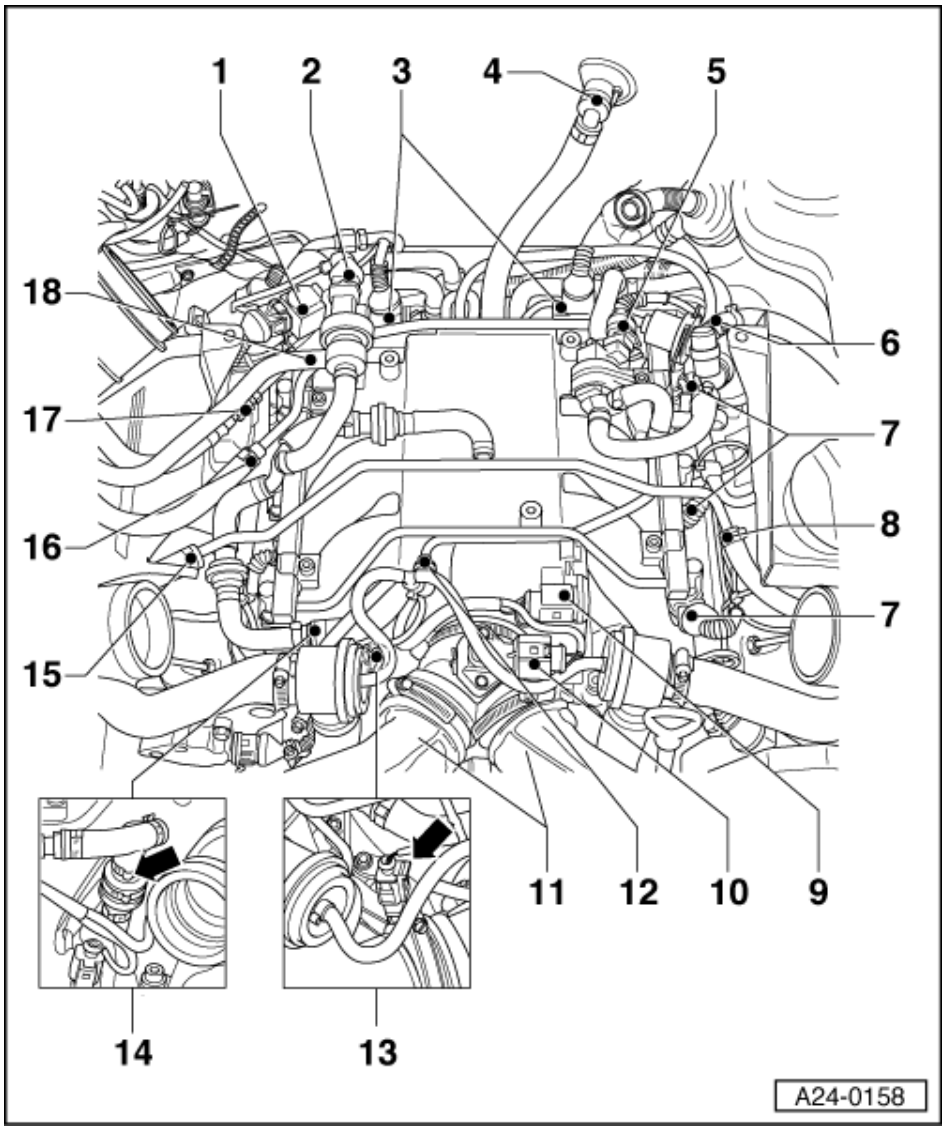

Note:

Further steps may be necessary depending on version, these will be included in the procedure.

- Remove air duct =>Page 76 .

1 Unclip solenoid valve for boost pressure limitation (N75) from fuel rail.

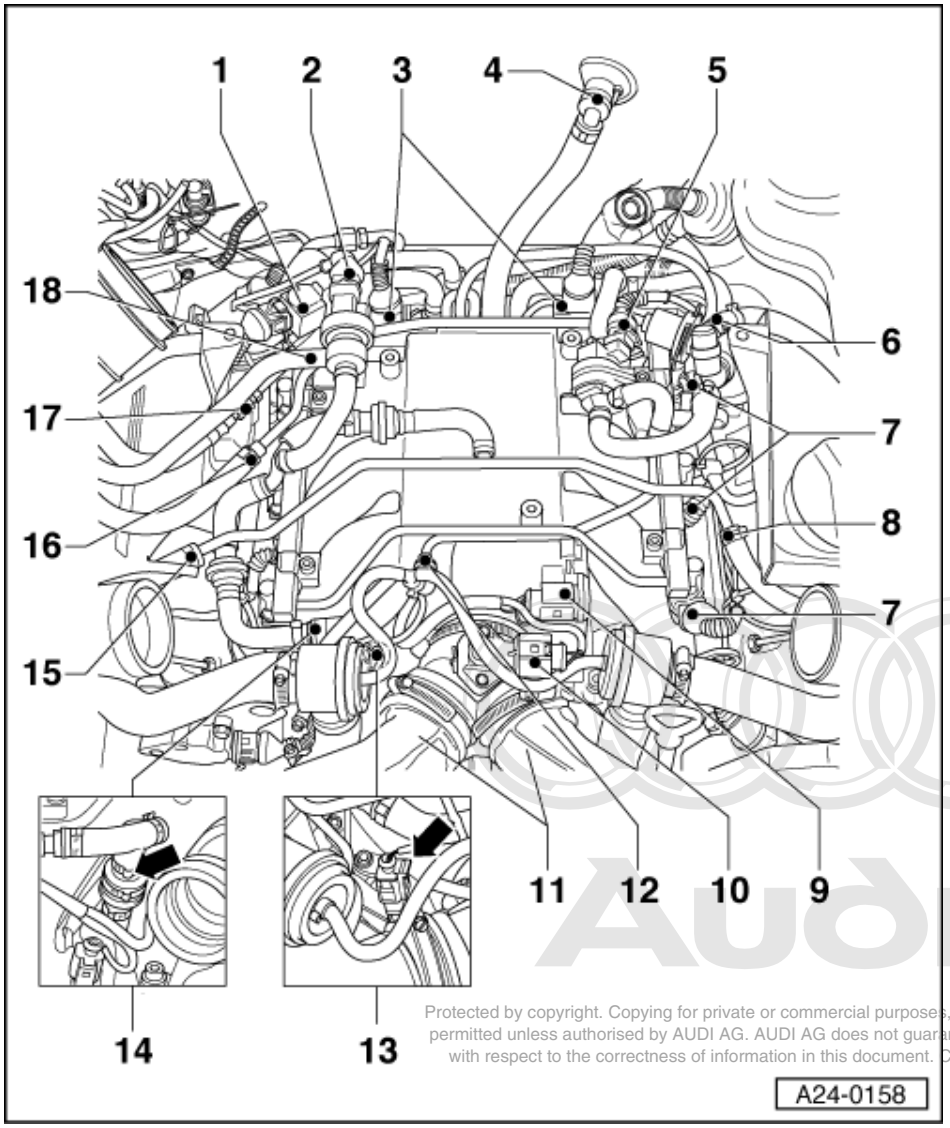

Protected by copyright. Copying for private or commercial purposes, in part or in whole, is not permitted unless authorised by AUDI AG. AUDI AG does not guarantee or accept any liability with respect to the correctness of information in this document. Copyright by AUDI AG.

2 Disconnect connector on solenoid valve 1 for activated charcoal filter (N80).

3 Detach both exhaust gas temperature senders (G235, G236) from intake manifold (on right of vehicle). The senders must remain connected. When re-installing, make sure that earth wires are firmly seated.

4 Detach brake servo hose from bulkhead.

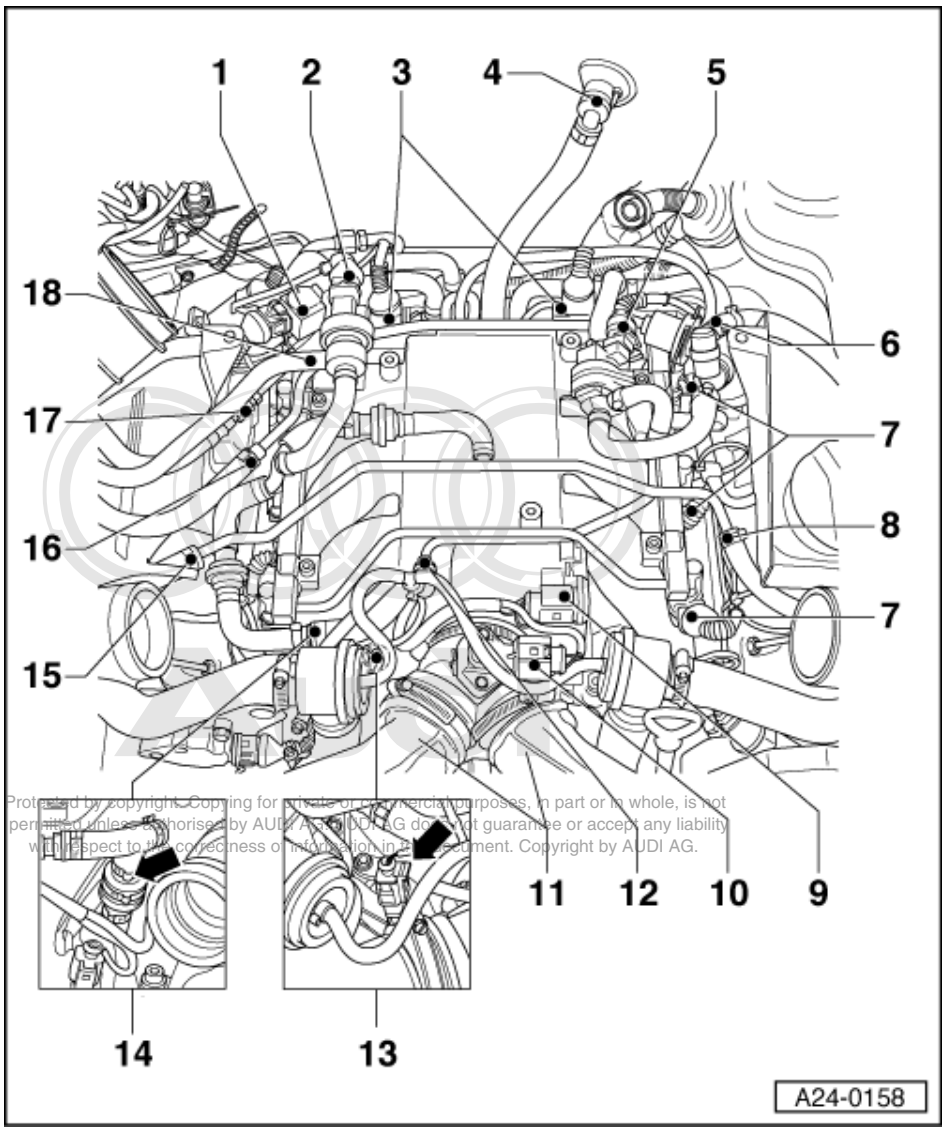

Protected by copyright. Copying for private or commercial purposes, in part or in whole, is not permitted unless authorised by AUDI AG. AUDI AG does not guarantee or accept any liability with respect to the correctness of information in this document. Copyright by AUDI AG.

5 Disconnect connector on air recirculation valve for turbocharger (N249).
6 Detach hose shown. The hose leads to a vacuum reservoir.
7 Unplug the connectors on injectors of cylinder bank 1 and cylinder bank 2.
8 Detach hose shown. This leads to intake of turbocharger, bank 2.

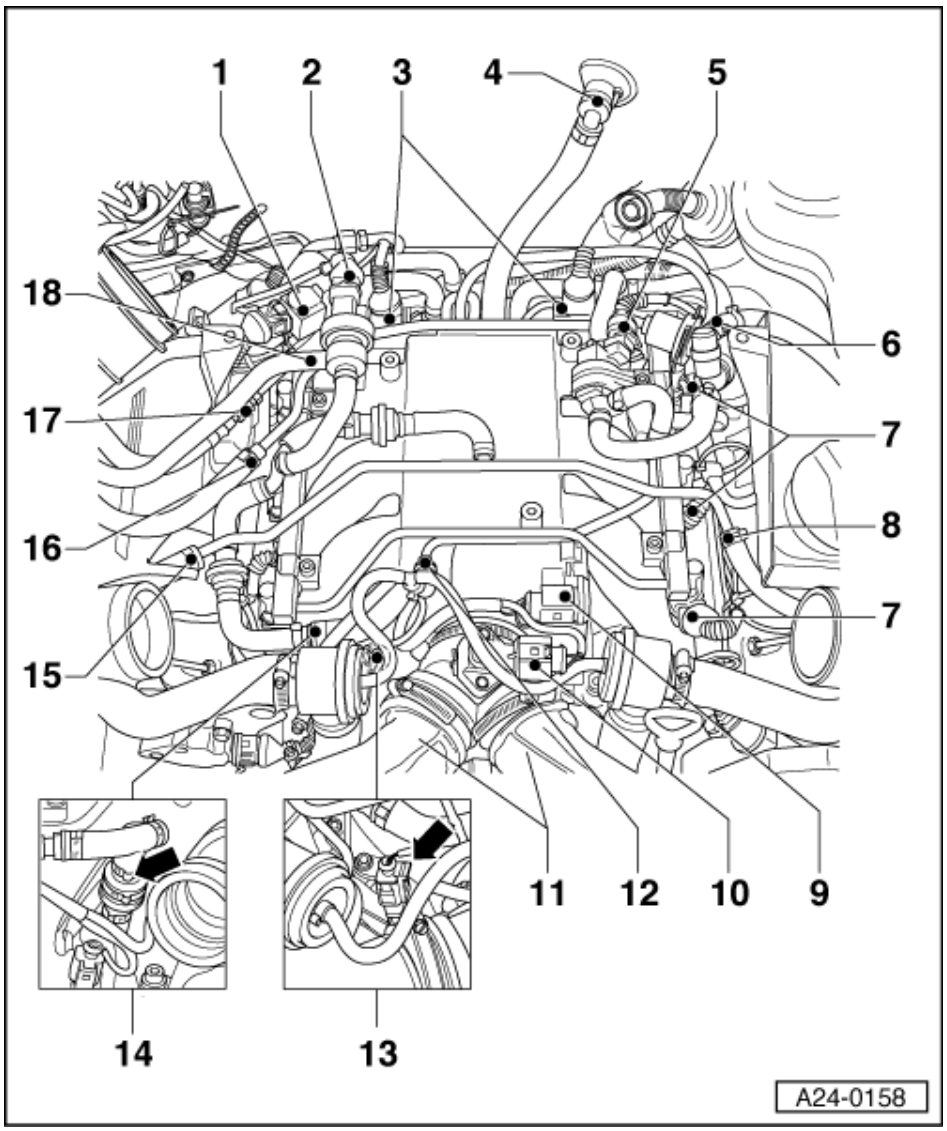

9 Disconnect the connector on throttle valve control part (J338).
10 Disconnect connector on boost pressure sender (G31).
11 Remove the pressure pipes shown
12 Detach the hose shown; this leads to the recirculation valves.
13 Disconnect connector for intake air temperature sender (G42).
14 Detach the hose shown; this is the crankcase breather hose.

Protected by copyright. Copying for private or commercial purposes, in part or in whole, is not permitted unless authorised by AUDI AG. AUDI AG does not guarantee or accept any liability with respect to the correctness of information in this document. Copyright by AUDI AG.

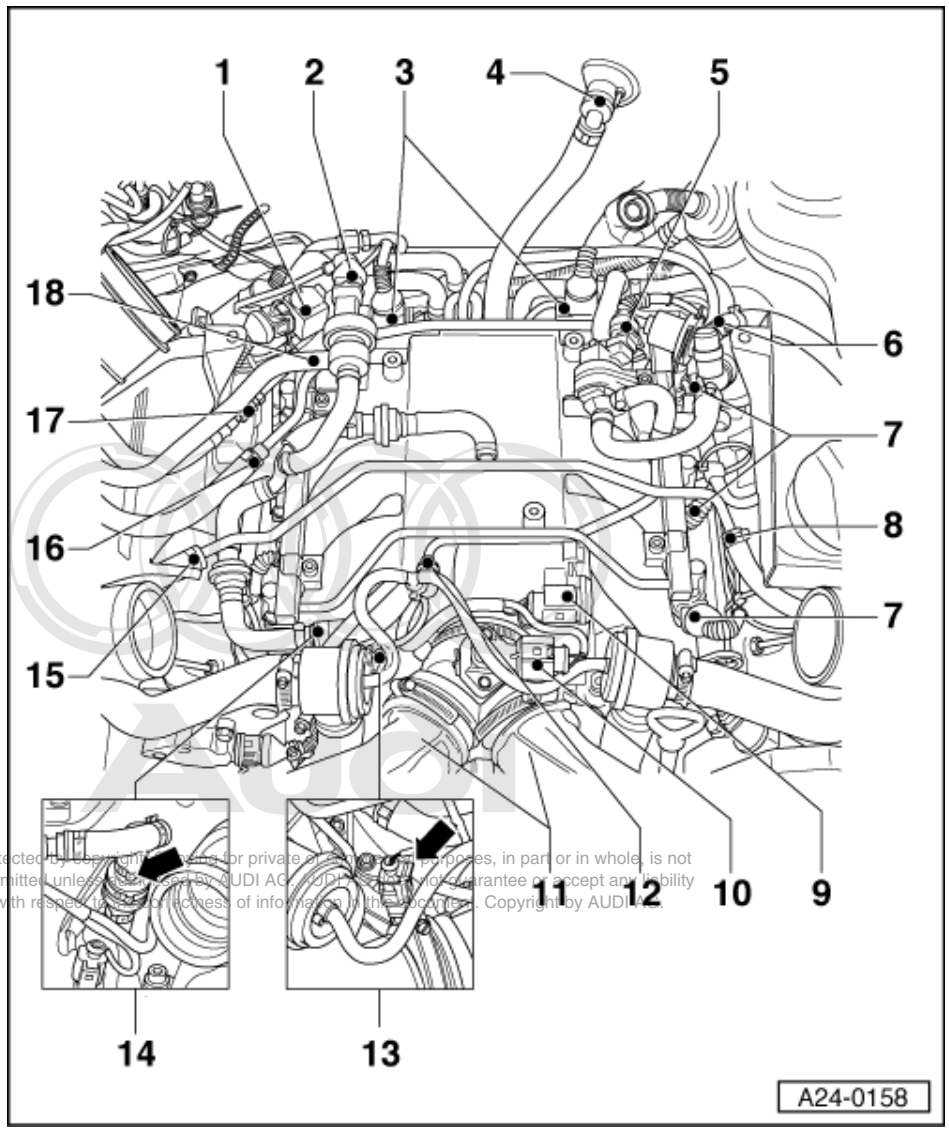

Protected by copyright. Copying for private or commercial purposes, in part or in whole, is not permitted unless authorised by AUDI AG. AUDI AG does not guarantee or accept any liability with respect to the correctness of information in this document. Copyright by AUDI AG.

15 Detach hose shown. This leads to intake of turbocharger, bank 1.

16 Detach fuel return from fuel rail (catch emerging fuel with a clean rag).

17 Detach fuel supply line from fuel rail.

18 Detach line shown on activated charcoal filter valve.

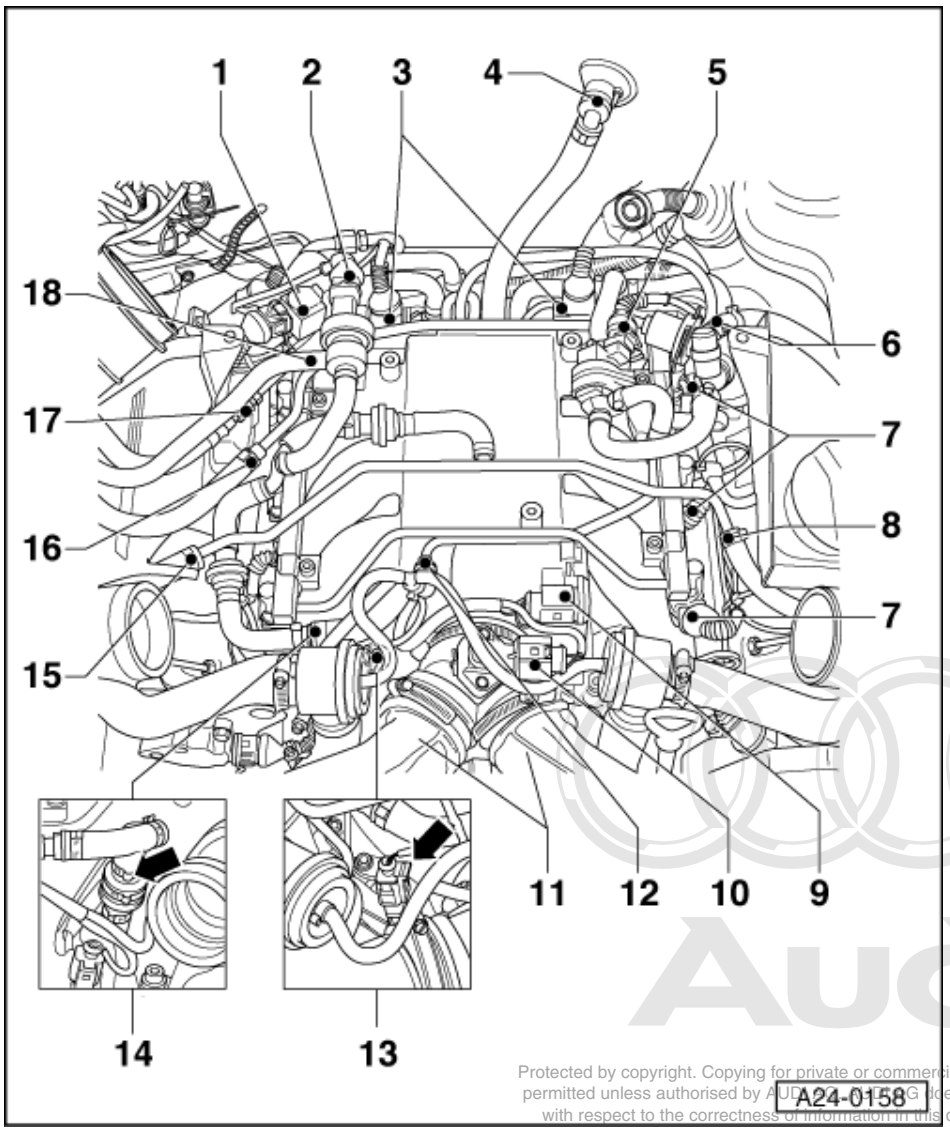

Protected by copyright. Copying for private or commercial purposes, in part or in whole, is not permitted unless authorised by AUDI AG. AUDI AG does not guarantee or accept any liability with respect to the correctness of information in this document. Copyright by AUDI AG.

Other hoses/connections must also be detached depending on variant; this will be included in the procedure.

- Unbolt intake manifold from cylinder heads,
- Carefully lift intake manifold from cylinder heads.

Installation of the intake manifold is performed in the reverse sequence. (tightening torque of screws: 10 Nm).

Always use new seals and clamps.

1.7 - Wiring and component check with test box V.A.G 1598/31

Notes:

- Before connecting the test box, please note the comments on Page 66 .
- The test box V.A.G 1598/31 is designed in such a way that it can be connected simultaneously to the engine control unit wiring harness and to the engine control unit itself.
- This has the advantage that the electronic motor control system remains fully functional when the test box is connected (for example, for measuring signals when the engine is running).
- Whether the engine control unit has to be additionally connected to the test box or not is described in the respective test procedures.

- Always use adapter set V.A.G 1594 A for connecting up measuring instruments (e.g. voltage tester V.A.G 1527 B, hand-held multimeter V.A.G 1526 A etc.)

Important:
To prevent damage to the electronic components, select appropriate measuring range before connecting the measuring cables and observe the test requirements.

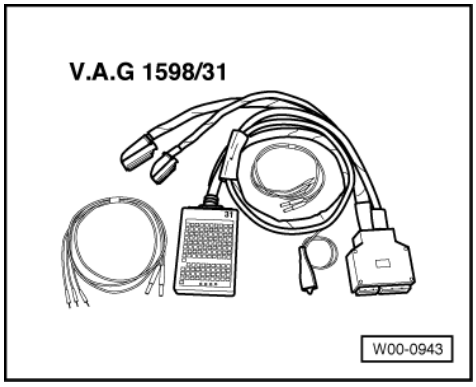

Special tools and workshop equipment required

- V.A.G 1598/31

Procedure

- Switch ignition off.

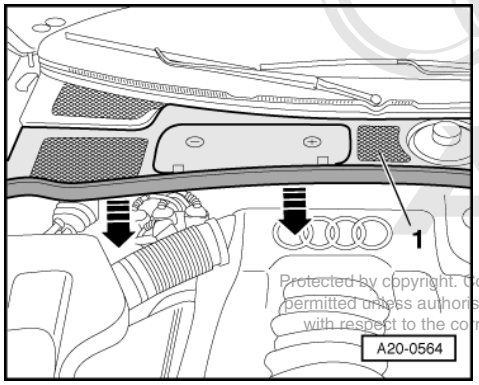

Protected by copyright. Copying for private or commercial purposes, in part or in whole, is not permitted unless authorised by AUDI AG. AUDI AG does not guarantee or accept any liability with respect to the correctness of information in this document. Copyright by AUDI AG.

- -> Detach rubber seal of plenum chamber cover in direction of arrow.
- Remove plenum chamber cover -1- from the front.

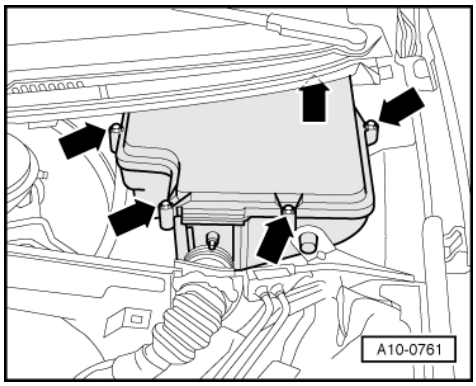

- -> Remove cover for electronics box (plenum chamber) -arrows-.

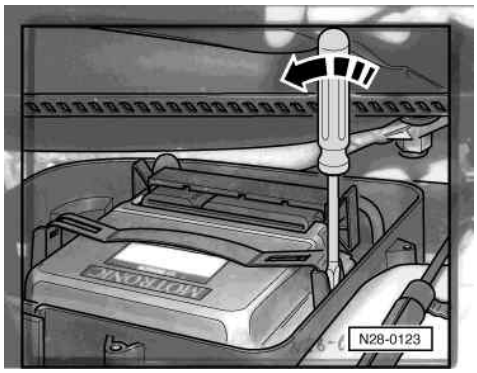

- -> Carefully lever off the retainer bar with a screwdriver -arrow-.
- Release the connector latches and pull off the control unit connectors.

Important:
To prevent damage to the electronic components, select appropriate measuring range before connecting the measuring cables and observe the test requirements.

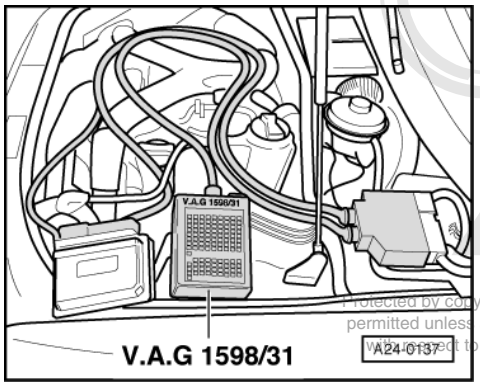

Protected by copyright. Copying for private or commercial purposes, in part or in whole, is not permitted unless authorised by AUDI AG. AUDI AG does not guarantee or accept any liability with respect to the correctness of information in this document. Copyright by AUDI AG.

- -> Connect V.A.G 1598/31 test box to connector on wiring harness. The earth clip on the test box is to be connected to the battery negative. Whether or not the engine control unit has to be additionally connected to the test box is described in the respective test procedures.
- Carry out test as described in the appropriate repair procedures.

Perform the following operations after re-connection of engine control unit:

- Interrogate fault memory and erase, if necessary => Page 6 .
- Perform adaption of throttle valve control part -J338 => Page 121 .

Note:

In the first learning phase, during the basic setting operation for the engine, slightly irregular idling and slight jolting during driving are possible.

Comments on test box V.A.G 1598/31:

- In some Audi A4 vehicles, the control units and sleeve housing are without guides (see Figure 1).
- In these vehicles, it is impossible to use the V.A.G 1598/31 test box for electrical tests on the engine control unit or engine control harness.
- In these cases, contact the service department of the responsible marketing centre or importer because special test boxes are kept there for such cases.
- In the current series, the engine control units are now provided with guides on the connector housing (see Figure 2).

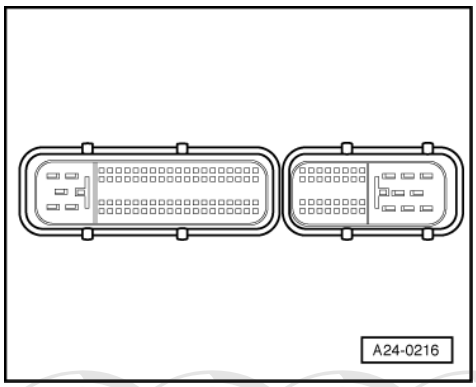

- -> Figure 1; engine control units without guides; in this case, contact the service department of the responsible sales centre or importer.

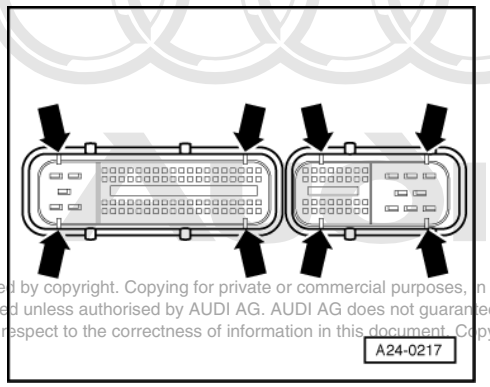

Protected by copyright. Copying for private or commercial purposes, in part or in whole, is not permitted unless authorised by AUDI AG. AUDI AG does not guarantee or accept any liability with respect to the correctness of information in this document. Copyright by AUDI AG.

- -> Figure 2; engine control units with guides (see arrow); in this case, the V.A.G 1598/31 test box can be used as described in the manual.

1.8 - Procedure following interruption of voltage supply

Note:

In the first learning phase, during the basic setting operation for the engine, slightly irregular idling and slight jolting during driving are possible.

Special tools and workshop equipment required

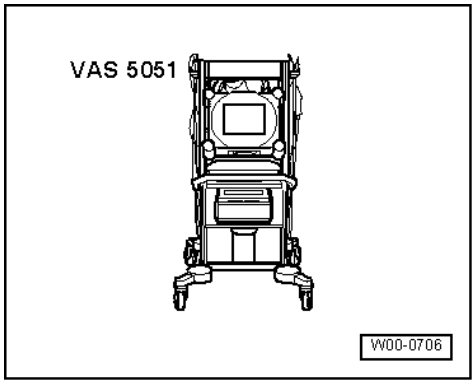

- VAS 5051 with VAS 5051/1

  or

- V.A.G 1551 with V.A.G 1551/3 A

Procedure

Perform the following operations after a voltage interruption:

- Interrogate fault memory and erase, if necessary => Page 6 .
- Perform adaption of throttle valve control part -J338 => Page 121 .

1.9 - Renewing engine control unit

Note:

When the engine control unit is disconnected, the learned values are erased but the contents of the fault memory remain intact.

Special tools and workshop equipment required

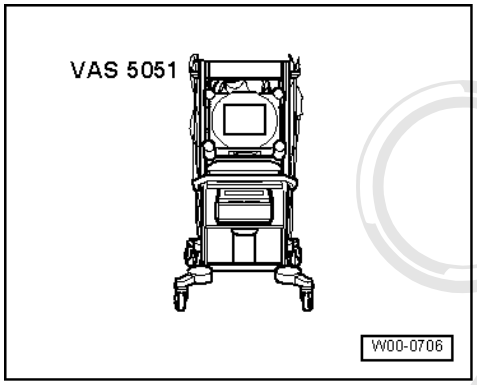

- VAS 5051 with VAS 5051/1

or

- V.A.G 1551 with V.A.G 1551/3 A

Protected by copyright. Copying for private or commercial purposes, in part or in whole, is not permitted unless authorised by AUDI AG. AUDI AG does not guarantee or accept any liability with respect to the correctness of information in this document. Copyright by AUDI AG.

Removing

- Connect the vehicle diagnostic, testing and information system VAS 5051 or fault reader V.A.G 1551 and select the engine electronics control unit with "address word" 01 => Page 3 .
  For this purpose, the ignition must be switched on.

-> The display on fault reader V.A.G 1551 shows the control unit identification code e.g.:

```
8D0907551.. 2.7l     V6/5VT     G
0002□
Code 10711     WSC 06388
```

- Always start by displaying and printing out the control unit identification => Page 5 .

- Compare code to encoding versions => Page 32 .
- Switch ignition off.

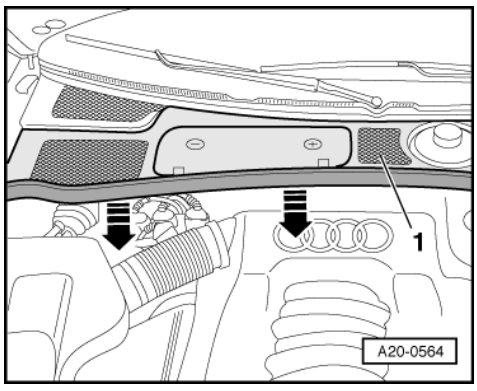

- -> Detach rubber seal of plenum chamber cover in direction of arrow.
- Remove plenum chamber cover -1- from the front.

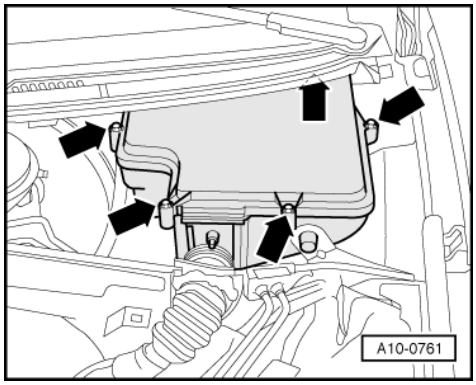

- -> Remove cover for electronics box (plenum chamber) -arrows-.

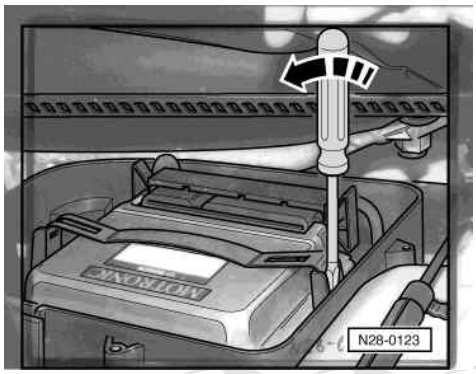

- -> Carefully lever off the retainer bar -arrow- with a screwdriver.
- Release the connector latches and pull of the control unit connectors.
- Take out engine control unit.

Installing

Installation is carried out in the reverse order, when doing this note the following:

Note:

In the first learning phase, during the basic setting operation for the engine, slightly irregular idling and slight jolting during driving are possible.

Important note:

Protected by copyright. Copying for private or commercial purposes, in part or in whole, is not permitted unless authorised by AUDI AG. AUDI AG does not guarantee or accept any liability with respect to the correctness of information in this document. Copyright by AUDI AG.

After installing the new engine control unit, the following operations must be performed:

- Interrogate fault memory and erase, if necessary => Page 6 .
  - Adapt immobiliser to engine control unit

=> Electrical System; Repair group 01; Immobiliser self-diagnosis; Adaption after renewal of engine control unit Immobiliser self-diagnosis Adaption after renewal of engine control unit

- Perform adaption of throttle valve control part -J338 => Page 121 .
- Note instructions for encoding new engine control unit => Page 32 .
- In vehicles with cruise control (recognisable from steering column switch), this should be freed in engine control unit:

=> Electrical System; Repair group 01; Cruise control system self-diagnosis; Checking cruise control system Cruise control system self-diagnosis Checking cruise control system

- Perform learning of kickdown function on vehicles with automatic gearbox =>Page 128 .

1.10 - Checking idling speed

Test conditions

- No leaks in exhaust system
- Coolant temperature at least 80 °C (display group 4, display zone 3)
- Electrical consumers switched off (radiator fan must not run during the check)
- Air conditioner switched off
- Pressure gauge not connected
- Place selector lever in P or N position (vehicles with automatic gearboxes).

Checking idling speed

Notes:

- The idling speed cannot be adjusted.
- The idling speed is tested during the basic setting of the engine.
- During the basic setting of the engine, the air conditioner compressor is automatically switched off and the solenoid valve for the activated charcoal filter (ACC valve) is closed.

- Interrogate fault memory The fault memory must be clear. If necessary, rectify any faults and erase the fault memory. Switch off the engine, then start up again. Perform road test and interrogate the fault memory again to make sure it is clear.
- Leave engine idling.

Important:
The electric radiator fan should not be running.

-> Indicated on display:

```
Rapid data transfer      HELP
Select function XX
```

- Press keys 0 and 4 for the function "Introduction of basic setting" and confirm entry with Q key.

Protected by copyright. Copying for private or commercial purposes, in part or in whole, is not permitted unless authorised by AUDI AG. AUDI AG does not guarantee or accept any liability with respect to the correctness of information in this document. Copyright by AUDI AG.

-> Indicated on display:

```
Initiate basic setting     HELP
Enter display group number XXX
```

- Press keys 0, 5 and 6 for "display group number 56" and confirm entry with Q key.

-> Indicated on display:
(1...4 = display zones)

```
Basic setting     56
     1     2     3     4
```

- Check whether the engine speed in the display zone 1 (actual speed) is within the permitted tolerance range (750 rpm...850 rpm).

	Display zones			
	1	2	3	4
Display group 56: Idling stabilisation when idling at operating temperature				
Display	**xxx rpm**	**xxx rpm**	x.x %	X X X X X
Display	**Engine speed (actual)**	**Engine speed (specified)**	Idling speed control Change in torque	Operating conditions

	Display zones			
Specification	750 rpm...850 rpm	800 rpm	x.x %	0 0 0 0 0
Note:	If the specification is not attained =>Page 71			Significance of figures =>Page 71

Note:

- The engine speed in display zone 1 (actual speed) is the actual engine speed.
- The engine speed in display zone 2 (specified speed) is a theoretical value calculated by the engine control unit.
- See next page for further notes.

- During idling, the engine control unit always tries to adapt the actual engine speed to the specified engine speed.
- This means that during idling the actual engine speed must always approximate to the specified engine speed.
- The display zones three and four are there for information but are irrelevant for checking the engine idling speed.

- Press ⇒key.
- Press keys 0 and 6 for the "End output" function and press the Q key to confirm entry.
- If specification is not attained, interrogate the fault memory again.

If the idling speed is too high or too low and there are no faults recorded in the fault memory, carry out the following tests marked with a dot:

- Check intake air system for unmetered air => Page 91 .
- Check throttle valve control part =>Page 118 .
- Solenoid valve for activated charcoal filter continuously open, check =>Page 115 .
- Perform adaption of throttle valve control part =>Page 121 .

Significance of 5-digit readout of display group 56

x	x	x	x	x	Display zone 4
				0	Air conditioner compressor 0 = A/C compressor off 1 = A/C compressor on
			0		Gear engaged 0 = selector lever set to "P" or "N" 1 = selector lever in 2/3/4/D/R
		0			Air conditioner; ready for maximum heating or cooling output
	0				Display always 0
0					Display always 0

1.11 - Checking fuel pressure regulator and holding pressure

Protected by copyright. Copying for private or commercial purposes, in part or in whole, is not permitted unless authorised by AUDI AG. AUDI AG does not guarantee or accept any liability with respect to the correctness of information in this document. Copyright by AUDI AG.

Test conditions

- Fuel pump relay OK, testing =>Page 84 .
- Fuel pump OK
- Fuel filter OK
- Battery voltage at least 11 V

Note:

Fuel pressure regulator regulates fuel pressure as a function of intake pressure. As a result, the pressure drop at the injectors remains constant for each engine speed and load range.

Important:
The fuel system is pressurised! Before loosening hose connections or opening the test connection (to measure fuel pressure), place a cloth around the connection. Then release pressure by carefully loosening the connection.

Check system pressure

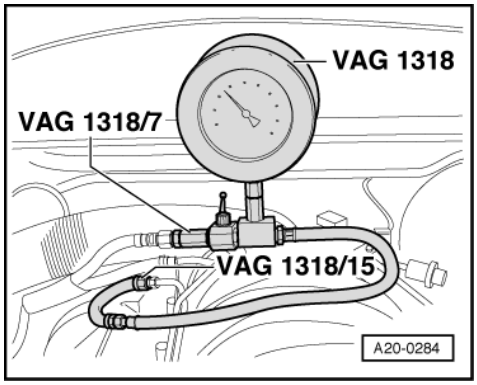

- -> Connect pressure gauge V.A.G 1318 to fuel supply line using adapters 1318/7, 1318/8 (pressure hose) and 1318/15.
- Withdraw vacuum line from pressure regulator to induction manifold at pressure regulator and close off line.

Note:

Replace pressure regulator if fuel emerges at the vacuum connection of the pressure regulator in the course of the following pressure test.

- Start the engine and run at idling speed.
- Measure the fuel pressure.

  Specification: approx. 3.8...4.2 bar gauge.

- If specification is not attained, try replacing the pressure regulator and repeating the pressure test.
- If specification is still not attained, check the fuel pump/feed pipe for damage (e.g. crushing) and replace, if necessary.

- If specification is exceeded, check the return pipe for damage (e.g. crushing) and replace, if necessary.

Note:

When performing the following test, do not leave the engine running for an unnecessarily long time with the vacuum hose detached, because the higher fuel pressure causes the fuel/air mixture to be enriched. This could lead to the lambda control limits being exceeded, which would then result in a fault being recorded.

- Start the engine and run at idling speed.
- Switch off electrical consumers (air conditioner system, etc).
- Attach vacuum hose to pressure regulator and observe drop in pressure on pressure gauge.

- Fuel pressure must decrease by approx. 0.5 bar when vacuum hose is attached.

  Perform the following checks if there is no change in pressure as described above:
  - Check vacuum hose for cracks and damage.

Translation by Volkswagen Group United Kingdom. Audi UK does not guarantee or accept any liability
with respect to the correctness of information in this document. Copyright by AUDI AG.

- Check vacuum hose at intake manifold for blockage; to do so, pull off hose at pressure regulator and blow into it.

- If there is no leak and no blockage in the vacuum hose, replace the pressure regulator.
- Renew the hose clamp which secures the vacuum hose to the pressure regulator and ensure that it is correctly fitted.

Checking holding pressure:

- Holding pressure 10 minutes after switching off engine (minimum pressure).

  With engine cold: at least 2.2 bar
  With engine at operating temperature: approx. 3.0 bar

Note:

The increase in temperature with the engine at operating temperature is caused by the expansion of the fuel and is normal.

- Start the engine and run at idling speed.
- Allow the pressure to build up, then switch off the ignition. At the same time close the cut off valve on the pressure gauge V.A.G 1318 (valve lever at right angles to direction of flow).

If the pressure does not drop, the following faults are possible:

- Union between pressure gauge and fuel supply pipe leaking
- Supply pipe leaking at fuel tank
- Non-return valve in fuel pump leaking

=> 6-cylinder Engine, Mechanical Components; Repair group 20; Removing and installing fuel pump Removing and installing fuel pump

Note:

After the isolating valve has been closed, the pressure gauge shows the pressure after the isolating valve "induction manifold end" (direction of injectors, fuel pressure regulator). If the pressure before the isolating valve (tank direction) should now fall, the equipment cannot recognise this fact. For this reason, "If the pressure does not drop..." appears in the middle of this page.

If the pressure drops again, the following faults are possible:

- Fuel pressure regulator defective
- Injectors leaking
- Unions on pressure gauge after cut-off valve leaking

Protected by copyright. Copying for private or commercial purposes, in part or in whole, is not permitted unless authorised by AUDI AG. AUDI AG does not guarantee or accept any liability with respect to the correctness of information in this document. Copyright by AUDI AG.

Note:

To disconnect the pressure gauge, close the cut-off valve, unscrew the union on adapter V.A.G 1318/15, then open the cut-off valve to drain off excess fuel into a suitable container.

1.12 - Checking injectors

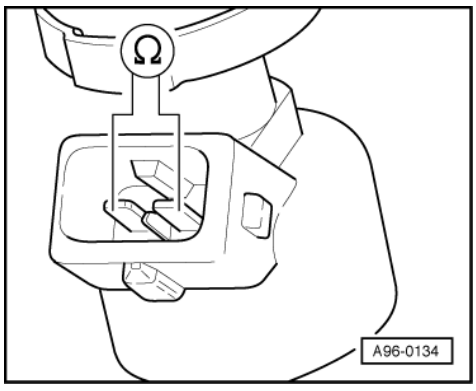

A - Electrical testing of injectors

- Remove connector from the injector which is to be tested.
- -> Measure resistance between the valve contacts using V.A.G 1526.

  Specification: 13.5...15.5 Ohm

When the engine is at operating temperature, the resistance is increased by approx. 4...6 ω.

- If specification is not attained, replace injector => Page 81 .

B - Testing power supply

Test conditions

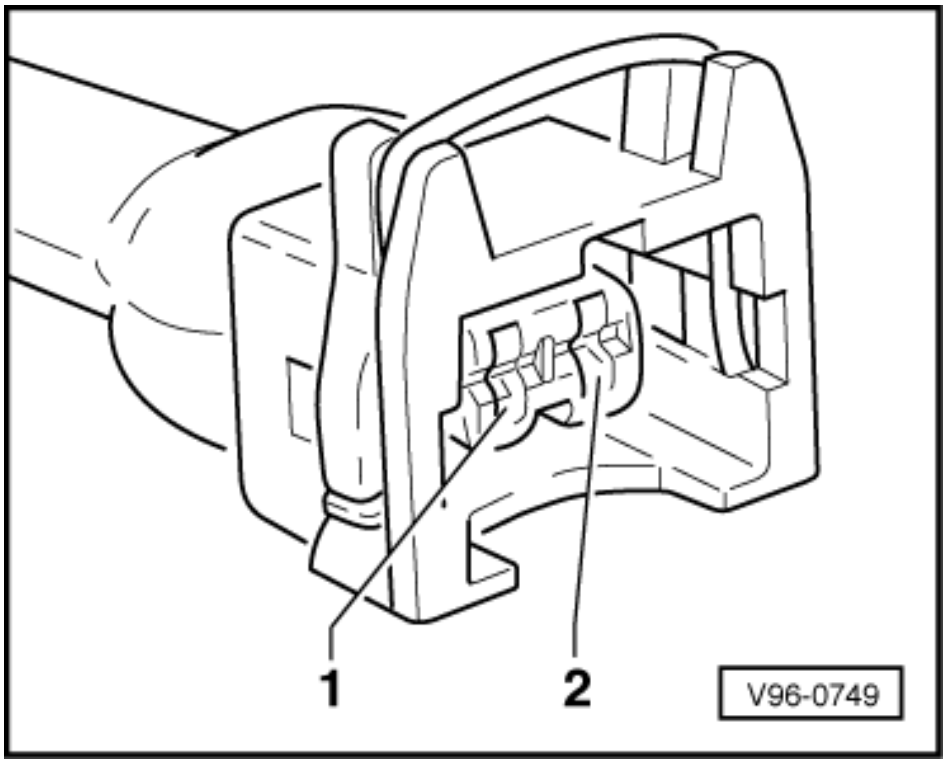

- Fuse for injectors OK

=> Current Flow Diagrams, Electrical Fault-Finding and Fitting Locations

- Remove connector from the injector which is to be tested.
- -> Connect diode test lamp V.A.G 1527 between contact 1 of the connector and engine earth.

- Switch on ignition, the diode test lamp should come on.
- If the diode test lamp does not light up, test for open circuits in the wiring between contact 1 and the fuse for the injectors - if necessary rectify open circuit.

=> Current Flow Diagrams, Electrical Fault-Finding and Fitting Locations

Protected by copyright. Copying for private or commercial purposes, in part or in whole, is not permitted unless authorised by AUDI AG. AUDI AG does not guarantee or accept any liability with respect to the correctness of information in this document. Copyright by AUDI AG.

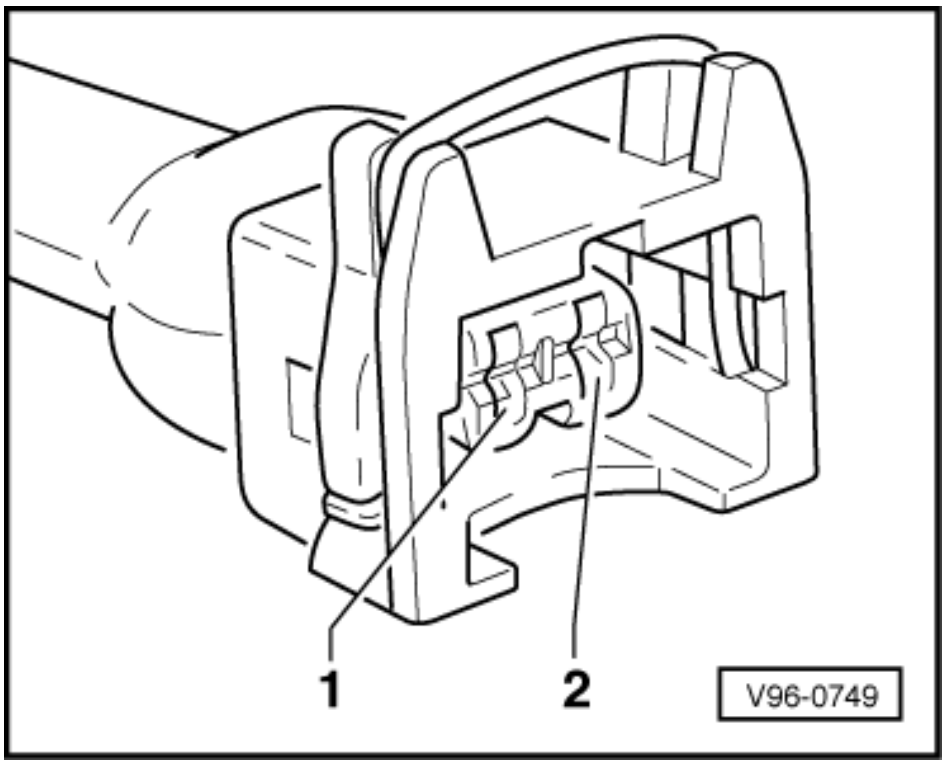

- If the diode test lamp lights up, test activation of injectors.

C - Testing activation of injectors

- Remove connector from the injector which is to be tested.
- -> Connect diode test lamp V.A.G 1527 between contact 2 of connector and battery positive (+).
- Operate starter for a few seconds (the engine can be allowed to start).

Specification: The diode test lamp should flash.

Note:

Diode test lamps with a low current draw continue to glow faintly between impulses from the engine control unit (rather than going out completely) and become much brighter when receiving an impulse.

Protected by copyright. Copying for private or commercial purposes, in part or in whole, is not permitted unless authorised by AUDI AG. AUDI AG does not guarantee or accept any liability with respect to the correctness of information in this document. Copyright by AUDI AG.

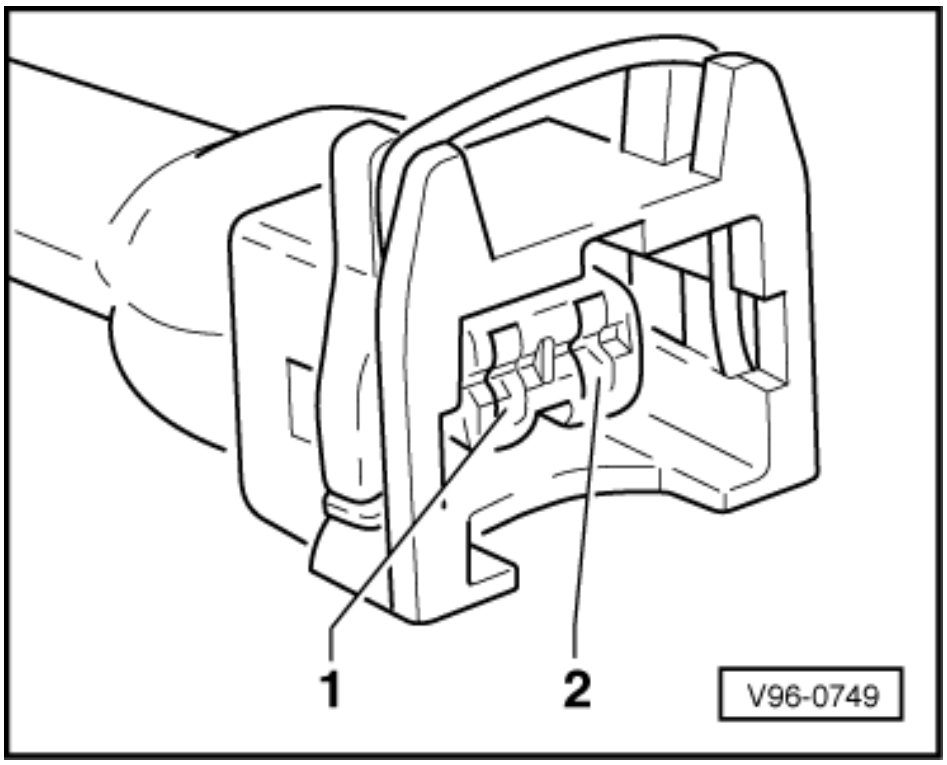

If the diode test lamp does not flash:

- Connect the V.A.G 1598/31 test box to wiring harness leading to engine control unit; the engine control unit should not be connected.
  => Page 64 .
- -> Test wiring between contact 2 of respective injector connector and engine control unit for continuity or short to positive.

Contact 2 on plug connector of injector for cylinder	Test box V.A.G 1598/31, socket
1	96
2	112
3	88
4	97
5	113
6	89

- Rectify any open/short circuit as necessary.
- If the wiring is OK, replace engine control unit => Page 68 .

1.13 - Testing injection quantity, leak tightness and spray pattern of injectors

Test conditions

- Fuel pressure OK, checking =>Page 71 .

Protected by copyright. Copying for private or commercial purposes, in part or in whole, is not permitted unless authorised by AUDI AG. AUDI AG does not guarantee or accept any liability with respect to the correctness of information in this document. Copyright by AUDI AG.

To gain access to the fuel rail (fuel manifold), the following steps must be performed. Procedure may vary depending on version.

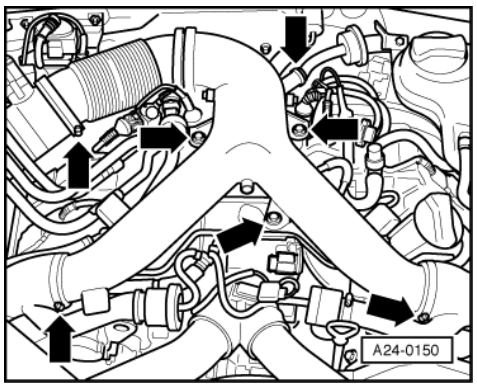

- -> Release air duct at points indicated by arrows and remove air duct.

Some hoses must then be disconnected.
- Be most careful about cleanliness.
- After the test, renew the clamps/screw-type clips and secure them correctly.

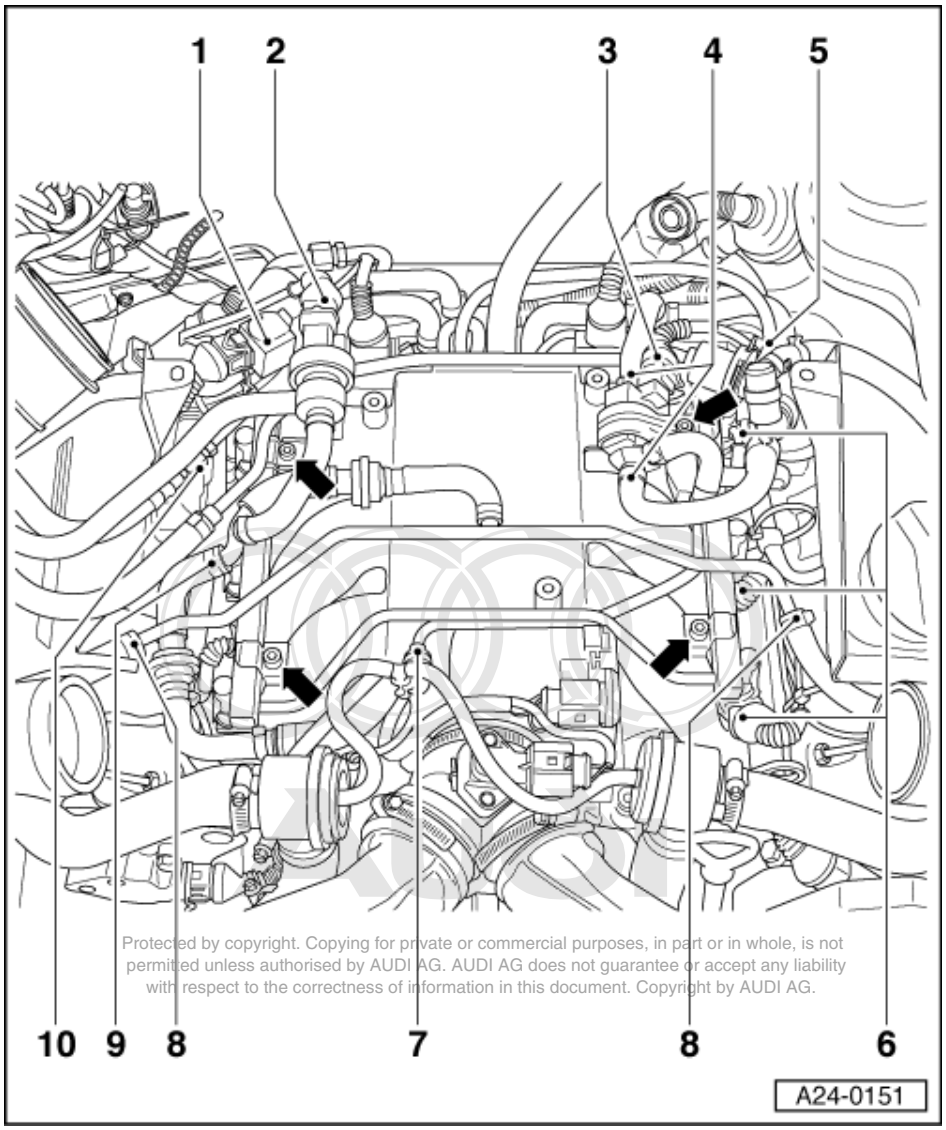

Protected by copyright. Copying for private or commercial purposes, in part or in whole, is not permitted unless authorised by AUDI AG. AUDI AG does not guarantee or accept any liability with respect to the correctness of information in this document. Copyright by AUDI AG.

1 Release solenoid valve for boost pressure limitation (N75) from fuel rail; hoses remain connected.
2 Disconnect connector on solenoid valve for activated charcoal filter (N80).
3 Disconnect connector on air recirculation valve for turbocharger (N249).
4 Open the clamps shown on the recirculation valve and pull off the hoses.

5 Open the clamps shown on the fuel pressure regulator and pull off the hoses.
6 Disconnect connectors from injectors, cylinder banks 1 and 2.

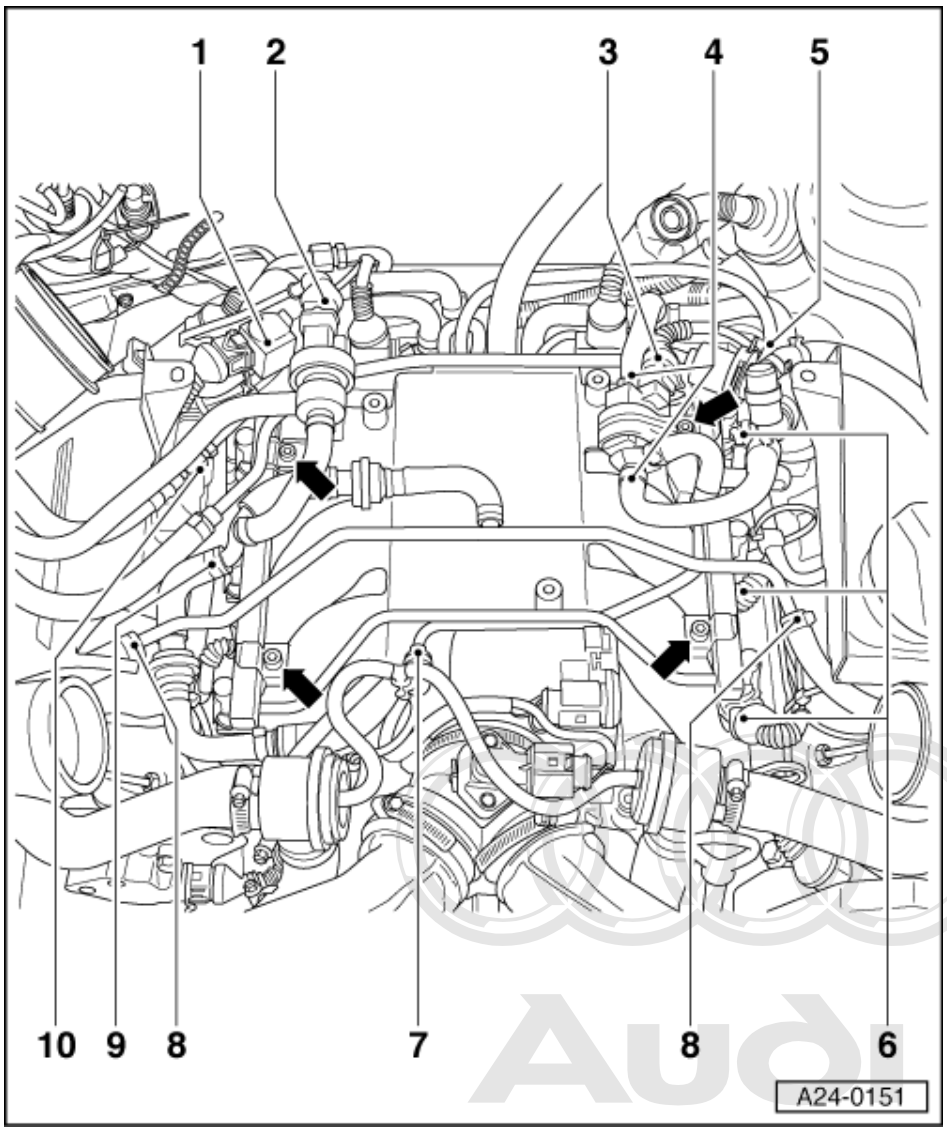

7 Open hose clamp and detach the hose (if required, vacuum is supplied to mechanical circulation valve via this hose).
8 Open the clamps shown and pull off the hoses. The hoses lead to the respective intakes of the bank 1 and bank 2 turbochargers.
9 Open hose clamp shown and detach the hose (fuel vapours are fed to the intake manifold via this hose).

permitted unless authorised by AUDI AG. AUDI AG does not guarantee or accept any liability
with respect to the correctness of information in this document. Copyright by AUDI AG.

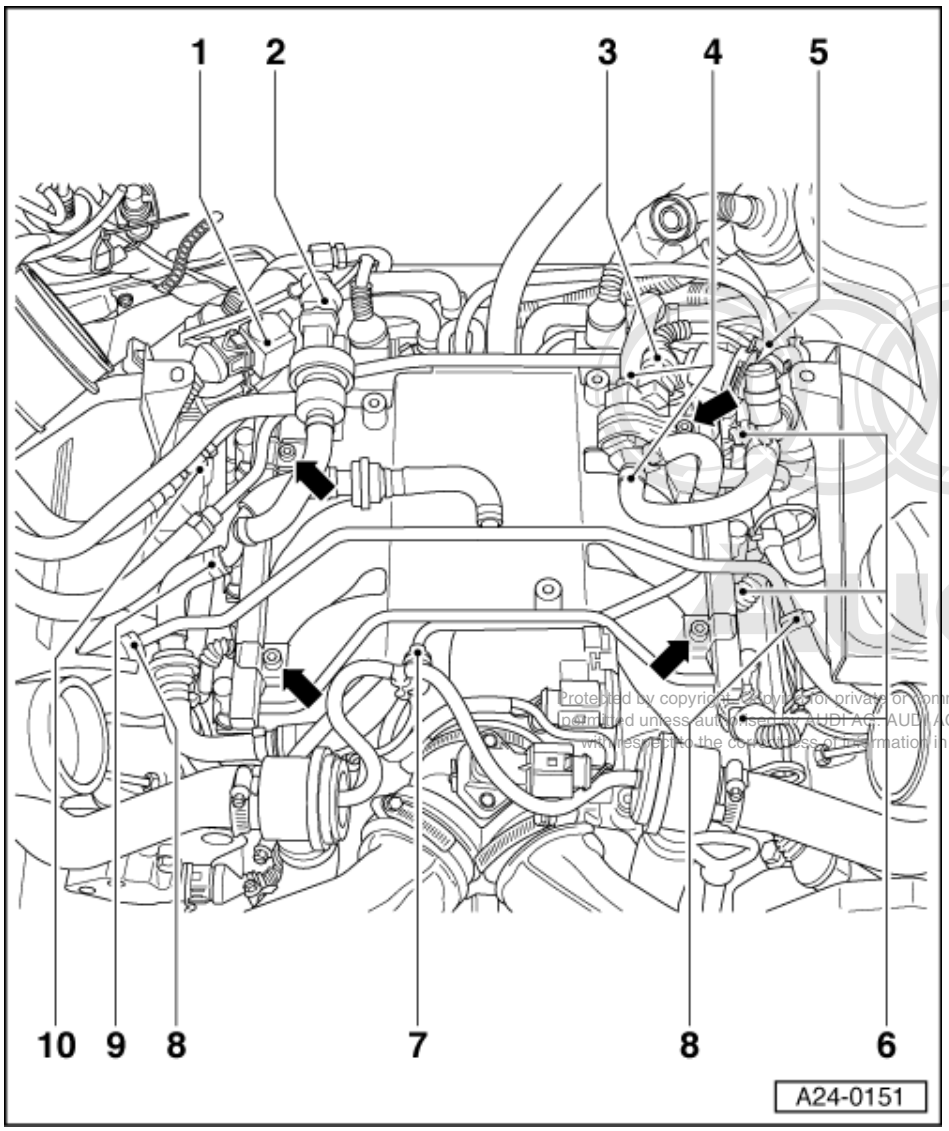

Protected by copyright. Copying for private or commercial purposes, in part or in whole, is not permitted unless authorised by AUDI AG. AUDI AG does not guarantee or accept any liability with respect to the correctness of information in this document. Copyright by AUDI AG.

10 Briefly open the screw connection on the fuel rail (supply line) in order to release pressure. Collect emerging fuel with a clean cloth. Retighten the screw connection.

11 Unscrew fuel rail from intake manifold (see arrows). (tightening torque of screws: 10 Nm).

- Lift fuel rail and injectors from intake manifold and support.

Note:

- After the fuel rail has been lifted, check whether the injectors are correctly fastened to it.
- When fuel rail is lifted, individual injectors may become released and remain stuck in the intake manifold. In this case, the injectors should be refitted correctly to the fuel rail.
  =>Page 82 .

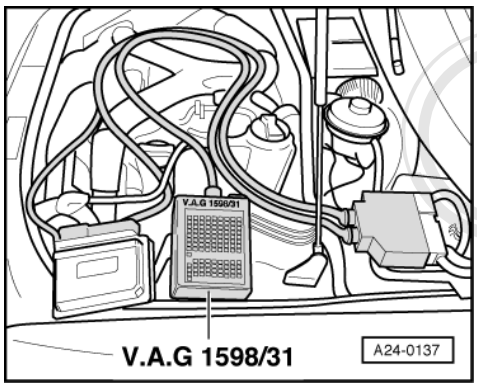

- -> Connect the V.A.G 1598/31 test box to wiring harness leading to engine control unit; the engine control unit must not be connected.
  => Page 64 .
- Place test box inside vehicle.

Protected by copyright. Copying for private or commercial purposes, in part or in whole, is not permitted unless authorised by AUDI AG. AUDI AG does not guarantee or accept any liability with respect to the correctness of information in this document. Copyright by AUDI AG.

Leak test

- Bridge contacts 1 and 65 on the test box using test leads from adapter set V.A.G 1594 (this creates an earth connection to one side of the fuel pump relay coil).

Note:

After bridging, the fuel pump runs continuously even if engine is not running; this is because the fuel pump relay is supplied with permanent positive via central electrics. The negative voltage supply for the fuel pump relay comes via the cable bridge in the test box.

- Check injectors for leaks (visual check). When the fuel pump is running, only 1 or 2 drops a minute should escape from each injector.

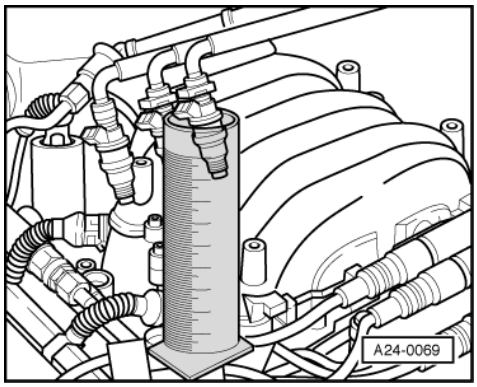

- If the fuel loss is greater, switch off fuel pump (remove cable bridge) and replace defective injector => Page 81 .

Checking injection quantity

- -> Place injector to be tested in a measuring glass from injection quantity tester V.A.G 1602.

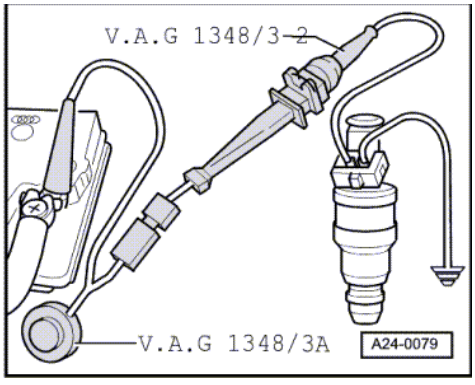

- -> Connect one of the injector contacts to engine earth using test cable and crocodile clamp from V.A.G 1594.
- Connect second injector contact to positive using remote control V.A.G 1348/3 A, adapter cable V.A.G 1348/3-2 and auxiliary cable.

Ensure that test box is inside the vehicle.

- Bridge contacts 1 and 65 on the test box using test leads from adapter set V.A.G 1594 (this creates an earth connection to one side of the fuel pump relay coil).

The fuel pump should run.

- Activate the V.A.G 1348/3 A remote control for 30 seconds.
- Once all three injectors of a cylinder bank have been actuated, place the three measuring glasses on a flat surface.

  Specification per injector: 135...165 ml

- If measured values for one or more injectors are outside tolerance, switch off fuel pump (switch off ignition) and replace defective injector => Page 81 .

- Repeat the check on injectors of second cylinder bank.
- If the measured values for all the injectors are outside the tolerance range, check the fuel pressure => Page 71 .

Protected by copyright. Copying for private or commercial purposes, in part or in whole, is not permitted unless authorised by AUDI AG. AUDI AG does not guarantee or accept any liability with respect to the correctness of information in this document. Copyright by AUDI AG.

Note:

When checking the injection quantity, also check the spray pattern. The spray pattern should be the same for all the injectors.

Notes on installation of fuel manifold and injectors:

Installation of the fuel manifold together with injectors is performed in the reverse sequence. The following points should be noted when installing:

- Renew the O-rings at all opened connections. (when renewing the front O-ring, ensure that the plastic cap is not removed from the injector head. The O-ring must be pulled off over the plastic cap).
- Moisten the O-rings with clean engine oil.

- Insert injectors perpendicularly and in correct position into fuel manifold and secure with fasteners.
- Position fuel rail with secured injectors on intake manifold and press evenly into place.
- Renew hose clamps and ensure that they are securely fitted.

1.14 - Dismantling and assembling fuel manifold with injectors

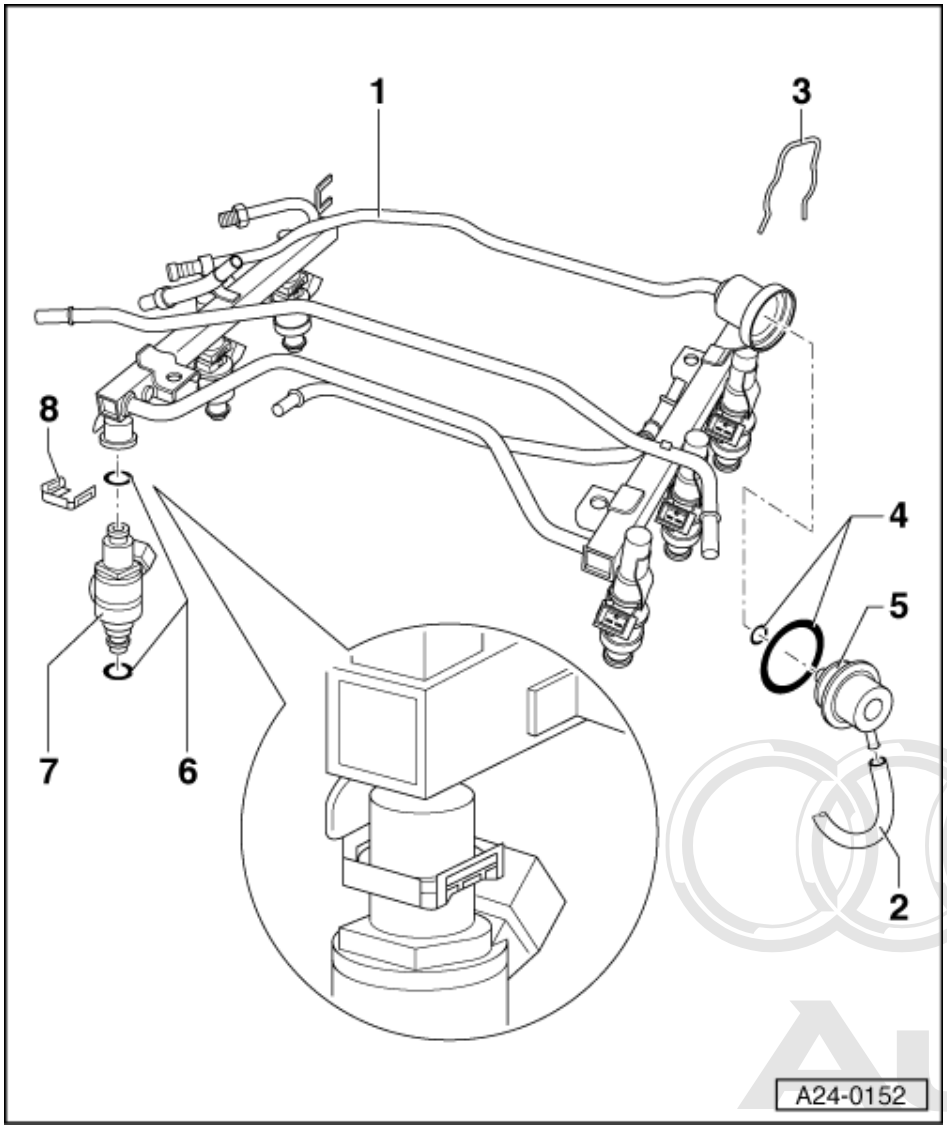

Protected by copyright. Copying for private or commercial purposes, in part or in whole, is not permitted unless authorised by AUDI AG. AUDI AG does not guarantee or accept any liability with respect to the correctness of information in this document. Copyright by AUDI AG.

Note:

Depending on version, the fuel manifold may differ slightly to that illustrated.

1 **Fuel rail**
2 **To intake manifold**
3 **Bracket**
4 **O-ring**
- Replace

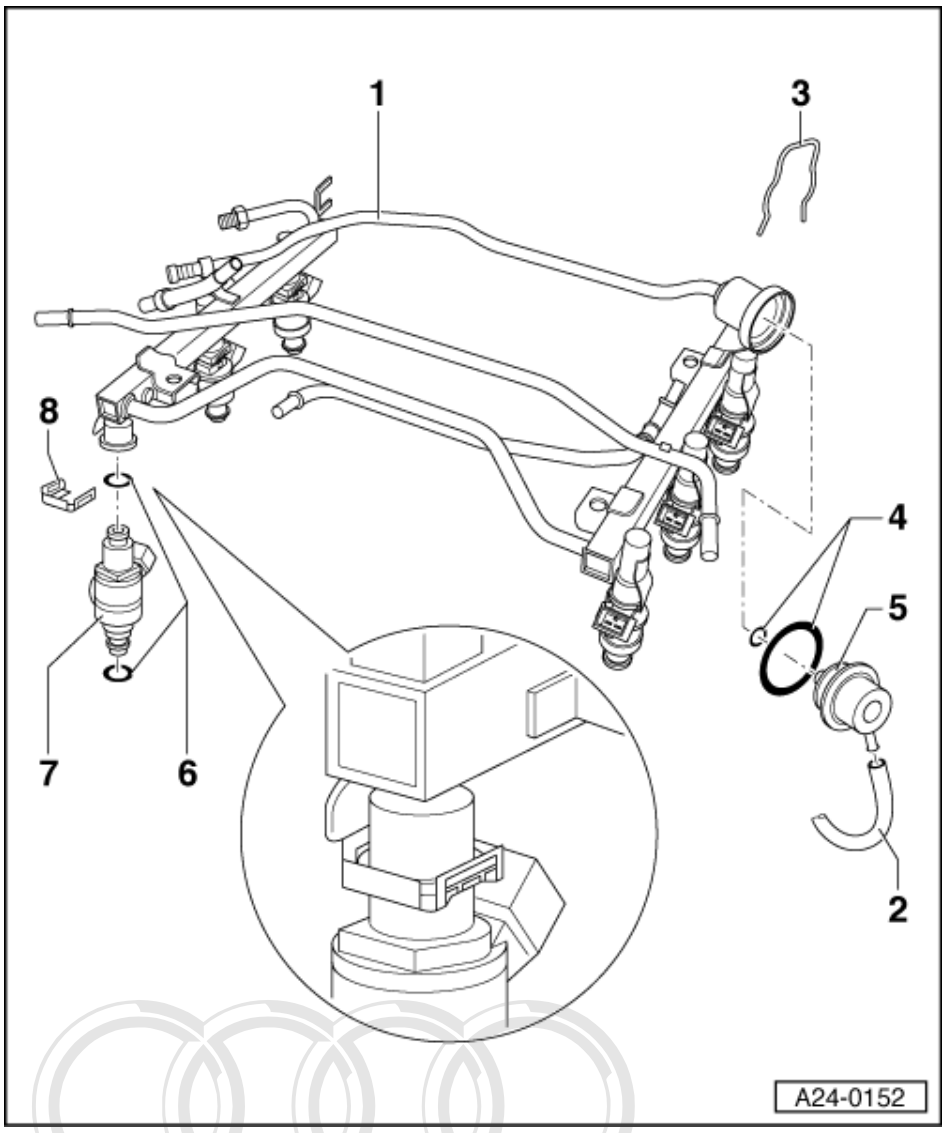

5 Fuel pressure regulator

6 O-ring
- Replace

7 Injector (N30...N32, N33...N84)

8 Bracket
- Ensure it is positioned correctly on injector and fuel manifold

Protected by copyright. Copying for private or commercial purposes, in part or in whole, is not permitted unless authorised by AUDI AG. AUDI AG does not guarantee or accept any liability with respect to the correctness of information in this document. Copyright by AUDI AG.

1.15 - Test fuel pump relay and activation

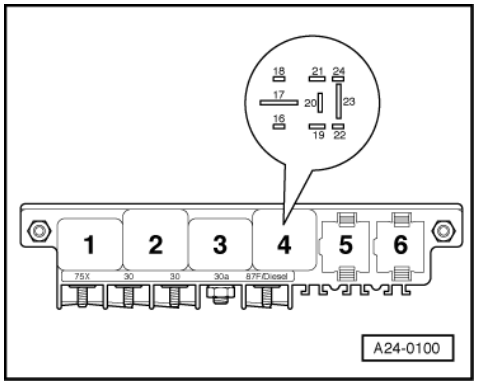

Note:

-> The fuel pump relay is located in central electrics in left hand footwell, relay position 4.

A - Testing fuel pump relay -J17

- Remove storage compartment from front left hand footwell.

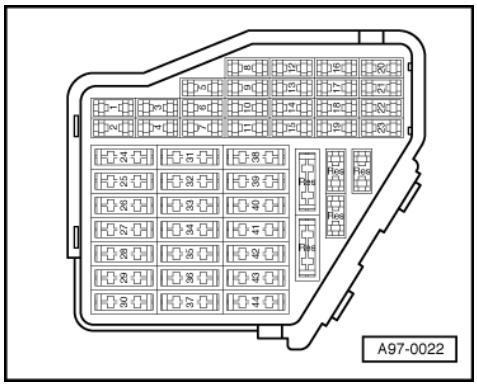

- -> Remove fuel pump fuse from fuse holder and connect diode test lamp V.A.G 1527 between earth and one of the two contacts of fuel pump fuse.

=> Current Flow Diagrams, Electrical Fault-Finding and Fitting Locations

- Operate the starter briefly.

The fuel pump relay should pick up (can be felt and heard) and the diode test lamp should light up.

- If the fuel pump relay does not respond, test activation => Page 85 .

- If the fuel pump relay responds but the diode test lamp does not light up, repeat the test on the other contact of the fuse holder.

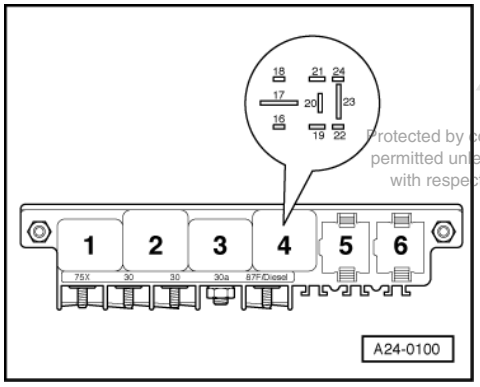

Protected by copyright. Copying for private or commercial purposes, in part or in whole, is not permitted unless authorised by AUDI AG. AUDI AG does not guarantee or accept any liability with respect to the correctness of information in this document. Copyright by AUDI AG.

- -> If the diode test lamp still does not light up, test wiring between contact 23 in relay position 4 and fuel pump fuse for continuity and if necessary, rectify open circuit.

=> Current Flow Diagrams, Electrical Fault-Finding and Fitting Locations

- If the power supply, activation and wiring for the fuel pump relay are OK, fit a new fuel pump relay.

B - Testing power supply and activation of fuel pump relay

Note:

Activation of the fuel pump relay can also be tested using the final control diagnosis.

=>Page 26 .

- Remove fuel pump relay -J17 from central electrics, relay position 4.

Checking power supply

- Switch the ignition on.

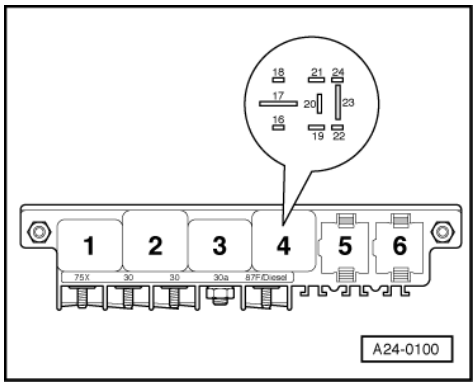

- -> Connect hand-held multimeter V.A.G 1526 first between contact 19 of relay panel and earth and then between contact 17 of relay panel and earth (each permanent positive; terminal 30 from battery).

Specification: approx. battery voltage in each case

- If the values are not as specified, rectify the open circuit.

=> Current Flow Diagrams, Electrical Fault-Finding and Fitting Locations

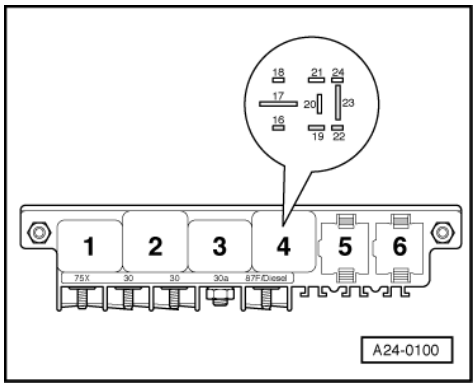

Checking actuation

- -> Connect diode test lamp V.A.G 1527 to contact 16 of relay panel (earth activation from engine control unit) and positive.
- Operate the starter briefly.

Protected by copyright. Copying for private or commercial purposes, in part or in whole, is not permitted unless authorised by AUDI AG. AUDI AG does not guarantee or accept any liability with respect to the correctness of information in this document. Copyright by AUDI AG.

- The diode test lamp should light up and remain lit when the starter is operated.

Note:

Diode test lamps with a low current consumption do not go out completely but continue to glow faintly until the starter is operated.

- If the activation, wiring and power supply for the fuel pump relay are OK but the fuel pump relay still does not respond, fit a new fuel pump relay.

If the diode test lamp does not light up, test the wiring as follows:

- Connect the V.A.G 1598/31 test box to wiring harness leading to engine control unit; the engine control unit must not be connected
  => Page 64 .

Protected by copyright. Copying for private or commercial purposes, in part or in whole, is not permitted unless authorised by AUDI AG. AUDI AG does not guarantee or accept any liability with respect to the correctness of information in this document. Copyright by AUDI AG.

- Connect hand-held multimeter between contact 16 on relay panel and socket 65 on the test box, then test wiring for open circuits.
- Rectify open circuit if necessary.

=> Current Flow Diagrams, Electrical Fault-Finding and Fitting Locations

- If there is no open circuit and the diode test lamp still does not light up, fit a new engine control unit
  => Page 68 .
- Refit the fuel pump fuse.

1.16 - Testing air mass meter

Test conditions

- Coolant temperature at least 80 °C (display group 4, display zone 3)
- Electrical consumers switched off (radiator fan must not run during the check)
- Air conditioner switched off
- Fuse for air mass meter OK

=> Current Flow Diagrams, Electrical Fault-Finding and Fitting Locations

Checking function

- Connect the vehicle diagnostic, testing and information system VAS 5051 or fault reader V.A.G 1551 and select the engine electronics control unit with "address word" 01 => Page 3 .
  For this purpose, the engine must be running at idle speed

-> Indicated on display:

```
Rapid data transfer      HELP
Select function XX
```

- Press keys 0 and 4 for the function "Introduction of basic setting" and confirm entry with Q key.

Note:

During basic setting, the solenoid valve for the activated charcoal filter (valve N80) is closed and the air conditioner compressor is switched off by the engine control unit.

-> Indicated on display:

```
Initiate basic setting     HELP
Enter display group number XXX
```

- Press keys 0, 0 and 2 for "display group 2" and confirm entry with Q key.

-> Indicated on display:

```
Basic setting 2
     1     2     3     4
```

- Check specified results for recorded load.

	Display zones			
	1	2	3	4
Display group 2: Intake air mass at idle and operating temperature				
Display	xxx rpm	xx.x %	**x.x ms**	**xxx.x g/s**
Display	Engine speed (in steps of 40 rpm)	Load	**Average injection period**	**Air mass**
Range	min.: 650 rpm max.: 6800 rpm	min.: 15 % max.: 175 %	**min.: 2.0 ms max.: 19.0 ms**	**min.: 3.0 g/s max.: approx. 225 g/s**
Specification	750...850 rpm	15.0...25.0 %	**2.0...4.0 ms**	**3.0...4.5 g/s**
Note:	---	---	**If specification is not attained: Evaluation, display zone 3 => Page 87**	**If specification is not attained: Evaluation, display zone 4 => Page 87**

If specification is attained:

- Press ⇒key.
- Press keys 0 and 6 for the "End output" function and press the Q key to confirm entry.
- Switch ignition off.

Protected by copyright. Copying for private or commercial purposes, in part or in whole, is not permitted unless authorised by AUDI AG. AUDI AG does not guarantee or accept any liability with respect to the correctness of information in this document. Copyright by AUDI AG.

Interpreting display group 2

Display zone: 3	Possible causes of fault	Fault remedy
Less than 2.0 ms	- Lower values can only occur when vehicle is on overrun	
Greater than 4.0 ms	- Engine load from ancillaries	- Eliminate load (air conditioner system/ power steering/alternator)
	- Poor idling (not running on all cylinders)	- Test spark plugs Check injectors => Page 73 .
	- Throttle valve control part -J338 defective	- Check throttle valve control part =>Page 118 .

Interpreting display group 2

Display zone: 4	Possible causes of fault	Fault remedy
Less than 3.0 g/s	- Large quantity of unmetered air between intake manifold and air mass meter - Voltage supply to air mass meter or wiring to engine control unit	- Test for leaks (unmetered air) in intake air system => Page 87
Greater than 4.5 g/s	- Engine load from ancillaries	- Eliminate load (air conditioner system/ power steering/alternator)
	- Voltage supply to air mass meter or wiring to engine control unit	- Check voltage supply and/or wiring => Page 87

Checking voltage supply for air mass meter (Hitachi air mass meter)

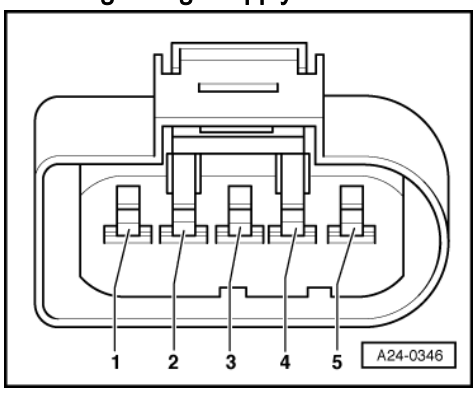

Note:For Bosch air mass meter, see Page 89 .

- -> Detach connector from air mass meter.
- Connect hand-held multimeter (voltage test range) between engine earth and contact 2 on the connector.
- Operate the starter briefly.

Specification: approx. battery voltage

Note:

Voltage supply to air mass meter is from fuel pump relay.

If battery voltage is not present:

- Test wiring from contact 2 on connector via fuse to fuel pump relay for open circuit or short to earth. Rectify if necessary.

=> Current Flow Diagrams, Electrical Fault-Finding and Fitting Locations

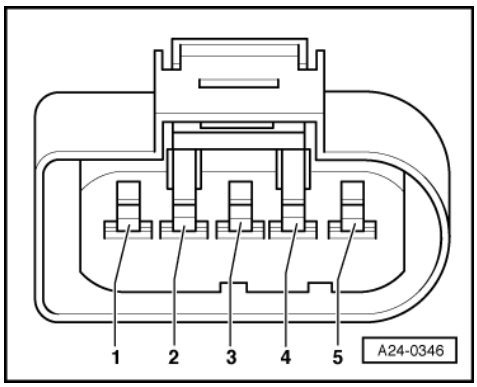

- -> Connect hand-held multimeter to contacts 2 and 3 of the connector to measure voltage.
- Operate the starter briefly.

Specification: approx. battery voltage

Note:

Engine control unit earth is present at contact 3 of the connector.

If specification is not attained, check wiring => Page 89 .

Protected by copyright. Copying for private or commercial purposes, in part or in whole, is not permitted unless authorised by AUDI AG. AUDI AG does not guarantee or accept any liability with respect to the correctness of information in this document. Copyright by AUDI AG.

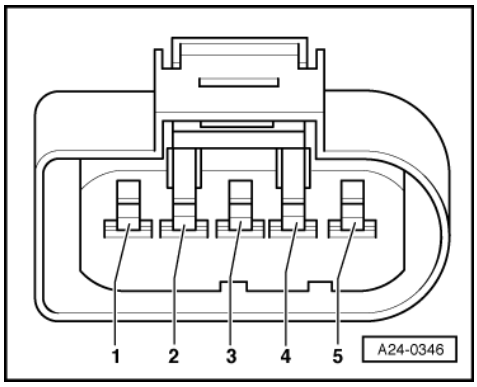

- -> Connect hand-held multimeter to contacts 3 and 1 of the connector to measure voltage.
- Switch the ignition on.

Specification: approx. 5 V.

If specification is not attained, check wiring => Page 89 .

Checking wiring connections for air mass meter (Hitachi air mass meter)

Note:

The signal wire is also checked during the wiring check.

- Connect test box V.A.G 1598/31 to wiring harness for engine control unit; the engine control unit must not be connected => Page 64 .

The following wiring connections are to be checked for open circuits and/or short to positive or negative.

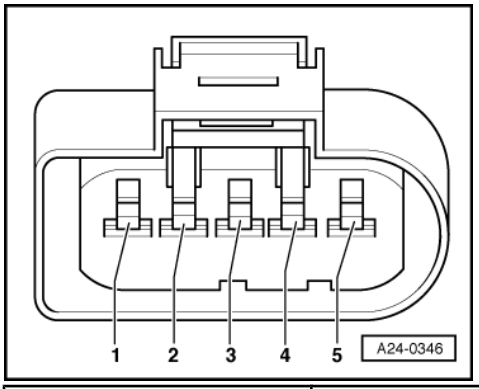

Connector for air mass meter (G70)	Test box V.A.G 1598/31 Contact
1	53
3	27
4	29

Checking voltage supply for air mass meter (Bosch air mass meter)

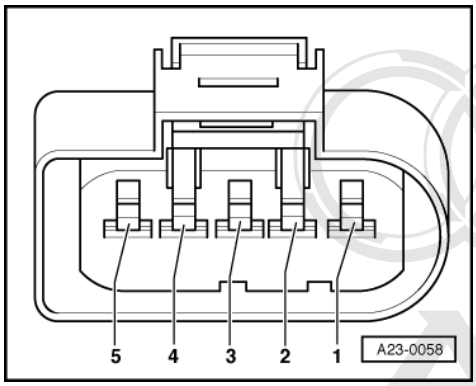

- -> Detach connector from air mass meter.
- Connect hand-held multimeter (voltage test range) between engine earth and contact 2 on the connector.
- Operate the starter briefly.

  Specification: approx. battery voltage

Protected by copyright. Copying for private or commercial purposes, in part or in whole, is not permitted unless authorised by AUDI AG. AUDI AG does not guarantee or accept any liability with respect to the correctness of information in this document. Copyright by AUDI AG.

Note:

Voltage supply to air mass meter is from fuel pump relay.

If battery voltage is not present:

- Test wiring from contact 2 on connector via fuse to fuel pump relay for open circuit or short to earth. Rectify if necessary.

=> Current Flow Diagrams, Electrical Fault-Finding and Fitting Locations

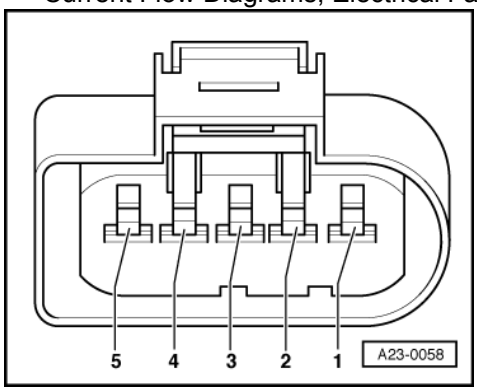

- -> Connect hand-held multimeter to contacts 2 and 3 of the connector to measure voltage.
- Operate the starter briefly.

  Specification: approx. battery voltage

Note:
Engine control unit earth is present at contact 3 of the connector.
If specification is not attained, check wiring => Page 89 .

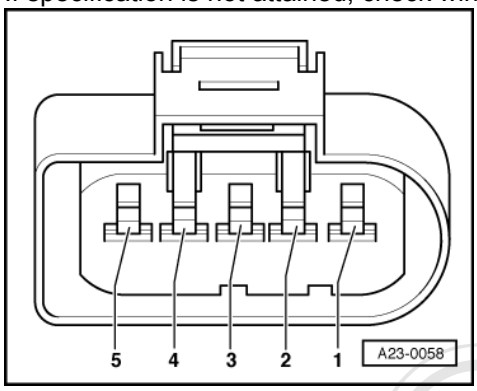

- -> Connect hand-held multimeter to contacts 3 and 4 of the connector to measure voltage.
- Switch the ignition on.

  Specification: approx. 5 V.

If specification is not attained, check wiring => Page 89 .

Checking wiring connections for air mass meter (Bosch air mass meter)

Note:
The signal wire is also checked during the wiring check.

- Connect test box V.A.G 1598/31 to wiring harness for engine control unit; the engine control unit must not be connected => Page 64 .

The following wiring connections are to be checked for open circuits and/or short to positive or negative.

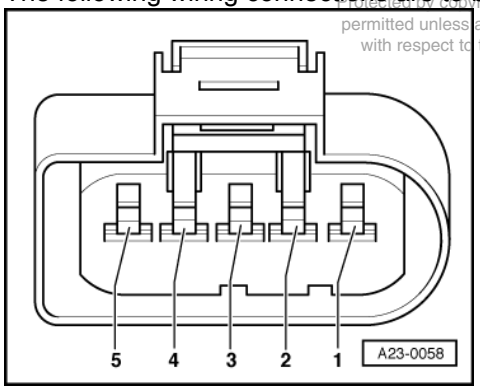

Protected by copyright. Copying for private or commercial purposes, in part or in whole, is not permitted unless authorised by AUDI AG. AUDI AG does not guarantee or accept any liability with respect to the correctness of information in this document. Copyright by AUDI AG.

Connector for air mass meter (G70)	Test box V.A.G 1598/31 Contact
3	27
4	53
5	29

Wire resistance: max. 1.5 Ohm

- Additionally check all wires for short to one another.

  Specification: infinite resistance (open circuit)

- If the voltage supply and the wiring are OK, renew the air mass meter (G70).

1.17 - Checking intake air system for leaks (unmetered air)

Checking with engine leak detector spray G 001 800 A1

Notes:

- The vacuum in the intake system will cause the leak detector spray to be drawn in with the unmetered air. The leak detector spray reduces the ignitability of the mixture. This leads to a drop in engine speed and to a significant increase of the CO content.
- The safety precautions listed on the container must be adhered to.

- Connect the vehicle diagnostic, testing and information system VAS 5051 or fault reader V.A.G 1551 and select the engine electronics control unit with "address word" 01 => Page 3 .
  For this purpose, the engine must be running at idle speed

-> Indicated on display:

```
Rapid data transfer      HELP
Select function XX
```

- Press keys 0 and 8 for the function "Read measured value block" and confirm entry with Q key.

-> Indicated on display:

```
Reading measured value block
Enter display group number XXX
```

- Press keys 0, 0 and 1 for "Display Group 01" and confirm entry by pressing Q.

-> Indicated on display:
(1...4 = display zones)

```
Read measured value block 1
     1     2     3     4
```

- Note engine speed in display zone 1.
- Systematically spray parts of the intake system with engine leak detector spray.

If engine speed does not change:

- Press ⇒key.
- Press keys 0 and 6 for the "End output" function and press the Q key to confirm entry.

If engine speed drops:

Protected by copyright. Copying for private or commercial purposes, in part or in whole, is not permitted unless authorised by AUDI AG. AUDI AG does not guarantee or accept any liability with respect to the correctness of information in this document. Copyright by AUDI AG.

- Press ⇒key.
- Press keys 0 and 6 for the "End output" function and press the Q key to confirm entry.

- Check sprayed areas of intake system for leaks and rectify if necessary.

2 - Checking lambda control

2.1 - Checking lambda control

2.2 - Function of lambda control

Protected by copyright. Copying for private or commercial purposes, in part or in whole, is not permitted unless authorised by AUDI AG. AUDI AG does not guarantee or accept any liability with respect to the correctness of information in this document. Copyright by AUDI AG.

The lambda probes compare the oxygen content in the air with the residual oxygen content in the exhaust gas and send a voltage signal to the control unit.

The voltage signal for "Mixture rich" (low level of residual oxygen) is between about 0.5 and 1.0 V (in relation to reference earth).

The voltage signal for "Mixture weak" (high residual oxygen) is between about 0...0.5 V (in relation to reference earth).

During the transition from "rich" to "lean" and vice versa (λ = 1.0), there is a voltage jump from 0.5...1.0 V to 0...0.5 V or vice versa.

Because of the sharp voltage jump the lambda control cannot maintain a constant ideal mixture composition of λ = 1.0. The system fluctuates continuously between "slightly too lean" and "slightly too rich".

If the voltage does not change or only changes slowly the following faults are possible:

- Slots or holes in probe head are blocked.
- Lambda probe has been subjected to excessive thermal stress.
- Contact resistance in signal wire or earth wire.
- Lambda probe too cold; lambda probe heating not working.
- Lambda probe damaged by contact spray or similar product (the contact spray is drawn into the probe through the fine cavities in the electrical wiring as a result of thermal fluctuations and capillary effects).
- Lambda probe damaged by silicone vapours (the engine draws in traces of any silicone based sealants that may have been used. The silicone does not burn and damages the lambda probe).

2.3 - Checking lambda probe and lambda control before catalytic converter

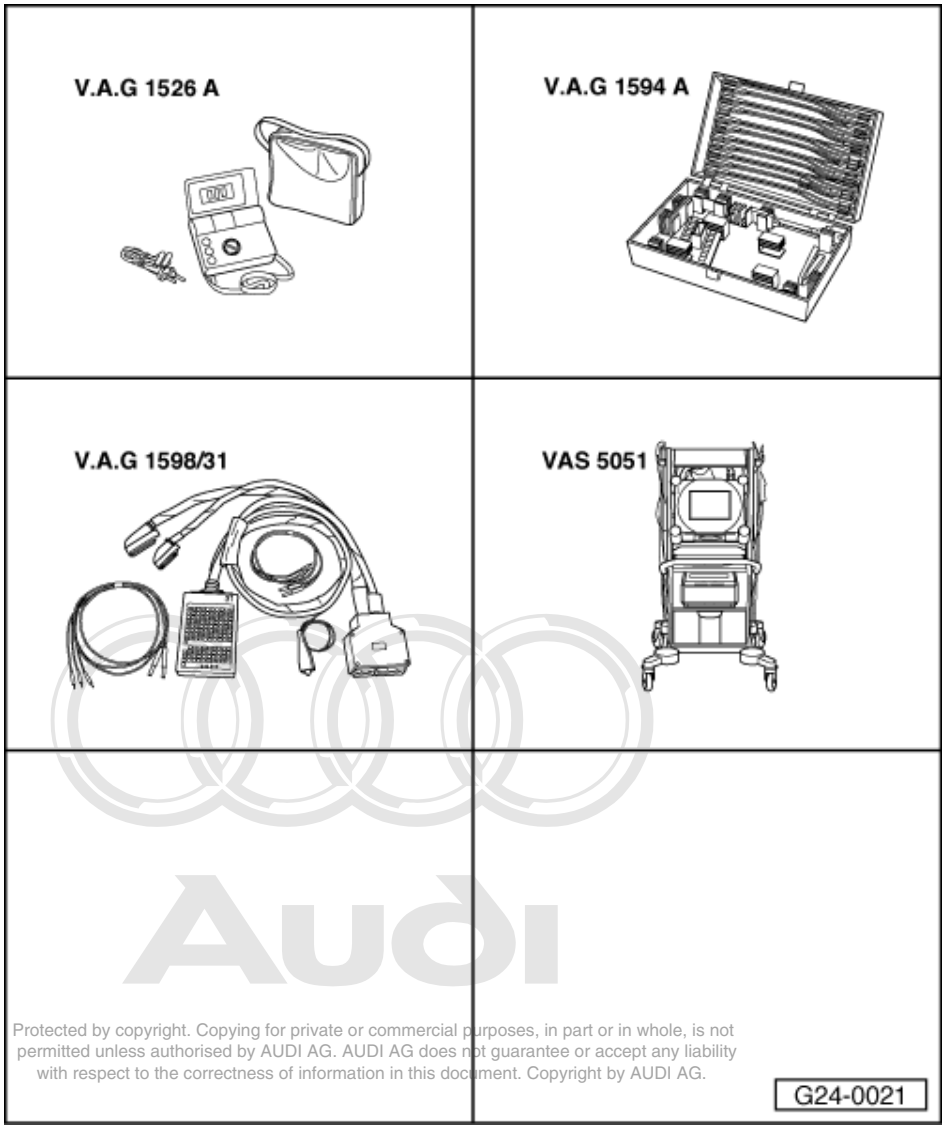

Protected by copyright. Copying for private or commercial purposes, in part or in whole, is not permitted unless authorised by AUDI AG. AUDI AG does not guarantee or accept any liability with respect to the correctness of information in this document. Copyright by AUDI AG.

Special tools and workshop equipment required

- V.A.G 1526 A
- V.A.G 1594 A
- V.A.G 1598/31
- VAS 5051 with VAS 5051/1

or

- V.A.G 1551 with V.A.G 1551/3 A

Notes:

- For vehicles which only fulfil emission standard EU II-D3, one lambda probe is installed per cylinder bank, i.e. a total of 2. For vehicles which fulfil emission standard EU III, two lambda probes are installed per cylinder bank, i.e. a total of 4.
- For specific fault search, it is possible to switch off the lambda control by selecting display group 99 "Basic setting" mode and to switch it on again by selecting display group 99 in "Read measured value block" mode.
- After selecting the display group 99 (whether in "Basic setting" or "Read measured value block" mode), it is possible to switch back and forth between the functions 04 "Basic setting" and 08 "Read measured value block" by pressing the keys 4 or 8 on V.A.G 1551.

- On leaving function 04 "Basic setting", the lambda control is automatically re-activated.

Test conditions

- Perform road test and do not erase fault memory.
- Coolant temperature at least 85 °C (display group 4, display zone 3)

Functional test

- Connect the vehicle diagnostic, testing and information system VAS 5051 or fault reader V.A.G 1551 and select the engine electronics control unit with "address word" 01 => Page 3 .
  For this purpose, the engine must be running at idle speed.

-> Indicated on display:

```
Rapid data transfer      HELP
Select function XX
```

- Press keys 0 and 4 for the function "Introduction of basic setting" and confirm entry with Q key.

Note:

During basic setting, the solenoid valve for the activated charcoal filter (valve -N80) is closed and the air conditioner compressor is switched off.

-> Indicated on display:

```
Basic setting
Enter display group number XXX
```

- Press keys 0, 3 and 0 for "display group number 30" and confirm entry with Q key.

-> Indicated on display:
(1...4 = display zones)

```
System in basic setting 30
     1     2     3     4
```

- Check lambda probe status
  (display zones 1 to 4)

Note:

The "lambda probe status" indicates the condition of the lambda control and the lambda probes.

Please note:

On vehicles which do not conform to emission standard EU III, the display zones 2 and 4 remain empty, the "post-catalytic converter control is not active. This also applies for the other tests.

Protected by copyright. Copying for private or commercial purposes, in part or in whole, is not permitted unless authorised by AUDI AG. AUDI AG does not guarantee or accept any liability with respect to the accuracy and completeness of this document. Copyright by AUDI AG.

	Display zones			
	1	2	3	4
Display group 30: Lambda status at idle (coolant temperature at least 85 °C)				
Display	**X X X**	X X X	**X X X**	X X X
Display	**Lambda probe status, bank 1, probe 1**	Lambda probe status, bank 2, probe 1	**Lambda probe status, bank 2, probe 1**	Lambda probe status, bank 2, probe 2
Range	**0 = off 1 = on**	0 = off 1 = on	**0 = off 1 = on**	0 = off 1 = on
Specification	**1 1 1**	1 1 0	**1 1 1**	1 1 0
Note:	**Explanation of display=> Page 106**			

Significance of 3-digit readout of display group 30

1	1	1	Display zones 1 to 4
		X	Lambda control 0 = inactive 1 = active
	X		Lambda probe condition 0 = inactive 1 = active
X			Condition of lambda probe heating 0 = inactive 1 = active

Notes:

- On vehicles with emission standard EU III: The lambda control of lambda probes after catalytic converters (B1-P2 and B2-P2) are not active at certain operating points without engine load, therefore the third digit of the lambda control after the catalytic converter can fluctuate between 0 and 1.
- The first digit of the 3-digit display (heating) fluctuates between 0 and 1 at certain operating points.

Checking lambda probe learned values and lambda control

- Connect the vehicle diagnostic, testing and information system VAS 5051 or fault reader V.A.G 1551 and select the engine electronics control unit with "address word" 01 => Page 3 .
  For this purpose, the engine must be running at idle speed

-> Indicated on display:

```
Rapid data transfer       HELP
Select function XX
```

- Press keys 0 and 4 for the function "Introduction of basic setting" and confirm entry with Q key.

Note:

During basic setting, the solenoid valve for the activated charcoal filter (valve -N80) is closed and the air conditioner compressor is switched off.

Protected by copyright. Copying for private or commercial purposes, in part or in whole, is not permitted unless authorised by AUDI AG. AUDI AG does not guarantee or accept any liability with respect to the correctness of information in this document. Copyright by AUDI AG.

-> Indicated on display:

```
Basic setting
Enter display group number XXX
```

- Press keys 0, 3 and 3 for "display group number 33" and confirm entry with Q key.

-> Indicated on display:
(1...4 = display zones)

```
System in basic setting 33
     1     2     3     4
```

- Check lambda control
  (display zones 1 to 4):

	Display zones			
	1	2	3	4
Display group 33: Lambda control at idle				
Display	**xx.x %**	**x.xxx Volt**	**xx.x %**	**x.xxx V**
Display	**Lambda control bank 1**	**Lambda probe voltage, bank 1**	**Lambda control bank 2**	Lambda probe voltage, bank 2

	Display zones			
Range	min.: -25.0 % max.: 25.0 %	min.: 0 V max.: 1.000 V	min.: -25.0 % max.: 25.0 %	min.: 0 V max.: 1.000 V
Specification	In range -4.0...4.0 % value must fluctuate by at least 2 %	In range 0.000...1.000 volts, the voltage must fluctuate	In range -4.0...4.0 % value must fluctuate by at least 2 %	In range 0.000...1.000 volts, the voltage must fluctuate
Note:	If the specification is not attained =>Page 96	If the specification is not attained, see evaluation =>Page 97	If the specification is not attained =>Page 96	If the specification is not attained, see evaluation =>Page 97

- Press Ckey.
- Press keys 0, 3 and 2 for "display group number 32" and confirm entry with Q key.

Protected by copyright. Copying for private or commercial purposes, in part or in whole, is not permitted unless authorized by AUDI AG. AUDI AG does not guarantee or accept any liability with respect to the correctness of information in this document. Copyright by AUDI AG.

-> Indicated on display:
(1...4 = display zones)

```
System in basic setting 32
     1     2     3     4
```

- Check lambda control
  (display zones 1 to 4):

	Display zones			
	1	2	3	4
Display group 32: Lambda probe-learned values at idle				
Display	xx.x %	xx.x %	xx.x %	xx.x %
Display	Lambda learned value bank 1, probe 1 at idle (additive)	Lambda learned value bank 1, probe 1 on part throttle (multiplicative)	Lambda learned value bank 1, probe 2 at idle (additive)	Lambda learned value bank 1, probe 2 on part throttle (multiplicative)
Range	min.: -10.0 % max.: 10.0 %	min.: -25.0 % max.: 25.0 %	min.: -10.0 % max.: 10.0 %	min.: -25.0 % max.: 25.0 %
Specification	-4.0...4.0 % can fluctuate slightly	-7.0...7.0 % can fluctuate slightly	-4.0...4.0 % can fluctuate slightly	-7.0...7.0 % can fluctuate slightly
Note:	If the specification is not attained =>Page 97	If the specification is not attained =>Page 97	If the specification is not attained =>Page 97	If the specification is not attained =>Page 97

If specification is not attained in display zone 1 or display zone 3, or if the value does not fluctuate by at least 2%:

- Check the lambda probe heating
  => Page 106 .
- Check lambda probe signal wiring and activation => Page 109
- Test for leaks (unmetered air) in intake air system =>Page 91 .
- Check fuel pressure / fuel pressure regulator
  => Page 71
- Fuel return line kinked or blocked.
- Press the ⇒key.
- Press keys 0 and 6 for the "End output" function and press the Q key to confirm entry.
- Switch ignition off.

Interpreting display group 32

Display group 32 Display zone: 1 / 3	Possible causes of fault	Fault remedy

Lambda learned values in range -4.0 to -10.0 %	- Oil dilution	- Carry out oil change or drive vehicle fairly fast on out-of-town roads
Display zone: 2 / 4	- High oil consumption	
Lambda learned values in range -7.0 to -25.0 %	- Air mass meter defective	- Test air mass meter => Page 86
	- Solenoid valve for activated charcoal filter stuck open	- Check solenoid valve for activated charcoal filter =>Page 115 .
	- Fuel pressure too high - Fuel return line kinked or blocked.	- Check fuel pressure regulator => Page 71 Check fuel return line
	- Injector leaking	- Check injectors => Page 73

Interpreting display group 32

Display group 32		
Display zone: 1 / 3	Possible causes of fault	Fault remedy
Lambda learned values in range 4.0 to 10.0 %	- Unmetered air in intake area	- Check intake system for leaks and rectify unmetered air
Display zone: 2 / 4	- Fuel pressure too low	- Check fuel pressure regulator => Page 71 .
Lambda learned values in range 7.0 to 25.0 %	- Lambda probe heating defective	- Check lambda probe heating => Page 106 .
	- Injector only opens partially or not at all	- Check injectors => Page 73
	- Solenoid valve for activated charcoal filter stuck open	- Check solenoid valve for activated charcoal filter => Page 115 .

Interpreting display group 33

Protected by copyright. Copying for private or commercial purposes, in part or in whole, is not permitted unless authorised by AUDI AG. AUDI AG does not guarantee or accept any liability with respect to the correctness of information in this document. Copyright by AUDI AG.

Display group 33		
Display zone: 2 / 4	Possible causes of fault	Fault remedy
approx. 0.450 V	- Open circuit in line 4 (at lambda probe) between lambda probe and control unit - Open circuit in line 3 (at lambda probe) between lambda probe and control unit - Lambda probe heating defective - Lambda probe defective	- Check signal wiring and actuation => Page 109 - Checking lambda probe heating => Page 106 Fit a new lambda probe
Greater than 1.100 V	- Short to positive in line 4 between lambda probe and control unit	- Check lambda probe wiring for bank 1, lambda probe 1 => Page 110
Less than 0.100 V	- Short circuit to earth in line 4 (at lambda probe) between lambda probe and control unit - Short circuit between lines 3 and 4	- Check lambda probe wiring for bank 2, lambda probe 1 => Page 112

2.4 - Checking ageing of lambda probes before catalytic converter (on vehicles which conform to emission standard EU III)

Test conditions

- Coolant temperature at least 85 °C (display group 4, display zone 3)

Test procedure for lambda probe 1 before catalytic converter bank 1

- Connect the vehicle diagnostic, testing and information system VAS 5051 or fault reader V.A.G 1551 and select the engine electronics control unit with "address word" 01 => Page 3 .
  For this purpose, the engine must be running at idle speed

-> When adjacent display appears:

```
Rapid data transfer      HELP
Select function XX
```

- Enter "04" to select "Start basic setting" and confirm with Q key.

-> When adjacent display appears:

```
Start basic setting      Q
Enter display group number XXX
```

- Enter "034" for "display group number 034" and confirm entry with Q key.

Test conditions

- Engine running at 1900...2200 rpm.

-> Indicated on display:

```
System in basic setting 34
     1     2     3     4
```

Protected by copyright. Copying for private or commercial purposes, in part or in whole, is not permitted unless authorised by AUDI AG. AUDI AG does not guarantee or accept any liability with respect to the correctness of information in this document. Copyright by AUDI AG.

- Perform the test as soon as "Test ON" appears in display zone 4.

Note:

This process can take a few minutes.

	Display zones			
	1	2	3	4
Display group 034: Diagnosis, lambda probe ageing, (bank 1)				
Display	xxxx rpm	xxx °C	x.x s	**Test ON**
Display	Engine speed	Exhaust gas temperature	Period Lambda probe before catalytic converter	Diagnosis status
Range	0...6800 rpm	70...850 °C	0...3.0 seconds	**Test OFF Test ON B1-P1 OK B1-P1 NOK**
Specification	1900...2200 rpm	greater than 260 °C	0.2...2.5 s	B1-P1 OK
Note:			**If specification not attained => ContinuePage 99**	

Note on display zone 2:

Calculated value from engine speed and load.

Note on display zones 3 and 4:

The period specifies the time between two voltage jumps in the lambda probe (e.g. rich - lean - rich) thereby providing a measurement basis for the ageing status of the lambda probe. If the specified time is exceeded, display zone 4 indicates = B1-P1 NOK.

(cont.)

If specification in display zone 4 is not attained:

- Replace lambda probe 1 before catalytic converter -G39, bank 1.

Test procedure for lambda probe 1 before catalytic converter, bank 2

- Connect the vehicle diagnostic, testing and information system VAS 5051 or fault reader V.A.G 1551 and select the engine electronics control unit with "address word" 01 => Page 3 .
  For this purpose, the engine must be running at idle speed

-> When adjacent display appears:

```
Rapid data transfer      HELP
Select function XX
```

- Enter "04" to select "Start basic setting" and confirm with Q key.

-> When adjacent display appears:

```
Basic setting      Q
Enter display group number XXX
```

- Enter "035" for "display group number 035" and confirm entry with Q key.

Test conditions

Protected by copyright. Copying for private or commercial purposes, in part or in whole, is not permitted unless authorised by AUDI AG. AUDI AG does not guarantee or accept any liability with respect to the correctness of information in this document. Copyright by AUDI AG.

- Engine running at 1900...2200 rpm.

-> Indicated on display:

```
System in basic setting 35
     1     2     3     4
```

- Perform the test as soon as "Test ON" appears in display zone 4.

Note:

This process can take a few minutes.

It is possible that "B2-P1 OK or NOK" will be displayed before "Test ON" appears, since the diagnosis is performed simultaneously with the lambda probe for bank 1. This also applies to further tests.

	Display zones			
	1	2	3	4
Display group 035: Diagnosis, lambda probe ageing, (bank 2)				
Display	xxxx rpm	xxx °C	x.x s	**Test ON**
Display	Engine speed	Exhaust gas temperature	Period Lambda probe before catalytic converter	Diagnosis status
Range	0...6800 rpm	70...850 °C	0...3.0 seconds	**Test OFF Test ON B2-P1 OK B2-P1 NOK**
Specification	1900...2200 rpm	greater than 260 °C	0.2...2.5 s	B2-P1 OK
Note:			**If specification not attained => ContinuePage 99**	

Note on display zone 2:

Calculated value from engine speed and load.

Note on display zones 3 and 4:

The period specifies the time between two voltage jumps in the lambda probe (e.g. rich - lean - rich) thereby providing a measurement basis for the ageing status of the lambda probe. If the specified time is exceeded, display zone 4 indicates = B1-P1 NOK.

(cont.)

If specification in display zone 3 or 4 is not attained:

- Replace lambda probe 1 before catalytic converter -G108, bank 2.

2.5 - Checking lambda probe and lambda control after catalytic converter (on vehicles which conform to emission standard EU III)

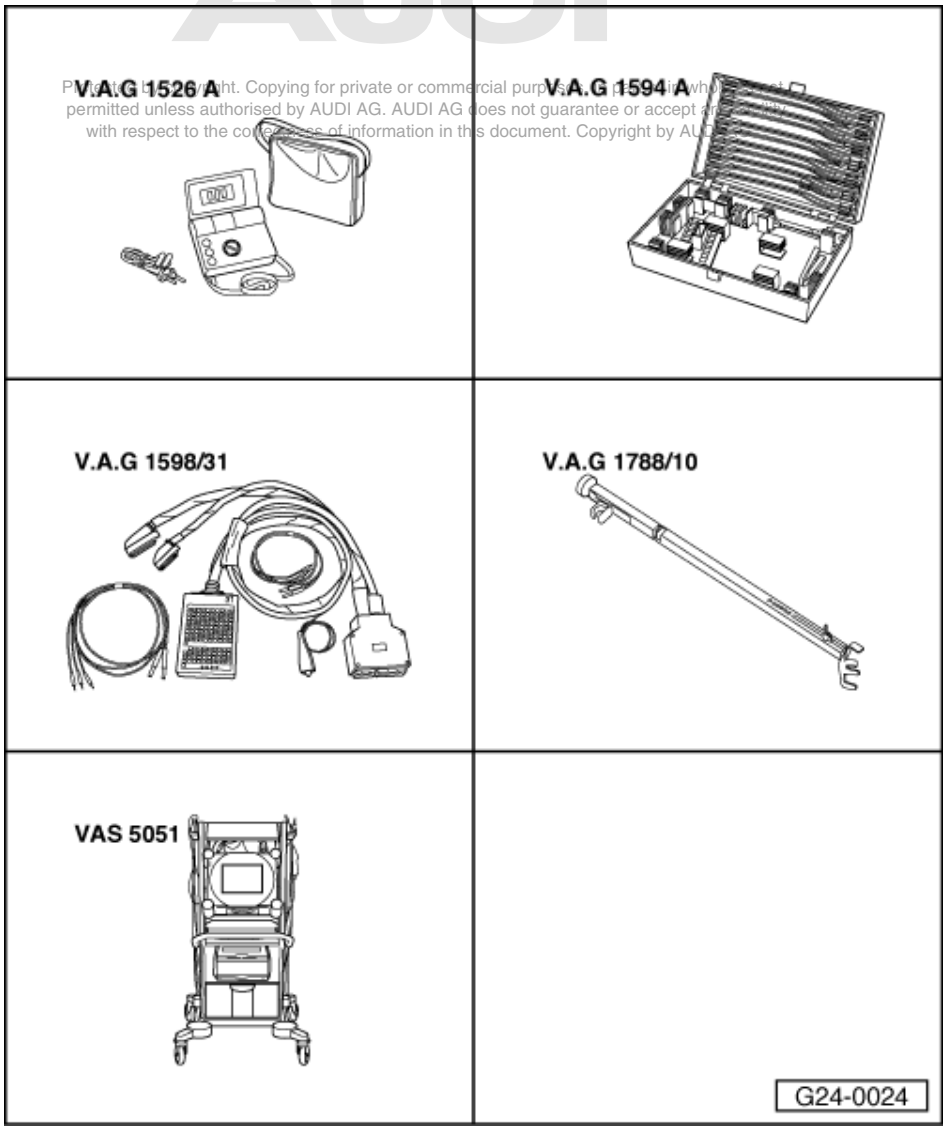

Protected by copyright. Copying for private or commercial purposes, in part or in whole, is not permitted unless authorised by AUDI AG. AUDI AG does not guarantee or accept any liability with respect to the correctness of information in this document. Copyright by AUDI AG.

Special tools and workshop equipment required

- V.A.G 1526 A
- V.A.G 1594 A
- V.A.G 1598/31
- V.A.G 1788/10
- VAS 5051 with VAS 5051/1

or

- V.A.G 1551 with V.A.G 1551/3 A

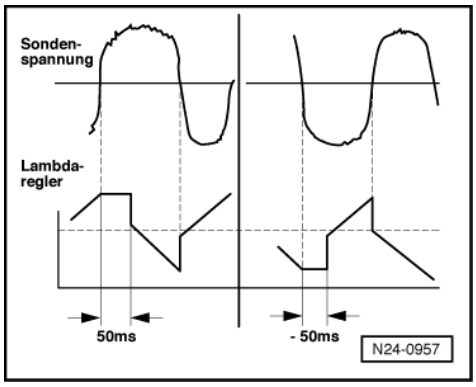

Note:

The lambda control after catalytic converter serves as a correction control.

-> It corrects slight mixture changes (e.g. enrichment) through the lambda probe before catalytic converter, by maintaining the lambda control for a certain period (dwell time) at the upper / lower point.If the time is in the positive range (e.g. 50 ms), the mixture is made richer. If it is in the negative range (e.g. -50 ms), the mixture is made leaner.

Fitting location of connectors => Page 49 .

Test conditions

- Perform road test and do not erase fault memory.
- Coolant temperature at least 85 °C (display group 4, display zone 3)

Test sequence

- Connect the vehicle diagnostic, testing and information system VAS 5051 or fault reader V.A.G 1551 and select the engine electronics control unit with "address word" 01 => Page 3 .
  For this purpose, the engine must be running at idle speed

-> When adjacent display appears:

```
Rapid data transfer      HELP
Select function XX
```

Protected by copyright. Copying for private or commercial purposes, in part or in whole, is not permitted unless authorised by AUDI AG. AUDI AG does not guarantee or accept any liability with respect to the correctness of information in this document. Copyright by AUDI AG.

- Enter "04" to select "Start basic setting" and confirm with Q key.

Note:

During basic setting, the solenoid valve for the activated charcoal filter (valve -N80) is closed and the air conditioner compressor is switched off.

-> When adjacent display appears:

```
Start basic setting          Q
Enter display group number XXX
```

- Enter "034" for "display group number 034" and confirm entry with Q key.

-> Indicated on display:

```
System in basic setting 34
     1     2     3     4
```

- Set engine speed to 2800...3200 rpm using engine speed controller V.A.G 1788/10.
- Perform the test as soon as an exhaust gas temperature above 320 °C is attained in display zone 2.

Note:

This process can take a few minutes.

- Press C key.
- Set engine speed to 1900...2200 rpm using engine speed controller V.A.G 1788/10.

-> When adjacent display appears:

```
Basic setting      Q
Enter display group number XXX
```

- Enter "030" for "display group number 030" and confirm entry with Q key.

-> When adjacent display appears:

```
System in basic setting 30
     1     2     3     4
```

- Check lambda probe status for lambda probe after catalytic converter in display zones 2 and 4.

Note:

The "lambda probe status" indicates the condition of the lambda control and the lambda probes.

	Display zones			
	1	2	3	4
Display group 030: Lambda status at idle				
Display	X X X	**X X X**	X X X	**X X X**
Display	Lambda probe status, bank 1, probe 1	**Lambda probe status bank 1, probe 2**	Lambda probe status, bank 2, probe 1	**Lambda probe status bank 2, probe 2**
Range	0 = off 1 = on	**0 = off 1 = on**	0 = off 1 = on	**0 = off 1 = on**
Specification	1 1 1	**1 1 0**	1 1 1	**1 1 0**
Note:	**Explanation of display => Page 106**			

Notes:

Protected by copyright. Copying for private or commercial purposes, in part or in whole, is not permitted unless authorised by AUDI AG. AUDI AG does not guarantee or accept any liability with respect to the correctness of information in this document. Copyright by AUDI AG.

- The lambda control of lambda probe after catalytic converter (bank 1-probe 2 and bank 2-probe 2) is not active without engine load, i.e. the display is 0.
- The first digit of the 3-digit display (heating) fluctuates between 0 and 1.
- The third digit of the 3-digit display (lambda control) fluctuates between 0 and 1.

Significance of 3-digit readout of display group 30

1	1	1	**Display zones 1 to 4**
		X	Lambda control 0 = inactive 1 = active

	X		Lambda probe condition 0 = inactive 1 = active
X			Condition of lambda probe heating 0 = inactive 1 = active

- Press C key.

-> When adjacent display appears:

```
Basic setting      Q
Enter display group number XXX
```

- Enter "043" for "display group number 043" and confirm entry with Q key.

Test conditions

- Engine running at 1900...2200 rpm.

-> Indicated on display:

```
System in basic setting 43
     1     2     3     4
```

- Check specification in display zone 4:

	Display zones			
	1	2	3	4
Display group 043: Lambda probe ageing, lambda probe after catalytic converter (bank 1)				
Display	xxxx rpm	xxx °C	x.xxx V	**Test ON**
Display	Engine speed	Exhaust gas temperature	Voltage, lambda probe after catalytic converter, bank 1	Diagnosis status
Range	0...6800 rpm	70...850 °C	0...1.000 volts	Test OFF Test ON B1-P2 OK B1-P2 NOK
Specification	1900...2200 rpm	greater than 320 °C	0...1.000 volts	B1-P2 OK
Note:				**If specification is not attained:Check lambda probe heating => Page 106**

If specification "B1-P2 OK" is attained:

- Press C key.

Test conditions

- Engine running at 1900...2200 rpm.

- Press keys 0, 4 and 4 for "display group number 44" and confirm entry with Q key.

	Display zones			
	1	2	3	4
Display group 044: Lambda probe ageing, lambda probe after catalytic converter (bank 2)				
Display	xxxx rpm	xxx °C	x.xxx V	**Test ON**
Display	Engine speed	Exhaust gas temperature	Voltage, lambda probe after catalytic converter, bank 2	Diagnosis status

Protected by copyright. Copying for private or commercial purposes, in part or in whole, is not permitted unless authorized by AUDI AG. AUDI AG does not guarantee or accept any liability with respect to the correctness of information in this document. Copyright by AUDI AG.

	Display zones			
Range	0...6800 rpm	70...850 °C	0...1.000 volts	Test OFF Test ON B2-P2 OK B2-P2 NOK
Specification	1900...2200 rpm	greater than 320 °C	0...1.000 volts	B2-P2 OK
Note:				**If specification is not attained:Check lambda probe heating => Page 106**

If specification "B2-P2 OK" is attained:

- Press C key.

Note:

It is possible that "B2-P2 OK or NOK" will be displayed before "Test ON" appears, since the diagnosis is performed simultaneously with the lambda probe for bank 1. This also applies to further tests.

Checking lambda control after catalytic converter

- Carry out a road test lasting at least 10 minutes.

-> When adjacent display appears:

```
Start basic setting      Q
Enter display group number XXX
```

- Enter "037" for "display group number 037" and confirm entry with Q key.

-> Indicated on display:

```
System in basic setting 37
     1     2     3     4
```

- Check lambda probe voltage in display zone 2.
- Check dwell time between lambda probe 1 before catalytic converter and lambda probe 2 after catalytic converter in display zone 3 and diagnosis result in display zone 4.

	Display zones			
	1	2	3	4
Display group 037: Diagnosis, lambda control system (bank 1)				
Display	xxx %	x.xxx Volt	xxx ms	**Test ON**
Display	Engine load	Voltage of lambda probe after catalytic converter, bank 1	Lambda correction value between lambda probe 1 and lambda probe 2, bank 1	Diagnosis status
Range	15.0...175.0 %	0....1.000 V	-1000...1000 ms	**Test OFF Test ON SYST. OK SYST. NOK**
Specification	15.0...25.0 %	0....1.000 V	-500...500 ms	SYST. OK
Note:		**If specification is not attained: Evaluation, display zone 2 => Page 105**	**If specification is not attained: Continued => Page 106**	**If "SYST. NOK" is displayed:Interrogate fault memory => Page 106**

Protected by copyright. Copying for private or commercial purposes, in part or in whole, is not permitted unless authorised by AUDI AG. AUDI AG does not guarantee or accept any liability with respect to the correctness of information in this document. Copyright by AUDI AG.

Note on display zone 3:

The lambda control after catalytic converter serves as a correction control.It corrects slight rich / lean mixture changes in the lambda probe before catalytic converter, by maintaining the lambda control before catalytic

converter at the upper / lower point for a certain period of time (dwell time). If the time is in the positive range (e.g. 50 ms), the mixture is made richer. If it is in the negative range (e.g. -50 ms), the mixture is made leaner.

- Press Ckey.
- Press keys 0, 3 and 8 for "display group number 38" and confirm entry with Q key.

-> Indicated on display:
(1...4 = display zones)

```
System in basic setting 38
     1     2     3     4
```

	Display zones			
	1	2	3	4
Display group 038: Lambda control system diagnosis (bank 2)				
Display	xxx %	x.xxx Volt	xxx ms	**Test ON**
Display	Engine load	Voltage of lambda probe after catalytic converter, bank 2	Lambda correction value between lambda probe 1 and lambda probe 2, bank 2	Diagnosis status
Range	15.0...greater than 175.0 %	0...1.000 volts	-1000...1000 ms	**Test OFF Test ON SYST. OK SYST. NOK**
Specification	15.0...25.0 %	0...1.000 V	-500...500 ms	SYST. OK
Note:		If specification is not attained: Evaluation, display zone 2 => Page 105	If specification is not attained: Continued => Page 106	**If "SYST. NOK" is displayed:Interrogate fault memory => Page 106**

Note on display zone 3:

Protected by copyright. Copying for private or commercial purposes, in part or in whole, is not permitted unless authorised by AUDI AG. AUDI AG does not guarantee or accept any liability with respect to the correctness of information in this document. Copyright by AUDI AG.

The lambda control after catalytic converter serves as a correction control. It corrects slight rich / lean mixture changes in the lambda probe before catalytic converter, by maintaining the lambda control before catalytic converter at the upper / lower point for a certain period of time (dwell time). If the time is in the positive range (e.g. 50 ms), the mixture is made richer. If it is in the negative range (e.g. -50 ms), the mixture is made leaner.

Evaluation of display groups 037 and 038

Display group 37/38 Display zone: 2	Possible causes of fault	Fault remedy
approx. 0.450 V	- Open circuit in line 4 between lambda probe and control unit - Open circuit in line 3 between lambda probe and control unit - Lambda probe heating defective - Lambda probe defective	- Check signal wiring and actuation => Page 109 - Checking lambda probe heating => Page 106 Fit a new lambda probe
Greater than 1.100 V	- Short to positive in line 4 between lambda probe and control unit	- Check lambda probe wiring bank 1, lambda probe 2 (after catalytic converter) => Page 111
Less than 0.100 V	- Short to earth in line 4 between lambda probe and control unit - Short circuit between lines 3 and 4	- Check lambda probe wiring bank 2, lambda probe 2 (after catalytic converter) => Page 113

(cont.)

If specification in display groups 37 and 38, display zones 3 or 4 is not attained:

- Check for air leak at exhaust or catalytic converter (check screw clamps and exhaust for damage)
- If values of display zones 3 differ greatly (e.g. +500 ms, -500 ms) (lambda correction value) in measured value blocks 37 and 38, the lambda probes after catalytic converter of cylinder bank 1 and 2 could be interchanged.

If none of the given causes apply:

- Replace respective lambda probe "pre" catalytic converter.

2.6 - Checking lambda probe heating

Note:

The lambda probe heating circuit is monitored by the self-diagnosis system.

Interrogate fault memory=> Page 6 .

- Connect the vehicle diagnostic, testing and information system VAS 5051 or fault reader V.A.G 1551 and select the engine electronics control unit with "address word" 01 => Page 3 .
  For this purpose, the engine must be running at idle speed.

Protected by copyright. Copying for private or commercial purposes, in part or in whole, is not permitted unless authorised by AUDI AG. AUDI AG does not guarantee or accept any liability with respect to the correctness of information in this document. Copyright by AUDI AG.

-> Indicated on display:

```
Rapid data transfer       HELP
Select function XX
```

- Press keys 0 and 8 for the function "Read measured value block" and confirm entry with Q key.

-> Indicated on display:

```
Read measured value block 08
Enter display group number XXX
```

- Press keys 0, 4 and 1 for "display group number 41" and confirm entry with Q key.

-> Indicated on display:

```
Read measured value block 41
     1     2     3     4
```

- Set engine speed to approx. 3000 rpm.
- Check resistance of lambda probe.

Note:

A readout appears in display zones 3 and 4 only on vehicles which conform to emission standard EU III.

	Display zones			
	1	2	3	4
Display group 41: Lambda probe heating bank 1 at idling speed				
Display	xxx kOhm	Htg. bC. ON	xxx kOhm	Htg. aC. ON
Display	bank1 - probe 1	Status of heating	bank1 - probe 2	Status of heating
Range		Htg. bC. ON Htg. bC. OFF		Htg. aC. ON Htg. aC. OFF

	Display zones			
Specification	0...0.5 kOhm	Htg. bC. ON/OFF	0...0.5 kOhm	Htg. aC. ON/OFF
Note:	It may take a few minutes until specification is attained. Until then this field remains empty.		It may take a few minutes until specification is attained.Until then this field remains empty.	

- Press Ckey.
- Press keys 0, 4 and 2 for "display group number 42" and confirm entry with Q key.

Note:

A readout appears in display zones 3 and 4 only on vehicles which conform to emission standard EU III.

	Display zones			
	1	2	3	4
Display group 42: Lambda probe heating bank 2 at idling speed				
Display	xxx kOhm	Htg. bC. ON	xxx kOhm	Htg. aC. ON
Display	bank1 - probe 2	Status of heating	bank 2, probe 2	Status of heating
Range		Htg. bC. ON Htg. bC. OFF		Htg. aC. ON Htg. aC. OFF
Specification	0...0.5 kOhm	Htg. bC. ON/OFF	0...0.5 kOhm	Htg. aC. ON/OFF
Note:	It may take a few minutes until the specification is attained. Until then this field remains empty.		It may take a few minutes until the specification is attained. Until then this field remains empty.	

If specification is not attained:

- Check the voltage supply to the lambda probe heating => Page 107 .
- Check lambda probe signal wiring and actuation => Page 109 .

Checking voltage supply for lambda probe heating

Fitting locations of 4-pin connectors for lambda probes => Page 49 .

- Check fuse for lambda probe heating.

=> Current Flow Diagrams, Electrical Fault-Finding and Fitting Locations

Protected by copyright. Copying for private or commercial purposes, in part or in whole, is not permitted unless authorised by AUDI AG. AUDI AG does not guarantee or accept any liability with respect to the correctness of information in this document. Copyright by AUDI AG.

- Disconnect 4- pin connector of relevant lambda probe.

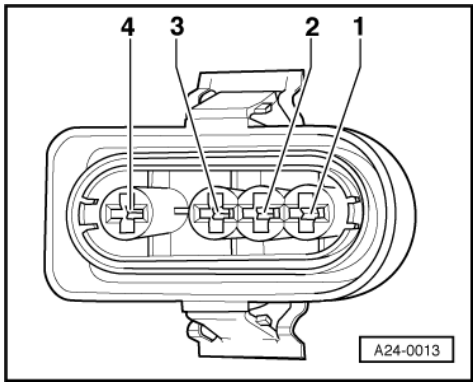

- -> Using leads from V.A.G 1594, connect hand-held multimeter (voltage measurement range) to sockets 1 (positive) and 2 (earth).

- Operate starter briefly.

  Specification: approx. battery voltage

If no voltage is present:

- -> Using leads from V.A.G 1594, connect hand-held multimeter (voltage measurement range) to socket 1 (positive) and vehicle earth.

- Operate starter briefly.

  Specification: approx. battery voltage

If no voltage is present:

Protected by copyright. Copying for private or commercial purposes, in part or in whole, is not permitted unless authorised by AUDI AG. AUDI AG does not guarantee or accept any liability with respect to the accuracy or completeness of this document. Copyright by AUDI AG.

- Check the wiring from socket 1 on the relevant lambda probe connector on the wiring harness via the fuse to the fuel pump relay for open circuit or short.

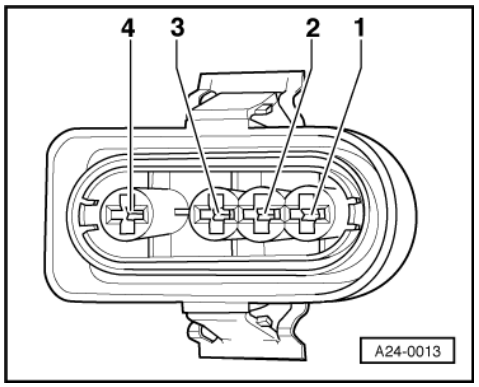

=> Current Flow Diagrams, Electrical Fault-Finding and Fitting Locations

If the power supply is OK:

- -> Using leads from V.A.G 1594, connect hand-held multimeter (voltage measurement range) to socket 2 (earth activation from engine control unit) and battery positive.

- Start the engine.

  Specification: approx. battery voltage, fluctuating

Note:

At certain operating points, the engine control unit "cycles" the earth for the lambda probe heating. This means that at these points, the earth is continuously switched on and off. For this reason, the voltage reading on the tester may fluctuate.

- Switch ignition off.

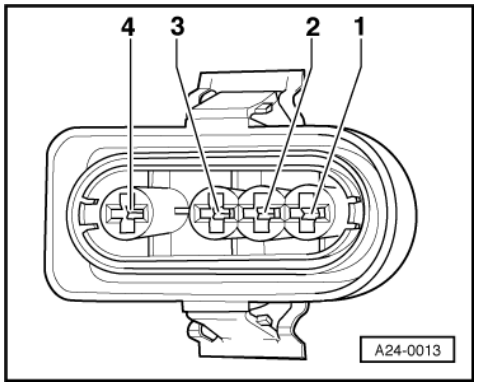

If no voltage is present:

- Connect test box V.A.G 1598/31 to wiring harness for engine control unit; do not connect the engine control unit => Page 64 .
- -> Check for open circuit in the following wiring connections:

Lambda probe before catalytic converter:Bank 1 -G39

Connector on wiring harness, Socket	Test box V.A.G 1598/31 Socket
2	5 (earth)

Lambda probe before catalytic converter:Bank 2 -G108

Connector on wiring harness, Socket	Test box V.A.G 1598/31 Socket
2	4 (earth)

Lambda probe after catalytic converter:Bank 1 -G130

Connector on wiring harness, Socket	Test box V.A.G 1598/31 Socket
2	63 (earth)

Lambda probe after catalytic converter:Bank 2 -G131

Connector on wiring harness, Socket	Test box V.A.G 1598/31 Socket
2	6 (earth)

Audi
Copyright by copyright. Copying for commercial purposes, in part or in whole, is not permitted unless authorised by AUDI AG. AUDI AG does not guarantee or accept any liability with respect to the correctness of information in this document. Copyright by AUDI AG.

Wire resistance: max. 1.5 Ohm

=> Current Flow Diagrams, Electrical Fault-Finding and Fitting Locations

If wiring connections are OK:

- Replace appropriate lambda probe.

2.7 - Testing lambda probe signal wiring and activation

Note:

The lambda probe signal is monitored by the self-diagnosis system.

- Interrogate fault memory =>Page 6 .
- If a fault related to the lambda probe is displayed and the lambda probe heating is OK unplug the connector for the relevant lambda probe.

Fitting locations of 4-pin connectors for lambda probes => Page 49 .

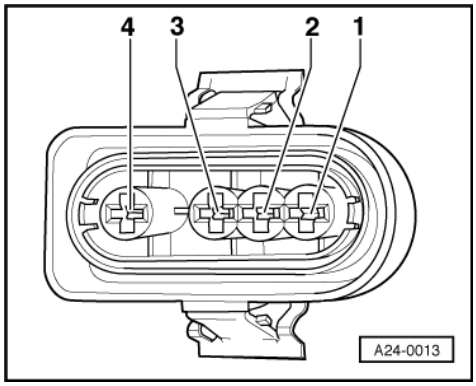

- -> Check voltage by connecting hand-held multimeter V.A.G 1526 (measuring range 2 V) between sockets 3 and 4 of plug on wiring harness.
- Switch the ignition on.

  Specification: 450 ± 50 mV.

If specification is not attained:

- Check lambda probe wiring => Page Bank 1, lambda probe 1, Page 113 .

If specification is attained:

- Renew lambda probe.

Checking lambda probe wiring, bank 1 lambda probe 1 -G39 before catalytic converter

Fitting location of 4-pin connector for lambda probe => Page 49 .

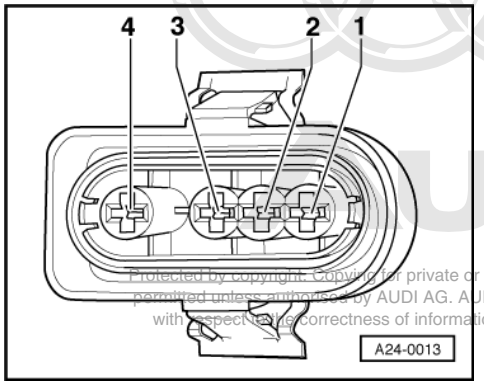

Protected by copyright. Copying for private or commercial purposes, in part or in whole, is not permitted unless authorised by AUDI AG. AUDI AG does not guarantee or accept any liability with respect to the correctness of information in this document. Copyright by AUDI AG.

- Unplug 4-pin connector (black) to bank 1 lambda probe 1 -G39.
- Connect test box V.A.G 1598/31 to wiring harness for engine control unit; do not connect the engine control unit => Page 64 .
- -> Test for open circuit in the following wiring connections.

Connector on wiring harness, Socket	Test box V.A.G 1598/31 Socket
3	51
4	70

Wire resistance: max. 1.5 Ohm

=> Current Flow Diagrams, Electrical Fault-Finding and Fitting Locations

- Also test wires on 4-pin connector for shorts between them.

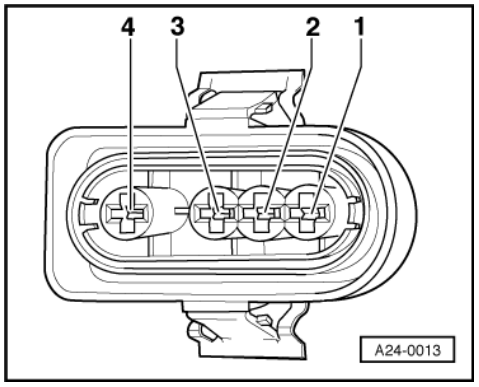

Connector on wiring harness, Socket	Test box V.A.G 1598/31 Socket
4	51

Specification: infinite resistance (open circuit)

=> Current Flow Diagrams, Electrical Fault-Finding and Fitting Locations

- Test screen wiring for short to lambda probe wiring.

Connector on wiring harness, Socket	Test box V.A.G 1598/31 Socket
4	32
3	32

Specification: infinite resistance (open circuit)

=> Current Flow Diagrams, Electrical Fault-Finding and Fitting Locations

If no wiring fault is detected:

- Replace engine control unit -J220
  => Page 68 .

Checking lambda probe wiring, bank 1 lambda probe 2 -G130 after catalytic converter

Fitting location of 4-pin connector for lambda probe => Page 49 .

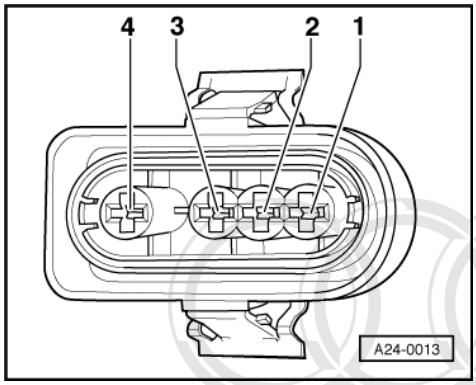

- Unplug 4-pin connector for bank 1, lambda probe 2 -G130.
- Connect test box V.A.G 1598/31 to wiring harness for engine control unit; do not connect the engine control unit => Page 64 .
- -> Test for open circuit in the following wiring connections.

Connector on wiring harness, Socket	Test box V.A.G 1598/31 Socket
3	68
4	69

Protected by copyright. Copying for private or commercial purposes, in part or in whole, is not permitted unless authorised by AUDI AG. AUDI AG does not guarantee or accept any liability with respect to the correctness of information in this document. Copyright by AUDI AG.

Wire resistance: max. 1.5 Ohm

=> Current Flow Diagrams, Electrical Fault-Finding and Fitting Locations

- Also test wires on 4-pin connector for shorts between them.

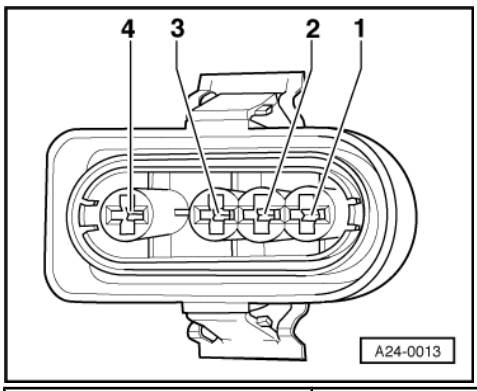

Connector on wiring harness, Socket	Test box V.A.G 1598/31 Socket
4	68

Specification: infinite resistance (open circuit)

=> Current Flow Diagrams, Electrical Fault-Finding and Fitting Locations

- Test screen wiring for short to lambda probe wiring.

Connector on wiring harness, Socket	Test box V.A.G 1598/31 Socket
4	32
3	32

Specification: infinite resistance (open circuit)

=> Current Flow Diagrams, Electrical Fault-Finding and Fitting Locations

If no wiring fault is detected:

- Replace engine control unit -J220
  => Page 68 .

Checking lambda probe wiring bank 2, lambda probe 1 -G108 before catalytic converter

Fitting location of 4-pin connector for lambda probe => Page 49 .

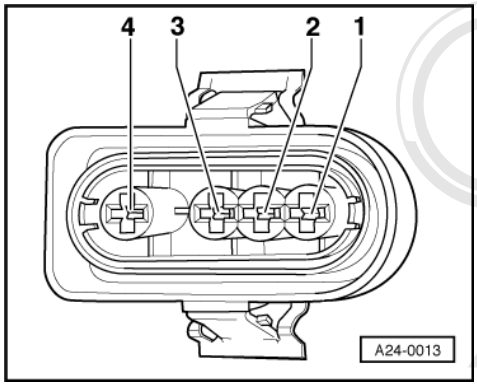

- Disconnect 4-pin connector (black) for bank 2, lambda probe 1 -G108.
- Connect test box V.A.G 1598/31 to wiring harness for engine control unit; do not connect the engine control unit => Page 64 .
- -> Test for open circuit in the following wiring connections.

Protected by copyright. Copying for private or commercial purposes, in part or in whole, is not permitted unless authorised by AUDI AG. AUDI AG does not guarantee or accept any liability with respect to the correctness of information in this document. Copyright by AUDI AG.

Connector on wiring harness, Socket	Test box V.A.G 1598/31 Socket
3	12
4	13

Wire resistance: max. 1.5 Ohm

=> Current Flow Diagrams, Electrical Fault-Finding and Fitting Locations
- Also test wires on 4-pin connector for shorts between them.

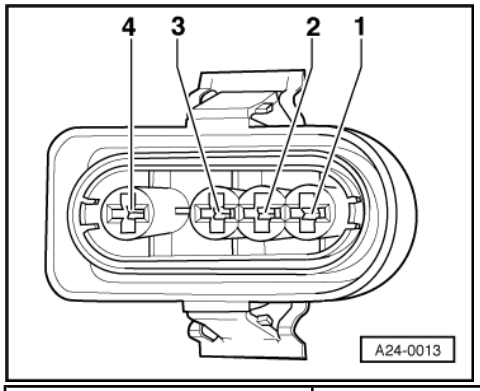

Connector on wiring harness, Socket	Test box V.A.G 1598/31 Socket
4	12

Specification: infinite resistance (open circuit)

=> Current Flow Diagrams, Electrical Fault-Finding and Fitting Locations
- Test screen wiring for short to lambda probe wiring.

Connector on wiring harness, Socket	Test box V.A.G 1598/31 Socket
4	32
3	32

Specification: infinite resistance (open circuit)

Protected by copyright. Copying for private or commercial purposes, in part or in whole, is not permitted unless authorised by AUDI AG. AUDI AG does not guarantee or accept any liability with respect to the correctness of information in this document. Copyright by AUDI AG.

=> Current Flow Diagrams, Electrical Fault-Finding and Fitting Locations
If no wiring fault is detected:
- Replace engine control unit -J220
  => Page 68 .

Checking lambda probe wiring, bank 2 lambda probe 2 -G131 after catalytic converter

Fitting location of 4-pin connector for lambda probe => Page 49 .

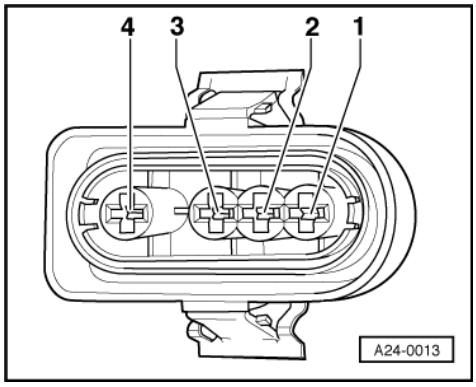

- Disconnect 4- pin connector to bank 2 lambda probe 2 -G131.
- Connect test box V.A.G 1598/31 to wiring harness for engine control unit; do not connect the engine control unit => Page 64 .
- -> Test for open circuit in the following wiring connections.

Connector on wiring harness, Socket	Test box V.A.G 1598/31 Socket
3	10
4	11

Wire resistance: max. 1.5 Ohm

=> Current Flow Diagrams, Electrical Fault-Finding and Fitting Locations

- Also test wires on 4-pin connector for shorts between them.

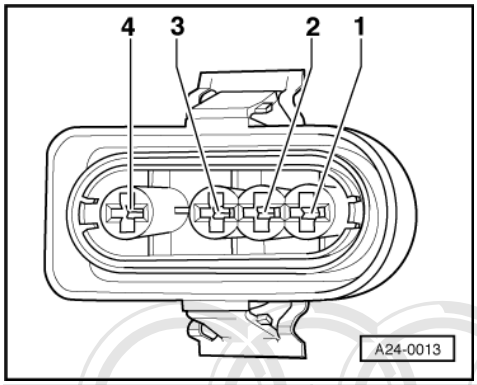

Connector on wiring harness, Socket	Test box V.A.G 1598/31 Socket
4	10

Specification: infinite resistance (open circuit)

=> Current Flow Diagrams, Electrical Fault-Finding and Fitting Locations

- Test screen wiring for short to lambda probe wiring.

Connector on wiring harness, Socket	Test box V.A.G 1598/31 Socket
4	32
3	32

Protected by copyright. Copying for private or commercial purposes, in part or in whole, is not permitted unless authorised by AUDI AG. AUDI AG does not guarantee or accept any liability with respect to the correctness of information in this document. Copyright by AUDI AG.

Specification: infinite resistance (open circuit)

=> Current Flow Diagrams, Electrical Fault-Finding and Fitting Locations

If no wiring fault is detected:

- Replace engine control unit -J220
  => Page 68 .

2.8 - Removing and installing lambda probes

Removing

- Disconnect connector of relevant lambda probe before catalytic converter from cylinder bank 1 and cylinder bank 2 (fitting location => Page 49).

- Disconnect connector of relevant lambda probe after catalytic converter from cylinder bank 1 and cylinder bank 2 (fitting location => Page 49).
- Remove relevant lambda probe using special tool 3337/9.
- The gearbox must be lowered to enable replacement of the lambda probes after catalytic converter. This procedure is described in the Workshop Manual, Audi A6 1998:6-speed Manual Gearbox 01E, Four-wheel Drive; Repair group 34.

When installing, note the following points:

Notes:

- When installing, the lambda probe wire must be secured in exactly the same position as before in order to avoid contact between the wire and the exhaust pipe.
- The screw thread on the lambda probe is coated with assembly paste. This paste must not be allowed to penetrate the openings on the probe.
- Tightening torque 55 Nm.

3 - Checking fuel tank breather

3.1 - Checking fuel tank breather

3.2 - Testing solenoid valve 1 for activated charcoal filter

Note:

Solenoid valve 1 for the activated charcoal filter system is also referred to in this context as fuel tank breather valve.

Testing for leaks

When there is no electrical supply, solenoid valve remains closed.

- Disconnect hoses from solenoid valve for activated charcoal filter (N80).
- Start final control diagnosis and select solenoid valve for activated charcoal filter (N80) =>Page 26 .

-> Indicated on display:

```
Final control diagnosis
Tank breather valve -N80
```

The valve should click...
...and should open and close (check by blowing into the auxiliary hose).

- If the valve does not click, electrically check solenoid valve 1 for activated charcoal filter => Page 115 .
- If the valve does not open and close correctly, renew solenoid valve 1 for activated charcoal filter.

Electrical check for solenoid valve 1 for activated charcoal filter -N80

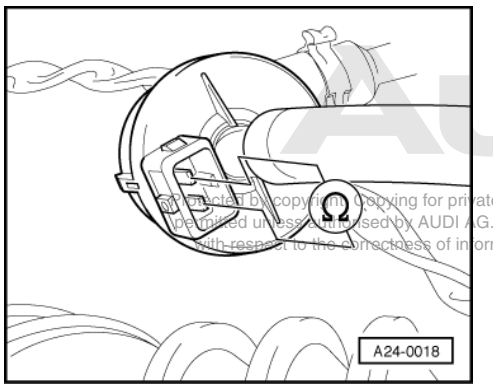

Copyright by AUDI AG. Copying for private or commercial purposes, in part or in whole, is not permitted unless authorised by AUDI AG. AUDI AG does not guarantee or accept any liability with respect to the correctness of information in this document. Copyright by AUDI AG.

- Unplug connector on ACF valve.
- -> Measure resistance between contacts on valve using hand-held multimeter V.A.G 1526.

  Specification: 22...30 Ohms

If specification is not attained:

- Replace -N80 solenoid valve for activated charcoal filter.

If specification is attained, check voltage supply => Page 116 .

Checking solenoid valve voltage supply

Note:

The ACF valve receives its power supply via the fuel pump relay.

Test conditions

- Fuse for activated charcoal filter valve OK

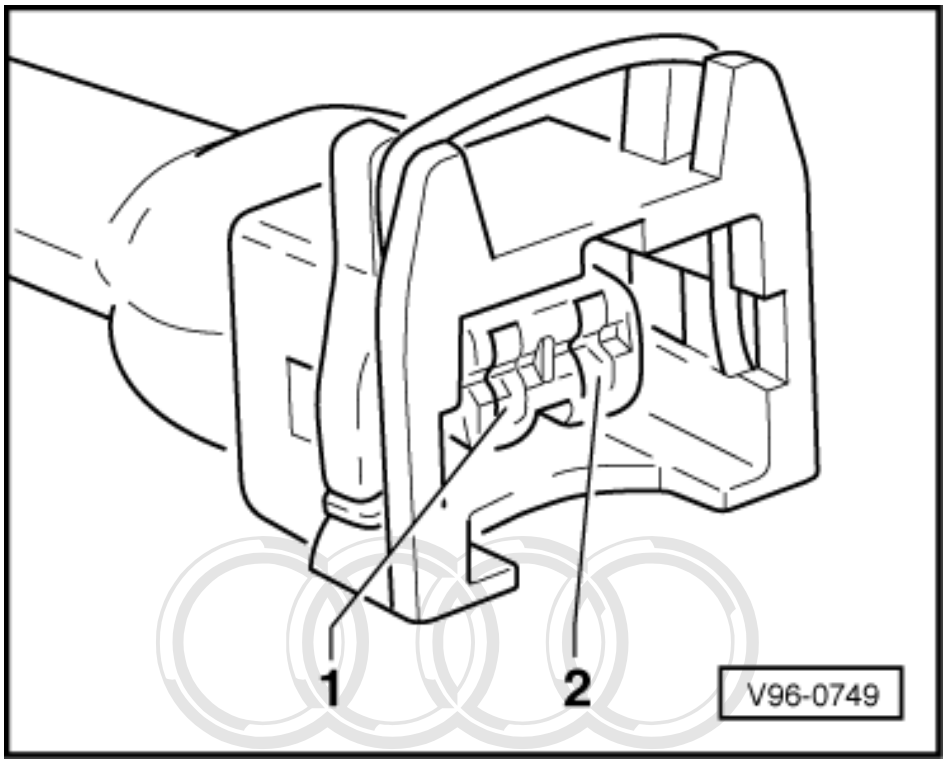

- Unplug connector on ACF valve.
- -> Connect diode test lamp V.A.G 1527 between engine earth and contact 1 on the connector.
- Operate starter.

The diode test lamp should light up.

If the diode test lamp does not light up:

Protected by copyright. Copying for private or commercial purposes, in part or in whole, is not permitted unless authorised by AUDI AG. AUDI AG does not guarantee or accept any liability with respect to the correctness of information in this document. Copyright by AUDI AG.

- Check the wiring from contact 1 via the fuse to the fuel pump relay for continuity, repair if necessary.

=> Current Flow Diagrams, Electrical Fault-Finding and Fitting Locations

- If wiring is OK, test fuel pump relay => Page 84 .

If diode test lamp illuminates, check activation => Page 117 .

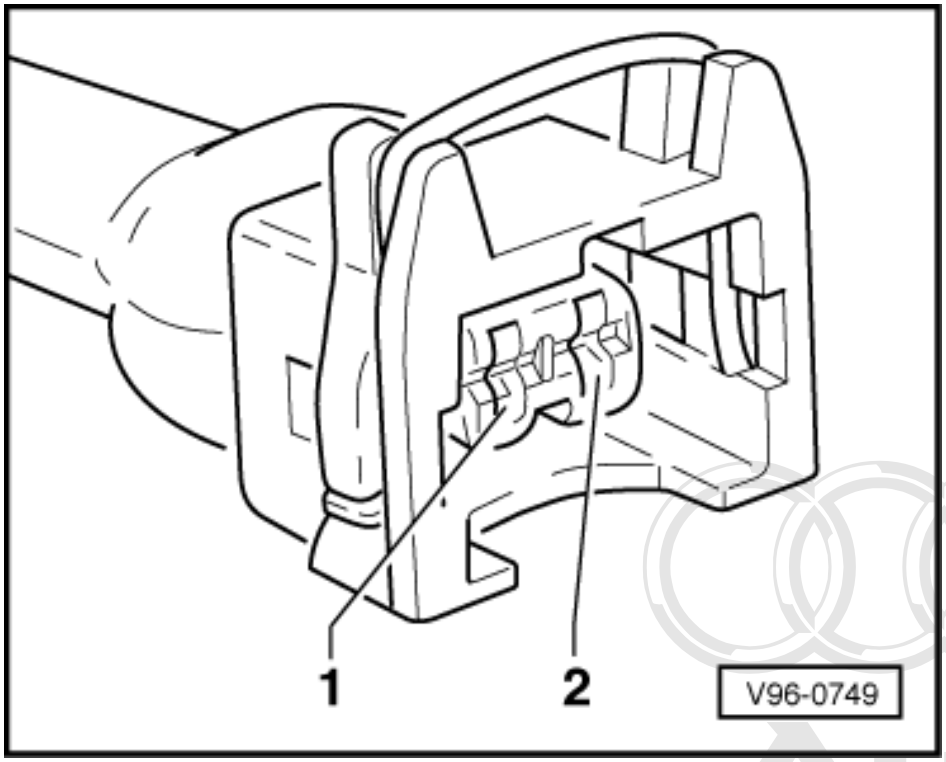

Testing ACF valve activation

- -> Connect the V.A.G 1527 diode test lamp between contact 2 and contact 1 (positive) in the connector.
- Start final control diagnosis and select solenoid valve for activated charcoal filter (N80) =>Page 26 . (Please note that final control diagnosis can only be carried out twice if engine was started between tests.)

Protected by copyright. Copyright for private or commercial purposes, in part or in whole, is not permitted unless authorised by AUDI AG. AUDI AG does not guarantee or accept any liability with respect to the correctness of information in this document. Copyright by AUDI AG.

Diode test lamp should flash.

If the diode test lamp does not flash or is continuously lit:

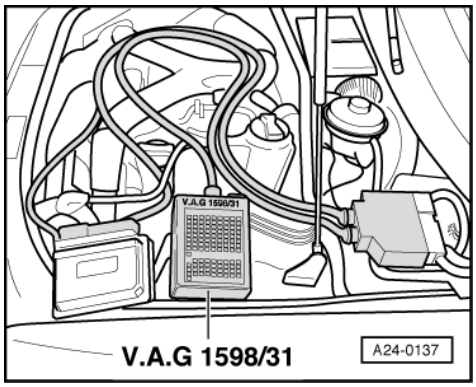

- -> Connect the V.A.G 1598/31 test box to wiring harness leading to engine control unit; the engine control unit should not be connected
  => Page 64 .

If the diode test lamp is continuously lit:

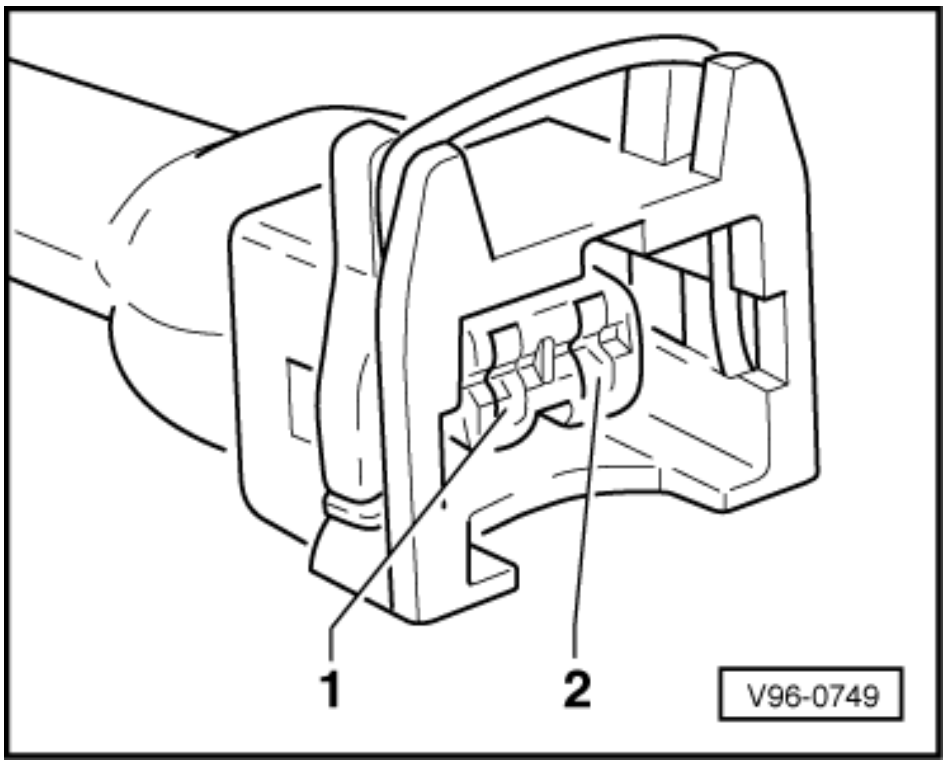

- -> Test for the line from contact 2 on the ACF valve connector and socket 64 on the test box for a short to earth.

If the diode test lamp does not flash:

- Check line from contact 2 on activated charcoal filter valve connector to contact 64 on test box for continuity and for short to positive.

  Wire resistance: max. 1.5 Ohm

- If necessary, rectify short circuit to earth or open circuit.
- If no short circuit or open circuit is found, fit a new engine control unit
  => Page 68 .

4 - Checking electronic engine power control (electronic throttle)

4.1 - Checking electronic engine power control (electronic throttle)

4.2 - Function of the electronic throttle system

In the electronic throttle system, the throttle valve is not operated by a cable connected to the accelerator pedal. There is no mechanical connection between the accelerator pedal and the throttle valve.

Copyright © 2001 Audi AG. All rights reserved. Any reproduction or distribution of this document, or any part of it, is not permitted unless authorised by AUDI AG. AUDI AG does not guarantee or accept any liability with respect to the correctness of information in this document. Copyright by AUDI AG.

The throttle valve is actuated, over the full range of engine speed and power, by an electric motor (throttle valve actuator) in the throttle valve control part.

The throttle valve actuator moves the throttle valve as instructed by the engine control unit.

The position of the accelerator pedal is communicated to the engine control unit by two accelerator position senders (variable resistances located in a single housing). These senders are linked to the accelerator pedal.

The position of the accelerator pedal (decided by the driver) is one of the main input parameters to the engine control unit.

With the ignition switched on and the engine not running, the engine control unit controls the throttle valve precisely in accordance with the signals from the accelerator position senders. This means that when the accelerator is pressed half way down, the throttle valve actuator opens the throttle valve to an equivalent extent; the throttle valve is then about half open.

When the engine is running (and under load), the engine control unit can open and close the throttle valve independently of the accelerator position senders.

As an example, the throttle valve can be fully open even though the accelerator pedal is only pressed half way down. This has the advantage of preventing throttle losses at the throttle valve.

Under certain engine load conditions, markedly improved emission and consumption figures are also attained.

The engine torque necessary can be provided by the engine control unit by an optimum combination of throttle opening and boost pressure.

The electronic control system does not simply consist of one or two components but is, rather, a system which includes all the components which contribute to determining the position of the throttle valve and to controlling and monitoring this position. These components include, for example, the throttle valve control part, the EPC warning lamp, the engine control unit...

4.3 - Significance of the EPC warning lamp (fault warning lamp for electronic throttle) in instrument cluster

"EPC" is an abbreviation for Electronic Power Control and refers to the electronic throttle control system.

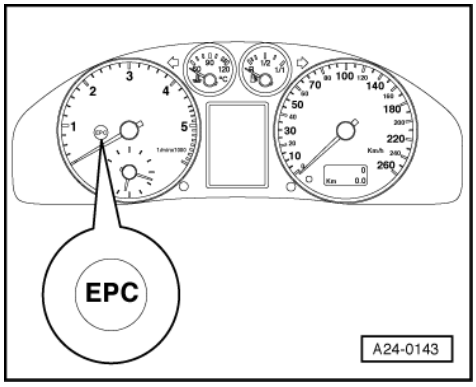

-> Location of the EPC warning lamp

When the ignition is switched on, the engine control unit checks all the components of importance to the electronic throttle system.

After switching on the ignition the engine control unit switches on the EPC warning lamp. The EPC lamp goes out shortly after starting the engine, if, on the one hand, the engine control unit does not detect any faults in the EPC system, and, on the other, if actuation of the lamp by the engine control unit is OK.

If a fault is detected in the electronic throttle system while the engine is running, the engine control unit switches on the EPC warning lamp. At the same time, an entry is made in the engine control unit fault memory.

Functional test of warning lamp (this test does not apply to vehicles which fulfil emission standard EU-III, since the EPC warning lamp is switched on via the CAN data bus in EU-III vehicles).

- Switch the ignition on.

Protected by copyright. Copying for private or commercial purposes, in part or in whole, is not permitted unless authorised by AUDI AG. AUDI AG does not guarantee or accept any liability with respect to the correctness of information in this document. Copyright by AUDI AG.

Specification: EPC warning lamp should light up.

If the EPC warning lamp does not come on:

- Check the line from the engine control unit to the EPC warning lamp as follows:

Cause EPC warning lamp has not been activated or is not lit because of an open circuit.	Remedy: -Switch off ignition. -Connect test box V.A.G 1598/31; do not connect engine control unit. -Bridge sockets 1 and 48 on test box. -Switch on ignition. EPC warning lamp should come on.If the EPC warning lamp does not come on: -Switch off ignition. -Find and rectify short circuit or open circuit between engine control unit and EPC warning lamp with the aid of current flow diagram.
	If no fault is found in line to EPC warning lamp:
Cause of fault	Instrument cluster defective => renew instrument cluster

- Start engine and run at idling speed.
  Specification: EPC warning lamp should go out shortly after starting.

If the EPC warning lamp does not go out:

- Interrogate the fault memory of the engine control unit.

If no fault is stored:

Cause EPC warning lamp is continuously activated by short to earth.	Remedy: -Switch off ignition. -Connect test box V.A.G 1598/31; do not connect engine control unit. -Measure resistance between vehicle earth and socket 48 in test box. Specification: infinite resistance (because this line should have no direct connection to earth). If specification is not attained: -Find and rectify short circuit to earth in line between engine control unit and EPC warning lamp with the aid of current flow diagram.
	If no fault is found in line to EPC warning lamp:
Cause of fault	Instrument cluster defective => renew instrument cluster

Protected by copyright. Copying for private or commercial purposes, in part or in whole, is not permitted unless authorised by AUDI AG. AUDI AG does not guarantee or accept any liability with respect to the correctness of information in this document. Copyright by AUDI AG.

4.4 - Checking throttle valve control part

The following components are located in the housing of the throttle valve control part.
(this housing must not be opened):

- Throttle valve actuator -G186 (This is an electric motor which is activated by the engine control unit. The electric motor opens the throttle valve against the force of a spring).
- Angle sender for throttle valve actuator -G187
- Angle sender 2 for throttle valve actuator -G188

Note:

The angle senders are in the form of potentiometers (variable resistances). They provide the position of the throttle valve to the engine control unit completely independently of one another (redundant system).

The potentiometers cannot be adjusted mechanically. The settings are performed as part of the basic setting (function 04) using the V.A.G 1551 or 1552 fault reader.

4.5 - Performing adaption of throttle valve control part

The adaption process enables the engine control unit to learn the various positions of the throttle valve with the ignition switched on and the engine not running. These positions are stored in the control unit. The feedback signal indicating the position of the throttle valve comes from the two throttle valve actuator angle senders.

An adaption must always be performed if the throttle valve control part (J338) or the engine control unit is removed and refitted or replaced, or if the voltage supply to the engine control unit is interrupted.

The learning process (adaption process) is performed:

- By initiating the basic setting (Function 04) of display group 60 with ignition switched on.
- Automatically if the ignition is switched on once for at least 6 seconds without actuating the starter or the accelerator pedal and the engine control unit recognises "Learning requirement". In this case, however, it is not obvious whether the adaption process was successful or not. Learning requirement is recognised if stored voltage values from the angle senders do not coincide with current measured voltage values in a certain tolerance band.

Note:

Engine will not start during automatic adaption.

Test conditions

- No fault stored in fault memory
  => Page 6 , Interrogating fault memory
- Engine stopped, ignition switched on.
- Accelerator not depressed.
- Coolant temperature at least 5 °C but below 100 °C (display group 4, display zone 3).
- Intake air temperature at least 100 °C (display group 4, display zone 4).
- Voltage supply to engine control unit greater than 11 V, testing =>Page 160 .

Protected by copyright. Copying for private or commercial purposes, in part or in whole, is not permitted unless authorised by AUDI AG. AUDI AG does not guarantee or accept any liability with respect to the correctness of information in this document. Copyright by AUDI AG.

- Connect the vehicle diagnostic, testing and information system VAS 5051 or fault reader V.A.G 1551 and select the engine electronics control unit with "address word" 01 => Page 3 .
  For this purpose, the ignition must be switched on.

-> Indicated on display:

```
Rapid data transfer      HELP
Select function XX
```

- Press keys 0 and 4 for the function "Introduction of basic setting" and confirm entry with Q key.

-> Indicated on display:

```
Basic setting      Q
Enter display group number     XXX
```

- Press keys 0, 6 and 0 for "display group number 60" and confirm entry with Q key.

-> Indicated on display:

```
Basic setting 60
     1     2     3     4
```

- Check specification for throttle valve control part in display zone 4 =>Page 122 .

After the Q key is pressed, the throttle valve actuator is first disconnected from the electricity supply.

In this condition, the throttle valve is pulled into an emergency running position by a mechanical spring which is located in the throttle valve control part. The values supplied by the two angle senders in this emergency running position are stored in the engine control unit.

The throttle valve is then opened by a predetermined amount. When this value is reached, the throttle valve actuator is again disconnected from the electricity supply. The mechanical spring should then close the throttle valve to the previously learnt emergency running position within a specified period of time (spring test).

The throttle valve actuator then closes the throttle valve; the values supplied by the angle senders in the throttle valve control part are stored in the engine control unit.

If the engine control unit disconnects the throttle valve actuator from the electricity supply while the vehicle is being driven, the result will be an increased and fluctuating idling speed and a very poor throttle response.

- Check specification for throttle valve control part (display zone 4).

	Display zones			
	1	2	3	4
Display group 60: Adaption of throttle valve control part				
Display	xx %	xx %	---	---
Display	Throttle valve angle (angle sender 1)	Throttle valve angle (angle sender 2)	**Learning stage counter**	**Adaption status**
Range	min.: 0 % max.: 100%	min.: 0 % max.: 100%	**0 to 8**	**ADP process running** **ADP process OK** **ADP ERROR**
Specification	3...20 %	80...97 %	**8**	**ADP process OK**
Note:			**Learning stage counter moves from 0 to 8 during adaption process. (some numbers may also be skipped).**	**If specification is not attained: Notes => Page 122**

Protected by copyright. Copying for private or commercial purposes, in part or in whole, is not permitted unless authorised by AUDI AG. AUDI AG does not guarantee or accept any liability with respect to the correctness of information in this document. Copyright by AUDI AG.

Note:

The deciding factor is not how the learning stage counter (display zone 3) behaves during the adaption process, but that specification in display zone 4 "ADP OK" has been attained after adaption.

"ADP" in display zone 4 stands for "Adaption".

Note:

If the adaption is interrupted by the control unit, the reason could be one of the following:

- The throttle valve cannot close completely (e.g. dirt).
- Connectors (e.g. on throttle valve control part) have become loose, are not properly engaged or contacts in plugs are corroded/bent.
- The battery voltage is too low.
- Throttle valve control part or wiring is defective.
- Engine was started or accelerator was actuated during the adaption process.
- Distortion of throttle valve housing (check screw connection; tightening torque: 10 Nm)

When adaption process is interrupted, message "Function is unknown or cannot be carried out at the moment" is displayed on tester. The next time the ignition is switched on (for several seconds), the adaption process is automatically performed again.

- End the engine basic setting by pressing the ⇒ key.
- Press keys 0 and 6 for the function "End data transfer" and confirm entry with the Q key.

4.6 - Checking angle sender for throttle valve actuator

The throttle valve actuator angle senders G187 and G188 signal the position of the throttle valve to the engine control unit. Both angle senders are located in the throttle valve control part.

- Connect the vehicle diagnostic, testing and information system VAS 5051 or fault reader V.A.G 1551 and select the engine electronics control unit with "address word" 01 => Page 3 .
  For this purpose, the ignition must be switched on.

-> Indicated on display:

```
Rapid data transfer      HELP
Select function XX
```

- Press keys 0 and 8 for the function "Read measured value block" and confirm entry with Q key.

-> Indicated on display:

```
Reading measured value block     Q
Enter display group number XXX
```

- Press keys 0, 6 and 2 for "display group number 62" and confirm entry with Q key.

-> Indicated on display:

```
Read measured value block 62
     1     2     3     4
```

- Check specifications for electronic throttle potentiometer voltages.

	Display zones			
	1	2	3	4
Display group 62: Electronic throttle potentiometer voltages				
Display	xx %	xx %	xx %	xx %
Display	Throttle valve angle (angle sender 1)	Throttle valve angle (angle sender 2)	Sender for accelerator pedal position	Sender 2 for accelerator pedal position
Range	min.: 0 % max.: 100 %	min.: 0 % max.: 100 %	min.: 0 % max.: 100 %	min.: 0 % max.: 100 %
Specification	3...93 % (Idling speed value: 8...18 %)	97...3 % (Idling speed value: 80...90 %)	12...97 %	4...49 %

Note:

The engine control unit converts and displays the voltage readings from the angle senders as percentages of 5 V. (A 5 Volt supply corresponds to 100 %).

- Observe readouts in display zones 1 and 2.
- Slowly depress accelerator pedal.

Percentage displayed in zone 1 should rise evenly. The tolerance range from 3...93 % is not fully utilised.

Percentage displayed in zone 2 should fall evenly. The tolerance range from 97...3 % is not fully utilised.

If the displays are not as described:

Protected by copyright. Copying for private or commercial purposes, in part or in whole, is not permitted unless authorised by AUDI AG. AUDI AG does not guarantee or accept any liability with respect to the correctness of information in this document. Copyright by AUDI AG.

- Check voltage supply and wiring of throttle valve control part => Page 124 .

Pay particular attention to connectors, which may be loose, not properly engaged or corroded.

=> Current Flow Diagrams, Electrical Fault-Finding and Fitting Locations

- Check the accelerator position senders
  => Page 125 .

Notes:

- The reason why the value in display zone 1 rises and that in zone 2 falls is that the potentiometers (angle senders) in the throttle valve control part operate in opposite directions.
- This means that the voltage picked off by one of the angle senders runs in the direction of 5 V. (As the throttle is opened, the voltage becomes greater and the percentage increases).
- The voltage picked off by the angle sender 2 runs from 5 V in the direction of 0 V. (As the throttle is opened, the voltage becomes smaller and the percentage decreases).

Checking the voltage supply to the throttle valve control part.

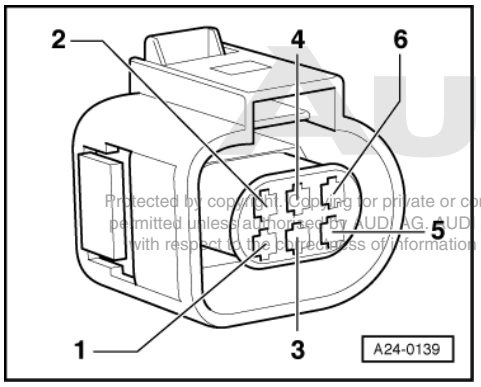

Protected by copyright. Copying for private or commercial purposes, in part or in whole, is not permitted unless authorised by AUDI AG. AUDI AG does not guarantee or accept any liability with respect to the correctness of information in this document. Copyright by AUDI AG.

- Unplug the connector from the throttle valve control part.
- Switch the ignition on.
- -> Connect hand-held multimeter (voltage range) between the following contacts on the connector:

6-pin connector on the wiring harness, Contact.	Specification
2 + earth	approx. 5 V
2 + 6	approx. 5 V

If specifications are not attained, also check the signal and activation lines of the throttle valve actuator => Page 124 .

If specifications are not attained:

Check wiring between engine control unit and throttle valve control part
=> Page 124 .

Checking wiring

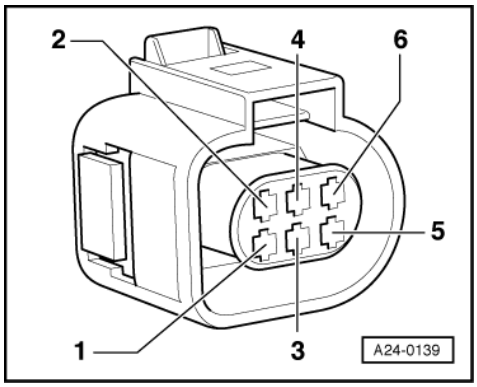

- -> Unplug the connector from the throttle valve control part.
- Connect the V.A.G 1598/31 test box to wiring harness leading to engine control unit; the engine control unit should not be connected.

=> Page 64 .

The following wiring connections are to be checked for open circuits and/or short to positive or negative.

6-pin connector on the wiring harness, Contact	Test box V.A.G 1598/31, Socket
1	92
2	83
3	117
4	84
5	118
6	91

- Rectify any open/short circuit as necessary.

If no wiring fault is detected:

- Replace throttle valve control part.

4.7 - Checking accelerator position sender

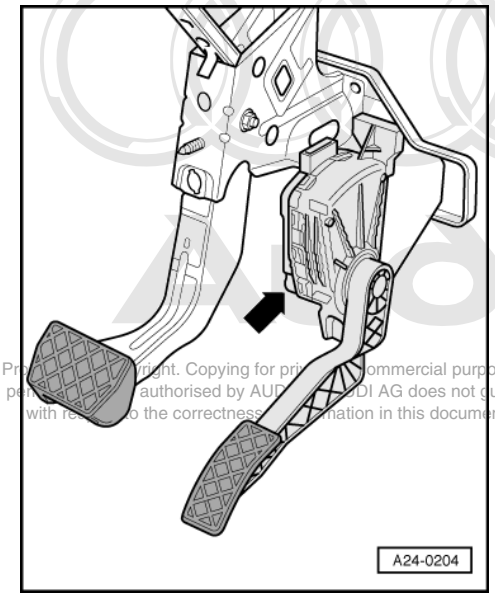

Pr right. Copying for pri ommercial purposes, in part or in whole, is not pe authorised by AUD DI AG does not guarantee or accept any liability with re o the correctness nation in this document. Copyright by AUDI AG.

-> Installation position for accelerator position sender -G79 and accelerator position sender 2 -G185

Both accelerator pedal position senders (G79 and G185) are located on the accelerator pedal and (completely independently) signal the driver's requirements to the engine control unit. Both senders are located in one housing.

- Connect the vehicle diagnostic, testing and information system VAS 5051 or fault reader V.A.G 1551 and select the engine electronics control unit with "address word" 01 => Page 3 .
  For this purpose, the ignition must be switched on.

-> When adjacent display appears:

```
Rapid data transfer      HELP
Select function XX
```

- Enter "08" to select the function "Reading measured value block" and confirm entry with Q key.

-> When adjacent display appears:

```
Reading measured value block     Q
Enter display group number XXX
```

- Enter "062" for "display group number 062" and confirm entry with Q key.

-> Indicated on display:

```
Read measured value block 62
     1     2     3     4
```

- Check specifications for electronic throttle potentiometer voltages.

	Display zones			
	1	2	3	4
Display group 062: Electronic throttle potentiometer voltages				
Display	xx %	xx %	**xx %**	**xx %**
Display	Throttle valve angle (angle sender 1)	Throttle valve angle (angle sender 2)	**Sender for accelerator pedal position**	**Sender 2 for accelerator pedal position**
Range	min.: 0 % max.: 100 %	min.: 0 % max.: 100 %	**min.: 0 % max.: 100 %**	**min.: 0 % max.: 100 %**
Specification	3...93 %	97...3 %	**12...97 % Idling speed value: 12...18 %**	**4...49 % (Idling speed value: 4...13 %)**

Note:

The engine control unit converts and displays the voltage readings from the angle senders as percentages of 5 V. (A 5 Volt supply corresponds to 100 %).

- Observe readouts in display zones 3 and 4.
- Slowly depress accelerator pedal.

Percentage displayed in zone 3 should rise evenly. The tolerance range from 12...97 % is not fully utilised.

Percentage displayed in zone 4 should also rise evenly. The tolerance range from 4...49 % is not fully utilised.

Note:

The value displayed in zone 3 must always be about twice as large as that in zone 4.

If the displays are not as described:

- Check voltage supply and wiring for accelerator position sender =>Page 126 .

Checking voltage supply for accelerator position senders

- Remove driver's storage compartment.

=> General Body Assembly - Interior; Repair group 68; Dash panel; Removing driver's shelf Dash panel Removing driver's shelf

- Detach connector from accelerator position senders.
- Switch the ignition on.

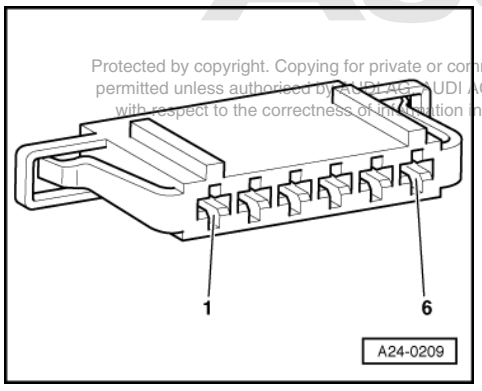

Protected by copyright. Copying for private or commercial purposes, in part or in whole, is not permitted unless authorised by AUDI AG. AUDI AG does not guarantee or accept any liability with respect to the correctness of information in this document. Copyright by AUDI AG.

- -> Connect multimeter as follows to measure voltage:

Connector Contact	Specification
1 + earth	approx. 5 V
1 + 5	approx. 5 V
2 + earth	approx. 5 V
2 + 3	approx. 5 V

If specifications are attained:

- Additionally check signal wires.

If specifications are not attained:

- Check wiring between engine control unit and accelerator position senders.

Checking wiring

- Connect test box V.A.G 1598/31 to wiring harness for engine control unit; do not connect the engine control unit => Page 64 .

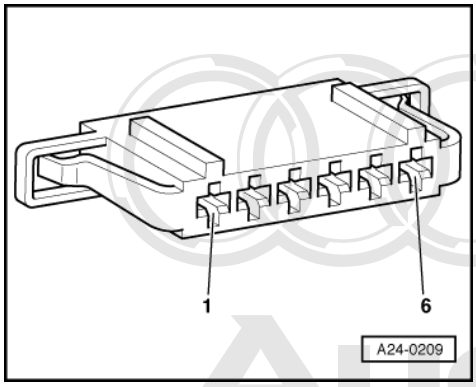

- -> Check for open circuit and short to positive or earth in the following wiring connection:

Connector Contact	Test box V.A.G 1598/31 Socket
1	72
2	73
3	36
4	35
5	33
6	34

This document is protected by copyright. Copying for private or commercial purposes, in part or in whole, is not permitted unless authorised by AUDI AG. AUDI AG does not guarantee or accept any liability with respect to the correctness of information in this document. Copyright by AUDI AG.

- Rectify any open/short circuit as necessary.

If no wiring fault is detected:

- Replace accelerator position senders.

Note:

After replacement of accelerator position sender on vehicles with automatic/infinitely variable speed gearbox, kickdown function must be learnt by engine control unit => Page 128 .

4.8 - Learning kickdown function

If accelerator position sender or engine control unit is replaced on vehicles with automatic/infinitely variable speed gearbox, kickdown function must be learnt by engine control unit.

Preconditions:

- No faults recorded in fault memory; interrogate fault memory => Page 6 .
- Engine stopped, ignition switched on.

- Connect the vehicle diagnostic, testing and information system VAS 5051 or fault reader V.A.G 1551 and select the engine electronics control unit with "address word" 01 => Page 3 .
  For this purpose, the ignition must be switched on.

-> When adjacent display appears:

```
Rapid data transfer      HELP
Select function XX
```

- Enter "04" to select "Start basic setting" and confirm with Q key.

-> When adjacent display appears:

```
Start basic setting      Q
Enter display group number XXX
```

- Enter "063" for "display group number 063" and confirm entry with Q key.

-> Display readout:

```
System in basic setting 63
     1     2     3     4
```

Note:

You will now be instructed to: "Actuate kickdown"

- Fully depress accelerator pedal beyond kickdown point and keep it pressed.

Note:

While the kickdown point is being learned, "Kickdown ADP running" is displayed on V.A.G 1551. Once the kickdown point has been successfully learned, "Kickdown ADP OK" is displayed on V.A.G 1551.

- Check specification in display zone 4:

	Display zones			
	1	2	3	4
Display group 063: Learning kickdown function				
Display	xx %	xx %		---
Display	Sender for accelerator pedal position	Learned "kickdown" value of sender for accelerator pedal position		**Adaption status**
Range	0...100 %	0...100 %	**Kickdown**	**Starting** **ADP. running** **ADP. OK** **ADP ERROR**
Specification	12...97 %		**Kickdown**	**ADP OK**

Protected by copyright. Copying for private or commercial purposes, in part or in whole, is not permitted unless authorised by AUDI AG. AUDI AG does not guarantee or accept any liability with respect to the correctness of information in this document. Copyright by AUDI AG.

	Display zones		
Note:			If "ADP ERROR" is displayed:Interrogate fault memory => Page 6 .

Notes:

- "ADP" in display zone 4 stands for adaption.
- It is important that "ADP OK" is displayed in display zone 4 after adaption.
- "ERROR" can be displayed, if e.g. accelerator pedal is not pressed when instructed by tester, or if accelerator pedal was released while adaption was already running but process was not yet complete.
  In both cases it is necessary to exit the "Basic setting" mode and restart the adaption process afresh =>Page 128 .

If specification "ADP OK" is attained:

- Press the ⇒key.

-> Display readout (function selection):

```
Rapid data transfer      HELP
Select function XX
```

- Enter "06" to end output.

Protected by copyright. Copying for private or commercial purposes, in part or in whole, is not permitted unless authorised by AUDI AG. AUDI AG does not guarantee or accept any liability with respect to the correctness of information in this document. Copyright by AUDI AG.

5 - Vacuum diagram

5.1 - Vacuum diagram

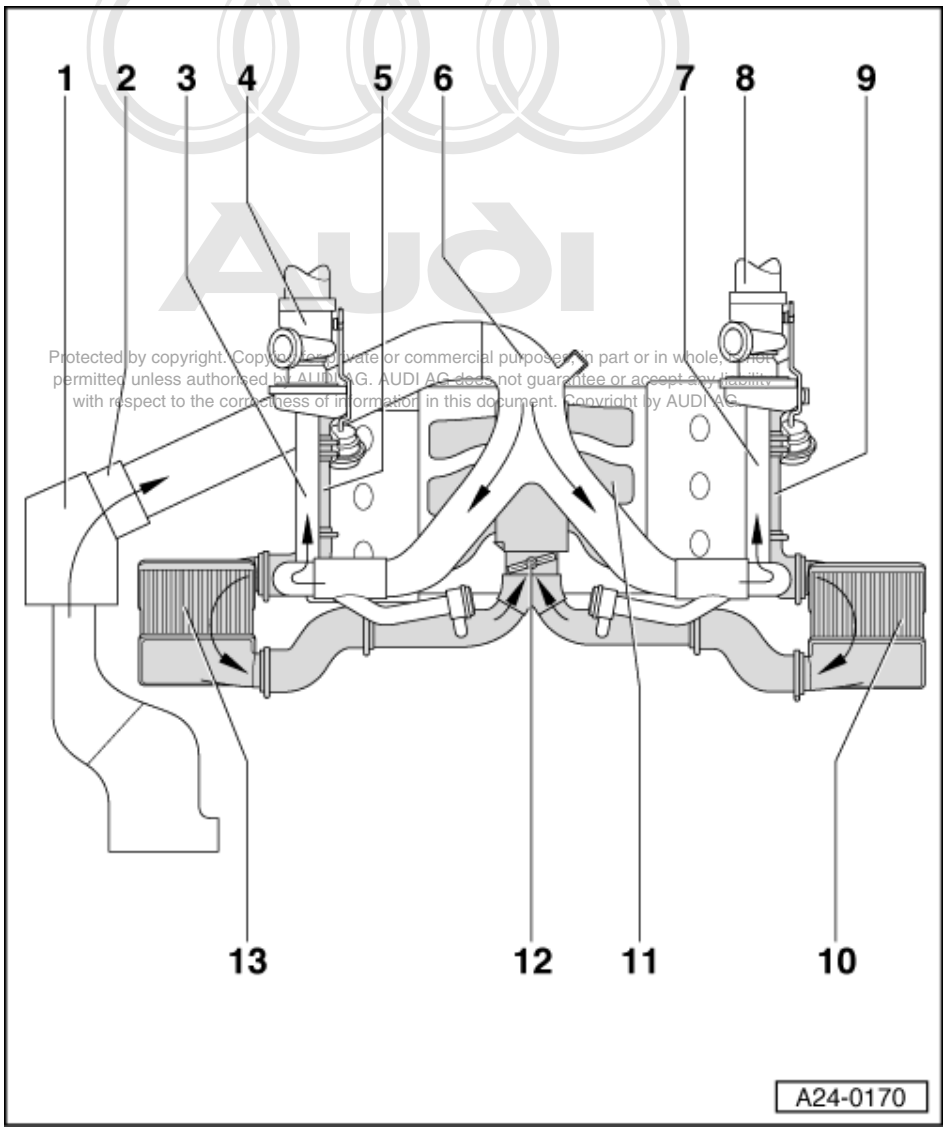

Protected by copyright. Copying for private or commercial purposes, in part or in whole, is not permitted unless authorised by AUDI AG. AUDI AG does not guarantee or accept any liability with respect to the correctness of information in this document. Copyright by AUDI AG.

5.2 - Air duct, general

1 Air cleaner
2 Air mass meter (G70)
3 Intake side turbocharger, bank 1
4 Turbocharger, bank 1
5 Pressure side turbocharger, bank 1
6 Air duct

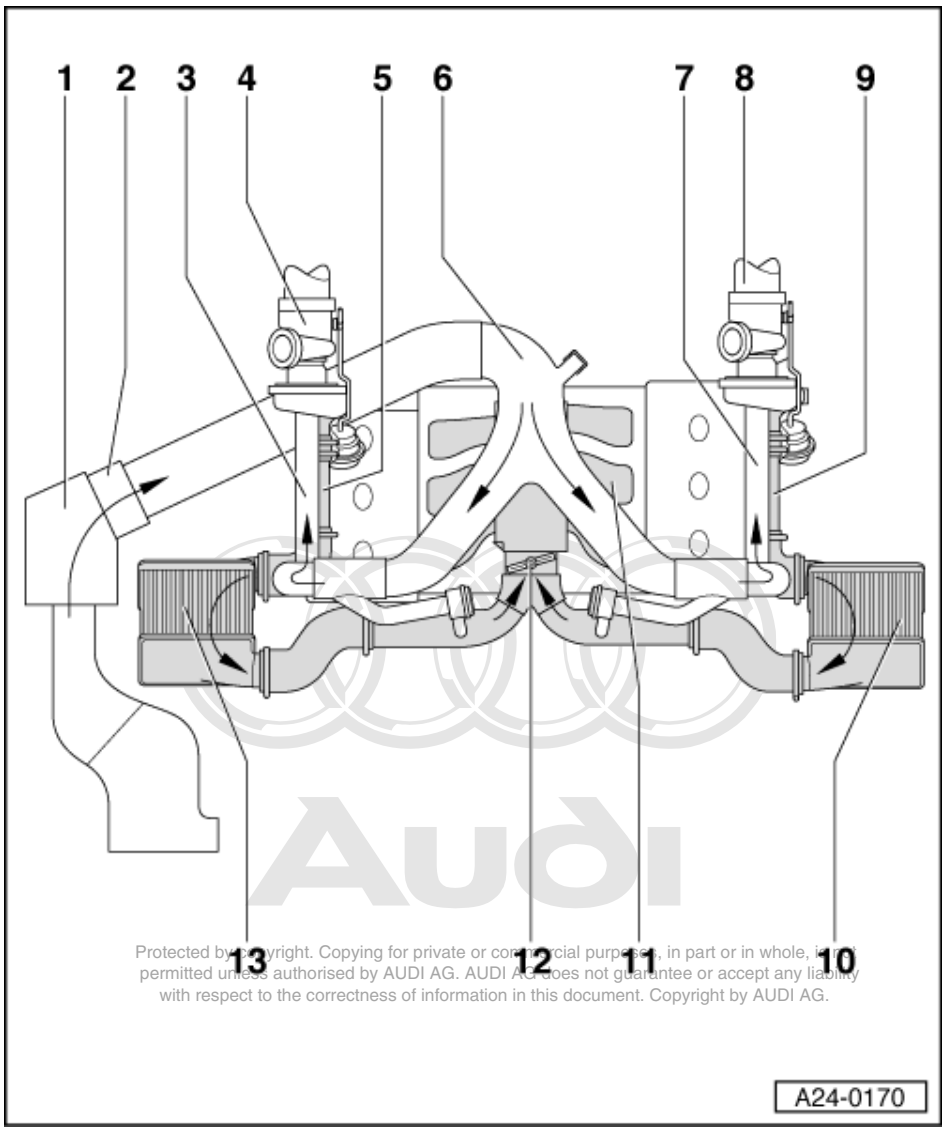

Protected by copyright. Copying for private or commercial purposes, in part or in whole, is not permitted unless authorised by AUDI AG. AUDI AG does not guarantee or accept any liability with respect to the correctness of information in this document. Copyright by AUDI AG.

7 Intake side turbocharger, bank 2
8 Turbocharger, bank 2
9 Pressure side turbocharger, bank 2
10 Charge air cooler, bank 2
11 Intake manifold
12 Throttle valve control part (J338)
13 Charge air cooler, bank 1

5.3 - Subsystem, boost pressure control

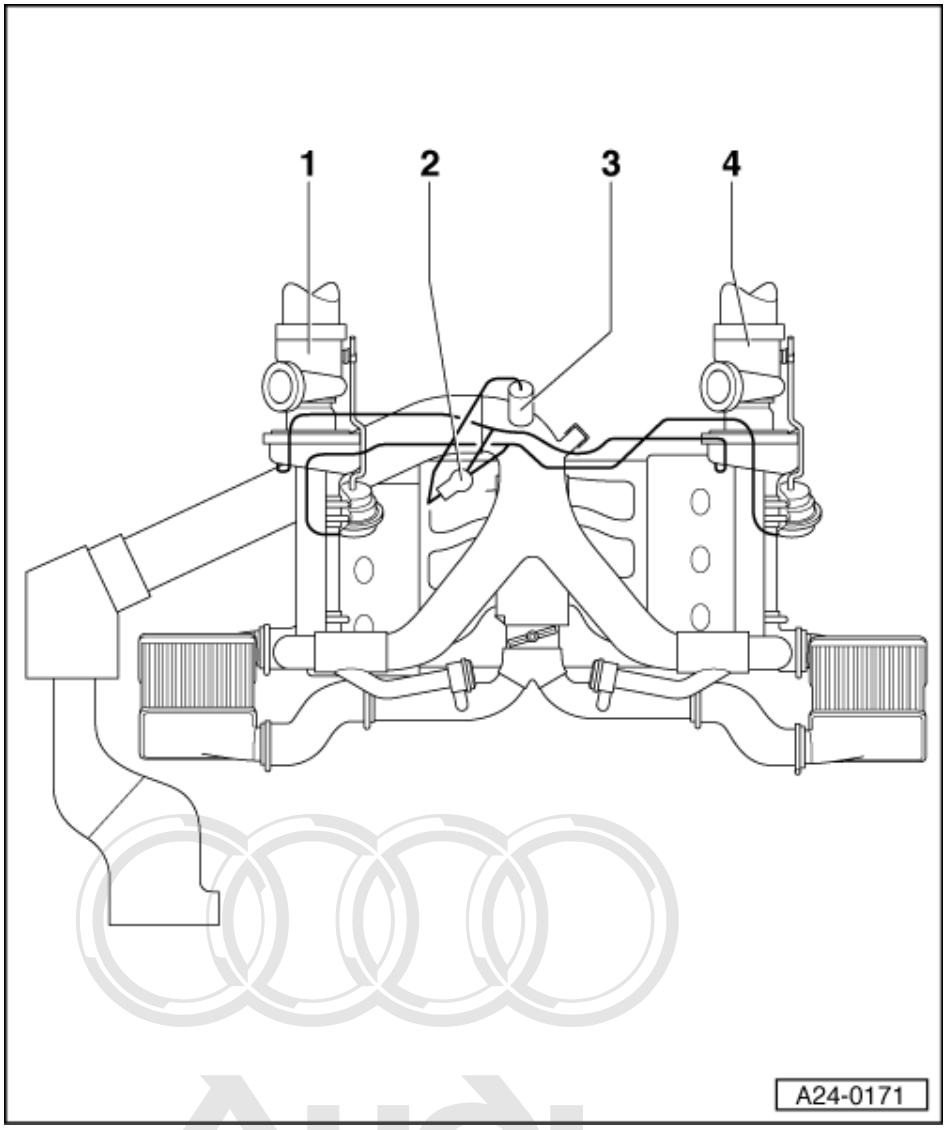

1 Turbocharger, bank 1
2 Solenoid valve for boost pressure limitation (N75)
3 Distributor piece
4 Turbocharger, bank 2

Protected by copyright. Copying for private or commercial purposes, in part or in whole, is not permitted without prior written consent of AUDI AG. AUDI AG does not guarantee or accept any liability with respect to the correctness of information in this document. Copyright by AUDI AG.

5.4 - Subsystem, fuel tank breather (ACF-system)

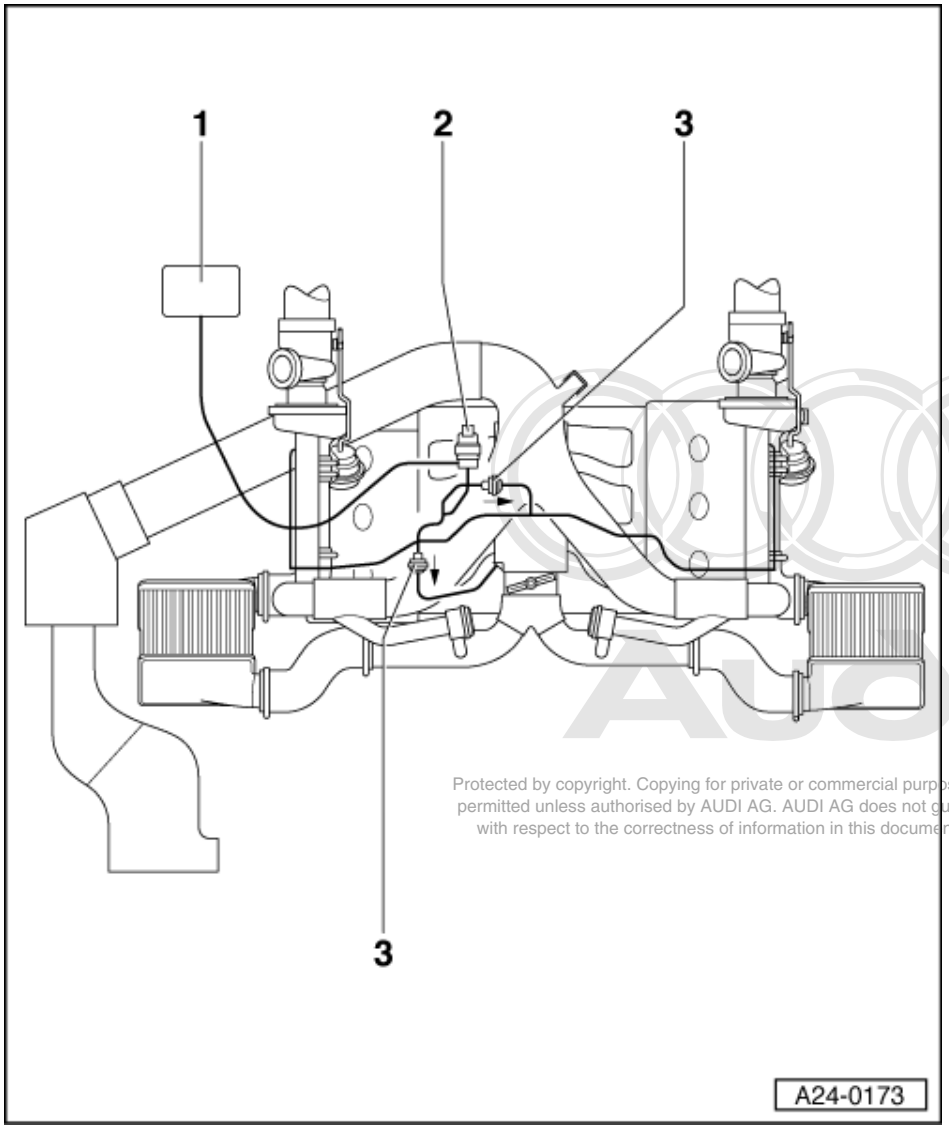

Protected by copyright. Copying for private or commercial purposes, in part or in whole, is not permitted unless authorised by AUDI AG. AUDI AG does not guarantee or accept any liability with respect to the correctness of information in this document. Copyright by AUDI AG.

1 Activated charcoal filter system
2 Solenoid valve 1 for activated charcoal filter (N80)
3 Non-return valves (arrow on each non-return valve indicates flow direction)

5.5 - Subsystem air recirculation control (air recirculation thrust control)

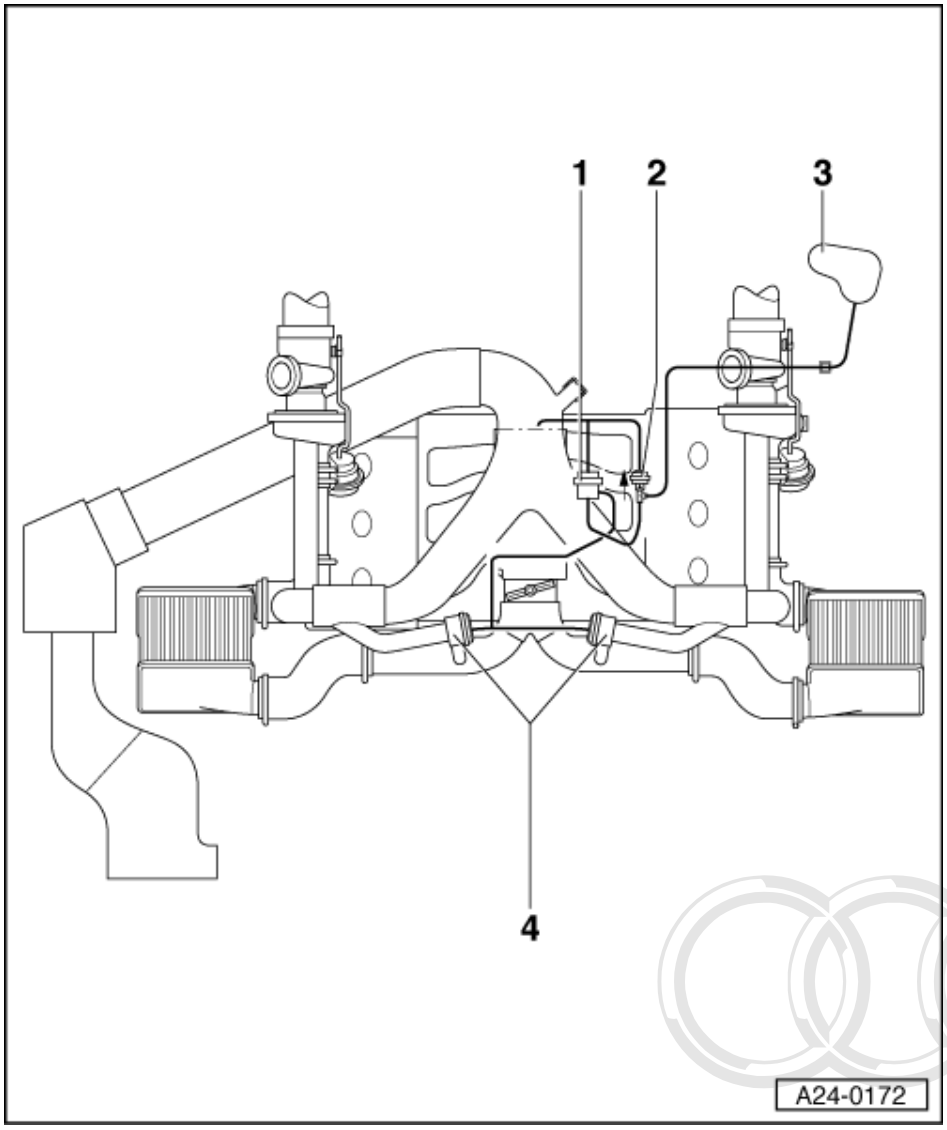

1 Air recirculation valve for turbocharger (N249)
2 Non-return valve (arrow indicates flow direction through valve)
3 Vacuum reservoir
4 Mechanical air recirculation valves

Protected by copyright. Copying for private or commercial purposes, in part or in whole, is not permitted unless authorised by AUDI AG. AUDI AG does not guarantee or accept any liability with respect to the correctness of information in this document. Copyright by AUDI AG.

5.6 - Subsystem, crankcase breather

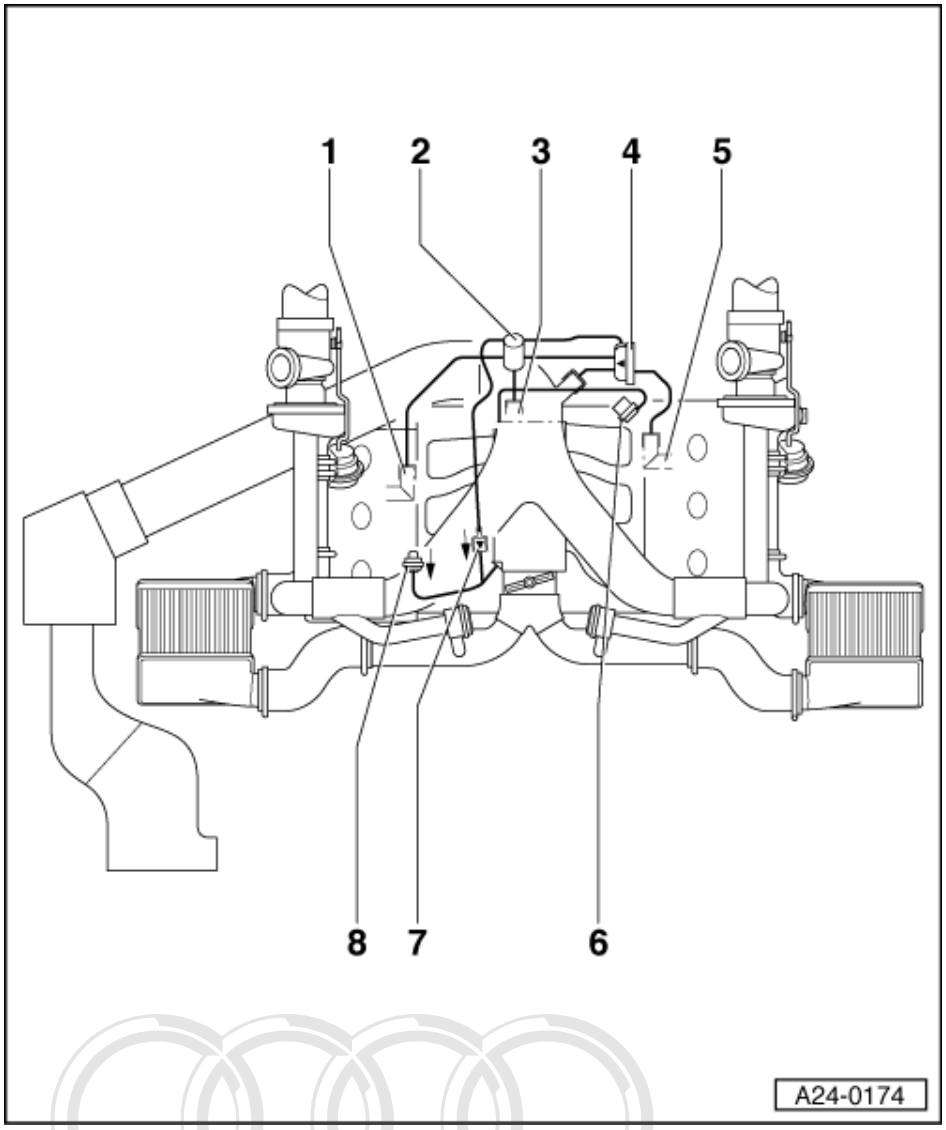

1 Connection on valve cover, cylinder bank 1
2 Distributor piece
3 Connection on crankcase
4 Pressure limiting valve
5 Connection on valve cover, cylinder bank 2

Protected by copyright. Copying for private or commercial purposes, in part or in whole, is not permitted unless authorised by AUDI AG. AUDI AG does not guarantee or accept any liability with respect to the correctness of information in this document. Copyright by AUDI AG.

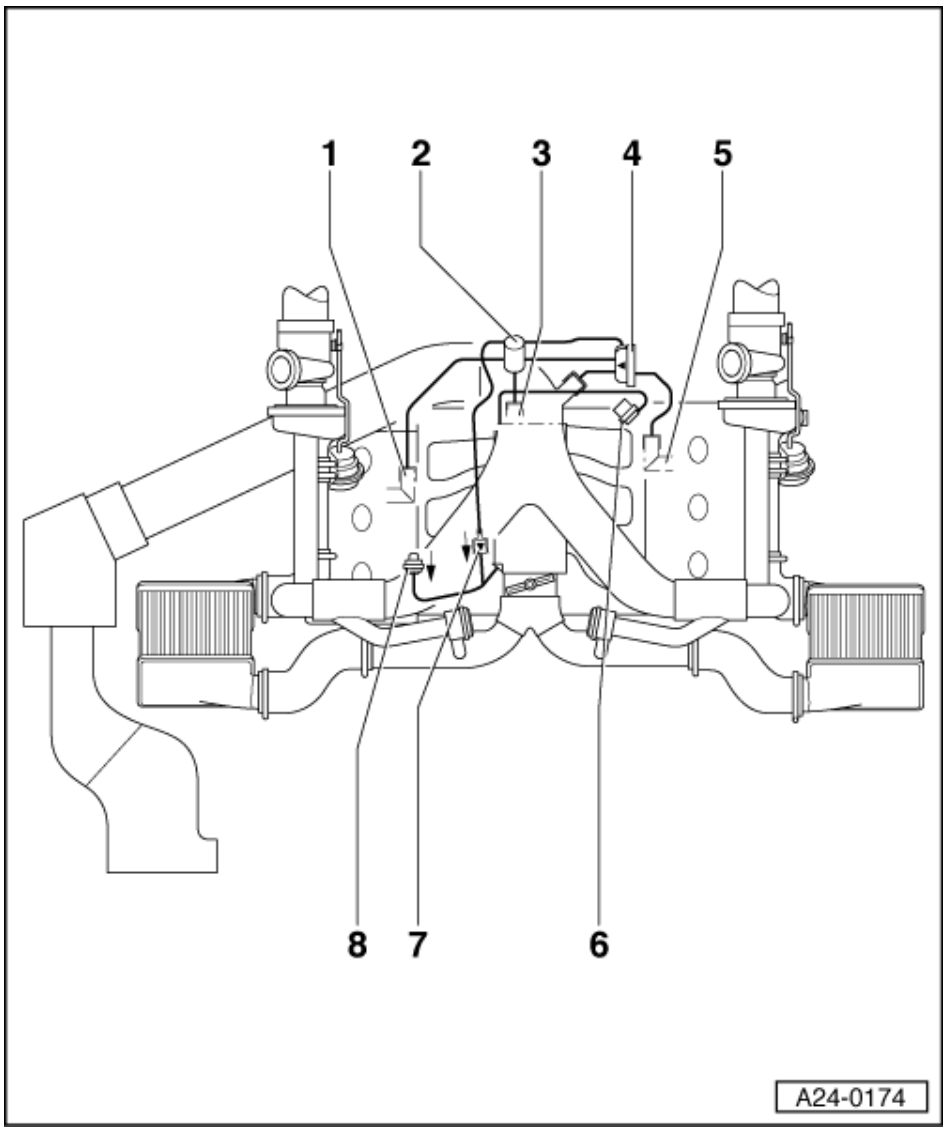

6 Fuel pressure regulator
7 Non-return valve (arrow on valve indicates flow direction)
8 Non-return valve (arrow on valve indicates flow direction); see also subsystem, fuel tank breather system => Page 133 .

6 - Checking auxiliary signals

6.1 - Checking auxiliary signals

6.2 - Checking engine speed signal

Protected by copyright. Copying for private or commercial purposes, in part or in whole, is not permitted unless authorised by AUDI AG. AUDI AG does not guarantee or accept any liability with respect to the correctness of information in this document. Copyright by AUDI AG.

Note:

The engine speed signal is taken from contact 37 of the engine control unit. The signal is used, among other things, for the engine speed display in the dash panel insert.

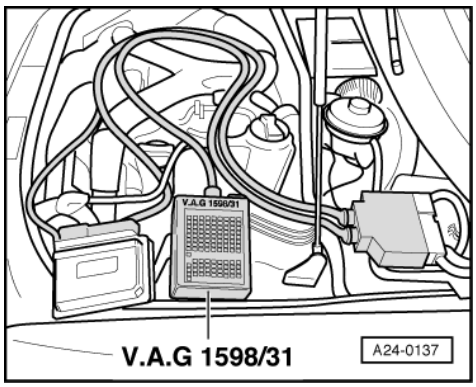

- -> Connect test box V.A.G 1598/31 to wiring harness for engine control unit; the engine control unit must not be connected =>Page 64 .
- Test for open circuit in wiring between dash panel insert and contact 37 on the test box, using current flow diagram.

=> Current Flow Diagrams, Electrical Fault-Finding and Fitting Locations

6.3 - Checking consumption signal for vehicle computer

Protected by copyright. Copying for private or commercial purposes, in part or in whole, is not permitted unless authorised by AUDI AG. AUDI AG does not guarantee or accept any liability with respect to the correctness of information in this document. Copyright by AUDI AG.

Notes:

- The consumption signal is calculated by the engine control unit from the injection period and relayed to the on-board computer. Consumption signal is taken from contact 81 of engine control unit.
- Checking fuel consumption signal

=> Current Flow Diagrams, Electrical Fault-Finding and Fitting Locations

6.4 - Checking coolant temperature sender

Notes:

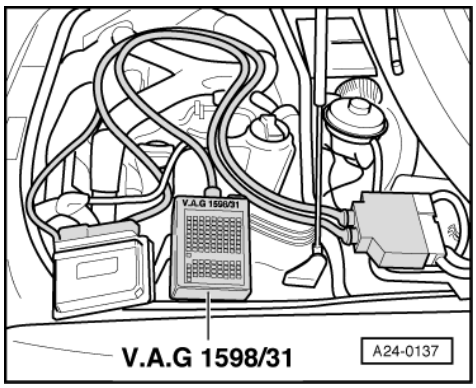

- Engine control unit receives coolant temperature signal from instrument cluster. When this signal arrives, the boost pressure is reduced to prevent engine overheating.

- -> Connect test box V.A.G 1598/31 to wiring harness for engine control unit; the engine control unit must not be connected =>Page 64 .
- Test for open circuit in wiring between dash panel insert and contact 19 on the test box, using current flow diagram.

=> Current Flow Diagrams, Electrical Fault-Finding and Fitting Locations

6.5 - Check vehicle speed signal

Notes:

- The vehicle speed signal is generated by the road speed sender -G68 (on the gearbox) and is processed in instrument cluster (dash panel insert).
- The processed signal goes to contact 54 on the engine control unit and is used for idling speed stabilisation and for the damping of load change jolts when changing gear.

- Start the engine.
- Connect the vehicle diagnostic, testing and information system VAS 5051 or fault reader V.A.G 1551 and select the engine electronics control unit with "address word" 01 => Page 3 .
- Select "Read measured value block" (function 08) and display group 5.

-> Indicated on display:

```
Read measured value block 5
     1     2     3     4
```

Important:
The V.A.G 1551 must be operated by a second person.

- Take vehicle for a test drive and check whether the vehicle speed appears in display zone 3.
- If the road speed does not appear, raise the vehicle (preferably using a lifting platform) until the front left wheel is clear of the ground.

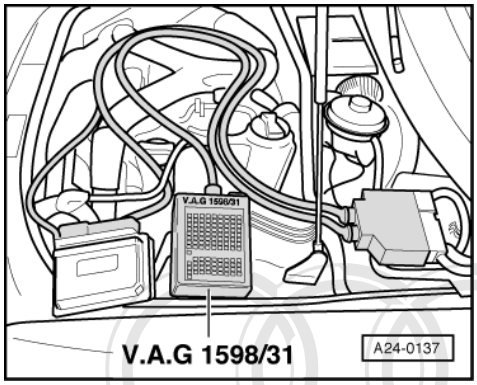

- -> Connect test box V.A.G 1598/31 to wiring harness for engine control unit; the engine control unit must not be connected =>Page 64 .
- Connect diode test lamp between socket 3 (positive) and socket 54 (road speed signal).
- Switch on the ignition and turn the front left wheel by hand.
- The diode test lamp should flash (very brief flashes).
- If the diode test lamp does not flash, check for open circuit or short circuit to positive/earth in wiring between dash panel insert and contact 54 on connector of engine control unit.

=> Current Flow Diagrams, Electrical Fault-Finding and Fitting Locations

Protected by copyright. Copying for private or commercial purposes, in part or in whole, is not permitted unless authorised by AUDI AG. AUDI AG does not guarantee or accept any liability with respect to the correctness of information in this document. Copyright by AUDI AG.

6.6 - Checking fuel level signal wiring

Notes:

- Engine control unit receives fuel level signal from instrument cluster.
- The processed signal goes to contact 30 on the engine control unit and is used for determining the cause of certain detected faults (e.g. misfire).

- Connect test box V.A.G 1598/31 to wiring harness for engine control unit; do not connect the engine control unit => Page 64 .

- Test for short and open circuit to positive or earth in wiring between instrument cluster and contact 30 on test box.

6.7 - Checking brake light switch and brake pedal switch

Test sequence

- Connect the vehicle diagnostic, testing and information system VAS 5051 or fault reader V.A.G 1551 and select the engine electronics control unit with "address word" 01 => Page 3 .
  For this purpose, the ignition must be switched on.

-> When adjacent display appears:

```
Rapid data transfer      HELP
Select function XX
```

- Enter "08" to select the function "Reading measured value block" and confirm entry with Q key.

-> When adjacent display appears:

```
Reading measured value block     Q
Enter display group number XXX
```

- Enter "066" for "display group number 066" and confirm entry with Q key.

-> Indicated on display:

```
Read measured value block 66
     1     2     3     4
```

- Check brake light/brake pedal switch in display zone 2.

	Display zones			
	1	2	3	4
Display group 066: Signals to engine control unit				
Display	xxx km/h	**XXXX**	xxx km/h	XXXX
Display	ACTUAL speed	**Switch settings**	SPECIFIED speed	Switch settings
Range		**XX00 XX11**		
Specification		**XX00 (with brake pedal not pressed)**		
		XX11 (with brake pedal pressed)		
Note:		**Value: X = no meaning. Switching points are slightly offset**		

Protected by copyright. Copying for private or commercial purposes, in part or in whole, is not permitted unless authorised by AUDI AG. AUDI AG does not guarantee or accept any liability with respect to the correctness of information in this document. Copyright by AUDI AG.

If the display is not as described:

Checking switch

- Remove driver's storage compartment.

=> General Body Assembly - Interior; Repair group 68; Dash panel; Removing driver's shelf Dash panel Removing driver's shelf

- Unplug connector from brake light/brake pedal switch.

- Connect multimeter between contacts 1 and 2 to measure resistance.

Note:

Receptacles are marked on back of plug.

- Specification: ∞ω (no continuity)

Press brake pedal.

- Specification: approx. 0 ω

Connect multimeter between contacts 3 and 4 to measure resistance.

- Specification: approx. 0 ω

Press brake pedal.

- Specification: ∞ω (no continuity)

If specifications are not attained:

- Check adjustment or replace brake light/brake pedal switch.

If specifications are attained:

Checking power supply

- Connect voltage tester V.A.G 1527 B as follows:

Connector Contact	Measure to
1	Car body earth point

- The LED should light up.

Protected by copyright. Copying for private or commercial purposes, in part or in whole, is not permitted unless authorised by AUDI AG. AUDI AG does not guarantee or accept any liability with respect to the correctness of information in this document. Copyright by AUDI AG.

Connector Contact	Measure to
3	Car body earth point

- Switch the ignition on.
  - The LED should light up.

If the LED does not light up:

- Check the wiring between contacts 1 and 3 of connector for open circuit (fuse) or short to earth:

=> Current Flow Diagrams, Electrical Fault-Finding and Fitting Locations

- Rectify any open/short circuit as necessary.

If the LED lights up:

Checking actuation

- Connect test box V.A.G 1598/31 to wiring harness for engine control unit; do not connect the engine control unit => Page 64 .
- Check for open circuit and short to earth/positive or earth in the following wiring connections:

Connector Contact	Test box V.A.G 1598/31 Socket
2	56
4	55

- Rectify any open/short circuit as necessary.

6.8 - Checking clutch pedal switch -F36

Note:

This signal is designed to prevent speed overshoots and jerkiness on switching from throttle open to throttle closed and vice versa when disengaging clutch. It is needed for the cruise control system.

Test sequence

- Connect the vehicle diagnostic, testing and information system VAS 5051 or fault reader V.A.G 1551 and select the engine electronics control unit with "address word" 01 => Page 3 .
  For this purpose, the ignition must be switched on.

-> When adjacent display appears:

```
Rapid data transfer      HELP
Select function XX
```

- Enter "08" to select the function "Reading measured value block" and confirm entry with Q key.

-> When adjacent display appears:

```
Reading measured value block      Q
Enter display group number XXX
```

- Enter "066" for "display group number 066" and confirm entry with Q key.

-> Indicated on display:

```
Read measured value block 66
     1     2     3     4
```

- Check clutch pedal switch in display zone 2.

	Display zones			
	1	2	3	4
Display group 066: Signals to engine control unit				
Display	xxx km/h	**XXXX**	xxx km/h	XXXX
Display	ACTUAL speed	**Switch settings**	SPECIFIED speed	Switch settings
Range		**X0XX X1XX**		
Specification		**X0XX (clutch pedal not pressed)**		
		X1XX (clutch pedal pressed)		
Note:		**Value: X = no meaning**		

If the display is not as described:

Checking switch

Protected by copyright. Copying for private or commercial purposes, in part or in whole, is not permitted unless authorised by AUDI AG. AUDI AG does not guarantee or accept any liability with respect to the correctness of information in this document. Copyright by AUDI AG.

- Remove driver's storage compartment.

=> General Body Assembly - Interior; Repair group 68; Dash panel; Removing driver's shelf Dash panel Removing driver's shelf

- Unplug the connector from clutch pedal switch.

- Connect multimeter between contacts 1 and 2 to measure resistance.

Note:

Receptacles are marked on back of plug.

- Specification: approx. 0 ω

Operate clutch pedal.

- Specification: ∞ω (no continuity)

If specification is not attained:

Protected by copyright. Copying for private or commercial purposes, in part or in whole, is not permitted unless authorised by AUDI AG. AUDI AG does not guarantee or accept any liability with respect to the correctness of information in this document. Copyright by AUDI AG.

- Replace clutch pedal switch.

If specification is attained:

Checking power supply

- Connect voltage tester V.A.G 1527 B as follows:

Connector Contact	Measure to
2	Car body earth point

- Switch the ignition on.
  - The LED should light up.

If the LED does not light up:

- Check the wiring from contact 2 of connector to central electrics for open circuit via the fuse (in fuse holder):

=> "Current Flow Diagrams, Electrical Fault-finding and Fitting Locations" binder

- Rectify open circuit, if necessary.

If the LED lights up:

Checking actuation

- Connect test box V.A.G 1598/31 to wiring harness for engine control unit; do not connect the engine control unit => Page 64 .
- Check for open circuit and short to positive or earth in the following wiring connections:

Connector Contact	Test box V.A.G 1598/31 Socket
1	39

- Rectify any open/short circuit as necessary.

6.9 - Testing crash signal

The engine control unit receives the crash signal ("Crash cut-off was activated") from the airbag control unit.

If the airbag control unit sends the crash signal to the engine control unit (during an accident or if a final control diagnosis relating to the airbag system is carried out), the engine control unit switches off the fuel pump, which stops the engine. It can however be restarted (e.g. to move vehicle out of danger area)

The engine control unit is unable to switch off the fuel pump in the case of an accident involving activation of airbag when the fault entry "Crash signal from airbag control unit, implausible signal" exists, because the engine

control unit is unable to recognise the crash signal from the airbag control unit; e.g. due to a wiring problem between engine control unit and airbag control unit.

- Connect the V.A.G 1598/31 test box to wiring harness leading to engine control unit; the engine control unit should not be connected => Page 64 .

Check the following wiring connections for open circuit and short circuit to positive or earth.

Test box V.A.G 1598/31, Socket	Airbag control unit, Contact
67	=> Current Flow Diagrams, Electrical Fault-Finding and Fitting Locations

Wire resistance: max. 1.5 Ohm

Protected by copyright. Copying for private or commercial purposes, in part or in whole, is not permitted unless authorised by AUDI AG. AUDI AG does not guarantee or accept any liability with respect to the correctness of information in this document. Copyright by AUDI AG.

- Rectify any open/short circuit as necessary.

=> Current Flow Diagrams, Electrical Fault-Finding and Fitting Locations

If no wiring fault is detected: Interrogate the fault memory of the airbag control unit.

6.10 - Testing rough road detection signal from ABS/EDS control unit

Notes:

- If the ABS/EDS control unit detects a spinning wheel, the ABS/EDS control unit generates the rough road signal.
  If the engine control unit detects the rough road signal, the misfire detection is switched off in engine control unit.
- The rough road signal must only be tested if the fault "18014 (P1606) Rough road detection/engine specified torque ABS CU, electrical fault in circuit" is stored.
  The possible additional fault "Misfire" is then a sequential fault and can be ignored.
- The wiring and rough road signal are monitored by the engine control unit

Test conditions

- Control unit code OK => Page 32 .

Test sequence

- Switch ignition off.
- Connect the V.A.G 1598/31 test box to wiring harness leading to engine control unit; the engine control unit must not be connected => Page 64 .
- Check wiring from socket 74 on test box to ABS control unit for short circuit or open circuit according to current flow diagram.

=> Current Flow Diagrams, Electrical Fault-Finding and Fitting Locations

If no wiring fault is detected:

- Replace ABS control unit.

If fault is re-displayed after replacing ABS control unit:

- Replace engine control unit => Page 68 .

6.11 - Testing data exchange between engine/ABS/gearbox control unit, instrument cluster

Notes:

- Data is exchanged between individual control units by means of a bus system.
- "Bus" is used to describe a system that transports and distributes data.
- The wires between the control units that are used to transfer the data are known as signal wires.
- These signal wires are used for serial transmission of data, i.e. data is sent to each of the connected control units in turn.

Testing the bus system

The test principle depends on the number of control units/systems connected to the data bus.

The fault table instructed you to check the data exchange between the engine control unit and CAN-compatible control units.

- Start the engine (if the engine does not start, please switch on the ignition).
- Connect the vehicle diagnostic, testing and information system VAS 5051 or fault reader V.A.G 1551 and select the engine electronics control unit with "address word" 01 => Page 3 .

-> Indicated on display:

```
Rapid data transfer     HELP
Select function XX
```

- Enter "08" to select the function "Reading measured value block" and confirm entry with Q key.

-> Indicated on display:

```
Reading measured value block     Q
Enter display group number XXX
```

- Enter "125" for "display group number 125" and confirm entry with Q key.

-> When adjacent display appears:

```
Read measured value block 125
     1     2     3     4
```

- Check displays in display zones 1 to 4.

  CAN-compatible control units are displayed with the engine control unit:
  - No display (display zone is blank): Engine control unit not CAN-compatible
  - Display 1:CAN-compatible control unit is a data bus user
  - Display 0:CAN-compatible control unit is not a data bus user (e.g. in case of fault)

-> Example:

```
Read measured value block 125
     ABS 1     Instrument cluster 1
```

Note:

Display group 125 indicates the systems which communicate with the engine control unit via the CAN data bus. (The ABS and instrument cluster control unit in the example). If these systems are not installed, the respective display zones in display group 125 remain blank. "Gearbox 1" would be indicated in display zone 1 and "Air conditioner 1" in display zone 4 if these systems communicate with the engine control unit via "CAN".

```
Read measured value block 126
     1     2     3     4
```

-> Check in the same way with display group number 126.

Copyright by AUDI AG. Copying for private or commercial purposes, in part or in whole, is not permitted unless authorized by AUDI AG. AUDI AG does not guarantee or accept any liability with respect to the correctness of information in this document. Copyright by AUDI AG.

Note:

Display group 126 indicates the systems which communicate with the engine control unit via the CAN data bus. If these systems are not installed, the respective display zones remain blank.

The following systems are displayed in display group 126, however only if they are available:

Display zone 1:Automatic distance control; display: "Distance 1".

Display zone 2:Steering angle sensor; display: "Steering angle 1"

Display zone 3:Airbag; display: "Airbag 1".

Display zone 4:Vehicle's electrical system; display: "el. CE 1".

- Press the ⇒key.

-> Indicated on display:

```
Rapid data transfer      HELP
Enter address word XX
```

Protected by copyright. Copying for private or commercial purposes, in part or in whole, is not permitted unless authorised by AUDI AG. AUDI AG does not guarantee or accept any liability with respect to the correctness of information in this document. Copyright by AUDI AG.

- Press the 0 key twice for the "automatic test sequence" address word and confirm entry with Q key.
  - The fault memory is then interrogated for all systems in the vehicle which are capable of self-diagnosis

If a control unit answers with its identification, the number of faults stored or "No fault detected" appears on the display.

Any system faults stored will be displayed in sequence and printed out. The V.A.G 1551 will then transmit the next address word.

-> The automatic test sequence has ended when the following appears on the display:

```
V.A.G - SELF DIAGNOSIS     HELP
1 - Rapid data transfer*
2 - Flash code output*
```

If a fault is displayed relating to "Data bus drive" or "...CAN bus":

- Check that the engine control unit and other CAN-compatible control units installed are suitable for this vehicle (part no. and code).

If the correct control units are installed:

- Check that multiple connectors for control units are properly seated.

If the multi-pin connectors are firmly seated:

- Check the CAN bus system.

Checking a "two-line bus system"

The communication between three or more control units is carried out over a "two-line bus system".

- Evaluate the faults stored in the control units.

This helps to localise line faults.

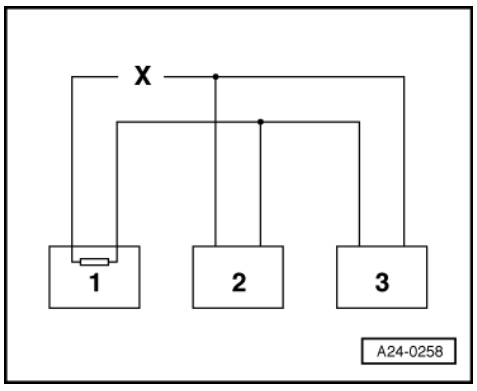

Example 1:

With the faults stored in the fault memories it can be seen that the control unit 1 does not communicate with control units 2 and 3.

Control unit	Faults stored in fault memory
1	- No message from control unit 2 - No message from control unit 3
2	- No message from control unit 1
3	- No message from control unit 1

Protected by copyright. Copying for private or commercial purposes, in part or in whole, is not permitted unless authorised by AUDI AG. AUDI AG does not guarantee or accept any liability with respect to the correctness of information in this document. Copyright by AUDI AG.

- Switch ignition off.
- Disconnect the control units connected to each other via the bus lines and investigate whether there is a short circuit between the bus lines.

=> Current Flow Diagrams, Electrical Fault-Finding and Fitting Locations

- If no fault can be detected in the bus lines exchange control unit 1.

Example 2:

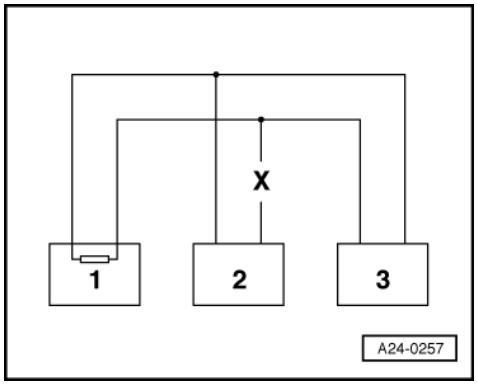

With the faults stored in the fault memories it can be seen that the control unit 2 does not communicate with control units 1 and 3.

Control unit	Faults stored in fault memory
1	- No message from control unit 2
2	- No message from control unit 1 - No message from control unit 3
3	- No message from control unit 2

- Switch ignition off.
- Disconnect the control units connected to each other via the bus lines and investigate whether there is a short circuit between the bus lines.

=> Current Flow Diagrams, Electrical Fault-Finding and Fitting Locations

- If no fault can be detected in the bus lines exchange control unit 2.

Example 3:

With the faults stored in the fault memories it can be seen that there is no sending or receiving operation possible in any of the control units.

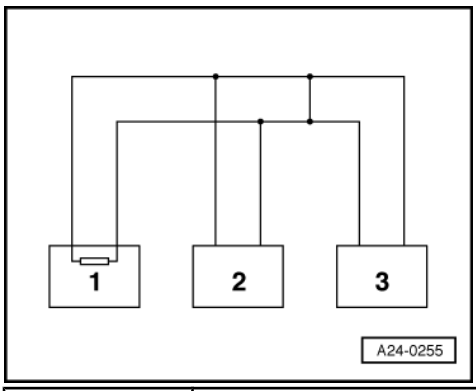

Control unit	Faults stored in fault memory
1	- Data bus drive defective
2	- Data bus drive defective
3	- Data bus drive defective

- Switch ignition off.
- -> Disconnect the control units that are linked by the bus wires and check for a short circuit between the bus wires

=> Current Flow Diagrams, Electrical Fault-Finding and Fitting Locations

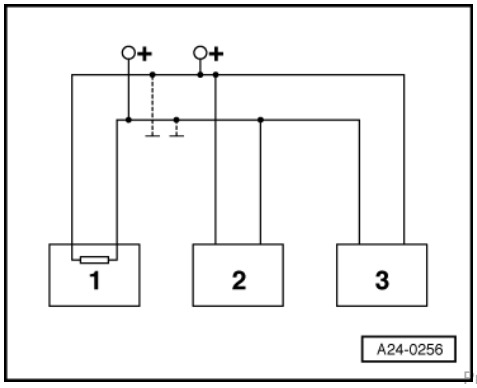

Protected by copyright. Copying for private or commercial purposes, in part or in whole, is not permitted unless authorised by AUDI AG. AUDI AG does not guarantee or accept any liability with respect to the correctness of information in this document. Copyright by AUDI AG.

- -> Check the bus wires for short to positive and short to earth.

If cause of fault "Data bus drive defective" cannot be found in bus lines check whether one of the control units is responsible for the fault.

All the control units that communicate via the CAN data bus are still disconnected. The ignition is switched off.

- Connect one of the control units.
- Connect fault reader V.A.G 1551. Switch the ignition on and erase the fault memory of the control unit that has just been connected Terminate fault readout by selecting function 06 "End output".
- Switch the ignition off and then on again.
- Leave the ignition switched on for 10 seconds. Then interrogate the fault memory of the control unit that has just been connected, using the fault reader.
- If the fault "Data bus drive defective" is now indicated, replace the control unit which has just been connected.
- If fault "Signal wire defect" is not read out, connect the next control unit and repeat the procedure.

28 - Ignition system

1 - Checking ignition system

1.1 - Checking ignition system

1.2 - General notes on ignition system

- Always switch off the ignition before connecting or disconnecting the battery, otherwise the engine control unit may be damaged.
- The engine control unit is equipped with self-diagnosis.
- A voltage of at least 11.5 V is necessary for satisfactory functioning of the electrical components.
- In the case of some tests, a fault may be recognised and stored by the control unit. At the end of all tests and repairs, therefore, the fault memory should be interrogated and, if necessary, erased.
- If the engine starts briefly and then stops after fault search, repair or tests on components, this may be because the immobiliser is blocking the engine control unit. The fault memory must then be interrogated and, if necessary, adaption carried out on the control unit.

1.3 - Safety precautions

Protected by copyright. Copying for private or commercial purposes, in part or in whole, is not permitted unless authorised by AUDI AG. AUDI AG does not guarantee or accept any liability with respect to the correctness of information in this document. Copyright by AUDI AG.

To prevent injuries to persons and/or damage to the fuel injection and ignition system, the following must be noted:

- Do not touch or disconnect ignition wiring when the engine is running or at starter speed.
- Always switch off the ignition before connecting or disconnecting injection or ignition system wiring or tester cables.
- To run engine at starting speed without actually starting it (for example, in order to test compression), unplug connector from the output stage of the ignition coils and also the connectors on the injectors. After completing the work, interrogate the fault memory and erase it.
- Always switch off the ignition before washing the engine.
- Always switch off the ignition before connecting or disconnecting the battery, otherwise the engine control unit may be damaged.

1.4 - Technical data for ignition system

Engine code letters	AGB (2.7 ltr. V6/5V / 195 kW biturbo engine / without secondary air inlet / satisfies emission standard Euro II-D3) AZB (2.7 ltr. V6/5V / 195 kW biturbo engine / without secondary air inlet / satisfies emission standard Euro III)
Idling speed Not adjustable - controlled by the idling speed stabilisation	750...850 rpm
Engine speed limitation By closing of throttle valve or deactivation of injectors	6800 rpm
Ignition timing is determined by the control unit. Ignition timing cannot be adjusted.	

Engine code letters	**AGB (2.7 ltr. V6/5V / 195 kW biturbo engine / without secondary air inlet / satisfies emission standard Euro II-D3) AZB (2.7 ltr. V6/5V / 195 kW biturbo engine / without secondary air inlet / satisfies emission standard Euro III)**
Ignition system	Individual coil system with 6 ignition coils connected directly to spark plugs via spark plug connectors The output stages for ignition coils are located as a separate component on the air cleaner housing.
Spark plug connectors	Resistance approx. 2 kω
Firing order	1-4-3-6-2-5

1.5 - Checking ignition coils

Note:

Misfiring is monitored by the self-diagnosis for vehicles which fulfil the emission standard EU III. This means that a cylinder which is not firing is stored in the fault memory together with the appropriate cylinder number. The advantage of this is that fault finding can be initiated from e.g. a specific cylinder in the case of fault. Therefore interrogate the engine control unit before starting this test.

Test conditions

- No faults relating to injector(s) stored

Identify an inoperative or misfiring cylinder as follows:

- Disconnect connectors from the injectors in sequence with the engine running, and observe how the engine runs.

  or

- Compare the spark plugs of all cylinders with each other and check for soot on the electrodes.

If the defective cylinder has been identified:

Protected by copyright. Copying for private or commercial purposes, in part or in whole, is not permitted unless authorised by AUDI AG. AUDI AG does not guarantee or accept any liability with respect to the correctness of information in this document. Copyright by AUDI AG.

- Connect multimeter (resistance measurement range) to spark plug connector.

Note:

The spark plug connector can be unplugged from the ignition coil.

Specification: approx. 2 kω

If specification is not attained:

- Replace the spark plug connector.

If specification is attained:

- Replace the spark plug of the defective cylinder with one from another cylinder. First perform visual inspection of spark plug for possible damage, e.g. cracks in ceramic body of spark plug.
- If the fault now occurs at the other cylinder, renew the spark plug.

If the fault remains in the same cylinder:

- Replace the ignition coil from the defective cylinder with one from another cylinder.First perform visual inspection of ignition coil for damage (ignition coil may have cracked (micro crack) or split open).
- If the fault now occurs at the other cylinder, renew the ignition coil.

If the fault remains in the same cylinder:

- Unplug the connector from the ignition coil.

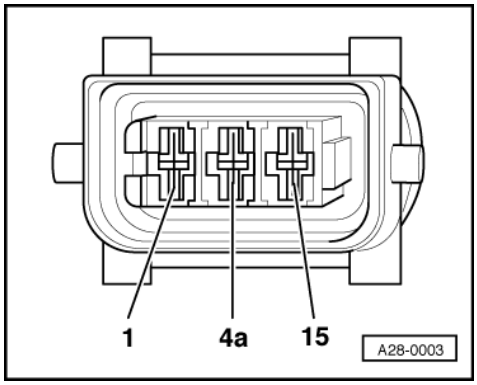

- -> Check earth connection from contact 4a to engine earth for open circuit or short to positive.

=> Current Flow Diagrams, Electrical Fault-Finding and Fitting Locations

- Rectify any open/short circuit as necessary.

If the earth connection is OK:

- -> Connect multimeter between earth and contact 15 on the connector to measure the voltage.
- Disconnect injector of cylinder to be tested.
- Operate starter.

  Specification on multimeter: approx. battery voltage

If specification is not attained:

- Check the wiring connections.

=> Current Flow Diagrams, Electrical Fault-Finding and Fitting Locations

If specification is attained:

- Disconnect 3-pin connectors on output stages for ignition coils; Installation locations overview =>Page 49 .
- Then connect diode test lamp to the 3-pin connectors of both output stages.

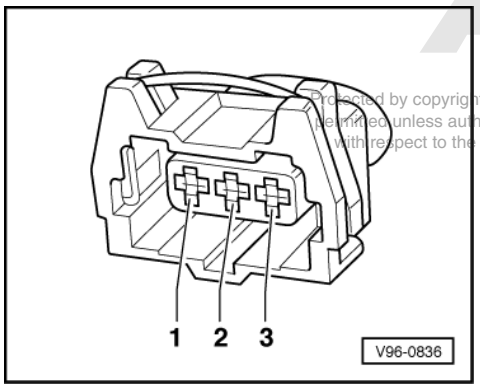

Protected by copyright. Copying for private or commercial purposes, in part or in whole, is not permitted unless authorised by AUDI AG. AUDI AG does not guarantee or accept any liability with respect to the correctness of information in this document. Copyright by AUDI AG.

- -> Connect the V.A.G 1527 diode test lamp to the following contacts on the output stage connectors: Then actuate the starter for a few seconds.

3-pin connector on wiring harness, Contact	Specification on actuation of starter
1 + earth	Diode test lamp should

2 + earth	light up
3 + earth	

If specifications are not attained:

- Switch ignition off.

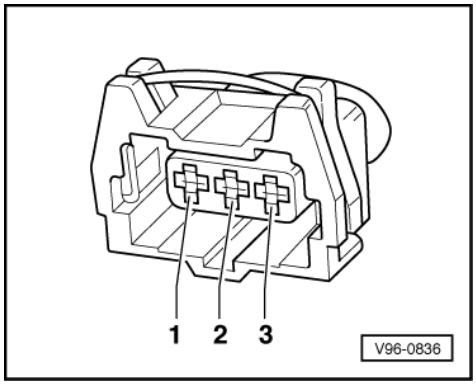

The following wiring connections are to be checked for open circuits and/or short to positive or negative.

3-pin connector on the power stage, Contact	3-pin connector on ignition coil, Contact
1	1 (cylinder 1)
2	1 (cylinder 2)
3	1 (cylinder 3)

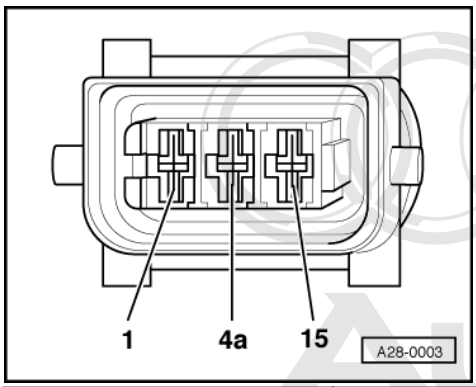

3-pin, brown connector on power stage, Contact	3-pin connector on ignition coil, Contact
1	1 (cylinder 4)
2	1 (cylinder 5)
3	1 (cylinder 6)

Protected by copyright. Copying for private or commercial purposes, in part or in whole, is not permitted unless authorised by AUDI AG. AUDI AG does not guarantee or accept any liability with respect to the correctness of information in this document. Copyright by AUDI AG.

- Rectify any open/short circuit as necessary.

1.6 - Checking output stages for ignition coils

Note:

- The output stage -N122 (black connector) activates the ignition coils of cylinder bank 1 (cylinders 1 to 3).

- The output stage 2 -N122 (brown connector) activates the ignition coils of cylinder bank 2 (cylinders 4 to 6).

Checking actuation of power output stages

- Pull the connectors off all six injectors.

Note:

It is important to ensure that no fuel is injected during the test, as this would damage the catalytic converter. Therefore, the connectors on the injectors must be unplugged.

- Disconnect 4-pin connectors on output stages; Installation locations overview =>Page 49 .

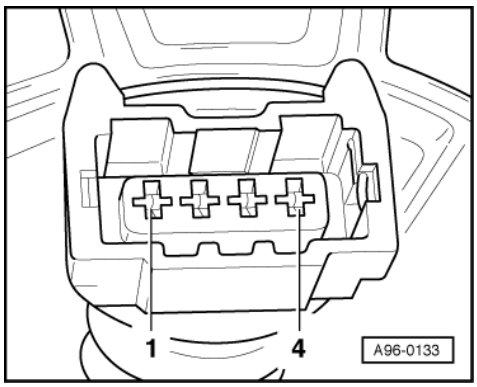

- -> Connect the V.A.G 1527 diode test lamp one after the other to the following contacts of the two 4-pin connectors on the output stage. Then actuate the starter for a few seconds.

4-pin connector on the wiring harness, Contact	Specification
1 + earth	Diode test lamp should flash (brief impulse)
3 + earth	
4 + earth	

If specifications are not attained:

- Switch ignition off.
- Connect test box V.A.G 1598/31 to wiring harness for engine control unit; the engine control unit must not be connected => Page 64 .

The following wiring connections are to be checked for open circuits and/or short to positive or negative.

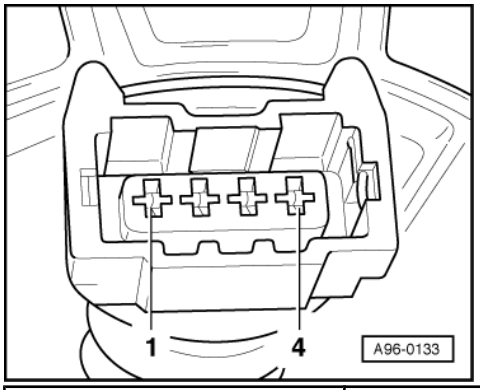

4-pin, black connector on wiring harness, Contact	Test box V.A.G 1598/31, Socket
1	94
3	110

Protected by copyright. Copying for private or commercial purposes, in part or in whole, is not permitted unless authorised by AUDI AG. AUDI AG does not guarantee or accept any liability with respect to the correctness of information in this document. Copyright by AUDI AG.

4-pin, black connector on wiring harness, Contact	Test box V.A.G 1598/31, Socket
4	102

4-pin, brown connector on wiring harness, Contact	Test box V.A.G 1598/31, Socket
1	95
3	111
4	103

- Rectify any open/short circuit as necessary.

If no wiring fault is detected:

- Connect 4-pin connector to output stage.
- Connect 3-pin connector to output stage.
- Connect V.A.G 1527 diode test lamp to battery positive (+) and to one of the contacts on the 3-pin output of the relevant output stage.
- Operate the starter for a few seconds.

  Diode test lamp should flash.

- Carry out the test with all three contacts on the 3-pin connectors of the relevant output stage.

  The diode test lamp should flash each time.

If the diode test lamp does not flash when testing one or more of the contacts:

Test the earth connection for the output stages as follows:

Protected by copyright. Copying for private or commercial purposes, in part or in whole, is not permitted unless authorised by AUDI AG. AUDI AG does not guarantee or accept any liability with respect to the correctness of information in this document. Copyright by AUDI AG.

- Disconnect 4-pin connectors from output stages.
- Connect the V.A.G 1527 diode test lamp to battery positive (+) and contact 2 on the 4-pin connector.

  The diode test lamp should light up.

- If the diode test lamp does not light up, check the wiring for open circuit, using the current flow diagram.

=> Current Flow Diagrams, Electrical Fault-Finding and Fitting Locations

  If the diode test lamp lights up:

- Replace the power output stage.

Important note:

Coat the metallic side of the new output stage with heat conducting paste (part no.: G 052 170 A1) before installation. This purpose of the heat conducting paste is the prevention of corrosion between the output stage and bolting point and dissipating the heat generated by the output stage.

1.7 - Checking the intake air temperature sender

Fitting location of sender and connector
=>Page 49

- Connect the vehicle diagnostic, testing and information system VAS 5051 or fault reader V.A.G 1551 and select the engine electronics control unit with "address word" 01 => Page 3 .
  For this purpose, the ignition must be switched on.

-> Indicated on display:

```
Rapid data transfer      HELP
Select function XX
```

- Press keys 0 and 8 for the function "Read measured value block" and confirm entry with Q key.

-> Indicated on display:

```
Read measured value block HELP
Enter display group number XXX
```

- Press keys 0, 0 and 4 for "display group number 4" and confirm entry with Q key.

-> Indicated on display:
(1...4 = display zones)

```
Read measured value block 4
     1     2     3     4
```

- Check specified result for intake air temperature sender (Display zone 4):

	Display zones			
	1	2	3	4
Display group 4: Intake air temperature with engine idling				
Display	xxxx rpm	xx.xxx Volt	xxx.x °C	**xxx.x °C**
Display	Engine speed	Battery voltage	Coolant temperature	**Intake air temperature**
Range	min.: 750 rpm max.: 6800 rpm	min.:10.000 Volt max.: 15.000 Volt	min.: -48.0 °C max.: 143,0 °C	**min.: -48.0 °C max.: 143,0 °C**
Specification	xxxx rpm	12.000...15.000 volts	80,0...110,0 °C	**Between ambient temperature and up to 120 °C 1)**
			The displayed temperature values must be approximately the same in display zones 3 and 4 when the engine is cold.	

1) If a temperature is displayed which deviates greatly from the ambient temperature of the sender, check sender and sender wiring for contact resistances and open circuit.

Checking wiring:

- Switch ignition off.
- Connect the V.A.G 1598/31 test box to wiring harness leading to engine control unit; the engine control unit should not be connected.
  => Page 64 .

Protected by copyright. Copying for private or commercial purposes, in part or in whole, is not permitted unless authorised by AUDI AG. AUDI AG does not guarantee or accept any liability with respect to the correctness of information in this document. Copyright by AUDI AG.

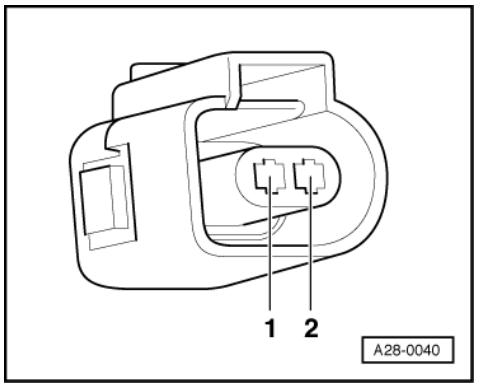

- -> Check wiring between test box and 2- pin connector for open circuit using current flow diagram. Specified result; max. 1.5 ω

Contact on 2-pin connector	Contact on control unit connector or test box
1	85
2	108

- Check the wiring for short circuit between Contact 1 and Contact 2 on 2-pin connector and for short to earth or positive.

If no wiring fault is detected:

Checking sender:

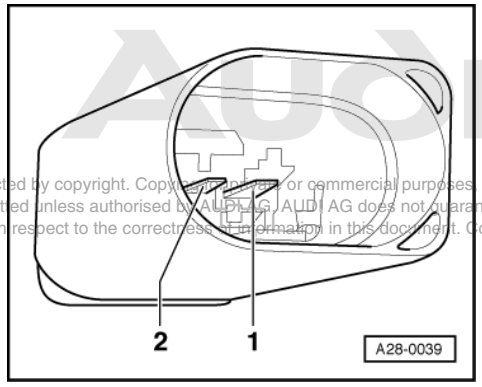

Protected by copyright. Copying for private or commercial purposes, in part or in whole, is not permitted unless authorised by AUDI AG. AUDI AG does not guarantee or accept any liability with respect to the correctness of information in this document. Copyright by AUDI AG.

- -> Measure resistance on connector to intake air temperature sender (G42) between contact 1 (signal) and contact 2 (earth).

Temperature °C	Resistance kω
-20	approx. 13,8
0	approx. 5,5
20	approx. 2,4
40	approx. 1,1
60	approx. 0.6

- If the value does not match specification, fit a new intake air temperature sender.
- In order to renew the sender, the intake manifold must be removed => Page 60 .

1.8 - Testing engine speed sender

Note:

- The engine speed sender is a combined speed sender and reference mark sender. The engine cannot be started without a signal from the G28 engine speed sender. If the signal from the -G28 engine speed sender fails while the engine is running, the engine will cut out immediately.

Testing engine speed sender

Fitting location of sender and connector
=> Page 49 .

- Before carrying out the test, make sure that the sender is correctly installed and firmly seated.
- Disconnect connector for engine speed sender (identification: grey connector).

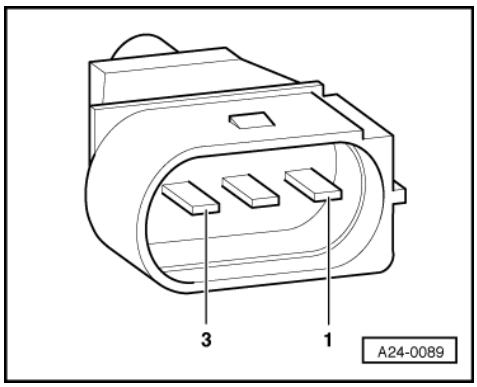

- -> Connect hand-held multimeter V.A.G 1526 (resistance test range) to contacts 2 and 3 on connector for engine speed sender using test lead from V.A.G 1594.

Specification: 730...1000 ω.

Note:

The resistance figure for the engine speed sender is associated with a temperature of 20 °C.

The resistance increases with increasing temperature.

- If the value does not match specification, fit a new engine speed sender.
- If specification is attained, connect hand-held multimeter (resistance range) to contacts 2 and 1 (earth) and to contacts 3 and 1 (earth).

Specification: infinite resistance (open circuit) in each test.

- If specified result is not achieved, renew engine speed sensor.
- If the value does match specification, test the wiring between the sender connector and the engine control unit as follows:

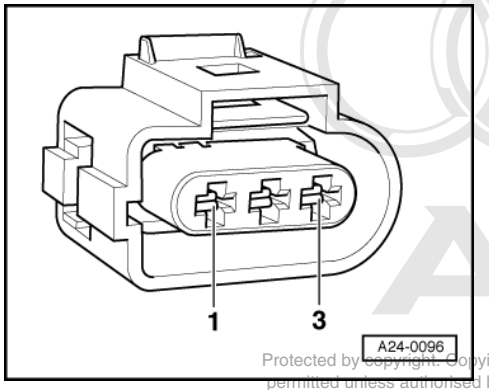

Protected by copyright. Copying for private or commercial purposes, in part or in whole, is not permitted unless authorised by AUDI AG. AUDI AG does not guarantee or accept any liability with respect to the correctness of information in this document. Copyright by AUDI AG.

- Connect test box V.A.G 1598/31 to wiring harness for engine control unit, do not connect the engine control unit => Page 64 .
- -> Test continuity of screening from contact 1 on sender connector to socket 108 on test box.

Specification: max. 1 ω.

- Check continuity of negative line from contact 2 on sender connector to socket 90 on test box.

Specification: max. 1 ω.

- Test continuity of signal wire from contact 3 on sender connector to socket 82 on test box.

Specification: max. 1 ω.

- If specified result is not achieved, rectify short or open circuit in wiring between sensor connector and control unit connector.

Contact on sender connector	Contact on control unit connector
1	108
2	90
3	82

- If no open circuits or short circuits are found, fit a new engine control unit =>Page 68 .

1.9 - Test coolant temperature sensor

Notes:

- Fitting location of coolant temperature sender => Page 49 .

Test requirements:

- Engine cold

Test sequence

- Connect the vehicle diagnostic, testing and information system VAS 5051 or fault reader V.A.G 1551 and select the engine electronics control unit with "address word" 01 => Page 3 .
  For this purpose, the engine must be running at idle speed.

-> When adjacent display appears:

```
Rapid data transfer      HELP
Select function XX
```

- Enter "08" to select the function "Reading measured value block" and confirm entry with Q key.

-> When adjacent display appears:

```
Reading measured value block     Q
Enter display group number XXX
```

- Enter "004" for "display group number 004" and confirm entry with Q key.

-> Indicated on display:

```
Read measured value block 4
     1     2     3     4
```

- Check display in display zone 3.

Protected by copyright. Copying for private or commercial purposes, in part or in whole, is not permitted unless authorised by AUDI AG. AUDI AG does not guarantee or accept any liability with respect to the correctness of information in this document. Copyright by AUDI AG.

	Display zones			
	1	2	3	4
Display group 004: Coolant temperature with engine idling				
Display	xxxx rpm	xx.x V	**xxx.x °C**	xxx.x °C
Display	Engine speed	Battery voltage	**Coolant temperature**	Intake air temperature
Specification	xxxx rpm	12.0....15.0 V	**The temperature reading should increase evenly**	Between ambient temperature and up to 120 °C
			The displayed temperature values must be approximately the same in display zones 3 and 4 when the engine is cold.	

If display zone 3 shows an implausible value:

- Disconnect connector on coolant temperature sender.

Coolant temperature sender with square plug:

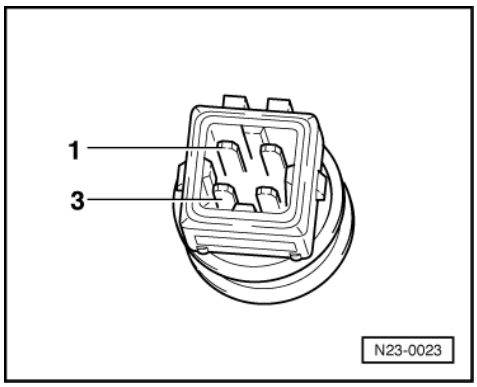

- -> Connect multimeter to contacts 1 and 3 of sender to measure resistance.

Coolant temperature sender with oval plug:

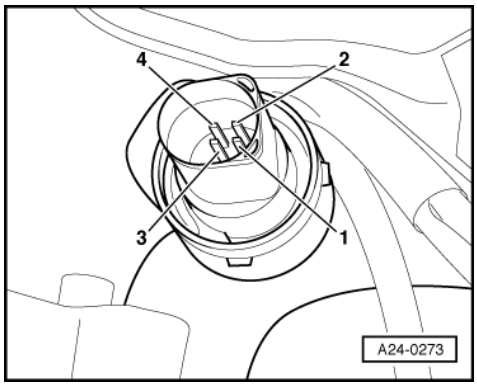

- -> Connect multimeter to contacts 3 and 4 of sender to measure resistance.

All models:

Protected by copyright. Copyright by AUDI AG.
with respect to the correctness of information in this document. Copyright by AUDI AG.

Range A shows resistance values for temperature range 0...50 °C and range B the values for temperature range 50...100 °C.

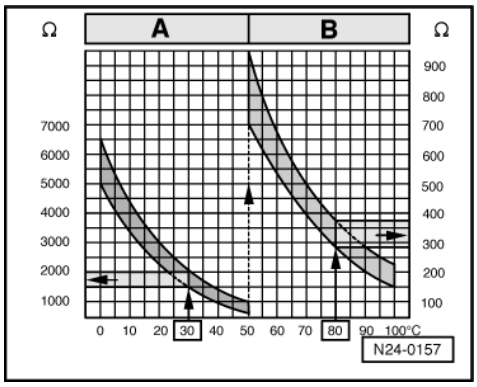

-> Sample readings:

- 30 °C corresponds to a resistance of 1500...2000 ω
- 80 °C corresponds to a resistance of 275...375 ω

If specification is not attained:

- Replace coolant temperature sender.

If specification is attained:

- Connect test box V.A.G 1598/31 to wiring harness for engine control unit; do not connect the engine control unit => Page 64 .

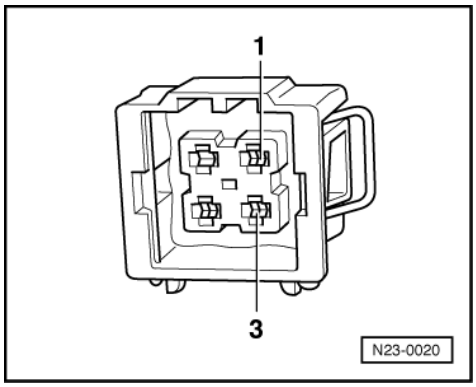

Coolant temperature sender with square plug:

- -> Check for open circuit and short to positive or earth in the following wiring connections:

Connector Contact	Test box V.A.G 1598/31 Socket
1 (signal)	93
3	108

Coolant temperature sender with oval plug:

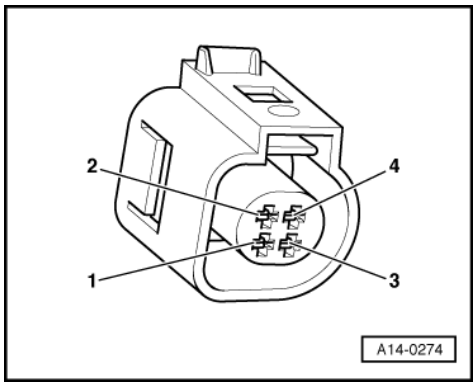

Protected by copyright. Copying for private or commercial purposes, in part or in whole, is not permitted unless authorised by AUDI AG. AUDI AG does not guarantee or accept any liability with respect to the correctness of information in this document. Copyright by AUDI AG.

- -> Check for open circuit and short to positive or earth in the following wiring connections:

Connector Contact	Test box V.A.G 1598/31 Socket
3	108
4 (signal)	93

All models:

- Test for short circuits between the two wires.
- Rectify any open/short circuit as necessary.

If no wiring fault is detected:

- Replace engine control unit => Page 68 .

1.10 - Checking control unit power supply

Test requirements:

- Fuse for engine control unit OK

=> Current Flow Diagrams, Electrical Fault-Finding and Fitting Locations

- Battery voltage at least 11 V
- Alternator OK

- Connect test box V.A.G 1598/31 to wiring harness for engine control unit; do not connect the engine control unit => Page 64 .
- Switch the ignition on.

Note:

- The positive voltage supply to the engine control unit is provided via contact 3 (terminal 15) and contact 62 (terminal 30).
- The earth connection to the engine control unit is provided via contact 1 and contact 2.

- Connect the V.A.G 1526 handheld multimeter for voltage measurement to the following contacts on the test box:

Contact	Specification
3 + 2	approx. battery voltage
3 + 1	approx. battery voltage
62 + 2	approx. battery voltage

If specifications are not attained:

- Check the wiring connections.

Protected by copyright. Copying for private or commercial purposes, in part or in whole, is not permitted unless authorised by AUDI AG. AUDI AG does not guarantee or accept any liability with respect to the correctness of information in this document. Copyright by AUDI AG.

=> Current Flow Diagrams, Electrical Fault-Finding and Fitting Locations

1.11 - Checking knock control stop

If a fault entry relating to "knock control stop reached" is made, carry out the following checks: Also see measured value blocks 20, 21, 22, 23 and 24; Page => Page 161 .

	Possible causes of fault	Fault remedy
Fault entry for all cylinders or Fault entry for all cylinders of one bank	- Poor fuel quality	- Change fuel quality (see operating instructions)
	- Knock sensor tightened to incorrect torque	- Loosen knock sensor and tighten to 20 Nm
	- Knock sensor defective	- Check knock sensor => Page 163
	- Corrosion on connector	
	- Loose components on engine	- Secure components
Fault entry for one cylinder	- Engine fault	- Check compression
	- Loose components on engine	- Secure components

Measured value blocks for ignition timing retardation

Display group 20, -Ignition- Knock control						
▪ Operation of the vehicle						
Read measured value block 20			⇒	◂ Indicated on display		
xx.x°crank-shaft	xx.x°crank-shaft	xx.x°crank-shaft	xx.x°crank-shaft			
1	2	3	4	◂ Display zones	Specification	Evaluation
				Ignition timing retardation by knock control, cylinder 4	0...12 °crank-shaft	=> Page 162
			Ignition timing retardation by knock control, cylinder 3		0...12 °crank-shaft	=> Page 162
		Ignition timing retardation by knock control, cylinder 2			0...12 °crank-shaft	=> Page 162
	Ignition timing retardation by knock control, cylinder 1				0...12 °crank-shaft	=> Page 162

Note:

The numbers displayed in display zones 1 to 4 represent the actual ignition timing retardation due to the knock control of the individual cylinders. The ignition timing is retarded in °crankshaft (degrees).

Display group 21, -Ignition- Knock control						
▪ Operation of the vehicle						
Read measured value block 21			⇒	◂ Indicated on display		
xx.x°crankshaft	xx.x°crankshaft					
1	2	3	4	◂ Display zones	Specification	Evaluation
		Ignition timing retardation by knock control, cylinder 6			0...12 °crankshaft	=> Page 162
	Ignition timing retardation by knock control, cylinder 5				0...12 °crankshaft	=> Page 162

Note:

The numbers displayed in display zones 1 and 2 represent the actual ignition timing retardation due to the knock control of the individual cylinders. The ignition timing is retarded in °crankshaft (degrees).

Protected by copyright. Copying for private or commercial purposes, in part or in whole, is not permitted unless authorised by AUDI AG. AUDI AG does not guarantee or accept any liability with respect to the correctness of information in this document. Copyright by AUDI AG.

Display group 22, -Ignition- Knock control						
▪ Operation of the vehicle						
Read measured value block 22			⇒	◂ Indicated on display		
xxxx rpm	x.x %	xx.x°crankshaft	xx.x°crankshaft			
1	2	3	4	◂ Display zones	Specification	Evaluation
				Ignition timing retardation by knock control, cylinder 2	0...12 °crankshaft	=> Page 162
			Ignition timing retardation by knock control, cylinder 1		0...12 °crankshaft	=> Page 162

	Engine load	15...175 %	---
	Engine speed	750..0,6800 rpm	---

Note:

The numbers displayed in display zones 3 and 4 represent the actual ignition timing retardation due to the knock control of cylinders one and two. The ignition timing is retarded in °crankshaft (degrees).

Display group 23, -Ignition- Knock control						
▪ Operation of the vehicle						
Read measured value block 23 ⇒ xxxx rpm x.x % xx.x°crankshaft xx.x°crankshaft				◂ Indicated on display		
1	2	3	4	◂ Display zones	Specification	Evaluation
				Ignition timing retardation by knock control, cylinder 4	0...12 °crankshaft	=> Page 162
			Ignition timing retardation by knock control, cylinder 3		0...12 °crankshaft	=> Page 162
		Engine load			15...175 %	---
	Engine speed				750..0,6800 rpm	---

Note:

The numbers displayed in display zones 3 and 4 represent the actual ignition timing retardation due to the knock control of cylinders three and four. The ignition timing is retarded in °crankshaft (degrees).

Display group 24, -Ignition- Knock control						
▪ Operation of the vehicle						
Read measured value block 24 ⇒ xxxx rpm x.x % xx.x°crankshaft xx.x°crankshaft				◂ Indicated on display		
1	2	3	4	◂ Display zones	Specification	Evaluation
				Ignition timing retardation by knock control, cylinder 6	0...12 °crankshaft	=> Page 162
			Ignition timing retardation by knock control, cylinder 5		0...12 °crankshaft	=> Page 162
		Engine load			15...175 %	---
	Engine speed				750...0,6800 rpm	---

Note:

The numbers displayed in display zones 3 and 4 represent the actual ignition timing retardation due to the knock control of cylinders five and six. The ignition timing is retarded in °crankshaft (degrees).

Evaluation of display group 20/21/22/23/24, - Ignition timing retardation

Indicated on display	Possible causes of fault	Fault remedy
All cylinders greater than 12 °crankshaft	- Knock sensor defective	- Check knock sensor => Page 163
	- Connector corroded	
	- Knock sensor incorrectly tightened	- Loosen sensor and tighten to 20 Nm
	- Loose components on engine	- Secure components

Protected by copyright. Copying for private or commercial purposes, in part or in whole, is not permitted unless authorised by AUDI AG. AUDI AG does not guarantee or accept any liability with respect to the correctness of information in this document. Copyright by AUDI AG.

	- Poor fuel quality	- Change fuel type
One cylinder deviates significantly from the others	- Connector corroded	- Check knock sensor => Page 163
	- Engine fault	- Check compression
	- Loose components on engine	- Secure components

1.12 - Checking knock sensors

Notes:

- Use only gold-plated contacts when repairing the cable connectors for the knock sensors.
- To ensure that the knock sensors function properly it is important to keep exactly to the specified tightening torque of 20 Nm.
- Check connector between knock sensor and wiring harness for corrosion.

Checking knock sensors

Note:

For engines that fulfil emission standard EU III (engine code "AZB"), the function of the knock sensors can be checked by means of a workshop test (short trip) as described below. For engines which do not fulfil EU III, please continue from page 164 .

- Connect the vehicle diagnostic, testing and information system VAS 5051 or fault reader V.A.G 1551 and select the engine electronics control unit with "address word" 01 => Page 3 .
  For this purpose, the engine must be running at idle speed

-> Indicated on display:

```
Rapid data transfer      HELP
Select function XX
```

- Press keys 0 and 4 for the function "Introduction of basic setting" and confirm entry with Q key.

-> Indicated on display:

```
Basic setting
Enter display group number XXX
```

- Press keys 0, 2 and 8 for "display group number 28" and confirm entry with Q key.

Test conditions

- Engine oil temperature at least 80 °C
- Engine speed min. 2500 rpm

Protected by copyright. Copying for private or commercial purposes, in part or in whole, is not permitted unless authorised by AUDI AG. AUDI AG does not guarantee or accept any liability with respect to the correctness of information in this document. Copyright by AUDI AG.

-> Indicated on display:
(1...4 = display zones)

```
System in basic setting 28
     1     2     3     4
```

- Perform the test as soon as "Test ON" appears in display zone 4.

	Display zones			
	1	2	3	4
Display group 028:Diagnosis of knock sensors				
Display	xxxx rpm	xx %	x.x °C	**Test ON**
Display	Engine speed	Engine load	Coolant temperature	Diagnosis status

	Display zones			
Range	0..0,6800 rpm	15...175 %		Test OFF Test ON Syst. OK Syst. NOK
Specification	Greater than 2500 rpm			Syst. OK
Note:			If the specification (Syst. OK) is not achieved, interrogate fault memory or => ContinuationPage 164	

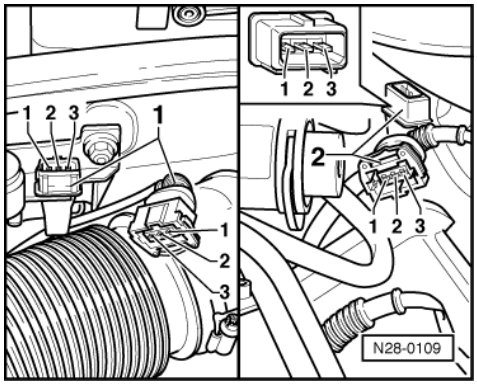

- -> Disconnect the connector for the relevant knock sensor in the engine compartment.

Note:

- Installation locations Overview =>Page 49 .
- In order to reach the connector of the knock sensor for bank 2, the coolant reservoir securing bolts must be removed and the reservoir moved to one side. Do not detach hoses.

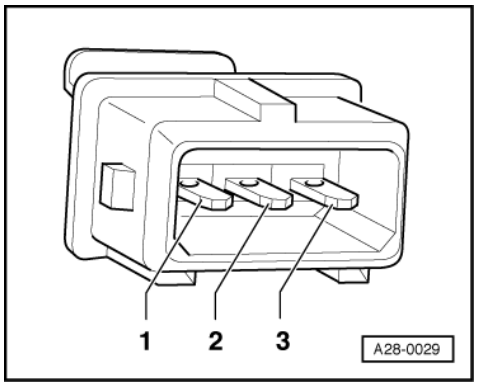

Protected by copyright. Copying for private or commercial purposes, in part or in whole, is not permitted unless authorised by AUDI AG. AUDI AG does not guarantee or accept any liability with respect to the correctness of information in this document. Copyright by AUDI AG.

- -> Test for short between all three contacts in the knock sensor connector (contacts 1+2, 1+3, 2+3).

  Specification: The must be no connection between any of the wires (infinite resistance).

- If there is a connection between the contacts, fit a new knock sensor.

Notes:

- In order to reach the knock sensor, the air duct must be removed, =>Page 77 .
- Use special tool 3247 to remove the knock sensors.

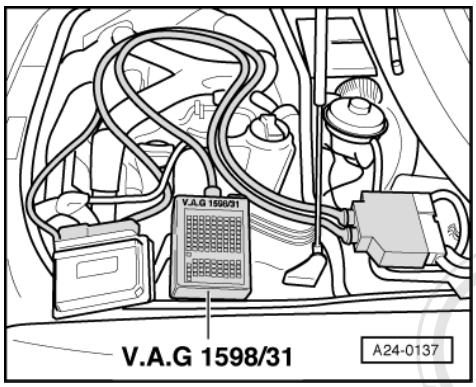

- If no short is found, check knock sensor wiring.

Checking wiring from knock sensors to engine control unit

- -> Connect test box V.A.G 1598/31 to wiring harness for engine control unit; the engine control unit must not be connected => Page 64 .

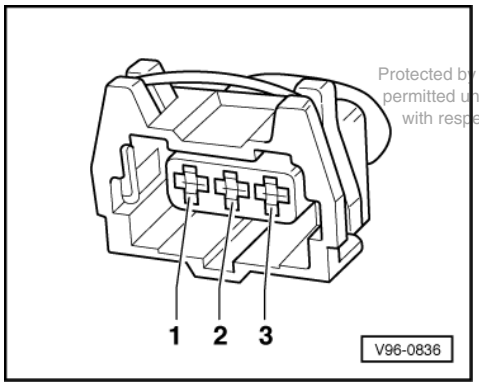

Protected by copyright. Copying for private or commercial purposes, in part or in whole, is not permitted unless authorised by AUDI AG. AUDI AG does not guarantee or accept any liability with respect to the correctness of information in this document. Copyright by AUDI AG.

- -> Check wiring from the relevant sensor connector...

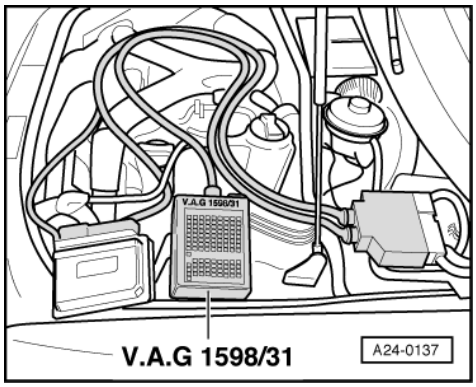

- -> ...to engine control unit for open circuit and short to positive or earth.

Knock sensor 1 - G61 (Bank 1)

3-pin connector on wiring harness, Contact	Test box V.A.G 1598/31 or engine control unit
1 (earth)	99
2 (signal)	106
3 (screening)	108

Knock sensor 2 - G61 (bank 2)

3-pin connector on wiring harness, Contact	Test box V.A.G 1598/31 or engine control unit
1 (earth)	99
2 (signal)	107
3 (screening)	108

Wire resistance: max. 1.5 Ohm

- Rectify any open/short circuit as necessary.

1.13 - Checking Hall sender

Protected by copyright. Copying for private or commercial purposes, in part or in whole, is not permitted unless authorised by AUDI AG. AUDI AG does not guarantee or accept any liability with respect to the correctness of information in this document. Copyright by AUDI AG.

Notes:

- Installation location of Hall sensor => Page 49 .
- Hall sender -G163 is located at rear of left-hand cylinder head (bank 2).
- Hall sender -G40 is located at front of right-hand cylinder head (bank 1).

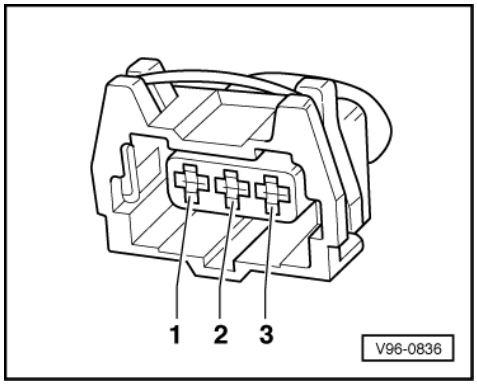

Checking activation of Hall sender

For following checks, use leads from adapter set V.A.G 1594.

- Push back rubber sleeve on relevant Hall sender connector.
- -> Connect the V.A.G 1527 diode test lamp to contacts 1 and 2 on the Hall sender connector from behind (the connector remains attached to the Hall sender).

Note:

Receptacles are numbered accordingly on the back of the connector.

- Operate the starter for a few seconds.

The diode test lamp must flash briefly on each second engine revolution.

Note:

Diode test lamps with a low current draw continue to glow faintly between impulses from the engine control unit (rather than going out completely) and become much brighter when receiving an impulse.

If diode test lamp does not flash, check voltage supply.

Checking the power supply for the Hall sender.

- Disconnect connector from relevant Hall sender.

- Switch the ignition on.

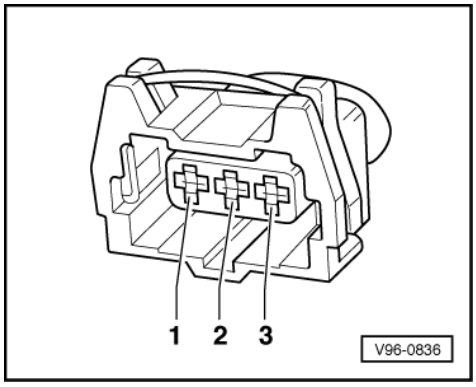

Protected by copyright. Copying for private or commercial purposes, in part or in whole, is not permitted unless authorised by AUDI AG. AUDI AG does not guarantee or accept any liability with respect to the correctness of information in this document. Copyright by AUDI AG.

- -> Connect V.A.G 1526 hand-held multimeter (voltage measurement) to contact 1 on the relevant connector and engine earth.

  Specification: approx. 5 V.

Checking signal wiring for Hall sender:

- -> Connect V.A.G 1526 hand-held multimeter (voltage measurement) between contact 2 of the relevant connector and engine earth.

  Specification: approx. battery voltage

Checking earth line for Hall sender:

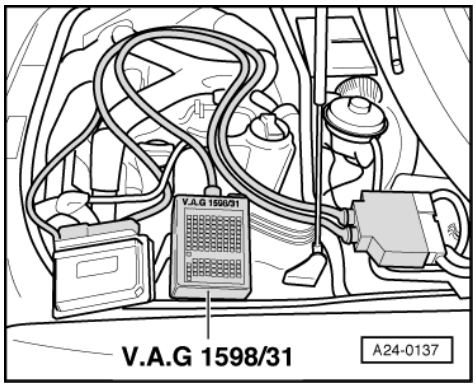

- -> Connect test box V.A.G 1598/31 to wiring harness for engine control unit; the engine control unit must not be connected => Page 64 .
- Connect V.A.G 1526 hand-held multimeter (resistance measurement) between contact 3 on the relevant connector and contact 108 in the test box.

  Specification: Continuity.
  Wire resistance: max. 1.5 Ohm

If specifications are all achieved and the diode test lamp does not flash (measured between contacts 1 and 2 with starter connector attached).

- Replace relevant Hall sender.

If specifications are not attained, check wiring connections.

Checking the wiring between the Hall sender and engine control unit.

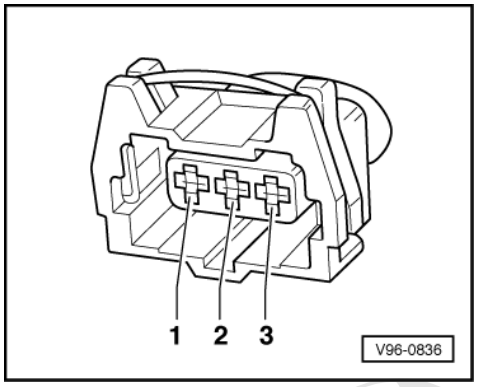

- Connect test box V.A.G 1598/31 to wiring harness for engine control unit; the engine control unit must not be connected =>Page 64 .
- -> Check the wiring from the Hall sender...
- ... to engine control unit for checking for open circuit and short to positive or earth.

Hall sender - G163 (Bank 2)

3-pin connector on wiring harness, Contact	Test box V.A.G 1598/31, Socket
1 (positive)	98
2 (signal)	86
3 (earth)	108

Protected by copyright. Copying for private or commercial purposes, in part or in whole, is not permitted unless authorised by AUDI AG. AUDI AG does not guarantee or accept any liability with respect to the correctness of information in this document. Copyright by AUDI AG.

Hall sender - G40 (Bank 1)

3-pin connector on wiring harness, Contact	Test box V.A.G 1598/31, Socket
1 (positive)	98
2 (signal)	87
3 (earth)	108

Wire resistance: max. 1.5 Ohm

- Rectify any open/short circuit as necessary.

- If a trial erasure of the fault memory is followed by the replaced indication of a fault relating to the camshaft sensor (Hall sender) although all previous tests were OK, the following faults are possible:
  - Rotor ring for Hall sender misaligned, check phase location.

Checking phase location of Hall sender

- Connect the vehicle diagnostic, testing and information system VAS 5051 or fault reader V.A.G 1551 and select the engine electronics control unit with "address word" 01 => Page 3 .
  For this purpose, the engine must be running at idle speed

-> Indicated on display:

```
Rapid data transfer      HELP
Select function XX
```

- Press keys 0 and 8 for the function "Read measured value block" and confirm entry with Q key.

-> Indicated on display:

```
Read measured value block 08
Enter display group number XXX
```

- Press keys 0, 9 and 3 for "display group number 93" and confirm entry with Q key.

-> Indicated on display:

```
Read measurement block 93
     1     2     3     4
```

- Check specified results for Hall sender.

	Display zones			
	1	2	3	4
Display group 93: Phase locations of Hall senders (bank 1 and bank 2), engine idling				
Display	xxx rpm	xx %	**0 ± 6 ° crankshaft**	**0 ± 6 ° crankshaft**
Display	Engine speed	Engine load	**Phase location bank 1**	**Phase location bank 2**
Range	min.: 750 rpm max.: 6800 rpm	min.: 15 % max.: 175 %	**-20,3...14,8 °crankshaft**	**-20,3...14,8 °crankshaft**
Specification	750...850 rpm	15...25 %	**0 ± 6 ° crankshaft**	**0 ± 6 ° crankshaft**
Note:			If the specifications are not attained, unscrew Hall sender and check to ensure that the rotor ring is correctly mounted on the camshaft (if it is incorrectly installed, the catch will be pressed flat when the securing screw is tightened). - Additionally check valve timing => Engine Mechanical Components; Repair group 13; Crankshaft; Removing and installing ribbed belt; Removing and installing toothed belt.	

1.14 - Testing misfire detection

Note:

Misfire detection is only active on vehicles that conform to emission standard EU III.

Protected by copyright. Copying for private or commercial purposes, in part or in whole, is not permitted unless authorised by AUDI AG. AUDI AG does not guarantee or accept any liability with respect to the correctness of information in this document. Copyright by AUDI AG.

Test sequence

- Connect the vehicle diagnostic, testing and information system VAS 5051 or fault reader V.A.G 1551 and select the engine electronics control unit with "address word" 01 => Page 3 .
  For this purpose, the engine must be running at idle speed.

-> Indicated on display:

```
Rapid data transfer      HELP
Select function XX
```

- Press keys 0 and 8 for the function "Read measured value block" and confirm entry with Q key.

-> Indicated on display:

```
Reading measured value block     Q
Enter display group number XXX
```

- Press keys 0, 1 and 4 for "display group number 14" and confirm entry with Q key.

-> Indicated on display:

```
Read measured value block 14
     1     2     3     4
```

- Test misfire detection.

	Display zones			
	1	2	3	4
Display group 014: Misfire detection				
Display	xxx rpm	xxx %	**xxx**	**---**
Display	Engine speed	Load	**Total misfires**	**Misfire detection**
Range	min.: 750 rpm max.: 6800 rpm	min.: 15 % max.: 175 %		**activated** **blocked**
Specification	750...850 rpm	15,0...25,0 %	**0...15**	**activated**
Note:	---	---	**If specification is not attained: Evaluation, display zone 3** **=> Page 170 .**	**---**

If specification is attained:

- Press the ⇒key.

-> Display (function selection):

```
Rapid data transfer       HELP
Select function XX
```

Protected by copyright. Copying for private or commercial purposes, in part or in whole, is not permitted unless authorised by AUDI AG. AUDI AG does not guarantee or accept any liability with respect to the correctness of information in this document. Copyright by AUDI AG.

Evaluation display group 14, display zone 3

Display zone: 3	Possible causes of fault	Fault remedy
higher than 15	- Defective spark plug - Defective spark plug connector - Ignition coil or output stage	- Test spark plugs and ignition wiring Check ignition coils => Page 151
	- Injector defective - Poor compression on one or more cylinders	- Check injectors => Page 73 Check compression

The measured value blocks that indicate the misfires of the individual cylinders are as follows:

	Display zones			
	1	2	3	4
Display group 015: Misfire detection of cylinders 1, 2 and 3				
Display	xxx	xxx	xxx	**---**
Display	Number of misfires in cylinder 1	Number of misfires in cylinder 2	**Number of misfires in cylinder 3**	**Misfire detection**
Range				**activated** **blocked**
Specification	0...15	0...15	0...15	**activated**
Note:	**If specification is not attained: Evaluation** **=> Page 171 .**	**If specification is not attained: Evaluation** **=> Page 171 .**	**If specification is not attained: Evaluation** **=> Page 171 .**	**---**

Note:

Note that misfire detection is only displayed on vehicles that conform to emission standard EU III.

	Display zones			
	1	2	3	4
Display group 016: Misfire detection of cylinders 4, 5 and 6				

	Display zones			
Display	xxx	xxx	xxx	---
Display	Number of misfires in cylinder 4	Number of misfires in cylinder 5	Number of misfires in cylinder 6	**Misfire detection**
Range				**activated blocked**
Specification	0...15	0...15	0...15	**activated**
Note:	**If specification is not attained: Evaluation => Page 171 .**	**If specification is not attained: Evaluation => Page 171 .**	**If specification is not attained: Evaluation => Page 171 .**	---

Note:

Note that misfire detection is only displayed on vehicles that conform to emission standard EU III.

Evaluation of measured value blocks 15 and 16

Protected by copyright. Copying for private or commercial purposes, in part or in whole, is not permitted unless authorised by AUDI AG. AUDI AG does not guarantee or accept any liability with respect to the correctness of information in this document. Copyright by AUDI AG.

Display zones:1/2/3	Possible causes of fault	Fault remedy
higher than 15	- Defective spark plug - Defective spark plug connector - Ignition coil or output stage	- Test spark plugs and ignition wiring Check ignition coils => Page 151
	- Injector defective - Poor compression on one or more cylinders	- Check injectors => Page 73 Check compression