Repair Manual

Audi A6 2011 ➤
Audi A7 Sportback 2011 ➤

Protected by copyright. Copying for private or commercial purposes, in part or in whole, is not permitted unless authorised by AUDI AG. AUDI AG does not make any representations or warranties regarding the accuracy or completeness of the contents of this publication nor does it accept any liability for any errors or omissions. © Copyright by AUDI AG.

multitronic 0AW FWD

Edition 07.2015

cardiagn.com

List of Workshop Manual Repair Groups

Repair Group

00 - General, Technical Data

37 - Controls, Housing

38 - Gears, Hydraulic Controls

39 - Final Drive, Differential

Protected by copyright. Copying for private or commercial purposes, in part or in whole, is not permitted unless authorised by AUDI AG. AUDI AG does not guarantee or accept any liability with respect to the correctness of information in this document. Copyright by AUDI AG.

cardiagn.com

Technical information should always be available to the foremen and mechanics, because their careful and constant adherence to the instructions is essential to ensure vehicle road-worthiness and safety. In addition, the normal basic safety precautions for working on motor vehicles must, as a matter of course, be observed.

All rights reserved.
No reproduction without prior agreement from publisher.

Copyright © 2016 Audi AG, Ingolstadt

D3E80393883

Contents

00 - General, Technical Data 1

1 Identification 1
1.1 Transmission Identification 1

2 Safety Precautions 2
2.1 Vehicle Safety Precautions 2
2.2 Start/Stop System Safety Precautions 3
2.3 Road Test with Testing Equipment Safety Precautions 3
2.4 Subframe Safety Precautions 3
2.5 Towing and Tow Starting Safety Precautions 4

3 Repair Information 5
3.1 Guidelines for Clean Working Conditions 5
3.2 General Information 5
3.3 General Repair Information 5
3.4 Contact Corrosion 7
3.5 Wire Routing and Securing 8

4 Technical Data 9
4.1 Capacities 9
4.2 Transmission/Engine Allocation 10

37 - Controls, Housing 12

1 Selector Mechanism 12
1.1 Overview Selector Lever Handle 12
1.2 Overview - Selector Mechanism 13
1.3 Overview - Selector Lever Cable 15
1.4 Emergency Release from Park 16
1.5 Selector Lever Handle, Removing and Installing 16
1.6 Selector Mechanism, Removing and Installing 19
1.7 Gearshift Mechanism, Checking 21
1.8 Selector Lever Cable, Removing and Installing 23
1.9 Selector Lever Cable, Checking and Adjusting 27
1.10 Shift Lock Solenoid N110 , Removing and Installing 30
1.11 Selector Lever Sensor System Control Module J587 , Removing and Installing 32
1.12 Transmission Park Selector Switch F305 , Removing and Installing 32
1.13 Selector Shaft Seal, Replacing 33

2 Transmission, Removing and Installing 34
2.1 Transmission, Removing 34
2.2 Transmission, Installing 58
2.3 Transmission Tightening Specifications 65

3 Subframe Mount 68
3.1 Overview - Subframe Mount 68
3.2 Tunnel Crossmember, Removing and Installing 68

4 Transmission, Transporting 70

5 Securing on Engine and Transmission Holder 71

6 ATF Circuit 72
6.1 Overview - ATF Circuit 72
6.2 ATF Cooler, Removing and Installing 73
6.3 ATF Filter, Removing and Installing 75
6.4 ATF Pipes, Removing and Installing 77

7 Automatic Transmission Fluid 81
7.1 ATF Level, Checking 81
7.2 ATF, Draining and Filling 87

Protected by copyright. Copying for private or commercial purposes, in part or in whole, is not permitted unless authorised by AUDI AG. AUDI AG does not guarantee or accept any liability with respect to the correctness of information in this document. Copyright by AUDI AG.

cardiagn.com

8 Special Tools 93

38 - Gears, Hydraulic Controls 100

1 Transmission, Disassembling and Assembling 100
1.1 Overview - Dual-Mass Flywheel 100
1.2 Overview - Transmission 100
1.3 Dual Mass Flywheel, Removing and Installing 101
1.4 End Cover, Removing and Installing 101
2 Special Tools 105

39 - Final Drive, Differential 106

1 Final Drive 106
1.1 Overview - Final Drive 106
2 Gear Oil 108
2.1 Gear Oil, Checking Level 108
2.2 Gear Oil, Draining and Filling 109
3 Seals 111
3.1 Overview - Seals 111
3.2 Left Seal, Replacing 111
3.3 Right Seal, Replacing 112
3.4 Input Shaft Seal, Replacing 112
4 Differential 113
4.1 Left Flange Shaft, Removing and Installing 113
4.2 Right Flange Shaft, Removing and Installing 113
5 Transmission Control 116
5.1 Overview - Transmission Control Module 116
5.2 Transmission Control Module, Removing and Installing 119
5.3 Hydraulic Control Module, Removing and Installing 119
6 Special Tools 120
7 Revision History 121

Protected by copyright. Copying for private or commercial purposes, in part or in whole, is not permitted unless authorised by AUDI AG. AUDI AG does not guarantee or accept any liability with respect to the correctness of information in this document. Copyright by AUDI AG.

cardiagn.com

00 – General, Technical Data

1 Identification

(Edition 07.2015)

⇒ "1.1 Transmission Identification", page 1

1.1 Transmission Identification

The continuously variable automatic transmission "multitronic 0AW FWD" is installed with different engines. Allocation. Refer to ⇒ "4.2 Transmission/Engine Allocation", page 10 .

Code Letters, Location on Transmission

The transmission code and serial number are on the top -arrow A- and the bottom -arrow B- of the transmission housing.

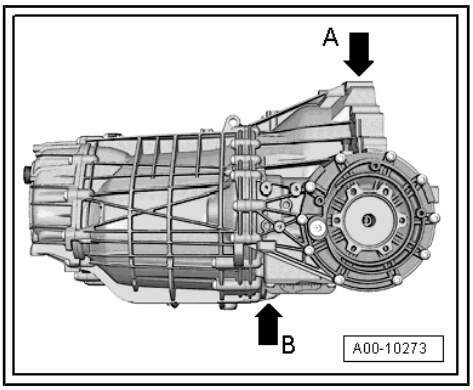

Transmission Code and Transmission Serial Number

3X19163		
NDQ	C14	164
14		05080

In this example:

- 3X19163 : transmission identification number
- NDQ : Transmission Code
- C14 : Assembly line (not relevant)
- 164: Serial Number
- 14 : factory (not relevant)
- 05080 : Build date: 05 August 2010

Note

- *The transmission code is also listed on the vehicle data plate.*
- *Vehicle data label location. Refer to ⇒ Maintenance ; Booklet 411 .*

Protected by copyright. Copying for private or commercial purposes, in part or in whole, is not permitted unless authorised by AUDI AG. AUDI AG does not guarantee or accept any liability with respect to the correctness of information in this document. Copyright by AUDI AG.

cardiagn.com

2 Safety Precautions

⇒ “2.1 Vehicle Safety Precautions”, page 2

⇒ “2.2 Start/Stop System Safety Precautions”, page 3

⇒ “2.3 Road Test with Testing Equipment Safety Precautions”, page 3

⇒ “2.4 Subframe Safety Precautions”, page 3

⇒ “2.5 Towing and Tow Starting Safety Precautions”, page 4

2.1 Vehicle Safety Precautions

Observe the following to avoid personal injury and vehicle damage:

WARNING

There is a risk of injury and accident from accidentally engaging a gear when the engine is running.

- *Shift the transmission into “P” and set the parking brake to lock the electro-mechanical parking brake before working on a running engine.*

Danger of poisonous exhaust gas when the engine is running.

- *When engine is running, an exhaust extraction system must always be connected to exhaust system.*

Risk of injury through fan turning on automatically.

- *Disconnect the connectors before working near the fan shroud.*

To prevent personal injury and damage to electrical and electronic components, observe the following:

- Connect and disconnect test equipment only when the ignition is off.

Caution

Risk of damaging electronic components when disconnecting the battery.

- *Complete the steps for disconnecting the battery.*
- *Disconnect the battery only when the ignition is turned off. Refer to ⇒ Electrical Equipment; Rep. Gr. 27 ; Battery; Battery, Disconnecting and Connecting .*

Protected by copyright. Copying for private or commercial purposes, in part or in whole, is not permitted unless authorised by AUDI AG. AUDI AG does not guarantee or accept any liability with respect to the correctness of information in this document. Copyright by AUDI AG.

cardiagn.com

2.2 Start/Stop System Safety Precautions

Pay attention to the following when working on a vehicle with Stop/Start system:

> ⚠ WARNING
>
> *There is a risk of injury if the engine starts automatically in vehicles with the Start/Stop System.*
>
> ♦ *For vehicles with an activated Start/Stop System (recognizable from a notification in the instrument cluster), the motor can be started automatically if needed.*
>
> ♦ *Make sure the Start/Stop System is disabled when working on the vehicle (turn off ignition, if needed, turn the ignition back on).*

2.3 Road Test with Testing Equipment Safety Precautions

Protected by copyright. Copying for private or commercial purposes, in part or in whole, is not permitted unless authorised by AUDI AG. AUDI AG does not guarantee or accept any liability with respect to the correctness of information in this document. Copyright by AUDI AG.

If testing equipment must be used during a road test, observe the following:

> ⚠ WARNING
>
> *Distraction and testing equipment that is not secured properly can cause accidents.*
>
> *The passenger airbag could pose a risk if it deploys in a collision.*
>
> • *Operating testing equipment while driving is a distraction.*
>
> • *Testing equipment that is not secured probably increases the risk of injury.*
>
> ♦ *Always secure testing equipment on the rear seat using a strap and have a second person in the rear seat operating it.*

2.4 Subframe Safety Precautions

Note the following whenever working on the subframe:

> ⚠ Caution
>
> *The suspension components could be damaged.*
>
> ♦ *Do not rest the vehicle on its wheels if the subframe mount, the steering gear or the subframe crossbrace are not installed correctly.*
>
> ♦ *Do not support the vehicle on the subframe or the subframe crossbrace, for example, by a floor jack or similar device.*

cardiagn.com

2.5 Towing and Tow Starting Safety Precautions

Caution

Danger of causing damage to the transmission.

- *When towing the vehicle, move the selector lever into "N". Do not tow the vehicle further than 50 km and do not drive faster than 50 km/h.*

Note

Tow-starting the engine, for example when the battery is too weak or the starter is defective, is not possible.

Protected by copyright. Copying for private or commercial purposes, in part or in whole, is not permitted unless authorised by AUDI AG. AUDI AG does not guarantee or accept any liability with respect to the correctness of information in this document. Copyright by AUDI AG.

cardiagn.com

3 Repair Information

⇒ “3.1 Guidelines for Clean Working Conditions”, page 5

⇒ “3.2 General Information”, page 5

⇒ “3.3 General Repair Information”, page 5

⇒ “3.4 Contact Corrosion”, page 7

⇒ “3.5 Wire Routing and Securing”, page 8

3.1 Guidelines for Clean Working Conditions

- Always clean the connection locations and the area around them before loosening.
- Clean the transmission and transmission components using Cleaning Solution - D 009 401 04- .
- Use lint-free cloths when cleaning, for example, the “WYPALL X70/WORKHORSE” cloth made by Kimberly-Clark Professional.
- Seal all open lines and connections immediately with clean plugs or caps from the Engine Bung Set - VAS6122- .
- Place removed parts on a clean surface and cover them. Use foil or lint-free cloths.
- Cover or plug unpacked components if repairs cannot be performed immediately.
- Only install clean components: Remove the replacement parts from their packaging just prior to installing them.
- Protect the disconnected connectors from dirt and moisture and only connect when they are dry.

3.2 General Information

The “multitronic 0AW, FWD transmission” works the same way as the continuously variable transmission multitronic 01J. For more information. Refer to ⇒ Self Study Program No. 228 ; Continuously Variable Transmission multitronic 01J .

Note

The continuously variable automatic transmission multitronic 0AW is also called “Continuously Variable Transmission”, or “CVT” for short.

cardiagn.com

3.3 General Repair Information

Carefulness, cleanliness and the correct tools are required for transmission repairs to be successful. The usual basic safety precautions also, naturally apply when carrying out vehicle repairs.

Some general repair information that applies to several procedures throughout this manual is summarized here. They apply to this repair manual.

Guided Fault Finding, OBD and Test Instruments

- Determine the cause of the malfunction as accurately as possible using `Guided Fault Finding`, `OBD` and `Test Instruments` before starting any repairs on the transmission using the Vehicle Diagnostic Tester .

Oil, Environmental and Disposal Regulations

- Handle ATF, axle oil and other fluids with care.
- Dispose of the drained fluids properly.
- Follow the legal environmental and disposal regulations.
- Follow the information provided on oil packaging.

Special Tools and Equipment

For a complete list of special tools used in the Repair Manual refer to Workshop Equipment and Special Tools

Transmission

- Follow the rules for clean working conditions when working on the transmission. Refer to ⇒ “3.1 Guidelines for Clean Working Conditions”, page 5 .
- Do not run the engine or tow the vehicle with the cover removed or if there is no ATF in the transmission.
- After installing, the following fluid levels must be checked and topped off if necessary: Check and correct the ATF-level. Refer to ⇒ “7.1 ATF Level, Checking”, page 81 and check and adjust the gear oil level in the front final drive. Refer to ⇒ “2.1 Gear Oil, Checking Level”, page 108 . Capacities (Refer to ⇒ “4.1 Capacities”, page 9), Specifications, (Refer to the Parts Catalog).

O-Rings, Shaft Seals, Seals

Protected by copyright. Copying for private or commercial purposes, in part or in whole, is not permitted unless authorised by AUDI AG. AUDI AG does not guarantee or accept any liability with respect to the correctness of information in this document. Copyright by AUDI AG.

- O-rings, shaft seals and seals must be replaced.
- After removing gaskets, examine contact surface on housing/shaft for burr resulting from removal or for other signs of damage.
- Thoroughly clean housing joint surfaces before assembling.
- To install, thinly coat shaft seals along outer circumference and on sealing lip with ATF.
- Coat O-rings with ATF before inserting to prevent crushing rings during installation.
- Always only use approved ATF. Other lubricants will cause the transmission to malfunction.
- The open side on the shaft seals faces the fluid to be sealed off.
- Press in new shaft seal, so that the sealing lip does not run on the same point as the sealing lip of the old shaft seal (use insertion depth tolerances).
- After installing, the following fluid levels must be checked and topped off if necessary: Check and correct the ATF-level. Refer to ⇒ “7.1 ATF Level, Checking”, page 81 and check and adjust the gear oil level in the front final drive. Refer to ⇒ “2.1 Gear Oil, Checking Level”, page 108 . Specifications. Refer to the Parts Catalog.

Bolts and Nuts

- Loosen the bolts opposite the tightening sequence.
- Nuts and bolts which secure covers and housings should be tightened in steps according to the specified tightening sequence and method.
- Nuts and bolts which secure covers and housings should be loosened and tightened crosswise in stages if no tightening sequence is specified.

cardiagn.com

- The tightening specifications apply to unlubricated bolts and nuts unless otherwise specified.
- Replace the self-locking nuts and bolts.
- If nothing else is specified: Use a wire brush to clean the threads of bolts that were screwed in with locking compound. Use locking fluid when installing the bolts. Refer to the Parts Catalog.
- Threaded holes used for self-locking bolts or bolts coated with locking fluid must be cleaned, for example with a thread tap. Otherwise there is a risk that the bolts will shear the next time they are removed.

Circlips, Snap Rings

- Do not overstretch the circlips.
- Replace damaged or stretched circlips.
- The circlips must fit completely inside the groove.

Protected by copyright. Copying for private or commercial purposes, in part or in whole, is not permitted without prior authorisation by AUDI AG. AUDI AG does not guarantee or accept any liability with respect to the correctness of information in this document. Copyright by AUDI AG.

Bearings

- Install needle bearings with lettered side (thicker metal) racing the fitting tool.
- Insert bearing with axle oil or ATF, depending on installation location.
- Do not interchange the outer or inner races of bearings of the same size.
- Always replace the tapered roller bearings on one shaft together and use new bearings from a single manufacturer.

Adjusting Shims

- Measure the adjusting shims at several locations with a micrometer. Different shim thicknesses make it possible to select the required thickness precisely; install two shims if necessary.
- Check for burrs and damage. Only install perfect shims.

Mechatronic

Caution

There is a risk of destroying the transmission control module (Mechatronic) with static discharge.

- *Always discharge "static electricity" before working with connectors or the Mechatronic. Do this by touching a grounded object, for example vehicle ground, the vehicle or the hoist.*
- *Do not touch contacts in transmission connector with hands.*

3.4 Contact Corrosion

Contact corrosion can occur if unsuitable fasteners (bolts, nuts, washers, etc.) are used.

For this reason, only fasteners with a special surface coating may be installed.

In addition, rubber or plastic parts and adhesive are made of materials that do not conduct electricity.

cardiagn.com

If there are doubts about whether parts can be used or not, then use new parts. Refer to the Parts Catalog.

Note:

- Only original replacement parts are recommended, they are checked and compatible with aluminum.
- The use of Audi accessories is recommended.
- Damage resulting from contact corrosion is not covered by the warranty.

3.5 Wire Routing and Securing

- Mark the individual fuel, and vacuum lines for the EVAP canister system as well as the electrical wires before disconnecting and/or removing them. This will prevent a mix-up when reconnecting them. If necessary, draw sketches or take pictures.
- Due to the limited space inside the engine compartment, be especially careful when working near moving or hot parts to avoid damaging the lines.

Protected by copyright. Copying for private or commercial purposes, in part or in whole, is not permitted unless authorised by AUDI AG. AUDI AG does not guarantee or accept any liability with respect to the correctness of information in this document. Copyright by AUDI AG.

cardiagn.com

4 Technical Data

⇒ “4.1 Capacities”, page 9

⇒ “4.2 Transmission/Engine Allocation”, page 10

4.1 Capacities

ATF Area in the Transmission

Capacities	Multitronic 0AW
Original filling by the manufacturer	Refer to Fluid Capacity Tables
Change	♦ Refer to Fluid Capacity Tables ♦ For the ATF change interval. Refer to the Maintenance Tables.
Lubricant	For the correct ATF for the “multitronic 0AW FWD”. Refer to the Parts Catalog

Caution

Danger of causing damage to the transmission.

- *For the correct allocation of the ATF. Refer to the Parts Catalog. Only use replacement part ATF for “multitronic 0AW FWD” for the “multitronic 0AW FWD” transmission.*
- *Do not mix other ATF types, even in small quantities. Malfunctions and transmission failure could occur.*

- Check the ATF level and correct if necessary. Refer to ⇒ “7.1 ATF Level, Checking”, page 81 .
- ATF, Draining and Filling. Refer to ⇒ “7.2 ATF, Draining and Filling”, page 87

Front Final Drive

Capacities	Multitronic 0AW
Initial filling	Approximately 1.1 liters
Change	♦ No change ♦ Permanent fill: only fill after repair, up to 1.1 liters.
Lubricant	♦ Different axle oils for Multitronic 0AW ♦ Note the allocation of the axle oils according to the transmission code letters. Refer to the Parts Catalog.

Protected by copyright. Copying for private or commercial purposes, in part or in whole, is not permitted unless authorised by AUDI AG. AUDI AG does not guarantee or accept any liability with respect to the correctness of information in this document. Copyright by AUDI AG.

cardiagn.com

Caution

Danger of causing damage to the transmission.

- *There are different gear oils for the "multitronic 0AW transmission".*
- *Only gear oil available as a replacement part meant for the transmission code may be used.*
- *Do not mix the axles oil, not even in small quantities. This will cause the sealing rings to leak. Note the allocation of the axle oils according to the transmission code letters. Refer to the Parts Catalog. Only axle oil for "multitronic 0AW" which can be obtained as a replacement part must be used in front final drive.*
- *Replace the filler plug after checking the level. Always pay attention to the allocation according to the transmission codes in the Parts Catalog. Compare the old and new filler plug to prevent leakage on the transmission.*
- *Do not mix other gear oils, even in small quantities. Leaks in the transmission will result.*

- Checking and filling the gear oil level in the front final drive. Refer to ⇒ "2.1 Gear Oil, Checking Level", page 108 .
- Fill the front final drive with gear oil after the repair. Refer to ⇒ "2.2 Gear Oil, Draining and Filling", page 109 .

4.2 Transmission/Engine Allocation

The following information can be found in the Parts Catalog.

- Date of manufacture
- The allocation for the Mechatronic and the software for the Transmission Control Module - J217-
- Flange shaft allocation

multitronic		0AW					
Transmission Allocation	Codes	NDH		NDL		NDM	
	Type	Audi A6 from 2011, Audi A7 from 2011		Audi A6 from 2011, Audi A7 from 2011		Audi A6 from 2011, Audi A7 from 2011	
	Engine	4-cylinder TDI engine 2.0L 120 kW or 130 kW		4-cylinder TFSI engine 2.0L 132 kW		4-cylinder TFSI engine 2.0L 155 kW	
Input shaft to disc set 1 ratio		49 : 48	1.021	49 : 48	1.021	49 : 48	1.021
Disc set 2 to pinion		41 : 24	1.708	39 : 25	1.560	39 : 25	1.560
Front Final Drive		34 : 11	3.091	34 : 11	3.091	34 : 11	3.091

multitronic		0AW					
Transmission Allocation	Codes	NDN		NDP		NDQ	
	Type	Audi A6 from 2011, Audi A7 from 2011		Audi A6 from 2011, Audi A7 from 2011		Audi A6 from 2011, Audi A7 from 2011	
	Engine	6-cylinder FSI engine 2.5L 140 kW or 150 kW		6-cylinder FSI engine 2.8L 150 kW or 162 kW		6-Cylinder 3.0L TDI engine 150 kW	
Input shaft to disc set 1 ratio		53: 45	1.178	49 : 48	1.021	49 : 48	1.021
Disc set 2 to pinion		41 : 25	1.64	41 : 24	1.708	41 : 24	1.708

Protected by copyright. Copying for private or commercial purposes, in part or in whole, is not permitted unless authorised by AUDI AG. AUDI AG does not guarantee or accept any liability with respect to the correctness of information in this document. Copyright by AUDI AG.

cardiagn.com

multitronic	0AW					
Front Final Drive	34 : 11	3.091	34 : 11	3.091	34 : 11	3.091

multitronic		0AW					
Transmission	Codes	NKP		NSL		PCF	
Allocation	Type	Audi A6 from 2011, Audi A7 from 2011		Audi A6 from MY 2011		Audi A6 from MY 2011	
	Engine	6-Cylinder 3.0L TDI engine 150 kW		4-cylinder TDI engine 2.0L 120 kW or 130 kW		4-cylinder TDI engine 2.0L 100 kW, 120 kW or 130 kW	
Input shaft to disc set 1 ratio		49 : 48	1.021	49 : 48	1.021	49 : 48	1.021
Disc set 2 to pinion		41 : 24	1.708	41 : 24	1.708	41 : 24	1.708
Front Final Drive		34 : 11	3.091	34 : 11	3.091	34 : 11	3.091

Protected by copyright. Copying for private or commercial purposes, in part or in whole, is not permitted unless authorised by AUDI AG. AUDI AG does not guarantee or accept any liability with respect to the correctness of information in this document. Copyright by AUDI AG.

cardiagn.com

37 – Controls, Housing

1 Selector Mechanism

⇒ “1.1 Overview Selector Lever Handle”, page 12

⇒ “1.2 Overview - Selector Mechanism”, page 13

⇒ “1.3 Overview - Selector Lever Cable”, page 15

⇒ “1.4 Emergency Release from Park”, page 16

⇒ “1.5 Selector Lever Handle, Removing and Installing”, page 16

⇒ “1.6 Selector Mechanism, Removing and Installing”, page 19

⇒ “1.7 Gearshift Mechanism, Checking”, page 21

⇒ “1.8 Selector Lever Cable, Removing and Installing”, page 23

⇒ “1.9 Selector Lever Cable, Checking and Adjusting”, page 27

⇒ “1.10 Shift Lock Solenoid N110 , Removing and Installing”, page 30

⇒ “1.11 Selector Lever Sensor System Control Module J587 , Removing and Installing”, page 32

⇒ “1.12 Transmission Park Selector Switch F305 , Removing and Installing”, page 32

⇒ “1.13 Selector Shaft Seal, Replacing”, page 33

Protected by copyright. Copying for private or commercial purposes, in part or in whole, is not permitted unless authorised by AUDI AG. AUDI AG does not guarantee or accept any liability with respect to the correctness of information in this document. Copyright by AUDI AG.

1.1 Overview Selector Lever Handle

cardiagn.com

1 - Selector Lever Transmission Range Position Display Unit - Y26-

- ❑ Removing and Installing. Refer to ⇒ Electrical Equipment; Rep. Gr. 96 ; Lamps; Selector Lever Transmission Range Position Display Unit - Y26- , Removing and Installing .

2 - Multimedia System Control Head - E380-

- ❑ Removing and Installing. Refer to ⇒ Communication; Rep. Gr. 91 ; Infotainment System; Multimedia System Control Head - E380- , Removing and Installing .

3 - Selector Lever Boot

- ❑ Removing and installing together with the selector lever handle. Refer to ⇒ "1.5 Selector Lever Handle, Removing and Installing", page 16

4 - Selector Lever Handle

- ❑ Removing and installing. Refer to ⇒ "1.5 Selector Lever Handle, Removing and Installing", page 16 .

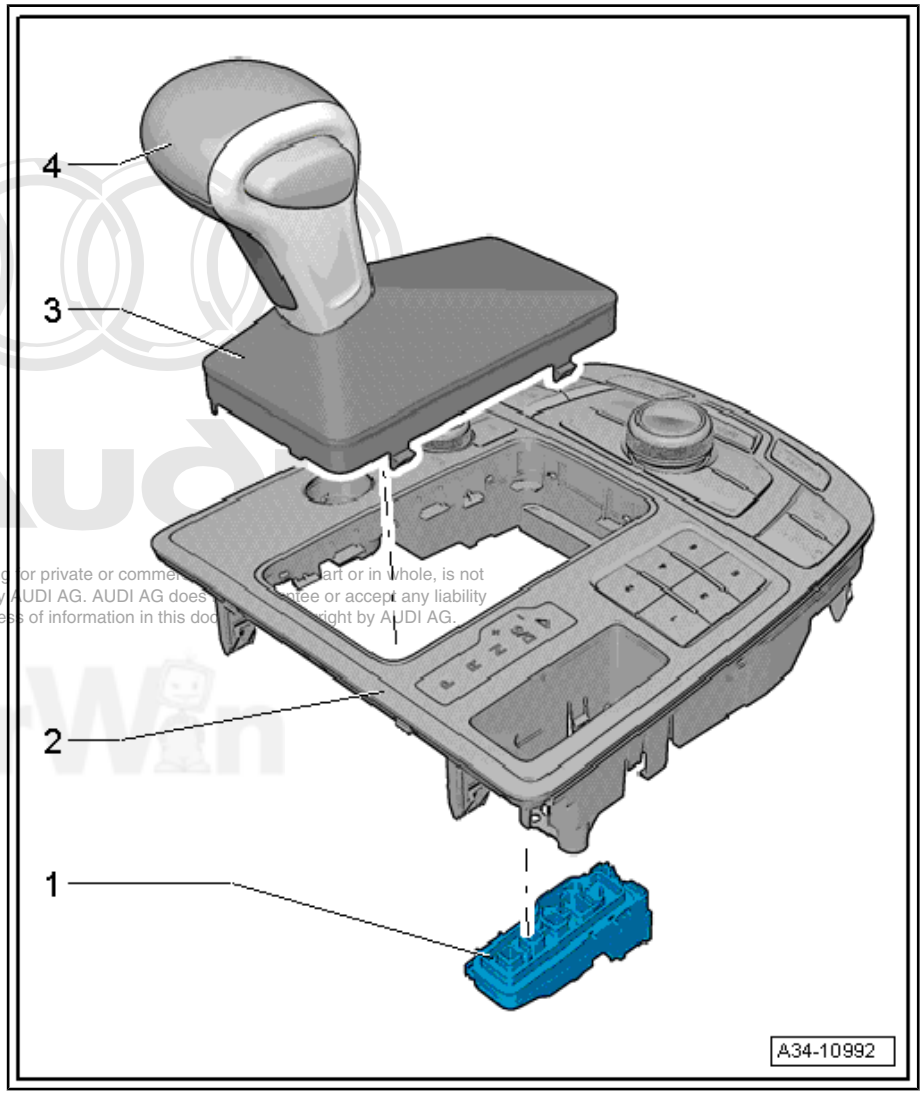

Protected by copyright. Copying for private or commercial purposes, in part or in whole, is not permitted unless authorised by AUDI AG. AUDI AG does not guarantee or accept any liability with respect to the correctness of information in this document. Copyright by AUDI AG.

1.2 Overview - Selector Mechanism

WARNING

There is a risk of injury and accident from accidentally engaging a gear when the engine is running.

cardiagn.com

Before disassembling the selector mechanism, perform check.
Refer to ⇒ “1.7 Gearshift Mechanism, Checking”, page 21 .

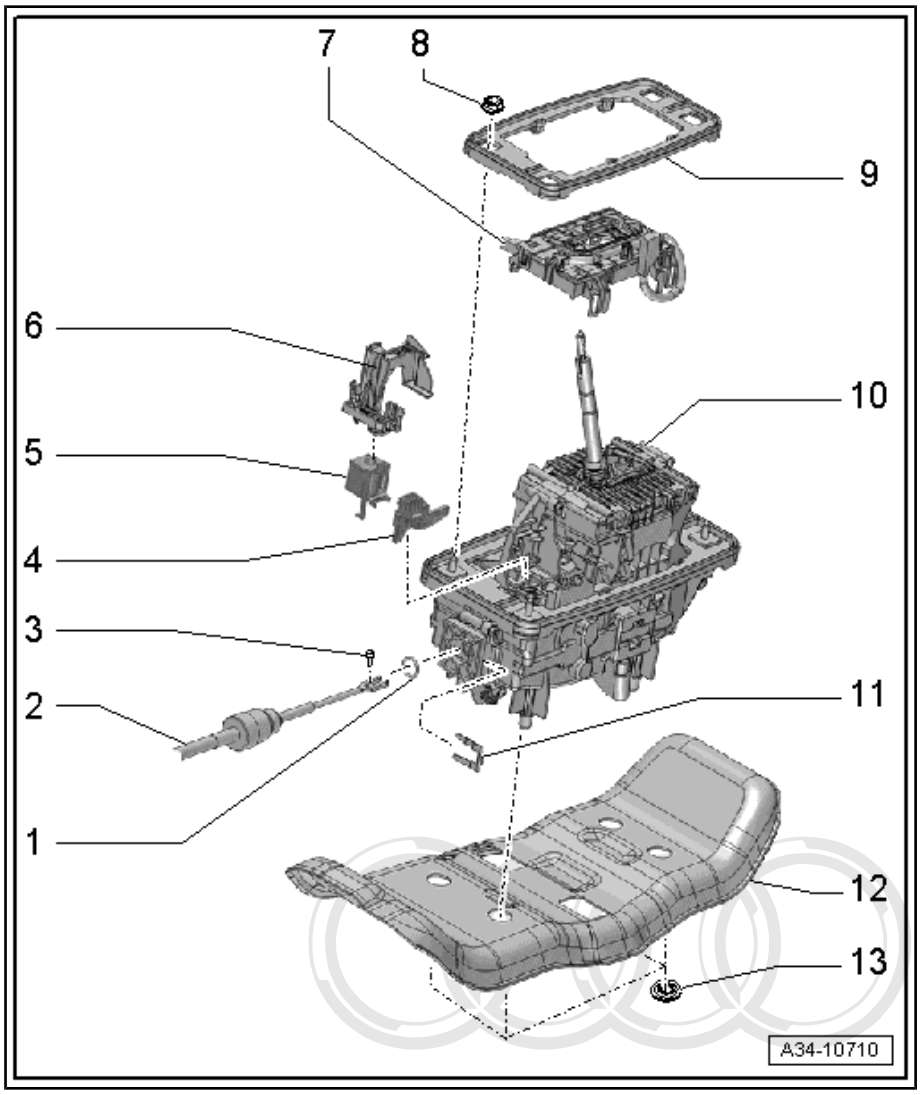

1 - O-Ring

- ❑ Replacing

2 - Selector Lever Cable

- ❑ Do not bend
- ❑ Overview. Refer to ⇒ “1.3 Overview - Selector Lever Cable”, page 15 .

3 - Bolt

- ❑ Tightening specification. Refer to -item 3- ⇒ Item 3 (page 15) .
- ❑ For selector lever cable adjustment

4 - Transmission Park Selector Switch - F305-

- ❑ Consists of two microswitches on the circuit board on the Shift Lock Solenoid - N110- .
- ❑ Can only be replaced together with the Shift Lock Solenoid - N110- . Refer to ⇒ “1.10 Shift Lock Solenoid N110 , Removing and Installing”, page 30 .

5 - Shift Lock Solenoid - N110-

- ❑ Removing and installing. Refer to ⇒ “1.10 Shift Lock Solenoid N110 , Removing and Installing”, page 30 .

6 - Cover

- ❑ Via the Shift Lock Solenoid - N110-

7 - Selector Lever Sensor System Control Module - J587- with Tiptronic Switch - F189-

- ❑ Removing and installing. Refer to ⇒ “1.11 Selector Lever Sensor System Control Module J587 , Removing and Installing”, page 32 .

Protected by copyright. Copying for private or commercial purposes, in part or in whole, is not permitted unless authorised by AUDI AG. AUDI AG does not guarantee or accept any liability with respect to the correctness of information in this document. Copyright by AUDI AG.

8 - Nut

- ❑ 8 Nm
- ❑ For securing the shift mechanism to the body
- ❑ Quantity: 4

9 - Seal

10 - Selector Mechanism Function Unit

- ❑ Can only be replaced as a unit
- ❑ Removing and installing. Refer to ⇒ “1.6 Selector Mechanism, Removing and Installing”, page 19 .

11 - Clip

- ❑ For selector lever cable

cardiagn.com

12 - Noise Insulation

- ❑ Not installed on all vehicles
- ❑ Allocation. Refer to the Parts Catalog.

13 - Lock Washers

- ❑ For the noise insulation
- ❑ Quantity: 4
- ❑ Replace

1.3 Overview - Selector Lever Cable

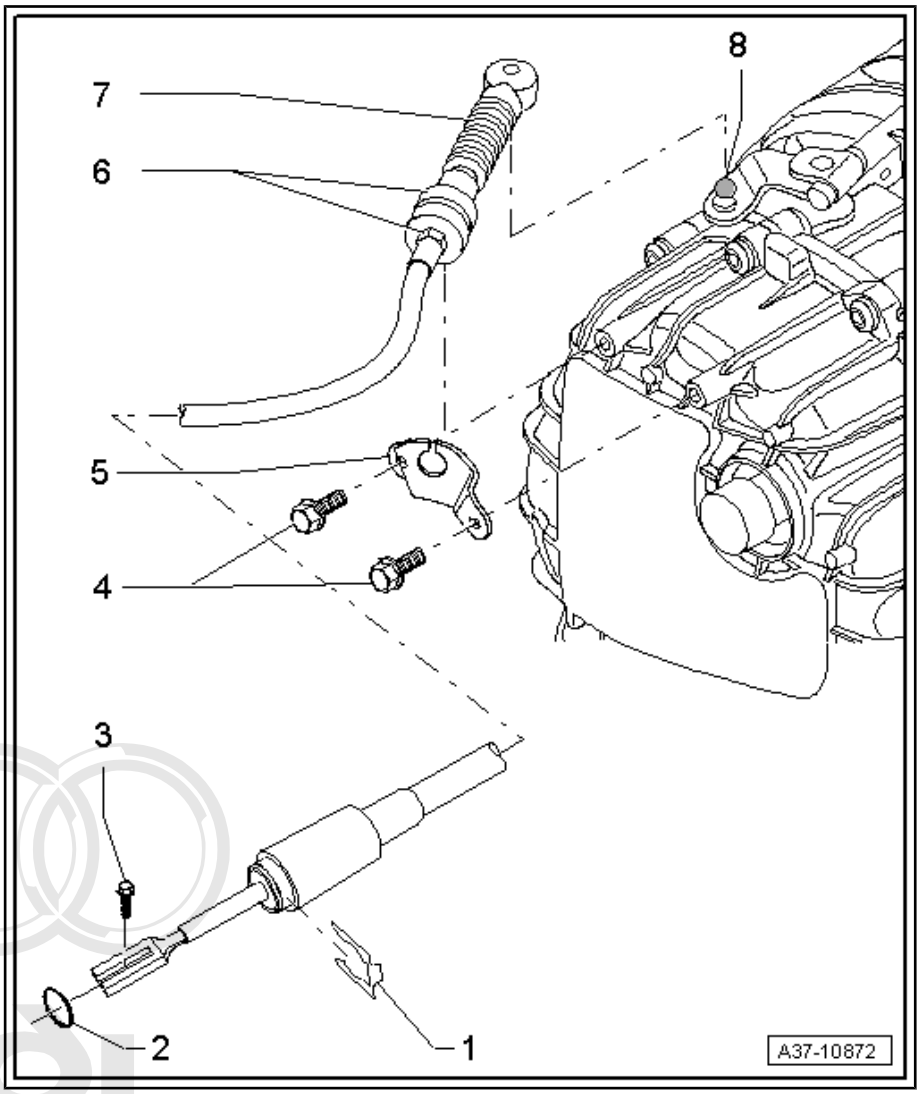

1 - Clip

- ❑ For selector lever cable

2 - O-Ring

- ❑ Replacing

3 - Bolt

- ❑ 13 Nm
- ❑ For selector lever cable adjustment

4 - Bolt

- ❑ 8 Nm
- ❑ Quantity: 2

5 - Cable Mounting Bracket

- ❑ For selector lever cable

6 - Nut

- ❑ 13 Nm
- ❑ Quantity: 2
- ❑ Securely mounted on the selector lever cable
- ❑ The selector lever cable is secured to the support bracket

7 - Selector Lever Cable

- ❑ Do not bend
- ❑ Removing and installing. Refer to ⇒ “1.8 Selector Lever Cable, Removing and Installing”, page 23 .
- ❑ The selector lever cable must be replaced if the rubber grommet is damaged.
- ❑ Lubricate the ball socket lightly with Polycarbamide Grease - G 052 142 A2- before installing.
- ❑ Make sure the rubber grommet on the transmission side is not twisted when installing.
- ❑ Adjusting. Refer to ⇒ “1.9.1 Selector Lever Cable, Checking and Adjusting”, page 27 .

8 - Gearshift Lever

Protected by copyright. Copying for private or commercial purposes, in part or in whole, is not permitted unless authorized by AUDI AG. AUDI AG does not guarantee or assume liability with respect to the correctness of information in this document. Copyright by AUDI AG.

cardiagn.com

1.4 Emergency Release from Park

Note

- *The selector lever will not move out of "P" if the battery is disconnected or is discharged. The vehicle cannot be moved or towed.*
- *The Shift Lock Solenoid - N110- will cancel out the lock when the emergency release is activated.*

Protected by copyright. Copying for private or commercial purposes, in part or in whole, is not permitted unless authorised by AUDI AG. AUDI AG does not guarantee or accept any liability with respect to the correctness of information in this document. Copyright by AUDI AG.

Procedure

Note

The handle on the selector lever is not shown in the illustration. It is not necessary to remove the handle in order to unlock the selector mechanism when it is in "P".

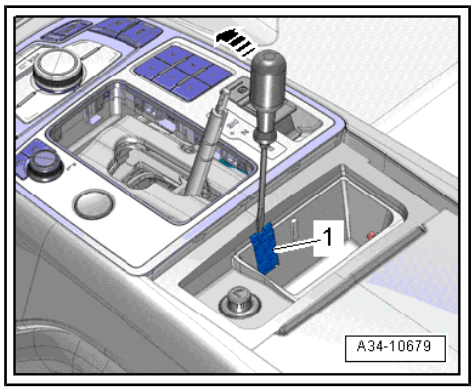

– Remove the front ashtray insert, if equipped.

– Pry out the cap -1- inside the ashtray housing with a screwdriver in direction of -arrow-.

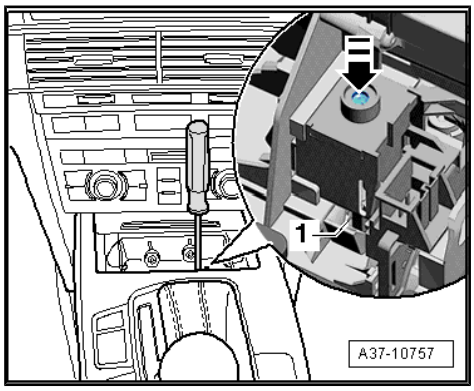

– Press the cylinder in direction of -arrow- on the Shift Lock Solenoid - N110- , for example using the screwdriver from the vehicle tool kit, through the center opening in the ashtray housing and at the same time, shift the selector lever out of "P" while pressing the button on the selector lever.

Note

- *This unlocks the locking lever -1- when the selector lever is in "P".*
- *If the cylinder -arrow- on the Shift Lock Solenoid - N110- is covered by insulation or a wire, then move the insulation or the wire to the side.*

1.5 Selector Lever Handle, Removing and Installing

Special tools and workshop equipment required

- Trim Removal Wedge - 3409-
- The cable ties or the assembly aid for the button on the handle. The assembly aid is already installed at the factory when a new handle is ordered.

cardiagn.com

Removing

– Press the button on the electro-mechanical parking brake to activate it.

– Move the selector lever into “N”.

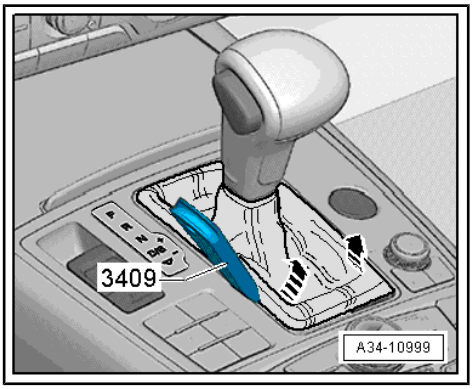

Note

Both the selector lever handle and the selector lever boot are removed.

– Carefully pry out the selector lever boot on the side using the Trim Removal Wedge - 3409- -arrows-.

– Remove the locking button from the selector lever handle -arrow- and secure it with a cable tie -A- or an assembly aid -B-, as illustrated.

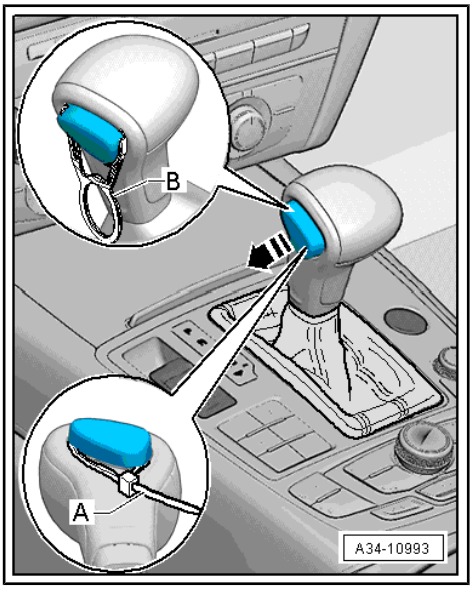

Note

The assembly aid -B- is already installed at the factory when a new handle is ordered. Remove the assembly aid only after the new handle is installed. This locking strap can be used again as an assist tool.

– Fold the selector lever boot -2- upward and over the selector lever handle -3-.

– Turn the locking ring all the way in direction of -arrow-. The markings -a and b- no longer line up.

– Remove the selector lever handle and selector lever boot without touching the locking button -1-.

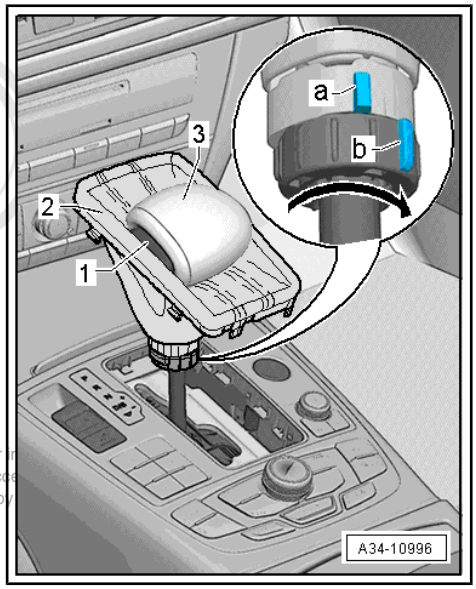

Protected by copyright. Copying for private or commercial purposes, in part or
permitted unless authorised by AUDI AG. AUDI AG does not guarantee or acc
with respect to the correctness of information in this document. Copyright b

cardiagn.com

Installing

- In order to install the selector lever handle, the locking button must be pulled out all the way and secured either with a cable tie -A- or with the assembly tool -B- supplied with a new handle.

If the locking button was not properly secured when the handle was being removed and it falls back inside the handle, then it must be pulled out again and secured:

– Tape an adhesive pad or two-sided tape -2- to the locking button -1-.

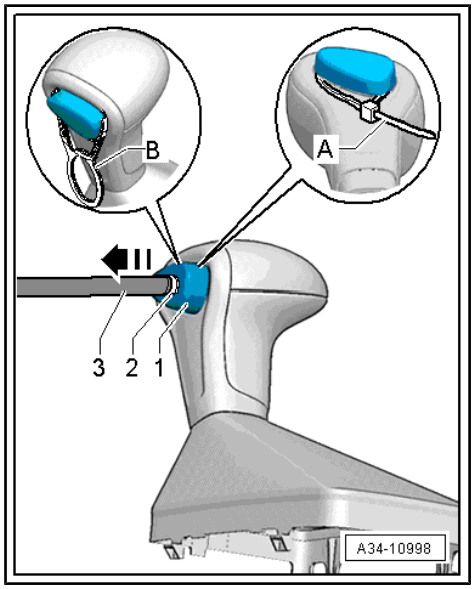

Note

♦ *As an alternative, use a 15 mm suction cup.*

♦ *Remove the adhesive pad or the two-sided tape after the handle has been installed. Make sure there is no adhesive left over.*

– Push on the adhesive surface using a tool -3- with a clean, flat surface as illustrated and pull out the locking button -arrow-.

– Secure the pulled-out locking button with a cable tie -A- or an assembly tool -B- as illustrated.

– Remove the adhesive pad or the two-sided tape -2- and clean the locking button -1-.

– Move the selector lever into “N”.

Note

Pull on the rod -4- to move the selector lever.

– Fold the selector lever boot -2- upward and over the selector lever handle -3-.

– Turn the locking ring all the way in direction of -arrow-. The markings -a- and -b- no longer line up.

– Mount the selector lever handle with the locking button until it locks.

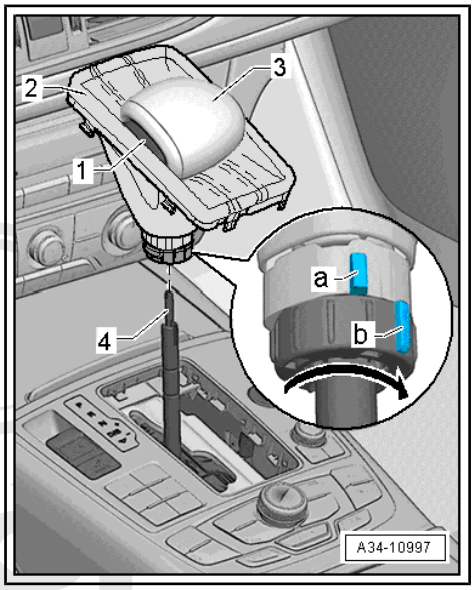

Protected by copyright. Copying for private or commercial purposes, in part or in whole, is not permitted unless authorised by AUDI AG. AUDI AG does not guarantee or accept any liability with respect to the correctness of information in this document. Copyright by AUDI AG.

cardiagn.com

– Turn the locking ring all the way in direction of -arrow- until it locks and the markings -a- and -b- line up.

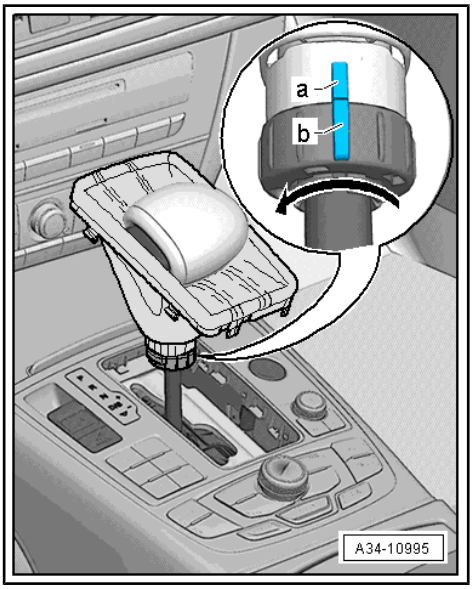

> **Caution**
>
> *Danger of causing damage to the selector lever handle.*
>
> *The locking ring can be turned only when the handle is installed completely.*

– Remove cable ties or assembly tools. The locking button mechanism will engage in the vertical groove on the selector lever. If necessary, press the locking button into the selector lever handle.

– Move the button mechanism through “R” and “S” to perform the function test.

• If the selector lever positions cannot be reached, remove the handle again. Refer to ⇒ “1.5 Selector Lever Handle, Removing and Installing”, page 16 .

– Pull the selector lever boot -2- downward and attach it to the Multimedia System Control Head - E380- .

1.6 Selector Mechanism, Removing and Installing

Special tools and workshop equipment required

♦ Pry Lever - 80-200-

Removing

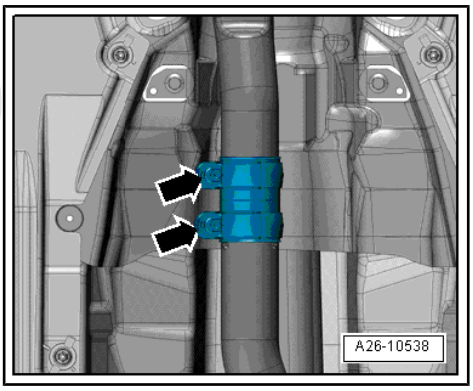

> **Caution**
>
> *The decoupling elements in the front exhaust pipe could get damaged.*
>
> ♦ *Do not bent decoupling elements in front exhaust pipe more than 10°.*

– Loosen the clamping sleeve -arrows-, slide it to the rear, lower the front exhaust pipe slightly and tie it to the underbody.

– Remove the ball socket -1- on the selector lever cable from the selector shaft lever using the Pry Lever - 80-200- .

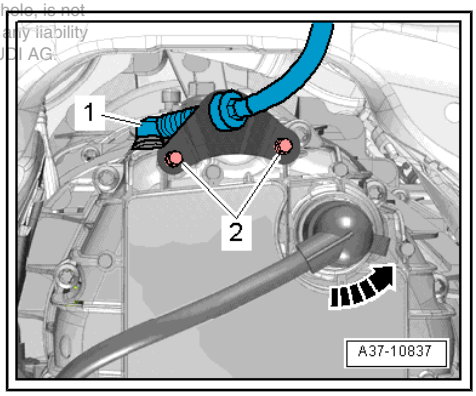

– Remove the bolts -2- from the cable mounting bracket.

> **Note**
>
> ♦ *Do not bend or kink the selector lever cable.*
>
> ♦ *Ignore -arrow-.*

– Remove the selector lever handle. Refer to ⇒ “1.5 Selector Lever Handle, Removing and Installing”, page 16 .

– Remove the front ashtray or storage compartment. Refer to ⇒ Body Interior; Rep. Gr. 68 ; Center Console; Overview - Center Console .

Protected by copyright. Copying for private or commercial purposes, in part or in whole, is not permitted unless authorised by AUDI AG. AUDI AG does not guarantee or accept any liability with respect to the correctness of information in this document. Copyright by AUDI AG.

cardiagn.com

– Disconnect the connectors -2 and 4-.

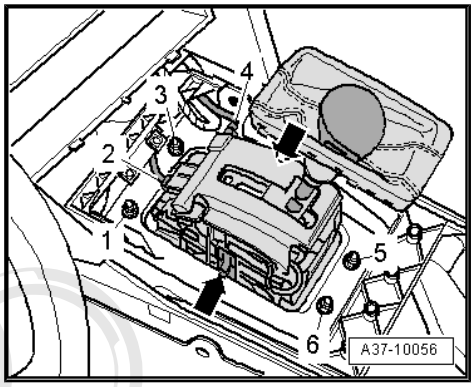

Note

- *The illustration does not show the insulation mat.*
- *A second technician is needed to remove the shift mechanism under the vehicle.*
- *Ignore -arrows-.*

– Remove the insulation mat over the shift mechanism.

– Remove the bolts -1, 3, 5 and 6-.

– Remove the selector mechanism.

Installing

Install in reverse order of removal. Note the following:

Note

- *Lubricate the ball socket on the selector lever cable with Polycarbamide Grease - G 052 142 A2- before installing.*
- *Do not bend or kink the selector lever cable.*

Protected by copyright. Copying for private or commercial purposes, in part or in whole, is not permitted unless authorised by AUDI AG. AUDI AG does not guarantee or accept any liability with respect to the correctness of information in this document. Copyright by AUDI AG.

– Adjust the selector lever cable. Refer to ⇒ “1.9.1 Selector Lever Cable, Checking and Adjusting”, page 27 .

– Check the selector mechanism. Refer to ⇒ “1.7 Gearshift Mechanism, Checking”, page 21 .

– Install the front ashtray or storage compartment. Refer to ⇒ Body Interior; Rep. Gr. 68 ; Center Console; Overview - Center Console .

– Install the selector lever handle. Refer to ⇒ “1.5 Selector Lever Handle, Removing and Installing”, page 16 .

Tightening Specifications

- Refer to ⇒ “1.2 Overview - Selector Mechanism”, page 13
- Refer to ⇒ Rep. Gr. 26 ; Exhaust Pipes/Mufflers; Overview - Muffler .

cardiagn.com

1.7 Gearshift Mechanism, Checking

WARNING

There is a risk of injury and accident from accidentally engaging a gear when the engine is running.

- *Shift the transmission into "P" and set the parking brake to lock the electro-mechanical parking brake before working on a running engine.*
- *Pay attention to the safety precautions when driving. Refer to* *⇒ "2.3 Road Test with Testing Equipment Safety Precautions", page 3* *.*
- *Perform all tests. If the specified values are not reached, adjust the selector lever cable (refer to* *⇒ "1.9.1 Selector Lever Cable, Checking and Adjusting", page 27* *) and perform "Guided Fault Finding" using the Vehicle Diagnostic Tester .*

Overview:

- 1. Selector mechanism function test. Refer to ⇒ page 21
- 2. Selector Lever Handle Locking Button, Checking. Refer to ⇒ page 22

1. Selector Mechanism Functionality Test

- Never operate the starter when the selector lever is in "R", "D/S" and the "tiptronic gate".
- If selector lever position "N" is selected at speeds greater than 5 km/h, the shift lock solenoid must not engage and block the selector lever. The selector lever can be moved into a another gear.
- For speeds below 2 km/h (almost standstill) and shifting into selector lever position "N", the shift lock solenoid must only engage after approximately 1 second. The selector lever can be moved out of "N" only when the brake pedal is pressed.

Protected by copyright. Copying for private or commercial purposes, in part or in whole, is not permitted unless authorised by AUDI AG. AUDI AG does not guarantee or accept any liability with respect to the correctness of information in this document. Copyright by AUDI AG.

Selector lever in "P":

– Press the button on the electro-mechanical parking brake to activate it.

– Turn off the ignition.

- Selector lever is locked and cannot be shifted out of position "P" while locking button on selector lever handle is pressed.

– Turn on the ignition.

Note

Press the Access/Start Authorization Button - E408- briefly to get "ignition on".

– Do not press the brake pedal.

- Selector lever is locked and cannot be shifted out of position "P" while locking button on selector lever handle is pressed. The Shift Lock Solenoid - N110- locks the selector lever.

– Press the brake pedal and hold it down.

- The Shift Lock Solenoid - N110- unlocks the selector lever. It is possible to shift into a gear. Press the button in the selector

cardiagn.com

lever handle and slowly move the selector lever from “P” and through “R, N, D, S”. While doing this, make sure the Transmission Range Display - Y6- inside the instrument cluster matches the actual position of the selector lever.

– Pull the selector lever toward the rear out of “D/S” and then release it again.

• The selector lever moves automatically back into “D/S”. The Transmission Range Display - Y6- must change from “D” to “S1” in the instrument cluster and then go back to “D” after pulling the lever toward the rear.

The selector lever is in “N” and the ignition is turned on:

– Do not press the brake pedal.

• After a short waiting period: The selector lever is locked and cannot be moved out of “N” position despite pressing locking button on selector lever handle. The Shift Lock Solenoid - N110- locks the selector lever.

– Press the brake pedal.

• The Shift Lock Solenoid - N110- unlocks the selector lever. It is possible to shift into “D/S”.

Protected by copyright. Copying for private or commercial purposes, in part or in whole, is not permitted unless authorised by AUDI AG. AUDI AG does not guarantee or accept any liability with respect to the correctness of information in this document. Copyright by AUDI AG.

The selector lever is in “D/S” and the ignition is on:

– Move the selector lever into the “tiptronic gate”.

• The “D/S” in the Selector Lever Transmission Range Position Display Unit - Y26- must turn off and the “+” and “–” must turn on.

• The Transmission Range Display - Y6- inside the instrument cluster must change from “D” to “M1” when the selector lever moves into the “tiptronic gate”

– Do not move the selector lever into “P” but rather, for example, into “N”.

– Turn off the ignition.

• A warning message must appear in the instrument cluster.

• The vehicle cannot be locked.

– Move the selector lever into “P”.

– Turn off the ignition.

• The vehicle can be locked.

If the specified values are not obtained:

– Perform `Guided Fault Finding` using the Vehicle Diagnostic Tester .

– Adjust the selector lever cable. Refer to ⇒ “1.9.1 Selector Lever Cable, Checking and Adjusting”, page 27 .

– Locking button on selector lever handle, checking. Refer to ⇒ page 22 .

2. Selector Lever Handle Locking Button, Checking

Make sure locking button moves easily.

• It must be possible to press the locking button without using great force.

• After releasing, the locking button must come all the way back out by itself.

If the specified values are not obtained:

cardiagn.com

– Make sure the selector lever handle is installed correctly. Refer to
⇒ “1.5 Selector Lever Handle, Removing and Installing”, page 16 .

– Make sure the selector lever is not bent.

Function test:

- The ignition is switched on.

The locking button on the selector lever handle must be pressed for the following shifts. If it is not pressed, the selector lever cannot be shifted into the specified position.

♦ Move the selector lever from “P” into “R” and press the brake pedal at the same time.

♦ “N” into “R”; stationary, press the brake pedal after waiting longer

♦ “R” into “P”

If the specified values are not obtained:

– Make sure the selector lever handle is installed correctly. Refer to
⇒ “1.5 Selector Lever Handle, Removing and Installing”, page 16 .

– Check the connectors on the selector mechanism.

– Perform `Guided Fault Finding` using the Vehicle Diagnostic Tester and check the Shift Lock Solenoid - N110- .

– Adjust the selector lever cable. Refer to
⇒ “1.9.1 Selector Lever Cable, Checking and Adjusting”, page 27 .

1.8 Selector Lever Cable, Removing and Installing

Special tools and workshop equipment required

♦ Pry Lever - 80-200-

♦ Trim Removal Wedge - 3409-

♦ Socket And Key - T40031-

Removing

– Press the button on the electro-mechanical parking brake to activate it.

– Move the selector lever into “D”.

– Carefully pry out the selector lever boot on the side using the Trim Removal Wedge - 3409- -arrows- and fold it upward.

Protected by copyright. Copying for p
permitted unless authorised by AUD
with respect to the correctness o

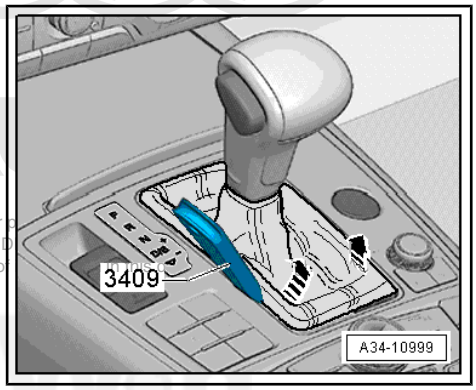

cardiagn.com

– Insert the Socket And Key - T40031- through the opening -arrow- in the selector mechanism and loosen the bolt on the selector lever cable approximately one turn.

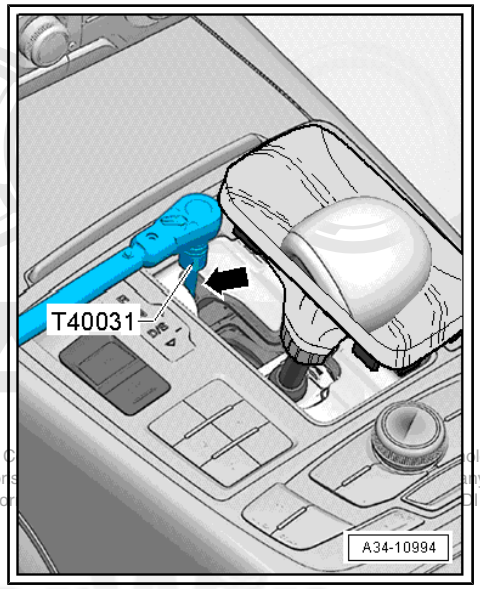

Note

- *Only loosen the clamping screw - do not remove it.*
- *The clamping screw is only accessible when the selector lever is in "D".*
- *The selector lever must remain in "D" when the clamping screw is loose.*

Protected by copyright. C ole, is not permitted unless author any liability with respect to the co I AG.

– Remove the ball socket -1- on the selector lever cable from the selector shaft lever using the Pry Lever - 80-200- .

– Remove the bolts -2- from the cable mounting bracket.

– Free up the selector lever cable.

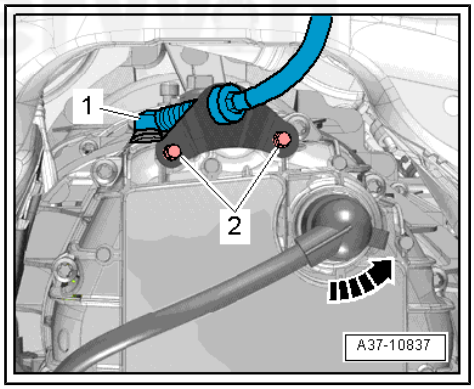

Note

- *Do not bend or kink the selector lever cable.*
- *Ignore -arrow-.*

– Remove the lock washer -1-.

– Remove the noise insulation -2- and slide it forward.

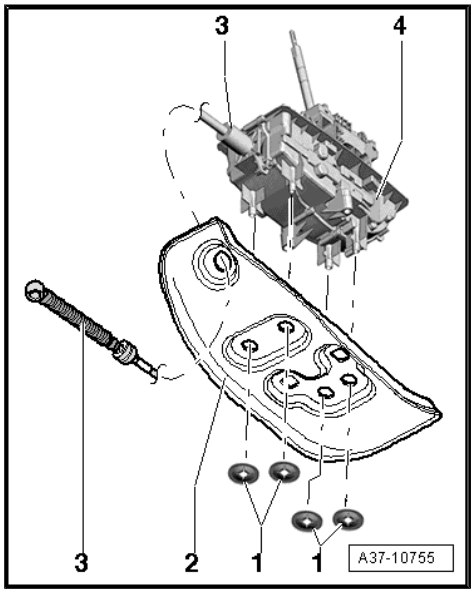

cardiagn.com

– Remove the clip -1- for the selector lever cable.

– Remove the selector lever cable -2- from the selector mechanism.

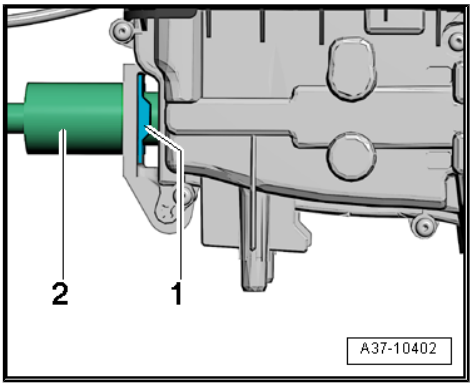

Installing

Install in reverse order of removal. Note the following:

Note

- *Lubricate the cable eye and the ball socket on the selector lever cable with Polycarbamide Grease - G 052 142 A2- before installing.*
- *Replace the lock washers.*

– Slide the noise insulation -2- over the opening on the selector lever cable -3-.

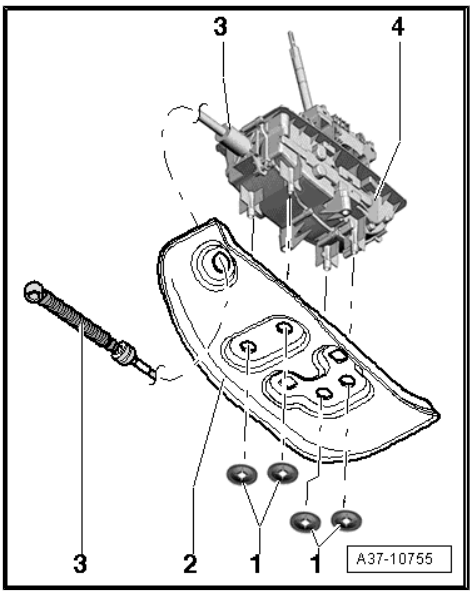

– Insert the O-ring -1- on the selector lever cable.

– Install the selector lever cable -2- into the gearshift mechanism function unit -arrow-.

– Secure the selector lever cable -2- with the clip -3-.

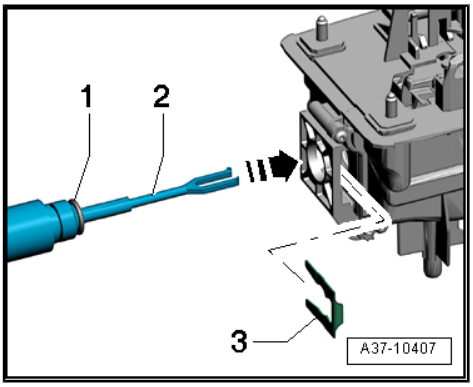

cardiagn.com

Protected by copyright. Copying for private or commercial purposes, in part or in whole, is not permitted unless authorised by AUDI AG. AUDI AG does not guarantee or accept any liability with respect to the correctness of information in this document. Copyright by AUDI AG.

- Installed position: The angled end of the clip -1- faces the shift mechanism.

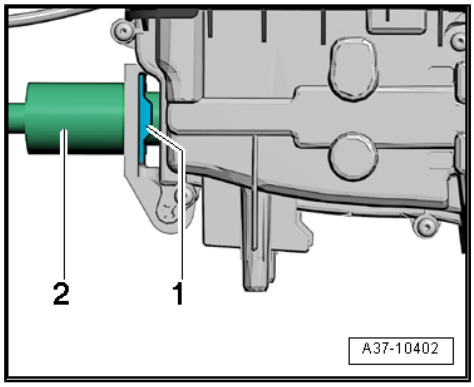

– Secure the noise insulation -2- with the lock washers -1-.

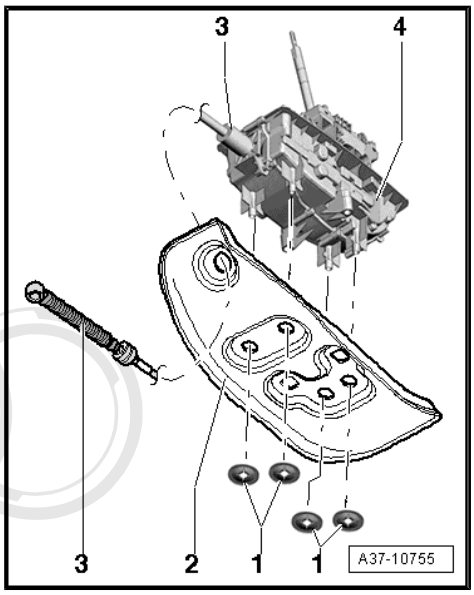

– Push the selector lever -1- on the transmission all the way to the back in direction of -arrow- until the parking lock locks into place.

- When parking lock is engaged, it must not be possible to turn the front wheels.

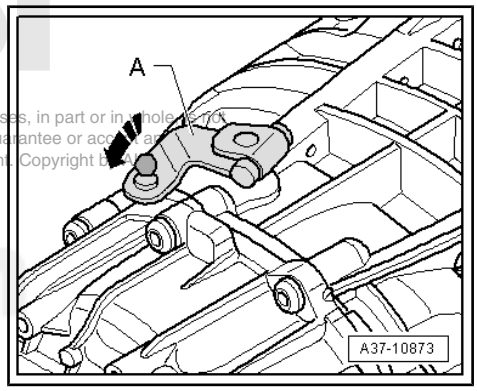

Protected by copyright. Copying for private or commercial purposes, in part or in whole, is not permitted unless authorised by AUDI AG. AUDI AG does not guarantee or accept any with respect to the correctness of information in this document. Copyright by AUDI

– Press the selector shaft lever forward three detents so the transmission is in “D”.

– Make sure the selector lever inside the vehicle is also in “D”.

– Carefully press the selector lever cable ball socket in this position onto the selector shaft lever.

Note

Do not bend selector shaft lever when pressing on, otherwise shift mechanism can no longer be adjusted exactly.

– Check and adjust the selector lever cable. Refer to ⇒ “1.9.1 Selector Lever Cable, Checking and Adjusting”, page 27 .

– Check the selector mechanism. Refer to ⇒ “1.7 Gearshift Mechanism, Checking”, page 21 .

Tightening Specifications

♦ Refer to ⇒ “1.3 Overview - Selector Lever Cable”, page 15

cardiagn.com

1.9 Selector Lever Cable, Checking and Adjusting

⇒ “1.9.1 Selector Lever Cable, Checking and Adjusting”, page 27

⇒ “1.9.2 Selector Lever Cable, Bringing into Basic Setting”, page 28

1.9.1 Selector Lever Cable, Checking and Adjusting

Special tools and workshop equipment required

- Trim Removal Wedge - 3409-
- Socket And Key - T40031-

Procedure

– Press the button on the electro-mechanical parking brake to activate it.

– Move the selector lever into “D”.

– Carefully pry out the selector lever boot on the side using the Trim Removal Wedge - 3409- -arrows- and fold it upward.

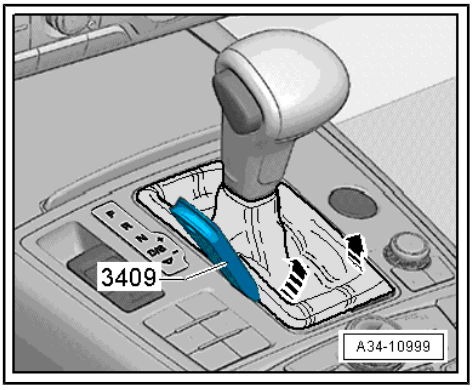

– Insert the Socket And Key - T40031- through the opening -arrow- in the selector mechanism and loosen the bolt on the selector lever cable approximately one turn.

Protected by copyright. Copying for private or commercial purposes, in part or in whole, is not permitted unless authorised by AUDI AG. AUDI AG does not guarantee or accept any liability with respect to the correctness of information in this document. Copyright by AUDI AG.

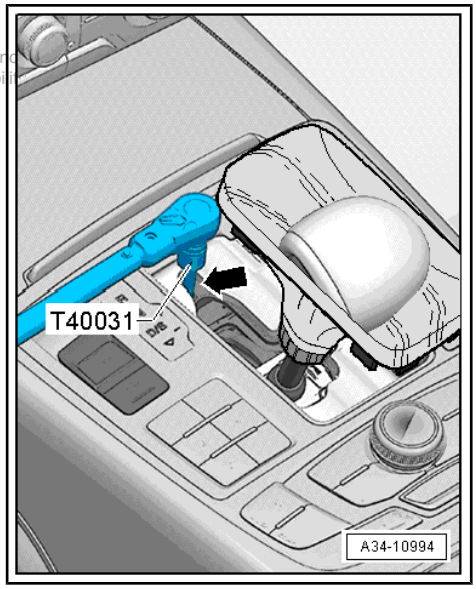

Note

- *Only loosen the clamping screw - do not remove it.*
- *The clamping screw is only accessible when the selector lever is in “D”.*
- *The selector lever must remain in “D” when the clamping screw is loose.*

– Carefully move the selector forward and back gently without shifting into another selector lever position. This releases the tension in the selector lever cable.

– Tighten the clamping screw in this position with the Socket And Key - T40031- without touching the selector lever.

– Check the selector mechanism. Refer to ⇒ “1.7 Gearshift Mechanism, Checking”, page 21 .

If shift mechanism does not function properly after adjusting selector lever cable:

– Bring the selector lever cable into the basic setting. Refer to ⇒ “1.9.2 Selector Lever Cable, Bringing into Basic Setting”, page 28 .

Tightening Specifications

- Refer to ⇒ “1.3 Overview - Selector Lever Cable”, page 15

cardiagn.com

1.9.2 Selector Lever Cable, Bringing into Basic Setting

Special tools and workshop equipment required

- ♦ Vehicle Diagnostic Tester
- ♦ Pry Lever - 80-200-
- ♦ Socket And Key - T40031-

Procedure

- • `Guided Fault Finding` with the Vehicle Diagnostic Tester is completed; all faults have been corrected.
- – Select the following menu items in “Functions/Component selection” “Guided Fault Finding” on the Vehicle Diagnostic Tester :
- ♦ `Drivetrain`
- ♦ `0AW transmission`
- ♦ `01-OBD-capable systems`
- ♦ `02-transmission electronics`
- ♦ `02-Transmission electronics, functions`
- ♦ `02-Measured values`
- – Select `driving mode` from the list.
- – Compare the following displays:
- ♦ Measured value `driving mode` on the Vehicle Diagnostic Tester
- ♦ Selector lever position
- ♦ Selector Lever Transmission Range Position Display Unit - Y26- on the shift mechanism
- ♦ Transmission Range Display - Y6- in the instrument cluster

Conditions:

- • The displays must match

If the displays do not match:

- – Adjust the selector lever cable. Refer to ⇒ “1.9.1 Selector Lever Cable, Checking and Adjusting”, page 27 .

If the individual displays cannot be reached by adjusting the selector lever cable:

Selector Lever Cable, Bringing into Basic Setting:

- – Remove the ball socket -1- on the selector lever cable from the selector shaft lever using the Pry Lever - 80-200- .

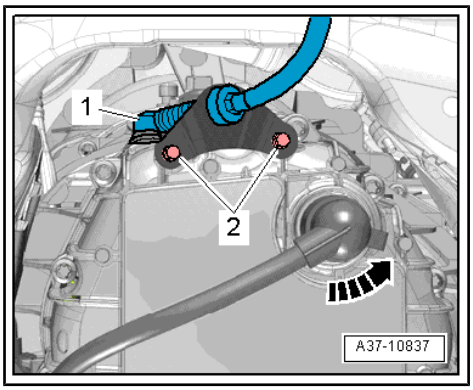

Note

Ignore -item 2- and -arrows-.

Protected by copyright. Copying for private or commercial purposes, in part or in whole, is not permitted unless authorised by AUDI AG. AUDI AG does not guarantee or accept any liability with respect to the correctness of information in this document. Copyright by AUDI AG.

cardiagn.com

– Push the selector lever -A- on the transmission all the way to the back in direction of -arrow- until the parking lock locks into place.

• When parking lock is engaged, it must not be possible to turn the front wheels.

– Press the selector shaft lever forward three detents so the transmission is in “D”.

– Make sure the selector lever inside the vehicle is also in “D”.

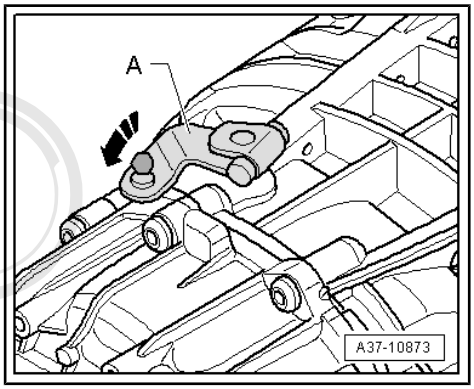

– Insert the Socket And Key - T40031- through the opening -arrow- in the selector mechanism and loosen the bolt on the selector lever cable approximately one turn.

Protected by copyright. Copying for private or commercial purposes, in pa
permitted unless authorised by AUDI AG. AUDI AG does not guarantee p
with respect to the correctness of information in this document. Copyri

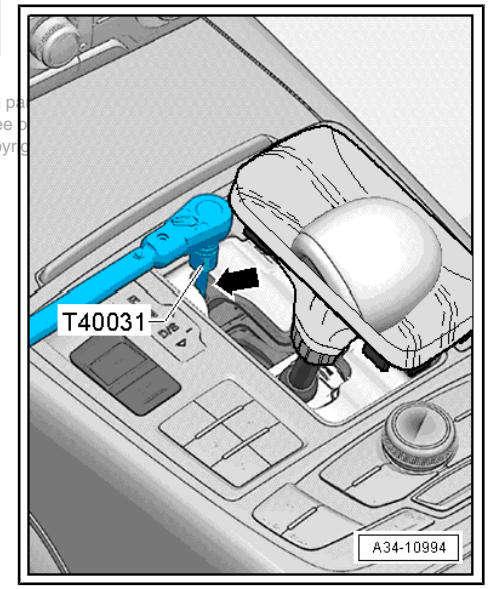

Note

♦ *Only loosen the clamping screw - do not remove it.*

♦ *The clamping screw is only accessible when the selector lever is in “D”.*

♦ *The selector lever must remain in “D” when the clamping screw is loose.*

– Remove the Socket And Key - T40031- from the torque wrench and let the move it through the opening -arrow- in the selector mechanism.

– Carefully press the selector lever cable ball socket -1- in this position onto the selector shaft lever.

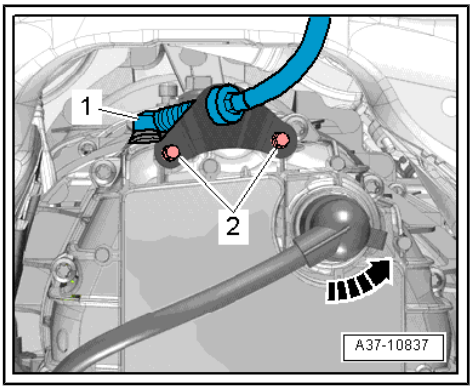

Note

♦ *Do not bend selector shaft lever when pressing on, otherwise shift mechanism can no longer be adjusted exactly.*

♦ *Ignore -item 2- and -arrows-.*

– Select `02-measured values` in “Guided Fault Finding” `02 transmission electronics` on the Vehicle Diagnostic Tester .

– Select `driving mode` from the list.

– Compare the following displays:

♦ Measured value `driving mode` on the Vehicle Diagnostic Tester

♦ Selector lever position

♦ Selector Lever Transmission Range Position Display Unit - Y26- on the shift mechanism

♦ Transmission Range Display - Y6- in the instrument cluster

Conditions:

• The displays must match

cardiagn.com

– Carefully move the selector forward and back gently without shifting into another selector lever position. This releases the tension in the selector lever cable.

– Tighten the clamping screw in this position with the Socket And Key - T40031- without touching the selector lever.

– Check the selector mechanism. Refer to ⇒ “1.7 Gearshift Mechanism, Checking”, page 21 .

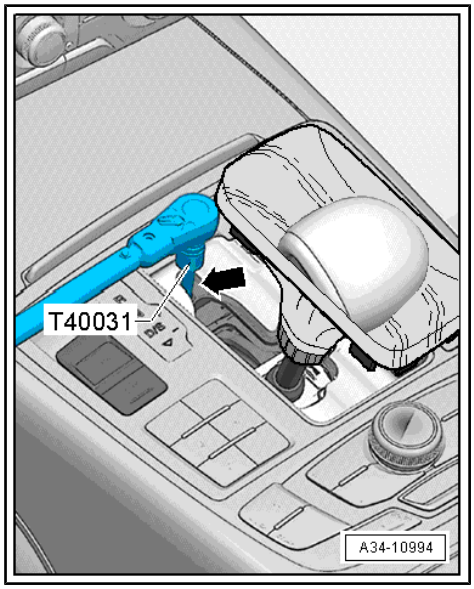

Tightening Specifications

♦ Refer to ⇒ “1.3 Overview - Selector Lever Cable”, page 15

1.10 Shift Lock Solenoid - N110- , Removing and Installing

Removing

– Move the selector lever into “P”.

– Remove the front ashtray or storage compartment. Refer to ⇒ Body Interior; Rep. Gr. 68 ; Center Console; Overview - Center Console .

– Loosen the nuts -1, 3, 5 and 6- a few turns but do not remove them completely.

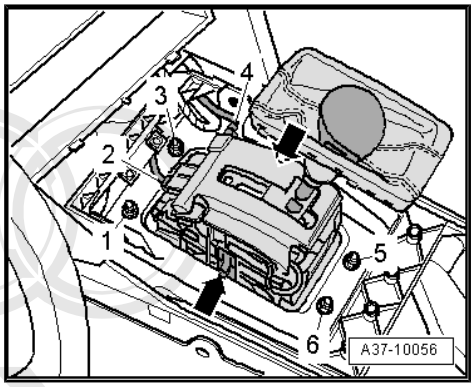

Note

♦ *This lowers the shift mechanism function unit slightly for better accessibility.*

♦ *Ignore -2 and 4- and -arrow-.*

Caution

The shift mechanism can be destroyed by broken clips, tabs or other objects.

♦ ***Make sure no components or other objects fall into the shift mechanism. The shift mechanism must be replaced if that happens.***

Protected by copyright. Copying for private or commercial purposes, in part or in whole, is not permitted unless authorised by AUDI AG. AUDI AG does not guarantee or accept any liability with respect to the correctness of information in this document. Copyright by AUDI AG.

cardiagn.com

– Open the retaining tabs -2 and 3- in the direction of the -arrow-, slightly raise the front of the sealing cap -A- and hold it in that position.

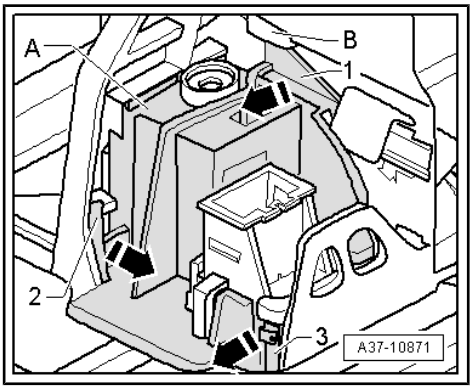

Note

This prevents the retaining tabs from engaging again.

– Open the upper tab -1- in direction of -arrow- above the bracket -B- and remove the cap -A-.

– Disconnect the connector on the Shift Lock Solenoid - N110- .

– Push the hook -A- in direction of -arrow- and hold it in this position.

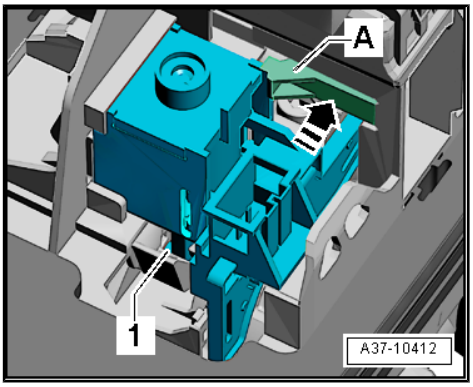

Note

Replace the selector mechanism function unit if any of the hooks -A- are broken off.

– Tilt the Shift Lock Solenoid - N110- in the direction of the -arrow- so that the ball head -1- comes out of the lever on the selector mechanism.

– Remove the Shift Lock Solenoid - N110- .

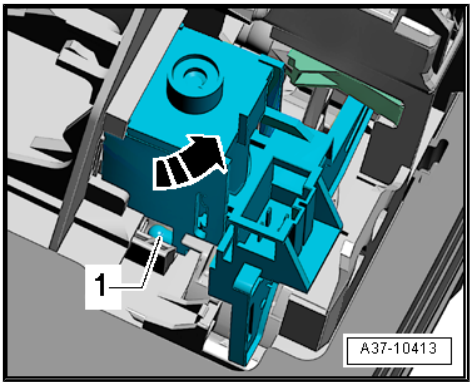

Installing

Install in reverse order of removal. Note the following:

– Turn the ball head -1- into the correct installed position.

– Install the Shift Lock Solenoid - N110- at an angle into the selector mechanism and then tilt it opposite the direction of -arrow-.

• The ball head -1- must engage completely in the operating lever on shift mechanism. Press it down using a small screwdriver if necessary.

– Attach the Shift Lock Solenoid - N110- to the hook -A-.

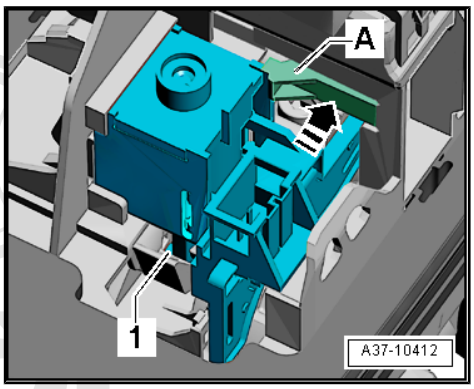

Protected by copyright. Copying for private or commercial purposes, in part or in whole, is not permitted unless authorised by AUDI AG. AUDI AG does not guarantee or accept any liability with respect to the correctness of information in this document. Copyright by AUDI AG.

cardiagn.com

– Position the cover -A- over the Shift Lock Solenoid - N110- and carefully lock it in -1 through 3-.

– Connect the electrical connectors.

– Check the shift mechanism function before completing assembly. Refer to
⇒ “1.7 Gearshift Mechanism, Checking”, page 21 .

– Install the front ashtray or storage compartment. Refer to ⇒ Body Interior; Rep. Gr. 68 ; Center Console; Overview - Center Console .

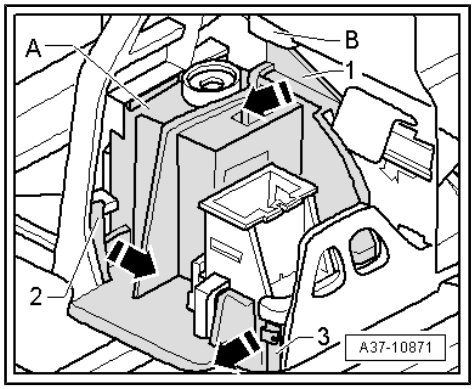

Tightening Specifications

♦ Refer to ⇒ “1.2 Overview - Selector Mechanism”, page 13

Protected by copyright. Copying for private or commercial purposes, in part or in whole, is not permitted unless authorised by AUDI AG. AUDI AG does not guarantee or accept any liability with respect to the correctness of information in this document. Copyright by AUDI AG.

1.11 Selector Lever Sensor System Control Module - J587- , Removing and Installing

Removing

– Remove the selector lever handle. Refer to
⇒ “1.5 Selector Lever Handle, Removing and Installing”, page 16 .

– Remove the Multimedia System Control Head - E380- . Refer to ⇒ Communication; Rep. Gr. 91 ; Infotainment System; Multimedia System Control Head - E380- , Removing and Installing .

– Disconnect the connector -1-.

– Open the four tabs -arrows- and remove the Selector Lever Sensor System Control Module - J587- -item 2- upward.

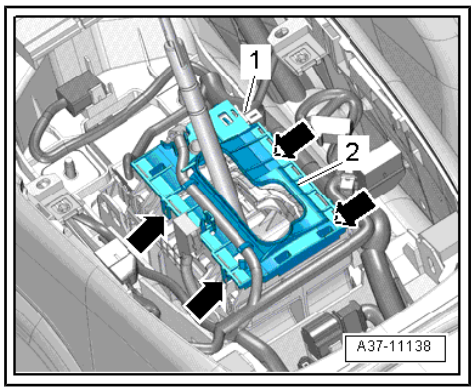

Installing

Install in reverse order of removal. Note the following:

– Let the Selector Lever Sensor System Control Module - J587- latch with the four tabs.

– Install the Multimedia System Control Head - E380- . Refer to ⇒ Communication; Rep. Gr. 91 ; Infotainment System; Multimedia System Control Head - E380- , Removing and Installing .

– Install the selector lever handle. Refer to
⇒ “1.5 Selector Lever Handle, Removing and Installing”, page 16 .

1.12 Transmission Park Selector Switch - F305- , Removing and Installing

♦ Component location: The Transmission Park Selector Switch - F305- , which consists of two microswitches -1- and -2-, is installed on the circuit board -B- on the Shift Lock Solenoid - N110- -A-.

The Transmission Park Selector Switch - F305- can only be replaced together with the Shift Lock Solenoid - N110- .

Refer to
⇒ “1.10 Shift Lock Solenoid N110 , Removing and Installing”, page 30 .

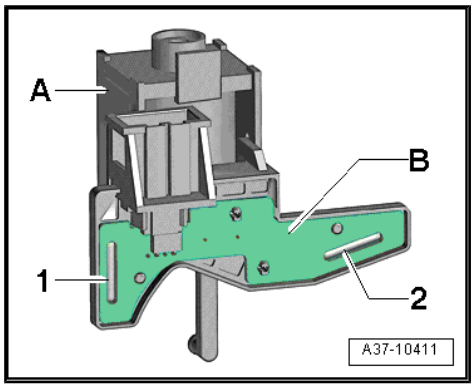

cardiagn.com

1.13 Selector Shaft Seal, Replacing

Procedure

Note

The selector shaft seal can only be replaced for removed transmissions.

- Remove the transmission. Refer to ⇒ “2.1 Transmission, Removing”, page 34 .
- Replace the selector shaft seal ⇒ Continuously Variable Transmission Internal Components; Rep. Gr. 39 ; Final Drive; Overview - Final Drive .
- Refer to ⇒ “7.1 ATF Level, Checking”, page 81 after installing the transmission.

Protected by copyright. Copying for private or commercial purposes, in part or in whole, is not permitted unless authorised by AUDI AG. AUDI AG does not guarantee or accept any liability with respect to the correctness of information in this document. Copyright by AUDI AG.

cardiagn.com

2 Transmission, Removing and Installing

⇒ “2.1 Transmission, Removing”, page 34

⇒ “2.2 Transmission, Installing”, page 58

⇒ “2.3 Transmission Tightening Specifications”, page 65

2.1 Transmission, Removing

⇒ “2.1.1 Transmission, Removing, Vehicles with 4-Cylinder 2.0L TFSI Engine”, page 34

⇒ “2.1.4 Transmission, Removing, Vehicles with 6-Cylinder TDI 3.0L Engine”, page 52

2.1.1 Transmission, Removing, Vehicles with 4-Cylinder 2.0L TFSI Engine

Special tools and workshop equipment required

- Pry Lever - 80-200-
- Engine and Gearbox Jack - VAS6931-
- Engine Bung Set - VAS6122-
- Tensioning Strap - T10038-
- Counterhold - Vibration Damper - T10355-
- Gearbox Support - T40173-

Removing

– Position the front wheels so they are straight.

> ⚠ **Caution**
>
> *Risk of damaging electronic components when disconnecting the battery.*
>
> ♦ *Complete the steps for disconnecting the battery.*

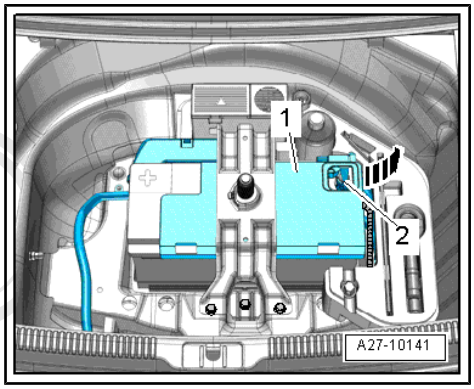

– Disconnect the battery ground cable -2-. Refer to ⇒ Electrical Equipment; Rep. Gr. 27 ; Battery; Battery, Disconnecting and Connecting .

– Remove the front wheels. Refer to ⇒ Suspension, Wheels, Steering; Rep. Gr. 44 ; Wheels and Tires .

– Remove left and right drive axle cover -1- in the wheel housing. Refer to ⇒ Body Exterior; Rep. Gr. 66 ; Noise Insulation; Overview - Noise Insulation .

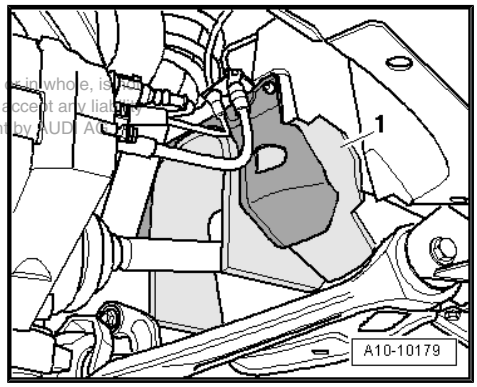

Protected by copyright. Copying for private or commercial purposes, in part or in whole, is not permitted unless authorised by AUDI AG. AUDI AG does not guarantee or accept any liability with respect to the correctness of information in this document. Copyright by AUDI AG.

cardiagn.com

– Remove the left and right bolts -arrows- and the heat shield -1-.

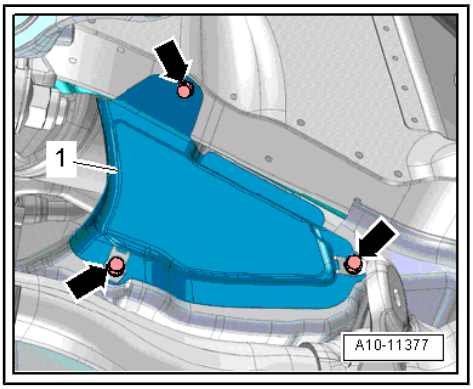

– Remove the noise insulations -1- and -2-. Refer to ⇒ Body Exterior; Rep. Gr. 66 ; Noise Insulation; Noise Insulation, Removing and Installing .

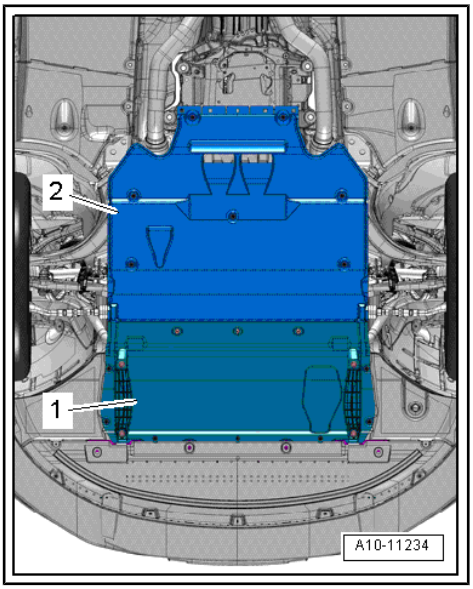

– Remove the front muffler. Refer to ⇒ Rep. Gr. 26 ; Exhaust Pipes/Mufflers; Front Muffler, Removing and Installing .

Protected by copyright. Copyright for private or commercial purposes, in part or in whole, is not permitted unless authorised by AUDI AG. AUDI AG does not guarantee or accept any liability with respect to the correctness of information in this document. Copyright by AUDI AG.

– Drain the coolant. Refer to ⇒ Rep. Gr. 19 ; Cooling System/ Coolant; Coolant, Draining and Filling .

– Remove the plenum chamber bulkhead. Refer to ⇒ Body Exterior; Rep. Gr. 50 ; Bulkhead; Overview - Bulkhead .

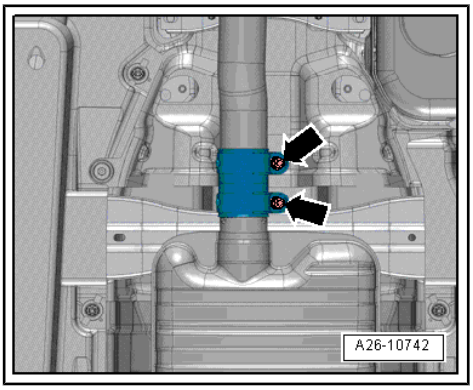

– Remove the left coolant pipe on the transmission. Refer to ⇒ Rep. Gr. 19 ; Coolant Pipes; Coolant Pipes, Removing and Installing .

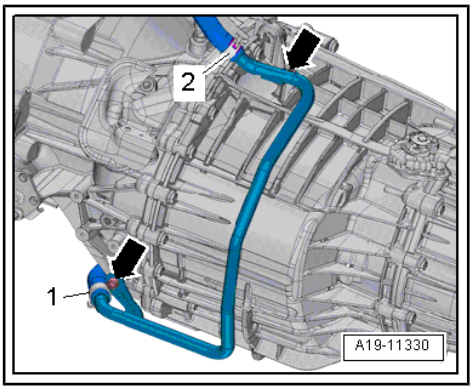

cardiagn.com

– Remove the bolts -2 through 5- connecting the engine to transmission. They are accessible from above.

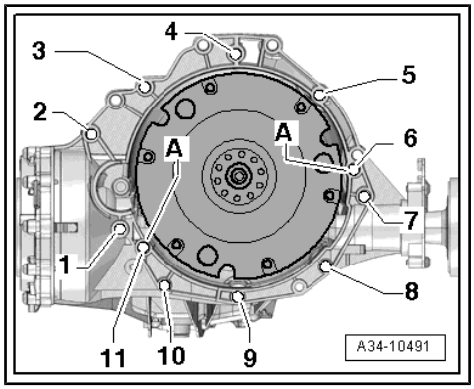

– Move the tower brace into its installed position and then tighten the bolts hand-tight.

– Secure the engine with the Tensioning Strap - T10038- as illustrated.

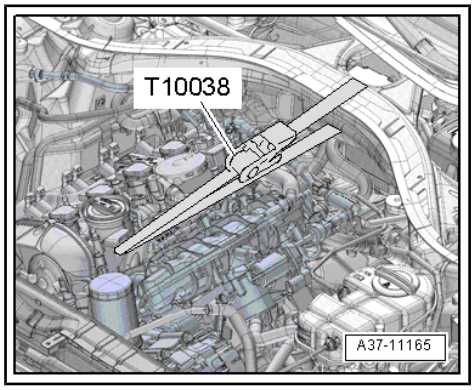

– Remove the bolts -arrows- and then remove the heat shield from the right drive axle.

– Remove the left and right drive axle from the transmission flange shaft. Refer to ⇒ Suspension, Wheels, Steering; Rep. Gr. 40 ; Drive Axle; Drive Axle, Removing and Installing .

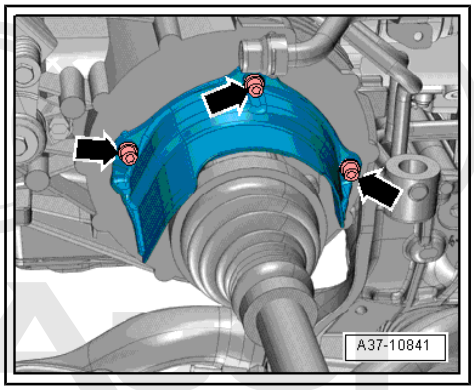

– Remove the ball socket -1- on the selector lever cable from the selector shaft lever using the Pry Lever - 80-200-.

– Remove the bolts -2- from the cable mounting bracket.

– Free up the selector lever cable.

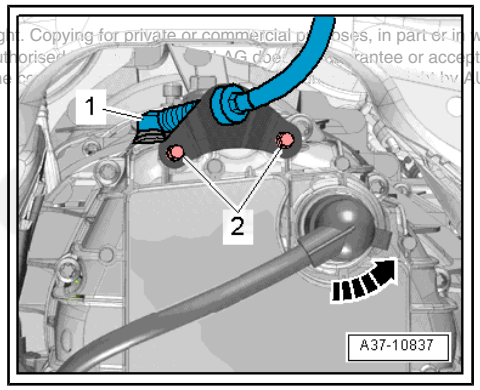

Protected by copyright. Copying for private or commercial purposes, in part or in whole, is not permitted unless authorised by AUDI AG. AUDI AG does not guarantee or accept any liability with respect to the correctness of information contained in this document copyrighted by AUDI AG.

Caution

There is a risk of destroying the transmission control module (Mechatronic) with electrostatic discharge.

- *Always "discharge" the static electricity before working with electric connectors. Do this by touching a grounded object, for example vehicle ground, the vehicle or the hoist.*
- *Do not touch contacts in transmission connector with hands.*

– Turn the rotary lock counter-clockwise -arrow- to disconnect the connector and free up the wire.

cardiagn.com

– Remove the steering intermediate shaft from the steering gear and the push the splines together. Refer to ⇒ Suspension, Wheels, Steering; Rep. Gr. 48 ; Steering Column; Steering Intermediate Shaft, Removing and Installing .

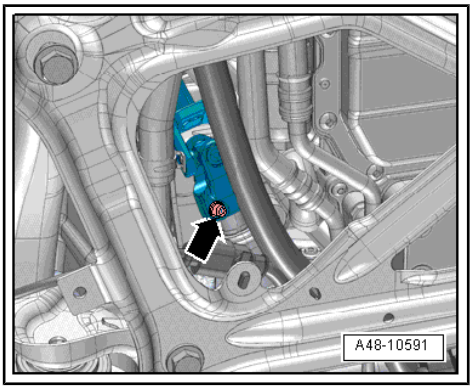

– Remove the subframe crossbrace. Refer to ⇒ Suspension, Wheels, Steering; Rep. Gr. 40 ; Subframe; Subframe Crossbrace, Removing and Installing .

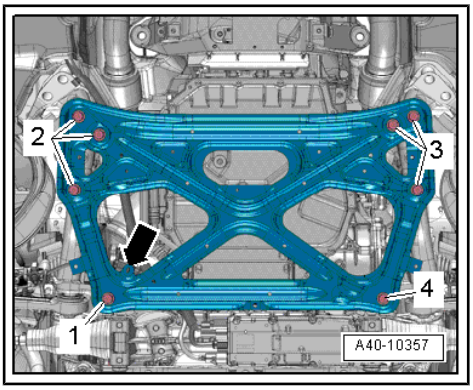

Caution

The suspension components could be damaged.

- ***Do not rest the vehicle on its wheels if the subframe mount, the steering gear or the subframe crossbrace are not installed correctly.***

Protected by copyright. Copying for private or commercial purposes, in part or in whole, is not permitted unless authorised by AUDI AG. AUDI AG does not guarantee or accept any liability with respect to the correctness of information in this document. Copyright by AUDI AG.

– Disconnect the connector -2- from the Engine Speed Sensor - G28- and free up the wire.

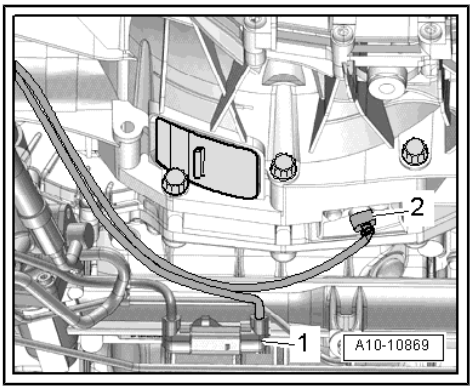

Note

Ignore -item 1-.

Note

Place a clean cloth underneath the ATF cooler to catch the escaping ATF.

– Loosen the clamp -1- and remove the coolant hose.

– Remove the bolts -arrows- and remove the ATF cooler.

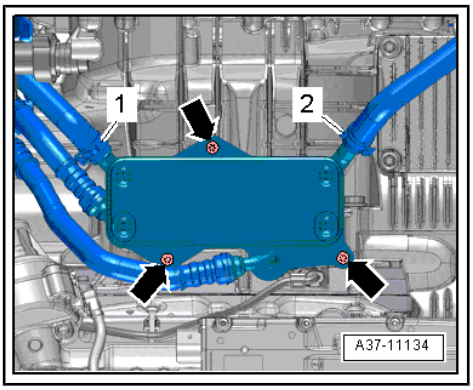

Note

Ignore -item 2-.

cardiagn.com

– Slide the retainer toward the rear in direction of -arrow- and press down the release in order to disconnect the connector -2- for the steering gear.

– Disconnect the connector -1-.

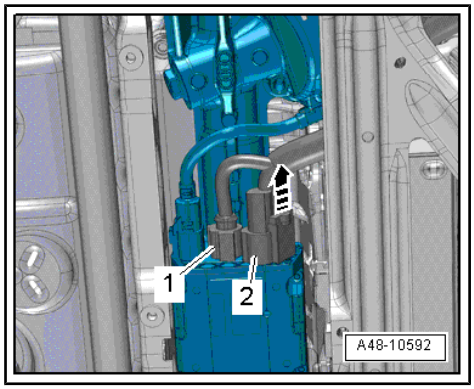

– Remove the lower cover -1- from the transmission in direction of -arrow-.

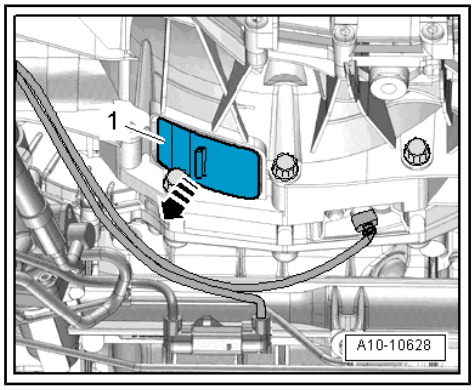

– Counterhold the crankshaft at the vibration damper using the Counterhold - Vibration Damper - T10355- to loosen the drive plate bolts.

Note

Ignore -arrow-.

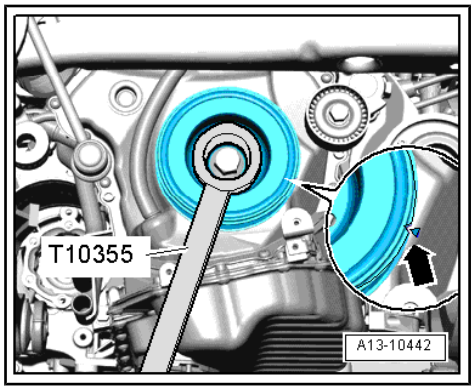

– Remove the three drive plate bolts -arrow- while turning the crankshaft 120° further in the direction of engine rotation.

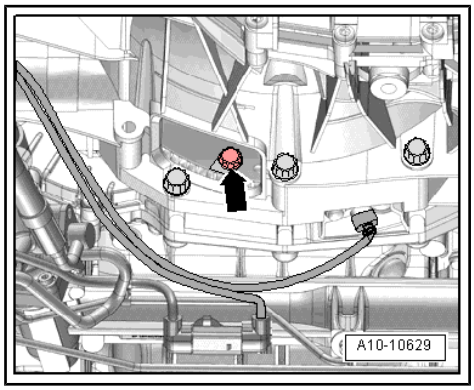

Protected by copyright. Copying for private or commercial purposes, in part or in whole, is not permitted unless authorised by AUDI AG. AUDI AG does not guarantee or accept any liability with respect to the correctness of information in this document. Copyright by AUDI AG.

cardiagn.com

– Remove the starter bolt -1-.

– Remove the starter from the transmission and leave it in the installation position.

– Remove the remaining bolts -6 through 11- that attach the engine to the transmission.

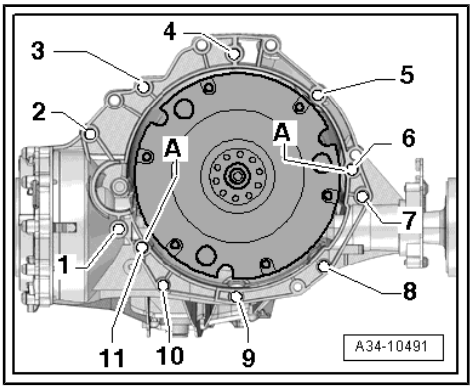

– Place the Engine and Gearbox Jack - VAS6931- with the Gearbox Support - T40173- under the transmission and secure with the tensioning strap -1- as shown in the illustration.

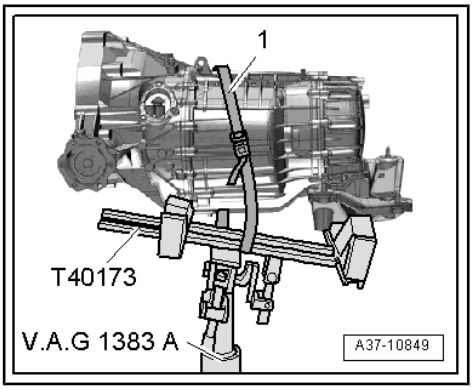

Note

The Gearbox Support - T40173- is not illustrated.

– Remove the bolts from the tunnel crossmember -arrows-.

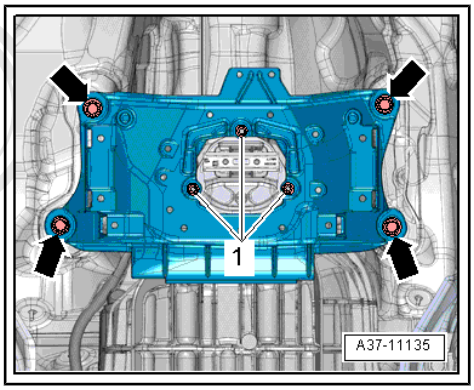

Note

Ignore -item 1-.

– Press the transmission off the engine and lower it carefully using the Engine and Gearbox Jack - VAS6931- .

– When necessary, lower the engine by loosening the front tensioning strap -T10038- .

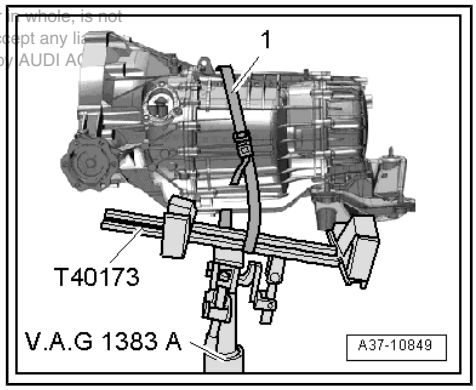

Protected by copyright. Copying for private or commercial purposes, in part or in whole, is not permitted unless authorised by AUDI AG. AUDI AG does not guarantee or accept any liability with respect to the correctness of information in this document. Copyright by AUDI AG

2.1.2 Transmission, Removing, 6-Cylinder FSI 2.5L/2.8L Engine

Special tools and workshop equipment required

- Pry Lever - 80-200-
- Engine and Gearbox Jack - VAS6931-

cardiagn.com

- Engine Bung Set - VAS6122-
- Tensioning Strap - T10038-
- Crankshaft Socket - T40058-
- Gearbox Support - T40173-

Removing

– Position the front wheels so they are straight.

> ⚠ **Caution**
>
> *Risk of damaging electronic components when disconnecting the battery.*
>
> ♦ *Complete the steps for disconnecting the battery.*

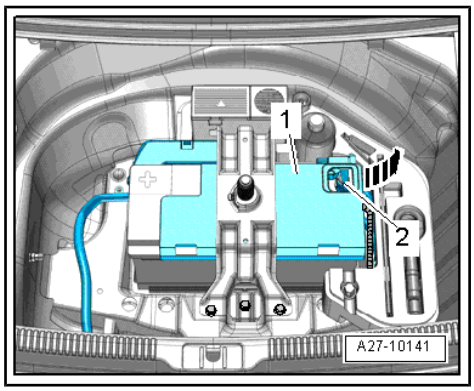

– Disconnect the battery ground cable -2-. Refer to ⇒ Electrical Equipment; Rep. Gr. 27 ; Battery; Battery, Disconnecting and Connecting .

– Remove the front wheels. Refer to ⇒ Suspension, Wheels, Steering; Rep. Gr. 44 ; Wheels and Tires .

– Remove left and right drive axle cover -1- in the wheel housing. Refer to ⇒ Body Exterior; Rep. Gr. 66 ; Noise Insulation; Overview - Noise Insulation .

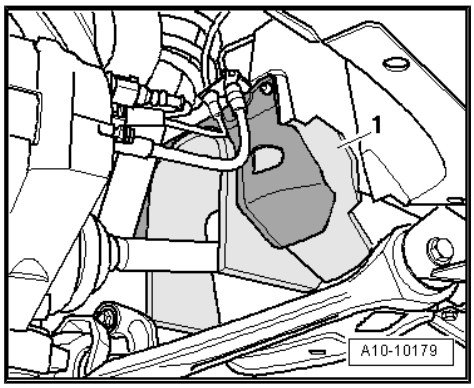

– Remove the left and right bolts -arrows- and the heat shield -1-.

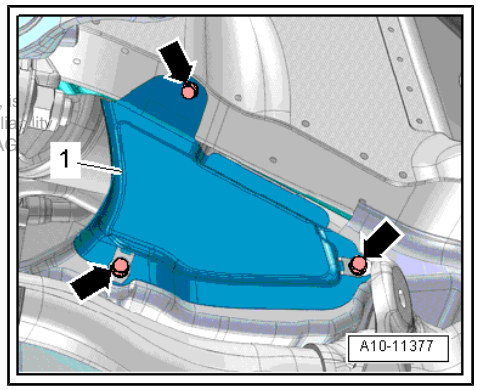

Protected by copyright. Copying for private or commercial purposes, in part or in whole, is not permitted unless authorised by AUDI AG. AUDI AG does not guarantee or accept any liability with respect to the correctness of information in this document. Copyright by AUDI AG.

cardiagn.com

– Remove the noise insulations -1- and -2-. Refer to ⇒ Body Exterior; Rep. Gr. 66 ; Noise Insulation; Noise Insulation, Removing and Installing .

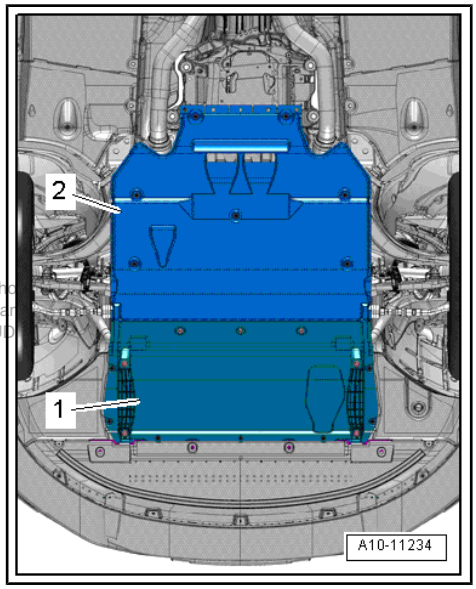

Protected by copyright. Copying for private or commercial purposes, in part or in whole, is not permitted unless authorised by AUDI AG. AUDI AG does not guarantee or accept any liability with respect to the correctness of information in this document. Copyright by AUDI AG.

– Remove the left and right front muffler. Refer to ⇒ Rep. Gr. 26 ; Exhaust Pipes/Mufflers; Front Muffler, Removing and Installing .

– Drain the coolant. Refer to ⇒ Rep. Gr. 19 ; Cooling System/ Coolant; Coolant, Draining and Filling .

– Remove the plenum chamber bulkhead. Refer to ⇒ Body Exterior; Rep. Gr. 50 ; Bulkhead; Overview - Bulkhead .

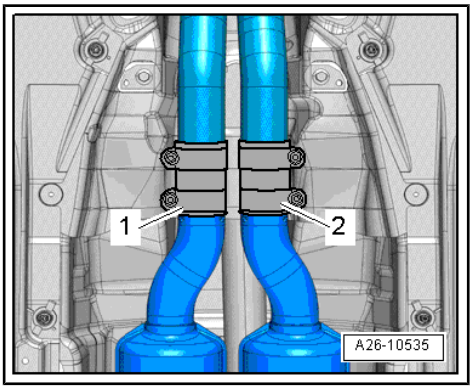

– Remove the left coolant pipe on the transmission. Refer to ⇒ Rep. Gr. 19 ; Coolant Pipes; Coolant Pipes, Removing and Installing .

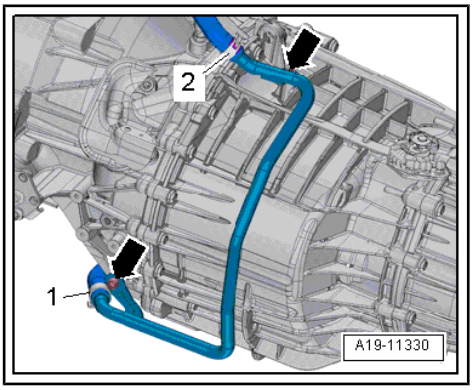

Note

Lay a cloth under the separating point to prevent ATF from leaking out.

– Remove the bolt -arrow- and pull the ATF pipes off the transmission.

– Seal the open lines and connections with clean plugs from the Engine Bung Set - VAS6122- .

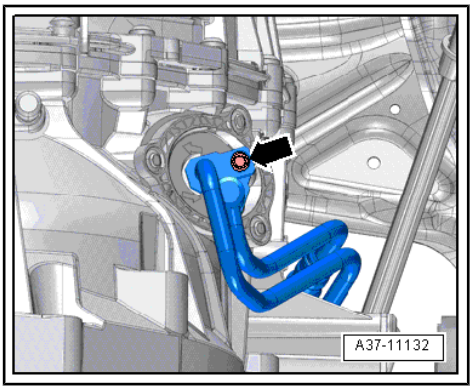

cardiagn.com

– Remove the nuts -arrows- and bolt -1- and press the right catalytic converter to the right side.

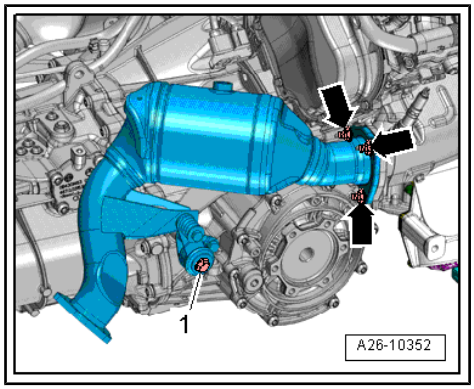

– Remove the bolts -2 through 5- connecting the engine to transmission. They are accessible from above.

– Secure the right catalytic converter from falling down by securing it with a loose nut on the exhaust manifold.

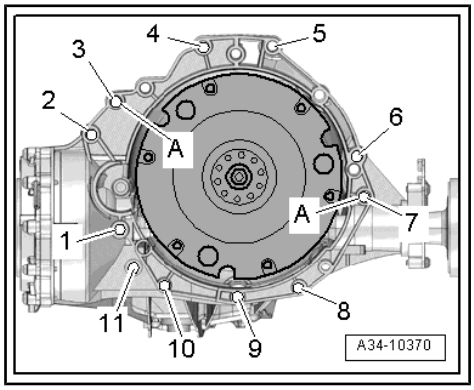

– Move the tower brace into its installed position and then tighten the bolts hand-tight.

– Secure the engine with the Tensioning Strap - T10038- as illustrated.

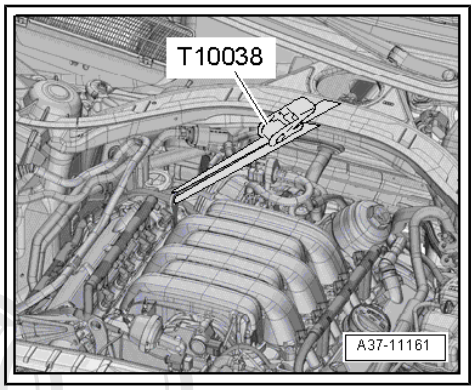

– Remove the bolts -arrows- and then remove the heat shield from the right drive axle.

– Remove the left and right drive axle from the transmission flange shaft. Refer to ⇒ Suspension, Wheels, Steering; Rep. Gr. 40 ; Drive Axle; Drive Axle, Removing and Installing .

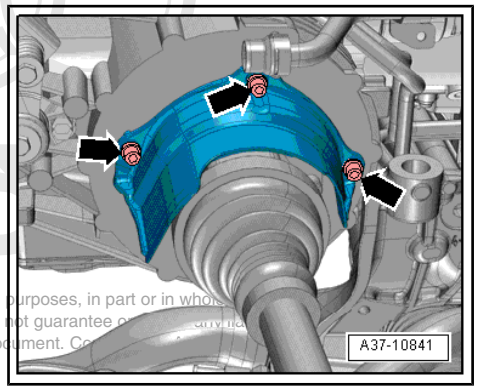

Protected by copyright. Copying for private or commercial purposes, in part or in whole, is not permitted unless authorised by AUDI AG. AUDI AG does not guarantee or assume any liability with respect to the correctness of information in this document. Copyright by AUDI AG.

cardiagn.com

– Remove the ball socket -1- on the selector lever cable from the selector shaft lever using the Pry Lever - 80-200- .

– Remove the bolts -2- from the cable mounting bracket.

– Free up the selector lever cable.

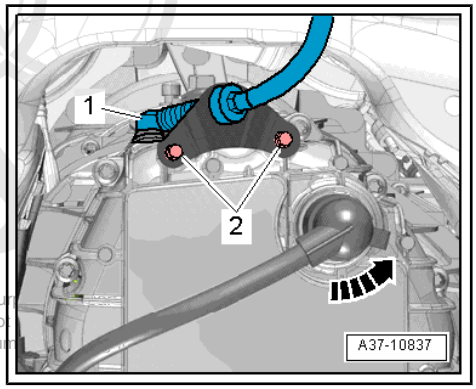

Caution

There is a risk of destroying the transmission control module (Mechatronic) with electrostatic discharge.

- *Always "discharge" the static electricity before working with electric connectors. Do this by touching a grounded object, for example vehicle ground, the vehicle or the hoist.*
- *Do not touch contacts in transmission connector with hands.*

Copyright. Copying for private or commercial purposes is not permitted unless authorised by AUDI AG. AUDI AG does not guarantee the accuracy of the information in this document.

– Turn the twist lock counter-clockwise -arrow- and disconnect the connector from the transmission.

– Remove the steering intermediate shaft from the steering gear and the push the splines together. Refer to ⇒ Suspension, Wheels, Steering; Rep. Gr. 48 ; Steering Column; Steering Intermediate Shaft, Removing and Installing .

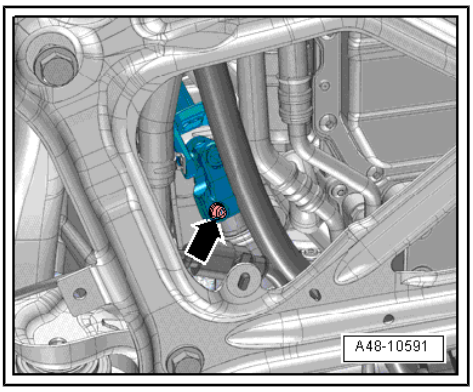

– Remove the subframe crossbrace. Refer to ⇒ Suspension, Wheels, Steering; Rep. Gr. 40 ; Subframe; Subframe Cross-brace, Removing and Installing .

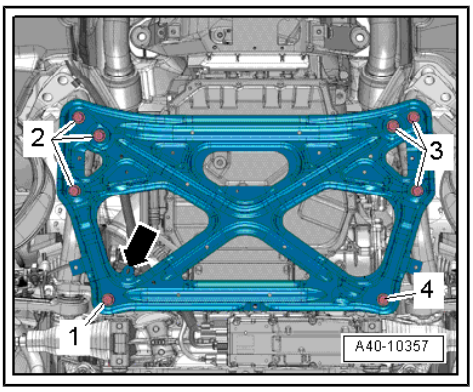

Caution

The suspension components could be damaged.

- *Do not rest the vehicle on its wheels if the subframe mount, the steering gear or the subframe crossbrace are not installed correctly.*

– Disconnect the connector -2- from the Engine Speed Sensor - G28- and free up the wire.

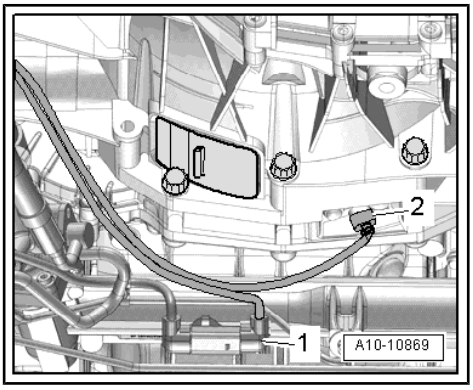

Note

Ignore -item 1-.

cardiagn.com

– Remove the bolt -1- and press the left retaining tab off the transmission and tilt it back -arrow-.

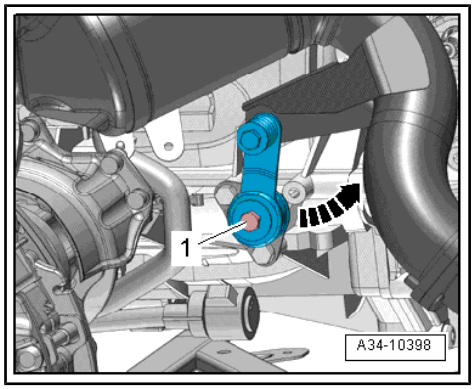

Note

Place a clean cloth underneath the ATF cooler to catch the escaping ATF.

– Loosen the clamp -1- and remove the coolant hose.

– Remove the bolts -arrows- and remove the ATF cooler.

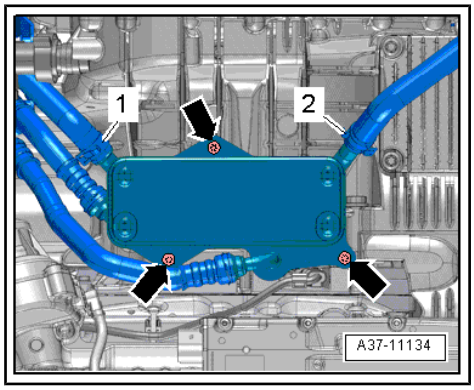

Note

Ignore -item 2-.

– Slide the retainer toward the rear -arrow- and press down the release in order to disconnect the connector -2- for the steering gear.

– Disconnect the connector -1-.

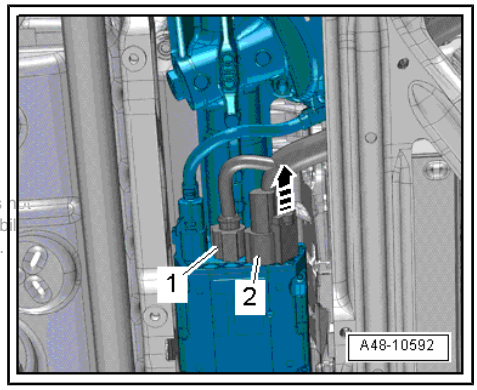

Protected by copyright. Copying for private or commercial purposes, in part or in whole, is not permitted unless authorised by AUDI AG. AUDI AG does not guarantee or accept any liability with respect to the correctness of information in this document. Copyright by AUDI AG.

– Remove the lower cover -1- from the transmission -arrow-.

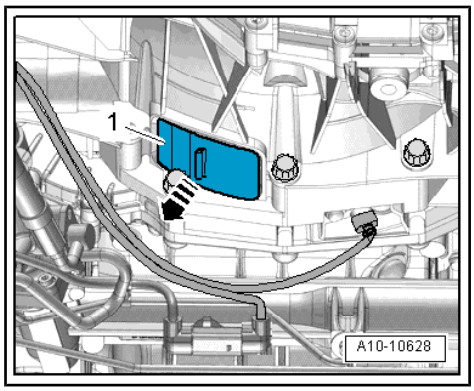

cardiagn.com

– Insert the adapter -T40058- guide pins as follows:
- The large diameter -arrow 1- faces the engine.
- The small diameter -arrow 2- faces the adapter.

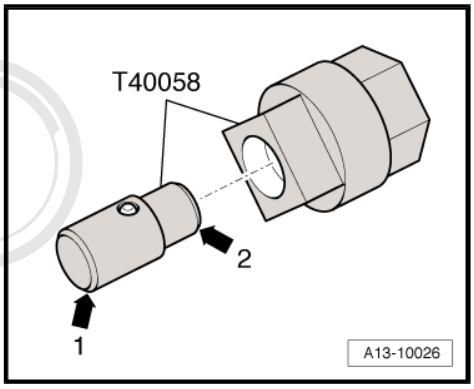

– Counterhold the crankshaft at the vibration damper using the Crankshaft Socket - T40058- to loosen the drive plate bolts.

Protected by copyright. Copying for private or commercial purposes, in part or in whole, is not permitted unless authorised by AUDI AG. AUDI AG does not guarantee or assume any liability with respect to the correctness of information in this document. Copyright by AUDI AG.

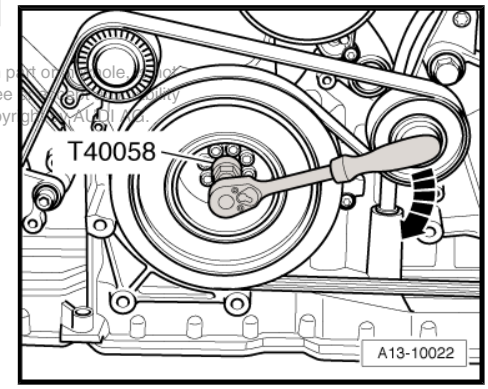

Note

When mounting, turn the crankshaft only in the direction of engine rotation -arrow-.

– Remove the 6 drive plate bolts -arrow- while turning the crankshaft 60° further in the direction of engine rotation.

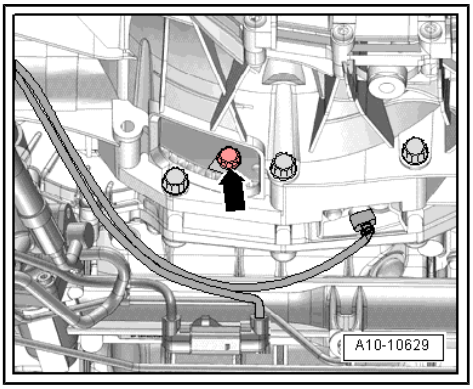

– Remove the starter bolt -1-.
– Remove the starter from the transmission and leave it in the installation position.
– Remove the remaining bolts -6 through 11- that attach the engine to the transmission.

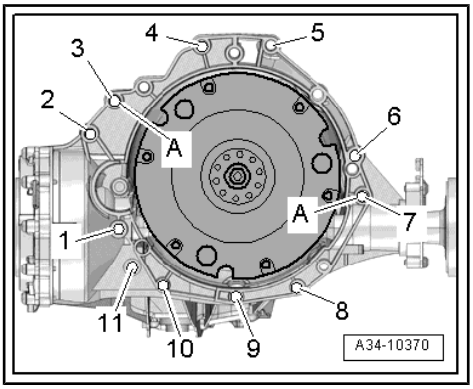

cardiagn.com

– Place the Engine and Gearbox Jack - VAS6931- with the Gearbox Support - T40173- under the transmission and secure with the tensioning strap -1- as shown in the illustration.

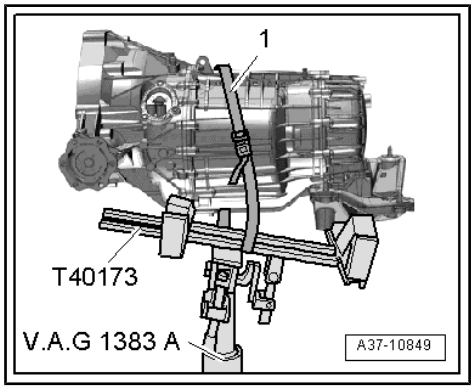

Note

The Gearbox Support - T40173- is not illustrated.

– Remove the bolts from the tunnel crossmember -arrows-.

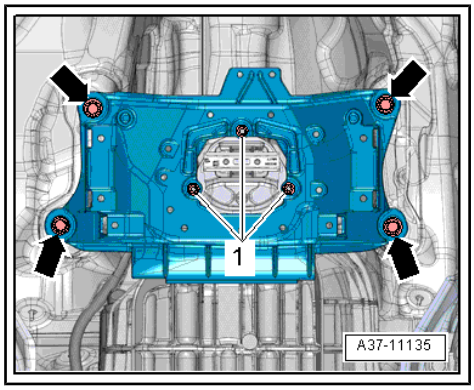

Note

Ignore -item 1-.

– Press the transmission off the engine and lower it carefully using the Engine and Gearbox Jack - VAS6931- .

– When necessary, lower the engine by loosening the front tensioning strap -T10038- .

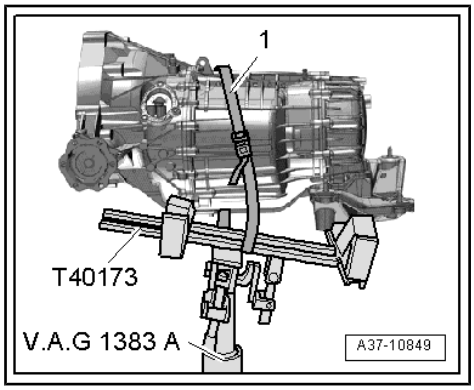

2.1.3 Transmission, Removing, Vehicles with 4-Cylinder TDI 2.0L Engine

Special tools and workshop equipment required

- Pry Lever - 80-200-
- Engine and Gearbox Jack - VAS6931-
- Engine Bung Set - VAS6122-
- Gearbox Support - T40173-

Protected by copyright. Copying for private or commercial purposes, in part or in whole, is not permitted unless authorised by AUDI AG. AUDI AG does not guarantee or accept any liability with respect to the correctness of information in this document. Copyright by AUDI AG.

cardiagn.com

Removing

– Position the front wheels so they are straight.

> **Caution**
>
> *Risk of damaging electronic components when disconnecting the battery.*
>
> ♦ *Complete the steps for disconnecting the battery.*

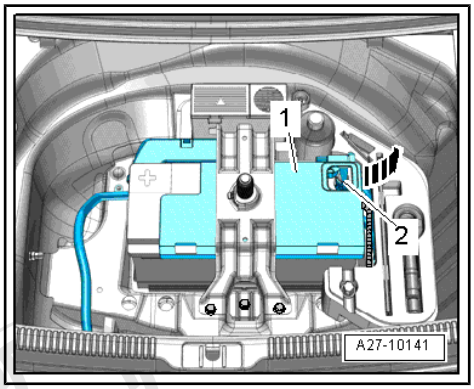

– Disconnect the battery ground cable -2-. Refer to ⇒ Electrical Equipment; Rep. Gr. 27 ; Battery; Battery, Disconnecting and Connecting .

– Remove the front wheels. Refer to ⇒ Suspension, Wheels, Steering; Rep. Gr. 44 ; Wheels and Tires .

– Remove left and right drive axle cover -1- in the wheel housing. Refer to ⇒ Body Exterior; Rep. Gr. 66 ; Noise Insulation; Overview - Noise Insulation .

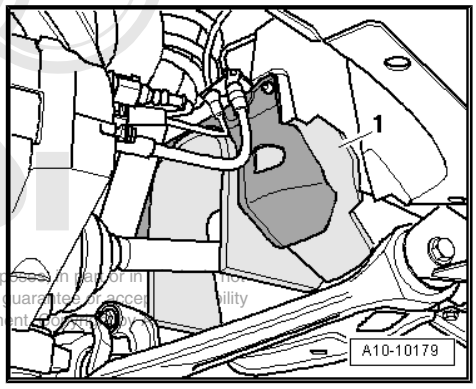

Protected by copyright. Copying for private or commercial purposes, in part or in [illegible] is not permitted unless authorised by AUDI AG. AUDI AG does not guarantee or accept any liability with respect to the correctness of information in this document. Copyright by AUDI AG.

– Remove the left and right bolts -arrows- and the heat shield -1-.

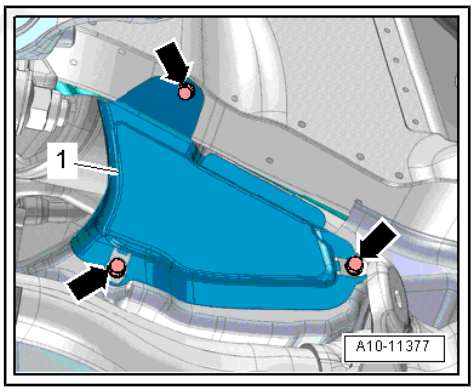

– Remove the noise insulations -1- and -2-. Refer to ⇒ Body Exterior; Rep. Gr. 66 ; Noise Insulation; Noise Insulation, Removing and Installing .

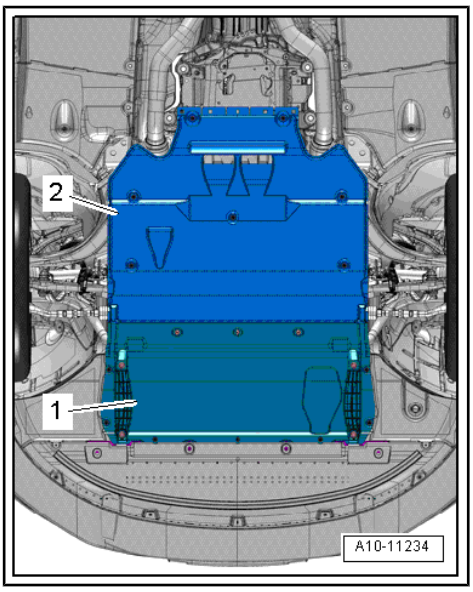

cardiagn.com

– Remove the front muffler. Refer to ⇒ Rep. Gr. 26 ; Exhaust Pipes/Mufflers; Front Muffler, Removing and Installing .

– Drain the coolant. Refer to ⇒ Rep. Gr. 19 ; Cooling System/ Coolant; Coolant, Draining and Filling .

– Remove the plenum chamber bulkhead. Refer to ⇒ Body Exterior; Rep. Gr. 50 ; Bulkhead; Overview - Bulkhead .

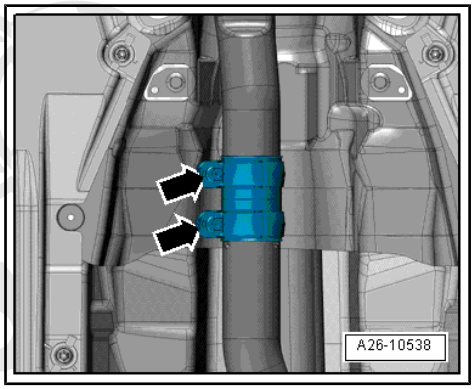

– Remove the left coolant pipe on the transmission. Refer to ⇒ Rep. Gr. 19 ; Coolant Pipes; Coolant Pipes, Removing and Installing .

Protected by copyright. Copies for private or commercial purposes, in part or in whole, is not permitted unless authorised by AUDI AG. AUDI AG does not with respect to the correctness of information in this docu

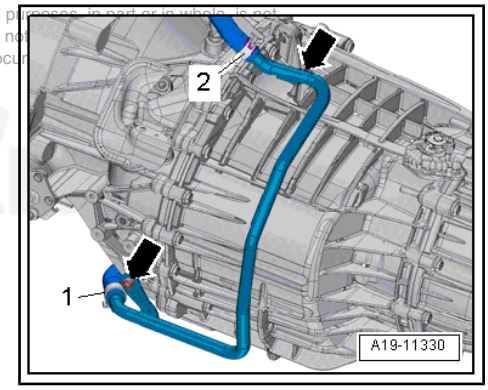

– Remove the connector -1- from the bracket and free up the wiring harness -2- with the Pry Lever - 80-200- .

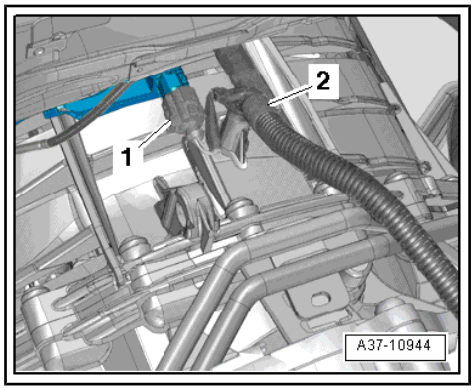

– Remove the bolts -2 through 5- connecting the engine to transmission. They are accessible from above.

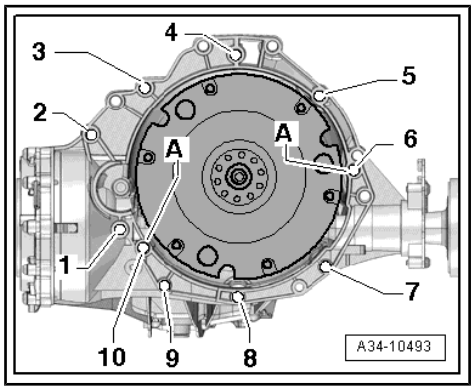

cardiagn.com

– Remove the bolts -arrows- and then remove the heat shield from the right drive axle.

– Remove the left and right drive axle from the transmission flange shaft. Refer to ⇒ Suspension, Wheels, Steering; Rep. Gr. 40 ; Drive Axle; Drive Axle, Removing and Installing .

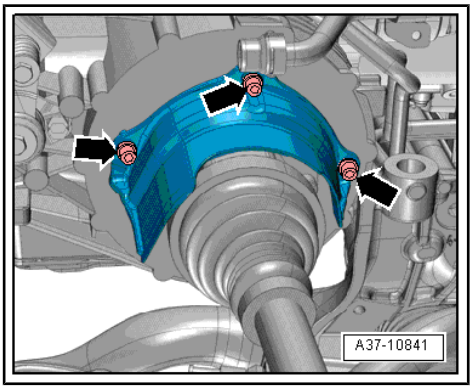

– Remove the ball socket -1- on the selector lever cable from the selector shaft lever using the Pry Lever - 80-200- .

– Remove the bolts -2- from the cable mounting bracket.

– Free up the selector lever cable.

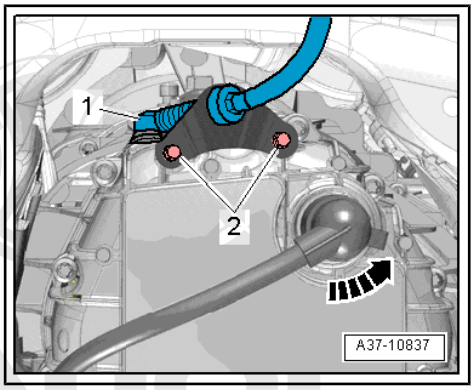

Caution

There is a risk of destroying the transmission control module (Mechatronic) with electrostatic discharge.

- *Always "discharge" the static electricity before working with electric connectors. Do this by touching a grounded object, for example vehicle ground, the vehicle or the hoist.*
- *Do not touch contacts in transmission connector with hands.*

Copyright. Copying for private or commercial purposes, in part or in whole, is not permitted unless authorised by AUDI AG. AUDI AG does not guarantee or accept any liability with respect to the correctness of information in this document. Copyright by AUDI AG.

– Turn the rotary lock counter-clockwise -arrow- to disconnect the connector and free up the wire.

– Remove the steering intermediate shaft from the steering gear and the push the splines together. Refer to ⇒ Suspension, Wheels, Steering; Rep. Gr. 48 ; Steering Column; Steering Intermediate Shaft, Removing and Installing .

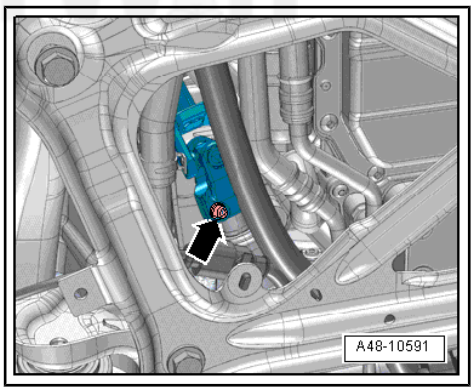

– Remove the subframe crossbrace. Refer to ⇒ Suspension, Wheels, Steering; Rep. Gr. 40 ; Subframe; Subframe Cross-brace, Removing and Installing .

Caution

The suspension components could be damaged.

- *Do not rest the vehicle on its wheels if the subframe mount, the steering gear or the subframe crossbrace are not installed correctly.*

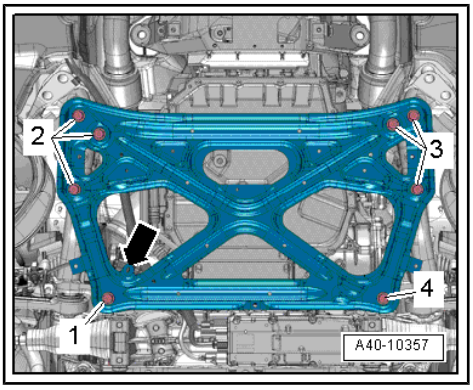

cardiagn.com

– Disconnect the connector -3-.

– Loosen the clamp -2- and remove the coolant hose.

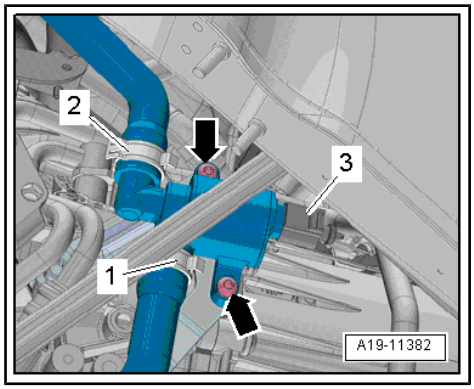

Note

Ignore -item 1- and -arrows-.

Note

Place a clean cloth underneath the ATF cooler to catch the escaping ATF.

– Loosen the clamp -1- and remove the coolant hose.

– Remove the bolts -arrows-, remove the ATF cooler, and press it to the side.

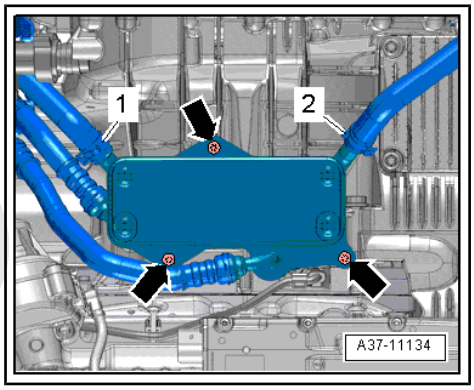

Note

Ignore -item 2-.

– Slide the retainer toward the rear -arrow- and press down the release in order to disconnect the connector -2- for the steering gear.

– Disconnect the connector -1-.

Protected by copyright. Copying for private or commercial purposes, in part or in whole, is not permitted unless authorised by AUDI AG. AUDI AG does not guarantee or accept any liability with respect to the correctness of information in this document. Copyright by AUDI AG.

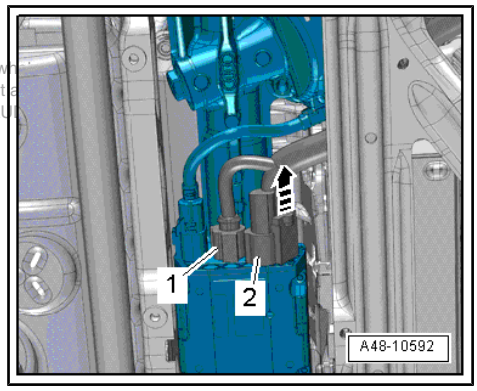

– Free up the Engine Speed Sensor - G28- wire on the transmission.

– Remove the lower cover -1- from the transmission -arrow-.

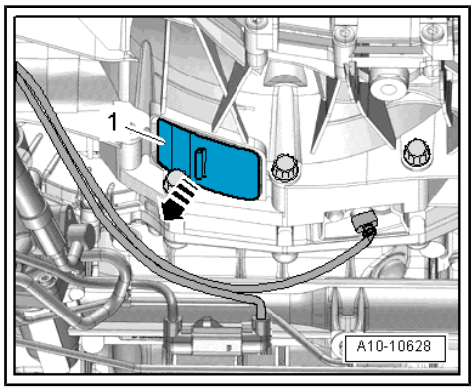

cardiagn.com

– Remove the cap from the vibration damper.

– Counterhold the crankshaft with an angled wrench -1- to loosen the drive plate bolts on the central bolt on the vibration damper.

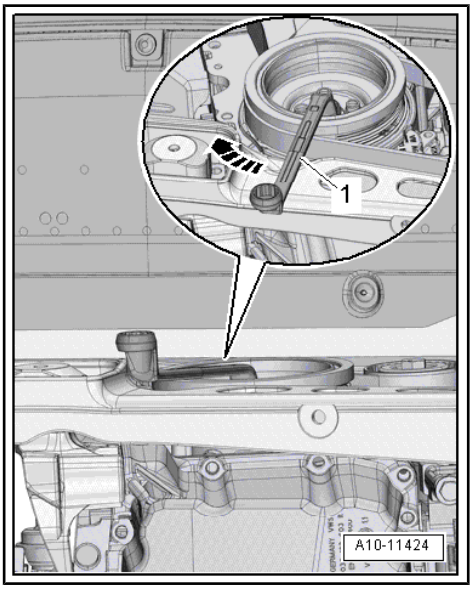

Note

When mounting, turn the crankshaft only in the direction of engine rotation -arrow-.

– Remove the 6 drive plate bolts -arrow- while turning the crankshaft 60° further in the direction of engine rotation.

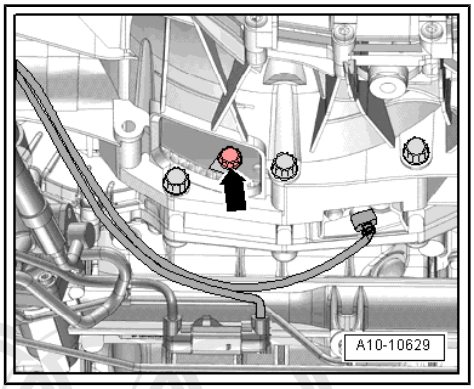

Note

Depending on the version, there are also three bolts.

– Remove the starter bolt -1-.

– Remove the starter from the transmission and leave it in the installation position.

– Remove the remaining bolts -6 through 10- that attach the engine to the transmission.

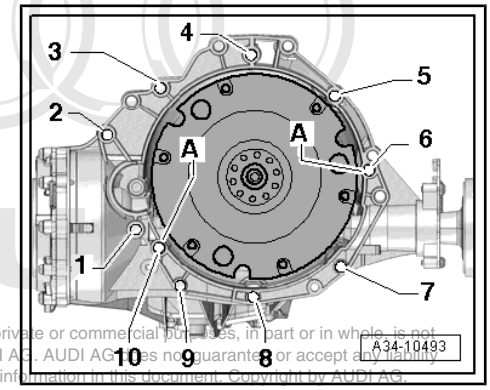

Protected by copyright. Copying for private or commercial purposes, in part or in whole, is not permitted unless authorised by AUDI AG. AUDI AG does not guarantee or accept any liability with respect to the correctness of information in this document. Copyright by AUDI AG.

– Place the Engine and Gearbox Jack - VAS6931- with the Gearbox Support - T40173- under the transmission and secure with the tensioning strap -1- as shown in the illustration.

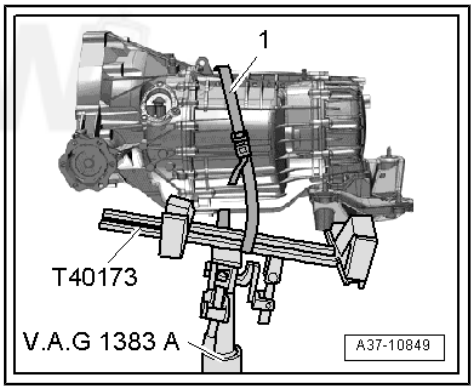

cardiagn.com

Note

The Gearbox Support - T40173- is not illustrated.

– Remove the bolts from the tunnel crossmember -arrows-.

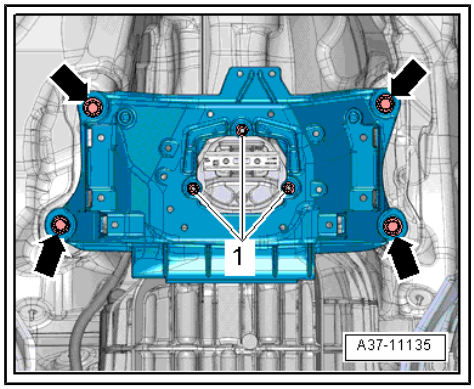

Note

Ignore -item 1-.

– Press the transmission off the engine and lower it carefully using the Engine and Gearbox Jack - VAS6931- .

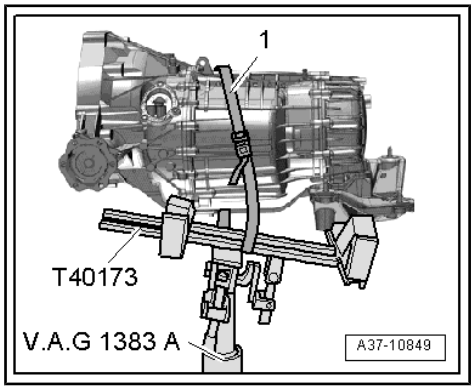

2.1.4 Transmission, Removing, Vehicles with 6-Cylinder TDI 3.0L Engine

Special tools and workshop equipment required

- Pry Lever - 80-200-
- Hose Clamps - Up To 25 mm - 3094-
- Engine and Gearbox Jack - VAS6931-
- Engine Bung Set - VAS6122-
- Gearbox Support - T40173-
- Crankshaft Turning Tool - T40257-
- Wrench - 21mm - T40263-
- Adapter -T40314-
- Tensioning Strap - T10038-

Removing

– Position the front wheels so they are straight.

ed by copyright. Copying for private or commercial purposes, in part or in whole, is not ed unless authorised by AUDI AG. AUDI AG does not guarantee or accept any liability with respect to the correctness of information in this document. Copyright by AUDI AG.

Caution

Risk of damaging electronic components when disconnecting the battery.

- ***Complete the steps for disconnecting the battery.***

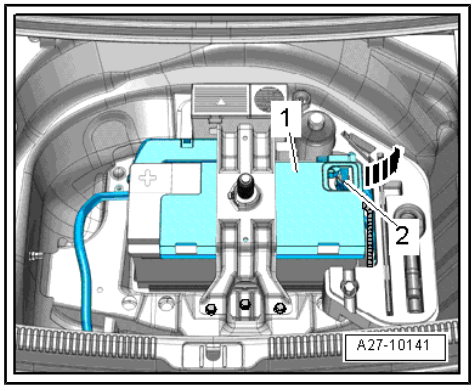

– Disconnect the battery ground cable -2-. Refer to ⇒ Electrical Equipment; Rep. Gr. 27 ; Battery; Battery, Disconnecting and Connecting .

cardiagn.com

– Remove the front wheels. Refer to ⇒ Suspension, Wheels, Steering; Rep. Gr. 44 ; Wheels and Tires .

– Remove left and right drive axle cover -1- in the wheel housing. Refer to ⇒ Body Exterior; Rep. Gr. 66 ; Noise Insulation; Overview - Noise Insulation .

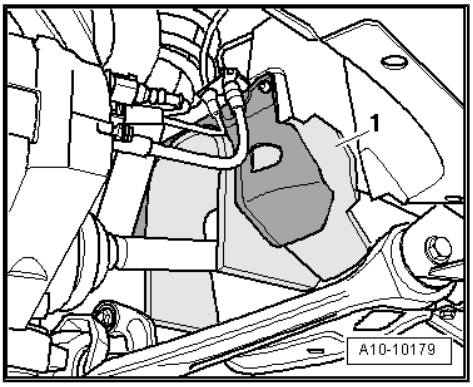

– Remove the left and right bolts -arrows- and the heat shield -1-.

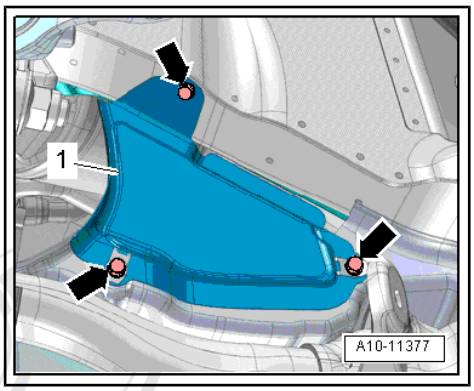

– Remove the noise insulations -1 and 2-. Refer to ⇒ Body Exterior; Rep. Gr. 66 ; Noise Insulation; Noise Insulation, Removing and Installing .

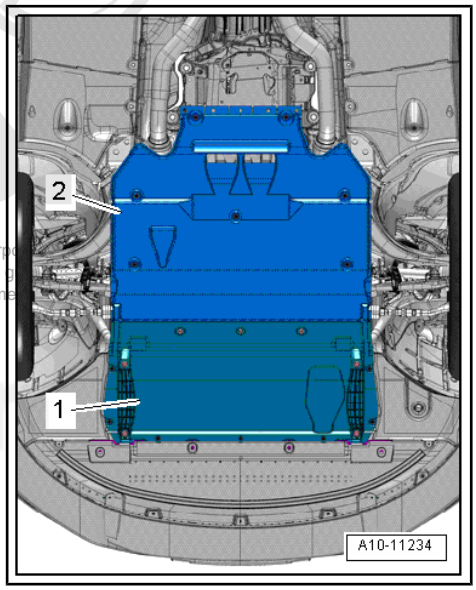

Protected by copyright. Copying for private or commercial purp
permitted unless authorised by AUDI AG. AUDI AG does not g
with respect to the correctness of information in this docum

– Remove the particulate filter and the front exhaust pipe. Refer to ⇒ Rep. Gr. 26 ; Exhaust Pipes/Mufflers; Overview - Muffler .

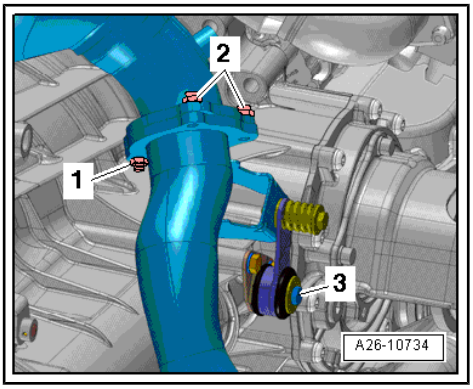

cardiagn.com

– Drain the coolant. Refer to ⇒ Rep. Gr. 19 ; Cooling System/ Coolant; Coolant, Draining and Filling .

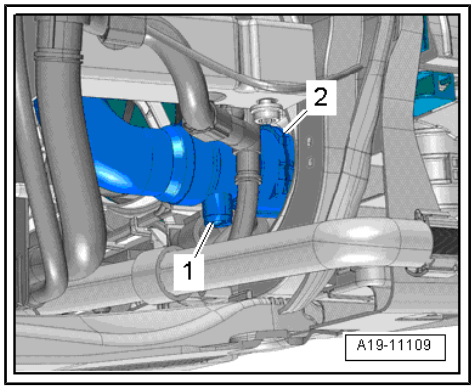

Note

Lay a cloth under the separating point to prevent ATF from leaking out.

– Remove the bolt -arrow- and pull the ATF pipes off the transmission.

– Seal the open lines and connections with clean plugs from the Engine Bung Set - VAS6122- .

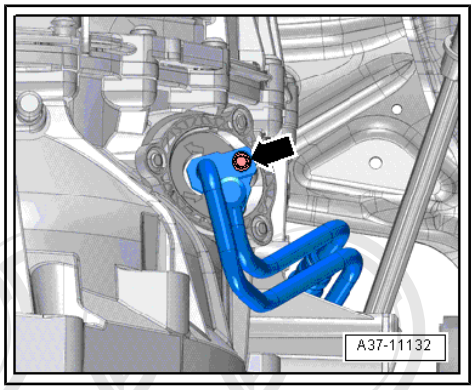

– Remove the bolts -2 through 5- connecting the engine to transmission. They are accessible from above.

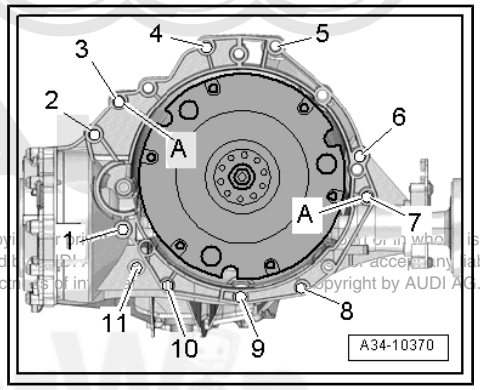

Protected by copyright. Copyright or in whole is not permitted unless authorised by AUDI AG. AUDI AG accepts any liability with respect to the correctness of information. Copyright by AUDI AG.

– Move the tower brace into its installed position and then tighten the bolts hand-tight.

– Secure the engine with the Tensioning Strap - T10038- as illustrated.

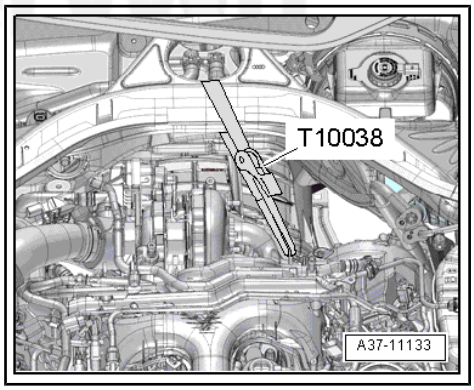

cardiagn.com

– Remove the bolts -arrows- and then remove the heat shield from the right drive axle.

– Remove the left and right drive axle from the transmission flange shaft. Refer to ⇒ Suspension, Wheels, Steering; Rep. Gr. 40 ; Drive Axle; Drive Axle, Removing and Installing .

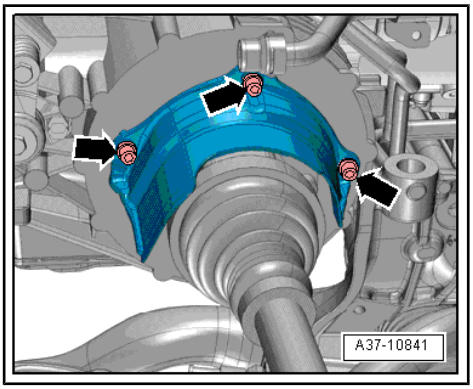

– Remove the ball socket -1- on the selector lever cable from the selector shaft lever using the Pry Lever - 80-200- .

– Remove the bolts -2- from the cable mounting bracket.

– Free up the selector lever cable.

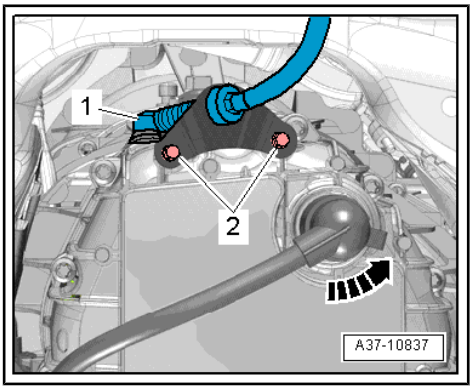

Caution

There is a risk of destroying the transmission control module (Mechatronic) with static discharge.

- *Always "discharge" the static electricity before working with electric connectors. Do this by touching a grounded object, for example vehicle ground, the vehicle or the hoist.*
- *Do not touch contacts in transmission connector with hands.*

– Turn the twist lock counter-clockwise -arrow- and disconnect the connector from the transmission.

– Remove the steering intermediate shaft from the steering gear and the push the splines together. Refer to ⇒ Suspension, Wheels, Steering; Rep. Gr. 48 ; Steering Column; Steering Intermediate Shaft, Removing and Installing .

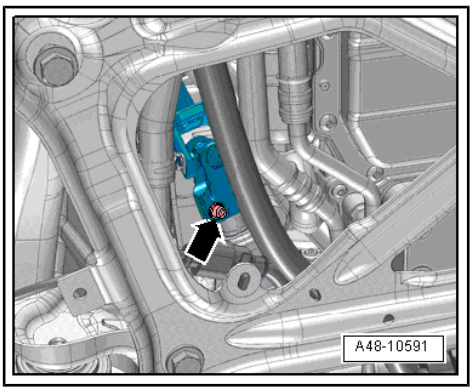

Protected by copyright. Copying for private or commercial purposes, in part or in whole, is not permitted unless authorised by AUDI AG. AUDI AG does not guarantee or accept any liability with respect to the correctness of information in this document. Copyright by AUDI AG.

cardiagn.com

– Remove the subframe crossbrace. Refer to ⇒ Suspension, Wheels, Steering; Rep. Gr. 40 ; Subframe; Subframe Crossbrace, Removing and Installing .

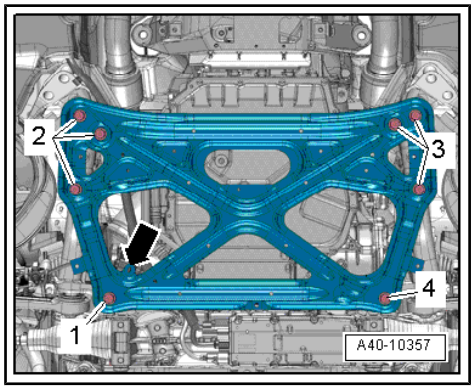

Caution

The suspension components could be damaged.

- *Do not rest the vehicle on its wheels if the subframe mount, the steering gear or the subframe crossbrace are not installed correctly.*

Note

Place a clean cloth underneath the ATF cooler to catch the escaping ATF.

– Loosen the hose clamps -1, 2- to remove the coolant hoses.

– Remove the bolts -arrows- and remove the ATF cooler.

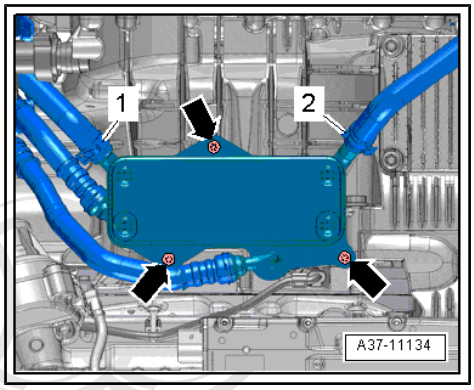

– Slide the retainer toward the rear in direction of -arrow- and press down the release in order to disconnect the connector -2- for the steering gear.

– Disconnect the connector -1-.

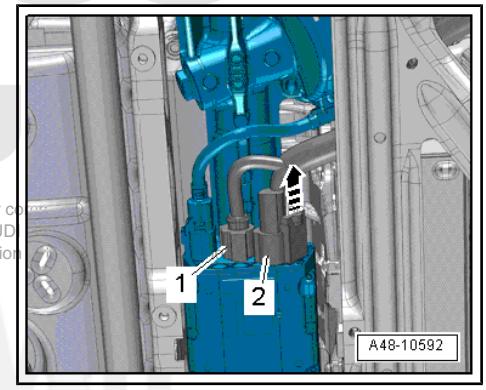

Protected by copyright. Copying for private or c
permitted unless authorised by AUDI AG. AUD
with respect to the correctness of informatio

– Free up the Engine Speed Sensor - G28- wire on the transmission.

– Remove the lower cover -1- from the transmission in direction of -arrow-.

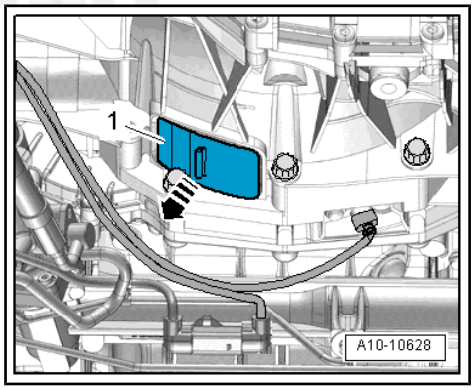

cardiagn.com

– Connect the tools the as illustrated.

1 - Socket 21 mm for 1/2"-drive

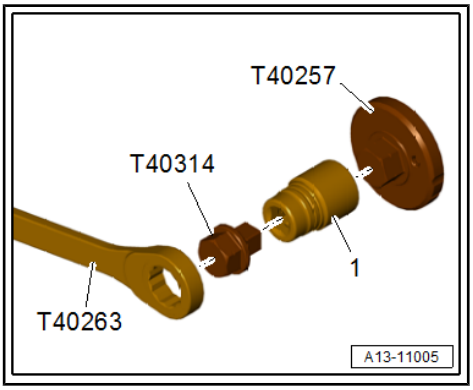

– Counterhold the crankshaft to loosen the dual mass flywheel bolts.

Note

When mounting, turn the crankshaft only in the direction of engine rotation -arrow-.

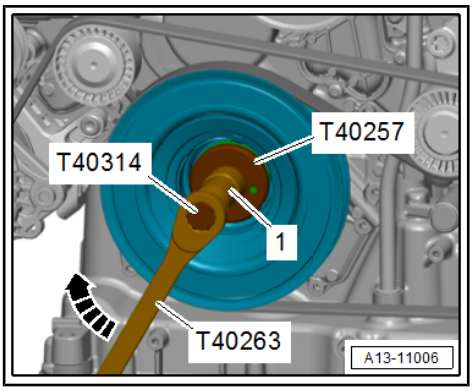

– Remove the 6 drive plate bolts -arrow- while turning the crankshaft 60° further in the direction of engine rotation.

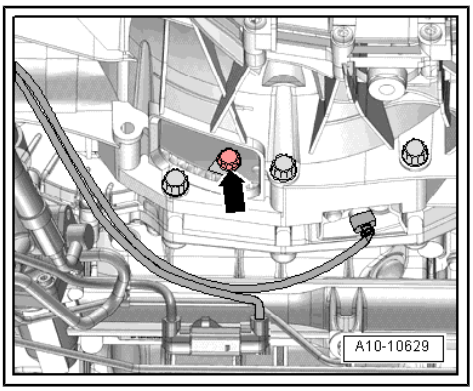

– Remove the starter bolt -1-.

– Remove the starter from the transmission and leave it in the installation position.

– Remove the remaining bolts -6 through 11- that attach the engine to the transmission.

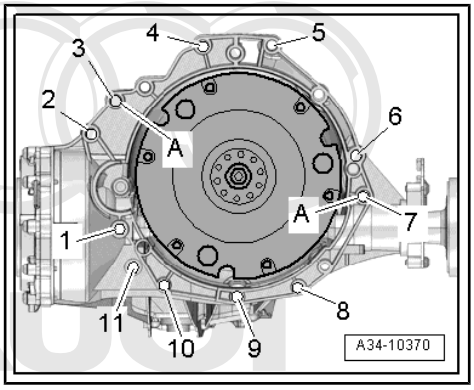

Protected by copyright. Copying for private or commercial purposes, in part or in whole, is not permitted unless authorised by AUDI AG. AUDI AG does not guarantee or accept any liability with respect to the correctness of information in this document. Copyright by AUDI AG.

cardiagn.com

– Place the Engine and Gearbox Jack - VAS6931- with the Gearbox Support - T40173- under the transmission and secure with the tensioning strap -1- as shown in the illustration.

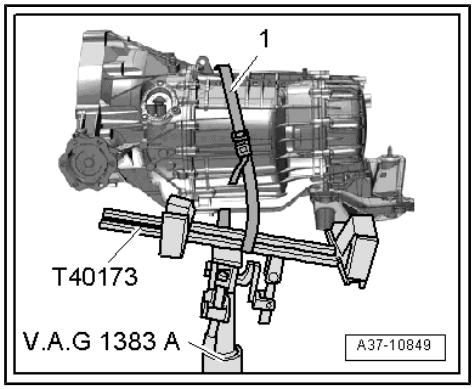

Note

The Gearbox Support - T40173- is not illustrated.

– Remove the bolts from the tunnel crossmember -arrows-.

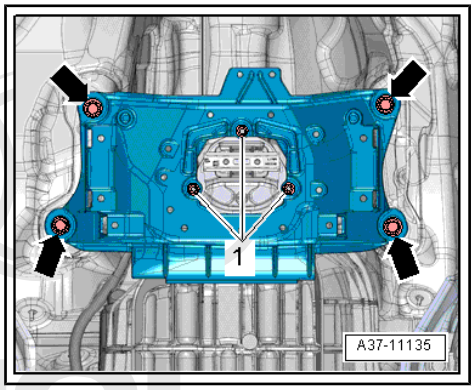

Note

Ignore -item 1-.

– Press the transmission off the engine and lower it carefully using the Engine and Gearbox Jack - VAS6931- .

Protected by copyright. Copying for private or commercial purposes, in part or in whole, is not permitted unless authorised by AUDI AG. AUDI AG does not guarantee or accept any liability with respect to the correctness of information in this document.

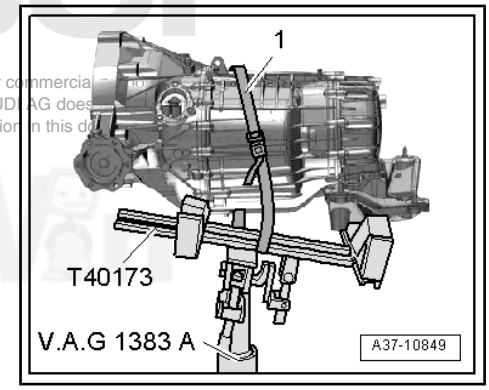

2.2 Transmission, Installing

Special tools and workshop equipment required

- Torque Wrench 1332 Insert - Ring Wrench - 16mm - VAG1332/14-
- Counterhold - Vibration Damper - T10355- for vehicles with 4-cylinder TFSI engine 2.0L engine
- Clutch Module Assembly Aid - T40169-
- Clutch Module Transportation Lock - T40170-

cardiagn.com

Procedure

Note

- *Replace any bolts that were tightened with an additional turn.*
- *Replace self-locking nuts and bolts and seals, gaskets and O-rings.*
- *Secure all hose connections with hose clamps of the same type as those equipped by the factory. Refer to the Parts Catalog.*
- *When installing, bring all cable ties back to same positions.*

Transmission Installation Tightening Specifications. Refer to
⇒ "2.3 Transmission Tightening Specifications", page 65

– Before installing a replacement transmission, always clean out the ATF cooler and ATF pipe/hose line using compressed air (maximum 10 bar (145 psi)). Refer to ⇒ page 79 .

– Clean residue from the threaded holes in the cylinder block using a thread tap before installing.

– When installing a replacement transmission: Install the transmission support, transmission mount and tunnel crossmember in the new transmission; refer to
⇒ "3.1 Overview - Subframe Mount", page 68 .

– Attach the exhaust system retaining strap bracket -1- to the new transmission. Refer to ⇒ Engine Mechanical, Fuel Injection and Ignition; Rep. Gr. 26 ; Exhaust Pipes/Mufflers; Overview - Muffler .

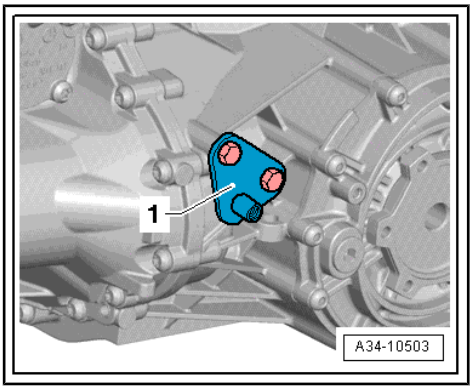

– Mount the transmission onto the Gearbox Support - T40173- and secure it using the tension strap -1- as illustrated.

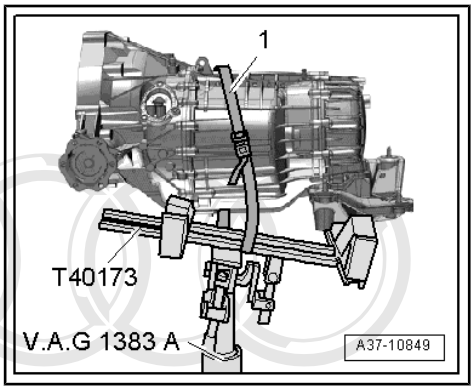

Protected by copyright. Copying for private or commercial purposes, in part or in whole, is not permitted unless authorised by AUDI AG. AUDI AG does not guarantee or accept any liability with respect to the correctness of information in this document. Copyright by AUDI AG.

cardiagn.com

– The following preparations must be made before connecting the engine and transmission:

– Insert the Clutch Module Assembly Aid - T40169- in the transmission housing and the dual mass flywheel from below as shown in the illustration.

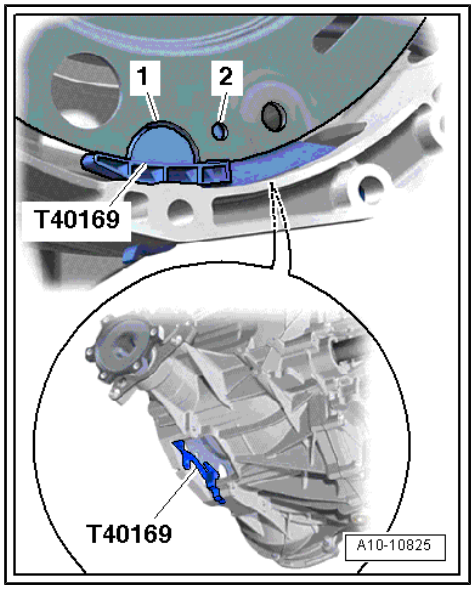

• The tool must grip into the semicircular hole and also in the hole -arrows A and B-.

Note

There is only 1 inspection opening on the circumference; rotate the dual mass flywheel as needed.

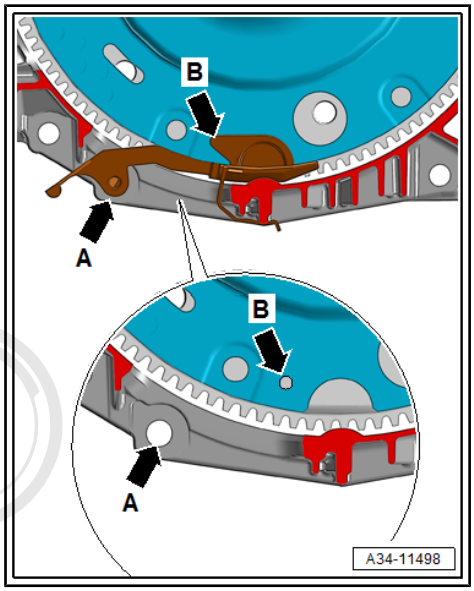

– Insert the Clutch Module Transportation Lock - T40170- in the transmission housing from below and secure it on the flange shaft -1-.

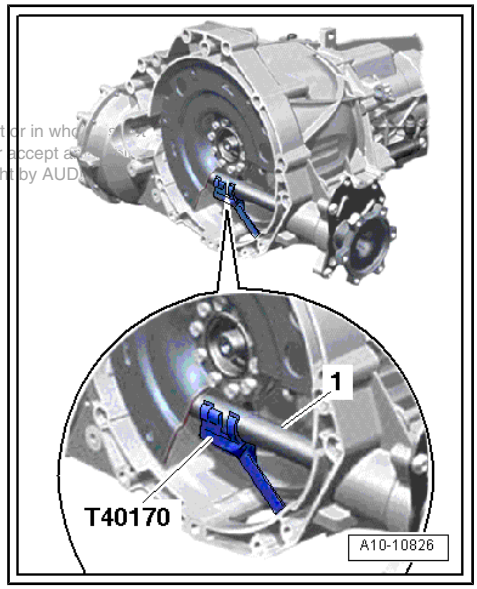

Protected by copyright. Copying for private or commercial purposes, in part or in whole, is not permitted unless authorised by AUDI AG. AUDI AG does not guarantee or accept any liability with respect to the correctness of information in this document. Copyright by AUDI AG.

cardiagn.com

– Check if the alignment sleeves -A- for centering the engine/ transmission are in the cylinder block and insert them if they are not.

– Inspect the aluminum bolts used to connect the engine to the transmission to see if they can be used again and mark them, if necessary. Refer to ⇒ page 67 .

– Position the transmission on the engine and tighten the engine/transmission connecting bolts.

– Remove the Clutch Module Transportation Lock - T40170- and the Clutch Module Assembly Aid - T40169- .

– Tighten the bolts for the tunnel crossmember. Refer to ⇒ "3.1 Overview - Subframe Mount", page 68 .

– Loosen the tensioning strap and guide the Engine and Gearbox Jack - VAS6931- with the Gearbox Support - T40173- under the transmission.

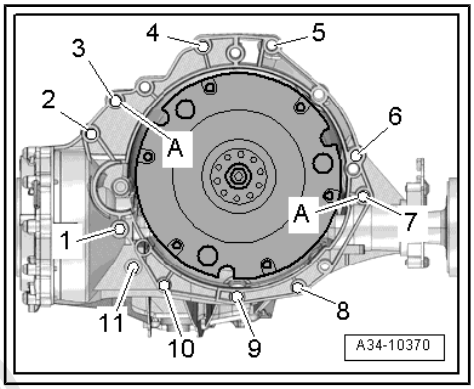

– Turn the crankshaft on the vibration damper 360° in the direction of engine rotation in direction of -arrow-.

Vehicles with a 4-cylinder TDI Engine:

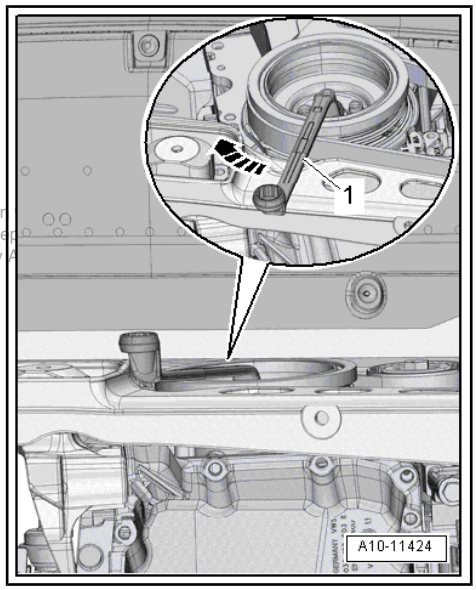

Protected by copyright. Copying for private or commercial purposes, in part or in
permitted unless authorised by AUDI AG. AUDI AG does not guarantee or accep
with respect to the correctness of information in this document. Copyright by A

Vehicles with a 4-Cylinder TFSI Engine:

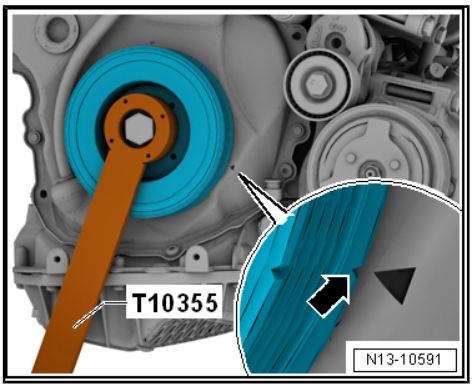

cardiagn.com

Vehicles with 6-cylinder TDI engine

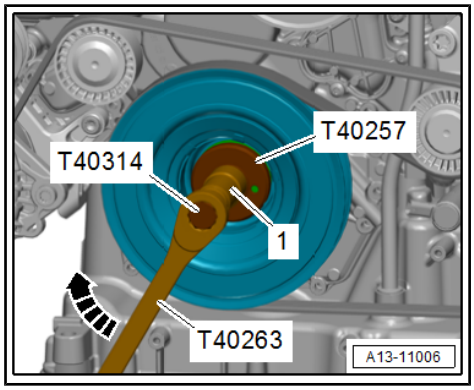

– Remove the Clutch Module Transportation Lock - T40170- .

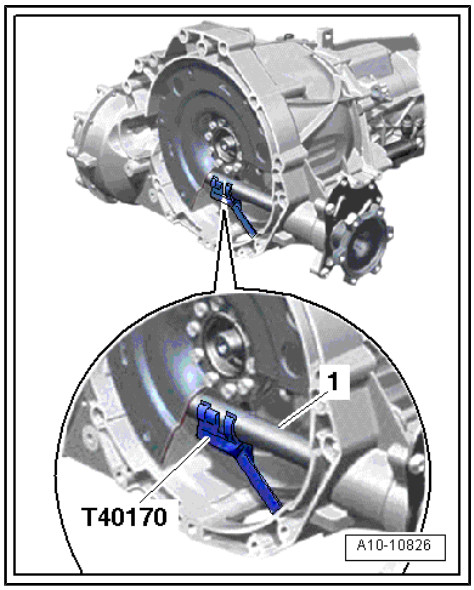

– Remove the Clutch Module Assembly Aid - T40169- .

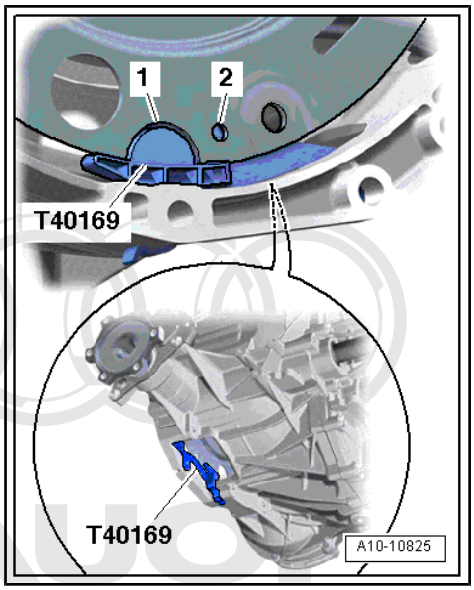

Protected by copyright. Copying for private or commercial purposes, in part or in whole, is not permitted unless authorised by AUDI AG. AUDI AG does not guarantee or accept any liability with respect to the correctness of information in this document. Copyright by AUDI AG.

cardiagn.com

Note

Use the Torque Wrench 1331 Insert - Open Jaw - 13mm - VAG1332/14- to tighten the bolts.

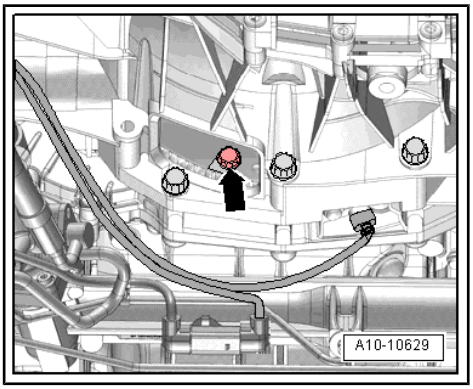

– Tighten the flywheel to the drive plate as follows:

Vehicles with 4-Cylinder TFSI Engine (Three Bolts)

– Install the first bolt -arrow-, tighten to 10 Nm, loosen and then tighten to 2 Nm (hand-tight).
– Turn the crankshaft on the vibration damper 120° in the direction of the engine rotation with a large offset open-end wrench.
– With the crankshaft in this position, install the next bolt and tighten to 60 Nm.
– Turn the crankshaft in another 120° the direction of engine rotation and install the next bolt and tighten to 60 Nm.
– Turn the crankshaft another 120° the direction of engine rotation and tighten the last bolt to 60 Nm.

Vehicle with 6-Cylinder and 4-Cylinder TDI Engine (Six Bolts)

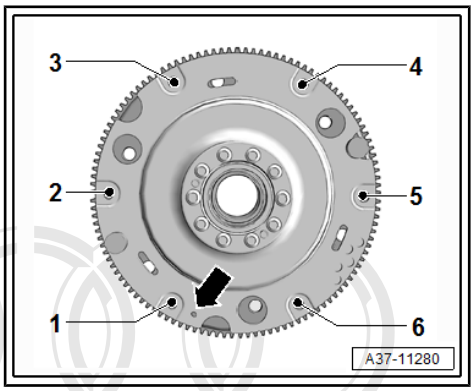

– Install the first bolt -1- and tighten to 10 Nm, loosen and then tighten to 2 Nm (hand-tight).
– Turn the crankshaft on the vibration damper 180° in the direction of engine rotation, install bolt -4- and tighten to 60 Nm.
– Turn the crankshaft another 60° the direction of engine rotation, install bolts -5 and 6- and tighten to 60 Nm.
– Turn the crankshaft another 60° in the direction of engine rotation and tighten bolt -1- to 60 Nm.
– Turn the crankshaft another 60° the direction of engine rotation, install bolts -2 and 3- and tighten to 60 Nm.

All Vehicles:

Install in reverse order of removal. Note the following:

cardiagn.com

Protected by copyright. Copying for private or commercial purposes, in part or in whole, is not permitted unless authorised by AUDI AG. AUDI AG does not guarantee or accept any liability with respect to the correctness of information in this document. Copyright by AUDI AG.

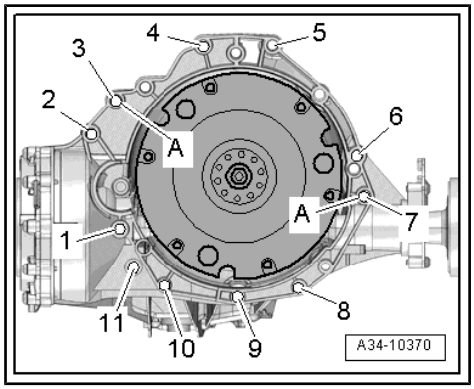

- Tighten the remaining engine/transmission connecting bolts -3 through 5-.
- Connections and routing. Refer to ⇒ Wiring diagrams, Troubleshooting & Component locations.
- Install the ATF lines and the ATF cooler. Refer to ⇒ “6.1 Overview - ATF Circuit”, page 72 .
- Install the subframe crossbrace. Refer to ⇒ Suspension, Wheels, Steering; Rep. Gr. 40 ; Subframe; Overview - Subframe .
- Attach the steering intermediate shaft to the steering gear. Refer to ⇒ Suspension, Wheels, Steering; Rep. Gr. 48 ; Steering Column; Steering Intermediate Shaft, Removing and Installing .
- Install selector lever cable. Refer to ⇒ “1.8 Selector Lever Cable, Removing and Installing”, page 23 .
- Installing the drive axle and drive axle heat shield. Refer to ⇒ Suspension, Wheels, Steering; Rep. Gr. 40 ; Drive Axle; Overview - Drive Axle .
- Install the plenum chamber bulkhead. Refer to ⇒ Body Exterior; Rep. Gr. 50 ; Bulkhead; Overview - Bulkhead .
- Install the exhaust system. Refer to ⇒ Rep. Gr. 26 ; Exhaust Pipes/Mufflers; Overview - Muffler .
- Install the subframe heat shield. Refer to ⇒ Body Exterior; Rep. Gr. 66 ; Molding/Trim/Extensions/Trim Panels; Overview - Heat Shield .
- Install the drive axle covers and noise insulation. Refer to ⇒ Body Exterior; Rep. Gr. 66 ; Noise Insulation; Overview - Noise Insulation .
- Install the front wheels. Refer to ⇒ Suspension, Wheels, Steering; Rep. Gr. 44 ; Wheels and Tires .
- Observe measures after connecting the battery. Refer to ⇒ Electrical Equipment; Rep. Gr. 27 ; Battery; Battery, Disconnecting and Connecting .

Protected by copyright. Copying for private or commercial purposes, in part or in whole, is not permitted unless authorised by AUDI AG. AUDI AG does not guarantee or accept any liability with respect to the correctness of information in this document. Copyright by AUDI AG.

Caution

Danger of causing damage to the control modules due to the excess voltage.

- *Do not use a charger to jump start!*

- Check and adjust the selector lever cable. Refer to ⇒ “1.9.1 Selector Lever Cable, Checking and Adjusting”, page 27 .
- Fill the engine coolant. Refer to ⇒ Rep. Gr. 19 ; Cooling System/Coolant; Coolant, Draining and Filling .
- Check the ATF level and correct if necessary. Refer to ⇒ “7.1 ATF Level, Checking”, page 81 .
- After repairing the transmission, check the axle oil level in the front final drive and adjust if necessary. Refer to ⇒ “2.1 Gear Oil, Checking Level”, page 108 .

cardiagn.com

2.3 Transmission Tightening Specifications

Note

- *The tightening specifications apply only to lightly greased, oiled, phosphated or blackened nuts and bolts.*
- *Additional lubricant such as engine or transmission oil may be used, but do not use graphite lubricant.*
- *Do not use any ungreased parts.*
- *Tightening specification tolerance ± 15%.*

Component		Nm
Bolts and nuts	M6	9
	M7	15
	M8	20
	M10	40
	M12	65
Dual-mass flywheel to drive plate		60 [1]
• [1] Replace the bolts.		

Note

The bolt -2- secures the starter to the transmission for 4 cylinder vehicles and also has a spacer sleeve -arrow-.

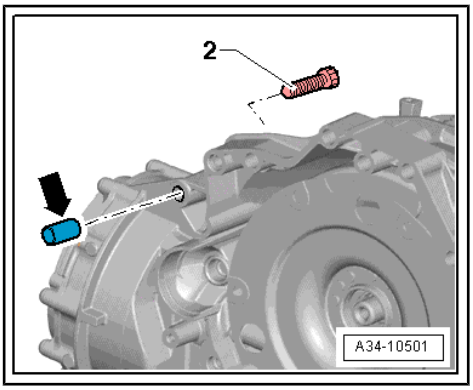

Protected by copyright. Copying for private or commercial purposes, in part or in whole, is not permitted unless authorised by AUDI AG. AUDI AG does not guarantee or accept any liability with respect to the correctness of information in this document. Copyright by AUDI AG.

cardiagn.com

Mounting the Multitronic 0AW FWD to a 4-Cylinder TFSI Engine 2.0L

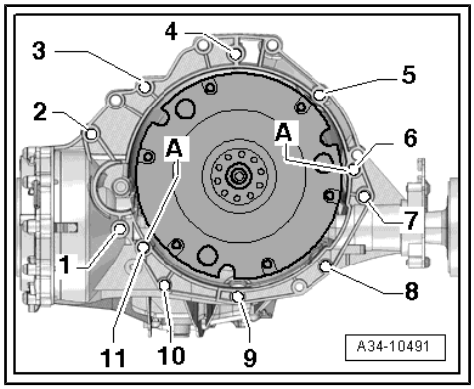

Item	Bolt	Nm
1 [1]	M10 x 50 [2]	65
2 [3], 7	M12 x 100 [4]	30 + 90°
3 [5], 6	M12 x 75 [4]	30 + 90°
4, 5 [5]	M12 x 120 [4]	30 + 90°
8 to 10	M10 x 75 [4]	15 + 90°
11	M12 x 50 [4]	30 + 90°
A	Alignment sleeves for centering	

- [1] also secures the starter.
- [2] Bolt strength rating 10.9 There is no limit to the number of times the steel bolt can be used again.
- [3] also secures that starter; with an additional spacer sleeve between the starter and the transmission.
- [4] The aluminum bolts can be used twice. Refer to ⇒ page 67 .
- [5] also secures the wire bracket.

Mounting the multitronic 0AW FWD to a 4-cylinder TFSI engine 2.0L

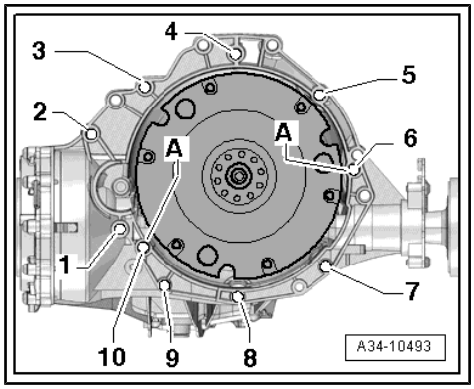

Item	Bolt	Nm
1 [1]	M10x50 [2]	65
2 [3]	M12x100 [4]	30 + 90°
3 [5], 6	M12x75 [4]	30 + 90°
4, 5 [5]	M12 x 120 [4]	30 + 90°
7 to 9	M10x75 [4]	15 +90°
10	M12 x 50 [4]	30 + 90°
A	Alignment sleeves for centering	

- [1] Mount the auxiliary adapter
- [2] Bolt strength rating 10.9. There is no limit to the number of times steel bolts may be used.
- [3] also secures that starter; with an additional spacer sleeve between the starter and the transmission.
- [4] The aluminum bolts can be used twice. Refer to ⇒ page 67 .
- [5] also secures the wire bracket.

Protected by copyright. Copying for private or commercial purposes, in part or in whole, is not permitted unless authorised by AUDI AG. AUDI AG does not guarantee or accept any liability with respect to the correctness of information in this document. Copyright by AUDI AG.

cardiagn.com

Mounting the multitronic 0AW FWD to a 6-cylinder FSI 2.8L and 2.5L engine and 6-cylinder TDI 3.0L engine

Item	Bolt	Nm
1 1)	M10x50 2)	65
2 3) to 6	M12x100 4)	30 + 90°
7	M12x125 4)	30 + 90°
8, 11	M10x60 4)	15 + 90°
9, 10	M10x95 4)	15 + 90°
A	Alignment sleeves for centering	

- 1) Mount the auxiliary adapter
- 2) Bolt strength rating 10.9 There is no limit to the number of times the steel bolt can be used again.
- 3) Mount the auxiliary adapter.
- 4) The aluminum bolts can be used twice. Refer to ⇒ page 67 .

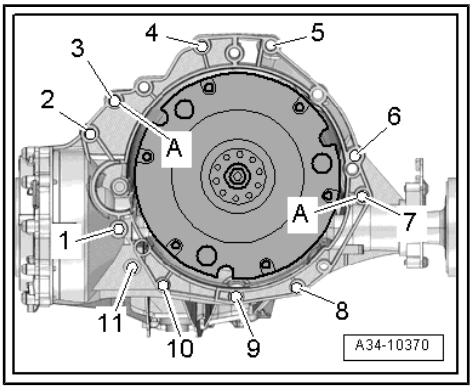

Protected by copyright. Copying for private or commercial purposes, in part or in whole, is not permitted unless authorised by AUDI AG. AUDI AG does not guarantee or accept any liability with respect to the correctness of information in this document. Copyright by AUDI AG.

- The aluminum bolts may be used two times. Therefore, the bolts must be marked with two notches “X” made by a chisel after they have be used the first time -arrow-.
- To prevent damaging the bolts when marking them, do not clamp them in a vise. Insert the bolt using a 14 mm socket with a $^{1}/_{2}$ drive, which is inserted in to the vise, as illustrated.
- Bolts marked with an “X” may not be used again.

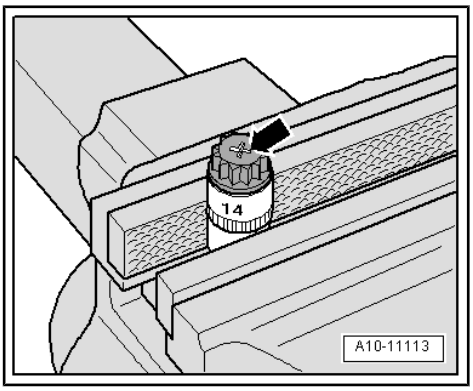

cardiagn.com

3 Subframe Mount

⇒ “3.1 Overview - Subframe Mount”, page 68

⇒ “3.2 Tunnel Crossmember, Removing and Installing”, page 68

3.1 Overview - Subframe Mount

1 - Nut
- ❑ 20 Nm
- ❑ Quantity: 3

2 - Bolt
- ❑ 70 Nm
- ❑ Quantity: 4

3 - Bolt
- ❑ 40 Nm

4 - Nut
- ❑ 20 Nm
- ❑ Quantity: 4

5 - Transmission Support

6 - Transmission Mount
- ❑ Removing and Installing. Refer to ⇒ Rep. Gr. 10 ; Subframe Mount; Transmission Mount, Removing and Installing .

7 - Lower Stop
- ❑ For the transmission mount

8 - Bolt
- ❑ 20 Nm +90°
- ❑ Quantity: 2
- ❑ Replacing

9 - Tunnel Crossmember
- ❑ Removing and installing. Refer to ⇒ “3.2 Tunnel Crossmember, Removing and Installing”, page 68 .

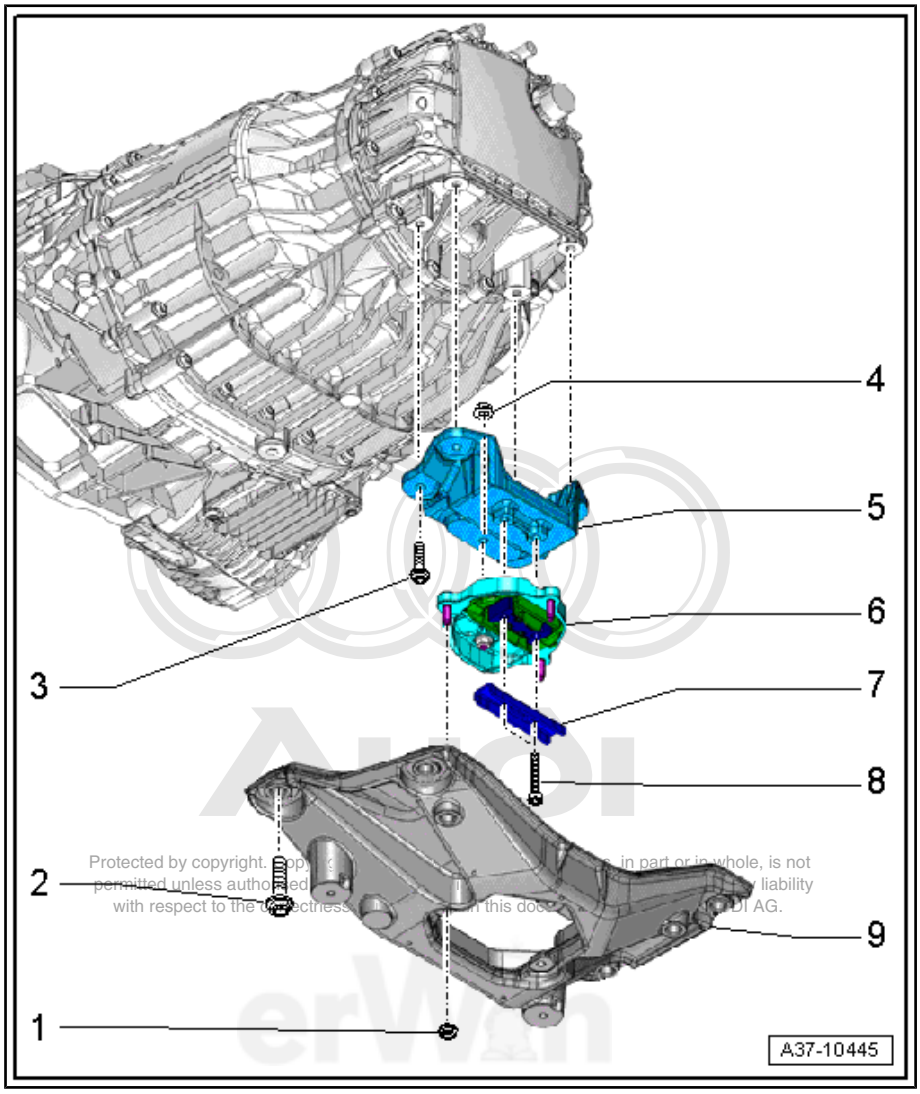

3.2 Tunnel Crossmember, Removing and Installing

Special tools and workshop equipment required

- Engine and Gearbox Jack - VAS6931-
- Engine/Gearbox Jack - Gearbox Support - T10337-

cardiagn.com

Removing

– Remove the rear noise insulation -2-. Refer to ⇒ Body Exterior; Rep. Gr. 66 ; Noise Insulation; Noise Insulation, Removing and Installing .

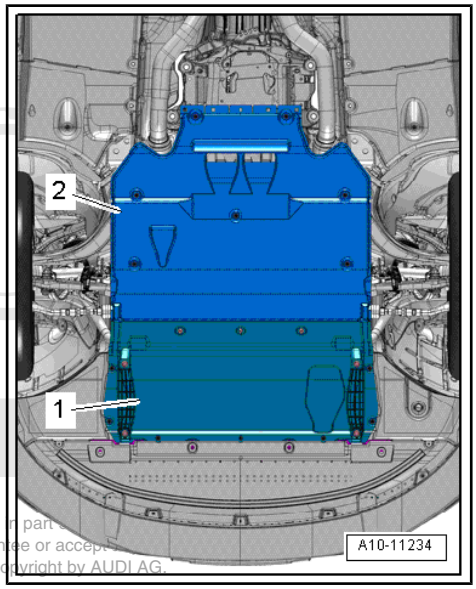

Protected by copyright. Copying for private or commercial purposes, in part or in whole, is not permitted unless authorised by AUDI AG. AUDI AG does not guarantee or accept any liability with respect to the correctness of information in this document. Copyright by AUDI AG.

– Mount the engine and gearbox jack -VAS6931- thrust plate together with the lower Engine/Gearbox Jack - Gearbox Support - T10337- on the tunnel crossmember.

– Lift the transmission slightly using the Engine and Gearbox Jack - VAS6931- .

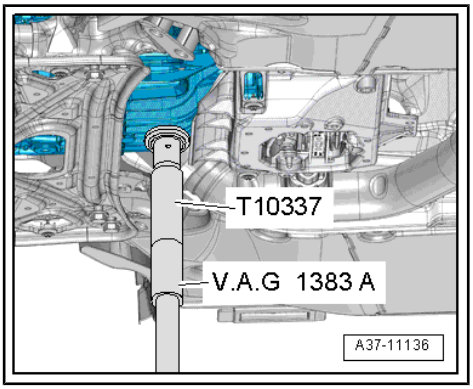

WARNING

There is the risk of an accident.

- *The Engine and Gearbox Jack - VAS6931- may only be used during assembly and must not sit unsupervised under the vehicle.*

Note

The Gearbox Support - T40173- is not illustrated.

– Remove the bolts -arrows-.

– Remove the nuts -1- and remove the tunnel crossmember.

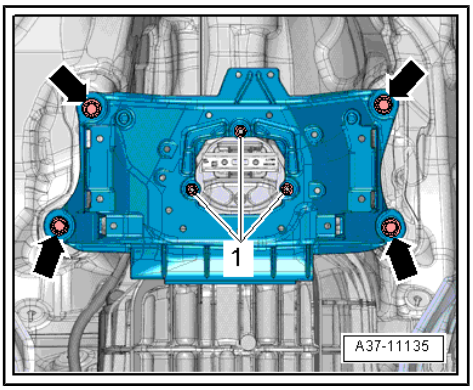

Installing

Install in reverse order of removal.

Tightening Specifications

- Refer to ⇒ “3.1 Overview - Subframe Mount”, page 68
- Refer to ⇒ Body Exterior; Rep. Gr. 66 ; Noise Insulation; Overview - Noise Insulation .

cardiagn.com

4 Transmission, Transporting

Description of the Procedure. Refer to ⇒ Continuously Variable Transmission Internal Components; Rep. Gr. 37 ; Transmission, Transporting .

cardiagn.com

Protected by copyright. Copying for private or commercial purposes, in part or in whole, is not permitted unless authorised by AUDI AG. AUDI AG does not guarantee or accept any liability with respect to the correctness of information in this document. Copyright by AUDI AG.

5 Securing on Engine and Transmission Holder

Description of the Procedure. Refer to ⇒ Continuously Variable Transmission Internal Components; Rep. Gr. 37 ; Securing on Engine and Transmission Holder .

cardiagn.com

Protected by copyright. Copying for private or commercial purposes, in part or in whole, is not permitted unless authorised by AUDI AG. AUDI AG does not guarantee or accept any liability with respect to the correctness of information in this document. Copyright by AUDI AG.

6 ATF Circuit

⇒ “6.1 Overview - ATF Circuit”, page 72
⇒ “6.2 ATF Cooler, Removing and Installing”, page 73
⇒ “6.3 ATF Filter, Removing and Installing”, page 75
⇒ “6.4 ATF Pipes, Removing and Installing”, page 77

6.1 Overview - ATF Circuit

ATF Lines, ATF Cooler, ATF Filter

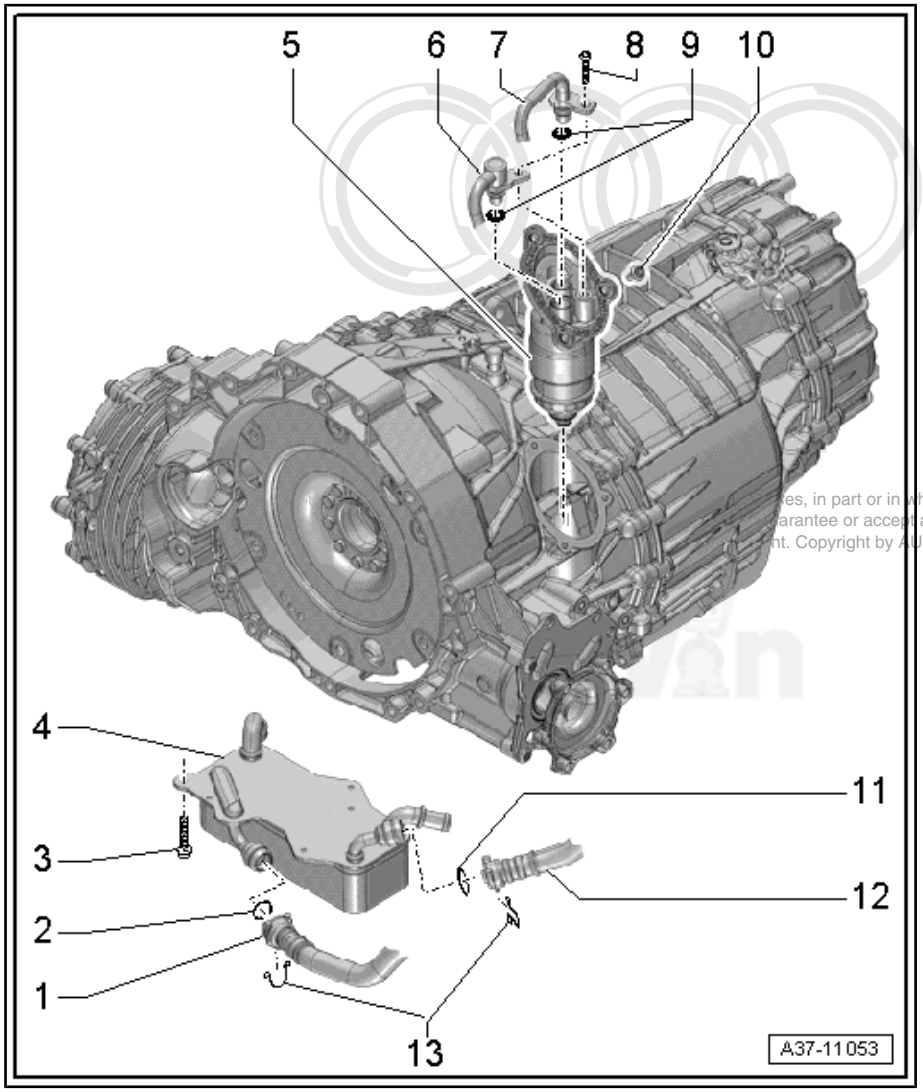

1 - ATF Pipe/Hose Line

- ❑ Removing and installing. Refer to ⇒ “6.4 ATF Pipes, Removing and Installing”, page 77 .

2 - O-Ring

- ❑ Replacing
- ❑ Coat with ATF before installing

3 - Bolt

- ❑ 8 Nm

4 - ATF Cooler

- ❑ Removing and installing. Refer to ⇒ “6.2 ATF Cooler, Removing and Installing”, page 73 .

5 - ATF Filter

- ❑ Check for cracks
- ❑ Removing and installing. Refer to ⇒ “6.3 ATF Filter, Removing and Installing”, page 75 .

6 - ATF Pipe/Hose Line

- ❑ Removing and installing. Refer to ⇒ “6.4 ATF Pipes, Removing and Installing”, page 77 .

7 - ATF Pipe/Hose Line

- ❑ Removing and installing. Refer to ⇒ “6.4 ATF Pipes, Removing and Installing”, page 77 .

8 - Bolt

- ❑ 20 Nm
- ❑ First insert the ATF pipes with new O-rings by hand as far as the stop

9 - O-Rings

- ❑ Replacing
- ❑ Coat with ATF before installing

10 - Bolt

- ❑ 5 Nm +90°

cardiagn.com

- ❑ Replacing

11 - O-Ring

- ❑ Replacing
- ❑ Coat with ATF before installing

12 - ATF Pipe/Hose Line

- ❑ Removing and installing. Refer to ⇒ "6.4 ATF Pipes, Removing and Installing", page 77 .

13 - Clips

Fill and Check Plugs

1 - ATF Fill and Check Plug

- ❑ 30 Nm
- ❑ Depending on the version, different ATF inspection plugs are installed. Always pay attention to the allocation according to the transmission codes in the Parts Catalog.
- ❑ Replacing

2 - ATF Oil Level Tube

- ❑ Always replace if removed

3 - O-Ring

- ❑ Not available individually
- ❑ Must be inserted completely into the oil level tube groove

4 - Fill and Check Plug

- ❑ 30 Nm
- ❑ For the transmission fluid inside the front final drive
- ❑ Replacing

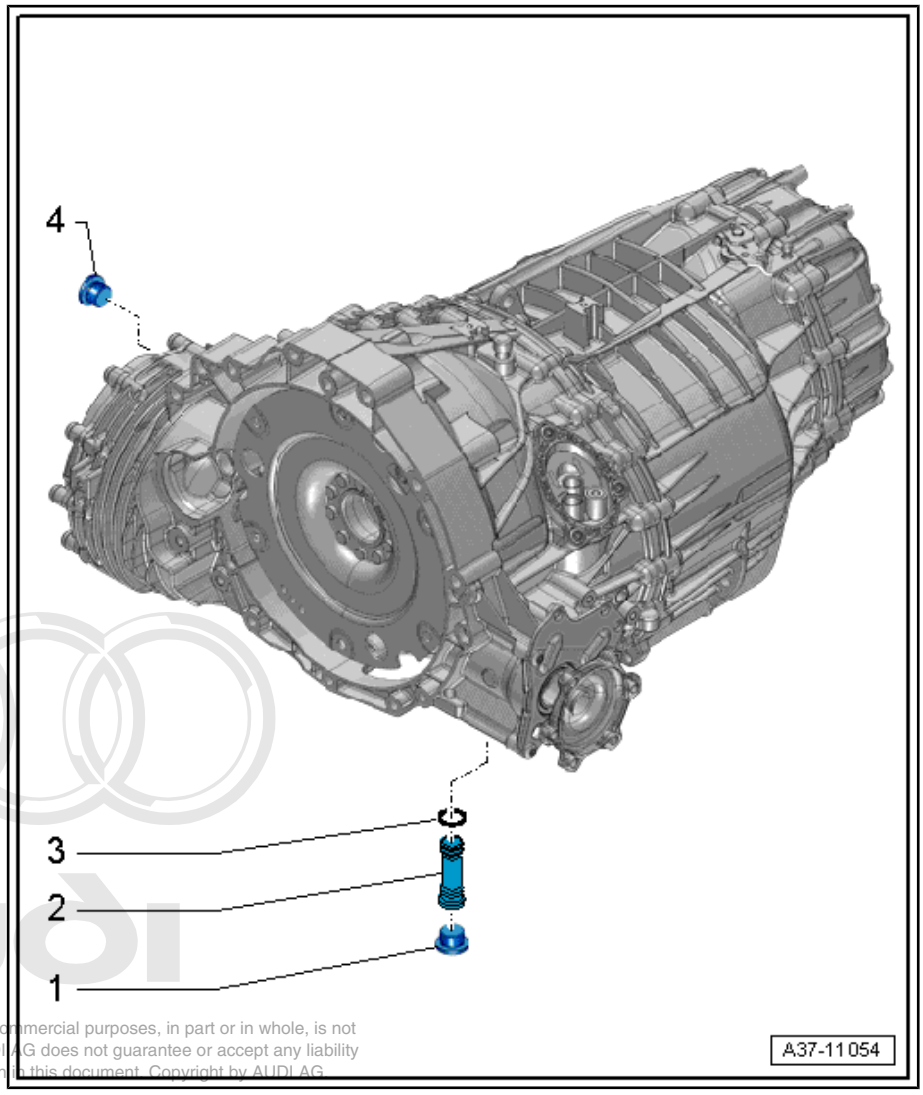

Protected by copyright. Copying for private or commercial purposes, in part or in whole, is not permitted unless authorised by AUDI AG. AUDI AG does not guarantee or accept any liability with respect to the correctness of information in this document. Copyright by AUDI AG.

cardiagn.com

6.2 ATF Cooler, Removing and Installing

Special tools and workshop equipment required

- ♦ Hose Clamps - Up To 25 mm - 3094-
- ♦ Engine Bung Set - VAS6122-
- ♦ Hose Clip Pliers - VAS6362-
- ♦ Used Oil Collection and Extraction Unit - SMN372500-

Removing

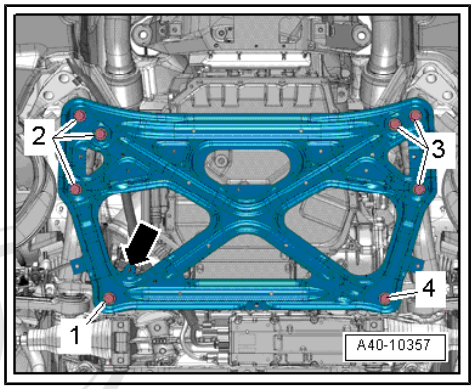

Note

- *General Repair Instructions. Refer to*
  ⇒ "3.3 General Repair Information", page 5 .
- *Clean working conditions for the automatic transmission. Refer to*
  ⇒ "3.1 Guidelines for Clean Working Conditions", page 5 .

– Remove the subframe crossbrace. Refer to ⇒ Suspension, Wheels, Steering; Rep. Gr. 40 ; Subframe; Subframe Crossbrace, Removing and Installing .

Caution

The suspension components could be damaged.

- ***Do not rest the vehicle on its wheels if the subframe mount, the steering gear or the subframe crossbrace are not installed correctly.***

Protected by copyright. Copying for private or commercial purposes, in part or in whole, is not permitted unless authorised by AUDI AG. AUDI AG does not guarantee or accept any liability with respect to the correctness of information in this document. Copyright by AUDI AG.

– Place the Used Oil Collection and Extraction Unit -SMN372500- under the transmission.

– Remove the clips -arrows- and disconnect the ATF hose lines.

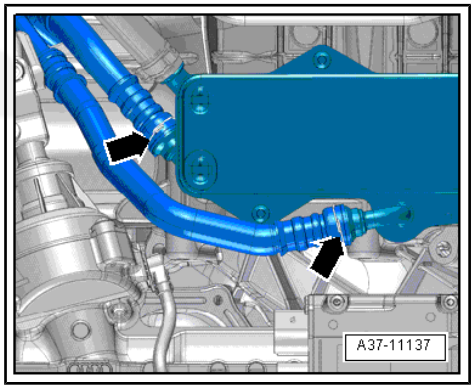

cardiagn.com

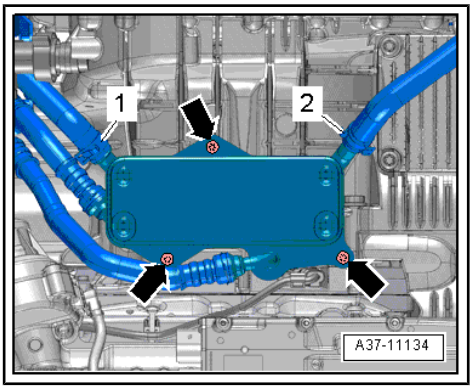

Note

Place a clean cloth underneath the ATF cooler to catch the escaping ATF.

– Loosen the hose clamps -1 and 2-, then clamp off the coolant hoses with the hose clamp - up to 25mm -3094- and remove them.

– Remove the bolts -arrows- and remove the ATF cooler.

– Seal the open lines and connections with clean plugs from the Engine Bung Set - VAS6122- .

Caution

Risk of contamination.

- *There is still a little bit of ATF and Coolant in the ATF cooler.*

Installing

Install in reverse order of removal. Note the following:

Note

Secure all hose connections with hose clamps of the same type as those equipped by the factory. Refer to the Parts Catalog.

Caution

Danger of causing damage to the transmission.

- *Remove all the plugs on the ATF pipes and on the transmission that were installed during removal.*
- *The ATF cooling function will not work and the transmission will be damaged if the plugs are forgotten.*

– Fill the engine coolant. Refer to ⇒ Rep. Gr. 19 ; Cooling System/Coolant; Coolant, Draining and Filling .

– Check the ATF level and correct if necessary
⇒ “7.1 ATF Level, Checking”, page 81 .

Tightening Specifications

- Refer to ⇒ “6.1 Overview - ATF Circuit”, page 72
- Crossbrace. Refer to ⇒ Suspension, Wheels Steering; Rep. Gr. 40 ; Subframe; Overview - Subframe .

6.3 ATF Filter, Removing and Installing

Special tools and workshop equipment required

- Engine Bung Set - VAS6122-
- Used Oil Collection and Extraction Unit - SMN372500-

Protected by copyright. Copying for private or commercial purposes, in part or in whole, is not permitted unless authorised by AUDI AG. AUDI AG does not guarantee or accept any liability with respect to the correctness of information in this document. Copyright by AUDI AG.

cardiagn.com

Note

For vehicles with 2.5L FSI and 2.8L FSI engines the transmission must be removed in order to remove the ATF filter. Refer to ⇒ "2.1.2 Transmission, Removing, 6-Cylinder FSI 2.5L/2.8L Engine", page 39 .

Removing

Note

- *General Repair Instructions. Refer to ⇒ "3.3 General Repair Information", page 5 .*
- *Clean working conditions for the automatic transmission. Refer to ⇒ "3.1 Guidelines for Clean Working Conditions", page 5 .*
- *Before installing a replacement transmission, always clean out the ATF cooler and ATF pipe/hose line using compressed air (maximum 10 bar (145 psi)) ⇒ , page 79 .*

– Remove the rear noise insulation -2-. Refer to ⇒ Body Exterior; Rep. Gr. 66 ; Noise Insulation; Noise Insulation, Removing and Installing .

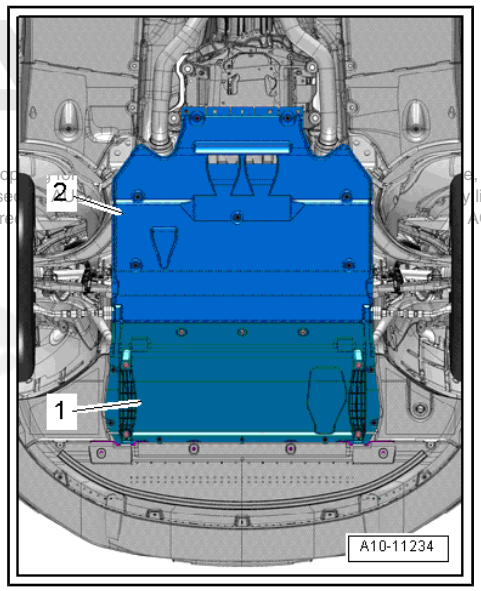

Protected by copyright. Co e, is not permitted unless authorise liability with respect to the corre AG.

– Place the Used Oil Collection and Extraction Unit - SMN372500- under the transmission.

– Remove the bolt -arrow-, and remove the ATF lines from the ATF filter and tie them up.

– Seal the open lines and connections with clean plugs from the Engine Bung Set - VAS6122- .

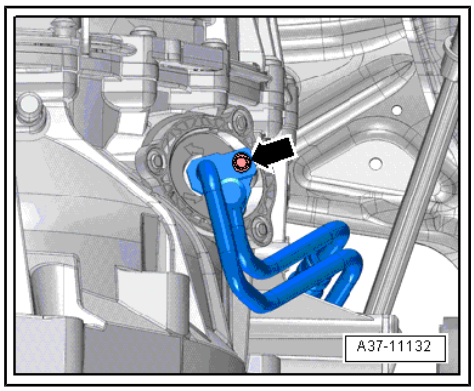

cardiagn.com

– Remove the bolts -arrows- and remove the ATF filter -1- upward.

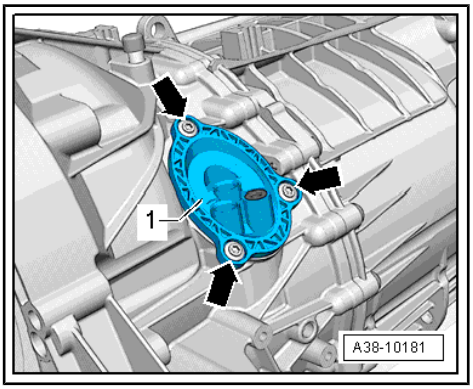

Installing

Install in reverse order of removal. Note the following:

Note

Inspect the ATF filter for cracks and replace if necessary.

– Install the ATF filter all the way into the transmission by hand and then tighten them.

Caution

Danger of causing damage to the transmission.

- *Remove all the plugs on the ATF pipes and on the transmission that were installed during removal.*
- *The ATF cooling function will not work and the transmission will be damaged if the plugs are forgotten.*

– Check the ATF level and correct if necessary. Refer to ⇒ "7.1 ATF Level, Checking", page 81 .

Tightening Specifications

- Refer to ⇒ "6.1 Overview - ATF Circuit", page 72
- Refer to ⇒ Body Exterior; Rep. Gr. 66 ; Noise Insulation; Overview - Noise Insulation .

6.4 ATF Pipes, Removing and Installing

Special tools and workshop equipment required

- Engine Bung Set - VAS6122-
- Used Oil Collection and Extraction Unit - SMN372500-
- Hose diameter approximately 18 mm
- Compressed air gun, commercially available
- Protective eyewear

Protected by copyright. Copying for private or commercial purposes, in part or in whole, is not permitted unless authorised by AUDI AG. AUDI AG does not guarantee or accept any liability with respect to the correctness of information in this document. Copyright by AUDI AG.

cardiagn.com

Removing

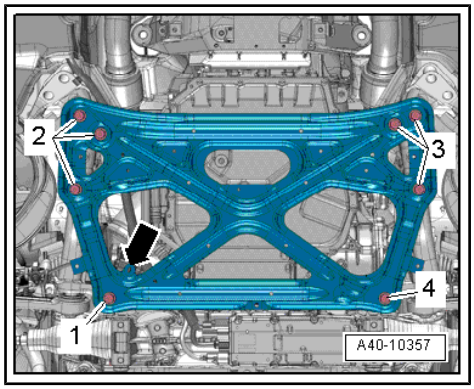

Note

- *General Repair Instructions. Refer to*
  ⇒ "3.3 General Repair Information", page 5 .
- *Clean working conditions for the automatic transmission. Refer to*
  ⇒ "3.1 Guidelines for Clean Working Conditions", page 5 .

– Remove the subframe crossbrace. Refer to ⇒ Suspension, Wheels, Steering; Rep. Gr. 40 ; Subframe; Subframe Crossbrace, Removing and Installing .

Caution

The suspension components could be damaged.

- ***Do not rest the vehicle on its wheels if the subframe mount, the steering gear or the subframe crossbrace are not installed correctly.***

– Place the Used Oil Collection and Extraction Unit -SMN372500- under the transmission.

– Remove the clips -arrows- and disconnect the ATF hose lines.

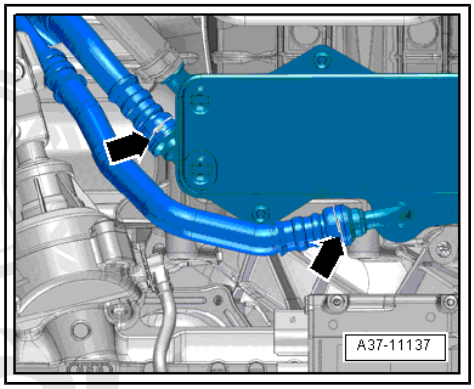

Protected by copyright. Copying for private or commercial purposes, in part or in whole, is not permitted unless authorised by AUDI AG. AUDI AG does not guarantee or accept any liability with respect to the correctness of information in this document. Copyright by AUDI AG.

cardiagn.com

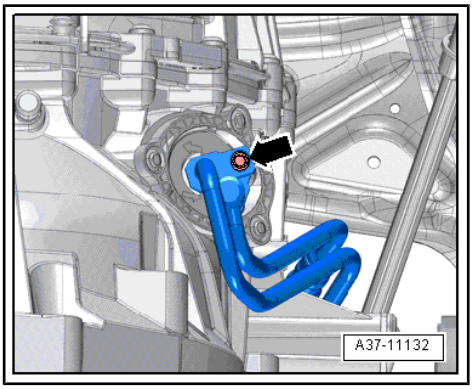

– Remove the bolt -arrow- and pull the ATF lines off of the ATF filter.

– Seal the open lines and connections with clean plugs from the Engine Bung Set - VAS6122- .

Installing

Install in reverse order of removal. Note the following:

Note

Replace the O-rings.

– Coat the O-ring with ATF before installing.

– Insert the ATF lines with the new O-ring by hand until they stop.

Caution

Danger of causing damage to the transmission.

- *Remove all the plugs on the ATF pipes and on the transmission that were installed during removal.*
- *The ATF cooling function will not work and the transmission will be damaged if the plugs are forgotten.*

– Check the ATF level and correct if necessary. Refer to ⇒ “7.1 ATF Level, Checking”, page 81 .

Clean

Note

Clean working conditions for the automatic transmission. Refer to *⇒ “3.1 Guidelines for Clean Working Conditions”, page 5* .

Protected by copyright. Copying for private or commercial purposes, in part or in whole, is not permitted unless authorised by AUDI AG. AUDI AG does not guarantee or accept any liability with respect to the correctness of information in this document. Copyright by AUDI AG.

– Before installing a replacement transmission, always clean out the ATF cooler and ATF pipe/hose line using compressed air (maximum 10 bar (145 psi)). Refer to ⇒ , page 79 .

WARNING

Danger of eye injury.

- *Wear protective eyewear.*

– Place the Used Oil Collection and Extraction Unit - SMN372500- under the separating points.

Note

If extremely dirty ATF flows out when cleaning using compressed air, flush the ATF cooler and the ATF pipe/hose line using clean ATF.

Tightening Specifications

- Refer to ⇒ “6.1 Overview - ATF Circuit”, page 72

cardiagn.com

- Crossbrace. Refer to ⇒ Suspension, Wheels Steering; Rep. Gr. 40 ; Subframe; Overview - Subframe .

cardiagn.com

Protected by copyright. Copying for private or commercial purposes, in part or in whole, is not permitted unless authorised by AUDI AG. AUDI AG does not guarantee or accept any liability with respect to the correctness of information in this document. Copyright by AUDI AG.

7 Automatic Transmission Fluid

⇒ “7.1 ATF Level, Checking”, page 81

⇒ “7.2 ATF, Draining and Filling”, page 87

7.1 ATF Level, Checking

Special tools and workshop equipment required

- Vehicle Diagnostic Tester
- CVT Gearbox Filler System - VAS5162-
- Used Oil Collection and Extraction Unit - SMN372500-
- Protective eyewear

cardiagn.com

Protected by copyright. Copying for private or commercial purposes, in part or in whole, is not permitted unless authorised by AUDI AG. AUDI AG does not guarantee or accept any liability with respect to the correctness of information in this document. Copyright by AUDI AG.

Preparing

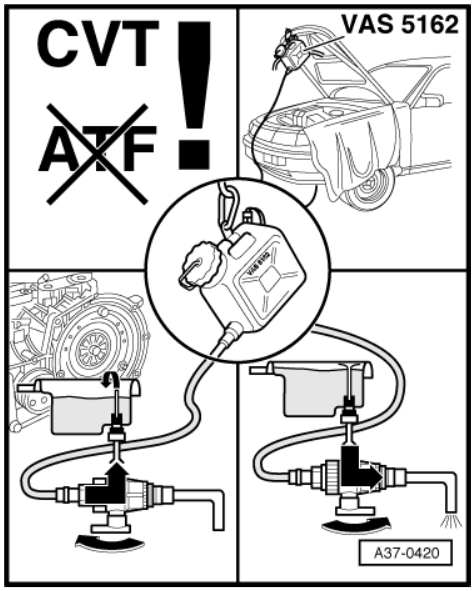

Note

- *The illustration on the reservoir for the CVT Gearbox Filler System - VAS5162- in the upper left graphic refers to the use of special ATFs for multitronic transmissions.*
- *In addition, the necessary work steps for filling are illustrated, which are described as follows:*

Caution

Danger of causing damage to the transmission.

- *Engine must not be started if only a small amount or no ATF is in the transmission after repair work or after significant ATF loss.*
- *In this case, a preliminary filling with 5.5 to 7 liters ATF must be performed.*

Test Conditions

- The transmission must not be in the emergency running
- Move the vehicle onto a 4-column workshop hoist or over a work pit so it is completely level.
- The selector level is in “P”.
- The parking brake button should be activated to close the electro-mechanical parking brake.
- Exhaust hose/-hoses of an exhaust extraction system connected.
- The A/C and the heater are off.
- Vehicle Diagnostic Tester is connected.
- The ATF temperature must not be higher than 30 °C (86 °F) at the beginning of the test. Let the transmission must cool down first, if necessary.

Note

- *Read the ATF temperature on the Vehicle Diagnostic Tester .*
- *The ATF level will vary depending on the temperature of the ATF.*
- *It is possible to overfill the ATF if the level is checked when the temperature is too low.*
- *It is possible to underfill the ATF if the level is checked when the temperature is too high.*
- *Overfilling or underfilling will influence the function of the transmission.*

Protected by copyright. Copying for private or commercial purposes, in part or in whole, is not permitted unless authorised by AUDI AG. AUDI AG does not guarantee or accept any liability with respect to the correctness of information in this document. Copyright by AUDI AG.

ATF Level, Checking and Correcting

Note

The ATF filling and check plugs must be replaced.

cardiagn.com

– Select the following menu options under “Functions/Component selection” in Guided Fault Finding on the Vehicle Diagnostic Tester :

- `Drivetrain`
- `0AW transmission`
- `01-OBD-capable systems`
- `02-transmission electronics`
- `02-Transmission electronics, functions`
- `02-Measured values`

– Select `transmission fluid temperature` from the list.

– Check the ATF temperature.

Caution

Danger of causing damage to the transmission.

- *For the correct allocation of the ATF. Refer to the Parts Catalog. Only use replacement part ATF for “multitronic 0AW FWD” for the “multitronic 0AW FWD” transmission.*
- *Do not mix other ATF types, even in small quantities. Malfunctions and transmission failure could occur.*
- *The ATF filler tool must be clean and the ATF must not be mixed with any other oils.*

Protected by copyright. Copying for private or commercial purposes, in part or in whole, is not permitted unless authorised by AUDI AG. AUDI AG does not guarantee or accept any liability with respect to the correctness of information in this document. Copyright by AUDI AG.

– Fill the CVT Gearbox Filler System - VAS5162- reservoir with the ATF for the “multitronic 0AW FWD”; ATF specification. Refer to Parts Catalog.

– Secure the ATF filler system reservoir as high as possible on the vehicle.

• The shut-off valve on the CVT Gearbox Filler System - VAS5162- must be closed.

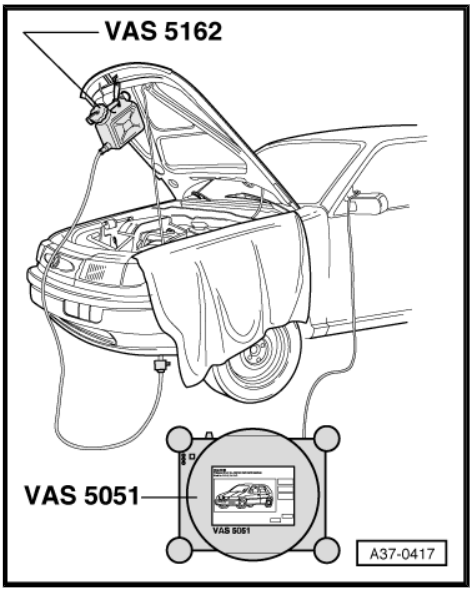

cardiagn.com

– Remove the O-ring -1- on the connection -2- on the CVT Gearbox Filler System - VAS5162- .

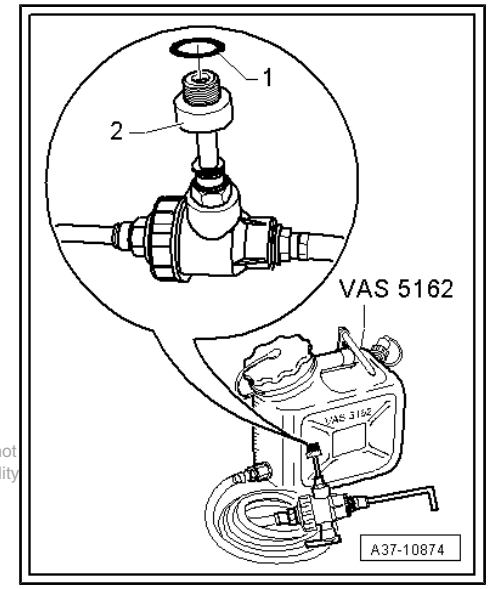

Caution

Danger of misfilling the transmission.

- *The connection -2- must be mounted by hand all the way into the ATF inspection plug hole on the transmission without the O-ring.*
- *The oil level tube can be pushed into the ATF inspection plug hole in the upper position only when the O-ring is not on the connection -2-.*
- *This is the only way to correctly check and/or adjust the ATF level to maximum.*

Reproduction or copying for private or commercial purposes, in part or in whole, is not permitted unless authorised by AUDI AG. AUDI AG does not guarantee or accept any liability with respect to the correctness of information in this document. Copyright by AUDI AG.

- Engine running at idle.

– Remove the rear noise insulation -2-. Refer to ⇒ Body Exterior; Rep. Gr. 66 ; Noise Insulation; Noise Insulation, Removing and Installing .

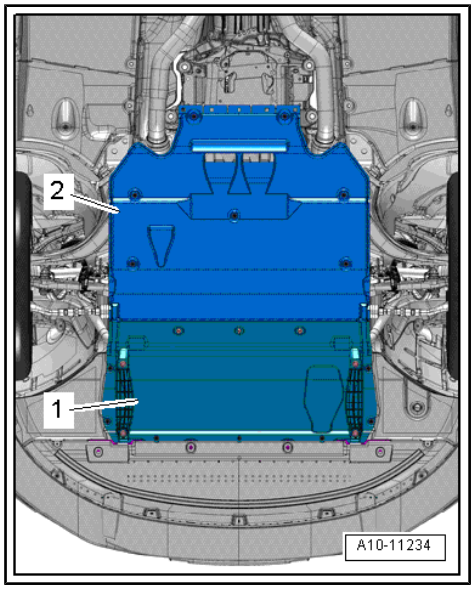

Note

- *Immediately after starting the engine, let it run at 2,500 RPM.*
- *Running the engine at high speeds is necessary to bleed the ATF pump.*
- *If running at high speeds is not performed, the ATF level cannot be adjusted correctly.*

– Start the engine with the selector lever in “P”.

– Using the accelerator pedal, let the engine run briefly at 2,500 RPM.

– Press the brake and move the selector lever alternately between “R” and “D/S” and let the engine idle for approximately 2 seconds in each position.

– Repeat the process three times.

Note

- *The ATF level is checked at the ATF inspection plug.*
- *ATF level is correct if a little bit of fluid still escapes at the ATF check plug between 35 and 45 °C (95 and 113 °F) or 50 °C (122 °F) for hot countries, ATF temperature (dependent on the fluid level when warming up).*

cardiagn.com

– Place the Used Oil Collection and Extraction Unit - SMN372500- under the transmission.

WARNING

Danger of eye injury.

- *Wear protective eyewear.*

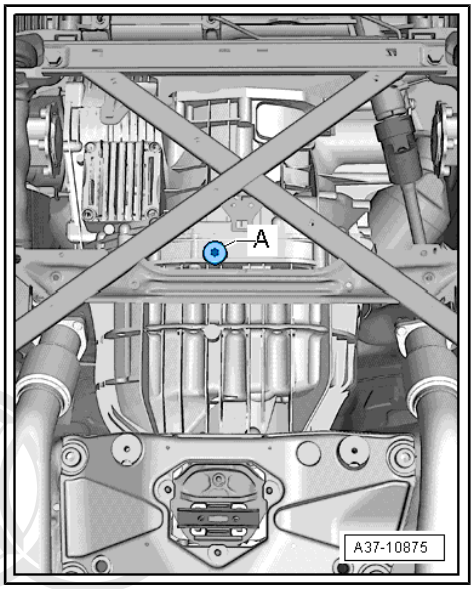

– Remove the ATF check plug -A- when the ATF reaches 35°C (95 °F).

Note

- *Approximately 5 to 10 cl of ATF will always drain initially from the internal oil level pipe when the plug is unscrewed.*
- *Follow the disposal requirements.*

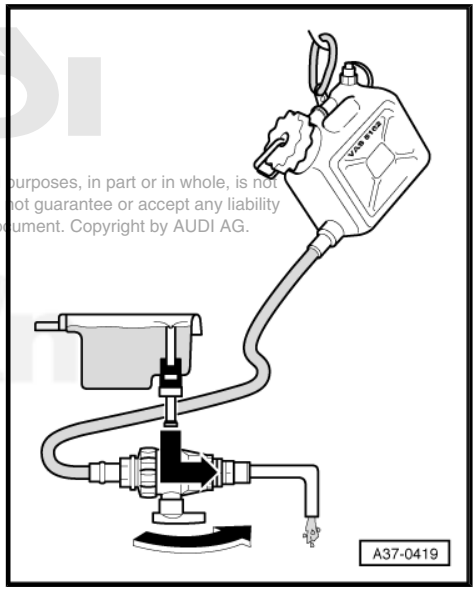

– Install the CVT Gearbox Filler System - VAS5162- connection, without the O-ring, all the way into the opening for the ATF inspection plug.

• This »presses «the oil level tube into the correct upper installation position.

– Turn the valve in the flow direction -down arrow- and check the ATF level.

Protected by copyright. Copying for private or commercial purposes, in part or in whole, is not permitted unless authorised by AUDI AG. AUDI AG does not guarantee or accept any liability with respect to the correctness of information in this document. Copyright by AUDI AG.

At 35°C (95 °F), the ATF Must Flow out Continually and at First Strongly.

– Wait until just a little ATF is coming out.

– Tighten the new ATF inspection plug.

Note

Depending on the version, ATF inspection plugs of different lengths are installed. Always pay attention to the allocation according to the transmission codes in the Parts Catalog. To prevent damaging the transmission, compare the old and new ATF inspection plug.

Note

- *The ATF check plug must be installed again before the ATF reaches a temperature of 45 °C (113 °F) or 50 °C (122 °F) with hot climates.*
- *If the ATF gets warmer than 45 °C (113 °F), it will leak out and the transmission will not have enough ATF.*

The ATF level test is now completed.

If, at 40 °C (104 °F)), No ATF or Just a Few Drops Flow out, Fill the ATF. Refer to ⇒ page 86 .

cardiagn.com

Filling ATF

- Engine continues running at idle.

– Turn the valve to the filler hose -lower arrow-. The ATF flows into the transmission.

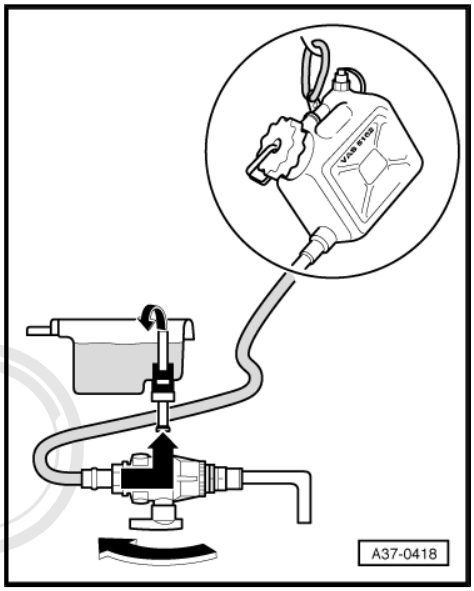

– Turn the valve in the flow direction -down arrow- and check the ATF level.

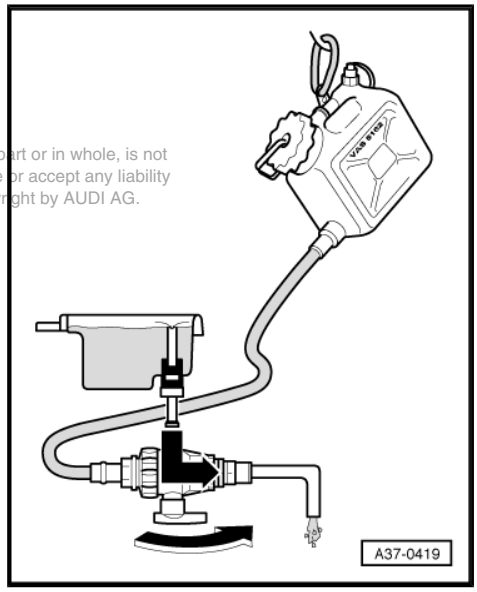

Note

Protected by copyright. Copying for private or commercial purposes, in part or in whole, is not permitted unless authorised by AUDI AG. AUDI AG does not guarantee or accept any liability with respect to the correctness of information in this document. Copyright by AUDI AG.

Approximately 5 to 10 cl of ATF will initially drain from the internal oil level pipe. This is normal.

– If no ATF leaks out, then turn the valve back toward the filler hose and let more ATF flow in. Check the ATF level again.

At 35 °C (95 °F) the ATF must flow out steadily and at first strongly, if necessary repeat the filling procedure.

– Wait until just a little ATF is coming out.

– After reaching the correct ATF level, remove the CVT Gearbox Filler System - VAS5162- connection again.

Note

After removing the connection, the ATF will flow again.

cardiagn.com

– Tighten the new ATF check plug -A-.

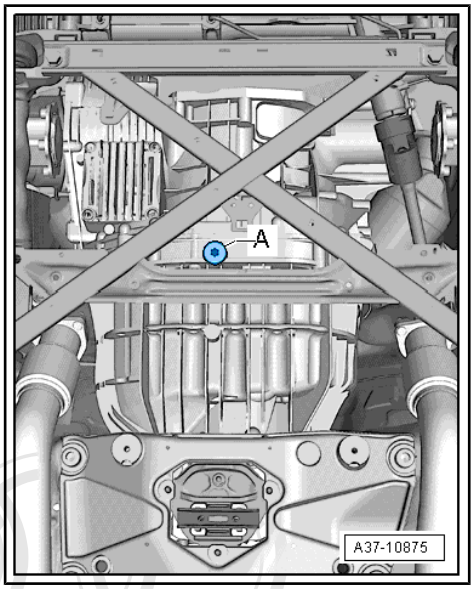

Note

Depending on the version, ATF inspection plugs of different lengths are installed. Always pay attention to the allocation according to the transmission codes in the Parts Catalog. To prevent damaging the transmission, compare the old and new ATF inspection plug.

Note

- *The ATF check plug must be installed again before the ATF reaches a temperature of 45 °C (113 °F) or 50 °C (122 °F) with hot climates.*
- *If the ATF gets warmer than 45 °C (113 °F), it will leak out and the transmission will not have enough ATF.*

Tightening Specifications

- Refer to -item 1- ⇒ Item 1 (page 73)
- Refer to ⇒ Body Exterior; Rep. Gr. 66 ; Noise Insulation; Overview - Noise Insulation .

7.2 ATF, Draining and Filling

Special tools and workshop equipment required

This document is copyright. Copying for private or commercial purposes, in part or in whole, is not permitted unless authorised by AUDI AG. AUDI AG does not guarantee or accept any liability with respect to the correctness of information in this document. Copyright by AUDI AG.

- T-Handle Hook - 3438-
- CVT Gearbox Filler System - VAS5162-
- Used Oil Collection and Extraction Unit - SMN372500-
- Protective eyewear

cardiagn.com

ATF, Draining

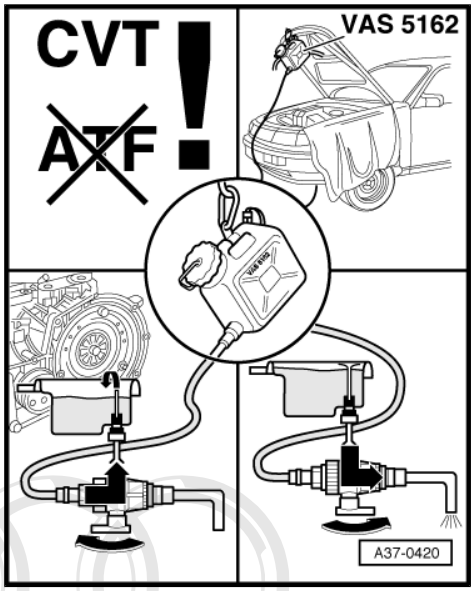

Note

- *The illustration on the reservoir for the CVT Gearbox Filler System - VAS5162- in the upper left graphic refers to the use of special ATF for CVT transmissions.*
- *In addition, the necessary work steps for filling are illustrated, which are described as follows:*

Caution

Danger of causing damage to the transmission.

- ***Engine must not be started if only a small amount or no ATF is in the transmission after repair work or after significant ATF loss.***
- ***Do not let the engine run or tow the vehicle without ATF.***
- ***In this case, a preliminary filling with 5.5 to 7 liters ATF must be performed.***

Note

The ATF check plug and the oil level tube must be replaced.

Protected by copyright. Copying for private or commercial purposes, in part or in whole, is not permitted unless authorised by AUDI AG. AUDI AG does not guarantee or accept any liability with respect to the correctness of information in this document. Copyright by AUDI AG.

- The engine is off.
- The parking brake button should be activated to close the electro-mechanical parking brake.
- The selector level is in “P”.

– Remove the rear noise insulation -2-. Refer to ⇒ Body Exterior; Rep. Gr. 66 ; Noise Insulation; Noise Insulation, Removing and Installing .

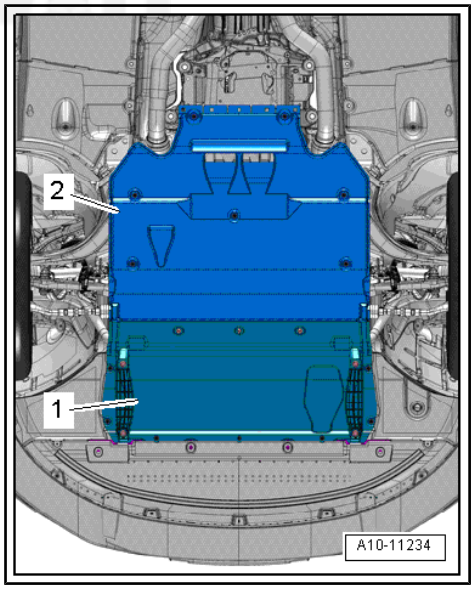

cardiagn.com

– Place the Used Oil Collection and Extraction Unit - SMN372500- under the transmission.

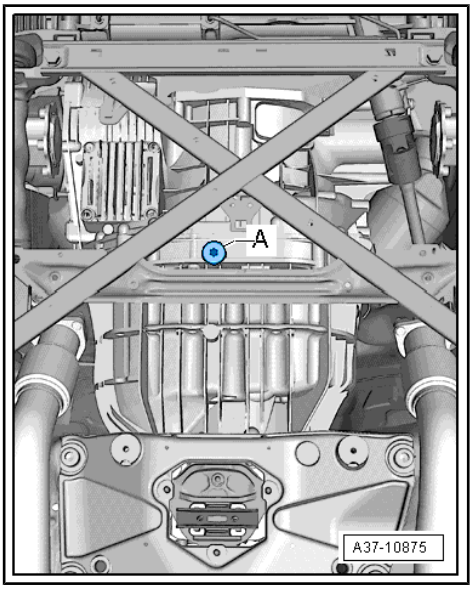

WARNING

Danger of eye injury.

- *Wear protective eyewear.*

– Remove the ATF check plug -A-.

– Drain the ATF.

Note

Follow the disposal requirements.

– Pull the oil level tube -A- out of the ATF check hole using the T-Handle Hook - 3438- and let the remaining ATF drain out.

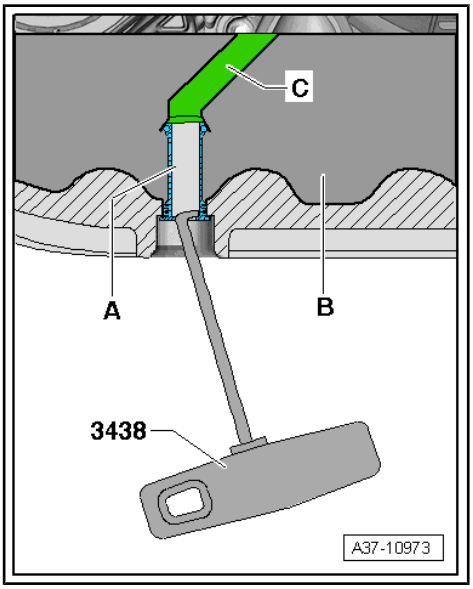

Note

Shown in the illustration from the side in sections.

Protected by copyright. Copying for private or commercial purposes, in part or in whole, is not permitted unless authorised by AUDI AG. AUDI AG does not guarantee or accept any liability with respect to the correctness of information in this document. Copyright by AUDI AG.

- The O-ring -1- must fit correctly inside the groove in the oil level tube -A-.

– Gently press the new oil level tube, by hand, straight into the ATF check hole -B-.

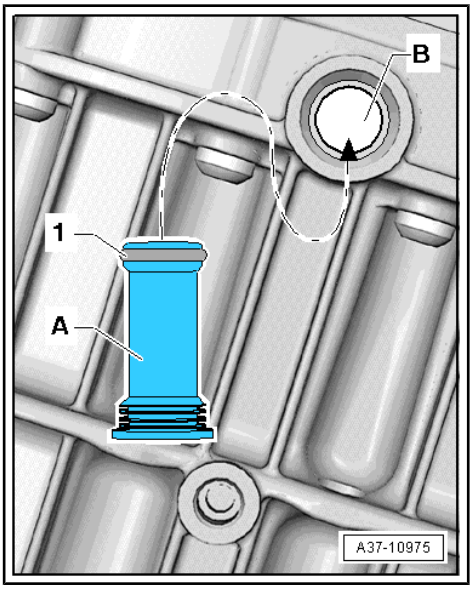

cardiagn.com

Note

- *The O-ring on the oil level tube -A- seals the oil level height tube -C-. Only this way can the ATF level be correctly adjusted.*
- *Ignore T-Handle Hook -3438- .*

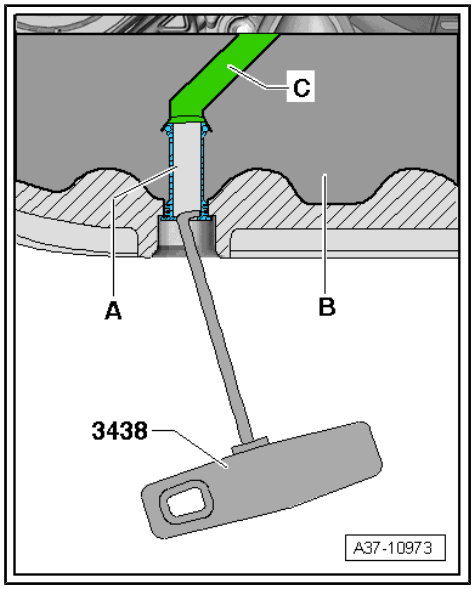

Fill the Transmission with ATF.

Note

- *The illustration on the reservoir for the CVT Gearbox Filler System - VAS5162- in the upper left graphic refers to the use of special ATF for CVT transmissions.*
- *In addition, the necessary work steps for filling are illustrated, which are described as follows:*

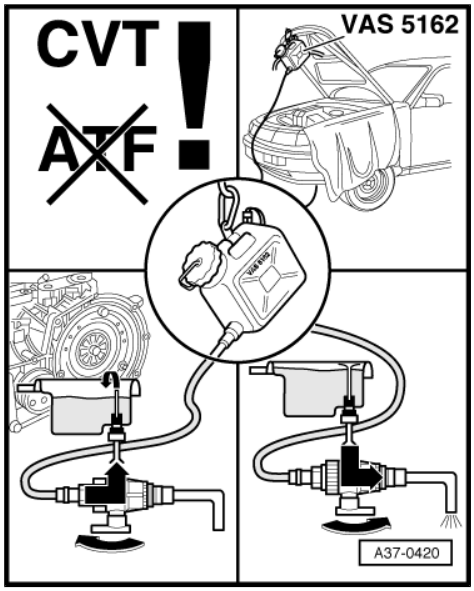

Caution

Danger of causing damage to the transmission.

- ***For the correct allocation of the ATF. Refer to the Parts Catalog. Only use replacement part ATF for "multitronic 0AW FWD" for the "multitronic 0AW FWD" transmission.***
- ***Do not mix other ATF types, even in small quantities. Malfunctions and transmission failure could occur.***
- ***The ATF filler tool must be clean and the ATF must not be mixed with any other oils.***

Note

Before installing a replacement transmission, always clean out the ATF cooler and ATF pipe/hose line using compressed air (maximum 10 bar (145 psi)). Refer to ⇒ , page 79 .

Protected by copyright. Copying for private or commercial purposes, in part or in whole, is not permitted unless authorised by AUDI AG. AUDI AG does not guarantee or accept any liability with respect to the correctness of information in this document. Copyright by AUDI AG.

cardiagn.com

– Fill the CVT Gearbox Filler System - VAS5162- reservoir with the ATF for the “multitronic 0AW FWD”; ATF specification. Refer to Parts Catalog.

– Secure the filled reservoir CVT Gearbox Filler System - VAS5162- as high as possible on the vehicle.

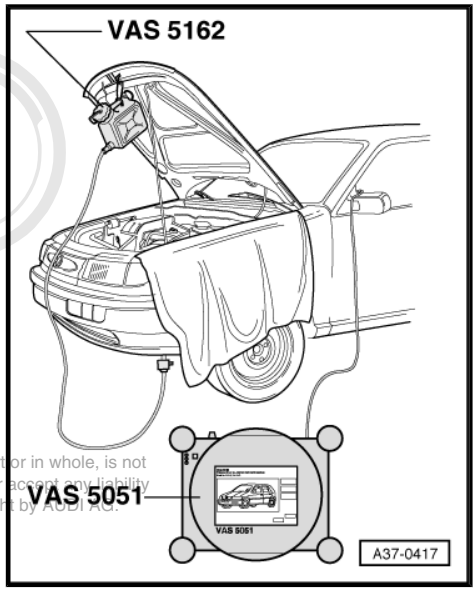

Note

The shut-off valve on the CVT Gearbox Filler System - VAS5162- must be closed.

Protected by copyright. Copying for private or commercial purposes, in part or in whole, is not permitted unless authorised by AUDI AG. AUDI AG does not guarantee or accept any liability with respect to the correctness of information in this document. Copyright by AUDI AG.

– Remove the O-ring -1- on the connection -2- on the CVT Gearbox Filler System - VAS5162- .

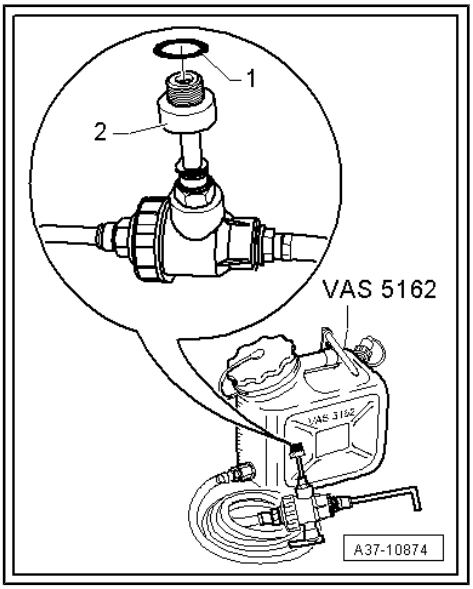

Caution

Danger of misfilling the transmission.

- *The connection -2- must be mounted by hand all the way into the inspection plug hole on the transmission without the O-ring.*
- *The oil level tube can be pushed into the ATF inspection plug hole in the upper position only when the O-ring is not on the connection -2-.*
- *This is the only way to correctly check and/or adjust the ATF level to maximum.*

cardiagn.com

– Install the CVT Gearbox Filler System - VAS5162- connection, without the O-ring, all the way into the ATF check hole hand-tight.

• This »presses «the oil level tube into the correct upper installation position.

– Turn the valve to the filler hose -lower arrow-. The ATF flows into the transmission.

– Fill at least 5.5 to 7 liters ATF into transmission.

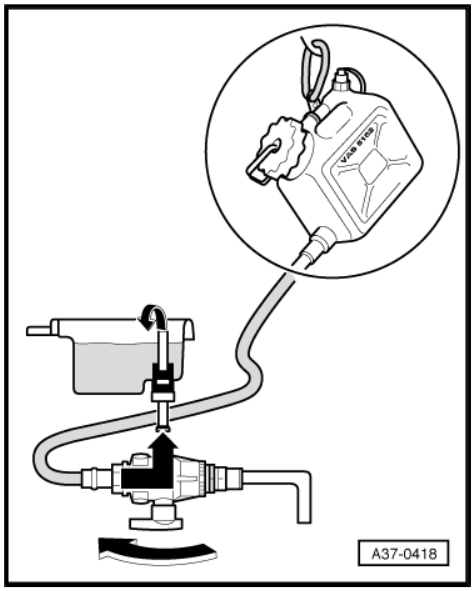

Caution

Immediately after starting the engine, let it run at 2,500 RPM.

- *Running the engine at high speeds is necessary so that the ATF pump is bled after a transmission repair.*
- *If this is not done, the pump could get damaged because it was briefly operated without any ATF.*

– Start the engine with the selector lever in “P”.

– Using the accelerator pedal, let the engine run briefly at 2,500 RPM.

– Check the ATF level and correct if necessary. Refer to ⇒ “7.1 ATF Level, Checking”, page 81 .

Note

Observe all notes and test requirements for “Checking ATF level and correcting”.

Tightening Specifications

- Refer to -item 1- ⇒ Item 1 (page 73)
- Refer to ⇒ Body Exterior; Rep. Gr. 66 ; Noise Insulation; Overview - Noise Insulation .

Protected by copyright. Copying for private or commercial purposes, in part or in whole, is not permitted unless authorised by AUDI AG. AUDI AG does not guarantee or accept any liability with respect to the correctness of information in this document. Copyright by AUDI AG.

cardiagn.com

8 Special Tools

Special tools and workshop equipment required

- Pry Lever - 80-200-
- Engine and Gearbox Jack - VAS6931-
- Engine Bung Set - VAS6122-
- Tensioning Strap - T10038-
- Crankshaft Socket - T40058-
- Gearbox Support - T40173-

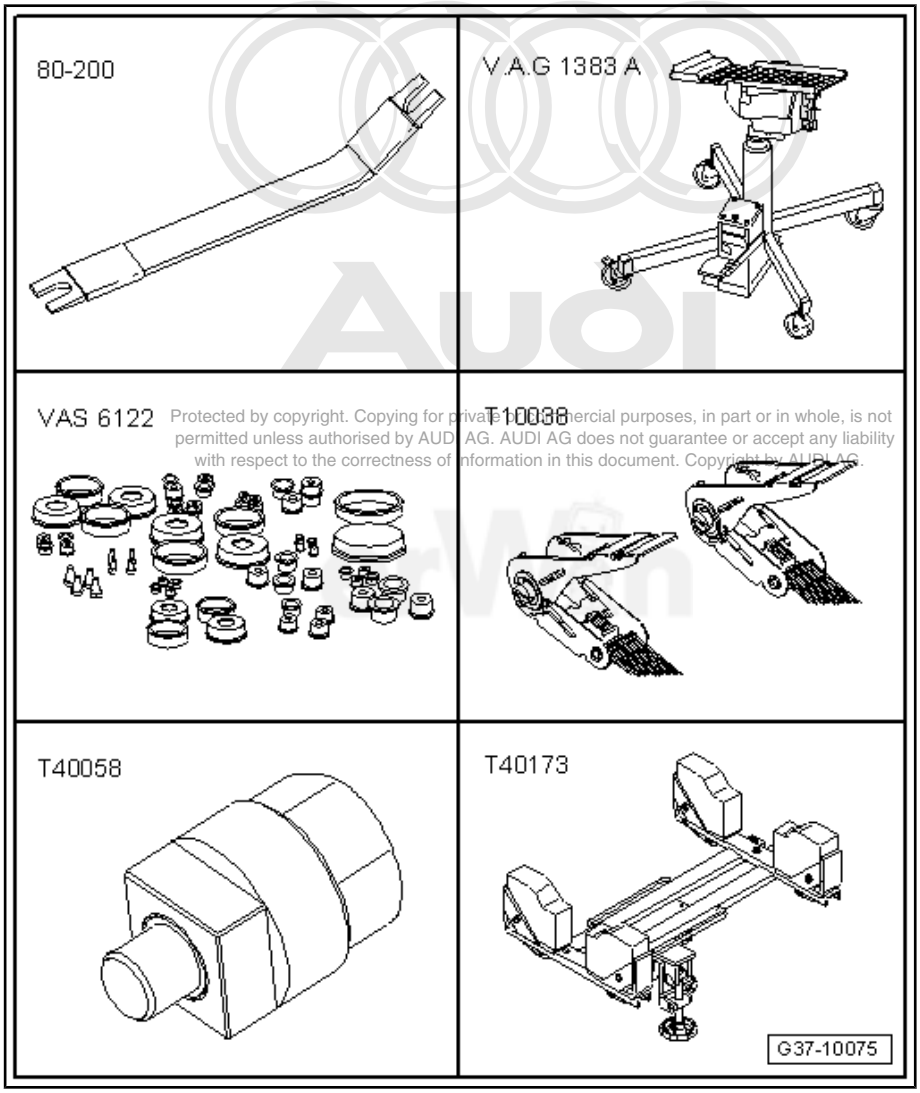

Protected by copyright. Copying for private or commercial purposes, in part or in whole, is not permitted unless authorised by AUDI AG. AUDI AG does not guarantee or accept any liability with respect to the correctness of information in this document. Copyright by AUDI AG.

cardiagn.com

- Pry Lever - 80-200-
- Engine and Gearbox Jack - VAS6931-
- Engine Bung Set - VAS6122-
- Tensioning Strap - T10038-
- Counterhold - Vibration Damper - T10355-
- Gearbox Support - T40173-

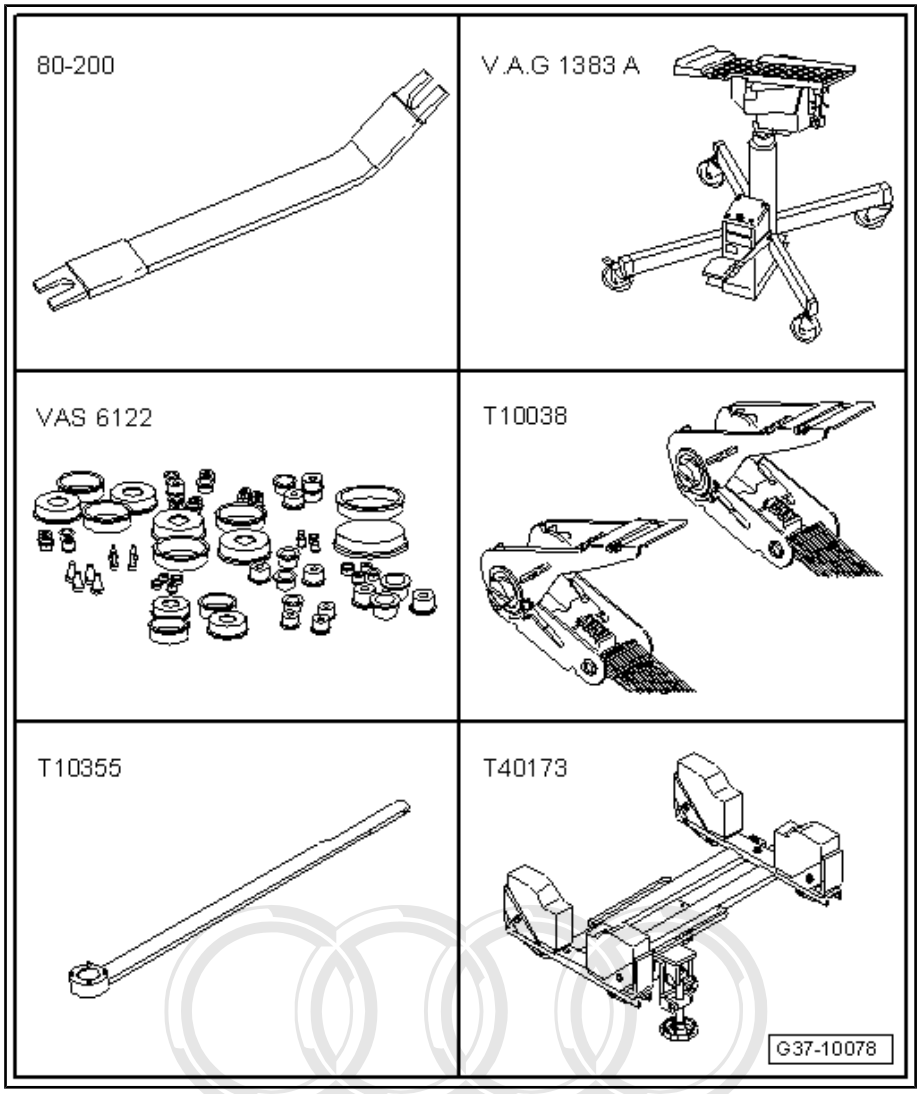

Protected by copyright. Copying for private or commercial purposes, in part or in whole, is not permitted unless authorised by AUDI AG. AUDI AG does not guarantee or accept any liability with respect to the correctness of information in this document. Copyright by AUDI AG.

cardiagn.com

- Pry Lever - 80 - 200-
- Hose Clamps - Up To 25 mm - 3094-
- Engine and Gearbox Jack - VAS 6931-
- Engine Bung Set - VAS 6122-
- Gearbox Support - T40173-
- Crankshaft Turning Tool - T40257-

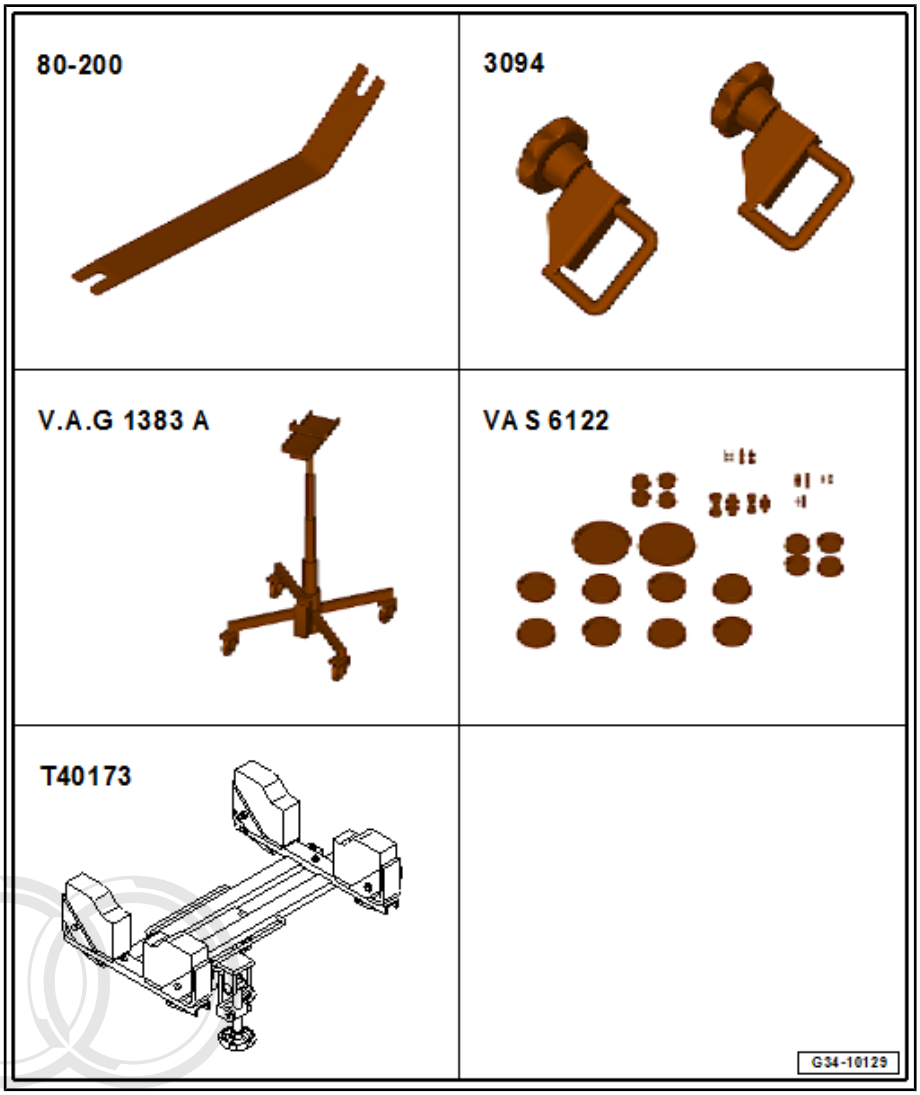

- Used Oil Collection and Extraction Unit - SMN372500-

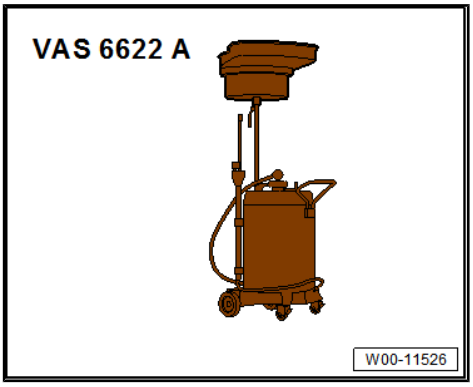

Protected by copyright. Copying for private or commercial purposes, in part or in whole, is not permitted unless authorised by AUDI AG. AUDI AG does not guarantee or accept any liability with respect to the correctness of information in this document. Copyright by AUDI AG.

cardiagn.com

- Engine/Gearbox Jack - Gearbox Support - T10337-

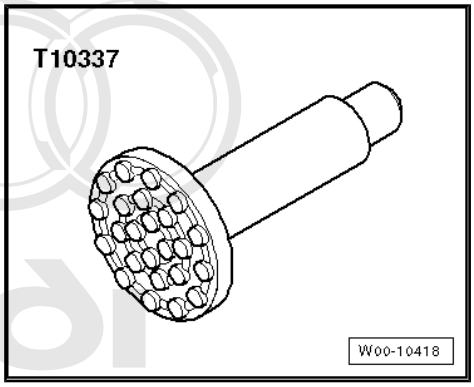

- Socket And Key - T40031-

Protected by copyright. Copying for private or commercial purposes, in part or in whole, is not permitted unless authorised by AUDI AG. AUDI AG does not guarantee or accept any liability with respect to the correctness of information in this document. Copyright by AUDI AG.

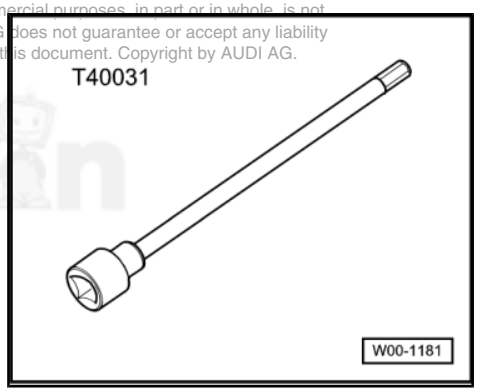

- Clutch Module Assembly Aid - T40169-

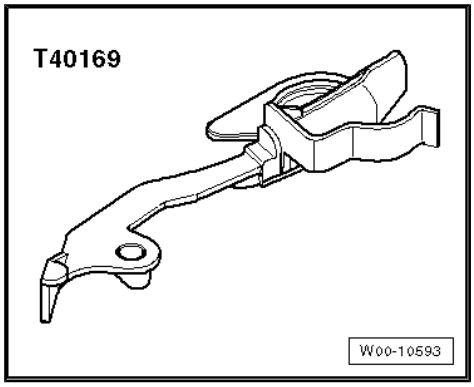

- Clutch Module Transportation Lock - T40170-

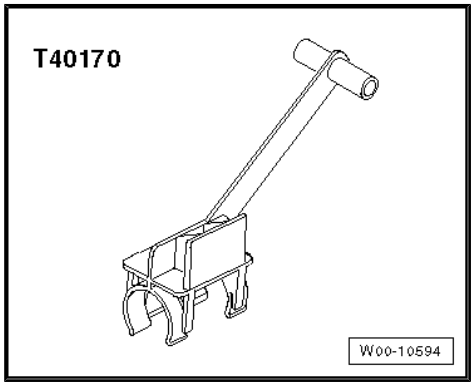

cardiagn.com

- Crankshaft Turning Tool - T40257-

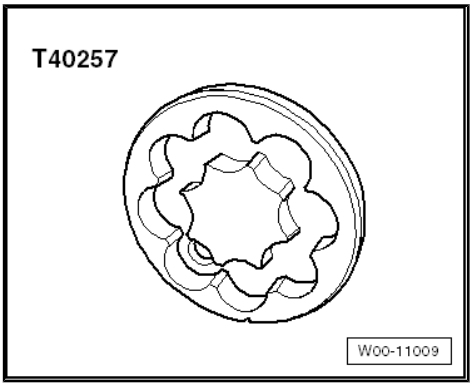

- Wrench - 21mm - T40263-

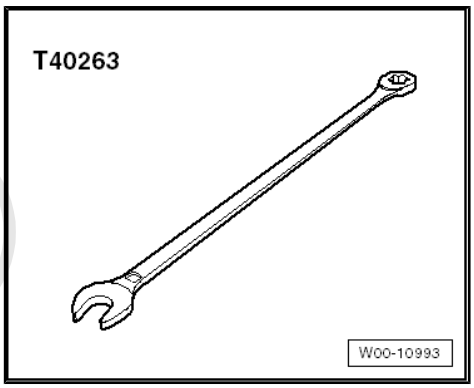

- Adapter -T40314-

Protected by copyright. Copying for private or commercial purposes, in part or in whole, is not permitted unless authorised by AUDI AG. AUDI AG does not guarantee or accept any liability with respect to the correctness of information in this document. Copyright by AUDI AG.

- Torque Wrench 1332 Insert - Ring Wrench - 16mm - VAG1332/14-

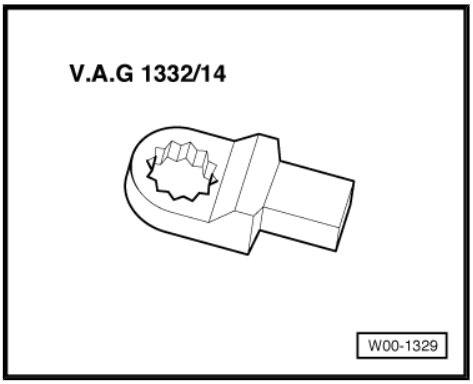

cardiagn.com

- CVT Gearbox Filler System - VAS5162-

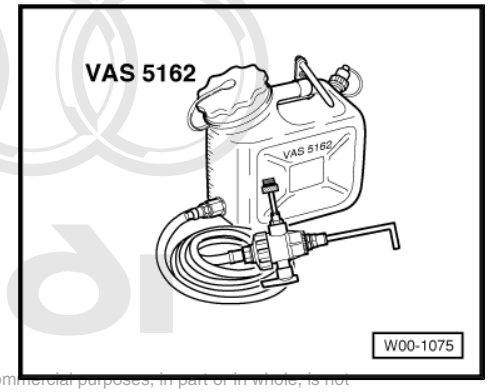

Protected by copyright. Copying for private or commercial purposes, in part or in whole, is not permitted unless authorised by AUDI AG. AUDI AG does not guarantee or accept any liability with respect to the correctness of information in this document. Copyright by AUDI AG.

- Hose Clip Pliers - VAS6362-

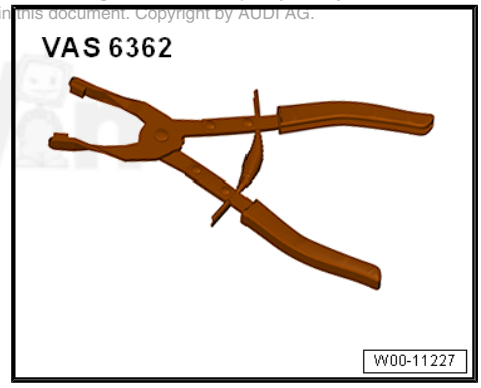

- Hose Clamps - Up To 25 mm - 3094-

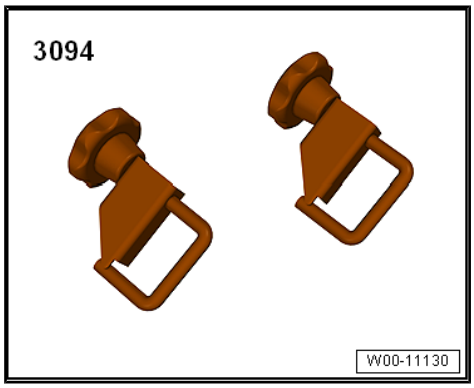

- T-Handle Hook - 3438-

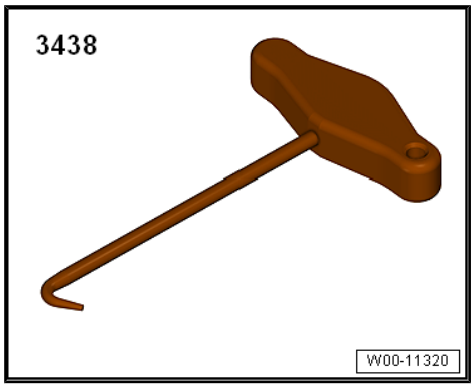

cardiagn.com

- Trim Removal Wedge - 3409-

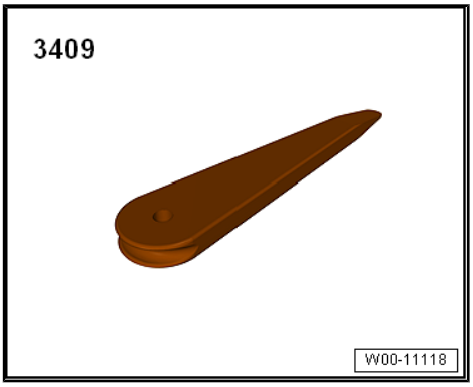

cardiagn.com

Protected by copyright. Copying for private or commercial purposes, in part or in whole, is not permitted unless authorised by AUDI AG. AUDI AG does not guarantee or accept any liability with respect to the correctness of information in this document. Copyright by AUDI AG.

erWin

38 – Gears, Hydraulic Controls

1 Transmission, Disassembling and Assembling

⇒ “1.1 Overview - Dual-Mass Flywheel”, page 100

⇒ “1.2 Overview - Transmission”, page 100

⇒ “1.3 Dual Mass Flywheel, Removing and Installing”, page 101

⇒ “1.4 End Cover, Removing and Installing”, page 101

1.1 Overview - Dual-Mass Flywheel

Overview - Dual-Mass Flywheel. Refer to ⇒ Continuously Variable Transmission; Rep. Gr. 38 ; Transmission, Disassembling and Assembling .

1.2 Overview - Transmission

Caution

Danger of causing damage to the transmission.

- *Do not let the engine run or tow the vehicle when the cover is removed or when there is no ATF in the transmission.*

Protected by copyright. Copying for private or commercial purposes, in part or in whole, is not permitted unless authorised by AUDI AG. AUDI AG does not guarantee or accept any liability with respect to the correctness of information in this document. Copyright by AUDI AG.

cardiagn.com

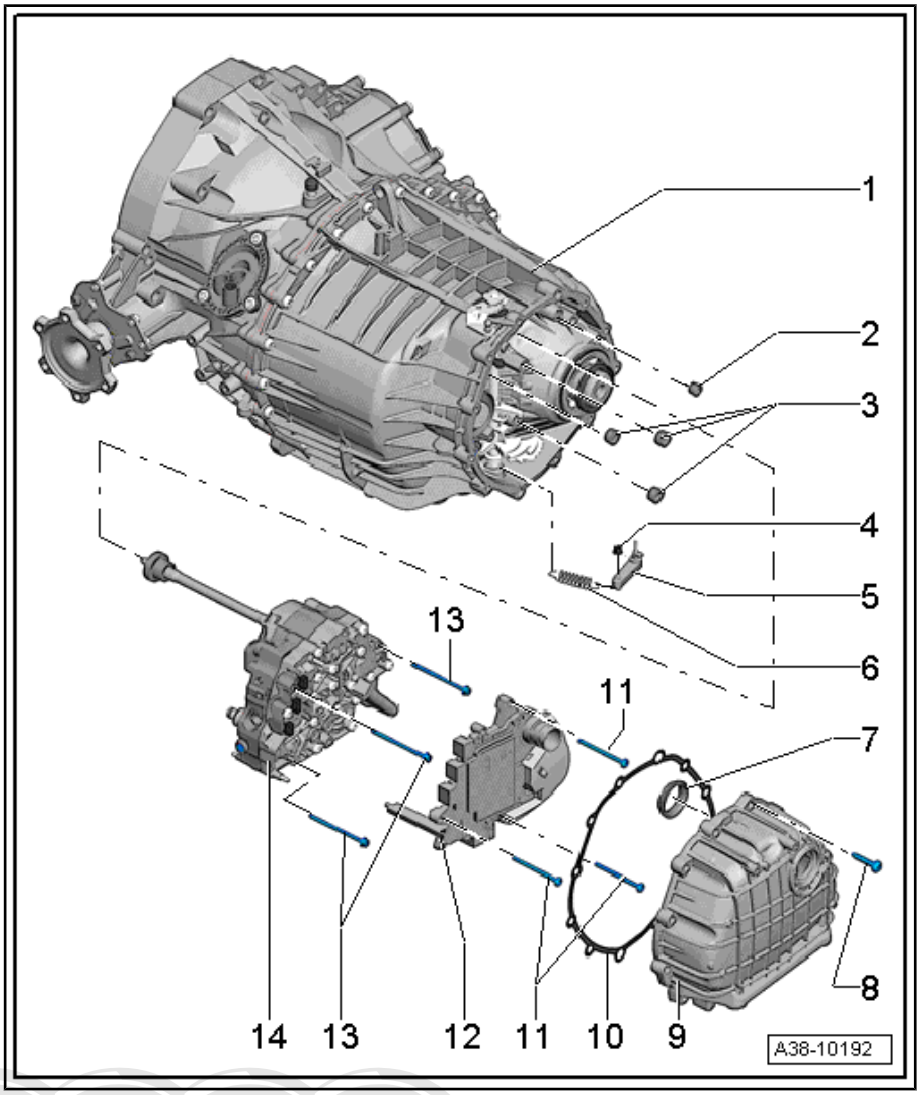

1 - Transmission

2 - Small Axial Sealing Element

- ❑ Replace

3 - Large Axial Sealing Element

- ❑ Replace

4 - Roller

5 - Selector Lever Lock Mechanism Lever

6 - Spring

7 - Seal

- ❑ For the connector on the Transmission Control Module - J217-

8 - Bolt

- ❑ Tightening specification. Refer to ⇒ Continuously Variable Transmission; Rep. Gr. 38 ; Transmission, Disassembling and Assembling .

9 - Cover

- ❑ Refer to ⇒ "1.4 End Cover, Removing and Installing", page 101

10 - Seal

- ❑ Replacing

11 - Bolt

- ❑ Tightening specification. Refer to ⇒ Continuously Variable Transmission; Rep. Gr. 38 ; Transmission, Disassembling and Assembling .

12 - Transmission Control Module - J217-

- ❑ Refer to ⇒ "5.2 Transmission Control Module, Removing and Installing", page 119

13 - Bolt

- ❑ Tightening specification. Refer to ⇒ Continuously Variable Transmission; Rep. Gr. 38 ; Transmission, Disassembling and Assembling .

14 - Hydraulic Control Unit

- ❑ Refer to ⇒ "5.3 Hydraulic Control Module, Removing and Installing", page 119

Protected by copyright. Copying for private or commercial purposes, in part or in whole, is not permitted unless authorised by AUDI AG. AUDI AG does not guarantee or accept any liability with respect to the correctness of information in this document. Copyright by AUDI AG.

1.3 Dual Mass Flywheel, Removing and Installing

Description of the Procedure. Refer to ⇒ Continuously Variable Transmission; Rep. Gr. 38 ; Transmission, Disassembling and Assembling .

1.4 End Cover, Removing and Installing

Special tools and workshop equipment required

- ♦ Pry Lever - 80-200-

cardiagn.com

♦ Used Oil Collection and Extraction Unit - SMN372500-

Removing

Note

♦ *General Repair Instructions. Refer to*
⇒ "3.3 General Repair Information", page 5 .

♦ *Clean working conditions for the automatic transmission. Refer to*
⇒ "3.1 Guidelines for Clean Working Conditions", page 5 .

– Move the selector lever into "P".

– Drain the ATF. Refer to
⇒ "7.2 ATF, Draining and Filling", page 87 .

– Remove the tunnel crossmember. Refer to
⇒ "3.2 Tunnel Crossmember, Removing and Installing", page 68 .

– Remove the bolts -arrows- and the transmission support with the transmission mount from the transmission.

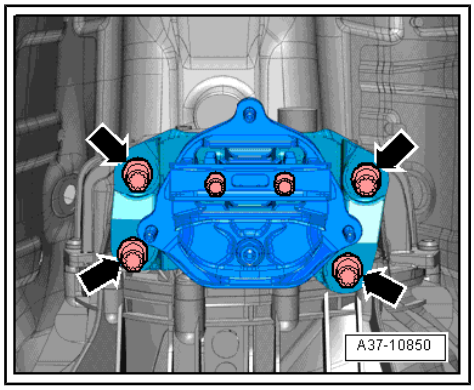

– Remove the ball socket -1- on the selector lever cable from the selector shaft lever using the Pry Lever - 80-200- .

– Remove the bolts -2- from the cable mounting bracket.

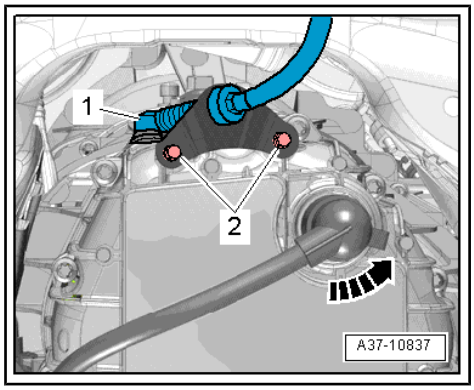

Caution

There is a risk of destroying the transmission control module (Mechatronic) with static discharge.

♦ ***Always "discharge" the static electricity before working with electric connectors. Do this by touching a grounded object, for example vehicle ground, the vehicle or the hoist.***

♦ ***Do not touch contacts in transmission connector with hands.***

– Turn the twist lock counter-clockwise -arrow- and disconnect the connector from the transmission.

Protected by copyright. Copying for private and commercial purposes, in part or in whole, is not permitted unless authorised by AUDI AG. AUDI AG does not guarantee or accept any liability with respect to the correctness of information in this document. Copyright by AUDI AG.

cardiagn.com

– Place the Used Oil Collection and Extraction Unit - SMN372500- under the transmission.

– Remove the bolts -arrows- and remove the cover.

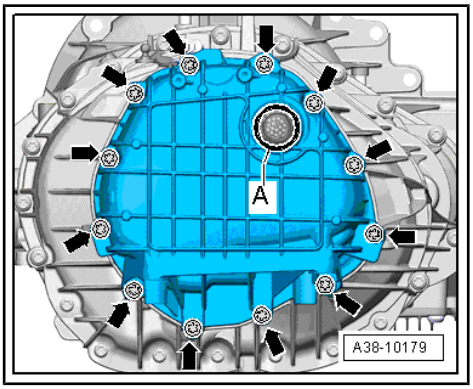

Installing

Install in reverse order of removal. Note the following:

Note

- *Replace the seal, sealing ring and axial elements.*
- *Replace any bolts that were tightened with an additional turn.*
- *Do not touch the pins in the connector -A-.*

– Slide the seal -B- with the double lip toward the outside and onto the connector -A- on the Transmission Control Module - J217- .

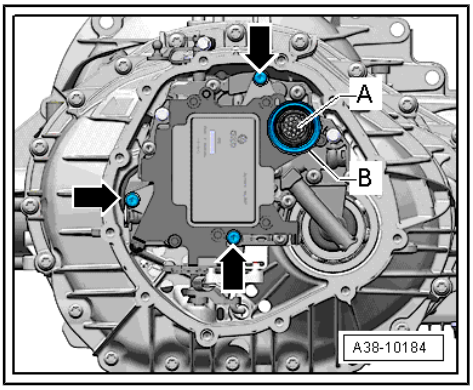

– Install the cover -A- (if equipped) over the Transmission Control Module - J217- .

– Clean the sealing surfaces on the transmission housing and on the cover.

– The alignment sleeves in the transmission housing or in the cover must be mounted on the same location.

– Place new seal for end cover onto transmission housing.

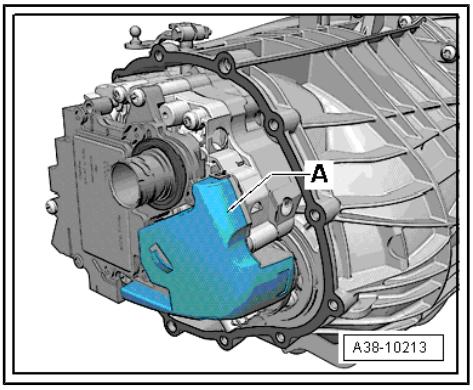

Note

Make sure the alignment sleeves fit correctly.

– Put on end cover and make sure the seal does not slip.

– Check installation position of gasket -A-:

• Gasket must fit flush (sealing lips must not be twisted).

– Tighten the new bolts -arrows- by hand first and then in a diagonal sequence to the tightening specification.

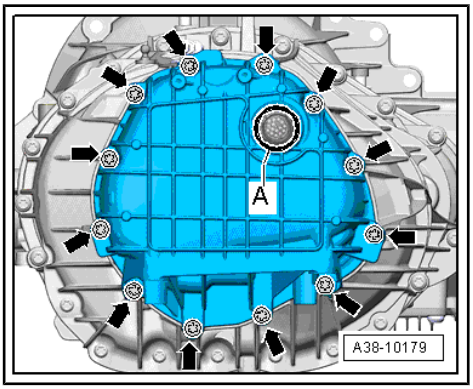

Protected by copyright. Copying for private or commercial purposes, in part or in whole, is not permitted unless authorised by AUDI AG. AUDI AG does not guarantee or accept any liability with respect to the correctness of information in this document. Copyright by AUDI AG.

cardiagn.com

– Shift the selector lever all the way to the rear in direction of -arrow- in “P”.

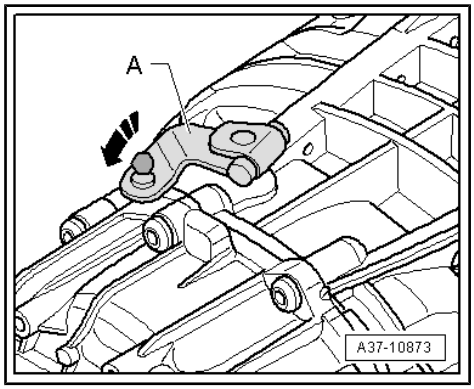

Note

Toward the rear, opposite the driving direction.

– Install the selector lever cable bracket. Refer to ⇒ “1.3 Overview - Selector Lever Cable”, page 15 .

– Install the transmission support and the tunnel crossmember. Refer to ⇒ “3.1 Overview - Subframe Mount”, page 68 .

– Fill the ATF. Refer to ⇒ “7.2 ATF, Draining and Filling”, page 87 .

Tightening Specifications

♦ Refer to ⇒ “1.2 Overview - Transmission”, page 100

Protected by copyright. Copying for private or commercial purposes, in part or in whole, is not permitted unless authorised by AUDI AG. AUDI AG does not guarantee or accept any liability with respect to the correctness of information in this document. Copyright by AUDI AG.

cardiagn.com

2 Special Tools

Special tools and workshop equipment required

- Used Oil Collection and Extraction Unit - SMN372500-

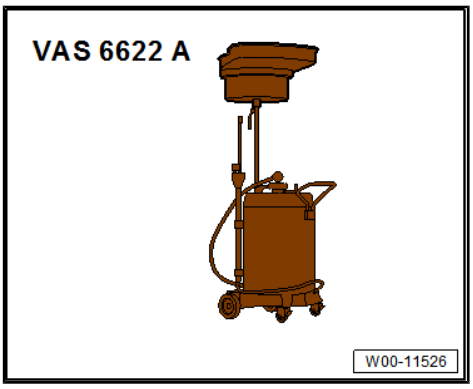

- Pry Lever - 80-200-

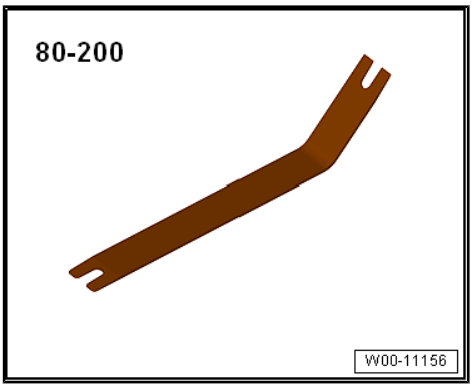

Protected by copyright. Copying for private or commercial purposes, in part or in whole, is not permitted unless authorised by AUDI AG. AUDI AG does not guarantee or accept any liability with respect to the correctness of information in this document. Copyright by AUDI AG.

cardiagn.com

39 – Final Drive, Differential

1 Final Drive

⇒ "1.1 Overview - Final Drive", page 106

1.1 Overview - Final Drive

Note

- *Refer to ⇒ "3.3 General Repair Information", page 5 .*
- *Refer to ⇒ "3.1 Guidelines for Clean Working Conditions", page 5 .*

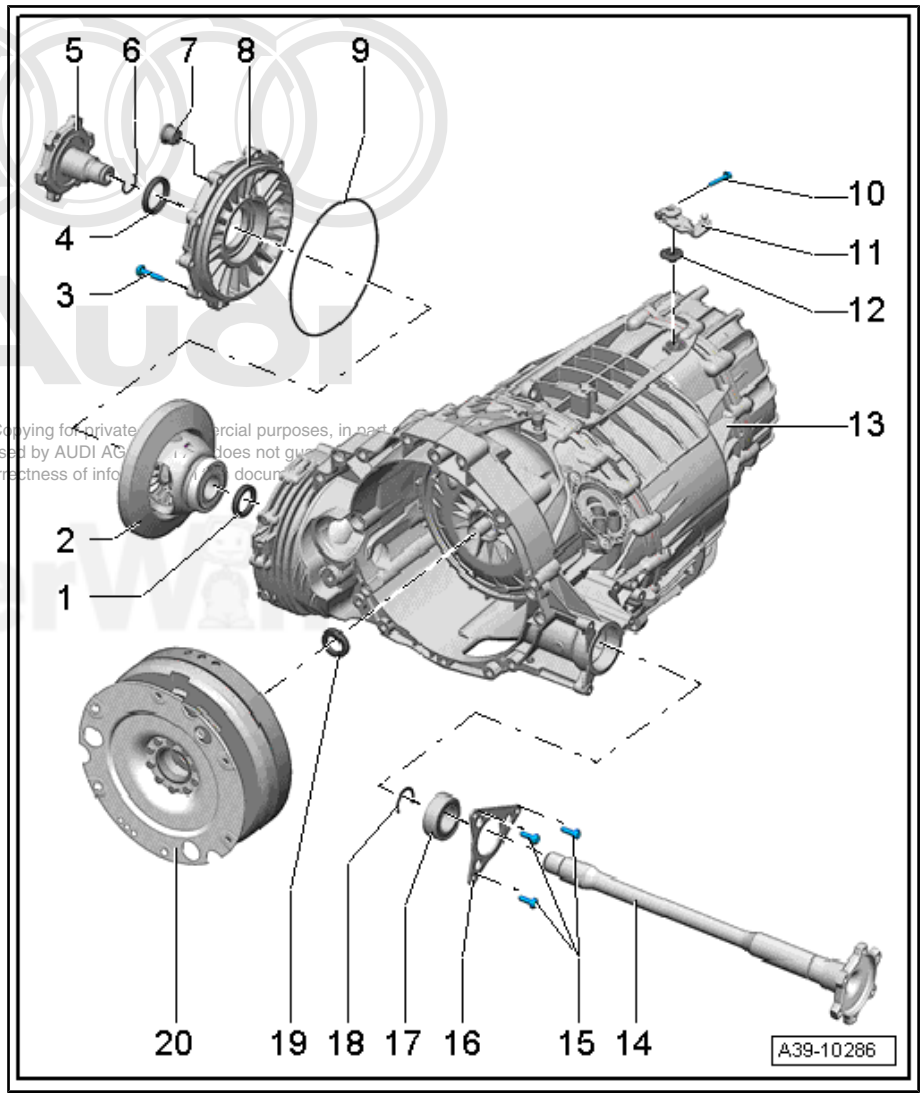

Protected by copyright. Copying for private and commercial purposes, in part or in whole, is not permitted unless authorised by AUDI AG. Audi AG does not guarantee or assume any liability with respect to the correctness of information in this document.

1 - Shaft Seal

- ❑ For the left flange shaft
- ❑ Refer to ⇒ "3.2 Left Seal, Replacing", page 111

2 - Differential

3 - Bolt

- ❑ Tightening specification. Refer to ⇒ Continuously Variable Transmission Internal Components; Rep. Gr. 39 ; Final Drive; Overview - Final Drive .

4 - Shaft Seal

- ❑ For the right flange shaft
- ❑ Refer to ⇒ "3.3 Right Seal, Replacing", page 112

5 - Right Flange Shaft

- ❑ Refer to ⇒ "4.2 Right Flange Shaft, Removing and Installing", page 113

6 - Locking Ring

- ❑ Replacing. Refer to ⇒ "4.2 Right Flange Shaft, Removing and Installing", page 113 .

7 - Fill and Check Plug

- ❑ For the transmission fluid inside the front final drive
- ❑ Tightening specification. Refer to -item 4- ⇒ Item 4 (page 73) .

8 - Front Final Drive Cover

- ❑ Pay attention to the alignment sleeves
- ❑ Removing and installing is only possible for removed transmissions. Refer to ⇒ Continuously Variable Transmission; Rep. Gr. 39 ; Seals; Left Seal, Replacing .

cardiagn.com

- ❑ After removing the front final drive cover, prefill. Refer to ⇒ “2.2 Gear Oil, Draining and Filling”, page 109 .

9 - O-Ring

- ❑ On the front final drive cover
- ❑ Replacing

10 - Bolt

- ❑ Tightening specification. Refer to ⇒ Continuously Variable Transmission Internal Components; Rep. Gr. 39 ; Final Drive; Overview - Final Drive .

11 - Gearshift Lever

Reproduction or duplicating for private or commercial purposes, in part or in whole, is not permitted unless authorised by AUDI AG. AUDI AG does not guarantee or accept any liability with respect to the correctness of information in this document. Copyright by AUDI AG.

12 - Shaft Seal

- ❑ For the selector shaft
- ❑ Replacing. Refer to ⇒ Continuously Variable Transmission Internal Components; Rep. Gr. 39 ; Final Drive; Overview - Final Drive .

13 - Transmission

14 - Left Flange Shaft

- ❑ Refer to ⇒ “4.1 Left Flange Shaft, Removing and Installing”, page 113

15 - Bolt

- ❑ Tightening specification. Refer to ⇒ Continuously Variable Transmission Internal Components; Rep. Gr. 39 ; Final Drive; Overview - Final Drive .

16 - Bracket

- ❑ Removing and installing is only possible for removed transmissions. Refer to ⇒ Rear Final Drive 0AW; Rep. Gr. 39 ; Differential .

17 - Ball Bearing

- ❑ For the left flange shaft
- ❑ Removing and installing is only possible for removed transmissions. Refer to ⇒ Rear Final Drive 0AW; Rep. Gr. 39 ; Differential .

18 - Circlip

- ❑ Replacing
- ❑ Removing and installing is only possible for removed transmissions. Refer to ⇒ Rear Final Drive 0AW; Rep. Gr. 39 ; Differential .

19 - Shaft Seal

- ❑ For the input shaft
- ❑ Refer to ⇒ “3.4 Input Shaft Seal, Replacing”, page 112

20 - Dual Mass Flywheel

- ❑ Removing and installing is only possible for removed transmissions. Refer to ⇒ Continuously Variable Transmission; Rep. Gr. 38 ; Transmission, Disassembling and Assembling .

cardiagn.com

2 Gear Oil

⇒ "2.1 Gear Oil, Checking Level", page 108

⇒ "2.2 Gear Oil, Draining and Filling", page 109

2.1 Gear Oil, Checking Level

Special tools and workshop equipment required

- Used Oil Collection and Extraction Unit - SMN372500-
- Protective eyewear

Procedure

Protected by copyright. Copying for private or commercial purposes, in part or in whole, is not permitted unless authorized by AUDI AG. AUDI AG does not guarantee or accept any liability with respect to the correctness of information in this document. Copyright by AUDI AG.

- Axle oil temperature approximately 20 °C (68 °F) (room temperature) to max. 50 °C (122 °F).
- Move the vehicle onto a 4-column workshop hoist or over a work pit so it is completely level.
- Wait 5 minutes so that the axle oil can drip down after turning off the engine.

Note

- *General Repair Instructions. Refer to ⇒ "3.3 General Repair Information", page 5 .*
- *Clean working conditions for the automatic transmission. Refer to ⇒ "3.1 Guidelines for Clean Working Conditions", page 5 .*
- *The filling and check plugs must be replaced.*
- *Always maintain the specified transmission fluid level. The transmission is very sensitive to overfilling.*
- *After performing any repairs where the axle oil has been drained, for example after removing the front final driver cover, the front final drive must first be filled with axle oil. Refer to ⇒ "2.2 Gear Oil, Draining and Filling", page 109 .*

– Remove the bolts -arrows- and then remove the heat shield from the right drive axle.

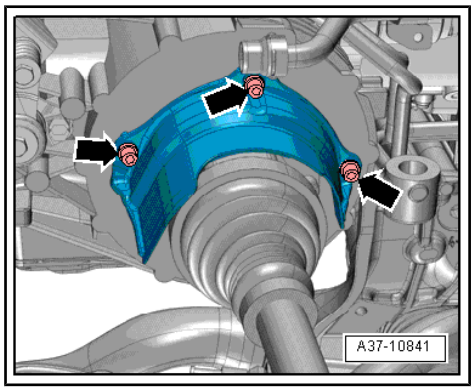

cardiagn.com

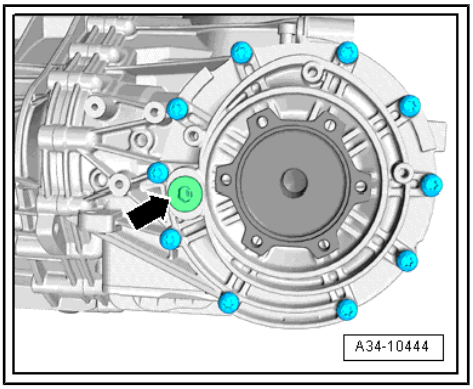

– Position the Used Oil Collection and Extraction Unit - SMN372500- under the right side of the transmission.

– Remove the sealing plug -arrow-.

– Check the oil level using a self-made tool, for example, a bent wire.

• Specified value: The oil level is correct when the front final drive is filled to 20 mm below the lower edge of the filler opening.

Too little axle oil:

Caution

Danger of causing damage to the transmission.

- *There are different gear oils for the "multitronic 0AW transmission".*
- *Only gear oil available as a replacement part meant for the transmission code may be used.*
- *Do not mix the axles oil, not even in small quantities. This will cause the sealing rings to leak. Note the allocation of the axle oils according to the transmission code letters. Refer to the Parts Catalog. Only axle oil for "multitronic 0AW" which can be obtained as a replacement part must be used in front final drive.*
- *Replace the filler plug after checking the level. Always pay attention to the allocation according to the transmission codes in the Parts Catalog. Compare the old and new filler plug to prevent leakage on the transmission.*
- *Do not mix other gear oils, even in small quantities. Leaks in the transmission will result.*

– Add some axle oil and wait 5 minutes.

Too much axle oil:

– Extract some axle oil and wait 5 minutes.

Protected by copyright. Copying for private or commercial purposes, in part or in whole, is not permitted unless authorised by AUDI AG. AUDI AG does not guarantee or accept any liability with respect to the correctness of information in this document. Copyright by AUDI AG.

Note

The waiting time of at least 5 minutes is necessary for the internal oil level to even out.

– Continue checking the oil level until it is correct.

– Tighten the new sealing plug.

Tightening Specifications

- Refer to -item 4- ⇒ Item 4 (page 73)
- Install the drive axle heat shield. Refer to ⇒ Suspension, Wheels, Steering; Rep. Gr. 40 ; Drive Axle; Overview - Drive Axle .

2.2 Gear Oil, Draining and Filling

Special tools and workshop equipment required

- Used Oil Collection and Extraction Unit - SMN372500-
- Protective eyewear

cardiagn.com

Procedure

After performing any repairs where the axle oil has been drained, for example after removing the front final driver cover, the front final drive must first be filled with axle oil.

Add the oil before installing the transmission so that there is enough time for the oil to even out.

Conditions:

- The axle oil was drained, for example after removing the front final drive cover.
- The cover for the front final drive is installed.

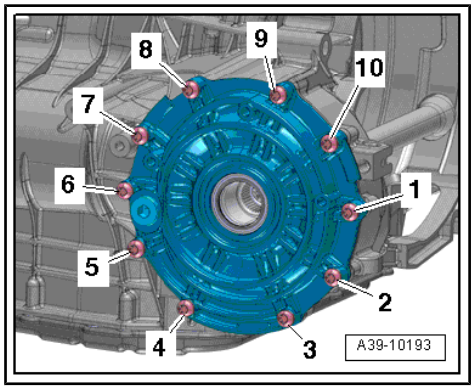

– With the transmission still removed, remove the inspection plug -arrow-.

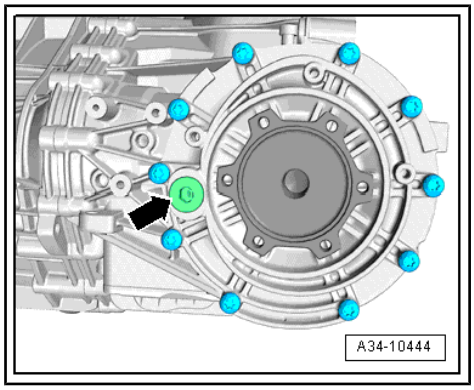

Caution

Danger of causing damage to the transmission.

- *There are different gear oils for the "multitronic 0AW transmission".*
- *Only gear oil available as a replacement part meant for the transmission code may be used.*
- *Do not mix the axles oil, not even in small quantities. This will cause the sealing rings to leak. Note the allocation of the axle oils according to the transmission code letters. Refer to the Parts Catalog. Only axle oil for "multitronic 0AW" which can be obtained as a replacement part must be used in front final drive.*
- *Replace the filler plug after checking the level. Always pay attention to the allocation according to the transmission codes in the Parts Catalog. Compare the old and new filler plug to prevent leakage on the transmission.*
- *Do not mix other gear oils, even in small quantities. Leaks in the transmission will result.*

– Fill in 0.8L of gear oil.

Note

For the pre-filling with the transmission installed, it is necessary to wait approximately 35 minutes, so that the internal oil in the front final drive can equal out. This is the only way the axle oil level can be correctly adjusted.

– After installing the transmission, check the axle oil level in the front final drive and adjust if necessary. Refer to ⇒ "2.1 Gear Oil, Checking Level", page 108 .

Protected by copyright. Copying for private or commercial purposes, in part or in whole, is not permitted unless authorised by AUDI AG. AUDI AG does not guarantee or accept any liability with respect to the correctness of information in this document. Copyright by AUDI AG.

cardiagn.com

3 Seals

⇒ “3.1 Overview - Seals”, page 111
⇒ “3.2 Left Seal, Replacing”, page 111
⇒ “3.3 Right Seal, Replacing”, page 112
⇒ “3.4 Input Shaft Seal, Replacing”, page 112

3.1 Overview - Seals

1 - Seal

- For the input shaft
- Replacing. Refer to ⇒ “3.4 Input Shaft Seal, Replacing”, page 112 .

2 - Left Seal

- For the flange shaft
- Replacing. Refer to ⇒ “3.2 Left Seal, Replacing”, page 111 .

3 - Front Final Drive Cover

4 - Seal

- For the right flange shaft
- Replacing. Refer to ⇒ “3.3 Right Seal, Replacing”, page 112 .

5 - O-Ring

- On the front final drive cover
- Replacing is only possible for removed transmissions. Refer to ⇒ Continuously Variable Transmission; Rep. Gr. 39 ; Seals; Left Seal, Replacing .

6 - Seal

- For the selector shaft
- Replacing. Refer to ⇒ “1.13 Selector Shaft Seal, Replacing”, page 33 .

7 - Transmission

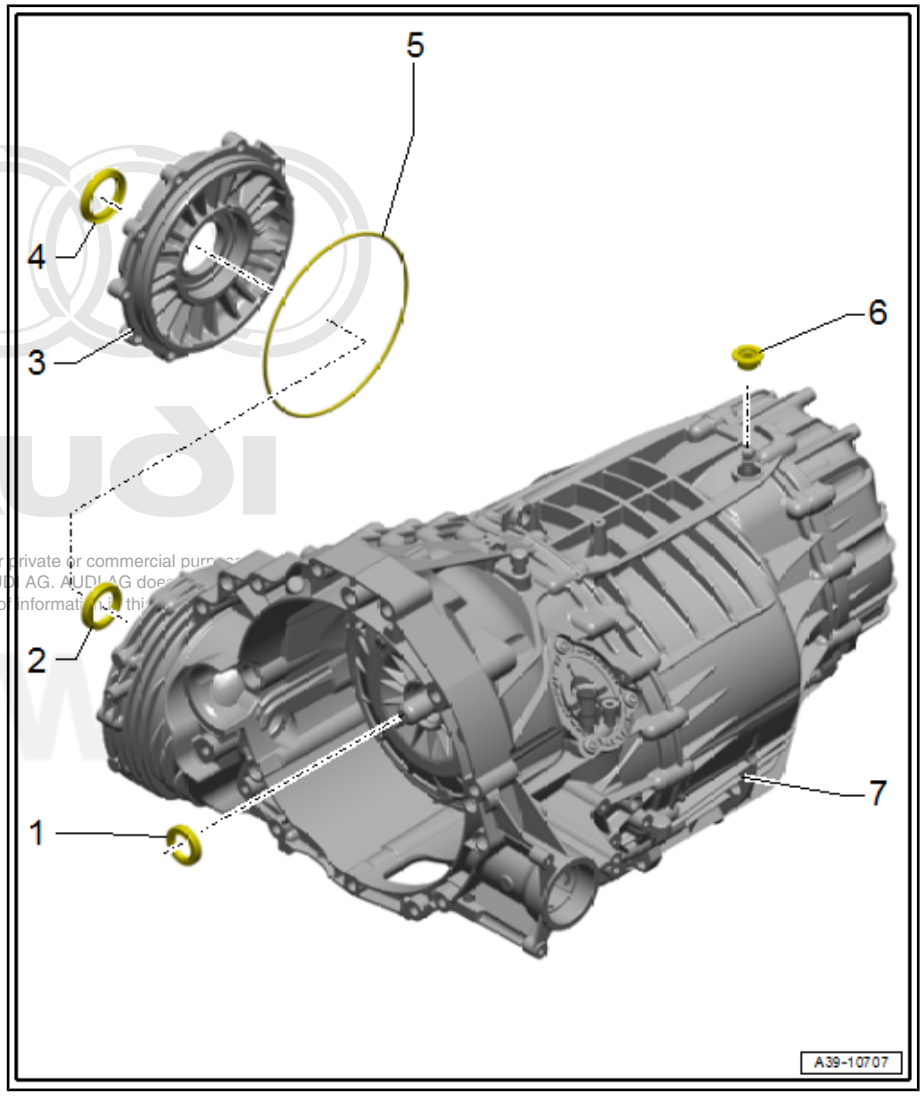

Protected by copyright. Copying for private or commercial purposes, in part or in whole, is not permitted unless authorised by AUDI AG. AUDI AG does not guarantee or assume any liability with respect to the correctness of information in this document.

cardiagn.com

3.2 Left Seal, Replacing

Procedure

Note

The left flange shaft seal can only be replaced for removed transmissions.

– Remove the transmission. Refer to
⇒ “2.1 Transmission, Removing”, page 34 .

– Replace the left flange shaft seal. Refer to ⇒ Continuously Variable Transmission; Rep. Gr. 39 ; Seals; Left Seal, Replacing .

– After installing the transmission, check the axle oil level in the front final drive and adjust if necessary. Refer to
⇒ “2.1 Gear Oil, Checking Level”, page 108 .

3.3 Right Seal, Replacing

Procedure

– Remove the right flange shaft. Refer to
⇒ “4.2 Right Flange Shaft, Removing and Installing”, page 113 .

– Replace the right flange shaft seal. Refer to ⇒ Continuously Variable Transmission; Rep. Gr. 39 ; Seals; Right Seal, Replacing .

– Install the right flange shaft. Refer to
⇒ “4.2 Right Flange Shaft, Removing and Installing”, page 113 .

– Gear oil level in front final drive, checking and filling. Refer to
⇒ “2.1 Gear Oil, Checking Level”, page 108 .

3.4 Input Shaft Seal, Replacing

Procedure

Note

The input shaft seal can only be replaced for removed transmissions.

– Remove the transmission. Refer to
⇒ “2.1 Transmission, Removing”, page 34 .

– Replacing the input shaft seal. Refer to ⇒ Continuously Variable Transmission; Rep. Gr. 39 ; Seals .

– Refer to ⇒ “7.1 ATF Level, Checking”, page 81 after installing the transmission.

Reproduction or copying for private or commercial purposes, in part or in whole, is not permitted unless authorised by AUDI AG. AUDI AG does not guarantee or accept any liability with respect to the correctness of information in this document. Copyright by AUDI AG.

cardiagn.com

4 Differential

⇒ "4.1 Left Flange Shaft, Removing and Installing", page 113

⇒ "4.2 Right Flange Shaft, Removing and Installing", page 113

4.1 Left Flange Shaft, Removing and Installing

Procedure

Note

The left flange shaft seal can only be replaced for removed transmissions.

– Remove the transmission. Refer to ⇒ "2.1 Transmission, Removing", page 34 .

– Remove the left flange shaft. Refer to ⇒ Continuously Variable Transmission; Rep. Gr. 39 ; Differential; Left Flange Shaft, Removing and Installing .

– After installing the transmission, check the axle oil level in the front final drive and adjust if necessary. Refer to ⇒ "2.1 Gear Oil, Checking Level", page 108 .

Protected by copyright. Copying for private or commercial purposes in part or in whole, is not permitted unless authorised by AUDI AG. AUDI AG does not guarantee or accept any liability with respect to the correctness of information in this document. Copyright by AUDI AG.

4.2 Right Flange Shaft, Removing and Installing

Special tools and workshop equipment required

- Bearing/Bushing Installer - Multiple Use - VW295-
- Slide Hammer Set - VW771-
- Vibration Damper Tool - 3419-
- Used Oil Collection and Extraction Unit - SMN372500-
- M10 nut, quantity: 2
- Sealing Grease - G 052 128 A1-

Removing

– Remove the right front wheel. Refer to ⇒ Suspension, Wheels, Steering; Rep. Gr. 44 ; Wheels and Tires .

– Remove the right drive axle cover -1- in the wheel housing. Refer to ⇒ Body Exterior; Rep. Gr. 66 ; Noise Insulation; Overview - Noise Insulation .

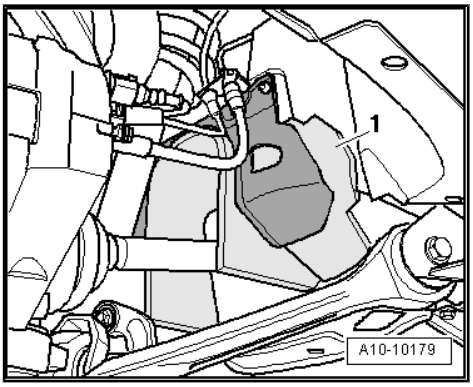

cardiagn.com

– Remove the bolts -arrows- and remove the right heat shield -1-.

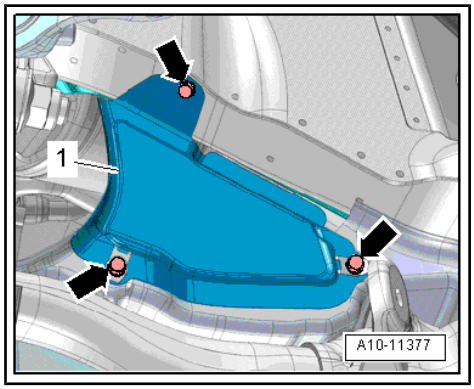

– Remove the bolts -arrows- and then remove the heat shield from the right drive axle.

– Remove the right drive axle from the transmission flange shaft and move it back. Refer to ⇒ Suspension, Wheels, Steering; Rep. Gr. 40 ; Drive Axle; Drive Axle, Removing and Installing .

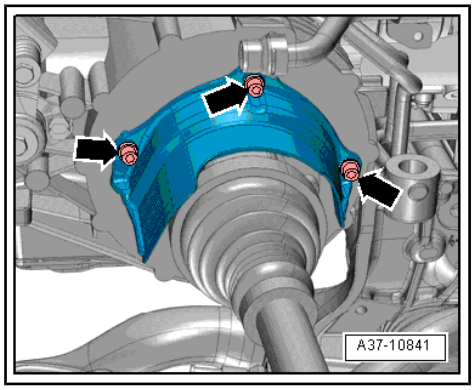

– Place the Used Oil Collection and Extraction Unit - SMN372500- under the transmission.

– Install the threaded eye from the Vibration Damper Tool - 3419- into the threaded hole in the right flange shaft with 2 M10 nuts -1-.

– Position the Slide Hammer Set - VW771- with the -VW771/13- on the threaded eye and remove the flange shaft.

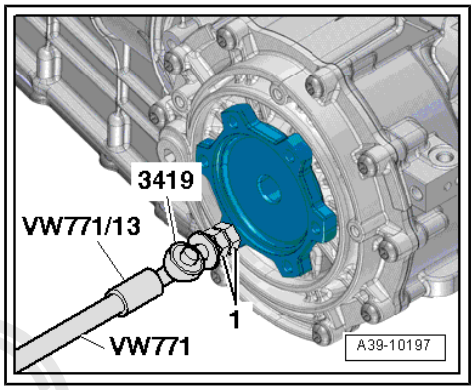

Protected by copyright. Copying for private or commercial purposes, in part or in whole, is not permitted unless authorised by AUDI AG. AUDI AG does not guarantee or accept any liability with respect to the correctness of information in this document. Copyright by AUDI AG.

cardiagn.com

Installing

Install in reverse order of removal. Note the following:

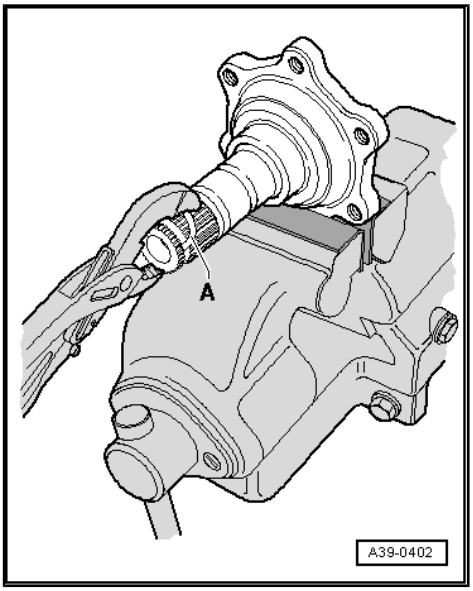

Note

Replace the circlip on the right flange shaft.

- Clamp the flange shaft in a vise with jaw protectors. Use the new circlip -A- to press the previous circlip out of the flange shaft groove.
- Inspect the right flange shaft seal for damages and replace if necessary. Refer to ⇒ Continuously Variable Transmission; Rep. Gr. 39 ; Seals; Right Seal, Replacing .
- Fill the space between the sealing and dust lip halfway with Sealing Grease - G 052 128 A1- .
- Drive in the right flange shaft using the Bearing/Bushing Installer - Multiple Use - VW295- .
- Gear oil level in front final drive, checking and filling. Refer to ⇒ “2.1 Gear Oil, Checking Level”, page 108 .

Tightening Specifications

- Refer to ⇒ Suspension, Wheels, Steering; Rep. Gr. 40 ; Drive Axle; Overview - Drive Axle .
- Refer to ⇒ Suspension, Wheels, Steering; Rep. Gr. 44 ; Wheels and Tires .
- Refer to ⇒ Body Exterior; Rep. Gr. 66 ; Molding/Trim/Extensions/Trim Panels; Overview - Heat Shield .

Protected by copyright. Copying for private or commercial purposes, in part or in whole, is not permitted unless authorised by AUDI AG. AUDI AG does not guarantee or accept any liability with respect to the correctness of information in this document. Copyright by AUDI AG.

cardiagn.com

5 Transmission Control

⇒ “5.1 Overview - Transmission Control Module”, page 116

⇒ “5.2 Transmission Control Module, Removing and Installing”, page 119

⇒ “5.3 Hydraulic Control Module, Removing and Installing”, page 119

5.1 Overview - Transmission Control Module

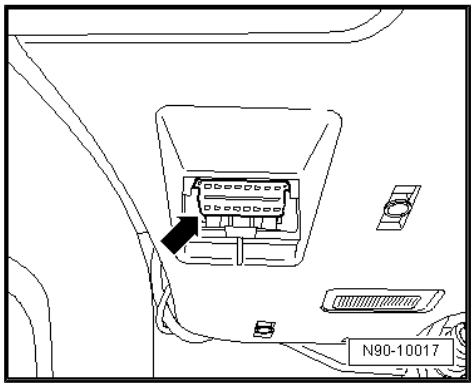

Diagnostic Connection

- Component location: The diagnostic connection for the Vehicle Diagnostic Tester in inside the footwell on the driver side.
- Determine the cause of the malfunction as accurately as possible using `Guided Fault Finding`, `OBD` and `Test Instruments` before starting any repairs on the transmission using the Vehicle Diagnostic Tester .

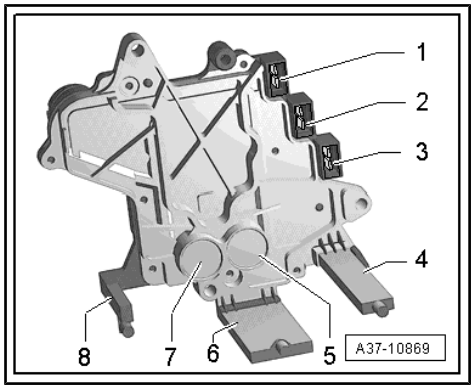

Transmission Control Module - J217-

- Component location: The Transmission Control Module - J217- is at the back of the transmission, secured directly to hydraulic control module.

The following components are integrated in the Transmission Control Module - J217- and can only be replaced together with the Transmission Control Module - J217- :

1 - Connector to the hydraulic control unit, on Solenoid Valve 1 - N88-

2 - Connector to the hydraulic control module, on the Automatic Transmission Pressure Regulating Valve 2 - N216-

3 - Connector to the hydraulic control module, on the Automatic Transmission Pressure Regulating Valve 1 - N215-

4 - Transmission Input Speed Sensor - G182- and Transmission Input Speed Sensor 2 - G612-

5 - Automatic Transmission Hydraulic Pressure Sensor 1 - G193-

6 - Multifunction Transmission Range Switch - F125- (Is also known as the drive position sensor)

7 - Automatic Transmission Hydraulic Pressure Sensor 2 - G194-

8 - Transmission Output Speed Sensor - G195-

Note

OBD monitors the Transmission Control Module - J217- .

Protected by copyright. Copying for private or commercial purposes, in part or in whole, is not permitted unless authorised by AUDI AG. AUDI AG does not guarantee or accept any liability with respect to the correctness of information in this document. Copyright by AUDI AG.

Removing and installing. Refer to ⇒ Continuously Variable Transmission; Rep. Gr. 39 ; Transmission Control; Transmission Control Module, Removing and Installing .

cardiagn.com

Hydraulic Control Unit

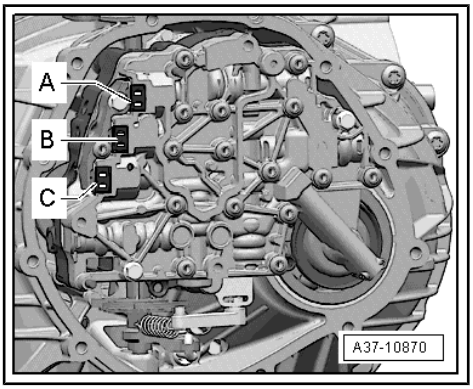

- Component location: The hydraulic control unit is attached to the back of the transmission. The Transmission Control Module - J217- is attached directly to the hydraulic control module.

A - Solenoid Valve 1 - N88- connector

B - Automatic Transmission Pressure Regulating Valve 2 - N216- connector

C - Automatic Transmission Pressure Regulating Valve 1 - N215- connector

Note

The OBD monitors the valves.

Removing and installing. Refer to ⇒ Continuously Variable Transmission; Rep. Gr. 39 ; Transmission Control .

Selector Lever Sensor System Control Module - J587- and Tiptronic Switch - F189-

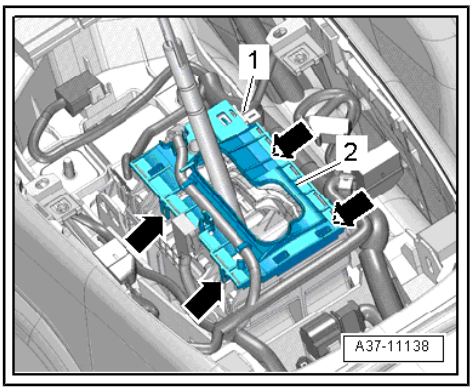

- Component location: The Selector Lever Sensor System Control Module - J587- and the Tiptronic Switch - F189- are a single unit -2-, which is clipped to the selector mechanism function unit -arrows-.

Refer to
⇒ “1.11 Selector Lever Sensor System Control Module J587 , Removing and Installing”, page 32 .

Shift Lock Solenoid - N110-

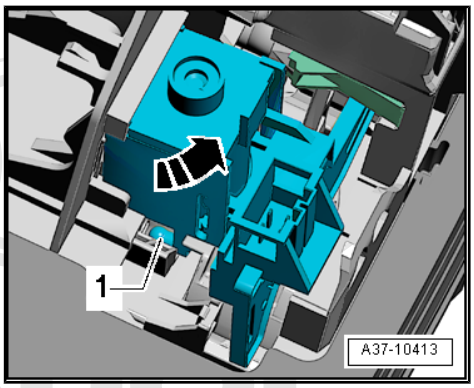

- Component location: The Shift Lock Solenoid - N110- -1- is clipped to the selector mechanism.

Refer to
⇒ “1.10 Shift Lock Solenoid N110 , Removing and Installing”, page 30 .

Transmission Park Selector Switch - F305-

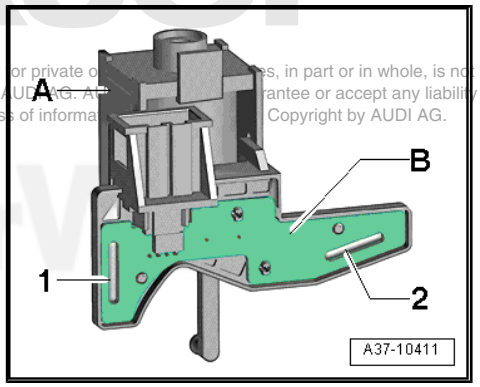

- Component location: The Transmission Park Selector Switch - F305- , which consists of two reed contacts -1- and -2-, is installed on the circuit board -B- on the Shift Lock Solenoid - N110- -A-.

Note

The Transmission Park Selector Switch - F305- can only be replaced together with the Shift Lock Solenoid - N110- .

cardiagn.com

Transmission Range Display - Y6-

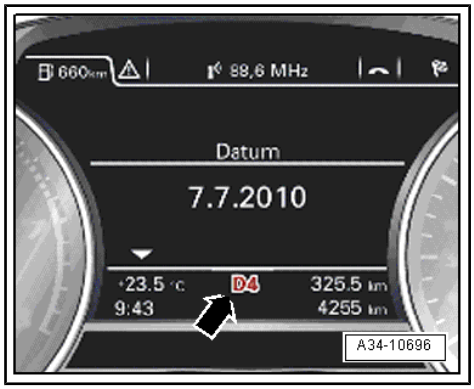

- Installed location: the Transmission Range Display - Y6- -arrow- is integrated inside the instrument cluster.

Note

Replace the instrument cluster if one of the transmission range displays is faulty. Refer to ⇒ Electrical Equipment; Rep. Gr. 90 ; Instrument Cluster; Overview - Instrument Cluster .

Selector Lever Transmission Range Position Display Unit - Y26-

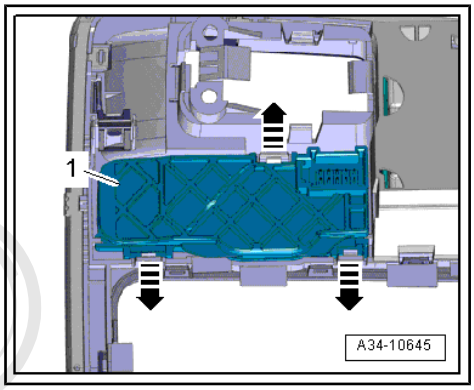

- Component location: The Selector Lever Transmission Range Position Display Unit - Y26- -item 1- is clipped inside the Multimedia System Control Head - E380- .

Removing and Installing. Refer to ⇒ Electrical Equipment; Rep. Gr. 96 ; Lamps; Selector Lever Transmission Range Position Display Unit - Y26- , Removing and Installing .

Kick Down Switch - F8-

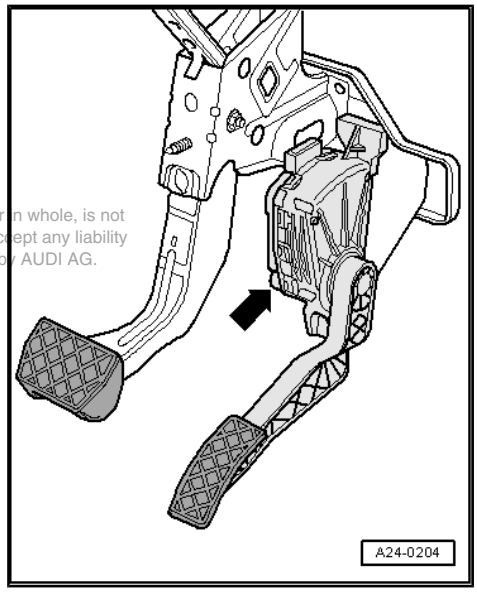

A programmed value from the Accelerator Pedal Position Sensor - G79- and Accelerator Pedal Position Sensor 2 - G185- (integrated in accelerator pedal module) are saved in the engine control module as a kick-down signal.

- Component location: The accelerator pedal position sensors are integrated inside the accelerator pedal module -arrow-.

Reproduction or copyright of the Audi Group, in part or in whole, is not permitted unless authorised by AUDI AG. AUDI AG does not guarantee or accept any liability with respect to the correctness of information in this document. Copyright by AUDI AG.

Note

The accelerator pedal module must be replaced if the accelerator pedal position sensor is faulty, for the removal and Installation. Refer to ⇒ Fuel Supply System; Rep. Gr. 20 ; Fuel Pump; Fuel Pump Control Module - J538- , Removing and Installing .

Transmission Fluid Cooling Valve - N509-

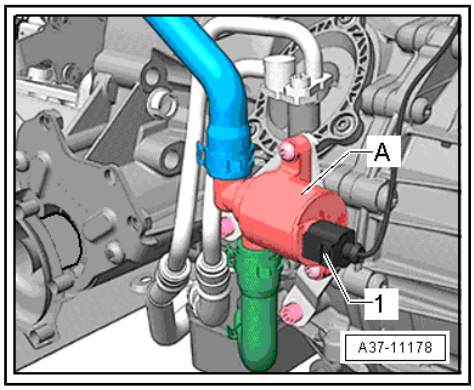

- Component location: The Transmission Fluid Cooling Valve - N509- -A- on the left on the transmission.

1 - Connector

Removing and installing. Refer to ⇒ Rep. Gr. 19 ; Coolant Pump/ Thermostat; Coolant Valve, Removing and Installing .

cardiagn.com

5.2 Transmission Control Module, Removing and Installing

Procedure

- Remove end cover. Refer to
  ⇒ “1.4 End Cover, Removing and Installing”, page 101 .
- Removing and installing the Transmission Control Module - J217- . Refer to ⇒ Continuously Variable Transmission; Rep. Gr. 39 ; Transmission Control; Transmission Control Module, Removing and Installing .
- Install the cover. Refer to
  ⇒ “1.4 End Cover, Removing and Installing”, page 101 .

5.3 Hydraulic Control Module, Removing and Installing

Procedure

- Remove end cover. Refer to
  ⇒ “1.4 End Cover, Removing and Installing”, page 101 .
- Removing and installing the hydraulic control unit. Refer to ⇒ Continuously Variable Transmission; Rep. Gr. 39 ; Transmission Control .
- Install the cover. Refer to
  ⇒ “1.4 End Cover, Removing and Installing”, page 101 .

Protected by copyright. Copying for private or commercial purposes, in part or in whole, is not permitted unless authorised by AUDI AG. AUDI AG does not guarantee or accept any liability with respect to the correctness of information in this document. Copyright by AUDI AG.

cardiagn.com

6 Special Tools

Special tools and workshop equipment required

- Used Oil Collection and Extraction Unit - SMN372500-

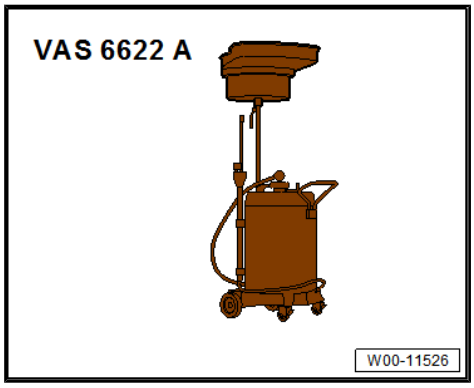

- Bearing/Bushing Installer - Multiple Use - VW295-

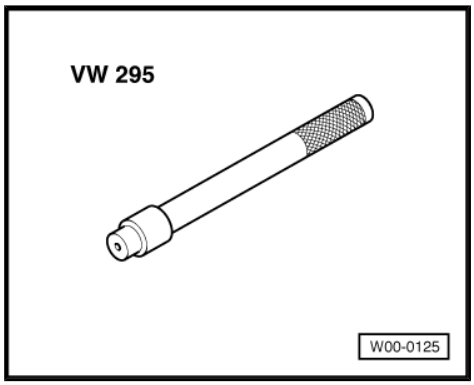

- Slide Hammer Set - VW771-

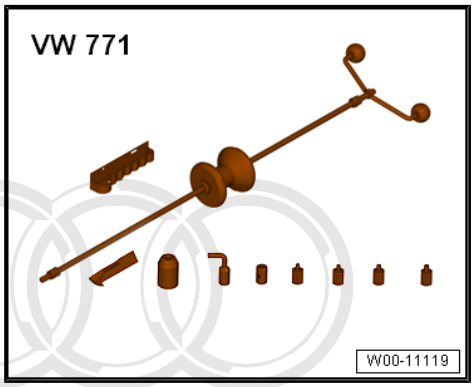

- Vibration Damper Tool - 3419-

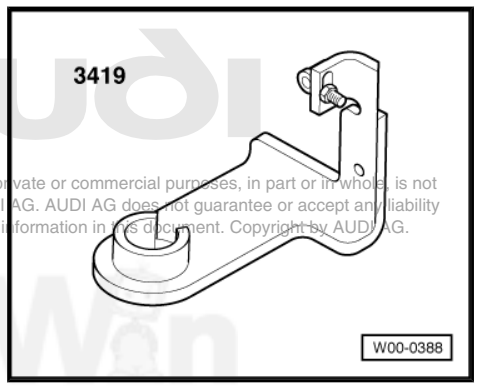

Protected by copyright. Copying for private or commercial purposes, in part or in whole, is not permitted unless authorised by AUDI AG. AUDI AG does not guarantee or accept any liability with respect to the correctness of information in this document. Copyright by AUDI AG.

cardiagn.com

7 Revision History

DRUCK NUMBER: A005A701621

Factory Edition	Edit Edition	Job Type	Impact	Feedback	Notes	Quality Checked By
07.2015	08/16/2016	Local Update	Low		Change Obergrup to “Drivetrain”	Tom Perry
07.2015	07/30/2015	Factory Update				Eric P.
05.2014	1/15/2015	Title Change				Jim H.
05.2014	11/18/2014	Link Checking				Joe Y.
05.2014	09/03/2014	Factory Update				Tom P.
	3/5/2014	Feedback		999715		Jim H.

Protected by copyright. Copying for private or commercial purposes, in part or in whole, is not permitted unless authorised by AUDI AG. AUDI AG does not guarantee or accept any liability with respect to the correctness of information in this document. Copyright by AUDI AG.

cardiagn.com

Cautions & Warnings

Please read these WARNINGS and CAUTIONS before proceeding with maintenance and repair work. You must answer that you have read and you understand these WARNINGS and CAUTIONS before you will be allowed to view this information.

- If you lack the skills, tools and equipment, or a suitable workshop for any procedure described in this manual, we suggest you leave such repairs to an authorized Audi retailer or other qualified shop. We especially urge you to consult an authorized Audi retailer before beginning repairs on any vehicle that may still be covered wholly or in part by any of the extensive warranties issued by Audi.

- Disconnect the battery negative terminal (ground strap)whenever you work on the fuel system or the electrical system. Do not smoke or work near heaters or other fire hazards. Keep an approved fire extinguisher handy.

Protected by copyright. Copying for private or commercial purposes, in part or in whole, is not permitted without the prior written consent of AUDI AG. AUDI AG does not accept any responsibility with respect to the correctness of information in this document. Copyright by AUDI AG.

- Audi is constantly improving its vehicles and sometimes these changes, both in parts and specifications, are made applicable to earlier models. Therefore, part numbers listed in this manual are for reference only. Always check with your authorized Audi retailer parts department for the latest information.

- Any time the battery has been disconnected on an automatic transmission vehicle, it will be necessary to reestablish Transmission Control Module (TCM) basic settings using the VAG 1551 Scan Tool (ST).

- Never work under a lifted vehicle unless it is solidly supported on stands designed for the purpose. Do not support a vehicle on cinder blocks, hollow tiles or other props that may crumble under continuous load. Never work under a vehicle that is supported solely by a jack. Never work under the vehicle while the engine is running.

- For vehicles equipped with an anti-theft radio, be sure of the correct radio activation code before disconnecting the battery or removing the radio. If the wrong code is entered when the power is restored, the radio may lock up and become inoperable, even if the correct code is used in a later attempt.

- If you are going to work under a vehicle on the ground, make sure that the ground is level. Block the wheels to keep the vehicle from rolling. Disconnect the battery negative terminal (ground strap) to prevent others from starting the vehicle while you are under it.

- Do not attempt to work on your vehicle if you do not feel well. You increase the danger of injury to yourself and others if you are tired, upset or have taken medicine or any other substances that may impair you or keep you from being fully alert.

- Never run the engine unless the work area is well ventilated. Carbon monoxide (CO) kills.

- Always observe good workshop practices. Wear goggles when you operate machine tools or work with acid. Wear goggles, gloves and other protective clothing whenever the job requires working with harmful substances.

- Tie long hair behind your head. Do not wear a necktie, a scarf, loose clothing, or a necklace when you work near machine tools or running engines. If your hair, clothing, or jewelry were to get caught in the machinery, severe injury could result.

next

© 2002 Audi of America, Inc.
All rights reserved. Information contained in this document is based on the latest information available at the time of printing and is subject to the copyright and other intellectual property rights of Audi of America, Inc., its affiliated companies and its licensors. All rights are reserved to make changes at any time without notice. No part of this document may be reproduced, stored in a retrieval system, or transmitted in any form or by any means, electronic, mechanical, photocopying, recording, or otherwise, nor may these materials be modified or reposted to other sites, without the prior expressed written permission of the publisher.
Version 1.0

cardiagn.com

Cautions & Warnings

- Do not re-use any fasteners that are worn or deformed in normal use. Some fasteners are designed to be used only once and are unreliable and may fail if used a second time. This includes, but is not limited to, nuts, bolts, washers, circlips and cotter pins. Always follow the recommendations in this manual - replace these fasteners with new parts where indicated, and any other time it is deemed necessary by inspection.

- Illuminate the work area adequately but safely. Use a portable safety light for working inside or under the vehicle. Make sure the bulb is enclosed by a wire cage. The hot filament of an accidentally broken bulb can ignite spilled fuel or oil.

- Friction materials such as brake pads and clutch discs may contain asbestos fibers. Do not create dust by grinding, sanding, or by cleaning with compressed air. Avoid breathing asbestos fibers and asbestos dust. Breathing asbestos can cause serious diseases such as asbestosis or cancer, and may result in death.

- Finger rings should be removed so that they cannot cause electrical shorts, get caught in running machinery, or be crushed by heavy parts.

Protected by copyright. Copying for private or commercial purposes, in part or in whole, is not permitted unless authorized by AUDI AG. AUDI AG does not guarantee or accept any liability with respect to the correctness of information in this document. Copyright by AUDI AG.

- Before starting a job, make certain that you have all the necessary tools and parts on hand. Read all the instructions thoroughly, do not attempt shortcuts. Use tools that are appropriate to the work and use only replacement parts meeting Audi specifications. Makeshift tools, parts and procedures will not make good repairs.

- Catch draining fuel, oil or brake fluid in suitable containers. Do not use empty food or beverage containers that might mislead someone into drinking from them. Store flammable fluids away from fire hazards. Wipe up spills at once, but do not store the oily rags, which can ignite and burn spontaneously.

- Use pneumatic and electric tools only to loosen threaded parts and fasteners. Never use these tools to tighten fasteners, especially on light alloy parts. Always use a torque wrench to tighten fasteners to the tightening torque listed.

- Keep sparks, lighted matches, and open flame away from the top of the battery. If escaping hydrogen gas is ignited, it will ignite gas trapped in the cells and cause the battery to explode.

- Be mindful of the environment and ecology. Before you drain the crankcase, find out the proper way to dispose of the oil. Do not pour oil onto the ground, down a drain, or into a stream, pond, or lake. Consult local ordinances that govern the disposal of wastes.

- The air-conditioning (A/C) system is filled with a chemical refrigerant that is hazardous. The A/C system should be serviced only by trained automotive service technicians using approved refrigerant recovery/recycling equipment, trained in related safety precautions, and familiar with regulations governing the discharging and disposal of automotive chemical refrigerants.

- Before doing any electrical welding on vehicles equipped with anti-lock brakes (ABS), disconnect the battery negative terminal (ground strap) and the ABS control module connector.

- Do not expose any part of the A/C system to high temperatures such as open flame. Excessive heat will increase system pressure and may cause the system to burst.

cardiagn.com

© 2002 Audi of America, Inc.
All rights reserved. Information contained in this document is based on the latest information available at the time of printing and is subject to the copyright and other intellectual property rights of Audi of America, Inc., its affiliated companies and its licensors. All rights are reserved to make changes at any time without notice. No part of this document may be reproduced, stored in a retrieval system, or transmitted in any form or by any means, electronic, mechanical, photocopying, recording, or otherwise, nor may these materials be modified or reposted to other sites, without the prior expressed written permission of the publisher.
Version 1.0

Cautions & Warnings

- When boost-charging the battery, first remove the fuses for the Engine Control Module (ECM), the Transmission Control Module (TCM), the ABS control module, and the trip computer. In cases where one or more of these components is not separately fused, disconnect the control module connector(s).

- Some of the vehicles covered by this manual are equipped with a supplemental restraint system (SRS), that automatically deploys an airbag in the event of a frontal impact. The airbag is operated by an explosive device. Handled improperly or without adequate safeguards, it can be accidentally activated and cause serious personal injury. To guard against personal injury or airbag system failure, only trained Audi Service technicians should test, disassemble or service the airbag system.

- Do not quick-charge the battery (for boost starting) for longer than one minute, and do not exceed 16.5 volts at the battery with the boosting cables attached. Wait at least one minute before boosting the battery a second time.

- Never use a test light to conduct electrical tests of the airbag system. The system must only be tested by trained Audi Service technicians using the VAG 1551 Scan Tool (ST) or an approved equivalent. The airbag unit must never be electrically tested while it is not installed in the vehicle.

- Some aerosol tire inflators are highly flammable. Be extremely cautious when repairing a tire that may have been inflated using an aerosol tire inflator. Keep sparks, open flame or other sources of ignition away from the tire repair area. Inflate and deflate the tire at least four times before breaking the bead from the rim. Completely remove the tire from the rim before attempting any repair.

- When driving or riding in an airbag-equipped vehicle, never hold test equipment in your hands or lap while the vehicle is in motion. Objects between you and the airbag can increase the risk of injury in an accident.

I have read and I understand these Cautions and Warnings.

back OK

Protected by copyright. Copying for private or commercial purposes, in part or in whole, is not permitted unless authorised by AUDI AG. AUDI AG does not guarantee or accept any liability with respect to the correctness of information in this document. Copyright by AUDI AG.

cardiagn.com

© 2002 Audi of America, Inc.
All rights reserved. Information contained in this document is based on the latest information available at the time of printing and is subject to the copyright and other intellectual property rights of Audi of America, Inc., its affiliated companies and its licensors. All rights are reserved to make changes at any time without notice. No part of this document may be reproduced, stored in a retrieval system, or transmitted in any form or by any means, electronic, mechanical, photocopying, recording, or otherwise, nor may these materials be modified or reposted to other sites, without the prior expressed written permission of the publisher.
Version 1.0