2010 Cadillac STS Owner Manual

In Brief 1-1
Instrument Panel 1-2
Initial Drive Information 1-4
Vehicle Features 1-14
Performance and Maintenance 1-20

Seats and Restraint System 2-1
Front Seats 2-2
Rear Seats 2-7
Safety Belts 2-8
Child Restraints 2-28
Airbag System 2-52
Restraint System Check 2-68

Features and Controls 3-1
Keys 3-3
Doors and Locks 3-12
Windows 3-18
Theft-Deterrent Systems 3-22
Starting and Operating Your Vehicle 3-25
Mirrors 3-37
Object Detection Systems 3-41
Universal Home Remote System 3-49
Storage Areas 3-56
Sunroof 3-57
Vehicle Personalization 3-58

Instrument Panel 4-1
Instrument Panel Overview 4-3
Climate Controls 4-44
Warning Lights, Gages, and Indicators 4-51
Driver Information Center (DIC) 4-69
Audio System(s) 4-94

Driving Your Vehicle 5-1
Your Driving, the Road, and the Vehicle 5-2
Towing 5-29

Service and Appearance Care 6-1
Service 6-4
Fuel 6-6
Checking Things Under the Hood 6-12
All-Wheel Drive 6-45
Rear Axle 6-46
Front Axle 6-47
Headlamp Aiming 6-48

2010 Cadillac STS Owner Manual

Bulb Replacement 6-49
Windshield Replacement 6-50
Windshield Wiper Blade Replacement 6-51
Tires 6-52
Appearance Care 6-108
Vehicle Identification 6-116
Electrical System 6-116
Capacities and Specifications 6-130

Maintenance Schedule 7-1
Maintenance Schedule 7-2

Customer Assistance Information 8-1
Customer Assistance and Information 8-2
Reporting Safety Defects 8-14
Vehicle Data Recording and Privacy 8-17

Index i-1

GENERAL MOTORS, GM, the GM Emblem, CADILLAC, the CADILLAC Crest & Wreath, and the name STS are registered trademarks and the name STS-V is a trademark of General Motors LLC.

This manual describes features that may or may not be on your specific vehicle either because they are options that you did not purchase or due to changes subsequent to the printing of this owner manual. Please refer to the purchase documentation relating to your specific vehicle to confirm each of the features found on your vehicle. For vehicles first sold in Canada, substitute the name “General Motors of Canada Limited” for Cadillac Motor Division wherever it appears in this manual.

Keep this manual in the vehicle for quick reference.

Litho in the U.S.A.
Part No. 25919507 A First Printing

Canadian Owners

Propriétaires Canadiens

A French language copy of this manual can be obtained from your dealer/retailer or from:

On peut obtenir un exemplaire de ce guide en français auprès du concessionnaire ou à l'adresse suivante:

Helm, Incorporated
P.O. Box 07130
Detroit, MI 48207

1-800-551-4123

Numéro de poste 6438 de langue française

www.helminc.com

Index

To quickly locate information about the vehicle, use the index in the back of the manual. It is an alphabetical list of what is in the manual and the page number where it can be found.

©2009 General Motors LLC. All Rights Reserved.

Safety Warnings and Symbols

Warning messages found on vehicle labels and in this manual describe hazards and what to do to avoid or reduce them.

Danger indicates a hazard with a high level of risk which will result in serious injury or death.

Warning or **Caution** indicates a hazard that could result in injury or death.

⚠ WARNING:

These mean there is something that could hurt you or other people.

Notice: **This means there is something that could result in property or vehicle damage. This would not be covered by the vehicle's warranty.**

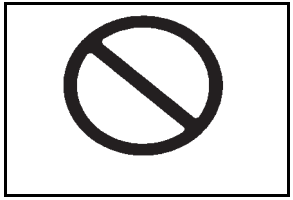

A circle with a slash through it is a safety symbol which means “Do Not,” “Do not do this,” or “Do not let this happen.”

Vehicle Symbols

The vehicle has components and labels that use symbols instead of text. Symbols are shown along with the text describing the operation or information relating to a specific component, control, message, gage, or indicator.

📖 **:** This symbol is shown when you need to see your owner manual for additional instructions or information.

: This symbol is shown when you need to see a service manual for additional instructions or information.

Vehicle Symbol Chart

Here are some additional symbols that may be found on the vehicle and what they mean. For more information on the symbol, refer to the index.

: Airbag Readiness Light

: Air Conditioning

: Antilock Brake System (ABS)

: Audio Steering Wheel Controls or OnStar®

: Brake System Warning Light

: Charging System

: Cruise Control

: Engine Coolant Temperature

: Exterior Lamps

: Fog Lamps

: Fuel Gage

: Fuses

: Headlamp High/Low-Beam Changer

: LATCH System Child Restraints

: Malfunction Indicator Lamp

: Oil Pressure

: Power

: Remote Vehicle Start

: Safety Belt Reminders

: Tire Pressure Monitor

: Traction Control

: Windshield Washer Fluid

✍ NOTES

Section 1 In Brief

Instrument Panel 1-2

Initial Drive Information 1-4
- Remote Keyless Entry (RKE) System 1-4
- Remote Vehicle Start 1-4
- Door Locks 1-5
- Trunk 1-6
- Windows 1-6
- Seat Adjustment 1-7
- Heated Seats (Front) 1-8
- Heated Seats (Rear) 1-8
- Heated and Ventilated Seats 1-9
- Head Restraint Adjustment 1-9
- Safety Belt 1-9
- Sensing System for Passenger Airbag 1-10
- Mirror Adjustment 1-10
- Steering Wheel Adjustment 1-11
- Interior Lighting 1-12
- Exterior Lighting 1-12
- Windshield Wiper/Washer 1-13
- Climate Controls 1-14

Vehicle Features 1-14
- Radio(s) 1-14
- Satellite Radio 1-16
- Steering Wheel Controls 1-16
- Bluetooth® 1-17
- Navigation System 1-17
- Driver Information Center (DIC) 1-18
- Vehicle Personalization 1-19
- Cruise Control 1-19
- Power Outlets 1-20

Performance and Maintenance 1-20
- Traction Control System (TCS) 1-20
- StabiliTrak® 1-20
- Tire Pressure Monitor 1-21
- Tire Sealant and Compressor Kit 1-21
- Engine Oil Life System 1-21
- Driving for Better Fuel Economy 1-22
- Roadside Service 1-22
- OnStar® 1-23

Instrument Panel

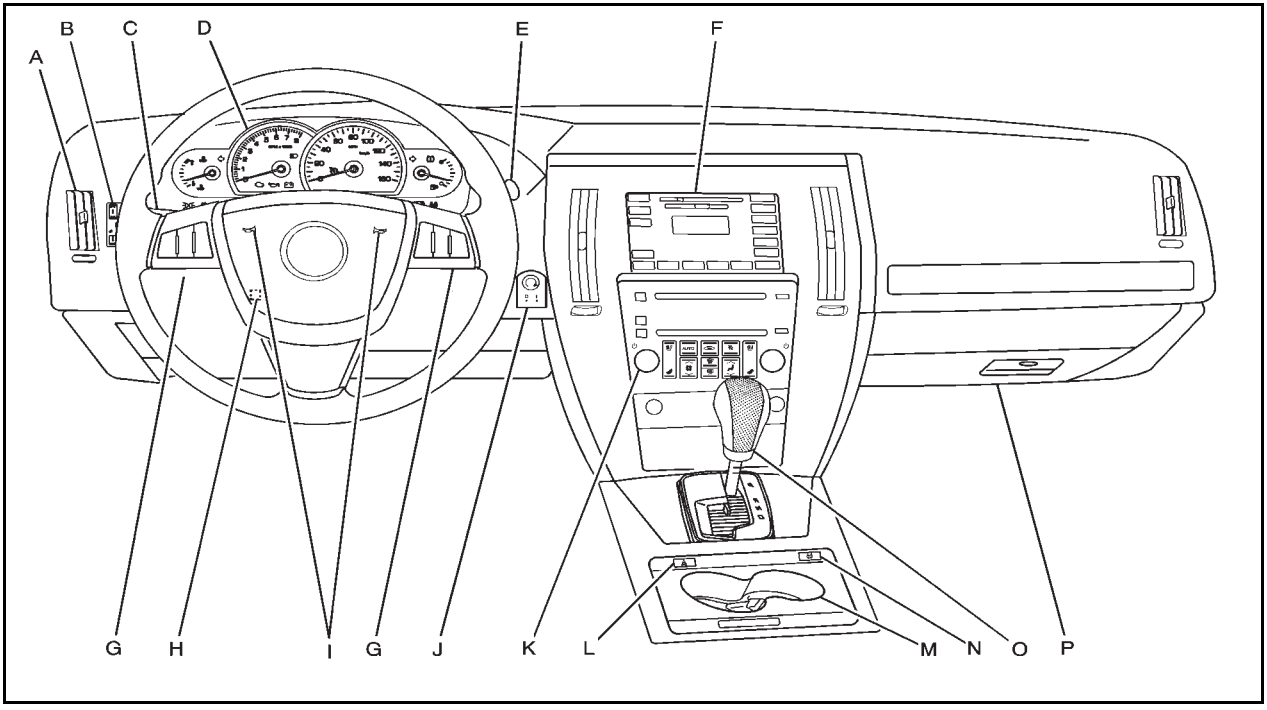

A. *Outlet Adjustment on page 4-48*.

B. *Instrument Panel Brightness on page 4-35*. *DIC Operation and Displays on page 4-70*. *Head-Up Display (HUD) on page 4-38* (If Equipped).

C. *Turn Signal/Multifunction Lever on page 4-4*. *Headlamps on page 4-27*. *Cruise Control on page 4-12*. *Adaptive Cruise Control on page 4-15* (If Equipped) . *Forward Collision Alert (FCA) System on page 4-6* (If Equipped) .

D. *Instrument Panel Cluster on page 4-52*.

E. *Windshield Wipers on page 4-10*.

F. *Audio System(s) on page 4-94*. *Navigation/Radio System on page 4-113* (If Equipped) .

G. *Audio Steering Wheel Controls on page 4-134* (If Equipped) . *Adaptive Cruise Control on page 4-15* (If Equipped) . *Heated Steering Wheel on page 4-4* (If Equipped) .

H. *Power Tilt Wheel and Telescopic Steering Column on page 4-3*.

I. *Horn on page 4-3*.

J. *Ignition Positions on page 3-26*.

K. *Dual Climate Control System on page 4-44*.

L. *Hazard Warning Flashers on page 4-3*.

M. *Cupholders on page 3-56*.

N. *Traction Control System (TCS) on page 5-9*.

O. Shift Lever. See *Automatic Transmission Operation on page 3-30*.

P. *Glove Box on page 3-56*.

Initial Drive Information

This section provides a brief overview about some of the important features that may or may not be on your specific vehicle.

For more detailed information, refer to each of the features which can be found later in this owner manual.

Remote Keyless Entry (RKE) System

The keyless access transmitter is used to lock and unlock the doors from up to 60 m (195 feet) away from the vehicle.

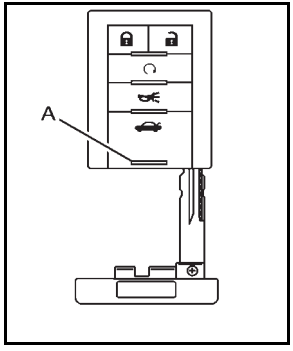

Press 🔓 to unlock the driver door. Press again within five seconds to unlock all remaining doors.

Press 🔒 to lock all doors.

Lock and unlock feedback can be personalized.

Press and hold 🚗 to open the trunk.

Press 🚨 and release to locate the vehicle.

Press and hold 🚨 for three seconds to sound the panic alarm.

Press 🚨 again to cancel the panic alarm.

Press the button (A) to remove the key. The key can be used for all locks.

See *Keys on page 3-3* and *Keyless Access System Operation on page 3-5*.

Remote Vehicle Start

With this feature the engine can be started from outside of the vehicle.

Starting the Vehicle

1. Aim the remote keyless access transmitter at the vehicle.
2. Press 🔓 .
3. Immediately after completing Step 2, press and hold 🔄 until the turn signal lamps flash.

When the vehicle starts, the parking lamps will turn on and remain on as long as the engine is running. The doors will be locked and the climate control system may come on.

The engine will continue to run for 10 minutes. Repeat the steps for a 10-minute time extension. Remote start can be extended only once.

Canceling a Remote Start

To cancel a remote start:

- Aim the RKE transmitter at the vehicle and press and hold until the parking lamps turn off.
- Turn on the hazard warning flashers.
- Press the Acc. button (ignition switch).
- Turn on the valet lockout switch.

See *Remote Vehicle Start on page 3-10*.

Door Locks

There are several ways to lock and unlock the vehicle.

From the outside:

- Pull the front door handle. If the vehicle has a keyless access transmitter, the vehicle recognizes the transmitter and automatically unlocks the door.
- Another way to lock or unlock the vehicle, is to press or on the keyless access transmitter. See *Vehicle Personalization on page 3-58* for information on how to program the keyless access feature.

From the inside:

- Press the power door lock switch located on each front door. See *Power Door Locks on page 3-13* for more information.
- Push down or pull up on the manual door lock knob for the rear door. The knob is located at the top of the door panel near the window.

Power Door Locks

On vehicles with power door locks, the switches are located on the front doors.

: Press to unlock the doors.

: Remove the key from the ignition and press to lock the doors.

Trunk

Trunk Lid Release

There are three ways to open the trunk lid.

- Press the button located on the driver door.
- Press on the keyless access transmitter.

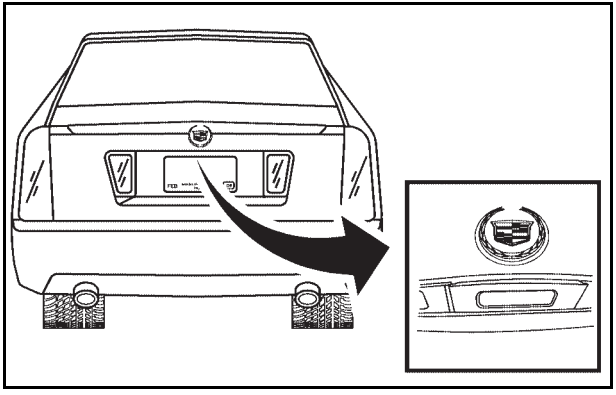

- Squeeze the trunk release button located on the rear of the trunk lid above the license plate.

See *Trunk on page 3-15* for more information.

Windows

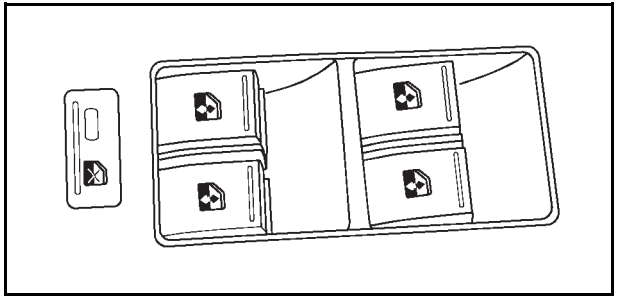

The power window switches are located on the armrest near each window. Press the front of the switch to the first position to open the window to the desired level. Lift up the front of the switch to the first position to close the window.

See *Windows on page 3-18* for more information.

See *Power Windows on page 3-19* for more information.

Seat Adjustment

Power Seats

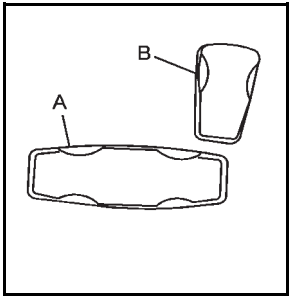

The power seat controls are on the outboard side of the seat(s).

Move the seat forward or rearward by moving the control (A) forward or rearward.

Raise or lower the front or rear of the seat cushion by moving the front or rear of the control (A) up or down.

See *Power Seats on page 2-2*.

Power Reclining Seatbacks

The control is located on the outboard side of the seat(s).

To raise or recline the seatback, tilt the top of the control (B) forward or rearward.

See *Power Reclining Seatbacks on page 2-4*.

Power Lumbar Adjustment

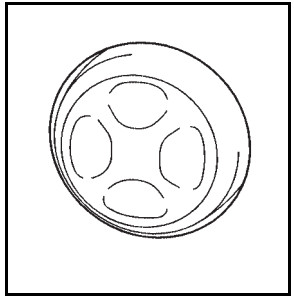

The control is located on the outboard side of the front seat(s).

Press the front or rear of the control to increase or decrease lumbar support.

Press the top or bottom of the control to raise or lower the position of the lumbar support.

See *Power Lumbar on page 2-3*.

Heated Seats (Front)

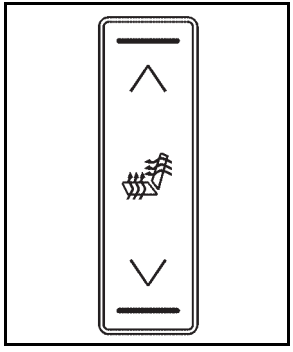

On vehicles with heated front seats, the buttons are located on the climate control panel.

: Press the up or down arrow to turn on the heated seat at the highest or lowest setting.

Press the up or down arrows a second time to raise or lower the setting. Press the down arrow until the indicator on the climate control displays is off.

See *Heated Seats on page 2-3* for more information.

Heated Seats (Rear)

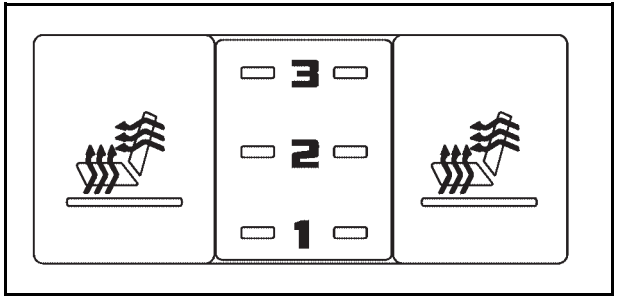

If the vehicle has this feature, the controls are located on the center console.

Press the button to turn the heated seat on. Press the button again to decrease the seat temperature or turn the seat off.

The indicator lights represent which setting the heat is on, 3 being the highest.

See *Heated Seats on page 2-7* for more information.

Heated and Ventilated Seats

On vehicles with heated and ventilated seats, the buttons are located on the climate control panel.

: Press to heat the seat and seatback.

: Press to ventilate the seat.

For more information see *Heated and Ventilated Seats on page 2-4*

Head Restraint Adjustment

Do not drive until the head restraints for all occupants are installed and adjusted properly.

For more information see *Head Restraints on page 2-6*.

Safety Belt

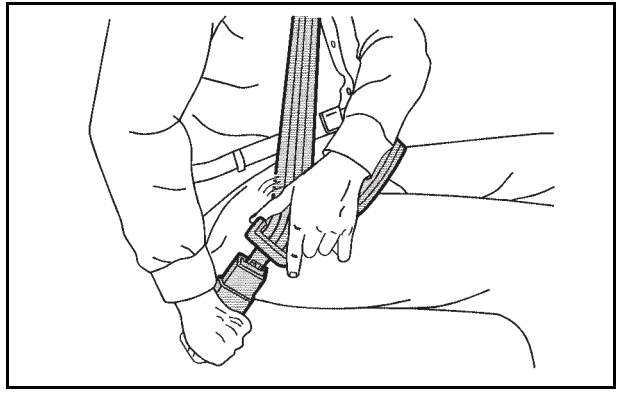

Refer to the following sections for important information on how to use safety belts properly.

- *Safety Belts: They Are for Everyone on page 2-8*.
- *How to Wear Safety Belts Properly on page 2-13*.
- *Lap-Shoulder Belt on page 2-22*.
- *Lower Anchors and Tethers for Children (LATCH) on page 2-39*.

Sensing System for Passenger Airbag

The passenger sensing system will turn off the right front passenger frontal airbag under certain conditions. The driver airbag, seat-mounted side impact airbags and the roof-rail airbags are not affected by the passenger sensing system.

The passenger airbag status indicator will be visible on the overhead console when the vehicle is started.

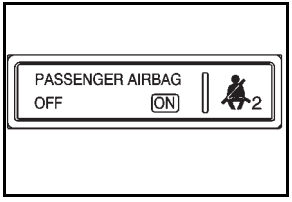

United States

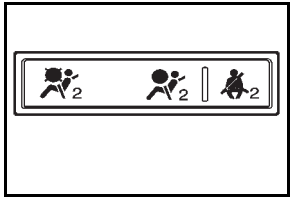

Canada

See *Passenger Sensing System on page 2-61* for important information.

Mirror Adjustment

Exterior Mirrors

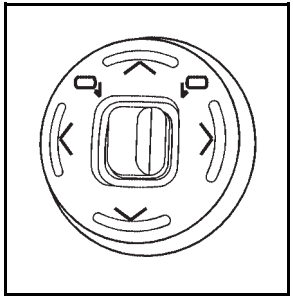

Controls for the outside power mirrors are located on the driver door.

1. Move the selector switch left or right to choose the driver side or passenger side mirror.
2. Press one of the four arrows located on the control pad to move the mirror to the desired direction.
3. Return the selector switch to the center position when finished adjusting.

The preferred mirror positions can be stored with the memory option. See *Memory Seat, Mirrors and Steering Wheel on page 3-75*.

The dimming feature automatically adjusts the driver outside mirror for the glare of the headlamps behind your vehicle. See *Automatic Dimming Rearview Mirror on page 3-37* for more information.

Manually fold the mirrors inward to prevent damage when going through an automatic car wash. To fold, push the mirror toward the vehicle. Push the mirror outward, to return to its original position.

Interior Mirror

The vehicle has an automatic dimming inside rearview mirror. Automatic dimming reduces the glare of lights from behind the vehicle. The dimming feature comes on and the indicator light illuminates each time the vehicle is started.

See *Automatic Dimming Rearview Mirror on page 3-37* for more information.

Steering Wheel Adjustment

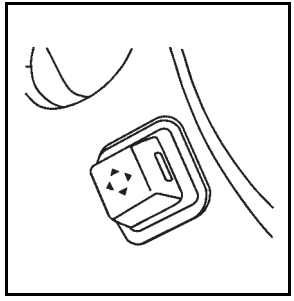

The power tilt and telescope wheel control is located on the left side of the steering column.

To adjust the steering wheel:

- Push the control up or down to tilt the steering wheel up or down.
- Push the control forward or rearward to move the steering wheel towards the front or rear of the vehicle.

See *Power Tilt Wheel and Telescopic Steering Column on page 4-3*.

Interior Lighting

Reading Lamps

The reading lamps are located on the overhead console. These lamps come on automatically when any door is opened.

For manual operation, press the button next to each lamp to turn it on or off.

If the reading lamps are left on, they automatically shut off 10 minutes after the ignition has been turned off.

For more information on interior lamps, see:

- *Reading Lamps on page 4-36*.
- *Entry Lighting on page 4-36*.
- *Instrument Panel Brightness on page 4-35*.

Exterior Lighting

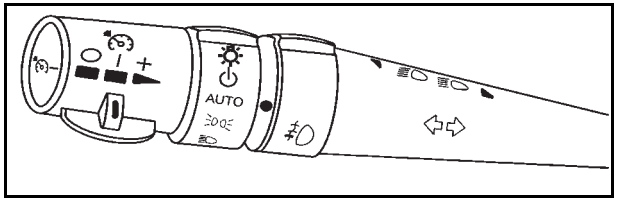

The exterior lamp control is located in the middle of the turn signal/multifunction lever.

☼ **:** Turn the control with this symbol on it to operate the exterior lamps.

The exterior lamp control has four positions:

⏻ **:** Turns off all lamps and automatic lighting features, including Daytime Running Lamps (DRL) and IntelliBeam™.

AUTO : Turns the exterior lamps on and off automatically depending upon how much light is outside of the vehicle.

: Turns on the parking lamps and other lamps.

: Turns on the headlamps and other lamps.

For more information, see:

- *Headlamps on page 4-27*.
- *Daytime Running Lamps (DRL) on page 4-32*.
- *Fog Lamps on page 4-33*.

Windshield Wiper/Washer

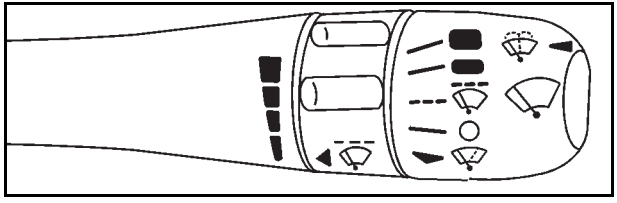

The windshield wiper lever is on the right side of the steering column.

Move the lever to select the wiper speed:

: Single wipe, move to and then release it. The lever will return to its original position. For several wipes, hold the lever in this position.

: Turns the windshield wipers off.

: For a delayed wiping cycle, move the lever to and turn the delay adjustment band to adjust the frequency of wipes.

: Turn the band up for more frequent wipes or down for less frequent wipes. The windshield wiper lever must be set to for this feature to work.

: Slow wipes.

: Fast wipes.

See *Windshield Wipers on page 4-10* and *Windshield Washer on page 4-11*.

Climate Controls

The heating, cooling, and ventilation can be controlled for the vehicle with this system.

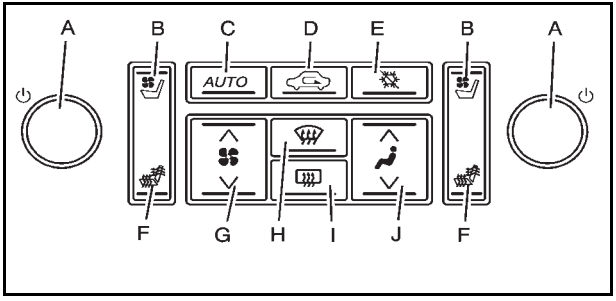

Vehicles With Heated and Ventilated Seats Shown, Vehicles Without Similar

A. Driver and Passenger Side Power Buttons
B. Ventilated Seat
C. AUTO
D. Air Recirculation
E. Air Conditioning
F. Heated Seat
G. Fan Control
H. Defrost
I. Rear Window Defogger
J. Air Delivery Mode Control

See *Dual Climate Control System on page 4-44* and *Rear Climate Control System on page 4-49*.

Vehicle Features

Radio(s)

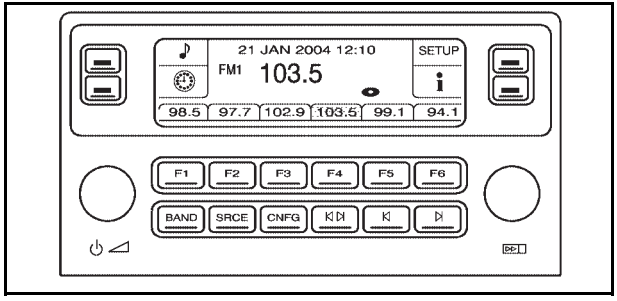

Radio with CD

⏻ **:** Press to turn the system on and off.

◢ **:** Turn to increase or to decrease the volume.

SRCE : Press to select between the radio or the CD player.

BAND : Press to select FM1, FM2, AM, or XM1 or XM2.

▷▷| **:** Turn to select radio stations.

|◁ ▷| **:** Seek or scan stations.

For more information about these and other radio features, see *Radio(s) on page 4-95*.

Setting Preset Stations

Up to 30 stations (six FM1, six FM2, six AM, six XM1 and six XM2), can be programmed on the six numbered pushbuttons.

To program preset stations:

1. Tune to a station and select the equalization, DSP, or PTY (program type) setting if desired.
2. Press and hold one of the six numbered pushbuttons for two seconds until a beep sounds. The set preset station number displays above the set pushbutton. If the numbered pushbutton is pressed for less then two seconds, the radio tunes to the station set to that pushbutton.
3. Repeat the steps for each pushbutton.

For more information, see *Radio(s) on page 4-95*.

Setting the Clock

To adjust the time:

1. Press ▷▷| , located on the radio, to enter the main menu.
2. Turn ▷▷| until SET CLOCK displays.
3. Press ▷▷| to select SET CLOCK.
4. Turn ▷▷| to adjust the time.
5. Press ▷▷| to update the time and VEHICLE TIME UPDATED displays.

To adjust the date:

1. Press ▷▷| to enter the main menu.
2. Turn ▷▷| until SET DATE displays.
3. Press ▷▷| to select SET DATE.
4. Turn ▷▷| to adjust the date.
5. Press ▷▷| to update the date and VEHICLE DATE UPDATED displays.

Satellite Radio

XM is a satellite radio service that is based in the 48 contiguous United States and 10 Canadian provinces. XM satellite radio has a wide variety of programming and commercial-free music, coast-to-coast, and in digital-quality sound.

A fee is required to receive the XM service.

For more information, refer to:

- www.xmradio.com or call 1-800-929-2100 (U.S.)
- www.xmradio.ca or call 1-877-438-9677 (Canada)

See “XM Satellite Radio Service” under *Radio(s) on page 4-95*.

Steering Wheel Controls

The vehicle has audio steering wheel controls and they could differ depending on the vehicle’s options.

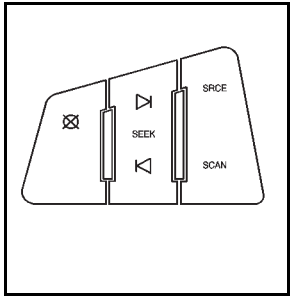

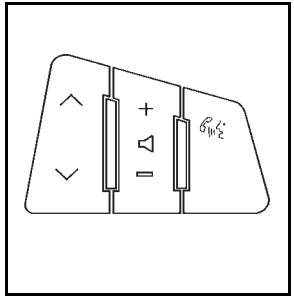

SEEK : Press to go to the next or previous radio station or track on a CD.

SRCE : Press to select between AM, FM, XM™, or CD.

SCAN : Press and hold to scan radio stations.

∧ ∨ **:** Press to go to the next or previous radio station stored as a favorite or tack on a CD.

+ ◁ −: Press to increase or to decrease the volume.

: Press and release to silence the vehicle speakers only. Press and release again to turn the sound on.

For vehicles with Bluetooth®, OnStar®, or a navigation system, press and hold to interact with those systems.

Bluetooth®

For vehicles with an in-vehicle Bluetooth system, it allows users with a Bluetooth enabled cell phone to make and receive hands-free calls using the vehicle's audio system and controls.

The Bluetooth enabled cell phone must be paired with the in-vehicle Bluetooth system before it can be used in the vehicle. Not all phones will support all functions. For more information visit www.gm.com/bluetooth.

For more information, see *Bluetooth® on page 4-113*.

Navigation System

The vehicle's navigation system provides detailed maps of most major freeways and roads throughout the United States and Canada. After a destination has been set, the system provides turn-by-turn instructions for reaching the destination. In addition, the system can help locate a variety of points of interest (POI), such as banks, airports, restaurants, and more.

See the vehicle's Navigation System manual for more information.

Driver Information Center (DIC)

The DIC display is located at the bottom of the instrument panel cluster. It shows the status of many vehicle systems.

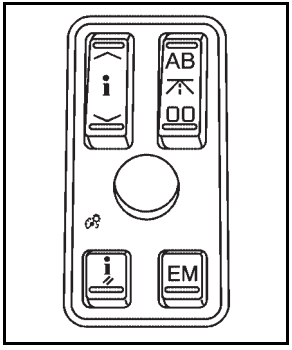

Without Head-Up Display (HUD)

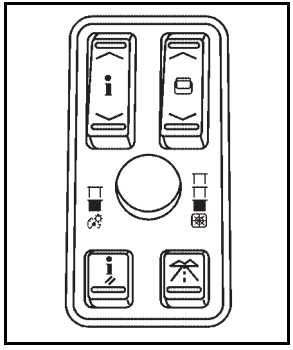

With Head-Up Display (HUD)

The DIC buttons are located on the instrument panel, to the left of the steering wheel.

∧ i ∨ **:** Press to scroll through the available vehicle information displays which may include digital speed display, fuel range, fuel economy, fuel used, average speed, timer, battery voltage, tire pressure, engine oil life, and display units.

If you have an STS-V, the DIC also has additional vehicle information displays which include engine boost, engine oil temperature, oil pressure, and transmission fluid temperature.

AB 00 or : Press to scroll through the odometer, trip odometer A and trip odometer B.

i //: Press to reset certain DIC features and to acknowledge DIC warning messages and clear them from the DIC display.

EM : Press this button to change the display from English to metric.

∧ ∨ **:** Press to change the position of the HUD on the windshield.

For more information about HUD, see *Head-Up Display (HUD) on page 4-38*.

For information on adjusting the instrument panel brightness, see *Instrument Panel Brightness on page 4-35*.

For more information, see *Driver Information Center (DIC) on page 4-69*.

Vehicle Personalization

Some vehicle features can be programmed by using the buttons on the remote keyless access transmitter and the buttons on the audio system. The features that can be programmed include:

- Driver Greeting
- Key Fob Reminder
- Remote Start
- Memory Features
- Lock and Unlock Feedback
- Lighting Features
- Door Lock and Unlock Settings
- Window Lock
- Chime Volume
- Suspension Mode

See *Vehicle Personalization on page 3-58*.

Cruise Control

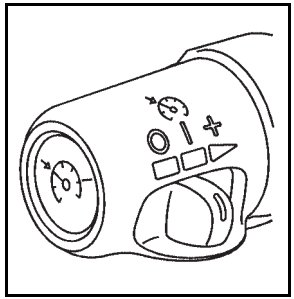

These controls are located on the end of the multifunction lever.

○ **:** Turns the system off.

I **:** Turns the system on.

+ : Use this position to make the vehicle resume a previously set speed or accelerate when cruise is already active.

: Press to set the speed or to decrease the speed when cruise is already active.

⊗ **:** Press this button on the steering wheel to cancel cruise control without erasing the set speed from memory.

See *Cruise Control on page 4-12* and *Adaptive Cruise Control on page 4-15* (If Equipped).

Power Outlets

Accessory power outlets can be used to plug in electrical equipment, such as a cellular telephone.

The vehicle has one outlet in front of the center console, one in the center console lid and there may be an additional outlet in the rear of the center console.

See *Accessory Power Outlet(s) on page 4-42*.

Performance and Maintenance

Traction Control System (TCS)

The traction control system limits wheel spin. The system turns on automatically every time the vehicle is started.

- To turn off traction control, press and release the TC button located on the console. TC illuminates when the system is turned off.

For more information, see *Traction Control System (TCS) on page 5-9*.

StabiliTrak®

The StabiliTrak system assists with directional control of the vehicle in difficult driving conditions. The system turns on automatically every time the vehicle is started.

- To turn off both Traction Control and StabiliTrak, press and hold TC , located on the console, until TC illuminates and the appropriate DIC message displays. See *DIC Warnings and Messages on page 4-76*.
- Press and release the button again to turn on both systems.

For more information, see *StabiliTrak® System on page 5-6*.

Tire Pressure Monitor

This vehicle may have a Tire Pressure Monitor System (TPMS).

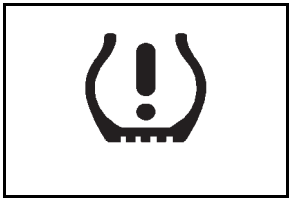

The Tire Pressure Monitor alerts you when a significant reduction in pressure occurs in one or more of the vehicle's tires by illuminating the low tire pressure warning light on the instrument cluster.

The warning light will remain on until the tire pressure is corrected. The proper tire pressures for your vehicle are listed on the Tire and Loading Information label located on the driver side center pillar (B pillar). See *Loading the Vehicle on page 5-23*.

You may notice during cooler conditions that the low tire pressure warning light will appear when the vehicle is first started and then turn off as you drive. This may be an early indicator that your tire pressures are getting low and the tires need to be inflated to the proper pressure.

Note: The Tire Pressure Monitor can alert you about low tire pressure, but it does not replace normal monthly tire maintenance. It is the driver's responsibility to maintain correct tire pressures.

See *Tire Pressure Monitor System on page 6-62* and *Tire Pressure Monitor Operation on page 6-64*.

Tire Sealant and Compressor Kit

This vehicle may come with a jack and spare tire or a tire sealant and compressor kit. The kit can be used to seal small punctures in the tread area of the tire.

See *Tire Sealant and Compressor Kit (Without Selector Switch) on page 6-78* or *Tire Sealant and Compressor Kit (With Selector Switch) on page 6-87* for complete operating information.

Engine Oil Life System

The engine oil life system calculates engine oil life based on vehicle use and displays a DIC message when it is necessary to change the engine oil and filter. The oil life system should be reset to 100% only following an oil change.

Resetting the Oil Life System

1. Press the up or down arrow to scroll the DIC to show OIL LIFE.
2. Once the XXX% ENGINE OIL LIFE menu item is highlighted, press and hold the RESET button until the percentage shows 100%.

   If the percentage does not return to 100% or if the CHANGE ENGINE OIL SOON message comes back on when the vehicle is started, the engine oil life system has not reset. Repeat the procedure.

See *Engine Oil Life System on page 6-21*.

Driving for Better Fuel Economy

Driving habits can affect fuel mileage. Here are some driving tips to get the best fuel economy possible.

- Avoid fast starts and accelerate smoothly.
- Brake gradually and avoid abrupt stops.
- Avoid idling the engine for long periods of time.
- When road and weather conditions are appropriate, use cruise control, if equipped.
- Always follow posted speed limits or drive more slowly when conditions require.
- Keep vehicle tires properly inflated.
- Combine several trips into a single trip.
- Replace the vehicle's tires with the same TPC Spec number molded into the tire's sidewall near the size.
- Follow recommended scheduled maintenance.

Roadside Service

U.S. or Canada: **1-800-882-1112**

TTY Users: **1-888-889-2438**

As the owner of a new Cadillac, you are automatically enrolled in the Roadside Service program which is available 24 hours a day, 365 days a year.

Roadside Service and OnStar

If you have a current OnStar subscription, press the OnStar button and the current GPS location will be sent to an OnStar Advisor who will assess your problem, contact Roadside Service, and relay exact location to get you the help you need.

Online Owner Center

The Online Owner Center is a complimentary service that includes online service reminders, vehicle maintenance tips, online owner manual, special privileges and more.

Sign up today at: **www.gmownercenter.com/cadillac** (U.S.) or **www.gm.ca** (Canada).

OnStar®

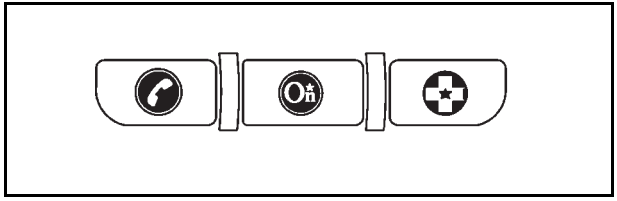

OnStar® uses several innovative technologies and live advisors to provide a wide range of safety, security, navigation, diagnostics, and calling services.

Automatic Crash Response

In a crash, built in sensors can automatically alert an OnStar advisor who is immediately connected to the vehicle to see if you need help.

How OnStar Service Works

: This blue button connects you to a specially trained OnStar advisor to verify your account information and to answer questions.

: Push this red emergency button to get priority help from specially trained OnStar emergency advisors.

: Push this button for hands-free, voice-activated calling and to give voice commands for turn-by-turn navigation.

Crisis Assist, Stolen Vehicle Assistance, Vehicle Diagnostics, Remote Door Unlock, Roadside Assistance, Turn-by-Turn Navigation and Hands-Free Calling are available on most vehicles. Not all OnStar services are available on all vehicles. For more information see the OnStar Owner's Guide or visit www.onstar.com (U.S.) or www.onstar.ca (Canada), contact OnStar at 1-888-4-ONSTAR (1-888-466-7827) or TTY 1-877-248-2080, or press to speak with an OnStar advisor 24 hours a day, 7 days a week.

For a full description of OnStar services and system limitations, see the OnStar Owner's Guide in the glove box.

OnStar service is subject to the OnStar terms and conditions included in the OnStar Subscriber Information.

OnStar service cannot work unless the vehicle is in a place where OnStar has an agreement with a wireless service provider for service in that area. OnStar service also cannot work unless the vehicle is in a place where the wireless service provider OnStar has hired for that area has coverage, network capacity and reception when the service is needed, and technology that is compatible with the OnStar service. Not all services are available everywhere, particularly in remote or enclosed areas, or at all times.

The OnStar system can record and transmit vehicle information. This information is automatically sent to an OnStar call center when is pressed, is pressed, or if the airbags or ACR system deploy. This information usually includes the vehicle's GPS location and, in the event of a crash, additional information regarding the crash that the vehicle was involved in (e.g. the direction from which the vehicle was hit). When the virtual advisor feature of OnStar hands-free calling is used, the vehicle also sends OnStar the vehicle's GPS location so they can provide services where it is located.

Location information about the vehicle is only available if the GPS satellite signals are unobstructed and available.

The vehicle must have a working electrical system, including adequate battery power, for the OnStar equipment to operate. There are other problems OnStar cannot control that may prevent OnStar from providing OnStar service at any particular time or place. Some examples are damage to important parts of the vehicle in a crash, hills, tall buildings, tunnels, weather or wireless phone network congestion.

OnStar Steering Wheel Controls

This vehicle may have a Talk/Mute button that can be used to interact with OnStar hands-free calling. See *Audio Steering Wheel Controls on page 4-134* for more information.

On some vehicles, the mute button can be used to dial numbers into voice mail systems, or to dial phone extensions. See the OnStar Owner's Guide for more information.

Your Responsibility

Increase the volume of the radio if the OnStar advisor cannot be heard.

If the light next to the OnStar buttons is red, the system may not be functioning properly. Press and request a vehicle diagnostic. If the light appears clear (no light is appearing), your OnStar subscription has expired and all services have been deactivated. Press to confirm that the OnStar equipment is active.

Section 2 Seats and Restraint System

Front Seats 2-2
Power Seats 2-2
Power Lumbar 2-3
Heated Seats 2-3
Heated and Ventilated Seats 2-4
Power Reclining Seatbacks 2-4
Head Restraints 2-6

Rear Seats 2-7
Heated Seats 2-7
Rear Seat Pass-Through Door 2-7

Safety Belts 2-8
Safety Belts: They Are for Everyone 2-8
How to Wear Safety Belts Properly 2-13
Lap-Shoulder Belt 2-22
Safety Belt Use During Pregnancy 2-27
Safety Belt Extender 2-28

Child Restraints 2-28
Older Children 2-28
Infants and Young Children 2-31
Child Restraint Systems 2-35
Where to Put the Restraint 2-38
Lower Anchors and Tethers for Children (LATCH) 2-39
Securing a Child Restraint in a Rear Seat Position 2-45
Securing a Child Restraint in the Right Front Seat Position 2-48

Airbag System 2-52
Where Are the Airbags? 2-55
When Should an Airbag Inflate? 2-57
What Makes an Airbag Inflate? 2-59
How Does an Airbag Restrain? 2-59
What Will You See After an Airbag Inflates? ... 2-59
Passenger Sensing System 2-61
Servicing Your Airbag-Equipped Vehicle 2-66
Adding Equipment to Your Airbag-Equipped Vehicle 2-66

Restraint System Check 2-68
Checking the Restraint Systems 2-68
Replacing Restraint System Parts After a Crash 2-69

Front Seats

Power Seats

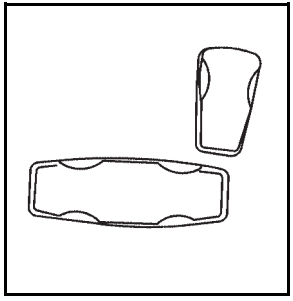

The power seat controls are located on the outboard side of the seats.

To adjust the seat:

- Move the seat forward or rearward by sliding the horizontal control forward or rearward.
- Raise or lower the front part of the seat cushion by moving the front of the horizontal control up or down.
- Raise or lower the rear part of the seat cushion by moving the rear of the horizontal control up or down.
- Use the vertical control to recline the seatback. See *Power Reclining Seatbacks on page 2-4*.

If the vehicle has the memory feature, you can program and recall memory settings for seat positions. See *Memory Seat, Mirrors and Steering Wheel on page 3-75*.

Power Lumbar

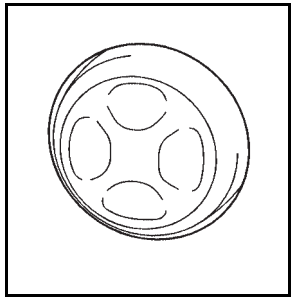

On vehicles with power lumbar, the control is located on the outboard sides of the front seat(s).

To increase or decrease support, press and hold the front or rear of the control.

To raise or lower the position of the lumbar support, press and hold the top or bottom of the control.

Vehicles with a memory function allow seat settings to be saved and recalled. See *Memory Seat, Mirrors and Steering Wheel on page 3-75* for more information.

Heated Seats

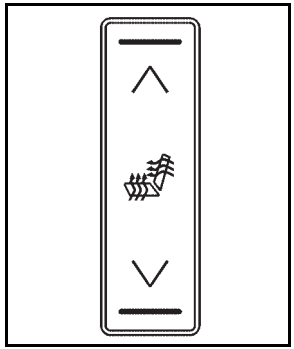

On vehicles with heated front seats, the buttons are located on the climate control panel.

(Heated Seat and Seatback) : Press the up or down arrow once to turn on the heated seat at the highest or lowest setting.

Press the up or down arrows a second time to raise or lower the setting. Keep pressing the down arrow until the indicator on the climate control display is off to turn off the heated seat.

A light bar in the climate control display shows the setting: high, medium, or low. The longest bar shows the high range and the shortest bar shows the low range.

The heated seat will automatically shut off when the vehicle is turned off.

Heated and Ventilated Seats

On vehicles with this feature, the buttons are located on the climate control panel.

(Heated Seat and Seatback): Press to heat the seat and seatback.

(Ventilated Seat): Press to ventilate the seat.

A light bar in the climate control display shows the setting; high, medium, or low.

Press either button to start that feature at the highest setting. Each press of the button, decreases the setting.

To turn the feature off, press the button until the light turns off.

The heated or ventilated seats shut off when the vehicle is turned off.

Power Reclining Seatbacks

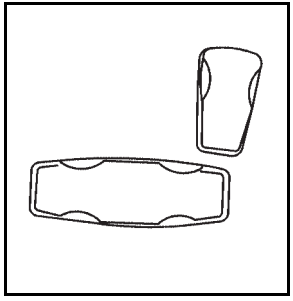

The front seats have power reclining seatbacks. Use the vertical power seat control located on the outboard side of the seat to operate them.

- To recline the seatback, press the control toward the rear of the vehicle.
- To raise the seatback, press the control toward the front of the vehicle.

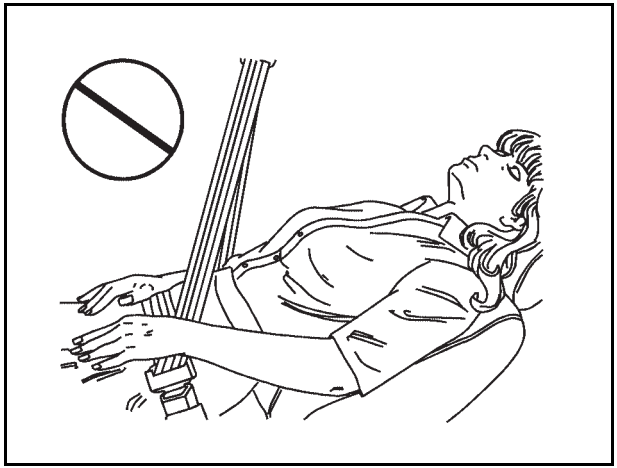

⚠ WARNING:

Sitting in a reclined position when the vehicle is in motion can be dangerous. Even when buckled up, the safety belts cannot do their job when reclined like this.

The shoulder belt cannot do its job because it will not be against your body. Instead, it will be in front of you. In a crash, you could go into it, receiving neck or other injuries.

The lap belt cannot do its job either. In a crash, the belt could go up over your abdomen. The belt forces would be there, not at your pelvic bones. This could cause serious internal injuries.

For proper protection when the vehicle is in motion, have the seatback upright. Then sit well back in the seat and wear the safety belt properly.

Do no have a seatback reclined if your vehicle is moving.

Head Restraints

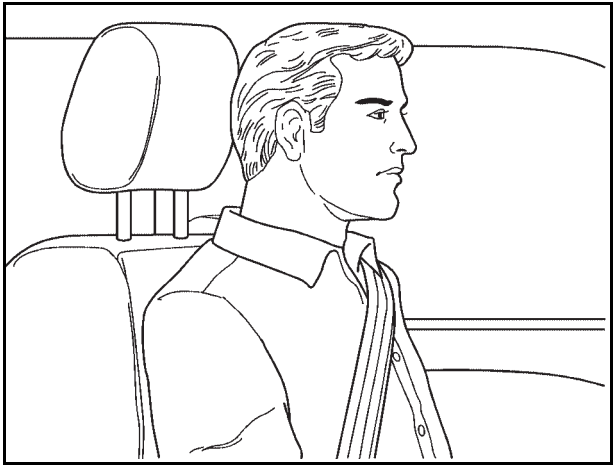

Adjust the head restraint so that the top of the restraint is at the same height as the top of the occupant's head. This position reduces the chance of a neck injury in a crash.

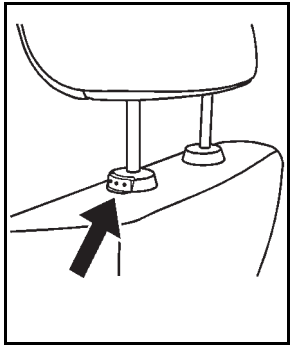

Pull the head restraint up to raise it. To lower the head restraint, press the button, located on the top of the seatback, and push the head restraint down.

The front head restraints can also tilt forward or rearward.

Rear Seats

Heated Seats

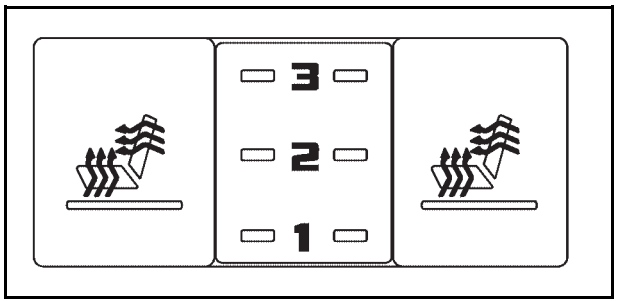

If the vehicle has this feature, the controls are located on the center console.

Pressing this button will turn the heated seat on at the highest setting. Each press of the button will decrease the seat temperature or turn the seat off. The light indicates which setting the seat is on, 3 being the highest.

The engine must be running for the seats to operate and will shut off when the ignition is turned off.

Rear Seat Pass-Through Door

The vehicle has a pass-through door that provides access to the trunk from the rear seats. See “Rear Seat Pass-Through Door” under *Trunk on page 3-15*.

Safety Belts

Safety Belts: They Are for Everyone

This section of the manual describes how to use safety belts properly. It also describes some things not to do with safety belts.

⚠ WARNING:

Do not let anyone ride where a safety belt cannot be worn properly. In a crash, if you or your passenger(s) are not wearing safety belts, the injuries can be much worse. You can hit things inside the vehicle harder or be ejected from the vehicle. You and your passenger(s) can be seriously injured or killed. In the same crash, you might not be, if you are buckled up. Always fasten your safety belt, and check that your passenger(s) are restrained properly too.

⚠ WARNING:

It is extremely dangerous to ride in a cargo area, inside or outside of a vehicle. In a collision, people riding in these areas are more likely to be seriously injured or killed. Do not allow people to ride in any area of your vehicle that is not equipped with seats and safety belts. Be sure everyone in your vehicle is in a seat and using a safety belt properly.

This vehicle has indicators as a reminder to buckle the safety belts. See *Safety Belt Reminders on page 4-53* for additional information.

In most states and in all Canadian provinces, the law requires wearing safety belts. Here is why:

You never know if you will be in a crash. If you do have a crash, you do not know if it will be a serious one.

A few crashes are mild, and some crashes can be so serious that even buckled up, a person would not survive. But most crashes are in between. In many of them, people who buckle up can survive and sometimes walk away. Without safety belts, they could have been badly hurt or killed.

After more than 40 years of safety belts in vehicles, the facts are clear. In most crashes buckling up does matter ... a lot!

Why Safety Belts Work

When you ride in or on anything, you go as fast as it goes.

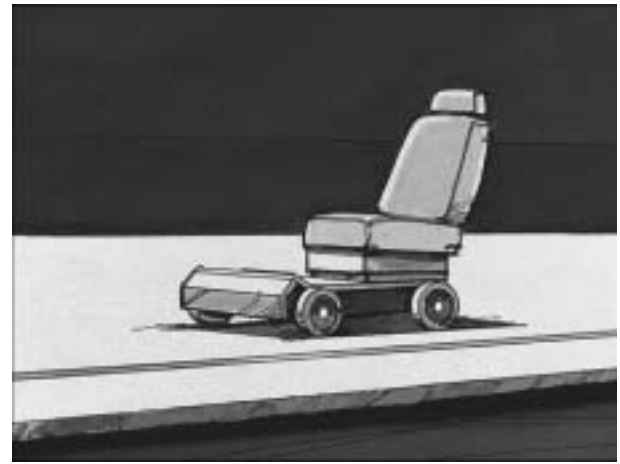

Take the simplest vehicle. Suppose it is just a seat on wheels.

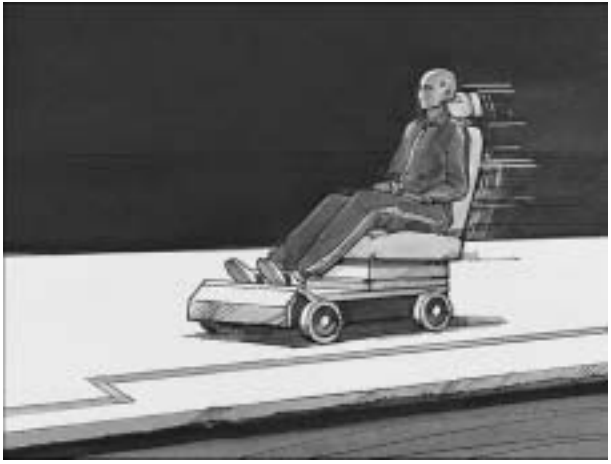

Put someone on it.

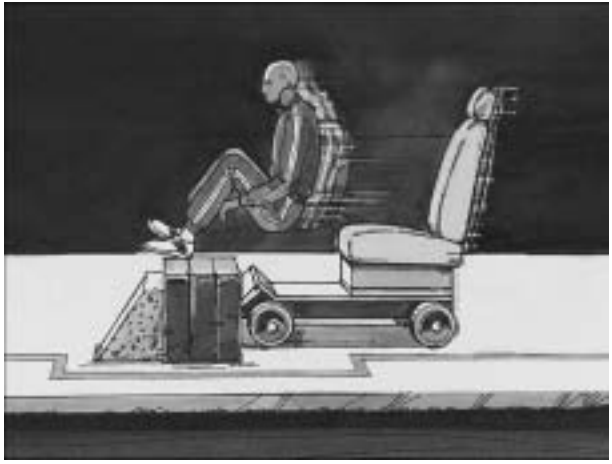

Get it up to speed. Then stop the vehicle. The rider does not stop.

The person keeps going until stopped by something. In a real vehicle, it could be the windshield...

or the instrument panel...

or the safety belts!

With safety belts, you slow down as the vehicle does. You get more time to stop. You stop over more distance, and your strongest bones take the forces. That is why safety belts make such good sense.

Questions and Answers About Safety Belts

Q: Will I be trapped in the vehicle after a crash if I am wearing a safety belt?

A: You *could* be — whether you are wearing a safety belt or not. But your chance of being conscious during and after an accident, so you *can* unbuckle and get out, is *much* greater if you are belted. And you can unbuckle a safety belt, even if you are upside down.

Q: If my vehicle has airbags, why should I have to wear safety belts?

A: Airbags are supplemental systems only; so they work *with* safety belts — not instead of them. Whether or not an airbag is provided, all occupants still have to buckle up to get the most protection. That is true not only in frontal collisions, but especially in side and other collisions.

Q: If I am a good driver, and I never drive far from home, why should I wear safety belts?

A: You may be an excellent driver, but if you are in a crash — even one that is not your fault — you and your passenger(s) can be hurt. Being a good driver does not protect you from things beyond your control, such as bad drivers.

Most accidents occur within 25 miles (40 km) of home. And the greatest number of serious injuries and deaths occur at speeds of less than 40 mph (65 km/h).

Safety belts are for everyone.

How to Wear Safety Belts Properly

This section is only for people of adult size.

Be aware that there are special things to know about safety belts and children. And there are different rules for smaller children and infants. If a child will be riding in the vehicle, see *Older Children on page 2-28* or *Infants and Young Children on page 2-31*. Follow those rules for everyone's protection.

It is very important for all occupants to buckle up. Statistics show that unbelted people are hurt more often in crashes than those who are wearing safety belts.

Occupants who are not buckled up can be thrown out of the vehicle in a crash. And they can strike others in the vehicle who are wearing safety belts.

First, before you or your passenger(s) wear a safety belt, there is important information you should know.

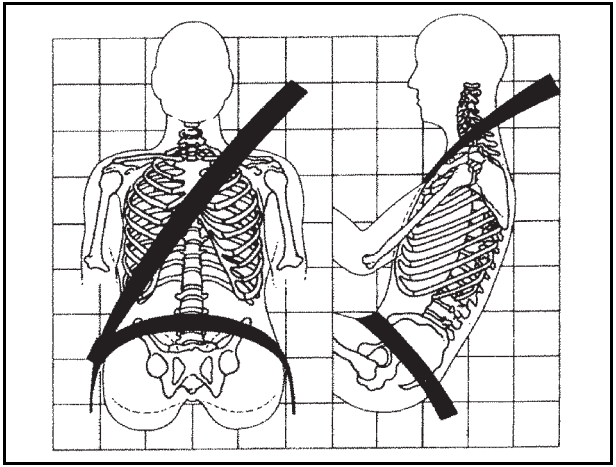

Sit up straight and always keep your feet on the floor in front of you. The lap part of the belt should be worn low and snug on the hips, just touching the thighs.

In a crash, this applies force to the strong pelvic bones and you would be less likely to slide under the lap belt. If you slid under it, the belt would apply force on your abdomen. This could cause serious or even fatal injuries. The shoulder belt should go over the shoulder and across the chest. These parts of the body are best able to take belt restraining forces.

The shoulder belt locks if there is a sudden stop or crash.

Q: What is wrong with this?

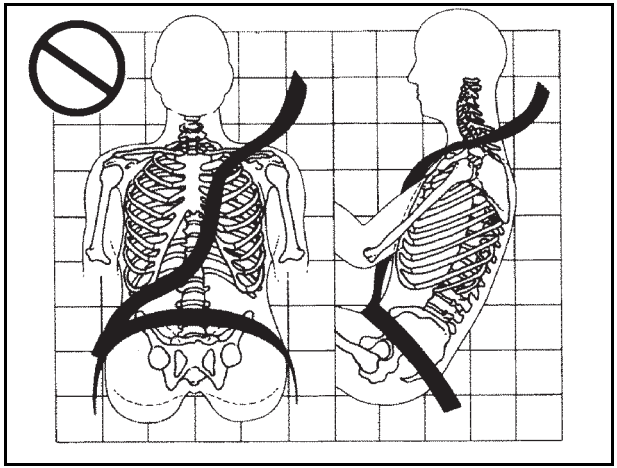

A: The shoulder belt is too loose. It will not give as much protection this way.

⚠ WARNING:

You can be seriously hurt if your shoulder belt is too loose. In a crash, you would move forward too much, which could increase injury. The shoulder belt should fit snugly against your body.

Q: What is wrong with this?

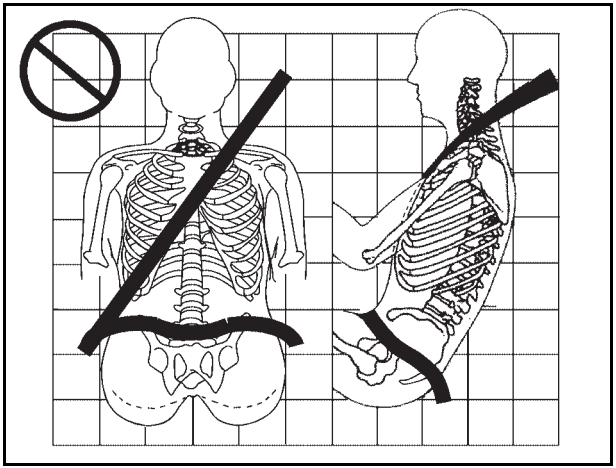

A: The lap belt is too loose. It will not give nearly as much protection this way.

⚠ WARNING:

You can be seriously hurt if your lap belt is too loose. In a crash, you could slide under the lap belt and apply force on your abdomen. This could cause serious or even fatal injuries. The lap belt should be worn low and snug on the hips, just touching the thighs.

Q: What is wrong with this?

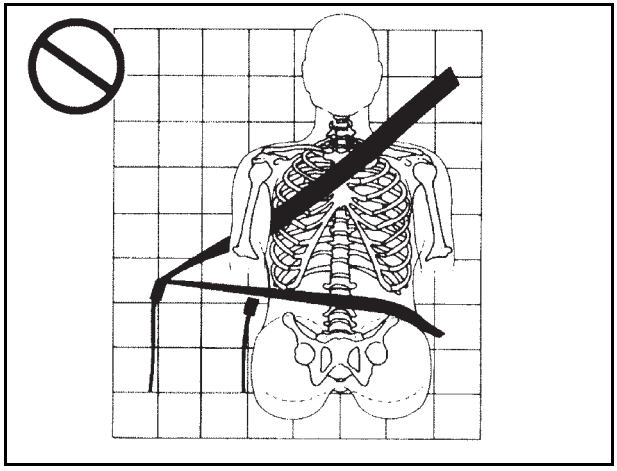

A: The belt is buckled in the wrong buckle.

⚠ WARNING:

You can be seriously injured if your belt is buckled in the wrong place like this. In a crash, the belt would go up over your abdomen. The belt forces would be there, not on the pelvic bones. This could cause serious internal injuries. Always buckle your belt into the buckle nearest you.

Q: What is wrong with this?

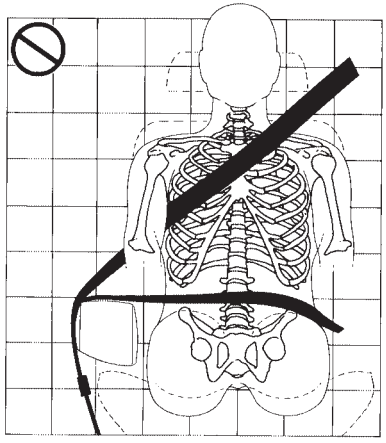

A: The belt is over an armrest.

⚠ WARNING:

You can be seriously injured if your belt goes over an armrest like this. The belt would be much too high. In a crash, you can slide under the belt. The belt force would then be applied on the abdomen, not on the pelvic bones, and that could cause serious or fatal injuries. Be sure the belt goes under the armrests.

Q: What is wrong with this?

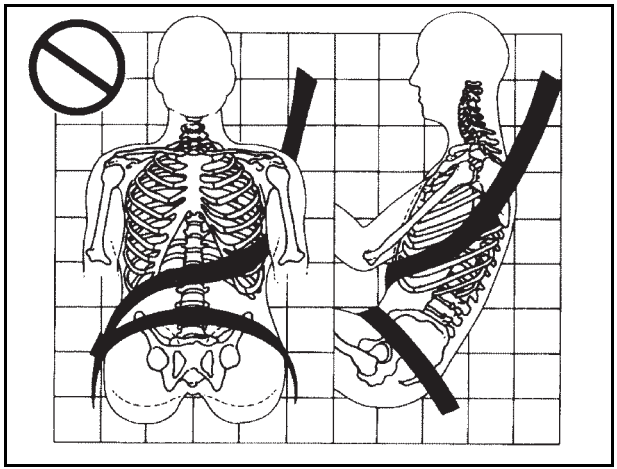

A: The shoulder belt is worn under the arm. It should be worn over the shoulder at all times.

⚠ WARNING:

You can be seriously injured if you wear the shoulder belt under your arm. In a crash, your body would move too far forward, which would increase the chance of head and neck injury. Also, the belt would apply too much force to the ribs, which are not as strong as shoulder bones. You could also severely injure internal organs like your liver or spleen. The shoulder belt should go over the shoulder and across the chest.

Q: What is wrong with this?

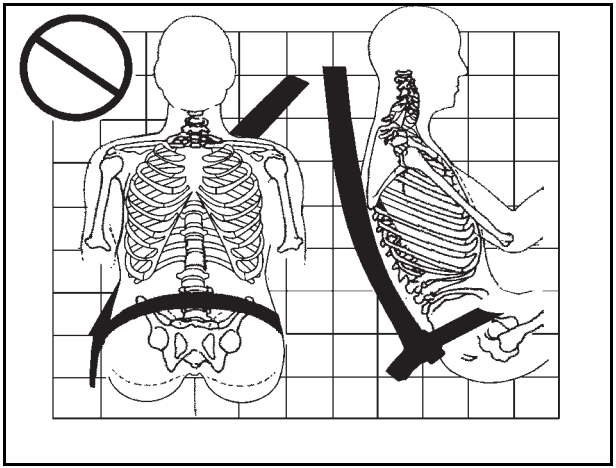

A: The belt is behind the body.

⚠ WARNING:

You can be seriously injured by not wearing the lap-shoulder belt properly. In a crash, you would not be restrained by the shoulder belt. Your body could move too far forward increasing the chance of head and neck injury. You might also slide under the lap belt. The belt force would then be applied right on the abdomen. That could cause serious or fatal injuries. The shoulder belt should go over the shoulder and across the chest.

Q: What is wrong with this?

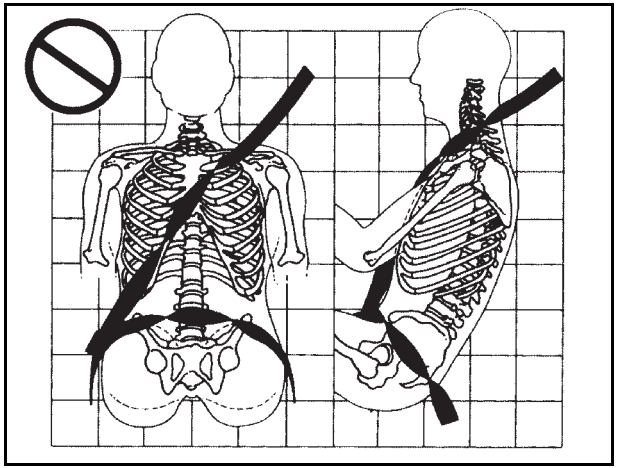

A: The belt is twisted across the body.

⚠ WARNING:

You can be seriously injured by a twisted belt. In a crash, you would not have the full width of the belt to spread impact forces. If a belt is twisted, make it straight so it can work properly, or ask your dealer/retailer to fix it.

Lap-Shoulder Belt

All seating positions in your vehicle have a lap-shoulder belt.

Here is how to wear a lap-shoulder belt properly.

1. Adjust the seat, if the seat is adjustable, so you can sit up straight. To see how, see “Seats” in the Index.
2. Pick up the latch plate and pull the belt across you. Do not let it get twisted.

   The lap-shoulder belt may lock if you pull the belt across you very quickly. If this happens, let the belt go back slightly to unlock it. Then pull the belt across you more slowly.

   If you ever pull the shoulder portion of a passenger belt out all the way, you may engage the child restraint locking feature. If this happens, just let the belt go back all the way and start again.

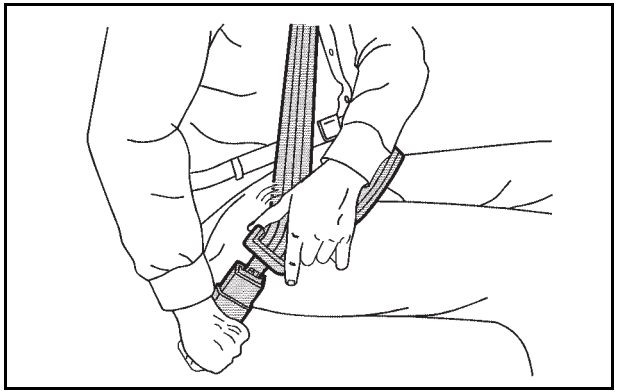

3. Push the latch plate into the buckle until it clicks.

   Pull up on the latch plate to make sure it is secure. If the belt is not long enough, see *Safety Belt Extender on page 2-28*.

   Make sure the release button on the buckle is positioned so you would be able to unbuckle the safety belt quickly if necessary.
4. If equipped with a shoulder belt height adjuster, move it to the height that is right for you. Improper shoulder belt height adjustment could reduce the effectiveness of the safety belt in a crash. See “Shoulder Belt Height Adjustment” later in this section.

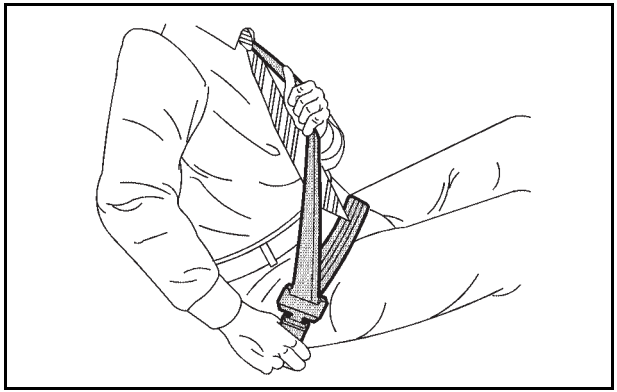

5. To make the lap part tight, pull up on the shoulder belt.

   It may be necessary to pull stitching on the safety belt through the latch plate to fully tighten the lap belt on smaller occupants.

6. This safety belt has a feature that will reduce the tension of the safety belt on the occupant's shoulder if the vehicle is on. To set this feature, gently pull on the belt, or lean forward and then sit back. The belt will retract and rest lightly against the occupant.

   When the safety belt is unbuckled or when the vehicle is turned off, the tension reducer will deactivate. The belt should go back out of the way.

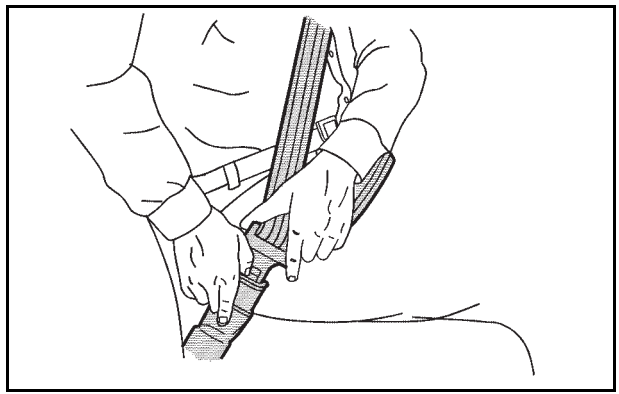

To unlatch the belt, just push the button on the buckle.

Before you close a door, be sure the belt is out of the way. If you slam the door on it, you can damage both the belt and your vehicle.

Shoulder Belt Height Adjuster

Your vehicle has a shoulder belt height adjuster for the driver and right front passenger position.

Adjust the height so that the shoulder portion of the belt is centered on your shoulder. The belt should be away from your face and neck, but not falling off your shoulder. Improper shoulder belt height adjustment could reduce the effectiveness of the safety belt in a crash.

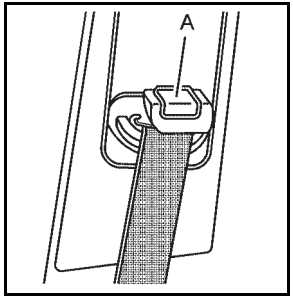

To move it down, press the release button (A) and move the height adjuster to the desired position. You can move the height adjuster up just by pushing up on the shoulder belt guide.

After you move the height adjuster to where you want it, try to move it down without pressing the release button to make sure it has locked into position.

Safety Belt Pretensioners

Your vehicle has safety belt pretensioners for front outboard occupants. Although you cannot see them, they are part of the safety belt assembly. They can help tighten the safety belts during the early stages of a moderate to severe frontal and near frontal crash if the threshold conditions for pretensioner activation are met. And, if your vehicle has side impact airbags, safety belt pretensioners can help tighten the safety belts in a side crash.

Pretensioners work only once. If they activate in a crash, you will need to get new ones, and probably other new parts for your safety belt system. See *Replacing Restraint System Parts After a Crash on page 2-69*.

Rear Safety Belt Comfort Guides

This vehicle may have rear shoulder belt comfort guides. If not, they are available through your dealer/retailer. The guides may provide added safety belt comfort for older children who have outgrown booster seats and for some adults. When installed and properly adjusted, the comfort guide positions the belt away from the neck and head.

Here is how to install a comfort guide to the safety belt:

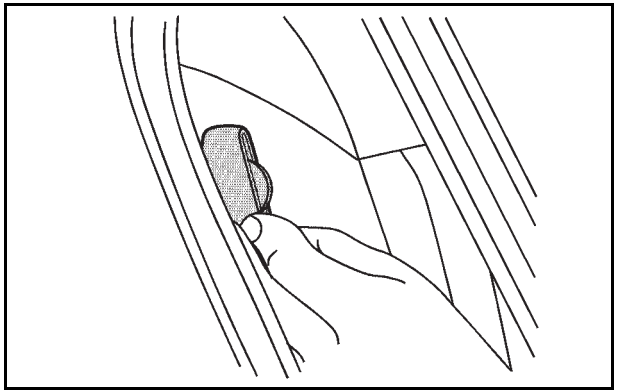

1. Pull the elastic cord out from between the edge of the seatback and the interior body to remove the guide from its storage clip.

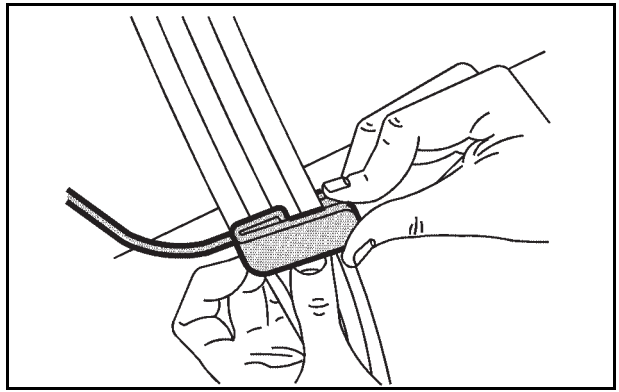

2. Place the guide over the belt and insert the two edges of the belt into the slots of the guide.

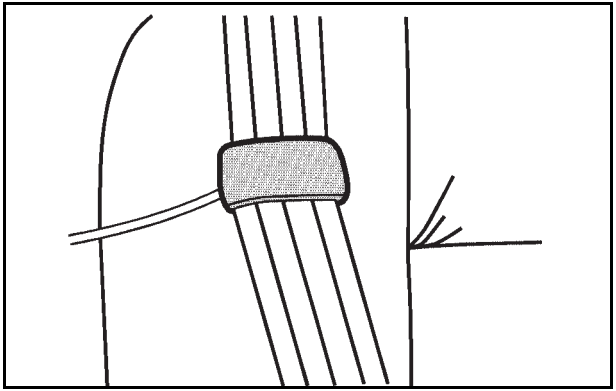

3. Be sure that the belt is not twisted and it lies flat. The elastic cord must be under the belt and the guide on top.

⚠ WARNING:

A safety belt that is not properly worn may not provide the protection needed in a crash. The person wearing the belt could be seriously injured. The shoulder belt should go over the shoulder and across the chest. These parts of the body are best able to take belt restraining forces.

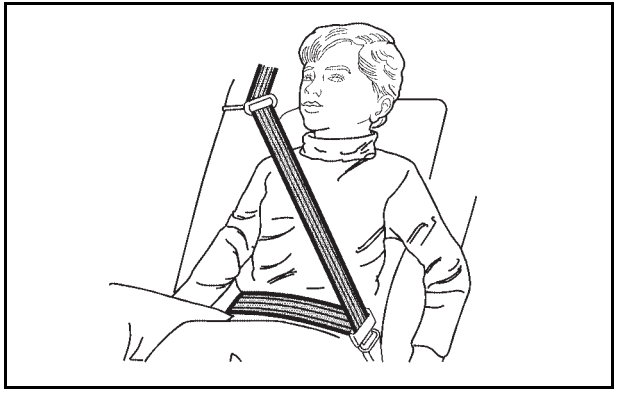

4. Buckle, position, and release the safety belt as described previously in this section. Make sure that the shoulder belt crosses the shoulder.

To remove and store the comfort guide, squeeze the belt edges together so that you can take them out of the guide. Pull the guide upward to expose its storage clip, and then slide the guide onto the clip. Turn the guide and clip inward and slide them in between the seatback and the interior body, leaving only the loop of the elastic cord exposed.

Safety Belt Use During Pregnancy

Safety belts work for everyone, including pregnant women. Like all occupants, they are more likely to be seriously injured if they do not wear safety belts.

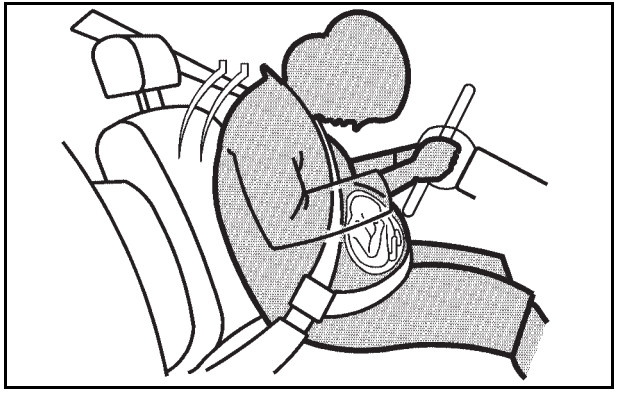

A pregnant woman should wear a lap-shoulder belt, and the lap portion should be worn as low as possible, below the rounding, throughout the pregnancy.

The best way to protect the fetus is to protect the mother. When a safety belt is worn properly, it is more likely that the fetus will not be hurt in a crash. For pregnant women, as for anyone, the key to making safety belts effective is wearing them properly.

Safety Belt Extender

If the vehicle's safety belt will fasten around you, you should use it.

But if a safety belt is not long enough, your dealer/retailer will order you an extender. When you go in to order it, take the heaviest coat you will wear, so the extender will be long enough for you. To help avoid personal injury, do not let someone else use it, and use it only for the seat it is made to fit. The extender has been designed for adults. Never use it for securing child seats. To wear it, attach it to the regular safety belt. For more information, see the instruction sheet that comes with the extender.

Child Restraints

Older Children

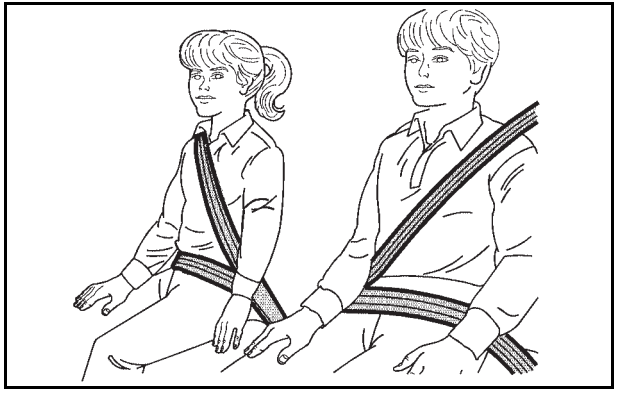

Older children who have outgrown booster seats should wear the vehicle's safety belts.

The manufacturer's instructions that come with the booster seat state the weight and height limitations for that booster. Use a booster seat with a lap-shoulder belt until the child passes the below fit test:

- Sit all the way back on the seat. Do the knees bend at the seat edge? If yes, continue. If no, return to the booster seat.
- Buckle the lap-shoulder belt. Does the shoulder belt rest on the shoulder? If yes, continue. If no, try using the rear safety belt comfort guide. See “Rear Safety Belt Comfort Guides” under *Lap-Shoulder Belt on page 2-22* for more information. If the shoulder belt still does not rest on the shoulder, then return to the booster seat.
- Does the lap belt fit low and snug on the hips, touching the thighs? If yes, continue. If no, return to the booster seat.
- Can proper safety belt fit be maintained for the length of the trip? If yes, continue. If no, return to the booster seat.
- If you have the choice, a child should sit in a position with a lap-shoulder belt and get the additional restraint a shoulder belt can provide.

Q: What is the proper way to wear safety belts?

A: An older child should wear a lap-shoulder belt and get the additional restraint a shoulder belt can provide. The shoulder belt should not cross the face or neck. The lap belt should fit snugly below the hips, just touching the top of the thighs. This applies belt force to the child's pelvic bones in a crash. It should never be worn over the abdomen, which could cause severe or even fatal internal injuries in a crash.

Also see “Rear Safety Belt Comfort Guides” under *Lap-Shoulder Belt on page 2-22*.

According to accident statistics, children and infants are safer when properly restrained in a child restraint system or infant restraint system secured in a rear seating position.

In a crash, children who are not buckled up can strike other people who are buckled up, or can be thrown out of the vehicle. Older children need to use safety belts properly.

⚠ WARNING:

Never do this.

Never allow two children to wear the same safety belt. The safety belt can not properly spread the impact forces. In a crash, the two children can be crushed together and seriously injured. A safety belt must be used by only one person at a time.

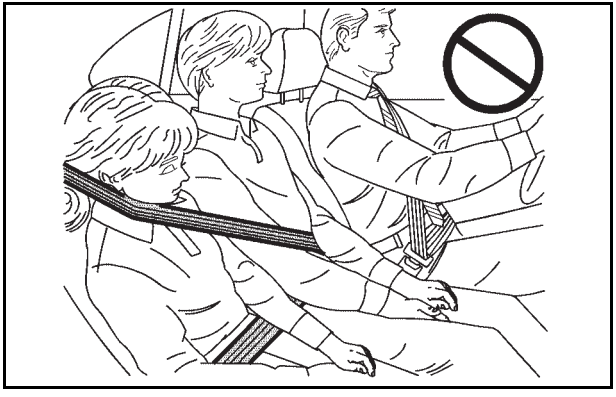

⚠ WARNING:

Never do this.

Never allow a child to wear the safety belt with the shoulder belt behind their back. A child can be seriously injured by not wearing the lap-shoulder belt properly. In a crash, the child would not be restrained by the shoulder belt. The child could move too far forward increasing the chance of head and neck injury. The child might also slide under the lap belt. The belt force would then be applied right on the abdomen. That could cause serious or fatal injuries. The shoulder belt should go over the shoulder and across the chest.

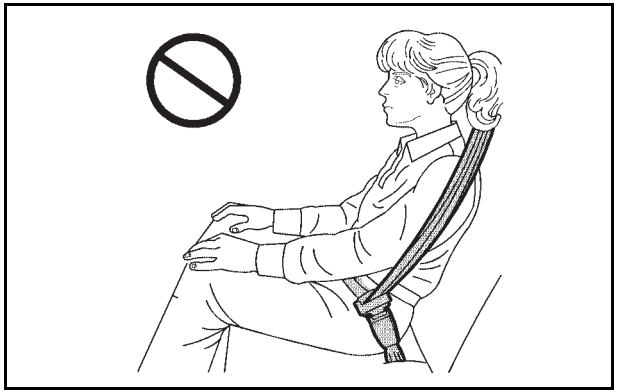

Infants and Young Children

Everyone in a vehicle needs protection! This includes infants and all other children. Neither the distance traveled nor the age and size of the traveler changes the need, for everyone, to use safety restraints. In fact, the law in every state in the United States and in every Canadian province says children up to some age must be restrained while in a vehicle.

⚠ WARNING:

Children can be seriously injured or strangled if a shoulder belt is wrapped around their neck and the safety belt continues to tighten. Never leave children unattended in a vehicle and never allow children to play with the safety belts.

Airbags plus lap-shoulder belts offer protection for adults and older children, but not for young children and infants. Neither the vehicle's safety belt system nor its airbag system is designed for them. Every time infants and young children ride in vehicles, they should have the protection provided by appropriate child restraints.

Children who are not restrained properly can strike other people, or can be thrown out of the vehicle.

⚠ WARNING:

Never do this.

Never hold an infant or a child while riding in a vehicle. Due to crash forces, an infant or a child will become so heavy it is not possible to hold it during a crash. For example, in a crash at only 40 km/h (25 mph), a 5.5 kg (12 lb) infant will suddenly become a 110 kg (240 lb) force on a person's arms. An infant should be secured in an appropriate restraint.

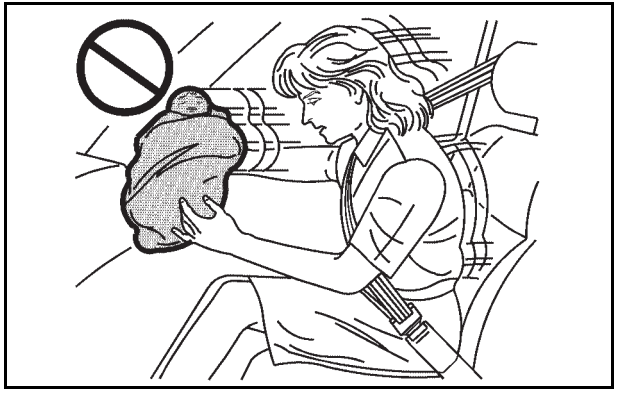

⚠ WARNING:

Never do this.

Children who are up against, or very close to, any airbag when it inflates can be seriously injured or killed. Never put a rear-facing child restraint in the right front seat. Secure a rear-facing child restraint in a rear seat. It is also better to secure a forward-facing child restraint in a rear seat. If you must secure a forward-facing child restraint in the right front seat, always move the front passenger seat as far back as it will go.

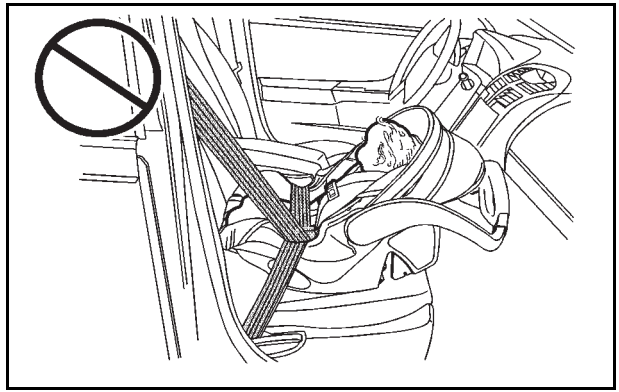

Q: What are the different types of add-on child restraints?

A: Add-on child restraints, which are purchased by the vehicle's owner, are available in four basic types. Selection of a particular restraint should take into consideration not only the child's weight, height, and age but also whether or not the restraint will be compatible with the motor vehicle in which it will be used.

For most basic types of child restraints, there are many different models available. When purchasing a child restraint, be sure it is designed to be used in a motor vehicle. If it is, the restraint will have a label saying that it meets federal motor vehicle safety standards.

The restraint manufacturer's instructions that come with the restraint state the weight and height limitations for a particular child restraint. In addition, there are many kinds of restraints available for children with special needs.

⚠ WARNING:

To reduce the risk of neck and head injury during a crash, infants need complete support. This is because an infant's neck is not fully developed and its head weighs so much compared with the rest of its body. In a crash, an infant in a rear-facing child restraint settles into the restraint, so the crash forces can be distributed across the strongest part of an infant's body, the back and shoulders. Infants should always be secured in rear-facing child restraints.

⚠ WARNING:

A young child's hip bones are still so small that the vehicle's regular safety belt may not remain low on the hip bones, as it should. Instead, it may settle up around the child's abdomen. In a crash, the belt would apply force on a body area that is unprotected by any bony structure. This alone could cause serious or fatal injuries. To reduce the risk of serious or fatal injuries during a crash, young children should always be secured in appropriate child restraints.

Child Restraint Systems

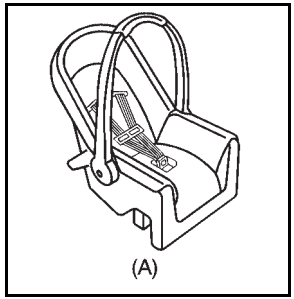

A rear-facing infant seat (A) provides restraint with the seating surface against the back of the infant.

The harness system holds the infant in place and, in a crash, acts to keep the infant positioned in the restraint.

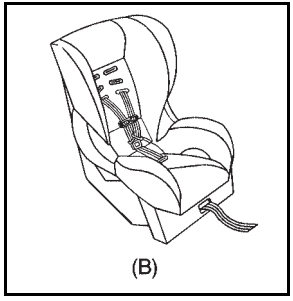

A forward-facing child seat (B) provides restraint for the child's body with the harness.

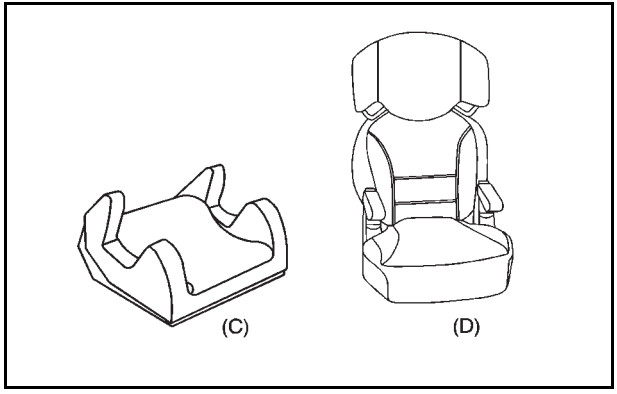

A booster seat (C-D) is a child restraint designed to improve the fit of the vehicle's safety belt system. A booster seat can also help a child to see out the window.

Securing an Add-On Child Restraint in the Vehicle

⚠ WARNING:

A child can be seriously injured or killed in a crash if the child restraint is not properly secured in the vehicle. Secure the child restraint properly in the vehicle using the vehicle's safety belt or LATCH system, following the instructions that came with that child restraint and the instructions in this manual.

To help reduce the chance of injury, the child restraint must be secured in the vehicle. Child restraint systems must be secured in vehicle seats by lap belts or the lap belt portion of a lap-shoulder belt, or by the LATCH system. See *Lower Anchors and Tethers for Children (LATCH) on page 2-39* for more information. A child can be endangered in a crash if the child restraint is not properly secured in the vehicle.

When securing an add-on child restraint, refer to the instructions that come with the restraint which may be on the restraint itself or in a booklet, or both, and to this manual. The child restraint instructions are important, so if they are not available, obtain a replacement copy from the manufacturer.

Keep in mind that an unsecured child restraint can move around in a collision or sudden stop and injure people in the vehicle. Be sure to properly secure any child restraint in the vehicle — even when no child is in it.

Securing the Child Within the Child Restraint

⚠ WARNING:

A child can be seriously injured or killed in a crash if the child is not properly secured in the child restraint. Secure the child properly following the instructions that came with that child restraint.

Where to Put the Restraint

According to accident statistics, children and infants are safer when properly restrained in a child restraint system or infant restraint system secured in a rear seating position.

We recommend that children and child restraints be secured in a rear seat, including: an infant or a child riding in a rear-facing child restraint; a child riding in a forward-facing child seat; an older child riding in a booster seat; and children, who are large enough, using safety belts.

A label on the sun visor says, “Never put a rear-facing child restraint in the front.” This is because the risk to the rear-facing child is so great, if the airbag deploys.

⚠ WARNING:

A child in a rear-facing child restraint can be seriously injured or killed if the right front passenger airbag inflates. This is because the back of the rear-facing child restraint would be very close to the inflating airbag. A child in a forward-facing child restraint can be seriously injured or killed if the right front passenger airbag inflates and the passenger seat is in a forward position.

Even if the passenger sensing system has turned off the right front passenger frontal airbag, no system is fail-safe. No one can guarantee that an airbag will not deploy under some unusual circumstance, even though it is turned off.

Secure rear-facing child restraints in a rear seat, even if the airbag is off. If you secure a forward-facing child restraint in the right front seat,

(Continued)

WARNING: (Continued)

always move the front passenger seat as far back as it will go. It is better to secure the child restraint in a rear seat.

See *Passenger Sensing System on page 2-61* for additional information.

When securing a child restraint in a rear seating position, study the instructions that came with the child restraint to make sure it is compatible with this vehicle.

Wherever a child restraint is installed, be sure to secure the child restraint properly.

Keep in mind that an unsecured child restraint can move around in a collision or sudden stop and injure people in the vehicle. Be sure to properly secure any child restraint in the vehicle — even when no child is in it.

Lower Anchors and Tethers for Children (LATCH)

The LATCH system holds a child restraint during driving or in a crash. This system is designed to make installation of a child restraint easier. The LATCH system uses anchors in the vehicle and attachments on the child restraint that are made for use with the LATCH system.

Make sure that a LATCH-compatible child restraint is properly installed using the anchors, or use the vehicle's safety belts to secure the restraint, following the instructions that came with that restraint, and also the instructions in this manual. When installing a child restraint with a top tether, you must also use either the lower anchors or the safety belts to properly secure the child restraint. A child restraint must never be installed using only the top tether and anchor.

In order to use the LATCH system in your vehicle, you need a child restraint that has LATCH attachments. The child restraint manufacturer will provide you with instructions on how to use the child restraint and its attachments. The following explains how to attach a child restraint with these attachments in your vehicle.

Not all vehicle seating positions or child restraints have lower anchors and attachments or top tether anchors and attachments.

Lower Anchors

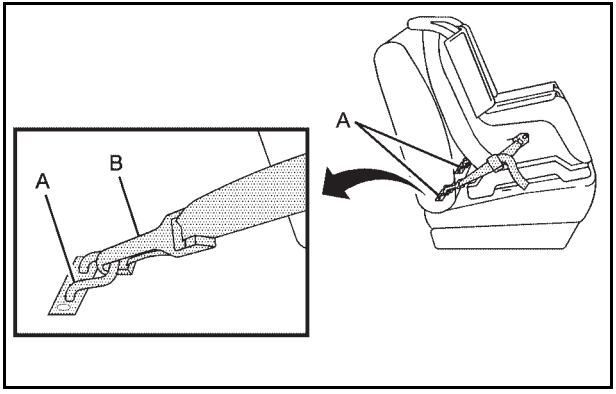

Lower anchors (A) are metal bars built into the vehicle. There are two lower anchors for each LATCH seating position that will accommodate a child restraint with lower attachments (B).

Top Tether Anchor

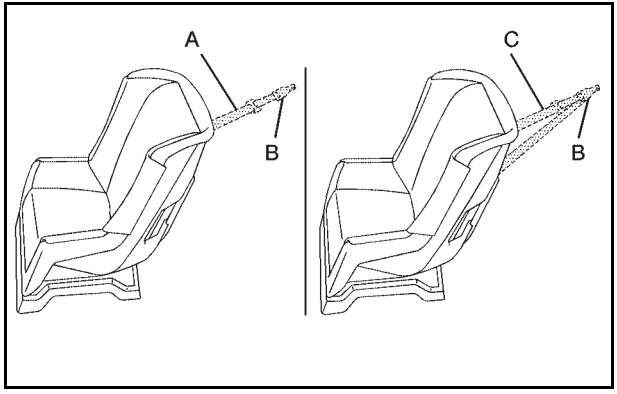

A top tether (A, C) anchors the top of the child restraint to the vehicle. A top tether anchor is built into the vehicle. The top tether attachment (B) on the child restraint connects to the top tether anchor in the vehicle in order to reduce the forward movement and rotation of the child restraint during driving or in a crash.

Your child restraint may have a single tether (A) or a dual tether (C). Either will have a single attachment (B) to secure the top tether to the anchor.

Some child restraints that have a top tether are designed for use with or without the top tether being attached. Others require the top tether always to be attached. In Canada, the law requires that forward-facing child restraints have a top tether, and that the tether be attached. Be sure to read and follow the instructions for your child restraint.

If the child restraint does not have a top tether, one can be obtained, in kit form, for many child restraints. Ask the child restraint manufacturer whether or not a kit is available.

Lower Anchor and Top Tether Anchor Locations

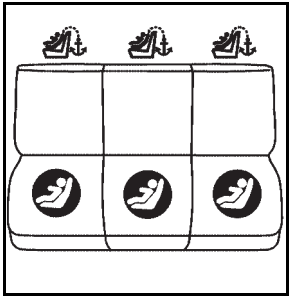

Rear Seat

(Top Tether Anchor): Seating positions with top tether anchors.

(Lower Anchor): Seating positions with two lower anchors.

To assist you in locating the lower anchors, each seating position with lower anchors has two labels, near the crease between the seatback and the seat cushion.

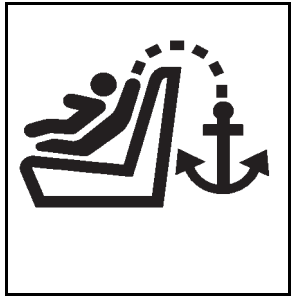

To assist you in locating the top tether anchors, the top tether anchor symbol is located on the cover.

The top tether anchors are located under covers on the rear seatback filler panel. Be sure to use an anchor located on the same side of the vehicle as the seating position where the child restraint will be placed.

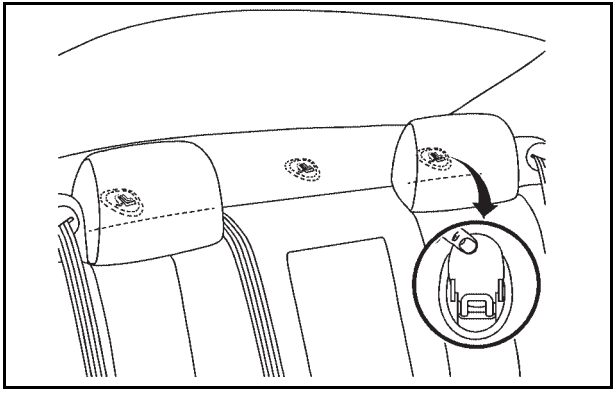

Do not secure a child restraint in a position without a top tether anchor if a national or local law requires that the top tether be attached, or if the instructions that come with the child restraint say that the top tether must be attached.

Accident statistics show that children are safer if they are restrained in the rear rather than the front seat. See *Where to Put the Restraint on page 2-38* for additional information.

Securing a Child Restraint Designed for the LATCH System

⚠ WARNING:

If a LATCH-type child restraint is not attached to anchors, the child restraint will not be able to protect the child correctly. In a crash, the child could be seriously injured or killed. Install a LATCH-type child restraint properly using the anchors, or use the vehicle's safety belts to secure the restraint, following the instructions that came with the child restraint and the instructions in this manual.

⚠ WARNING:

Do not attach more than one child restraint to a single anchor. Attaching more than one child restraint to a single anchor could cause the anchor or attachment to come loose or even break during a crash. A child or others could be injured. To reduce the risk of serious or fatal injuries during a crash, attach only one child restraint per anchor.

⚠ WARNING:

Children can be seriously injured or strangled if a shoulder belt is wrapped around their neck and the safety belt continues to tighten. Buckle any unused safety belts behind the child restraint so children cannot reach them. Pull the shoulder belt all the way out of the retractor to set the lock, if your vehicle has one, after the child restraint has been installed.

Notice: **Do not let the LATCH attachments rub against the vehicle's safety belts. This may damage these parts. If necessary, move buckled safety belts to avoid rubbing the LATCH attachments.**

Do not fold the empty rear seat with a safety belt buckled. This could damage the safety belt or the seat. Unbuckle and return the safety belt to its stowed position, before folding the seat.

1. Attach and tighten the lower attachments to the lower anchors. If the child restraint does not have lower attachments or the desired seating position does not have lower anchors, secure the child restraint with the top tether and the safety belts. Refer to your child restraint manufacturer instructions and the instructions in this manual.
   1.1. Find the lower anchors for the desired seating position.
   1.2. Put the child restraint on the seat.
   1.3. Attach and tighten the lower attachments on the child restraint to the lower anchors.

2. If the child restraint manufacturer recommends that the top tether be attached, attach and tighten the top tether to the top tether anchor, if equipped. Refer to the child restraint instructions and the following steps:

   2.1. Find the top tether anchor.

   2.2. Open the top tether anchor cover to expose the anchor.

   2.3. If you have an adjustable headrest or head restraint, raise the headrest or head restraint.

   2.4. Route, attach and tighten the top tether according to your child restraint instructions and the following instructions:

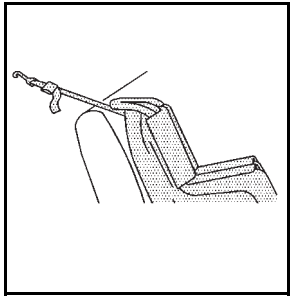

If the position you are using does not have a headrest or head restraint and you are using a single tether, route the tether over the seatback.

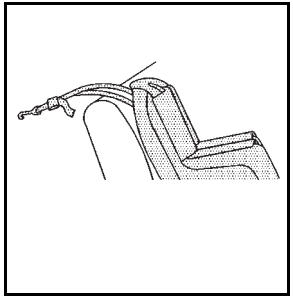

If the position you are using does not have a headrest or head restraint and you are using a dual tether, route the tether over the seatback.

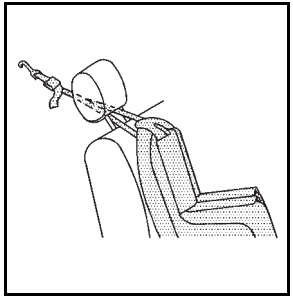

If the position you are using has an adjustable headrest or head restraint and you are using a dual tether, route the tether under the head restraint and in between the head restraint posts.

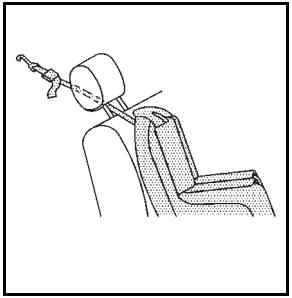

If the position you are using has an adjustable headrest or head restraint and you are using a single tether, route the tether under the headrest or head restraint and in between the headrest or head restraint posts.

3. Push and pull the child restraint in different directions to be sure it is secure.

Securing a Child Restraint in a Rear Seat Position

When securing a child restraint in a rear seating position, study the instructions that came with the child restraint to make sure it is compatible with this vehicle.

If the child restraint has the LATCH system, see *Lower Anchors and Tethers for Children (LATCH) on page 2-39* for how and where to install the child restraint using LATCH. If a child restraint is secured in the vehicle using a safety belt and it uses a top tether, see *Lower Anchors and Tethers for Children (LATCH) on page 2-39* for top tether anchor locations.

Do not secure a child seat in a position without a top tether anchor if a national or local law requires that the top tether be anchored, or if the instructions that come with the child restraint say that the top strap must be anchored.

In Canada, the law requires that forward-facing child restraints have a top tether, and that the tether be attached.

If the child restraint does not have the LATCH system, you will be using the safety belt to secure the child restraint in this position. Be sure to follow the instructions that came with the child restraint. Secure the child in the child restraint when and as the instructions say.

If more than one child restraint needs to be installed in the rear seat, be sure to read *Where to Put the Restraint on page 2-38*.

1. Put the child restraint on the seat.
2. Pick up the latch plate, and run the lap and shoulder portions of the vehicle's safety belt through or around the restraint. The child restraint instructions will show you how.

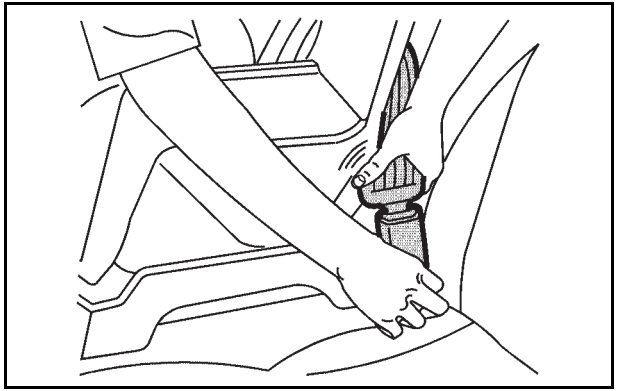

3. Push the latch plate into the buckle until it clicks.

   Position the release button on the buckle so that the safety belt could be quickly unbuckled if necessary.

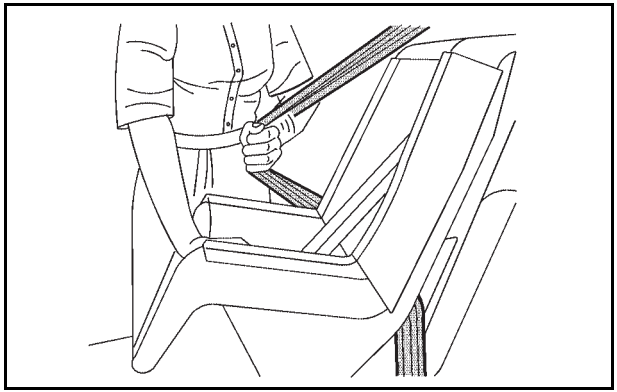

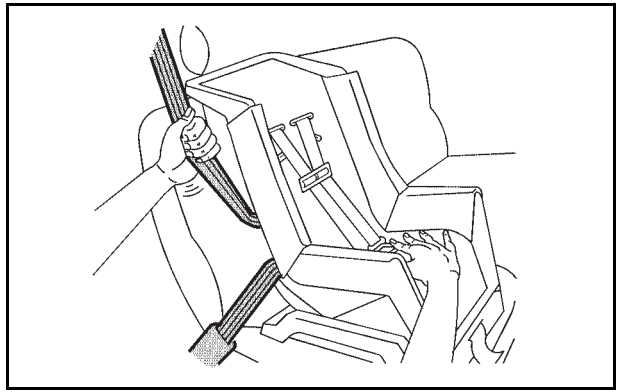

4. Pull the rest of the shoulder belt all the way out of the retractor to set the lock.

5. To tighten the belt, push down on the child restraint, pull the shoulder portion of the belt to tighten the lap portion of the belt and feed the shoulder belt back into the retractor. When installing a forward-facing child restraint, it may be helpful to use your knee to push down on the child restraint as you tighten the belt.

6. If the child restraint has a top tether, follow the child restraint manufacturer's instructions regarding the use of the top tether. See *Lower Anchors and Tethers for Children (LATCH) on page 2-39* for more information.
7. Push and pull the child restraint in different directions to be sure it is secure.

To remove the child restraint, unbuckle the vehicle safety belt and let it return to the stowed position. If the top tether is attached to a top tether anchor, disconnect it.

Securing a Child Restraint in the Right Front Seat Position

This vehicle has airbags. A rear seat is a safer place to secure a forward-facing child restraint. See *Where to Put the Restraint on page 2-38*.

In addition, the vehicle has a passenger sensing system which is designed to turn off the right front passenger frontal airbag under certain conditions. See *Passenger Sensing System on page 2-61* and *Passenger Airbag Status Indicator on page 4-55* for more information, including important safety information.

A label on the sun visor says, “Never put a rear-facing child seat in the front.” This is because the risk to the rear-facing child is so great, if the airbag deploys.

⚠ WARNING:

A child in a rear-facing child restraint can be seriously injured or killed if the right front passenger airbag inflates. This is because the back of the rear-facing child restraint would be very close to the inflating airbag. A child in a forward-facing child restraint can be seriously injured or killed if the right front passenger airbag inflates and the passenger seat is in a forward position.

Even if the passenger sensing system has turned off the right front passenger frontal airbag, no system is fail-safe. No one can guarantee that an airbag will not deploy under some unusual circumstance, even though it is turned off.

(Continued)

WARNING: (Continued)

Secure rear-facing child restraints in a rear seat, even if the airbag is off. If you secure a forward-facing child restraint in the right front seat, always move the front passenger seat as far back as it will go. It is better to secure the child restraint in a rear seat.

See *Passenger Sensing System on page 2-61* for additional information.

If the child restraint has the LATCH system, see *Lower Anchors and Tethers for Children (LATCH) on page 2-39* for how and where to install the child restraint using LATCH. If a child restraint is secured using a safety belt and it uses a top tether, see *Lower Anchors and Tethers for Children (LATCH) on page 2-39* for top tether anchor locations.

Do not secure a child seat in a position without a top tether anchor if a national or local law requires that the top tether be anchored, or if the instructions that come with the child restraint say that the top strap must be anchored.

In Canada, the law requires that forward-facing child restraints have a top tether, and that the tether be attached.

You will be using the lap-shoulder belt to secure the child restraint in this position. Follow the instructions that came with the child restraint.

1. Move the seat as far back as it will go before securing the forward-facing child restraint.

   When the passenger sensing system has turned off the right front passenger frontal airbag, the off indicator on the passenger airbag status indicator should light and stay lit when the vehicle is started. See *Passenger Airbag Status Indicator on page 4-55*.

2. Put the child restraint on the seat.
3. Pick up the latch plate, and run the lap and shoulder portions of the vehicle's safety belt through or around the restraint. The child restraint instructions will show you how.

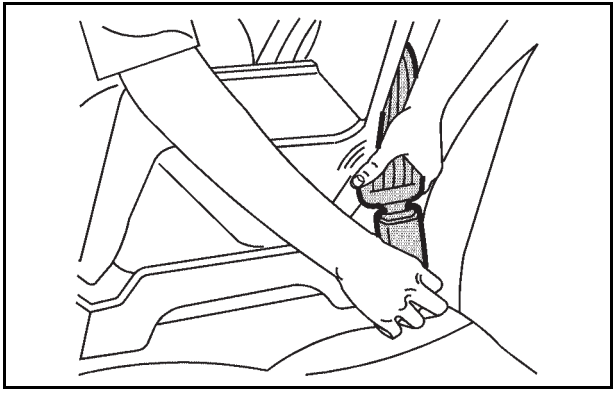

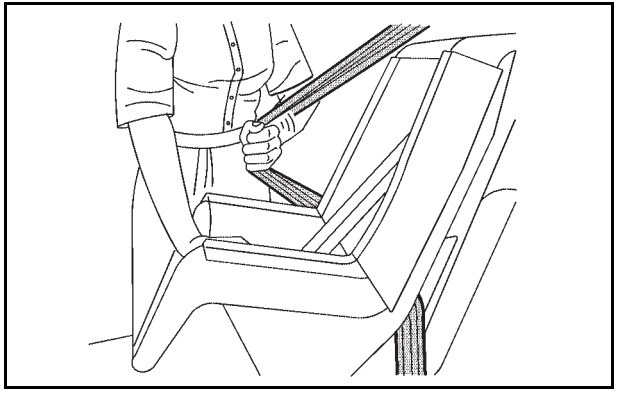

4. Push the latch plate into the buckle until it clicks.

   Position the release button on the buckle so that the safety belt could be quickly unbuckled if necessary.

5. Pull the rest of the shoulder belt all the way out of the retractor to set the lock.

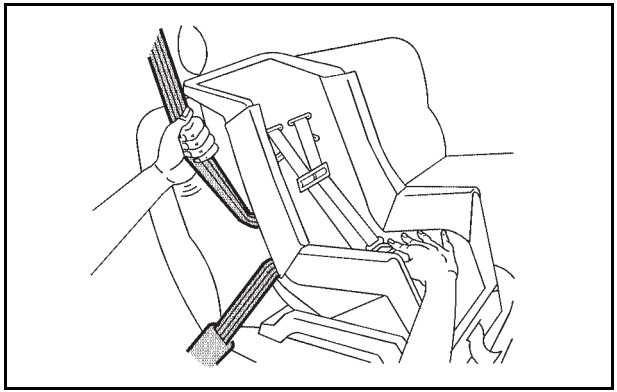

6. To tighten the belt, push down on the child restraint, pull the shoulder portion of the belt to tighten the lap portion of the belt and feed the shoulder belt back into the retractor. When installing a forward-facing child restraint, it may be helpful to use your knee to push down on the child restraint as you tighten the belt.
7. Push and pull the child restraint in different directions to be sure it is secure.

If the airbag is off, the off indicator in the passenger airbag status indicator will come on and stay on when the vehicle is started.

If a child restraint has been installed and the on indicator is lit, see “If the On Indicator is Lit for a Child Restraint” under *Passenger Sensing System on page 2-61* for more information.

To remove the child restraint, unbuckle the vehicle safety belt and let it return to the stowed position.

Airbag System

The vehicle has the following airbags:

- A frontal airbag for the driver.
- A frontal airbag for the right front passenger.
- A seat-mounted side impact airbag for the driver.
- A seat-mounted side impact airbag for the right front passenger.
- A roof-rail airbag for the driver and the passenger seated directly behind the driver.
- A roof-rail airbag for the right front passenger and the passenger seated directly behind the right front passenger.

All of the airbags in your vehicle will have the word AIRBAG embossed in the trim or on an attached label near the deployment opening.

For frontal airbags, the word AIRBAG will appear on the middle part of the steering wheel for the driver and on the instrument panel for the right front passenger.

With seat-mounted side impact airbags, the word AIRBAG will appear on the side of the seatback closest to the door.

With roof-rail airbags, the word AIRBAG will appear along the headliner or trim.

Airbags are designed to supplement the protection provided by safety belts. Even though today's airbags are also designed to help reduce the risk of injury from the force of an inflating bag, all airbags must inflate very quickly to do their job.

Here are the most important things to know about the airbag system:

⚠ WARNING:

You can be severely injured or killed in a crash if you are not wearing your safety belt — even if you have airbags. Airbags are designed to work with safety belts, but do not replace them. Also, airbags are not designed to deploy in every crash. In some crashes safety belts are your only restraint. See *When Should an Airbag Inflate? on page 2-57*.

Wearing your safety belt during a crash helps reduce your chance of hitting things inside the vehicle or being ejected from it. Airbags are "supplemental restraints" to the safety belts. Everyone in your vehicle should wear a safety belt properly — whether or not there is an airbag for that person.

⚠ WARNING:

Airbags inflate with great force, faster than the blink of an eye. Anyone who is up against, or very close to, any airbag when it inflates can be seriously injured or killed. Do not sit unnecessarily close to the airbag, as you would be if you were sitting on the edge of your seat or leaning forward. Safety belts help keep you in position before and during a crash. Always wear your safety belt, even with airbags. The driver should sit as far back as possible while still maintaining control of the vehicle.

Occupants should not lean on or sleep against the door or side windows in seating positions with seat-mounted side impact airbags and/or roof-rail airbags.

⚠ WARNING:

Children who are up against, or very close to, any airbag when it inflates can be seriously injured or killed. Airbags plus lap-shoulder belts offer protection for adults and older children, but not for young children and infants. Neither the vehicle's safety belt system nor its airbag system is designed for them. Young children and infants need the protection that a child restraint system can provide. Always secure children properly in your vehicle. To read how, see *Older Children on page 2-28* or *Infants and Young Children on page 2-31*.

There is an airbag readiness light on the instrument panel cluster, which shows the airbag symbol.

The system checks the airbag electrical system for malfunctions. The light tells you if there is an electrical problem. See *Airbag Readiness Light on page 4-54* for more information.

Where Are the Airbags?

The driver's frontal airbag is in the middle of the steering wheel.

The right front passenger's frontal airbag is in the instrument panel on the passenger's side.

Driver Side shown, Passenger Side similar

The seat-mounted side impact airbags for the driver and right front passenger are in the side of the seatbacks closest to the door.

Driver Side shown, Passenger Side similar

The roof-rail airbags for the driver, right front passenger, and second row outboard passengers are in the ceiling above the side windows.

⚠ WARNING:

If something is between an occupant and an airbag, the airbag might not inflate properly or it might force the object into that person causing severe injury or even death. The path of an inflating airbag must be kept clear. Do not put anything between an occupant and an airbag, and do not attach or put anything on the steering wheel hub or on or near any other airbag covering.

Do not use seat accessories that block the inflation path of a seat-mounted side impact airbag.

Never secure anything to the roof of a vehicle with roof-rail airbags by routing a rope or tie down through any door or window opening. If you do, the path of an inflating roof-rail airbag will be blocked.

When Should an Airbag Inflate?

Frontal airbags are designed to inflate in moderate to severe frontal or near-frontal crashes to help reduce the potential for severe injuries mainly to the driver's or right front passenger's head and chest. However, they are only designed to inflate if the impact exceeds a predetermined deployment threshold. Deployment thresholds are used to predict how severe a crash is likely to be in time for the airbags to inflate and help restrain the occupants.

Whether the frontal airbags will or should deploy is not based on how fast your vehicle is traveling. It depends largely on what you hit, the direction of the impact, and how quickly your vehicle slows down.

Frontal airbags may inflate at different crash speeds. For example:

- If the vehicle hits a stationary object, the airbags could inflate at a different crash speed than if the vehicle hits a moving object.
- If the vehicle hits an object that deforms, the airbags could inflate at a different crash speed than if the vehicle hits an object that does not deform.
- If the vehicle hits a narrow object (like a pole), the airbags could inflate at a different crash speed than if the vehicle hits a wide object (like a wall).
- If the vehicle goes into an object at an angle, the airbags could inflate at a different crash speed than if the vehicle goes straight into the object.

Thresholds can also vary with specific vehicle design.

Frontal airbags are not intended to inflate during vehicle rollovers, rear impacts, or in many side impacts.

In addition, the vehicle has dual-stage frontal airbags. Dual-stage airbags adjust the restraint according to crash severity. The vehicle has electronic frontal sensors, which help the sensing system distinguish between a moderate frontal impact and a more severe frontal impact. For moderate frontal impacts, dual-stage airbags inflate at a level less than full deployment. For more severe frontal impacts, full deployment occurs.

The vehicle has seat-mounted side impact and roof-rail airbags. See *Airbag System on page 2-52*. Seat-mounted side impact and roof-rail airbags are intended to inflate in moderate to severe side crashes. Seat-mounted side impact and roof-rail airbags will inflate if the crash severity is above the system's designed threshold level. The threshold level can vary with specific vehicle design.

Seat-mounted side impact and roof-rail airbags are not intended to inflate in frontal impacts, near-frontal impacts, rollovers, or rear impacts. A seat-mounted side impact airbag is intended to deploy on the side of the vehicle that is struck. A roof-rail airbag is intended to deploy on the side of the vehicle that is struck.

In any particular crash, no one can say whether an airbag should have inflated simply because of the damage to a vehicle or because of what the repair costs were. For frontal airbags, inflation is determined by what the vehicle hits, the angle of the impact, and how quickly the vehicle slows down. For seat-mounted side impact and roof-rail airbags, deployment is determined by the location and severity of the side impact.

What Makes an Airbag Inflate?

In a deployment event, the sensing system sends an electrical signal triggering a release of gas from the inflator. Gas from the inflator fills the airbag causing the bag to break out of the cover and deploy. The inflator, the airbag, and related hardware are all part of the airbag module.

Frontal airbag modules are located inside the steering wheel and instrument panel. For vehicles with seat-mounted side impact airbags, there are airbag modules in the side of the front seatbacks closest to the door. For vehicles with roof-rail airbags, there are airbag modules in the ceiling of the vehicle, near the side windows that have occupant seating positions.

How Does an Airbag Restrain?

In moderate to severe frontal or near frontal collisions, even belted occupants can contact the steering wheel or the instrument panel. In moderate to severe side collisions, even belted occupants can contact the inside of the vehicle.

Airbags supplement the protection provided by safety belts. Frontal airbags distribute the force of the impact more evenly over the occupant's upper body, stopping the occupant more gradually. Seat-mounted side impact and roof-rail airbags distribute the force of the impact more evenly over the occupant's upper body.

But airbags would not help in many types of collisions, primarily because the occupant's motion is not toward those airbags. See *When Should an Airbag Inflate? on page 2-57* for more information.

Airbags should never be regarded as anything more than a supplement to safety belts.

What Will You See After an Airbag Inflates?

After the frontal airbags and seat-mounted side impact airbags inflate, they quickly deflate, so quickly that some people may not even realize an airbag inflated. Roof-rail airbags may still be at least partially inflated for some time after they deploy. Some components of the airbag module may be hot for several minutes. For location of the airbag modules, see *What Makes an Airbag Inflate? on page 2-59*.

The parts of the airbag that come into contact with you may be warm, but not too hot to touch. There may be some smoke and dust coming from the vents in the deflated airbags. Airbag inflation does not prevent the driver from seeing out of the windshield or being able to steer the vehicle, nor does it prevent people from leaving the vehicle.

⚠ WARNING:

When an airbag inflates, there may be dust in the air. This dust could cause breathing problems for people with a history of asthma or other breathing trouble. To avoid this, everyone in the vehicle should get out as soon as it is safe to do so.
If you have breathing problems but cannot get out of the vehicle after an airbag inflates, then get fresh air by opening a window or a door. If you experience breathing problems following an airbag deployment, you should seek medical attention.

The vehicle has a feature that may automatically unlock the doors, turn on the interior lamps and hazard warning flashers, and shut off the fuel system after the airbags inflate. You can lock the doors, turn off the interior lamps and hazard warning flashers by using the controls for those features.

⚠ WARNING:

A crash severe enough to inflate the airbags may have also damaged important functions in the vehicle, such as the fuel system, brake and steering systems, etc. Even if the vehicle appears to be drivable after a moderate crash, there may be concealed damage that could make it difficult to safely operate the vehicle.

Use caution if you should attempt to restart the engine after a crash has occurred.

In many crashes severe enough to inflate the airbag, windshields are broken by vehicle deformation. Additional windshield breakage may also occur from the right front passenger airbag.

- Airbags are designed to inflate only once. After an airbag inflates, you will need some new parts for the airbag system. If you do not get them, the airbag system will not be there to help protect you in another crash. A new system will include airbag modules and possibly other parts. The service manual for your vehicle covers the need to replace other parts.
- The vehicle has a crash sensing and diagnostic module which records information after a crash. See *Vehicle Data Recording and Privacy on page 8-17* and *Event Data Recorders on page 8-17*.
- Let only qualified technicians work on the airbag systems. Improper service can mean that an airbag system will not work properly. See your dealer/retailer for service.

Passenger Sensing System

The vehicle has a passenger sensing system for the right front passenger position. The passenger airbag status indicator will be visible on the overhead console when you start the vehicle.

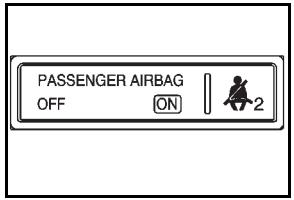

United States

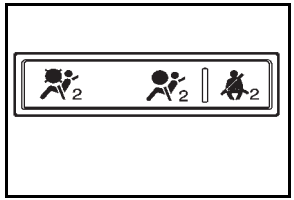

Canada

The words ON and OFF, or the symbol for on and off, will be visible during the system check. If you are using remote start to start your vehicle from a distance, if equipped, you may not see the system check. When the system check is complete, either the word ON or the word OFF, or the symbol for on or the symbol for off, will be visible. See *Passenger Airbag Status Indicator on page 4-55*.

The passenger sensing system will turn off the right front passenger frontal airbag under certain conditions. The driver airbag, seat-mounted side impact airbags and the roof-rail airbags are not part of the passenger sensing system.

The passenger sensing system works with sensors that are part of the right front passenger seat. The sensors are designed to detect the presence of a properly-seated occupant and determine if the right front passenger's frontal airbag should be enabled (may inflate) or not.

According to statistics, children are safer when properly secured in a rear seat in the correct child restraint for their weight and size.

We recommend that children be secured in a rear seat, including: an infant or a child riding in a rear-facing child restraint; a child riding in a forward-facing child seat; an older child riding in a booster seat; and children, who are large enough, using safety belts.

A label on the sun visor says, “Never put a rear-facing child seat in the front.” This is because the risk to the rear-facing child is so great, if the airbag deploys.

⚠ WARNING:

A child in a rear-facing child restraint can be seriously injured or killed if the right front passenger airbag inflates. This is because the back of the rear-facing child restraint would be very close to the inflating airbag. A child in a forward-facing child restraint can be seriously injured or killed if the right front passenger airbag inflates and the passenger seat is in a forward position.

Even if the passenger sensing system has turned off the right front passenger frontal airbag, no system is fail-safe. No one can guarantee that an airbag will not deploy under some unusual circumstance, even though the airbag is turned off.

Secure rear-facing child restraints in a rear seat, even if the airbag is off. If you secure a forward-facing child restraint in the right front seat, always move the front passenger seat as far back as it will go. It is better to secure the child restraint in a rear seat.

The passenger sensing system is designed to turn off the right front passenger frontal airbag if:

- The right front passenger seat is unoccupied.
- The system determines that an infant is present in a rear-facing infant seat.
- The system determines that a small child is present in a child restraint.
- The system determines that a small child is present in a booster seat.
- A right front passenger takes his/her weight off of the seat for a period of time.
- The right front passenger seat is occupied by a smaller person, such as a child who has outgrown child restraints.
- Or, if there is a critical problem with the airbag system or the passenger sensing system.

When the passenger sensing system has turned off the right front passenger's frontal airbag, the off indicator will light and stay lit to remind you that the airbag is off. See *Passenger Airbag Status Indicator on page 4-55*.

If a child restraint has been installed and the on indicator is lit, turn the vehicle off. Remove the child restraint from the vehicle and reinstall the child restraint following the child restraint manufacturer's directions and refer to *Securing a Child Restraint in the Right Front Seat Position on page 2-48*.

If, after reinstalling the child restraint and restarting the vehicle, the on indicator is still lit, check to make sure that the vehicle's seatback is not pressing the child restraint into the seat cushion. If this happens, slightly recline the vehicle's seatback and adjust the seat cushion if possible. Also make sure the child restraint is not trapped under the vehicle head restraint. If this happens, adjust the head restraint. See *Head Restraints on page 2-6*.

Remove any additional material from the seat such as blankets, cushions, seat covers, seat heaters, or seat massagers before reinstalling or securing the child restraint.

If the on indicator is still lit, secure the child in the child restraint in a rear seat position in the vehicle, and check with your dealer/retailer.

The passenger sensing system is designed to enable (may inflate) the right front passenger's frontal airbag anytime the system senses that a person of adult size is sitting properly in the right front passenger's seat. When the passenger sensing system has allowed the airbag to be enabled, the on indicator will light and stay lit to remind you that the airbag is active.

For some children who have outgrown child restraints and for very small adults, the passenger sensing system may or may not turn off the right front passenger's frontal airbag, depending upon the person's seating posture and body build. Everyone in your vehicle who has outgrown child restraints should wear a safety belt properly — whether or not there is an airbag for that person.

If a person of adult-size is sitting in the right front passenger's seat, but the off indicator is lit, it could be because that person is not sitting properly in the seat. If this happens, turn the vehicle off, remove any additional material from the seat, such as blankets, cushions, seat covers, seat heaters or seat massagers and ask the person to place the seatback in the fully upright position, then sit upright in the seat, centered on the seat cushion, with the person's legs comfortably extended. Restart the vehicle and have the person remain in this position for two to three minutes. This will allow the system to detect that person and then enable the right front passenger's frontal airbag.

Safety belts help keep the passenger in position on the seat during vehicle maneuvers and braking, which helps the passenger sensing system maintain the passenger airbag status. See “Safety Belts” and “Child Restraints” in the Index for additional information about the importance of proper restraint use.

⚠ WARNING:

If the airbag readiness light in the instrument panel cluster ever comes on and stays on, it means that something may be wrong with the airbag system. If this ever happens, have the vehicle serviced promptly, because an adult-size person sitting in the right front passenger's seat may not have the protection of the airbag(s). See *Airbag Readiness Light on page 4-54* for more on this, including important safety information.

A thick layer of additional material, such as a blanket or cushion, or aftermarket equipment such as seat covers, seat heaters, and seat massagers can affect how well the passenger sensing system operates. We recommend that you not use seat covers or other aftermarket equipment other than any that GM has approved for your specific vehicle. See *Adding Equipment to Your Airbag-Equipped Vehicle on page 2-66* for more information about modifications that can affect how the system operates.

⚠ WARNING:

Stowing of articles under the passenger seat or between the passenger seat cushion and seatback may interfere with the proper operation of the passenger sensing system.

Servicing Your Airbag-Equipped Vehicle

Airbags affect how the vehicle should be serviced. There are parts of the airbag system in several places around the vehicle. Your dealer/retailer and the service manual have information about servicing the vehicle and the airbag system. To purchase a service manual, see *Service Publications Ordering Information on page 8-16*.

⚠ WARNING:

For up to 10 seconds after the ignition is turned off and the battery is disconnected, an airbag can still inflate during improper service. You can be injured if you are close to an airbag when it inflates. Avoid yellow connectors. They are probably part of the airbag system. Be sure to follow proper service procedures, and make sure the person performing work for you is qualified to do so.

Adding Equipment to Your Airbag-Equipped Vehicle

Q: Is there anything I might add to or change about the vehicle that could keep the airbags from working properly?

A: Yes. If you add things that change your vehicle's frame, bumper system, height, front end or side sheet metal, they may keep the airbag system from working properly. Changing or moving any parts of the front seats, safety belts, the airbag sensing and diagnostic module, steering wheel, instrument panel, roof-rail airbag modules, ceiling headliner or pillar garnish trim, overhead console, front sensors, side impact sensors, or airbag wiring can affect the operation of the airbag system.

In addition, your vehicle has a passenger sensing system for the right front passenger's position, which includes sensors that are part of the passenger's seat. The passenger sensing system may not operate properly if the original seat trim is replaced with non-GM covers, upholstery or trim, or with GM covers, upholstery or trim designed for a different vehicle. Any object, such as an aftermarket seat heater or a comfort enhancing pad or device, installed under or on top of the seat fabric, could also interfere with the operation of the passenger sensing system. This could either prevent proper deployment of the passenger airbag(s) or prevent the passenger sensing system from properly turning off the passenger airbag(s). See *Passenger Sensing System on page 2-61*.

If you have any questions about this, you should contact Customer Assistance before you modify your vehicle. The phone numbers and addresses for Customer Assistance are in Step Two of the Customer Satisfaction Procedure in this manual. See *Customer Satisfaction Procedure on page 8-2*.

Q: Because I have a disability, I have to get my vehicle modified. How can I find out whether this will affect my airbag system?

A: If you have questions, call Customer Assistance. The phone numbers and addresses for Customer Assistance are in Step Two of the Customer Satisfaction Procedure in this manual. See *Customer Satisfaction Procedure on page 8-2*.

In addition, your dealer/retailer and the service manual have information about the location of the airbag sensors, sensing and diagnostic module and airbag wiring.

Restraint System Check

Checking the Restraint Systems

Safety Belts

Now and then, check that the safety belt reminder light, safety belts, buckles, latch plates, retractors, and anchorages are all working properly.

Look for any other loose or damaged safety belt system parts that might keep a safety belt system from doing its job. See your dealer/retailer to have it repaired. Torn or frayed safety belts may not protect you in a crash. They can rip apart under impact forces. If a belt is torn or frayed, get a new one right away.

Make sure the safety belt reminder light is working. See *Safety Belt Reminders on page 4-53* for more information.

Keep safety belts clean and dry. See *Care of Safety Belts on page 6-111*.

Airbags

The airbag system does not need regularly scheduled maintenance or replacement. Make sure the airbag readiness light is working. See *Airbag Readiness Light on page 4-54* for more information.

Notice: **If an airbag covering is damaged, opened, or broken, the airbag may not work properly. Do not open or break the airbag coverings. If there are any opened or broken airbag covers, have the airbag covering and/or airbag module replaced. For the location of the airbag modules, see *What Makes an Airbag Inflate? on page 2-59*. See your dealer/retailer for service.**

Replacing Restraint System Parts After a Crash

⚠ WARNING:

A crash can damage the restraint systems in your vehicle. A damaged restraint system may not properly protect the person using it, resulting in serious injury or even death in a crash. To help make sure your restraint systems are working properly after a crash, have them inspected and any necessary replacements made as soon as possible.

If the vehicle has been in a crash, do you need new safety belts or LATCH system (if equipped) parts?

After a very minor crash, nothing may be necessary. But the safety belt assemblies that were used during any crash may have been stressed or damaged. See your dealer/retailer to have the safety belt assemblies inspected or replaced.

If the vehicle has the LATCH system and it was being used during a crash, you may need new LATCH system parts.

New parts and repairs may be necessary even if the safety belt or LATCH system (if equipped), was not being used at the time of the crash.

If an airbag inflates, you will need to replace airbag system parts. See the part on the airbag system earlier in this section.

Have the safety belt pretensioners checked if the vehicle has been in a crash, if the airbag readiness light stays on after the vehicle is started, or while you are driving. See *Airbag Readiness Light on page 4-54*.

✍ NOTES

Section 3 Features and Controls

Keys 3-3
Keyless Access System 3-4
Keyless Access System Operation 3-5
Remote Vehicle Start 3-10

Doors and Locks 3-12
Door Locks 3-12
Power Door Locks 3-13
Programmable Automatic Door Locks 3-14
Rear Door Security Locks 3-14
Lockout Protection 3-15
Trunk 3-15

Windows 3-18
Power Windows 3-19
Sun Visors 3-21

Theft-Deterrent Systems 3-22
Theft-Deterrent System 3-22
Valet Lockout Switch 3-24
Immobilizer 3-24
Immobilizer Operation 3-24

Starting and Operating Your Vehicle 3-25
New Vehicle Break-In 3-25
Ignition Positions 3-26
Retained Accessory Power (RAP) 3-26
Starting the Engine 3-27
Engine Coolant Heater 3-29
Automatic Transmission Operation 3-30
Parking Brake 3-33
Shifting Into Park 3-34
Shifting Out of Park 3-35
Parking Over Things That Burn 3-35
Engine Exhaust 3-36
Running the Vehicle While Parked 3-36

Mirrors 3-37
Automatic Dimming Rearview Mirror 3-37
Compass 3-38
Outside Power Mirrors 3-39
Outside Automatic Dimming Mirror 3-39
Park Tilt Mirrors 3-40
Outside Convex Mirror 3-40
Outside Heated Mirrors 3-40

Object Detection Systems 3-41
Ultrasonic Rear Parking Assist (URPA) 3-41
Side Blind Zone Alert (SBZA) 3-44
Lane Departure Warning (LDW) 3-47
Universal Home Remote System 3-49
Universal Home Remote System Operation (With Three Round LED) 3-49
Storage Areas 3-56
Glove Box 3-56
Cupholders 3-56
Center Console Storage 3-56
Convenience Net 3-56
Sunroof 3-57
Vehicle Personalization 3-58
Memory Seat, Mirrors and Steering Wheel 3-75

Keys

⚠ WARNING:

Leaving children in a vehicle with the keyless access transmitter is dangerous for many reasons, children or others could be badly injured or even killed. They could operate the power windows or other controls or even make the vehicle move. The windows will function with the keyless access transmitter in the vehicle and they could be seriously injured or killed if caught in the path of a closing window. Do not leave the keyless access transmitter in a vehicle with children.

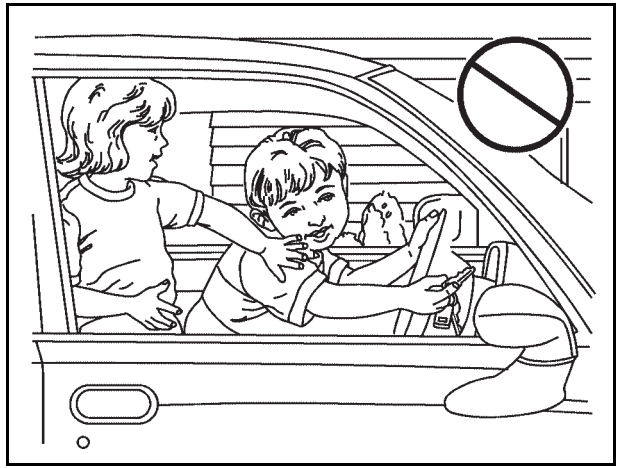

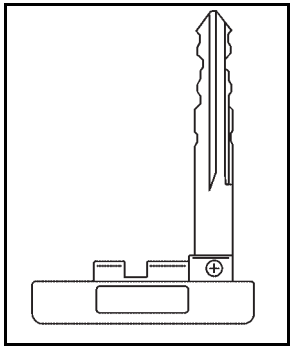

This key, located inside the keyless access transmitter, can be used for all locks.

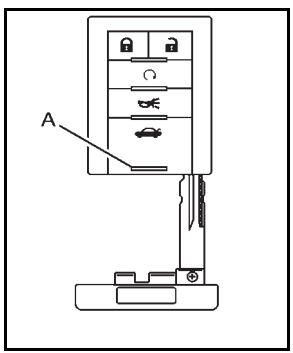

Press the button (A) near the bottom of the keyless access transmitter to remove the key. Never pull the key without pressing the button.

Your vehicle has a Keyless Access System with pushbutton start. See *Ignition Positions on page 3-26* for information on starting the vehicle.

Notice: **If you ever lose your transmitter(s) and/or key, it could be difficult to get into your vehicle. You may even have to damage your vehicle to get in. Be sure you have a spare transmitter and/or key.**

In an emergency, contact Cadillac Roadside Assistance. See *Roadside Service on page 8-8*.

Keyless Access System

See *Radio Frequency Statement on page 8-18* for information regarding Part 15 of the Federal Communications Commission (FCC) Rules and RSS-210/211 of Industry and Science Canada.

Changes or modifications to this system by other than an authorized service facility could void authorization to use this equipment.

If there is a decrease in the RKE operating range, try this:

- Check the distance. The transmitter may be too far from the vehicle. Stand closer during rainy or snowy weather.
- Check the location. Other vehicles or objects may be blocking the signal. Take a few steps to the left or right, hold the transmitter higher, and try again.
- Check the transmitter's battery. See “Battery Replacement” later in this section.
- If the transmitter is still not working correctly, see your dealer/retailer or a qualified technician for service.

Keyless Access System Operation

The Keyless Access System transmitter functions will work up to 195 feet (60 m) away from the vehicle.

The Keyless Access System lets you lock and unlock the doors without removing the remote transmitter from your pocket, purse, briefcase, etc. The keyless access transmitter must be within 3 feet (1 m) of the front door or trunk being opened.

Keyless Unlocking

Pull the door handle to unlock and open the door(s) if the keyless access transmitter is within range. See *Door Locks on page 3-12* for additional information. To customize which doors unlock when pulling the driver or passenger handle, see “Keyless FT (Front) Door Unlock” and “Keyless Doors Unlock” under *Vehicle Personalization on page 3-58* for additional information.

Keyless Locking

The doors lock after several seconds if all doors are closed and at least one keyless access transmitter has been removed from the interior of the vehicle. To customize whether the doors automatically lock when exiting the vehicle, see "Keyless Lock Delay" under *Vehicle Personalization on page 3-58*. for additional information.

Keyless Trunk Opening

To open the trunk with the keyless access transmitter within range, press the trunk release button located above the license plate on the trunk. See *Trunk on page 3-15* for additional information.

Other conditions can affect the performance of the transmitter. See *Keyless Access System on page 3-4*.

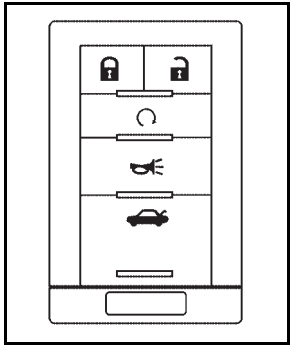

(Lock): Press once to lock the doors. The light on the front doors comes on and the turn signals flash.

If is pressed twice, the horn will also sound.

See “Lights Flash at Lock” and “Horn Chirps at Lock” under *Vehicle Personalization on page 3-58* to change the feedback feature.

(Unlock): Press once to unlock the driver door. The turn signals flash twice. Press twice within five seconds to unlock all the doors. The interior lamps may come on.

See “Lights Flash at Unlock” and “Ext. (Exterior) Lights at Unlock” under *Vehicle Personalization on page 3-58* to change the feedback feature.

Vehicles with the memory feature can be programmed to recall memory settings when is pressed on the keyless access transmitter. See *Memory Seat, Mirrors and Steering Wheel on page 3-75* for more information.

(Remote Start): Press to operate the remote start feature. See *Remote Vehicle Start on page 3-10*.

(Trunk): Press and hold to unlock the trunk. If the engine is running, the shift lever must be in P (Park).

(Vehicle Locator/Panic Alarm): Press and release to locate the vehicle. The horn sounds three times and the turn signal lamps flash three times. Press and hold for three seconds to sound the panic alarm. The horn sounds and the turn signal lamps flash for 30 seconds. Press and release again to cancel the panic alarm.

The vehicle comes with two transmitters. Each transmitter will have a number on top of it, “1” or “2”. These numbers correspond to the driver of the vehicle. For example, the memory seat position for driver 1 will be recalled when using the transmitter labeled “1”, if enabled through the vehicle personalization. See *Memory Seat, Mirrors and Steering Wheel on page 3-75* and *Vehicle Personalization on page 3-58* for more information.

Programming Transmitters to the Vehicle

Only keyless access transmitters programmed to this vehicle will work. If a transmitter is lost or stolen, a replacement can be purchased and programmed through your dealer/retailer. The vehicle can be reprogrammed so that lost or stolen transmitters no longer work. Each vehicle can have up to four transmitters programmed to it.

Programming with a Recognized Transmitter

A new transmitter can be programmed to the vehicle when there is one recognized transmitter. For vehicles sold in Canada, two recognized transmitters are required to program a new transmitter.

1. The vehicle must be off.
2. Both the recognized and new transmitters must be with you.
3. Insert the vehicle key into the key cylinder located on the outside of the driver door.
4. Turn the key to the unlock position five times within five seconds.
5. The Driver Information Center (DIC) displays READY FOR FOB 2, 3 or 4.

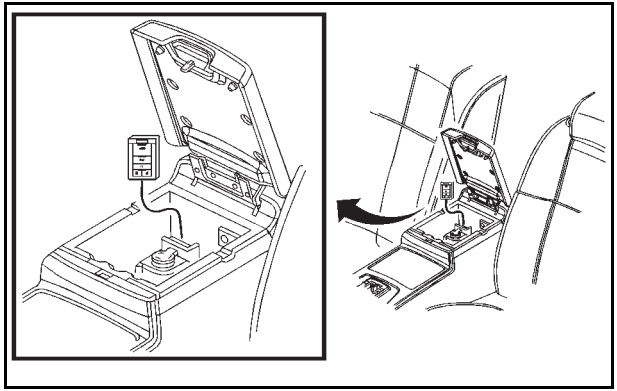

6. Place the new transmitter into the transmitter pocket, located inside the center console storage area located between the driver and front passenger seats, with the transmitter buttons facing the front of the vehicle.
7. A beep sounds once programming in complete. The DIC displays READY FOR 3 or 4, or MAX # FOBS LEARNED.

8. Remove the transmitter from the transmitter pocket and press 🔓 twice on each newly programmed transmitter to complete the process.
9. To program additional transmitters, repeat Step 6. Press Acc. on the ignition switch if programming is complete.

Programming without a Recognized Transmitter

This procedure requires three ten minutes cycles to complete the programming process. United States owners are permitted to program a new transmitter to their vehicle when a recognized transmitter is not available. The Canadian immobilizer standard requires that Canadian owners see their dealer/retailer for programming new transmitters when two recognized transmitters are not available.

1. The vehicle must be off.

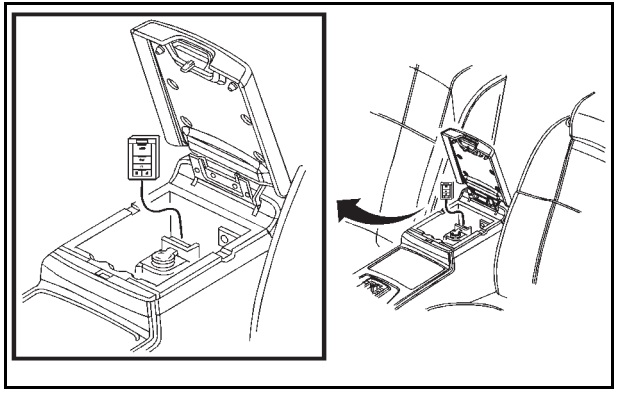

2. Place the new transmitter into the transmitter pocket, located inside the center console storage area located between the driver and front passenger seats, with the transmitter buttons facing the front of the vehicle.
3. Insert the vehicle key into the key lock cylinder located on the driver door.
4. Turn the key to the unlock position five times within five seconds.
5. The DIC message displays OFF/ACC TO LEARN.
6. Press Acc. on the ignition switch.

7. The DIC reads WAIT 10 MINUTES and counts down to zero.
8. The DIC displays OFF/ACC TO LEARN again.
9. Press Acc. on the ignition switch.
10. Steps 7, 8 and 9 will be repeated two more times.
11. A beep sounds and the DIC reads READY FOR FOB 1. All previously known transmitter programming has been erased.
12. A beep sounds once programming in complete. The DIC displays READY FOR FOB #2.
13. To program additional transmitters, take transmitter 1 out of the transmitter pocket and place transmitter 2 in the pocket. Up to four transmitters can be programmed. The DIC will then display MAX # FOBS LEARNED and will exit the programming mode.
14. Remove the transmitter from the transmitter pocket and press 🔓 twice on each newly programmed transmitter to complete the process.

Starting the Vehicle with a Low Transmitter Battery

If the transmitter battery is weak, the DIC may display NO FOBS DETECTED when trying to start the vehicle. To start the vehicle, place the transmitter in the center console storage area transmitter pocket with the buttons facing to the front of the vehicle. Then, with the vehicle in P (Park) OR N (Neutral), press the brake pedal and . Replace the transmitter battery as soon as possible. Change the transmitter battery if the DIC displays KEY FOB BATTERY LOW.

Battery Replacement

Notice: **When replacing the battery, do not touch any of the circuitry on the transmitter. Static from your body could damage the transmitter.**

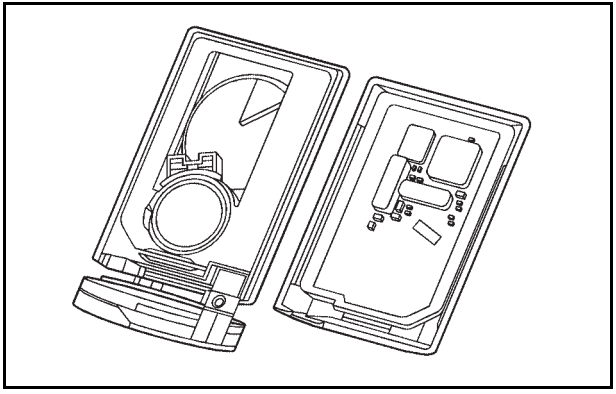

1. Separate the transmitter with a flat, thin object inserted into the slot on the side of the transmitter.
2. Remove the old battery. Do not use a metal object.
3. Insert the new battery, positive side facing down. Replace with a CR2032 or equivalent battery.
4. Snap the transmitter back together.

Remote Vehicle Start

This feature allows you to start the engine from outside the vehicle.

Before the remote vehicle start system can be operated, it must be turned on through the vehicle personalization system.

You can also program the remote vehicle start system to start up the vehicle's automatic climate control system. If this feature is turned on, the system monitors the outside temperature and turns on the rear window defogger, front window defogger, and heated or ventilated seats, if your vehicle has them. See “Personal Settings Menu” under *Vehicle Personalization on page 3-58*.

(Remote Start) : This button will be on the RKE transmitter if you have remote start.

To start the vehicle using the remote start feature:

1. Aim the remote keyless access transmitter at the vehicle.
2. Press the transmitter's , release it, and then immediately press and hold the transmitter's for at least three seconds or until the vehicle's turn signal lamps flash. The vehicle's doors will be locked.

   When the vehicle starts, the parking lamps will turn on and remain on while the vehicle is running.

3. If it is the first remote start since the vehicle has been driven, repeat these steps, while the engine is still running, to extend the engine running time by 10 minutes. Remote start can be extended one time.

If the vehicle is left running it will automatically shut off after 10 minutes unless a time extension has been done. To manually shut off a remote start, do one of the following:

- Aim the keyless access transmitter at the vehicle and press the remote start button until the parking lamps turn off.
- Turn on the hazard warning flashers.
- Press the Acc. button (ignition switch). See *Ignition Positions on page 3-26*.
- Turn on the valet lockout switch. See *Valet Lockout Switch on page 3-24*.

When you enter the vehicle during a remote start, press the brake pedal and press the start button on the keyless ignition switch to transition from remote start operation to normal vehicle operation.

Laws in some local communities may restrict the use of remote starters. For example, laws may require a person using remote start to have the vehicle in view when doing so. Check local regulations for any requirements on remote starting of vehicles.

Do not use the remote start feature if your vehicle is low on fuel. Your vehicle may run out of fuel.

The remote start feature provides two separate starts, each with 10 minutes of engine running. If you press the lock button and then hold the remote start button on the keyless access transmitter again for at least three seconds before the first 10 minutes of engine running time has expired, 10 minutes is added to the remaining minutes. For example, if the remote start is initiated again after five minutes of the engine run time, 10 minutes is added and you now have 15 minutes with the engine running. Once two remote starts or 20 minutes of the engine running have been provided, the vehicle must be started using the keyless access with pushbutton start feature, if the engine needs to be restarted. See *Starting the Engine on page 3-27* for more information regarding the keyless ignition.

The remote start feature will not operate if any of the following occur:

- The check engine light is displayed. See “Check Engine Light” under *Malfunction Indicator Lamp on page 4-62*.
- The valet lockout switch is on.
- The keyless access transmitter is in the vehicle.
- The vehicle's hood is open.
- The vehicle personalization feature is not enabled.
- An unauthorized vehicle entry or a vehicle theft was attempted.

If your vehicle has the remote start feature, the keyless access transmitter functions will have an increased range of operation. However, the range may be less while the vehicle is running.

There are other conditions which can affect the performance of the transmitter, see *Keyless Access System on page 3-4*.

Doors and Locks

Door Locks

⚠ WARNING:

Unlocked doors can be dangerous.

- Passengers, especially children, can easily open the doors and fall out of a moving vehicle. When a door is locked, the handle will not open it. The chance of being thrown out of the vehicle in a crash is increased if the doors are not locked. So, all passengers should wear safety belts properly and the doors should be locked whenever the vehicle is driven.
- Young children who get into unlocked vehicles may be unable to get out. A child can be overcome by extreme heat and can suffer permanent injuries or even death from heat stroke. Always lock the vehicle whenever leaving it.

(Continued)

WARNING: (Continued)

- Outsiders can easily enter through an unlocked door when you slow down or stop your vehicle. Locking your doors can help prevent this from happening.

There are several ways to lock and unlock your vehicle.

From the outside:

- Pull the front door handle. If you have the keyless access transmitter, the vehicle recognizes the transmitter and automatically unlocks the door.
- Another way to lock or unlock the vehicle, is to press 🔒 or 🔓 on the keyless access transmitter. See *Vehicle Personalization on page 3-58* for information on how to program the keyless access feature.

From the inside:

- Press the power door lock switch located on each front door. See *Power Door Locks on page 3-13* for more information.
- Push down or pull up on the manual door lock knob. The knob is located at the top of the door panel near the window.

Power Door Locks

With power door locks, the switches on the front doors can be used to lock and unlock the vehicle.

🔓 **(Unlock):** Press to unlock the doors.

🔒 **(Lock):** Remove the key from the ignition and press to lock the doors.

Programmable Automatic Door Locks

The vehicle was programmed so when the doors are closed, the ignition is on, and the shift lever is moved out of P (Park), all the doors will lock.

The front doors can still be opened from the inside while the doors are locked. If a rear passenger needs to exit the vehicle, have that person use the manual knob or use the power door lock switch on either front door . When the door is closed again, it will not lock automatically. Use the manual knob or the power door lock switch to lock the door.

The doors were also pre-programmed to unlock every time the shift lever is moved into P (Park).

The power door locks can be programmed through the radio display. The radio display allows you to choose various lock and unlock settings. For more information on programming, see *Vehicle Personalization on page 3-58*.

Rear Door Security Locks

The vehicle has rear door security locks to prevent passengers from opening the rear doors from the inside.

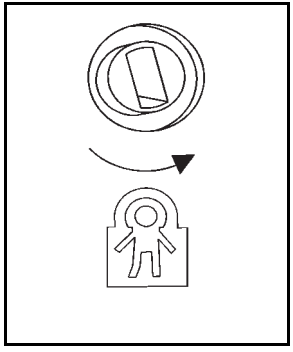

Open the rear doors to access the security locks on the inside edge of each door.

To set the locks, insert a key into the slot and turn it to the horizontal position. The door can only be opened from the outside with the door unlocked. To return the door to normal operation, turn the slot to the vertical position.

Lockout Protection

The vehicle can be programmed to sound the horn three times and unlock the driver's door when all doors are closed and there is a keyless access transmitter inside the interior of the vehicle. When the driver's door is reopened, the key in reminder chime will sound continuously. The vehicle will remain locked only when at least one transmitter has been removed from the vehicle and both doors are closed. See *Vehicle Personalization on page 3-58*.

Trunk

⚠ WARNING:

Exhaust gases can enter the vehicle if it is driven with the liftgate, trunk/hatch open, or with any objects that pass through the seal between the body and the trunk/hatch or liftgate. Engine exhaust contains Carbon Monoxide (CO) which cannot be seen or smelled. It can cause unconsciousness and even death.

(Continued)

WARNING: (Continued)

If the vehicle must be driven with the liftgate, or trunk/hatch open:

- Close all of the windows.
- Fully open the air outlets on or under the instrument panel.
- Adjust the Climate Control system to a setting that brings in only outside air and set the fan speed to the highest setting. See Climate Control System in the Index.
- If the vehicle is equipped with a power liftgate, disable the power liftgate function.

For more information about carbon monoxide, see *Engine Exhaust on page 3-36*.

Trunk Lid Release

There are three ways to open the trunk lid.

- **(Trunk Lid Release):** Press this button located on the driver's door. The vehicle must be in P (Park) or N (Neutral) and the valet mode turned off. To disable valet mode, see *Valet Lockout Switch on page 3-24*.
- Press the trunk lid release button on the keyless access transmitter. See *Keyless Access System Operation on page 3-5*. The vehicle must be in P (Park) or N (Neutral) and the valet mode turned off.

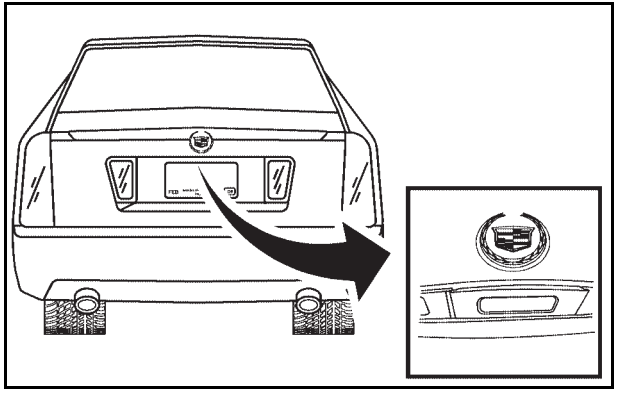

- Squeeze the trunk release button located on the rear of the trunk lid above the license plate. If the vehicle is locked, the keyless access transmitter must be within three feet (one meter) of the trunk opening for it to be recognized and allow the trunk to open. If the vehicle doors are unlocked, the trunk is also unlocked and the keyless access transmitter does not have to be at the rear of the vehicle to open it.The vehicle must be in P (Park) and the valet mode turned off.

If your vehicle has lost battery power, you can still access the trunk by unlocking and lowering the rear seat pass-through door and pulling the emergency trunk release handle.

Rear Seat Pass-Through Door

To open the door:

1. Pull the rear seat armrest down.
2. If the door is locked, insert the key into the lock and turn it counterclockwise.
3. Press the button above the lock and lower the door.

To open the trunk lid, pull the emergency trunk release handle located in the trunk on the other side of the door opening. See “Emergency Trunk Release Handle” following.

Emergency Trunk Release Handle

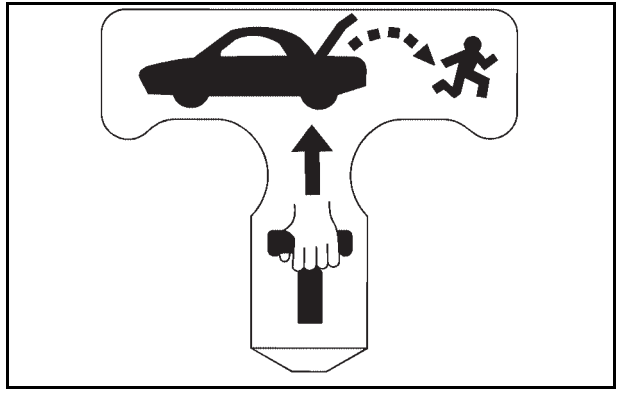

Notice: **Do not use the emergency trunk release handle as a tie-down or anchor point when securing items in the trunk as it could damage the handle.**

There is a glow-in-the-dark trunk release handle located inside the trunk near the back of the rear seats. This handle will glow following exposure to light. Pull down the release handle to open the trunk from the inside of the vehicle.

Windows

⚠ WARNING:

Leaving children, helpless adults, or pets in a vehicle with the windows closed is dangerous. They can be overcome by the extreme heat and suffer permanent injuries or even death from heat stroke. Never leave a child, a helpless adult, or a pet alone in a vehicle, especially with the windows closed in warm or hot weather.

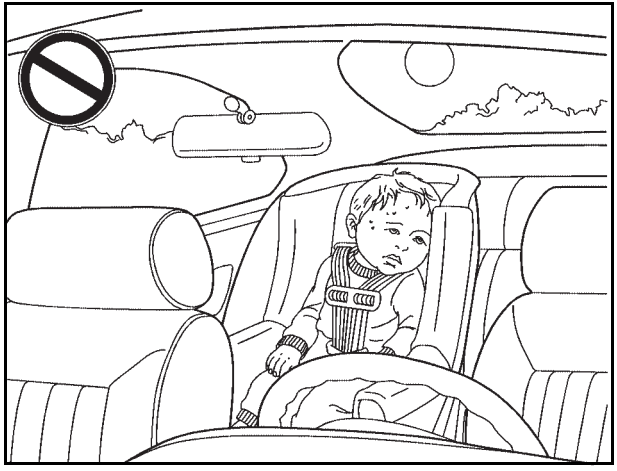

Power Windows

⚠ WARNING:

Leaving children in a vehicle with the keys is dangerous for many reasons, children or others could be badly injured or even killed. They could operate the power windows or other controls or even make the vehicle move. The windows will function and they could be seriously injured or killed if caught in the path of a closing window. Do not leave keys in a vehicle with children.

When there are children in the rear seat use the window lockout button to prevent unintentional operation of the windows.

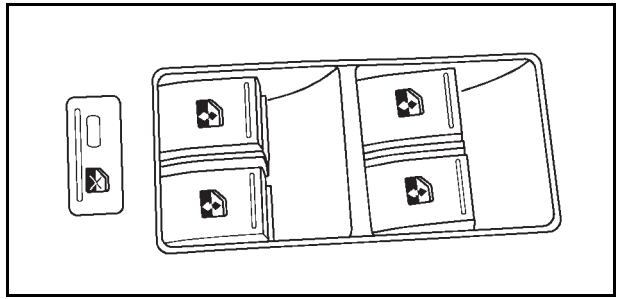

The power window switches are located on the armrest near each window. Press the front of the switch to the first position to open the window to the desired level. Lift up the front of the switch to the first position to close the window.

Your vehicle has Retained Accessory Power (RAP) that allows you to use the power windows once the engine has been turned off. For more information, see *Retained Accessory Power (RAP) on page 3-26*.

If a window switch is repeatedly operated within a short time frame, the window operation will be disabled temporarily.

Express-Down/Up Window

Any window can be lowered or raised all the way without holding the switch.

Press the front of the window switch to the second position and release to activate the express-down feature. To stop the window, briefly pull up the switch.

Lift the front of the switch briefly to activate the express-up feature. To stop the window, briefly press the switch.

Programming the Power Windows

If the battery on your vehicle has been recharged, disconnected, or is not working, each window must be reprogrammed for the express-up feature to work.

To program each window:

1. With the ignition on or in ACC/ACCESSORY, or while RAP is active, close all doors.
2. Press and hold the power window switch until the window has fully opened.
3. Continue holding the switch for approximately two seconds.
4. Pull up the power window switch until the window is fully closed.

Repeat the process for all windows.

Express Window Anti-Pinch Feature

If any object is in the path of the window when the express-up is active, the window will stop at the obstruction and auto-reverse to a preset factory position. Weather conditions such as severe icing may also cause the window to auto-reverse. The window will return to normal operation once the obstruction or condition is removed.

Express Window Anti-Pinch Override

⚠ WARNING:

If express override is activated, the window will not reverse automatically. You or others could be injured and the window could be damaged. Before you use express override, make sure that all people and obstructions are clear of the window path.

In an emergency, the anti-pinch feature can be overridden in a supervised mode. Hold the window switch all the way up in the express position. The window will rise for as long as the switch is held. Once the switch is released, the express mode is re-activated.

In this mode, the window can still close on an object in its path. Use care when using the override mode.

Window Lockout

(Window Lockout) : Press to disable the rear window controls. The light on the button illuminates, indicating that the feature is in use. The rear windows can still be raised or lowered using the driver's window switches. To restore power to the rear windows, press the button again.

The front passenger window can be programmed to be disabled using the window lockout button. See *Vehicle Personalization on page 3-58*.

Sun Visors

Swing down the visor or detach it from the center mount and move to the side to block out glare. The visors also have side-to-side slide capability for greater coverage.

Pull the visor down and lift the cover. Move the slide switch up or down to brighten or dim the lamp.

Theft-Deterrent Systems

Vehicle theft is big business, especially in some cities. This vehicle has theft-deterrent features, however, they do not make it impossible to steal.

Theft-Deterrent System

Your vehicle has a theft-deterrent alarm system.

The security light is located on the instrument panel cluster.

If the ignition is off and a door is open, the security light will flash, reminding you to arm the theft-deterrent system.

To arm the system:

- Press the lock button on the keyless access transmitter. If the door is closed when the lock button is pressed, the security light will stay illuminated for 30 seconds. After the security light goes off, the theft-deterrent system is armed. Pressing the lock button twice will arm the system immediately.

  If the vehicle is locked using the keyless access transmitter and the trunk lid, hood or a door is open or not closed completely, the security light will flash for 60 seconds and then turn off. The theft-deterrent system is armed but the alarm will not sound if the trunk lid, hood or door that was not closed completely is tampered with or opened. The alarm will sound for the trunk lid, hood or a door that was completely closed at the time the vehicle was locked using the keyless access transmitter.

- Exit the vehicle and lock the door with the power door lock switch or lock button on the keyless access transmitter. The security light should flash. Close the door. The security light will stop flashing and stay on. After 30 seconds the light should turn off, the theft-deterrent system is armed.

- If Passive Arming is activated through the vehicle personalization feature, the system will arm automatically after you close the door and take at least one keyless access transmitter with you. The security light will turn on. After 60 seconds the light should turn off. The theft-deterrent system is armed. See *Vehicle Personalization on page 3-58*.

If a door, hood, or the trunk is opened without the keyless access transmitter, the horn will sound for 30 seconds and the lamps will flash for two minutes. The vehicle cannot be started without a keyless access transmitter.

The Theft-Deterrent system will not arm if :

- The key is used to turn the key cylinder to the lock position.
- The driver's door is locked using the power door lock switch after the doors are closed.

The vehicle can be programmed to automatically unlock the doors and disarm the theft-deterrent system when you approach the vehicle and the keyless access transmitter is with you. See *Vehicle Personalization on page 3-58*.

Pressing the unlock button on the keyless access transmitter or using the key to unlock the driver's door disarms the theft-deterrent system. Unlocking a door any other way while the system is armed will activate the alarm.

Testing the Alarm

1. From inside the vehicle, roll down the window, then get out of the vehicle, keeping the door open.
2. From outside of the vehicle, with the door open, lock the vehicle using the power door lock switch or the keyless access transmitter and close the door. Wait about 30 seconds until the security light goes off.
3. Reach in and open the door using the inside door handle. The horn will sound and the exterior lamps will flash.

You can turn off the alarm by pressing the unlock button on the keyless access transmitter or by starting the car.

If the alarm does not sound when it should, check to see if the horn works. The horn fuse may be blown. To replace the fuse, see *Fuses and Circuit Breakers on page 6-117*. If the fuse does not need to be replaced, you may need to have your vehicle serviced.

To reduce the possibility of theft, always arm the Theft-Deterrent system when leaving your vehicle.

Do not leave the key or device that disarms or deactivates the theft deterrent system in the vehicle.

Valet Lockout Switch

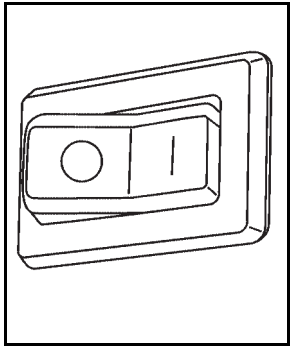

The valet lockout switch is located inside the glove box.

○ **(Off) :** Press to turn the lockout feature off and allow the trunk to be opened with either the keyless access transmitter or the trunk release button located on the driver's door.

I **(On) :** Press to turn the lockout feature on. The trunk cannot be unlocked or opened. When the valet lockout feature is on, the remote start feature and the Universal Home Remote transmitter will be disabled

Lock the glove box with the key to further secure the vehicle.

See *Keyless Access System Operation on page 3-5* and *Trunk on page 3-15* for additional information.

Immobilizer

See *Radio Frequency Statement on page 8-18* for information regarding Part 15 of the Federal Communications Commission (FCC) Rules and RSS-210/211 of Industry and Science Canada.

Immobilizer Operation

The vehicle has a passive theft-deterrent system.

The system is automatically armed when the ignition is turned off.

The immobilization system is disarmed when the ignition is turned to OFF/ACCESSORY or START and a valid transmitter is found in the vehicle.

You do not have to manually arm or disarm the system.

The security light comes on if there is a problem with arming or disarming the theft-deterrent system.

The system has one or more keyless access transmitters that are matched to an immobilizer control unit in the vehicle. Only a correctly matched keyless access transmitter starts the vehicle. The vehicle may not start if the keyless access transmitter is damaged.

If the engine does not start and the security light comes on, there may be a problem with the immobilizer system. Press the START button again.

If the vehicle does not start and the keyless access transmitter appears to be undamaged, try another keyless access transmitter. Or, place the transmitter in the transmitter pocket. See “NO FOBS DETECTED” under *DIC Warnings and Messages on page 4-76* for additional information. Check the fuse. See *Fuses and Circuit Breakers on page 6-117*. If the engine still does not start with the other transmitter, the vehicle needs service. If the engine does start, the first transmitter may be faulty. See your dealer/retailer or have a new keyless access transmitter programmed to the vehicle.

The immobilizer system can learn new or replacement keyless access transmitters. Up to four keyless access transmitters can be programmed for the vehicle. To program additional transmitters, see “Matching transmitter(s) to Your Vehicle” under *Keyless Access System Operation on page 3-5*.

Do not leave the key or device that disarms or deactivates the theft deterrent system in the vehicle.

Starting and Operating Your Vehicle

New Vehicle Break-In

Notice: **The vehicle does not need an elaborate break-in. But it will perform better in the long run if you follow these guidelines:**

- **Do not drive at any one constant speed, fast or slow, for the first 500 miles (805 km). Do not make full-throttle starts. Avoid downshifting to brake or slow the vehicle.**
- **Avoid making hard stops for the first 200 miles (322 km) or so. During this time the new brake linings are not yet broken in. Hard stops with new linings can mean premature wear and earlier replacement. Follow this breaking-in guideline every time you get new brake linings.**
- **Do not tow a trailer during break-in. See *Towing a Trailer on page 5-31* for the trailer towing capabilities of your vehicle and more information.**

Following break-in, engine speed and load can be gradually increased.

Ignition Positions

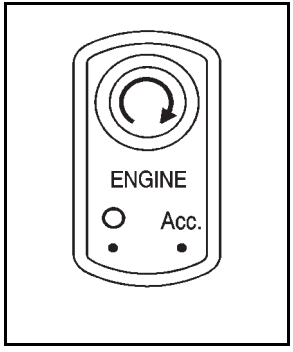

The vehicle has an electronic keyless ignition with pushbutton start.

To shift out of P (Park), the vehicle must be running or in ACCESSORY mode and the regular brake pedal must be applied.

(START) : Press to start the engine with your foot on the brake pedal. The shifter must be in P (Park) or N (Neutral) and the keyless access transmitter must be in the vehicle.

If the start button does not work, the vehicle may be near a strong radio antenna signal causing interference to the keyless access system. See *DIC Warnings and Messages on page 4-76* for more information.

/Acc. (OFF/ACCESSORY) : Press to turn the engine off in any gear. If the shifter is in P (Park), RAP will engage if all doors are closed. RAP will turn off when a front door is opened. See *Retained Accessory Power (RAP) on page 3-26* for more information.

If the engine is off, press this button to turn on the accessory mode. ACCESSORY ACTIVE will display on the Driver Information Center (DIC). Accessory mode allows use of the audio system and windshield wipers. Accessory mode must be used if the vehicle must be towed or in motion when the engine is not running.

After the vehicle has been in accessory mode for more than 20 minutes, the vehicle will enter RAP or turn off, depending on if the doors are opened or closed.

Retained Accessory Power (RAP)

These vehicle accessories can be used for up to 20 minutes after the engine is turned off:

- Audio System
- Audio Steering Wheel Controls
- Power Windows

Power to these accessories will work up to 20 minutes or until one of the front doors is opened. For an additional 20 minutes of operation, close all the doors and press Acc. to place the vehicle in accessory mode. Press the button again to return to RAP.

Starting the Engine

To place the transmission in the proper gear:

Move the shift lever to P (Park) or N (Neutral). To restart the engine when the vehicle is already moving, use N (Neutral).

Notice: **Do not try to shift to P (Park) if the vehicle is moving. If you do, you could damage the transmission. Shift to P (Park) only when the vehicle is stopped.**

The keyless access transmitter must be inside the vehicle for the ignition to work.

Cell phone chargers can interfere with the operation of the Keyless Access System. Battery chargers should not be plugged in when starting or turning off the engine.

To start the vehicle, do the following:

Starting Procedure

1. With your foot on the brake pedal, press the START button located on the instrument panel.

   If there is not a keyless access transmitter in the vehicle or if there is something causing interference with it, the DIC will display NO FOBS DETECTED. See *DIC Warnings and Messages on page 4-76* for more information.

2. When the engine begins cranking, let go of the button and the engine cranks automatically until it starts. If the battery in the keyless access transmitter is weak, the DIC displays KEY FOB BATTERY LOW. You can still drive the vehicle.

   See “Battery Replacement” under *Keyless Access System Operation on page 3-5* for more information. If the fob battery is dead, you need to insert the fob into the fob slot to enable engine starting. See “No Fobs Detected” under *DIC Warnings and Messages on page 4-76*.

3. Do not race the engine immediately after starting it. Operate the engine and transmission gently until the oil warms up and lubricates all moving parts.

4. If the engine does not start and no DIC message is displayed, wait 15 seconds before trying again to let the cranking motor cool down.

   If the engine does not start after 5-10 seconds, especially in very cold weather (below 0°F or −18°C), it could be flooded with too much gasoline. Try pushing the accelerator pedal all the way to the floor while cranking for up to 15 seconds maximum.

Notice: **Cranking the engine for long periods of time, by pressing the START button immediately after cranking has ended, can overheat and damage the cranking motor, and drain the battery. Wait at least 15 seconds between each try, to allow the cranking motor to cool down.**

When the engine starts, let go of the accelerator. If the vehicle starts briefly but then stops again, do the same thing. This clears the extra gasoline from the engine.

The vehicle has a Computer-Controlled Cranking System. This feature assists in starting the engine and protects components. Once cranking has been initiated, the engine continues cranking for a few seconds or until the vehicle starts. If the engine does not start, cranking automatically stops after 15 seconds to prevent cranking motor damage. To prevent gear damage, this system also prevents cranking if the engine is already running.

Notice: **The engine is designed to work with the electronics in the vehicle. If you add electrical parts or accessories, you could change the way the engine operates. Before adding electrical equipment, check with your dealer/retailer. If you do not, the engine might not perform properly. Any resulting damage would not be covered by the vehicle warranty.**

Stopping the Engine

Move the shift lever to P (Park) and press the Acc. button located on the instrument panel. If the shifter is not in P (Park), the engine shuts off and the vehicle goes into the Accessory Mode. The DIC displays SHIFT TO PARK. Once the shifter is moved to P (Park), the vehicle turns off.

The DIC displays NO FOB, OFF OR RUN?, if the keyless access transmitter is not detected inside the vehicle when it is turned off.

See *DIC Warnings and Messages on page 4-76* for more information.

Engine Coolant Heater

The engine coolant heater can provide easier starting and better fuel economy during engine warm-up in cold weather conditions at or below −18°C (0°F). Vehicles with an engine coolant heater should be plugged in at least four hours before starting. Some models have an internal thermostat in the cord which will prevent engine coolant heater operation at temperatures above −18°C (0°F).

To Use the Engine Coolant Heater

1. Turn off the engine.
2. Open the hood and unwrap the electrical cord.

   For the 3.6L V6 engine, the cord is located in the front of the engine compartment, on the passenger side of the vehicle.

   For the 4.6L V8 engine, the cord is located in the engine compartment on the driver side of the vehicle near the inner fender and above the strut.
3. You must remove the plastic cap to access the plug.
4. Plug it into a normal, grounded 110-volt AC outlet.

⚠ WARNING:

Plugging the cord into an ungrounded outlet could cause an electrical shock. Also, the wrong kind of extension cord could overheat and cause a fire. You could be seriously injured. Plug the cord into a properly grounded three-prong 110-volt AC outlet. If the cord will not reach, use a heavy-duty three-prong extension cord rated for at least 15 amps.

5. Before starting the engine, be sure to unplug and store the cord as it was before to keep it away from moving engine parts. If you do not, it could be damaged.

The length of time the heater should remain plugged in depends on several factors. Ask a dealer/retailer in the area where you will be parking the vehicle for the best advice on this.

Automatic Transmission Operation

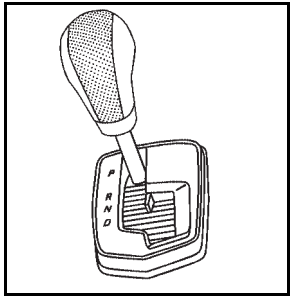

There are several different positions for the shift lever.

P (Park) : This position locks the rear wheels. It is the best position to use when you start the engine because the vehicle cannot move easily.

⚠ WARNING:

It is dangerous to get out of the vehicle if the shift lever is not fully in P (Park) with the parking brake firmly set. The vehicle can roll.

Do not leave the vehicle when the engine is running unless you have to. If you have left the engine running, the vehicle can move suddenly. You or others could be injured. To be sure the vehicle will not move, even when you are on fairly level ground, always set the parking brake and move the shift lever to P (Park). See *Shifting Into Park on page 3-34*. If you are pulling a trailer, see *Towing a Trailer on page 5-31*.

Make sure the shift lever is fully in P (Park) before starting the engine. The vehicle has an automatic transmission shift lock control system. You must fully apply your regular brakes first and then press the shift lever button before you can shift from P (Park) when the vehicle is running. If you cannot shift out of P (Park), ease pressure on the shift lever and push the shift lever all the way into P (Park) as you maintain brake application. Then press the shift lever button and move the shift lever into another gear. See *Shifting Out of Park on page 3-35*.

Notice: **Shifting to R (Reverse) while the vehicle is moving forward could damage the transmission. The repairs would not be covered by the vehicle warranty. Shift to R (Reverse) only after the vehicle is stopped.**

R (Reverse) : Use this gear to back up.

At low vehicle speeds, you can also use R (Reverse) to rock your vehicle back and forth to get out of snow, ice, or sand without damaging the transmission. See *If Your Vehicle is Stuck in Sand, Mud, Ice, or Snow on page 5-22* for additional information.

N (Neutral) : In this position, the engine does not connect with the wheels. To restart the engine when the vehicle is already moving, use N (Neutral) only. You can also use N (Neutral) when the vehicle is being towed.

⚠ WARNING:

Shifting into a drive gear while the engine is running at high speed is dangerous. Unless your foot is firmly on the brake pedal, the vehicle could move very rapidly. You could lose control and hit people or objects. Do not shift into a drive gear while the engine is running at high speed.

Notice: **Shifting out of P (Park) or N (Neutral) with the engine running at high speed may damage the transmission. The repairs would not be covered by the vehicle warranty. Be sure the engine is not running at high speed when shifting the vehicle.**

D (Drive) : This position is for normal driving. It provides the best fuel economy. If you need more power for passing, and you are:

- Going less than 35 mph (55 km/h), push the accelerator pedal about halfway down.
- Going about 35 mph (55 km/h) or more, push the accelerator all the way down.

  The transmission will shift down to a lower gear and have more power.

Downshifting the transmission in slippery road conditions could result in skidding, see “Skidding” under *Loss of Control on page 5-14*.

Driver Shift Control (DSC)

Notice: **If you drive the vehicle at high RPMs without upshifting while using Driver Shift Control (DSC), you could damage the vehicle. Always upshift when necessary while using DSC.**

Driver Shift Control (DSC) allows you shift an automatic transmission similar to a manual transmission. To use the DSC feature:

1. Move the shift lever to the right from D (Drive) into the DSC area.

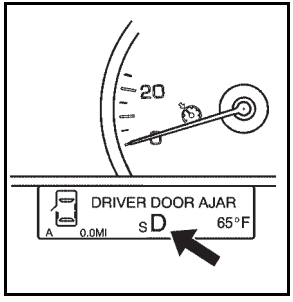

When in DSC mode, the sport symbol will appear in the Driver Information Center (DIC).

The vehicle will remain in sport mode if the shift lever is not moved. Sport mode will shift automatically but remain in a gear longer then it would in normal driving mode based on braking and acceleration.

2. Press the shift lever forward to upshift or rearward to downshift.

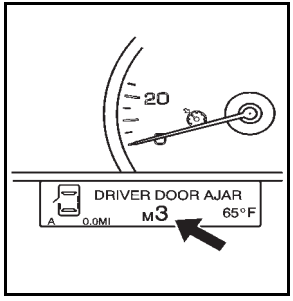

When using the DSC mode, the number displayed on the Driver Information Center (DIC) indicates the gear that the transmission is in. See *Driver Information Center (DIC) on page 4-69* for more information on the DIC.

When starting the vehicle from a stopped condition, only 1 (First) and 2 (Second) gear may be used.

While using the DSC feature the vehicle will have firmer shifting and increased performance. You can use this for sport driving or when climbing/descending hills to stay in gear longer or to down shift for more power or engine braking.

The transmission will only allow you to shift into gears appropriate for the vehicle speed and engine Revolutions Per Minute (RPM). The transmission will not automatically shift to the next higher gear if the engine RPM is too high.

If shifting is prevented for any reason, the selected gear will flash multiple times, indicating that the transmission has not shifted gears.

The transmission will allow you to shift to the gear selected and will automatically downshift when the vehicle comes to a stop. This will allow for more power during take-off and passing.

Parking Brake

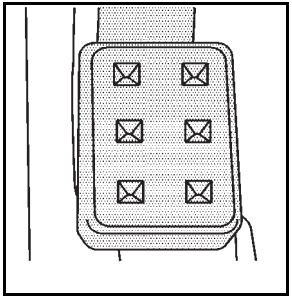

The parking brake pedal is located on the lower portion of the instrument panel to the left of the steering wheel.

The vehicle has a push-to-release parking brake pedal. To set the parking brake, hold the brake pedal down, then push the parking brake pedal down.

If the ignition is on, the brake system warning light on the instrument panel cluster should come on. If it does not, you need to have the vehicle serviced. See *Brake System Warning Light on page 4-58* for more information.

To release the parking brake, hold the brake pedal down, then push the parking brake pedal. When you release the park brake pedal, the parking brake releases.

Notice: **Driving with the parking brake on can overheat the brake system and cause premature wear or damage to brake system parts. Make sure that the parking brake is fully released and the brake warning light is off before driving.**

A warning chime will sound if the parking brake is set, the ignition is on and the vehicle begins to move. To stop the chime, fully release the parking brake.

If you are towing a trailer and parking on a hill, see *Towing a Trailer on page 5-31* for more information.

Shifting Into Park

⚠ WARNING:

It can be dangerous to get out of the vehicle if the shift lever is not fully in P (Park) with the parking brake firmly set. The vehicle can roll. If you have left the engine running, the vehicle can move suddenly. You or others could be injured. To be sure the vehicle will not move, even when you are on fairly level ground, use the steps that follow. If you are pulling a trailer, see *Towing a Trailer on page 5-31*.

To shift into P (Park), use the following steps:

1. Hold the brake pedal down.
2. Move the shift lever into P (Park) by pressing the button on the front of the shift lever while pushing the lever all the way toward the front of the vehicle. Release the button.
3. With your foot still holding the brake pedal down, set the parking brake. See *Parking Brake on page 3-33* for more information.
4. Turn the ignition off.

Leaving the Vehicle With the Engine Running

⚠ WARNING:

It can be dangerous to leave the vehicle with the engine running. The vehicle could move suddenly if the shift lever is not fully in P (Park) with the parking brake firmly set. And, if you leave the vehicle with the engine running, it could overheat and even catch fire. You or others could be injured. Do not leave the vehicle with the engine running.

If you leave the vehicle with the engine running, the vehicle must be in P (Park) and the parking brake set. After shifting into P (Park), try to move the shift lever out without first pushing the button on the shift lever. If you can, the shift lever was not fully locked into P (Park).

Torque Lock

Torque lock is when the weight of the vehicle puts too much force on the parking pawl in the transmission. This happens when parking on a hill and shifting the transmission into P (Park) is not done properly and then it is difficult to shift out of P (Park). To prevent torque lock, set the parking brake and then shift into P (Park). To find out how, see “Shifting Into P (Park)” listed previously.

If torque lock does occur, your vehicle may need to be pushed uphill by another vehicle to relieve the parking pawl pressure, so you can shift out of P (Park).

Shifting Out of Park

Shift lock release prevents shifting out of P (Park) unless the vehicle is running or in Accessory mode and the brake pedal is applied.

The shift lock release is always functional except in the case of an uncharged or low voltage (less than 9-volt) battery. See *Jump Starting on page 6-40* for more information.

To shift out of P (Park) use the following:

1. Apply the brake pedal.
2. Press the shift lever button.
3. Move the shift lever to the desired position.

If you still are unable to shift out of P (Park):

1. Fully release the shift lever button.
2. While holding down the brake pedal, press the shift lever button again.
3. Move the shift lever to the desired position.

If you still cannot move the shift lever from P (Park), consult your dealer/retailer or a professional towing service.

Parking Over Things That Burn

⚠ WARNING:

Things that can burn could touch hot exhaust parts under the vehicle and ignite. Do not park over papers, leaves, dry grass, or other things that can burn.

Engine Exhaust

⚠ WARNING:

Engine exhaust contains Carbon Monoxide (CO) which cannot be seen or smelled. Exposure to CO can cause unconsciousness and even death.

Exhaust may enter the vehicle if:

- The vehicle idles in areas with poor ventilation (parking garages, tunnels, deep snow that may block underbody airflow or tail pipes).
- The exhaust smells or sounds strange or different.
- The exhaust system leaks due to corrosion or damage.
- The vehicle's exhaust system has been modified, damaged or improperly repaired.
- There are holes or openings in the vehicle body from damage or after-market modifications that are not completely sealed.

(Continued)

WARNING: (Continued)

If unusual fumes are detected or if it is suspected that exhaust is coming into the vehicle:

- Drive it only with the windows completely down.
- Have the vehicle repaired immediately.

Never park the vehicle with the engine running in an enclosed area such as a garage or a building that has no fresh air ventilation.

Running the Vehicle While Parked

It is better not to park with the engine running. But if you ever have to, here are some things to know.

⚠ WARNING:

Idling a vehicle in an enclosed area with poor ventilation is dangerous. Engine exhaust may enter the vehicle. Engine exhaust contains Carbon Monoxide (CO) which cannot be seen or

(Continued)

WARNING: (Continued)

smelled. It can cause unconsciousness and even death. Never run the engine in an enclosed area that has no fresh air ventilation. For more information, see *Engine Exhaust on page 3-36*.

⚠ WARNING:

It can be dangerous to get out of the vehicle if the automatic transmission shift lever is not fully in P (Park) with the parking brake firmly set. The vehicle can roll. Do not leave the vehicle when the engine is running unless you have to. If you have left the engine running, the vehicle can move suddenly. You or others could be injured. To be sure the vehicle will not move, even when you are on fairly level ground, always set the parking brake after you move the shift lever to P (Park).

Follow the proper steps to be sure the vehicle will not move. See *Shifting Into Park on page 3-34*.

If parking on a hill and pulling a trailer, see *Towing a Trailer on page 5-31*.

Mirrors

Automatic Dimming Rearview Mirror

The vehicle may have an inside rearview mirror with automatic dimming and OnStar® controls; or it may have OnStar® and a compass display. See the OnStar® owner guide and/or *Compass on page 3-38* for more information.

⏻ **(On/Off):** Press to turn the dimming feature on or off.

Automatic Dimming Mirror Operation

Automatic dimming reduces the glare of lights from behind the vehicle. The dimming feature comes on and the indicator light illuminates each time the vehicle is started.

Cleaning the Mirror

Do not spray glass cleaner directly on the mirror. Use a soft towel dampened with water.

Compass

Compass Operation

Press ⏻ to turn the compass on or off.

When the ignition and the compass feature are on, the mirror displays the compass heading after a few seconds.

Compass Calibration

If after few seconds, the display does not show a compass heading (for example, N for North), there may be a strong magnetic field interfering with the compass. Interference can be caused by a magnetic antenna mount, magnetic note pad holder or a similar magnetic item. If the letter C should ever appear in the compass window, the compass may need calibration.

The mirror can be calibrated by driving the vehicle in circles at 5 mph (8 km/h) or less until the display reads a direction.

The compass can be placed in calibration mode manually by pressing and holding ⏻ until a C is shown in the compass display.

Compass Variance

The mirror is set to zone eight. If you do not live in zone eight or drive out of the area, the compass variance needs to be changed to the appropriate zone.

To adjust for compass variance:

1. Find the current location and variance zone number on the following zone map.

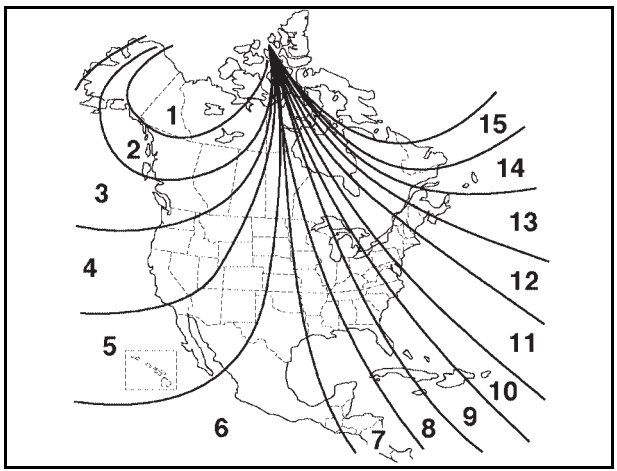

2. Press and hold ⏻ until a zone number displays.

3. Once the zone number displays, press ⏻ repeatedly until the correct zone number displays. Stop pressing the button and the mirror returns to normal operation. If C appears in the compass window, the compass may need calibration. See “Compass Calibration” listed previously.

Outside Power Mirrors

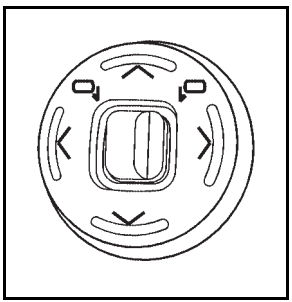

Controls for the outside power mirrors are located on the driver door.

To adjust the mirrors:

1. Move the selector switch left or right to choose the driver side or passenger side mirror.
2. Press one of the four arrows located on the control pad to move the mirror to the desired direction.
3. Adjust each outside mirror so that a little of the vehicle and the area behind it can be seen.
4. Return the selector switch to the center position when finished adjusting.

The preferred mirror positions can be stored with the memory option. See *Memory Seat, Mirrors and Steering Wheel on page 3-75*.

Manually fold the mirrors inward to prevent damage when going through car washes or confined spaces. To fold, push the mirror toward the vehicle. To return the mirror to its original position, push outward. Return both mirrors to their original unfolded position before driving.

Outside Automatic Dimming Mirror

The driver side mirror adjusts for the glare of headlamps behind you. This feature is controlled by the on and off settings on the automatic dimming inside rearview mirror. See *Automatic Dimming Rearview Mirror on page 3-37* for more information.

Park Tilt Mirrors

This feature assists the driver by improving rear obstacle detection and is useful in viewing the curb when parallel parking.

The passenger and/or driver mirror tilts to a preselected position when the vehicle is in R (Reverse). This feature lets the driver view the curb when parallel parking. If further adjustment is needed after the mirror is tilted, the mirror switch may be used. The mirror then returns to this new position when the vehicle is shifted into R (Reverse).

When the vehicle is shifted out of R (Reverse), and a five-second delay has occurred, the mirror will return to its original position. The delay prevents movement of the mirror if multiple gear transitions R (Reverse) to D (Drive) to R (Reverse) occur during a parallel parking maneuver.

If the outside mirror selector switch is in the middle position, neither outside mirror will move.

Side Blind Zone Alert (SBZA)

If the vehicle has the Side Blind Zone Alert (SBZA) system, see *Side Blind Zone Alert (SBZA) on page 3-44* for more information.

Outside Convex Mirror

⚠ WARNING:

A convex mirror can make things, like other vehicles, look farther away than they really are. If you cut too sharply into the right lane, you could hit a vehicle on the right. Check the inside mirror or glance over your shoulder before changing lanes.

The passenger side mirror is convex shaped. A convex mirror's surface is curved so more can be seen from the driver seat.

Outside Heated Mirrors

For vehicles with this feature:

(Rear Window Defogger): Press to heat the mirrors. See “Rear Window Defogger” under *Dual Climate Control System on page 4-44* for more information.

Object Detection Systems

Ultrasonic Rear Parking Assist (URPA)

For vehicles with the URPA system, it operates at speeds less than 3 mph (5 km/h), and assists the driver with parking and avoiding objects while in R (Reverse). The sensors on the rear bumper are used to detect the distance to an object up to 5 feet (1.5 m) behind the vehicle and at least 10 inches (25.4 cm) off the ground.

⚠ WARNING:

The Ultrasonic Rear Parking Assist (URPA) system does not replace driver vision. It cannot detect:

- Objects that are below the bumper, underneath the vehicle, or if they are too close or far from the vehicle
- Children, pedestrians, bicyclists, or pets.

(Continued)

WARNING: (Continued)

If you do not use proper care before and while backing; vehicle damage, injury, or death could occur. Even with URPA, always check behind the vehicle before backing up. While backing, be sure to look for objects and check the vehicle's mirrors.

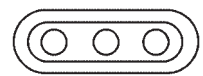

The display is located in the dome lamp and can be seen by looking over your right shoulder.

URPA uses three color-coded lights to provide distance and system information.

How the System Works

URPA comes on automatically when the shift lever is moved into R (Reverse). The rear display briefly illuminates to indicate the system is working.

URPA operates only at speeds less than 3 mph (5 km/h). If the vehicle is above this speed, the red light on the rear display will flash.

To be detected, objects must be at least 10 inches (25.4 cm) off the ground and below trunk level. Objects must also be within 5 feet (1.5 m) from the rear bumper. This distance may be less during warmer or humid weather.

A single beep will sound the first time an object is detected between 20 inches (0.5 m) and 5 feet (1.5 m) away. Beeping will occur when the vehicle is closer than 20 inches (0.5 m) from the object.

The following describes what will occur with the URPA display as the vehicle gets closer to a detected object:

Description	English	Metric
amber light	5 ft	1.5 m
amber/amber lights	40 in	1.0 m
amber/amber/red lights/ continuous beep	20 in	0.5 m
amber/amber/red lights flashing and continuous beep	1 ft	0.3 m

When the System Does Not Seem to Work Properly

If the URPA system will not activate due to a temporary condition a red light will be shown on the rear URPA display when the shift lever is moved into R (Reverse). This occurs under the following conditions:

- The ultrasonic sensors are not clean. Keep your rear bumper free of mud, dirt, snow, ice and slush. For cleaning instructions, see *Washing Your Vehicle on page 6-111*.
- The ultrasonic sensors are not clean. Keep the vehicle's rear bumper free of mud, dirt, snow, ice and slush. For cleaning instructions, see *Washing Your Vehicle on page 6-111*.
- A trailer was attached to the vehicle, or a bicycle or an object was hanging out of the trunk during the last drive cycle, the red light may illuminate in the rear display. Once the attached object is removed, URPA will return to normal operation.
- The vehicle's bumper is damaged. Take the vehicle to your dealer/retailer to repair the system.
- Other conditions may affect system performance, such as vibrations from a jackhammer or the compression of air brakes on a very large truck.

If the system is still disabled, after driving forward at least 15 mph (25 km/h), take the vehicle to your dealer/retailer.

Side Blind Zone Alert (SBZA)

The vehicle may have a Side Blind Zone Alert (SBZA) system. Read this entire section before using the system.

⚠ WARNING:

SBZA is only a lane changing aid and does not replace driver vision. SBZA does not detect:

- Vehicles outside the side blind zones which may be rapidly approaching.
- Pedestrians, bicyclists, or animals.

Failure to use proper care when changing lanes may result in damage to the vehicle, injury, or death. Always check the outside and rearview mirrors, glance over your shoulder, and use the turn signal before changing lanes.

The SBZA system is an aid that may help you avoid lane change crashes with vehicles in the side blind spots (zones). When the system detects a vehicle in the side blind zone, amber SBZA displays will light up in the side mirrors. This indicates that it may be unsafe to change lanes. Before making a lane change, always check the SBZA display, the outside and rearview mirrors, look over your shoulder for vehicles and hazards, and use the turn signal.

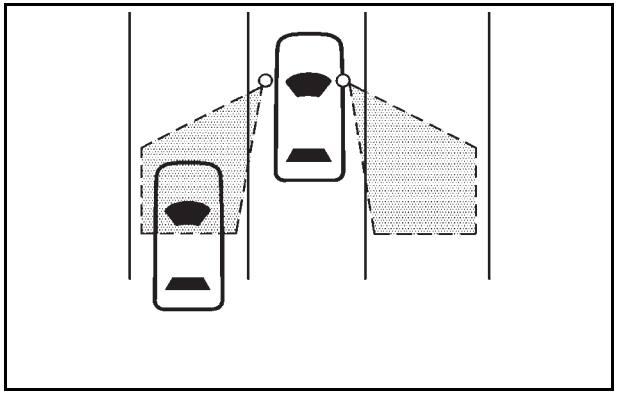

SBZA Detection Zones

The SBZA sensor covers a zone of approximately one lane over from both sides of the vehicle, 3.5 m (11 ft). This zone starts at each side mirror and goes back approximately 5.0 m (16 ft). The height of the zone is approximately between 0.5 m (1.5 ft) and 2.0 m (6 ft) off the ground.

The SBZA detection zones do not change if the vehicle is towing a trailer. So be extra careful when changing lanes while towing a trailer.

How the System Works

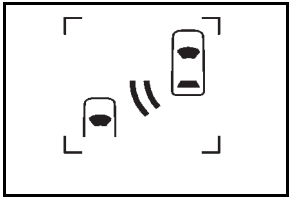

Left Side Mirror Display

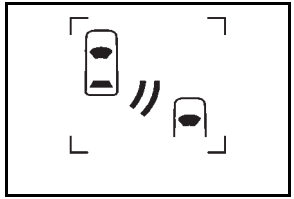

Right Side Mirror Display

When the vehicle is started, both outside mirror displays will briefly come on to indicate that the system is operating. When the vehicle is moving forward, the left or right side mirror SBZA display will light up if a vehicle is detected in that blind zone. When the turn signal is used and a vehicle has been detected on the same side, the SBZA display will flash to give you extra warning not to change lanes.

SBZA displays do not come on while the vehicle is approaching or passing other vehicles.

(SBZA): To turn SBZA on or off, press the CONFIG hard key located on the navigation radio, then press . See “Configure Menu” in the index of the Navigation System manual. The symbol will be highlighted when the feature is active. If SBZA is disabled by the driver, the SBZA mirror displays will not light up.

When the System Does Not Seem To Work Properly

Occasional missed alerts can occur under normal circumstances and will increase in wet conditions. The system does not need to be serviced due to an occasional missed alert. The number of missed alerts will increase with increased rainfall or road spray.

If the SBZA displays do not light up when the system is on and vehicles are in the blind zone, the system may need service. Take the vehicle to your dealer/retailer.

SBZA is designed to ignore stationary objects; however, the system may occasionally light up due to guard rails, signs, trees, shrubs, and other stationary objects. This is normal system operation, the vehicle does not need service.

SBZA does not operate when the left or right corners of the rear bumper are covered with mud, dirt, snow, ice, slush, or in heavy rainstorms. For cleaning instructions, see *Washing Your Vehicle on page 6-111*. If the DIC still displays the SIDE BLIND ZONE SYSTEM UNAVAILABLE message after cleaning the bumper, see your dealer/retailer.

The SBZA displays may remain on if a trailer is attached to the vehicle, or a bicycle or object is extending out to either side of the vehicle.

When SBZA is disabled for any reason other than the driver turning it off, the driver will not be able to turn SBZA back on using the DIC. The SIDE BLIND ZONE ALERT ON option will not be selectable if the conditions for normal system operation are not met. Until normal operating conditions for SBZA are met, you should not rely upon SBZA while driving.

SBZA Error Messages

The following messages may appear in the DIC:

SIDE BLIND ZONE ALERT SYSTEM OFF : This message indicates that the system has been turned off.

SIDE BLIND ZONE SYSTEM UNAVAILABLE : This message indicates that the SBZA system is disabled because the sensor is blocked and cannot detect vehicles in the blind zone. The sensor may be blocked by mud, dirt, snow, ice, slush, or even heavy rainstorms. This message may also activate during heavy rain or due to road spray. The vehicle does not need service. For cleaning, see *Washing Your Vehicle on page 6-111*.

SERVICE SIDE BLIND ZONE ALERT SYSTEM : If this message appears, both SBZA displays will remain on indicating there is a problem with the SBZA system. If these displays remain on after continued driving, the system needs service. Take the vehicle to your dealer/retailer.

FCC Information

See *Radio Frequency Statement on page 8-18* for FCC information.

Frequency of operation: 24.05GHz – 24.25GHz

Field Strength: Not greater than 2.5V/m peak (0.25V/m average) at a distance of 3m

The manufacturer is not responsible for any radio or TV interference caused by unauthorized modifications to this equipment. Such modifications could void the user's authority to operate the equipment.

Lane Departure Warning (LDW)

If the vehicle has the LDW system. Read this entire section before using the system.

⚠ WARNING:

The Lane Departure Warning (LDW) system does not steer the vehicle and is only an aid to help you stay in your driving lane. The LDW system may not:

- Provide you with enough time to avoid a lane change collision.
- Be loud enough for you to hear the warning beeps.
- Work properly under bad weather conditions or if the windshield is not kept clean.
- Detect lane markings and will not detect road edges.
- Warn you that your vehicle is crossing a lane marking if the system does not detect the lane marking.

(Continued)

WARNING: (Continued)

LDW will indicate the system is working whenever it detects either the left or right lane marking. So if you depart on the side of the lane that LDW is not detecting, LDW will not warn you.

If you do not carefully maintain your vehicle position within the lane, vehicle damage, injury, or death could occur. Even with LDW, always keep your attention on the road and maintain proper vehicle position within the lane. Always keep the windshield clean and do not use LDW in bad weather conditions.

When the vehicle crosses a detected lane marking, the LDW symbol will flash and you will hear three beeps. LDW will not warn you if the turn signal is on or if the vehicle makes a sharp maneuver. Before making a lane change, check the vehicle's mirrors, glance over your shoulder for vehicles and hazards, and turn on the turn signal before changing lanes.

How the System Works

LDW uses a camera located between the inside rearview mirror and the windshield to detect the lane markings.

(Lane Departure Warning): To turn LDW on or off, press the CONFIG hard key located on the navigation radio, then press . See “Configure Menu” in the index of the Navigation System manual. The symbol will be highlighted when the feature is active.

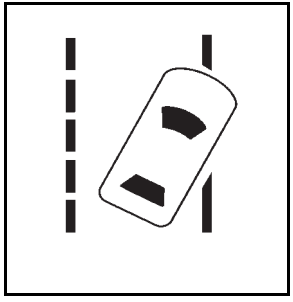

When the vehicle is started, the LDW symbol that is located in the instrument panel cluster will briefly come on to indicate that the light is operational.

LDW only operates at speeds of 35 mph (56 km) or greater. If LDW is turned on when traveling at these speeds, the LDW symbol will appear green if the system detects a left or right lane marking. This symbol will change to amber and flash and three beeps will sound if you cross a detected lane marking without using the turn signal.

LDW is not currently operating and will not warn you if the LDW symbol does not appear.

When the System Does Not Seem To Work Properly

The LDW symbol will not appear when the system is having difficulty seeing the lines on the road or if the view of the camera on the windshield is blocked with mud, dirt, snow, ice, or slush, if the windshield is damaged, or when weather limits visibility, such as while driving in fog, rain, or snow conditions. This is normal operation, the vehicle does not need service. For cleaning instructions, see *Washing Your Vehicle on page 6-111*.

LDW warnings may occasionally occur due to tar marks, shadows, cracks in the road, or other road imperfections. This is normal system operation, the vehicle does not need service.

LDW Error Message

SERVICE LANE DEPARTURE SYSTEM : This message may appear in the DIC to indicate that LDW is not working properly. If this message remains on after continued driving, the system needs service. Take the vehicle to your dealer/retailer. See *DIC Warnings and Messages on page 4-76* for more information.

LANE DEPARTURE SYSTEM UNAVAILABLE : This message may appear in the DIC if LDW does not activate due to a temporary condition. See *DIC Warnings and Messages on page 4-76* for more information.

Universal Home Remote System

See *Radio Frequency Statement on page 8-18* for information regarding Part 15 of the Federal Communications Commission (FCC) Rules and RSS-210/211 of Industry and Science Canada.

Universal Home Remote System Operation (With Three Round LED)

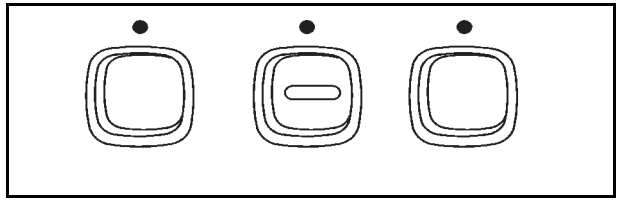

The vehicle may have the Universal Home Remote System. If there are three round Light Emitting Diode (LED) indicator lights above the Universal Home Remote buttons, follow the instructions below.

This system provides a way to replace up to three remote control transmitters used to activate devices such as garage door openers, security systems, and home automation devices.

Do not use this system with any garage door opener that does not have the stop and reverse feature. This includes any garage door opener model manufactured before April 1, 1982.

Read the instructions completely before attempting to program the transmitter. Because of the steps involved, it may be helpful to have another person available to assist you in programming the transmitter.

Be sure to keep the original remote control transmitter for use in other vehicles, as well as, for future programming. Only the original remote control transmitter is needed for Fixed Code programming. The programmed buttons should be erased when the vehicle is sold or the lease ends. See “Erasing Universal Home Remote Buttons” later in this section.

Park the vehicle outside of the garage when programming a garage door. Be sure that people and objects are clear of the garage door or gate that is being programmed.

Programming Universal Home Remote — Rolling Code

For questions or help programming the Universal Home Remote System, call 1-866-572-2728 or go to learcar2u.com.

Most garage door openers sold after 1996 are Rolling Code units.

Programming a garage door opener involves time-sensitive actions, so read the entire procedure before starting. Otherwise, the device will time out and the procedure will have to be repeated.

To program up to three devices:

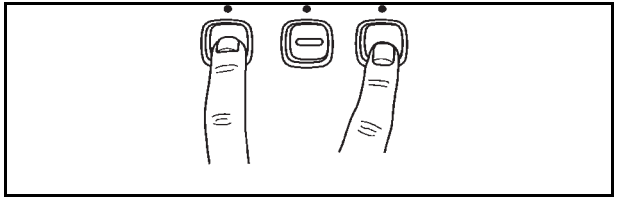

1. From inside the vehicle, press the two outside buttons at the same time for one to two seconds, and immediately release them.

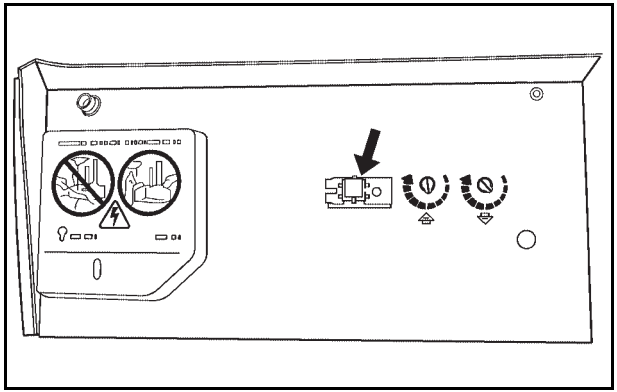

2. Locate in the garage, the garage door opener receiver (motor-head unit). Locate the “Learn” or “Smart” button. It can usually be found where the hanging antenna wire is attached to the motor-head unit and may be a colored button. Press this button. After pressing this button, complete the following steps in less than 30 seconds.
3. Immediately return to the vehicle. Press and hold the Universal Home Remote button that will be used to control the garage door until the garage door moves. The indicator light, above the selected button, should slowly blink. This button may need to be held for up to 20 seconds.
4. Immediately, within one second, release the button when the garage door moves. The indicator light will blink rapidly until programming is complete.
5. Press and release the same button again. The garage door should move, confirming that programming is successful and complete.

To program another Rolling Code device such as an additional garage door opener, a security device, or home automation device, repeat Steps 1-5, choosing a different function button in Step 3 than what was used for the garage door opener.

If these instructions do not work, the garage door opener is probably a Fixed Code unit. Follow the Programming instructions that follow for a Fixed Code garage door opener.

Programming Universal Home Remote — Fixed Code

For questions or help programming the Universal Home Remote System, call 1-866-572-2728 or go to learcar2u.com.

Most garage door openers sold before 1996 are Fixed Code units.

Programming a garage door opener involves time-sensitive actions, so read the entire procedure before starting. Otherwise, the device will time out and the procedure will have to be repeated.

To program up to three devices:

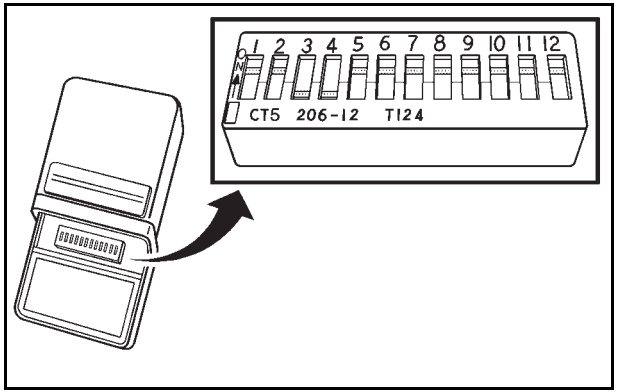

1. To verify that the garage door opener is a Fixed Code unit, remove the battery cover on the hand held transmitter supplied by the manufacturer of the garage door opener motor. If there are a row of dip switches similar to the graphic above, the garage door opener is a Fixed Code unit. If you do not see a row of dip switches, return to the previous section for Programming Universal Home Remote – Rolling Code.

The hand held transmitter can have between eight to 12 dip switches depending on the brand of transmitter.

The garage door opener receiver (motor head unit) could also have a row of dip switches that can be used when programming the Universal Home Remote. If the total number of switches on the motor head and hand held transmitter are different, or if the dip switch settings are different, use the dip switch settings on the motor head unit to program the Universal Home Remote. The motor head dip switch settings can also be used when the original hand held transmitter is not available.

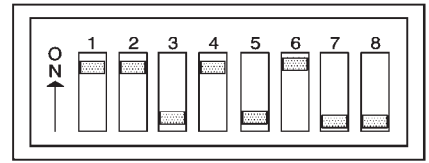

Switch Number	1	2	3	4	5	6	7	8
Switch Position	On	On	Off	On	Off	On	Off	Off
Your Universal Home Remote Button	Left	Left	Right	Left	Right	Left	Right	Right

Example of Eight Dip Switches with Two Positions

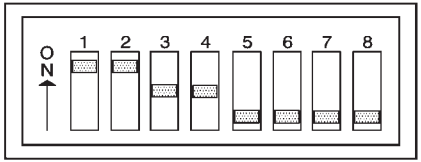

Switch Number	1	2	3	4	5	6	7	8
Switch Position	On	On	Neutral	Neutral	Off	Off	Off	Off
Your Universal Home Remote Button	Left	Left	Middle	Middle	Right	Right	Right	Right

Example of Eight Dip Switches with Three Positions

The panel of switches might not appear exactly as they do in the examples above, but they should be similar.

The switch positions on your hand-held transmitter could be labeled, as follows:

- A switch in the up position could be labeled as “Up,” “+,” or “On.”
- A switch in the down position could be labeled as “Down,” “−,” or “Off.”
- A switch in the middle position could be labeled as “Middle,” “0,” or “Neutral.”

2. Write down the eight to 12 switch settings from left to right as follows:
   - When a switch is in the up position, write “Left.”
   - When a switch is in the down position, write “Right.”
   - If a switch is set between the up and down position, write “Middle.”

   The switch settings written down in Step 2 will now become the button strokes to be entered into the Universal Home Remote in Step 4. Be sure to enter the switch settings written down in Step 2, in order from left to right, into the Universal Home Remote, when completing Step 4.
3. From inside your vehicle, first firmly press all three buttons at the same time for about three seconds. Release the buttons to put the Universal Home Remote into programming mode.

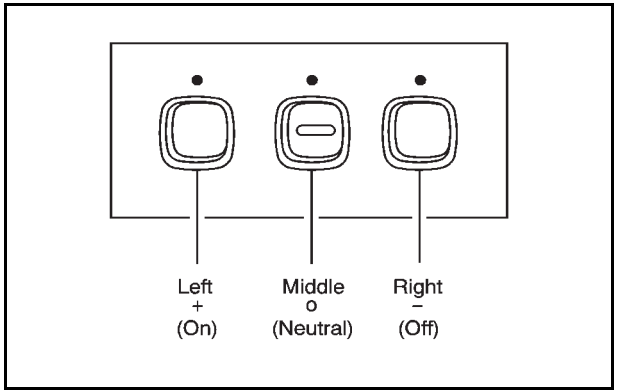

4. The indicator lights will blink slowly. Enter each switch setting from Step 2 into your vehicle's Universal Home Remote. You will have two and one-half minutes to complete Step 4. Now press one button on the Universal Home Remote for each switch setting as follows:
   - If you wrote “Left,” press the left button in the vehicle.
   - If you wrote “Right,” press the right button in the vehicle.
   - If you wrote “Middle,” press the middle button in the vehicle.
5. After entering all of the switch positions, again, firmly press and release all three buttons at the same time. The indicator lights will turn on.
6. Press and hold the button that will be used to control the garage door until the garage door moves. The indicator light above the selected button should slowly blink. This button may need to be held for up to 55 seconds.
7. Immediately release the button when the garage door moves. The indicator light will blink rapidly until programming is complete.
8. Press and release the same button again. The garage door should move, confirming that programming is successful and complete.

To program another Fixed Code device such as an additional garage door opener, a security device, or home automation device, repeat Steps 1-8, choosing a different button in Step 6 than what was used for the garage door opener.

Using Universal Home Remote

Press and hold the appropriate button for at least half of a second. The indicator light will come on while the signal is being transmitted.

Reprogramming Universal Home Remote Buttons

Any of the three buttons can be reprogrammed by repeating the instructions.

Erasing Universal Home Remote Buttons

The programmed buttons should be erased when the vehicle is sold or the lease ends.

To erase either Rolling Code or Fixed Code on the Universal Home Remote device:

1. Press and hold the two outside buttons at the same time for approximately 20 seconds, until the indicator lights, located directly above the buttons, begin to blink rapidly.
2. Once the indicator lights begin to blink, release both buttons. The codes from all buttons will be erased.

For help or information on the Universal Home Remote System, call the customer assistance phone number under *Customer Assistance Offices on page 8-6*.

Storage Areas

Glove Box

Lift up on the glove box lever to open it.

Cupholders

The vehicle has two cupholders in the center console area.

Center Console Storage

The vehicle has a center console storage area located between the front seats. It includes storage areas, and accessory power outlet(s) on the rear of the console.

Convenience Net

Use the convenience net, located in the rear, to store small loads as far forward as possible. The net should not be used to store heavy loads.

Sunroof

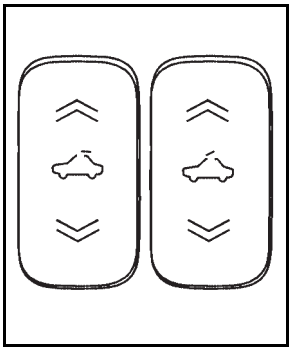

If the vehicle has a power sunroof, the switches are located on the overhead console.

To open or close the sunroof, the ignition must be on or Retained Accessory Power (RAP) must be active. See *Retained Accessory Power (RAP) on page 3-26*.

Express Open: The express open feature will operate from the closed or partially open position. To express open the power sunroof, fully press the driver's side switch rearward once. To stop the sunroof glass in a desired position other than to the express-open position, press the switch again, in either direction, to stop the movement. If the sunshade is in the closed position, it will open with the sunroof, or it can be opened manually.

Vent Open: To open the power sunroof to the vent position from the closed position, press and hold the passenger's side sunroof switch forward. The rear of the sunroof panel will tilt upward to the full vent position. The sunshade must be opened manually.

Express Close: The express close feature will operate from the open or partially open position. To express close the power sunroof, fully press the driver's side switch forward once. To stop the sunroof glass in a desired position other than closed, press the switch again in either direction. The sunshade must be closed manually.

Close: To close the power sunroof, operate the controls according to one of the following:

- From the open position, press and hold the driver's side sunroof switch forward. The sunshade must be closed manually.
- From the vent position, press and hold the passenger's side sunroof switch rearward.

Anti-Pinch: If an object is in the path of the sunroof while it is closing, the anti-pinch feature will detect the object and stop the sunroof from closing at the point of the obstruction. The sunroof will then return to the full-open or vent position. To close the sunroof once it has re-opened, refer to the two options previously described under the “Close” feature instructions.

Do not keep the sunroof open for long periods of time while the vehicle is not in use. Debris can collect in the tracks and possibly damage the sunroof operation or plug the water draining system.

Vehicle Personalization

The vehicle has personalization that allows you to program certain features to a preferred setting for up to two drivers. The back of the keyless access transmitters are labelled 1 or 2. Additional keyless access transmitters programmed to the vehicle, as 3 and/or 4, do not have a number on the back and are not capable of being personalized. The number of programmable features varies depending upon which vehicle options are purchased.

On all vehicles, features such as climate control settings, radio and XM™ preset settings, exterior lighting at unlock and remote lock unlock confirmation, and language have already been programmed. Your vehicle also has an automatic door locking feature that is always on. You cannot turn the automatic door locking feature off. See *Programmable Automatic Door Locks on page 3-14*.

Some vehicles have additional features that can be programmed including the seat, steering column, and outside rearview mirror position.

If your vehicle has the base audio system, the following information explains the vehicle personalization on your vehicle.

If your vehicle has the Navigation system, see “Personalization” in the Index of the Navigation System manual for information on vehicle personalization.

If your vehicle has the ability to program additional personalization features, the driver's preferences are recalled by pressing any button on the keyless access transmitter, 1 or 2, by selecting Driver 1 or 2 on the radio display, or when a valid keyless access transmitter is detected upon opening the driver's door.

If more than one valid keyless access transmitter is detected upon opening the driver's door, the driver preferences for the lowest driver number will be recalled.

Certain features can be programmed not to recall until the ignition is turned off.

The default settings were preset but may have been changed.

To change feature preferences, use the following procedure.

Entering the Personal Settings Menu

To enter the feature programming mode:

1. The ignition must be either on, in ACCESSORY, or in RAP and the transmission in P (Park) or the vehicle speed less than 6 mph (9 km/h).

   To avoid excessive drain on the battery, it is recommended that the headlamps are turned off.
2. Press any button on the appropriate keyless access transmitter to identify yourself as Driver 1 or Driver 2.
3. Turn on the radio by pressing the power/volume knob.
4. Press the CNFG radio button or the tune/select knob located on the right side of the radio to enter the radio's main menu.
5. Turn the tune/select knob and scroll to SETUP.
6. Press the tune/select knob to enter the SETUP menu.

7. Turn the tune/select knob and scroll to PERSONAL SETTINGS MENU, then press the tune/select knob to turn the feature on. A check mark appears after this selection when it is turned on and the entire list of personalization features will appear.
8. Turn the tune/select knob and scroll to the feature you want to change, then press the tune/select knob to turn the feature on or off. If the feature is turned on, a check mark will appear next to the feature name.

   Some features have submenus that show additional features that can be turned on or off. After entering a submenu, turn the tune/select knob and scroll to the feature you want to change, then press the tune/select knob to turn the feature on or off.

Personal Settings Menu Items

The PERSONAL SETTINGS MENU must be selected with a check mark to program the personalization features. If it is not selected, press the tune/select knob until the check mark appears. If it is selected, the entire list of features will be available to program.

DRIVER GREETING

This feature allows you to type in a customized name or greeting that will appear on the display whenever the corresponding keyless access transmitter, 1 or 2, is used or Driver 1 or Driver 2 is selected on the radio display.

If a customized name or greeting is not programmed, the system will show Driver 1 or Driver 2 to correspond with the numbers on the back of the keyless access transmitters. In this case, the customized driver greeting feature is factory shipped as off.

To turn the driver greeting feature on and to program a customized name or greeting:

1. Enter the PERSONAL SETTINGS MENU by following the instructions listed previously under “Entering the Personal Settings Menu.”
2. Turn the tune/select knob until DRIVER GREETING is highlighted.

3. Press the tune/select knob to turn on the DRIVER GREETING feature.

   You will see a cursor on the screen.

4. Turn the tune/select knob until you reach the first letter you want; the letter will be highlighted. There is a complete alphabet with both upper and lower case letters and the numbers zero through nine. Also included are spaces and other non-letter characters such as the ampersand (&).

5. Press the tune/select knob once to select the letter. The letter will then appear on the display and the cursor will advance to the next letter.

   If you make a mistake, press the F5 button, located on the radio, repeatedly to cycle back through all of the characters until you reach the character you wish to change. Then turn the tune/select knob until the letter you want is highlighted and press the tune/select knob to select the new letter.

6. Repeat Steps 4 and 5 until the name or greeting you want is complete. You can program up to 16 characters.

The name or greeting you programmed is now set. You can either exit the programming mode by following the instructions later in this section or program the next feature available on your vehicle by pressing the F6 (BACK) button, located on the radio, to return to the PERSONAL SETTINGS MENU. You will now see a check mark next to the driver greeting menu item, which means that the driver greeting feature is on and a customized driver greeting is being used.

To turn off the customized driver greeting, and go back to displaying either Driver 1 or Driver 2:

1. Enter the PERSONAL SETTINGS MENU by following the instructions listed previously under “Entering the Personal Settings Menu.”

2. Turn the tune/select knob until DRIVER GREETING is highlighted.

3. Press the tune/select knob to turn on the DRIVER GREETING feature. The check mark will be cleared and the customized driver greeting is off.

To change a customized driver greeting after exiting the screen to spell the name, turn the driver greeting feature off, and then back on.

KEY FOB REMINDER

This feature sounds the horn three times when the driver's door is closed and there is a keyless access transmitter left inside of the vehicle. This will only occur when the vehicle is off.

Programmable Modes

Mode 1 : ON (default)

Mode 2 : OFF

To program the vehicle to a different mode:

1. Enter the PERSONAL SETTINGS MENU by following the instructions listed previously under “Entering the Personal Settings Menu.”
2. Turn the tune/select knob until KEY FOB REMINDER is highlighted.
3. Press the tune/select knob to switch back and forth between on and off.

   When the mode is turned on, a check mark will appear next to the feature name.

The mode you selected is now set. You can either exit the programming mode by following the instructions later in this section or program the next feature available on your vehicle.

REMOTE START

With remote start you can choose which features are activated when the vehicle is started remotely. These features include the climate control system, the rear defogger, and the seat temperature, if your vehicle has this feature. See *Remote Vehicle Start on page 3-10* for more information.

Mode 1 : ON (default)

Mode 2 : OFF

To program the vehicle to a different mode:

1. Enter the PERSONAL SETTINGS MENU by following the instructions listed previously under “Entering the Personal Settings Menu.”
2. Turn the tune/select knob until REMOTE START is highlighted.
3. Press the tune/select knob to switch back and forth between on and off.

When REMOTE START is on, a check mark will appear next to the feature name. You can then choose to activate any or all of the following features by turning the tune/select knob to highlight the feature, then pressing the knob to turn it on.

CLIMATE CONTROL : The climate control system will engage when the vehicle is started using the remote start feature. It will be at the same climate control setting that was last used by the driver using that keyless entry transmitter.

REAR WINDOW DEFOG : If this feature is active, the rear defogger will engage when the vehicle is started using the remote start feature.

SEAT TEMP (Temperature) CONTROL : If your vehicle has this feature and this feature is active, the seats will be heated or cooled when the vehicle is started using the remote start feature.

The mode you selected is now set. You can either exit the programming mode by following the instructions later in this section or program the next feature available on your vehicle by pressing the F6 (BACK) button, located on the radio, to return to the PERSONAL SETTINGS MENU.

REMOTE RECALL MEMORY

If your vehicle has the optional memory package, you will have this feature. When this feature is turned on, you can recall any previously programmed seat position and mirror position when the unlock button on the keyless access transmitter is pressed.

Programmable Modes

Mode 1 : ON

Mode 2 : OFF (default)

The exception to the default is the recall seat to driver position which is on.

To program the vehicle to a different mode:

1. Enter the PERSONAL SETTINGS MENU by following the instructions listed previously under “Entering the Personal Settings Menu.”
2. Turn the tune/select knob until REMOTE RECALL MEMORY is highlighted.
3. Press the tune/select knob to switch back and forth between on and off.

   When the mode is turned on, a check mark will appear next to the feature name.

If this feature is selected, START BUTTON RECALL cannot be selected.

The mode you selected is now set. You can either exit the programming mode by following the instructions later in this section or program the next feature available on your vehicle.

START BUTTON RECALL

If your vehicle has the optional memory package, you will have this feature. When this feature is turned on, you can recall any previously programmed seat, mirror, and steering column position when the start button on the ignition is pressed.

Programmable Modes

Mode 1 : ON

Mode 2 : OFF (default)

To program the vehicle to a different mode:

1. Enter the PERSONAL SETTINGS MENU by following the instructions listed previously under “Entering the Personal Settings Menu.”
2. Turn the tune/select knob until START BUTTON RECALL is highlighted.
3. Press the tune/select knob to switch back and forth between on and off.

   When the mode is turned on, a check mark will appear next to the feature name.

If this feature is selected, REMOTE RECALL MEMORY cannot be selected.

The mode you selected is now set. You can either exit the programming mode by following the instructions later in this section or program the next feature available on your vehicle.

AUTO EXIT SEAT

If your vehicle has the optional memory package, you will have this feature. When this feature is turned on, you can recall any previously programmed exit position for the driver's seat when the vehicle is off, the shift lever is in P (Park), and the driver's door is opened.

Programmable Modes

Mode 1 : ON

Mode 2 : OFF (default)

To program the vehicle to a different mode:

1. Enter the PERSONAL SETTINGS MENU by following the instructions listed previously under “Entering the Personal Settings Menu.”
2. Turn the tune/select knob until AUTO EXIT SEAT is highlighted.
3. Press the tune/select knob to switch back and forth between on and off.

   When the mode is turned on, a check mark will appear in the box next to the feature name.

The mode you selected is now set. You can either exit the programming mode by following the instructions later in this section or program the next feature available on your vehicle.

AUTO EXIT COLUMN

If your vehicle has the optional memory package, you will have this feature. When this feature is turned on, you can recall any previously programmed exit position for the steering column when the vehicle is off, the shift lever is in P (Park), and the driver's door is opened.

Programmable Modes

Mode 1 : ON

Mode 2 : OFF (default)

To program the vehicle to a different mode:

1. Enter the PERSONAL SETTINGS MENU by following the instructions listed previously under “Entering the Personal Settings Menu.”
2. Turn the tune/select knob until AUTO EXIT COLUMN is highlighted.
3. Press the tune/select knob to switch back and forth between on and off.

   When the mode is turned on, a check mark will appear in the box next to the feature name.

The mode you selected is now set. You can either exit the programming mode by following the instructions later in this section or program the next feature available on your vehicle.

LIGHTS FLASH AT UNLOCK

This feature allows the exterior lamps to flash when the keyless access transmitter is used to unlock the vehicle. All doors must be closed for this feature to work, and the lamps will not flash if the parking lamps or headlamps are on.

If LIGHTS FLASH AT UNLOCK is turned on and either KEYLESS FT DOOR UNLOCK or KEYLESS DOORS UNLOCK is turned on, the exterior lamps will flash when the doors are passively unlocked. See “KEYLESS FT (Front) DOOR UNLOCK” and “KEYLESS DOORS UNLOCK” later in this section for more information.

Programmable Modes

Mode 1 : ON (default)

Mode 2 : OFF

To program the vehicle to a different mode:

1. Enter the PERSONAL SETTINGS MENU by following the instructions listed previously under “Entering the Personal Settings Menu.”
2. Turn the tune/select knob until LIGHTS FLASH AT UNLOCK is highlighted.

3. Press the tune/select knob to switch back and forth between on and off.

   When the mode is turned on, a check mark will appear next to the feature name.

The mode you selected is now set. You can either exit the programming mode by following the instructions later in this section or program the next feature available on your vehicle.

LIGHTS FLASH AT LOCK

This feature allows the exterior lamps to flash once when the keyless access transmitter is used to lock the vehicle. All doors must be closed for this feature to work, and the lamps will not flash if the parking lamps or headlamps are on.

If LIGHTS FLASH AT LOCK is turned on and either KEYLESS FT DOOR UNLOCK or KEYLESS DOORS UNLOCK is turned on, the exterior lamps will flash when the doors are passively unlocked. See “KEYLESS FT (Front) DOOR UNLOCK” and “KEYLESS DOORS UNLOCK” later in this section for more information.

Programmable Modes

Mode 1 : ON (default)

Mode 2 : OFF

To program the vehicle to a different mode:

1. Enter the PERSONAL SETTINGS MENU by following the instructions listed previously under “Entering the Personal Settings Menu.”
2. Turn the tune/select knob until LIGHTS FLASH AT LOCK is highlighted.
3. Press the tune/select knob to switch back and forth between on and off.

   When the mode is turned on, a check mark will appear next to the feature name.

You can select this feature by itself, or you can combine it with Horn Chirps At Lock so that both the exterior lamps flash and the horn chirps when you lock your vehicle.

The mode you selected is now set. You can either exit the programming mode by following the instructions later in this section or program the next feature available on your vehicle.

EXT. (Exterior) LIGHTS AT UNLOCK

This feature turns on the exterior lamps when the keyless access transmitter is used to unlock the vehicle. The lamps will remain on for about 20 seconds unless a door is opened, the ignition is in ACCESSORY, on, or START, or the keyless access transmitter is used to lock the vehicle.

Programmable Modes

Mode 1 : ON (default)

Mode 2 : OFF

To program the vehicle to a different mode:

1. Enter the PERSONAL SETTINGS MENU by following the instructions listed previously under “Entering the Personal Settings Menu.”
2. Turn the tune/select knob until EXT. LIGHTS AT UNLOCK is highlighted.
3. Press the tune/select knob to switch back and forth between on and off.

   When the mode is turned on, a check mark will appear next to the feature name.

The mode you selected is now set. You can either exit the programming mode by following the instructions later in this section or program the next feature available on your vehicle.

HORN CHIRPS AT LOCK

This feature sounds the horn once when the keyless access transmitter is used to lock the vehicle. All doors must be closed for this feature to work.

Programmable Modes

Mode 1 : ON

Mode 2 : OFF (default)

To program the vehicle to a different mode:

1. Enter the PERSONAL SETTINGS MENU by following the instructions listed previously under “Entering the Personal Settings Menu.”
2. Turn the tune/select knob until HORN CHIRPS AT LOCK is highlighted.
3. Press the tune/select knob to switch back and forth between on and off.

   When the mode is turned on, a check mark will appear next to the feature name.

The mode you selected is now set. You can either exit the programming mode by following the instructions later in this section or program the next feature available on your vehicle.

TWILIGHT DELAY

This feature allows you to set the amount of time you want the exterior lamps to remain on after you exit the vehicle.

Programmable Modes

Mode 1 : 0:00 seconds (off)

Mode 2 : 0:05 seconds (default)

Mode 3 : 0:15 seconds

Mode 4 : 0:30 seconds

Mode 5 : 1:30 minutes

Mode 6 : 2:00 minutes

Mode 7 : 3:00 minutes

Mode 8 : 4:00 minutes

To determine the mode to which the vehicle is programmed or to program the vehicle to a different mode:

1. Enter the PERSONAL SETTINGS MENU by following the instructions listed previously under “Entering the Personal Settings Menu.”
2. Turn the tune/select knob until TWILIGHT DELAY is highlighted.
3. Press the tune/select knob to scroll through the available delay settings and set your selection.

   If you choose Mode 1, the exterior lamps will not illuminate when you exit the vehicle. Only one mode can be selected at a time.

The mode you selected is now set. You can either exit the programming mode by following the instructions later in this section or program the next feature available on your vehicle.

DRIVER UNLOCK AT OFF

This feature allows the driver's door to automatically unlock when the ignition is turned off.

Programmable Modes

Mode 1 : ON

Mode 2 : OFF (default)

To program the vehicle to a different mode:

1. Enter the PERSONAL SETTINGS MENU by following the instructions listed previously under “Entering the Personal Settings Menu.”
2. Turn the tune/select knob until DRIVER UNLOCK AT OFF is highlighted.
3. Press the tune/select knob to switch between on and off.

   When the mode is turned on, a check mark will appear next to the feature name.

The mode you selected is now set. You can either exit the programming mode by following the instructions later in this section or program the next feature available on your vehicle.

DOORS UNLOCK AT OFF

This feature allows all of the doors to automatically unlock when the ignition is turned off.

Programmable Modes

Mode 1 : ON

Mode 2 : OFF (default)

To program the vehicle to a different mode:

1. Enter the PERSONAL SETTINGS MENU by following the instructions listed previously under “Entering the Personal Settings Menu.”
2. Turn the tune/select knob until DOORS UNLOCK AT OFF is highlighted.
3. Press the tune/select knob to switch between on and off.

   When the mode is turned on, a check mark will appear next to the feature name.

The mode you selected is now set. You can either exit the programming mode by following the instructions later in this section or program the next feature available on your vehicle.

DRIVER UNLOCK IN PARK

The feature allows the driver's door to automatically unlock when the transmission is shifted into P (Park).

Programmable Modes

Mode 1 : ON

Mode 2 : OFF (default)

To program the vehicle to a different mode:

1. Enter the PERSONAL SETTINGS MENU by following the instructions listed previously under “Entering the Personal Settings Menu.”
2. Turn the tune/select knob until DRIVER UNLOCK IN PARK is highlighted.
3. Press the tune/select knob to switch back and forth between on and off.

   When the mode is turned on, a check mark will appear next to the feature name.

The mode you selected is now set. You can either exit the programming mode by following the instructions later in this section or program the next feature available on your vehicle.

DOORS UNLOCK IN PARK

The feature allows all of the doors to automatically unlock when the transmission is shifted into P (Park).

Programmable Modes

Mode 1 : ON (default)

Mode 2 : OFF

To program the vehicle to a different mode:

1. Enter the PERSONAL SETTINGS MENU by following the instructions listed previously under “Entering the Personal Settings Menu.”
2. Turn the tune/select knob until DOORS UNLOCK IN PARK is highlighted.
3. Press the tune/select knob to switch back and forth between on and off.

   When the mode is turned on, a check mark will appear next to the feature name.

The mode you selected is now set. You can either exit the programming mode by following the instructions later in this section or program the next feature available on your vehicle.

KEYLESS FT (Front) DOOR UNLOCK

This feature automatically unlocks the appropriate front door when you approach the vehicle with the keyless access transmitter and pull the respective door handle. See *Door Locks on page 3-12* for more information.

Programmable Modes

Mode 1 : ON

Mode 2 : OFF (default)

To program the vehicle to a different mode:

1. Enter the PERSONAL SETTINGS MENU by following the instructions listed previously under “Entering the Personal Settings Menu.”
2. Turn the tune/select knob until KEYLESS FT DOOR UNLOCK is highlighted.
3. Press the tune/select knob to switch back and forth between on and off.

   When the mode is turned on, a check mark will appear next to the feature name.

The mode you selected is now set. You can either exit the programming mode by following the instructions later in this section or program the next feature available on your vehicle.

KEYLESS DOORS UNLOCK

This feature automatically unlocks all of the doors when you approach the vehicle with the keyless access transmitter and pull either front door handle. See *Door Locks on page 3-12* for more information.

Programmable Modes

Mode 1 : ON (default)

Mode 2 : OFF

To program the vehicle to a different mode:

1. Enter the PERSONAL SETTINGS MENU by following the instructions listed previously under “Entering the Personal Settings Menu.”
2. Turn the tune/select knob until KEYLESS DOORS UNLOCK is highlighted.
3. Press the tune/select knob to switch back and forth between on and off.

   When the mode is turned on, a check mark will appear next to the feature name.

The mode you selected is now set. You can either exit the programming mode by following the instructions later in this section or program the next feature available on your vehicle.

LOCK DELAY

This feature delays the locking of the vehicle's doors for eight seconds after a power door lock switch or the lock button on the keyless access transmitter is pressed. The eight second delay occurs after the last door is closed. If the keyless access transmitter is left inside of the vehicle, the doors will not lock.

Programmable Modes

Mode 1 : ON (default)

Mode 2 : OFF

To program the vehicle to a different mode:

1. Enter the PERSONAL SETTINGS MENU by following the instructions listed previously under “Entering the Personal Settings Menu.”
2. Turn the tune/select knob until LOCK DELAY is highlighted.
3. Press the tune/select knob to switch back and forth between on and off.

   When the mode is turned on, a check mark will appear next to the feature name.

The mode you selected is now set. You can either exit the programming mode by following the instructions later in this section or program the next feature available on your vehicle.

KEYLESS LOCK DELAY

This feature allows you to select whether the doors automatically lock during normal vehicle exit. When the ignition is turned off and all doors become closed, the vehicle will determine how many keyless access transmitters remain in the vehicle interior. If at least one keyless access transmitter has been removed from the interior of the vehicle, the doors will lock after 10 seconds.

For example, if there are two keyless access transmitters in the vehicle and one is removed, the other will be locked in. The keyless access transmitter locked in the vehicle can still be used to start the vehicle or unlock the doors, if needed. A person approaching the outside of the locked vehicle without an authorized keyless access transmitter, however, will not be able to open the door, even with a transmitter in the vehicle.

You may temporarily disable the passive door locking feature by pressing the door unlock switch for three seconds on an open door. Passive door locking will then remain disabled until a door lock switch is pressed or until the power mode transitions from the off power mode.

Programmable Modes

Mode 1 : ON

Mode 2 : OFF (default)

To program the vehicle to a different mode:

1. Enter the PERSONAL SETTINGS MENU by following the instructions listed previously under “Entering the Personal Settings Menu.”
2. Turn the tune/select knob until KEYLESS LOCK DELAY is highlighted.
3. Press the tune/select knob to switch back and forth between on and off.

   When the mode is turned on, a check mark will appear next to the feature name.

The mode you selected is now set. You can either exit the programming mode by following the instructions later in this section or program the next feature available on your vehicle.

FRONT PASS (Passenger) WINDOW LOCK

This feature allows you to choose whether or not to have the front passenger window deactivated as part of the window lockout button. If you would like the front passenger window to be deactivated when the window lockout button is pushed, turn this feature on. If this feature is left off, the window lockout button located on the door will deactivate only the rear windows. See *Power Windows on page 3-19* for more information.

Programmable Modes

Mode 1 : ON

Mode 2 : OFF (default)

To program the vehicle to a different mode:

1. Enter the PERSONAL SETTINGS MENU by following the instructions listed previously under “Entering the Personal Settings Menu.”
2. Turn the tune/select knob until FRONT PASS WINDOW LOCK is highlighted.
3. Press the tune/select knob to switch back and forth between on and off.

   When the mode is turned on, a check mark will appear next to the feature name.

The mode you selected is now set. You can either exit the programming mode by following the instructions later in this section or program the next feature available on your vehicle.

CHIME VOLUME HIGH

This feature allows you to adjust the volume level of the vehicle's warning chimes. The chime volume cannot be turned off, only adjusted.

Programmable Modes

Mode 1 : NORMAL (default)

Mode 2 : HIGH

To program the vehicle to a different mode:

1. Enter the PERSONAL SETTINGS MENU by following the instructions listed previously under “Entering the Personal Settings Menu.”
2. Turn the tune/select knob until CHIME VOLUME HIGH is highlighted.
3. Press the tune/select knob to switch back and forth between the normal and high settings. A check mark indicates that the chime volume is set to HIGH.

The mode you selected is now set. You can either exit the programming mode by following the instructions later in this section or program the next feature available on your vehicle.

SUSPENSION MODE

If your vehicle has this feature, you can select between performance or touring modes. Performance mode is used where road conditions or personal preference demand more control. Touring mode is used for normal city and highway driving.

Programmable Modes

Mode 1 : PERFORMANCE

Mode 2 : TOURING (default)

To program the vehicle to a different mode:

1. Enter the PERSONAL SETTINGS MENU by following the instructions listed previously under “Entering the Personal Settings Menu.”
2. Turn the tune/select knob until SUSPENSION MODE is highlighted.
3. Press the tune/select knob to enter the SUSPENSION MODE submenu.
4. Turn the tune/select knob to highlight TOURING or PERFORMANCE.
5. Press the tune/select knob to select the setting.

The mode you selected is now set. You can either exit the programming mode by following the instructions later in this section or program the next feature available on your vehicle by pressing the F6 (BACK) button, located on the radio, to return to the PERSONAL SETTINGS MENU.

Exiting the Personal Settings Menu

Once you have finished making your selections on the base audio system, you will automatically return to the main audio screen after 15 seconds. You can also press the F6 (BACK) button, located on the radio, to return to the main audio screen.

Memory Seat, Mirrors and Steering Wheel

If the vehicle has the memory feature, you can program and recall memory settings for the following features for up to two drivers:

- The driver's seat position
- The outside rearview mirrors position
- The power tilt wheel and telescopic steering column position

The following settings and presets are set automatically:

- The language, radio and XM™ presets, tone, volume, playback mode (AM/FM or CD), last displayed stations, and compact disc position
- The last climate control setting
- The Head-Up Display (HUD) position, if your vehicle has this feature
- Other personalization settings, for example, remote start settings

  See *Vehicle Personalization on page 3-58*.

For vehicles with the base audio system, memory features are programmed and recalled through the radio from the DRIVER SELECTION and the DRIVER EXIT SETTINGS submenus. See “Entering the Driver Selection Submenu” and “Entering the Driver Exit Settings Submenu” later in this section for more information on recalling and programming the memory settings using the base audio system.

For vehicles with the Navigation system, memory features are programmed and recalled through the navigation display. See “Personalization” in the Index of the Navigation System manual for more information on programming and recalling the memory settings using the Navigation system.

For vehicles with the Navigation system, you can also recall the memory features by using voice recognition, if your vehicle has this feature. See “Voice Recognition” in the Index of the Navigation System manual for more information.

Entering the Driver Selection Submenu

To enter the memory programming mode for your driver settings:

1. The ignition must be either on, in ACCESSORY, or in RAP and the transmission in P (Park) or the vehicle speed less than 6 mph (9 km/h).
2. Press any button on the appropriate keyless access transmitter to identify yourself as Driver 1 or Driver 2.
3. Turn on the radio by pressing the power/ volume knob.
4. Press the CNFG radio button to enter the main menu of the radio.
5. Turn the tune/select knob and scroll to SETUP.
6. Press the tune/select knob to enter the SETUP menu.
7. Turn the tune/select knob and scroll to DRIVER SELECTION.
8. Press the tune/select knob to enter the DRIVER SELECTION submenu. The following items will appear:
   - DRIVER 1
   - DRIVER 2
   - RECALL DRIVER SETTINGS
   - STORE DRIVER SETTINGS

Driver Selection Submenu Items

DRIVER 1/DRIVER 2

The numbers on the back of each keyless access transmitter correspond to DRIVER 1 and DRIVER 2. If you would like to recall or store driver settings for the driver that does not correspond to the number on the back of the keyless access transmitter that you are using:

1. Enter the memory programming mode for your driver settings by following the instructions listed previously under “Entering the Driver Selection Submenu.”
2. From the DRIVER SELECTION submenu, turn the tune/select knob to highlight the driver number that you want, either DRIVER 1 or DRIVER 2.
3. Set your choice by pressing in the tune/select knob.

If you would like to recall or store driver settings for the selected driver, see “RECALL DRIVER SETTINGS” or “STORE DRIVER SETTINGS” later in this section.

If you would like to recall or store exit settings for the selected driver, see “RECALL EXIT SETTINGS” or “STORE EXIT SETTINGS” later in this section.

RECALL DRIVER SETTINGS

To recall driver settings:

1. Enter the memory programming mode for your driver settings by following the instructions listed previously under “Entering the Driver Selection Submenu.”
2. From the DRIVER SELECTION submenu, turn the tune/select knob to scroll to RECALL DRIVER SETTINGS and press in the knob.

   If the vehicle is in P (Park), one beep will sound and your previously saved driving position will then be recalled.

   If the vehicle is not in P (Park), three beeps will sound and your previously saved driving position will not be recalled.

A memory recall can be stopped by pressing any memory seat or mirror position button.

If you would like the stored driving positions to be recalled when unlocking your vehicle with the keyless access transmitter or when starting your vehicle, see “REMOTE RECALL MEMORY” or “START BUTTON RECALL” under *Vehicle Personalization on page 3-58*.

STORE DRIVER SETTINGS

To store driver settings:

1. Adjust your settings for the driver's seat, the outside rearview mirrors, and the steering column to a comfortable driving position.
2. Enter the memory programming mode for your driver settings by following the instructions listed previously under “Entering the Driver Selection Submenu.”
3. From the DRIVER SELECTION submenu, turn the tune/select knob to scroll to STORE DRIVER SETTINGS and press in the knob. Two beeps will sound to confirm that your driver settings are saved.
4. Set the HUD position, if your vehicle has this feature, the climate control temperature, fan speed and mode settings, the radio presets, tone, volume, playback mode (AM/FM, XM™, or CD), and compact disc position.

   Your memory settings are now programmed. Any changes that are made to the HUD, audio system, and climate controls while driving will be automatically stored when the ignition is turned off.
5. Repeat the procedure for a second driver by programming the other driver number.

Entering the Driver Exit Settings Submenu

To enter the memory programming mode for your exit settings:

1. The ignition must be either on, in ACCESSORY, or in RAP and the transmission in P (Park) or the vehicle speed less than 6 mph (9 km/h).
2. Press any button on the appropriate keyless access transmitter to identify yourself as Driver 1 or Driver 2.
3. Turn on the radio by pressing the power/volume knob.
4. Press the CNFG radio button to enter the main menu of the radio.
5. Turn the tune/select knob and scroll to SETUP.
6. Press the tune/select knob to enter the SETUP menu.
7. Turn the tune/select knob and scroll to DRIVER EXIT SETTINGS.
8. Press the tune/select knob to enter the DRIVER EXIT SETTINGS submenu. The following items will appear:
   - RECALL EXIT SETTINGS
   - STORE EXIT SETTINGS

Driver Exit Settings Submenu Items

RECALL EXIT SETTINGS

To recall exit settings:

1. Enter the memory programming mode for your exit settings by following the instructions listed previously under “Entering the Driver Exit Settings Submenu.”
2. From the DRIVER EXIT SETTINGS submenu, turn the tune/select knob to scroll to RECALL EXIT SETTINGS and press in the knob.

   If the vehicle is in P (Park), one beep will sound and your previously saved exit position will then be recalled.

   If the vehicle is not in P (Park), three beeps will sound and your previously saved exit position will not be recalled.

   A memory recall can be stopped by pressing any memory seat or mirror position button.

If you would like the stored exit positions to be recalled when your vehicle is in P (Park), the vehicle is off, and the driver's door is opened, see “AUTO EXIT SEAT” and “AUTO EXIT COLUMN” under *Vehicle Personalization on page 3-58*.

STORE EXIT SETTINGS

To store exit settings:

1. Adjust your settings for the driver's seat, the outside rearview mirrors, and the steering column to a comfortable exit position.
2. Enter the memory programming mode for your exit settings by following the instructions listed previously under “Entering the Driver Exit Settings Submenu.”
3. From the DRIVER EXIT SETTINGS submenu, turn the tune/select knob to scroll to STORE EXIT SETTINGS and press in the knob. Two beeps will sound to confirm that your new exit settings are saved.
4. Repeat the procedure for a second driver by programming the other driver number.

✍ NOTES

Section 4 Instrument Panel

Instrument Panel Overview 4-3
Hazard Warning Flashers 4-3
Horn 4-3
Power Tilt Wheel and Telescopic Steering Column 4-3
Heated Steering Wheel 4-4
Turn Signal/Multifunction Lever 4-4
Turn and Lane-Change Signals 4-4
Headlamp High/Low-Beam Changer 4-5
Forward Collision Alert (FCA) System 4-6
Flash-to-Pass 4-9
Windshield Wipers 4-10
Windshield Washer 4-11
Headlamp Washer 4-11
Cruise Control 4-12
Adaptive Cruise Control 4-15
Headlamps 4-27
Wiper Activated Headlamps 4-31
Headlamps on Reminder 4-31
Daytime Running Lamps (DRL) 4-32
Fog Lamps 4-33
Twilight Sentinel® 4-34
Exterior Lighting Battery Saver 4-35
Instrument Panel Brightness 4-35
Entry Lighting 4-36
Parade Dimming 4-36
Reading Lamps 4-36
Battery Load Management 4-36
Electric Power Management 4-37
Inadvertent Power Battery Saver 4-37
Head-Up Display (HUD) 4-38
Accessory Power Outlet(s) 4-42
Ashtray(s) and Cigarette Lighter 4-43

Climate Controls 4-44
Dual Climate Control System 4-44
Outlet Adjustment 4-48
Rear Climate Control System 4-49
Passenger Compartment Air Filter 4-50

Warning Lights, Gages, and Indicators 4-51
Instrument Panel Cluster 4-52
Speedometer and Odometer 4-53
Tachometer 4-53
Safety Belt Reminders 4-53
Airbag Readiness Light 4-54
Passenger Airbag Status Indicator 4-55
Charging System Light 4-57
Brake System Warning Light 4-58
Antilock Brake System (ABS) Warning Light ... 4-59
Traction Control System (TCS) Warning Light 4-60
Lane Departure Warning (LDW) Light 4-60
Engine Coolant Temperature Warning Light 4-61

Section 4 Instrument Panel

Engine Coolant Temperature Gage 4-61
Tire Pressure Light 4-62
Malfunction Indicator Lamp 4-62
Oil Pressure Light 4-66
Security Light 4-67
Fog Lamp Light 4-67
Lights On Reminder 4-67
Cruise Control Light 4-67
Highbeam On Light 4-68
Fuel Gage 4-68

Driver Information Center (DIC) 4-69
DIC Operation and Displays 4-70
DIC Warnings and Messages 4-76
Other Messages 4-93

Audio System(s) 4-94
Setting the Clock 4-95
Radio(s) 4-95
Using an MP3 4-108
XM Radio Messages 4-112
Navigation/Radio System 4-113
Bluetooth® 4-113
Phone (Navigation) 4-123
Radio Personalization 4-130
Theft-Deterrent Feature 4-134
Audio Steering Wheel Controls 4-134
Radio Reception 4-136
Backglass Antenna 4-137
XM™ Satellite Radio Antenna System 4-137

Instrument Panel Overview

Hazard Warning Flashers

⚠ **:** Press this button located on the console, near the shift lever, to make the front and rear turn signal lamps flash on and off. This warns others that you are having trouble. Press again to turn the flashers off.

When the hazard warning flashers are on, the turn signals do not work.

Horn

Press near or on the horn symbols on the steering wheel pad to sound the horn.

Power Tilt Wheel and Telescopic Steering Column

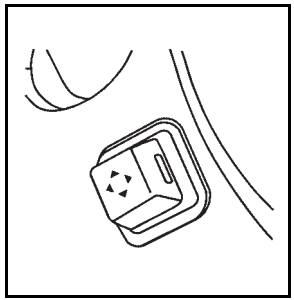

The power tilt and telescope wheel control is located on the left side of the steering column.

To adjust the steering wheel:

- Push the control up or down to tilt the steering wheel up or down.
- Push the control forward or rearward to move the steering wheel towards the front or rear of the vehicle.

To set the memory position, see *Vehicle Personalization on page 3-58* and *Memory Seat, Mirrors and Steering Wheel on page 3-75*.

Heated Steering Wheel

For vehicles with a heated steering wheel, the button for this feature is located on the steering wheel.

: Press to turn the heated steering wheel on or off. A light on the button displays when the feature is turned on.

The steering wheel takes about three minutes to start heating.

Turn Signal/Multifunction Lever

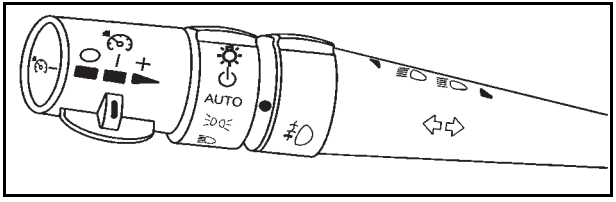

The lever on the left side of the steering column includes the following:

: Turn and Lane-Change Signals

: Headlamps

: Headlamp High/Low-Beam Changer

: Fog Lamps

: Cruise Control

- Adaptive Cruise Control (If Equipped).
- Forward Collision Alert (FCA) (If Equipped).
- Flash-To-Pass Feature.

Information for these features is on the pages following.

Turn and Lane-Change Signals

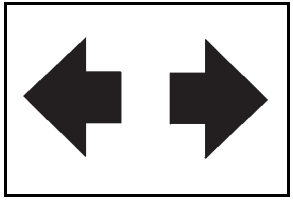

An arrow on the instrument panel cluster flashes in the direction of the turn or lane change.

Move the lever all the way up or down to signal a turn.

Raise or lower the lever until the arrow starts to flash to signal a lane change. Hold it briefly until the lane change is complete.

The lever returns to its starting position when it is released.

If after signaling a turn or lane change the arrow flashes rapidly or does not come on, a signal bulb may be burned out.

Have the bulbs replaced. If the bulb is not burned out, check the fuse. See *Fuses and Circuit Breakers on page 6-117*.

Turn Signal On Chime

If the turn signal is left on for about 1 mile (1.6 km), a warning chime will sound and the TURN SIGNAL ON message will appear on the Driver Information Center (DIC) display. See “Turn Signal On” under *DIC Warnings and Messages on page 4-76* for more information.

Headlamp High/Low-Beam Changer

Push forward on the turn signal/multifunction lever to change the headlamps from low to high beam. Pull the lever back and then release it to change from high to low beam.

If you turn the vehicle off with the high beams on, the next time you start your vehicle the low beams will be on.

To re-activate high beams, pull lever toward you and then push it forward again.

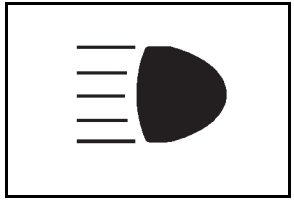

This light on the instrument panel cluster will be on, indicating high-beam usage.

Forward Collision Alert (FCA) System

If the vehicle has this system, read this entire section before using it.

The system operates on a radio frequency subject to Federal Communications Commission (FCC) Rules and with Industry Canada.

This device complies with Part 15 of the FCC Rules. Operation is subject to the following two conditions:

1. This device may not cause interference, and
2. This device must accept any interference received, including interference that may cause undesired operation of the device.

This device complies with RSS-210 of Industry Canada. Operation is subject to the following two conditions:

1. This device may not cause interference, and
2. This device must accept any interference received, including interference that may cause undesired operation of the device.

Changes or modifications to this system by other than an authorized service facility could void authorization to use this equipment.

The Forward Collision Alert (FCA) system provides an audible and visual warning if you approach a vehicle too rapidly. FCA also provides a visual warning with no audible warning if you are following another vehicle much too closely. FCA uses the Adaptive Cruise Control radar to detect a vehicle directly ahead, in your path, within a distance of 100 m (328 ft) and operates at speeds above 32 km/h (20 mph).

⚠ WARNING:

FCA is only a warning system and does not apply the brakes. When you are approaching a vehicle or object too rapidly or when you are following a vehicle too closely that is ahead of you, FCA may not provide you with enough time to avoid a collision. FCA is not designed to warn the driver of pedestrians or animals. Your complete attention is always required while driving and you should be ready to take action and apply the brakes. For more information, see *Defensive Driving on page 5-2*.

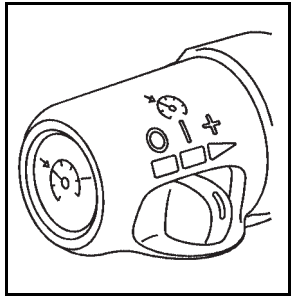

The Forward Collision Alert (FCA) controls are located on the end of the multifunction lever.

○ **(Off) :** Turns the system off.

| **(On) :** Turns the system on.

The Head-Up Display must be on and properly adjusted. If the HUD is not on, FCA will not be enabled and you will not be provided with FCA audible and visual warnings. See *Head-Up Display (HUD) on page 4-38* for more information.

⚠ WARNING:

- On winding roads, FCA may not detect a vehicle ahead. You could crash into a vehicle ahead of you. Do not rely on FCA on winding roads.
- When weather limits visibility, such as in fog, rain, or snow, FCA performance is limited. There may not be enough warning distance to the vehicle in front of you. Do not rely on FCA in low visibility conditions.

⚠ WARNING:

When FCA is enabled, the Adaptive Cruise Control switch is on. If you press another Adaptive Cruise Control button, you might go into cruise when you do not want to. You could be startled and even lose control. Be careful not to press adaptive cruise buttons unless you want to use cruise control.

Warning the Driver

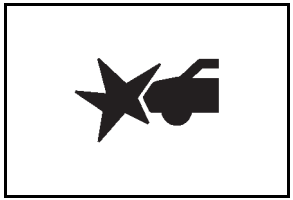

The alert symbol will flash on the HUD and a warning beep will sound when driver action may be required.

The driver warning is active when:

- You are approaching a vehicle too quickly.
- You are following a vehicle ahead much too closely.

See *Defensive Driving on page 5-2* for more information.

Detecting the Vehicle Ahead

The vehicle ahead symbol will only appear on the HUD when a vehicle ahead of you is detected in your path. If this symbol does not appear, or disappears briefly, FCA will not respond to vehicles you may see ahead. The symbol may disappear on curves, highway exit ramps, or hills. Also, when another vehicle enters the same lane as you, the FCA system will not detect the vehicle until it is completely in your driving lane.

⚠ WARNING:

When the Adaptive Cruise Control radar is blocked by snow, ice, or dirt, it may not detect a vehicle ahead. FCA may not help you avoid a collision under these conditions. Do not use FCA when the radar is blocked by snow, ice, or dirt. Keep your radar clean. See “Cleaning the System” under *Adaptive Cruise Control on page 4-15*.

⚠ WARNING:

FCA may not detect and warn soon enough to stationary or slow-moving vehicles or other objects ahead of you. You could crash into an object ahead of you. Do not rely on FCA when approaching stationary or slow-moving vehicles or other objects.

Unnecessary Warnings

FCA may occasionally provide an unnecessary warning to guard rails, signs, and other stationary objects. This is normal operation, your vehicle does not need service.

Other Messages

There are three messages that may appear on the Driver Information Center (DIC). They are CLEAN RADAR, RADAR CRUISE NOT READY and SERVICE RADAR CRUISE. See *DIC Warnings and Messages on page 4-76*.

Cleaning the System

The radar can become blocked by snow, ice, or dirt. If so, you may need to turn off the engine and clean the lens. See “Cleaning the System” under *Adaptive Cruise Control on page 4-15*.

Flash-to-Pass

This feature allows you to use the high-beam headlamps to signal the driver in front of you that you want to pass.

Pull and hold the turn signal/multifunction lever toward you to use this feature. When this is done the following will occur:

- If the headlamps are off, in low-beam or in Daytime Running Lamps (DRL) mode, the high-beam headlamps will turn on. They will stay on as long as the lever is held there. Release the lever to turn them off.
- If the headlamps are in high-beam mode, they will switch to low beam. To return to high-beam, push the lever forward.

Windshield Wipers

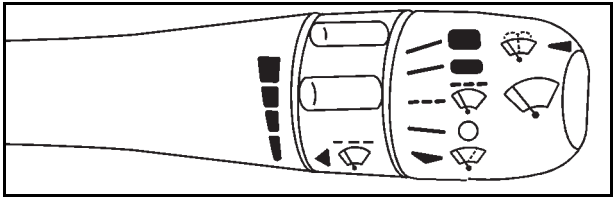

The windshield wiper lever is on the right side of the steering column.

Move the lever to select the wiper speed:

(Mist) : Single wipe, move to and then release it. The lever will return to its original position. For several wipes, hold the lever in this position.

(Off) : Turns the windshield wipers off.

(Delay) : For a delayed wiping cycle, move the lever to and turn the delay adjustment band to adjust the frequency of wipes.

(Delay Adjustment Band) : Turn the band up for more frequent wipes or down for less frequent wipes. The windshield wiper lever must be set to for this feature to work.

(Low Speed) : Slow wipes.

(High Speed) : Fast wipes.

If the windshield wipers are in use for about six seconds while you are driving, the exterior lamps will come on automatically if the exterior lamp control is in AUTO. See *Wiper Activated Headlamps on page 4-31* for more information.

Clear snow and ice from the wiper blades before using them. If frozen to the windshield, carefully loosen or thaw them. Damaged blades should be replaced. See *Windshield Wiper Blade Replacement on page 6-51*.

Heavy snow or ice can overload the wiper motor. A circuit breaker will stop the motor until it cools down.

Windshield Washer

The windshield washer button is located at the end of the windshield wiper lever on the right side of the steering column.

(Washer Fluid) : Press and hold to spray windshield washer fluid on the windshield. The washer will spray until the button is released. The wipers will continue to clear the window for about six seconds after the button is released and then stop or return to the preset speed.

⚠ WARNING:

In freezing weather, do not use your washer until the windshield is warmed. Otherwise the washer fluid can form ice on the windshield, blocking your vision.

If the fluid in the windshield washer fluid reservoir is low, the message CHECK WASHER FLUID will appear on the Driver Information Center (DIC) display. It will take 60 seconds after the bottle is refilled for this message to turn off. For information on the correct washer fluid mixture to use, see *Windshield Washer Fluid on page 6-36* and *Recommended Fluids and Lubricants on page 7-9*.

Headlamp Washer

For vehicles with headlamp washers, they are located to the inside of the headlamps.

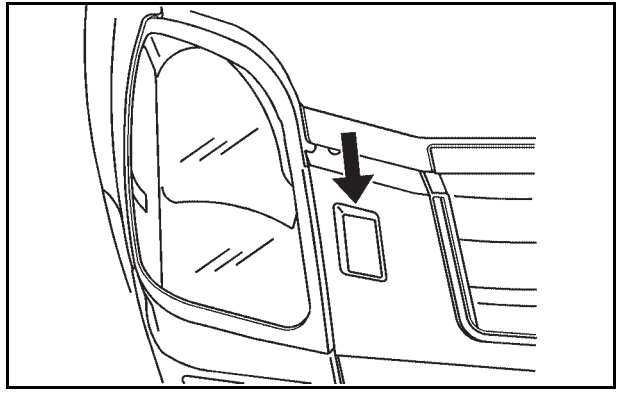

Press located at the end of the windshield wiper lever, to wash the headlamps and windshield. After the first wash, the headlamps will be washed after the fifth press of the windshield washer button.

The headlamps must be on to be washed. If the washer fluid is low, the headlamp washers will not work.

See *Windshield Washer on page 4-11* for additional information.

Cruise Control

With cruise control, a speed of about 40 km/h (25 mph) or more can be maintained without keeping your foot on the accelerator. Cruise control does not work at speeds below about 40 km/h (25 mph).

If the brakes are applied, the cruise control shuts off.

⚠ WARNING:

Cruise control can be dangerous where you cannot drive safely at a steady speed. So, do not use the cruise control on winding roads or in heavy traffic.

Cruise control can be dangerous on slippery roads. On such roads, fast changes in tire traction can cause excessive wheel slip, and you could lose control. Do not use cruise control on slippery roads.

If the vehicle is in cruise control when the Traction Control System (TCS) begins to limit wheel spin or the stability control system activates, the cruise control automatically disengages. See *Traction Control System (TCS) on page 5-9* and *StabiliTrak® System on page 5-6* or *Enhanced StabiliTrak® on page 5-7*. When road conditions allow you to safely use it again, the cruise control can be turned back on.

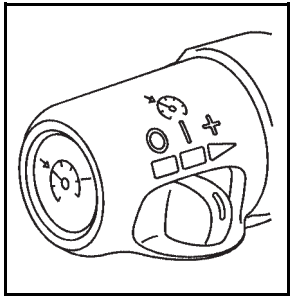

These controls are located on the end of the multifunction lever.

○ **(Off) :** Turns the system off.

I **(On) :** Turns the system on.

+ (Resume/Accelerate) : Use this position to make the vehicle resume a previously set speed or accelerate when cruise is already active.

(Set/Decrease) : Press to set the speed or to decrease the speed when cruise is already active.

(Cancel): Press this button on the steering wheel to cancel cruise control without erasing the set speed from memory.

Setting Cruise Control

⚠ WARNING:

If you leave your cruise control on when you are not using cruise, you might hit a button and go into cruise when you do not want to. You could be startled and even lose control. Keep the cruise control switch off until you want to use cruise control.

1. Move the cruise control switch to on.
2. Get up to the speed desired.
3. Press at the end of the lever and release it.
4. Take your foot off the accelerator pedal.

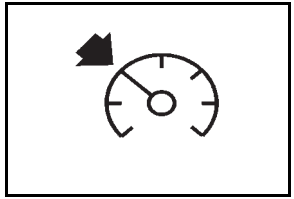

This light on the instrument panel cluster comes on while cruise control is on.

Resuming a Set Speed

If the cruise control is at the set speed desired and then the brake is applied, the cruise control is disengaged. But it does not need to be reset.

Once the vehicle speed reaches about 40 km/h (25 mph) or more, move the cruise control switch briefly from | to + .

The vehicle will go back up to your chosen speed and stay there.

If the switch is held at resume/accelerate the vehicle keeps going faster until the switch is released or the brake is applied. Do not hold the switch at resume/accelerate, unless you want the vehicle to go faster.

Increasing Speed While Using Cruise Control

There are two ways to go to a higher speed:

- Use the accelerator pedal to get to the higher speed. Press at the end of the lever, then release the button and the accelerator pedal. The vehicle will cruise at the higher speed.
- Move the cruise switch from | to + . Hold it there until the desired speed is reached, and then release the switch. To increase the vehicle speed in very small amounts, move the switch briefly to + . Each time this is done, the vehicle goes about 1.6 km/h (1 mph) faster.

If using the accelerator pedal and the set button at end of the lever to increase cruise set speed, the new set speed must be at least 5 mph higher than current speed for this method to work. If it is not 5 mph higher, move the cruise switch to off, then on, and then reset the speed using the set button.

Reducing Speed While Using Cruise Control

There are two ways to reduce your speed while using cruise control:

- Press at the end of the lever until the lower speed desired is reached, then release it.
- To slow down in very small amounts, briefly press . Each time this is done, the vehicle goes about 1.6 km/h (1 mph) slower.

Passing Another Vehicle While Using Cruise Control

Use the accelerator pedal to increase your vehicle speed. When you take your foot off the pedal, the vehicle slows down to the cruise control speed you set earlier.

Using Cruise Control on Hills

How well the cruise control works on hills depends upon the vehicle speed, load, and the steepness of the hills. When going up steep hills, you might have to step on the accelerator pedal to maintain the vehicle's speed.

When going downhill, you might have to brake to keep the vehicle's speed down. Applying the brake will turn off the cruise control. If you need to apply the brake due to the grade of the downhill slope, you might not want to attempt to use the cruise control feature.

Ending Cruise Control

There are three ways to end cruise control.

- Step lightly on the brake pedal. This will end the current cruise control session.
- Move the cruise control switch to ◯ to turn off the system completely.
- Press the ⊗ button on the steering wheel.

Erasing Speed Memory

The cruise control set speed memory is erased when the cruise control or the ignition is turned off.

Adaptive Cruise Control

If the vehicle has adaptive cruise control, read the *Radio Frequency Statement on page 8-18* before using this feature.

Changes or modifications to this system by other than an authorized service facility could void authorization to use this equipment.

Adaptive Cruise Control is an enhancement to traditional cruise control and is not a safety system. It allows you to keep cruise control engaged in moderate traffic conditions without having to constantly be reset. Adaptive Cruise Control uses radar to detect a vehicle directly ahead in your path, within a distance of 100 m (328 ft), and operates at speeds above 48 km/h (30 mph). When it is engaged by the driver, the system can apply limited braking or acceleration of the vehicle, automatically, to maintain a selected following distance to the vehicle ahead.

The vehicle's braking during Adaptive Cruise Control is comparable to a person applying moderate pressure to the vehicle's brake pedal. To disengage Adaptive Cruise Control, apply the brake. If no vehicle is in your path, your vehicle will react like traditional cruise control.

⚠ WARNING:

Adaptive Cruise Control will not apply hard braking or bring the vehicle to a complete stop. It will not respond to stopped vehicles, pedestrians or animals. When you are approaching a vehicle or object, Adaptive Cruise Control may not have time to slow your vehicle enough to avoid a collision. Your complete attention is always required while driving and you should be ready to take action and apply the brakes. For more information, see *Defensive Driving on page 5-2*.

⚠ WARNING:

- On winding roads, Adaptive Cruise Control may not detect a vehicle ahead. You could crash into a vehicle ahead of you. Do not use Adaptive Cruise Control on winding roads.
- Adaptive Cruise Control may not have time to slow your vehicle enough to avoid a crash when you are driving in conditions where vehicles may suddenly slow or stop ahead of you, enter your lane, or cross your vehicle's path. If you are driving in these conditions, do not use Adaptive Cruise Control. The warning beep and alert symbol may indicate that you are driving in conditions where Adaptive Cruise Control should not be used. See “Alerting the Driver” in this section.

(Continued)

WARNING: (Continued)

- On slippery roads, fast changes in tire traction can cause needless wheel spinning, and you could lose control. Do not use cruise control on slippery roads.
- When weather limits visibility, such as when in fog, rain, or snow conditions, Adaptive Cruise Control performance is limited. There may not be enough distance to adapt to the changing traffic conditions. Do not use cruise control when visibility is low.

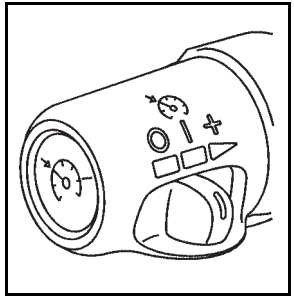

The cruise controls are located on the end of the multifunction lever.

The Adaptive Cruise controls are located on the left side of the steering wheel.

○ **(Off) :** Turns the system off.

I **(On) :** Turns the system on.

+ **(Resume/Increase) :** Use this position to make the vehicle resume a previously set speed or increase the set speed when Adaptive Cruise Control is already active.

(Set/Decrease) : Press to set the speed or to decrease the set speed when Adaptive Cruise Control is already active.

⊗ **(Cancel):** Press this button located on the steering wheel to cancel adaptive cruise control.

Engaging Adaptive Cruise Control With the Set Button

⚠ WARNING:

If you leave your Adaptive Cruise Control switch on when you are not using cruise, you might hit a button and go into cruise when you do not want to. You could be startled and even lose control. Keep the Adaptive Cruise Control switch off until you want to use cruise control.

⚠ WARNING:

If you operate Adaptive Cruise Control without your Head-up Display (HUD) properly adjusted, your Adaptive Cruise Control settings may not be visible. You could forget your settings and be startled by Adaptive Cruise Control response and even lose control. Keep your HUD on and properly adjusted when using Adaptive Cruise Control.

The set speed is selected by the driver. This is the speed you will travel if there is no vehicle detected in your path.

To set Adaptive Cruise Control, do the following:

1. Make sure the Head-Up Display (HUD) is on and properly adjusted. You cannot engage Adaptive Cruise Control unless the HUD is on. See *Head-Up Display (HUD) on page 4-38* for more information.
2. Move the switch to on.
3. Get up to the desired speed.
4. Press – at the end of the lever and release the button.
5. Take your foot off the accelerator pedal.

Once Adaptive Cruise Control is set, it might immediately apply the brakes if it detects a vehicle ahead that is too close or moving slower than your vehicle.

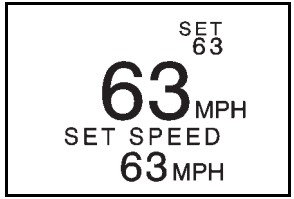

United States version shown, Canada similar

This symbol appears on the Head-Up Display (HUD) to indicate that Adaptive Cruise Control is active. The number indicates the set speed.

See *Head-Up Display (HUD) on page 4-38* for more information.

Make sure the set speed is visible on the HUD so you know the speed your vehicle will accelerate to if a vehicle is not detected in your path. Keep in mind speed limits, surrounding traffic speeds, and weather conditions when adjusting your set speed.

If your vehicle is in Adaptive Cruise Control when the traction control system begins to limit wheel spin, the Adaptive Cruise Control will automatically disengage. See *Traction Control System (TCS) on page 5-9*, *StabiliTrak® System on page 5-6* or *Enhanced StabiliTrak® on page 5-7*. When road conditions allow you to safely use it again, the Adaptive Cruise Control can be turned back on.

Increasing Set Speed While Using Adaptive Cruise Control

There are two ways to increase the set speed:

- Use the accelerator to get to the higher speed. Press ⏲ at the end of the lever, then release the button and the accelerator pedal. The vehicle will now cruise at the higher speed.
- Move the Adaptive Cruise Control switch from | to +. Hold it there until the desired set speed is displayed in the HUD, then release the switch. To increase the set speed in small amounts, move the switch briefly to resume/increase. Each time this is done, the vehicle set speed increases by about 1.6 km/h (1 mph).

Your vehicle will not reach the set speed until the system determines there is no vehicle in front of you. At that point, your vehicle speed will increase to the set speed.

Decreasing Set Speed While Using Adaptive Cruise Control

Press ⊖ at the end of the lever until the lower speed desired is reached, then release the button.

To slow down in small amounts, briefly press ⊖. Each this is done, the set speed will be 1.6 km/h (1 mph) slower.

Resuming a Set Speed

If the brakes are applied while the Adaptive Cruise Control is at a set speed, this disengages the Adaptive Cruise Control. But it does not need to be reset.

Once the vehicle reaches about 48 km/h (30 mph) or more, move the Adaptive Cruise Control switch briefly from | to +. Adaptive Cruise Control will be engaged with the speed previously selected.

Selecting the Follow Distance (GAP)

When the system detects a slower moving vehicle, it will adjust your vehicle's speed and maintain the following distance (gap) selected.

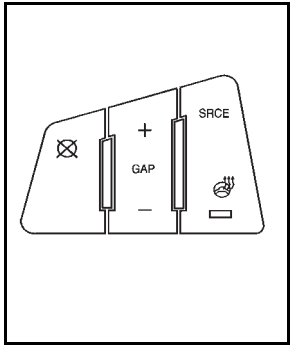

Use the GAP button on the steering wheel to adjust the follow distance between your vehicle and other vehicle's.

Press the top of the button to increase the distance or the bottom of the button to decrease the distance. The first button press shows the current follow distance setting on the HUD. The current following distance setting is maintained until it is changed.

There are six follow distances to choose from. The follow distance selection ranges from near to far (one second to two seconds follow time). The distance maintained for a selected follow distance varies based on vehicle speed. The faster the vehicle speed the further back you will follow. Consider traffic and weather conditions when selecting the follow distance.

The range of selectable distances may not be appropriate for all drivers and driving conditions. If you prefer to travel at a following distance farther than Adaptive Cruise Control allows, disengage the system and drive manually.

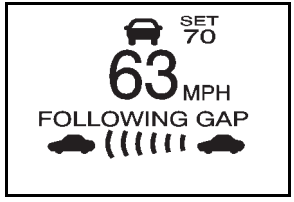

United States version shown, Canada similar

A graphic on the HUD indicates the selected following distance. This picture shows a maximum follow distance.

The vehicles will move closer together as you select a smaller following distance.

Alerting the Driver

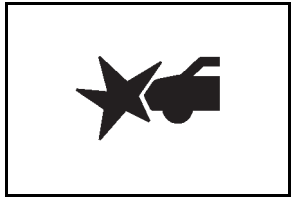

The alert symbol flashes on the HUD and a warning beep sounds when driver action is required.

Driver action is required when:

- Adaptive Cruise Control cannot apply sufficient braking because you are approaching a vehicle too rapidly.
- The vehicle speed drops below about 40 km/h (25 mph).
- A temporary condition prohibits Adaptive Cruise Control from operating. See *DIC Warnings and Messages on page 4-76* for more information.
- A malfunction is detected in the system. See *DIC Warnings and Messages on page 4-76* for more information.

See *Defensive Driving on page 5-2*.

⚠ WARNING:

Adaptive Cruise Control has only limited braking ability to slow your vehicle. In some cases, Adaptive Cruise Control may not have time to slow your vehicle enough to avoid a collision. Be ready to take action and apply the brakes yourself. See *Defensive Driving on page 5-2*.

Approaching and Following a Vehicle

The vehicle ahead symbol only appears on the HUD when a vehicle ahead is detected in your path.

If this symbol does not appear, or disappears briefly, Adaptive Cruise Control will not respond to vehicles you may see ahead.

⚠ WARNING:

When the Adaptive Cruise Control radar is blocked by snow, ice, or dirt, it may not detect a vehicle ahead. Adaptive Cruise Control may not have time to slow your vehicle enough to avoid a collision. Do not use Adaptive Cruise Control when the radar is blocked by snow, ice, or dirt. Keep your radar clean. See “Cleaning the System” later in this section.

Adaptive Cruise Control automatically slows your vehicle down when approaching a slower moving vehicle. It then adjusts your speed to follow the vehicle in front at the selected following distance. Your speed increases or decreases to follow the vehicle in front of you but will not exceed the set speed. It may apply limited braking, if necessary. When braking is active, your brake lights come on. It may feel or sound different than if you were applying the brakes yourself. This is normal.

Stationary or Very Slow-Moving Objects

⚠ WARNING:

Adaptive Cruise Control may not detect and react to stationary or slow-moving vehicles or other objects ahead of you. You could crash into an object ahead of you. Do not use Adaptive Cruise Control when approaching stationary or slow-moving vehicles or other objects.

⚠ WARNING:

Adaptive Cruise Control may not detect and react to stationary or slow-moving vehicles or other objects ahead of you. Your vehicle may accelerate toward objects, such as a stopped vehicle that suddenly appears after the lead vehicle changes lanes. Your complete attention is always required while driving and you should be ready to take action and apply the brakes.

Low-Speed Deactivation

If your speed falls below 40 km/h (25 mph) while following a vehicle ahead, Adaptive Cruise Control will begin to disengage. The driver alert symbol on the HUD will flash and the warning beep will sound. The driver must take action since Adaptive Cruise Control will not slow the vehicle to a stop.

Deactivation When Head-Up Display is Turned Off

If the HUD is turned off when Adaptive Cruise Control is engaged, it will begin to disengage. A warning beep sounds and the message RADAR CRUISE NOT READY appears on the Driver Information Center (DIC). See *DIC Warnings and Messages on page 4-76* for additional information. If Adaptive Cruise Control was braking when the HUD is turned off, the braking will continue briefly.

Passing a Vehicle/Adaptive Cruise Control Override

To increase speed to pass a vehicle, use the accelerator pedal. While you are doing this, the system will not automatically apply the brakes. A PEDAL APPLIED ACC OVERRIDE message will appear on the HUD. See *Head-Up Display (HUD) on page 4-38* for additional information. Once you pass the vehicle and remove your foot from the accelerator pedal, Adaptive Cruise Control returns to normal operation and the brakes can be applied, if needed.

⚠ WARNING:

If you rest your foot on the accelerator pedal, the system will not automatically apply the brakes. You could crash into a vehicle ahead of you. Do not rest your foot on the accelerator pedal when using Adaptive Cruise Control.

Curves in the Road

⚠ WARNING:

Due to Adaptive Cruise Control limitations in curves, it may respond to a vehicle in another lane, or may not have time to react to a vehicle in your lane. You could crash into a vehicle ahead of you, or lose control of your vehicle. Give extra attention in curves and be ready to use the brakes if necessary. Select an appropriate speed while driving in curves.

Adaptive Cruise Control might operate differently in a sharp curve. It might reduce your speed if the curve is too sharp.

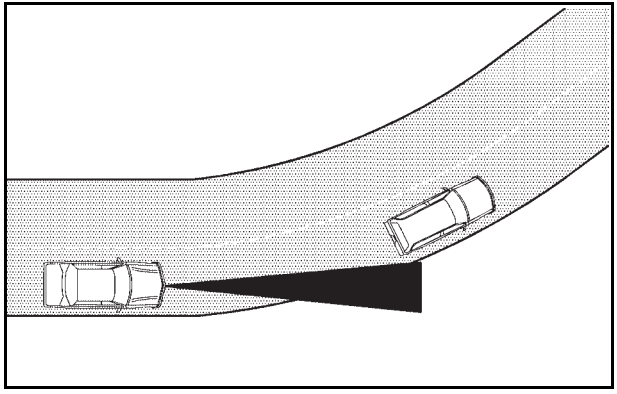

When following a vehicle and entering a curve, Adaptive Cruise Control could lose track of the vehicle in your lane and your vehicle could accelerate. When this happens, the vehicle ahead symbol will not appear on the HUD.

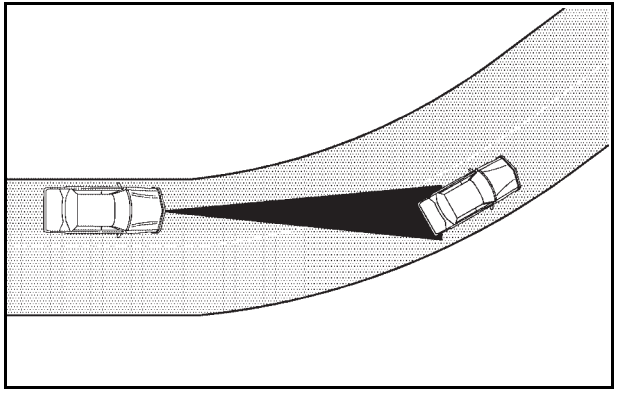

Adaptive Cruise Control might detect a vehicle that is not in your lane and apply the brakes.

Adaptive Cruise Control might occasionally provide a driver alert and/or braking that you consider unnecessary. It could respond to signs, guardrails, and other stationary objects when entering or exiting a curve. This is normal operation. Your vehicle does not need service.

Highway Exit Ramps

⚠ WARNING:

Adaptive Cruise Control may lose track of the vehicle ahead and accelerate up to your set speed while entering or on highway exit ramps. You could be startled by this acceleration and even lose control of the vehicle. Disengage Adaptive Cruise Control before entering a highway exit ramp. Do not use Adaptive Cruise Control while entering or on exit ramps.

Other Vehicle Lane Changes

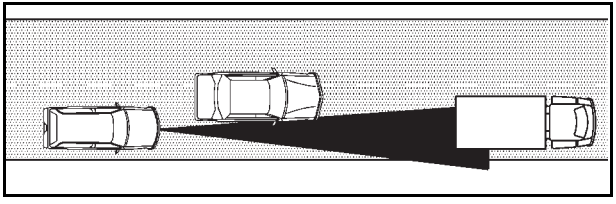

If another vehicle enters the same lane as you, Adaptive Cruise Control will not detect the vehicle until it is completely in the lane. Be ready to take action and apply the brakes yourself.

Using Adaptive Cruise Controls on Hills and When Towing a Trailer

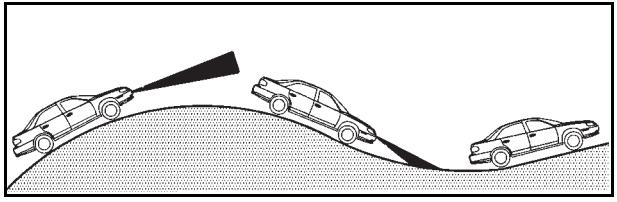

How well Adaptive Cruise Control works on hills and while a trailer is being towed depends on your vehicle speed, vehicle load, traffic conditions, and the steepness of the hills. It might not detect a vehicle in your lane while driving on hills. While going up steep hills, you might want to use the accelerator pedal to maintain your vehicle speed. While going downhill and towing a trailer, you might want to brake to keep your vehicle speed down. Applying the brake disengages the system. You may choose not to use Adaptive Cruise Control on steep hills when towing a trailer.

Disengaging Adaptive Cruise Control

Apply the brake pedal or move the Adaptive Cruise Control switch to off, to disengage the system. Adaptive Cruise Control information does not appear on the HUD while the system is not engaged.

Erasing Set Speed Memory

The set speed memory is erased when the Adaptive Cruise Control switch or the ignition is turned off.

Other Messages

There are three messages that may appear on the DIC. They are SERVICE RADAR CRUISE, RADAR CRUISE NOT READY and CLEAN RADAR. These messages will appear to indicate a problem with the Adaptive Cruise Control. See *DIC Warnings and Messages on page 4-76* for more information.

Cleaning the System

The radar can become blocked by snow, ice, or dirt. If this happens, turn off the engine and clean the emblem/lens, located in the center of the front outside grille. Do not use Adaptive Cruise Control in icy conditions, or when visibility is low, such as in fog, rain or snow.

To clean the emblem/lens, wipe the surface with a soft cloth. After cleaning the emblem/lens, engage the Adaptive Cruise Control. If you are unable to do so, see your dealer/retailer.

Headlamps

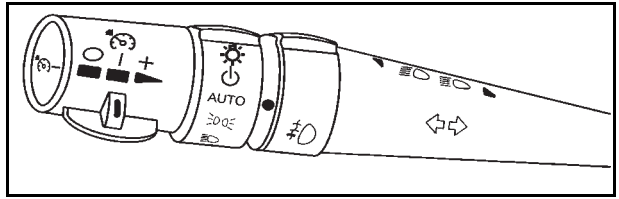

The exterior lamp control is located in the middle of the turn signal/multifunction lever.

☼ **(Exterior Lamp Control) :** Turn the control with this symbol on it to operate the exterior lamps.

The exterior lamp control has four positions:

⏻ **(Off):** Turns off all lamps and automatic lighting features, including Daytime Running Lamps (DRL) and IntelliBeam™.

This is a momentary switch that springs back to the AUTO position when released. An AUTOMATIC LIGHTS ON message appears on the DIC when automatic lights are enabled or an AUTOMATIC LIGHTS OFF message appears on the DIC when the automatic lights are disabled.

AUTO (Automatic) : Turns the exterior lamps on and off automatically depending upon how much light is outside of the vehicle.

The automatic lights may be disabled even if the control is in the AUTO position.

To enable automatic lighting do any of the following:

- Turn the headlamp control from AUTO to off and release the switch. It returns back to the AUTO position by itself.
- Turn the headlamp control from the parking lamp position to AUTO.
- Turn the headlamp control from the headlamp position to AUTO.

To disable automatic lighting do any of the following:

- Turn the headlamp control from AUTO to off and release the switch. It returns back to the AUTO position by itself.
- Turn the headlamp control from AUTO to the parking lamp position.
- Turn the headlamp control from AUTO to the headlamp position.

Disabling automatic lighting disables the automatic headlamp operation, DRL, and IntelliBeam™ High-Beams (if the vehicle has them).

(Parking Lamps) : Turns on the parking lamps together with the following:

- Sidemarker Lamps
- Taillamps
- License Plate Lamps
- Instrument Panel Lights

(Headlamps) : Turns on the headlamps, together with the previously listed lamps and lights.

IntelliBeam™ Intelligent High-Beam Headlamp Control System

For vehicles with IntelliBeam, read this entire section before using this feature.

IntelliBeam is an enhancement to the vehicle's headlamp system. It uses a light sensor located on the back of the rearview mirror to turn the high-beam headlamps on and off depending on approaching traffic.

The IntelliBeam system turns the high-beam headlamps on when it is dark enough, there is no other traffic present, and the IntelliBeam system is enabled.

Turning On and Enabling IntelliBeam

AUTO (IntelliBeam On/Off): Press and release the IntelliBeam button on the inside rear view mirror. The indicator on the mirror turns on. Once the system

has been turned on, it remains on each time the vehicle is started. Additionally, the IntelliBeam system must be enabled.

To enable the System, turn the exterior lamp control to AUTO, with the turn signal/multifunction lever in its starting position. The High-Beam On Light appears on the instrument panel cluster when the high-beams are on. See *Highbeam On Light on page 4-68*. The vehicle has variable intensity high-beams. The high-beam indicator on the instrument panel cluster comes on as soon as the high-beams start to come on, and remains on until the high-beams have completely turned off. Vehicles with IntelliBeam quickly turn off the high-beams if the system detects the sudden presence of vehicle lights ahead.

Driving with IntelliBeam

IntelliBeam only activates the high-beams when driving over 32 km/h (20 mph).

The high-beam headlamps remain on, under the control of IntelliBeam, until any of the following situations occur:

- The system detects an approaching vehicle's headlamps.
- The system detects a preceding vehicle's taillamps.
- The outside light is bright enough that high-beam headlamps are not required.
- The high-beam headlamps are manually turned on or you use the flash-to-pass feature. See *Headlamp High/Low-Beam Changer on page 4-5* and *Flash-to-Pass on page 4-9*.

  When either of these conditions occur, the IntelliBeam feature is temporarily disabled until the high-beam stalk is returned to its starting position. If either of these conditions occur and IntelliBeam already has the high-beam headlamps on, the feature is disabled and the light in the mirror turns off.
- The exterior lamp control is turned to any setting except AUTO.

  When this occurs, IntelliBeam is disabled until the control is turned back to the AUTO position and the AUTOMATIC LIGHTS ON message displays on the DIC.
- The IntelliBeam system is turned off at the inside rearview mirror.
- The vehicle's speed drops below 24 km/h (15 mph).

IntelliBeam may not turn off the high-beams if the system cannot detect other vehicle's lamps because of any of the following:

- The others vehicle's lamp(s) are missing, damaged, obstructed from view, or otherwise undetected.
- The other vehicle's lamp(s) are covered with dirt, snow and/or road spray.
- The other vehicle's lamp(s) cannot be detected due to dense exhaust, smoke, fog, snow, road spray, mist, or other airborne obstructions.
- Your vehicle's windshield is dirty, cracked, or obstructed by something that blocks the view of the IntelliBeam light sensor.
- Your vehicle's windshield is covered with ice, dirt, haze, or other obstructions.
- Your vehicle is loaded such that the front end of the vehicle points upward, causing the IntelliBeam sensor to aim high and not detect headlamps and taillamps.
- You are driving on winding or hilly roads.

You might need to manually disable or cancel the high-beam headlamps by turning the low-beam headlamps on, if any of the above conditions exist.

Disabling and Resetting IntelliBeam at the Rearview Mirror

IntelliBeam can be disabled and reset to the original factory setting by using the controls on the inside rearview mirror.

AUTO (IntelliBeam On/Off): To disable the system, press this button on the inside rearview mirror. The IntelliBeam indicator turns off and does not come back on until the IntelliBeam button is pressed again.

When IntelliBeam has turned on the high-beams, pull or push the high-beam stalk. This disables IntelliBeam and the IntelliBeam indicator on the rearview mirror turns off. To re-enable IntelliBeam, press the IntelliBeam button on the mirror.

A different sensitivity setting is available for dealer diagnostics. This is done by pushing and holding this button for 20 seconds until the light flashes three times. If you accidentally activate this, the vehicle's setting automatically resets each time the ignition is turned off and then on again; otherwise, refer to the text above for resetting the system.

Cleaning the IntelliBeam Light Sensor

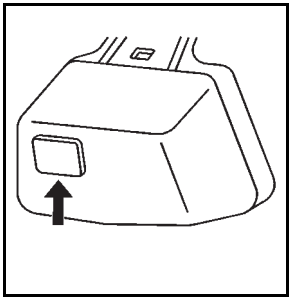

The light sensor is located on the inside of the vehicle at the back of the rearview mirror.

Clean the light sensor window, periodically, using glass cleaner on a soft cloth. Gently wipe the sensor window. Do not spray glass cleaner directly on the surface of the sensor window.

Wiper Activated Headlamps

This feature activates the headlamps and parking lamps after the windshield wipers have been in use for about six seconds. For this feature to work, automatic lighting must be enabled. See *Headlamps on page 4-27* for additional information.

When the ignition is turned off, the wiper-activated headlamps will immediately turn off. They will also turn off if the windshield wiper control is turned off.

Headlamps on Reminder

A warning chime will sound if the exterior lamp control is left on in either the headlamp or parking lamp position and the driver's door is opened with the ignition off. See *Lights On Reminder on page 4-67* for additional information.

Daytime Running Lamps (DRL)

Daytime Running Lamps (DRL) can make it easier for others to see the front of your vehicle during the day. Fully functional daytime running lamps are required on all vehicles first sold in Canada.

The DRL system comes on when the following conditions are met:

- It is still daylight and the ignition is on.
- The automatic lights are enabled.
- The transmission is not in P (Park).

When DRL are on, only the front turn signal lamps will be on. No other exterior lamps will be on when the DRL are being used. The instrument panel will not be lit.

When the automatic lights are enabled and it is dark enough outside, the DRL will turn off and the low-beam headlamps will turn on. When it is bright enough outside, the low-beam headlamps will go off, and the DRL will turn back on. If the vehicle is started in a dark garage, the automatic headlamp system comes on immediately. Once the vehicle leaves the garage, it will take about one minute for the automatic headlamp system to change to DRL if it is light outside. During that delay, the instrument panel cluster may not be as bright as usual. Make sure the instrument panel brightness lever is in the full bright position. See *Instrument Panel Brightness on page 4-35*.

To operate the vehicle with the DRL off, turn the exterior lamp control off and then do one of the following:

- Turn the exterior lamp control to the parking lamp position.
- Turn the exterior lamp control to the headlamp position.
- Turn the exterior lamp control from AUTO to off and back to AUTO.

An AUTOMATIC LIGHTS OFF message will appear on the DIC, showing that automatic lighting has been disabled. See *DIC Warnings and Messages on page 4-76*.

The regular headlamp system should be turned on when needed.

Light Sensor

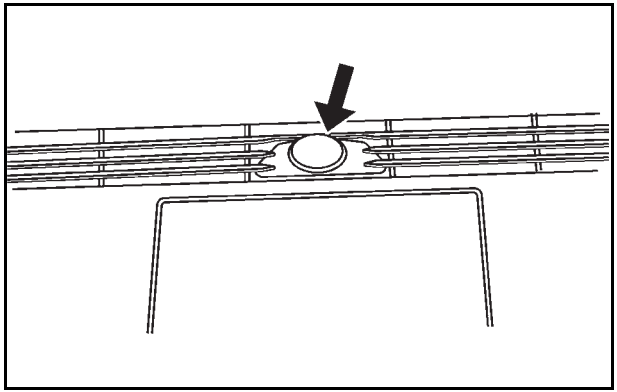

The light sensor for the DRL is located on top of the instrument panel. If the sensor is covered, it will prevent it from sensing light, and the exterior lamps may come on when they are not needed.

Fog Lamps

The fog lamp controls are located on the turn signal/ multifunction lever.

(Fog Lamps) : The band with this symbol is used to turn the fog lamps on and off.

The parking lamps must be on for the fog lamps to work.

To turn the fog lamps on or off, turn the fog lamp band on the lever up to the dot and release it. The band will return to its original position.

If the high-beam headlamps are turned on, the fog lamps will turn off. The fog lamps will come back on when the high-beam headlamps are off.

Some localities have laws that require the headlamps to be on along with the fog lamps.

Twilight Sentinel®

Twilight Sentinel® can turn the lamps on and off for you.

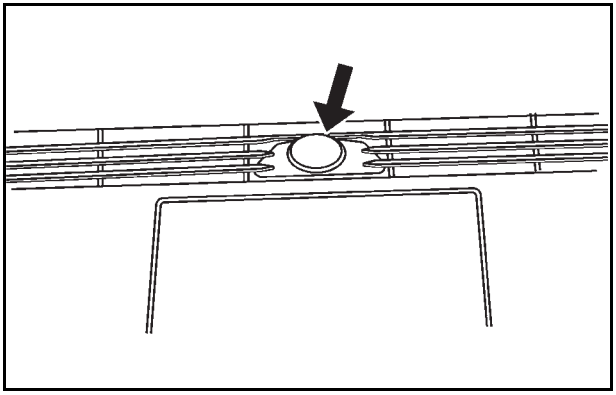

A light sensor on top of the instrument panel makes the Twilight Sentinel work, so be sure it is not covered.

With Twilight Sentinel the following will happen:

- When it is dark enough outside, the front turn signal lamps (DRL) will go off, and the headlamps and parking lamps will come on. The other lamps that come on with headlamps will also come on.
- When it is bright enough outside, the headlamps will go off, and the front turn signal lamps (DRL) will come on, as long as the exterior lamp switch is in the off position.

If the vehicle is started in a dark garage, the automatic headlamp system comes on immediately. Once the vehicle leaves the garage, it will take about one minute for the automatic headlamp system to change to DRL if it is light outside. During that delay, the instrument panel cluster might not be as bright as usual. Make sure the instrument panel brightness control is in full bright position. See *Instrument Panel Brightness on page 4-35* for more information.

You can idle the vehicle with the lamps off, even when it is dark outside. First set the parking brake while the ignition is in OFF/ACCESSORY. Then start the vehicle. The lamps will stay off until the parking brake is released.

Twilight Sentinel also provides exterior illumination as you leave the vehicle. If Twilight Sentinel has turned on the lamps when you turn off the ignition, the lamps will remain on until:

- The exterior lamp switch is moved from off to the parking lamp position.
- A delay time that you select has elapsed.

See *Vehicle Personalization on page 3-58* to select the delay time needed. You can also select no delay time.

If the ignition is turned off with the exterior lamp switch in the parking lamp or headlamp position, the Twilight Sentinel delay will not occur. The lamps will turn off as soon as the switch is turned off.

As with any vehicle, the regular headlamp system should be turned on when needed.

Exterior Lighting Battery Saver

If the parking lamps or headlamps have been left on, the exterior lamps will turn off about 10 minutes after the ignition is turned off. This protects against draining the battery in case you have accidentally left the headlamps or parking lamps on. The battery saver does not work if the headlamps are turned on after the ignition is turned off.

If you need to leave the lamps on for more than 10 minutes, use the exterior lamp control to turn the lamps back on.

Instrument Panel Brightness

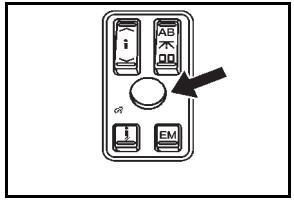

Base Level Shown, Uplevel Similar

Press the center knob on the DIC control panel to extend. Then turn the knob clockwise to brighten the lights or counterclockwise to dim them. If the knob is turned completely clockwise, the interior lamps turn on.

Entry Lighting

The entry lighting system turns on the reading and dome lamps and the backlighting to the exterior lamp control when a door is opened or if you press the remote keyless entry transmitter unlock button. If activated by the transmitter, the lighting will remain active for about 25 seconds. The entry lighting system uses the light sensor; it must be dark outside in order for the lamps to turn on. The lamps turn off about 25 seconds after the last door is closed. They will dim to off if the ignition is on, or immediately deactivate if the power locks are activated.

Parade Dimming

This feature prohibits dimming of the instrument panel displays and backlighting during daylight hours when the key is in the ignition and the headlamps are on. This feature operates with the light sensor and is fully automatic. When the light sensor reads darkness outside and the parking lamps are active, the instrument panel displays can be adjusted by turning the instrument panel brightness knob. See *Instrument Panel Brightness on page 4-35* for additional information.

Reading Lamps

The reading lamps are located on the overhead console. These lamps come on automatically when any door is opened.

For manual operation, press the button next to each lamp to turn it on or off.

If the reading lamps are left on, they automatically shut off 10 minutes after the ignition has been turned off.

Battery Load Management

The battery load management feature is designed to monitor the vehicle's electrical load and determine when the battery is in a heavy discharge condition. During times of high electrical loading, the engine may idle at a higher revolutions per minute (rpm) setting than normal to make sure the battery charges. High electrical loads may occur when several of the following are on: headlamps, high beams, fog lamps, rear window defogger, the climate control fan at high speeds, heated seats and engine cooling fans.

If the battery continues to discharge, even with the engine idling at a higher rpm setting, some electrical loads will automatically be reduced. When this occurs, the rear window defogger may take slightly longer to clear the glass and the fan may cut back to a lower

speed. For more battery saving information, see “Battery Saver Active Message” under *DIC Warnings and Messages on page 4-76*.

Electric Power Management

The vehicle has Electric Power Management (EPM) that estimates the battery's temperature and state of charge. It then adjusts the voltage for best performance and extended life of the battery.

When the battery's state of charge is low, the voltage is raised slightly to quickly bring the charge back up. When the state of charge is high, the voltage is lowered slightly to prevent overcharging. If the vehicle has a voltmeter gage or a voltage display on the Driver Information Center (DIC), you may see the voltage move up or down. This is normal. If there is a problem, an alert will be displayed.

The battery can be discharged at idle if the electrical loads are very high. This is true for all vehicles. This is because the generator (alternator) may not be spinning fast enough at idle to produce all the power that is needed for very high electrical loads.

A high electrical load occurs when several of the following are on, such as: headlamps, high beams, fog lamps, rear window defogger, climate control fan at high speed, heated seats, engine cooling fans, trailer loads, and loads plugged into accessory power outlets.

EPM works to prevent excessive discharge of the battery. It does this by balancing the generator's output and the vehicle's electrical needs. It can increase engine idle speed to generate more power, whenever needed. It can temporarily reduce the power demands of some accessories.

Normally, these actions occur in steps or levels, without being noticeable. In rare cases at the highest levels of corrective action, this action may be noticeable to the driver. If so, a Driver Information Center (DIC) message might be displayed, such as BATTERY SAVER ACTIVE, BATTERY VOLTAGE LOW, or LOW BATTERY. If this message is displayed, it is recommended that the driver reduce the electrical loads as much as possible. See *DIC Warnings and Messages on page 4-76*.

Inadvertent Power Battery Saver

This feature is designed to protect the vehicle's battery against drainage from the interior lamps, trunk lamp, glove box lamp, or the garage door opener. When the ignition is turned off, the power to these features will automatically turn off after 10 minutes (three minutes if a new car has 24 km (15 miles) or less). Power will be restored for an additional 10 minutes if any door is opened, the trunk is opened or the courtesy lamp switch is turned on.

Head-Up Display (HUD)

⚠ WARNING:

If the HUD image is too bright, or too high in your field of view, it may take you more time to see things you need to see when it is dark outside. Be sure to keep the HUD image dim and placed low in your field of view.

For vehicles with the Head-Up Display (HUD), some of the driver information that appears on the instrument panel cluster is projected onto an image on the windshield.

The information can be displayed in English or metric units. To change from English to metric units, see *DIC Operation and Displays on page 4-70*.

The HUD consists of the following information:

- Speedometer
- Turn Signal Indicators
- High-Beam Indicator Symbol
- Driver Shift Control Transmission Feature, see *Automatic Transmission Operation on page 3-30*
- Check Gages Icon
- Adaptive Cruise Control Features and Indicators (If Equipped), see *Adaptive Cruise Control on page 4-15*
- Forward Collision Alert Features and Indicators (If Equipped), see *Forward Collision Alert (FCA) System on page 4-6*
- Radio Features

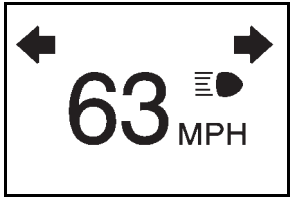

United States version shown, Canada similar

Always scan the instrument panel displays, controls and driving environment just as you would in a vehicle without HUD, so important warning lights are not missed. Under important warning conditions, the CHECK GAGES message will display in the HUD. View the Driver Information Center (DIC) for more information.

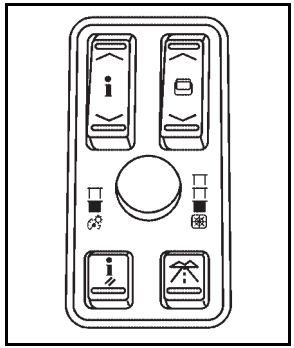

The HUD controls are located to the left of the steering wheel on the DIC control panel.

Off : Turn the brightness control knob fully counterclockwise to turn the HUD display off.

(Head-Up Display) : Press to move the HUD display up or down on the windshield. HUD cannot be adjusted side-to-side.

Brightness Control : Press the knob on the center of the DIC control panel to extend and then pull the knob until is completely extended. Turn the knob clockwise or counterclockwise to increase or decrease the brightness of the HUD display.

To adjust the HUD so it can be seen properly:

1. Adjust the seat to a comfortable driving position, before adjusting the HUD position.
2. Start the engine.
3. Adjust the position and brightness of the HUD display.

The brightness of the HUD display is determined by the light conditions in the direction the vehicle is facing and where the HUD has been positioned on the windshield. If the vehicle is facing a dark object or a heavily shaded area, the HUD may begin to dim because it anticipates the vehicle entering a dark area.

When sunlight enters the HUD it can make it difficult to see the display. The display will return to normal brightness when the sunlight no longer enters the HUD.

Wearing polarized sunglasses could also make the HUD display harder to see.

The Ignition is On and the HUD Image Cannot Be Seen

Check to see if:

- The HUD unit is covered.
- The brightness is adjusted properly.
- The HUD display is adjusted to the proper height.
- Ambient light in the direction the vehicle is facing is low.
- A fuse is blown. See *Fuses and Circuit Breakers on page 6-117*.

The windshield is part of the HUD system. See *Windshield Replacement on page 6-50*.

The following messages may appear in the HUD:
SPEED ALERT

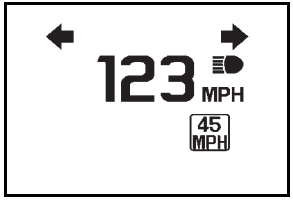

Posted Speed

Advisory Speed

When the Speed Advisor feature is turned on, HUD displays either the posted or advisory speed as determined by the information on the map disc in the navigation system. To turn the Speed Advisor on or off, see *DIC Operation and Displays on page 4-70*.

The Speed Advisor can be set to show a speed alert when the vehicle speed exceeds the speed alert limit as set in the DIC menu. Depending on the level of the HUD on the vehicle, your HUD may work like either of the following:

- The HUD speedometer will turn red when the vehicle speed exceeds the speed alert limit. When the vehicle speed is at or below the alert limit and above the posted speed or advisory speed, the speedometer turns yellow. If the Speed Alert setting in the DIC is set to AT LIMIT, the speedometer will not turn yellow. When the vehicle speed is at or below the posted speed or advisory speed, the speedometer remains green.
- The HUD speedometer will turn yellow when the vehicle speed exceeds the speed alert limit. When the vehicle speed is at or below the alert limit, the speedometer remains green.PEDAL APPLIED ACC OVERRIDE

When the PEDAL APPLIED ACC OVERRIDE message displays, the accelerator pedal is being pressed and the Adaptive Cruise Control is overridden and cannot automatically apply the brakes. Once the accelerator pedal is released, the Adaptive Cruise Control will return to normal operation and be able to apply the brakes, if needed.

An Adaptive Cruise Control active symbol, alert symbol or vehicle ahead symbol may also appear. See *Adaptive Cruise Control on page 4-15* for more information.

Care of the HUD

Clean the inside of the windshield as needed to remove any dirt or film that reduces the sharpness or clarity of the HUD display.

To clean the HUD, spray household glass cleaner on a soft, clean cloth. Wipe the HUD lens gently, then dry.

Notice: **When cleaning, be careful not to scratch the HUD or camera lenses. Do not sprayglass cleaner directly on the HUD lens because the cleaner could leak inside the unitand cause damage.**

Accessory Power Outlet(s)

Accessory power outlets can be used to plug in electrical equipment, such as a cellular telephone.

The vehicle has one outlet in front of the center console, one in the center console lid and there may be an additional outlet in the rear of the center console.

The vehicle may have a small cap that must be removed to access the accessory power outlet. Be sure to cover the outlet with the protective cap when it is not in use.

Notice: **Leaving electrical equipment plugged in for an extended period of time while the vehicle is off will drain the battery. Power is always supplied to the outlets. Always unplug electrical equipment when not in use and do not plug in equipment that exceeds the maximum 20 ampere rating.**

Certain accessory power plugs may not be compatible to the accessory power outlet and could result in blown vehicle or adapter fuses. If you experience a problem, see your dealer for additional information on the accessory power outlets.

Notice: **Adding any electrical equipment to the vehicle can damage it or keep other components from working as they should. The repairs would not be covered by the vehicle warranty. Do not use equipment exceeding maximum amperage rating of 20 amperes. Check with your dealer/retailer before adding electrical equipment.**

Follow the proper installation instructions that are included with any electrical equipment you install.

Notice: **Improper use of the power outlet can cause damage not covered by the vehicle warranty. Do not hang any type of accessory or accessory bracket from the plug because the power outlets are designed for accessory power plugs only.**

Ashtray(s) and Cigarette Lighter

The vehicle may have an ashtray and cigarette lighter.

Notice: **If papers, pins, or other flammable items are put in the ashtray, hot cigarettes or other smoking materials could ignite them and possibly damage the vehicle. Never put flammable items in the ashtray.**

Ashtray

For vehicles with an ashtray, it is located under the climate control panel on the center console. Press on the door to release the ashtray. The ashtray automatically slides open for use.

To empty the ashtray with the ashtray in full open position, locate the release button to the right of the ash receiver and slide it to the right (in the direction of the arrow). The ash receiver will unlock and lift slightly and can then be easily removed from the housing. To replace the ash receiver, place it into position in the ashtray housing and push down firmly until it locks into place.

Cigarette Lighter

Notice: **Holding a cigarette lighter in while it is heating will not allow the lighter to back away from the heating element when it is hot. Damage from overheating may occur to the lighter or heating element, or a fuse could be blown. Do not hold a cigarette lighter in while it is heating. Do not use equipment exceeding maximum amperage rating of 15 amperes.**

The cigarette lighter is located next to the ashtray. The vehicle does not have any cigarette lighters for the rear seat passengers.

To activate the cigarette lighter, push it into the heating element and let go. When the lighter is ready it will pop back out by itself.

Climate Controls

Dual Climate Control System

The heating, cooling, and ventilation can be controlled for the vehicle with this system.

Automatic Operation

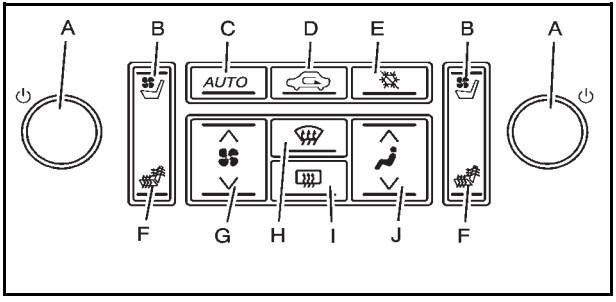

Vehicles With Heated and Ventilated Seats Shown, Vehicles Without Similar

A. Driver and Passenger Side Power Buttons
B. Ventilated Seat
C. AUTO
D. Recirculation
E. Air Conditioning
F. Heated Seat
G. Fan Control
H. Defrost
I. Rear Window Defogger
J. Air Delivery Mode Control

AUTO (Automatic) : The system automatically controls the fan speed, air delivery, air conditioning and recirculation modes in order to heat or cool the vehicle to the desired temperature.

To place the system in automatic mode:

1. Press the AUTO button.
2. Adjust the temperature to a comfortable setting, generally, between 21°C (70°F) and 27°C (80°F).

   Choosing the coldest or warmest temperature setting will not cause the system to heat or cool any faster. If the system is set at the warmest temperature setting, the system will try to continuously heat the vehicle and will not adjust the system down as the vehicle warms up.

   To avoid blowing cold air in cold weather, the system delays turning on the fan until warm air is available. The system starts out blowing air at the floor, but can automatically change modes as the vehicle warms up to maintain the chosen temperature setting. The length of time needed for warm up depends on the outside temperature and the length of time that has elapsed since the vehicle was last driven.
3. Wait for the system to regulate. This may take from 10 to 30 minutes. Then adjust the temperature, if necessary.

The display can be changed from English to metric units through the Driver Information Center (DIC). See *DIC Operation and Displays on page 4-70*.

Manual Operation

⏻ **(Driver's Temperature Control) :** Press to turn the entire climate control system on or off. Turn the knob to increase or decrease the temperature inside the vehicle.

⏻ **(Passenger's Temperature Control) :** Press to turn the passenger climate control system on. Turn the knob to increase or decrease the temperature for the front passenger only. The passenger side power button does not turn off the climate control system. The system is set to the same setting as the driver.

∧✤∨ **(Fan Control) :** Press to increase or decrease the fan speed. This cancels automatic operation and lets the amount of airflow be adjusted manually. Press AUTO to return to automatic operation.

If the airflow seems low when the fan speed is at the highest setting, the passenger compartment air filter may need to be replaced. For more information, see *Passenger Compartment Air Filter on page 4-50* and *Scheduled Maintenance on page 7-3*.

∧ ∨ **(Air Delivery Mode) :** Press to change the direction of the airflow in the vehicle. This cancels automatic operation and lets the air delivery mode be adjusted manually. Press AUTO to return to automatic operation.

The outboard air outlets always receive airflow regardless of the mode selected. See *Outlet Adjustment on page 4-48* to change this airflow from the outboard outlets.

To change the current mode, select one of the following:

(Vent) : Air is directed to the instrument panel outlets.

(Bi-Level) : Air is divided between the instrument panel outlets and the floor outlets. In automatic operation, cooler air is directed to the upper outlets and warmer air to the floor outlets.

(Floor) : Air is directed to the floor outlets, with some air directed to the windshield and side windows.

(Defog) : This mode clears the windows of fog or moisture. Air is directed to the windshield and floor outlets, with some air directed to the side windows and outboard panel outlets. When this mode is selected, the system turns off recirculation and runs the air-conditioning compressor unless the outside temperature is at or below freezing. If recirculation is selected while in the defog mode, it is cancelled after 10 minutes.

If there is fogging on the side windows, remain in defog or defrost mode until they clear.

(Defrost) : This mode clears the windshield of fog or frost more quickly. Air is directed to the windshield, with some air directed to the side windows and outboard panel outlets. The air-conditioning compressor runs automatically in this setting, unless the outside temperature is at or below freezing. Recirculation cannot be selected while in the defrost mode.

This mode can also cause the fan speed and air temperature to increase.

(Air Conditioning) : Press to turn the air conditioning off. Press AUTO to return to automatic operation. To limit fogging on the windshield, the air conditioning compressor cannot be off while in the defrost mode.

(Recirculation) : Press once to select recirculation mode or twice to select outside air. If in AUTO mode, press once to select recirculation. This mode recirculates and helps to quickly cool the air inside the vehicle. It can be used to prevent outside air and odors from entering the vehicle.

Recirculation is not available in the defrost mode and shuts off when defog mode is selected. Both of these features are designed to limit fogging in the vehicle. If recirculation is selected during defog mode, it automatically turns off after 10 minutes.

Using the recirculation for long periods of time might cause the air inside the vehicle to become too dry or stuffy. To prevent this from happening, after the air in the vehicle has cooled, press the recirculation button again to select outside air or press the AUTO button.

Rear Window Defogger

The rear window defogger uses a warming grid to remove fog or frost from the rear window.

The defogger only works when the ignition is on or during remote start, if programmed. See “Personal Settings Menu” under *Vehicle Personalization on page 3-58* for additional information.

(Rear Window Defogger) : Press to turn the rear window defogger on or off. The rear window defogger stays on for 10 minutes, before turning off.

If the vehicle's speed is above 48 km/h (30 mph), the rear defogger stays on continuously. If turned on again, the defogger only runs for about five minutes before turning off. The defogger can also be turned off by turning off the engine.

The heated outside rearview mirrors also heat to help clear fog or frost from the surface of the mirror when the rear window defogger is on. See *Outside Heated Mirrors on page 3-40*.

Notice: **Do not use a razor blade or sharp object to clear the inside rear window. Do not adhere anything to the defogger grid lines in the rear glass. These actions may damage the rear defogger. Repairs would not be covered by your warranty.**

(Ventilated Seat) : If the vehicle has this feature, press to turn the driver or passenger side ventilated seat on. See *Heated and Ventilated Seats on page 2-4*.

(Heated Seat) : If the vehicle has this feature, press to turn the driver or passenger side heated seat and seatback on. See *Heated and Ventilated Seats on page 2-4*.

Sensors

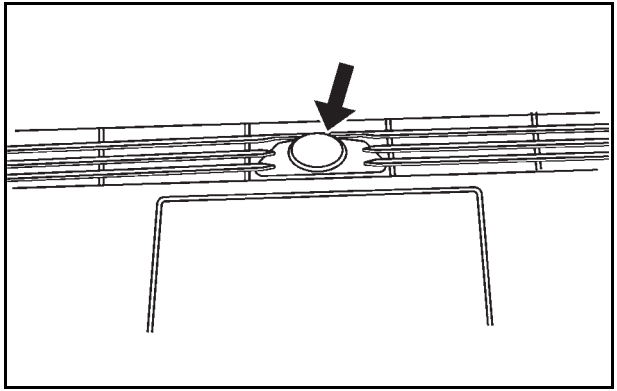

The solar sensor located on the instrument panel, near the windshield, monitors the solar heat.

The interior temperature sensor located on the instrument panel to the right of the steering wheel, measures the temperature of the air inside the vehicle.

The climate control system uses the information from these sensors to adjust the temperature, the fan speed and the air delivery, in order to maintain the selected temperature. The system may also supply cooler air to the side of the vehicle facing the sun.

Do not cover the sensors or the automatic climate control system will not work properly.

Outlet Adjustment

Use the lever located in the center of each outlet to change the direction of the airflow, either side-to-side or up and down. Use the thumbwheels to open or close the outlets to adjust the airflow.

Turn the thumbwheel towards the vehicle door to open the outlets and allow the maximum amount of air to enter your vehicle. Turn the thumbwheel towards the center console to close the outlets and minimize the amount of air entering the vehicle.

Operation Tips

- Clear away any ice, snow or leaves from the air inlets at the base of the windshield that may block the flow of air into your vehicle.
- Use of non-GM approved hood deflectors may adversely affect the performance of the system.
- Keep the path under the front seats clear of objects to help circulate the air inside of your vehicle more effectively.
- If the airflow seems low when the fan speed is at the highest setting, the passenger compartment air filter may need to be replaced. For more information, see *Passenger Compartment Air Filter on page 4-50*.

Rear Climate Control System

The vehicle has a rear climate control system. The base model includes air outlets in the rear of the center console for cooling and under-seat air outlets for heating. The temperature, amount of airflow, and the air delivery mode is controlled automatically by the front climate control system.

Some vehicles may have an optional climate control panel for the rear passenger, located on the back of the center console.

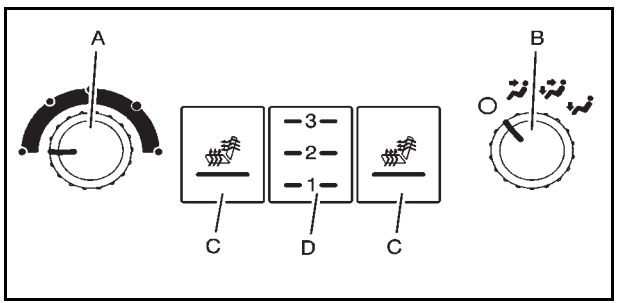

A. Temperature Control
B. Air Delivery Mode Control
C. Heated Seat
D. Heated Seat Indicator

(Off) : Turns off the airflow to the rear seat passengers. With the air delivery off there may be an increase in the air rush sound of the front system.

Temperature Control : Turn clockwise or counterclockwise to increase or decrease the temperature.

Air Delivery Mode Control : Turn to change the direction of the airflow for the rear seat passengers.

To change the current mode, select one of the following:

(Vent) : Air is directed to the console outlets.

(Bi-Level) : Air is directed to the console and the floor outlets.

(Floor) : Air is directed to the floor outlets.

The front climate control system automatically controls the amount of airflow to the rear seat passengers, regardless of optional equipment. Airflow to the rear system turns off when defrost is selected on the front climate control panel, in order to direct air to clear the windshield.

(Heated Seat): Press to turn on rear heated seats.

There are two buttons, each with three indicator lights, located between the climate control knobs on the rear climate control panel.

Keep the area under the front seats clear of any objects so the air in the vehicle can circulate effectively.

Passenger Compartment Air Filter

Your vehicle may be equipped with a passenger compartment air filter. There are two types of filters available. There is a standard dust filter that traps small particles including pollen. There is, also, a dust/odor filter available that traps dust and pollen and uses a charcoal element to help reduce many offensive odors from entering your vehicle. The filter will need to be changed periodically. For information on when to change the passenger compartment air filter, see *Scheduled Maintenance on page 7-3*.

Notice: **Driving without a passenger compartment air filter in place can cause water and small particles, like paper and leaves, to be pulled into your climate control system which may cause damage to it. Make sure you always replace the old filter with a new one.**

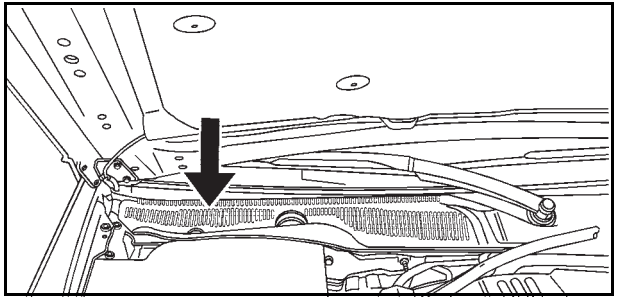

The access panel for the passenger compartment air filter is located under the hood near the windshield, on the passenger side of the vehicle. See *Engine Compartment Overview on page 6-13* for more information on location. See *Doing Your Own Service Work on page 6-5* for information on doing your own service work.

To access the passenger compartment air filter:

1. Pull back the rubber hood seal from the edge of the leaf screen vent cover.
2. Remove the three fasteners that hold the filter cover in place and slide the cover off.
3. To access the filter, remove the water deflector by lifting the outboard edge of the deflector to release the retention tab.

4. Lift the inboard edge of the deflector to release the retention tab.
5. Lift and slide the water deflector toward the inboard side and remove it.

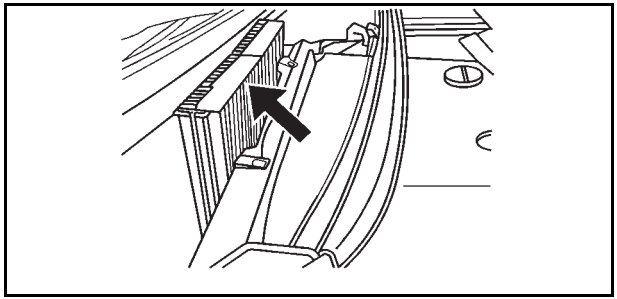

6. The top edge of the filter should be visible. Reach in and lift the filter out , pulling upward and toward the front of the vehicle.
7. Insert the new air filter by sliding it back into place. Make sure the arrow on the filter is pointing toward the passenger compartment.

Reverse steps 1 through 3 to reinstall the water deflector, filter cover and the hood seal.

Warning Lights, Gages, and Indicators

Warning lights and gages can signal that something is wrong before it becomes serious enough to cause an expensive repair or replacement. Paying attention to the warning lights and gages could prevent injury.

Warning lights come on when there might be or there is a problem with one of the vehicle's functions. Some warning lights come on briefly when the engine is started to indicate they are working.

Gages can indicate when there might be or there is a problem with one of the vehicle's functions. Often gages and warning lights work together to indicate a problem with the vehicle.

When one of the warning lights comes on and stays on while driving, or when one of the gages shows there could be a problem, check the section that explains what to do. Follow this manual's advice. Waiting to do repairs can be costly and even dangerous.

Instrument Panel Cluster

The instrument panel cluster is designed to show how the vehicle is running. It shows how fast the vehicle is going, how much fuel is being used and many of the other things needed to drive safely and economically.

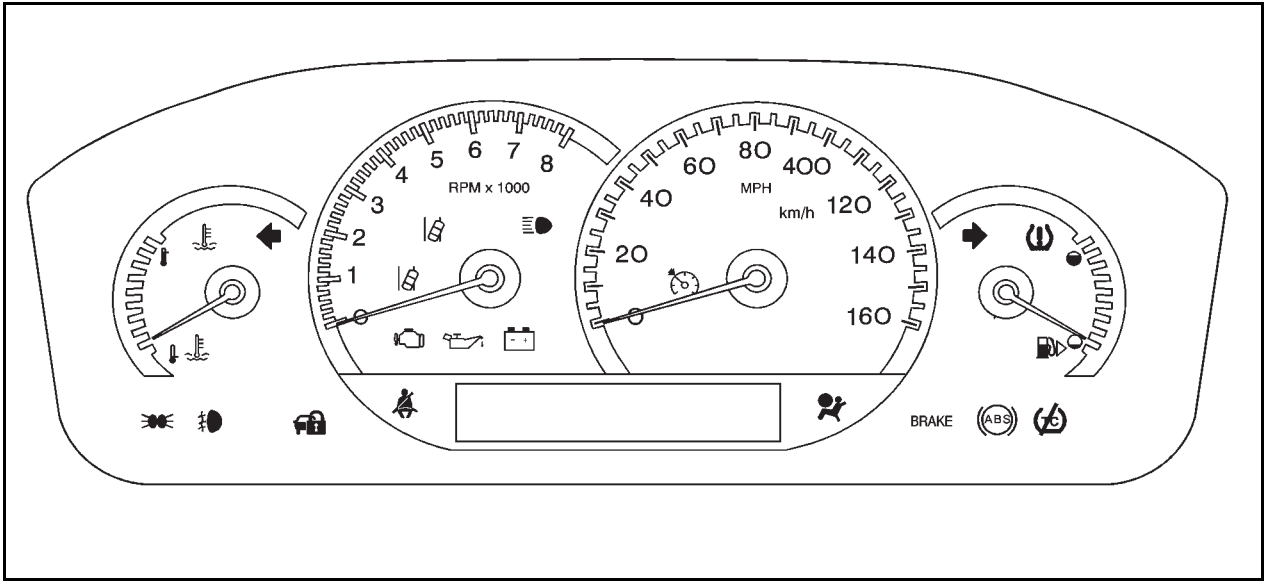

United States Base version shown, Canada and Uplevel similar

Speedometer and Odometer

The speedometer shows the speed in both kilometers per hour (km/h) and miles per hour (mph). See *DIC Operation and Displays on page 4-70* for more information.

The odometer mileage can be checked without the vehicle running. The vehicle's odometer works together with the driver information center. The odometer can be set for a Trip A and a Trip B. See “Trip Information” under *DIC Operation and Displays on page 4-70* for more information.

If the vehicle ever needs a new odometer installed, the new one will be set to the correct mileage total of the old odometer.

Tachometer

This gage indicates the engine speed in revolutions per minute (rpm).

Safety Belt Reminders

Safety Belt Reminder Light

When the engine is started, a chime sounds for several seconds to remind a driver to fasten the safety belt, unless the driver safety belt is already buckled.

The safety belt light comes on and stays on for several seconds, then flashes for several more.

This chime and light are repeated if the driver remains unbuckled and the vehicle is in motion. If the driver safety belt is already buckled, neither the chime nor the light comes on.

Passenger Safety Belt Reminder Light

Several seconds after the engine is started, a chime sounds for several seconds to remind the front passenger to buckle their safety belt. The passenger safety belt light, located on the instrument panel, comes on and stays on for several seconds and then flashes for several more.

This chime and light are repeated if the passenger remains unbuckled and the vehicle is in motion.

If the passenger safety belt is buckled, neither the chime nor the light comes on.

The front passenger safety belt warning light and chime may turn on if an object is put on the seat such as a briefcase, handbag, grocery bag, laptop or other electronic device. To turn off the warning light and or chime, remove the object from the seat or buckle the safety belt.

Airbag Readiness Light

The system checks the airbag's electrical system for possible malfunctions. If the light stays on it indicates there is an electrical problem. The system check includes the airbag sensor, the pretensioners, the airbag modules, the wiring and the crash sensing and diagnostic module. For more information on the airbag system, see *Airbag System on page 2-52*.

The airbag readiness light flashes for a few seconds when the engine is started. If the light does not come on then, have it fixed immediately.

⚠ WARNING:

If the airbag readiness light stays on after the vehicle is started or comes on while driving, it means the airbag system might not be working properly. The airbags in the vehicle might not inflate in a crash, or they could even inflate without a crash. To help avoid injury, have the vehicle serviced right away.

If there is a problem with the airbag system, an airbag Driver Information Center (DIC) message can also come on. See *DIC Warnings and Messages on page 4-76* for more information.

Passenger Airbag Status Indicator

Your vehicle has the passenger sensing system. Your overhead console has a passenger airbag status indicator.

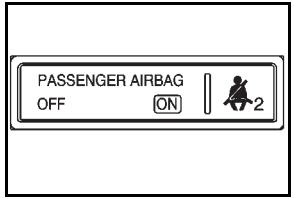

United States

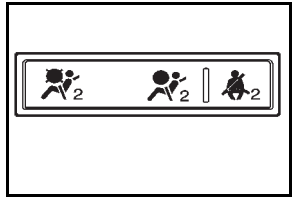

Canada

When you start the vehicle, the passenger airbag status indicator will light ON and OFF, or the symbol for on and off, for several seconds as a system check. If you use remote start to start your vehicle from a distance, if your vehicle has this feature, you may not see the system check.

Then, after several more seconds, the status indicator will light either ON or OFF, or either the on or off symbol to let you know the status of the right front passenger's frontal airbag.

If the word ON or the on symbol is lit on the passenger airbag status indicator, it means that the right front passenger's frontal airbag is enabled (may inflate).

⚠ WARNING:

If the on indicator comes on when you have a rear-facing child restraint installed in the right front passenger's seat, it means that the passenger sensing system has not turned off the passenger's frontal airbag. A child in a rear-facing child restraint can be seriously injured or killed if the right front passenger's airbag inflates. This is because the back of the rear-facing child restraint would be very close to the inflating airbag. Do not use a rear-facing child restraint in the right front passenger's seat if the airbag is turned on.

⚠ WARNING:

Even though the passenger sensing system is designed to turn off the right front passenger's frontal airbag if the system detects a rear-facing child restraint, no system is fail-safe, and no one can guarantee that an airbag will not deploy under some unusual circumstance, even though it is turned off. We recommend that rear-facing child restraints be secured in the rear seat, even if the airbag is off.

If the word OFF or the off symbol is lit on the airbag status indicator, it means that the passenger sensing system has turned off the right front passenger's frontal airbag. See *Passenger Sensing System on page 2-61* for more on this, including important safety information.

If, after several seconds, both status indicator lights remain on, or if there are no lights at all, there may be a problem with the lights or the passenger sensing system. See your dealer/retailer for service.

⚠ WARNING:

If the airbag readiness light in the instrument panel cluster ever comes on and stays on, it means that something may be wrong with the airbag system. If this ever happens, have the vehicle serviced promptly, because an adult-size person sitting in the right front passenger's seat may not have the protection of the airbag(s). See *Airbag Readiness Light on page 4-54* for more on this, including important safety information.

Charging System Light

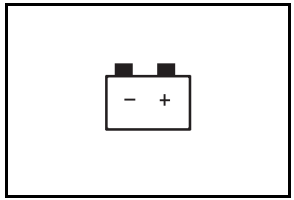

This light comes on briefly when the ignition key is turned to START, but the engine is not running, as a check to show it is working.

If it does not, have the vehicle serviced by your dealer/retailer.

The light should go out once the engine starts. If it stays on, or comes on while driving, there could be a problem with the charging system. A charging system message in the Driver Information Center (DIC) can also appear. See *DIC Warnings and Messages on page 4-76* for more information. This light could indicate that there are problems with a generator drive belt, or that there is an electrical problem. Have it checked right away. If the vehicle must be driven a short distance with the light on, turn off accessories, such as the radio and air conditioner.

Brake System Warning Light

The vehicle's hydraulic brake system is divided into two parts. If one part is not working, the other part can still work and stop the vehicle. For good braking both parts need to be working.

If the warning light comes on, there is a brake problem. Have the brake system inspected right away.

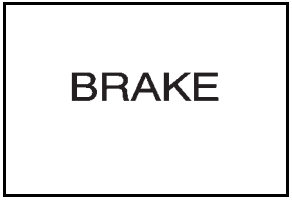

United States

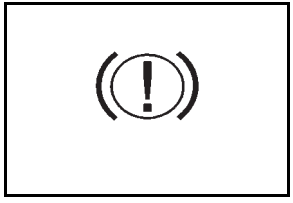

Canada

This light comes on briefly when the engine is turned on. If it does not come on then, have it fixed so it will be ready to warn if there is a problem.

When the ignition is on, the brake system warning light also comes on when the parking brake is set. The light will stay on if the parking brake does not release fully. If it stays on after the parking brake is fully released, it means there is a brake problem.

If the light comes on while driving, pull off the road and stop carefully.The pedal may be harder to push, or the pedal may go closer to the floor. It may take longer to stop. If the light is still on, have the vehicle towed for service. See *Towing Your Vehicle on page 5-29*.

⚠ WARNING:

The brake system might not be working properly if the brake system warning light is on. Driving with the brake system warning light on can lead to a crash. If the light is still on after the vehicle has been pulled off the road and carefully stopped, have the vehicle towed for service.

Antilock Brake System (ABS) Warning Light

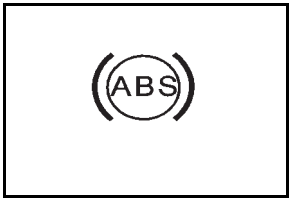

For vehicles with the Antilock Brake System (ABS), this light comes on briefly when the engine is started.

If it does not, have the vehicle serviced by your dealer/retailer. If the system is working normally the indicator light then goes off.

If the ABS light stays on, turn the ignition off. If the light comes on while driving, stop as soon as it is safely possible and turn the ignition off. Then start the engine again to reset the system. If the ABS light stays on, or comes on again while driving, the vehicle needs service. If the regular brake system warning light is not on, the vehicle still has brakes, but not antilock brakes. If the regular brake system warning light is also on, the vehicle does not have antilock brakes and there is a problem with the regular brakes. See *Brake System Warning Light on page 4-58*.

For vehicles with a Driver Information Center (DIC), see *DIC Warnings and Messages on page 4-76* for all brake related DIC messages.

Traction Control System (TCS) Warning Light

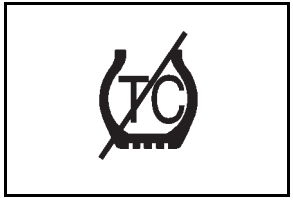

The TCS warning light comes on briefly when the engine is started.

If it does not, have the vehicle serviced by your dealer/retailer.

If the Traction Control System (TCS) warning light comes on and stays on, there may be a problem with the TCS.

The light also comes on if the TCS is turned off using the traction control on/off button located on the console.

If this light stays on or comes on while driving, pull off the road as soon as possible and stop carefully. Turn the engine off and then restart it. If the light still stays on or comes back on again while driving, the vehicle needs service. Have the TCS inspected as soon as possible. See *Traction Control System (TCS) on page 5-9* and *StabiliTrak® System on page 5-6* for more information.

Lane Departure Warning (LDW) Light

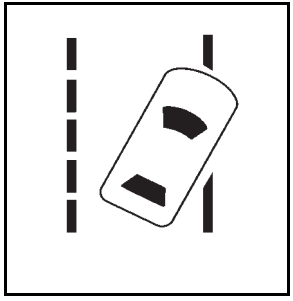

For vehicles with the lane departure warning system, this light briefly comes on green while starting the vehicle.

If it does not, have the vehicle serviced by your dealer/retailer. If the system is working normally the indicator light then goes off.

This light also comes on green if the system detects a left or right lane marking. It flashes, changes to amber, and three beeps sound, if a detected lane marking is crossed without using a turn signal. For more information, see the Index in the Navigation Manual.

Engine Coolant Temperature Warning Light

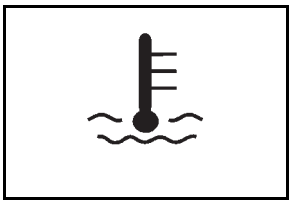

The engine coolant temperature warning light comes on when the engine is very hot.

This light also comes on briefly when the vehicle is started.

If the light does not go out or comes on and stays on while driving, there may be a problem with the cooling system. Driving with engine coolant temperature light on could cause the vehicle to overheat, see *Overheated Engine Protection Operating Mode on page 6-34*. See *Engine Overheating on page 6-32* and *DIC Warnings and Messages on page 4-76* for more information.

Engine Coolant Temperature Gage

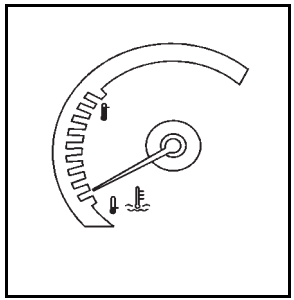

This gage shows the engine coolant temperature.

It can be used to see when the engine has warmed up and to make sure the cooling system is operating properly. If the gage pointer moves into the shaded area, the engine coolant is too hot and the engine coolant temperature warning light comes on.
See *Engine Overheating on page 6-32* for more information.

Tire Pressure Light

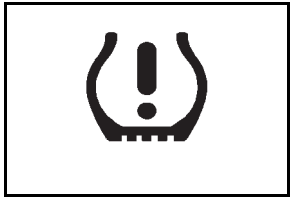

For vehicles with a tire pressure monitoring system, this light comes on briefly when the engine is started. It provides information about tire pressures and the Tire Pressure Monitoring System.

When the Light is On Steady

This indicates that one or more of the tires is significantly underinflated.

A tire pressure message in the Driver Information Center (DIC), can accompany the light. See *Driver Information Center (DIC) on page 4-69* for more information. Stop and check the tires as soon as it is safe to do so. If underinflated, inflate to the proper pressure. See *Inflation - Tire Pressure on page 6-60* for more information.

When the Light Flashes First and Then is On Steady

This indicates that there may be a problem with the Tire Pressure Monitor System. The light flashes for about a minute and stays on steady for the remainder of the ignition cycle. This sequence repeats with every ignition cycle. See *Tire Pressure Monitor Operation on page 6-64* for more information.

Malfunction Indicator Lamp

Check Engine Light

A computer system called OBD II (On-Board Diagnostics-Second Generation) monitors operation of the fuel, ignition, and emission control systems. It makes sure that emissions are at acceptable levels for the life of the vehicle, helping to produce a cleaner environment.

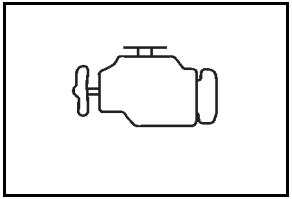

This comes on briefly while starting the engine. If it does not come on, have the vehicle serviced by your dealer/retailer.

If the check engine light comes on and stays on, while the engine is running, this indicates that there is an OBD II problem and service is required.

Malfunctions often are indicated by the system before any problem is apparent. Being aware of the light can prevent more serious damage to the vehicle. This system assists the service technician in correctly diagnosing any malfunction.

Notice: **If the vehicle is continually driven with this light on, after a while, the emission controls might not work as well, the vehicle's fuel economy might not be as good, and the engine might not run as smoothly. This could lead to costly repairs that might not be covered by the vehicle warranty.**

Notice: **Modifications made to the engine, transmission, exhaust, intake, or fuel system of the vehicle or the replacement of the original tires with other than those of the same Tire Performance Criteria (TPC) can affect the vehicle's emission controls and can cause this light to come on. Modifications to these systems could lead to costly repairs not covered by the vehicle warranty. This could also result in a failure to pass a required Emission Inspection/Maintenance test. See *Accessories and Modifications on page 6-4*.**

This light comes on during a malfunction in one of two ways:

Light Flashing : A misfire condition has been detected. A misfire increases vehicle emissions and could damage the emission control system on the vehicle. Diagnosis and service might be required.

The following can prevent more serious damage to the vehicle:

- Reduce vehicle speed.
- Avoid hard accelerations.
- Avoid steep uphill grades.

If the light continues to flash, when it is safe to do so, stop the vehicle. Find a safe place to park the vehicle. Turn off the ignition, wait at least 10 seconds, and restart the engine. If the light is still flashing, follow the previous steps and see your dealer/retailer for service as soon as possible.

Light On Steady : An emission control system malfunction has been detected on the vehicle. Diagnosis and service might be required.

An emission system malfunction might be corrected by doing the following:

- Make sure the fuel cap is fully installed. See *Filling the Tank on page 6-9*. The diagnostic system can determine if the fuel cap has been left off or improperly installed. A loose or missing fuel cap allows fuel to evaporate into the atmosphere. A few driving trips with the cap properly installed should turn the light off.
- If the vehicle has been driven through a deep puddle of water, the vehicle's electrical system might be wet. The condition is usually corrected when the electrical system dries out. A few driving trips should turn the light off.
- Make sure to fuel the vehicle with quality fuel. Poor fuel quality causes the engine not to run as efficiently as designed and may cause: stalling after start-up, stalling when the vehicle is changed into gear, misfiring, hesitation on acceleration, or stumbling on acceleration. These conditions might go away once the engine is warmed up.

  If one or more of these conditions occurs, change the fuel brand used. It will require at least one full tank of the proper fuel to turn the light off.

  See *Gasoline Octane on page 6-7*.

If none of the above have made the light turn off, your dealer/retailer can check the vehicle. The dealer/retailer has the proper test equipment and diagnostic tools to fix any mechanical or electrical problems that might have developed.

Emissions Inspection and Maintenance Programs

Some state/provincial and local governments have or might begin programs to inspect the emission control equipment on the vehicle. Failure to pass this inspection could prevent getting a vehicle registration.

Here are some things to know to help the vehicle pass an inspection:

- The vehicle will not pass this inspection if the check engine light is on with the engine running.

  To perform a check engine light bulb check with the keyless ignition, make sure the transmitter fob is in the passenger compartment. See *Ignition Positions on page 3-26*. Press the bottom of the Acc. button on the instrument panel and hold the button down for five seconds. The instrument panel, including the check engine light, will light up and the ignition will be on, but the engine will not start — press the bottom of the Acc. button only briefly, less than five seconds, the accessory power mode will be turned on, but not the ignition. After the bulb check, press and release the Acc. button again to turn the ignition off and avoid draining the vehicle's battery.

- The vehicle will not pass this inspection if the OBD II (on-board diagnostic) system determines that critical emission control systems have not been completely diagnosed by the system. The vehicle would be considered not ready for inspection. This can happen if the battery has recently been replaced or if the battery has run down. The diagnostic system is designed to evaluate critical emission control systems during normal driving. This can take several days of routine driving. If this has been done and the vehicle still does not pass the inspection for lack of OBD II system readiness, your dealer/retailer can prepare the vehicle for inspection.

Oil Pressure Light

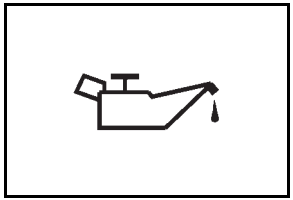

For vehicles with an oil pressure light, if there is a problem with the oil, the light may stay on after the engine is started, or comes on while driving.

This light indicates that oil is not going through the engine quickly enough to keep it lubricated. The engine could be low on oil or could have some other oil problem. Have the vehicle serviced by your dealer/retailer.

The oil light could also come on in the following situations:

- The light comes on briefly when the ignition is turned on to show that it is working properly. If it does not come on with the ignition on, there may be a problem with the fuse or bulb. Have the vehicle serviced by your dealer/retailer.
- Sometimes when the engine is idling at a stop, a chime sounds and the light may blink on and off. This is normal.

⚠ WARNING:

Do not keep driving if the oil pressure is low. The engine can become so hot that it catches fire. Someone could be burned. Check the oil as soon as possible and have the vehicle serviced.

Notice: **Lack of proper engine oil maintenance can damage the engine. The repairs would not be covered by the vehicle warranty. Always follow the maintenance schedule in this manual for changing engine oil.**

Security Light

For information regarding this light and the vehicle's security system, see *Theft-Deterrent System on page 3-22*.

Fog Lamp Light

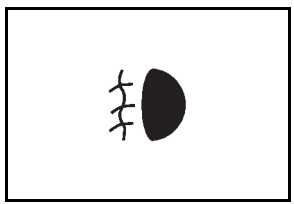

The fog lamp light comes on when the fog lamps are in use.

The light goes out when the fog lamps are turned off. See *Fog Lamps on page 4-33* for more information.

Lights On Reminder

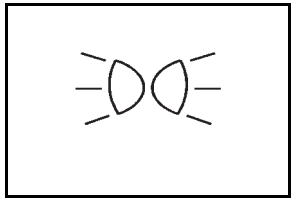

This light comes on whenever the parking lamps are on.

See *Headlamps on Reminder on page 4-31* for more information.

Cruise Control Light

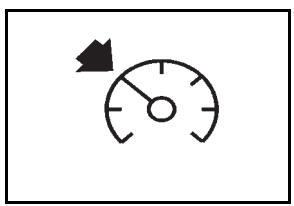

This light comes on whenever the cruise control is set.

The light goes out when the cruise control is turned off. See *Cruise Control on page 4-12* and *Adaptive Cruise Control on page 4-15* for more information.

Highbeam On Light

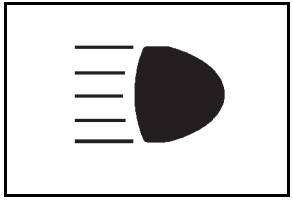

This light comes on when the high-beam headlamps are in use.

See *Headlamp High/Low-Beam Changer on page 4-5* for more information.

Fuel Gage

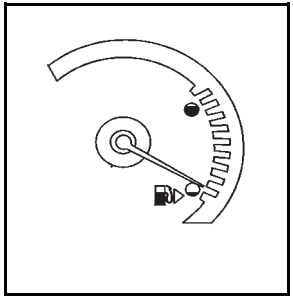

The fuel gage shows approximately how much fuel is in the fuel tank. It works only when the engine is on.

An arrow on the fuel gage indicates the side of the vehicle the fuel door is on.

If the fuel supply gets low, the “FUEL LEVEL LOW” message appears on the Driver Information Center (DIC) and a single chime sounds. See *DIC Warnings and Messages on page 4-76* for more information.

All of the following situations are normal and do not indicate that anything is wrong with the fuel gage:

- At the gas station the gas pump shuts off before the gage reads full.
- The gage may change when you turn, stop quickly or accelerate quickly.
- It takes a little more or less fuel to fill the tank than the gage indicated. For example, the gage may have indicated that the tank was half full, but it actually took a little more or less than half the tank's capacity to fill the tank.

Driver Information Center (DIC)

The Driver Information Center (DIC) gives you the status of many of your vehicle's systems. The DIC is also used to display warning/status messages. All messages will appear in the DIC display located at the bottom of the instrument panel cluster, below the tachometer and speedometer. The DIC buttons are located on the instrument panel, to the left of the steering wheel.

The DIC comes on when the ignition is on. After a short delay, the DIC will display the current driver and the information that was last displayed before the engine was turned off.

The top line of the DIC display shows the vehicle system information and the warning/status messages. The bottom line of the DIC display shows either the odometer, the trip odometer A or the trip odometer B information on the left side. Only one odometer can appear at a time. See “Trip Information” under *DIC Operation and Displays on page 4-70* for information on changing the display to show the odometer or trip odometer information. The bottom line of the DIC display also shows the outside temperature on the right side and the shift lever position indicator in the center. See *Automatic Transmission Operation on page 3-30* for more information on the shift lever positions.

When the sport mode is active, an S will appear next to the shift position indicator on the center of the DIC display. When the manual mode is active, an M will appear on the DIC display. When the normal mode is active, only the shift position indicator will appear. While the Driver Shift Control (DSC) feature is active, the DIC will change to show the selected gear. See “Driver Shift Control (DSC)” under *Automatic Transmission Operation on page 3-30* for more information.

If a problem is detected, a warning message will appear on the display. Be sure to take any message that appears on the display seriously and remember that clearing the message will only make the message disappear, not correct the problem.

DIC Operation and Displays

The Driver Information Center (DIC) has different modes which can be accessed by pressing the four DIC buttons located on the instrument panel, to the left of the steering wheel.

DIC Buttons (Base Level)

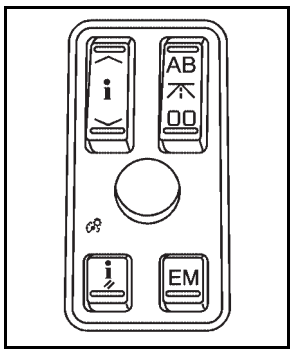

If your vehicle does not have a Head-Up Display (HUD), these are the buttons for the DIC.

∧ i ∨ (Information): Press the top or bottom of this button to scroll through the available vehicle information displays which include digital speed display, if your vehicle has this feature, fuel range, fuel economy, fuel used, average speed, timer, battery voltage, tire pressure, and engine oil life, if your vehicle has this feature.

See “MPH (km)” later in this section for more information on the digital speed display.

AB 00 (Trip Information): Press the top of this button to scroll through the odometer, trip odometer A and trip odometer B. Press and hold the bottom of this button to reset each trip odometer back to zero.

i // (Reset): Press this button to reset certain DIC features and to acknowledge DIC warning messages and clear them from the DIC display.

EM (English/Metric) : Press this button to change the display from English to metric.

DIC Buttons (Uplevel)

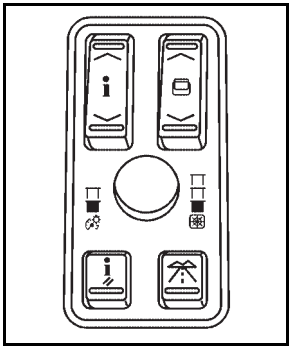

If the vehicle has a HUD, these are the buttons for the DIC.

∧ i ∨ **(Information):** Press the top or bottom of this button to scroll through the available vehicle information displays which include digital speed display, if your vehicle has this feature, fuel range, fuel economy, fuel used, average speed, timer, battery voltage, tire pressure, engine oil life, if your vehicle has this feature, and display units. See “MPH (km)” later in this section for more information on the digital speed display.

∧ ⊟ ∨ **(Head-Up Display):** Press this button to change the position of the HUD on the windshield. Press the top part of the button to move the HUD image up. Press the bottom part of the button to move the HUD image down.

To adjust the brightness of the HUD image, see *Head-Up Display (HUD) on page 4-38*.

For information on adjusting the instrument panel brightness, see *Instrument Panel Brightness on page 4-35*.

i // **(Reset):** Press this button to reset certain DIC features and to acknowledge DIC warning messages and clear them from the DIC display.

(Trip Information): Press this button to scroll through the odometer, trip odometer A and trip odometer B. To reset each trip odometer, either press the reset button or press and hold the trip information button until the trip odometer displayed returns to zero.

Information Display Menu Items

The following display menu items can be displayed by pressing the information button.

MPH (km/h)

If the vehicle has this display, it shows the vehicle's speed digitally in either miles per hour (mph) or kilometers per hour (km/h).

MILES RANGE (km RANGE)

This display shows the approximate number of remaining miles (mi) or kilometers (km) you can drive without refilling the fuel tank. This estimate is based on the current driving conditions and will change if the driving conditions change. For example, if you are driving in traffic making frequent stops, the display may read one number, but if you enter the freeway, the number may change even though you still have the same amount of fuel in the fuel tank. This is because different driving conditions produce different fuel economies. Generally, freeway driving produces better fuel economy than city driving.

Once the range drops below about 40 miles (64 km) remaining, the display will show LOW RANGE.

If your vehicle is low on fuel, the Fuel Level Low message will be displayed. See “Fuel Level Low” under *DIC Warnings and Messages on page 4-76* for more information.

MPG AVG (L/100 km AVG)

This display shows the approximate average miles per gallon (mpg) or liters per 100 kilometers (L/100 km). This number is calculated based on the number of mpg (L/100 km) recorded since the last time this display was reset. To reset MPG AVG, press the reset button. The display will return to zero.

MPG INST (L/100 km INST)

This display shows the current fuel economy. This number reflects only the fuel economy that the vehicle has right now and will change frequently as driving conditions change. Unlike average fuel economy, this display cannot be reset.

GAL FUEL USED (L FUEL USED)

This display shows the number of gallons (gal) or liters (L) of fuel used since the last reset of this display. To reset GAL FUEL USED, press the reset button. The display will return to zero.

AVG MPH (AVG km/h)

This display shows the average speed of the vehicle in miles per hour (mph) or kilometers per hour (km/h). This average is calculated based on the various vehicle speeds recorded since the last reset of this display. To reset AVG MPH, press the reset button. The display will return to zero.

HUD Speed Advisor ON/OFF (On Vehicles with HUD)

If the vehicle has HUD, you can choose to have the Speed Limit/Speed Advisory display appear in the HUD. The DIC will toggle between ON and OFF. Press the reset button to make your selection. See *Head-Up Display (HUD) on page 4-38* for more information.

SPEED LIMIT: XXX MPH (SPEED LIMIT: XXX Km/h) or ADVISORY: XXX MPH (ADVISORY: XXX Km/h) (On Vehicles without HUD)

This display will show the speed limit or the advised speed as determined by the information on the map disc in the navigation system. If there is no map disc in the navigation system, this display will not be available.

The speed limit and speed advisory displays on the DIC and the HUD, if equipped, are for reference only. There may be segments of road where speed data has not been captured or times where incorrect speed data, or no speed data, will be displayed by the DIC and the HUD due to the navigation system not correctly matching the vehicle's position to the actual road. Be aware of this and obey posted speed limits wherever you drive.

SPEED ALERT

This display will allow you to customize the speed alert warning. You can choose to have no warning display, or to have it display at the limit, at 5 mph (km/h) over the limit, or at 10 mph (km/h) over the limit. The DIC will toggle between OFF, AT LIMIT, +5 , +10 (MPH or Km/h). Press the reset button to make your selection.

TIMER OFF

This display can be used like a stopwatch. You can record the time it takes to travel from one point to another. To access the timer, press the information button until 00:00:00 TIMER OFF displays. To turn on the timer, press the reset button until TIMER ON displays. The timer will then start. To turn off the timer, press the reset button again until TIMER OFF displays. The timer will stop and display the end timing value. To reset the timer, press and hold the reset button after the timer has been stopped. The display will return to zero.

BATTERY VOLTS

This display shows the current battery voltage. If the voltage is in the normal range, the value will display. For example, the display may read 13.2 BATTERY VOLTS. If the voltage is low, the display will have LOW after it. If the voltage is high, the display will have HIGH after it. Your vehicle's charging system regulates voltage based on the state of the battery. The battery voltage may fluctuate when viewing this information on the DIC. This is normal. See *Charging System Light on page 4-57* for more information.

If there is a problem with the battery charging system, the DIC may display a message. See *DIC Warnings and Messages on page 4-76* and *Electric Power Management on page 4-37* for more information.

Tire Pressure

This display shows the pressure for each tire in either pounds per square inch (psi) or kilopascals (kPa). If the tire pressure is normal, the value will display. If the tire pressure is low, LOW will appear on the display with the value. See *Inflation - Tire Pressure on page 6-60* and *DIC Warnings and Messages on page 4-76* for more information. Press the information button to scroll through the following displays:

LF TIRE : This display shows the pressure in the driver side front tire.

RF TIRE : This display shows the pressure in the passenger side front tire.

LR TIRE : This display shows the pressure in the driver side rear tire.

RR TIRE : This display shows the pressure in the passenger side rear tire.

If the tire pressure display shows dashes instead of a value, there may be a problem with your vehicle. If this consistently occurs, see your dealer/retailer for service.

ENGINE OIL LIFE

If your vehicle has this display, it shows the estimated oil life remaining. If you see 99% ENGINE OIL LIFE on the display, that means that 99% of the current oil life remains.

When the oil life is depleted, the CHANGE ENGINE OIL SOON message will appear on the display. Change the oil as soon as possible. In addition to the engine oil life system monitoring the oil life, additional maintenance is recommended in the Maintenance Schedule in this manual. See *Scheduled Maintenance on page 7-3* and *Engine Oil on page 6-18*.

After an oil change, reset the ENGINE OIL LIFE display. To reset, see *Engine Oil Life System on page 6-21*. The display will show 100% ENGINE OIL LIFE after it has been reset. Also clear the CHANGE ENGINE OIL SOON message from the display.

ENGLISH DISPLAY UNITS (METRIC DISPLAY UNITS)

This display allows you to select between English and metric units of measurement if your vehicle has the uplevel DIC. Press the reset button to switch between English and metric units.

Blank Line

This display shows no information.

Trip Information Display Menu Items

The following display menu items can be displayed by pressing the trip Information button.

Odometer

Press the trip information button until the odometer appears on the DIC display. The odometer shows the total distance the vehicle has been driven in either miles (mi) or kilometers (km).

Trip Odometer

Press the trip information button until trip odometer A or B appears on the DIC display. The trip odometer shows the current distance traveled since the last reset for each trip odometer in either miles (mi) or kilometers (km). Both odometers can be used at the same time.

For base level vehicles, each trip odometer can be reset to zero separately by pressing and holding the bottom of the trip information button while the desired trip odometer is displayed. For uplevel vehicles, reset each trip odometer by pressing the reset button or by pressing and holding the trip information button while the desired trip odometer is displayed.

DIC Warnings and Messages

Messages are displayed on the DIC to notify the driver that the status of the vehicle has changed and that some action may be needed by the driver to correct the condition. Multiple messages may appear one after another.

The text messages are the same for both the base audio and Navigation systems unless otherwise indicated.

Some messages may not require immediate action, but you can press the reset button to acknowledge that you received the messages and to clear them from the display.

Some messages cannot be cleared from the DIC display because they are more urgent. These messages require action before they can be cleared. Take any messages that appear on the display seriously and remember that clearing the messages will only make the messages disappear, not correct the problem.

The following are the possible messages that can be displayed and some information about them.

ADVISORY: XXX MPH (KM/H)

This message displays when the Speed Alert has been turned on through the DIC Information Menu and the vehicle is at or above the advised speed. See *DIC Operation and Displays on page 4-70* for more information.

AUTOMATIC LIGHTS OFF

This message displays when the automatic headlamps are turned off. See *Headlamps on page 4-27* for more information.

AUTOMATIC LIGHTS ON

This message displays when the automatic headlamps are turned on. See *Headlamps on page 4-27* for more information.

BATTERY NOT CHARGING SERVICE CHARGING SYS (System)

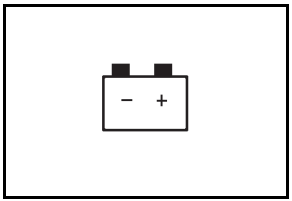

This symbol appears with this message.

This message displays when a problem with the charging system has been detected. Have your vehicle serviced by your dealer/retailer.

BATTERY SAVER ACTIVE

This message displays when the system detects that the battery voltage is dropping beyond a reasonable level. The battery saver system starts reducing certain features of the vehicle that may be noticeable. At the point that the features are disabled, this message is displayed. It means that the vehicle is trying to save the charge in the battery.

Turn off all unnecessary accessories to allow the battery to recharge.

The normal battery voltage range is 11.5 to 15.5 volts. To monitor battery voltage on the DIC, press the information button until BATTERY VOLTS displays.

BATTERY VOLTAGE HIGH

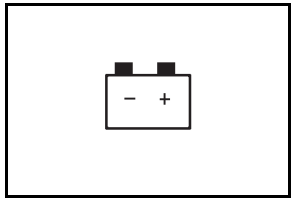

This symbol appears with this message.

This message displays when the electrical charging system is overcharging the battery. When the system detects that the battery voltage is above an estimated 16 volts, this message displays.

To reduce the charging overload, use the vehicle's accessories:

- Turn on the exterior lamps and radio.
- Set the climate control on AUTO and the fan speed on the highest setting.
- Turn the rear window defogger on.

The normal battery voltage range is 11.5 to 15.5 volts when the engine is running. To monitor battery voltage on the DIC, press the information button until BATTERY VOLTS displays.

BATTERY VOLTAGE LOW

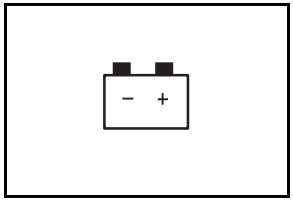

This symbol appears with this message.

This message displays when the electrical system is charging less than 10 volts or the battery has been drained.

If this message appears immediately after starting the engine, it is possible that the generator can still recharge the battery. The battery should recharge while driving, but may take a few hours to do so. Consider using an auxiliary charger to boost the battery after returning home or to a final destination. Follow the manufacturer's instructions.

If this message appears while driving or after starting your vehicle and stays on, have it checked immediately to determine the cause of this problem.

To help the generator recharge the battery quickly, reduce the load on the electrical system by turning off the accessories.

The normal battery voltage range is 11.5 to 15.5 volts. To monitor battery voltage on the DIC, press the information button until BATTERY VOLTS displays.

CHANGE ENGINE OIL SOON

This message displays when the engine oil needs to be changed. See your dealer/retailer. See *Engine Oil on page 6-18* and *Scheduled Maintenance on page 7-3* for more information.

After resetting the CHANGE ENGINE OIL SOON message by clearing it from the display, reset the engine oil life system separately. For more information on resetting the engine oil life system, see *Engine Oil Life System on page 6-21*.

CHECK BRAKE FLUID

This message displays if the ignition is on to inform the driver that the brake fluid level is low. Have the brake system serviced by your dealer/retailer as soon as possible. See *Brake System Warning Light on page 4-58* for more information.

CHECK GAS CAP

This message displays when the fuel cap has not been fully tightened. Recheck the fuel cap to ensure that it is on and tightened properly.

CHECK TIRE PRESSURE

This message displays when the pressure in one or more of the vehicle's tires needs to be checked. If a tire pressure message appears on the DIC, stop as soon as you can. Have the tire pressures checked and set to those shown on the Tire Loading Information label. See *Tires on page 6-52*, *Loading the Vehicle on page 5-23*, and *Inflation - Tire Pressure on page 6-60*. The DIC also shows the tire pressure values. See *DIC Operation and Displays on page 4-70*. If the tire pressure is low, the low tire pressure warning light comes on. See *Tire Pressure Light on page 4-62*.

CHECK WASHER FLUID

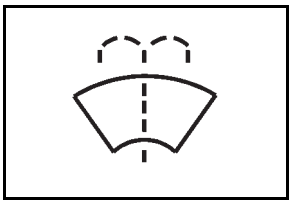

This symbol appears with this message.

This message displays when the windshield washer fluid is low. Fill the windshield washer fluid reservoir as soon as possible. See *Windshield Washer Fluid on page 6-36* for more information.

CLEAN RADAR

This message displays when the Adaptive Cruise Control system is disabled because the radar is blocked and cannot detect vehicles in your path. It may also activate during heavy rain or due to road spray. To clean the system, see “Cleaning the System” under *Adaptive Cruise Control on page 4-15*.

DRIVER DOOR AJAR

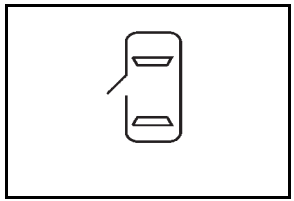

This symbol appears with this message.

This message displays when the driver door is not closed completely. Make sure that the door is closed completely.

ENGINE COOLANT HOT IDLE ENGINE

Notice: **If you drive your vehicle while the engine is overheating, severe engine damage may occur. If an overheat warning appears on the instrument panel cluster and/or DIC, stop the vehicle as soon as possible. Do not increase the engine speed above normal idling speed. See *Engine Overheating on page 6-32* for more information.**

This symbol appears with this message.

This message displays when the engine coolant temperature is too hot. Stop and allow the vehicle to idle until it cools down. See *Engine Coolant Temperature Warning Light on page 4-61*.

See *Overheated Engine Protection Operating Mode on page 6-34* for information on driving to a safe place in an emergency.

ENGINE HOT – AC (Air Conditioning) OFF

This message displays when the engine coolant becomes hotter than the normal operating temperature. See *Engine Coolant Temperature Gage on page 4-61*. To avoid added strain on a hot engine, the air conditioning compressor is automatically turned off. When the coolant temperature returns to normal, the air conditioning compressor turns back on. You can continue to drive your vehicle.

If this message continues to appear, have the system repaired by your dealer/retailer as soon as possible to avoid damage to the engine.

ENGINE POWER REDUCED

This message displays when the engine power is being reduced to protect the engine from damage. There could be several malfunctions that might cause this message. Reduced engine power can affect the vehicle's ability to accelerate. If this message is on, but there is no reduction in performance, proceed to your

destination. The performance may be reduced the next time the vehicle is driven. The vehicle may be driven at a reduced speed while this message is on, but acceleration and speed may be reduced. Anytime this message stays on, take the vehicle to your dealer/retailer for service as soon as possible.

ENGINE PROTECTION REDUCED RPM'S (Revolutions Per Minute)

This message displays when your vehicle is in an overheated engine operating mode. If this message appears, the vehicle has determined that continued operation at the existing engine speed may lead to engine overheating. The vehicle automatically limits engine RPMs to prevent engine overheating. You may notice the vehicle upshifting early or reduced speeds while this message is displayed. When the engine oil returns to a safe operating temperature, this message clears from the DIC and the vehicle returns to normal operation. Your vehicle does not require service when this message is displayed.

FUEL LEVEL LOW

This symbol appears with this message.

This message displays and a chime sounds if the fuel level is low. Refuel as soon as possible. See *Fuel Gage on page 4-68* and *Fuel on page 6-6* for more information.

HOOD AJAR

This symbol appears with this message.

This message displays when the hood is not closed completely. Make sure that the hood is closed completely. See *Hood Release on page 6-12*.

ICE POSSIBLE

This message displays when the outside temperature is cold enough to create icy road conditions. Adjust your driving accordingly.

KEY FOB BATTERY LOW

This message displays when the battery in the keyless access transmitter is low. Replace the battery in the transmitter. See “Battery Replacement” under *Keyless Access System Operation on page 3-5*.

LANE DEPARTURE SYSTEM UNAVAILABLE

If your vehicle has the Lane Departure Warning (LDW) system, this message may display if the LDW system does not activate due to a temporary condition. See the Index in the Navigation manual for more information.

LEFT REAR DOOR AJAR

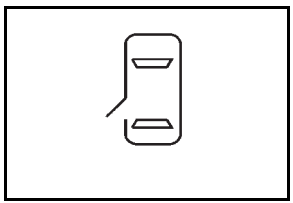

This symbol appears with this message.

This message displays when the driver side rear door is not closed completely. Make sure that the door is closed completely.

NO FOBS DETECTED

This message displays if the vehicle does not detect the presence of a keyless access transmitter when you have attempted to start the vehicle or a vehicle door has just closed. The following conditions may cause this message to appear:

- Driver-added equipment plugged into the accessory power outlet on the center console is causing interference. Examples of these devices are cell phones and cell phone chargers, two-way radios, power inverters, or similar items. Try moving the keyless access transmitter away from these devices when starting the vehicle. In addition, PDA devices and remote garage and gate openers may also generate Electromagnetic Interference (EMI) that may interfere with the keyless access transmitter. Do not carry the keyless access transmitter in the same pocket or bag as these devices.
- The vehicle is experiencing Electromagnetic Interference (EMI). Some locations, such as airports, automatic toll booths, and some gas stations, have EMI fields which may interfere with the keyless access transmitter.

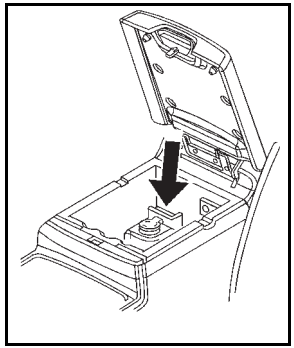

If moving the transmitter to different locations within the vehicle does not help, place the transmitter in the center console transmitter pocket with the buttons facing forward and then press the START button.

- The vehicle's battery voltage is low. The battery voltage must be above 10 volts for the keyless access transmitter to be detected properly.

NO FOB OFF OR RUN?

This message displays when the keyless access transmitter is not detected inside the vehicle while you are trying to turn the ignition off. Your vehicle may be near a strong radio antenna signal causing the keyless access system to be jammed. The vehicle remains in ACCESSORY until OFF or START has been pressed or 10 minutes has expired. If you turn the ignition off and you cannot find the keyless access transmitter, you will not be able to restart the vehicle. The keyless access transmitter needs to be inside of the vehicle in order for the vehicle to start. See *Starting the Engine on page 3-27* for more information.

OIL PRESSURE LOW STOP ENGINE

Notice: **If you drive your vehicle while the engine oil pressure is low, severe engine damage may occur. If a low oil pressure warning appears on the instrument panel cluster and/or DIC, stop the vehicle as soon as possible. Do not drive the vehicle until the cause of the low oil pressure is corrected. See *Engine Oil on page 6-18* for more information.**

This message displays when the vehicle's engine oil pressure is low.

A multiple chime sounds when this message is displayed. See *Engine Oil on page 6-18* for more information.

Stop the vehicle immediately, as engine damage can result from driving a vehicle with low oil pressure. Have the vehicle serviced by your dealer/retailer as soon as possible when this message is displayed.

PASSENGER DOOR AJAR

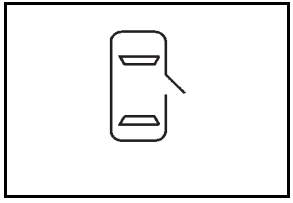

This symbol appears with this message.

This message displays when the passenger side front door is not closed completely. Make sure that the door is closed completely.

PRESS START AND BRAKE TO START ENGINE

This message displays when you need to press down on the brake pedal while pressing the start button on the electronic keyless ignition when trying to start your vehicle. See *Starting the Engine on page 3-27* for more information.

RADAR CRUISE NOT READY

This message displays when the Adaptive Cruise Control system is not activating due to a temporary condition. Your vehicle does not require service. This message also displays when either of the following conditions occur:

- The driver turns off the head-up display (HUD) while the Adaptive Cruise Control is engaged.
- The driver attempts to engage the Adaptive Cruise Control while the HUD is off.

If this message appears when attempting to activate the system, continue driving for several minutes and then try activating the system again.

RIGHT REAR DOOR AJAR

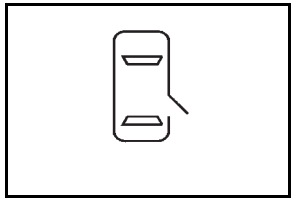

This symbol appears with this message.

This message displays when the passenger side rear door is not closed completely. Make sure that the door is closed completely.

SERVICE AC (Air Conditioning) SYSTEM

This message displays when the electronic sensors that control the air conditioning and heating systems are no longer working. Have the climate control system serviced by your dealer/retailer if a drop in heating and air conditioning efficiency is noticeable.

SERVICE AIR BAG

This message displays if there is a problem with the airbag system. Have your vehicle serviced by your dealer/retailer immediately. See *Airbag Readiness Light on page 4-54* for more information.

SERVICE BRAKE ASSIST

This message displays when a problem with the panic brake assist system has been detected. Have your vehicle serviced by your dealer/retailer.

SERVICE LANE DEPARTURE SYSTEM

If your vehicle has the Lane Departure Warning (LDW) system, this message may display to indicate that the LDW system is not working properly. If this message remains on after continued driving, the system needs service. See your dealer/retailer. See the Index in the Navigation manual for more information.

SERVICE RADAR CRUISE

This message displays when the Adaptive Cruise Control system is disabled and needs service. See your dealer/retailer.

SERVICE SIDE BLIND ZONE ALERT SYSTEM

If your vehicle has the Side Blind Zone Alert (SBZA) system and this message displays, both SBZA displays will remain on indicating there is a problem with the SBZA system. If these displays remain on after continued driving, the system needs service. See your dealer/retailer. See the Index in the Navigation manual for more information.

SERVICE STABILITY SYS (System)

Your vehicle has a vehicle stability enhancement system called StabiliTrak®. All-Wheel Drive (AWD) vehicle with the Active Steering with Enhanced StabiliTrak option have a stability enhancement system called Enhanced StabiliTrak.

This message displays if there has been a problem detected with the stability system.

If this message comes on while driving, pull off the road as soon as possible and stop carefully. Try resetting the system by turning the ignition off then back on. If this message still stays on or comes back on again while driving, your vehicle needs service. Have the stability

system inspected by your dealer/retailer as soon as possible. See *StabiliTrak® System on page 5-6* or *Enhanced StabiliTrak® on page 5-7* for more information.

For vehicles with the Active Steering with Enhanced StabiliTrak option, in some cases when the SERVICE STABILITY SYS message is displayed, a larger degree of steering wheel input at low vehicle speeds and a smaller degree of steering wheel input at higher vehicle speeds may be required.

SERVICE STEERING SYS (System)

Your vehicle has a speed variable assist steering system. Your All-Wheel Drive (AWD) vehicle may have the Active Steering with Enhanced StabiliTrak option. See “Active Steering” under *Steering on page 5-11*.

This message displays if a problem is detected with the speed variable assist steering system or the Active Steering system. When this message is displayed, you may notice that the effort required to steer the vehicle increases or feels heavier, but you will still be able to steer the vehicle. See *Steering on page 5-11* for more information. Have the steering system inspected by your dealer/retailer as soon as possible.

If the SERVICE STEERING SYS message appears because the Active Steering system needs service, normal power steering is still operational. However, compared to Active Steering, normal power steering requires a larger degree of steering wheel input at low vehicle speeds and a smaller degree of steering wheel input at high vehicle speeds. The center position of the steering wheel may be different. You may continue to drive your vehicle with normal power steering, but have the steering system inspected by your dealer/retailer as soon as possible.

If the Active Steering system needs service, the system may be operating in the Stability Secure Mode and the STABILITY SECURE MODE message will display. See *Enhanced StabiliTrak® on page 5-7*.

When certain steering faults are present, the vehicle speed may be limited. If vehicle speed is limited, the SPEED LIMITED TO XXX message will display. See “Active Steering” under *Steering on page 5-11*.

SERVICE SUSPENSION SYS (System)

This message displays when the suspension system is not operating properly. Have your vehicle serviced by your dealer/retailer.

If your All-Wheel Drive (AWD) vehicle has the Active Steering with Enhanced StabiliTrak option and the suspension system needs service, the Enhanced StabiliTrak system may be operating in the Stability Secure Mode and the STABILITY SECURE MODE message will display. See *Enhanced StabiliTrak® on page 5-7*.

SERVICE TIRE MONITOR

This message displays if a part on the Tire Pressure Monitor System (TPMS) is not working properly. The tire pressure light also flashes and then remains on during the same ignition cycle. See *Tire Pressure Light on page 4-62*. Several conditions may cause this message to appear. See *Tire Pressure Monitor Operation on page 6-64* for more information. If the warning comes on and stays on, there may be a problem with the TPMS. See your dealer/retailer.

SERVICE THEFT SYSTEM

This message displays when there is a problem with the hood open and closed switches. The switches may need to be replaced. When this message is displayed, the theft-deterrent system will still be protecting the interior of the vehicle, however, the hood area will not be protected at this time. Also, the remote start function will not work when this message appears. See your dealer/retailer for service.

SERVICE TRANSMISSION

This message displays when there is a problem with the transmission. Have your vehicle serviced by your dealer/retailer.

SERVICE VEHICLE SOON

This message displays when a non-emissions related malfunction occurs. Have your vehicle serviced by your dealer/retailer as soon as possible.

SIDE BLIND ZONE ALERT SYSTEM OFF

If your vehicle has the Side Blind Zone Alert (SBZA) system, this message displays when the SBZA system has been turned off. See *Side Blind Zone Alert (SBZA) on page 3-44* and *DIC Operation and Displays on page 4-70* for more information.

SIDE BLIND ZONE SYSTEM UNAVAILABLE

If your vehicle has the Side Blind Zone Alert (SBZA) system, this message displays when the SBZA system is disabled because the sensor is blocked and cannot detect vehicles in your blind zone. The sensor may be blocked by mud, dirt, snow, ice, or slush. This message may also display during heavy rain or due to road spray. Your vehicle does not need service. For cleaning instructions, see *Washing Your Vehicle on page 6-111*. See *Side Blind Zone Alert (SBZA) on page 3-44* for more information.

SPEED LIMIT: XXX MPH (KM/H)

This message displays when the Speed Alert has been turned on through the DIC Information Menu and the vehicle is at or above the speed limit. See *DIC Operation and Displays on page 4-70* for more information.

SPEED LIMITED TO XXX

This message displays when the vehicle speed is limited to XXX, mph in English mode and km/h in Metric mode, because the vehicle detects a problem in the steering, stability control, or suspension system. Have your vehicle serviced by your dealer/retailer.

STABILITY COMPETITIVE MODE

If your All-Wheel Drive (AWD) vehicle has the Active Steering with Enhanced StabiliTrak option, this message displays when the Competitive Mode for stability control has been turned on using the TC (traction control) button. See *Enhanced StabiliTrak® on page 5-7* for more information. When the Enhanced StabiliTrak Competitive Mode has been activated, traction control operates in competitive mode and cannot be turned off. Also, the Active Steering and the Magnetic Ride Control systems operate in the Performance Mode. For more information, see “Active Steering and Magnetic Ride Control” in the Index in the Navigation manual.

STABILITY SECURE MODE

If your All-Wheel Drive (AWD) vehicle has the Active Steering with Enhanced StabiliTrak option, this message displays when the stability control system is in the secure mode. Stability Secure Mode is set automatically when certain system faults or vehicle conditions are detected. When the Stability Secure Mode is activated, the stability control system will not respond to driver requests to change the stability mode until the next ignition cycle or until the vehicle condition or fault is returned to normal. See *Enhanced StabiliTrak® on page 5-7* for more information.

STABILITY SYS (System) ACTIVE

This message displays any time the StabiliTrak system or Enhanced StabiliTrak system is actively assisting with directional control of the vehicle. Slippery road conditions may exist when this message is displayed, so adjust your driving accordingly. This message may stay on for a few seconds after StabiliTrak stops assisting with directional control of the vehicle. See *StabiliTrak® System on page 5-6* or *Enhanced StabiliTrak® on page 5-7* for more information.

STABILITY SYS (System) NOT READY

This message displays if the StabiliTrak system is not ready. Two conditions may cause this message to display:

- The vehicle needs to be driven in a straight line until the sensors are centered. Once the sensors are centered, the StabiliTrak system is ready and the STABILITY SYS READY message displays.
- The system needs to warm up. This may occur when first starting your vehicle and driving away during cold winter weather. This is normal. To acknowledge this message, press the reset button.

The StabiliTrak performance is affected until the STABILITY SYS READY message is displayed in the DIC. See *StabiliTrak® System on page 5-6* for more information.

STABILITY SYS (System) OFF

This message displays any time StabiliTrak or Enhanced StabiliTrak is turned off using the TC (traction control) on/off button. See *Traction Control System (TCS) on page 5-9* and “Enhanced StabiliTrak and Traction Control Mode Selection” under *Enhanced StabiliTrak® on page 5-7* for more information.
When this message has been displayed, StabiliTrak or Enhanced StabiliTrak is no longer available to assist

with directional control of the vehicle. Adjust your driving accordingly. See *StabiliTrak® System on page 5-6* or *Enhanced StabiliTrak® on page 5-7* for more information.

STABILITY SYS (System) READY

This message displays any time StabiliTrak is turned back on using the TC (traction control) on/off button. See *Traction Control System (TCS) on page 5-9* for more information. When this message has been displayed, StabiliTrak is ready to assist with directional control of the vehicle, if needed. See *StabiliTrak® System on page 5-6* for more information.

STABILITY TOURING MODE

If your All-Wheel Drive (AWD) vehicle has the Active Steering with Enhanced StabiliTrak option, this message displays when the Stability Touring Mode is re-activated by using the traction control button after:

- Driving in the Stability Competitive Mode.
- The stability control system is turned off by the driver.

This message may also display after exiting STABILITY SECURE MODE when certain system faults or vehicle conditions have been cleared. See *Enhanced StabiliTrak® on page 5-7*.

STARTING DISABLED THEFT PROBLEM

This message displays when incorrect conditions exist within the theft-deterrent system. See your dealer/retailer for service.

STARTING DISABLED THROTTLE PROBLEM

This message displays when your vehicle's throttle system is not functioning properly. Have your vehicle serviced by your dealer/retailer.

THEFT ATTEMPTED

This symbol appears with this message.

This message displays if the theft-deterrent system has detected a break-in attempt while you were away from your vehicle.

TRACTION ACTIVE

This message displays when the Traction Control System (TCS) is actively limiting wheel spin. Slippery road conditions may exist if this message is displayed, so adjust your driving accordingly. The message stays on for a few seconds after the TCS stops limiting wheel spin. See *Traction Control System (TCS) on page 5-9* for more information.

TRANS (Transmission) HOT IDLE ENGINE

Notice: **If you drive your vehicle while the transmission fluid is overheating and the transmission temperature warning is displayed on the instrument panel cluster and/or DIC, you can damage the transmission. This could lead to costly repairs that would not be covered by your warranty. Do not drive your vehicle with overheated transmission fluid or while the transmission temperature warning is displayed.**

This message displays when the transmission fluid in your vehicle is too hot. Stop the vehicle and allow it to idle until the transmission cools down or until this message is removed.

TRUNK OPEN

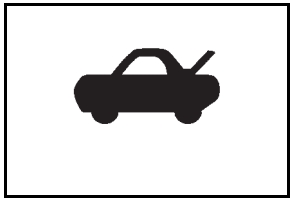

This symbol appears with this message.

This message displays when the trunk is not closed completely. Make sure that the trunk is closed completely.

TURN SIGNAL ON

This message displays and a chime sounds if a turn signal is left on for about 1 mile (1.6 km). Turn off the turn signal.

Other Messages

Here are more messages that you can receive on your Driver Information Center (DIC). To acknowledge a message and read another message that may have come on at the same time, press the reset button.

- ACCESSORY ACTIVE

  See *Ignition Positions on page 3-26*.

- KNOWN FOB

  See “Matching Transmitter(s) to Your Vehicle” under *Keyless Access System Operation on page 3-5*.

- MAX # FOBS LEARNED

  See “Matching Transmitter(s) to Your Vehicle” under *Keyless Access System Operation on page 3-5*.

- OFF/ACC (Accessory) TO LEARN

  See “Matching Transmitter(s) to Your Vehicle” under *Keyless Access System Operation on page 3-5*.

- READY FOR FOB X

  See “Matching Transmitter(s) to Your Vehicle” under *Keyless Access System Operation on page 3-5*.

- SHIFT TO PARK

  See *Starting the Engine on page 3-27* and *Shifting Into Park on page 3-34*.

- WAIT XX MIN (Minutes)

  See “Matching Transmitter(s) to Your Vehicle” under *Keyless Access System Operation on page 3-5*.

Audio System(s)

Determine which radio the vehicle has and read the following pages to become familiar with its features.

⚠ WARNING:

Taking your eyes off the road for extended periods could cause a crash resulting in injury or death to you or others. Do not give extended attention to entertainment tasks while driving.

This system provides access to many audio and non audio listings.

To minimize taking your eyes off the road while driving, do the following while the vehicle is parked:

- Become familiar with the operation and controls of the audio system.
- Set up the tone, speaker adjustments, and preset radio stations.

For more information, see *Defensive Driving on page 5-2*.

Notice: **Contact your dealer/retailer before adding any equipment.**

Adding audio or communication equipment could interfere with the operation of the vehicle's engine, radio, or other systems, and could damage them. Follow federal rules covering mobile radio and telephone equipment.

The vehicle has Retained Accessory Power (RAP). With RAP, the audio system can be played even after the ignition is turned off. See *Retained Accessory Power (RAP) on page 3-26* for more information.

Setting the Clock

To adjust the time:

1. Press ▷▷| ,located on the radio, to enter the main menu.
2. Turn ▷▷| until SET CLOCK displays.
3. Press ▷▷| to select SET CLOCK.
4. Turn ▷▷| to adjust the time.
5. Press ▷▷| to update the time and VEHICLE TIME UPDATED displays.

To adjust the date:

1. Press ▷▷| to enter the main menu.
2. Turn ▷▷| until SET DATE displays.
3. Press ▷▷| to select SET DATE.
4. Turn ▷▷| to adjust the date.
5. Press ▷▷| to update the date and VEHICLE DATE UPDATED displays.

Radio(s)

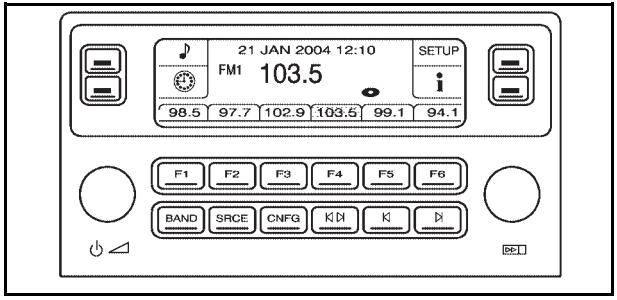

Radio with CD shown, Radio with Six-Disc CD similar

Playing the Radio

⏻ **(Power):** Press to turn the system on and off.

◿ **(Volume) :** Turn to increase or to decrease the volume.

SRCE (Source) : Press to select between the radio or the CD player.

Radio Data System (RDS)

The audio system has RDS features that are available for use only on FM stations that broadcast RDS information.

With RDS:

- Stations can be selected based on programming
- Stations with traffic announcements can be selected
- Announcements concerning local and national emergencies can be received.
- Messages display from radio stations.

RDS relies on receiving specific information from radio stations and only works when the information is available. In rare cases, a radio station could broadcast incorrect information that causes the radio features to work improperly. Contact the radio station if this happens.

When the radio is tuned to an RDS station, the station name or call letters display instead of the frequency. RDS stations can also provide the time of day, a program type (PTY) for current programming, and the name of the program being broadcast.

Finding a Station

BAND : Press to select FM1, FM2, AM, or XM1 or XM2.

(Tune): Turn to select radio stations.

(Seek): Press to go to the previous or next station and stay there. The radio only seeks stations with a strong signal in the selected band, and the sound mutes while seeking.

(Scan): Press to scan stations or preset stations. The radio only scans stations with a strong signal in the selected band.

To scan stations:

1. Press and release or , SCAN displays. The radio goes to a station, plays for five seconds, then goes to the next station.
2. Press and release or again to stop scanning.

To scan preset stations:

1. Press and hold ⊲ or ⊳ for more than two seconds until a beep sounds and PSCAN displays. The radio goes to the first preset station, plays for five seconds, then goes to the next preset station.
2. Press and release ⊲ or ⊳ to stop scanning.

LOCAL/DISTANT Selection: The radio can be set to search for local stations or stations that are further away for a larger selection.

To select between LOCAL or DISTANT:

1. Press ▷▷| to enter the main menu.
2. Turn ▷▷| until SEEK LOCAL or SEEK DISTANT displays.
3. Press ▷▷| to select either LOCAL or DISTANT.
4. Press F6 to exit the display. To return to the original display, repeatedly press F6 or wait for the display to time out.

To search for stations, press ⊲ or ⊳ . If the system is set to LOCAL, SEEK displays and seeks to stations only with strong signals. If the system is set to DISTANT, D-SEEK displays and seeks to stations with weak and strong signals.

This feature does not function with the XM™ radio stations.

i (Information): Press while in XM mode to retrieve three different categories of information related to the current song or channel: Artist, Song Title, Category or PTY. To view this information:

1. Press ▷▷| to enter the main menu.
2. Turn ▷▷| until INFO displays.
3. Press ▷▷| to select INFO. The display changes to show the additional XM information.
4. Press F6 to exit the display. To return to the original display, repeatedly press F6 or wait for the display to time out.

Setting Preset Stations

Up to 30 stations (six FM1, six FM2, six AM, six XM1 and six XM2), can be programmed on the six numbered pushbuttons.

To program preset stations:

1. Tune to a station and select the equalization, DSP, or PTY (program type) setting if desired.
2. Press and hold one of the six numbered pushbuttons for two seconds until a beep sounds. The set preset station number displays above the set pushbutton. If the numbered pushbutton is pressed for less then two seconds, the radio tunes to the station set to that pushbutton.
3. Repeat the steps for each pushbutton.

AUTOSTORE PRESETS : When Autostore is used, the radio automatically searches the selected band and stores the six radio stations with the strongest signal. The stations are stored by signal strength, not sequential order. This feature does not function with XM radio stations.

To program autostore presets:

1. Press ▷▷| to enter the main menu.
2. Turn ▷▷| until AUTOSTORE PRESETS displays.
3. Press ▷▷| to select AUTOSTORE PRESETS. The radio begins searching and AUTOSTORE displays.
4. Press F6 to exit the display. To return to the original display, repeatedly press F6 or wait for the display to time out.

The radio presets do not have to be reset when the vehicle is started, or when the battery power is removed.

PRESETS HOME/AWAY : This feature stores two different kinds of station presets. HOME can be used for local stations and AWAY for stations outside of the local broadcasting area. This feature does not function with the XM radio stations.

To set preset stations for home and away:

1. Press ▷▷| to enter the main menu.
2. Turn ▷▷| until PRESETS HOME/AWAY displays.
3. Press ▷▷| to select HOME or AWAY.
4. Press F6 to exit the display. To return to the original display, repeatedly press F6 or wait for the display to time out.
5. Follow the steps for programming presets or autostore presets.

Adjusting the Tone (Bass/Midrange/Treble)

To adjust the bass, midrange, and treble:

1. Press ▷▷| to enter the main menu.
2. Turn ▷▷| until BASS-MID-TREBLE displays.
3. Press ▷▷| to enter the tone settings.
4. Press ▷▷| to scroll through the settings.
5. Turn ▷▷| to increase or to decrease the bass, midrange, or treble. If a station is weak or noisy, decrease the treble.
6. Press ▷▷| to set the adjustment.
7. Press F6 to exit the display. To return to the original display, repeatedly press F6 or wait for the display to time out.

AUDIO EQUALIZER : Use this feature to choose one of the following customized equalization settings.

- EQ0 (Normal)
- EQ1 (Pop)
- EQ2 (Rock)
- EQ3 (Jazz)
- EQ4 (Talk)
- EQ5 (Country)

To choose an equalization setting:

1. Press ▷▷| to enter the main menu.
2. Turn ▷▷| until EQUALIZER displays.
3. Press ▷▷| to set the equalization setting and the equalization setting displays.
4. Press F6 to exit the display. To return to the original display, repeatedly press F6 or wait for the display to time out.

Adjusting the Speakers (Balance/Fade)

To adjust the balance or fade:

1. Press ▷▷| to enter the main menu.
2. Turn ▷▷| until BALANCE-FADER displays.
3. Press ▷▷| to enter the settings.
4. Press ▷▷| to scroll to BALANCE or FADER.
5. Turn ▷▷| to adjust the BALANCE to the right or the left speakers and the FADER to the front or the rear speakers.
6. Press ▷▷| to set the adjustment.
7. Press F6 to exit the display. To return to the original display, repeatedly press F6 or wait for the display to time out.

EQ0 does not display while in this mode.

RDS Messages

ALERT : Displays when local or national emergency announcements are received. If the radio tunes to a related network station for the announcement, it returns to the original station when the announcement ends. The announcement should be heard even if the volume is low or a CD is playing. If a CD is playing, it will stop playing during the announcement.

- The RDS alert feature is not supported by all RDS radio stations.
- The RDS alert feature cannot be turned off.
- Alert is not affected by tests of the emergency broadcast system.

Displays if the current RDS station has a message. The message displays the artist, song title, call in phone numbers, etc. If the entire message does not display, parts of the message appear every three seconds until the message is completed. MSG disappears from the display once the completed message has displayed.

MSG (Message) : Displays if the current RDS station has a message. The message can display the artist, song title, call in phone numbers, etc. If the entire message does not display, parts of the message appear every three seconds until the message is completed. MSG disappears from the display once the completed message has displayed.

To display the last message:

1. Press ▷▷| to enter the main menu.
2. Turn ▷▷| until RECALL RDS MESSAGE displays.
3. Press ▷▷| and the message displays.

Once the message displays, MSG disappears from the display until another new message is received.

TP (Traffic Program) : Displays when the radio detects a signal from an RDS station that has traffic announcement broadcast capability.

TA (Traffic Announcement) : Displays when the feature is turned on and allows the radio to automatically seek radio stations that broadcast traffic announcements.

- If the current radio station broadcasts traffic announcements the station will not change.
- If the current radio station does not broadcast traffic announcements, the radio seeks to the first station that does. If the radio cannot find a station that broadcasts traffic announcements, No Traffic displays.
- If a CD is playing and the previous radio station broadcasts traffic announcements, the radio interrupts the CD for the traffic announcement.

To turn TA on or off:

1. Press ▷▷| to enter the main menu.
2. Turn ▷▷| until TRAFFIC ANNOUNCE displays.
3. Press ▷▷| to select ON or OFF. An X appears in the box when ON is selected.
4. Press F6 to exit the display. To return to the original display, repeatedly press F6 or wait for the display to time out.

Activating Program Type (PTY) Stations (RDS and XM™)

PTY lets the radio search for stations with specific types of music. When this feature is turned on, the PTYs display above the pushbuttons in place of the programmed preset stations. Not all stations support PTYs and the radio may not go to all of the stations with that music type when pressing the pushbutton.

The selectable PTYs are:

- CNTRY (Country)
- CLASS (Classical)
- EASY
- JAZZ
- POP
- TALK

To turn PTY on or off:

1. Press ▷▷| to enter the main menu.
2. Turn ▷▷| until PROGRAM TYPE MODE displays.
3. Press ▷▷| to select ON or OFF. An X appears in the box when ON is selected.
4. Press F6 to exit the display. To return to the original display, repeatedly press F6 or wait for the display to time out.

AF (Alternate Frequency) : Alternate frequency lets the radio switch to a stronger station with the same program type.

This feature does not function with XM radio stations.

To turn AF on or off:

1. Press ▷▷| to enter the main menu.
2. Turn ▷▷| until ALTERNATE FREQ. displays.
3. Press ▷▷| to select AF OFF, AF ON, or AF REG. An X appears in the box when ON is selected.
4. Press F6 to exit the display. To return to the original display, repeatedly press F6 or wait for the display to time out.

Radio Message

THEFTLOCK : Displays when the THEFTLOCK® system has been activated. Take the vehicle to your dealer/retailer for service.

XM Satellite Radio Service

XM is a satellite radio service that is based in the 48 contiguous United States and 10 Canadian provinces. XM Satellite Radio has a wide variety of programming and commercial-free music, coast-to-coast, and in digital-quality sound. A service fee is required to receive the XM service. For more information, contact XM at www.xmradio.com or call 1-800-929-2100 in the U.S. and www.xmradio.ca or call 1-877-438-9677 in Canada.

Radio Messages for XM Only

See *XM Radio Messages on page 4-112* XM Radio Messages later in this section for further detail.

Using the Single CD Player

Load a CD partway into the slot, label side up. The player pulls it in. The CD player can play the smaller 3 inch (8 cm) single CDs with an adapter ring. Full-size CDs and the smaller CDs are loaded in the same manner.

- The CD begins playing after it is loaded if the ignition and the radio are on.
- The CD starts to play where it was last stopped if it was the last selected audio source when the radio is turned on.
- The CD stays in the player when the ignition or radio is turned off.
- A CD can be loaded with the radio off, but it does not start playing until the radio is turned on.

When a CD is loaded, CD displays and the CD functions display above the pushbuttons in place of the programmed preset stations. The track number displays as each new track starts to play.

F1 ≪ (Reverse): Press and hold to reverse quickly within a track. Release to resume playback. The elapsed time of the track displays.

F2 ≫ (Forward): Press and hold to advance quickly within a track. Release to resume playback. The elapsed time of the track displays.

F3 RDM (Random) : Press to listen to the tracks in a random, rather than sequential order. RANDOM displays. Press again to turn off random play. RANDOM disappears from the display.

F4 RPT (Repeat) : Press to hear a track over again. REPEAT displays. Press again to turn off repeat play. REPEAT disappears from the display.

F6 DISP (Display) : Press to display the time of the track. Press again to remove the time of the track from the display.

⏮ ⏭ **(Seek):** Press to go to the previous or next track on the CD.

⏮ ⏭ **(Scan):** Press to listen to each track for 10 seconds. The CD goes to a track, plays for 10 seconds, then goes to the next track. Press again to stop scanning.

SRCE (Source) : Press to select a source, either radio or CD. The CD must be loaded to select the source and to play. CD displays if a CD is loaded. If a CD is not loaded, the display does not change from the radio source.

⏏ **(Eject):** Press to stop a CD when it is playing or to eject a CD when it is not playing. Eject can be used when the ignition and the radio are off.

Using the Six-Disc CD Changer

(Load): Press to load CDs into the CD player. This CD player holds up to six CDs.

To insert one CD:

1. The ignition and the radio can be on or off.
2. Press and release . Please Wait displays.
3. When INSERT displays, load a CD partway into the slot, label side up. The player pulls the CD in.

If the radio is on, the CD begins to play automatically. CD displays and the number of the CD and the track number displays.

To insert multiple CDs:

1. The ignition and the radio can be on or off.
2. Press and hold for two seconds. Please Wait displays and a beep sounds.
3. When INSERT displays, load the first CD partway into the slot, label side up, and the player pulls it in.
4. Wait until INSERT displays again to load the next CD.
5. Repeat Step 4 until all the desired CDs are loaded.

If the radio is on, the lased CD loaded begins to play automatically. CD displays and the number of the CD and the track number displays.

F1 DISC ↓ (Down): Press to go to the previous CD.

F2 DISC ↑ (Up): Press to go to the next CD.

F3 CD REV ≪ (Reverse): Press to go to the previous track. Press and hold to reverse quickly within the track. Release to resume playback.

F4 CD FWD ≫ (Forward): Press to go to the next track. Press and hold to advance quickly within the track. Release to resume playback.

F5 MODE : Press to select from:

- **NORMAL:** Sets the system for normal play of the CD(s). NORMAL does not display while in this mode.
- **RPT TRCK (Repeat Track):** Repeats the track over again. RPT TRCK displays. Press F5 MODE again to turn off repeat play. RPT TRCK disappears from the display.
- **RPT DISC (Repeat CD):** Repeats the CD over again. RPT DISC displays. Press F5 MODE again to turn off repeat play. RPT DISC disappears from the display.
- **RDM TRCK (Random Track):** Plays the tracks on the current CD in random, rather than sequential order. RDM TRCK displays. Press F5 MODE again to turn off random play. RDM TRCK disappears from the display.
- **RDM ALL (Random All CDs):** Plays all of the CDs loaded in random, rather than sequential order. RDM ALL displays. Press F5 MODE again to turn off random play. RDM ALL disappears from the display.

F6 DISP (Display) : Press to display the time of the track. Press again to display CD PLAY MODE.

⏮ ⏭ (Seek): Press to go to the previous or the next track on the CD.

⏮ ⏭ (Scan): Press to listen to each track for 10 seconds. The CD goes to a track, plays for 10 seconds, then goes to the next track. Press again to stop scanning.

⏏ (Eject): Press to eject the CD that is currently playing, or press and hold to eject all of the CDs loaded. A beep sounds. Eject can be used when the ignition and the radio are off.

Playing an MP3 CD-R Disc

Radios with the MP3 feature are capable of playing an MP3 CD-R disc. For more information on how to play an MP3 CD-R disc, see *Using an MP3 on page 4-108* later in this section.

Care of CDs

The sound quality of the CD player can be reduced because of:

- The CD-R quality.
- The method of recording the CD-R.
- The quality of the music that has been recorded on the CD-R.
- The way the CD-R has been handled.

Store CDs in their original cases or other protective cases and away from dust and direct sunlight. The CD player scans the bottom surface of the disc. If the surface of a CD is damaged, such as cracked, broken, or scratched, the CD may not play properly or at all. Do not touch the bottom side of a CD while handling it; this could damage the surface. Pick up CDs by grasping the outer edges or the edge of the hole and the outer edge.

To clean a CD, use a soft lint free cloth, or dampen a clean soft cloth in a mild neutral detergent solution mixed with water. Wipe the CD from the center to the edge.

Care of the CD Player

Use a marking pen to identify CDs, do not add labels.

Do not use CD lens cleaners, they could damage the CD player.

Notice: **If a label is added to a CD, or more than one CD is inserted into the slot at a time, or an attempt is made to play scratched or damaged CDs, the CD player could be damaged. While using the CD player, use only CDs in good condition without any label, load one CD at a time, and keep the CD player and the loading slot free of foreign materials, liquids, and debris.**

If an error displays, see “CD Messages” later in this section.

CD Messages

If the CD ejects, it could be for one of the following reasons:

- The CD player is very hot. When the temperature returns to normal, the CD should play.
- The road is very rough. When the road becomes smoother, the CD should play.
- The CD is dirty, scratched, wet, or upside down.

- The air is very humid. If so, wait about an hour and try again.
- The format of the CD might not be compatible. See *Using an MP3 on page 4-108* later in this section.
- A problem may have occurred while burning the CD.
- The label could be caught in the CD player.

If the CD is not playing correctly for any other reason, try a known good CD.

If any error occurs repeatedly or if an error cannot be corrected, contact your dealer/retailer. If the radio displays an error message, write it down and provide it to your dealer/retailer when reporting the problem.

Configurable Radio Display Keys

The four keys located on each side of the radio display can be configured to adjust the radio features and other non-radio related features. The configurable keys can be changed at any time. Once a feature is programmed to a key, the feature does not display when programming the remaining configurable keys.

To program the configurable radio display keys:

1. Press ▷▷| to enter the main menu.
2. Turn ▷▷| until SETUP displays.
3. Press ▷▷| to enter into SETUP.
4. Turn ▷▷| until CONFIGURE DISPLAY KEYS displays.
5. Press ▷▷| to enter into CONFIGURE DISPLAY KEYS.
6. Turn and then press ▷▷| to select the configurable key to be changed. The currently assigned feature displays.
7. Turn ▷▷| to find the feature that will be stored to the key.
8. Press ▷▷| to select the desired feature. The display updates by showing the symbol of the feature selected next to the configurable key.
9. Repeat the previous steps for each configurable key.

Using an MP3

MP3 CD-R Disc

MP3 Format

The MP3 player will only play CD-R discs. It can read and play a maximum of:

- 50 folders.
- 11 folders in depth
- 50 playlists
- 10 sessions
- 255 files

All folders, playlists, sessions and files over the maximum are ignored.

When recording an MP3 disc, make sure that:

- Playlists use an .m3u or .wpl extension.
- Standard audio and compressed audio files are not mixed on the same disc.
- The disc is finalized when using multiple sessions.

File Naming

Song title, artist name, and album are available for display by the radio when recorded using ID3 tags version 1 and 2.

The song name that is displayed on the radio is the song name that is contained in the ID3 tag. If the song name is not present in the ID3 tag, the radio displays the file name without the file extension as the track name.

Track names longer than 32 characters or four pages are shortened. Parts of words on the last page of text and the extension of the filename do not display.

Order of Play

Playlists are accessed before files or folders in the root directory.

CD's that have playlists play the tracks in the following order:

1. After the first track in the first playlist ends, play continues sequentially through all tracks in each playlist
2. After the last track of the last playlist ends, play restarts from the first track of the first playlist.

CD's that do not have playlists play the tracks in the following order:

1. The first file in the root directory plays.
2. After all files from the root directory have played, files in the folders play.
3. After playing the last file from the last folder, play restarts with the first file in the root directory.

Preprogrammed Playlists

Preprogrammed playlists created by WinAmp™, MusicMatch™, or Real Jukebox™ software can be accessed, but not edited by the radio, and are treated as special folders containing compressed audio song files.

Root Directory

The root directory is treated as a folder and displays on the radio as F1 ROOT. All compressed audio files in the root directory are accessed before folders in the root directory.

Empty Directory or Folder

Empty folders and directories do not display on the radio and the system ignores them and advances to the next directory or folder that has compressed audio files in it.

No Folder

On a CD that only contains compressed audio files in the root directory, the next and previous folder functions do not work. The radio displays ROOT when displaying the name of the folder.

On a CD that only contains playlists and compressed audio files, the next and previous folder functions search playlists first and then search compressed audio files in the root folder. The radio displays ROOT when displaying the name of the folder.

Playing an MP3

F1 ◀◀ (Previous Folder): Press to go to the first track in the previous folder.

Press and hold F1 ◀◀ to reverse quickly within a track. Release to resume playback. REV and the elapsed time of the track displays.

Pressing F1 ◀◀ while in folder random mode goes to the previous folder and plays the tracks in that folder in random order.

F2 ▶▶ (Next Folder): Press to go to the first track in the next folder.

Press and hold F1 ◀◀ to advance quickly within a track. Release to resume playback. FWD and the elapsed time of the track displays.

Pressing F2 ▶▶ while in folder random mode goes to the next folder and plays the tracks in that folder in random order.

F3 RDM (Random) : Press to listen to the tracks in a random, rather than sequential order. Random can be used on the entire disc or the current folder.

While in random, pressing and releasing ⊲| or |⊳ goes to the previous or to the next random track.

- To play the tracks on entire disc in random, press and release F3 RDM until RDM TRCK displays.

  Once all of the tracks in the current folder or playlist have played, the system moves on to the next folder or playlist and plays all of the tracks in random order.
- To play the tracks in the current folder in random, press and release F3 RDM until RDM FLDR displays. This feature does not work with playlists.
- To turn random off, press and release F3 RDM until NORMAL displays.

F4 RPT (Repeat) : Single tracks or folders can be repeated.

- To repeat the current track, press and release F4 RPT until RPT TRCK displays.
- To repeat the tracks in the current folder, press and release F4 RPT until RPT FLDR displays.
- To turn repeat off, press and release F4 RPT until NORMAL displays.

F6 DISP (Display) : Press to switch between the elapsed time of the track and the MP3 playback information.

⏮ ⏭ **(Seek):** Press and release to go to the start of the previous track or the start of the next track. Press and hold for more than two seconds to search the previous or next tracks at two tracks per second. Release to stop searching and to play the track.

⏮ ⏭ **(Scan):** Press to scan the tracks in each folder. The radio goes to the next track, plays for 10 seconds, then goes to the next track. Press again to stop scanning.

⏭ **(Tune):** Turn to fast track reverse or advance advance through the tracks in all folders or playlists. The track number and file name displays for each track. Turning ⏭ while in random will fast track reverse or advance the tracks in sequential order.

i (Information): Press to view the Title, Artist, Album, or Folder names. To view this information:

1. Press ⏭ to enter the main menu.
2. Turn ⏭ until INFO displays.
3. Press ⏭ to select INFO. The display changes to show the additional MP3 information.
4. Press one of the following pushbuttons to view that specific information.
   - **F1 TTLE (Title):** Displays the title name.
   - **F2 ATST (Artist):** Displays the artist name.
   - **F3 ALBM (Album):** Displays the album name.
   - **F4 FLDR (Folder):** Displays the folder name.
5. Press F6 to exit the display. To return to the original display, repeatedly press F6 or wait for the display to time out.

XM Radio Messages

XL (Explicit Language Channels) : These channels, or any others, can be blocked at a customer's request, by calling 1-800-852-XMXM (9696).

XM Updating : The encryption code in the receiver is being updated, and no action is required. This process should take no longer than 30 seconds.

No XM Signal : The system is functioning correctly, but the vehicle is in a location that is blocking the XM™ signal. When the vehicle is moved into an open area, the signal should return.

Loading XM : The audio system is acquiring and processing audio and text data. No action is needed. This message should disappear shortly.

Channel Off Air : This channel is not currently in service. Tune in to another channel.

Channel Unauth : This channel is blocked or cannot be received with your XM Subscription package.

Channel Unavail : This previously assigned channel is no longer assigned. Tune to another station. If this station was one of the presets, choose another station for that preset button.

No Artist Info : No artist information is available at this time on this channel. The system is working properly.

No Title Info : No song title information is available at this time on this channel. The system is working properly.

No CAT Info : No category information is available at this time on this channel. The system is working properly.

No Information : No text or informational messages are available at this time on this channel. The system is working properly.

CAT Not Found : There are no channels available for the selected category. The system is working properly.

XM Theftlocked : The XM receiver in the vehicle could have previously been in another vehicle. For security purposes, XM receivers cannot be swapped between vehicles. If this message is received after having the vehicle serviced, check with your dealer/retailer.

XM Radio ID : If tuned to channel 0, this message alternates with the XM™ Radio 8 digit radio ID label. This label is needed to activate the service.

Unknown : If this message is received when tuned to channel 0, there could be a receiver fault. Consult with your dealer/retailer.

Check Antenna : If this message does not clear within a short period of time, the receiver or antenna could have a fault. Consult with your dealer/retailer.

Check XM Receivr : If this message does not clear within a short period of time, the receiver could have a fault. Consult with your dealer/retailer.

XM Not Available : If this message does not clear within a short period of time, the receiver could have a fault. Consult with your dealer/retailer.

Navigation/Radio System

For vehicles with a navigation radio system, see the separate Navigation System manual.

Bluetooth®

For vehicles with a Navigation System and Bluetooth, see the Navigation System manual for information about how to use the Bluetooth system.

For vehicles without a Navigation System, the Bluetooth system can use a Bluetooth capable cell phone with a Hands Free Profile to make and receive phone calls. The system can be used while the key is in ON/RUN or ACC/ACCESSORY position. The range of the Bluetooth system can be up to 9.1 m (30 ft). Not all phones support all functions, and not all phones are guaranteed to work with the in-vehicle Bluetooth system. See www.gm.com/bluetooth for more information on compatible phones.

Voice Recognition

The Bluetooth system uses voice recognition to interpret voice commands to dial phone numbers and name tags.

Noise : Keep interior noise levels to a minimum. The system may not recognize voice commands if there is too much background noise.

When to Speak : A short tone sounds after the system responds indicating when it is waiting for a voice command. Wait until the tone and then speak.

How to Speak : Speak clearly in a calm and natural voice.

Audio System

When using the in-vehicle Bluetooth system, sound comes through the vehicle's front audio system speakers and over-rides the audio system. Use the audio system volume knob, during a call, to change the volume level. The adjusted volume level remains in memory for later calls. To prevent missed calls, a minimum volume level is used if the volume is turned down too low.

Bluetooth Controls

Use the buttons located on the steering wheel to operate the in-vehicle Bluetooth system. See *Audio Steering Wheel Controls on page 4-134* for more information.

(Push To Talk) : Press to answer incoming calls, to confirm system information, and to start speech recognition.

Pairing

A Bluetooth enabled cell phone must be paired to the in-vehicle Bluetooth system first and then connected to the vehicle before it can be used. See the cell phone manufacturers user guide for Bluetooth functions before pairing the cell phone. If a Bluetooth phone is not connected, calls will be made using OnStar® Hands-Free Calling, if available. Refer to the OnStar owner's guide for more information.

Pairing Information:

- Up to five cell phones can be paired to the in-vehicle Bluetooth system.
- The pairing process is disabled when the vehicle is moving.
- The in-vehicle Bluetooth system automatically links with the first available paired cell phone in the order the phone was paired.
- Only one paired cell phone can be connected to the in-vehicle Bluetooth system at a time.
- Pairing should only need to be completed once, unless changes to the pairing information have been made or the phone is deleted.

To link to a different paired phone, see Linking to a Different Phone later in this section.

Pairing a Phone

1. Press and hold for two seconds. The system responds with “Ready” followed by a tone.
2. Say “Bluetooth”. The system responds with “Bluetooth ready” followed by a tone.
3. Say “Pair”. The system responds with instructions and a four digit PIN number. The PIN number will be used in Step 4.
4. Start the Pairing process on the cell phone that will be paired to the vehicle. Reference the cell phone manufacturers user guide for information on this process.

   Locate the device named “General Motors” in the list on the cellular phone and follow the instructions on the cell phone to enter the four digit PIN number that was provided in Step 3.

5. The system prompts for a name for the phone. Use a name that best describes the phone. This name will be used to indicate which phone is connected. The system then confirms the name provided.
6. The system responds with “<Phone name> has been successfully paired” after the pairing process is complete.
7. Repeat Steps 1 through 7 for additional phones to be paired.

Listing All Paired and Connected Phones

1. Press and hold for two seconds. The system responds with “Ready” followed by a tone.
2. Say “Bluetooth”. The system responds with “Bluetooth ready” followed by a tone.
3. Say “List”. The system lists all the paired Bluetooth devices. If a phone is connected to the vehicle, the system will say “Is connected” after the connected phone.

Deleting a Paired Phone

1. Press and hold for two seconds. The system responds with “Ready” followed by a tone.
2. Say “Bluetooth”. The system responds with “Bluetooth ready” followed by a tone.
3. Say “Delete”. The system asks which phone to delete followed by a tone.
4. Say the name of the phone to be deleted. If the phone name is unknown, use the “List” command for a list of all paired phones. The system responds with “Would you like to delete <phone name>? Yes or No” followed by a tone
5. Say “Yes” to delete the phone. The system responds with “OK, deleting <phone name>”.

Linking to a Different Phone

1. Press and hold for two seconds. The system responds with “Ready” followed by a tone.
2. Say “Bluetooth”. The system responds with “Bluetooth ready” followed by a tone.
3. Say “Change phone”. The system responds with “Please wait while I search for other phones”.
   - If another phone is found, the response will be “<Phone name> is now connected”.
   - If another phone is not found, the original phone remains connected.

Storing Name Tags

The system can store up to thirty phone numbers as name tags that are shared between the Bluetooth and OnStar systems.

The system uses the following commands to store and retrieve phone numbers:

- Store
- Digit Store
- Directory

Using the Store Command

The store command allows a phone number to be stored without entering the digits individually.

1. Press and hold ✆ for two seconds. The system responds with “Ready” followed by a tone.
2. Say “Store”. The system responds with “Store, number please” followed by a tone.
3. Say the complete phone number to be stored at once with no pauses.
   - If the system recognizes the number it responds with “OK, Storing” and repeats the phone number.
   - If the system is unsure it recognizes the phone number, it responds with “Store” and repeats the number followed by “Please say yes or no”. If the number is correct, say “Yes”. If the number is not correct, say “No”. The system will ask for the number to be re-entered.
4. After the system stores the phone number, it responds with “Please say the name tag” followed by a tone.
5. Say a name tag for the phone number. The name tag is recorded and the system responds with “About to store <name tag>. Does that sound OK?”.
   - If the name tag does not sound correct, say “No” and repeat Step 5.
   - If the name tag sounds correct, say “Yes” and the name tag is stored. After the number is stored the system returns to the main menu.

Using the Digit Store Command

The digit store command allows a phone number to be stored by entering the digits individually.

1. Press and hold ✆ for two seconds. The system responds with “Ready” followed by a tone.
2. Say “Digit Store”. The system responds with “Please say the first digit to store” followed by a tone.

3. Say the first digit to be stored. The system will repeat back the digit it heard followed by a tone. Continue entering digits until the number to be stored is complete.
   - If an unwanted number is recognized by the system, say “Clear” at any time to clear the last number.
   - To hear all of the numbers recognized by the system, say “Verify” at any time and the system will repeat them.
4. After the complete number has been entered, say “Store”. The system responds with “Please say the name tag” followed by a tone.
5. Say a name tag for the phone number. The name tag is recorded and the system responds with “About to store <name tag>. Does that sound OK?”.
   - If the name tag does not sound correct, say “No” and repeat Step 5.
   - If the name tag sounds correct, say “Yes” and the name tag is stored. After the number is stored the system returns to the main menu.

Using the Directory Command

The directory command lists all of the name tags stored by the system. To use the directory command:

1. Press and hold for two seconds. The system responds with “Ready” followed by a tone.
2. Say “Directory”. The system responds with “Directory” and then plays back all of the stored name tags. When the list is complete, the system returns to the main menu.

Deleting Name Tags

The system uses the following commands to delete name tags:

- Delete
- Delete all name tags

Using the Delete Command

The delete command allows specific name tags to be deleted.

To use the delete command:

1. Press and hold for two seconds. The system responds with “Ready” followed by a tone.
2. Say “Delete”. The system responds with “Delete, please say the name tag” followed by a tone.

3. Say the name tag to be deleted. The system responds with “Would you like to delete, <name tag>? Please say yes or no”.
   - If the name tag is correct, say “Yes” to delete the name tag. The system responds with “OK, deleting <name tag>, returning to the main menu.”
   - If the name tag is incorrect, say “No”. The system responds with “No. OK, let's try again, please say the name tag.”

Using the Delete All Name Tags Command

The delete all name tags command deletes all stored phone book name tags and route name tags for OnStar (if present).

To use the delete all name tags command:

1. Press and hold for two seconds. The system responds with “Ready” followed by a tone.
2. Say “Delete all name tags”. The system responds with “You are about to delete all name tags stored in your phone directory and your route destination directory. Are you sure you want to do this? Please say yes or no.”
   - Say “Yes” to delete all name tags.
   - Say “No” to cancel the function and return to the main menu.

Making a Call

Calls can be made using the following commands:

- Dial
- Digit Dial
- Call
- Re-dial

Using the Dial Command

1. Press and hold for two seconds. The system responds with “Ready” followed by a tone.
2. Say “Dial”. The system responds with “Dial using <phone name>. “Number please” followed by a tone.
3. Say the entire number without pausing.
   - If the system recognizes the number, it responds with “OK, Dialing” and dials the number.
   - If the system does not recognize the number, it confirms the numbers followed by a tone. If the number is correct, say “Yes”. The system responds with “OK, Dialing” and dials the number. If the number is not correct, say “No”. The system will ask for the number to be re-entered.

Using the Digit Dial Command

1. Press and hold ✆ for two seconds. The system responds with “Ready” followed by a tone.
2. Say “Digit Dial”. The system responds with “Digit dial using <phone name>, please say the first digit to dial” followed by a tone.
3. Say the digit to be dialed one at a time. Following each digit, the system will repeat back the digit it heard followed by a tone.
4. Continue entering digits until the number to be dialed is complete. After the whole number has been entered, say “Dial”. The system responds with “OK, Dialing” and dials the number.
   - If an unwanted number is recognized by the system, say “Clear” at any time to clear the last number.
   - To hear all of the numbers recognized by the system, say “Verify” at any time and the system will repeat them.

Using the Call Command

1. Press and hold ✆ for two seconds. The system responds with “Ready” followed by a tone.
2. Say “Call”. The system responds with “Call using <phone name>. Please say the name tag” followed by a tone.
3. Say the name tag of the person to call.
   - If the system clearly recognizes the name tag it responds with “OK, calling, <name tag>” and dials the number.
   - If the system is unsure it recognizes the right name tag, it confirms the name tag followed by a tone. If the name tag is correct, say “Yes”. The system responds with “OK, calling, <name tag>” and dials the number. If the name tag is not correct, say “No”. The system will ask for the name tag to be re-entered.

Once connected, the person called will be heard through the audio speakers.

Using the Re-dial Command

1. Press and hold ✆ for two seconds. The system responds with “Ready” followed by a tone.
2. After the tone, say “Re-dial”. The system responds with “Re-dial using <phone name>” and dials the last number called from the connected Bluetooth phone.

Once connected, the person called will be heard through the audio speakers.

Receiving a Call

When an incoming call is received, the audio system mutes and a ring tone is heard in the vehicle.

Press ✆ and begin speaking to answer the call.

Call Waiting

Call waiting must be supported on the Bluetooth phone and enabled by the wireless service carrier to work.

- Press ✆ to answer an incoming call when another call is active. The original call is placed on hold.
- Press ✆ again to return to the original call.
- To ignore the incoming call, continue with the original call with no action.

Three-Way Calling

Three-Way Calling must be supported on the Bluetooth phone and enabled by the wireless service carrier to work.

1. While on a call press ✆ . The system responds with “Ready” followed by a tone.
2. Say “Three-way call”. The system responds with “Three-way call, please say dial or call”.
3. Use the dial or call command to dial the number of the third party to be called.
4. Once the call is connected, press ✆ to link all the callers together.

Ending a Call

To end a call:

1. Press ✆ . The system responds with “Ready” followed by a tone.
2. Say “End Call”. The call is then ended.

Muting a Call

During a call, all sounds from inside the vehicle can be muted so that the person on the other end of the call cannot hear them.

To Mute a call

1. Press . The system responds with “Ready” followed by a tone.
2. Say “Mute Call”. The system responds with “Call muted”.

To Cancel Mute

1. Press . The system responds with “Ready” followed by a tone.
2. After the tone, say “Mute Call”. The system responds with “Resuming call”.

Transferring a Call

Audio can be transferred between the in-vehicle Bluetooth system and the cell phone.

To Transfer Audio to the Cell Phone

During a call with the audio in the vehicle:

1. Press . The system responds with “Ready” followed by a tone.
2. Say “Transfer Call.” The system responds with “Transferring call” and the audio will switch from the vehicle to the cell phone.

To Transfer Audio to the In-Vehicle Bluetooth System

The cellular phone must be paired and connected with the Bluetooth system before a call can be transferred. The connection process can take up to two minutes after the key is turned to the ON/RUN or ACC/ACCESSORY position.

During a call with the audio on the cell phone, press for more than two seconds. The audio switches from the cell phone to the vehicle.

Voice Pass-Thru

Voice Pass-Thru allows access to the voice recognition commands on the cell phone. See the cell phone manufacturers user guide to see if the cell phone supports this feature. This feature can be used to verbally access contacts stored in the cell phone.

1. Press and hold for two seconds. The system responds with “Ready” followed by a tone.
2. Say “Bluetooth”. The system responds with “Bluetooth ready” followed by a tone.
3. Say “Voice”. The system responds with “OK, accessing <phone name>”.
   - The cell phone's normal prompt messages will go through its cycle according to the phone's operating instructions.

Dual Tone Multi-Frequency (DTMF) Tones

The in-vehicle Bluetooth system can send numbers and numbers stored as name tags during a call. This is used when calling a menu driven phone system. Account numbers can be programmed into the phonebook for retrieval during menu driven calls.

Sending a Number During a Call

1. Press . The system responds with “Ready” followed by a tone.
2. Say “Dial”. The system responds with “Say a number to send tones” followed by a tone.
3. Say the number to send.
   - If the system clearly recognizes the number it responds with “OK, Sending Number” and the dial tones are sent and the call continues.
   - If the system is not sure it recognized the number properly, it responds “Dial Number, Please say yes or no?” followed by a tone. If the number is correct, say “Yes”. The system responds with “OK, Sending Number” and the dial tones are sent and the call continues.

Sending a Stored Name Tag During a Call

1. Press . The system responds with “Ready” followed by a tone.
2. Say “Send name tag.” The system responds with “Say a name tag to send tones” followed by a tone.
3. Say the name tag to send.
   - If the system clearly recognizes the name tag it responds with “OK, Sending <name tag>” and the dial tones are sent and the call continues.
   - If the system is not sure it recognized the name tag properly, it responds “Dial <name tag>, Please say yes or no?” followed by a tone. If the name tag is correct, say “Yes”. The system responds with “OK, Sending <name tag>” and the dial tones are sent and the call continues.

Clearing the System

Unless information is deleted out of the in-vehicle Bluetooth system, it will be retained indefinitely. This includes all saved name tags in the phonebook and phone pairing information. For information on how to delete this information, see the above sections on Deleting a Paired Phone and Deleting Name Tags.

Other Information

The Bluetooth® word mark and logos are owned by the Bluetooth® SIG, Inc. and any use of such marks by General Motors is under license. Other trademarks and trade names are those of their respective owners.

See *Radio Frequency Statement on page 8-18* for FCC information.

Phone (Navigation)

The navigation system has Bluetooth®. Bluetooth® is a wireless communication system that allows you to use a Bluetooth® compatible phone in a hands-free mode. A phone directory can be set up for use in the vehicle. Up to 12 phones may be registered with your Bluetooth® system, but only one phone may be connected at a time.

Setting Up Your Bluetooth® Phone

In order to use your cellular phone with this Bluetooth® system, your phone must be Bluetooth® compatible. See your phone information to find out if your phone supports Bluetooth®. If your phone does support Bluetooth®, your phone will need to be paired to the radio.

To use the navigation system to connect or pair to the phone:

1. Press the CONFIG hard key.
2. Select the ⓑ (Bluetooth®) screen button.
3. Your phone must be in the discoverable mode and the Bluetooth® feature powered on, to be found by the Bluetooth system in the vehicle. This is normally in the phone settings Bluetooth option.
4. Select the Search screen button. The system searches for the compatible Bluetooth® devices.
5. Choose your device by touching the icon next to the device name. Scroll through the choices using the arrow buttons.
6. Select the Connect screen button. Your phone and the Bluetooth® system will begin a connecting procedure.
7. Follow the instructions on the screen of the phone. They will differ depending on your phone. Refer to your phone instructions for further information.
8. Select default so the vehicle will attempt to automatically connect to the phone when you enter the vehicle.

To use the phone to connect or pair to the navigation system:

1. Press the CONFIG hard key.
2. Select the ⊛ (Bluetooth®) screen button.
3. Select the Receive screen button. Use your phone's search feature to select the vehicle from the phone's list of Bluetooth® devices found.
4. Follow the instructions on the screen of the phone to connect the phone with the vehicle. They differ depending on your phone. Refer to your phone instructions for further information.
5. Select default so the vehicle attempts to automatically connect to the phone when you enter the vehicle.

The following options are available when in the Bluetooth® set up screen.

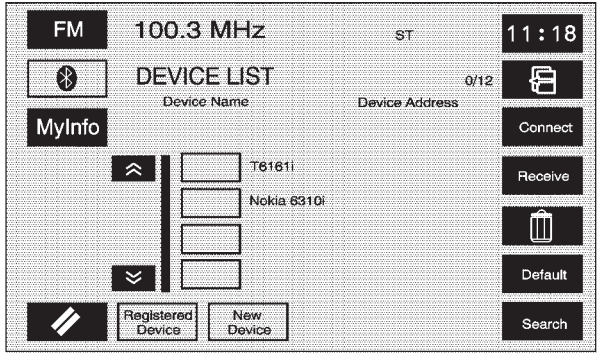

My Info (Information) : Select this screen button to display the details of your Bluetooth® device including the name and passkey information. Selecting Device Name allows you to edit the name of the Bluetooth® device name. Selecting Pass-key allows you to edit the pairing passkey used for your vehicle. The system default device name is “Cadillac STS” and the pass-key is set to “1234”. It is recommended that you change the default pass-key to a number that you can easily remember.

(Page Up): Select to scroll up the list one page at a time.

(Page Down): Select to scroll down the list one page at a time.

(Cancel): Select to return to the setup screen.

Registered Device : Select to display a list of all Bluetooth® phones that have been registered (connected) to the vehicle. From this list you can set your default device, change the phones to be used in the vehicle, search for a new device, delete a device, and receive or connect a new device.

New Device : Select when you are in the process of adding a new phone to be used in the vehicle. From this menu you can receive a new device or search for new devices.

(Back): Select to return the previous screen.

Connect : Select to connect your phone to the Bluetooth® system.

Receive : Select this screen button to have your Bluetooth® system connect to your phone when you are using your phone as the device to initiate pairing. This allows your phone to search for other devices and to find and connect to your vehicle. When this button is pressed, the navigation system is waiting to be connected to a device.

(Delete): Select to delete paired items one at a time.

To delete an item:

1. Select the item from the device list.
2. Select the delete screen button.

Default : Select to set a device as the default.

To set a device as a default:

1. Select the device name from the device list.
2. Select the Default screen button.

   The device is underlined. The system automatically connects to the defaulted device when entering your vehicle.

Search : This screen button begins the system's search for all available Bluetooth® phones in a designated area.

Bluetooth® Phone Screen

This information on this screen depends on the information received from the phone. Some phones may not support this feature. While in this screen, use the different features to dial or to make a call.

Press the AUX hard key to get to the BLUETOOTH PHONE screen. The screen displays even if the phone is not connected. If the phone is not connected, the system displays “Bluetooth phone not available, please check phone.”

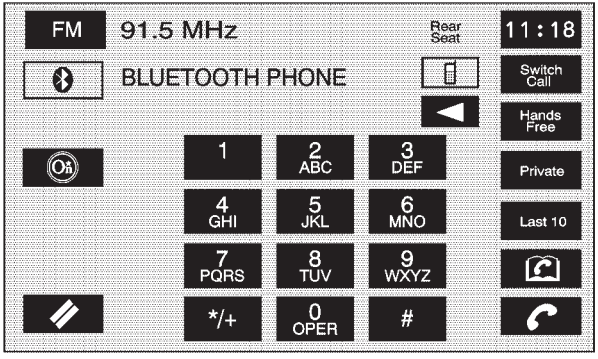

(Bluetooth): Select to get to the Bluetooth® screen.

(Call Status): This area indicates the call status. It indicates whether or not there is good signal strength and whether or not the phone is in service range.

(Backspace): Select to delete numbers after they have been entered. Select and release to delete numbers one-by-one or hold it down to delete all numbers at the same time.

Switch Call : Use this screen button to switch calls during a call-waiting situation.

Hands Free : Select to put the phone in hands-free mode and to hear it through the vehicle's speakers.

Private : Select to put the phone in handset mode.

Last 10 : This screen button goes to a screen showing the last 10 calls either sent or received using Bluetooth®. Phone calls can be placed from this screen. See the “Last 10 Calls Screen” later in this section for more information.

(Phone Book): This screen button goes to the phone book screen. From this screen names can be stored in the Bluetooth® system to be used to dial calls from. This address book is independent of the phone's address book and data cannot be transferred from the Bluetooth® phone book to the phone's address book or vise versa.

(Send/End Call): This screen button lets you place a call after using the alpha keypad or to end a call at the end of the conversation. When you send a call, the button is green. When you are in a call the button is red to indicate that touching the button ends the call.

Dialing and Making Calls Using Your Bluetooth® Phone

Once your phone has been set up, you are ready to begin using it.

1. Press the AUX hard key to enter the BLUETOOTH PHONE screen.
2. Select the Bluetooth® screen button ( ).
3. Use the keypad to input the number to be called. The number can also be selected from the phone book or from the last 10 calls.
4. Select the phone icon screen button to place the call.
5. When ready to hang up, press the phone icon screen button again to disconnect the call.

To reduce driver distraction, the phone screen buttons are not available while driving. See "Defensive Driving" in the Index of the vehicle's owner manual for more information.

Phone Book Screen

This screen allows access to your Bluetooth® Phone Book where names and phone numbers are stored. Information in this screen must be entered using the New screen button or by copying and adding the number from the last 10 dialed or received options. This phone book is stored on the Bluetooth® system. Phone book entries can not be transferred to the phone address book.

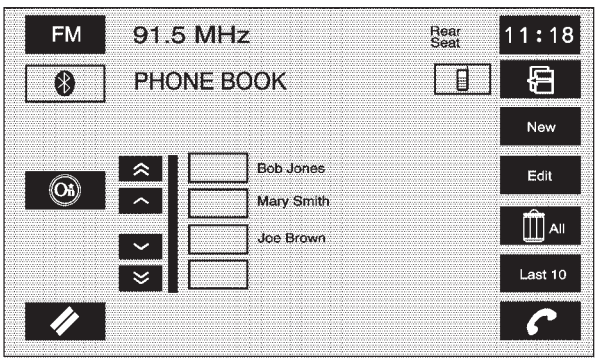

(Page Up): Scrolls up the list one page at a time.

(Scroll Up): Scrolls up the list one entry at a time.

(Scroll Down): Scrolls down the list one entry at a time.

(Page Down): Scrolls down the list one page at a time.

(OnStar): Select to use the OnStar system to place a phone call. See the OnStar® owner guide for more information.

Video : Select when using an auxiliary device. See “Auxiliary Devices” in the Navigation Supplement for more information.

(Cancel): Select to return to the BLUETOOTH PHONE screen.

(Back): This screen button returns the screen to the previous page.

(Scroll to End/Beginning): These screen buttons allow you to scroll through the entry as necessary.

New : This screen button begins the creation of a new phone book entry.

To add a new phone book entry:

1. Select the New screen button.
2. Select a name or phone screen button entry.
3. Use the keypads to enter the name and telephone number. There can be a maximum of 24 characters.

4. A nametag to the entry to work with the voice recognition. Up to 20 nametags can be used for phone book entries in use at a time.
5. After entering the information, touch the OK screen button.

To delete a phone book entry:

1. Select the (phone book) screen button.
2. Select the name to be deleted.
3. Select the Edit screen button.
4. Select the (delete) screen button.
5. The system will request confirmation. Press Yes to confirm or No to cancel.

To add a nametag to a specific name:

1. Select the (phone book) screen button.
2. Select the name that will have a nametag added.
3. Select the Edit screen button.
4. Select the Add Nametag screen button.
5. The system requests to state the name associated with this entry.
6. The system plays back the name and request confirmation. Say “Yes” to confirm or “No” to cancel.

To delete a nametag:

1. Select the (phone book) screen button.
2. Select the name to delete.
3. Select the Edit screen button.
4. Select the Del Nametag screen button.
5. The system requests confirmation. Press Yes to confirm or No to cancel.

Edit : This screen button edits an existing phone book entry.

All (Delete All): This screen button deletes all phone book entries.

Last 10 : This screen button goes to a screen showing the last 10 calls either sent or received using the Bluetooth system. Phone calls can be placed from this screen. See the “Last 10 Calls Screen” later in this section for more information.

(Phone Book): This screen button goes to the phone book screen.

(Send/End Call): This screen button lets a call be placed after touching the appropriate phone book entry or to cancel a call at the end of the conversation.

Last 10 Calls Screen

This screen shows either the last 10 calls that have been placed or the last 10 calls received by the Bluetooth® system. The newest calls are at the top of the list.

(Page Up) : Scrolls up the list one page at a time.

(Scroll Up) : Scrolls up the list one entry at a time.

(Scroll Down) : Scrolls down the list one entry at a time.

(Page Down) : Scrolls down the list one page at a time.

(Cancel) : Returns to the BLUETOOTH PHONE screen.

(Back) : Returns the screen to the previous page.

(Scroll to End/Beginning) : Scrolls through the entry as necessary.

Save : Saves the entry in your phone book.

All (Delete All) : Deletes all phone book entries in the current screen, either received or sent.

(Phone Book) : Goes to the phone book screen.

(Send/End Call): Lets a call be placed after touching the appropriate phone book entry or to cancel a call at the end of the conversation.

Sent : Gives the list of the last 10 calls sent from the system.

Received : Gives the list of the last 10 calls received on the system.

Dialing from Navigation Screens

When a Bluetooth® phone is connected the (Send/End Call) screen button can be used to dial the associated number. Press the Info screen button when it appears on the display. The (Send/End Call) screen button appears next to the telephone number. Press the screen button and the number dials. For example, dial a POI number (restaurant, bank, etc.), dial a number associated with a preset destination.

Radio Personalization

For vehicles with a Navigation System, see the Navigation System manual supplied with the vehicle for more information on accessing the main menu and for descriptions of the menu items for the Navigation system.

Accessing the Main Menu

To access the main menu:

1. Press CNFG or ▷▷| to enter the main menu.
2. Turn ▷▷| to scroll through the menu items.

The main menu consists of the following menu items:

- ♪ BASS - MID - TREBLE
- ◁ BALANCE - FADER
- ♪ EQ EQUALIZER
- H/A (HOME/AWAY) PRESETS
- AUTOSTORE PRESETS
- CAT CATEGORY
- TA TRAFFIC ANNOUNCE
- RECALL RDS (Radio Data System) MESSAGE
- SEEK LOCAL/DISTANT
- SET CLOCK
- 31 SET DATE
- i INFO (Information)
- LANG LANGUAGE
- SETUP

Radio Main Menu Item Descriptions

♪ BASS - MID (Midrange) - TREBLE: This item allows the the bass, midrange and treble features of the audio system to be adjusted. See “Setting the Tone (Bass/Treble)” under *Radio(s) on page 4-95* for more information.

◁ BALANCE - FADER: This item allows the the balance and fader features of the audio system to be adjusted. See “Adjusting the Speakers (Balance/Fade)” under *Radio(s) on page 4-95* for more information.

♪ EQ (Equalizer): This item allows one of the five preset equalizations for the audio system to be selected. See “Audio Equalizer” under *Radio(s) on page 4-95* for more information.

H/A (Home/Away) PRESETS : This item allows either the home or away preset radio stations to be selected. See “Presets Home/Away” under *Radio(s) on page 4-95* for more information.

AUTOSTORE PRESETS : This item allows the radio to automatically store stations with the strongest signals as presets. See “Autostore Presets” under *Radio(s) on page 4-95* for more information.

CAT (Category) : This item allows radio stations based on preset categories to be selected. See “Activating Program Type (PTY) Stations” under *Radio(s) on page 4-95* for more information.

TA (Traffic Announcement) : This item allows the TA feature to be turned on and off. See “TA (Traffic Announcement)” under *Radio(s) on page 4-95* for more information.

RECALL RDS MESSAGE : This item allows the RDS radio station messages broadcast by a radio station to be viewed. See “MSG (Message)” under *Radio(s) on page 4-95* for more information.

SEEK LOCAL/DISTANT: This item allows the audio system to seek only local radio stations with the strongest signal or to seek all radio stations with a strong signal in a large area. Use LOCAL while in urban areas where there are several strong radio station signals and you want to limit the number of stations to those with the strongest signals only. Use DISTANT while in rural areas where there are fewer radio station signals available.

See “Local/Distant Selection” under *Radio(s) on page 4-95* for more information.

SET CLOCK: This item allows the clock to be adjusted.

See *Setting the Clock on page 4-95* for more information.

SET DATE: This item allows the date to be adjusted.

See *Setting the Clock on page 4-95* for more information.

(Information): This item allows XM satellite radio service and CD MP3 playback information to be displayed. See “ (Information)” under *Radio(s) on page 4-95* for more information.

LANG (Language) : This item allows the language on the radio display to be changed.

To change the langauge:

1. Press to enter the main menu.
2. Turn until LANGUAGE displays.

3. Press ▷▷| to enter the language settings and then turn ▷▷| to scroll through the following available langauges:
   - ENGLISH
   - GERMAN
   - FRENCH
   - SPANISH
   - JAPANESE
4. Press ▷▷| to set the langauge.
5. Press F6 to exit the display. To return to the original display, repeatedly press F6 or wait for the display to time out.

SETUP : The following submenus are available when this item is selected:

- PERSONAL SETTINGS MENU
- DRIVER SELECTION
- DRIVER EXIT SETTINGS
- CONFIGURE DISPLAY KEYS

SETUP Submenu Items

The following choices are available for programming.

PERSONAL SETTINGS MENU

This item turns the entire list of personalization features on or off, and allows a preferred setting for up to two people to be programmed. The number of available features varies depending on which options the vehicle has. A check mark appears after it when this item is on. For more information on the PERSONAL SETTINGS MENU item, see *Vehicle Personalization on page 3-58*.

DRIVER SELECTION

The following submenu displays when this item is selected:

- DRIVER 1
- DRIVER 2
- RECALL DRIVER SETTINGS
- STORE DRIVER SETTINGS

For more information on the DRIVER SELECTION submenu item, see “Recalling Driver Settings” and “Storing Driver Settings” under *Memory Seat, Mirrors and Steering Wheel on page 3-75*.

DRIVER EXIT SETTINGS

The following submenu displays when this item is selected:

- RECALL EXIT SETTINGS
- STORE EXIT SETTINGS

For more information on the DRIVER EXIT SETTINGS submenu item, see “Recalling Exit Settings” and “Storing Exit Settings” under *Memory Seat, Mirrors and Steering Wheel on page 3-75*.

CONFIGURE DISPLAY KEYS (Base Audio System)

This item allows the four configurable keys located to the left and right of the audio display to be customized. See “Configurable Radio Display Keys” under *Radio(s) on page 4-95* for programming information.

Theft-Deterrent Feature

THEFTLOCK® is designed to discourage theft of the vehicle's radio by learning a portion of the Vehicle Identification Number (VIN). The radio does not operate if it is stolen or moved to a different vehicle.

Audio Steering Wheel Controls

The vehicle has audio steering wheel controls and they could differ depending on the vehicle’s options.

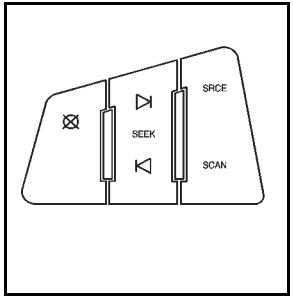

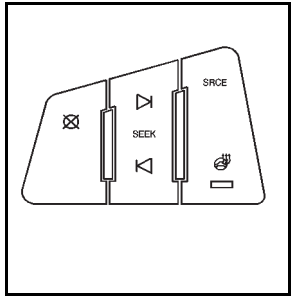

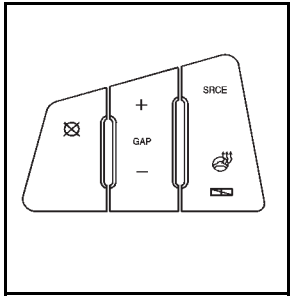

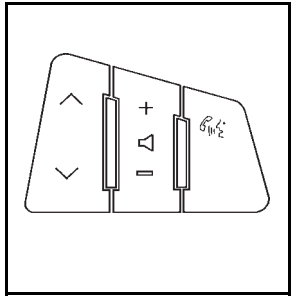

Some audio controls can be adjusted at the steering wheel.

⊳| SEEK |⊲ : Press to go to the next or previous radio station with a strong signal in the selected band while listening to the radio.

Press ⊳| or |⊲ to go to the next or previous track while a CD is playing,

SRCE (Source) : Press to select between AM, FM, XM™, or CD.

SCAN : Press and hold to scan radio stations, the radio goes to the next strongest station in the selected band, plays for a few seconds, then goes to the next station. Press SCAN again to stop scanning.

∧ ∨ (Previous/Next): Press to go to the next or previous radio station stored as a favorite while listening to the radio.

Press ∧ or ∨ to go to the next or previous track while a CD is playing.

+ ◁ − (Volume): Press to increase or to decrease the volume.

(Mute/Voice Recognition): Press and release to silence the vehicle speakers only. Press and release again to turn the sound on.

- For vehicles with a navigation system, press and hold for two seconds to initiate speech recognition. See “Voice Recognition” in the Navigation System manual for more information.
- For vehicles with a navigation system and OnStar®, press and hold for two seconds and then say “OnStar” to interact with the OnStar system. See the OnStar Owner's Guide for more information.
- For vehicles with a navigation system and Bluetooth®, see the Navigation System manual for more information.
- For vehicles without a navigation system, and with OnStar or Bluetooth, press and hold for two seconds to interact with the Bluetooth or system OnStar. See *Bluetooth® on page 4-113*, or the OnStar Owner's Guide for more information about these features.

Radio Reception

Frequency interference and static can occur during normal radio reception if items such as cell phone chargers, vehicle convenience accessories, and external electronic devices are plugged into the accessory power outlet. If there is interference or static, unplug the item from the accessory power outlet.

AM

The range for most AM stations is greater than for FM, especially at night. The longer range can cause station frequencies to interfere with each other. For better radio reception, most AM radio stations boost the power levels during the day, and then reduce these levels during the night. Static can also occur when things like storms and power lines interfere with radio reception. When this happens, try reducing the treble on the radio.

FM Stereo

FM signals only reach about 10 to 40 miles (16 to 65 km). Although the radio has a built-in electronic circuit that automatically works to reduce interference, some static can occur, especially around tall buildings or hills, causing the sound to fade in and out.

XM™ Satellite Radio Service

XM Satellite Radio Service gives digital radio reception from coast-to-coast in the 48 contiguous United States, and in Canada. Just as with FM, tall buildings or hills can interfere with satellite radio signals, causing the sound to fade in and out. In addition, traveling or standing under heavy foliage, bridges, garages, or tunnels may cause loss of the XM signal for a period of time.

Cellular Phone Usage

Cellular phone usage may cause interference with the vehicle's radio. This interference may occur when making or receiving phone calls, charging the phone's battery, or simply having the phone on. This interference causes an increased level of static while listening to the radio. If static is received while listening to the radio, unplug the cellular phone and turn it off.

Backglass Antenna

The AM-FM antenna is integrated with the rear window defogger, located in the rear window. Make sure that the inside surface of the rear window is not scratched and that the lines on the glass are not damaged. If the inside surface is damaged, it could interfere with radio reception. For proper radio reception, the antenna connector needs to be properly attached to the post on the glass.

If a cellular telephone antenna needs to be attached to the glass, make sure that the grid lines for the AM-FM antenna are not damaged. There is enough space between the grid lines to attach a cellular telephone antenna without interfering with radio reception.

Notice: **Using a razor blade or sharp object to clear the inside rear window can damage the rear window antenna and/or the rear window defogger. Repairs would not be covered by the vehicle warranty. Do not clear the inside rear window with sharp objects.**

Notice: **Do not apply aftermarket glass tinting with metallic film. The metallic film in some tinting materials will interfere with or distort the incoming radio reception. Any damage caused to your backglass antenna due to metallic tinting materials will not be covered by the vehicle warranty.**

XM™ Satellite Radio Antenna System

The XM Satellite Radio antenna is located on the roof or the rear of the vehicle. Keep the antenna clear of obstructions for clear radio reception.

✍ NOTES

Section 5 Driving Your Vehicle

Your Driving, the Road, and the Vehicle 5-2
Defensive Driving 5-2
Drunk Driving 5-2
Control of a Vehicle 5-3
Braking 5-4
Antilock Brake System (ABS) 5-5
Braking in Emergencies 5-6
StabiliTrak® System 5-6
Enhanced StabiliTrak® 5-7
Traction Control System (TCS) 5-9
Magnetic Ride Control™ 5-11
Limited-Slip Rear Axle 5-11
All-Wheel Drive (AWD) System 5-11
Steering 5-11
Off-Road Recovery 5-14
Passing 5-14
Loss of Control 5-14
Driving at Night 5-16
Driving in Rain and on Wet Roads 5-16
Before Leaving on a Long Trip 5-18
Highway Hypnosis 5-18
Hill and Mountain Roads 5-19
Winter Driving 5-20
If Your Vehicle is Stuck in Sand, Mud, Ice, or Snow 5-22
Rocking Your Vehicle to Get It Out 5-23
Loading the Vehicle 5-23
Towing 5-29
Towing Your Vehicle 5-29
Recreational Vehicle Towing 5-29
Towing a Trailer 5-31

Your Driving, the Road, and the Vehicle

Defensive Driving

Defensive driving means “always expect the unexpected.” The first step in driving defensively is to wear your safety belt — See *Safety Belts: They Are for Everyone on page 2-8*.

⚠ WARNING:

Assume that other road users (pedestrians, bicyclists, and other drivers) are going to be careless and make mistakes. Anticipate what they might do and be ready. In addition:

- Allow enough following distance between you and the driver in front of you.
- Focus on the task of driving.

Driver distraction can cause collisions resulting in injury or possible death. These simple defensive driving techniques could save your life.

Drunk Driving

⚠ WARNING:

Drinking and then driving is very dangerous. Your reflexes, perceptions, attentiveness, and judgment can be affected by even a small amount of alcohol. You can have a serious — or even fatal — collision if you drive after drinking. Do not drink and drive or ride with a driver who has been drinking. Ride home in a cab; or if you are with a group, designate a driver who will not drink.

Death and injury associated with drinking and driving is a global tragedy.

Alcohol affects four things that anyone needs to drive a vehicle: judgment, muscular coordination, vision, and attentiveness.

Police records show that almost 40 percent of all motor vehicle-related deaths involve alcohol. In most cases, these deaths are the result of someone who was drinking and driving. In recent years, more than 17,000 annual motor vehicle-related deaths have been associated with the use of alcohol, with about 250,000 people injured.

For persons under 21, it is against the law in every U.S. state to drink alcohol. There are good medical, psychological, and developmental reasons for these laws.

The obvious way to eliminate the leading highway safety problem is for people never to drink alcohol and then drive.

Medical research shows that alcohol in a person's system can make crash injuries worse, especially injuries to the brain, spinal cord, or heart. This means that when anyone who has been drinking — driver or passenger — is in a crash, that person's chance of being killed or permanently disabled is higher than if the person had not been drinking.

Control of a Vehicle

The following three systems help to control the vehicle while driving — brakes, steering, and accelerator. At times, as when driving on snow or ice, it is easy to ask more of those control systems than the tires and road can provide. Meaning, you can lose control of the vehicle. See *Traction Control System (TCS) on page 5-9* and *StabiliTrak® System on page 5-6* or *Enhanced StabiliTrak® on page 5-7*.

Adding non-dealer/non-retailer accessories can affect vehicle performance. See *Accessories and Modifications on page 6-4*.

Braking

See *Brake System Warning Light on page 4-58*.

Braking action involves perception time and reaction time. Deciding to push the brake pedal is perception time. Actually doing it is reaction time.

Average reaction time is about three-fourths of a second. But that is only an average. It might be less with one driver and as long as two or three seconds or more with another. Age, physical condition, alertness, coordination, and eyesight all play a part. So do alcohol, drugs, and frustration. But even in three-fourths of a second, a vehicle moving at 100 km/h (60 mph) travels 20 m (66 feet). That could be a lot of distance in an emergency, so keeping enough space between the vehicle and others is important.

And, of course, actual stopping distances vary greatly with the surface of the road, whether it is pavement or gravel; the condition of the road, whether it is wet, dry, or icy; tire tread; the condition of the brakes; the weight of the vehicle; and the amount of brake force applied.

Avoid needless heavy braking. Some people drive in spurts, heavy acceleration followed by heavy braking, rather than keeping pace with traffic. This is a mistake. The brakes might not have time to cool between hard stops. The brakes will wear out much faster with a lot of heavy braking. Keeping pace with the traffic and allowing realistic following distances eliminates a lot of unnecessary braking. That means better braking and longer brake life.

If the engine ever stops while the vehicle is being driven, brake normally but do not pump the brakes. If the brakes are pumped, the pedal could get harder to push down. If the engine stops, there will still be some power brake assist but it will be used when the brake is applied. Once the power assist is used up, it can take longer to stop and the brake pedal will be harder to push.

Adding non-dealer/non-retailer accessories can affect vehicle performance. See *Accessories and Modifications on page 6-4*.

Antilock Brake System (ABS)

This vehicle has the Antilock Brake System (ABS), an advanced electronic braking system that helps prevent a braking skid.

When the engine is started and the vehicle begins to drive away, ABS checks itself. A momentary motor or clicking noise might be heard while this test is going on, and it might even be noticed that the brake pedal moves a little. This is normal.

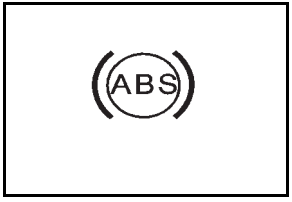

If there is a problem with ABS, this warning light stays on. See *Antilock Brake System (ABS) Warning Light on page 4-59*.

Let us say the road is wet and you are driving safely. Suddenly, an animal jumps out in front of you. You slam on the brakes and continue braking. Here is what happens with ABS:

A computer senses that the wheels are slowing down. If one of the wheels is about to stop rolling, the computer will separately work the brakes at each wheel.

ABS can change the brake pressure to each wheel, as required, faster than any driver could. This can help the driver steer around the obstacle while braking hard.

As the brakes are applied, the computer keeps receiving updates on wheel speed and controls braking pressure accordingly.

Remember: ABS does not change the time needed to get a foot up to the brake pedal or always decrease stopping distance. If you get too close to the vehicle in front of you, there will not be enough time to apply the brakes if that vehicle suddenly slows or stops. Always leave enough room up ahead to stop, even with ABS.

Using ABS

Do not pump the brakes. Just hold the brake pedal down firmly and let antilock work. The antilock pump or motor might be heard operating and the brake pedal might be felt to pulsate , but this is normal.

Braking in Emergencies

ABS allows the driver to steer and brake at the same time. In many emergencies, steering can help more than even the very best braking.

Brake Assist

This vehicle has a Brake Assist feature designed to assist the driver in stopping or decreasing vehicle speed in emergency driving conditions. This feature uses the stability system hydraulic brake control module to supplement the power brake system under conditions where the driver has quickly and forcefully applied the brake pedal in an attempt to quickly stop or slow down the vehicle. The stability system hydraulic brake control module increases brake pressure at each corner of the vehicle until the ABS activates. Minor brake pedal pulsations or pedal movement during this time is normal and the driver should continue to apply the brake pedal as the driving situation dictates The Brake Assist feature will automatically disengage when the brake pedal is released or brake pedal pressure is quickly decreased.

StabiliTrak® System

The vehicle has a vehicle stability enhancement system called StabiliTrak. It is an advanced computer controlled system that assists with directional control of the vehicle in difficult driving conditions.

If the vehicle has all-wheel-drive and has Active Steering with Enhanced StabiliTrak, see *Enhanced StabiliTrak® on page 5-7*.

StabiliTrak activates when the computer senses a discrepancy between the intended path and the direction the vehicle is actually traveling. StabiliTrak selectively applies braking pressure at any one of the vehicle's brakes to help steer the vehicle in the intended direction.

When the system activates, a STABILITY SYS ACTIVE message will be displayed on the Driver Information Center (DIC). See *DIC Warnings and Messages on page 4-76*. A noise may be heard or a vibration felt in the brake pedal. This is normal. Continue to steer the vehicle in the intended direction.

If there is a problem detected with StabiliTrak, a SERVICE STABILITY SYS message will be displayed on the DIC. See *DIC Warnings and Messages on page 4-76*. When this message is displayed, the system is not operational. Driving should be adjusted accordingly.

StabiliTrak comes on automatically whenever the vehicle is started. To help assist with directional control of the vehicle, always leave the system on. StabiliTrak can be turned off, however, by using the Traction Control System (TCS)/StabiliTrak button. See *Traction Control System (TCS) on page 5-9*.

If cruise control is being used when StabiliTrak activates, it will automatically disengage. Cruise control may be reengaged when road conditions allow. See *Cruise Control on page 4-12* or *Adaptive Cruise Control on page 4-15* for more information.

Enhanced StabiliTrak®

All-wheel-drive (AWD) vehicles with the Active Steering with Enhanced StabiliTrak option have an enhanced computer controlled vehicle stability system that assists with directional control of the vehicle in difficult driving conditions. This system coordinates automatic control of the Active Steering System, the Magnetic Ride Control Suspension System, and the Brake Control System for better vehicle performance.

During extreme cold temperature conditions, the active steering function may be temporarily disabled which may cause the steering wheel to be offset from the center position while driving straight. This is normal operation and the vehicle is safe to drive in these cases.

Stability control activates when the computer senses a difference between the intended path and the direction the vehicle is actually traveling. Stability control automatically adjusts the front road wheel steering angle, modifies the suspension stiffness, and selectively applies braking pressure at any one of the vehicle's brakes to help maintain directional control of the vehicle.

When the system activates, a STABILITY SYS ACTIVE message displays on the Driver Information Center (DIC). See *DIC Warnings and Messages on page 4-76*. It is normal to hear a noise or feel vibration in the brake pedal when the system is working. Continue to steer the vehicle in the intended direction.

If cruise control is engaged when Enhanced StabiliTrak activates, the cruise control will automatically disengage. Re-engage cruise control when road conditions allow. See *Cruise Control on page 4-12*, or *Adaptive Cruise Control on page 4-15* for more information.

Enhanced StabiliTrak comes on automatically in the Stability Touring Mode, when the vehicle is started. The Stability Touring Mode is recommended for normal driving.

To assist with directional control of the vehicle, always leave the system on. Stability control can be turned off however, by using the TC button. See *Traction Control System (TCS) on page 5-9*. The STABILITY SYS OFF message will be displayed on the DIC. See *DIC Warnings and Messages on page 4-76*.

If there is a problem detected with Enhanced StabiliTrak, the SERVICE STABILITY SYS message will be displayed on the DIC. See *DIC Warnings and Messages on page 4-76*. When this message is displayed, the system is not operating. Driving should be adjusted accordingly.

When certain faults or vehicle conditions are detected, the Stability control will automatically go into a secure mode and the STABILITY SECURE MODE message will be displayed on the DIC. When the Stability Secure Mode is activated, the stability control system will not respond to driver requests to change the stability mode until the next ignition cycle or until the vehicle condition or fault is returned to normal. When the Stability Secure Mode is activated, other messages may be displayed, such as SERVICE STEERING SYS, SERVICE SUSPENSION SYS or CHECK TIRE PRESSURE on the DIC. When the Stability Secure Mode is activated, a larger degree of steering wheel input at low vehicle speeds and a smaller degree of steering wheel input at high vehicle speeds may be required. Stability Secure Mode will be activated if a compact spare tire is being used. See *DIC Warnings and Messages on page 4-76* and *Compact Spare Tire on page 6-107*.

Persistent operation of the vehicle in the STABILITY SECURE MODE may be an indication that the vehicle needs to be serviced by your dealer/retailer.

When certain faults are present, the vehicle's speed may be limited and the SPEED LIMITED TO XXX message will be displayed on the DIC. See *DIC Warnings and Messages on page 4-76*. When the vehicle's speed is limited, other messages may be displayed, such as SERVICE STABILITY SYS, SERVICE STEERING SYS or SERVICE SUSPENSION SYS on the DIC. Have the vehicle serviced by your dealer/retailer.

Enhanced StabiliTrak and Traction Control Mode Selection

Enhanced StabiliTrak can be operated in Touring Mode. It can also be turned off. The TC button is used to change stability control modes (Touring or Off) as well as to turn traction control on or off. See *Traction Control System (TCS) on page 5-9*. The following information describes the operation of the TC button for changing Traction Control and Stability Control Modes.

When the vehicle is started, Stability control comes on automatically in the Stability Touring Mode.

- To change from Stability Touring Mode to Stability Off Mode, press and hold the TC button until the STABILITY SYS OFF message is displayed on the DIC.
- To change from Stability Off Mode to Stability Touring Mode, press and release the TC button and the STABILITY TOURING MODE message will be displayed on the DIC.
- To turn traction control off while in the Stability Touring Mode, press and release the TC button and the traction control system warning light will come on. See *Traction Control System (TCS) on page 5-9*.
- To turn traction control on while in the Stability Touring Mode, press and release the TC button and the traction control system warning light will turn off.

Traction Control System (TCS)

The vehicle has a traction control system that limits wheel spin. This is especially useful in slippery road conditions. On a rear-wheel-drive vehicle, the system operates if it senses that one or both of the rear wheels are spinning or beginning to lose traction. On an All-Wheel-Drive (AWD) vehicle, the system will operate if it senses that any of the wheels are spinning or beginning to lose traction. When this happens, the system brakes the spinning wheel(s) and/or reduces engine power to limit wheel spin.

The system may be heard or felt while it is working, but this is normal.

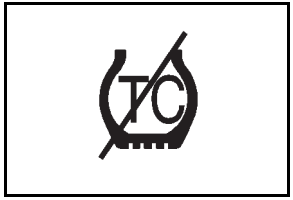

This warning light comes on if there is a problem with TCS.

See *Traction Control System (TCS) Warning Light on page 4-60*. When this warning light is on, the system will not limit wheel spin. Adjust your driving accordingly.

TCS automatically comes on whenever the vehicle is started. To limit wheel spin, especially in slippery road conditions, the system should always be left on, but TCS can be turned off if needed.

Notice: **Do not repeatedly brake or accelerate heavily when TCS is off. The vehicle's driveline could be damaged.**

When TCS is turned off on a vehicle with AWD, the system may still be working. This is normal and necessary with the hardware on the vehicle.

It may be necessary to turn the system off if the vehicle gets stuck in sand, mud or snow and rocking the vehicle is required. See *Rocking Your Vehicle to Get It Out on page 5-23* and *If Your Vehicle is Stuck in Sand, Mud, Ice, or Snow on page 5-22* for more information. See *Winter Driving on page 5-20* for information on using TCS when driving in snowy or icy conditions.

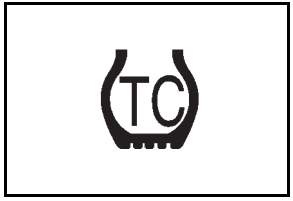

To turn the system off, press the TCS/StabiliTrak button located near the shift lever.

For AWD vehicles with the Active Steering with Enhanced StabiliTrak option, the TCS/StabiliTrak button is used to turn traction control on and off and to turn StabiliTrak on and off. See *Enhanced StabiliTrak® on page 5-7* for instructions on selecting the proper stability control mode.

Press and release the TCS/StabiliTrak button and TCS will turn off and the Traction Control System Warning Light will come on. Press the button again to turn the system back on.

Adding non-GM accessories can affect the vehicle's performance. See *Accessories and Modifications on page 6-4* for more information.

Magnetic Ride Control™

Vehicles with this feature automatically adjust the ride of the vehicle based on driving conditions. Magnetic Ride Control monitors the suspension system to determine the proper system response. If the controller detects a problem within the system, the DIC will display a SERVICE SUSPENSION SYS message. See *DIC Warnings and Messages on page 4-76* for more information. See your dealer/retailer for service.

Limited-Slip Rear Axle

Vehicles with a limited-slip rear axle can give more traction on snow, mud, ice, sand or gravel. It works like a standard axle most of the time, but when traction is low, this feature allows the drive wheel with the most traction to move the vehicle.

All-Wheel Drive (AWD) System

With this feature, engine power is sent to all four wheels at all times. It is fully automatic, and adjusts itself as needed for road conditions.

Steering

Power Steering

If power steering assist is lost because the engine stops or the system is not functioning, the vehicle can be steered but it will take more effort.

Speed Variable Assist Steering

The vehicle has a steering system that continuously adjusts the effort felt when steering at all vehicle speeds. It provides ease when parking, yet a firm, solid feel at highway speeds.

Active Steering

All-wheel-drive vehicles with the Active Steering with Enhanced StabiliTrak® option have an electronically controlled active steering system. The active steering system uses the steering actuator to automatically adjust the front road wheel turning angle based on vehicle speed and how much the steering wheel is turned. This system reduces steering effort at low speeds, improves steering feel at moderate speeds, and reduces steering sensitivity at higher speeds.

During some operating conditions, the active steering might deactivate to protect the system from damage. You might notice that the center position of the steering wheel is changed. Unless there is a SERVICE STEERING SYS message, the system will return to normal operation as soon as the condition ceases, usually within a very short period of time.

At low speeds, the active steering system requires less movement of the steering wheel to change vehicle direction than the normal power steering system. Adjust your driving accordingly.

When certain steering faults are present, the active steering deactivates and vehicle speed might be limited. The SERVICE STEERING SYS and SPEED LIMITED TO XXX messages will be displayed. See *DIC Warnings and Messages on page 4-76*. The normal power steering system is still operational. You might notice that the center position of the steering wheel is changed and that more steering effort at low speeds and less steering effort at high speeds is required. You can continue to drive the vehicle with normal power steering but you should have your dealer/retailer inspect the steering system as soon as possible in order to have the problem corrected and the steering wheel position centered.

When stability control activates, the system automatically adjusts the front road wheel steering angle, modifies the suspension stiffness, and selectively applies braking pressure at any one of the vehicle's brakes to help maintain directional control of the vehicle. Adjustments to the steering will not be felt in the steering wheel. See *Enhanced StabiliTrak® on page 5-7*.

It is recommended that the battery not be disconnected when the steering wheel is turned from the center position. If this occurs, the center position of the steering wheel could be temporarily changed a small amount. You can continue to operate the vehicle and, after a short time, the center position of the steering wheel will return to normal.

Steering Tips

It is important to take curves at a reasonable speed.

Traction in a curve depends on the condition of the tires and the road surface, the angle at which the curve is banked, and vehicle speed. While in a curve, speed is the one factor that can be controlled.

If there is a need to reduce speed, do it before entering the curve, while the front wheels are straight.

Try to adjust the speed so you can drive through the curve. Maintain a reasonable, steady speed. Wait to accelerate until out of the curve, and then accelerate gently into the straightaway.

To help you steer in the direction you want to go, during certain sharp or sudden cornering maneuvers, gear selection is controlled. This will maximize the available drive wheel torque and minimize the transmission response time and shift activity. During this kind of maneuver, the transmission shifts automatically as vehicle speed changes.

Steering in Emergencies

There are times when steering can be more effective than braking. For example, you come over a hill and find a truck stopped in your lane, or a car suddenly pulls out from nowhere, or a child darts out from between parked cars and stops right in front of you. These problems can be avoided by braking — if you can stop in time. But sometimes you cannot stop in time because there is no room. That is the time for evasive action — steering around the problem.

The vehicle can perform very well in emergencies like these. First apply the brakes. See *Braking on page 5-4*. It is better to remove as much speed as possible from a collision. Then steer around the problem, to the left or right depending on the space available.

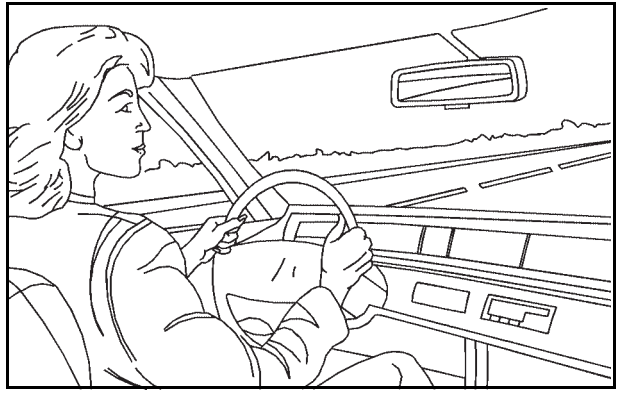

An emergency like this requires close attention and a quick decision. If holding the steering wheel at the recommended 9 and 3 o'clock positions, it can be turned a full 180 degrees very quickly without removing either hand. But you have to act fast, steer quickly, and just as quickly straighten the wheel once you have avoided the object.

The fact that such emergency situations are always possible is a good reason to practice defensive driving at all times and wear safety belts properly.

Off-Road Recovery

The vehicle's right wheels can drop off the edge of a road onto the shoulder while driving.

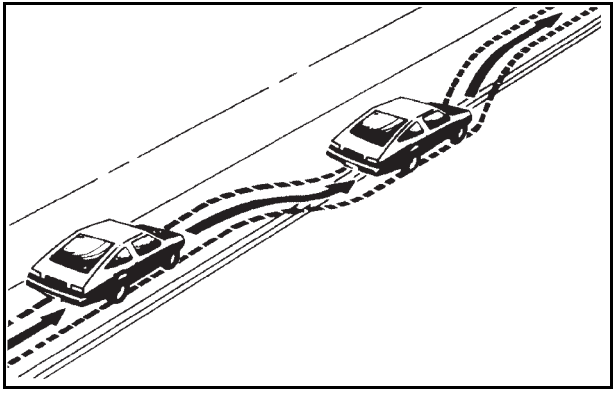

If the level of the shoulder is only slightly below the pavement, recovery should be fairly easy. Ease off the accelerator and then, if there is nothing in the way, steer so that the vehicle straddles the edge of the pavement. Turn the steering wheel 8 to 13 cm (3 to 5 inches), about one-eighth turn, until the right front tire contacts the pavement edge. Then turn the steering wheel to go straight down the roadway.

Passing

Passing another vehicle on a two-lane road can be dangerous. To reduce the risk of danger while passing:

- Look down the road, to the sides, and to crossroads for situations that might affect a successful pass. If in doubt, wait.
- Watch for traffic signs, pavement markings, and lines that could indicate a turn or an intersection. Never cross a solid or double-solid line on your side of the lane.
- Do not get too close to the vehicle you want to pass. Doing so can reduce your visibility.
- Wait your turn to pass a slow vehicle.
- When you are being passed, ease to the right.

Loss of Control

Let us review what driving experts say about what happens when the three control systems — brakes, steering, and acceleration — do not have enough friction where the tires meet the road to do what the driver has asked.

In any emergency, do not give up. Keep trying to steer and constantly seek an escape route or area of less danger.

Skidding

In a skid, a driver can lose control of the vehicle. Defensive drivers avoid most skids by taking reasonable care suited to existing conditions, and by not overdriving those conditions. But skids are always possible.

The three types of skids correspond to the vehicle's three control systems. In the braking skid, the wheels are not rolling. In the steering or cornering skid, too much speed or steering in a curve causes tires to slip and lose cornering force. And in the acceleration skid, too much throttle causes the driving wheels to spin.

Remember: Any traction control system helps avoid only the acceleration skid. If the traction control system is off, then an acceleration skid is best handled by easing your foot off the accelerator pedal.

If the vehicle starts to slide, ease your foot off the accelerator pedal and quickly steer the way you want the vehicle to go. If you start steering quickly enough, the vehicle may straighten out. Always be ready for a second skid if it occurs.

You might see the STABILITY SYS ACTIVE message on the Driver Information Center. See *DIC Warnings and Messages on page 4-76* and *StabiliTrak® System on page 5-6* or *Enhanced StabiliTrak® on page 5-7*.

Of course, traction is reduced when water, snow, ice, gravel, or other material is on the road. For safety, slow down and adjust your driving to these conditions. It is important to slow down on slippery surfaces because stopping distance will be longer and vehicle control more limited.

While driving on a surface with reduced traction, try your best to avoid sudden steering, acceleration, or braking, including reducing vehicle speed by shifting to a lower gear. Any sudden changes could cause the tires to slide. You may not realize the surface is slippery until the vehicle is skidding. Learn to recognize warning clues — such as enough water, ice, or packed snow on the road to make a mirrored surface — and slow down when you have any doubt.

Remember: Antilock brakes help avoid only the braking skid.

Driving at Night

Night driving is more dangerous than day driving because some drivers are likely to be impaired — by alcohol or drugs, with night vision problems, or by fatigue.

Night driving tips include:

- Drive defensively.
- Do not drink and drive.
- Reduce headlamp glare by adjusting the inside rearview mirror.
- Slow down and keep more space between you and other vehicles because headlamps can only light up so much road ahead.
- Watch for animals.
- When tired, pull off the road.
- Do not wear sunglasses.
- Avoid staring directly into approaching headlamps.
- Keep the windshield and all glass on your vehicle clean — inside and out.
- Keep your eyes moving, especially during turns or curves.

No one can see as well at night as in the daytime. But, as we get older, these differences increase. A 50-year-old driver might need at least twice as much light to see the same thing at night as a 20-year-old.

Driving in Rain and on Wet Roads

Rain and wet roads can reduce vehicle traction and affect your ability to stop and accelerate. Always drive slower in these types of driving conditions and avoid driving through large puddles and deep-standing or flowing water.

⚠ WARNING:

Wet brakes can cause crashes. They might not work as well in a quick stop and could cause pulling to one side. You could lose control of the vehicle.

After driving through a large puddle of water or a car/vehicle wash, lightly apply the brake pedal until the brakes work normally.

Flowing or rushing water creates strong forces. Driving through flowing water could cause your vehicle to be carried away. If this happens, you and other vehicle occupants could drown. Do not ignore police warnings and be very cautious about trying to drive through flowing water.

Hydroplaning

Hydroplaning is dangerous. Water can build up under your vehicle's tires so they actually ride on the water. This can happen if the road is wet enough and you are going fast enough. When your vehicle is hydroplaning, it has little or no contact with the road.

There is no hard and fast rule about hydroplaning. The best advice is to slow down when the road is wet.

Other Rainy Weather Tips

Besides slowing down, other wet weather driving tips include:

- Allow extra following distance.
- Pass with caution.
- Keep windshield wiping equipment in good shape.
- Keep the windshield washer fluid reservoir filled.
- Have good tires with proper tread depth. See *Tires on page 6-52*.
- Turn off cruise control.

Before Leaving on a Long Trip

To prepare your vehicle for a long trip, consider having it serviced by your dealer/retailer before departing.

Things to check on your own include:

- *Windshield Washer Fluid:* Reservoir full? Windows clean — inside and outside?
- *Wiper Blades:* In good shape?
- *Fuel, Engine Oil, Other Fluids:* All levels checked?
- *Lamps:* Do they all work and are lenses clean?
- *Tires:* Are treads good? Are tires inflated to recommended pressure?
- *Weather and Maps:* Safe to travel? Have up-to-date maps?

Highway Hypnosis

Always be alert and pay attention to your surroundings while driving. If you become tired or sleepy, find a safe place to park your vehicle and rest.

Other driving tips include:

- Keep the vehicle well ventilated.
- Keep interior temperature cool.
- Keep your eyes moving — scan the road ahead and to the sides.
- Check the rearview mirror and vehicle instruments often.

Hill and Mountain Roads

Driving on steep hills or through mountains is different than driving on flat or rolling terrain. Tips for driving in these conditions include:

- Keep the vehicle serviced and in good shape.
- Check all fluid levels and brakes, tires, cooling system, and transmission.
- Going down steep or long hills, shift to a lower gear.

⚠ WARNING:

If you do not shift down, the brakes could get so hot that they would not work well. You would then have poor braking or even none going down a hill. You could crash. Shift down to let the engine assist the brakes on a steep downhill slope.

⚠ WARNING:

Coasting downhill in N (Neutral) or with the ignition off is dangerous. The brakes will have to do all the work of slowing down and they could get so hot that they would not work well. You would then have poor braking or even none going down a hill. You could crash. Always have the engine running and the vehicle in gear when going downhill.

- Stay in your own lane. Do not swing wide or cut across the center of the road. Drive at speeds that let you stay in your own lane.
- Top of hills: Be alert — something could be in your lane (stalled car, accident).
- Pay attention to special road signs (falling rocks area, winding roads, long grades, passing or no-passing zones) and take appropriate action.

Winter Driving

Driving on Snow or Ice

Drive carefully when there is snow or ice between the tires and the road, creating less traction or grip. Wet ice can occur at about 0°C (32°F) when freezing rain begins to fall, resulting in even less traction. Avoid driving on wet ice or in freezing rain until roads can be treated with salt or sand.

Drive with caution, whatever the condition. Accelerate gently so traction is not lost. Accelerating too quickly causes the wheels to spin and makes the surface under the tires slick, so there is even less traction.

Try not to break the fragile traction. If you accelerate too fast, the drive wheels will spin and polish the surface under the tires even more.

The *Traction Control System (TCS) on page 5-9* improves the ability to accelerate on slippery roads, but slow down and adjust your driving to the road conditions. When driving through deep snow, turn off the traction control system to help maintain vehicle motion at lower speeds.

The *Antilock Brake System (ABS) on page 5-5* improves vehicle stability during hard stops on a slippery roads, but apply the brakes sooner than when on dry pavement.

Allow greater following distance on any slippery road and watch for slippery spots. Icy patches can occur on otherwise clear roads in shaded areas. The surface of a curve or an overpass can remain icy when the surrounding roads are clear. Avoid sudden steering maneuvers and braking while on ice.

Turn off cruise control, if equipped, on slippery surfaces.

Blizzard Conditions

Being stuck in snow can be in a serious situation. Stay with the vehicle unless there is help nearby. If possible, use the *Roadside Service on page 8-8*. To get help and keep everyone in the vehicle safe:

- Turn on the *Hazard Warning Flashers on page 4-3*.
- Tie a red cloth to an outside mirror.

⚠ WARNING:

Snow can trap engine exhaust under the vehicle. This may cause exhaust gases to get inside. Engine exhaust contains carbon monoxide (CO) which cannot be seen or smelled. It can cause unconsciousness and even death.

If the vehicle is stuck in the snow:

- Clear away snow from around the base of your vehicle, especially any that is blocking the exhaust pipe.
- Check again from time to time to be sure snow does not collect there.

(Continued)

WARNING: (Continued)

- Open a window about 5 cm (two inches) on the side of the vehicle that is away from the wind to bring in fresh air.
- Fully open the air outlets on or under the instrument panel.
- Adjust the Climate Control system to a setting that circulates the air inside the vehicle and set the fan speed to the highest setting. See Climate Control System in the Index.

For more information about carbon monoxide, see *Engine Exhaust on page 3-36*.

Snow can trap exhaust gases under your vehicle. This can cause deadly CO (carbon monoxide) gas to get inside. CO could overcome you and kill you. You cannot see it or smell it, so you might not know it is in your vehicle. Clear away snow from around the base of your vehicle, especially any that is blocking the exhaust.

To save fuel, run the engine for only short periods as needed to warm the vehicle and then shut the engine off and close the window most of the way to save heat. Repeat this until help arrives but only when you feel really uncomfortable from the cold. Moving about to keep warm also helps.

If it takes some time for help to arrive, now and then when you run the engine, push the accelerator pedal slightly so the engine runs faster than the idle speed. This keeps the battery charged to restart the vehicle and to signal for help with the headlamps. Do this as little as possible to save fuel.

If Your Vehicle is Stuck in Sand, Mud, Ice, or Snow

Slowly and cautiously spin the wheels to free the vehicle when stuck in sand, mud, ice, or snow. See *Rocking Your Vehicle to Get It Out on page 5-23*.

If the vehicle has a traction system, it can often help to free a stuck vehicle. Refer to the vehicle's traction system in the Index. If stuck too severely for the traction system to free the vehicle, turn the traction system off and use the rocking method.

⚠ WARNING:

If the vehicle's tires spin at high speed, they can explode, and you or others could be injured. The vehicle can overheat, causing an engine compartment fire or other damage. Spin the wheels as little as possible and avoid going above 55 km/h (35 mph) as shown on the speedometer.

For information about using tire chains on the vehicle, see *Tire Chains on page 6-76*.

Rocking Your Vehicle to Get It Out

Turn the steering wheel left and right to clear the area around the front wheels. Turn off any traction or stability system. Shift back and forth between R (Reverse) and a forward gear, spinning the wheels as little as possible. To prevent transmission wear, wait until the wheels stop spinning before shifting gears. Release the accelerator pedal while shifting, and press lightly on the accelerator pedal when the transmission is in gear. Slowly spinning the wheels in the forward and reverse directions causes a rocking motion that could free the vehicle. If that does not get the vehicle out after a few tries, it might need to be towed out. If the vehicle does need to be towed out, see *Towing Your Vehicle on page 5-29*.

Loading the Vehicle

It is very important to know how much weight your vehicle can carry. This weight is called the vehicle capacity weight and includes the weight of all occupants, cargo, and all nonfactory-installed options. Two labels on your vehicle show how much weight it may properly carry, the Tire and Loading Information label, and the Certification label.

⚠ WARNING:

Do not load the vehicle any heavier than the Gross Vehicle Weight Rating (GVWR), or either the maximum front or rear Gross Axle Weight Rating (GAWR). If you do, parts on the vehicle can break, and it can change the way the vehicle handles. These could cause you to lose control and crash. Also, overloading can shorten the life of the vehicle.

Tire and Loading Information Label

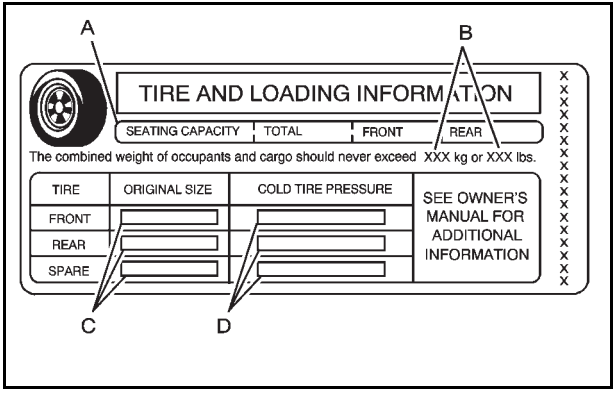

Example Label

A vehicle specific Tire and Loading Information label is attached to the vehicle's center pillar (B-pillar). With the driver's door open, you will find the label attached below the door lock post (striker). The Tire and Loading Information label shows the number of occupant seating positions (A), and the maximum vehicle capacity weight (B) in kilograms and pounds.

The Tire and Loading Information label also shows the tire size of the original equipment tires (C) and the recommended cold tire inflation pressures (D). For more information on tires and inflation see *Tires on page 6-52* and *Inflation - Tire Pressure on page 6-60*.

There is also important loading information on the Certification label. It tells you the Gross Vehicle Weight Rating (GVWR) and the Gross Axle Weight Rating (GAWR) for the front and rear axle; see “Certification Label” later in this section.

Steps for Determining Correct Load Limit

1. Locate the statement “The combined weight of occupants and cargo should never exceed XXX kg or XXX lbs” on your vehicle's placard.
2. Determine the combined weight of the driver and passengers that will be riding in your vehicle.
3. Subtract the combined weight of the driver and passengers from XXX kg or XXX lbs.
4. The resulting figure equals the available amount of cargo and luggage load capacity. For example, if the “XXX” amount equals 1400 lbs and there will be five 150 lb passengers in your vehicle, the amount of available cargo and luggage load capacity is 650 lbs (1400 − 750 (5 x 150) = 650 lbs).
5. Determine the combined weight of luggage and cargo being loaded on the vehicle. That weight may not safely exceed the available cargo and luggage load capacity calculated in Step 4.
6. If your vehicle will be towing a trailer, the load from your trailer will be transferred to your vehicle. Consult this manual to determine how this reduces the available cargo and luggage load capacity of your vehicle.

   See *Towing a Trailer on page 5-31* for important information on towing a trailer, towing safety rules and trailering tips.

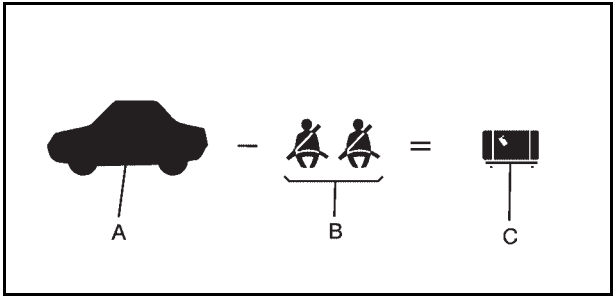

Example 1

Item	Description	Total
A	Vehicle Capacity Weight for Example 1 =	1,000 lbs (453 kg)
B	Subtract Occupant Weight @ 150 lbs (68 kg) × 2 =	300 lbs (136 kg)
C	Available Occupant and Cargo Weight =	700 lbs (317 kg)

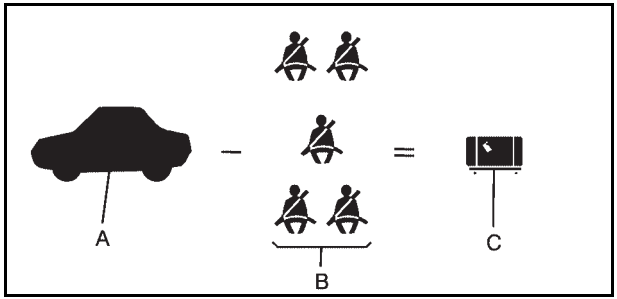

Example 2

Item	Description	Total
A	Vehicle Capacity Weight for Example 2 =	1,000 lbs (453 kg)
B	Subtract Occupant Weight @ 150 lbs (68 kg) × 5 =	750 lbs (340 kg)
C	Available Cargo Weight =	250 lbs (113 kg)

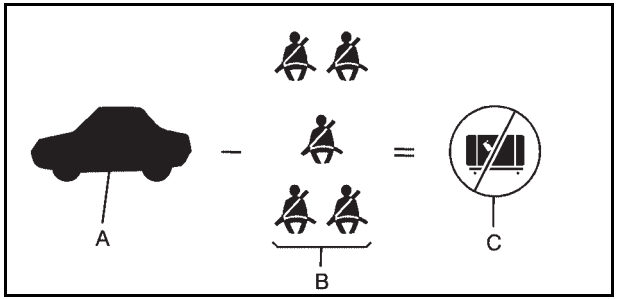

Example 3

Item	Description	Total
A	Vehicle Capacity Weight for Example 3 =	1,000 lbs (453 kg)
B	Subtract Occupant Weight @ 200 lbs (91 kg) × 5 =	1,000 lbs (453 kg)
C	Available Cargo Weight =	0 lbs (0 kg)

Refer to your vehicle's Tire and Loading Information label for specific information about your vehicle's capacity weight and seating positions. The combined weight of the driver, passengers, and cargo should never exceed your vehicle's capacity weight.

Certification Label

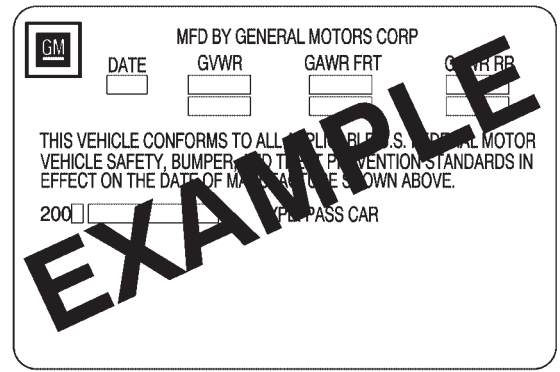

A vehicle specific Certification label is attached to either the driver's door edge or the lower center pillar on the driver's side of the vehicle. This label shows the gross weight capacity of your vehicle, called the Gross Vehicle Weight Rating (GVWR). The GVWR includes the weight of the vehicle, all occupants, fuel, and cargo. The Certification label also shows the maximum weights for the front and

rear axles, called the Gross Axle Weight Rating (GAWR). Never exceed the GVWR or the GAWR for either the front or rear axle.

⚠ WARNING:

Do not load the vehicle any heavier than the Gross Vehicle Weight Rating (GVWR), or either the maximum front or rear Gross Axle Weight Rating (GAWR). If you do, parts on the vehicle can break, and it can change the way the vehicle handles. These could cause you to lose control and crash. Also, overloading can shorten the life of the vehicle.

Notice : **Overloading the vehicle may cause damage. Repairs would not be covered by the vehicle warranty. Do not overload the vehicle.**

If you put things inside your vehicle, like suitcases, tools, packages, or anything else, they will go as fast as the vehicle goes. If you have to stop or turn quickly, or if there is a crash, they will keep going.

⚠ WARNING:

Things you put inside the vehicle can strike and injure people in a sudden stop or turn, or in a crash.

- Put things in the cargo area of the vehicle. In the cargo area, put them as far forward as you can. Try to spread the weight evenly.
- Never stack heavier things, like suitcases, inside the vehicle so that some of them are above the tops of the seats.
- Do not leave an unsecured child restraint in the vehicle.
- When you carry something inside the vehicle, secure it whenever you can.
- Do not leave a seat folded down unless you need to.

Towing

Towing Your Vehicle

Consult your dealer/retailer or a professional towing service if the disabled vehicle needs to be towed. See *Roadside Service on page 8-8*.

To tow the vehicle behind another vehicle for recreational purposes (such as behind a motorhome), see Recreational Vehicle Towing following.

Recreational Vehicle Towing

Recreational vehicle towing means towing the vehicle behind another vehicle – such as behind a motorhome. The two most common types of recreational vehicle towing are known as “dinghy towing” — towing the vehicle with all four wheels on the ground, and “dolly towing” — towing the vehicle with two wheels on the ground and two wheels up on a device known as a “dolly”.

Here are some important things to consider before recreational vehicle towing:

- What is the towing capacity of the towing vehicle? Be sure to read the tow vehicle manufacturer's recommendations.
- What is the distance that will be travelled? Some vehicles have restrictions on how far and how long they can tow.
- Is the proper towing equipment going to be used? See your dealer/retailer or trailering professional for additional advice and equipment recommendations.
- Is the vehicle ready to be towed? Just as preparing the vehicle for a long trip, make sure the vehicle is prepared to be towed. See *Before Leaving on a Long Trip on page 5-18*.

Dinghy Towing

Notice: **If the vehicle is towed with all four wheels on the ground, the drivetrain components could be damaged. The repairs would not be covered by the vehicle warranty. Do not tow the vehicle with all four wheels on the ground.**

The vehicle was not designed to be towed with all four wheels on the ground. If the vehicle must be towed, use a dolly. See “Dolly Towing” later in this section for more information.

Dolly Towing (Rear-Wheel-Drive Vehicles)

Notice: **Dolly towing or dinghy towing the vehicle may cause damage because of reduced ground clearance. Always tow the vehicle using the towing procedures listed in this section or put the vehicle on a flatbed truck or trailer.**

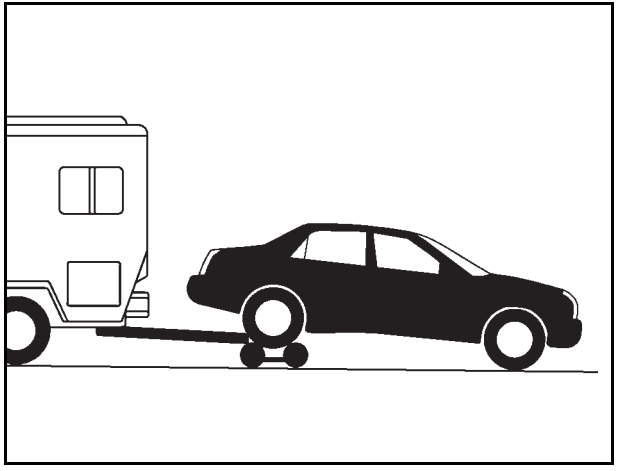

Rear-wheel drive vehicles can be towed using a dolly. To tow the vehicle using a dolly, follow these steps:

1. Attach the dolly to the tow vehicle following the dolly manufacturer's instructions.
2. Drive the rear wheels onto the dolly.

3. Firmly set the parking brake. See *Parking Brake on page 3-33*.
4. Put the transmission in P (Park).
5. Secure the vehicle to the dolly following the manufacturer's instructions.
6. Use an adequate clamping device designed for towing to ensure that the front wheels are locked into the straight position.
7. Turn the ignition to LOCK/OFF.

Dolly Towing (All-Wheel-Drive Vehicles)

Notice: **Towing an all-wheel-drive vehicle with all four wheels on the ground, or even with only two of its wheels on the ground, will damage drivetrain components. Do not tow an all-wheel-drive vehicle with any of its wheels on the ground.**

All-Wheel Drive (AWD) vehicles can only be towed on a flat-bed truck or trailer.

Towing a Trailer

⚠ WARNING:

The driver can lose control when pulling a trailer if the correct equipment is not used or the vehicle is not driven properly. For example, if the trailer is too heavy, the brakes may not work well — or even at all. The driver and passengers could be seriously injured. The vehicle may also be damaged; the resulting repairs would not be covered by the vehicle warranty. Pull a trailer only if all the steps in this section have been followed. Ask your dealer/retailer for advice and information about towing a trailer with the vehicle.

To identify the trailering capacity of the vehicle, read the information in “Weight of the Trailer” that appears later in this section.

Trailering is different than just driving the vehicle by itself. Trailering means changes in handling, acceleration, braking, durability and fuel economy. Successful, safe trailering takes correct equipment, and it has to be used properly.

The following information has many time-tested, important trailering tips and safety rules. Many of these are important for your safety and that of your passengers. So please read this section carefully before pulling a trailer.

Load-pulling components such as the engine, transmission, rear axle, wheel assemblies and tires are forced to work harder against the drag of the added weight. The engine is required to operate at relatively higher speeds and under greater loads, generating extra heat. The trailer also adds considerably to wind resistance, increasing the pulling requirements.

Pulling A Trailer

Here are some important points:

- Do not tow a trailer at all during the first 500 miles (800 km) the new vehicle is driven. The engine, axle or other parts could be damaged.
- Then, during the first 500 miles (800 km) that a trailer is towed, do not drive over 50 mph (80 km/h) and do not make starts at full throttle. This helps the engine and other parts of the vehicle wear in at the heavier loads.
- Vehicles can tow in D (Drive). Shift the transmission to a lower gear if the transmission shifts too often under heavy loads and/or hilly conditions.
- Obey speed limit restrictions when towing a trailer. Do not drive faster than the maximum posted speed for trailers, or no more than 55 mph (90 km/h), to save wear on the vehicle's parts.
- If the vehicle has the Side Blind Zone Alert (SBZA) system and it doesn't seem to be working properly while pulling a trailer, turn the system off. See *Side Blind Zone Alert (SBZA) on page 3-44* for more information.

Three important considerations have to do with weight:

- The weight of the trailer.
- The weight of the trailer tongue.
- The total weight on the vehicle's tires.

Weight of the Trailer

How heavy can a trailer safely be?

It should never weigh more than 1,000 lbs (450 kg). But even that can be too heavy.

It depends on how the rig is used. For example, speed, altitude, road grades, outside temperature and how much the vehicle is used to pull a trailer are all important. It can depend on any special equipment on the vehicle, and the amount of tongue weight the vehicle can carry. See “Weight of the Trailer Tongue” later in this section for more information.

Maximum trailer weight is calculated assuming only the driver is in the tow vehicle and it has all the required trailering equipment. The weight of additional optional equipment, passengers and cargo in the tow vehicle must be subtracted from the maximum trailer weight.

Ask your dealer/retailer for our trailering information or advice, or write us at our Customer Assistance Offices. See *Customer Assistance Offices on page 8-6* for more information.

Weight of the Trailer Tongue

The tongue load (A) of any trailer is an important weight to measure because it affects the total gross weight of the vehicle. The Gross Vehicle Weight (GVW) includes the curb weight of the vehicle, any cargo carried in it, and the people who will be riding in the vehicle. If there are a lot of options, equipment, passengers or cargo in the vehicle, it will reduce the tongue weight the vehicle can carry, which will also reduce the trailer weight the vehicle can tow. If towing a trailer, the tongue load must be added to the GVW because the vehicle will be carrying that weight, too. See *Loading the Vehicle on page 5-23* for more information about the vehicle's maximum load capacity.

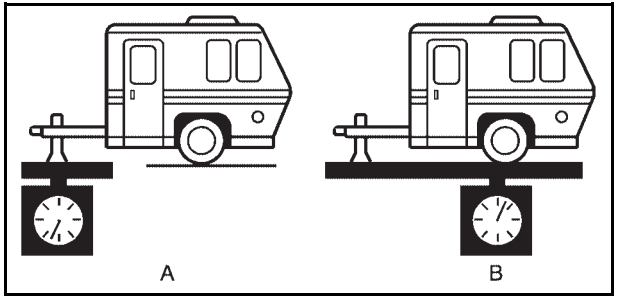

If using a weight-carrying hitch, the trailer tongue (A) should weigh 10 to 15 percent of the total loaded trailer weight (B).

After loading the trailer, weigh the trailer and then the tongue, separately, to see if the weights are proper. If they are not, adjustments might be made by moving some items around in the trailer.

Total Weight on the Vehicle's Tires

Be sure the vehicle's tires are inflated to the upper limit for cold tires. These numbers can be found on the Certification label or see *Loading the Vehicle on page 5-23*. Make sure not to go over the GVW limit for the vehicle, or the GAWR, including the weight of the trailer tongue.

Hitches

It is important to have the correct hitch equipment. Crosswinds, large trucks going by and rough roads are a few reasons why the right hitch is needed.

- The rear bumper on the vehicle is not intended for hitches. Do not attach rental hitches or other bumper-type hitches to it. Use only a frame-mounted hitch that does not attach to the bumper.
- Will any holes be made in the body of the vehicle when the trailer hitch is installed? If so, be sure to seal the holes when the hitch is removed. If they are not sealed, deadly carbon monoxide (CO) from the engine's exhaust can get into the vehicle. See *Engine Exhaust on page 3-36*. Sealing the holes will also prevent dirt and water from entering the vehicle.

Safety Chains

Always attach chains between the vehicle and the trailer. Cross the safety chains under the tongue of the trailer to help prevent the tongue from contacting the road if it becomes separated from the hitch. Instructions about safety chains may be provided by the hitch manufacturer or by the trailer manufacturer. Follow the manufacturer's recommendation for attaching safety chains and do not attach them to the bumper. Always leave just enough slack so the rig can turn. Never allow safety chains to drag on the ground.

Trailer Brakes

Does the trailer have its own brakes? Be sure to read and follow the instructions for the trailer brakes so they are installed, adjusted and maintained properly. Because the vehicle has StabiliTrak®, do not try to tap into the vehicle's hydraulic brake system. If you do, both brake systems will not work well, or at all.

Trailer Wiring Harness

All of the electrical circuits required for the trailer lighting system can be accessed at the driver side rear lamp connector. This connector is located under the carpet on the rear corner of the trunk compartment.

Driving with a Trailer

Towing a trailer requires a certain amount of experience. Get to know the rig before setting out for the open road. Get acquainted with the feel of handling and braking with the added weight of the trailer. And always keep in mind that the vehicle you are driving is now longer and not as responsive as the vehicle is by itself.

Before starting, check all trailer hitch parts and attachments, safety chains, electrical connectors, lamps, tires and mirror adjustments. If the trailer has electric brakes, start the vehicle and trailer moving and then apply the trailer brake controller by hand to be sure the brakes are working. This checks the electrical connection at the same time.

During the trip, check occasionally to be sure that the load is secure, and that the lamps and any trailer brakes are still working.

Following Distance

Stay at least twice as far behind the vehicle ahead as you would when driving the vehicle without a trailer. This can help to avoid situations that require heavy braking and sudden turns.

Passing

More passing distance is needed when towing a trailer. Because the rig is longer, it is necessary to go much farther beyond the passed vehicle before returning to the lane.

Backing Up

Hold the bottom of the steering wheel with one hand. Then, to move the trailer to the left, move that hand to the left. To move the trailer to the right, move your hand to the right. Always back up slowly and, if possible, have someone guide you.

Making Turns

Notice: **Making very sharp turns while trailering could cause the trailer to come in contact with the vehicle. The vehicle could be damaged. Avoid making very sharp turns while trailering.**

When turning with a trailer, make wider turns than normal. Do this so the trailer will not strike soft shoulders, curbs, road signs, trees or other objects. Avoid jerky or sudden maneuvers. Signal well in advance.

Turn Signals When Towing a Trailer

The arrows on the instrument panel flash whenever signaling a turn or lane change. Properly hooked up, the trailer lamps also flash, telling other drivers the vehicle is turning, changing lanes or stopping.

When towing a trailer, the arrows on the instrument panel flash for turns even if the bulbs on the trailer are burned out. For this reason you may think other drivers are seeing the signal when they are not. It is important to check occasionally to be sure the trailer bulbs are still working.

The vehicle has bulb warning lights. When a trailer lighting system is plugged into the vehicle's lighting system, its bulb warning lights may not let you know if one of the lamps goes out. So, when the trailer lighting system is plugged in, be sure to check the vehicle and trailer lamps from time to time to be sure they are all working. Once the trailer lamps are disconnected, the bulb warning lights again can tell you if one of the vehicle lamps is out.

Driving On Grades

Reduce speed and shift to a lower gear *before* starting down a long or steep downgrade. If the transmission is not shifted down, the brakes might have to be used so much that they would get hot and no longer work well.

On a long uphill grade, shift down and reduce the vehicle's speed to around 45 mph (70 km/h) to reduce the possibility of the engine and the transmission overheating.

Vehicles can tow in D (Drive). Shift the transmission to a lower gear if the transmission shifts too often under heavy loads and/or hilly conditions.

When towing at high altitude on steep uphill grades, consider the following: Engine coolant will boil at a lower temperature than at normal altitudes. If the engine is turned off immediately after towing at high altitude on steep uphill grades, the vehicle may show signs similar to engine overheating. To avoid this, let the engine run while parked, preferably on level ground, with the automatic transmission in P (Park) for a few minutes before turning the engine off. If the overheat warning comes on, see *Engine Overheating on page 6-32*.

Parking on Hills

⚠ WARNING:

Parking the vehicle on a hill with the trailer attached can be dangerous. If something goes wrong, the rig could start to move. People can be injured, and both the vehicle and the trailer can be damaged. When possible, always park the rig on a flat surface.

If parking the rig on a hill:

1. Press the brake pedal, but do not shift into P (Park) yet. Turn the wheels into the curb if facing downhill or into traffic if facing uphill.
2. Have someone place chocks under the trailer wheels.
3. When the wheel chocks are in place, release the regular brakes until the chocks absorb the load.
4. Reapply the brake pedal. Then apply the parking brake and shift into P (Park).
5. Release the brake pedal.

Leaving After Parking on a Hill

1. Apply and hold the brake pedal while you:
   - Start the engine
   - Shift into a gear
   - Release the parking brake
2. Let up on the brake pedal.
3. Drive slowly until the trailer is clear of the chocks.
4. Stop and have someone pick up and store the chocks.

Maintenance When Trailer Towing

The vehicle needs service more often when pulling a trailer. See this manual's Maintenance Schedule or Index for more information. Things that are especially important in trailer operation are automatic transmission fluid, engine oil, axle lubricant, belts, cooling system and brake system. It is a good idea to inspect these before and during the trip.

Check periodically to see that all hitch nuts and bolts are tight.

Engine Cooling When Trailer Towing

The cooling system may temporarily overheat during severe operating conditions. See *Engine Overheating on page 6-32*.

Section 6 Service and Appearance Care

Service 6-4
Accessories and Modifications 6-4
California Proposition 65 Warning 6-5
California Perchlorate Materials Requirements 6-5
Doing Your Own Service Work 6-5
Adding Equipment to the Outside of the Vehicle 6-6

Fuel 6-6
Gasoline Octane 6-7
Gasoline Specifications 6-7
California Fuel 6-7
Additives 6-8
Fuels in Foreign Countries 6-8
Filling the Tank 6-9
Filling a Portable Fuel Container 6-11

Checking Things Under the Hood 6-12
Hood Release 6-12
Engine Compartment Overview 6-13
Engine Oil 6-18
Engine Oil Life System 6-21
Engine Air Cleaner/Filter 6-23
Automatic Transmission Fluid 6-25
Cooling System 6-26
Engine Coolant 6-27
Engine Overheating 6-32
Overheated Engine Protection Operating Mode 6-34
Power Steering Fluid 6-35
Windshield Washer Fluid 6-36
Brakes 6-37
Battery 6-40
Jump Starting 6-40

All-Wheel Drive 6-45

Rear Axle 6-46

Front Axle 6-47

Headlamp Aiming 6-48

Bulb Replacement 6-49
High Intensity Discharge (HID) Lighting 6-49
Halogen Bulbs 6-49
Back-Up Lamps 6-50
Replacement Bulbs 6-50

Windshield Replacement 6-50

Windshield Wiper Blade Replacement 6-51

Tires 6-52
Winter Tires 6-53
Tire Sidewall Labeling 6-54
Tire Terminology and Definitions 6-57
Inflation - Tire Pressure 6-60
High-Speed Operation 6-62

Section 6 Service and Appearance Care

Tire Pressure Monitor System 6-62
Tire Pressure Monitor Operation 6-64
Tire Inspection and Rotation 6-67
When It Is Time for New Tires 6-69
Buying New Tires 6-70
Different Size Tires and Wheels 6-72
Uniform Tire Quality Grading 6-73
Wheel Alignment and Tire Balance 6-74
Wheel Replacement 6-74
Tire Chains 6-76
If a Tire Goes Flat 6-76
Tire Sealant and Compressor Kit (Without Selector Switch) 6-78
Tire Sealant and Compressor Kit (With Selector Switch) 6-87
Tire Sealant and Compressor Kit Storage 6-96
Changing a Flat Tire 6-96
Removing the Spare Tire and Tools 6-98
Removing the Flat Tire and Installing the Spare Tire 6-99
Storing a Flat or Spare Tire and Tools 6-105
Compact Spare Tire 6-107

Appearance Care 6-108
Interior Cleaning 6-108
Fabric/Carpet 6-109
Leather 6-110
Instrument Panel, Vinyl, and Other Plastic Surfaces 6-110
Wood Panels 6-111
Speaker Covers 6-111
Care of Safety Belts 6-111
Weatherstrips 6-111
Washing Your Vehicle 6-111
Cleaning Exterior Lamps/Lenses 6-112
Finish Care 6-112
Windshield and Wiper Blades 6-113
Aluminum or Chrome-Plated Wheels and Trim 6-114
Tires 6-115
Sheet Metal Damage 6-115
Finish Damage 6-115
Underbody Maintenance 6-115
Chemical Paint Spotting 6-115

Section 6 Service and Appearance Care

Vehicle Identification 6-116
Vehicle Identification Number (VIN) 6-116
Service Parts Identification Label 6-116
Electrical System 6-116
Add-On Electrical Equipment 6-116
Headlamp Wiring 6-117
Windshield Wiper Fuses 6-117
Power Windows and Other Power Options ... 6-117
Fuses and Circuit Breakers 6-117
Underhood Fuse Block 6-118
Rear Underseat Fuse Block 6-122
Capacities and Specifications 6-130

Service

For service and parts needs, visit your dealer/retailer. You will receive genuine GM parts and GM-trained and supported service people.

Genuine GM parts have one of these marks:

Accessories and Modifications

When non-dealer/non-retailer accessories are added to the vehicle, they can affect vehicle performance and safety, including such things as airbags, braking, stability, ride and handling, emissions systems, aerodynamics, durability, and electronic systems like antilock brakes, traction control, and stability control. Some of these accessories could even cause malfunction or damage not covered by the vehicle warranty.

Damage to vehicle components resulting from the installation or use of non-GM certified parts, including control module modifications, is not covered under the terms of the vehicle warranty and may affect remaining warranty coverage for affected parts.

GM Accessories are designed to complement and function with other systems on the vehicle. Your GM dealer/retailer can accessorize the vehicle using genuine GM Accessories. When you go to your GM dealer/retailer and ask for GM Accessories, you will know that GM-trained and supported service technicians will perform the work using genuine GM Accessories.

Also, see *Adding Equipment to Your Airbag-Equipped Vehicle on page 2-66*.

California Proposition 65 Warning

Most motor vehicles, including this one, contain and/or emit chemicals known to the State of California to cause cancer and birth defects or other reproductive harm. Engine exhaust, many parts and systems, many fluids, and some component wear by-products contain and/or emit these chemicals.

California Perchlorate Materials Requirements

Certain types of automotive applications, such as airbag initiators, seat belt pretensioners, and lithium batteries contained in remote keyless transmitters, may contain perchlorate materials. Special handling may be necessary. For additional information, see www.dtsc.ca.gov/hazardouswaste/perchlorate.

Doing Your Own Service Work

⚠ WARNING:

You can be injured and the vehicle could be damaged if you try to do service work on a vehicle without knowing enough about it.

- Be sure you have sufficient knowledge, experience, the proper replacement parts, and tools before attempting any vehicle maintenance task.
- Be sure to use the proper nuts, bolts, and other fasteners. English and metric fasteners can be easily confused. If the wrong fasteners are used, parts can later break or fall off. You could be hurt.

If doing some of your own service work, use the proper service manual. It tells you much more about how to service the vehicle than this manual can. To order the proper service manual, see *Service Publications Ordering Information on page 8-16*.

This vehicle has an airbag system. Before attempting to do your own service work, see *Servicing Your Airbag-Equipped Vehicle on page 2-66*.

Keep a record with all parts receipts and list the mileage and the date of any service work performed. See *Maintenance Record on page 7-13*.

Adding Equipment to the Outside of the Vehicle

Things added to the outside of the vehicle can affect the airflow around it. This can cause wind noise and can affect fuel economy and windshield washer performance. Check with your dealer/retailer before adding equipment to the outside of the vehicle.

Fuel

Use of the recommended fuel is an important part of the proper maintenance of this vehicle. To help keep the engine clean and maintain optimum vehicle performance, we recommend the use of gasoline advertised as TOP TIER Detergent Gasoline.

Look for the TOP TIER label on the fuel pump to ensure gasoline meets enhanced detergency standards developed by auto companies. A list of marketers providing TOP TIER Detergent Gasoline can be found at www.toptiergas.com.

TOP TIER™
Detergent Gasoline

CATEGORIE SUPERIEURE™
Essences Détergentes

The 8th digit of the Vehicle Identification Number (VIN) shows the code letter or number that identifies the vehicle's engine. The VIN is at the top left of the instrument panel. See *Vehicle Identification Number (VIN) on page 6-116*.

Gasoline Octane

If the vehicle has the 3.6L V6 engine (VIN Code V), use regular unleaded gasoline with a posted octane rating of 87 or higher. If the octane rating is less than 87, an audible knocking noise, commonly referred to as spark knock, might be heard when driving. If this occurs, use a gasoline rated at 87 octane or higher as soon as possible. If heavy knocking is heard when using gasoline rated at 87 octane or higher, the engine needs service.

If the vehicle has the 4.6L V8 engine (VIN Code A), use premium unleaded gasoline with a posted octane rating of 91 or higher. You can also use regular unleaded gasoline rated at 87 octane or higher, but the vehicle's acceleration could be slightly reduced, and a slight audible knocking noise, commonly referred to as spark knock, might be heard. If the octane is less than 87, you might notice a heavy knocking noise when you drive. If this occurs, use a gasoline rated at 87 octane or higher as soon as possible. Otherwise, you could damage the engine. If heavy knocking is heard when using gasoline rated at 87 octane or higher, the engine needs service.

Gasoline Specifications

At a minimum, gasoline should meet ASTM specification D 4814 in the United States or CAN/CGSB-3.5 or 3.511 in Canada. Some gasolines contain an octane-enhancing additive called methylcyclopentadienyl manganese tricarbonyl (MMT). We recommend against the use of gasolines containing MMT. See *Additives on page 6-8* for additional information.

California Fuel

If the vehicle is certified to meet California Emissions Standards, it is designed to operate on fuels that meet California specifications. See the underhood emission control label. If this fuel is not available in states adopting California emissions standards, the vehicle will operate satisfactorily on fuels meeting federal specifications, but emission control system performance might be affected. The malfunction indicator lamp could turn on and the vehicle might fail a smog-check test. See *Malfunction Indicator Lamp on page 4-62*. If this occurs, return to your authorized dealer/retailer for diagnosis. If it is determined that the condition is caused by the type of fuel used, repairs might not be covered by the vehicle warranty.

Additives

To provide cleaner air, all gasolines in the United States are now required to contain additives that help prevent engine and fuel system deposits from forming, allowing the emission control system to work properly. In most cases, nothing should have to be added to the fuel. However, some gasolines contain only the minimum amount of additive required to meet U.S. Environmental Protection Agency regulations. To help keep fuel injectors and intake valves clean, or if the vehicle experiences problems due to dirty injectors or valves, look for gasoline that is advertised as TOP TIER Detergent Gasoline.

For customers who do not use TOP TIER Detergent Gasoline regularly, one bottle of GM Fuel System Treatment PLUS, added to the fuel tank at every engine oil change, can help clean deposits from fuel injectors and intake valves. GM Fuel System Treatment PLUS is the only gasoline additive recommended by General Motors.

Also, your dealer/retailer has additives that will help correct and prevent most deposit-related problems.

Gasolines containing oxygenates, such as ethers and ethanol, and reformulated gasolines might be available in your area. We recommend that you use these gasolines, if they comply with the specifications described earlier. However, E85 (85% ethanol) and other fuels containing more than 10% ethanol must not be used in vehicles that were not designed for those fuels.

Notice: **This vehicle was not designed for fuel that contains methanol. Do not use fuel containing methanol. It can corrode metal parts in the fuel system and also damage plastic and rubber parts. That damage would not be covered under the vehicle warranty.**

Some gasolines that are not reformulated for low emissions can contain an octane-enhancing additive called methylcyclopentadienyl manganese tricarbonyl (MMT); ask the attendant where you buy gasoline whether the fuel contains MMT. We recommend against the use of such gasolines. Fuels containing MMT can reduce the life of spark plugs and the performance of the emission control system could be affected. The malfunction indicator lamp might turn on. If this occurs, return to your dealer/retailer for service.

Fuels in Foreign Countries

If you plan on driving in another country outside the United States or Canada, the proper fuel might be hard to find. Never use leaded gasoline or any other fuel not recommended in the previous text on fuel. Costly repairs caused by use of improper fuel would not be covered by the vehicle warranty.

To check the fuel availability, ask an auto club, or contact a major oil company that does business in the country where you will be driving.

Filling the Tank

⚠ WARNING:

Fuel vapor burns violently and a fuel fire can cause bad injuries. To help avoid injuries to you and others, read and follow all the instructions on the fuel pump island. Turn off the engine when refueling. Do not smoke near fuel or when refueling the vehicle. Do not use cellular phones. Keep sparks, flames, and smoking materials away from fuel. Do not leave the fuel pump unattended when refueling the vehicle. This is against the law in some places. Do not re-enter the vehicle while pumping fuel. Keep children away from the fuel pump; never let children pump fuel.

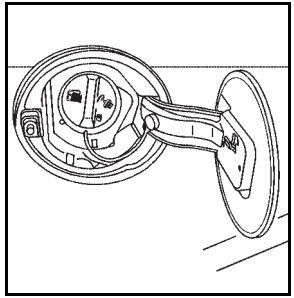

The tethered fuel cap is located behind a hinged fuel door on the passenger side of the vehicle.

To open the fuel door, push the rearward center edge in and release and it will open.

To remove the fuel cap, turn it slowly counterclockwise. The fuel cap has a spring in it; if the cap is released too soon, it will spring back to the right.

While refueling, hang the tethered fuel cap from the hook on the fuel door.

⚠ WARNING:

Fuel can spray out on you if you open the fuel cap too quickly. If you spill fuel and then something ignites it, you could be badly burned. This spray can happen if the tank is nearly full, and is more likely in hot weather. Open the fuel cap slowly and wait for any hiss noise to stop. Then unscrew the cap all the way.

Be careful not to spill fuel. Do not top off or overfill the tank, and wait a few seconds after you have finished pumping before removing the nozzle. Clean fuel from painted surfaces as soon as possible. See *Washing Your Vehicle on page 6-111*.

When replacing the fuel cap, turn it clockwise until it clicks. Make sure the cap is fully installed. The diagnostic system can determine if the fuel cap has been left off or improperly installed. This would allow fuel to evaporate into the atmosphere. See *Malfunction Indicator Lamp on page 4-62*.

The CHECK GAS CAP message will appear on the Driver Information Center (DIC) display if the fuel cap is not reinstalled properly. See *DIC Warnings and Messages on page 4-76* for more information.

⚠ WARNING:

If a fire starts while you are refueling, do not remove the nozzle. Shut off the flow of fuel by shutting off the pump or by notifying the station attendant. Leave the area immediately.

Notice: **If you need a new fuel cap, be sure to get the right type. Your dealer/retailer can get one for you. If you get the wrong type, it may not fit properly. This may cause the malfunction indicator lamp to light and may damage the fuel tank and emissions system. See *Malfunction Indicator Lamp on page 4-62*.**

Filling a Portable Fuel Container

⚠ WARNING:

Never fill a portable fuel container while it is in the vehicle. Static electricity discharge from the container can ignite the fuel vapor. You can be badly burned and the vehicle damaged if this occurs. To help avoid injury to you and others:

- Dispense fuel only into approved containers.
- Do not fill a container while it is inside a vehicle, in a vehicle's trunk, pickup bed, or on any surface other than the ground.
- Bring the fill nozzle in contact with the inside of the fill opening before operating the nozzle. Contact should be maintained until the filling is complete.
- Do not smoke while pumping fuel.
- Do not use a cellular phone while pumping fuel.

Checking Things Under the Hood

⚠ WARNING:

An electric fan under the hood can start up and injure you even when the engine is not running. Keep hands, clothing, and tools away from any underhood electric fan.

⚠ WARNING:

Things that burn can get on hot engine parts and start a fire. These include liquids like fuel, oil, coolant, brake fluid, windshield washer and other fluids, and plastic or rubber. You or others could be burned. Be careful not to drop or spill things that will burn onto a hot engine.

Hood Release

To open the hood:

1. Pull the hood release lever with this symbol on it. It is located inside the vehicle on the lower left side of the instrument panel.

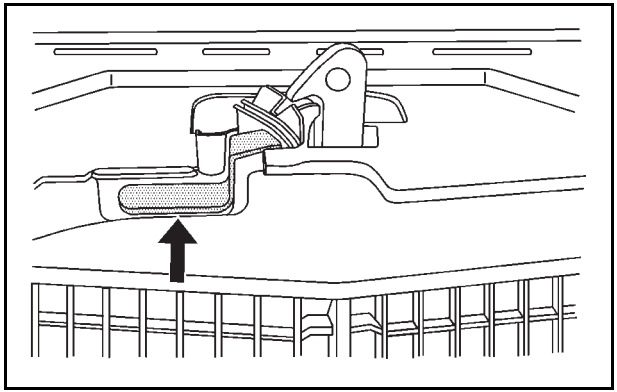

2. Then go to the front of the vehicle and find the secondary hood release lever. The lever is located under the front edge of the grille near the center. Push the release lever up and raise the hood.

Before closing the hood, be sure all the filler caps are on properly. Then pull the hood down and close it firmly.

Engine Compartment Overview

Your vehicle may be equipped with front compartment underhood sight shields, which surround the vehicle's engine cover. These sight shields will need to be removed in order to access some of the underhood components in your vehicle.

To remove the sight shields, turn the fasteners on each shield to the left until they pop out. Then remove the fasteners and lift the shields up and away from the tower to tower brace.

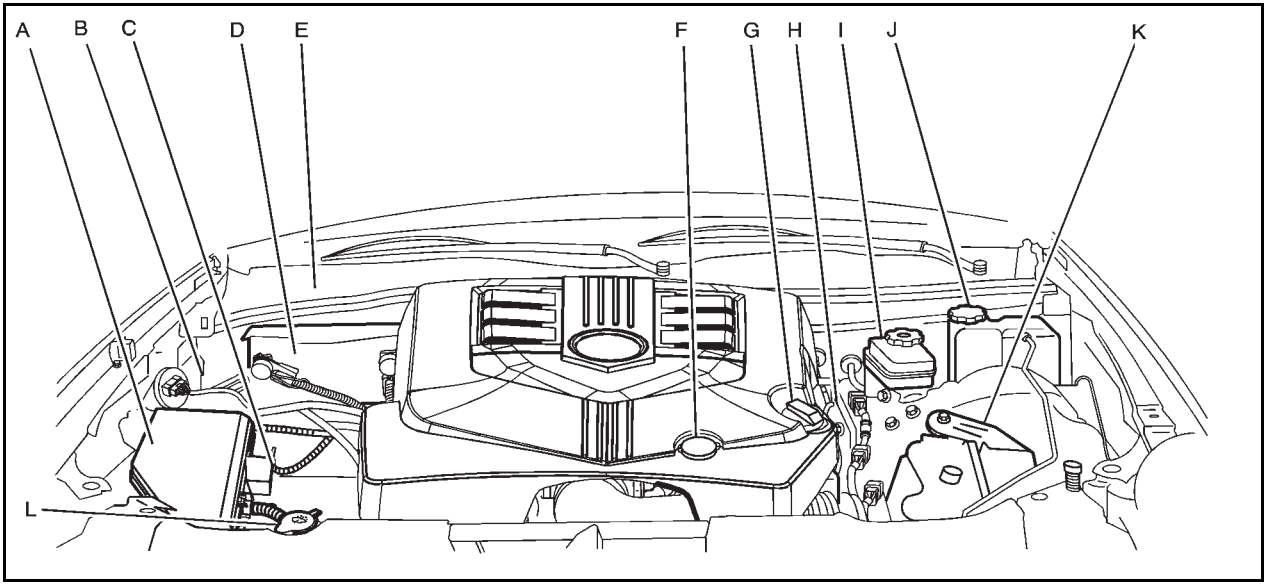

3.6L V6 Engine

After you have removed the sight shields (if equipped) on the 3.6L V6 engine, here is what you will see:

A. Underhood Fuse Block. See *Underhood Fuse Block on page 6-118*.

B. Remote Negative (-) Terminal. See *Jump Starting on page 6-40*.

C. Remote Positive (+) Terminal. See *Jump Starting on page 6-40*.

D. Battery. See *Battery on page 6-40*.

E. Passenger Compartment Air Filter. See *Passenger Compartment Air Filter on page 4-50*.

F. Power Steering Fluid Reservoir. See *Power Steering Fluid on page 6-35*.

G. Engine Oil Fill Cap. See “When to Add Engine Oil” under *Engine Oil on page 6-18*.

H. Engine Oil Dipstick (Out of View). See “Checking Engine Oil” under *Engine Oil on page 6-18*.

I. Brake Master Cylinder Reservoir. See “Brake Fluid” under *Brakes on page 6-37*.

J. Engine Coolant Surge Tank and Pressure Cap. See *Cooling System on page 6-26*.

K. Engine Air Cleaner/Filter. See *Engine Air Cleaner/ Filter on page 6-23*.

L. Windshield Washer Fluid Reservoir. See “Adding Washer Fluid” under *Windshield Washer Fluid on page 6-36*.

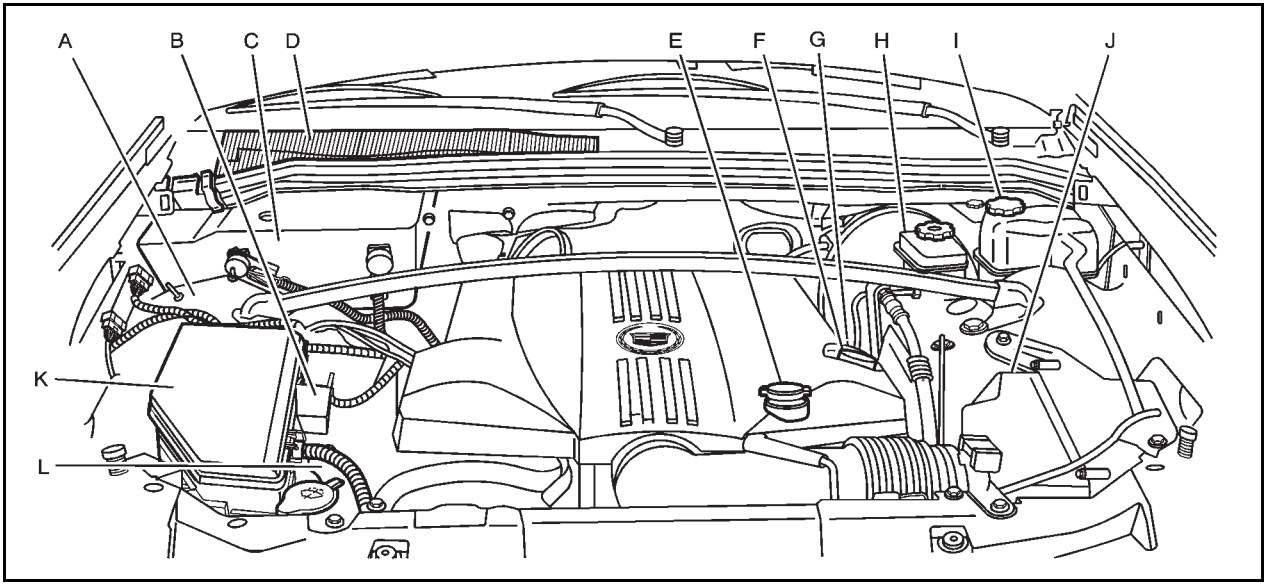

4.6L V8 Engine

After you have removed the sight shields (if equipped) on the 4.6L V8 engine, here is what you will see:

A. Remote Negative (-) Terminal. See *Jump Starting on page 6-40*.

B. Remote Positive (+) Terminal. See *Jump Starting on page 6-40*.

C. Battery. See *Battery on page 6-40*.

D. Passenger Compartment Air Filter. See *Passenger Compartment Air Filter on page 4-50*.

E. Power Steering Fluid Reservoir. See *Power Steering Fluid on page 6-35*.

F. Engine Oil Fill Cap. See “When to Add Engine Oil” under *Engine Oil on page 6-18*.

G. Engine Oil Dipstick (Out of View). See “Checking Engine Oil” under *Engine Oil on page 6-18*.

H. Brake Master Cylinder Reservoir. See “Brake Fluid” under *Brakes on page 6-37*.

I. Engine Coolant Surge Tank and Pressure Cap. See *Cooling System on page 6-26*.

J. Engine Air Cleaner/Filter. See *Engine Air Cleaner/ Filter on page 6-23*.

K. Underhood Fuse Block. See *Underhood Fuse Block on page 6-118*.

L. Windshield Washer Fluid Reservoir. See “Adding Washer Fluid” under *Windshield Washer Fluid on page 6-36*.

If your vehicle is equipped with front compartment underhood sight shields, before closing the hood be sure to reinstall the sight shields. To reinstall the shields, locate the tabs on the left and right sides and insert them into the openings in the tower to tower brace. Then insert the fasteners into the top of the shield and push the fasteners back into place.

Engine Oil

Checking Engine Oil

It is a good idea to check the engine oil level at each fuel fill. In order to get an accurate reading, the oil must be warm and the vehicle must be on level ground.

The engine oil dipstick handle is a yellow loop. See *Engine Compartment Overview on page 6-13* for the location of the engine oil dipstick.

1. Turn off the engine and give the oil several minutes to drain back into the oil pan. If this is not done, the oil dipstick might not show the actual level.
2. Pull out the dipstick and clean it with a paper towel or cloth, then push it back in all the way. Remove it again, keeping the tip down, and check the level.

When to Add Engine Oil

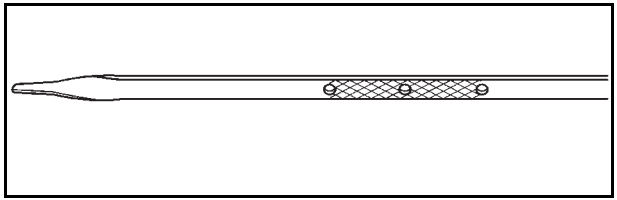

V6 Engine

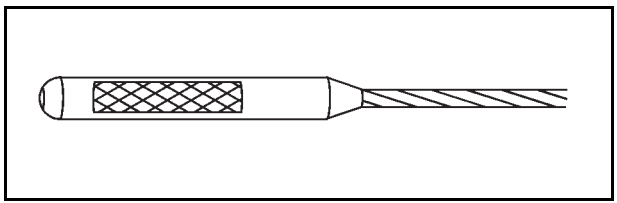

V8 Engine

If the oil is below the cross-hatched area at the tip of the dipstick, add at least one quart/liter of the recommended oil. This section explains what kind of oil to use. For engine oil crankcase capacity, see *Capacities and Specifications on page 6-130*.

Notice: **Do not add too much oil. If the engine has so much oil that the oil level gets above the cross-hatched area that shows the proper operating range, the engine could be damaged.**

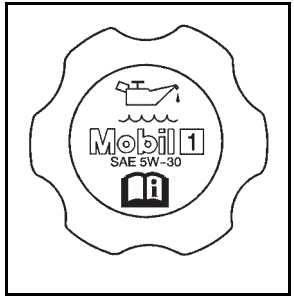

See *Engine Compartment Overview on page 6-13* for the location of the engine oil fill cap.

Add enough oil to put the level somewhere in the proper operating range. Push the dipstick all the way back in when through.

What Kind of Engine Oil to Use

Look for three things:

- GM4718M

  This vehicle's engine requires a special oil meeting GM Standard GM4718M. Oils meeting this standard may be identified as synthetic. However, not all synthetic oils will meet this GM standard. Use only an oil that meets GM Standard GM4718M.

Notice: **Using oils that do not have the GM4718M Standard designation can cause engine damage not covered by the vehicle warranty.**

- SAE 5W-30

  SAE 5W-30 is best for the vehicle. These numbers on an oil container show its viscosity, or thickness. Do not use other viscosity oils such as SAE 20W-50.

- American Petroleum Institute (API) starburst symbol

Oils meeting these requirements should have the starburst symbol on the container. This symbol indicates that the oil has been certified by the American Petroleum Institute (API).

This vehicle's engine was filled at the factory with a Mobil 1® synthetic oil meeting all requirements for this vehicle.

Substitute Engine Oil: When adding oil to maintain engine oil level, oil meeting GM Standard GM4718M might not be available. You can add substitute oil designated SAE 5W-30 with the starburst symbol at all temperatures. Substitute oil not meeting GM Standard GM4718M should not be used for an oil change.

Engine Oil Additives / Engine Oil Flushes

Do not add anything to the oil. The recommended oils with the starburst symbol that meet GM standards are all that is needed for good performance and engine protection.

Engine oil system flushes are not recommended and could cause engine damage not covered by the vehicle warranty.

Engine Oil Life System

When to Change Engine Oil

This vehicle has a computer system that indicates when to change the engine oil and filter. This is based on engine revolutions and engine temperature, and not on mileage. Based on driving conditions, the mileage at which an oil change is indicated can vary considerably. For the oil life system to work properly, the system must be reset every time the oil is changed.

Notice: **If your vehicle is an STS-V model, the engine uses a special oil filter. The use of any other engine oil filter could lead to filter failure and result in severe engine damage. Damage caused by use of the wrong engine oil filter would not be covered by your new vehicle warranty.**

When the system has calculated that oil life has been diminished, it indicates that an oil change is necessary. A CHANGE ENGINE OIL SOON message in the DIC comes on. See *DIC Warnings and Messages on page 4-76*. Change the oil as soon as possible within the next 600 miles (1 000 km). It is possible that, if driving under the best conditions, the oil life system might not indicate that an oil change is necessary for over a year. However, the engine oil and filter must be changed at least once a year and at this time the system must be reset. Your dealer/retailer has trained service people who will perform this work using genuine parts and reset the system. It is also important to check the oil regularly and keep it at the proper level.

If the system is ever reset accidentally, the oil must be changed at 3,000 miles (5 000 km) since the last oil change. Remember to reset the oil life system whenever the oil is changed.

How to Reset the Engine Oil Life System

The Engine Oil Life System calculates when to change the engine oil and filter based on vehicle use. Whenever the oil is changed, reset the system so it can calculate when the next oil change is required. If a situation occurs where the oil is changed prior to a CHANGE ENGINE OIL SOON message in the DIC being turned on, reset the system.

After the oil has been changed, the CHANGE ENGINE OIL SOON message must be reset. To reset the message:

1. Press the up or down arrow to scroll the DIC to show OIL LIFE.
2. Once the XXX% ENGINE OIL LIFE menu item is highlighted, press and hold the RESET button until the percentage shows 100%.

   If the percentage does not return to 100% or if the CHANGE ENGINE OIL SOON message comes back on when the vehicle is started, the engine oil life system has not reset. Repeat the procedure.

What to Do with Used Oil

Used engine oil contains certain elements that can be unhealthy for your skin and could even cause cancer. Do not let used oil stay on your skin for very long. Clean your skin and nails with soap and water, or a good hand cleaner. Wash or properly dispose of clothing or rags containing used engine oil. See the manufacturer's warnings about the use and disposal of oil products.

Used oil can be a threat to the environment. If you change your own oil, be sure to drain all the oil from the filter before disposal. Never dispose of oil by putting it in the trash, pouring it on the ground, into sewers, or into streams or bodies of water. Recycle it by taking it to a place that collects used oil.

Engine Air Cleaner/Filter

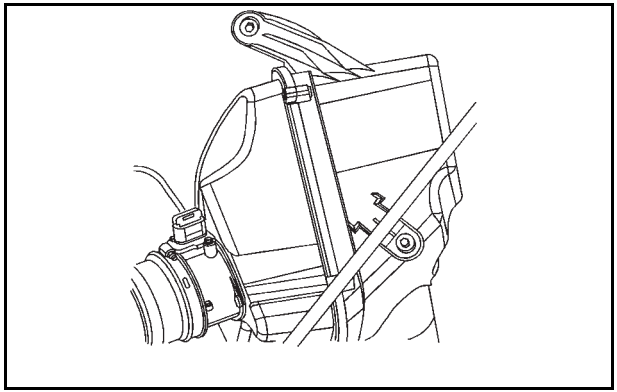

4.6L V8 Engine shown, 3.6L V6 Engine similar

The engine air cleaner/filter is in the engine compartment on the driver's side of the vehicle, near the front. See *Engine Compartment Overview on page 6-13* for more information on locating the air cleaner/filter.

When to Inspect the Engine Air Cleaner/Filter

Inspect the air cleaner/filter at the Maintenance II intervals and replace it at the first oil change after each 80 000 km (50,000 mile) interval. See *Scheduled Maintenance on page 7-3* for more information. If you are driving in dusty/dirty conditions, inspect the filter at each engine oil change.

How to Inspect the Engine Air Cleaner/Filter

To inspect the air cleaner/filter remove the filter from the vehicle and lightly shake the filter to release loose dust and dirt. If the filter remains caked with dirt, a new filter is required.

To inspect or replace the filter in the 3.6L V6 or 4.6L V8 engines, do the following:

1. Remove the two screws located on the top of the cover.
2. Disconnect the coolant recovery hose so that it is not going across the top of the engine air cleaner/filter.
3. Loosen the clamp and remove the duct from the passenger's side of the engine air cleaner/filter.
4. The two sides of the airbox are hinged at the bottom. Open the airbox by pushing the top of the airbox cover toward the engine.
5. Remove the air filter by lifting it straight up through the opening in the airbox.
6. Inspect or replace the engine air cleaner/filter. See *Maintenance Replacement Parts on page 7-11* for the correct part number for the filter.
7. Reinstall the cover by reversing Steps 1 through 4.

⚠ WARNING:

Operating the engine with the air cleaner/filter off can cause you or others to be burned. The air cleaner not only cleans the air; it helps to stop flames if the engine backfires. Use caution when working on the engine and do not drive with the air cleaner/filter off.

Notice: **If the air cleaner/filter is off, dirt can easily get into the engine, which could damage it. Always have the air cleaner/filter in place when you are driving.**

Automatic Transmission Fluid

How to Check Automatic Transmission Fluid

It is not necessary to check the transmission fluid level. A transmission fluid leak is the only reason for fluid loss. If a leak occurs, take the vehicle to the dealer/retailer service department and have it repaired as soon as possible.

There is a special procedure for checking and changing the transmission fluid. Because this procedure is difficult, it should be done at the dealer/retailer service department. Contact your dealer/retailer for additional information or the procedure can be found in the service manual. To purchase a service manual, see *Service Publications Ordering Information on page 8-16*.

Notice: **Use of the incorrect automatic transmission fluid may damage the vehicle, and the damages may not be covered by the vehicle's warranty. Always use the automatic transmission fluid listed in *Recommended Fluids and Lubricants on page 7-9*.**

Change the fluid and filter at the intervals listed in *Scheduled Maintenance on page 7-3*, and be sure to use the fluid listed in *Recommended Fluids and Lubricants on page 7-9*.

Cooling System

The cooling system allows the engine to maintain the correct working temperature.

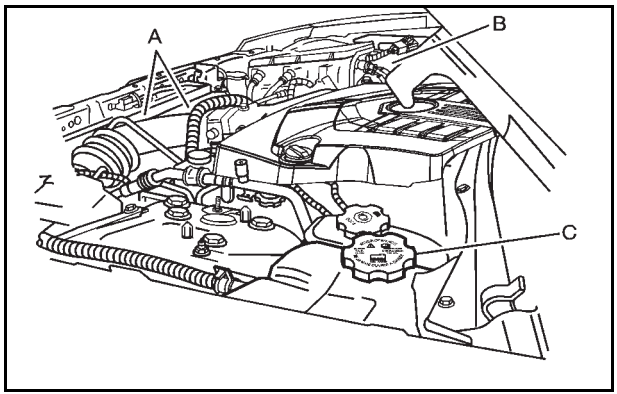

3.6L V6 Engine shown, 4.6L V8 Engine similar

A. Electric Engine Cooling Fan(s) (Out of view)

B. Mechanical Engine Cooling Fan (If equipped) (Out of view)

C. Coolant Surge Tank and Pressure Cap

⚠ WARNING:

An electric engine cooling fan under the hood can start up even when the engine is not running and can cause injury. Keep hands, clothing, and tools away from any underhood electric fan.

⚠ WARNING:

Heater and radiator hoses, and other engine parts, can be very hot. Do not touch them. If you do, you can be burned.

Do not run the engine if there is a leak. If you run the engine, it could lose all coolant. That could cause an engine fire, and you could be burned. Get any leak fixed before you drive the vehicle.

Notice: **Using coolant other than DEX-COOL® can cause premature engine, heater core, or radiator corrosion. In addition, the engine coolant could require changing sooner, at 50 000 km (30,000 miles) or 24 months, whichever occurs first. Any repairs would not be covered by the vehicle warranty. Always use DEX-COOL® (silicate-free) coolant in the vehicle.**

Engine Coolant

The cooling system in the vehicle is filled with DEX-COOL® engine coolant. This coolant is designed to remain in the vehicle for five years or 240 000 km (150,000 miles), whichever occurs first.

The following explains the cooling system and how to check and add coolant when it is low. If there is a problem with engine overheating, see *Engine Overheating on page 6-32*

What to Use

⚠ WARNING:

Adding only plain water to the cooling system can be dangerous. Plain water, or some other liquid such as alcohol, can boil before the proper coolant mixture will. The vehicle's coolant warning system is set for the proper coolant mixture. With plain water or the wrong mixture, the engine could get too hot but you would not get the overheat warning. The engine could catch fire and you or others could be burned. Use a 50/50 mixture of clean, drinkable water and DEX-COOL® coolant.

Use a 50/50 mixture of clean, drinkable water and DEX-COOL® coolant. If using this mixture, nothing else needs to be added. This mixture:

- Gives freezing protection down to −34°F (−37°C), outside temperature.
- Gives boiling protection up to 265°F (129°C), engine temperature.
- Protects against rust and corrosion.
- Will not damage aluminum parts.
- Helps keep the proper engine temperature.

Notice: **If an improper coolant mixture is used, the engine could overheat and be badly damaged. The repair cost would not be covered by the vehicle warranty. Too much water in the mixture can freeze and crack the engine, radiator, heater core, and other parts.**

Notice: **If extra inhibitors and/or additives are used in the vehicle's cooling system, the vehicle could be damaged. Use only the proper mixture of the engine coolant listed in this manual for the cooling system. See *Recommended Fluids and Lubricants on page 7-9* for more information.**

Checking Coolant

The vehicle must be on a level surface when checking the coolant level.

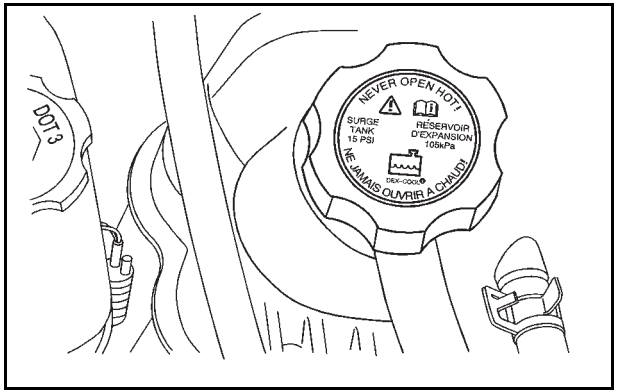

The coolant surge tank and pressure cap are located on the driver's side of the vehicle, toward the rear of the engine compartment. See *Engine Compartment Overview on page 6-13* for more information on location.

Check to see if coolant is visible in the coolant surge tank. If the coolant inside the coolant surge tank is boiling, do not do anything else until it cools down. If coolant is visible but the coolant level is not at or above the FULL COLD/FROID line, add a 50/50 mixture of clean, drinkable water and DEX-COOL® coolant at the coolant surge tank, but be sure the cooling system is cool before this is done.

When the engine is cold, the coolant level should be at or above the FULL COLD/FROID line on the side of the coolant surge tank. Follow the arrow from the top of the tank down the side to the horizontal mark. If it is not, there could be a leak in the cooling system.

If the coolant is low, add the coolant or take the vehicle to a dealer/retailer for service

How to Add Coolant to the Surge Tank

⚠ WARNING:

You can be burned if you spill coolant on hot engine parts. Coolant contains ethylene glycol and it will burn if the engine parts are hot enough. Do not spill coolant on a hot engine.

⚠ WARNING:

Steam and scalding liquids from a hot cooling system can blow out and burn you badly. They are under pressure, and if you turn the coolant surge tank pressure cap — even a little — they can come out at high speed. Never turn the cap when the cooling system, including the coolant surge tank pressure cap, is hot. Wait for the cooling system and coolant surge tank pressure cap to cool if you ever have to turn the pressure cap.

⚠ WARNING:

An electric engine cooling fan under the hood can start up even when the engine is not running and can cause injury. Keep hands, clothing, and tools away from any underhood electric fan.

If no coolant is visible in the surge tank, add coolant as follows:

1. Remove the coolant surge tank pressure cap when the cooling system, including the coolant surge tank pressure cap and upper radiator hose, is no longer hot. Turn the pressure cap slowly counterclockwise about one-quarter of a turn. If you hear a hiss, wait for that to stop. A hiss means there is still some pressure left.

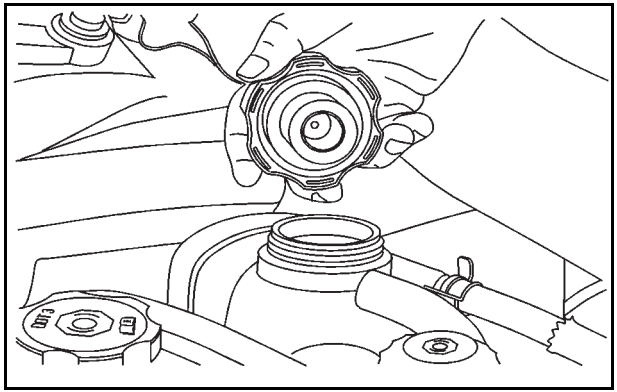

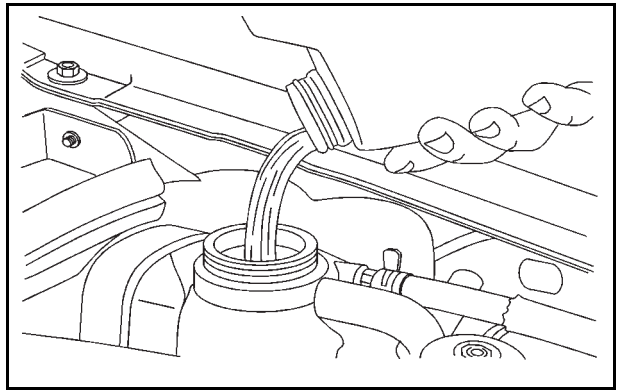

2. Then keep turning the pressure cap slowly, and remove it.

3. Fill the coolant surge tank with the proper DEX-COOL® coolant mixture, to slightly above the FULL COLD/FROID line on the side of the coolant surge tank.

4. With the coolant surge tank pressure cap off, start the engine and let it run until you can feel the upper radiator hose getting hot. The upper radiator hose is the largest of the hoses which comes out of the radiator, on the passenger side of the vehicle. Watch out for the engine cooling fans.

   By this time, the coolant level inside the coolant surge tank may be lower. If the level is lower, add more of the proper mixture to the coolant surge tank until the level reaches the FULL COLD/FROID line on the side of the coolant surge tank.

5. Then replace the pressure cap. Be sure the pressure cap is hand-tight and fully seated.

Start the engine and allow it to warm up.

Engine Overheating

The vehicle has several indicators to warn of engine overheating.

There are two engine hot messages that could be displayed in the Driver Information Center (DIC). See *DIC Warnings and Messages on page 4-76* DIC Warnings and Messages for more information.

If the engine is overheating, then you will find a coolant temperature gage and a coolant warning light on the instrument panel. See *Engine Coolant Temperature Gage on page 4-61* and *Engine Coolant Temperature Warning Light on page 4-61* for more information.

You may decide not to lift the hood when this warning appears, but instead get service help right away. See *Roadside Service on page 8-8*.

If you do decide to lift the hood , make sure the vehicle is parked on a level surface.

Then check to see if the engine cooling fans are running. If the engine is overheating, both fans should be running. If they are not, do not continue to run the engine and have the vehicle serviced.

Notice: **Engine damage from running your engine without coolant is not covered by your warranty. See *Overheated Engine Protection Operating Mode on page 6-34* for information on driving to a safe place in an emergency.**

Notice: **If the engine catches fire while driving with no coolant, the vehicle can be badly damaged. The costly repairs would not be covered by the vehicle warranty. See *Overheated Engine Protection Operating Mode on page 6-34* for information on driving to a safe place in an emergency.**

If Steam Is Coming From The Engine Compartment

⚠ WARNING:

Steam from an overheated engine can burn you badly, even if you just open the hood. Stay away from the engine if you see or hear steam coming from it. Turn it off and get everyone away from the vehicle until it cools down. Wait until there is no sign of steam or coolant before you open the hood.

If you keep driving when the vehicles engine is overheated, the liquids in it can catch fire. You or others could be badly burned. Stop the engine if it overheats, and get out of the vehicle until the engine is cool.

See *Overheated Engine Protection Operating Mode on page 6-34* for information on driving to a safe place in an emergency.

If No Steam Is Coming From The Engine Compartment

An overheat warning, can indicate a serious problem.

If an engine overheat warning is displayed but no steam can be seen or heard, the problem may not be too serious. Sometimes the engine can get a little too hot when the vehicle:

- Climbs a long hill on a hot day.
- Stops after high-speed driving.
- Idles for long periods in traffic.
- Tows a trailer.

If the overheat warning is displayed with no sign of steam:

1. Turn the air off.
2. Turn the heater on to the highest temperature and to the highest fan speed. Open the windows as necessary.
3. In heavy traffic, let the engine idle in N (Neutral) while stopped. If it is safe to do so, pull off the road, shift to P (Park) or N (Neutral) and let the engine idle.

If the engine coolant temperature gage is no longer in the overheat zone or an overheat warning no longer displays, the vehicle can be driven. Continue to drive the vehicle slow for about 10 minutes. Keep a safe vehicle distance from the car in front of you. If the warning does not come back on, continue to drive normally.

If the warning continues, pull over, stop, and park the vehicle right away.

If there is no sign of steam, idle the engine for three minutes while parked. If the warning is still displayed, turn off the engine until it cools down. Also, see "Overheated Engine Protection Operating Mode" later in this section.

Overheated Engine Protection Operating Mode

This operating mode allows your vehicle to be driven to a safe place in an emergency. Should an overheated engine condition exist, an overheat protection mode which alternates firing groups of cylinders helps prevent engine damage. In this mode, you will notice a loss in power and engine performance. An engine overheat warning will indicate that an overheat condition exists. Driving extended miles (km) and/or towing a trailer in the overheat protection mode should be avoided.

Notice: **After driving in the overheated engine protection operating mode, to avoid engine damage, allow the engine to cool before attempting any repair. The engine oil will be severely degraded. Repair the cause of coolant loss and change the oil. See *Engine Oil on page 6-18*.**

Power Steering Fluid

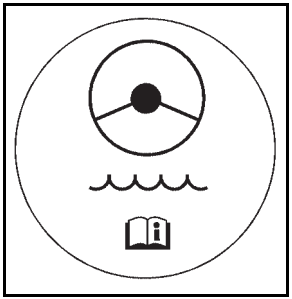

See *Engine Compartment Overview on page 6-13* for reservoir location.

When to Check Power Steering Fluid

It is not necessary to regularly check power steering fluid unless you suspect there is a leak in the system or you hear an unusual noise. A fluid loss in this system could indicate a problem. Have the system inspected and repaired.

How to Check Power Steering Fluid

To check the power steering fluid, do the following:

1. Turn the ignition off and let the engine compartment cool down.
2. Wipe the cap and the top of the reservoir clean.
3. Unscrew the cap and wipe the dipstick with a clean rag.
4. Replace the cap and completely tighten it.
5. Remove the cap again and look at the fluid level on the dipstick.

The level should be within the HOT mark. If necessary, add only enough fluid to bring the level within the mark.

What to Use

To determine what kind of fluid to use, see *Recommended Fluids and Lubricants on page 7-9*. Always use the proper fluid.

Notice: **Use of the incorrect fluid may damage the vehicle and the damages may not be covered by the vehicle's warranty. Always use the correct fluid listed in *Recommended Fluids and Lubricants on page 7-9*.**

Windshield Washer Fluid

What to Use

When you need windshield washer fluid, be sure to read the manufacturer's instructions before use. If you will be operating your vehicle in an area where the temperature may fall below freezing, use a fluid that has sufficient protection against freezing.

Adding Washer Fluid

The CHECK WASHER FLUID message will appear on the Driver Information Center (DIC) when the fluid level is low. See *DIC Warnings and Messages on page 4-76* for more information.

Open the cap with the washer symbol on it. Add washer fluid until the tank is full. See *Engine Compartment Overview on page 6-13* for reservoir location.

Notice:

- **When using concentrated washer fluid, follow the manufacturer's instructions for adding water.**
- **Do not mix water with ready-to-use washer fluid. Water can cause the solution to freeze and damage the washer fluid tank and other parts of the washer system. Also, water does not clean as well as washer fluid.**
- **Fill the washer fluid tank only three-quarters full when it is very cold. This allows for fluid expansion if freezing occurs, which could damage the tank if it is completely full.**
- **Do not use engine coolant (antifreeze) in the windshield washer. It can damage the vehicle's windshield washer system and paint.**

Brakes

Brake Fluid

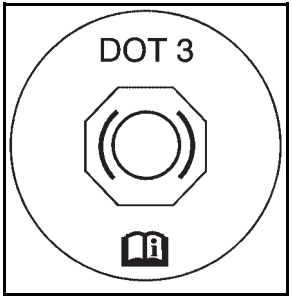

The brake master cylinder reservoir is filled with DOT 3 brake fluid. See *Engine Compartment Overview on page 6-13* for reservoir location and access.

There are only two reasons why the brake fluid level in the reservoir might go down:

- The brake fluid level goes down because of normal brake lining wear. When new linings are installed, the fluid level goes back up.
- A fluid leak in the brake hydraulic system can also cause a low fluid level. Have the brake hydraulic system fixed, since a leak means that sooner or later the brakes will not work well.

Do not top off the brake fluid. Adding fluid does not correct a leak. If fluid is added when the linings are worn, there will be too much fluid when new brake linings are installed. Add or remove brake fluid, as necessary, only when work is done on the brake hydraulic system.

⚠ WARNING:

If too much brake fluid is added, it can spill on the engine and burn, if the engine is hot enough. You or others could be burned, and the vehicle could be damaged. Add brake fluid only when work is done on the brake hydraulic system.

If the ignition is on and the brake fluid is low, the CHECK BRAKE FLUID message displays in the Driver Information Center (DIC). See *DIC Warnings and Messages on page 4-76*.

What to Add

DOT 3 brake fluid is recommended. DOT 4 brake fluid is also compatible with the vehicle's brake system parts. However, if DOT 4 fluid is used, it is recommended that the brake hydraulic system be flushed and refilled with new DOT 4 fluid at a regular maintenance service every two years. See *Scheduled Maintenance on page 7-3*. Use new brake fluid from a sealed container only. See *Recommended Fluids and Lubricants on page 7-9*.

Always clean the brake fluid reservoir cap and the area around the cap before removing it. This helps keep dirt from entering the reservoir.

⚠ WARNING:

With the wrong kind of fluid in the brake hydraulic system, the brakes might not work well. This could cause a crash. Always use the proper brake fluid.

Notice:

- **Using the wrong fluid can badly damage brake hydraulic system parts. For example, just a few drops of mineral-based oil, such as engine oil, in the brake hydraulic system can damage brake hydraulic system parts so badly that they will have to be replaced. Do not let someone put in the wrong kind of fluid.**
- **If brake fluid is spilled on the vehicle's painted surfaces, the paint finish can be damaged. Be careful not to spill brake fluid on the vehicle. If you do, wash it off immediately. See *Washing Your Vehicle on page 6-111*.**

Brake Wear

This vehicle has disc brakes. Disc brake pads have built-in wear indicators that make a high-pitched warning sound when the brake pads are worn and new pads are needed. The sound can come and go or be heard all the time the vehicle is moving, except when applying the brake pedal firmly.

⚠ WARNING:

The brake wear warning sound means that soon the brakes will not work well. That could lead to an accident. When the brake wear warning sound is heard, have the vehicle serviced.

Notice: **Continuing to drive with worn-out brake pads could result in costly brake repair.**

Some driving conditions or climates can cause a brake squeal when the brakes are first applied or lightly applied. This does not mean something is wrong with the brakes.

Properly torqued wheel nuts are necessary to help prevent brake pulsation. When tires are rotated, inspect brake pads for wear and evenly tighten wheel nuts in the proper sequence to torque specifications in *Capacities and Specifications on page 6-130*.

Brake linings should always be replaced as complete axle sets.

Brake Pedal Travel

See your dealer/retailer if the brake pedal does not return to normal height, or if there is a rapid increase in pedal travel. This could be a sign that brake service might be required.

Brake Adjustment

Every time the brakes are applied, with or without the vehicle moving, the brakes adjust for wear.

Replacing Brake System Parts

The braking system on a vehicle is complex. Its many parts have to be of top quality and work well together if the vehicle is to have really good braking. The vehicle was designed and tested with top-quality brake parts. When parts of the braking system are replaced — for example, when the brake linings wear down and new ones are installed — be sure to get new approved replacement parts. If this is not done, the brakes might not work properly. For example, if someone puts in brake linings that are wrong for the vehicle, the balance between the front and rear brakes can change — for the worse. The braking performance expected can change in many other ways if the wrong replacement brake parts are installed.

Battery

Refer to the replacement number on the original battery label when a new battery is needed. See *Engine Compartment Overview on page 6-13* for battery location.

⚠ DANGER:

Battery posts, terminals, and related accessories contain lead and lead compounds, chemicals known to the State of California to cause cancer and reproductive harm. Wash hands after handling.

Vehicle Storage

⚠ WARNING:

Batteries have acid that can burn you and gas that can explode. You can be badly hurt if you are not careful. See *Jump Starting on page 6-40* for tips on working around a battery without getting hurt.

Infrequent Usage: Remove the black, negative (−) cable from the battery to keep the battery from running down.

Extended Storage: Remove the black, negative (−) cable from the battery or use a battery trickle charger.

Jump Starting

If your vehicle's battery has run down, you may want to use another vehicle and some jumper cables to start your vehicle. Be sure to use the following steps to do it safely.

⚠ WARNING:

Batteries can hurt you. They can be dangerous because:

- They contain acid that can burn you.
- They contain gas that can explode or ignite.
- They contain enough electricity to burn you.

If you do not follow these steps exactly, some or all of these things can hurt you.

Notice: **Ignoring these steps could result in costly damage to the vehicle that would not be covered by the warranty.**

Trying to start the vehicle by pushing or pulling it will not work, and it could damage the vehicle.

1. Check the other vehicle. It must have a 12-volt battery with a negative ground system.

Notice: **If the other vehicle's system is not a 12-volt system with a negative ground, both vehicles can be damaged. Only use vehicles with 12-volt systems with negative grounds to jump start your vehicle.**

2. Get the vehicles close enough so the jumper cables can reach, but be sure the vehicles are not touching each other. If they are, it could cause a ground connection you do not want. You would not be able to start your vehicle and the bad grounding could damage the electrical systems.

   To avoid the possibility of the vehicles rolling, set the parking brake firmly on both vehicles involved in the jump start procedure. Put an automatic transmission in P (Park) or a manual transmission in NEUTRAL before setting the parking brake.

Notice: **If you leave the radio or other accessories on during the jump starting procedure, they could be damaged. The repairs would not be covered by the warranty. Always turn off the radio and other accessories when jump starting the vehicle.**

3. Turn off the ignition on both vehicles. Unplug unnecessary accessories plugged into the cigarette lighter or the accessory power outlets. Turn off the radio and all lamps that are not needed. This will avoid sparks and help save both batteries. And it could save the radio!

4. Open the hoods and locate the positive (+) and negative (−) terminal locations or the remote positive (+) and remote negative (−) terminals of the other vehicle. Then locate the remote positive (+) location on your vehicle. See *Engine Compartment Overview on page 6-13* for more information on locations the terminals.

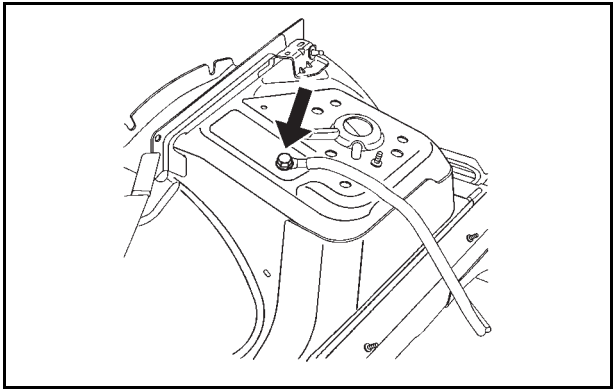

Your vehicle has a remote negative (−) ground location, as shown in the illustration. It is located on the passenger side front shock tower. See *Engine Compartment Overview on page 6-13*. You should always use this remote ground location, instead of the terminal on the battery.

Notice: **If you connect a negative cable to the Engine Control Module (ECM), ECM mounting bracket, or any cables that attach to the ECM bracket, you may damage the ECM. Always attach the negative cable to your vehicle's remote negative ground location, instead of the ECM, ECM bracket, or any cables attached to the ECM bracket.**

⚠ WARNING:

An electric fan can start up even when the engine is not running and can injure you. Keep hands, clothing and tools away from any underhood electric fan.

⚠ WARNING:

Using an open flame near a battery can cause battery gas to explode. People have been hurt doing this, and some have been blinded. Use a flashlight if you need more light.

Be sure the battery has enough water. You do not need to add water to the battery installed in your new vehicle. But if a battery has filler caps, be sure the right amount of fluid is there. If it is low, add water to take care of that first. If you do not, explosive gas could be present.

Battery fluid contains acid that can burn you. Do not get it on you. If you accidentally get it in your eyes or on your skin, flush the place with water and get medical help immediately.

⚠ WARNING:

Fans or other moving engine parts can injure you badly. Keep your hands away from moving parts once the engine is running.

5. Check that the jumper cables do not have loose or missing insulation. If they do, you could get a shock. The vehicles could be damaged too.

   Before you connect the cables, here are some basic things you should know. Positive (+) will go to positive (+) or to a remote positive (+) terminal if the vehicle has one. Negative (−) will go to a heavy, unpainted metal engine part or to a remote negative (−) terminal if the vehicle has one.

   Do not connect positive (+) to negative (−) or you will get a short that would damage the battery and maybe other parts too. And do not connect the negative (−) cable to the negative (−) terminal on the dead battery because this can cause sparks.

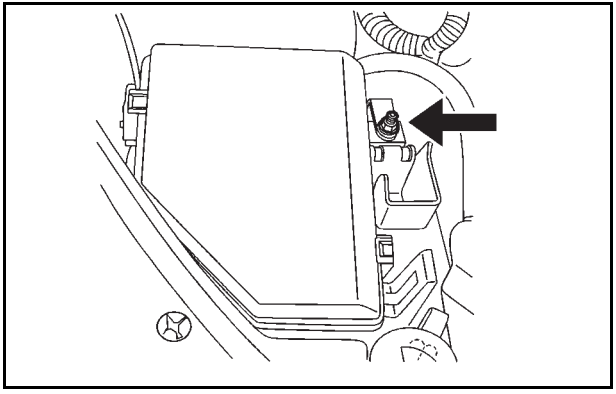

6. Connect the red positive (+) cable to the positive (+) terminal of the dead battery. Use a remote positive (+) terminal if the vehicle has one.
7. Do not let the other end touch metal. Connect it to the positive (+) terminal of the good battery. Use a remote positive (+) terminal if the vehicle has one.
8. Now connect the black negative (−) cable to the negative terminal of the good battery. Use a remote negative (−) terminal if the vehicle has one.

   Do not let the other end touch anything until the next step. The other end of the negative (−) cable does not go to the dead battery. It goes to a heavy, unpainted metal engine part or to a remote negative (−) terminal on the vehicle with the dead battery.
9. Connect the other end of the negative (−) cable at least 18 inches (45 cm) away from the dead battery, but not near engine parts that move. The electrical connection is just as good there, and the chance of sparks getting back to the battery is much less.

   Use a remote negative (−) terminal if the vehicle has one. Your vehicle's remote negative (−) ground location is for this purpose.
10. Now start the vehicle with the good battery and run the engine for a while.
11. Try to start the vehicle that had the dead battery. If it will not start after a few tries, it probably needs service.

Notice: **If the jumper cables are connected or removed in the wrong order, electrical shorting may occur and damage the vehicle. The repairs would not be covered by the vehicle warranty. Always connect and remove the jumper cables in the correct order, making sure that the cables do not touch each other or other metal.**

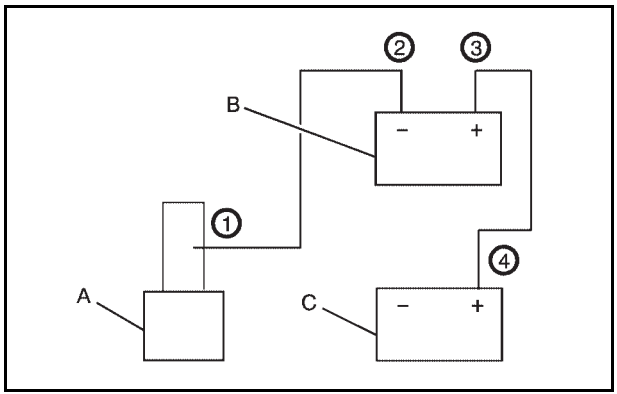

Jumper Cable Removal

A. Heavy, Unpainted Metal Engine Part or Remote Negative (−) Terminal

B. Good Battery or Remote Positive (+) and Remote Negative (−) Terminals

C. Dead Battery or Remote Positive (+) Terminal

To disconnect the jumper cables from both vehicles, do the following:

1. Disconnect the black negative (−) cable from the vehicle that had the dead battery.
2. Disconnect the black negative (−) cable from the vehicle with the good battery.
3. Disconnect the red positive (+) cable from the vehicle with the good battery.
4. Disconnect the red positive (+) cable from the other vehicle.

All-Wheel Drive

All of the lubricant checks in this section apply to your vehicle. If you have an all-wheel-drive vehicle, there is an additional system that need lubrication.

Transfer Case

When to Check Lubricant

It is not necessary to regularly check the transfer case fluid unless you suspect there is a leak or you hear an unusual noise. A fluid loss could indicate a problem. Have it inspected and repaired.

How to Check Lubricant

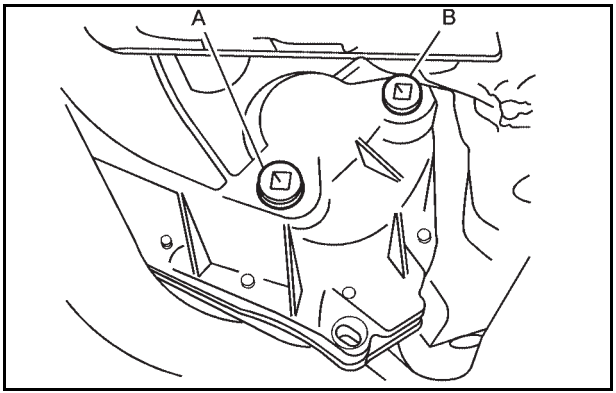

A. Drain Plug

B. Fill Plug

To get an accurate reading, the vehicle should be on a level surface.

If the level is below the bottom of the filler plug hole, located on the transfer case, you'll need to add some lubricant. Add enough lubricant to raise the level to the bottom of the filler plug hole. Use care not to overtighten the plug.

What to Use

Refer to the Maintenance Schedule to determine what kind of lubricant to use. See *Recommended Fluids and Lubricants on page 7-9*.

Rear Axle

When to Check Lubricant

It is not necessary to regularly check rear axle fluid unless you suspect there is a leak or you hear an unusual noise. A fluid loss could indicate a problem. Have it inspected and repaired.

How to Check Lubricant

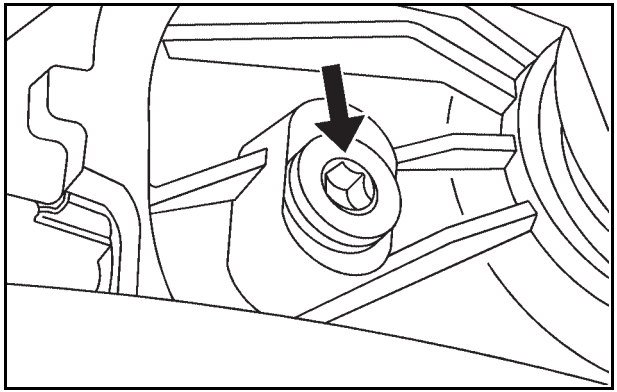

To get an accurate reading, the vehicle should be on a level surface.

If the level is below the bottom of the filler plug hole, located on the rear axle, you'll need to add some lubricant. Add enough lubricant to raise the level to the bottom of the filler plug hole.

What to Use

Refer to the Maintenance Schedule to determine what kind of lubricant to use. See *Recommended Fluids and Lubricants on page 7-9*.

Front Axle

When to Check and Change Lubricant

It is not necessary to regularly check the front axle fluid unless you suspect there is a leak or you hear an unusual noise. A fluid loss could indicate a problem. Have it inspected and repaired.

How to Check Lubricant

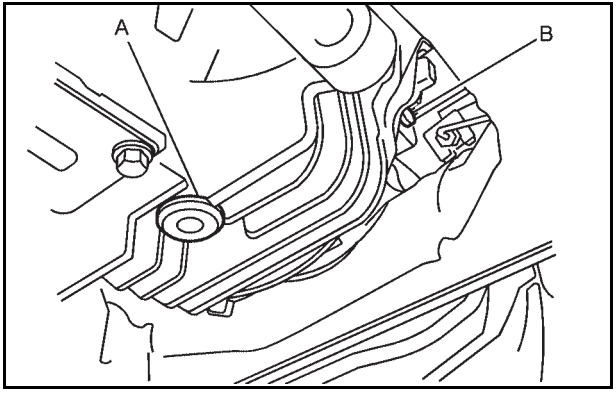

A. Drain Plug

B. Filler Plug

To get an accurate reading, the vehicle should be on a level surface.

If the level is below the bottom of the filler plug hole, located on the front axle, you may need to add some lubricant.

What to Use

Refer to the Maintenance Schedule to determine what kind of lubricant to use. See *Recommended Fluids and Lubricants on page 7-9*.

Headlamp Aiming

Headlamp aim has been preset at the factory and should need no further adjustment.

However, if your vehicle is damaged in a crash, the headlamp aim may be affected. Aim adjustment to the low-beam headlamps may be necessary if oncoming drivers flash their high-beam headlamps at you (for vertical aim).

If the headlamps need to be re-aimed, it is recommended that you take the vehicle to your dealer/retailer for service.

Bulb Replacement

For the proper type of replacement bulbs, see *Replacement Bulbs on page 6-50*.

For any bulb changing procedure not listed in this section, contact your dealer/retailer.

High Intensity Discharge (HID) Lighting

⚠ WARNING:

The low beam high intensity discharge lighting system operates at a very high voltage. If you try to service any of the system components, you could be seriously injured. Have your dealer/retailer or a qualified technician service them.

The vehicle may have HID headlamps. After an HID headlamp bulb has been replaced, you may notice that the beam is a slightly different shade than it was originally. This is normal.

Halogen Bulbs

⚠ WARNING:

Halogen bulbs have pressurized gas inside and can burst if you drop or scratch the bulb. You or others could be injured. Be sure to read and follow the instructions on the bulb package.

Back-Up Lamps

To replace a back-up lamp bulb:

1. Open the trunk. See *Trunk on page 3-15*.

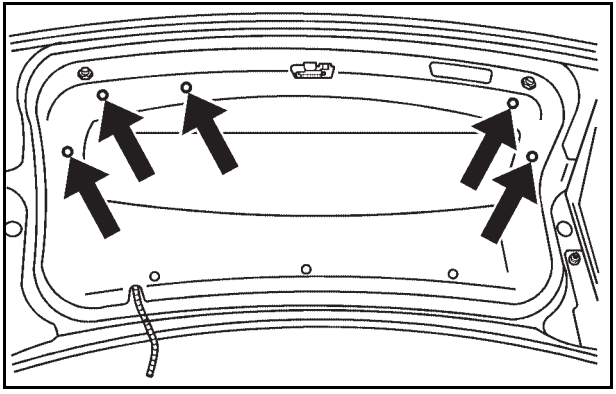

2. Pull out the push pins holding down the top portion of the cloth cover.
3. Fold the cover down slightly and locate the lamp assembly.
4. Turn the socket counterclockwise and pull it straight out to remove it from the lamp assembly.
5. Pull the old bulb straight out and reinstall the new bulb.
6. Put the cover back in place and reinstall the push pins.

Replacement Bulbs

Exterior Lamp	Bulb Number
Back-up	3157K

For replacement bulbs not listed here, contact your dealer/retailer.

Windshield Replacement

The windshield is part of the Head-Up Display (HUD) system. If you ever have to get the windshield replaced, get one that is designed for HUD or the HUD image may look out of focus.

Windshield Wiper Blade Replacement

Windshield wiper blades should be inspected for wear or cracking. See *Scheduled Maintenance on page 7-3*.

It's a good idea to clean or replace the wiper blade assembly on a regular basis or when worn. For proper windshield wiper blade length and type, see *Maintenance Replacement Parts on page 7-11*.

To replace the wiper blade assembly, do the following:

1. Pull the windshield wiper assembly away from the windshield.

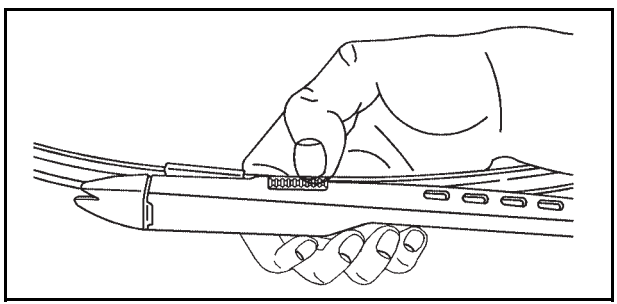

2. Squeeze the tabs on each side of the wiper blade assembly and slide the assembly off the end of the wiper arm.

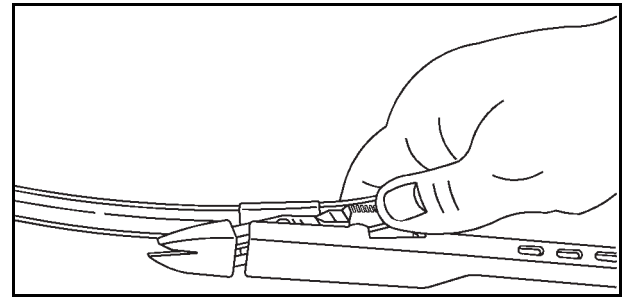

3. Replace the blade assembly with a new one.

   Allowing the wiper blade arm to touch the windshield when no wiper blade is installed could damage the windshield. Any damage that occurs would not be covered by your warranty. Do not allow the wiper blade arm to touch the windshield.

4. Repeat the steps for the other wiper.

Tires

Your new vehicle comes with high-quality tires made by a leading tire manufacturer. If you ever have questions about your tire warranty and where to obtain service, see your vehicle Warranty booklet for details.

⚠ WARNING:

- Poorly maintained and improperly used tires are dangerous.
- Overloading your tires can cause overheating as a result of too much flexing. You could have an air-out and a serious accident. See*Loading the Vehicle on page 5-23*.
- Underinflated tires pose the same danger as overloaded tires. The resulting accident could cause serious injury. Check all tires frequently to maintain the recommended pressure. Tire pressure

(Continued)

WARNING: (Continued)

should be checked when your tires are cold. See *Inflation - Tire Pressure on page 6-60*.

- Overinflated tires are more likely to be cut, punctured, or broken by a sudden impact — such as when you hit a pothole. Keep tires at the recommended pressure.
- Worn, old tires can cause accidents. If your tread is badly worn, or if your tires have been damaged, replace them.

See *High-Speed Operation on page 6-62* for inflation pressure adjustment for high speed driving.

Low-Profile Performance Tires

If your vehicle has 255/45ZR18 size tires, they are classified as low-profile performance tires. These tires are designed for very responsive driving on wet or dry pavement. You may also notice more road noise with low-profile performance tires and that they tend to wear faster. These performance tires are not rated as all-season tires. Winter tires are recommended for snow or ice covered roads.

Notice: **If the vehicle has low-profile tires, they are more susceptible to damage from road hazards or curb impact than standard profile tires. Tire and/or wheel assembly damage can occur when coming into contact with road hazards like, potholes, or sharp edged objects, or when sliding into a curb. The vehicle warranty does not cover this type of damage. Keep tires set to the correct inflation pressure and, when possible avoid contact with curbs, potholes, and other road hazards.**

Winter Tires

If you expect to drive on snow or ice covered roads often, you may want to get winter tires for your vehicle. All season tires provide good overall performance on most surfaces but they may not offer the traction you would like or the same level of performance as winter tires on snow or ice covered roads.

Winter tires, in general, are designed for increased traction on snow and ice covered roads. With winter tires, there may be decreased dry road traction, increased road noise, and shorter tread life. After switching to winter tires, be alert for changes in vehicle handling and braking.

See your dealer/retailer for details regarding winter tire availability and proper tire selection. Also, see *Buying New Tires on page 6-70*.

If you choose to use winter tires:

- Use tires of the same brand and tread type on all four wheel positions.
- Use only radial ply tires of the same size, load range, and speed rating as the original equipment tires.

Winter tires with the same speed rating as your original equipment tires may not be available for H, V, W, Y, and ZR speed rated tires. If you choose winter tires with a lower speed rating, never exceed the tire's maximum speed capability.

Tire Sidewall Labeling

Useful information about a tire is molded into its sidewall. The examples below show a typical passenger vehicle tire and a compact spare tire sidewall.

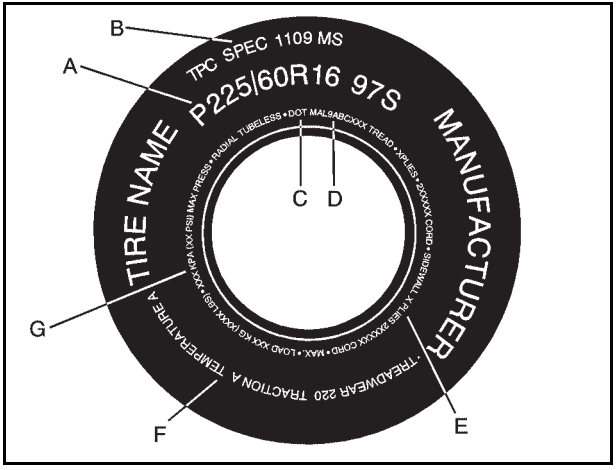

Passenger (P-Metric) Tire Example

(A) Tire Size : The tire size is a combination of letters and numbers used to define a particular tire's width, height, aspect ratio, construction type, and service description. See the “Tire Size” illustration later in this section for more detail.

(B) TPC Spec (Tire Performance Criteria Specification) : Original equipment tires designed to GM's specific tire performance criteria have a TPC specification code molded onto the sidewall. GM's TPC specifications meet or exceed all federal safety guidelines.

(C) DOT (Department of Transportation) : The Department of Transportation (DOT) code indicates that the tire is in compliance with the U.S. Department of Transportation Motor Vehicle Safety Standards.

(D) Tire Identification Number (TIN) : The letters and numbers following DOT (Department of Transportation) code is the Tire Identification Number (TIN). The TIN shows the manufacturer and plant code, tire size, and date the tire was manufactured. The TIN is molded onto both sides of the tire, although only one side may have the date of manufacture.

(E) Tire Ply Material : The type of cord and number of plies in the sidewall and under the tread.

(F) Uniform Tire Quality Grading (UTQG) : Tire manufacturers are required to grade tires based on three performance factors: treadwear, traction, and temperature resistance. For more information see *Uniform Tire Quality Grading on page 6-73*.

(G) Maximum Cold Inflation Load Limit : Maximum load that can be carried and the maximum pressure needed to support that load.

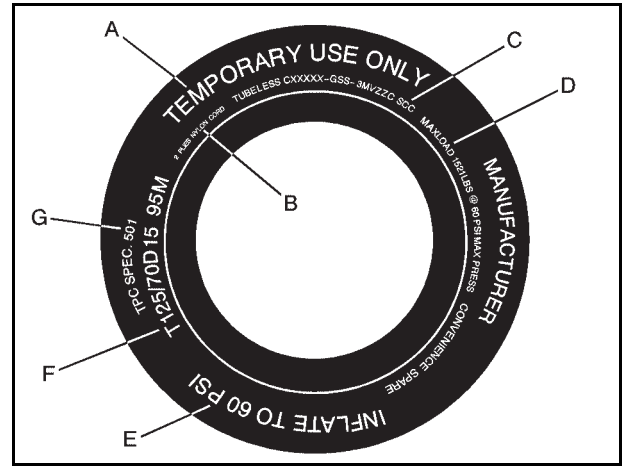

Compact Spare Tire Example

(A) Temporary Use Only : The compact spare tire or temporary use tire has a tread life of approximately 3,000 miles (5 000 km) and should not be driven at speeds over 65 mph (105 km/h). The compact spare tire is for emergency use when a regular road tire has lost air and gone flat. If your vehicle has a compact spare tire, see *Compact Spare Tire on page 6-107* and *If a Tire Goes Flat on page 6-76*.

(B) Tire Ply Material : The type of cord and number of plies in the sidewall and under the tread.

(C) Tire Identification Number (TIN) : The letters and numbers following the DOT (Department of Transportation) code is the Tire Identification Number (TIN). The TIN shows the manufacturer and plant code, tire size, and date the tire was manufactured. The TIN is molded onto both sides of the tire, although only one side may have the date of manufacture.

(D) Maximum Cold Inflation Load Limit : Maximum load that can be carried and the maximum pressure needed to support that load.

(E) Tire Inflation : The temporary use tire or compact spare tire should be inflated to 60 psi (420 kPa). For more information on tire pressure and inflation see *Inflation - Tire Pressure on page 6-60*.

(F) Tire Size : A combination of letters and numbers define a tire's width, height, aspect ratio, construction type, and service description. The letter T as the first character in the tire size means the tire is for temporary use only.

(G) TPC Spec (Tire Performance Criteria Specification) : Original equipment tires designed to GM's specific tire performance criteria have a TPC specification code molded onto the sidewall. GM's TPC specifications meet or exceed all federal safety guidelines.

Tire Size

The following illustration shows an example of a typical passenger vehicle tire size.

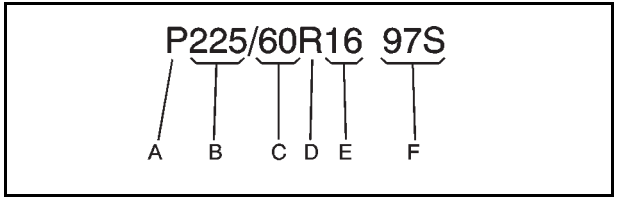

(A) Passenger (P-Metric) Tire : The United States version of a metric tire sizing system. The letter P as the first character in the tire size means a passenger vehicle tire engineered to standards set by the U.S. Tire and Rim Association.

(B) Tire Width : The three-digit number indicates the tire section width in millimeters from sidewall to sidewall.

(C) Aspect Ratio : A two-digit number that indicates the tire height-to-width measurements. For example, if the tire size aspect ratio is 60, as shown in item C of the illustration, it would mean that the tire's sidewall is 60 percent as high as it is wide.

(D) Construction Code : A letter code is used to indicate the type of ply construction in the tire. The letter R means radial ply construction; the letter D means diagonal or bias ply construction; and the letter B means belted-bias ply construction.

(E) Rim Diameter : Diameter of the wheel in inches.

(F) Service Description : These characters represent the load index and speed rating of the tire. The load index represents the load carry capacity a tire is certified to carry. The speed rating is the maximum speed a tire is certified to carry a load.

Tire Terminology and Definitions

Air Pressure : The amount of air inside the tire pressing outward on each square inch of the tire. Air pressure is expressed in pounds per square inch (psi) or kilopascal (kPa).

Accessory Weight : This means the combined weight of optional accessories. Some examples of optional accessories are, automatic transmission, power steering, power brakes, power windows, power seats, and air conditioning.

Aspect Ratio : The relationship of a tire's height to its width.

Belt : A rubber coated layer of cords that is located between the plies and the tread. Cords may be made from steel or other reinforcing materials.

Bead : The tire bead contains steel wires wrapped by steel cords that hold the tire onto the rim.

Bias Ply Tire : A pneumatic tire in which the plies are laid at alternate angles less than 90 degrees to the centerline of the tread.

Cold Tire Pressure : The amount of air pressure in a tire, measured in pounds per square inch (psi) or kilopascals (kPa) before a tire has built up heat from driving. See *Inflation - Tire Pressure on page 6-60*.

Curb Weight : The weight of a motor vehicle with standard and optional equipment including the maximum capacity of fuel, oil, and coolant, but without passengers and cargo.

DOT Markings : A code molded into the sidewall of a tire signifying that the tire is in compliance with the U.S. Department of Transportation (DOT) motor vehicle safety standards. The DOT code includes the Tire Identification Number (TIN), an alphanumeric designator which can also identify the tire manufacturer, production plant, brand, and date of production.

GVWR : Gross Vehicle Weight Rating. See *Loading the Vehicle on page 5-23*.

GAWR FRT : Gross Axle Weight Rating for the front axle. See *Loading the Vehicle on page 5-23*.

GAWR RR : Gross Axle Weight Rating for the rear axle. See *Loading the Vehicle on page 5-23*.

Intended Outboard Sidewall : The side of an asymmetrical tire, that must always face outward when mounted on a vehicle.

Kilopascal (kPa) : The metric unit for air pressure.

Light Truck (LT-Metric) Tire : A tire used on light duty trucks and some multipurpose passenger vehicles.

Load Index : An assigned number ranging from 1 to 279 that corresponds to the load carrying capacity of a tire.

Maximum Inflation Pressure : The maximum air pressure to which a cold tire can be inflated. The maximum air pressure is molded onto the sidewall.

Maximum Load Rating : The load rating for a tire at the maximum permissible inflation pressure for that tire.

Maximum Loaded Vehicle Weight : The sum of curb weight, accessory weight, vehicle capacity weight, and production options weight.

Normal Occupant Weight : The number of occupants a vehicle is designed to seat multiplied by 150 lbs (68 kg). See *Loading the Vehicle on page 5-23*.

Occupant Distribution : Designated seating positions.

Outward Facing Sidewall : The side of an asymmetrical tire that has a particular side that faces outward when mounted on a vehicle. The side of the tire that contains a whitewall, bears white lettering, or bears manufacturer, brand, and/or model name molding that is higher or deeper than the same moldings on the other sidewall of the tire.

Passenger (P-Metric) Tire : A tire used on passenger cars and some light duty trucks and multipurpose vehicles.

Recommended Inflation Pressure : Vehicle manufacturer's recommended tire inflation pressure as shown on the tire placard. See *Inflation - Tire Pressure on page 6-60* and *Loading the Vehicle on page 5-23*.

Radial Ply Tire : A pneumatic tire in which the ply cords that extend to the beads are laid at 90 degrees to the centerline of the tread.

Rim : A metal support for a tire and upon which the tire beads are seated.

Sidewall : The portion of a tire between the tread and the bead.

Speed Rating : An alphanumeric code assigned to a tire indicating the maximum speed at which a tire can operate.

Traction : The friction between the tire and the road surface. The amount of grip provided.

Tread : The portion of a tire that comes into contact with the road.

Treadwear Indicators : Narrow bands, sometimes called wear bars, that show across the tread of a tire when only 1/16 inch (1.6 mm) of tread remains. See *When It Is Time for New Tires on page 6-69*.

UTQGS (Uniform Tire Quality Grading Standards) : A tire information system that provides consumers with ratings for a tire's traction, temperature, and treadwear. Ratings are determined by tire manufacturers using government testing procedures. The ratings are molded into the sidewall of the tire. See *Uniform Tire Quality Grading on page 6-73*.

Vehicle Capacity Weight : The number of designated seating positions multiplied by 150 lbs (68 kg) plus the rated cargo load. See *Loading the Vehicle on page 5-23*.

Vehicle Maximum Load on the Tire : Load on an individual tire due to curb weight, accessory weight, occupant weight, and cargo weight.

Vehicle Placard : A label permanently attached to a vehicle showing the vehicle's capacity weight and the original equipment tire size and recommended inflation pressure. See “Tire and Loading Information Label” under *Loading the Vehicle on page 5-23*.

Inflation - Tire Pressure

Tires need the correct amount of air pressure to operate effectively.

Notice: **Do not let anyone tell you that under-inflation or over-inflation is all right. It is not. If your tires do not have enough air (under-inflation), you can get the following:**

- **Too much flexing**
- **Too much heat**
- **Tire overloading**
- **Premature or irregular wear**
- **Poor handling**
- **Reduced fuel economy**

If your tires have too much air (over-inflation), you can get the following:

- **Unusual wear**
- **Poor handling**
- **Rough ride**
- **Needless damage from road hazards**

A vehicle specific Tire and Loading Information label is attached to your vehicle. This label lists your vehicle's original equipment tires and shows the correct inflation pressures for your tires when they are cold. The recommended cold tire inflation pressure, shown on the label, is the minimum amount of air pressure needed to support your vehicle's maximum load carrying capacity.

For additional information regarding how much weight your vehicle can carry, and an example of the tire and loading information label, see *Loading the Vehicle on page 5-23*. How you load your vehicle affects vehicle handling and ride comfort. Never load your vehicle with more weight than it was designed to carry.

When to Check

Check your tires once a month or more. Do not forget to check the compact spare tire, if your vehicle has one. The compact spare should be at 60 psi (420 kPa). For additional information regarding the compact spare tire, see *Compact Spare Tire on page 6-107*.

How to Check

Use a good quality pocket-type gage to check tire pressure. You cannot tell if your tires are properly inflated simply by looking at them. Radial tires may look properly inflated even when they are underinflated. Check the tire's inflation pressure when the tires are cold. Cold means your vehicle has been sitting for at least three hours or driven no more than 1 mile (1.6 km).

Remove the valve cap from the tire valve stem. Press the tire gage firmly onto the valve to get a pressure measurement. If the cold tire inflation pressure matches the recommended pressure on the Tire and Loading Information label, no further adjustment is necessary. If the inflation pressure is low, add air until you reach the recommended amount.

If you overfill the tire, release air by pushing on the metal stem in the center of the tire valve. Re-check the tire pressure with the tire gage.

Be sure to put the valve caps back on the valve stems. They help prevent leaks by keeping out dirt and moisture.

High-Speed Operation

⚠ WARNING:

Driving at high speeds, 160 km/h (100 mph) or higher, puts an additional strain on tires. Sustained high-speed driving causes excessive heat build up and can cause sudden tire failure. You could have a crash and you or others could be killed. Some high-speed rated tires require inflation pressure adjustment for high speed operation. When speed limits and road conditions are such that a vehicle can be driven at high speeds, make sure the tires are rated for high speed operation, in excellent condition, and set to the correct cold tire inflation pressure for the vehicle load.

If you will be driving at high speeds, speeds of 100 mph (160 km/h) or higher, where it is legal, set the cold inflation pressure to the maximum inflation pressure shown on the tire sidewall, or 38 psi (265 kPa), whichever is lower. See the example following. When you end this high-speed driving, return the tires to the cold inflation pressure shown on the Tire and Loading Information label. See *Loading the Vehicle on page 5-23*.

Example:

You will find the maximum load and inflation pressure molded on the tire's sidewall, in small letters, near the rim flange. It will read something like this: Maximum load 690 kg (1521 lbs) 300 kPa (44 psi) Max. Press.

For this example, you would set the inflation pressure for high-speed driving at 38 psi (265 kPa).

Tire Pressure Monitor System

The Tire Pressure Monitor System (TPMS) uses radio and sensor technology to check tire pressure levels. The TPMS sensors monitor the air pressure in your vehicle's tires and transmit tire pressure readings to a receiver located in the vehicle.

Each tire, including the spare (if provided), should be checked monthly when cold and inflated to the inflation pressure recommended by the vehicle manufacturer on the vehicle placard or tire inflation pressure label. (If your vehicle has tires of a different size than the size indicated on the vehicle placard or tire inflation pressure label, you should determine the proper tire inflation pressure for those tires.)

As an added safety feature, your vehicle has been equipped with a tire pressure monitoring system (TPMS) that illuminates a low tire pressure telltale when one or more of your tires is significantly under-inflated.

Accordingly, when the low tire pressure telltale illuminates, you should stop and check your tires as soon as possible, and inflate them to the proper pressure. Driving on a significantly under-inflated tire causes the tire to overheat and can lead to tire failure. Under-inflation also reduces fuel efficiency and tire tread life, and may affect the vehicle's handling and stopping ability.

Please note that the TPMS is not a substitute for proper tire maintenance, and it is the driver's responsibility to maintain correct tire pressure, even if under-inflation has not reached the level to trigger illumination of the TPMS low tire pressure telltale.

Your vehicle has also been equipped with a TPMS malfunction indicator to indicate when the system is not operating properly. The TPMS malfunction indicator is combined with the low tire pressure telltale. When the system detects a malfunction, the telltale will flash for approximately one minute and then remain continuously illuminated. This sequence will continue upon subsequent vehicle start-ups as long as the malfunction exists.

When the malfunction indicator is illuminated, the system may not be able to detect or signal low tire pressure as intended. TPMS malfunctions may occur for a variety of reasons, including the installation of replacement or alternate tires or wheels on the vehicle that prevent the TPMS from functioning properly. Always check the TPMS malfunction telltale after replacing one or more tires or wheels on your vehicle to ensure that the replacement or alternate tires and wheels allow the TPMS to continue to function properly.

See *Tire Pressure Monitor Operation on page 6-64* for additional information.

Federal Communications Commission (FCC) and Industry and Science Canada

See *Radio Frequency Statement on page 8-18* for information regarding Part 15 of the Federal Communications Commission (FCC) Rules and RSS-210/211 of Industry and Science Canada.

Tire Pressure Monitor Operation

This vehicle may have a Tire Pressure Monitor System (TPMS). The TPMS is designed to warn the driver when a low tire pressure condition exists. TPMS sensors are mounted onto each tire and wheel assembly, excluding the spare tire and wheel assembly, if the vehicle has one. The TPMS sensors monitor the air pressure in the vehicle's tires and transmits the tire pressure readings to a receiver located in the vehicle.

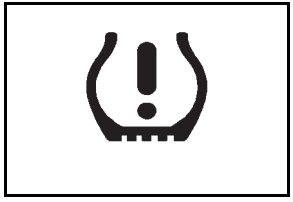

When a low tire pressure condition is detected, the TPMS illuminates the low tire pressure warning light located on the instrument panel cluster.

At the same time a message to check the pressure in a specific tire appears on the Driver Information Center (DIC) display. The low tire pressure warning light and the DIC warning message come on at each ignition cycle until the tires are inflated to the correct inflation pressure. Using the DIC, tire pressure levels can be viewed by the driver. For additional information and details about the DIC operation and displays see *DIC Operation and Displays on page 4-70* and *DIC Warnings and Messages on page 4-76*.

The low tire pressure warning light may come on in cool weather when the vehicle is first started, and then turn off as you start to drive. This could be an early indicator that the air pressure in the tire(s) are getting low and need to be inflated to the proper pressure.

A Tire and Loading Information label , attached to your vehicle, shows the size of your vehicle's original equipment tires and the correct inflation pressure for your vehicle's tires when they are cold. See *Loading the Vehicle on page 5-23* for an example of the Tire and Loading Information label and its location on your vehicle. Also see *Inflation - Tire Pressure on page 6-60*.

Your vehicle's TPMS can warn you about a low tire pressure condition but it does not replace normal tire maintenance. See *Tire Inspection and Rotation on page 6-67* and *Tires on page 6-52*.

Notice: **Using non-approved tire sealants could damage the Tire Pressure Monitor System (TPMS) sensors. TPMS sensor damage caused by using an incorrect tire sealant is not covered by the vehicle warranty. Always use the GM approved tire sealant available through your dealer/retailer.**

Factory-installed Tire Inflator Kits use a GM approved liquid tire sealant. Using non-approved tire sealants could damage the TPMS sensors. See *Tire Sealant and Compressor Kit (Without Selector Switch) on page 6-78* or *Tire Sealant and Compressor Kit (With Selector Switch) on page 6-87* for information regarding the inflator kit materials and instructions.

TPMS Malfunction Light and Message

The TPMS will not function properly if one or more of the TPMS sensors are missing or inoperable. When the system detects a malfunction, the low tire warning light flashes for about one minute and then stays on for the remainder of the ignition cycle. A DIC warning message is also displayed. The low tire warning light and DIC warning message come on at each ignition cycle until the problem is corrected. Some of the conditions that can cause the malfunction light and DIC message to come on are:

- One of the road tires has been replaced with the spare tire, if the vehicle has one. The spare tire does not have a TPMS sensor. The DIC message should go off once you re-install the road tire containing the TPMS sensor.
- The TPMS sensor matching process was started but not completed or not completed successfully after rotating the vehicle's tires. The DIC message and TPMS malfunction light should go off once the TPMS sensor matching process is performed successfully. See “TPMS Sensor Matching Process” later in this section.
- One or more TPMS sensors are missing or damaged. The DIC message and the TPMS malfunction light should go off when the TPMS sensors are installed and the sensor matching process is performed successfully. See your dealer/retailer for service.
- Replacement tires or wheels do not match your vehicle's original equipment tires or wheels. Tires and wheels other than those recommended for your vehicle could prevent the TPMS from functioning properly. See *Buying New Tires on page 6-70*.
- Operating electronic devices or being near facilities using radio wave frequencies similar to the TPMS could cause the TPMS sensors to malfunction.

If the TPMS is not functioning it cannot detect or signal a low tire condition. See your dealer/retailer for service if the TPMS malfunction light and DIC message comes on and stays on.

TPMS Sensor Matching Process

Each TPMS sensor has a unique identification code. Any time you replace one or more of the TPMS sensors or rotate your vehicle's tires, the identification codes will need to be matched to the new tire/wheel position. The sensors are matched to the tire/wheel positions in the following order: driver side front tire, passenger side front tire, passenger side rear tire, and driver side rear tire using a TPMS diagnostic tool. See your dealer/retailer for service.

The TPMS sensors may also be matched to each tire/wheel position by increasing or decreasing the tire's air pressure. When increasing the tire's pressure, do not exceed the maximum inflation pressure indicated on the tire's sidewall. If using this method to match TPMS sensors, the complete procedure outlined below must be performed within 15 minutes of the vehicle being stationary.

To decrease air-pressure out of a tire you can use the pointed end of the valve cap, a pencil-style air pressure gage, or a key.

You will have one minute to match the first tire/wheel position, and five minutes overall, to match all four tire/wheel positions. If it takes longer than one minute to match the first tire and wheel, or more than five minutes to match all four tire/wheel positions, the matching process stops and you will need to start over.

The TPM matching process is outlined below:

1. Set the parking brake.
2. Press the push-button ignition switch to Acc.
3. Using the keyless access transmitter, lock and unlock the vehicle's doors.
4. Press the lock and unlock buttons, at the same time, on the keyless access transmitter. The horn sounds twice, indicating that the TPMS is ready, and the sensor matching process can begin.
5. Start with the driver side front tire.
6. Remove the valve cap from the valve stem. Activate the TPMS sensor by increasing or decreasing the tire's air pressure for five seconds, or until a horn chirp sounds. The horn chirp, which may take up to 30 seconds to sound, confirms that the sensor identification code has been matched to this tire position.
7. Proceed to the passenger side front tire, and repeat the procedure in Step 6.
8. Proceed to the passenger side rear tire, and repeat the procedure in Step 6.
9. Proceed to the driver side rear tire, and repeat the procedure in Step 6.

10. After hearing the confirming single horn chirp for the driver side rear tire, a double horn chirp will sound to signal the tire matching mode is no longer active. Press the push-button ignition switch to Acc.
11. Set all four tires to the recommended air pressure level as indicated on the tire and loading information label.
12. Put the valve caps back on the valve stems.

Tire Inspection and Rotation

We recommend that you regularly inspect your vehicle's tires, including the spare tire, for signs of wear or damage. See *When It Is Time for New Tires on page 6-69* for more information.

Tire rotation is not recommended if your vehicle has P235/50ZR18 size tires on the front wheels and P255/45ZR18 size tires on the rear wheels.

Different tire sizes should not be rotated front to rear. Each tire and wheel should only be used in the original front or rear position it is in.

Tire rotation is recommended if the vehicle is equipped with P235/50R17 size tires on all four wheel positions or 255/45ZR18 size tires on all four wheel positions. These tires should be rotated every 5,000 to 8,000 miles (8 000 to 13 000 km). See *Scheduled Maintenance on page 7-3*.

The purpose of a regular tire rotation is to achieve a uniform wear for all tires on the vehicle. This will ensure that the vehicle continues to perform most like it did when the tires were new.

Any time you notice unusual wear, rotate your tires as soon as possible and check wheel alignment. Also check for damaged tires or wheels. See *When It Is Time for New Tires on page 6-69* and *Wheel Replacement on page 6-74*.

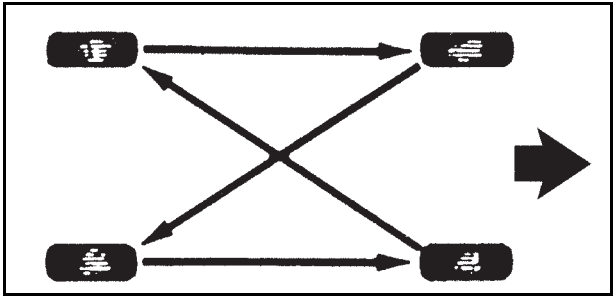

When rotating P235/50R17 size tires or 255/45ZR18 size tires, always use the correct rotation pattern shown here.

If the vehicle has a compact spare tire, do not include the compact spare tire in the tire rotation.

After the tires have been rotated, adjust the front and rear inflation pressures as shown on the Tire and Loading Information label. See *Inflation - Tire Pressure on page 6-60* and *Loading the Vehicle on page 5-23*.

Reset the Tire Pressure Monitor System. See *Tire Pressure Monitor Operation on page 6-64*.

Make certain that all wheel nuts are properly tightened. See “Wheel Nut Torque” under *Capacities and Specifications on page 6-130*.

⚠ WARNING:

Rust or dirt on a wheel, or on the parts to which it is fastened, can make wheel nuts become loose after time. The wheel could come off and cause an accident. When you change a wheel, remove any rust or dirt from places where the wheel attaches to the vehicle. In an emergency, you can use a cloth or a paper towel to do this; but be sure to use a scraper or wire brush later, if needed, to get all the rust or dirt off. See *Changing a Flat Tire on page 6-96*.

When It Is Time for New Tires

Various factors, such as maintenance, temperatures, driving speeds, vehicle loading, and road conditions influence when you need new tires.

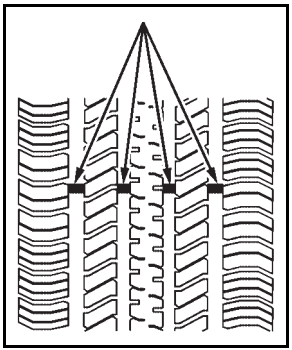

One way to tell when it is time for new tires is to check the treadwear indicators, which will appear when your tires have only 1/16 inch (1.6 mm) or less of tread remaining.

You need new tires if any of the following statements are true:

- You can see the indicators at three or more places around the tire.
- You can see cord or fabric showing through the tire's rubber.
- The tread or sidewall is cracked, cut, or snagged deep enough to show cord or fabric.
- The tire has a bump, bulge, or split.
- The tire has a puncture, cut, or other damage that cannot be repaired well because of the size or location of the damage.

The rubber in tires degrades over time, even if they are not being used. This is also true for the spare tire, if your vehicle has one. Multiple conditions affect how fast this aging takes place, including temperatures, loading conditions, and inflation pressure maintenance. With proper care and maintenance tires will typically wear out before they degrade due to age. If you are unsure about the need to replace your tires as they get older, consult the tire manufacturer for more information.

Buying New Tires

GM has developed and matched specific tires for your vehicle. The original equipment tires installed on your vehicle, when it was new, were designed to meet General Motors Tire Performance Criteria Specification (TPC Spec) system rating. If you need replacement tires, GM strongly recommends that you get tires with the same TPC Spec rating. This way, your vehicle will continue to have tires that are designed to give the same performance and vehicle safety, during normal use, as the original tires.

GM's exclusive TPC Spec system considers over a dozen critical specifications that impact the overall performance of your vehicle, including brake system performance, ride and handling, traction control, and tire pressure monitoring performance. GM's TPC Spec number is molded onto the tire's sidewall near the tire size. If the tires have an all-season tread design, the TPC Spec number will be followed by an MS for mud and snow. See *Tire Sidewall Labeling on page 6-54* for additional information.

GM recommends replacing tires in sets of four. This is because uniform tread depth on all tires will help keep your vehicle performing most like it did when the tires were new. Replacing less than a full set of tires can affect the braking and handling performance of your vehicle.

The optional 18-inch performance tires, size 255/45ZR18 99Y, used on some vehicles, meets the General Motors Tire Performance Criteria Specification (TPC Spec) rating but the TPC Spec code has not been molded onto the tire's sidewall. If your vehicle has these tires, and you need to replace them, you can still get these TPC Spec rated tires by asking your GM dealer. Your GM dealer can order these tires by part number. This way, your vehicle will continue to give the proper endurance, handling, traction, and ride as the original tires.

Winter tires with the same speed rating as your original equipment tires may not be available for H, V, W, Y and ZR speed rated tires. If you choose snow tires with a lower speed rating, never exceed the tire's maximum speed capability.

⚠ WARNING:

Mixing tires could cause you to lose control while driving. If you mix tires of different sizes (other than those originally installed on your vehicle), brands, or types (radial and bias-belted tires), the vehicle may not handle properly, and you could have a crash. Using tires of different sizes (other than those originally installed on your vehicle), brands, or types may also cause damage to your vehicle. Be sure to use the correct size, brand, and type of tires on all wheels. It is all right to drive with your vehicle's compact spare temporarily, it was developed for use on your vehicle. See *Compact Spare Tire on page 6-107*.

⚠ WARNING:

If you use bias-ply tires on the vehicle, the wheel rim flanges could develop cracks after many miles of driving. A tire and/or wheel could fail suddenly, causing a crash. Use only radial-ply tires with the wheels on the vehicle.

If you must replace your vehicle's tires with those that do not have a TPC Spec number, make sure they are the same size, load range, speed rating, and construction type (radial and bias-belted tires) as your vehicle's original tires.

Vehicles that have a tire pressure monitoring system could give an inaccurate low-pressure warning if non-TPC Spec rated tires are installed on it. Non-TPC Spec rated tires may give a low-pressure warning that is higher or lower than the proper warning level you would get with TPC Spec rated tires. See *Tire Pressure Monitor System on page 6-62*.

Your vehicle's original equipment tires are listed on the Tire and Loading Information label. See *Loading the Vehicle on page 5-23*, for more information about the Tire and Loading Information label and its location on your vehicle.

Different Size Tires and Wheels

If you add wheels or tires that are a different size than your original equipment wheels and tires, this may affect the way your vehicle performs, including its braking, ride and handling characteristics, stability, and resistance to rollover . Additionally, if your vehicle has electronic systems such as, antilock brakes, traction control, and electronic stability control, the performance of these systems can be affected.

⚠ WARNING:

If you add different sized wheels, your vehicle may not provide an acceptable level of performance and safety if tires not recommended for those wheels are selected. You may increase the chance that you will crash and suffer serious injury. Only use GM specific wheel and tire systems developed for your vehicle, and have them properly installed by a GM certified technician.

See *Buying New Tires on page 6-70* and *Accessories and Modifications on page 6-4* for additional information.

Uniform Tire Quality Grading

Quality grades can be found where applicable on the tire sidewall between tread shoulder and maximum section width. For example:

Treadwear 200 Traction AA Temperature A

The following information relates to the system developed by the United States National Highway Traffic Safety Administration (NHTSA), which grades tires by treadwear, traction, and temperature performance. This applies only to vehicles sold in the United States. The grades are molded on the sidewalls of most passenger car tires. The Uniform Tire Quality Grading (UTQG) system does not apply to deep tread, winter-type snow tires, space-saver, or temporary use spare tires, tires with nominal rim diameters of 10 to 12 inches (25 to 30 cm), or to some limited-production tires.

While the tires available on General Motors passenger cars and light trucks may vary with respect to these grades, they must also conform to federal safety requirements and additional General Motors Tire Performance Criteria (TPC) standards.

Treadwear

The treadwear grade is a comparative rating based on the wear rate of the tire when tested under controlled conditions on a specified government test course. For example, a tire graded 150 would wear one and a half (1.5) times as well on the government course as a tire graded 100. The relative performance of tires depends upon the actual conditions of their use, however, and may depart significantly from the norm due to variations in driving habits, service practices, and differences in road characteristics and climate.

Traction – AA, A, B, C

The traction grades, from highest to lowest, are AA, A, B, and C. Those grades represent the tire's ability to stop on wet pavement as measured under controlled conditions on specified government test surfaces of asphalt and concrete. A tire marked C may have poor traction performance.

Temperature – A, B, C

The temperature grades are A (the highest), B, and C, representing the tire's resistance to the generation of heat and its ability to dissipate heat when tested under controlled conditions on a specified indoor laboratory test wheel. Sustained high temperature can cause the material of the tire to degenerate and reduce tire life, and excessive temperature can lead to sudden tire failure. The grade C corresponds to a level of performance which all passenger car tires must meet under the Federal Motor Vehicle Safety Standard No. 109. Grades B and A represent higher levels of performance on the laboratory test wheel than the minimum required by law. It should be noted that the temperature grade for this tire is established for a tire that is properly inflated and not overloaded. Excessive speed, underinflation, or excessive loading, either separately or in combination, can cause heat buildup and possible tire failure.

Wheel Alignment and Tire Balance

The tires and wheels on your vehicle were aligned and balanced carefully at the factory to give you the longest tire life and best overall performance. Adjustments to wheel alignment and tire balancing will not be necessary on a regular basis. However, if you notice unusual tire wear or your vehicle pulling to one side or the other, the alignment might need to be checked. If you notice your vehicle vibrating when driving on a smooth road, the tires and wheels might need to be rebalanced. See your dealer/retailer for proper diagnosis.

Wheel Replacement

Replace any wheel that is bent, cracked, or badly rusted or corroded. If wheel nuts keep coming loose, the wheel, wheel bolts, and wheel nuts should be replaced. If the wheel leaks air, replace it (except some aluminum wheels, which can sometimes be repaired). See your dealer/retailer if any of these conditions exist.

Your dealer/retailer will know the kind of wheel you need.

Each new wheel should have the same load-carrying capacity, diameter, width, offset, and be mounted the same way as the one it replaces.

If you need to replace any of your wheels, wheel bolts, wheel nuts, or Tire Pressure Monitor System (TPMS) sensors, replace them only with new GM original equipment parts. This way, you will be sure to have the right wheel, wheel bolts, wheel nuts, and TPMS sensors for your vehicle.

⚠ WARNING:

Using the wrong replacement wheels, wheel bolts, or wheel nuts on your vehicle can be dangerous. It could affect the braking and handling of your vehicle, make your tires lose air and make you lose control. You could have a collision in which you or others could be injured. Always use the correct wheel, wheel bolts, and wheel nuts for replacement.

Notice: **The wrong wheel can also cause problems with bearing life, brake cooling, speedometer or odometer calibration, headlamp aim, bumper height, vehicle ground clearance, and tire or tire chain clearance to the body and chassis.**

See *Changing a Flat Tire on page 6-96* for more information.

Used Replacement Wheels

⚠ WARNING:

Putting a used wheel on the vehicle is dangerous. You cannot know how it has been used or how far it has been driven. It could fail suddenly and cause a crash. If you have to replace a wheel, use a new GM original equipment wheel.

Tire Chains

⚠ WARNING:

If your vehicle has P255/45R17, P255/45ZR18, or 255/45ZR18 size tires, do not use tire chains, as there is not enough clearance.

Tire chains used on a vehicle without the proper amount of clearance can cause damage to the brakes, suspension, or other vehicle parts. The area damaged by the tire chains could cause you to lose control of the vehicle and you or others may be injured in a crash.

Use another type of traction device only if its manufacturer recommends it for use on your vehicle and tire size combination and road conditions. Follow that manufacturer's instructions. To help avoid damage to the vehicle, drive slowly, readjust, or remove the device if it is contacting the vehicle, and do not spin the vehicle's wheels.

If you do find traction devices that will fit, install them on the rear tires only.

Notice: **If your vehicle has P235/50R17 size tires, use tire chains only where legal and only when you must. Use only SAE Class S-type chains that are the proper size for your tires. Install them on the rear tires and tighten them as tightly as possible with the ends securely fastened. Drive slowly and follow the chain manufacturer's instructions. If you can hear the chains contacting your vehicle, stop and retighten them. If the contact continues, slow down until it stops. Driving too fast or spinning the wheels with chains on will damage your vehicle.**

If a Tire Goes Flat

It is unusual for a tire to blowout while you are driving, especially if you maintain your tires properly. See *Tires on page 6-52*. If air goes out of a tire, It is much more likely to leak out slowly. But if you should ever have a blowout, here are a few tips about what to expect and what to do:

If a front tire fails, the flat tire will create a drag that pulls the vehicle toward that side. Take your foot off the accelerator pedal and grip the steering wheel firmly. Steer to maintain lane position, and then gently brake to a stop well out of the traffic lane.

A rear blowout, particularly on a curve, acts much like a skid and may require the same correction you would use in a skid. In any rear blowout, remove your foot from the accelerator pedal. Get the vehicle under control by steering the way you want the vehicle to go. It may be very bumpy and noisy, but you can still steer. Gently brake to a stop, well off the road if possible.

If a tire goes flat, avoid further tire and wheel damage by driving slowly to a level place and stopping.

1. Turn on the hazard warning flashers. See *Hazard Warning Flashers on page 4-3*.
2. Park the vehicle. Set the parking brake firmly and put the shift lever in P (Park).
3. Turn off the engine.
4. Inspect the flat tire.

⚠ WARNING:

Lifting a vehicle and getting under it to do maintenance or repairs is dangerous without the appropriate safety equipment and training. If a jack is provided with the vehicle, it is designed only for changing a flat tire. If it is used for anything else, you or others could be badly injured or killed if the vehicle slips off the jack. If a jack is provided with the vehicle, only use it for changing a flat tire.

This vehicle may come with a jack and spare tire or a tire sealant and compressor kit. To use the jack and spare tire, see *Changing a Flat Tire on page 6-96*. To use the tire sealant and compressor kit, see *Tire Sealant and Compressor Kit (Without Selector Switch) on page 6-78* or *Tire Sealant and Compressor Kit (With Selector Switch) on page 6-87*.

Tire Sealant and Compressor Kit (Without Selector Switch)

System Identification

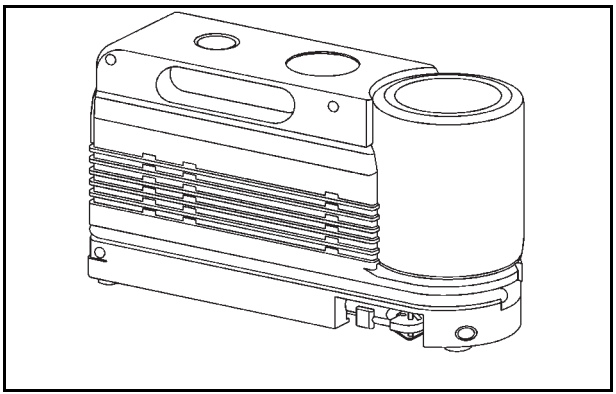

If the vehicle has the tire sealant and compressor kit shown above, see the operating instructions that follow.

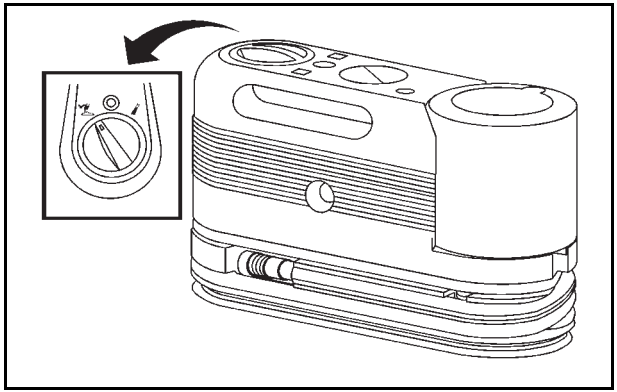

If the vehicle has the tire sealant and compressor kit shown above, follow the operating instructions under “Tire Sealant and Compressor Kit (With Selector Switch).

⚠ WARNING:

Idling a vehicle in an enclosed area with poor ventilation is dangerous. Engine exhaust may enter the vehicle. Engine exhaust contains Carbon Monoxide (CO) which cannot be seen or smelled. It can cause unconsciousness and even death. Never run the engine in an enclosed area that has no fresh air ventilation. For more information, see *Engine Exhaust on page 3-36*.

⚠ WARNING:

Over-inflating a tire could cause the tire to rupture and you or others could be injured. Be sure to read and follow the tire sealant and compressor kit instructions and inflate the tire to its recommended pressure. Do not exceed the recommended pressure.

⚠ WARNING:

Storing the tire sealant and compressor kit or other equipment in the passenger compartment of the vehicle could cause injury. In a sudden stop or collision, loose equipment could strike someone. Store the tire sealant and compressor kit in its original location.

If this vehicle has a tire sealant and compressor kit, there may not be a spare tire, tire changing equipment, and on some vehicles there may not be a place to store a tire.

The tire sealant and compressor can be used to temporarily seal punctures up to ¼ inch (6 mm) in the tread area of the tire. It can also be used to inflate an under inflated tire.

If the tire has been separated from the wheel, has damaged sidewalls, or has a large puncture, the tire is too severely damaged for the tire sealant and compressor kit to be effective. See *Roadside Service on page 8-8*.

Read and follow all of the tire sealant and compressor kit instructions.

The kit includes:

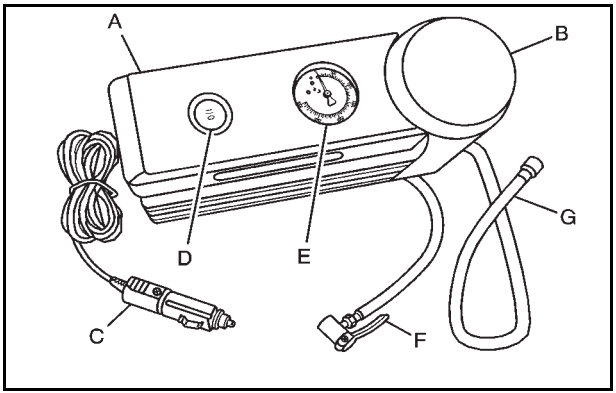

A. Air Compressor
B. Tire Sealant Canister
C. Power Plug
D. On/Off Button
E. Pressure Gage
F. Air Only Hose (Black)
G. Sealant/Air Hose (Clear)

Tire Sealant

Read and follow the safe handling instructions on the label adhered to the sealant canister.

Check the tire sealant expiration date on the sealant canister. The sealant canister should be replaced before its expiration date. Replacement sealant canisters are available at your local dealer/retailer. See “Removal and Installation of the Sealant Canister” following.

There is only enough sealant to seal one tire. After usage, the sealant canister and sealant/air hose assembly must be replaced. See “Removal and Installation of the Sealant Canister” following.

Using the Tire Sealant and Compressor Kit to Temporarily Seal and Inflate a Punctured Tire

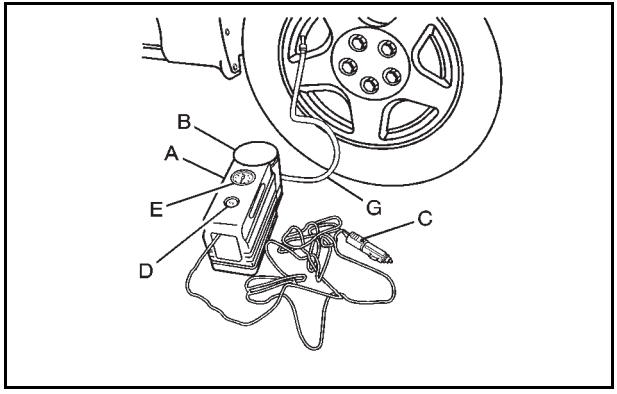

When using the tire sealant and compressor kit during cold temperatures, warm the kit in a heated environment for 5 minutes. This will help to inflate the tire faster.

Always do a safety check first. See *If a Tire Goes Flat on page 6-76*. Do not remove any objects that have penetrated the tire.

1. Remove the tire sealant and compressor kit from its storage location. See *Tire Sealant and Compressor Kit Storage on page 6-96*.

   Make sure the on/off button (D) is in the off (O) position.
2. Unwrap the sealant/air hose (F) and the power plug (C).
3. Place the kit on the ground.

   Make sure the tire valve stem is positioned close to the ground so the hose will reach it.
4. Remove the valve stem cap from the flat tire by turning it counterclockwise.
5. Attach the sealant/air hose (F) onto the tire valve stem. Turn it clockwise until it is tight.

6. Plug the power plug (C) into the accessory power outlet in the vehicle. Unplug all items from other accessory power outlets. See *Accessory Power Outlet(s) on page 4-42*.

   If the vehicle has an accessory power outlet, do not use the cigarette lighter.

   If the vehicle only has a cigarette lighter, use the cigarette lighter.

   Do not pinch the power plug cord in the door or window.

7. Start the vehicle. The vehicle must be running while using the air compressor.

8. Press the on/off (D) button to turn the tire sealant and compressor kit on.

   The compressor will inject sealant and air into the tire.

   The pressure gage (E) will initially show a high pressure while the compressor pushes the sealant into the tire. Once the sealant is completely dispersed into the tire, the pressure will quickly drop and start to rise again as the tire inflates with air only.

9. Inflate the tire to the recommended inflation pressure using the pressure gage (E). The recommended inflation pressure can be found on the Tire and Loading Information label. See *Inflation - Tire Pressure on page 6-60*.

   The pressure gage (E) may read higher than the actual tire pressure while the compressor is on. Turn the compressor off to get an accurate pressure reading. The compressor may be turned on/off until the correct pressure is reached.

Notice: **If the recommended pressure cannot be reached after approximately 25 minutes, the vehicle should not be driven farther. The tire is too severely damaged and the tire sealant and compressor kit cannot inflate the tire. Remove the power plug from the accessory power outlet and unscrew the inflating hose from the tire valve. See *Roadside Service on page 8-8*.**

10. Press the on/off button (D) to turn the tire sealant and compressor kit off.

    The tire is not sealed and will continue to leak air until the vehicle is driven and the sealant is distributed in the tire, therefore, Steps 11 through 17 must be done immediately after Step 10.

    Be careful while handling the tire sealant and compressor kit as it could be warm after usage.

11. Unplug the power plug (C) from the accessory power outlet in the vehicle.
12. Turn the sealant/air hose (F) counterclockwise to remove it from the tire valve stem.
13. Replace the tire valve stem cap.
14. Replace the sealant/air hose (F), and the power plug (C) back in their original location.

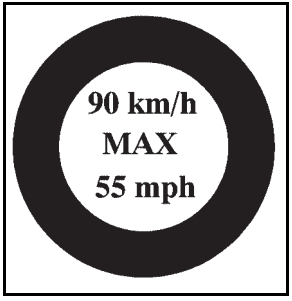

15. If the flat tire was able to inflate to the recommended inflation pressure, remove the maximum speed label from the sealant canister (B) and place it in a highly visible location.

    The label is a reminder not to exceed 55 mph (90 km/h) until the damaged tire is repaired or replaced.
16. Return the equipment to its original storage location in the vehicle.
17. Immediately drive the vehicle 5 miles (8 km) to distribute the sealant in the tire.
18. Stop at a safe location and check the tire pressure. Refer to Steps 1 through 11 under “Using the Tire Sealant and Compressor Kit without Sealant to Inflate a Tire (Not Punctured).”

    If the tire pressure has fallen more than 10 psi (68 kPa) below the recommended inflation pressure, stop driving the vehicle. The tire is too severely damaged and the tire sealant cannot seal the tire. See *Roadside Service on page 8-8*.

    If the tire pressure has not dropped more than 10 psi (68 kPa) from the recommended inflation pressure, inflate the tire to the recommended inflation pressure.
19. Wipe off any sealant from the wheel, tire or vehicle.
20. Dispose of the used sealant canister (B) and sealant/air hose (F) assembly at a local dealer/retailer or in accordance with local state codes and practices.
21. Replace it with a new canister available from your dealer/retailer.
22. After temporarily sealing a tire using the tire sealant and compressor kit, take the vehicle to an authorized dealer/retailer within a 100 miles (161 km) of driving to have the tire repaired or replaced.

Using the Tire Sealant and Compressor Kit without Sealant to Inflate a Tire (Not Punctured)

To use the air compressor to inflate a tire with air only and not sealant:

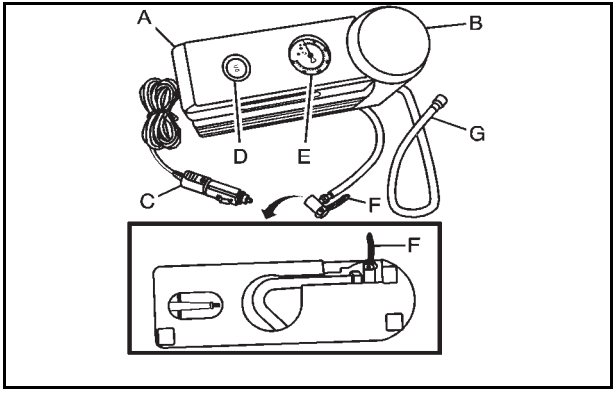

Always do a safety check first. See *If a Tire Goes Flat on page 6-76*.

1. Remove the tire sealant and compressor kit from its storage location. See *Tire Sealant and Compressor Kit Storage on page 6-96*.
2. Unlock the air only hose (F) from the sealant canister (B) by pulling up on the lever.
3. Pull the air only hose (F) from the sealant canister (B).
4. Remove the power plug (C) from the air compressor (A).
5. Place the kit on the ground.

   Make sure the tire valve stem is positioned close to the ground so the hose will reach it.
6. Remove the tire valve stem cap by turning it counterclockwise.
7. Attach the air only hose (F) onto the tire valve stem and push the lever down to secure it.

8. Plug the power plug (C) into the accessory power outlet in the vehicle. Unplug all items from other accessory power outlets. See *Accessory Power Outlet(s) on page 4-42*.

   If the vehicle has an accessory power outlet, do not use the cigarette lighter.

   If the vehicle only has a cigarette lighter, use the cigarette lighter.

   Do not pinch the power plug cord in the door or window.

9. Start the vehicle. The vehicle must be running while using the air compressor.

10. Press the on/off (D) button to turn the compressor on.

    The compressor will inflate the tire with air only.

11. Inflate the tire to the recommended inflation pressure using the pressure gage (E). The recommended inflation pressure can be found on the Tire and Loading Information label. See *Inflation - Tire Pressure on page 6-60*.

    The pressure gage (E) may read higher than the actual tire pressure while the compressor is on. Turn the compressor off to get an accurate reading. The compressor may be turned on/off until the correct pressure is reached.

12. Press the on/off button (D) to turn the tire sealant and compressor kit off.

    Be careful while handling the tire sealant and compressor kit as it could be warm after usage.

13. Unplug the power plug (C) from the accessory power outlet in the vehicle.

14. Disconnect the air only hose (F) from the tire valve stem, by turning it counterclockwise, and replace the tire valve stem cap.

15. Replace the air only hose (F) and the power plug (C) back in its original location.

16. Place the equipment in the original storage location in the vehicle.

Removal and Installation of the Sealant Canister

To remove the sealant canister:

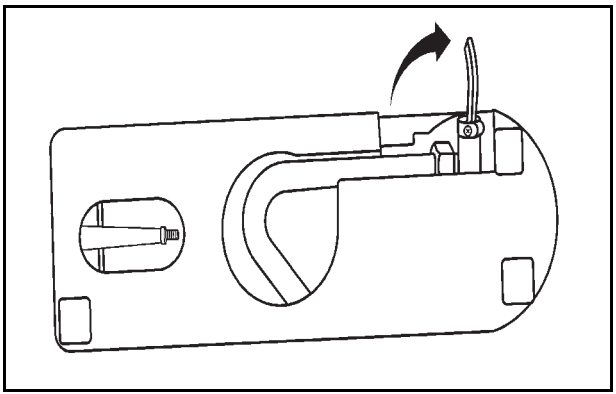

1. Unlock the air only hose (F) from the sealant canister (B) by pulling up on the lever.
2. Pull the air only hose (F) from the sealant canister (B).
3. Unwrap the sealant/air hose (F) from the compressor (A).

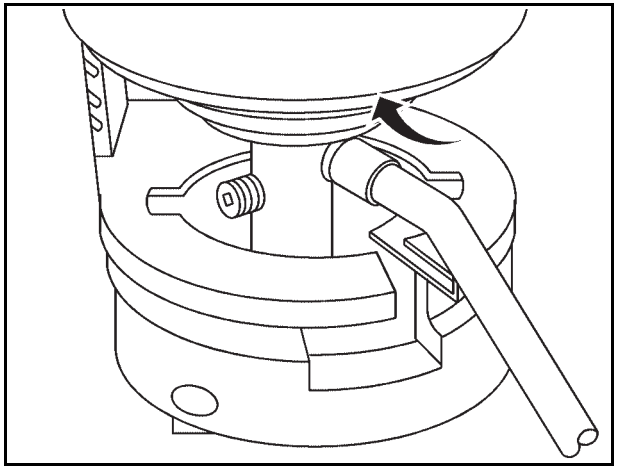

4. Turn the sealant canister (B) so the inflator filling hose is aligned with the slot in the compressor.
5. Lift the sealant canister (B) from the compressor and replace with a new sealant canister. See your dealer/retailer for more information.

To install a new sealant canister:

1. Align the sealant/air hose (F) with the slot in the air compressor.
2. Push the sealant canister (B) down and turn it clockwise.
3. Wrap the sealant/air hose (F) around the air compressor channel to stow it in its original location.
4. Push the air compressor inflator hose (F) onto the sealant canister inlet and push the lever down.

Tire Sealant and Compressor Kit (With Selector Switch)

System Identification

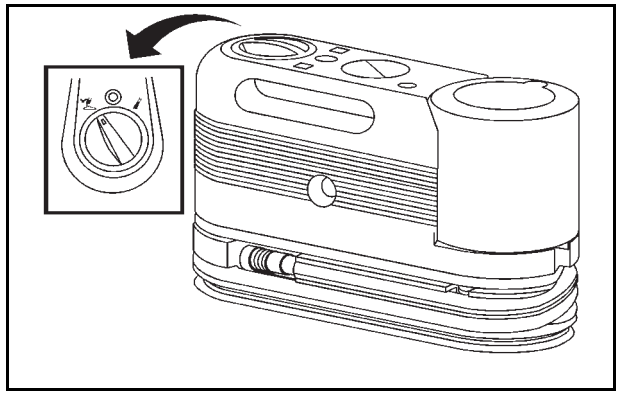

If the vehicle has the tire sealant and compressor kit shown above, see the operating instructions that follow.

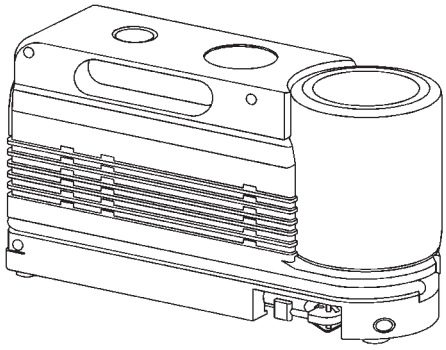

If the vehicle has the tire sealant and compressor kit shown above, follow the operating instructions under “Tire Sealant and Compressor Kit (Without Selector Switch).

⚠ WARNING:

Idling a vehicle in an enclosed area with poor ventilation is dangerous. Engine exhaust may enter the vehicle. Engine exhaust contains Carbon Monoxide (CO) which cannot be seen or smelled. It can cause unconsciousness and even death. Never run the engine in an enclosed area that has no fresh air ventilation. For more information, see *Engine Exhaust on page 3-36*.

⚠ WARNING:

Over-inflating a tire could cause the tire to rupture and you or others could be injured. Be sure to read and follow the tire sealant and compressor kit instructions and inflate the tire to its recommended pressure. Do not exceed the recommended pressure.

⚠ WARNING:

Storing the tire sealant and compressor kit or other equipment in the passenger compartment of the vehicle could cause injury. In a sudden stop or collision, loose equipment could strike someone. Store the tire sealant and compressor kit in its original location.

If this vehicle has a tire sealant and compressor kit, there may not be a spare tire, tire changing equipment, and on some vehicles there may not be a place to store a tire.

The tire sealant and compressor can be used to temporarily seal punctures up to ¼ inch (6 mm) in the tread area of the tire. It can also be used to inflate an under inflated tire.

If the tire has been separated from the wheel, has damaged sidewalls, or has a large puncture, the tire is too severely damaged for the tire sealant and compressor kit to be effective. See *Roadside Service on page 8-8*.

Read and follow all of the tire sealant and compressor kit instructions.

The kit includes:

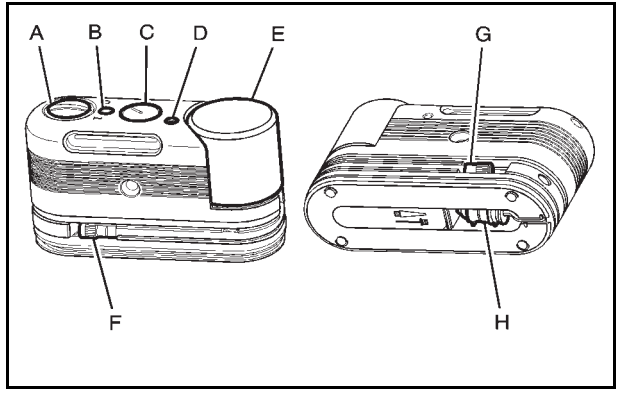

A. Selector Switch (Sealant/Air or Air Only)
B. On/Off Button
C. Pressure Gage
D. Pressure Deflation Button
E. Tire Sealant Canister
F. Sealant/Air Hose (Clear)
G. Air Only Hose (Black)
H. Power Plug

Tire Sealant

Read and follow the safe handling instructions on the label adhered to the sealant canister.

Check the tire sealant expiration date on the sealant canister. The sealant canister should be replaced before its expiration date. Replacement sealant canisters are available at your local dealer/retailer. See “Removal and Installation of the Sealant Canister” following.

There is only enough sealant to seal one tire. After usage, the sealant canister and sealant/air hose assembly must be replaced. See “Removal and Installation of the Sealant Canister” following.

Using the Tire Sealant and Compressor Kit to Temporarily Seal and Inflate a Punctured Tire

Follow the directions closely for correct sealant usage.

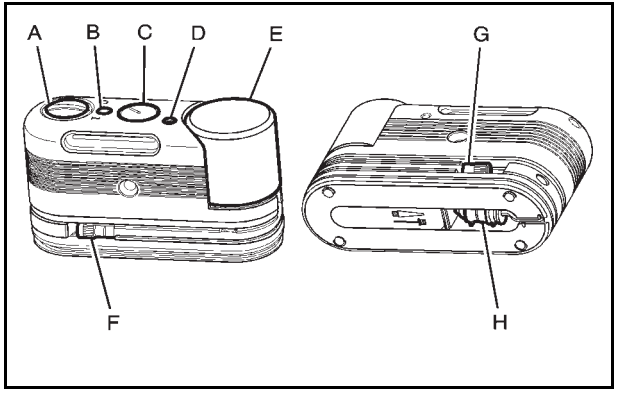

When using the tire sealant and compressor kit during cold temperatures, warm the kit in a heated environment for 5 minutes. This will help to inflate the tire faster.

Always do a safety check first. See *If a Tire Goes Flat on page 6-76*. Do not remove any objects that have penetrated the tire.

1. Remove the tire sealant and compressor kit from its storage location. See *Tire Sealant and Compressor Kit Storage on page 6-96*.
2. Unwrap the sealant/air hose (F) and the power plug (H).
3. Place the kit on the ground.
4. Remove the valve stem cap from the flat tire by turning it counterclockwise.
5. Attach the sealant/air hose (F) onto the tire valve stem. Turn it clockwise until it is tight.
6. Plug the power plug (H) into the accessory power outlet in the vehicle. Unplug all items from other accessory power outlets. See *Accessory Power Outlet(s) on page 4-42*.

   If the vehicle has an accessory power outlet, do not use the cigarette lighter.

   If the vehicle only has a cigarette lighter, use the cigarette lighter.

   Do not pinch the power plug cord in the door or window.
7. Start the vehicle. The vehicle must be running while using the air compressor.
8. Turn the selector switch (A) counterclockwise to the Sealant + Air position.
9. Press the on/off (B) button to turn the tire sealant and compressor kit on.

   The compressor will inject sealant and air into the tire.

   The pressure gage (C) will initially show a high pressure while the compressor pushes the sealant into the tire. Once the sealant is completely dispersed into the tire, the pressure will quickly drop and start to rise again as the tire inflates with air only.

10. Inflate the tire to the recommended inflation pressure using the pressure gage (C). The recommended inflation pressure can be found on the Tire and Loading Information label. See *Inflation - Tire Pressure on page 6-60*.

    The pressure gage (C) may read higher than the actual tire pressure while the compressor is on. Turn the compressor off to get an accurate pressure reading. The compressor may be turned on/off until the correct pressure is reached.

***Notice:* If the recommended pressure cannot be reached after approximately 25 minutes, the vehicle should not be driven farther. The tire is too severely damaged and the tire sealant and compressor kit cannot inflate the tire. Remove the power plug from the accessory power outlet and unscrew the inflating hose from the tire valve. See *Roadside Service on page 8-8*.**

11. Press the on/off button (B) to turn the tire sealant and compressor kit off.

    The tire is not sealed and will continue to leak air until the vehicle is driven and the sealant is distributed in the tire, therefore, Steps 12 through 18 must be done immediately after Step 11.

    Be careful while handling the tire sealant and compressor kit as it could be warm after usage.

12. Unplug the power plug (H) from the accessory power outlet in the vehicle.
13. Turn the sealant/air hose (F) counterclockwise to remove it from the tire valve stem.
14. Replace the tire valve stem cap.
15. Replace the sealant/air hose (F), and the power plug (H) back in their original location.

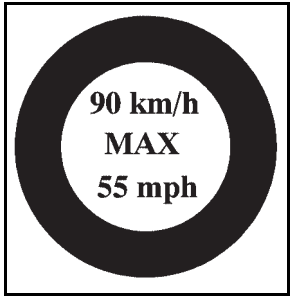

16. If the flat tire was able to inflate to the recommended inflation pressure, remove the maximum speed label from the sealant canister (E) and place it in a highly visible location.

    The label is a reminder not to exceed 55 mph (90 km/h) until the damaged tire is repaired or replaced.

17. Return the equipment to its original storage location in the vehicle.
18. Immediately drive the vehicle 5 miles (8 km) to distribute the sealant in the tire.

19. Stop at a safe location and check the tire pressure. Refer to Steps 1 through 11 under “Using the Tire Sealant and Compressor Kit without Sealant to Inflate a Tire (Not Punctured).”

    If the tire pressure has fallen more than 10 psi (68 kPa) below the recommended inflation pressure, stop driving the vehicle. The tire is too severely damaged and the tire sealant cannot seal the tire. See *Roadside Service on page 8-8*.

    If the tire pressure has not dropped more than 10 psi (68 kPa) from the recommended inflation pressure, inflate the tire to the recommended inflation pressure.

20. Wipe off any sealant from the wheel, tire, and vehicle.
21. Dispose of the used sealant canister (E) and sealant/air hose (F) assembly at a local dealer/retailer or in accordance with local state codes and practices.
22. Replace it with a new canister available from your dealer/retailer.
23. After temporarily sealing a tire using the tire sealant and compressor kit, take the vehicle to an authorized dealer/retailer within a 100 miles (161 km) of driving to have the tire repaired or replaced.

Using the Tire Sealant and Compressor Kit without Sealant to Inflate a Tire (Not Punctured)

To use the air compressor to inflate a tire with air only and not sealant:

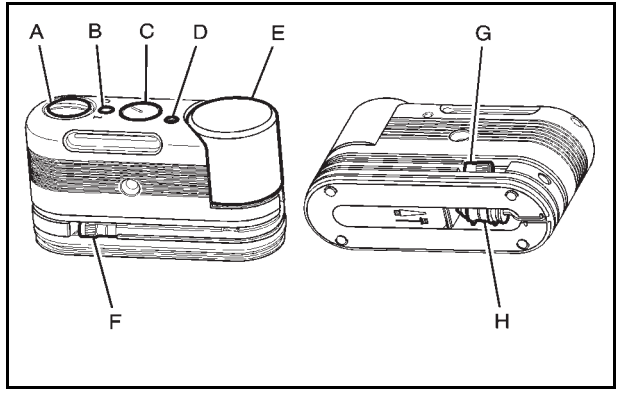

Always do a safety check first. See *If a Tire Goes Flat on page 6-76*.

1. Remove the tire sealant and compressor kit from its storage location. See *Tire Sealant and Compressor Kit Storage on page 6-96*.
2. Unwrap the air only hose (G) and the power plug (H).

3. Place the kit on the ground.
4. Remove the tire valve stem cap from the flat tire by turning it counterclockwise.
5. Attach the air only hose (G) onto the tire valve stem by turning it clockwise until it is tight.
6. Plug the power plug (H) into the accessory power outlet in the vehicle. Unplug all items from other accessory power outlets. See *Accessory Power Outlet(s) on page 4-42*.

   If the vehicle has an accessory power outlet, do not use the cigarette lighter.

   If the vehicle only has a cigarette lighter, use the cigarette lighter.

   Do not pinch the power plug cord in the door or window.
7. Start the vehicle. The vehicle must be running while using the air compressor.
8. Turn the selector switch (A) clockwise to the Air Only position.
9. Press the on/off (B) button to turn the compressor on.

   The compressor will inflate the tire with air only.
10. Inflate the tire to the recommended inflation pressure using the pressure gage (C). The recommended inflation pressure can be found on the Tire and Loading Information label. See *Inflation - Tire Pressure on page 6-60*.

    The pressure gage (C) may read higher than the actual tire pressure while the compressor is on. Turn the compressor off to get an accurate reading. The compressor may be turned on/off until the correct pressure is reached.

    If you inflate the tire higher than the recommended pressure you can adjust the excess pressure by pressing the pressure deflation button (D) until the proper pressure reading is reached. This option is only functional when using the air only hose (G).
11. Press the on/off button (B) to turn the tire sealant and compressor kit off.

    Be careful while handling the tire sealant and compressor kit as it could be warm after usage.
12. Unplug the power plug (H) from the accessory power outlet in the vehicle.
13. Disconnect the air only hose (G) from the tire valve stem, by turning it counterclockwise, and replace the tire valve stem cap.

14. Replace the air only hose (G) and the power plug (H) and cord back in its original location.
15. Place the equipment in the original storage location in the vehicle.

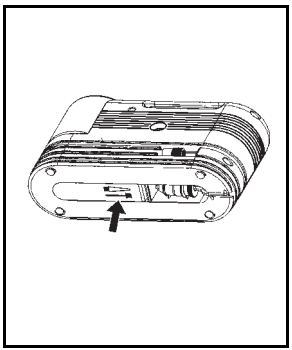

The tire sealant and compressor kit has an accessory adapter located in a compartment on the bottom of its housing that may be used to inflate air mattresses, balls, etc.

Removal and Installation of the Sealant Canister

To remove the sealant canister:

1. Unwrap the sealant hose.
2. Press the canister release button.
3. Pull up and remove the canister.
4. Replace with a new canister which is available from your dealer/retailer.
5. Push the new canister into place.

Tire Sealant and Compressor Kit Storage

The tire sealant and compressor kit is located in the trunk.

1. Open the trunk. See *Trunk on page 3-15*.

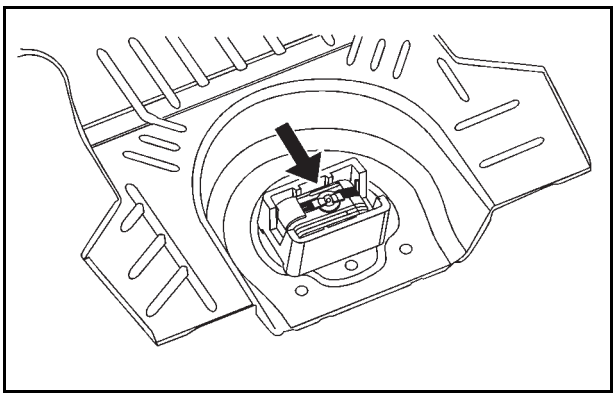

2. Remove the retainer that holds the tire sealant and compressor kit in place.
3. Remove the tire sealant and compressor kit from the foam container.

To store the tire sealant and compressor kit, reverse the steps.

Changing a Flat Tire

If a tire goes flat, avoid further tire and wheel damage by driving slowly to a level place. Turn on the hazard warning flashers. See *Hazard Warning Flashers on page 4-3*.

⚠ WARNING:

Changing a tire can be dangerous. The vehicle can slip off the jack and roll over or fall on you or other people. You and they could be badly injured or even killed. Find a level place to change your tire. To help prevent the vehicle from moving:

1. Set the parking brake firmly.
2. Put the shift lever in P (Park).
3. Turn off the engine and do not restart while the vehicle is raised.
4. Do not allow passengers to remain in the vehicle.

(Continued)

WARNING: (Continued)

To be even more certain the vehicle will not move, you should put blocks at the front and rear of the tire farthest away from the one being changed. That would be the tire, on the other side, at the opposite end of the vehicle.

When the vehicle has a flat tire (B), use the following example as a guide to assist you in the placement of wheel blocks (A).

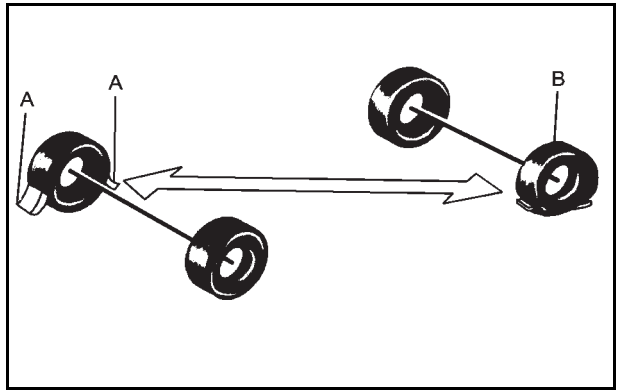

A. Wheel Block

B. Flat Tire

The following information explains how to use the jack and change a tire.

Removing the Spare Tire and Tools

The equipment you will need is located in the trunk. To access to the compact spare tire and jacking equipment:

1. Open the trunk. See *Trunk on page 3-15* for more information.
2. Remove the compact spare tire cover.

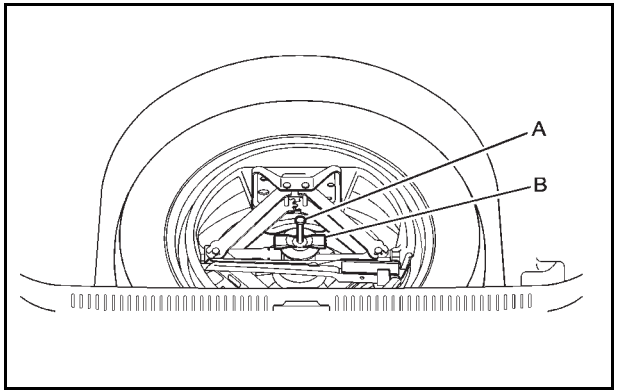

3. Pull the stow rod (A) to remove it.
4. Turn the nut (B) holding the jack package container counterclockwise and remove it. Then remove the jack and wheel wrench.
5. Remove the compact spare tire. See *Compact Spare Tire on page 6-107* for more information about the compact spare tire.

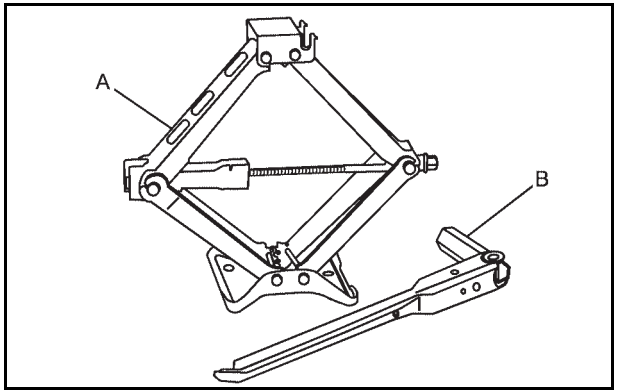

The tools you will be using include the jack (A) and the wheel wrench (B).

Removing the Flat Tire and Installing the Spare Tire

1. Do a safety check before proceeding. See *Changing a Flat Tire on page 6-96* for more information.

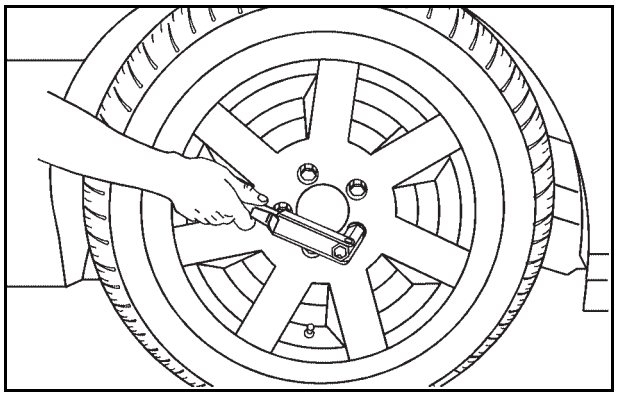

2. Loosen all of the wheel nuts, but do not remove them yet, using the wheel wrench. Turn the handle about 180 degrees, then flip the handle back to the starting position. This avoids taking the wrench off the lug nut for each turn.

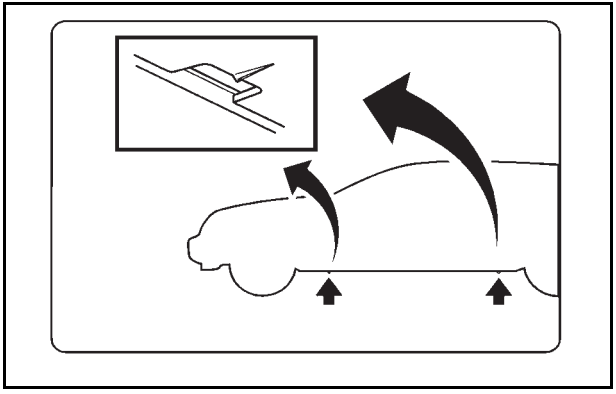

3. Find the vehicle's jacking location using the diagram above and corresponding V–shaped notches located in the plastic molding on the vehicle's frame. The notches in the plastic molding are marked with a triangle shape.
4. Attach the wheel wrench to the jack.

⚠ WARNING:

Getting under a vehicle when it is jacked up is dangerous. If the vehicle slips off the jack, you could be badly injured or killed. Never get under a vehicle when it is supported only by a jack.

⚠ WARNING:

Raising your vehicle with the jack improperly positioned can damage the vehicle and even make the vehicle fall. To help avoid personal injury and vehicle damage, be sure to fit the jack lift head into the proper location before raising the vehicle.

⚠ WARNING:

Lifting a vehicle and getting under it to do maintenance or repairs is dangerous without the appropriate safety equipment and training. If a jack is provided with the vehicle, it is designed only for changing a flat tire. If it is used for anything else, you or others could be badly injured or killed if the vehicle slips off the jack. If a jack is provided with the vehicle, only use it for changing a flat tire.

Notice: **If you position the jack under the rocker molding and attempt to raise the vehicle, you could break the molding and/or cause other damage to your vehicle. Always position the jack so that when the jack head is raised, it will fit firmly in the notch located inboard from the rocker molding.**

5. Turn the wheel wrench counterclockwise to lower the jack lift head until the jack fits under the vehicle.

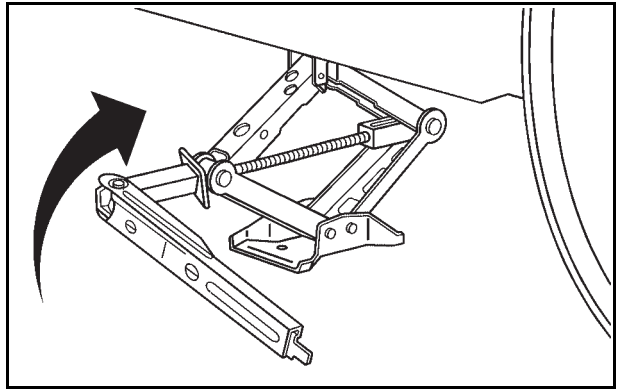

6. Raise the jack by turning the wheel wrench clockwise until the slots in the jack head fit into the metal flange located behind the triangle on the plastic molding as shown.
7. Put the compact spare tire near you.

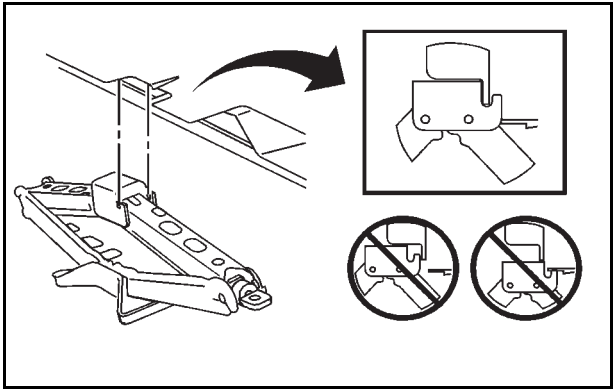

8. Raise the vehicle by turning the wheel wrench clockwise. Raise the vehicle far enough off the ground for the compact spare tire to fit under the vehicle.

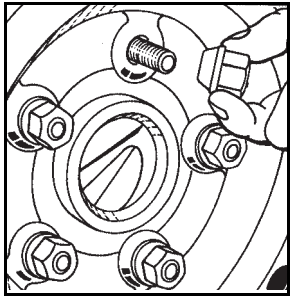

9. Remove all the wheel nuts and the flat tire.

⚠ WARNING:

Rust or dirt on a wheel, or on the parts to which it is fastened, can make wheel nuts become loose after time. The wheel could come off and cause an accident. When changing a wheel, remove any rust or dirt from places where the wheel attaches

(Continued)

WARNING: (Continued)

to the vehicle. In an emergency, use a cloth or a paper towel to do this; but be sure to use a scraper or wire brush later, if needed, to get all the rust or dirt off. See *Changing a Flat Tire on page 6-96*.

⚠ WARNING:

Never use oil or grease on bolts or nuts because the nuts might come loose. The vehicle's wheel could fall off, causing a crash.

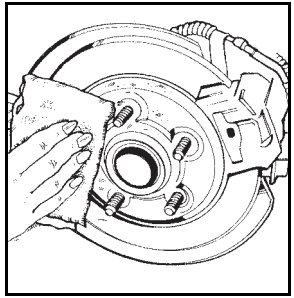

10. Remove any rust or dirt from the wheel bolts, mounting surfaces, and spare wheel.
11. Install the spare tire.
12. Put the wheel nuts back on with the rounded end of the nuts toward the wheel.
13. Tighten each wheel nut by turning it clockwise with your hand until the wheel is held against the hub.

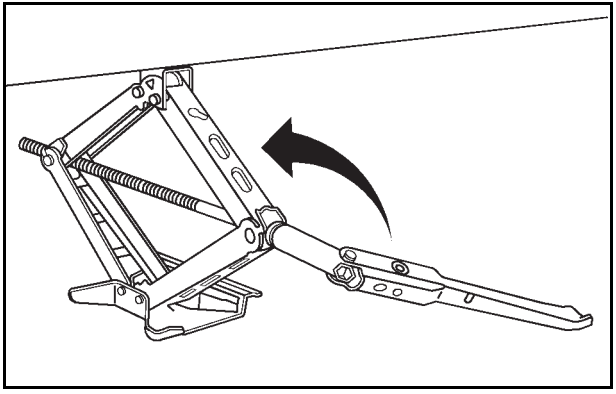

14. Lower the vehicle by turning the wheel wrench counterclockwise. Lower the jack completely.

⚠ WARNING:

Wheel nuts that are improperly or incorrectly tightened can cause the wheels to become loose or come off. The wheel nuts should be tightened with a torque wrench to the proper torque specification after replacing. Follow the torque specification supplied by the aftermarket manufacturer when using accessory locking wheel nuts. See *Capacities and Specifications on page 6-130* for original equipment wheel nut torque specifications.

Notice: **Improperly tightened wheel nuts can lead to brake pulsation and rotor damage. To avoid expensive brake repairs, evenly tighten the wheel nuts in the proper sequence and to the proper torque specification. See *Capacities and Specifications on page 6-130* for the wheel nut torque specification.**

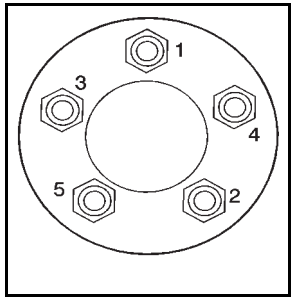

15. Tighten the wheel nuts firmly in a crisscross sequence as shown.

Storing a Flat or Spare Tire and Tools

⚠ WARNING:

Storing a jack, a tire, or other equipment in the passenger compartment of the vehicle could cause injury. In a sudden stop or collision, loose equipment could strike someone. Store all these in the proper place.

Full-Size Tire and Tools

After you have put the compact spare tire on your vehicle, you will need to do the following to store the flat tire in your trunk.

1. Open the trunk. See *Trunk on page 3-15*.
2. Store the jack and wheel wrench in the jack container in the trunk.

   When storing the jack, in the container, it must be raised until the screw end is flush with the edge of the jack.
3. Store the flat tire as far forward in the trunk as possible.

The compact spare is for temporary use only. Replace the compact spare tire with a full-size tire as soon as you can.

Compact Spare Tire and Tools

Use the following diagram as a guide for storing the compact spare tire and tools in the trunk:

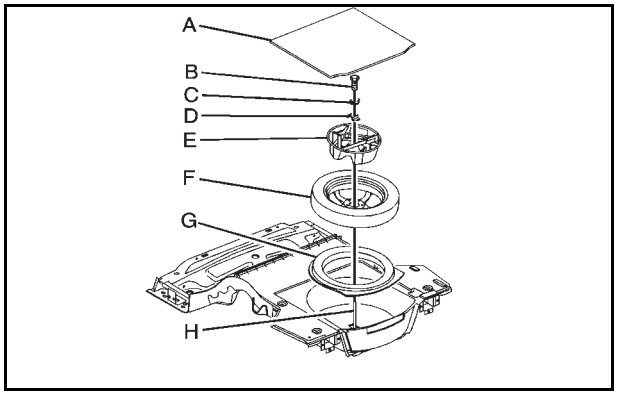

A. Compact Spare Tire Cover
B. Stow Rod Cap
C. Plastic Wing Nut
D. Retainer
E. Jack Container Package (With Wheel Wrench and Jack)
F. Compact Spare Tire
G. Foam Support
H. Bolt

1. Open the trunk. See *Trunk on page 3-15*.
2. Make sure the foam support (G) is in place in the trunk area.
3. Reinstall the compact spare tire (F) making sure to line up the wheel center hole with the bolt (H) and place on the compartment floor.
4. Insert the jack container (E) with wheel wrench and jack into the center of the compact spare tire making sure to line up the wheel nut hole with the bolt (H) on the compartment floor.
5. Secure the tire and wheel with the retainer (D) and wing nut (C).
6. Cover the exposed bolt with the stow rod cap (B).
7. Reinstall the compact spare tire cover (A).

Compact Spare Tire

⚠ WARNING:

Driving with more than one compact spare tire at a time could result in loss of braking and handling. This could lead to a crash and you or others could be injured. Use only one compact spare tire at a time.

Although the compact spare tire was fully inflated when the vehicle was new, it can lose air after a time. Check the inflation pressure regularly. It should be 60 psi (420 kPa).

After installing the compact spare on the vehicle, you should stop as soon as possible and make sure the spare tire is correctly inflated. The compact spare is made to perform well at speeds up to 65 mph (105 km/h) for distances up to 3,000 miles (5 000 km), so you can finish your trip and have the full-size tire repaired or replaced where you want. You must calibrate the tire inflation monitor system after installing or removing the compact spare. See *Tire Pressure Monitor System on page 6-62*. The system may not work correctly when the compact spare is installed on the vehicle. Of course, it's best to replace the spare with a full-size tire as soon as you can. The spare will last longer and be in good shape in case you need it again.

Notice: **When the compact spare is installed, do not take the vehicle through an automatic car wash with guide rails. The compact spare can get caught on the rails which can damage the tire, wheel and other parts of the vehicle.**

Do not use the compact spare on other vehicles.

And do not mix the compact spare tire or wheel with other wheels or tires. They will not fit. Keep the spare tire and its wheel together.

Notice: **Tire chains will not fit the compact spare. Using them can damage the vehicle and can damage the chains too. Do not use tire chains on the compact spare.**

Appearance Care

Interior Cleaning

The vehicle's interior will continue to look its best if it is cleaned often. Although not always visible, dust and dirt can accumulate on the upholstery. Dirt can damage carpet, fabric, leather, and plastic surfaces. Regular vacuuming is recommended to remove particles from the upholstery. It is important to keep the upholstery from becoming and remaining heavily soiled. Soils should be removed as quickly as possible. The vehicle's interior may experience extremes of heat that could cause stains to set rapidly.

Lighter colored interiors may require more frequent cleaning. Use care because newspapers and garments that transfer color to home furnishings may also transfer color to the vehicle's interior.

When cleaning the vehicle's interior, only use cleaners specifically designed for the surfaces being cleaned. Permanent damage may result from using cleaners on surfaces for which they were not intended. Use glass cleaner only on glass. Remove any accidental over-spray from other surfaces immediately. To prevent over-spray, apply cleaner directly to the cleaning cloth.

Notice: **Using abrasive cleaners when cleaning glass surfaces on the vehicle, could scratch the glass and/or cause damage to the rear window defogger. When cleaning the glass on the vehicle, use only a soft cloth and glass cleaner.**

Many cleaners contain solvents that may become concentrated in the vehicle's breathing space. Before using cleaners, read and adhere to all safety instructions on the label. While cleaning the vehicle's interior, maintain adequate ventilation by opening the vehicle's doors and windows.

Dust may be removed from small buttons and knobs using a small brush with soft bristles.

Products that remove odors from the vehicle's upholstery and clean the vehicle's glass can be obtained from your dealer/retailer.

Do not clean the vehicle using:

- A knife or any other sharp object to remove a soil from any interior surface.
- A stiff brush. It can cause damage to the vehicle's interior surfaces.
- Heavy pressure or aggressive rubbing with a cleaning cloth. Use of heavy pressure can damage the interior and does not improve the effectiveness of soil removal.
- Laundry detergents or dishwashing soaps with degreasers can leave residue that streaks and attracts dirt. For liquid cleaners, about 20 drops per gallon (3.78 L) of water is a good guide. Use only mild, neutral-pH soaps.
- Too much cleaner that saturates the upholstery.
- Organic solvents such as naptha, alcohol, etc. that can damage the vehicle's interior.

Fabric/Carpet

Use a vacuum cleaner with a soft brush attachment frequently to remove dust and loose dirt. A canister vacuum with a beater bar in the nozzle may only be used on floor carpet and carpeted floor mats. For any soil, always try to remove it first with plain water or club soda. Before cleaning, gently remove as much of the soil as possible using one of the following techniques:

- For liquids: gently blot the remaining soil with a paper towel. Allow the soil to absorb into the paper towel until no more can be removed.
- For solid dry soils: remove as much as possible and then vacuum.

To clean:

1. Saturate a lint-free, clean white cloth with water or club soda.
2. Wring the cloth to remove excess moisture.
3. Start on the outside edge of the soil and gently rub toward the center. Continue cleaning, using a clean area of the cloth each time it becomes soiled.
4. Continue to gently rub the soiled area until the cleaning cloth remains clean.
5. If the soil is not completely removed, use a mild soap solution and repeat the cleaning process that was used with plain water.

If any of the soil remains, a commercial fabric cleaner or spot lifter may be necessary. When a commercial upholstery cleaner or spot lifter is to be used, test a small hidden area for colorfastness first. If the locally cleaned area gives any impression that a ring formation may result, clean the entire surface.

After the cleaning process has been completed, a paper towel can be used to blot excess moisture from the fabric or carpet.

Leather

A soft cloth dampened with water can be used to remove dust. If a more thorough cleaning is necessary, a soft cloth dampened with a mild soap solution can be used. Allow the leather to dry naturally. Do not use heat to dry. Never use steam to clean leather. Never use spot lifters or spot removers on leather. Many commercial leather cleaners and coatings that are sold to preserve and protect leather may permanently change the appearance and feel of the leather and are not recommended. Do not use silicone or wax-based products, or those containing organic solvents to clean the vehicle's interior because they can alter the appearance by increasing the gloss in a non-uniform manner. Never use shoe polish on leather.

Instrument Panel, Vinyl, and Other Plastic Surfaces

A soft cloth dampened with water may be used to remove dust. If a more thorough cleaning is necessary, a clean soft cloth dampened with a mild soap solution can be used to gently remove dust and dirt. Never use spot lifters or removers on plastic surfaces.
Many commercial cleaners and coatings that are sold to preserve and protect soft plastic surfaces may permanently change the appearance and feel of the interior and are not recommended. Do not use silicone or wax-based products, or those containing organic solvents to clean the vehicle's interior because they can alter the appearance by increasing the gloss in a non-uniform manner.

Some commercial products may increase gloss on the instrument panel. The increase in gloss may cause annoying reflections in the windshield and even make it difficult to see through the windshield under certain conditions.

Wood Panels

Use a clean cloth moistened in warm, soapy water (use mild dish washing soap). Dry the wood immediately with a clean cloth.

Speaker Covers

Vacuum around a speaker cover gently, so that the speaker will not be damaged. Clean spots with just water and mild soap.

Care of Safety Belts

Keep belts clean and dry.

⚠ WARNING:

Do not bleach or dye safety belts. It may severely weaken them. In a crash, they might not be able to provide adequate protection. Clean safety belts only with mild soap and lukewarm water.

Weatherstrips

Silicone grease on weatherstrips will make them last longer, seal better, and not stick or squeak. Apply silicone grease with a clean cloth. During very cold, damp weather frequent application may be required. See *Recommended Fluids and Lubricants on page 7-9*.

Washing Your Vehicle

The best way to preserve the vehicle's finish is to keep it clean by washing it often.

Notice: **Certain cleaners contain chemicals that can damage the emblems or nameplates on the vehicle. Check the cleaning product label. If it states that it should not be used on plastic parts, do not use it on the vehicle or damage may occur and it would not be covered by the warranty.**

Do not wash the vehicle in direct sunlight. Use a car washing soap. Do not use cleaning agents that are petroleum based or that contain acid or abrasives, as they can damage the paint, metal or plastic on the vehicle. Approved cleaning products can be obtained from your dealer/retailer. Follow all manufacturers' directions regarding correct product usage, necessary safety precautions and appropriate disposal of any vehicle care product.

Rinse the vehicle well, before washing and after to remove all cleaning agents completely. If they are allowed to dry on the surface, they could stain.

Dry the finish with a soft, clean chamois or an all-cotton towel to avoid surface scratches and water spotting.

High pressure car washes may cause water to enter the vehicle. Avoid using high pressure washes closer than 12 inches (30 cm) to the surface of the vehicle. Use of power washers exceeding 1,200 psi (8 274 kPa) can result in damage or removal of paint and decals.

Cleaning Exterior Lamps/Lenses

Use only lukewarm or cold water, a soft cloth and a car washing soap to clean exterior lamps and lenses. Follow instructions under *Washing Your Vehicle on page 6-111*.

Finish Care

Occasional waxing or mild polishing of the vehicle by hand may be necessary to remove residue from the paint finish. Approved cleaning products can be obtained from your dealer/retailer.

If the vehicle has a basecoat/clearcoat paint finish, the clearcoat gives more depth and gloss to the colored basecoat. Always use waxes and polishes that are non-abrasive and made for a basecoat/clearcoat paint finish.

Notice: **Machine compounding or aggressive polishing on a basecoat/clearcoat paint finish may damage it. Use only non-abrasive waxes and polishes that are made for a basecoat/clearcoat paint finish on the vehicle.**

Foreign materials such as calcium chloride and other salts, ice melting agents, road oil and tar, tree sap, bird droppings, chemicals from industrial chimneys, etc., can damage the vehicle's finish if they remain on painted surfaces. Wash the vehicle as soon as possible.

If necessary, use non-abrasive cleaners that are marked safe for painted surfaces to remove foreign matter.

Exterior painted surfaces are subject to aging, weather and chemical fallout that can take their toll over a period of years. To help keep the paint finish looking new, keep the vehicle garaged or covered whenever possible.

Protecting Exterior Bright Metal Parts

Bright metal parts should be cleaned regularly to keep their luster. Washing with water is all that is usually needed. However, chrome polish may be used on chrome or stainless steel trim, if necessary.

Use special care with aluminum trim. To avoid damaging protective trim, never use auto or chrome polish, steam or caustic soap to clean aluminum. A coating of wax, rubbed to high polish, is recommended for all bright metal parts.

Windshield and Wiper Blades

Clean the outside of the windshield with glass cleaner.

Clean the rubber blades using a lint free cloth or paper towel soaked with windshield washer fluid or a mild detergent. Wash the windshield thoroughly when cleaning the blades. Bugs, road grime, sap, and a buildup of vehicle wash/wax treatments may cause wiper streaking. Replace the wiper blades if they are worn or damaged.

Wipers can be damaged by:

- Extreme dusty conditions
- Sand and salt
- Heat and sun
- Snow and ice, without proper removal

Aluminum or Chrome-Plated Wheels and Trim

The vehicle may have either aluminum or chrome-plated wheels.

Keep the wheels clean using a soft clean cloth with mild soap and water. Rinse with clean water. After rinsing thoroughly, dry with a soft clean towel. A wax may then be applied.

Notice: **Chrome wheels and other chrome trim may be damaged if the vehicle is not washed after driving on roads that have been sprayed with magnesium, calcium or sodium chloride. These chlorides are used on roads for conditions such as ice and dust. Always wash the vehicle's chrome with soap and water after exposure.**

Notice: **Using strong soaps, chemicals, abrasive polishes, cleaners, brushes, or cleaners that contain acid on aluminum or chrome-plated wheels, could damage the surface of the wheel(s). The repairs would not be covered by the vehicle warranty. Use only approved cleaners on aluminum or chrome-plated wheels.**

The surface of these wheels is similar to the painted surface of the vehicle. Do not use strong soaps, chemicals, abrasive polishes, abrasive cleaners, cleaners with acid, or abrasive cleaning brushes on them because they could damage the surface. Do not use chrome polish on aluminum wheels.

Notice: **Using chrome polish on aluminum wheels could damage the wheels. The repairs would not be covered by the vehicle warranty. Use chrome polish on chrome wheels only.**

Use chrome polish only on chrome-plated wheels, but avoid any painted surface of the wheel, and buff off immediately after application.

Notice: **Driving the vehicle through an automatic car wash that has silicone carbide tire cleaning brushes, could damage the aluminum or chrome-plated wheels. The repairs would not be covered by the vehicle warranty. Never drive a vehicle that has aluminum or chrome-plated wheels through an automatic car wash that uses silicone carbide tire cleaning brushes.**

Tires

To clean the tires, use a stiff brush with tire cleaner.

Notice: **Using petroleum-based tire dressing products on the vehicle may damage the paint finish and/or tires. When applying a tire dressing, always wipe off any overspray from all painted surfaces on the vehicle.**

Sheet Metal Damage

If the vehicle is damaged and requires sheet metal repair or replacement, make sure the body repair shop applies anti-corrosion material to parts repaired or replaced to restore corrosion protection.

Original manufacturer replacement parts will provide the corrosion protection while maintaining the vehicle warranty.

Finish Damage

Any stone chips, fractures or deep scratches in the finish should be repaired right away. Bare metal will corrode quickly and may develop into major repair expense.

Minor chips and scratches can be repaired with touch-up materials available from your dealer/retailer. Larger areas of finish damage can be corrected in your dealer's/retailer's body and paint shop.

Underbody Maintenance

Chemicals used for ice and snow removal and dust control can collect on the underbody. If these are not removed, corrosion and rust can develop on the underbody parts such as fuel lines, frame, floor pan, and exhaust system even though they have corrosion protection.

At least every spring, flush these materials from the underbody with plain water. Clean any areas where mud and debris can collect. Dirt packed in close areas of the frame should be loosened before being flushed. Your dealer/retailer or an underbody car washing system can do this.

Chemical Paint Spotting

Some weather and atmospheric conditions can create a chemical fallout. Airborne pollutants can fall upon and attack painted surfaces on the vehicle. This damage can take two forms: blotchy, ring-shaped discolorations, and small, irregular dark spots etched into the paint surface.

Although no defect in the paint job causes this, we will repair, at no charge to the owner, the surfaces of new vehicles damaged by this fallout condition within 12 months or 12,000 miles (20 000 km) of purchase, whichever occurs first.

Vehicle Identification

Vehicle Identification Number (VIN)

This legal identifier is in the front corner of the instrument panel, on the driver side. It can be seen through the windshield from outside.
The VIN also appears on the Vehicle Certification and Service Parts labels and certificates of title and registration.

Engine Identification

The eighth character in the VIN is the engine code. This code identifies the vehicle's engine, specifications, and replacement parts. See “Engine Specifications” under *Capacities and Specifications on page 6-130* for the vehicle's engine code.

Service Parts Identification Label

This label, on the spare tire cover, has the following information:

- Vehicle Identification Number (VIN)
- Model designation
- Paint information
- Production options and special equipment

Do not remove this label from the vehicle.

Electrical System

Add-On Electrical Equipment

Notice: **Do not add anything electrical to the vehicle unless you check with your dealer/retailer first. Some electrical equipment can damage the vehicle and the damage would not be covered by the vehicle's warranty. Some add-on electrical equipment can keep other components from working as they should.**

Add-on equipment can drain the vehicle battery, even if the vehicle is not operating.

The vehicle has an airbag system. Before attempting to add anything electrical to the vehicle, see *Servicing Your Airbag-Equipped Vehicle on page 2-66* and *Adding Equipment to Your Airbag-Equipped Vehicle on page 2-66*.

Headlamp Wiring

The headlamp wiring is protected by fuses in the fuse block. An electrical overload will cause the lamps to turn off. If this happens, have the headlamp wiring checked right away.

Windshield Wiper Fuses

The windshield wiper motor is protected by an internal circuit breaker. If the wiper motor overheats due to heavy snow, the wipers will stop until the motor cools and will then restart.

Power Windows and Other Power Options

Circuit breakers in the fuse block protect the power windows and other power accessories. When the current load is too heavy, the circuit breaker opens and closes, protecting the circuit until the problem is fixed or goes away.

Fuses and Circuit Breakers

The wiring circuits in the vehicle are protected from short circuits by a combination of fuses, circuit breakers and fusible thermal links. This greatly reduces the chance of fires caused by electrical problems.

Look at the silver-colored band inside the fuse. If the band is broken or melted, replace the fuse. Be sure you replace a bad fuse with a new one of the identical size and rating.

Fuses of the same amperage can be temporarily borrowed from another fuse location, if a fuse goes out. Replace the fuse as soon as you can.

Underhood Fuse Block

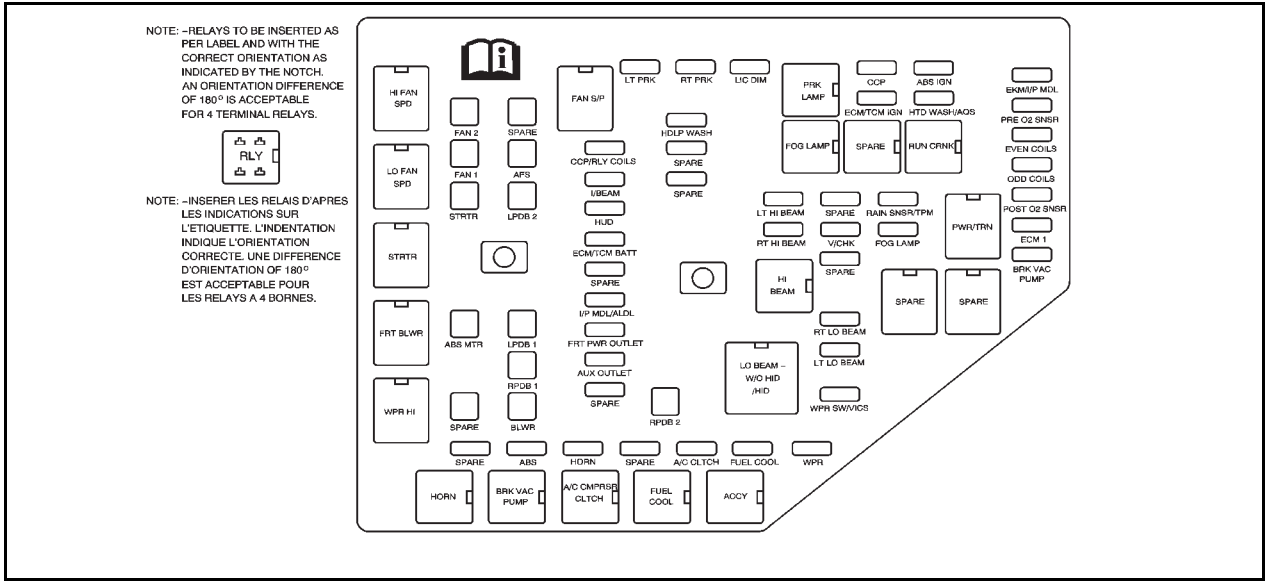

The underhood fuse block is located in the front of the engine compartment on the passenger side of the vehicle. See *Engine Compartment Overview on page 6-13* for more information on location and removal procedure for the front compartment underhood sights shields.

To access the fuses, push in the tabs located on each side of the fuse block cover, then lift the cover off.

Notice: **Spilling liquid on any electrical components on the vehicle may damage it. Always keep the covers on any electrical component.**

Fuses JCase	Usage
ABS MTR	ABS Module- ABS Module-Stabilitrak
AFS	Active Front Steering
BLWR	Blower Motor
FAN 1	Cooling Fan-Low Speed
FAN 2	Cooling Fan-High Speed
LPDB 1	Driver Side Rear Fuse Block
LPDB 2	Driver Side Rear Fuse Block
RPDB 1	Passenger Side Rear Fuse Block
RPDB 2	Passenger Side Rear Fuse Block

Fuses JCase	Usage
SPARE	Spare
SPARE	Spare
STRTR	Starter

Fuses Mini	Usage
A/C CLTCH	Air Conditioning Compressor Clutch
ABS	ABS Module-Stabilitrak
ABS IGN	Antilock Brake Controller
AUX OUTLET	Rear Accessory Power Outlet
BRK VAC PUMP	Brake Vacuum Pump
CCP	Climate Control Panel
CCP/RLY COILS	Climate Control Panel, Headlamp Level Control, Active Cruise Control, Relay Coils, Starter, Front Blower
ECM 1	Engine Control Module (ECM)
ECM/ TCM BATT	ECM, Transmission Control Module (TCM)
ECM/TCM IGN	ECM, TCM, Instrument Panel Cluster

Fuses Mini	Usage
EKM/I/P MDL	Easy Key Module (EKM), Instrument Panel Module (I/P MDL)
EVEN COILS	Even Ignition Coils, Even Fuel Injectors
FOG LAMP	Front Fog Lamps
FRT PWR OUTLET	Front Accessory Power Outlet
FUEL COOL	Fuel Cooling
HORN	Horn
HTD WASH/AQS	Heated Headlamp Washer, Air Quality Sensor
HUD	Heads-Up Display, Steering Column Switch
I/BEAM	IntelliBeam Relay
I/P MDL/ALDL	Instrument Panel Module, Assembly Line Data Link Connector
LIC DIM	License Plate, Instrument Panel Dimming
LT HI BEAM	Driver Side High Beam Headlamp
LT LO BEAM	Driver Side Low Beam Headlamp
LT PRK	Driver Side Park Lamp/Driver Side Taillamp

Fuses Mini	Usage
ODD COILS	Odd Ignition Coils, Odd Fuel Injectors
POST O2 SNSR	Post Oxygen Sensor
PRE O2 SNSR	Pre Oxygen Sensor, CAM Sensors
RAIN SNSR/TPM	Rain Sensor, Relay Coil: Headlamp Wash
RT HI BEAM	Passenger Side High Beam Headlamp
RT LO BEAM	Passenger Side Low Beam Headlamp
RT PRK	Passenger Side Park Lamp, Passenger Side Taillamp
SPARE	Spare
SPARE	Spare
SPARE	Spare
SPARE	Spare
SPARE	Spare
SPARE	Spare
SPARE	Spare

Fuses Mini	Usage
V/CHK	Instrument Panel Module-Voltage Check
WPR	Wipe/Wash Module Assembly
WPR SW/VICS	Rain Sensor, Wiper Switch

Relays	Usage
A/C CMPRSR CLTCH	Air Conditioning Compressor Clutch
ACCY	Accessory, Rain Sensor, Headlamp Washer Relay Coil, Windshield Wiper/Washer Module
BRK VAC PUMP	Brake Vacuum Pump
FAN S/P	Cooling Fan Series/Parallel
FOG LAMP	Fog Lamps
FRT BLWR	Front Blower Motor
FUEL COOL	Fuel Cooling Pump
HI BEAM	High Beam Headlamp
HI FAN SPD	Cooling Fan High Speed
HORN	Horn

Relays	Usage
LO FAN SPD	Cooling Fan Low Speed
LOW BEAM W/O HID/HID	Low Beam Headlamp, High Intensity Discharge (HID)
PRK LAMP	Parking Lamps, Instrument Panel Dimming, Rear License Plate Lamps
PWR/TRN	Engine Controls
RUN CRNK	Heated Washer Nozzle, Air Quality, Antilock Brake System, Climate Control Panel, TCM, ECM, Instrument Panel Cluster
SPARE	Spare
SPARE	Spare
SPARE	Spare
STRTR	Starter
WPR HI	Windshield Wiper High Speed

Circuit Breakers	Usage
HDLP WASH	Headlamp Washer Motor (Circuit Breaker)

Rear Underseat Fuse Block

Removing the Rear Seat Cushion

Notice: **If you touch the exposed wires with the metal on the seat cushion, you could cause a short that could damage the battery and or wires. Avoid contact between the rear seat and the fuse center whenever you remove or reinstall the rear seat. Do not remove covers from any of the covered parts, and do not store anything under the seats.**

To remove the rear seat cushion, do the following:

1. Pull up on the front of the cushion to release the front hooks.
2. Pull the cushion up and out toward the front of the vehicle.

To reinstall the rear seat cushion, do the following:

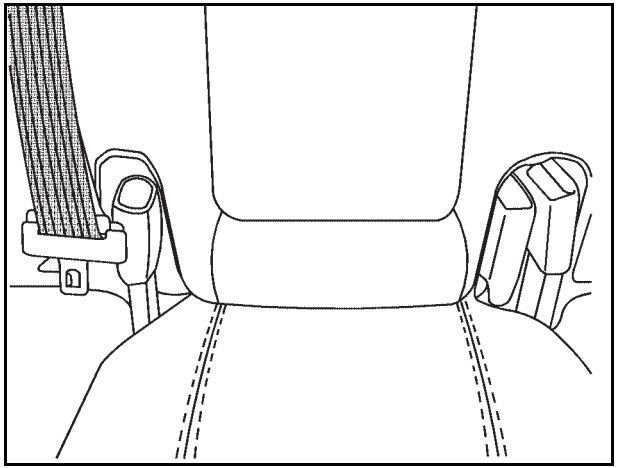

⚠ WARNING:

A safety belt that is not properly routed through the seat cushion or is twisted will not provide the protection needed in a crash. If the safety belt has not been routed through the seat cushion at all, it will not be there to work for the next passenger. The person sitting in that position could be badly injured. After reinstalling the seat cushion, always check to be sure that the safety belts are properly routed and are not twisted.

1. Buckle the center passenger position safety belt, then route the safety belts through the proper slots in the seat cushion. Do not let the safety belts get twisted.
2. Slide the rear of the cushion up and under the seatback so the rear-locating guides hook into the wire loops on the back frame.
3. With the seat cushion lowered, push rearward and then press down on the seat cushion until the spring locks on both ends engage.
4. Check to make sure the safety belts are properly routed and that no portion of any safety belt is trapped under the seat. Also make sure the seat cushion is secured.

Rear Underseat Fuse Block

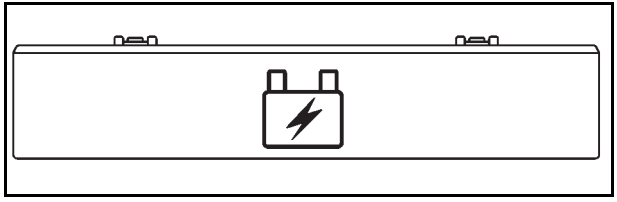

There is a fuse block located under the rear seat on the driver side and passenger side of the vehicle. The rear seat cushion must be removed to access the fuse blocks. See “Removing the Rear Seat Cushion” listed previously in this section.

To access the fuses, push in the two tabs, then lift the cover off.

The vehicle may not have all the fuses listed below.

Driver's Side

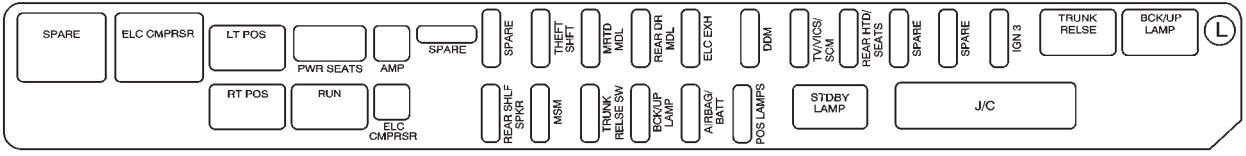

Fuses	Usage
AMP	Amplifier
SPARE	Spare
THEFT/SHFT	Theft Sensors, Auto Shifter, Power Sounder
MRTD MDL	Magnetic Ride Control Module (Option)
REAR DR MDL	Rear Door Modules
ELC EXH	Electronic Level Control, Exhaust Solenoid (Option)
DDM	Driver Door Module, Front Door SubWoofers (Option)
TV/VICS/SCM	Infotainment (Export Only), Supervisory Control Module (Option)
REAR HTD/ SEATS	Rear Heated Seats
SPARE	Spare

Fuses	Usage
SPARE	Spare
IGN3	Front Passenger Heated Seat, Auto Shifter, Occupant Protection, Electronic Tension Reducer for Seatbelt
REAR SHLF SPKR	Rear Shelf Speaker (Option)
MSM	Memory Seat Module Lumbar
TRUNK RELSE SW	Trunk Release, Valet Lockout Switch
BCK/UP LAMP	Reverse Lamps, Rear Parking Aid, Inside Rearview Mirrors
AIR BAG/BATT	Airbag
POS LAMPS	Rear Taillamps
ELC CMPRSR	Automatic Level Control (Option)

Relays	Usage
SPARE	Spare
ELC CMPRSR	Electronic Level Control, Compressor (Option)
LT POS	Left Rear Taillamp, Position Lamps (Option)
RT POS	Right Rear Taillamp, Position Lamps (Option)
RUN	Ignition 3
STDBY LAMP	Rear Taillamps, Position Lamps (Option)
TRUNK RELSE	Trunk Release Motor
BCK/UP LAMP	Reverse Lamps, Rear Parking Aid, Inside Rearview Mirror

Circuit Breakers	Usage
PWR SEATS	Power Seats

Diodes	Usage
SPARE	Spare

Joint Connector	Usage
J/C	Splice Pack (Green)

Passenger's Side

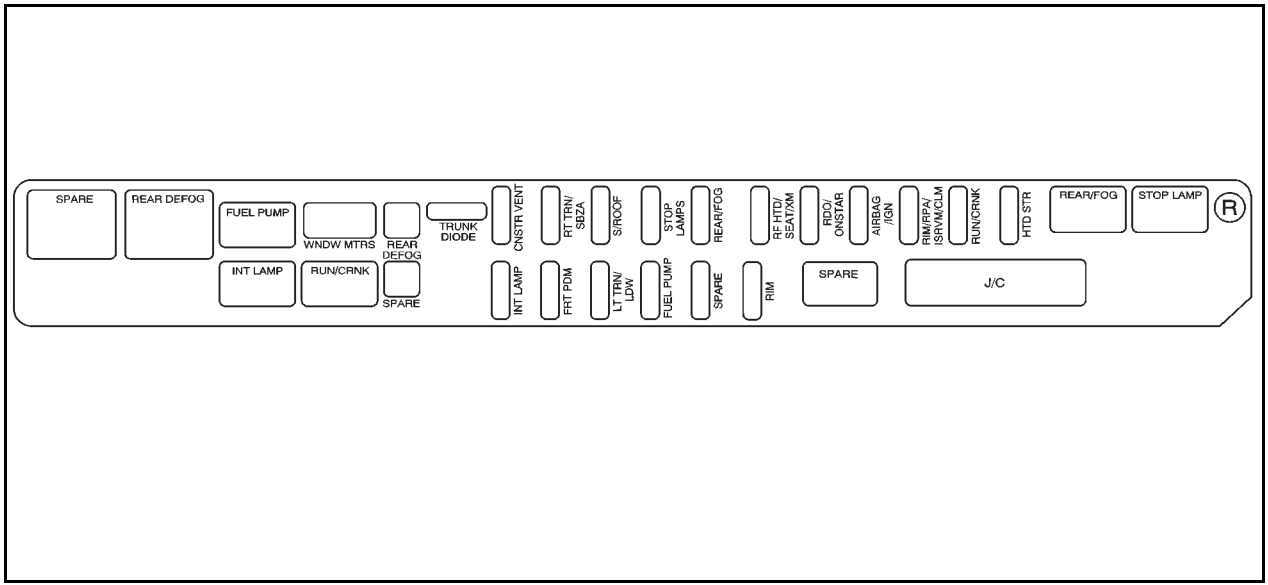

Fuses	Usage
AIRBAG/IGN	Sensing and Diagnostic Monitor, Automatic Occupant Sensor, Passenger Supplemental Inflatable Restraint
CNSTR/VENT	Canister Vent Solenoid
SPARE	Spare
FRT PDM	Front Passenger Door Module, Right Power Subwoofer
FUEL PUMP	Fuel Pump
HTD STR	Heated Steering Wheel
RF HTD/ SEAT/XM	Front Passenger Heated Seat, S-Band™ Antenna
RDO/ONSTAR	Radio, OnStar®
INT LAMP	Interior Lamps
LT TRN/LDW	Left Turn Signal, Lane Departure Warning (Option)
REAR DEFOG	Rear Defogger

Fuses	Usage
REAR/FOG	Rear Fog Lamps (Option)
RIM	Rear Integration Module
RIM /RPA /ISRVM /CLM	Rear Integration Module, Rear Parking Aid, Inside Rearview Mirror, Column Lock Module, Power Sounder, Active Front Steering (AFS), Supervisory Control Module
RUN/CRNK	UHBEC Run, CRNK Relay Coil, Rear Fog Lamp Relay Coil
S/ROOF	Sun Roof Module (Option)
SPARE	Spare
STOP LAMPS	Stop Lamps
RT TRN/SZBA	Right Turn Signal, Side Blind Zone Alert (Option)

Relays	Usage
SPARE	Spare
FUEL PUMP	Fuel Pump
INT LAMP	Interior Lamps
REAR DEFOG	Rear Defogger
REAR/FOG	Rear Fog Lamps (Option)
RUN/CRNK	Ignition 1
SPARE	Spare
STOP LAMP	Stop Lamp

Circuit Breakers	Usage
WINDOW MTRS	Power Window Motors Circuit Breaker

Diodes	Usage
TRUNK DIODE	Trunk Release

Joint Connector	Usage
J/C	Splice Pack (Blue)

Capacities and Specifications

The following approximate capacities are given in English and metric conversions. See *Recommended Fluids and Lubricants on page 7-9* for more information.

Application	Capacities	
	Metric	English
Air Conditioning Refrigerant R134a	For the air conditioning system refrigerant charge amount, see the refrigerant caution label located under the hood. See your dealer/retailer for more information.	
Brake Fluid Capacities	1.0 L	1.1 qt
Cooling System		
3.6L V6 Engine	10.8 L	11.4 qt
4.6L V8 Engine	11.7 L	12.4 qt
Engine Oil with Filter		
3.6L V6 Engines	5.7 L	6.0 qt
4.6L V8 Engine	7.6 L	8.0 qt
Fuel Tank	66.2 L	17.5 gal

Application	Capacities	
	Metric	English
Transmission Fluid (Pan Removal and Filter Replacement)		
6-Speed Automatic	6.3 L	6.7 qt
Wheel Nut Torque	140 N•m	100 lb ft
All capacities are approximate. When adding, be sure to fill to the approximate level as recommended in this manual. Recheck the fluid level after filling.		

Engine Specifications

Engine	VIN Code	Transmission	Spark Plug Gap
3.6L SIDI V6 Engine	V	Automatic	1.11 mm (0.044 in)
4.6L DOHC V8 Engine	A	Automatic	1.27 mm (0.050 in)

✍ NOTES

Section 7 Maintenance Schedule

Maintenance Schedule 7-2
Introduction 7-2
Scheduled Maintenance 7-3
Owner Checks and Services 7-7
Recommended Fluids and Lubricants 7-9
Maintenance Replacement Parts 7-11
Engine Drive Belt Routing 7-12
Maintenance Record 7-13

Maintenance Schedule

Introduction

Notice: **Maintenance intervals, checks, inspections, recommended fluids, and lubricants are necessary to keep this vehicle in good working condition. Damage caused by failure to follow scheduled maintenance might not be covered by the vehicle warranty.**

Proper vehicle maintenance helps to keep the vehicle in good working condition, improves fuel economy, and reduces vehicle emissions for better air quality.

Because of all the different ways people use vehicles, maintenance needs vary. The vehicle might need more frequent checks and services. Please read the information under Scheduled Maintenance. To keep the vehicle in good condition, see your dealer/retailer.

The maintenance schedule is for vehicles that:

- carry passengers and cargo within recommended limits on the Tire and Loading Information label. See *Loading the Vehicle on page 5-23*.
- are driven on reasonable road surfaces within legal driving limits.
- use the recommended fuel. See *Gasoline Octane on page 6-7*.

⚠ WARNING:

Performing maintenance work on a vehicle can be dangerous. In trying to do some jobs, you can be seriously injured. Do your own maintenance work only if you have the required know-how and the proper tools and equipment for the job. If you have any doubt, see your dealer/retailer to have a qualified technician do the work. See *Doing Your Own Service Work on page 6-5*.

At your General Motors dealer/retailer, you can be certain that you will receive the highest level of service available. Your dealer /retailer has specially trained service technicians, uses genuine GM replacement parts, as well as, up to date tools and equipment to ensure fast and accurate diagnostics.

The proper replacement parts, fluids, and lubricants to use are listed in *Recommended Fluids and Lubricants on page 7-9* and *Maintenance Replacement Parts on page 7-11*. We recommend the use of genuine parts from your dealer/retailer.

Rotation of New Tires

Tire rotation is not recommended if the vehicle has different size tires on the front and rear wheels. If tire rotation is recommended for the vehicle, to maintain ride, handling, and performance of the vehicle, it is important that the first rotation service for new tires be performed when they have 8 000 to 13 000 km (5,000 to 8,000 miles). See *Tire Inspection and Rotation on page 6-67*.

Scheduled Maintenance

When the Change Engine Oil Soon Message Displays

Change engine oil and filter. See *Engine Oil on page 6-18*. *An Emission Control Service.*

When the Change Engine Oil Soon message displays, service is required for the vehicle as soon as possible, within the next 1 000 km/600 miles. If driving under the best conditions, the engine oil life system might not indicate the need for vehicle service for more than a year. The engine oil and filter must be changed at least once a year and the oil life system must be reset. Your dealer/retailer has trained service technicians who will perform this work and reset the system. If the engine oil life system is reset accidentally, service the vehicle within 5 000 km/3,000 miles since the last service. Reset the oil life system whenever the oil is changed. See *Engine Oil Life System on page 6-21*.

When the Change Engine Oil Soon message displays, certain services, checks, and inspections are required.

Every Engine Oil Change

- Change engine oil and filter. See *Engine Oil on page 6-18*. *An Emission Control Service.*
- Engine coolant level check. See *Engine Coolant on page 6-27*.
- Windshield washer fluid level check. See *Windshield Washer Fluid on page 6-36*.
- Tire inflation check. See *Inflation - Tire Pressure on page 6-60*.
- Tire wear inspection. See *Tire Inspection and Rotation on page 6-67*.
- If tire rotation is recommended for the vehicle, rotate tires. See *Tire Inspection and Rotation on page 6-67*.
- Fluids visual leak check (or every 12 months, whichever occurs first). A leak in any system must be repaired and the fluid level checked.
- Engine air cleaner filter inspection. See *Engine Air Cleaner/Filter on page 6-23*.
- Brake system inspection (or every 12 months, whichever occurs first).
- Steering and suspension inspection. Visual inspection for damaged, loose, or missing parts or signs of wear.
- Engine cooling system inspection. Visual inspection of hoses, pipes, fittings, and clamps and replacement, if needed.
- Windshield wiper blade inspection for wear, cracking, or contamination and windshield and wiper blade cleaning, if contaminated. See *Windshield and Wiper Blades on page 6-113*. Worn or damaged wiper blade replacement. See *Windshield Wiper Blade Replacement on page 6-51*.
- Body hinges and latches, key lock cylinders, rear compartment hinges, console door hinges, and glove box door hinges lubrication. See *Recommended Fluids and Lubricants on page 7-9*. More frequent lubrication may be required when vehicle is exposed to a corrosive environment. Applying silicone grease on weatherstrips with a clean cloth makes them last longer, seal better, and not stick or squeak.
- Restraint system component check. See *Checking the Restraint Systems on page 2-68*.
- Automatic transmission fluid level check and adding fluid, if needed. See *Automatic Transmission Fluid on page 6-25*.

Additional Required Services

At Each Fuel Stop

- Engine oil level check. See *Engine Oil on page 6-18*.
- Engine coolant level check. See *Engine Coolant on page 6-27*.
- Windshield washer fluid level check. See *Windshield Washer Fluid on page 6-36*.

Once a Month

- Tire inflation check. See *Inflation - Tire Pressure on page 6-60*.
- Tire wear inspection. See *Tire Inspection and Rotation on page 6-67*.

Once a Year

- Starter switch check. See *Owner Checks and Services on page 7-7*.
- Parking brake and automatic transmission P (Park) mechanism check. See *Owner Checks and Services on page 7-7*.
- Automatic transmission shiftlock control system check. See *Owner Checks and Services on page 7-7*.
- Engine cooling system and pressure cap pressure check. Radiator and air conditioning condenser outside cleaning. See *Cooling System on page 6-26*.
- Exhaust system and nearby heat shields inspection for loose or damaged components.
- Accelerator pedal check for damage, high effort, or binding. Replace if needed.
- If the vehicle has a Tire Sealant and Compressor Kit, check the sealant expiration date printed on the instruction label of the kit. See *Tire Sealant and Compressor Kit (Without Selector Switch) on page 6-78* or *Tire Sealant and Compressor Kit (With Selector Switch) on page 6-87*.

Once Every Two Years

- Vehicles using DOT 4 brake fluid only: Brake fluid replacement.

First Engine Oil Change After Every 40 000 km/25,000 Miles

- Fuel system inspection for damage or leaks.
- Passenger compartment air filter replacement (or every 12 months, whichever occurs first). More frequent replacement may be required if vehicle is driven regularly under dusty conditions.

First Engine Oil Change After Every 64 000 km/40,000 Miles

- 3.6L (Code V) V6 Engine Only: Engine air cleaner filter replacement. See *Engine Air Cleaner/Filter on page 6-23*.

First Engine Oil Change After Every 80 000 km/50,000 Miles

- 4.6L (Code A) V8 Engine Only: Engine air cleaner filter replacement. See *Engine Air Cleaner/Filter on page 6-23*.
- Automatic transmission fluid and filter change (severe service) for vehicles mainly driven in heavy city traffic in hot weather, in hilly or mountainous terrain, when frequently towing a trailer, or used for taxi, police, or delivery service. See *Automatic Transmission Fluid on page 6-25*.
- All-wheel drive only: Transfer case fluid change (severe service) for vehicles mainly driven when frequently towing a trailer, or used for taxi, police, or delivery service. Check vent hose at transfer case for kinks and proper installation. Check to be sure vent hose is unobstructed, clear, and free of debris.

First Engine Oil Change After Every 160 000 km/100,000 Miles

- Automatic transmission fluid and filter change (normal service). See *Automatic Transmission Fluid on page 6-25*.
- All-wheel drive only: Transfer case fluid change (normal service). Check vent hose at transfer case for kinks and proper installation. Check to be sure vent hose is unobstructed, clear, and free of debris.
- Spark plug replacement. *An Emission Control Service.*

First Engine Oil Change After Every 240 000 km/150,000 Miles

- Engine cooling system drain, flush, and refill, cooling system and cap pressure check, and cleaning of outside of radiator and air conditioning condenser (or every 5 years, whichever occurs first). See *Engine Coolant on page 6-27*. *An Emission Control Service.*
- Engine accessory drive belt inspection for fraying, excessive cracks, or obvious damage and replacement, if needed. *An Emission Control Service.*

Starter Switch Check

⚠ WARNING:

When you are doing this inspection, the vehicle could move suddenly. If the vehicle moves, you or others could be injured.

1. Before starting this check, be sure there is enough room around the vehicle.
2. Firmly apply both the parking brake and the regular brake. See *Parking Brake on page 3-33*.

   Do not use the accelerator pedal, and be ready to turn off the engine immediately if it starts.
3. Try to start the engine in each gear. The vehicle should start only in P (Park) or N (Neutral). If the vehicle starts in any other position, contact your dealer/retailer for service.

Automatic Transmission Shift Lock Control System Check

⚠ WARNING:

When you are doing this inspection, the vehicle could move suddenly. If the vehicle moves, you or others could be injured.

1. Before starting this check, be sure there is enough room around the vehicle. It should be parked on a level surface.
2. Firmly apply the parking brake. See *Parking Brake on page 3-33*.

   Be ready to apply the regular brake immediately if the vehicle begins to move.
3. With the engine off and without applying the regular brake, try to move the shift lever out of P (Park) with normal effort. If the shift lever moves out of P (Park), contact your dealer/retailer for service.

Parking Brake and Automatic Transmission P (Park) Mechanism Check

⚠ WARNING:

When you are doing this check, the vehicle could begin to move. You or others could be injured and property could be damaged. Make sure there is room in front of the vehicle in case it begins to roll. Be ready to apply the regular brake at once should the vehicle begin to move.

Park on a fairly steep hill, with the vehicle facing downhill. Keeping your foot on the regular brake, set the parking brake.

- To check the parking brake's holding ability: With the engine running and the transmission in N (Neutral), slowly remove foot pressure from the regular brake pedal. Do this until the vehicle is held by the parking brake only.
- To check the P (Park) mechanism's holding ability: With the engine running, shift to P (Park). Then release the parking brake followed by the regular brake.

Contact your dealer/retailer if service is required.

Recommended Fluids and Lubricants

Fluids and lubricants identified below by name, part number, or specification can be obtained from your dealer/retailer.

Usage	Fluid/Lubricant
Engine Oil	The engine requires a special engine oil meeting GM Standard GM4718M. Oils meeting this standard can be identified as synthetic, and should also be identified with the American Petroleum Institute (API) Certified for Gasoline Engines starburst symbol. However, not all synthetic API oils with the starburst symbol will meet this GM standard. Look for and use only oil that meets GM Standard GM4718M. For the proper viscosity, see *Engine Oil on page 6-18*.

Usage	Fluid/Lubricant
Engine Cooling System	50/50 mixture of clean, drinkable water and use only DEX-COOL® Coolant. See *Engine Coolant on page 6-27*.
Hydraulic Brake System	DOT 3 Hydraulic Brake Fluid (GM Part No. U.S. 12377967, in Canada 89021320).
Windshield Washer	Optikleen® Washer Solvent.
Parking Brake Cable Guides	Chassis Lubricant (GM Part No. U.S. 12377985, in Canada 88901242) or lubricant meeting requirements of NLGI #2, Category LB or GC-LB.
Power Steering System	GM Power Steering Fluid (GM Part No. U.S. 89021184, in Canada 89021186).
Automatic Transmission	DEXRON®-VI Automatic Transmission Fluid.

Usage	Fluid/Lubricant
Key Lock Cylinders	Multi-Purpose Lubricant, Superlube (GM Part No. U.S. 12346241, in Canada 10953474).
Rear Axle	SAE 75W-90 Synthetic Axle Lubricant (GM Part No. U.S. 89021677, in Canada 89021678) meeting GM Specification 9986115.
Front Axle (All-Wheel Drive)	SAE 75W-90 Synthetic Axle Lubricant (GM Part No. U.S. 89021677, in Canada 89021678) meeting GM Specification 9986115.
Transfer Case (All-Wheel Drive)	Manual Transmission Fluid (GM Part No. U.S. 88861800, in Canada 88861801).

Usage	Fluid/Lubricant
Hood Latch Assembly, Secondary Latch, Pivots, Spring Anchor, and Release Pawl	Lubriplate Lubricant Aerosol (GM Part No. U.S. 12346293, in Canada 992723) or lubricant meeting requirements of NLGI #2, Category LB or GC-LB.
Hood and Door Hinges	Multi-Purpose Lubricant, Superlube (GM Part No. U.S. 12346241, in Canada 10953474).
Weatherstrip Conditioning	Weatherstrip Lubricant (GM Part No. U.S. 3634770, in Canada 10953518) or Dielectric Silicone Grease (GM Part No. U.S. 12345579, in Canada 992887).

Maintenance Replacement Parts

Replacement parts identified below by name, part number, or specification can be obtained from your dealer/retailer.

Part	GM Part Number	ACDelco Part Number
Engine Air Cleaner/Filter Element		
3.6L and 4.6L Engines	25798271	A2944C
Engine Oil Filter		
3.6L Engines	25177917	PF2129
4.6L Engine	89017342	PF61
Passenger Compartment Air Filter	88957450	CF13C
Spark Plugs		
3.6L Engines	92220447	41-990
4.6L Engine	12571535	41-987
Wiper Blades		
Driver Side – 56.5 cm (22 in)	88958361	—
Passenger Side – 53.0 cm (21 in)	88958359	—

Engine Drive Belt Routing

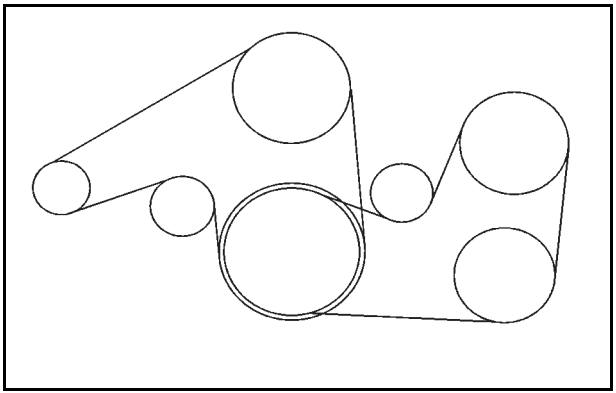

3.6L V6 Engine

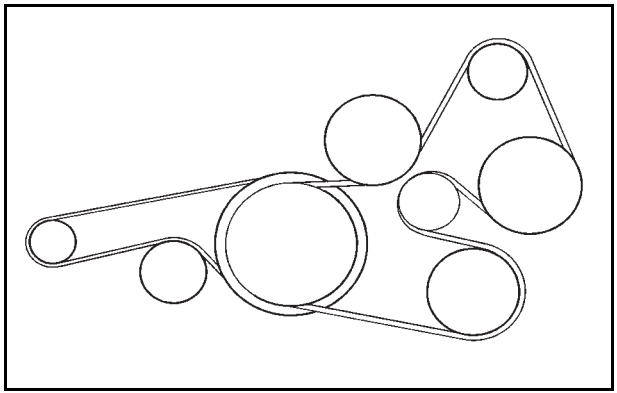

4.6L V8 Engine

Maintenance Record

After the scheduled services are performed, record the date, odometer reading, who performed the service, and the type of services performed in the boxes provided. Retain all maintenance receipts.

Maintenance Record

Date	Odometer Reading	Serviced By	Maintenance Stamp	Services Performed

Maintenance Record (cont'd)

Date	Odometer Reading	Serviced By	Maintenance Stamp	Services Performed

Maintenance Record (cont'd)

Date	Odometer Reading	Serviced By	Maintenance Stamp	Services Performed

Maintenance Record (cont'd)

Date	Odometer Reading	Serviced By	Maintenance Stamp	Services Performed

Section 8 Customer Assistance Information

Customer Assistance and Information 8-2
Customer Satisfaction Procedure 8-2
Online Owner Center 8-5
Customer Assistance for Text Telephone (TTY) Users 8-6
Customer Assistance Offices 8-6
GM Mobility Reimbursement Program 8-7
Roadside Service 8-8
Scheduling Service Appointments 8-10
Courtesy Transportation Program 8-10
Collision Damage Repair 8-12

Reporting Safety Defects 8-14
Reporting Safety Defects to the United States Government 8-14
Reporting Safety Defects to the Canadian Government 8-15
Reporting Safety Defects to General Motors ... 8-15
Service Publications Ordering Information 8-16

Vehicle Data Recording and Privacy 8-17
Event Data Recorders 8-17
OnStar® 8-18
Navigation System 8-18
Radio Frequency Identification (RFID) 8-18
Radio Frequency Statement 8-18

Customer Assistance and Information

Customer Satisfaction Procedure

Your satisfaction and goodwill are important to your dealer and to Cadillac. Normally, any concerns with the sales transaction or the operation of the vehicle will be resolved by the dealer's sales or service departments. Sometimes, however, despite the best intentions of all concerned, misunderstandings can occur. If your concern has not been resolved to your satisfaction, the following steps should be taken:

STEP ONE : Discuss your concern with a member of dealership management. Normally, concerns can be quickly resolved at that level. If the matter has already been reviewed with the sales, service or parts manager, contact the owner of the dealership or the general manager.

STEP TWO : If after contacting a member of dealership management, it appears your concern cannot be resolved by the dealership without further help, in the United States, call the Cadillac Customer Assistance Center, 24 hours a day, at 1-800-458-8006. In Canada, call the Canadian Cadillac Customer Communication Centre at 1-888-446-2000.

We encourage you to call the toll-free number in order to give your inquiry prompt attention. Have the following information available to give the Customer Assistance Representative:

- Vehicle Identification Number (VIN). This is available from the vehicle registration or title, or the plate at the top left of the instrument panel and visible through the windshield.
- Dealership name and location.
- Vehicle delivery date and present mileage.

When contacting Cadillac, remember that your concern will likely be resolved at a dealer's facility. That is why we suggest following Step One first.

STEP THREE (U.S. Owners) : Both General Motors and your dealer are committed to making sure you are completely satisfied with your new vehicle. However, if you continue to remain unsatisfied after following the procedure outlined in Steps One and Two, you can file with the Better Business Bureau (BBB) Auto Line Program to enforce your rights.

The BBB Auto Line Program is an out of court program administered by the Council of Better Business Bureaus to settle automotive disputes regarding vehicle repairs or the interpretation of the New Vehicle Limited Warranty. Although you may be required to resort to this informal dispute resolution program prior to filing a court action, use of the program is free of charge and your case will generally be heard within 40 days. If you do not agree with the decision given in your case, you may reject it and proceed with any other venue for relief available to you.

You may contact the BBB Auto Line Program using the toll-free telephone number or write them at the following address:

BBB Auto Line Program
Council of Better Business Bureaus, Inc.
4200 Wilson Boulevard
Suite 800
Arlington, VA 22203-1838

Telephone: 1-800-955-5100
dr.bbb.org/goauto

This program is available in all 50 states and the District of Columbia. Eligibility is limited by vehicle age, mileage and other factors. General Motors reserves the right to change eligibility limitations and/or discontinue its participation in this program.

STEP THREE (Canadian Owners):

General Motors Participation in the Mediation/ Arbitration Program

In the event that you do not feel your concerns have been addressed after the following the procedure outlined in Steps One and Two. General Motors of Canada Limited wants you to be aware of its participation in a no-charge mediation/Arbitration program. General Motors of Canada Limited has committed to binding arbitration of owner disputes involving factory-related vehicle service claims. The program provides for the review of the facts involved by an impartial third party arbiter, and may include an informal hearing before the arbiter. The program is designed so that the entire dispute settlement process, from the time you file your complaint to the final decision, should be completed in approximately 70 days. We believe our impartial program offers advantages over courts in most jurisdictions because it is informal, quick, and free of charge.

For further information concerning eligibility in the Canadian Motor Vehicle Arbitration Plan (CAMVAP), call toll-free 1-800-207-0685, or call the General Motors Customer Communication Centre, 1-800-263-3777 (English), 1-800-263-7854 (French), or write to the Mediation/Arbitration Program at the following address:

Mediation/Arbitration Program
c/o Customer Communication Centre
General Motors of Canada Limited
Mail Code: CA1–163–005
1908 Colonel Sam Drive
Oshawa, Ontario L1H 8P7

Your inquiry should be accompanied by the Vehicle Identification Number (VIN).

Online Owner Center

Online Owner Center (U.S.) — www.gmownercenter.com/cadillac

Information and services customized for your specific vehicle — all in one convenient place.

- Digital owner manual, warranty information, and more
- Online service and maintenance records
- Find Cadillac dealers for service nationwide
- Exclusive privileges and offers
- Recall notices for your specific vehicle
- OnStar® and GM Cardmember Services Earnings summaries

Other Helpful Links:

Cadillac − www.cadillac.com

Cadillac Merchandise — www.cadillaccollection.com

Help Center — www.cadillac.com/helpcenter

- FAQ
- Contact Us

My GM Canada (Canada) — www.gm.ca

My GM Canada is a password-protected section of www.gm.ca where you can save information on GM vehicles, get personalized offers, and use handy tools and forms with greater ease.

Here are a few of the valuable tools and services you will have access to:

- My Showroom: Find and save information on vehicles and current offers in your area.
- My Dealers/Retailers: Save details such as address and phone number for each of your preferred GM dealers/retailers.
- My Driveway: Access quick links to parts and service estimates, check trade-in values, or schedule a service appointment by adding the vehicles you own to your driveway profile.
- My Preferences: Manage your profile and use tools and forms with greater ease.

To sign up, visit the My GM Canada section within www.gm.ca.

Customer Assistance for Text Telephone (TTY) Users

To assist customers who are deaf, hard of hearing, or speech-impaired and who use Text Telephones (TTYs), Cadillac has TTY equipment available at its Customer Assistance Center. Any TTY user can communicate with Cadillac by dialing: 1-800-833-CMCC (2622). (TTY users in Canada can dial 1-800-263-3830.)

Customer Assistance Offices

Cadillac encourages customers to call the toll-free number for assistance. However, if a customer wishes to write or e-mail Cadillac, the letter should be addressed to:

United States — Customer Assistance

Cadillac Customer Assistance Center
Cadillac Motor Car Division
P.O. Box 33169
Detroit, MI 48232-5169
www.Cadillac.com

1-800-458-8006
1-800-833-2622 (For Text Telephone devices (TTYs))
Roadside Assistance: 1-800-882-1112

From Puerto Rico:

1-800-496-9992 (English)
1-800-496-9993 (Spanish)

From U.S. Virgin Islands:

1-800-496-9994

Canada — Customer Assistance

General Motors of Canada Limited
Canadian Cadillac Customer Communication Centre, CA1-163-005
1908 Colonel Sam Drive
Oshawa, Ontario L1H 8P7
www.gmcanada.com

1-888-446-2000
1-800-263-3830 (For Text Telephone devices (TTYs))
Roadside Assistance: 1-800-882-1112

Overseas — Customer Assistance

Please contact the local General Motors Business Unit.

Mexico, Central America and Caribbean Islands/Countries (Except Puerto Rico and U.S. Virgin Islands) — Customer Assistance

General Motors de Mexico, S. de R.L. de C.V.
Customer Assistance Center
Paseo de la Reforma # 2740
Col. Lomas de Bezares
C.P. 11910, Mexico, D.F.

01-800-508-0000
Long Distance: 011-52-53 29 0 800

GM Mobility Reimbursement Program

This program, available to qualified applicants, can reimburse you up to $1,000 of the cost of eligible aftermarket adaptive equipment required for your vehicle, such as hand controls or a wheelchair/scooter lift.

The offer is available for a very limited period of time from the date of vehicle purchase/lease. For more details, or to determine your vehicle's eligibility, visit gmmobility.com or call the GM Mobility Assistance Center at 1-800-323-9935. Text telephone (TTY) users, call 1-800-833-9935.

General Motors of Canada also has a Mobility Program. Call 1-800-GM-DRIVE (463-7483) for details. TTY users call 1-800-263-3830.

Roadside Service

In the United States or Canada, call **1-800-882-1112**.

Text Telephone (TTY), U.S. only, call **1-888-889-2438**.

Service is available 24 hours a day, 365 days a year.

Calling for Assistance

When calling Roadside Assistance, have the following information ready:

- Your name, home address, and home telephone number
- Telephone number of your location
- Location of the vehicle
- Model, year, color, and license plate number of the vehicle
- Odometer reading, Vehicle Identification Number (VIN), and delivery date of the vehicle
- Description of the problem

Coverage

Services are provided up to 5 years/ 100,000 miles (160 000 km), whichever comes first.

In the U.S., anyone driving the vehicle is covered. In Canada, a person driving the vehicle without permission from the owner is not covered.

Roadside Assistance is not a part of the New Vehicle Limited Warranty. Cadillac and General Motors of Canada Limited reserve the right to make any changes or discontinue the Roadside Assistance program at any time without notification.

Cadillac and General Motors of Canada Limited reserve the right to limit services or payment to an owner or driver if they decide the claims are made too often, or the same type of claim is made many times.

Cadillac Owner Privileges™

- **Emergency Fuel Delivery:** Delivery of enough fuel for the vehicle to get to the nearest service station.
- **Lock-Out Service:** Service is provided to unlock the vehicle if you are locked out. A remote unlock may be available if you have OnStar®. For security reasons, the driver must present identification before this service is given.

- **Emergency Tow From a Public Road or Highway:** Tow to the nearest Cadillac dealer for warranty service, or if the vehicle was in a crash and cannot be driven. Assistance is also given when the vehicle is stuck in the sand, mud, or snow.
- **Flat Tire Change:** Service is provided to change a flat tire with spare tire. The spare tire, if equipped, must be in good condition and properly inflated. It is your responsibility for the repair or replacement of the tire if it is not covered by the warranty.
- **Battery Jump Start:** Service is provided to jump start a dead battery.
- **Trip Routing Service:** Detailed maps of North America are provided when requested either with the most direct route or the most scenic route. Additional travel information is also available. Allow three weeks for delivery.
- **Trip Interruption Benefits and Assistance:** If your trip is interrupted due to a warranty failure, incidental expenses may be reimbursed during the 5 year/100,000 miles (160 000 km) Powertrain warranty period. Items considered are hotel, meals, and rental car.

Cadillac Technician Roadside Service (U.S. only)

Cadillac's exceptional Roadside Service is more than an auto club or towing service. It provides every Cadillac owner in the United States with the advantage of contacting a Cadillac advisor and, where available, a Cadillac trained dealer technician who can provide on-site service.

A dealer technician will travel to your location within a 30 mile radius of a participating Cadillac dealership. If beyond this radius, we will arrange to have your car towed to the nearest Cadillac dealership. Each technician travels with a specially equipped service vehicle complete with the necessary Cadillac parts and tools required to handle most roadside repairs.

Services Not Included in Roadside Assistance

- Impound towing caused by violation of any laws.
- Legal fines.
- Mounting, dismounting or changing of snow tires, chains, or other traction devices.
- Towing or services for vehicles driven on a non-public road or highway.

Services Specific to Canadian Purchased Vehicles

- **Fuel delivery:** Reimbursement is approximately $5 Canadian. Diesel fuel delivery may be restricted. Propane and other fuels are not provided through this service.
- **Lock-Out Service:** Vehicle registration is required.
- **Trip Routing Service:** Limit of six requests per year.
- **Trip Interruption Benefits and Assistance:** Pre-authorization, original detailed receipts, and a copy of the repair orders are required. Once authorization has been received, the Roadside Assistance advisor will help you make arrangements and explain how to receive payment.
- **Alternative Service:** If assistance cannot be provided right away, the Roadside Assistance advisor may give you permission to get local emergency road service. You will receive payment, up to $100, after sending the original receipt to Roadside Assistance. Mechanical failures may be covered, however any cost for parts and labor for repairs not covered by the warranty are the owner responsibility.

Scheduling Service Appointments

When your vehicle requires warranty service, contact your dealer/retailer and request an appointment. By scheduling a service appointment and advising your service consultant of your transportation needs, your dealer/retailer can help minimize your inconvenience.

If your vehicle cannot be scheduled into the service department immediately, keep driving it until it can be scheduled for service, unless, of course, the problem is safety-related. If it is, please call your dealership/retailer, let them know this, and ask for instructions.

If the dealer/retailer requests you to bring the vehicle for service, you are urged to do so as early in the work day as possible to allow for the same day repair.

Courtesy Transportation Program

To enhance your ownership experience, we and our participating dealers are proud to offer Courtesy Transportation, a customer support program for vehicles with the Bumper to Bumper (Base Warranty Coverage period in Canada) and extended powertrain, and hybrid specific warranties in both the U.S. and Canada.

Several courtesy transportation options are available to assist in reducing your inconvenience when warranty repairs are required.

Courtesy Transportation is not a part of the New Vehicle Limited Warranty. A separate booklet entitled “Warranty and Owner Assistance Information” furnished with each new vehicle provides detailed warranty coverage information.

Transportation Options

Warranty service can generally be completed while you wait. However, if you are unable to wait, GM helps to minimize your inconvenience by providing several transportation options. Depending on the circumstances, your dealer can offer you one of the following:

Shuttle Service

Participating dealers can provide shuttle service to get you to your destination with minimal interruption of your daily schedule. This includes one-way or round trip shuttle service to a destination up to 10 miles (16 km) from the dealership.

Public Transportation or Fuel Reimbursement

If your vehicle requires warranty repairs, and public transportation is used instead of the dealer's shuttle service, the expense must be supported by original receipts and can only be up to the maximum amount allowed by GM for shuttle service. In addition, for U.S. customers, should you arrange transportation through a friend or relative, limited reimbursement for reasonable fuel expenses may be available. Claim amounts should reflect actual costs and be supported by original receipts. See your dealer for information regarding the allowance amounts for reimbursement of fuel or other transportation costs.

Courtesy Rental Vehicle

Your dealer may arrange to provide you with a courtesy rental vehicle or reimburse you for a rental vehicle that you obtain if your vehicle is kept for a warranty repair. If you obtain a rental vehicle on your own, please see your dealer for the maximum number of days allowed and the allowance per rental day. Rental reimbursement must be supported by original receipts. This requires that you sign and complete a rental agreement and meet state, local, and rental vehicle provider requirements. Requirements vary and may include minimum age requirements, insurance coverage, credit card, etc. You are responsible for fuel usage charges and may also be responsible for taxes, levies, usage fees, excessive mileage, or rental usage beyond the completion of the repair.

It may not be possible to provide a like-vehicle as a courtesy rental.

Additional Program Information

All program options, such as shuttle service, may not be available at every dealer. Please contact your dealer for specific information about availability. All Courtesy Transportation arrangements will be administered by appropriate dealer personnel.

General Motors reserves the right to unilaterally modify, change, or discontinue Courtesy Transportation at any time and to resolve all questions of claim eligibility pursuant to the terms and conditions described herein at its sole discretion.

Collision Damage Repair

If your vehicle is involved in a collision and it is damaged, have the damage repaired by a qualified technician using the proper equipment and quality replacement parts. Poorly performed collision repairs will diminish your vehicle's resale value, and safety performance can be compromised in subsequent collisions.

Collision Parts

Genuine GM Collision parts are new parts made with the same materials and construction methods as the parts with which your vehicle was originally built. Genuine GM Collision parts are your best choice to ensure that your vehicle's designed appearance, durability and safety are preserved. The use of Genuine GM parts can help maintain your GM New Vehicle Warranty.

Recycled original equipment parts may also be used for repair. These parts are typically removed from vehicles that were total losses in prior crashes. In most cases, the parts being recycled are from undamaged sections of the vehicle. A recycled original equipment GM part, may be an acceptable choice to maintain your vehicle's originally designed appearance and safety performance, however, the history of these parts is not known. Such parts are not covered by your GM New Vehicle Limited Warranty, and any related failures are not covered by that warranty.

Aftermarket collision parts are also available. These are made by companies other than GM and may not have been tested for your vehicle. As a result, these parts may fit poorly, exhibit premature durability/corrosion problems, and may not perform properly in subsequent collisions. Aftermarket parts are not covered by your GM New Vehicle Limited Warranty, and any vehicle failure related to such parts are not covered by that warranty.

Repair Facility

GM also recommends that you choose a collision repair facility that meets your needs before you ever need collision repairs. Your GM dealer/retailer may have a collision repair center with GM-trained technicians and state of the art equipment, or be able to recommend a collision repair center that has GM-trained technicians and comparable equipment.

Insuring Your Vehicle

Protect your investment in your GM vehicle with comprehensive and collision insurance coverage. There are significant differences in the quality of coverage afforded by various insurance policy terms. Many insurance policies provide reduced protection to your GM vehicle by limiting compensation for damage repairs by using aftermarket collision parts. Some insurance companies will not specify aftermarket collision parts. When purchasing insurance, we recommend that you assure your vehicle will be repaired with GM original equipment collision parts. If such insurance coverage is not available from your current insurance carrier, consider switching to another insurance carrier.

If your vehicle is leased, the leasing company may require you to have insurance that assures repairs with Genuine GM Original Equipment Manufacturer (OEM) parts or Genuine Manufacturer replacement parts. Read your lease carefully, as you may be charged at the end of your lease for poor quality repairs.

If a Crash Occurs

If there has been an injury, call emergency services for help. Do not leave the scene of a crash until all matters have been taken care of. Move the vehicle only if its position puts you in danger, or you are instructed to move it by a police officer.

Give only the necessary information to police and other parties involved in the crash.

For emergency towing see *Roadside Service on page 8-8*

Gather the following information:

- Driver's name, address, phone number
- Driver's license number
- Owner's name, address, phone number
- Vehicle license plate
- Vehicle make, model and model year
- Vehicle Identification Number (VIN)
- Insurance company and policy number
- General description of the damage to the other vehicle

Choose a reputable repair facility that uses quality replacement parts. See “Collision Parts” earlier in this section.

If the airbag has inflated, see *What Will You See After an Airbag Inflates? on page 2-59*.

Managing the Vehicle Damage Repair Process

In the event that your vehicle requires damage repairs, GM recommends that you take an active role in its repair. If you have a pre-determined repair facility of choice, take your vehicle there, or have it towed there. Specify to the facility that any required replacement collision parts be original equipment parts, either new Genuine GM parts or recycled original GM parts. Remember, recycled parts will not be covered by your GM vehicle warranty.

Insurance pays the bill for the repair, but you must live with the repair. Depending on your policy limits, your insurance company may initially value the repair using aftermarket parts. Discuss this with your repair professional, and insist on Genuine GM parts. Remember if your vehicle is leased you may be obligated to have the vehicle repaired with Genuine GM parts, even if your insurance coverage does not pay the full cost.

If another party's insurance company is paying for the repairs, you are not obligated to accept a repair valuation based on that insurance company's collision policy repair limits, as you have no contractual limits with that company. In such cases, you can have control of the repair and parts choices as long as cost stays within reasonable limits.

Reporting Safety Defects

Reporting Safety Defects to the United States Government

If you believe that your vehicle has a defect which could cause a crash or could cause injury or death, you should immediately inform the National Highway Traffic Safety Administration (NHTSA) in addition to notifying General Motors.

If NHTSA receives similar complaints, it may open an investigation, and if it finds that a safety defect exists in a group of vehicles, it may order a recall and remedy campaign. However, NHTSA cannot become involved in individual problems between you, your dealer, or General Motors.

To contact NHTSA, you may call the Vehicle Safety Hotline toll-free at 1-888-327-4236 (TTY: 1-800-424-9153); go to *http://www.safercar.gov*; or write to:

Administrator, NHTSA
1200 New Jersey Avenue, S.E.
Washington, D.C. 20590

You can also obtain other information about motor vehicle safety from *http://www.safercar.gov*.

Reporting Safety Defects to the Canadian Government

If you live in Canada, and you believe that your vehicle has a safety defect, notify Transport Canada immediately, in addition to notifying General Motors of Canada Limited. Call them at 1-800-333-0510 or write to:

Transport Canada
Road Safety Branch
2780 Sheffield Road
Ottawa, Ontario K1B 3V9

Reporting Safety Defects to General Motors

In addition to notifying NHTSA (or Transport Canada) in a situation like this, please notify General Motors.

Call 1-800-458-8006, or write:

Cadillac Customer Assistance Center
Cadillac Motor Car Division
P.O. Box 33169
Detroit, MI 48232-5169

In Canada, call 1-888-446-2000, or write:

Canadian Cadillac Customer Communication Centre, CA1-163-005
General Motors of Canada Limited
1908 Colonel Sam Drive
Oshawa, Ontario L1H 8P7

Service Publications Ordering Information

Service Manuals

Service Manuals have the diagnosis and repair information on engines, transmission, axle suspension, brakes, electrical, steering, body, etc.

Service Bulletins

Service Bulletins give additional technical service information needed to knowledgeably service General Motors cars and trucks. Each bulletin contains instructions to assist in the diagnosis and service of your vehicle.

Owner Information

Owner publications are written specifically for owners and intended to provide basic operational information about the vehicle. The owner manual includes the Maintenance Schedule for all models.

In-Portfolio: Includes a Portfolio, Owner Manual, and Warranty Booklet.

RETAIL SELL PRICE: $35.00 (U.S.) plus processing fee

Without Portfolio: Owner Manual only.

RETAIL SELL PRICE: $25.00 (U.S.) plus processing fee

Current and Past Model Order Forms

Technical Service Bulletins and Manuals are available for current and past model GM vehicles. To request an order form, specify year and model name of the vehicle.

ORDER TOLL FREE: 1-800-551-4123
Monday-Friday 8:00 AM - 6:00 PM
Eastern Time

For Credit Card Orders Only
(VISA-MasterCard-Discover), visit Helm, Inc. on the World Wide Web at: helminc.com

Or you can write to:

Helm, Incorporated
P.O. Box 07130
Detroit, MI 48207

Prices are subject to change without notice and without incurring obligation. Allow ample time for delivery.

Note to Canadian Customers: All listed prices are quoted in U.S. funds. Canadian residents are to make checks payable in U.S. funds.

Vehicle Data Recording and Privacy

Your GM vehicle has a number of sophisticated computers that record information about the vehicle's performance and how it is driven. For example, your vehicle uses computer modules to monitor and control engine and transmission performance, to monitor the conditions for airbag deployment and deploy airbags in a crash and, if so equipped, to provide antilock braking to help the driver control the vehicle. These modules may store data to help your dealer/retailer technician service your vehicle. Some modules may also store data about how you operate the vehicle, such as rate of fuel consumption or average speed. These modules may also retain the owner's personal preferences, such as radio pre-sets, seat positions, and temperature settings.

Event Data Recorders

This vehicle has an Event Data Recorder (EDR). The main purpose of an EDR is to record, in certain crash or near crash-like situations, such as an airbag deployment or hitting a road obstacle, data that will assist in understanding how a vehicle's systems performed. The EDR is designed to record data related to vehicle dynamics and safety systems for a short period of time, typically 30 seconds or less. The EDR in this vehicle is designed to record such data as:

- How various systems in your vehicle were operating
- Whether or not the driver and passenger safety belts were buckled/fastened
- How far, if at all, the driver was pressing the accelerator and/or brake pedal
- How fast the vehicle was traveling

This data can help provide a better understanding of the circumstances in which crashes and injuries occur.

Important: EDR data is recorded by your vehicle only if a non-trivial crash situation occurs; no data is recorded by the EDR under normal driving conditions and no personal data (e.g., name, gender, age, and crash location) is recorded. However, other parties, such as law enforcement, could combine the EDR data with the type of personally identifying data routinely acquired during a crash investigation.

To read data recorded by an EDR, special equipment is required, and access to the vehicle or the EDR is needed. In addition to the vehicle manufacturer, other parties, such as law enforcement, that have the special equipment, can read the information if they have access to the vehicle or the EDR.

GM will not access this data or share it with others except: with the consent of the vehicle owner or, if the vehicle is leased, with the consent of the lessee; in response to an official request of police or similar government office; as part of GM's defense of litigation through the discovery process; or, as required by law. Data that GM collects or receives may also be used for GM research needs or may be made available to others for research purposes, where a need is shown and the data is not tied to a specific vehicle or vehicle owner.

OnStar®

If the vehicle has OnStar and you subscribe to the OnStar services, please refer to the OnStar Terms and Conditions for information on data collection and use.

Navigation System

If your vehicle has a navigation system, use of the system may result in the storage of destinations, addresses, telephone numbers, and other trip information. Refer to the navigation system operating manual for information on stored data and for deletion instructions.

Radio Frequency Identification (RFID)

RFID technology is used in some vehicles for functions such as tire pressure monitoring and ignition system security, as well as in connection with conveniences such as key fobs for remote door locking/unlocking and starting, and in-vehicle transmitters for garage door openers. RFID technology in GM vehicles does not use or record personal information or link with any other GM system containing personal information.

Radio Frequency Statement

This vehicle has systems that operate on a radio frequency that comply with Part 15 of the Federal Communications Commission (FCC) Rules and with RSS-210/211 of Industry and Science Canada.

Operation is subject to the following two conditions:

1. The device may not cause interference.
2. The device must accept any interference received, including interference that may cause undesired operation of the device.

Changes or modifications to any of these systems by other than an authorized service facility could void authorization to use this equipment.

A

Accessories and Modifications 6-4
Accessory Power 3-26
Accessory Power Outlets 4-42
Adaptive Cruise Control 4-15
Add-On Electrical Equipment 6-116
Additives, Fuel 6-8
Adjustments
  Headlamp Range 2-6
Air Cleaner/Filter, Engine 6-23
Air Filter, Passenger Compartment 4-50
Airbag
  Adding Equipment to Your Airbag-Equipped Vehicle 2-66
Airbag System
  How Does an Airbag Restrain? 2-59
  Passenger Sensing System 2-61
  Servicing Your Airbag-Equipped Vehicle 2-66
  What Makes an Airbag Inflate? 2-59
  What Will You See After an Airbag Inflates? 2-59
  When Should an Airbag Inflate? 2-57
  Where Are the Airbags? 2-55
Airbags
  Passenger Status Indicator 4-55
  Readiness Light 4-54
  System Check 2-52
All-Wheel Drive 6-45
All-Wheel-Drive (AWD) System 5-11
Antenna
  Backglass 4-137
Antenna, XM™ Satellite Radio Antenna System 4-137
Antilock Brake System (ABS) 5-5
  Warning Light 4-59
Appearance Care
  Aluminum or Chrome-Plated Wheels 6-114
  Care of Safety Belts 6-111
  Chemical Paint Spotting 6-115
  Cleaning Exterior Lamps/Lenses 6-112
  Fabric/Carpet 6-109
  Finish Care 6-112
  Finish Damage 6-115
  Instrument Panel, Vinyl, and Other Plastic Surfaces 6-110
  Interior Cleaning 6-108
  Leather 6-110
  Sheet Metal Damage 6-115
  Speaker Covers 6-111
  Tires 6-115
  Underbody Maintenance 6-115
  Washing Your Vehicle 6-111
  Weatherstrips 6-111
  Windshield and Wiper Blades 6-113
  Wood Panels 6-111
Ashtray 4-43

Audio System 4-94
Audio Steering Wheel Controls 4-134
Navigation/Radio System, see Navigation Manual 4-113
Radio Personalization 4-130
Radio Reception 4-136
Setting the Clock 4-95
Theft-Deterrent Feature 4-134
XM™ Satellite Radio Antenna System 4-137
Audio System(s) 4-95
Automatic Transmission
Fluid 6-25
Operation 3-30
Axle, Rear 6-46

B

Back-Up Lamps - Ambulance Body
Bulb Replacement 6-50
Backglass Antenna 4-137
Battery 6-40
Electric Power Management 4-37
Exterior Lighting Battery Saver 4-35
Inadvertent Power Saver 4-37
Load Management 4-36
Belt Routing, Engine 7-12
Bluetooth® 4-113
Brake
Emergencies 5-6
Brakes 6-37
Antilock 5-5
Parking 3-33
System Warning Light 4-58
Braking 5-4
Braking in Emergencies 5-6
Break-In, New Vehicle 3-25
Bulb Replacement 6-50
Back-Up Lamps - Ambulance Body 6-50
Fog Lamps 4-33
Halogen Bulbs 6-49
Headlamp Aiming 6-48
Headlamps 6-49
High Intensity Discharge (HID) Lighting 6-49
Buying New Tires 6-70

C

Calibration 2-7, 3-38
California
Perchlorate Materials Requirements 6-5
Warning 6-5
California Fuel 6-7
Canadian Owners iii
Capacities and Specifications 6-130

Carbon Monoxide
Engine Exhaust 3-36
Trunk 3-15
Winter Driving 5-20
Care of
Safety Belts 6-111
CD, MP3 4-108
Center Console Storage 3-56
Chains, Tire 6-76
Charging System Light 4-57
Check
Engine Lamp 4-62
Checking Things Under the Hood 6-12
Chemical Paint Spotting 6-115
Child Restraints
Infants and Young Children 2-31
Lower Anchors and Tethers for Children 2-39
Older Children 2-28
Securing a Child Restraint in a Rear Seat
Position 2-45
Securing a Child Restraint in the Right Front
Seat Position 2-48
Systems 2-35
Where to Put the Restraint 2-38
Cigarette Lighter 4-43
Circuit Breakers 6-117
Cleaning
Aluminum or Chrome-Plated Wheels 6-114
Exterior Lamps/Lenses 6-112
Fabric/Carpet 6-109
Finish Care 6-112
Instrument Panel, Vinyl, and Other Plastic
Surfaces 6-110
Interior 6-108
Leather 6-110
Speaker Covers 6-111
Tires 6-115
Underbody Maintenance 6-115
Washing Your Vehicle 6-111
Weatherstrips 6-111
Windshield and Wiper Blades 6-113
Wood Panels 6-111
Climate Control System
Outlet Adjustment 4-48
Climate Control Systems
Dual 4-44
Rear 4-49
Climate Controls 1-14
Clock, Setting 4-95
Collision Damage Repair 8-12
Compact Spare Tire 6-107
Compass 2-7, 3-38
Compressor Kit, Tire Sealant 6-78, 6-87
Control of a Vehicle 5-3

Convenience Net 3-56
Coolant
Engine 6-27
Engine Temperature Gage 4-61
Engine Temperature Warning Light 4-61
Cooling System 6-26
Courtesy Transportation Program 8-10
Cruise Control 4-12
Light 4-67
Cruise Control, Active 4-15
Cruise Control, Forward Collision Alert (FCA)
System 4-6
Cupholders 3-56
Customer Assistance 8-6
Offices 8-6
Text Telephone (TTY) Users 8-6
Customer Information
Service Publications Ordering Information 8-16
Customer Satisfaction Procedure 8-2

D

Damage Repair, Collision 8-12
Data Recorders, Event 8-17
Daytime Running Lamps (DRL) 4-32
Defensive Driving 5-2
Disc, MP3 4-108
Displays
Head-Up 4-38
Doing Your Own Service Work 6-5
Door
Locks 3-12
Power Locks 3-13
Programmable Automatic Door Locks 3-14
Rear Door Security Locks 3-14
Drive Systems
All-Wheel Drive 6-45
Driver Information Center (DIC) 4-69
DIC Operation and Displays 4-70
DIC Warnings and Messages 4-76
Other Messages 4-93
Driving
At Night 5-16
Before a Long Trip 5-18
Defensive 5-2
Drunk 5-2
Highway Hypnosis 5-18
Hill and Mountain Roads 5-19
In Rain and on Wet Roads 5-16
Loss of Control 5-14
Off-Road Recovery 5-14
Rocking Your Vehicle to Get it Out 5-23
Winter 5-20
Driving for Better Fuel Economy 1-22
Dual Climate Control System 4-44

E

EDR 8-17
Electrical Equipment, Add-On 6-116
Electrical System
  Fuses and Circuit Breakers 6-117
  Headlamp Wiring 6-117
  Power Windows and Other Power Options 6-117
  Rear Underseat Fuse Block 6-122
  Underhood Fuse Block 6-118
  Windshield Wiper Fuses 6-117
Engine
  Air Cleaner/Filter 6-23
  Check and Service Engine Soon Lamp 4-62
  Compartment Overview 6-13
  Coolant 6-27
  Coolant Heater 3-29
  Coolant Temperature Gage 4-61
  Coolant Temperature Warning Light 4-61
  Cooling System 6-26
  Drive Belt Routing 7-12
  Exhaust 3-36
  Oil 6-18
  Overheated Protection Operating Mode 6-34
  Overheating 6-32
  Starting 3-27
Engine Oil
  Life System 6-21
Enhanced StabiliTrak® 5-7
Entry Lighting 4-36
Event Data Recorders 8-17
Extender, Safety Belt 2-28
Exterior Lighting Battery Saver 4-35

F

Filter
  Engine Air Cleaner 6-23
Finish Damage 6-115
Flash-to-Pass 4-9
Flashers, Hazard Warning 4-3
Flat Tire 6-76
Flat Tire, Changing 6-96
Flat Tire, Storing 6-105
Fluid
  Automatic Transmission 6-25
  Power Steering 6-35
  Windshield Washer 6-36
Fog Lamps
  Bulb Replacement 4-33
  Light 4-67
Forward Collision Alert (FCA) System 4-6
Front Axle 6-47

Fuel 6-6
Additives 6-8
California Fuel 6-7
Filling a Portable Fuel Container 6-11
Filling the Tank 6-9
Fuels in Foreign Countries 6-8
Gage 4-68
Gasoline Octane 6-7
Gasoline Specifications 6-7
Fuel Economy
Driving for Better 1-22
Fuses
Fuses and Circuit Breakers 6-117
Rear Underseat Fuse Block 6-122
Underhood Fuse Block 6-118
Windshield Wiper 6-117

G

Gages
Engine Coolant Temperature 4-61
Fuel 4-68
Speedometer 4-53
Tachometer 4-53
Garage Door Opener 3-49
Gasoline
Octane 6-7
Specifications 6-7
Glove Box 3-56
GM Mobility Reimbursement Program 8-7

H

Halogen Bulbs 6-49
Hazard Warning Flashers 4-3
Head Restraints 2-6
Head-Up Display (HUD) 4-38
Headlamp Wiring 6-117
Headlamps 4-27
Aiming 6-48
Bulb Replacement 6-49
Daytime Running Lamps (DRL) 4-32
Flash-to-Pass 4-9
High Intensity Discharge (HID) Lighting 6-49
High/Low Beam Changer 4-5
On Reminder 4-31
Range Adjustment 2-6
Washer 4-11
Wiper Activated 4-31
Heated
Steering Wheel 4-4
Heated Seats 2-3, 2-4

Heater
Engine Coolant 3-29
High-Speed Operation, Tires 6-62
Highbeam On Light 4-68
Highway Hypnosis 5-18
Hill and Mountain Roads 5-19
Hood
Checking Things Under 6-12
Release 6-12
Horn 4-3
How to Wear Safety Belts Properly 2-13

I

Ignition Positions 3-26
Immobilizer 3-24
Inadvertent Power Battery Saver 4-37
Infants and Young Children, Restraints 2-31
Inflation - Tire Pressure 6-60
Instrument Panel
Brightness 4-35
Instrument Panel Cluster 4-52
Introduction 7-2

J

Jump Starting 6-40

K

Keyless Access System 3-4
Keyless Access System, Operation 3-5
Keys 3-3

L

Labeling, Tire Sidewall 6-54
Lamps
Back-Up 6-50
Daytime Running (DRL) 4-32
Exterior Lighting Battery Saver 4-35
Malfunction Indicator 4-62
Reading 4-36
Twilight Sentinel® 4-34
Lane Departure Warning 3-47
Lane Departure Warning Light 4-60
Lap-Shoulder Belt 2-22
LATCH System for Child Restraints 2-39
Lighting
Entry 4-36
Parade Dimming 4-36
Lights 4-27
Airbag Readiness 4-54
Antilock Brake System (ABS) Warning 4-59
Brake System Warning 4-58
Charging System 4-57
Cruise Control 4-67

Lights (cont.)
Engine Coolant Temperature Warning 4-61
Flash-to-Pass 4-9
Fog Lamps 4-67
High/Low Beam Changer 4-5
Highbeam On 4-68
Lane Departure Warning 4-60
Lights On Reminder 4-67
Oil Pressure 4-66
On Reminder 4-31
Passenger Airbag Status Indicator 4-55
Safety Belt Reminders 4-53
Security 4-67
Tire Pressure 4-62
Traction Control System (TCS) Warning 4-60
Limited-Slip Rear Axle 5-11
Loading Your Vehicle 5-23
Lockout Switch, Valet 3-24
Locks
Door 3-12
Lockout Protection 3-15
Power Door 3-13
Programmable Automatic Door Locks 3-14
Rear Door Security Locks 3-14
Loss of Control 5-14
Lower Anchors and Tethers for Children 2-39
Lumbar
Power Controls 2-3

M

Magnetic Ride Control 5-11
Maintenance Schedule
Maintenance Record 7-13
Maintenance Replacement Parts 7-11
Owner Checks and Services 7-7
Recommended Fluids and Lubricants 7-9
Scheduled Maintenance 7-3
Malfunction Indicator Lamp 4-62
Memory Mirrors 3-75
Memory Seat 3-75
Memory Steering Wheel Controls 3-75
Message
DIC Warnings and Messages 4-76
Mirrors
Automatic Dimming Rearview 3-37
Manual Rearview Mirror with Compass and Temperature 2-7
Memory 3-75
Outside Automatic Dimming Mirror 3-39
Outside Convex Mirror 3-40
Outside Heated Mirrors 3-40
Outside Power Mirrors 3-39
Park Tilt 3-40
MP3 4-108

N

Navigation System, Privacy 8-18
Navigation/Radio System, see Navigation Manual 4-113
Net, Convenience 3-56
New Vehicle Break-In 3-25

O

Object Detection, Side Blind Zone Alert (SBZA) . . . 3-44
Odometer 4-53
Off-Road
  Recovery 5-14
Oil
  Engine 6-18
  Engine Oil Life System 6-21
  Pressure Light 4-66
Older Children, Restraints 2-28
Online Owner Center 8-5
OnStar, Privacy 8-18
OnStar® System 1-23
Operation, Universal Home Remote System 3-49
Outlet Adjustment 4-48
Outlets
  Accessory Power 4-42
Outside
  Automatic Dimming Mirror 3-39
  Convex Mirror 3-40
  Heated Mirrors 3-40
  Power Mirrors 3-39
Overheated Engine Protection Operating Mode 6-34
Owner Checks and Services 7-7
Owners, Canadian iii

P

Paint, Damage 6-115
Parade Dimming 4-36
Park
  Shifting Into 3-34
  Shifting Out of 3-35
Park Aid 3-41
Park Tilt Mirrors 3-40
Parking
  Assist 3-41
  Brake 3-33
  Over Things That Burn 3-35
Passenger Airbag Status Indicator 4-55
Passenger Compartment Air Filter 4-50
Passenger Sensing System 2-61
Passing 5-14
Perchlorate Materials Requirements, California 6-5

Phone 4-123
Bluetooth® 4-113
Power
Door Locks 3-13
Electrical System 6-117
Lumbar Controls 2-3
Reclining Seatbacks 2-4
Retained Accessory (RAP) 3-26
Seat 2-2
Steering Fluid 6-35
Tilt Wheel and Telescopic Steering Column 4-3
Windows 3-19
Pregnancy, Using Safety Belts 2-27
Privacy 8-17
Navigation System 8-18
OnStar 8-18
Radio Frequency Identification (RFID) 8-18
Program
Courtesy Transportation 8-10
Programmable Automatic Door Locks 3-14
Proposition 65 Warning, California 6-5

R

Radio Frequency
Identification (RFID) 8-18
Statement 8-18
Radio(s) 4-95
Radios
Navigation/Radio System, see Navigation
Manual 4-113
Personalization 4-130
Reception 4-136
Setting the Clock 4-95
Theft-Deterrent 4-134
Range Adjustment, Headlamps 2-6
Reading Lamps 4-36
Rear Axle 6-46
Limited-Slip 5-11
Rear Climate Control System 4-49
Rear Door Security Locks 3-14
Rear Heated Seats 2-7
Rearview Mirror with Compass and Temperature 2-7
Rearview Mirrors
Automatic Dimming 3-37
Reclining Seatbacks, Power 2-4
Recommended Fluids and Lubricants 7-9
Recreational Vehicle Towing 5-29
Reimbursement Program, GM Mobility 8-7
Remote Vehicle Start 3-10
Remote, Keyless Access System 3-4
Removing the Flat Tire and Installing the
Spare Tire 6-99
Removing the Spare Tire and Tools 6-98
Replacement Bulbs 6-50

Replacement Parts
Maintenance 7-11
Reporting Safety Defects
Canadian Government 8-15
General Motors 8-15
U.S. Government 8-14
Restraint System Check
Checking the Restraint Systems 2-68
Replacing Restraint System Parts After a Crash 2-69
Retained Accessory Power (RAP) 3-26
Ride Control Systems
Limited Slip Rear Axle 5-11
Roadside Service 8-8
Rocking Your Vehicle to Get it Out 5-23
Roof
Sunroof 3-57
Running the Vehicle While Parked 3-36

S

Safety Belts
Care of 6-111
Extender 2-28
How to Wear Safety Belts Properly 2-13
Lap-Shoulder Belt 2-22
Safety Belts (cont.)
Reminders 4-53
Safety Belts Are for Everyone 2-8
Use During Pregnancy 2-27
Safety Defects Reporting
Canadian Government 8-15
General Motors 8-15
U.S. Government 8-14
Safety Warnings and Symbols iv
Scheduled Maintenance 7-3
Scheduling Appointments 8-10
Sealant Kit, Tire 6-78, 6-87
Seats
Heated and Ventilated Seats 2-4
Heated Seats 2-3
Heated Seats - Rear 2-7
Memory 3-75
Power Lumbar 2-3
Power Reclining Seatbacks 2-4
Power Seats 2-2
Securing a Child Restraint
Rear Seat Position 2-45
Right Front Seat Position 2-48
Security
Light 4-67

Service 6-4
Accessories and Modifications 6-4
Adding Equipment to the Outside of the Vehicle ... 6-6
Doing Your Own Work 6-5
Engine Soon Lamp 4-62
Parts Identification Label 6-116
Publications Ordering Information.....8-16
Scheduling Appointments.....8-10
Servicing Your Airbag-Equipped Vehicle 2-66
Setting the Clock 4-95
Sheet Metal Damage 6-115
Shifting
Out of Park 3-35
Shifting Into Park 3-34
Side Blind Zone Alert 3-44
Signals, Turn and Lane-Change 4-4
Spare Tire
Compact 6-107
Installing 6-99
Removing 6-98
Storing 6-105
Specifications and Capacities.....6-130
Speedometer 4-53
StabiliTrak® System 5-6
Start Vehicle, Remote 3-10
Starting the Engine 3-27
Steering 5-11
Heated Wheel 4-4
Steering Wheel Controls, Audio 4-134
Steering Wheel Controls, Memory 3-75
Steering Wheel, Power Tilt Wheel and Telescopic
Steering Column 4-3
Storage Areas
Center Console 3-56
Convenience Net 3-56
Cupholders 3-56
Glove Box 3-56
Storing the Tire Sealant and Compressor Kit
..... 6-96
Stuck in Sand, Mud, Ice, or Snow 5-22
Sun Visors 3-21
Sunroof 3-57

T

Tachometer 4-53
Telescopic Steering Column, Power Tilt Wheel 4-3
Text Telephone (TTY) Users 8-6
Theft - Deterrent System 3-22
Theft-Deterrent Feature 4-134
Theft-Deterrent Systems 3-22, 3-24
Immobilizer 3-24
Time, Setting 4-95

Tires 6-52
Aluminum or Chrome-Plated Wheels, Cleaning 6-114
Buying New Tires 6-70
Chains 6-76
Changing a Flat Tire 6-96
Cleaning 6-115
Compact Spare 6-107
Different Size 6-72
High-Speed Operation 6-62
If a Tire Goes Flat 6-76
Inflation - Tire Pressure 6-60
Inspection and Rotation 6-67
Installing the Spare Tire 6-99
Pressure Light 4-62
Pressure Monitor Operation 6-64
Pressure Monitor System 6-62
Removing the Flat Tire 6-99
Removing the Spare Tire and Tools 6-98
Sealant and Compressor Kit 6-78, 6-87, 6-96
Sidewall Labeling 6-54
Storing a Flat or Spare Tire and Tools 6-105
Terminology and Definitions 6-57
Uniform Tire Quality Grading 6-73
Wheel Alignment and Tire Balance 6-74
Wheel Replacement 6-74
When It Is Time for New Tires 6-69
Winter 6-53
Towing
Recreational Vehicle 5-29
Towing a Trailer 5-31
Your Vehicle 5-29
Traction
Control System (TCS) 5-9
Control System Warning Light 4-60
Enhanced StabiliTrak® 5-7
Limited-Slip Rear Axle 5-11
Magnetic Ride Control 5-11
StabiliTrak® System 5-6
Transmission
Fluid, Automatic 6-25
Transmission Operation, Automatic 3-30
Transportation Program, Courtesy 8-10
Trunk 3-15
Turn and Lane-Change Signals 4-4
Turn Signal/Multifunction Lever 4-4
Twilight Sentinel® 4-34

U

Ultrasonic Rear Parking Assist (URPA) 3-41
Uniform Tire Quality Grading 6-73
Universal Home Remote System 3-49
Operation 3-49

V

Valet Lockout Switch 3-24
Vehicle
  Control 5-3
  Loading 5-23
  Personalization 3-58
  Remote Start 3-10
  Running While Parked 3-36
  Symbols iv
Vehicle Data Recording and Privacy 8-17
Vehicle Identification
  Number (VIN) 6-116
  Service Parts Identification Label 6-116
Vehicle Personalization
  Memory Seat, Mirrors and Steering Wheel 3-75
Ventilated Seats 2-4
Ventilation Adjustment 4-48
Visors 3-21

W

Warning Lights, Gages, and Indicators 4-51
Warnings
  DIC Warnings and Messages 4-76
  Hazard Flashers 4-3
  Safety and Symbols iv
Washer, Headlamps 4-11
Wheels
  Alignment and Tire Balance 6-74
  Different Size 6-72
  Replacement 6-74
When It Is Time for New Tires 6-69
Where to Put the Child Restraint 2-38
Windows 3-18
  Power 3-19
Windshield
  Replacement 6-50
  Washer 4-11
  Washer Fluid 6-36
  Wiper Blade Replacement 6-51
  Wiper Blades, Cleaning 6-113
  Wiper Fuses 6-117
  Wipers 4-10
Winter Driving 5-20
Winter Tires 6-53
Wiper Activated Headlamps 4-31

X

XM Radio Messages 4-112
XM™ Satellite Radio
  Antenna 4-137