COMPONENT LOCATOR

DISASSEMBLED VIEWS

Engine Covers and Component Assemblies (1 of 2) (LF1, LFW or LFX)

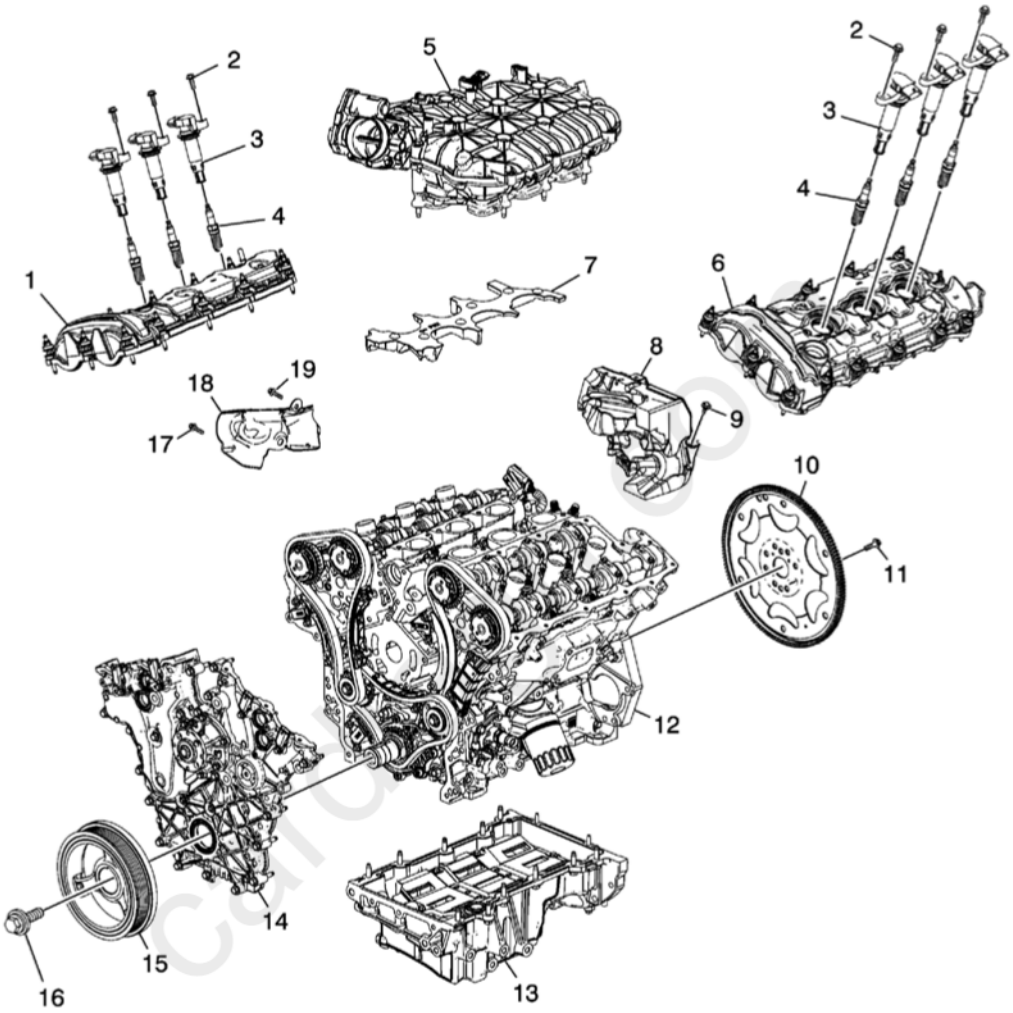

Fig. 1: Engine Covers and Component Assemblies (1 of 2)
Courtesy of GENERAL MOTORS COMPANY

Callout	Component Name
1	Right Camshaft Cover Assembly
2	Ignition Coil Bolt
3	Ignition Coil
4	Spark Plug
5	Intake Manifold Assembly
6	Left Camshaft Cover Assembly
7	Fuel Rail Noise Shield
8	Engine Rear Noise Shield
9	Engine Rear Noise Shield Bolt
10	Engine Flywheel
11	Engine Flywheel Bolt
12	Engine Assembly

Callout	Component Name
13	Oil Pan Assembly
14	Engine Front Cover Assembly
15	Crankshaft Balancer
16	Crankshaft Balancer Bolt
17	Crankshaft Position Sensor Heat Shield Bolt - Large
18	Crankshaft Position Sensor Heat Shield
19	Crankshaft Position Sensor Heat Shield Bolt - Small

Engine Covers and Component Assemblies (2 of 2)

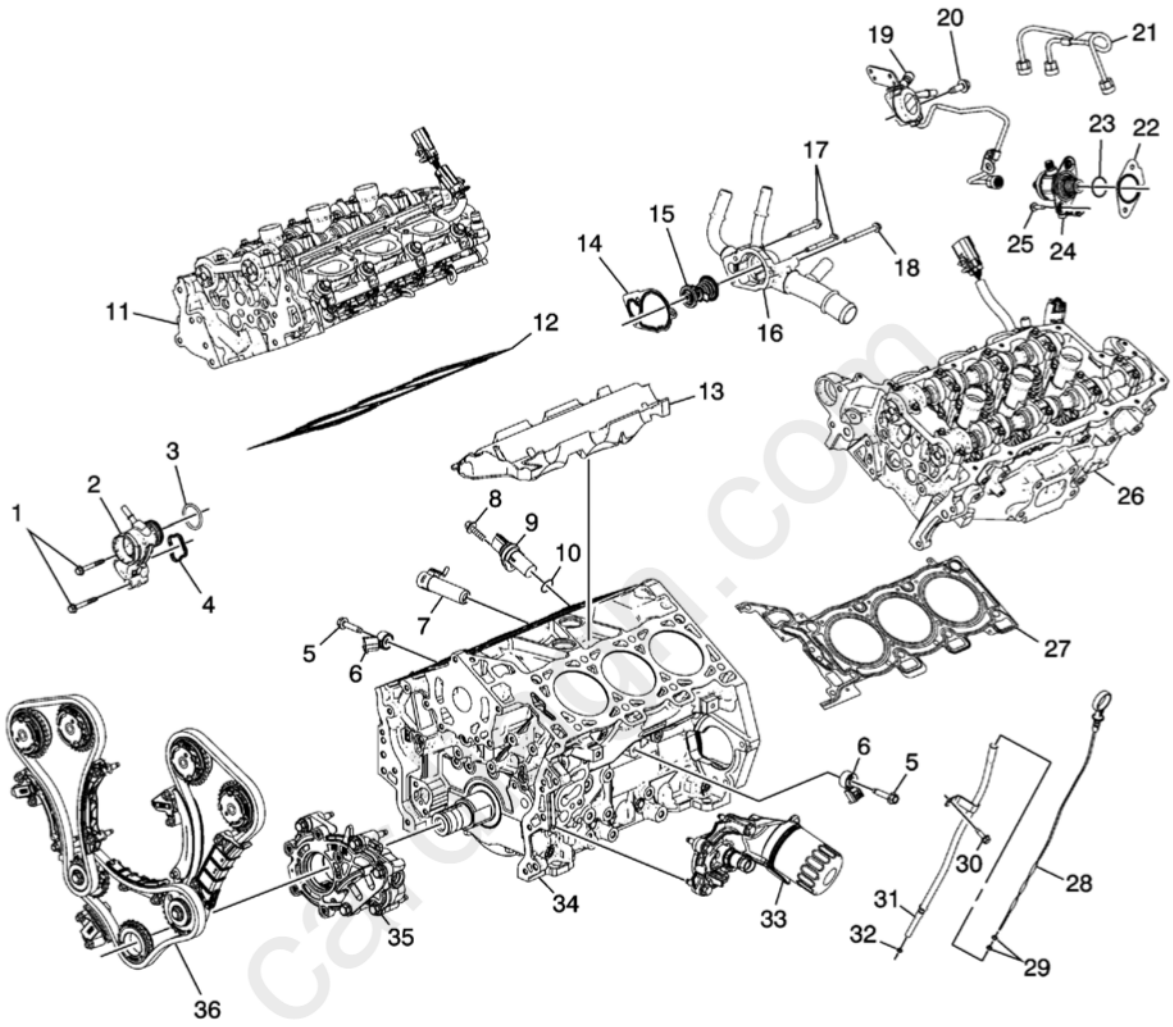

Fig. 2: Engine Covers and Component Assemblies (2 of 2)
Courtesy of GENERAL MOTORS COMPANY

Callout	Component Name
1	Water Outlet Bolt
2	Water Outlet
3	Water Outlet O-ring
4	Water Outlet Seal
5	Knock Sensor Bolt
6	Knock Sensor
7	Engine Coolant Heater Assembly
8	Crankshaft Position Sensor Bolt
9	Crankshaft Position Sensor
10	Crankshaft Position Sensor O-ring
11	Right Cylinder Head Assembly
12	Right Cylinder Head Gasket
13	Lower Fuel Rail Noise Shield

Callout	Component Name
14	Engine Cooling Thermostat Gasket
15	Engine Cooling Thermostat
16	Engine Cooling Thermostat Housing
17	Engine Cooling Thermostat Bolt - Short
18	Engine Cooling Thermostat Housing Bolt - Long
19	Fuel Feed Pipe Assembly
20	Fuel Feed Pipe Assembly Bolt
21	Fuel Feed Intermediate Pipe Assembly
22	Fuel Pump Gasket
23	Fuel Pump O-ring Seal
24	Fuel Pump
25	Fuel Pump Bolt
26	Left Cylinder Head Assembly
27	Left Cylinder Head Gasket
28	Oil Level Indicator
29	Oil Level Indicator Handle O-ring
30	Oil Level Indicator Tube Bolt
31	Oil Level Indicator Tube
32	Oil Level Indicator Tube O-ring
33	Oil Filter Adapter Assembly
34	Engine Short Block Assembly
35	Oil Pump Assembly
36	Timing Drive Assembly

Camshaft Cover Assembly

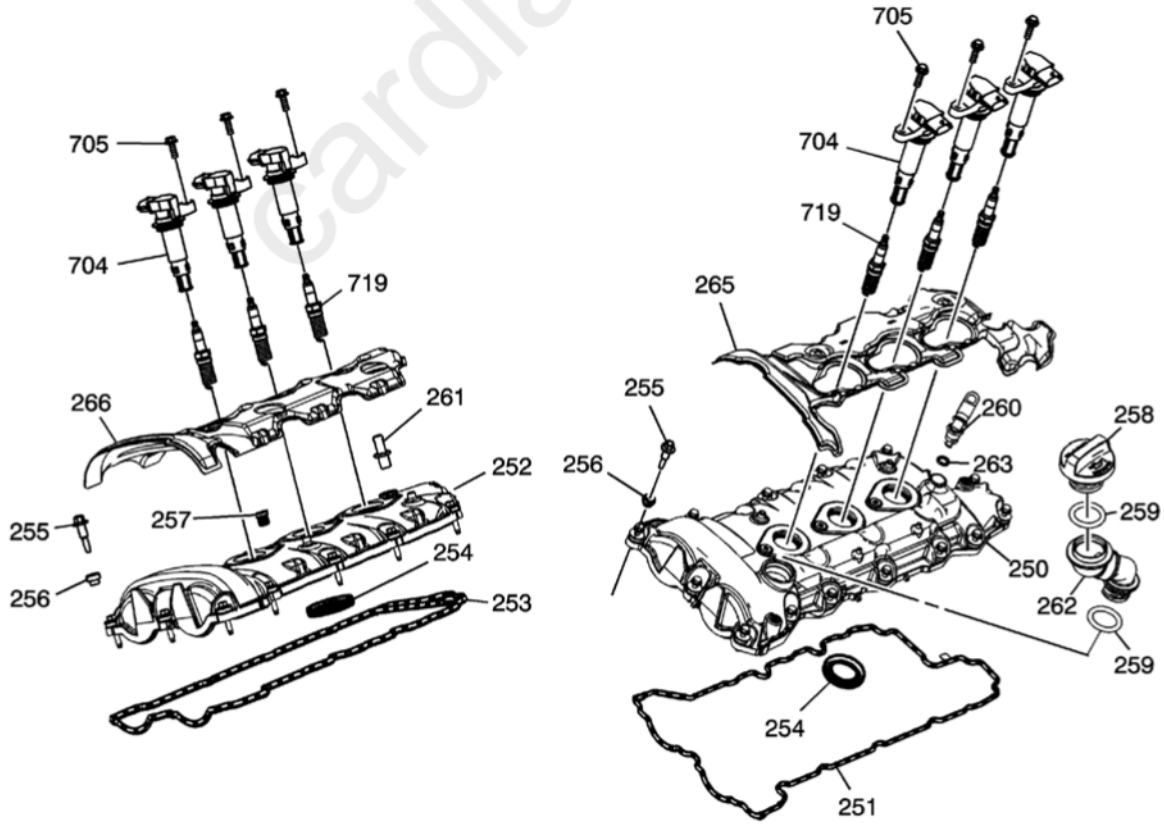

cardiagn.com

Fig. 3: Camshaft Cover Assembly
Courtesy of GENERAL MOTORS COMPANY

Callout	Component Name
250	Left Camshaft Cover
251	Left Camshaft Cover Gasket
252	Right Camshaft Cover
253	Right Camshaft Cover Gasket
254	Camshaft Cover Spark Plug Port Seal
255	Camshaft Cover Bolt
256	Camshaft Cover Bolt Insulator
257	Ignition Coil Bolt Thread Insert
258	Oil Fill Cap
259	Oil Fill O-ring
260	Left Camshaft Cover PCV Fitting
261	Right Camshaft Cover PCV Fitting Orifice
262	Oil Fill Tube
263	Left Camshaft Cover PCV Fitting O-ring
265	Left Camshaft Housing Cover Insulator
266	Right Camshaft Housing Cover Insulator
704	Ignition Coil
705	Ignition Coil Bolt
719	Spark Plug

Camshaft Timing Components

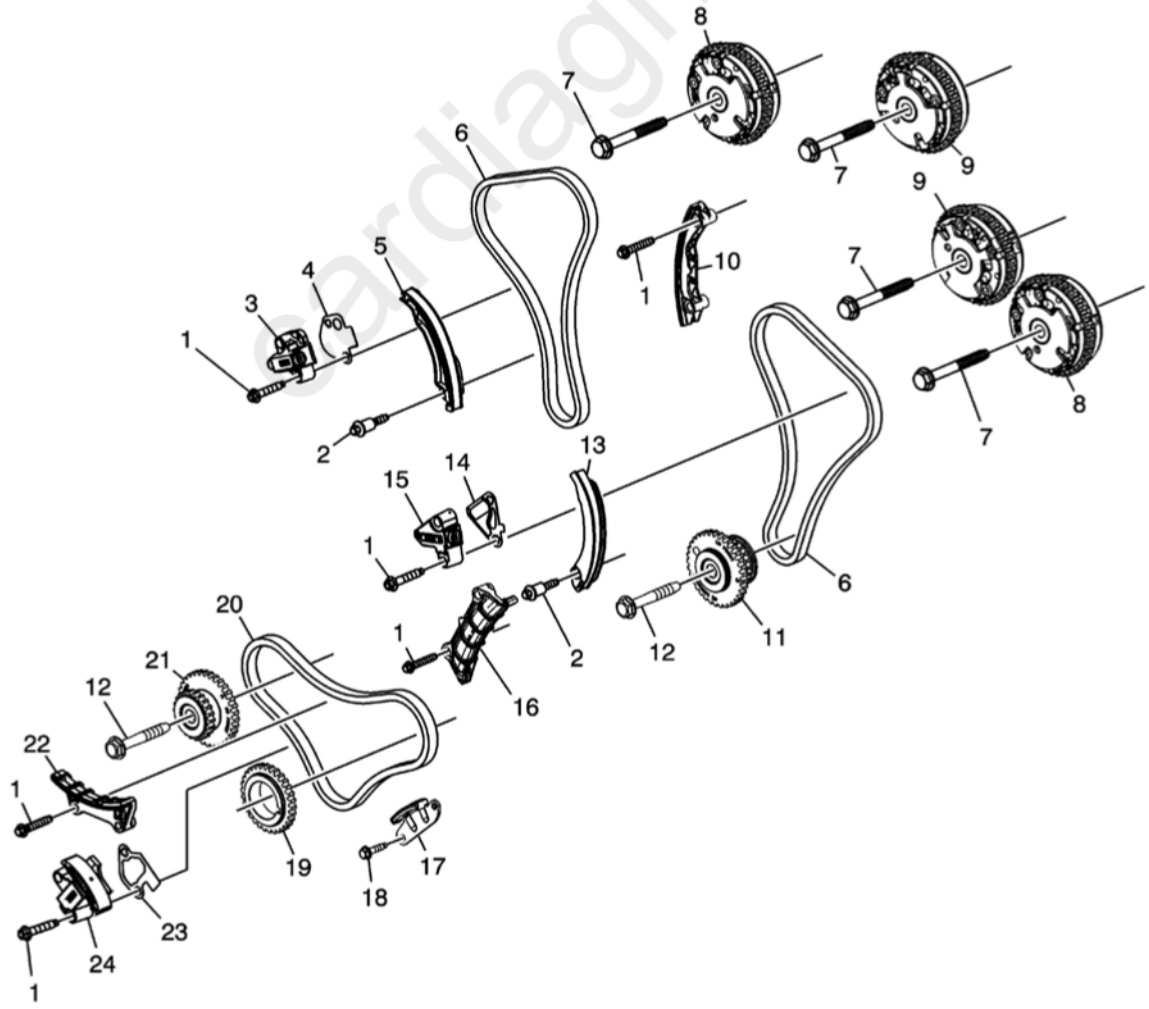

Fig. 4: Camshaft Timing Components
Courtesy of GENERAL MOTORS COMPANY

Callout	Component Name
1	Right Secondary Timing Chain Tensioner Bolt
2	Right Secondary Timing Chain Guide Bolt
3	Right Secondary Timing Chain Tensioner
4	Right Timing Chain Housing Gasket
5	Right Secondary Timing Chain Guide
6	Secondary Camshaft Intermediate Drive Chain
7	Camshaft Position Actuator Bolt
8	Exhaust Camshaft Position Actuator
9	Intake Camshaft Position Actuator
10	Right Pivot Arm Timing Chain Guide
11	Left Camshaft Timing Chain Idler Sprocket
12	Timing Chain Idler Sprocket Shaft Bolt
13	Left Pivot Arm Timing Chain Guide
14	Left Timing Chain Housing Gasket
15	Left Secondary Timing Chain Tensioner
16	Left Secondary Timing Chain Guide
17	Lower Primary Timing Chain Guide
18	Lower Primary Timing Chain Guide Bolt
19	Crankshaft Sprocket
20	Primary Timing Chain
21	Right Camshaft Timing Chain Idler Sprocket
22	Upper Primary Timing Chain Guide
23	Timing Chain Housing Gasket
24	Camshaft Intermediate Drive Chain Tensioner

Intake Manifold

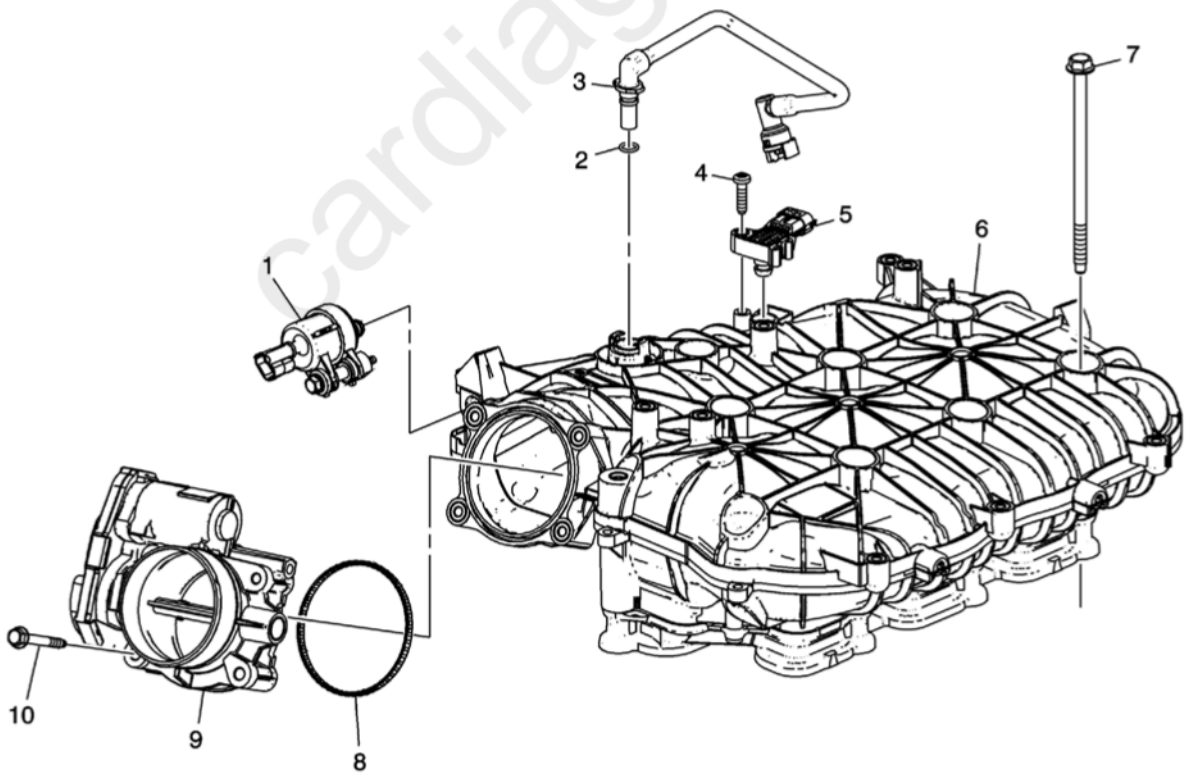

Fig. 5: Intake Manifold Components
Courtesy of GENERAL MOTORS COMPANY

Callout	Component Name
1	EVAP Solenoid
2	PCV Tube O-ring Seal

Callout	Component Name
3	PCV Tube
4	MAP Sensor Bolt
5	MAP Sensor
6	Upper Intake Manifold
7	Upper Intake Manifold Bolt
8	Throttle Body Gasket
9	Throttle Body
10	Throttle Body Bolt

Fuel Rail

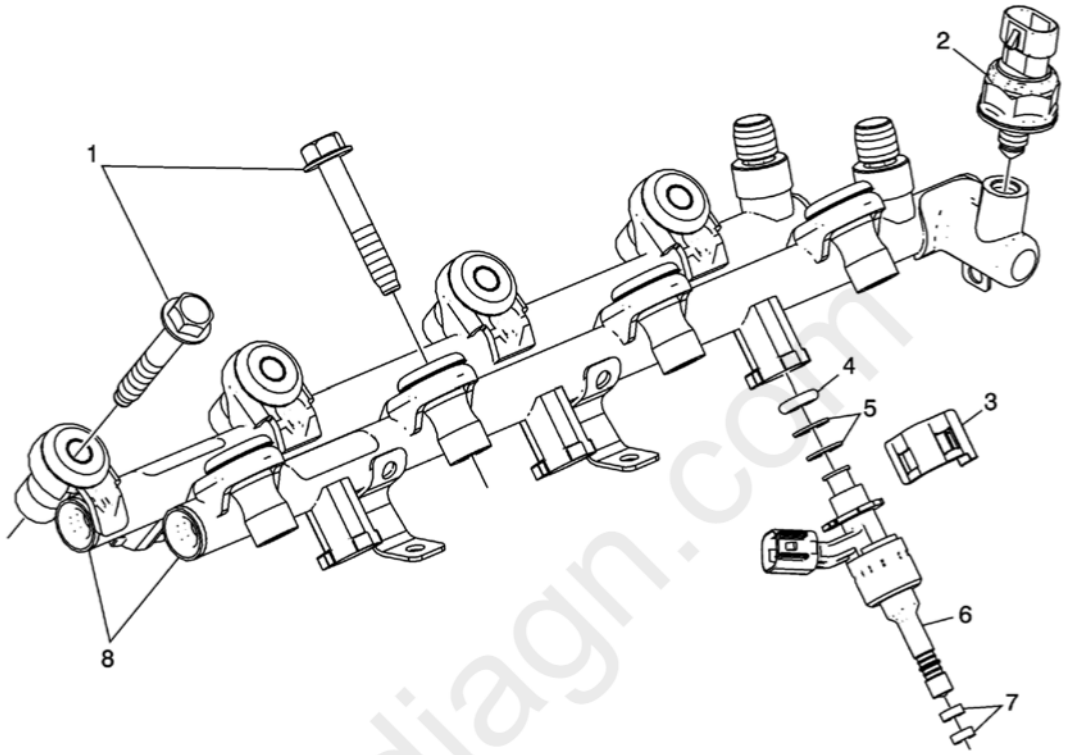

Fig. 6: Identifying Fuel Rail Components
Courtesy of GENERAL MOTORS COMPANY

Callout	Component Name
1	Fuel Rail Bolt
2	Fuel Pressure Sensor
3	Fuel Injector Retainer
4	Fuel Injector O-ring Seal
5	Fuel Injector Spacer
6	Fuel Injector
7	Fuel Injector Teflon Seal
8	Fuel Rail

Cylinder Head Assemblies

cardiagn.com

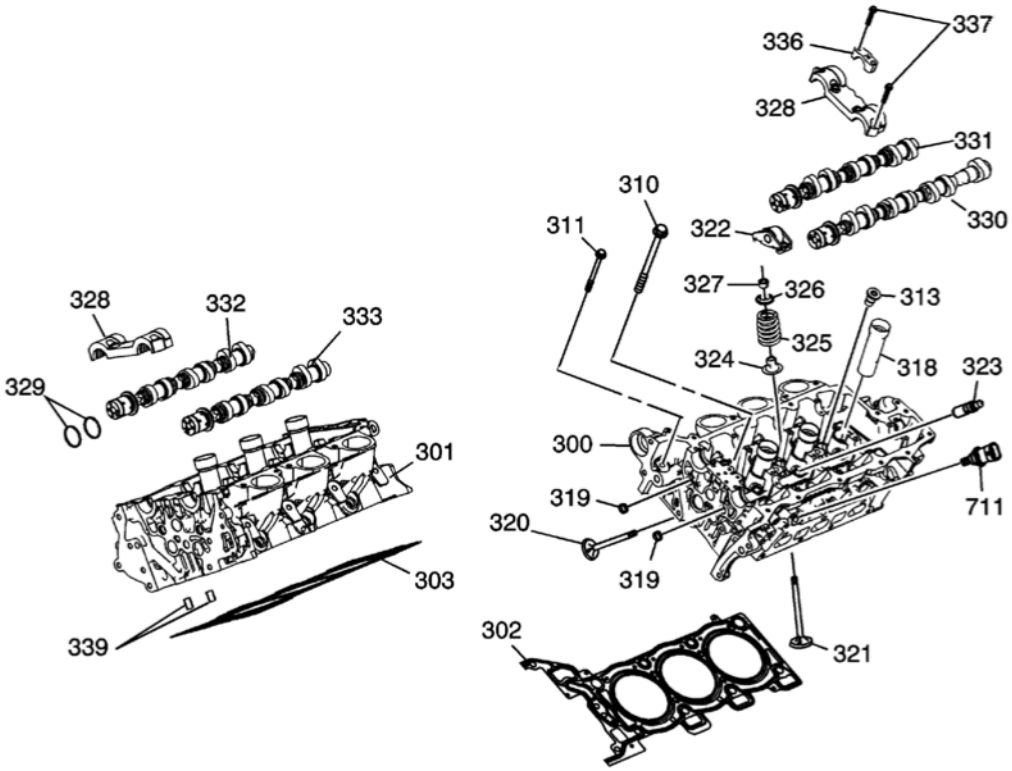

Fig. 7: Cylinder Head Assemblies
Courtesy of GENERAL MOTORS COMPANY

Callout	Component Name
300	Left Cylinder Head
301	Right Cylinder Head
302	Left Cylinder Head Gasket
303	Right Cylinder Head Gasket
310	Cylinder Head Bolt
311	Cylinder Head Front Bolt
313	Cylinder Head Water Jacket Hole Threaded Plug
318	Spark Plug Wire Sleeve
319	Cylinder Head Oil Gallery Expansion Plug - 14 mm
320	Exhaust Valve
321	Intake Valve
322	Valve Rocker Arm
323	Hydraulic Valve Lash Adjuster
324	Valve Stem Oil Seal
325	Valve Spring
326	Valve Spring Cap
327	Valve Stem Key
328	Cylinder Head Camshaft Front Thrust Bearing Cap
328	Cylinder Head Camshaft Front Thrust Bearing Cap
329	Camshaft Oil Seal Ring
330	Left Exhaust Camshaft
331	Left Intake Camshaft
332	Right Intake Camshaft
333	Right Exhaust Camshaft
336	Cylinder Head Camshaft Cap - Intermediate
337	Cylinder Head Camshaft Cap Bolt
339	Cylinder Head Oil Gallery Check Valve
711	Engine Coolant Temperature Sensor

Engine Front Cover

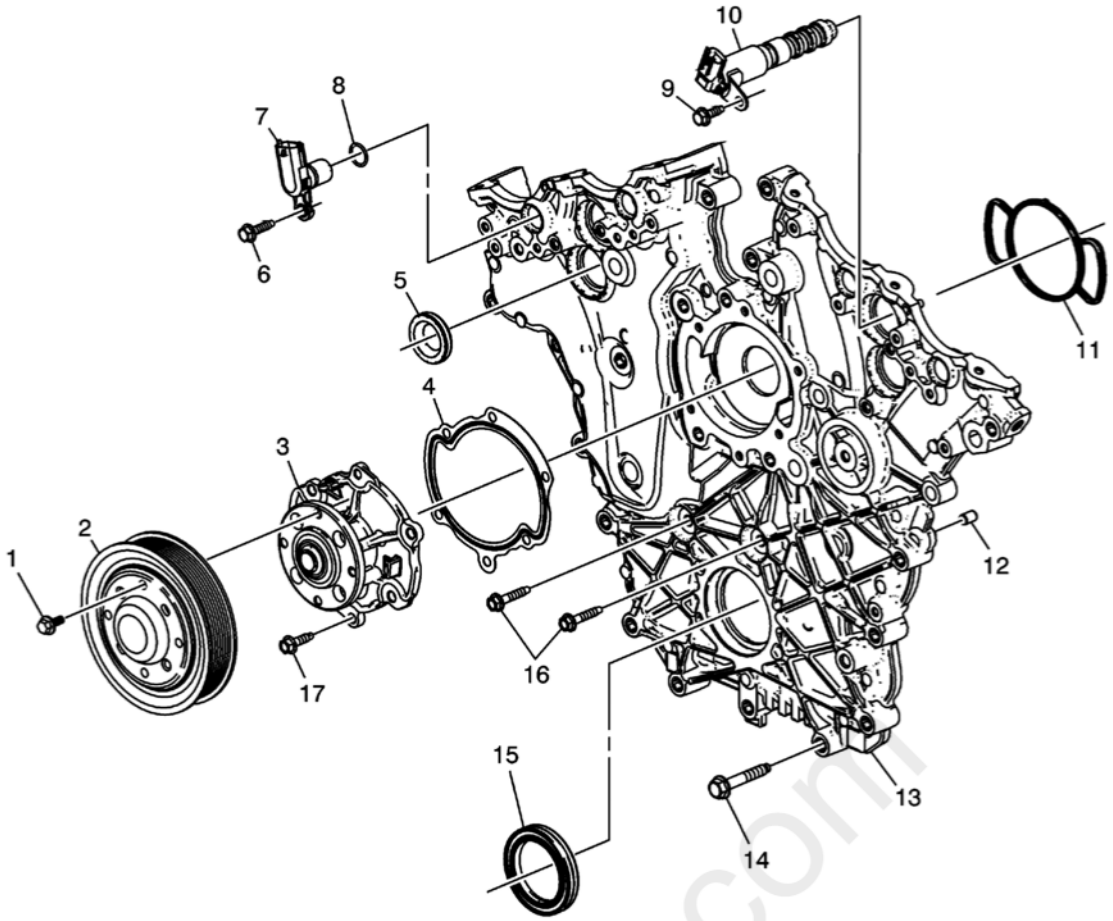

Fig. 8: View Of Engine Front Cover Components
Courtesy of GENERAL MOTORS COMPANY

Callout	Component Name
1	Water Pump Pulley Bolt
2	Water Pump Pulley
3	Water Pump
4	Water Pump Gasket
5	Camshaft Position Actuator Solenoid Valve Seal
6	Camshaft Position Sensor Bolt
7	Camshaft Position Sensor
8	Camshaft Position Sensor Seal Ring
9	Camshaft Position Actuator Solenoid Valve Bolt
10	Camshaft Position Actuator Solenoid Valve
11	Engine Front Cover Gasket
12	Engine Front Cover Locating Pin
13	Engine Front Cover
14	Engine Front Cover Bolt
15	Crankshaft Front Oil Seal
16	Engine Front Cover Bolt
17	Water Pump Bolt

Oil Pump

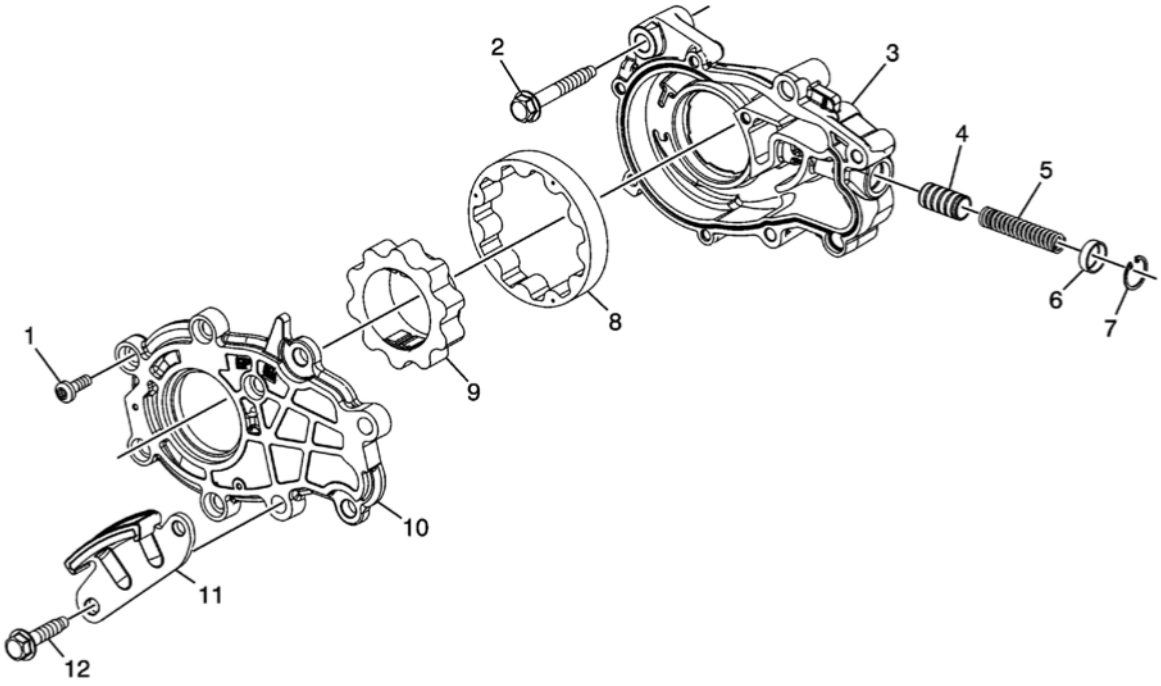

Fig. 9: Oil Pump Components
Courtesy of GENERAL MOTORS COMPANY

Callout	Component Name
1	Oil Pump Cover Bolt
2	Oil Pump Bolt
3	Oil Pump Housing
4	Oil Pressure Relief Valve
5	Oil Pressure Relief Valve Spring
6	Oil Pressure Relief Valve Bore Plug
7	Oil Pressure Relief Valve Bore Plug Retainer Clip
8	Oil Pump Driven Gear
9	Oil Pump Drive Gear
10	Oil Pump Cover
11	Lower Primary Timing Chain Guide
12	Lower Primary Timing Chain Guide Bolt

Engine Block Assembly

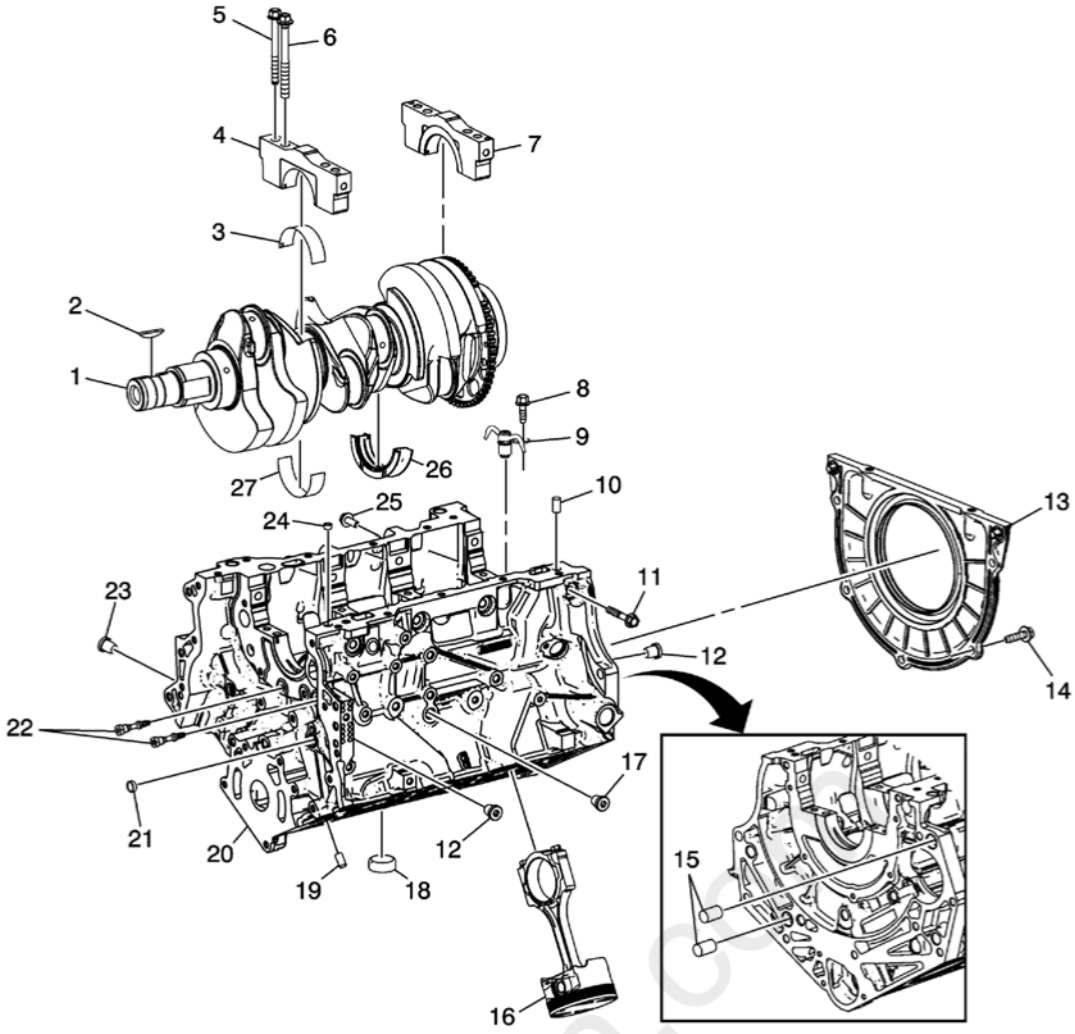

Fig. 10: Identifying Engine Block Assembly Components
Courtesy of GENERAL MOTORS COMPANY

Callout	Component Name
1	Crankshaft
2	Crankshaft Key
3	Crankshaft Lower Bearing
4	Crankshaft Bearing Cap
5	Crankshaft Bearing Cap Outboard Bolt
6	Crankshaft Bearing Cap Inboard Bolt
7	Crankshaft Bearing Thrust Cap
8	Piston Oil Nozzle Bolt
9	Piston Oil Nozzle
10	Oil Pan Locating Pin
11	Crankshaft Bearing Cap Side Bolt - Long
12	Engine Block Oil Gallery Threaded Plug - 14 mm
13	Crankshaft Rear Oil Seal Housing Assembly
14	Crankshaft Rear Oil Seal Housing Assembly Bolt
15	Transaxle Locating Pin
16	Piston and Connecting Rod Assembly
17	Engine Block Coolant Drain Threaded Plug - 14 mm
18	Engine Block Core Coolant Expansion Plug - 34.3 mm
19	Cylinder Head Locating Pin
20	Engine Block
21	Engine Block Oil Gallery Expansion Plug - 14 mm
22	Engine Front Cover Stud
23	Engine Block Oil Gallery Threaded Plug - 20 mm

Callout	Component Name
24	Engine Block Oil Gallery Expansion Plug - 10 mm
25	Crankshaft Bearing Cap Side Bolt - Short
26	Crankshaft Upper Thrust Bearing #3
27	Crankshaft Upper Bearing

Piston, Rings, Bearing and Connecting Rod

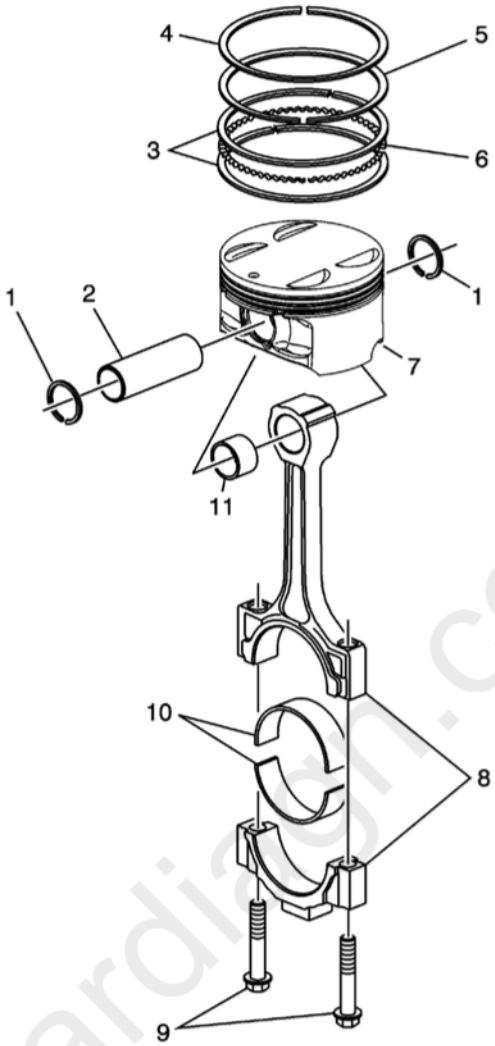

Fig. 11: Piston, Rings, Bearing and Connecting Rod
Courtesy of GENERAL MOTORS COMPANY

Callout	Component Name
1	Piston Pin Retainer
2	Piston Pin
3	Piston Oil Control Rail Ring
4	Piston Upper Compression Ring
5	Piston Lower Compression Ring
6	Piston Oil Control Ring Spacer
7	Piston
8	Connecting Rod
9	Connecting Rod Bolt
10	Connecting Rod Bearing
11	Connecting Rod Bushing

Oil Pan Assembly

cardiagn.com

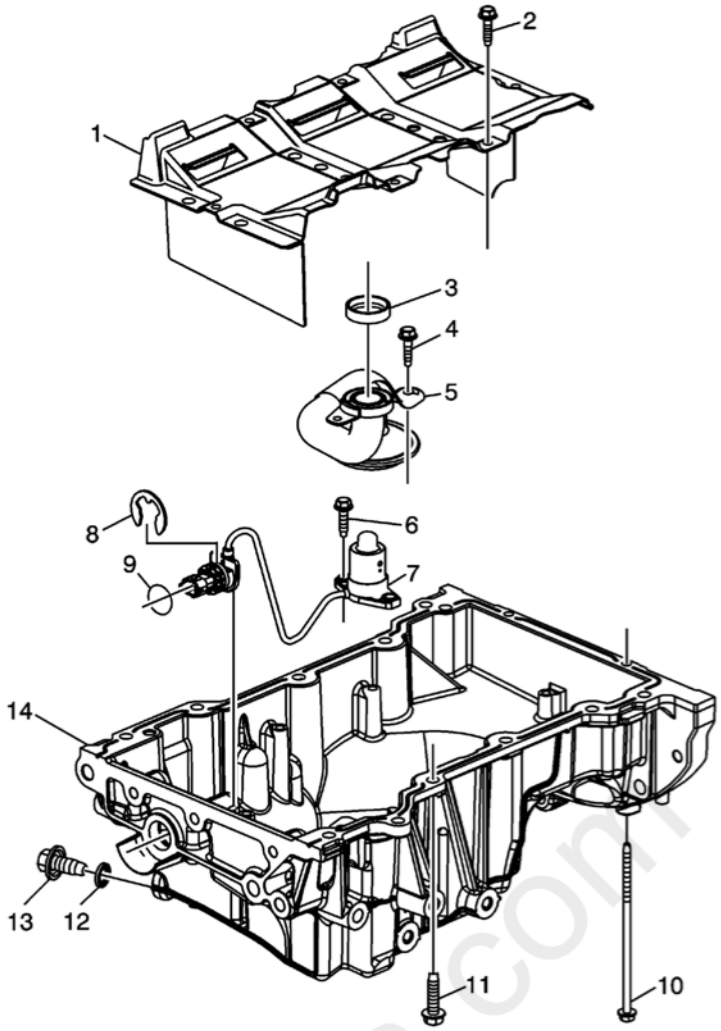

Fig. 12: Oil Pan Assembly
Courtesy of GENERAL MOTORS COMPANY

Callout	Component Name
1	Oil Pan Baffle Scraper
2	Oil Pan Baffle Scraper Bolt
3	Oil Pump Suction Pipe Seal
4	Oil Pump Suction Pipe Bolt
5	Oil Pump Suction Pipe
6	Engine Oil Level Switch Bolt
7	Engine Oil Level Switch
8	Engine Oil Level Switch Clip
9	Engine Oil Level Switch Seal
10	Oil Pan Bolt - Long
11	Oil Pan Bolt
12	Oil Pan Drain Plug Seal
13	Oil Pan Drain Plug
14	Oil Pan

Oil Filter Adapter

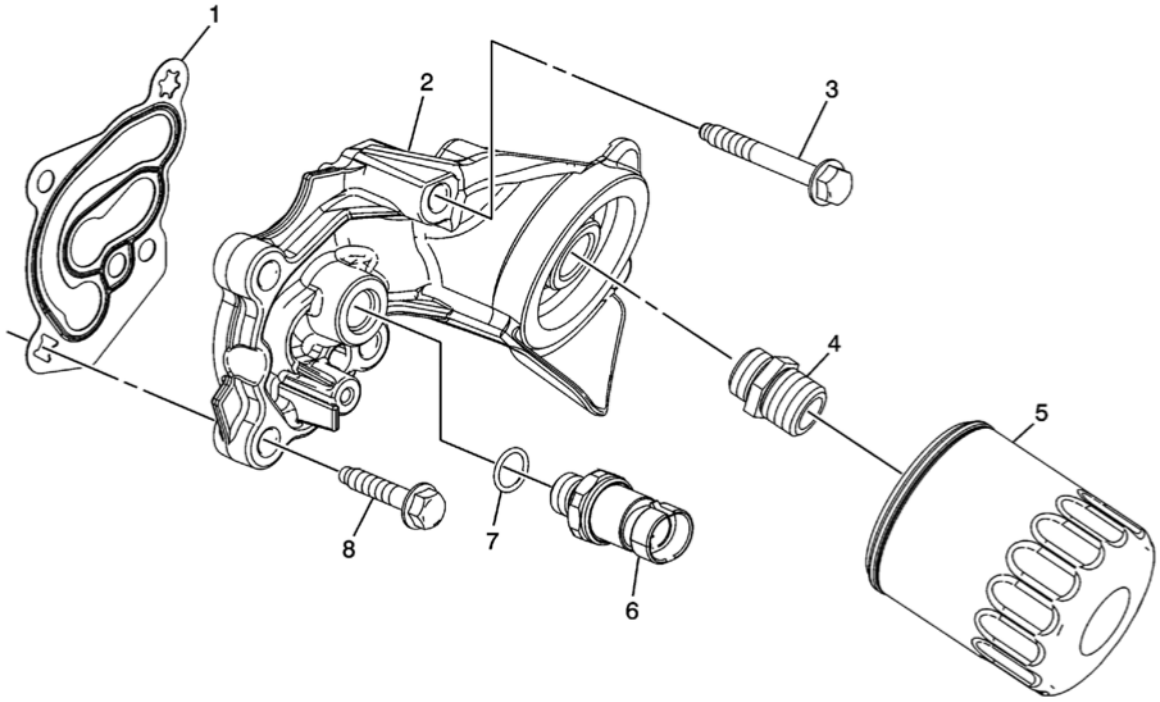

Fig. 13: Oil Filter Adapter
Courtesy of GENERAL MOTORS COMPANY

Callout	Component Name
1	Oil Filter Adapter Gasket
2	Oil Filter Adapter
3	Oil Filter Adapter Bolt - Long
4	Oil Filter Fitting
5	Oil Filter
6	Engine Oil Pressure Sensor
7	Engine Oil Pressure Sensor Seal
8	Oil Filter Adapter Bolt

ENGINE IDENTIFICATION

Vehicle Identification Number

The Vehicle Identification Number (VIN) Derivative is located in two places on the engine and is a nine digit number stamped or laser etched onto the block at the vehicle assembly plant. If reading the identification number the following information can be obtained:

- The first digit identifies the vehicle division.
- The second digit is the model year.
- The third digit identifies the assembly plant.
- The fourth through ninth digits are the last six digits of the Vehicle Identification Number (VIN).

carmagn.com

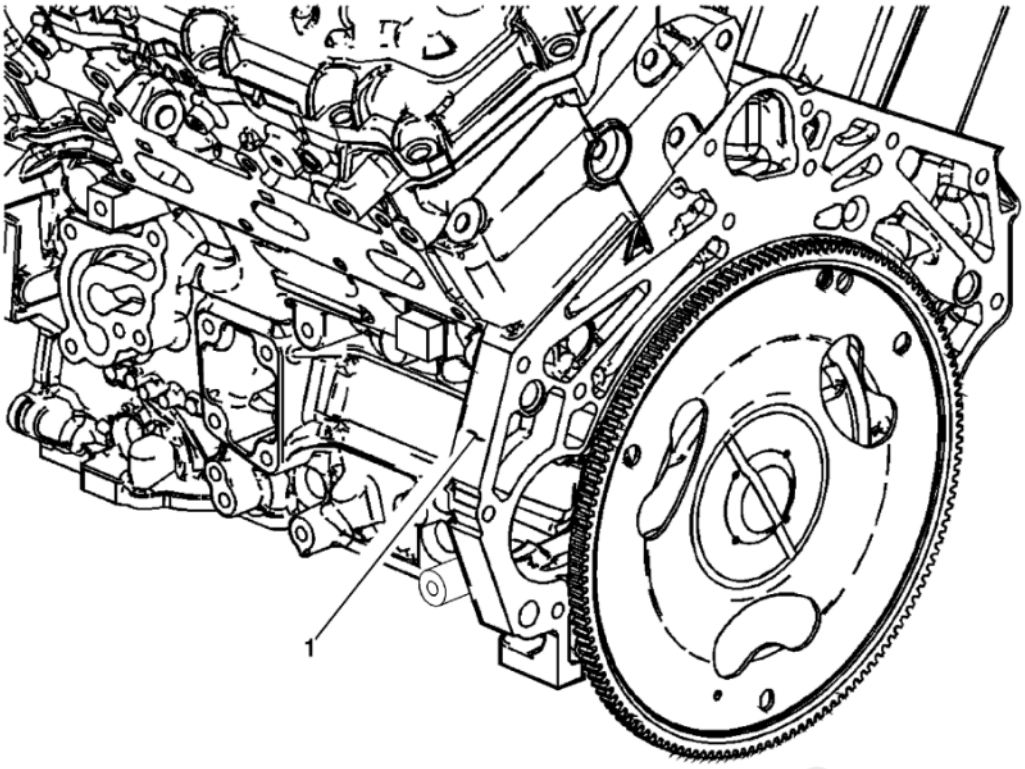

Fig. 14: Locating Engine VIN - Left Rear Side
Courtesy of GENERAL MOTORS COMPANY

The engine block is marked with the VIN on a pad area on the left rear side (1).

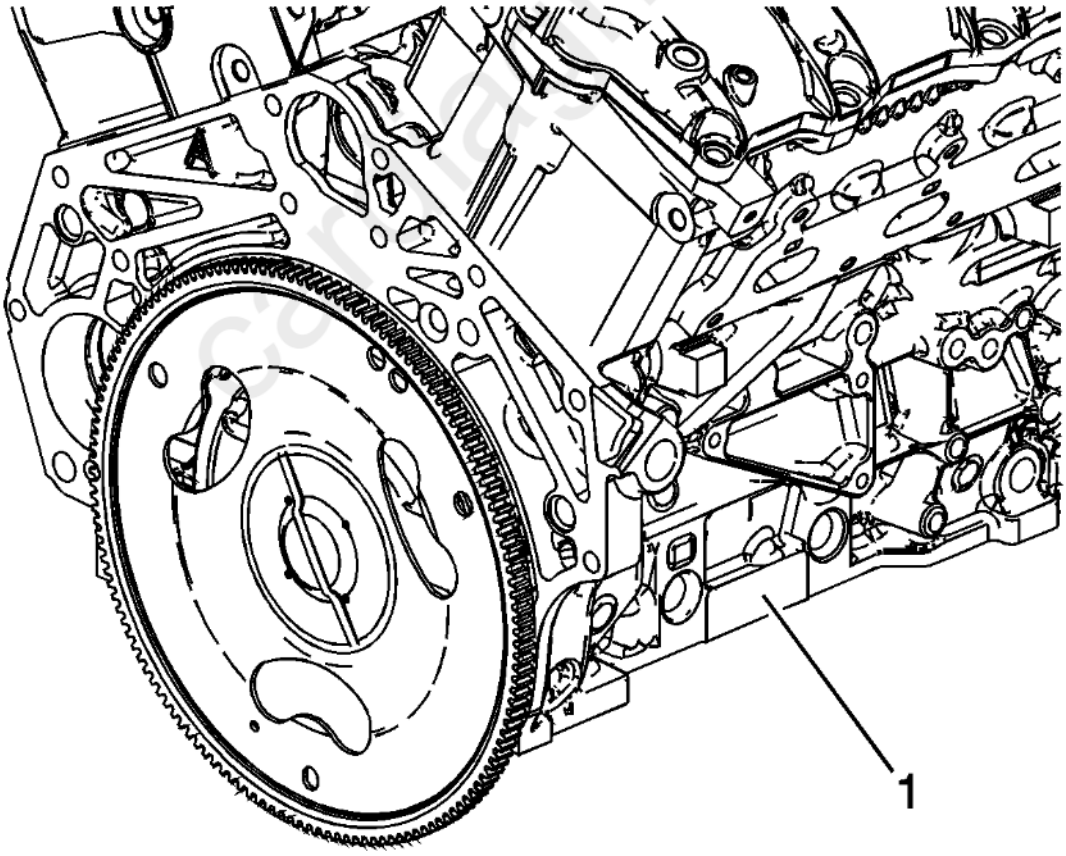

Fig. 15: Locating Vehicle Identification Number (VIN) - Center Lower Right Side
Courtesy of GENERAL MOTORS COMPANY

The engine block is marked with the VIN on a pad area on the center lower right side (1).

Engine Traceability Label

The engine traceability label is located in two places on the engine and consists of the broadcast code, bar code and sequence number. This label is used in engine and vehicle assembly plants and is not intended to be permanent. If it is missing refer back to the engine block VIN pad for the permanent ID.

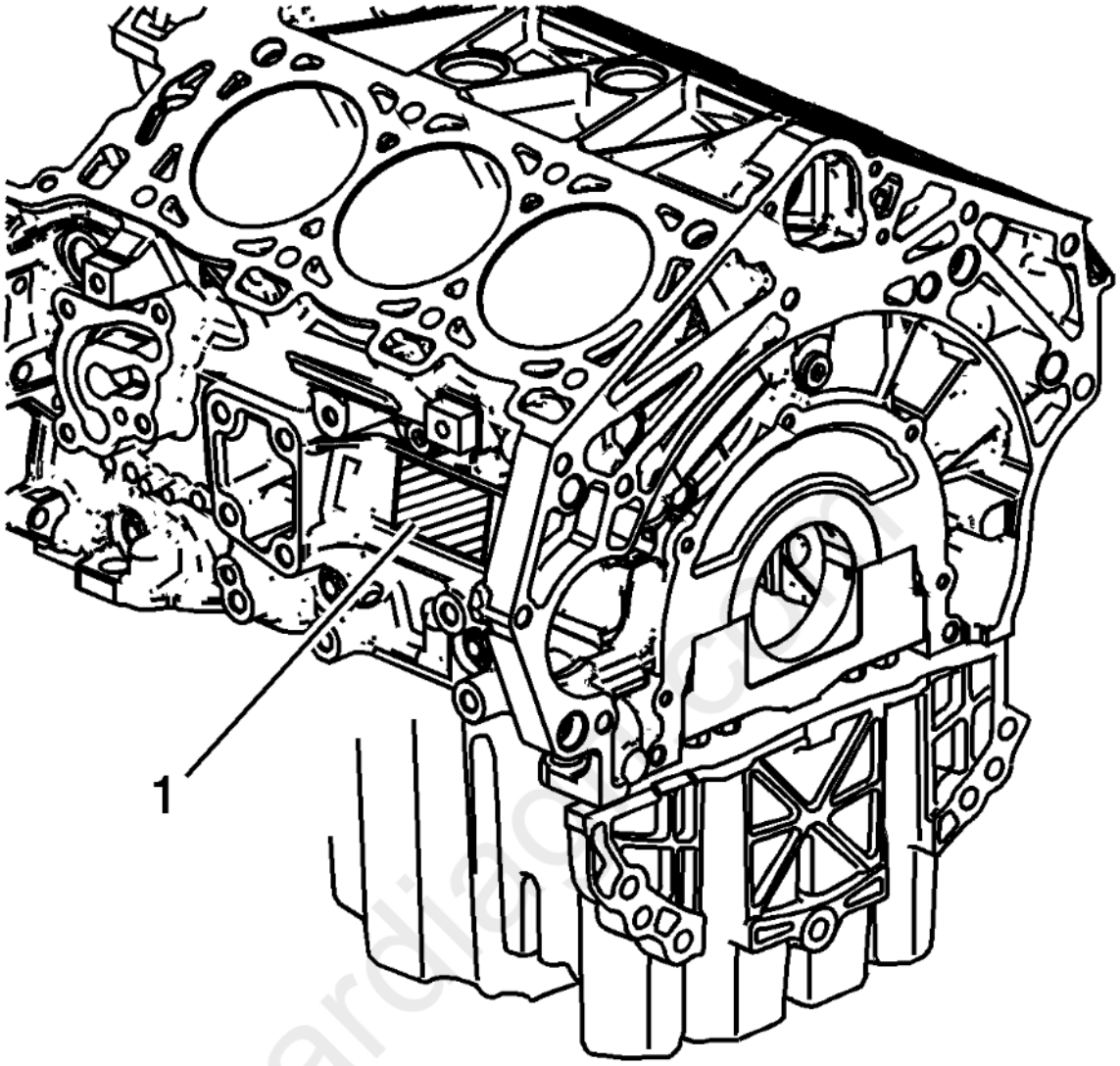

Fig. 16: Locating Left Rear Engine Traceability Label
Courtesy of GENERAL MOTORS COMPANY

One engine traceability label (1) is located on the left rear side of the engine block. This label is used in engine and vehicle assembly plants and is not intended to be permanent. If it is missing refer back to the engine block VIN pad for the permanent ID.

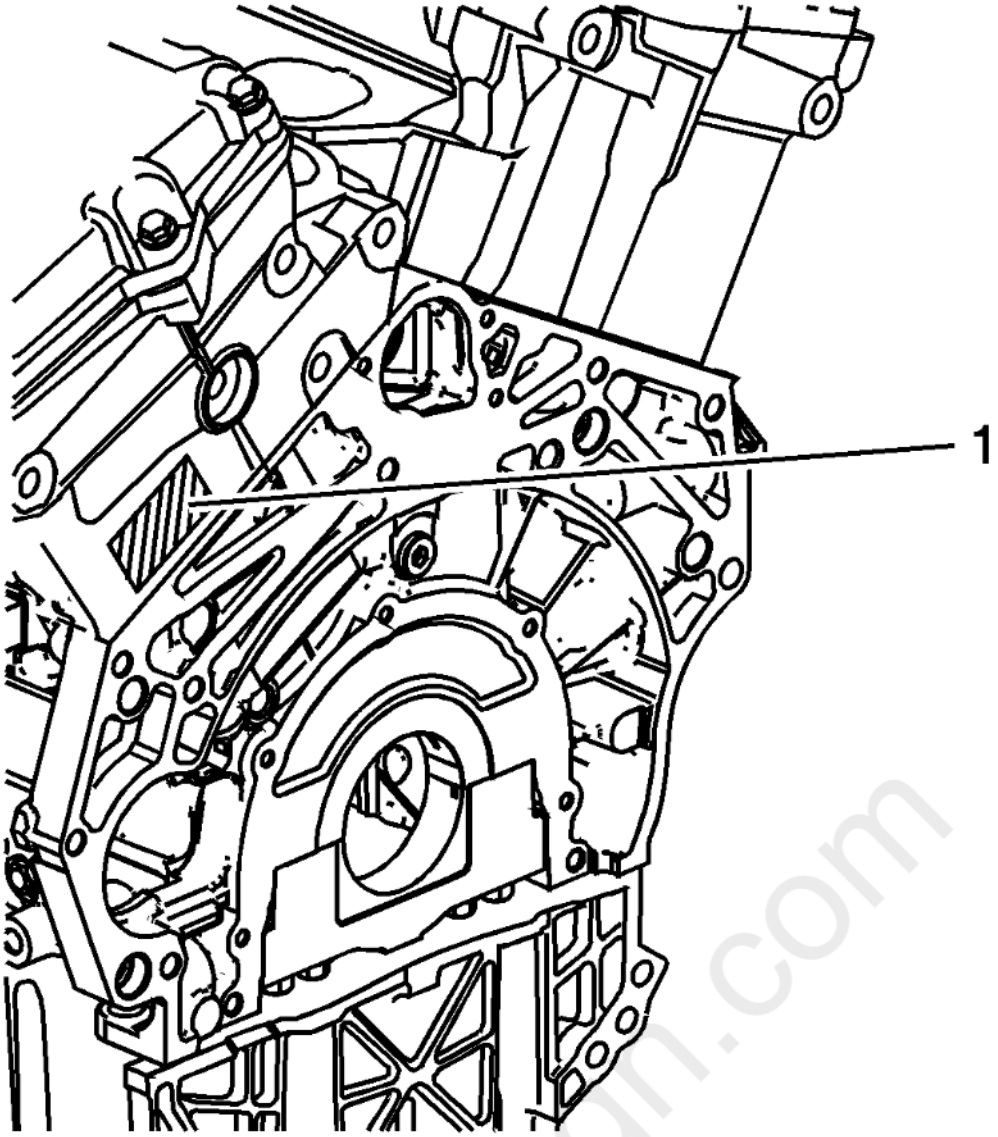

Fig. 17: View Of Engine Traceability Label On Left Cylinder Head
Courtesy of GENERAL MOTORS COMPANY

Another engine traceability label (1) is located on the rear of the left cylinder head. This label is used in engine and vehicle assembly plants and is not intended to be permanent. If it is missing refer back to the engine block VIN pad for the permanent ID.

Engine Verification Label

The engine verification label is located in two places on the engine and consists of the broadcast code and bar code. This label is used in engine and vehicle assembly plants and is not intended to be permanent. If it is missing refer back to the engine block VIN pad for the permanent ID.

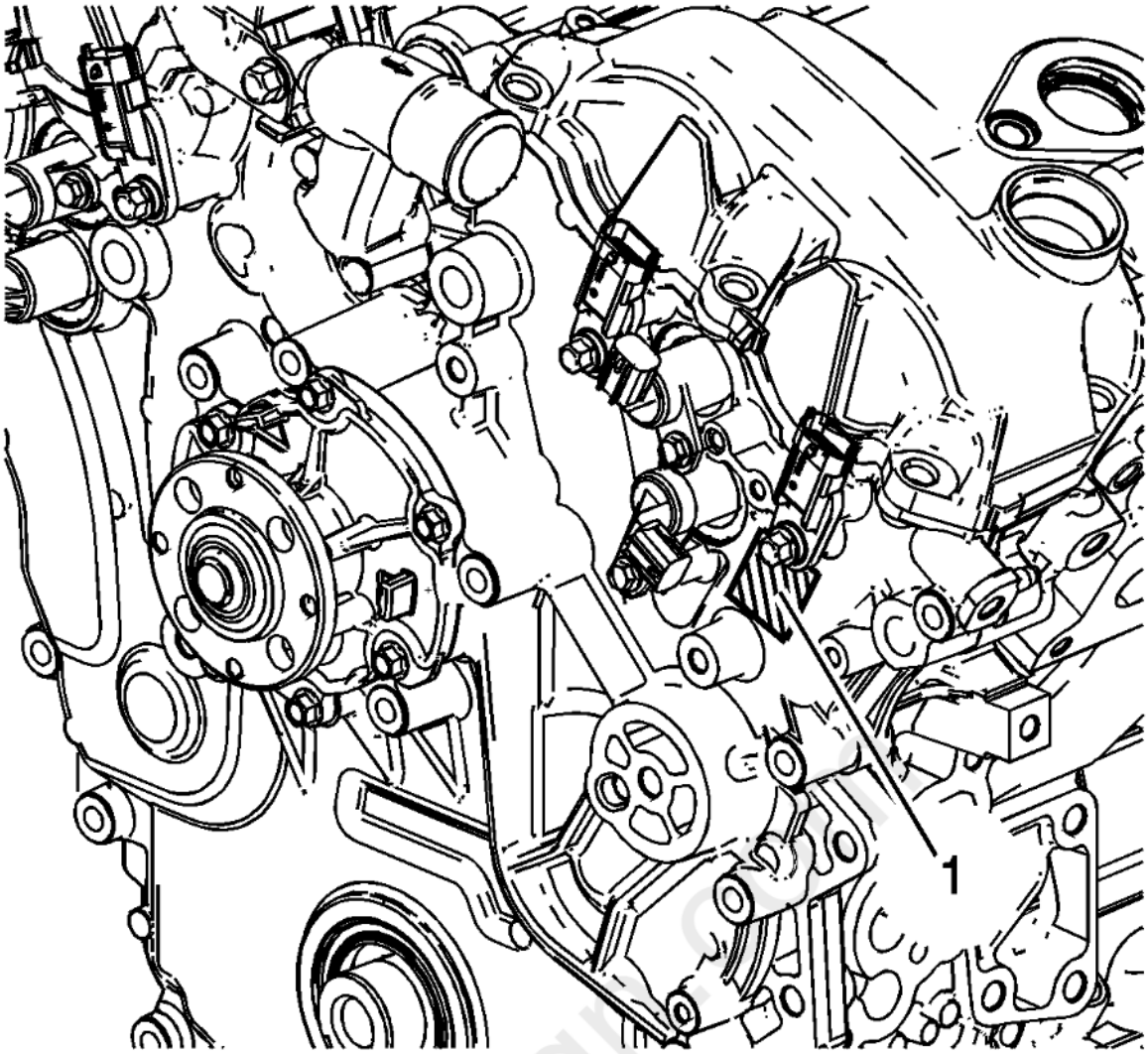

Fig. 18: Locating Left Engine Verification Label
Courtesy of GENERAL MOTORS COMPANY

One engine verification label (1) is located on the left side of the engine front cover below the exhaust camshaft position sensor. This label is used in engine and vehicle assembly plants and is not intended to be permanent. If it is missing refer back to the engine block VIN pad for the permanent ID.

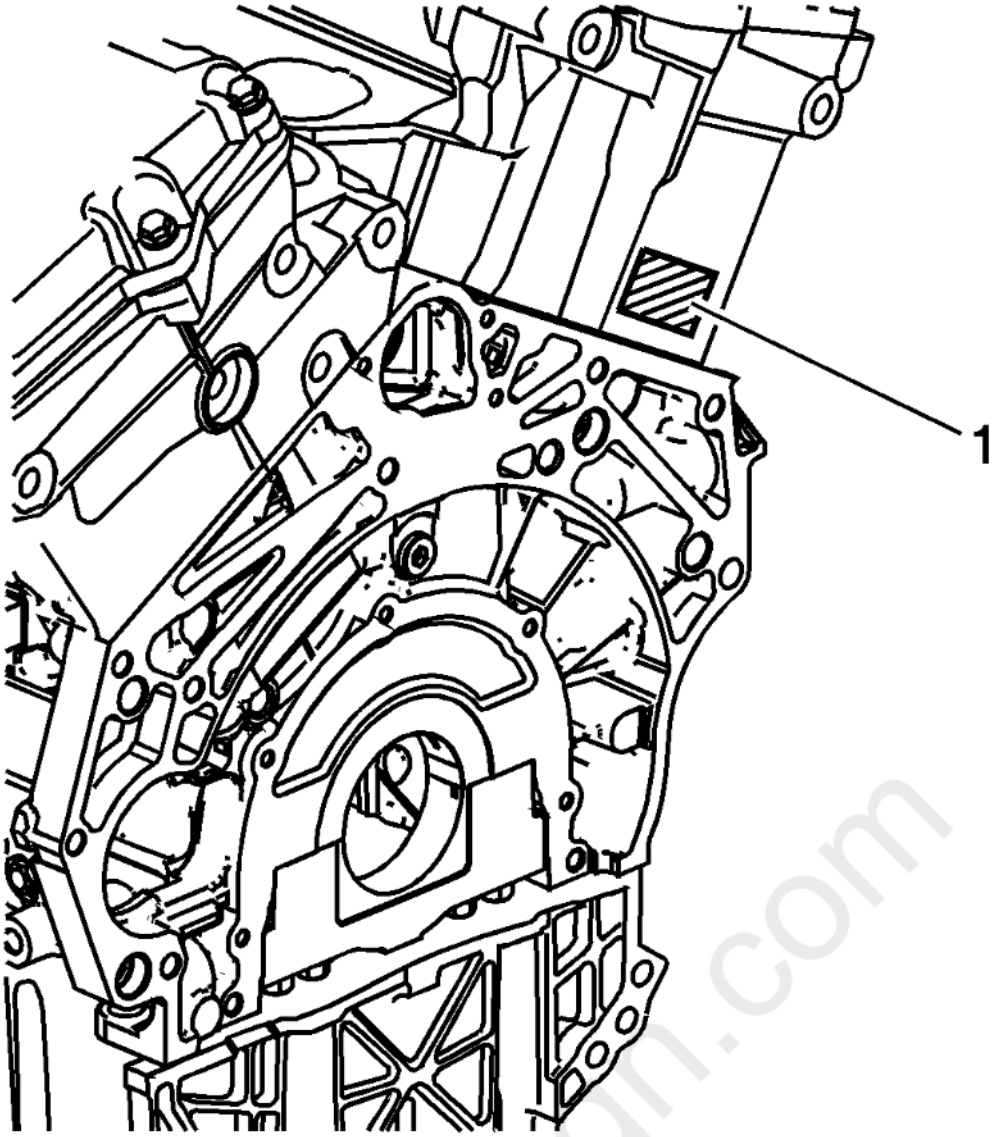

Fig. 19: Identifying Engine Verification Label On Rear Of Right Cylinder Head
Courtesy of GENERAL MOTORS COMPANY

Another engine verification label (1) is located on the rear of the right cylinder head. This label is used in engine and vehicle assembly plants and is not intended to be permanent. If it is missing refer back to the engine block VIN pad for the permanent ID.

---

carmagn.com

DESCRIPTION AND OPERATION

CRANKCASE VENTILATION SYSTEM DESCRIPTION

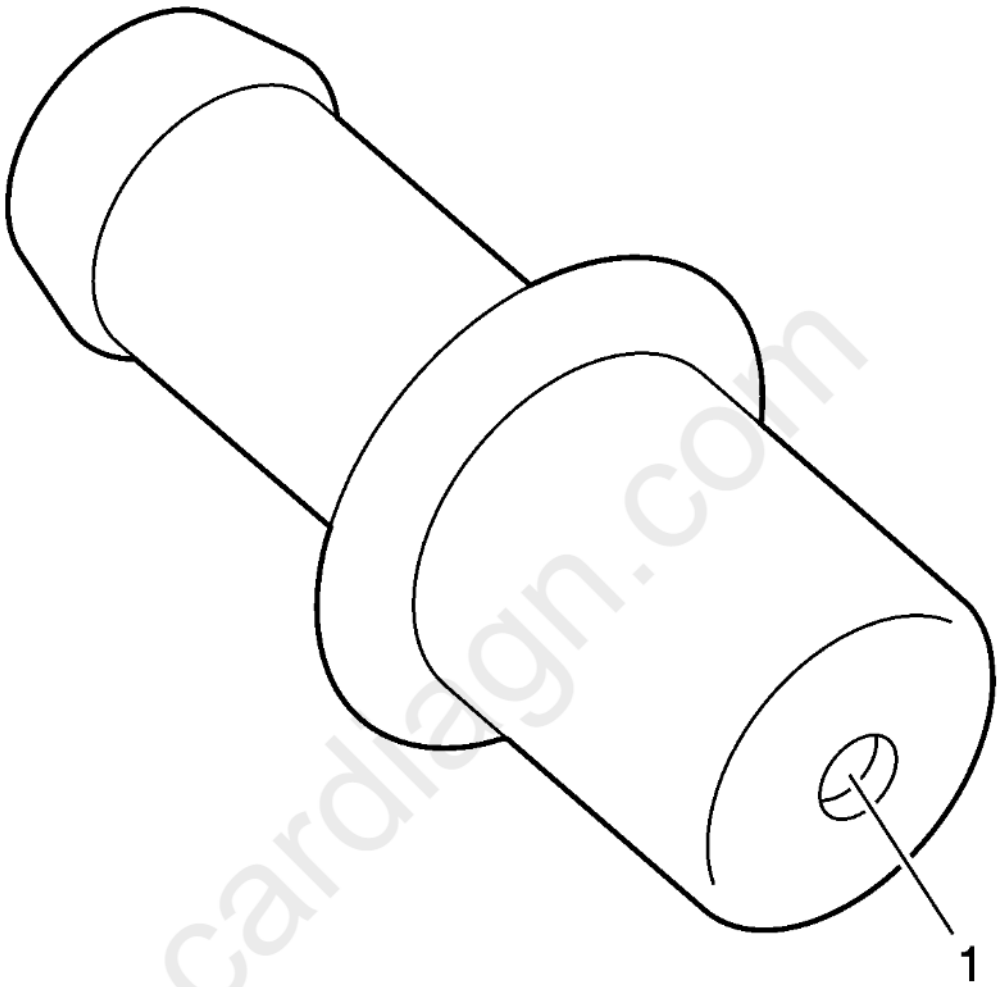

cardiagn.com

Fig. 1: PCV Orificed Tube
Courtesy of GENERAL MOTORS COMPANY

A crankcase ventilation system is used to consume crankcase vapors created during the combustion process instead of venting them to the atmosphere.

Fresh air is supplied through a filter to the crankcase, the crankcase mixes the fresh air with the blow-by gases and then passed through a positive crankcase ventilation (PCV) orificed tube into the intake manifold.

The PCV orificed tube restricts the flow rate of the blow-by gases using an orifice (1) located at the end of the tube. If abnormal operating conditions arise, the system is designed to allow excessive amounts of blow-by gases to back flow through the crankcase vent tube into the throttle body in order to be consumed by normal combustion.

DRIVE BELT SYSTEM DESCRIPTION

The drive belt system consists of the following components:

- The drive belt

- The drive belt tensioner
- The drive belt idler pulley
- The crankshaft balancer pulley
- The accessory drive component mounting brackets
- The accessory drive components
    - The power steering pump, if belt driven
    - The generator
    - The A/C compressor, if equipped
    - The engine cooling fan, if belt driven
    - The water pump, if belt driven
    - The vacuum pump, if equipped
    - The air compressor, if equipped

The drive belt system may use 1 belt or 2 belts. The drive belt is thin so that it can bend backwards and has several ribs to match the grooves in the pulleys. The drive belts are made of different types of rubbers, chloroprene or EPDM, and have different layers or plies containing either fiber cloth or cords for reinforcement.

Both sides of the drive belt may be used to drive the different accessory drive components. When the back side of the drive belt is used to drive a pulley, the pulley is smooth.

The drive belt is pulled by the crankshaft balancer pulley across the accessory drive component pulleys. The spring loaded drive belt tensioner keeps constant tension on the drive belt to prevent the drive belt from slipping. The drive belt tensioner arm will move when loads are applied to the drive belt by the accessory drive components and the crankshaft.

The drive belt system may have an idler pulley, which is used to add wrap to the adjacent pulleys. Some systems use an idler pulley in place of an accessory drive component when the vehicle is not equipped with the accessory.

ENGINE COMPONENT DESCRIPTION

The High Feature V6 (VIN Code Identifier "3" for both cars and trucks) RPO LFX is a 3.6 Liter VVT (Variable Valve Timing) engine with direct injection. The LFX has E85-compatible valves and seats with special materials and coatings that require slightly different service procedures from gasoline valves. The direct injection system places the high pressure injectors in the cylinder heads. This engine incorporates 2 intake and 2 exhaust valves per cylinder, and uses a dual overhead cam design with individual intake and exhaust camshafts. A camshaft position actuator is mounted on each camshaft. The cylinders are arranged in 2 banks of 3 with a 60 degree included angle. The right bank of cylinders are number 1-3-5 and the left bank of cylinders are 2-4-6, viewed from the flywheel end of the engine. The engine firing order is 1-2-3-4-5-6.

Crankcase

The cylinder block is constructed of aluminum alloy by precision sand-casting with cast in place iron cylinder liners. Each main bearing cap incorporates 6 bolts bolting the cap into the engine block. Along with 2 outer and 2 inner bolts, 2 side bolts are used in the deep skirt block. To prevent aeration, oil return from the valvetrain and cylinder heads is channeled away from the rotating and reciprocating components through oil drain back passages incorporated into the cylinder heads and engine block. Pressure-actuated piston oil cooling jets are mounted between opposing cylinders. A knock sensor is located on the each side of the exterior of the engine block. The crankshaft position sensor is located on the right side of the exterior of the engine block.

Crankshaft

The crankshaft is a hardened, forged steel design with 4 main bearings. Crankshaft thrust is controlled by the upper portion of number 3 main bearing. The crankshaft position reluctor wheel is pressed onto the rear of the crankshaft in front of the rear main journal. A micro encapsulated adhesive is used on the reluctor wheel to aid retention. The crankshaft is internally balanced, and has an integral oil pump drive machined into the nose in front of the front main journal.

Connecting Rods and Pistons

The connecting rods are steel and have full floating piston pins. The piston pins are a slip fit in the bronze bushed connecting rod. Round wire retainers are used to retain the piston pin into the piston. The cast aluminum pistons incorporate a polymer-coated skirt to reduce friction. The piston uses two low tension compression rings and one multi-piece oil control ring. The top of the piston contains a shaped portion for the direct injection system to aid in fuel-air charge mixture and even combustion.

Camshaft Drive System

The camshaft drive system consists of one primary timing drive chain driven by the crankshaft sprocket. The primary timing drive chain drives two intermediate drive shaft sprockets. Each oil-pressure-fed intermediate drive shaft sprocket drives separate secondary timing drive chains. Each secondary timing drive chain drives the respective cylinder head's intake and exhaust camshaft position actuators.

The primary timing drive chain uses two stationary timing drive chain guides and a hydraulically-actuated tensioner with built-in shoe. The tensioner minimizes timing drive chain noise and provides accurate valve action by keeping slack out of the timing drive chains and continuously adjusting for timing drive chain wear. The tensioner incorporates a plunger that adjusts out with wear allowing only a minimal amount of backlash. The tensioner is equipped with an oiling jet to spray oil onto the timing components during engine operation. The secondary timing drive chains use a stationary timing drive chain guide and movable timing drive chain shoe. The secondary timing drive chain shoe is under tension from a hydraulically-actuated tensioner. All tensioners are sealed to the head or block using a rubber coated steel gasket. The gasket traps an adequate oil reserve to ensure quiet start-up.

Camshaft Position Actuator System

The engine incorporates a camshaft position actuator for each intake and exhaust camshaft. Camshaft phasing changes valve timing as engine operating conditions vary. Dual camshaft phasing allows the further optimization of performance, fuel economy and emissions without compromising overall engine response and driveability. Variable valve timing also contributes to a reduction in exhaust emissions. It optimizes exhaust and inlet valve overlap and eliminates the need for an exhaust gas recirculation (EGR) system.

The camshaft position actuator is a hydraulic vane-type actuator that changes the camshaft lobe timing relative to the camshaft drive sprocket. Engine oil is directed by a camshaft position actuator oil control valve to the appropriate passages in the camshaft position actuator. Oil acting on the vane in the camshaft position actuator rotates the camshaft relative to the sprocket. At idle, both camshafts are at the default or "home" position. At this position, the exhaust camshaft is fully advanced and the intake is fully retarded to minimize valve overlap for smooth idle. An internal lock pin locks the inner rotor to the outer camshaft position actuator housing at idle and maintains this position during start-up conditions. Under other engine operating conditions, the camshaft position actuator is controlled by the engine control module (ECM) to deliver optimal intake and exhaust valve timing for performance, driveability and fuel economy. The camshaft position actuator incorporates an integral trigger wheel, which is sensed by the camshaft position sensor mounted in the front cover, to accurately determine the position of each camshaft. The exhaust camshaft position actuator has a different internal configuration than the intake camshaft position actuator since the exhaust camshaft position actuator phases in the opposite direction relative to the inlet camshaft position actuator.

The camshaft position actuator oil control valve (OCV) directs oil from the oil feed in the head to the appropriate camshaft position actuator oil passages. There is one OCV for each camshaft position actuator. The OCV is sealed and mounted to the front cover. The ported end of the OCV is inserted into the cylinder head with a sliding fit. A filter screen protects each OCV oil port from any contamination in the oil supply.

The camshaft front journal has several drilled oil holes to allow camshaft position actuator control oil to transfer from the cylinder head to the camshaft position actuator. The center camshaft bolt hole is counterbored to allow oil to flow around the camshaft bolt and to the camshaft position actuator. Oil in this oil passage is used to move the camshaft position actuator to the default or home position.

Radially outward from the center of the journal is a set of 4 drilled camshaft position actuator oil holes. Oil in this group of oil holes is used to move the camshaft from the default position to a specific set position as determined by the ECM. Seal rings are used at the front and rear of the front camshaft

journal to prevent oil leakage from the camshaft position actuator hydraulic system. The seal is made from a plastic compound that resists wear and has a diagonal end gap to enhance sealing. The camshaft position actuator is mounted to the front end of the camshaft and the timing notch in the nose of the camshaft aligns with the dowel pin in the camshaft position actuator to ensure proper cam timing and camshaft position actuator oil hole alignment.

Cylinder Heads

The cylinder heads are cast aluminum with powdered metal valve seat inserts and valve guides. The cylinder heads also feature integrated exhaust manifolds; the exhaust manifolds are incorporated into the head casting. Two intake valves and two exhaust valves are actuated by roller finger followers pivoting on a stationary hydraulic lash adjuster (SHLA). In the E85 fuel compatible LFX engine, the valves and seats are constructed with specialized materials and coatings to perform properly in the E85 fuel environment. The intake valves in the LFX engine are slightly larger than those in the LFW engine to allow the additional air necessary for a 3.6L displacement engine.

Separate exhaust and intake camshafts are supported by bearings machined into the cylinder head. The front camshaft bearing cap is used as a thrust control surface for each camshaft. Each spark plug is shielded by a tube that is pressed into the cylinder head. Each spark plug ignition coil is also mounted through the spark plug tube. The engine coolant temperature (ECT) sensor is threaded into the cylinder head. With direct injection, the high pressure injectors are located in machined bores below the intake ports. A stainless steel, high pressure fuel rail is attached to the intake side of the head.

Induction System

The intake manifold assembly is used to deliver a dry-air charge to the combustion chamber. Fuel is introduced directly to the cylinder during the intake stroke. As the piston approaches top-dead center, the air-fuel mixture is ignited by the spark plug. An electronically controlled throttle (ETC), through the ECM, coordinates the input from the driver with various control components.

Right and Left Bank Designation

Right hand (RH) and left hand (LH) designation through the engine mechanical section are viewed from the rear, non-front-cover side, of the engine or from inside the vehicle. These banks are also referred to as Bank 1 (RH) and Bank 2 (LH).

LUBRICATION DESCRIPTION

A structural diecast aluminum oil pan incorporates an oil suction tube and a windage tray. The oil suction tube is bolted into the oil pan and seals to the bottom of the block with O-ring gasket. The windage tray is bolted to the upper portion of the oil pan and reduces friction losses at high speed.

A crankshaft driven gerotor oil pump with internal pressure-relief valve is mounted to the front of the engine block and pulls oil from the oil suction tube through the lower passage in the engine block. The oil pump then directs the flow of pressurized oil back through the upper passage in the block to the left side of the engine block where the oil filter adapter is mounted.

An oil filter adapter is mounted with a gasket to the left side of the engine block.

RWD Applications : The oil filter adapter incorporates a top-access, cartridge style oil filter. The filter is accessed through a screw on cap with an O-ring gasket. The oil filter adapter cap has a built-in oil bypass valve. The oil filter adapter housing incorporates a drain back control valve and a threaded oil pressure sending unit. Oil flows through the lower passage in the oil filter adapter up to and through the oil filter cartridge. Filtered oil travels back through the upper passage of the oil filter adapter and back into the engine block.

FWD Applications : An oil filter adapter is mounted with a gasket to the left side of the engine block. The oil filter adapter incorporates a bottom-access, spin-on oil filter. The oil filter adapter housing incorporates a threaded oil pressure sending unit. Oil flows through the lower passage in the oil filter adapter to and through the oil filter. Filtered oil travels back through the upper passage of the oil filter adapter and back into the engine block.

Oil is directed up and across the engine block front through several drilled passages. These front passages feed oil to each cylinder head, oil to the passage for the main bearings and piston oil jets, oil to

the right and left secondary idler sprockets, and oil to the primary timing drive chain tensioner.

Each cylinder head passage directs oil into the cylinder head where it is directed to oiling circuits for the stationary hydraulic lifter assemblies (SHLAs) and the camshaft bearing journals. Oil is also directed through 2 passages each with a spring-loaded check-ball valve to the 2 chambers where the camshaft position actuator oil control solenoid valves are mounted. Each chamber contains a camshaft position actuator oil control solenoid valve with built-in oil filter screen. One camshaft position actuator oil control solenoid valve is used to control the exhaust camshaft position actuator and 1 camshaft position actuator oil control solenoid valve is used to control the intake camshaft position actuator. The engine control module (ECM) electrically controls each camshaft position actuator oil control solenoid valve. When energized by the ECM the camshaft position actuator oil control solenoid valve directs oil to pass up through the cylinder head front camshaft bearing cap. Oil passes through the camshaft bearing cap passage into oil holes drilled into the side of the front camshaft journal and onto the front of the camshaft mounting surface. Oil passes through to matching passages in the camshaft position actuator. Oil is directed by the camshaft position actuator oil control solenoid valve to the appropriate passage in the system to pressurize oil on the vanes on the inside of the of the camshaft position actuator. Oil acting on the vanes rotates the camshaft mounted to the inner camshaft position actuator rotor relative to the sprocket mounted to the outer camshaft position actuator housing. An internal lock pin locks the inner rotor to the outer camshaft position actuator housing at idle and maintains the camshaft position actuator in the home or default position during start-up conditions. Oil pressure directed by the camshaft position actuator oil control solenoid valve unlocks the pin and allows the camshaft position actuator to function. An additional passage in the cylinder head also directs oil to the secondary timing drive chain tensioner mounted to each cylinder head.

The oil passage that supplies oil to the main bearings also supplies oil to pressure-actuated piston-cooling oil jets. Each oil jet is mounted between opposing cylinder bores and directs oil to the 2 bores to provide extra cooling and control piston temperatures.

Oil is directed from the front passages to the front of the block where the right and left secondary idler sprockets and the primary timing drive chain tensioner are mounted. Each camshaft timing drive chain tensioner relies on a gasket in order to maintain an oil reserve after the engine is turned OFF. All camshaft timing drive chain tensioners incorporate a small oil jet to supply an oil spray onto the camshaft timing drive chain components.

Oil returns to the oil pan sump either through the camshaft timing drive chain area or through the cast oil drain back passages on the outboard walls of the cylinder heads and engine block.

CLEANLINESS AND CARE

An automobile engine is a combination of many of the following surfaces:

- Machined
- Honed
- Polished
- Lapped

The tolerances of these surfaces are measured in the ten-thousandths of an inch. When you service any internal engine part, cleanliness and care are important. Apply a liberal coating of engine oil to the friction areas during assembly in order to protect and lubricate the surfaces on initial operation. Throughout this section, practice proper cleaning and protection procedures to the machined surfaces and to the friction areas.

CAUTION: **Engine damage may result if an abrasive paper, pad, or motorized wire brush is used to clean any engine gasket surfaces.**

Whenever you remove the valve train components, keep the components in order. Follow this procedure in order to install the components in the same locations and with the same mating surfaces as when removed.

WARNING: **Refer to Battery Disconnect Warning .**

Disconnect the negative battery cables before you perform any major work on the engine.

cardiagn.com

SEPARATING PARTS

In addition to the room temperature vulcanizing (RTV) sealant's sealing capabilities, the RTV sealants may form an adhesive bond between the components. This may make the components difficult to remove or to separate. Pry points have been provided in the components that utilize RTV as the sealing system. Pry points are positioned so they can be used without damaging other vital engine components.

REPLACING ENGINE GASKETS

Special Tools

EN-28410 Gasket Remover

For equivalent regional tools, refer to **Special Tools** .

Gasket Reuse and Applying Sealant

- Do not reuse any gasket unless specified.
- Gaskets that can be reused will be identified in the service procedure.
- Do not apply sealant to any gasket or sealing surface unless specified in the service procedure.

Separating Components

- Use incorporated pry points to separate components using an RTV sealing system.
- Do not try to separate RTV sealed components by prying against other engine components.
- Pry points are positioned so no other vital engine components are damaged when they are used.

Cleaning Gasket Surfaces

- Use care to avoid gouging or scraping the sealing surfaces.
- Use a plastic or wood scraper in order to remove all the sealant from the components.

  Do not use any other method or technique to remove the sealant or the gasket material from a part.

- Do not use abrasive pads, sand paper, or power tools to clean the gasket surfaces.
  - These methods of cleaning can cause damage to the component sealing surfaces.
  - Abrasive pads also produce a fine grit that the oil filter cannot remove from the engine oil.

    This fine grit is an abrasive and can cause internal engine damage.

Assembling Components

- Assemble components using only the sealant, or equivalent, that is specified in the service procedure.
- Sealing surfaces must be clean and free of debris or oil.
- Specific components such as crankshaft oil seals or valve stem oil seals may require lubrication during assembly.
- Components requiring lubrication will be identified in the service procedure.
- Apply only the amount of sealant specified in the service procedure to a component.
- Do not allow the sealant to enter into any blind threaded holes, as the sealant may prevent the fastener from clamping properly or cause component damage when tightened.

  NOTE: **Do not overtighten the fasteners.**

- Tighten the fasteners to the proper specifications.

USE OF ROOM TEMPERATURE VULCANIZING (RTV) AND ANAEROBIC SEALANT

Cleaning Mating Part Surfaces for RTV Joints

carmagr.com

RTV sealant depends greatly on adhesion to the mating parts in order to form and maintain a robust sealed joint. As with any adhesion system, proper surface preparation of the bonded parts is extremely important to ensure good adhesion over the life of the product.

CAUTION: **When cleaning the sealing surfaces of engine components, DO NOT use bristle discs, abrasive pads, wire wheels or surface conditioning discs. These types of devices should not be used because they produce a very fine grit that is abrasive and known to cause internal engine damage. The bristle discs and pads are embedded with abrasive material and wear down as they clean, continually exposing fresh abrasive to the surface of the component.**

Abrasive pads, wire wheels and bristle discs can remove enough metal to affect the engine front cover, cylinder head, engine block, oil pan rail, and intake manifold runner surface flatness, which can then result in engine coolant leaks, engine oil leaks and air leaks. It takes about 15 seconds to remove 0.203 mm (0.008 in) of metal with an abrasive pad.

Abrasive pads, wire wheels and bristle discs used with high speed grinders produce airborne debris that can travel throughout the shop contaminating other work being performed outside of the immediate work area.

When cleaning engine gasket sealing surfaces and/or cleaning parts from an engine that are to be reused, surface conditioning discs, typically constructed of woven fiber or molded bristles that contain abrasives, such as a high amount of aluminum oxide, should NOT be used. The use of such surface conditioning discs dislodges aluminum oxide from the disk and metal component particles, which can lead to premature engine bearing failure. The presence of aluminum oxide in engine oil has been shown to cause premature engine bearing failure. In some cases, this failure occurs in as little as 1, 600 km (1, 000 mi) or less after the repair has been made.

Surface conditioning discs may grind the component material and embed it into the disc. This can result when more aggressive grinding of the gasket surface takes place.

General Motors strongly recommends using a plastic razor blade, plastic gasket scraper, a wood scraper or a non-metallic scraper to remove all sealer/gasket material on the surface of engine components that are to be reused. Do not use any other method or technique to remove the sealant or the gasket material from a part.

- Do not gouge or scratch any engine sealing surface during the cleaning process.
- It is not necessary to remove every speck of the old sealer.

To remove the old RTV sealant from the sealing surface, spray GM Low VOC Cleaner or an equivalent, on the mating surfaces and allow it to soak to loosen the old gasket material. Use care to avoid getting GM Low VOC Cleaner in any area other than the mating surface to be cleaned.

Use a plastic razor blade, that mounts in a scraper device or a hand held plastic razor blade, to remove old RTV sealant from a sealing surface. Use a new blade for each corresponding engine component surface. Hold the blade as parallel to the flat surface as possible.

To properly clean the sealing surfaces prior to reassembly, spray GM Low VOC Cleaner on a folded lint free shop cloth. Wipe the mating surfaces on the engine and front cover and rotate the shop cloth until there are no more visible signs of contamination on the cloth.

After the final cleaning of the parts, allow up to 5 minutes for the components to dry before applying new RTV sealant.

NOTE: **After the final cleaning with GM Low VOC Cleaner and before reassembly, DO NOT touch the cleaned surfaces with your hand. Oils from your skin WILL CONTAMINATE the surface and prevent proper bonding of the new RTV sealant.**

Typical Applications

This procedure is intended for use in the following operations:

- Building of engines in a manual low volume build process where the use of assembly lubricants and other typical conditions exist which may contaminate the component sealing surfaces in an RTV joint.
- Cleaning of surfaces contaminated with oil or other substance during the assembly operation as a special case event.

In the typical situation, both the part being assembled, and the assembly to which it is to be sealed will be cleaned. An example is an oil pan assembled to a block/front cover/rear cover assembly using an RTV seal applied to the pan or the block. Both the pan and the block assembly should be cleaned prior to RTV application.

Any loose gaskets that are part of the RTV joint should not be cleaned unless it is known that they have been contaminated during the build process. Examples of loose gaskets are intake side and end seals which contact RTV used to seal a T-joint.

Assemblies supplied to GM with gaskets in place should not be cleaned unless they are known to be contaminated during the build process. Examples are rocker/cam covers with press in place gaskets using RTV at corners or T-joints.

Materials Needed

Use clean dry lint free cloths to wipe surface with approved solvent based cleaner. Examples are:

- GM Good Wrench Service Low VOC Brake Parts Cleaner
- AC Delco Non-Chlorinated Brake Parts Cleaner
- Loctite ODC - Free Cleaner & Degreaser

Procedure:

1. Identify the surfaces to which the RTV will come into contact in the assembled joint.
2. Using an approved solvent based cleaner, thoroughly soak an appropriate portion of a clean, dry cloth. Immediately wipe the surfaces with the cloth to remove any residue of oil, soap, etc.
3. Repeat step 2 using a clean portion of the cloth as many times as required until the cleanliness of the cloth after wiping the surface becomes constant in appearance. There is typically some discoloration of the cloth after wiping however a clean surface should produce the same level of discoloration with successive wiping with a clean cloth and solvent.
4. If crevices exist in the joint such that wiping the surface would not be sufficient to clean the crevice, the approved solvent based cleaner should be directly sprayed on the joint to ensure wetting of the surfaces and removal of the contaminant. DO NOT spray rubber components directly. Care must be used to avoid getting solvent in areas other than necessary to clean the joint. Then continue with step 3.
5. Allow the surfaces to dry for a minimum of 1 minute or longer if necessary for the solvent to evaporate from the surface.
6. Do not touch the cleaned surface with anything prior to RTV application.
7. The surface is now prepared for RTV application.

Sealant Types

NOTE: **The correct sealant and amount of sealant must be used in the proper location to prevent oil leaks, coolant leaks, or the loosening of the fasteners. DO NOT interchange the sealants. Use only the sealant, or equivalent, as specified in the service procedure.**

The following two major types of sealant are commonly used in engines:

- Room Temperature Vulcanizing (RTV)
- Anaerobic sealant, which include the following:
  - Gasket Eliminator
  - Pipe Sealant

- Threadlock

Room Temperature Vulcanizing (RTV) Sealer

This type of sealant is used where two components, such as the intake manifold and the engine block, are assembled together.

Use the following information when using RTV sealant:

- Do not use RTV sealant in areas where extreme temperatures are expected. These areas include:
  - The exhaust manifold
  - The head gasket
  - Any other surfaces where a different type of sealant is specified in the service procedure
- Do not use RTV sealant unless the ambient air temperature is at least 18Â°C (65Â°F) degrees or higher.
- Always follow all the safety recommendations and the directions that are on the RTV sealant container.
- Use a plastic or wood scraper in order to remove all the RTV sealant from the components.

CAUTION: **Do not allow the RTV sealant to enter any blind threaded hole. RTV sealant that is allowed to enter a blind threaded hole can cause hydraulic lock of the fastener when the fastener is tightened. Hydraulic lock of a fastener can lead to damage to the fastener and/or the components. Hydraulic lock of a fastener can also prevent the proper clamping loads to be obtained when the fastener is tightened. Improper clamping loads can prevent proper sealing of the components allowing leakage to occur. Preventing proper fastener tightening can allow the components to loosen or separate leading to extensive engine damage.**

NOTE: **The bead size is critical and is easier to maintain consistency and application with a RTV dispensing tool. This also helps to eliminate waste.**

- The surfaces to be sealed must be clean and dry.
- Use a RTV sealant bead size as specified in the service procedure.
- Apply the RTV sealant bead to the inside of any bolt holes areas.

NOTE: **Do not wait for the RTV sealant to skin over.**

- Assemble the components while the RTV sealant is still wet to the touch, within 10 minutes.

NOTE: **Do not overtighten the fasteners.**

- Tighten the fasteners in sequence, if specified, and to the proper torque specifications.

Anaerobic Type Gasket Eliminator Sealant

Anaerobic type gasket eliminator sealant cures in the absence of air. This type of sealant is used where two rigid parts, such as castings, are assembled together. When two rigid parts are disassembled and no sealant or gasket is readily noticeable, then the two parts were probably assembled using an anaerobic type gasket eliminator sealant.

Use the following information when using gasket eliminator sealant:

- Always follow all the safety recommendations and directions that are on the gasket eliminator sealant container.
- Apply a continuous bead of gasket eliminator sealant to one flange.
- The surfaces to be sealed must be clean and dry.

CAUTION: **Do not allow the sealant to enter a blind hole. The sealant may prevent the fastener from achieving proper clamp load, cause component damage when the fastener is tightened, or lead to component failure.**

- Do not allow the gasket eliminator sealed joint to cure more than 5 minutes before torquing to specification. This will result in an incorrect clamp load of assembled components.
- Do not overtighten the fasteners.
  - Apply the gasket eliminator sealant evenly to get a uniform thickness of the gasket eliminator sealant on the sealing surface.
  - Tighten the fasteners in sequence, if specified, and to the proper torque specifications.
  - After properly tightening the fasteners, remove the excess gasket eliminator sealant from the outside of the joint.

Anaerobic Type Threadlock Sealant

Anaerobic type threadlock sealant cures in the absence of air. This type of sealant is used for threadlocking and sealing of bolts, fittings, nuts, and studs. This type of sealant cures only when confined between two close fitting metal surfaces.

Use the following information when using threadlock sealant:

- Always follow all safety recommendations and directions that are on the threadlock sealant container.
- The threaded surfaces to be sealed must be clean and dry.
- Apply the threadlock sealant as specified on the threadlock sealant container.

NOTE:

- **Do not allow the threadlock sealant to cure more than 5 minutes before torquing to specification. This will result in an incorrect clamp load of assembled components.**
- **Do not overtighten the fasteners.**

- Tighten the fasteners in sequence, if specified, and to the proper torque specifications.

Anaerobic Type Pipe Sealant

Anaerobic type pipe sealant cures in the absence of air and remains pliable when cured. This type of sealant is used where two parts are assembled together and require a leak proof joint.

Use the following information when using pipe sealant:

- Do not use pipe sealant in areas where extreme temperatures are expected. These areas include:
  - The exhaust manifold
  - The head gasket
  - Surfaces where a different sealant is specified
- Always follow all the safety recommendations and the directions that are on the pipe sealant container.
- The surfaces to be sealed must be clean and dry.
- Use a pipe sealant bead of the size or quantity as specified in the service procedure.

CAUTION: **Do not allow the sealant to enter a blind hole. The sealant may prevent the fastener from achieving proper clamp load, cause component damage when the fastener is tightened, or lead to component failure.**

- Apply the pipe sealant bead to the inside of any bolt hole areas.
- Apply a continuous bead of pipe sealant to one sealing surface.

cardiagn.com

NOTE: **Do not overtighten the fasteners.**

- Tighten the fasteners in sequence, if specified, and to the proper torque specifications.

TOOLS AND EQUIPMENT

- Special tools are listed and illustrated throughout this section, with a complete listing at the end of the section. These tools, or their equivalents, are designed to quickly and safely accomplish the operations for which they are intended. The use of these special tools also minimize possible damage to engine components. Some precision measuring tools are required for inspection of certain critical components. Torque wrenches and a torque angle meter are necessary for the proper tightening of various fasteners.
- To properly service the engine assembly, the following items should be readily available:
  - Approved eye protection and safety gloves
  - A clean, well-lit, work area
  - A suitable component cleaning tank
  - A compressed air supply
  - Trays or storage containers to keep components and fasteners organized
  - An adequate set of hand tools
  - Approved engine repair stand
  - An approved engine lifting device that adequately supports the weight of the components

cardiagn.com

DIAGNOSTIC INFORMATION AND PROCEDURES

SYMPTOMS - ENGINE MECHANICAL

Strategy Based Diagnostics

1. Perform a **Diagnostic System Check - Vehicle** before using the symptom tables, if applicable.
2. Review the system operations in order to familiarize yourself with the system functions. Refer to **Disassembled Views** , **Engine Component Description** , **Drive Belt System Description** , and **Lubrication Description** .

All diagnosis on a vehicle should follow a logical process. Strategy based diagnostics is a uniform approach for repairing all systems. The diagnostic flow may always be used in order to resolve a system problem. The diagnostic flow is the place to start when repairs are necessary. For a detailed explanation, refer to **Strategy Based Diagnosis** .

Visual/Physical Inspection

- Inspect for aftermarket devices which could affect the operation of the engine. Refer to **Checking Aftermarket Accessories** .
- Inspect the easily accessible or visible system components for obvious damage or conditions which could cause the symptom.
- Check for the correct oil level, proper oil viscosity, and correct filter application.
- Verify the exact operating conditions under which the concern exists. Note factors such as engine RPM, ambient temperature, engine temperature, amount of engine warm-up time, and other specifics.
- Compare the engine sounds, if applicable, to a known good engine and make sure you are not trying to correct a normal condition.

Intermittent

Test the vehicle under the same conditions that the customer reported in order to verify the system is operating properly.

Symptom List

Refer to a symptom diagnostic procedure from the following list in order to diagnose the symptom:

- **Base Engine Misfire without Internal Engine Noises**
- **Base Engine Misfire with Abnormal Internal Lower Engine Noises**
- **Base Engine Misfire with Abnormal Valve Train Noise**
- **Base Engine Misfire with Coolant Consumption**
- **Base Engine Misfire with Excessive Oil Consumption**
- **Engine Noise on Start-Up, but Only Lasting a Few Seconds**
- **Upper Engine Noise, Regardless of Engine Speed**
- **Lower Engine Noise, Regardless of Engine Speed**
- **Engine Noise Under Load**
- **Engine Will Not Crank - Crankshaft Will Not Rotate**
- **Engine Compression Test**
- **Oil Consumption Diagnosis**
- **Oil Pressure Diagnosis and Testing**

cardiagn.com

- Oil Leak Diagnosis

BASE ENGINE MISFIRE WITHOUT INTERNAL ENGINE NOISES

Cause	Correction
Abnormalities, severe cracking, bumps, or missing areas, in the accessory drive belt Abnormalities in the accessory drive system and/or components may cause engine RPM variations and lead to a misfire DTC. A misfire code may be present without an actual misfire condition.	Replace the drive belt. Refer to **Drive Belt Replacement** .
Worn, damaged, or mis-aligned accessory drive components or excessive pulley runout and may lead to a misfire DTC. A misfire code may be present without an actual misfire condition.	Inspect the components, repair or replace as required.
Loose or improperly installed engine flywheel or crankshaft balancer A misfire code may be present without an actual misfire condition.	Repair or replace the flywheel and/or balancer as required. Refer to **Automatic Transmission Flex Plate Replacement** , or **Crankshaft Balancer Replacement** .
Restricted exhaust system A severe restriction in the exhaust flow can cause significant loss of engine performance and may set a DTC. Possible causes of restrictions include collapsed or dented pipes or plugged mufflers and/or catalytic converters.	Repair or replace as required.
Improperly installed or damaged vacuum hoses	Repair or replace as required.
Improper sealing between the intake manifold and cylinder heads, intake manifold and plenum duct, plenum duct and water crossover, water crossover and throttle body and/or pressure relief valve and intake manifold.	Replace the intake manifold, plenum duct, gaskets, cylinder heads, throttle body and/or pressure relief valve as required.
Improperly installed or damaged MAP sensor and/or seal The sealing grommet of the MAP sensor should not be torn or damaged.	Repair or replace the MAP sensor as required.
Improperly installed or damaged EVAP purge solenoid and/or O-ring seal	Repair or replace the EVAP purge solenoid as required.
Worn or loose followers, valve rocker arms The follower, valve rocker arm, roller bearing should be intact and in the proper position.	Replace the followers, valve rocker arms, as required.
Stuck valves Carbon buildup on the valve stem can cause the valve not to close properly.	Repair or replace as required.
Excessively worn or mis-aligned timing chain or chains	Replace the timing chain or chains and sprockets as required.
Worn camshaft lobes	Replace the camshaft or camshafts and SHLAs (valve lifters).
Excessive oil pressure A lubrication system with excessive oil pressure may lead to excessive valve lifter pump-up and loss of compression.	• Perform an oil pressure test. Refer to **Oil Pressure Diagnosis and Testing**. • Repair or replace the oil pump as required.

cardiagn.com

Cause	Correction
Faulty cylinder head gaskets and/or cracking or other damage to the cylinder heads and engine block cooling system passages. Refer to **Diagnostic Starting Point - Vehicle** . Coolant consumption may or may not cause the engine to overheat.	• Inspect for spark plugs saturated by coolant. Refer to **Spark Plug Inspection** for the 3.6L engine. • Inspect the cylinder heads, engine block, and/or head gaskets. • Repair or replace as required.
Worn Piston Rings Oil consumption may or may not cause the engine to misfire.	• Inspect the spark plugs for oil deposits. Refer to **Spark Plug Inspection** for the 3.6L engine. • Inspect the cylinders for a loss of compression. Refer to **Engine Compression Test**. • Perform cylinder leak down and compression testing to identify the cause. • Repair or replace as required.
A damaged crankshaft reluctor wheel A damaged crankshaft reluctor wheel can result in different symptoms depending on the severity and location of the damage. • Systems with SEVERE reluctor ring damage may exhibit periodic loss of crankshaft position, stop delivering a signal, and then re-sync the crankshaft position. • Systems with SLIGHT reluctor ring damage may exhibit no loss of crankshaft position and no misfire may occur. However, a P0300 DTC may be set.	Replace the crankshaft as required.

BASE ENGINE MISFIRE WITH ABNORMAL INTERNAL LOWER ENGINE NOISES

Cause	Correction
Abnormalities, severe cracking, bumps or missing areas, in the accessory drive belt Abnormalities in the accessory drive system and/or components may cause engine RPM variations, noises similar to a faulty lower engine and also lead to a misfire condition. A misfire code may be present without an actual misfire condition.	Replace the drive belt. Refer to **Drive Belt Replacement** .
Worn, damaged, or mis-aligned accessory drive components or excessive pulley runout A misfire code may be present without an actual misfire condition.	Inspect the components, repair or replace as required.
Loose or improperly installed engine flywheel or crankshaft balancer A misfire code may be present without an actual misfire condition.	Repair or replace the engine flywheel and/or crankshaft balancer as required. Refer to **Automatic Transmission Flex Plate Replacement** , or **Crankshaft Balancer Replacement** .

carmagn.com

Cause	Correction
Worn or broken piston rings Oil consumption may or may not cause the engine to misfire.	• Inspect the spark plugs for oil deposits. Refer to **Spark Plug Inspection** . • Inspect the cylinders for a loss of compression. Refer to **Engine Compression Test**. • Perform cylinder leak down and compression testing to determine the cause. • Repair or replace as required.
Worn crankshaft thrust bearings Severely worn thrust surfaces on the crankshaft and/or thrust bearing may permit fore and aft movement of the crankshaft and create a DTC without an actual misfire condition.	Replace the crankshaft and bearings as required.

BASE ENGINE MISFIRE WITH ABNORMAL VALVE TRAIN NOISE

Cause	Correction
Worn or loose followers, valve rocker arms The follower, valve rocker arm, roller bearing should be intact and in the proper position.	Replace the followers, valve rocker arms, as required.
Stuck valves Carbon buildup on the valve stem can cause the valve not to close properly.	Repair or replace as required.
Excessively worn or mis-aligned timing chain or chains	Replace the timing chain or chains and sprockets as required.
Worn camshaft lobes	Replace the camshaft or camshafts and SHLAs (valve lifters).
Sticking SHLAs (lifters)	Replace the SHLAs as required.

BASE ENGINE MISFIRE WITH COOLANT CONSUMPTION

Cause	Correction
Faulty cylinder head gaskets and/or cracking or other damage to the cylinder heads and engine block cooling system passages. Refer to **Diagnostic Starting Point - Vehicle** . Coolant consumption may or may not cause the engine to overheat.	• Inspect for spark plugs saturated by coolant. Refer to **Spark Plug Inspection** for the 3.6L engine. • Perform a cylinder leak down test. • Inspect the cylinder heads and engine block for damage to the coolant passages and/or a faulty head gasket. • Repair or replace as required.

BASE ENGINE MISFIRE WITH EXCESSIVE OIL CONSUMPTION

Cause	Correction
Worn valves, valve guides and/or valve stem oil seals	1. Inspect the spark plugs for oil deposits. Refer to **Spark Plug Inspection** . 2. Repair or replace as required.

Mydiagram.com

Cause	Correction
Worn piston rings Oil consumption may or may not cause the engine to misfire.	1. Inspect the spark plugs for oil deposits. Refer to **Spark Plug Inspection** . 2. Inspect the cylinders for a loss of compression. Refer to **Engine Compression Test**. 3. Perform cylinder leak down and compression testing to determine the cause. 4. Repair or replace as required.

ENGINE NOISE ON START-UP, BUT ONLY LASTING A FEW SECONDS

Cause	Correction
Incorrect oil filter without anti-drainback feature	Install the correct oil filter.
Incorrect oil viscosity	Drain the engine oil and replace with the correct viscosity oil.
High stationary hydraulic lash adjuster (SHLA), valve lifter, leak down rate	Replace the SHLAs, valve lifters, as required.
Worn crankshaft thrust bearing	• Inspect the thrust bearing and crankshaft. • Repair or replace as required.
Damaged or faulty oil filter by-pass valve	• Inspect the oil filter by-pass valve for proper operation. • Repair or replace as required.
Malfunctioning camshaft position actuators - improper oil viscosity or contamination.	Isolate the noise to a specific camshaft position actuator. Disconnect the electrical connector on the camshaft position actuator solenoid valves and start the vehicle. If noise is gone, repeat procedure to limit to an individual actuator. Refer to **Camshaft Position Actuator Replacement - Bank 1** , or **Camshaft Position Actuator Replacement - Bank 2** .

UPPER ENGINE NOISE, REGARDLESS OF ENGINE SPEED

Cause	Correction
Low oil pressure	1. Perform an oil pressure test. Refer to **Oil Pressure Diagnosis and Testing**. 2. Repair or replace as required.
Loose and/or worn follower, valve rocker arm	1. Inspect the follower, valve rocker arm. 2. Repair or replace as required.

cardiagn.com

Cause	Correction
Improper lubrication to the followers, valve rocker arms	Inspect the following components, and repair or replace as required: • The follower, valve rocker arm • The SHLA, valve lifter • The oil filter bypass valve • The oil pump and pump screen • The cylinder head oil galleries • The engine block oil galleries
Broken valve spring	Replace the valve spring.
Worn or dirty stationary hydraulic lash adjusters (SHLAs), valve lifters	Replace the SHLAs, valve lifters.
Stretched or broken timing chain or chains and/or damaged sprocket teeth	Replace the timing chain or chains and sprockets.
Worn timing chain tensioner or tensioners	Replace the timing chain tensioner or tensioners as required.
Worn timing chain shoe or shoes	Replace the timing chain shoe or shoes as required.
Worn timing chain guide or guides	Replace the timing chain guide or guides as required.
Worn engine camshaft lobes	1. Inspect the engine camshaft lobes. 2. Replace the camshaft or camshafts and SHLAs, valve lifters, as required.
Worn valve guides or valve stems	Inspect the following components, and repair as required: • The valves • The valve guides
• Stuck valves • Carbon on the valve stem or valve seat may cause the valve to stay open	Inspect the following components, and repair as required: • The valves • The valve guides

LOWER ENGINE NOISE, REGARDLESS OF ENGINE SPEED

Cause	Correction
Low oil pressure	1. Perform an oil pressure test. Refer to **Oil Pressure Diagnosis and Testing**. 2. Repair or replace damaged components as required.
• Worn accessory drive components • Abnormalities such as severe cracking, bumps or missing areas in the accessory drive belt and/or misalignment of system components.	1. Inspect the accessory drive system. 2. Repair or replace as required.

cardiagn.com

Cause	Correction
Loose or damaged crankshaft balancer	1. Inspect the crankshaft balancer. 2. Repair or replace as required.
Detonation or spark knock	Verify the correct operation of the ignition controls system. Refer to **Symptoms - Engine Controls** .
Loose torque converter bolts	1. Inspect the torque converter bolts and engine flywheel. 2. Repair or replace as required.
Loose or damaged engine flywheel	Repair or replace the engine flywheel.
• Damaged oil pan, contacting the oil pump screen • An oil pan that has been damaged may improperly position the oil pump screen, preventing proper oil flow to the oil pump.	1. Inspect the oil pan. 2. Inspect the oil pump screen. 3. Repair or replace as required.
Oil pump screen loose, damaged or restricted	1. Inspect the oil pump screen. 2. Repair or replace as required.
Excessive piston-to-cylinder bore clearance	1. Inspect the piston and cylinder bore. 2. Repair as required.
Excessive piston pin-to-bore clearance	1. Inspect the piston, piston pin, and the connecting rod. 2. Repair or replace as required.
Excessive connecting rod bearing clearance	Inspect the following components, and repair as required: • The connecting rod bearings • The connecting rods • The crankshaft • The crankshaft journals
Excessive crankshaft bearing clearance	Inspect the following components, and repair as required: • The crankshaft bearings • The crankshaft journals
• Incorrect piston, piston pin and connecting rod installation • Pistons must be installed with the mark or dimple on the top of the piston facing the front of the engine. Piston pins must be centered in the connecting rod pin bore.	1. Verify the pistons, piston pins and connecting rods are installed correctly. 2. Repair as required.

ENGINE NOISE UNDER LOAD

cardiagn.com

Cause	Correction
Low oil pressure	1. Perform an oil pressure test. Refer to **Oil Pressure Diagnosis and Testing**. 2. Repair or replace as required.
Detonation or spark knock	Verify the correct operation of the ignition controls. Refer to **Symptoms - Engine Controls** .
Loose torque converter bolts	1. Inspect the torque converter bolts and engine flywheel. 2. Repair as required.
Cracked engine flywheel	1. Inspect the engine flywheel and bolts. 2. Repair as required.
Excessive connecting rod bearing clearance	Inspect the following components, and repair as required: • The connecting rod bearings • The connecting rods • The crankshaft
Excessive crankshaft bearing clearance	Inspect the following components, and repair as required: • The crankshaft bearings • The crankshaft journals • The cylinder block crankshaft bearing bore

ENGINE WILL NOT CRANK - CRANKSHAFT WILL NOT ROTATE

Cause	Correction
Seized accessory drive system component	1. Remove the accessory drive belt or belts. 2. Rotate the crankshaft by hand at the crankshaft balancer or the engine flywheel location. 3. Repair or replace as required.
Hydraulically locked cylinder • Coolant/antifreeze in cylinder • Oil in cylinder • Fuel in cylinder	1. Remove the spark plugs and check for fluid. 2. Inspect for broken head gasket or gaskets. 3. Inspect for cracked engine block or cylinder head. 4. Inspect for a sticking fuel injector. 5. Repair or replace as required.
Seized automatic transmission torque converter	1. Remove the torque converter bolts. 2. Rotate the crankshaft by hand at the crankshaft balancer or the engine flywheel location. 3. Repair or replace as required.

cardiagn.com

Cause	Correction
Material in cylinder • Broken valve • Piston material • Foreign material	1. Inspect the cylinder for damaged components and/or foreign materials. 2. Repair or replace as required.
Seized crankshaft or connecting rod bearings	1. Inspect the crankshaft and the connecting rod bearings. 2. Repair as required.
Bent or broken connecting rod	1. Inspect the connecting rods. 2. Repair as required.
Broken crankshaft	1. Inspect the crankshaft. 2. Repair as required.
Seized or broken camshaft	1. Inspect the camshaft or camshafts. 2. Inspect the cylinder head camshaft journals for damage. 3. Repair as required.
Seized or broken balance shaft	1. Inspect the balance shaft. 2. Inspect the block for damaged balance shaft bearings. 3. Repair as required.
Seized or broken camshaft timing components	1. Inspect the following sprockets: • The crankshaft sprocket • The exhaust sprockets • The intake sprockets 2. Inspect the following chains: • The primary camshaft drive chain • The secondary camshaft drive chains 3. Inspect the following guides: • The lower primary camshaft drive chain guide • The upper primary camshaft drive chain guides 4. Inspect the secondary camshaft drive chain shoe. 5. Inspect the following tensioners: • The primary camshaft drive chain tensioner • The secondary camshaft drive chain tensioners 6. Repair as required.

cardiagn.com

Cause	Correction
Seized or broken valve train components	1. Inspect the followers, rocker arms. 2. Inspect the lifters. 3. Inspect the valves. 4. Inspect the valve springs. 5. Repair as required.

COOLANT IN COMBUSTION CHAMBER

Cause	Correction
DEFINITION: Excessive white smoke and/or coolant type odor coming from the exhaust pipe may indicate coolant in the combustion chamber. Low coolant levels, an inoperative cooling fan, or a faulty thermostat may lead to an "overtemperature" condition which may cause engine component damage. **NOTE:** **While not always conclusive, use of hydrocarbon block test kits may reveal hydrocarbons indicating combustion chamber gases in the cooling system. It is important to follow the kit instructions. This is not a substitute for the service information. Combustion leak tests are available from a wide variety of aftermarket suppliers.** 1. A slower than normal cranking speed may indicate coolant entering the combustion chamber. Refer to **Engine Will Not Crank - Crankshaft Will Not Rotate**. 2. Remove the spark plugs and inspect for spark plugs saturated by coolant or coolant in the cylinder bore. 3. Inspect by performing a **Cylinder Leakage Test**. During this test, excessive air bubbles within the coolant may indicate a faulty gasket or damaged component. 4. Inspect by performing a cylinder compression test. Two cylinders "side-by-side" on the engine block, with low compression, may indicate a failed cylinder head gasket. Refer to **Engine Compression Test**.	
Cracked intake manifold or failed gasket	Replace the components as required.
Faulty cylinder head gasket	Replace the head gasket and components as required. Refer to **Cylinder Head Cleaning and Inspection** , and **Cylinder Head Replacement - Left Side** , or **Cylinder Head Replacement - Right Side** .
Warped cylinder head	Machine the cylinder head to the proper flatness, if applicable and replace the cylinder head gasket. Refer to **Cylinder Head Cleaning and Inspection** .
Cracked cylinder head	Replace the cylinder head and gasket.
Cracked cylinder liner or engine block	Replace the components as required.
Cylinder head or engine block porosity	Replace the components as required.

COOLANT IN ENGINE OIL

Cause	Correction

carquery.com

Cause	Correction
DEFINITION: Foamy or discolored oil or an engine oil "overfill" condition may indicate coolant entering the engine crankcase. Low coolant levels, an inoperative cooling fan, or a faulty thermostat may lead to an "overtemperature" condition which may cause engine component damage. Contaminated engine oil and oil filter should be changed. 1. Inspect the oil for excessive foaming or an overfill condition. Oil diluted by coolant may not properly lubricate the crankshaft bearings and may lead to component damage. Refer to **Lower Engine Noise, Regardless of Engine Speed**. 2. Inspect by performing a **Cylinder Leakage Test**. During this test, excessive air bubbles within the cooling system may indicate a faulty gasket or damaged component. 3. Inspect by performing a cylinder compression test. Two cylinders "side-by-side" on the engine block with low compression may indicate a failed cylinder head gasket. Refer to **Engine Compression Test**.	
Faulty external engine oil cooler	Replace the components as required.
Faulty cylinder head gasket	Replace the head gasket and components as required. Refer to **Cylinder Head Cleaning and Inspection** , and **Cylinder Head Replacement - Left Side** , or **Cylinder Head Replacement - Right Side** .
Warped cylinder head	Machine the cylinder head to proper flatness, if applicable, and replace the cylinder head gasket. Refer to **Cylinder Head Cleaning and Inspection** .
Cracked cylinder head	Replace the cylinder head and gasket.
Cracked cylinder liner or engine block	Replace the components as required.
Cylinder head, block, or manifold porosity	Replace the components as required.

ENGINE COMPRESSION TEST

Special Tools

EN-39313 Spark Plug Port Adapter

For equivalent regional tools, refer to **Special Tools** .

A compression pressure test of the engine cylinders determines the condition of the piston rings, the valves and the head gaskets.

1. Run the engine until it reaches normal operating temperature. The battery must be at or near full charge. You may wish to connect a battery charger for the duration of the test to maintain an adequate battery level.
2. Turn the engine OFF.
3. Remove the intake manifold cover.
4. Remove the ignition coils and spark plugs from all cylinders. Refer to **Ignition Coil Replacement - Bank 1** , and **Ignition Coil Replacement - Bank 2** .
5. Connect the GDS2 to the vehicle and select "Compression Test". Enabling the Compression Test will disable the fuel pump, fuel injectors, and spark. The throttle body is opened to a Wide Open Throttle (WOT) position. The GDS2 will also automatically control the cranking procedure for many applications. If cranking control is not available use a remote start switch in place of the Starter Relay to control cranking.
6. Measure the engine compression, using the following procedure:
    1. Thread the **EN-39313** adapter into the spark plug hole.
    2. Thread the compression gauge into the **EN-39313** adapter.
    3. Enable cranking via the GDS2 or remote start switch. Record the reading after the cranking cycle completes.

cardiagn.com

4. When the compression measurement is normal, the compression builds up quickly and evenly to the specified compression on each cylinder.
5. Repeat the compression test for each cylinder.

7. Compare the compression readings from all of the cylinders.
   - The lowest reading should not be less than 70 percent of the highest reading.
   - Turbocharger equipped engines - No cylinder reading should be less than 690 kPa (100 psi).
   - Non-Turbocharger equipped engines - No cylinder reading should be less than 965 kPa (140 psi).
8. The following are indicators of potential problems:
   - When low compression is caused by the piston rings, compression is low on the first stroke and tends to build up on the following strokes, but does not reach normal. Compression improves considerably with the addition of oil to the cylinder. Use approximately 3 squirts of oil from a plunger-type oiler into the cylinder and replace the gauge and measure again.
   - When low compression is caused by the valves, the measurement is low on the first stroke and does not build up even with the addition of oil.
   - Leaking head gaskets will provide the same results as worn valves but engine coolant may be identified in the crankcase. In addition, a leaking head gasket will give low readings on paired cylinders.
9. Disconnect GDS2 diagnostic tool or remote start switch.
10. Install the spark plugs. Refer to **Spark Plug Replacement** .
11. Install the ignition coils and spark plugs from all cylinders. Refer to **Ignition Coil Replacement - Bank 1** , and **Ignition Coil Replacement - Bank 2** .
12. Install the intake manifold cover.

CYLINDER LEAKAGE TEST

Special Tools

- **EN-35667-A** Cylinder Head Leakdown Tester
- **EN-39313** Spark Plug Port Adapter

For equivalent regional tools, refer to **Special Tools** .

NOTE: **A leakage test may be performed in order to measure cylinder/combustion chamber leakage. High cylinder leakage may indicate one or more of the following:**

- **Worn or burnt valves**
- **Broken valve springs**
- **Stuck valve lifters**
- **Incorrect valve lash/adjustment**
- **Damaged piston**
- **Worn piston rings**
- **Worn or scored cylinder bore**
- **Damaged cylinder head gasket**
- **Cracked or damaged cylinder head**
- **Cracked or damaged engine block**

WARNING: **Refer to Battery Disconnect Warning .**

1. Disconnect the battery ground negative cable.
2. Remove the spark plugs. Refer to **Spark Plug Replacement** .

CAUTION: **Only turn the engine in a CLOCKWISE direction as viewed from the**

cardiagn.com

crankshaft balancer. Counterclockwise rotation may result in the timing chain jumping a tooth, causing poor running, DTCs, or severe engine damage.

3. Rotate the crankshaft to place the piston in the cylinder being tested at top dead center (TDC) of the compression stroke.
4. Thread the **EN-39313** adapter into the spark plug hole.
5. Install the **EN-35667-A** tester or equivalent.

NOTE: **It may be necessary to hold the crankshaft balancer bolt to prevent the engine from rotating.**

6. Apply shop air pressure to the **EN-35667-A** tester and adjust according to the manufacturers instructions.
7. Record the cylinder leakage value. Cylinder leakage that exceeds 25 percent is considered excessive and may require component service. In excessive leakage situations, inspect for the following conditions:
   - Air leakage sounds at the throttle body or air inlet hose that may indicate a worn or burnt intake valve or a broken valve spring
   - Air leakage sounds at the exhaust system tailpipe that may indicate a worn or burnt exhaust valve or a broken valve spring
   - Air leakage sounds from the crankcase, oil level indicator tube, or oil fill tube that may indicate worn piston rings, a damaged piston, a worn or scored cylinder bore, a damaged engine block or a damaged cylinder head
   - Air bubbles in the cooling system may indicate a damaged cylinder head or a damaged cylinder head gasket.
8. Perform the leakage test on the remaining cylinders and record the values.

OIL CONSUMPTION DIAGNOSIS

Checks	Causes
DEFINITION: Excessive oil consumption (not due to leaks) is the use of 0.946 L (1 qt) or more of engine oil within 3 200 km (2, 000 mi). The causes of excessive oil consumption may include the following conditions:	

carmagn.com

Checks	Causes
Preliminary	• External oil leaks - Refer to **Oil Leak Diagnosis**. • Incorrect oil level or improper reading of the oil level indicator With the vehicle on a level surface, run the engine for a few minutes, allow adequate drain down time (2 - 3 minutes) and check for the correct engine oil level. • Improper oil viscosity Refer to the vehicle owners manual and use the recommended SAE grade and viscosity for the prevailing temperatures. • Continuous high speed driving and/or severe usage • Crankcase ventilation system restrictions or malfunctioning components • Worn valve guides and/or valve stems • Worn, missing or improperly installed valve stem oil seals • Piston rings broken, worn, not seated properly Allow adequate time for the rings to seat. Replace worn piston rings as necessary. • Piston and rings improperly installed or miss-fitted to the cylinder bore

OIL PRESSURE DIAGNOSIS AND TESTING

Special Tools

- **EN-47971** Oil Pressure Gauge Adapter
- **CH-48027** Pressure Gauge

For equivalent regional tools, refer to **Special Tools** .

1. With the vehicle on a level surface, run the vehicle for a few minutes, allow adequate drain down time, 2 - 3 minutes, and measure the oil level.
2. If required, add the recommended grade engine oil and fill the crankcase until the oil level measures full on the oil level indicator.
3. Run the engine briefly, 10 - 15 seconds, and verify low or no oil pressure on the vehicle gauge or light.
4. Listen for a noisy valve train or a knocking noise.
5. Inspect for the following conditions:
    - Oil diluted by water or glycol antifreeze
    - Foamy oil

cardiagn.com

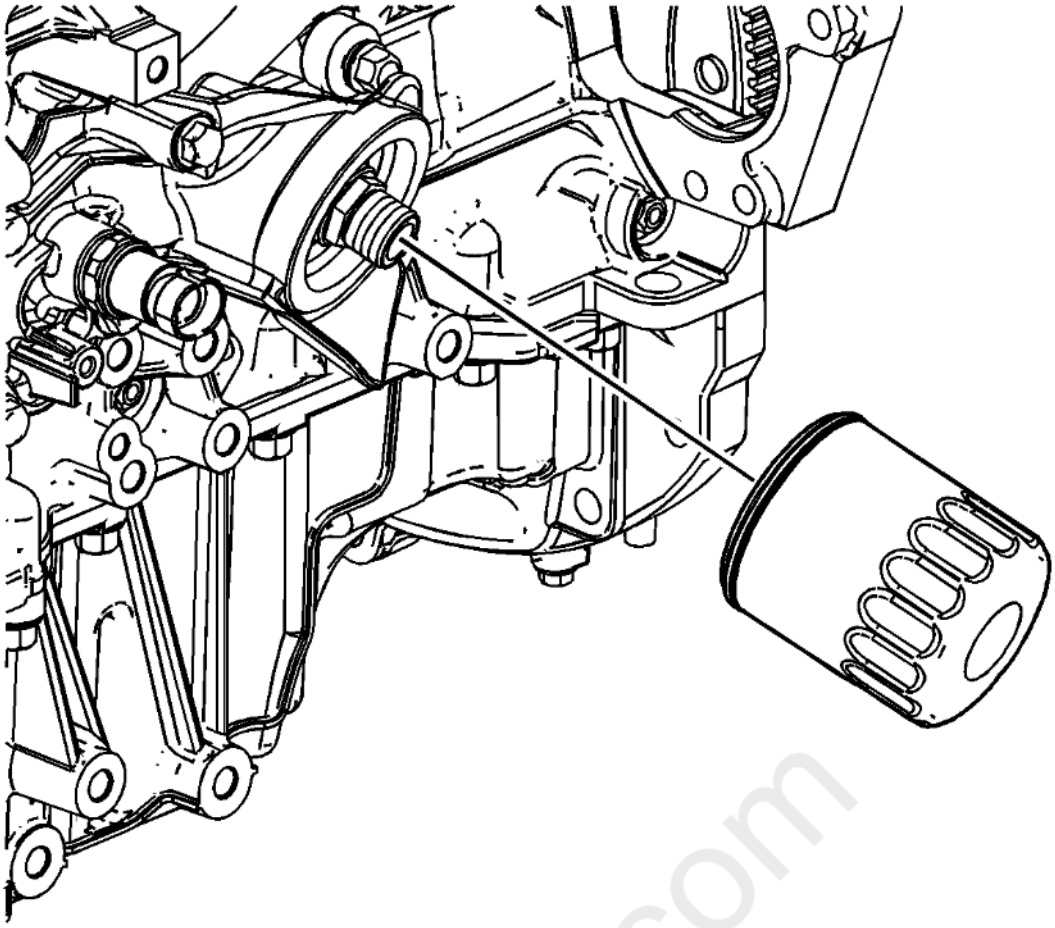

Fig. 1: Identifying Oil Filter
Courtesy of GENERAL MOTORS COMPANY

6. Remove the oil filter.

cardiagn.com

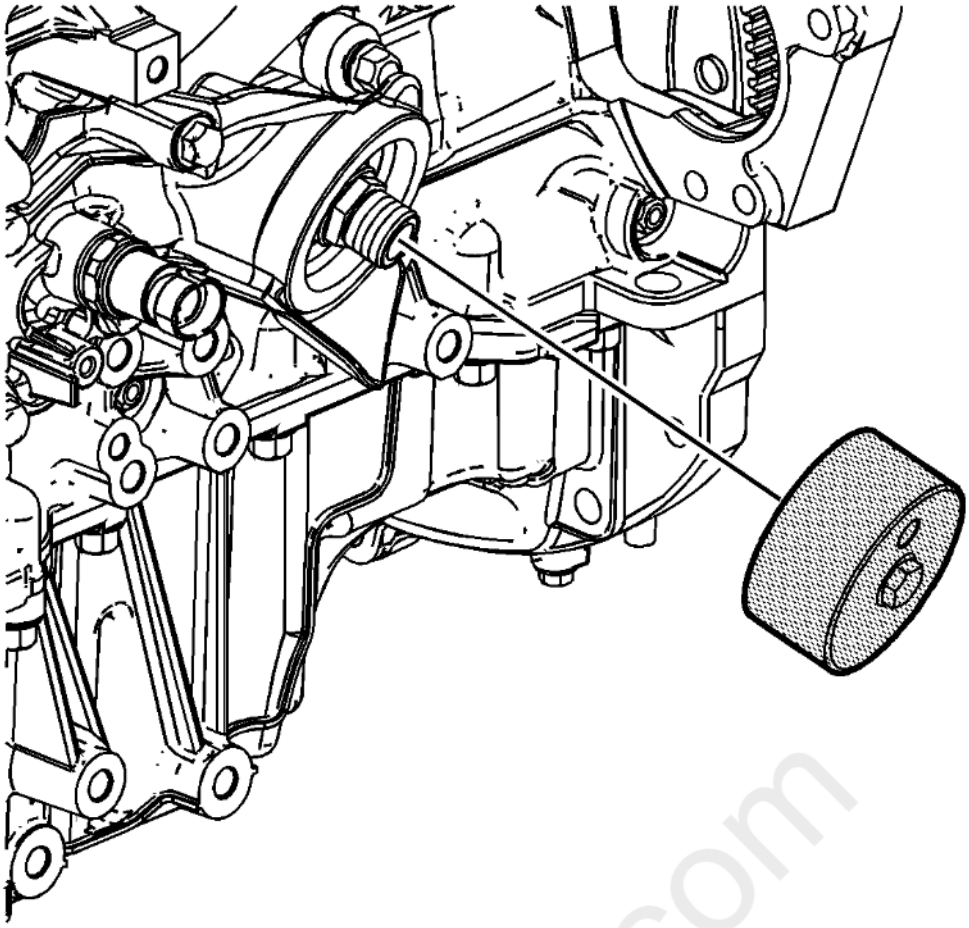

Fig. 2: Oil Pressure Gauge Adapter
Courtesy of GENERAL MOTORS COMPANY

CAUTION: **Special new tool EN 47971 must be used. Due to the special size and thread pitch of the oil filter adapter fitting ensure the proper tool is used or component damage will result.**

7. Install the **EN-47971** adapter onto the oil filter adapter.

carmagn.com

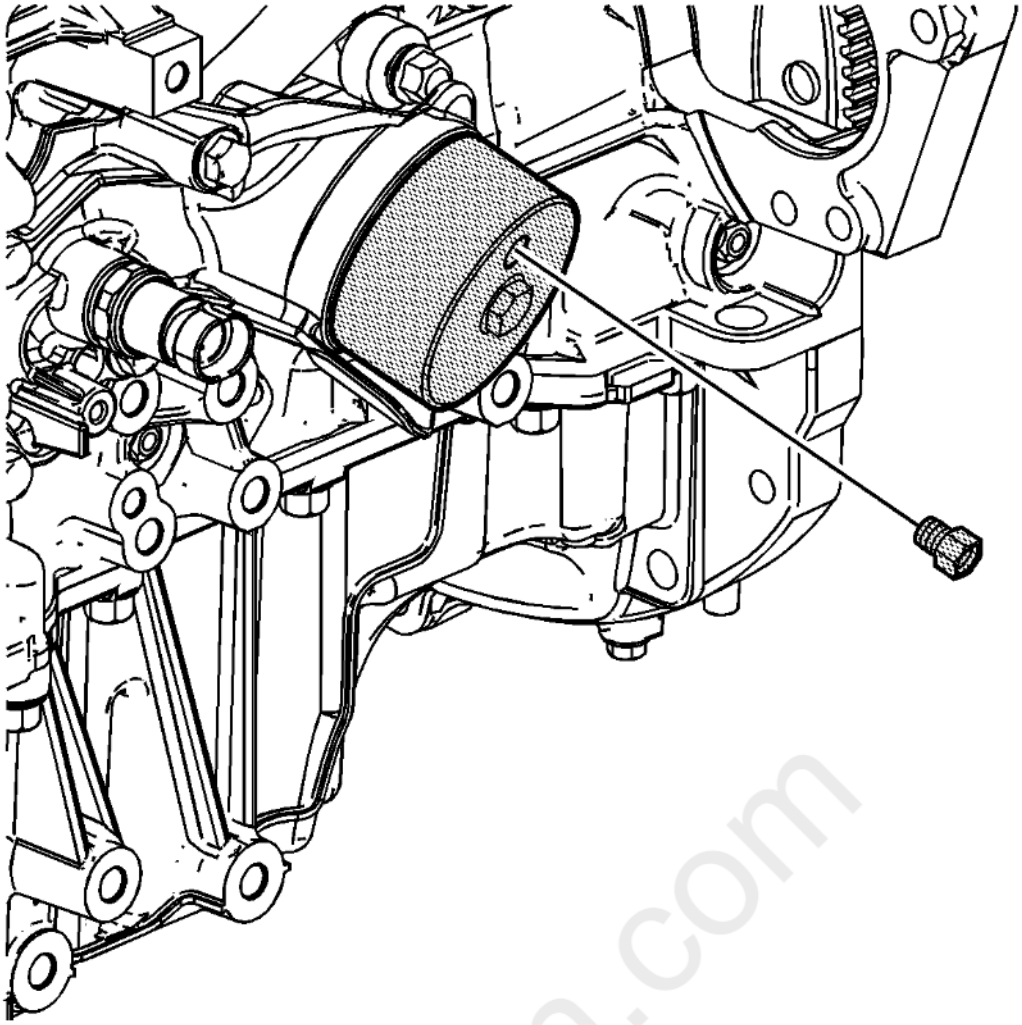

Fig. 3: Oil Pressure Gauge Adapter & Pressure Gauge
Courtesy of GENERAL MOTORS COMPANY

8. Install the 1/8 NPT fitting from the **CH-48027** gauge into the port on the **EN-47971** adapter.

cardiagn.com

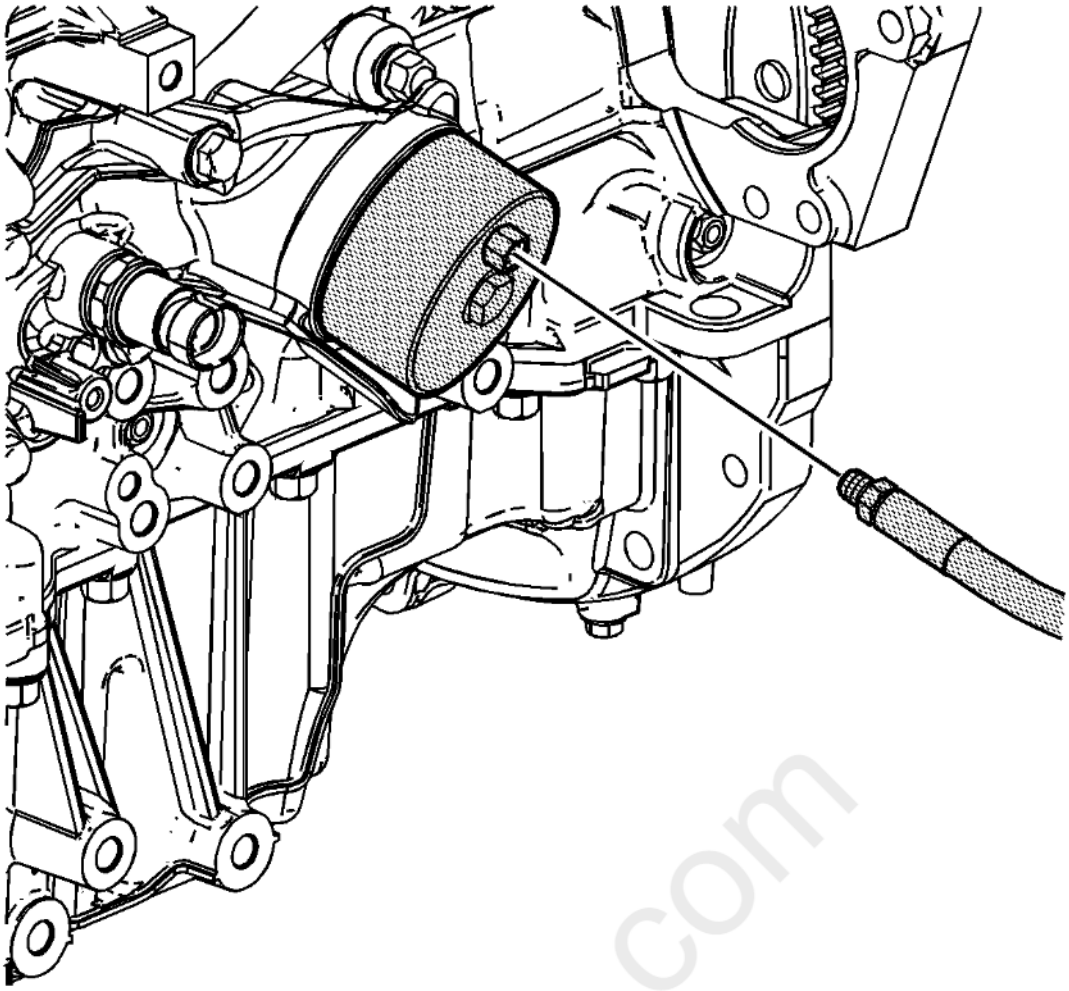

Fig. 4: View Of Special Tool J 21867 & Flexible Hose
Courtesy of GENERAL MOTORS COMPANY

9. Install the **CH-48027** gauge flexible hose to the **EN-47971** adapter.
10. Run the engine and measure the engine oil pressure.
11. Compare the readings to **Engine Mechanical Specifications** .
12. If the engine oil pressure is below specifications, inspect the engine for 1 or more of the following conditions:
    - Oil pump worn or dirty. Refer to **Oil Pump Replacement** , **Oil Pump Disassemble** , and **Oil Pump Cleaning and Inspection** .
    - Oil pump-to-engine block bolts loose. Refer to **Oil Pump Replacement** .
    - Oil pump screen loose, plugged, or damaged. Refer to **Oil Pump Suction Pipe and Screen Assembly Replacement** , and **Oil Pump Suction Pipe and Screen Cleaning and Inspection** .
    - Oil pump screen O-ring seal missing or damaged. Refer to **Oil Pump Suction Pipe and Screen Assembly Replacement** , and **Oil Pump Suction Pipe and Screen Cleaning and Inspection** .
    - Oil pump pressure relief valve malfunction. Refer to **Oil Pump Replacement** .
    - Engine bearing clearance excessive. Refer to **Crankshaft and Bearing Cleaning and Inspection** , **Crankshaft and Bearing Installation** , and **Piston, Connecting Rod, and Bearing Installation** .
    - Cracked, porous, or restricted oil galleries.
    - Oil gallery plugs missing or incorrectly installed. Refer to **Engine Block Assemble** , and **Cylinder Head Assemble** .
    - Valve lifters broken. Repair, as necessary. Refer to **Valve Lifter Replacement - Left Side** , and/or **Valve Lifter Replacement - Right Side** , and **Valve Lifter Cleaning and Inspection** .

carmagn.com

CAUTION: **This engine uses a special high performance oil filter. Use of any other filter may lead to filter failure and/or severe engine damage.**

13. If the oil pressure reading on the **CH-48027** gauge, or equivalent, is within specifications, inspect for the following conditions:
    - Plugged or incorrect oil filter and/or malfunctioning oil bypass valve. Refer to **Engine Oil and Oil Filter Replacement** .
    - Malfunctioning oil pressure gauge or sensor. Repair, as necessary. Refer to **Engine Oil Pressure Sensor and/or Switch Replacement** .

OIL LEAK DIAGNOSIS

Checks	Action
CAUTION: **It is important to correctly identify the source of an oil leak. A power steering fluid leak or spillage can travel across the valley area of the engine and run out the weep hole, which is located at the back of the block. Failure to correctly identify the source of an oil leak can lead to the incorrect or unnecessary replacement of components.** You can repair most fluid leaks by first visually locating the leak, repairing or replacing the component, or by resealing the gasket surface. Once the leak is identified, determine the cause of the leak. Repair the cause of the leak as well as the leak itself.	
Locating and identifying the leak	To determine if the leaking fluid is engine oil, transmission fluid, power steering fluid, brake fluid, or some other fluid, use the visual inspection method.
Visual Inspection Method	1. Bring the vehicle to normal operating temperature. 2. Park the vehicle over a large sheet of paper, or other clean surface. 3. Wait several minutes, then check for drippings. 4. Identify the type of fluid, and the approximate location of the leak. 5. Visually inspect the suspected area. Use a small mirror to assist in looking at hard to see areas. 6. Check for leaks at sealing surfaces, fittings, or from cracked or damaged components. 7. If you cannot locate the leak, do the following: 1. Completely clean the entire engine and surrounding components. 2. Operate the vehicle for several miles at normal operation temperature and at varying speeds. 3. Park the vehicle over a large sheet of paper, or other clean surface. 4. Wait several minutes, then check for drippings. 5. Identify the type of fluid, and the approximate location of the leak. 6. Visually inspect the suspected area. Use a small mirror to assist in looking at hard to see areas. 7. See possible causes for leaks. 8. If you still cannot locate the leak, use the powder method or the black light and dye method.

carmagn.com

Checks	Action
Powder Method	1. Completely clean the entire engine and surrounding components. 2. Apply an aerosol-type powder (baby powder, foot powder, etc.) to the suspected area. 3. Operate the vehicle for several miles at normal operation temperature and at varying speeds. 4. Identify the type of fluid, and the approximate location of the leak, from the discolorations in the powder surface. 5. Visually inspect the suspected area. Use a small mirror to assist in looking at hard to see areas. 6. See possible causes for leaks.
Black Light and Dye Method	1. A dye and light kit is available for finding leaks. Use the **GE 28428-E** High-Intensity Black Light Kit or equivalent. Refer to the manufacturer's instructions when using the tool. 2. Visually inspect the suspected area. Use a small mirror to assist in looking at hard to see areas. 3. See possible causes for leaks.
Possible Causes for Leaks	Check for the following conditions: • Higher than recommended fluid levels • Higher than recommended fluid pressures • Plugged or malfunctioning fluid filters or pressure bypass valves • Plugged or malfunctioning engine ventilation system • Improperly tightened or damaged fasteners • Cracked or porous components • Improper sealants or gaskets where required • Improper sealant or gasket installation • Damaged or worn gaskets or seals • Damaged or worn sealing surfaces

cardiagn.com

CRANKCASE VENTILATION SYSTEM INSPECTION/DIAGNOSIS

Crankcase Ventilation (CV) System Inspection

- Test for vacuum at the vacuum hose where it connects to the crankcase ventilation housing. There should be manifold vacuum present at the hose. If there is no vacuum, inspect for a plugged hose, leaking hose or a plugged vent adapter.
- Plug the end of the vacuum hose while the engine is running. Inspect the hose for any areas that collapse when the end of the hose is blocked. Replace the hose if it collapses when blocked.
- If oil has accumulated in the intake air duct, inspect for the following conditions:
  - Plugged vacuum orifice in the crankcase ventilation housing
  - Plugged or restricted crankcase ventilation housing
  - Excessive crankcase pressure or blow-by, refer to **Oil Consumption Diagnosis**.
- Additional items to inspect:
  - Plugged or leaking fresh air vent hose assembly or vent adapter
  - Plugged or restricted passages in the throttle body
  - Missing or damaged O-ring seals on the vent adapter
  - Inspect the cam covers, the oil pan gasket, and other sealing areas for leaks

Results of Incorrect Operation

A plugged crankcase ventilation housing or hose may contribute to the following conditions:

- A rough idle
- Stalling or a slow idle speed
- Oil leaks
- Oil accumulation in the intake air duct
- Sludge in the engine

A leaking housing or hose may contribute to the following conditions:

- A rough idle
- Stalling
- Unstable idle speed

DRIVE BELT CHIRPING, SQUEAL, AND WHINE DIAGNOSIS

Diagnostic Aids

- A chirping or squeal noise may be intermittent due to moisture on the drive belts or the pulleys. It may be necessary to spray a small amount of water on the drive belts in order to duplicate the customers concern. If spraying water on the drive belt duplicates the symptom, cleaning the belt pulleys may be the probable solution.
- If the noise is intermittent, verify the accessory drive components by varying their loads making sure they are operated to their maximum capacity. An overcharged A/C system, power steering system with a pinched hose or wrong fluid, or a generator failing are suggested items to inspect.
- A chirping, squeal or whine noise may be caused by a loose or improper installation of a body or suspension component. Other items of the vehicle may also cause the noise.
- The drive belts will not cause a whine noise.

Test Description

The numbers below refer to the step numbers on the diagnostic table.

2

The noise may not be engine related. This step is to verify that the engine is making the noise. If the engine is not making the noise do not proceed further with this table.

3

The noise may be an internal engine noise. Removing the drive belts one at a time and operating the engine for a brief period will verify the noise is related to the drive belt. When removing the drive belt the water pump may not be operating and the engine may overheat. Also DTCs may set when the engine is operating with the drive belts removed.

4

Inspect all drive belt pulleys for pilling. Pilling is the small balls or pills or it can be strings in the drive belt grooves from the accumulation of rubber dust.

6

Misalignment of the pulleys may be caused from improper mounting of the accessory drive component, incorrect installation of the accessory drive component pulley, or the pulley bent inward or outward from a previous repair. Test for a misaligned pulley using a straight edge in the pulley grooves across two or three pulleys. If a misaligned pulley is found refer to that accessory drive component for the proper installation procedure for that pulley.

10

cardiagn.com

Inspecting of the fasteners can eliminate the possibility that a wrong bolt, nut, spacer, or washer was installed.

12

Inspecting the pulleys for being bent should include inspecting for a dent or other damage to the pulleys that would prevent the drive belt from not seating properly in all of the pulley grooves or on the smooth surface of a pulley when the back side of the belt is used to drive the pulley.

14

This test is to verify that the drive belt tensioner operates properly. If the drive belt tensioner is not operating properly, proper belt tension may not be achieved to keep the drive belt from slipping which could cause a squeal noise.

15

This test is to verify that the drive belt is not too long, which would prevent the drive belt tensioner from working properly. Also if an incorrect length drive belt was installed, it may not be routed properly and may be turning an accessory drive component in the wrong direction.

16

Misalignment of the pulleys may be caused from improper mounting of the accessory drive component, incorrect installation of the accessory drive component pulley, or the pulley bent inward or outward from a previous repair. Test for a misaligned pulley using a straight edge in the pulley grooves across two or three pulleys. If a misaligned pulley is found refer to that accessory drive component for the proper installation procedure for that pulley.

17

This test is to verify that the pulleys are the correct diameter or width. Using a known good vehicle compare the pulley sizes.

19

Replacing the drive belt when it is not damaged or there is not excessive pilling will only be a temporary repair.

Step	Action	Yes	No
CAUTION: **Refer to Belt Dressing Caution .** DEFINITION: The following items are indications of chirping: • A high pitched noise that is heard once per revolution of the drive belt or a pulley. • Chirping may occur on cold damp start-ups and will subside once the vehicle reaches normal operating temp. DEFINITION: The following items are indications of drive belt squeal: • A loud screeching noise that is caused by a slipping drive belt. This is unusual for a drive belt with multiple ribs. • The noise occurs when a heavy load is applied to the drive belt, such as an air conditioning compressor engagement snapping the throttle, or slipping on a seized pulley or a faulty accessory drive component. DEFINITION: The following items are indications of drive belt whine: • A high pitched continuous noise. • The noise may be caused by an accessory drive component failed bearing.			

cardiagn.com

Step	Action	Yes	No
1	Did you review the Drive Belt Symptom operation and perform the necessary inspections?	Go to **Step 2**	Go to **Symptoms - Engine Mechanical**
2	Verify that there is a chirping, squeal or whine noise. Does the engine make the chirping squeal or whine noise?	Go to **Step 3**	Go to Diagnostic Aids
3	1. Remove the drive belt. If the engine has multiple drive belts, remove the belts one at a time and perform the test below each time a belt is removed. 2. Operate the engine for no longer than 30 - 40 seconds. 3. Repeat this test if necessary by removing the remaining belt(s). Does the chirping, squeal or whine noise still exist?	Go to **Symptoms - Engine Mechanical**	Go to **Step 4**
4	If diagnosing a chirping noise, inspect for severe pilling exceeding 1/3 of the belt groove depth. If diagnosing a squeal or whine noise, proceed to step 13. Do the belt grooves have pilling?	Go to **Step 5**	Go to **Step 6**
5	Clean the drive belt pulleys with a suitable wire brush. Did you complete the repair?	Go to **Step 20**	Go to **Step 6**
6	Inspect for misalignment of the pulleys. Are any of the pulleys misaligned?	Go to **Step 7**	Go to **Step 8**
7	Replace or repair any misaligned pulleys. Did you complete the repair?	Go to **Step 20**	Go to **Step 8**
8	Inspect for bent or cracked brackets. Did you find any bent or cracked brackets?	Go to **Step 9**	Go to **Step 10**
9	Replace any bent or cracked brackets. Did you complete the repair?	Go to **Step 20**	Go to **Step 10**
10	Inspect for improper, loose or missing fasteners. Did you find the condition?	Go to **Step 11**	Go to **Step 12**
11	**CAUTION:** **Refer to Fastener Caution .** 1. Tighten any loose fasteners. Refer to **Fastener Specifications** . 2. Replace any improper or missing fasteners. Did you complete the repair?	Go to **Step 20**	Go to **Step 12**
12	Inspect for a bent pulley. Did you find the condition?	Go to **Step 18**	Go to **Step 19**
13	Inspect for an accessory drive component seized bearing or a faulty accessory drive component. Did you find and correct the condition?	Go to **Step 20**	Go to **Step 14**

Carlagn.com

Step	Action	Yes	No
14	If diagnosing a whine noise and the condition still exist, proceed to Diagnostic Aids. Test the drive belt tensioner for proper operation. Refer to **Drive Belt Tensioner Diagnosis**. Did you find and correct the condition?	Go to **Step 20**	Go to **Step 15**
15	Inspect for the correct drive belt length. Did you find and correct the condition?	Go to **Step 20**	Go to **Step 16**
16	Inspect for misalignment of a pulley. Did you find and correct the condition?	Go to **Step 20**	Go to **Step 17**
17	Inspect for the correct pulley size. Did you find and correct the condition?	Go to **Step 20**	Go to Diagnostic Aids
18	Replace the bent pulley. Did you complete the repair?	Go to **Step 20**	Go to **Step 19**
19	Replace the drive belt. Refer to **Drive Belt Replacement** . Did you complete the repair?	Go to **Step 20**	Go to Diagnostic Aids
20	Operate the system in order to verify the repair. Did you correct the condition?	System OK	Go to **Step 3**

DRIVE BELT RUMBLING AND VIBRATION DIAGNOSIS

Diagnostic Aids

The accessory drive components can have an affect on engine vibration. Vibration from the engine operating may cause a body component or another part of the vehicle to make rumbling noise. Vibration can be caused by, but not limited to the A/C system over charged, the power steering system restricted or the incorrect fluid, or an extra load on the generator. To help identify an intermittent or an improper condition, vary the loads on the accessory drive components.

The drive belt may have a rumbling condition that can not be seen or felt. Sometimes replacing the drive belt may be the only repair for the symptom.

If replacing the drive belt, completing the diagnostic table, and the noise is only heard when the drive belts are installed, there might be an accessory drive component with a failure. Varying the load on the different accessory drive components may aid in identifying which component is causing the rumbling noise.

Test Description

The numbers below refer to the step numbers on the diagnostic table.

2

This test is to verify that the symptom is present during diagnosing. Other vehicle components may cause a similar symptom.

3

This test is to verify that one of the drive belts is causing the rumbling noise or vibration. Rumbling noise may be confused with an internal engine noise due to the similarity in the description. Remove only one drive belt at a time if the vehicle has multiple drive belts. When removing the drive belts the water pump may not be operating and the engine may overheat. Also DTCs may set when the engine is operating with the drive belts removed.

4

Inspecting the drive belts is to ensure that they are not causing the noise. Small cracks across the ribs of the drive belt will not cause the noise. Belt separation is identified by the plys of the belt separating and may be seen at the edge of the belt our felt as a lump in the belt.

cardiagn.com

5

Small amounts of pilling is normal condition and acceptable. When the pilling is severe the drive belt does not have a smooth surface for proper operation.

9

Inspecting of the fasteners can eliminate the possibility that the wrong bolt, nut, spacer, or washer was installed.

11

This step should only be performed if the water pump is driven by the drive belt. Inspect the water pump shaft for being bent. Also inspect the water pump bearings for smooth operation and excessive play. Compare the water pump with a known good water pump.

12

Accessory drive component brackets that are bent, cracked, or loose may put extra strain on that accessory component causing it to vibrate.

<table>
<tr><th>Step</th><th>Action</th><th>Yes</th><th>No</th></tr>
<tr><td colspan="4">CAUTION:
Refer to Belt Dressing Caution .

DEFINITION: The following items are indications of drive belt rumbling:
• A low pitch tapping, knocking, or thumping noise heard at or just above idle.
• Heard once per revolution of the drive belt or a pulley.
• Rumbling may be caused from:
  • Pilling, the accumulation of rubber dust that forms small balls (pills) or strings in the drive belt pulley groove
  • The separation of the drive belt
  • A damaged drive belt

DEFINITION: The following items are indications of drive belt vibration:
• The vibration is engine-speed related.
• The vibration may be sensitive to accessory load.</td></tr>
<tr><td>1</td><td>Did you review the Drive Belt Symptom operation and perform the necessary inspections?</td><td>Go to Step 2</td><td>Go to Symptoms - Engine Mechanical</td></tr>
<tr><td>2</td><td>Verify that there is a rumbling noise or that the vibration is engine related.
Does the engine make the rumbling noise or vibration?</td><td>Go to Step 3</td><td>Go to Diagnostic Aids</td></tr>
</table>

cardiagn.com

Step	Action	Yes	No
3	1. Remove the drive belt. If the engine has multiple drive belts, remove the belts one at a time and perform the test below each time a belt is removed. 2. Operate the engine for no longer than 30 - 40 seconds. 3. Repeat this test if necessary by removing the remaining belt(s). Does the rumbling or vibration still exist?	Go to **Symptoms - Engine Mechanical** or Go to **Vibration Analysis - Engine**	Go to **Step 4**
4	Inspect the drive belts for wear, damage, separation, sections of missing ribs, and debris build-up. Did you find any of these conditions?	Go to **Step 7**	Go to **Step 5**
5	Inspect for severe pilling of more than 1/3 of the drive belt pulley grooves. Did you find severe pilling?	Go to **Step 6**	Go to **Step 7**
6	1. Clean the drive belt pulleys using a suitable wire brush. 2. Reinstall the drive belts. Refer to **Drive Belt Replacement** . Did you correct the condition?	Go to **Step 8**	Go to **Step 7**
7	Install a new drive belt. Refer to **Drive Belt Replacement** . Did you complete the replacement?	Go to **Step 8**	Go to **Step 9**
8	Operate the system in order to verify the repair. Did you correct the condition?	System OK	Go to **Step 9**
9	Inspect for improper, loose or missing fasteners. Did you find any of these conditions?	Go to **Step 10**	Go to **Step 11**
10	1. Tighten any loose fasteners. Refer to **Fastener Specifications** . 2. Replace improper or missing fasteners. Did you complete the repair?	Go to **Step 13**	Go to **Step 11**
11	Inspect for a bent water pump shaft. Refer to **Water Pump Replacement (LFX)** **Water Pump Replacement (LCV)** . Did you find and correct the condition?	Go to **Step 13**	Go to **Step 12**
12	Inspect for bent or cracked brackets. Did you find and correct the condition?	Go to **Step 13**	Go to Diagnostic Aids
13	Operate the system in order to verify the repair. Did you correct the condition?	System OK	Go to **Step 3**

DRIVE BELT FALLS OFF AND EXCESSIVE WEAR DIAGNOSIS

Diagnostic Aids

If the drive belt repeatedly falls off the drive belt pulleys, this is because of pulley misalignment.

An extra load that is quickly applied on released by an accessory drive component may cause the drive belt to fall off the pulleys. Verify the accessory drive components operate properly.

cardiagn.com

If the drive belt is the incorrect length, the drive belt tensioner may not keep the proper tension on the drive belt.

Excessive wear on a drive belt is usually caused by an incorrect installation or the wrong drive belt for the application.

Minor misalignment of the drive belt pulleys will not cause excessive wear, but will probably cause the drive belt to make a noise or to fall off.

Excessive misalignment of the drive belt pulleys will cause excessive wear but may also make the drive belt fall off.

Test Description

The numbers below refer to the step numbers on the diagnostic table.

2

This inspection is to verify the condition of the drive belt. Damage may of occurred to the drive belt when the drive belt fell off. The drive belt may of been damaged, which caused the drive belt to fall off. Inspect the belt for cuts, tears, sections of ribs missing, or damaged belt plys.

4

Misalignment of the pulleys may be caused from improper mounting of the accessory drive component, incorrect installation of the accessory drive component pulley, or the pulley bent inward or outward from a previous repair. Test for a misaligned pulley using a straight edge in the pulley grooves across two or three pulleys. If a misaligned pulley is found refer to that accessory drive component for the proper installation procedure of that pulley.

5

Inspecting the pulleys for being bent should include inspecting for a dent or other damage to the pulleys that would prevent the drive belt from not seating properly in all of the pulley grooves or on the smooth surface of a pulley when the back side of the belt is used to drive the pulley.

6

Accessory drive component brackets that are bent or cracked will let the drive belt fall off.

7

Inspecting of the fasteners can eliminate the possibility that a wrong bolt, nut, spacer, or washer was installed. Missing. loose, or the wrong fasteners may cause pulley misalignment from the bracket moving under load. Over tightening of the fasteners may cause misalignment of the accessory component bracket.

13

The inspection is to verify the drive belt is correctly installed on all of the drive belt pulleys. Wear on the drive belt may be caused by mis-positioning the drive belt by one groove on a pulley.

14

The installation of a drive belt that is two wide or two narrow will cause wear on the drive belt. The drive belt ribs should match all of the grooves on all of the pulleys.

15

This inspection is to verify the drive belt is not contacting any parts of the engine or body while the engine is operating. There should be sufficient clearance when the drive belt accessory drive components load varies. The drive belt should not come in contact with an engine or a body component when snapping the throttle.

cardiagn.com

Step	Action	Yes	No
	CAUTION: **Refer to Belt Dressing Caution .** DEFINITION: The drive belt falls off the pulleys or may not ride correctly on the pulleys.DEFINITION: Wear at the outside ribs of the drive belt due to an incorrectly installed drive belt.		
1	Did you review the Drive Belt Symptom operation and perform the necessary inspections?	Go to **Step 2**	Go to **Symptoms - Engine Mechanical**
2	If diagnosing excessive wear, proceed to step 13. If diagnosing a drive belt that falls off, inspect for a damaged drive belt. Did you find the condition?	Go to **Step 3**	Go to **Step 4**
3	Install a new drive belt. Refer to **Drive Belt Replacement** . Does the drive belt continue to fall off?	Go to **Step 4**	System OK
4	Inspect for misalignment of the pulleys. Did you find and repair the condition?	Go to **Step 12**	Go to **Step 5**
5	Inspect for a bent or dented pulley. Did you find and repair the condition?	Go to **Step 12**	Go to **Step 6**
6	Inspect for a bent or a cracked bracket. Did you find and repair the condition?	Go to **Step 12**	Go to **Step 7**
7	Inspect for improper, loose or missing fasteners. Did you find loose or missing fasteners?	Go to **Step 8**	Go to **Step 9**
8	**CAUTION:** **Refer to Fastener Caution .** 1. Tighten any loose fasteners. Refer to **Fastener Specifications** . 2. Replace improper or missing fasteners. Does the drive belt continue to fall off?	Go to **Step 9**	System OK
9	Test the drive belt tensioner for operating correctly. Refer to **Drive Belt Tensioner Diagnosis**. Does the drive belt tensioner operate correctly?	Go to **Step 11**	Go to **Step 10**
10	Replace the drive belt tensioner. Refer to **Drive Belt Tensioner Replacement** . Does the drive belt continue to fall off?	Go to **Step 11**	System OK
11	Inspect for failed drive belt idler and drive belt tensioner pulley bearings. Did you find and repair the condition?	Go to **Step 12**	Go to Diagnostic Aids
12	Operate the system in order to verify the repair. Did you correct the condition?	System OK	Go to **Step 2**
13	Inspect the drive belt for the proper installation. Refer to **Drive Belt Replacement** . Did you find this condition?	Go to **Step 16**	Go to **Step 14**
14	Inspect for the proper drive belt. Did you find this condition?	Go to **Step 16**	Go to **Step 15**
15	Inspect for the drive belt rubbing against a bracket, hose, or wiring harness. Did you find and repair the condition?	Go to **Step 17**	Go to Diagnostic Aids
16	Replace the drive belt. Refer to **Drive Belt Replacement** . Did you complete the replacement?	Go to **Step 17**	-
17	Operate the system in order to verify the repair. Did you correct the condition?	System OK	-

carmagn.com

DRIVE BELT TENSIONER DIAGNOSIS

Step	Action	Yes	No
1	Remove the drive belt and inspect the drive belt tensioner pulley. Is the drive belt tensioner pulley loose or misaligned?	Go to **Step 4**	Go to **Step 2**
2	Rotate the drive belt tensioner. Does the tensioner rotate without any unusual resistance or binding?	Go to **Step 3**	Go to **Step 4**
3	1. Use a torque wrench in order to measure the torque required to move the tensioner off of the stop. 2. Use a torque wrench on a known good tensioner in order to measure the torque required to move the tensioner off of the stop. Is the first torque reading within 10 percent of the second torque reading?	System OK	Go to **Step 4**
4	Replace the drive belt tensioner. Is the repair complete?	System OK	-

cardiagn.com

REPAIR INSTRUCTIONS - OFF VEHICLE

DRIVE BELT TENSIONER REMOVAL

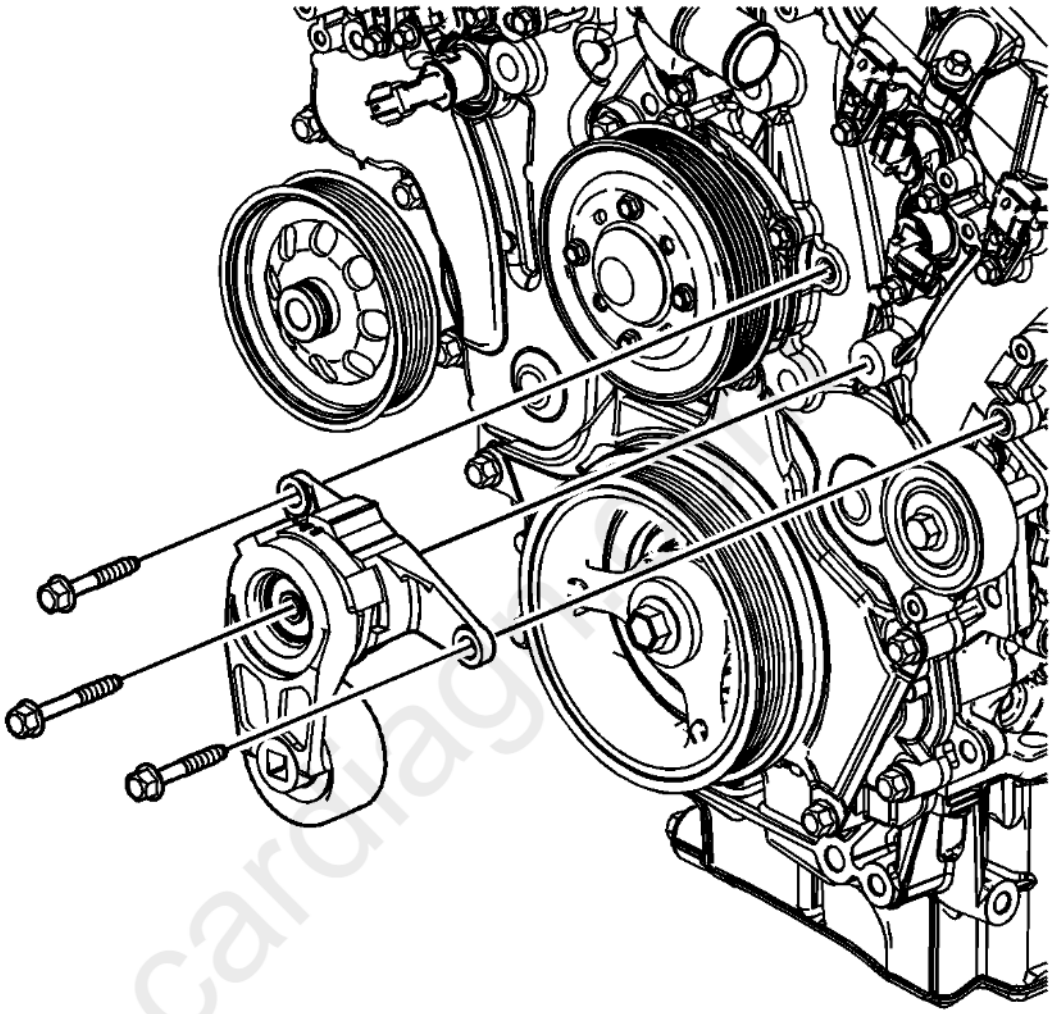

Fig. 1: Locating Drive Belt Tensioner Bracket Bolts
Courtesy of GENERAL MOTORS COMPANY

1. Remove the drive belt tensioner bracket bolts.
2. Remove the drive belt tensioner assembly.

OIL LEVEL INDICATOR AND TUBE REMOVAL

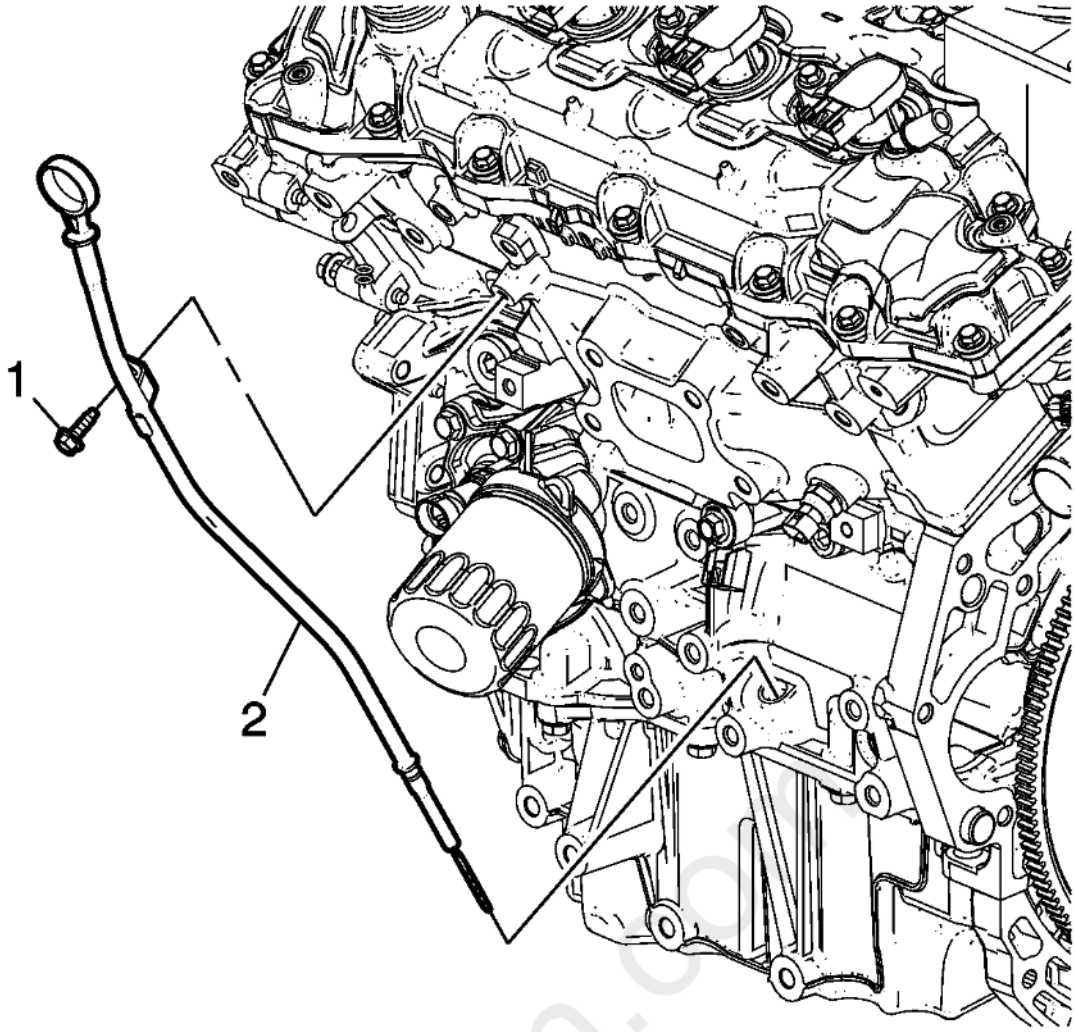

Fig. 2: Oil Level Indicator Tube Bracket Bolt
Courtesy of GENERAL MOTORS COMPANY

1. Remove the oil level indicator tube bracket bolt (1).
2. Remove the oil level indicator and tube (2) by sliding the tube out from the lower crankcase hole.

cardiagn.com

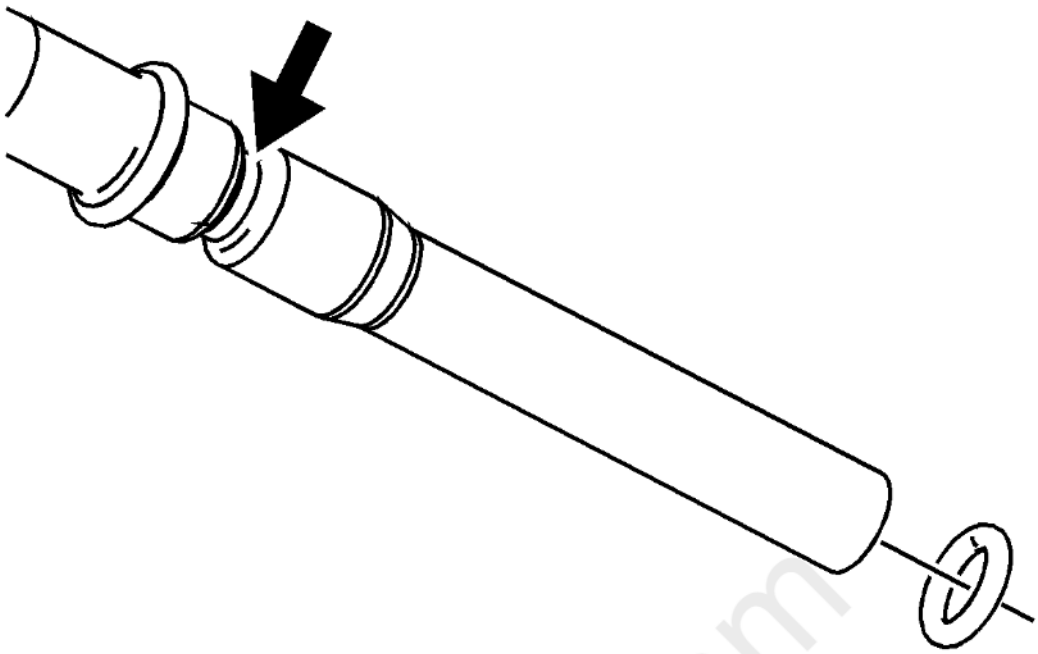

Fig. 3: View Of Oil Level Indicator Tube O-Ring
Courtesy of GENERAL MOTORS COMPANY

3. Remove and discard the O-ring from the oil level indicator tube if damaged.

OIL FILTER ADAPTER REMOVAL

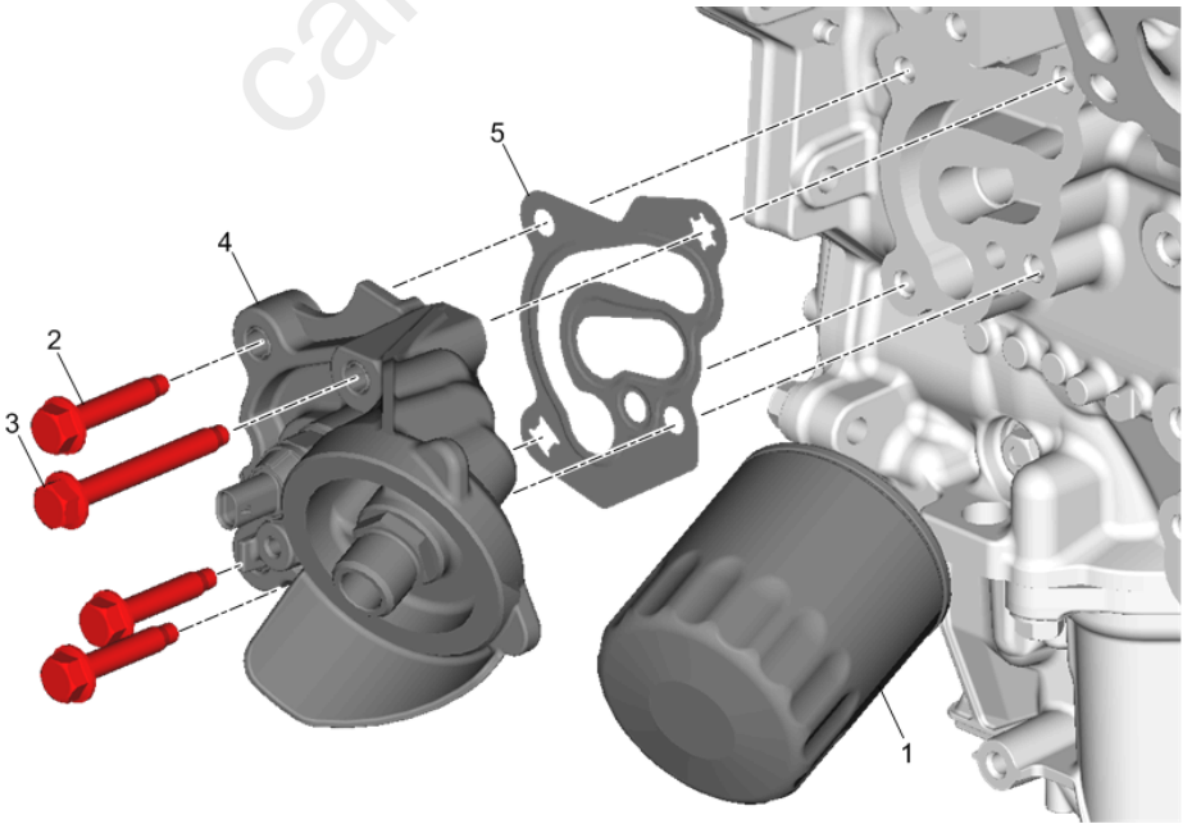

cardiagn.com

Fig. 4: Oil Filter Adapter Components
Courtesy of GENERAL MOTORS COMPANY

Callout	Component Name
1	Oil Filter **NOTE:** **Remove and DISCARD the oil filter.**
2	Oil Filter Adapter Bolt
3	Oil Filter Adapter Bolt (Qty: 3)
4	Oil Filter Adapter
5	Oil Filter Adapter Gasket **NOTE:** **Remove and DISCARD the gasket.**

INTAKE MANIFOLD REMOVAL

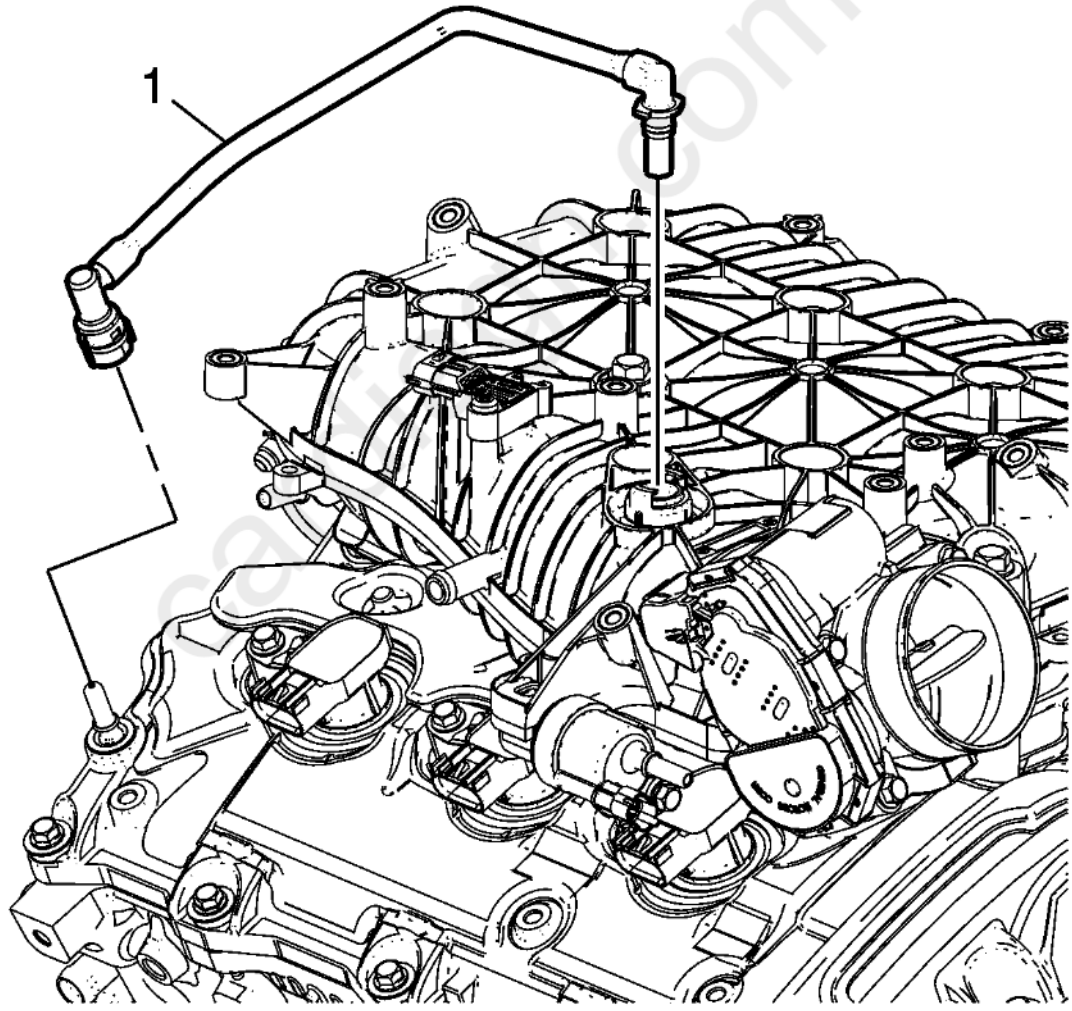

Fig. 5: View Of Positive Crankcase Ventilation (PCV) Tube Assembly
Courtesy of GENERAL MOTORS COMPANY

1. Disconnect and remove the positive crankcase ventilation (PCV) tube (1) from the intake manifold and right camshaft cover.

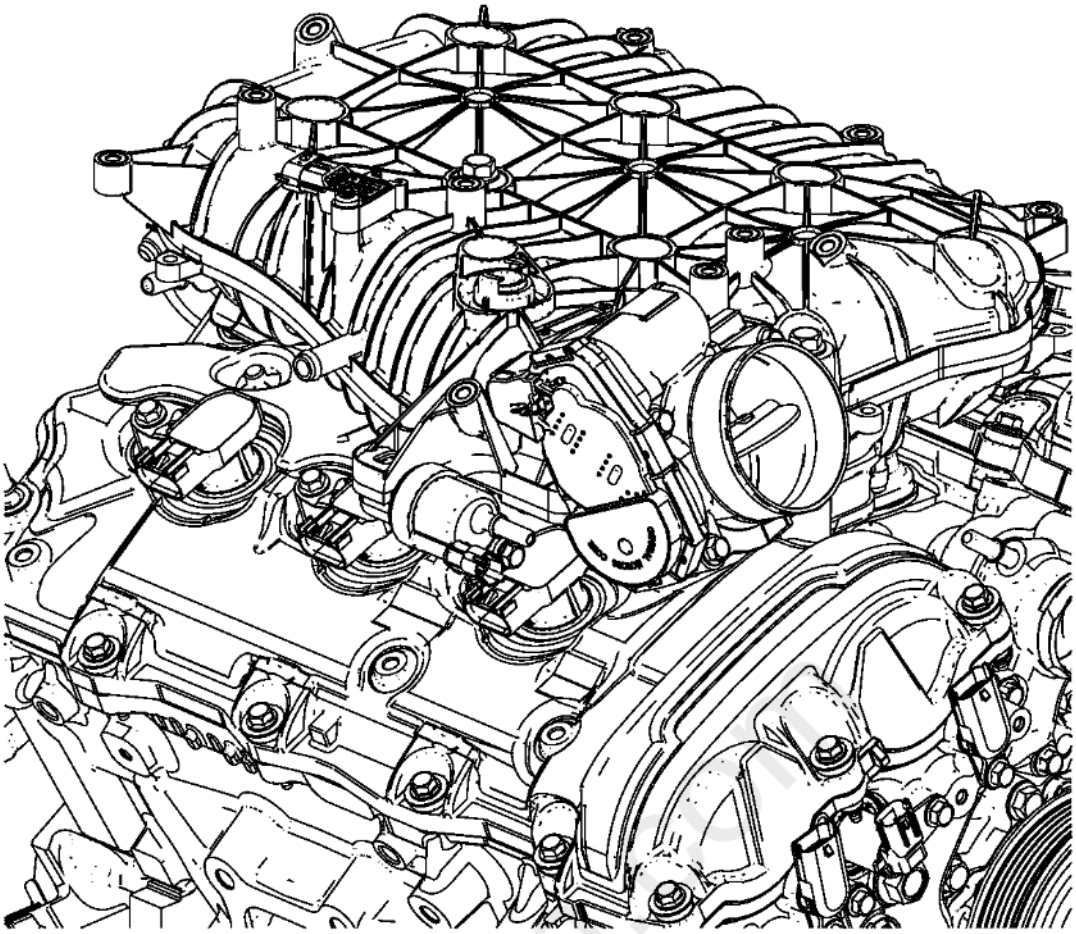

Fig. 6: Upper Intake Manifold And EVAP Solenoid
Courtesy of GENERAL MOTORS COMPANY

2. Remove the evaporative (EVAP) hose from the intake manifold and EVAP solenoid.

cardiagn.com

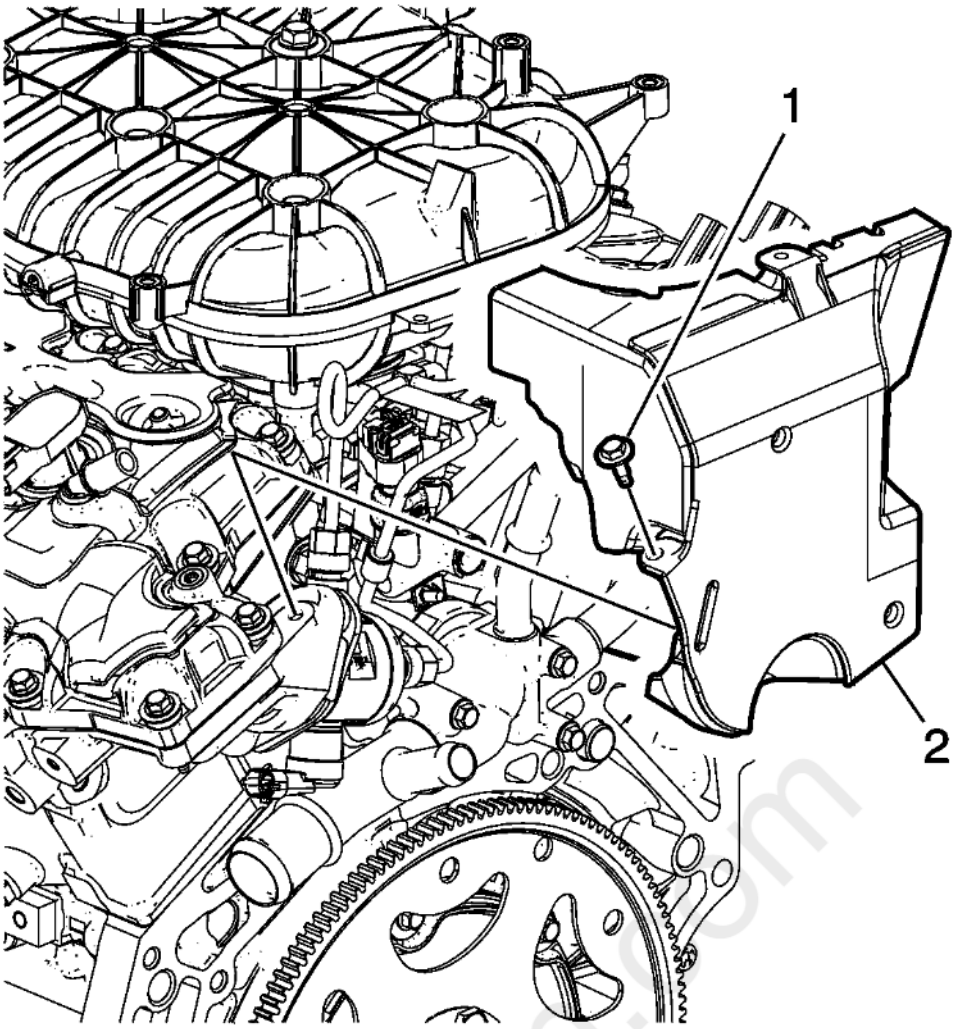

Fig. 7: View Of Fuel Pump Cover & Bolt
Courtesy of GENERAL MOTORS COMPANY

3. Remove the engine rear noise shield bolt (1).
4. Remove the engine rear noise shield (2).

cardiagn.com

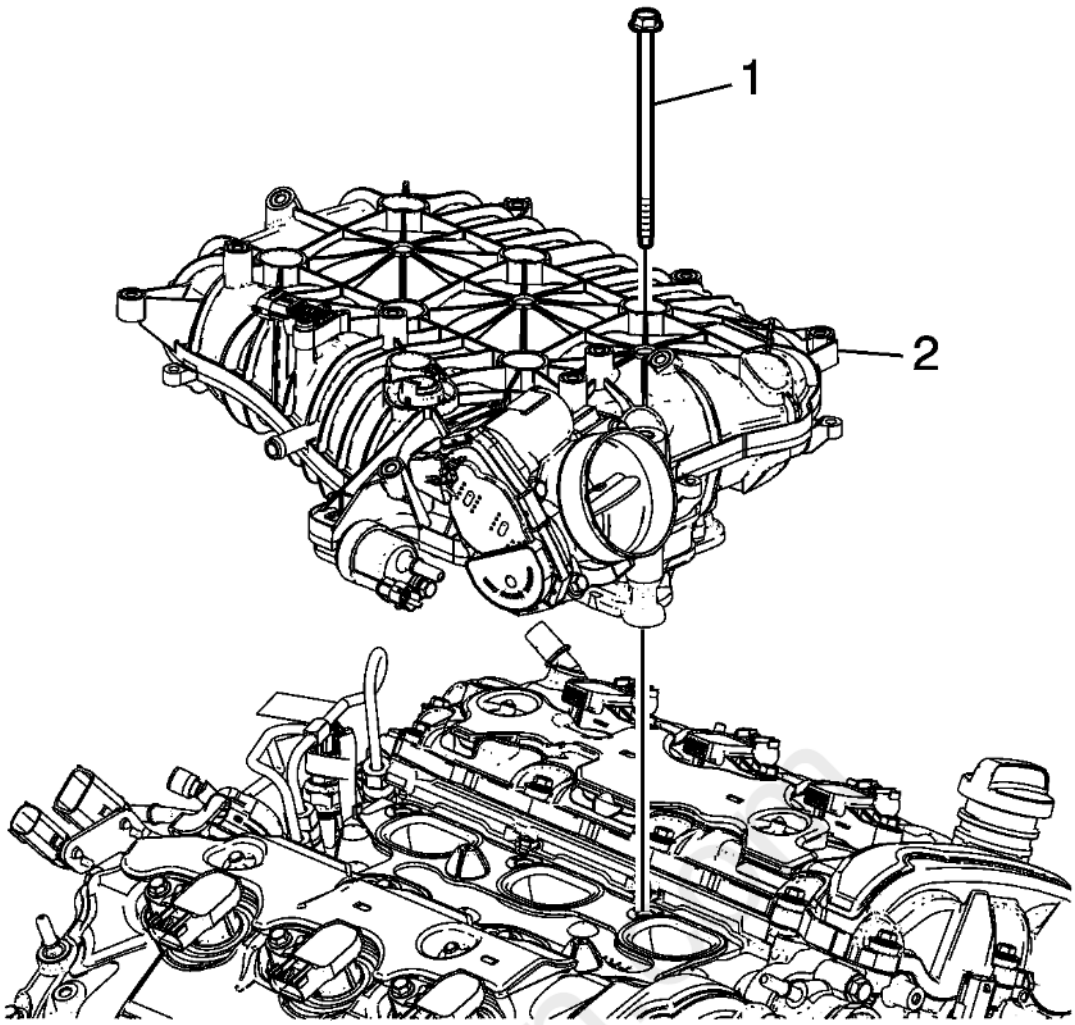

Fig. 8: Intake Manifold Assembly
Courtesy of GENERAL MOTORS COMPANY

5. Remove the intake manifold bolts (1).
6. Remove the intake manifold assembly (2).

cardiagn.com

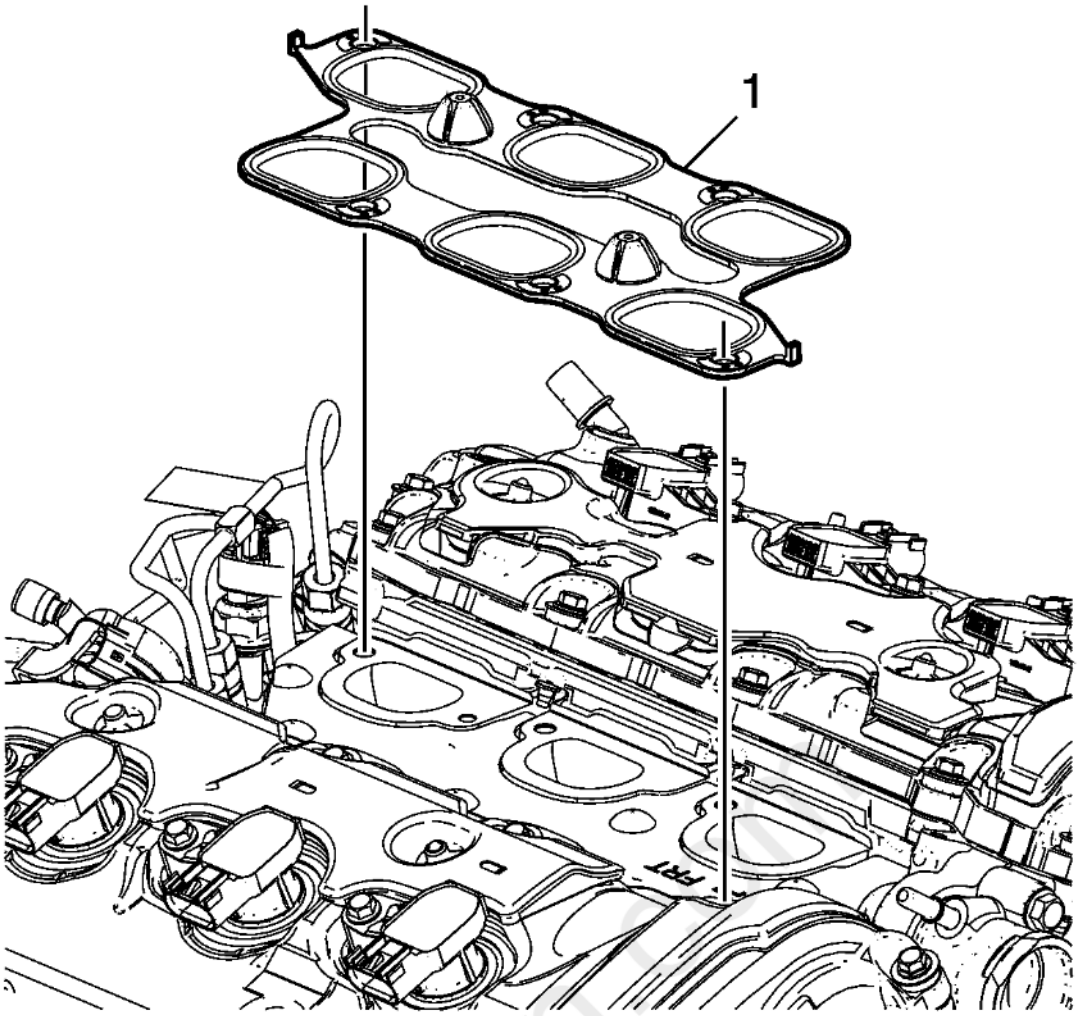

Fig. 9: Intake Manifold Gasket
Courtesy of GENERAL MOTORS COMPANY

7. Remove and discard the intake manifold gasket (1).

WATER OUTLET REMOVAL

cardiagn

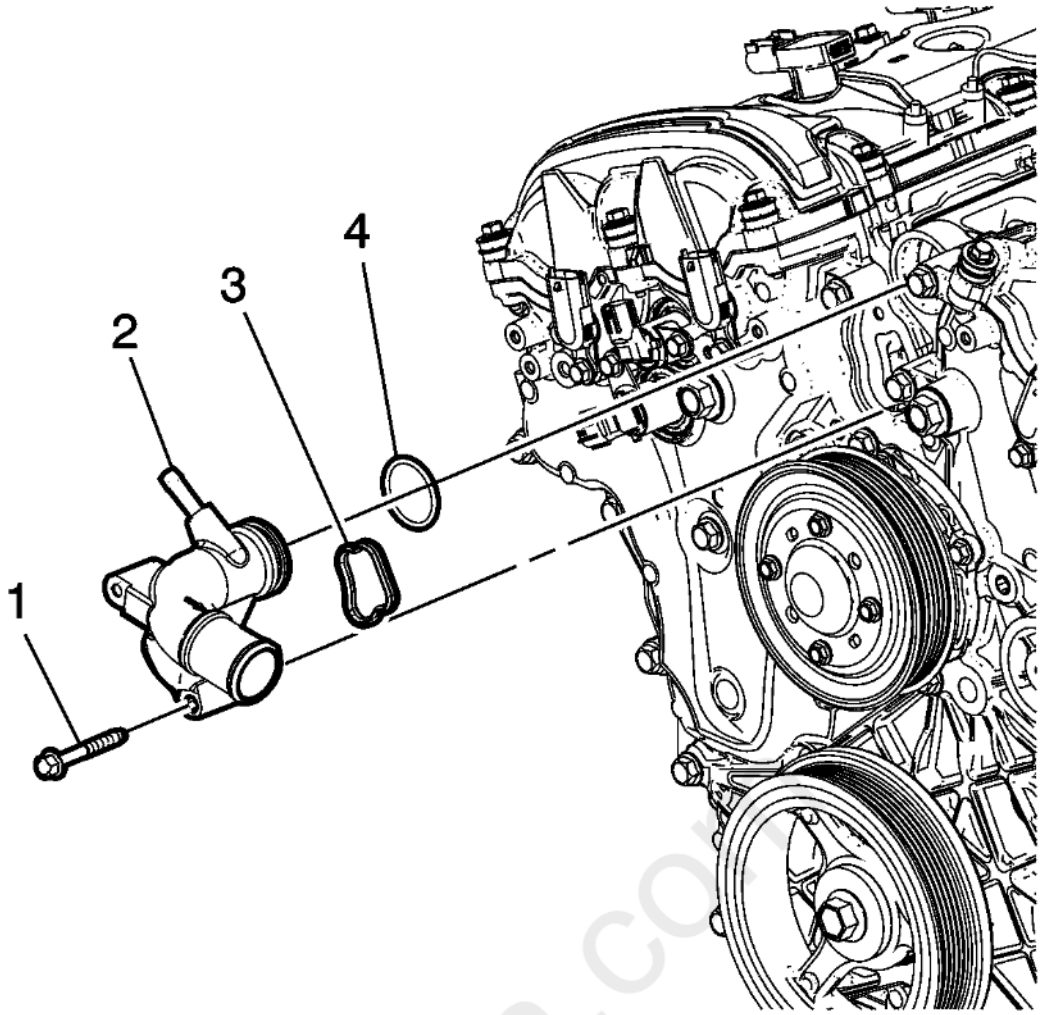

Fig. 10: Water Outlet, Seals And Bolts
Courtesy of GENERAL MOTORS COMPANY

1. Remove the water outlet bolts (1).
2. Remove the water outlet (2).
3. Remove the water outlet seals (3, 4).

ENGINE COOLANT THERMOSTAT HOUSING REMOVAL

cardiagn.com

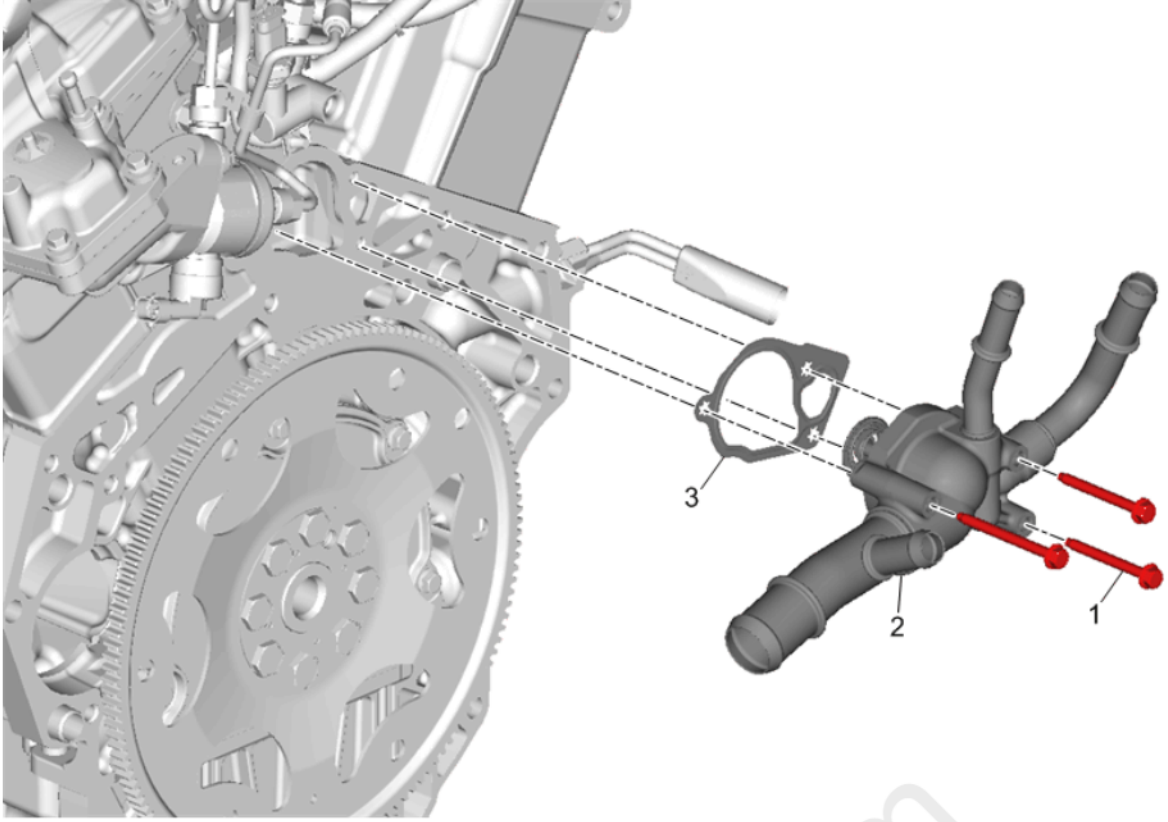

Fig. 11: Engine Coolant Thermostat Housing
Courtesy of GENERAL MOTORS COMPANY

Callout	Component Name
1	Engine Coolant Thermostat Housing Bolt (Qty: 3)
2	Engine Coolant Thermostat Housing
3	Engine Coolant Thermostat Housing Gasket **NOTE:** **Remove and DISCARD the gasket.**

CRANKSHAFT BALANCER REMOVAL

Special Tools

- **EN 46106** Flywheel Holding Tool
- **J 38416-B** Harmonic Balancer Remover
- **J 38416-2** Crankshaft Button

For equivalent regional tools, refer to **Special Tools** .

cardiagn.com

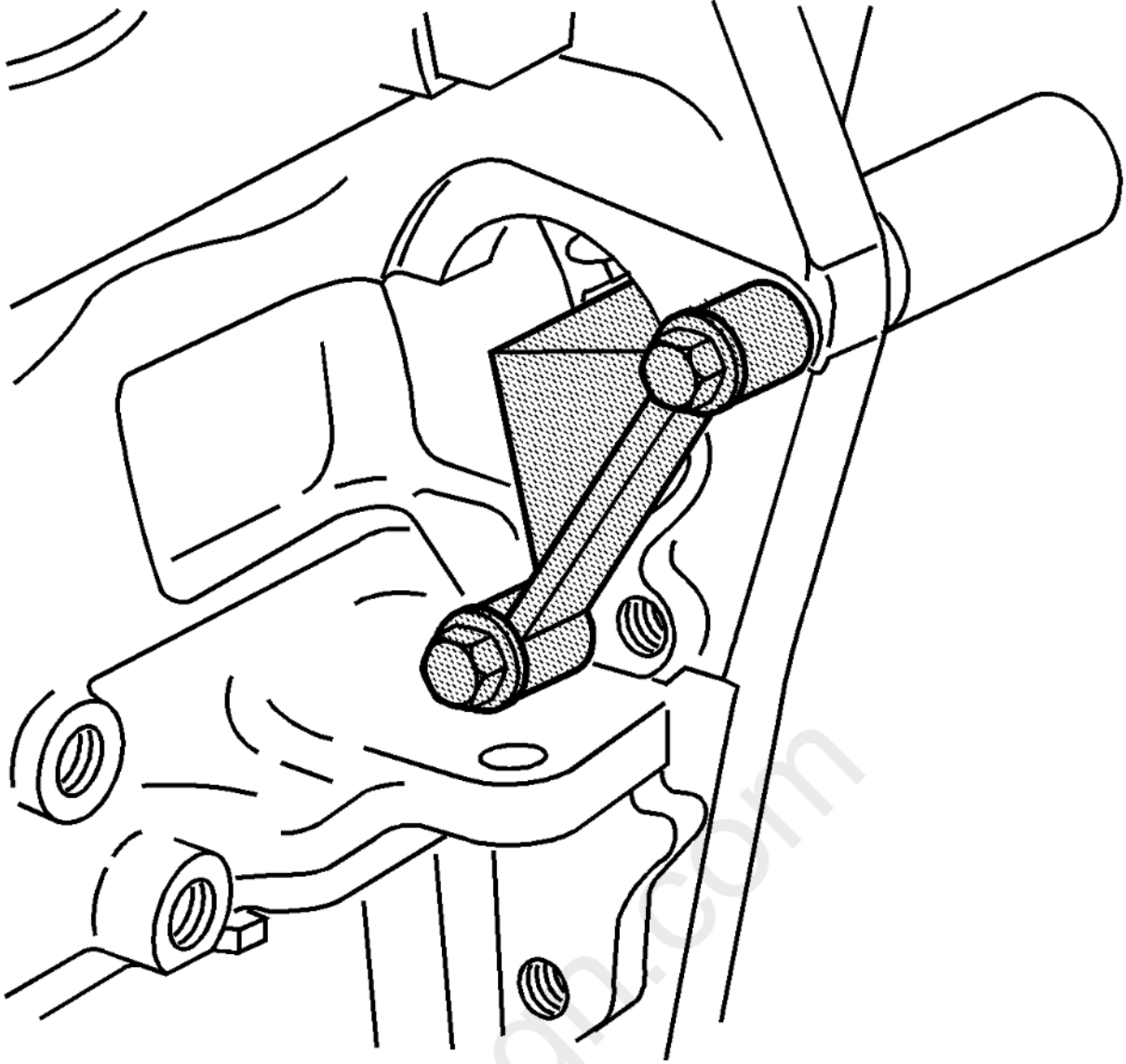

Fig. 12: Flywheel Holding Fixture
Courtesy of GENERAL MOTORS COMPANY

1. Install the **EN 46106** tool through the starter mounting hole.

carmanuals.com

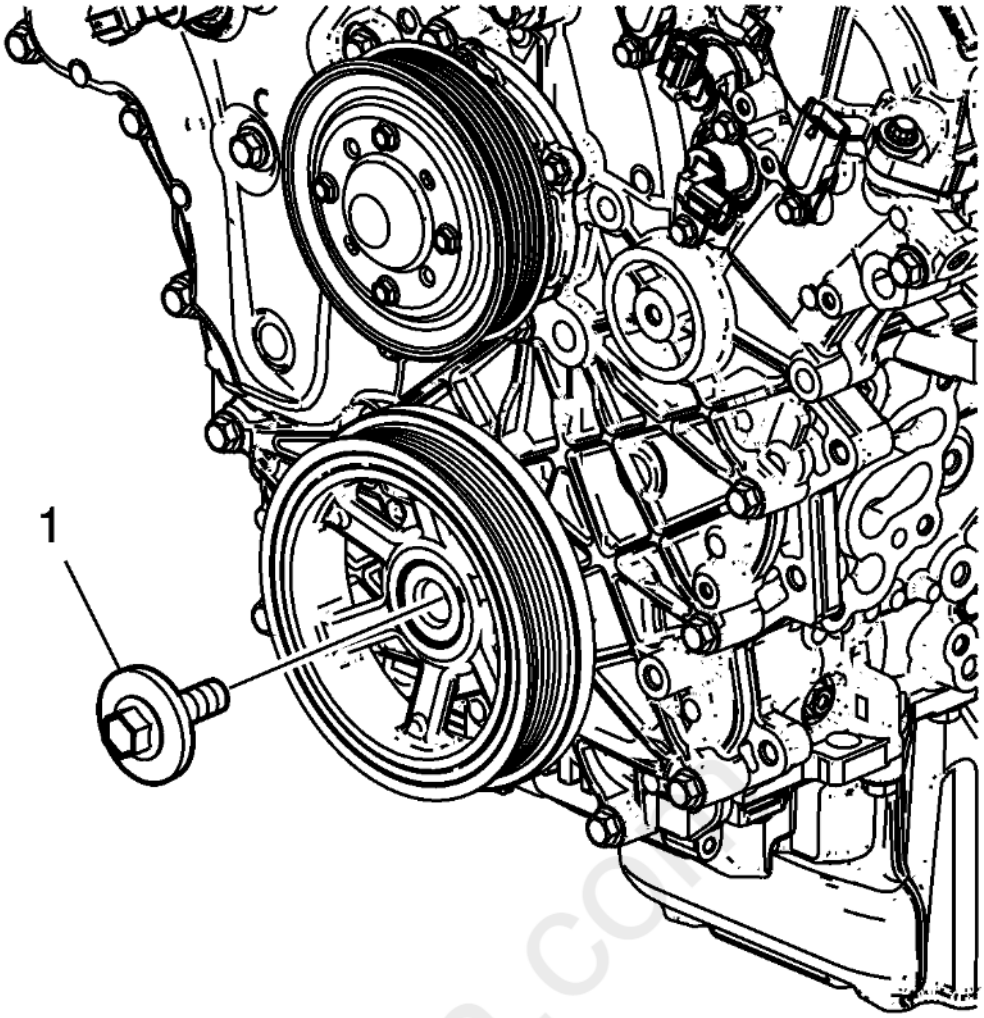

Fig. 13: Crankshaft Balancer Bolt
Courtesy of GENERAL MOTORS COMPANY

2. Remove and discard the crankshaft balancer bolt (1).

cardiagn.com

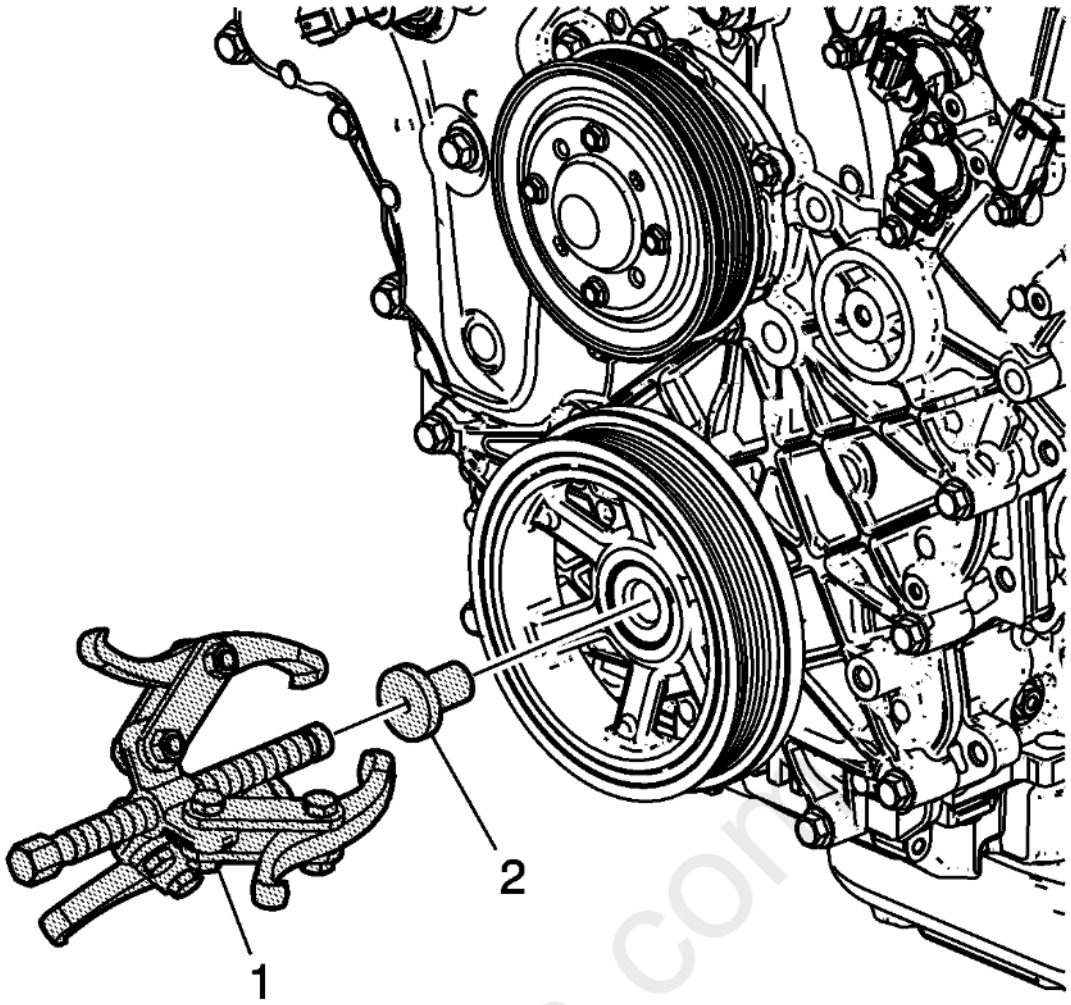

Fig. 14: Installing Crankshaft Balancer Remover
Courtesy of GENERAL MOTORS COMPANY

3. Install the **J 38416-2** button (2) in the nose of the crankshaft.
4. Install the **J 38416-B** remover (1) in order to remove the crankshaft balancer.

cardiagn.com

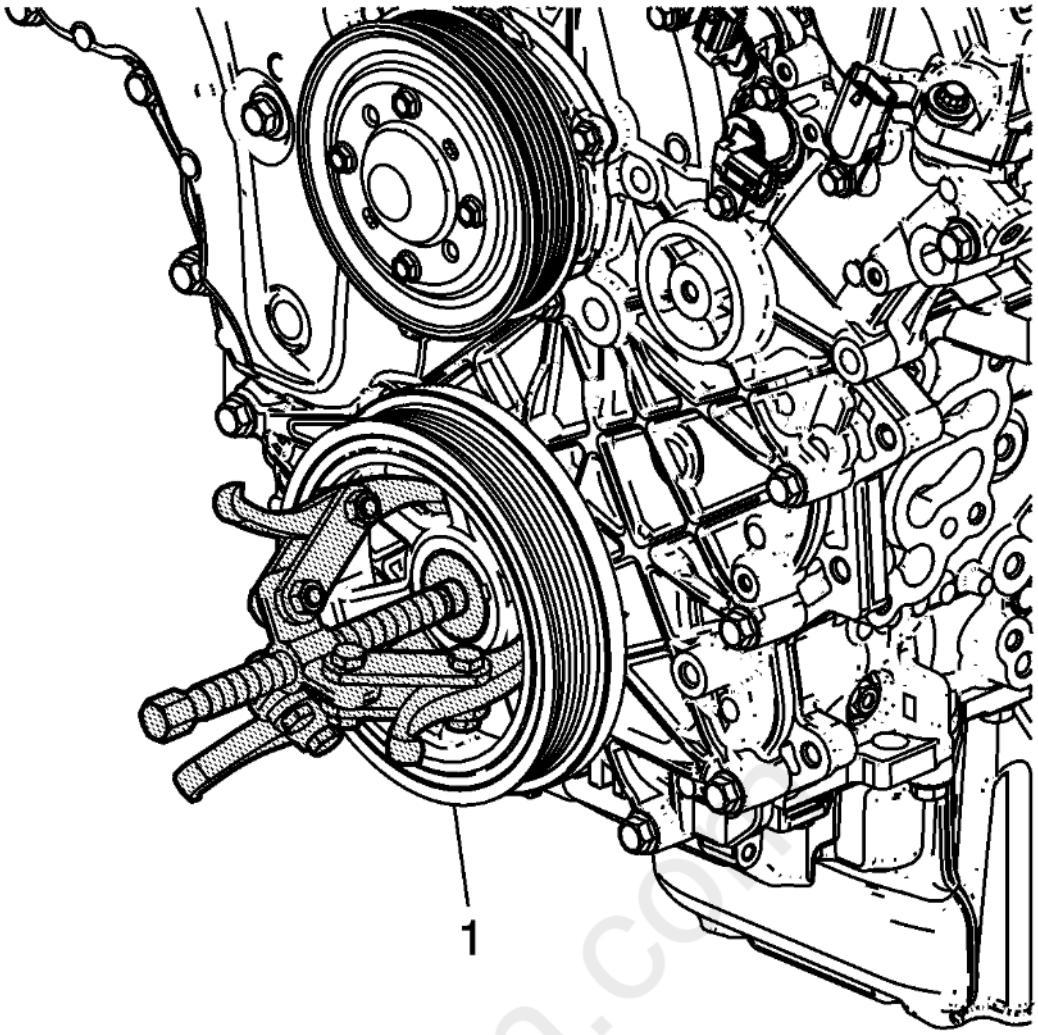

Fig. 15: Pulling Crankshaft Balancer Off
Courtesy of GENERAL MOTORS COMPANY

5. Pull the crankshaft balancer (1) off by tightening the center bolt on the **J 38416-B** remover until the crankshaft balancer pulls off of the crankshaft end.
6. Remove the **J 38416-B** remover and **J 38416-2** button from the crankshaft balancer.

carmagn.com

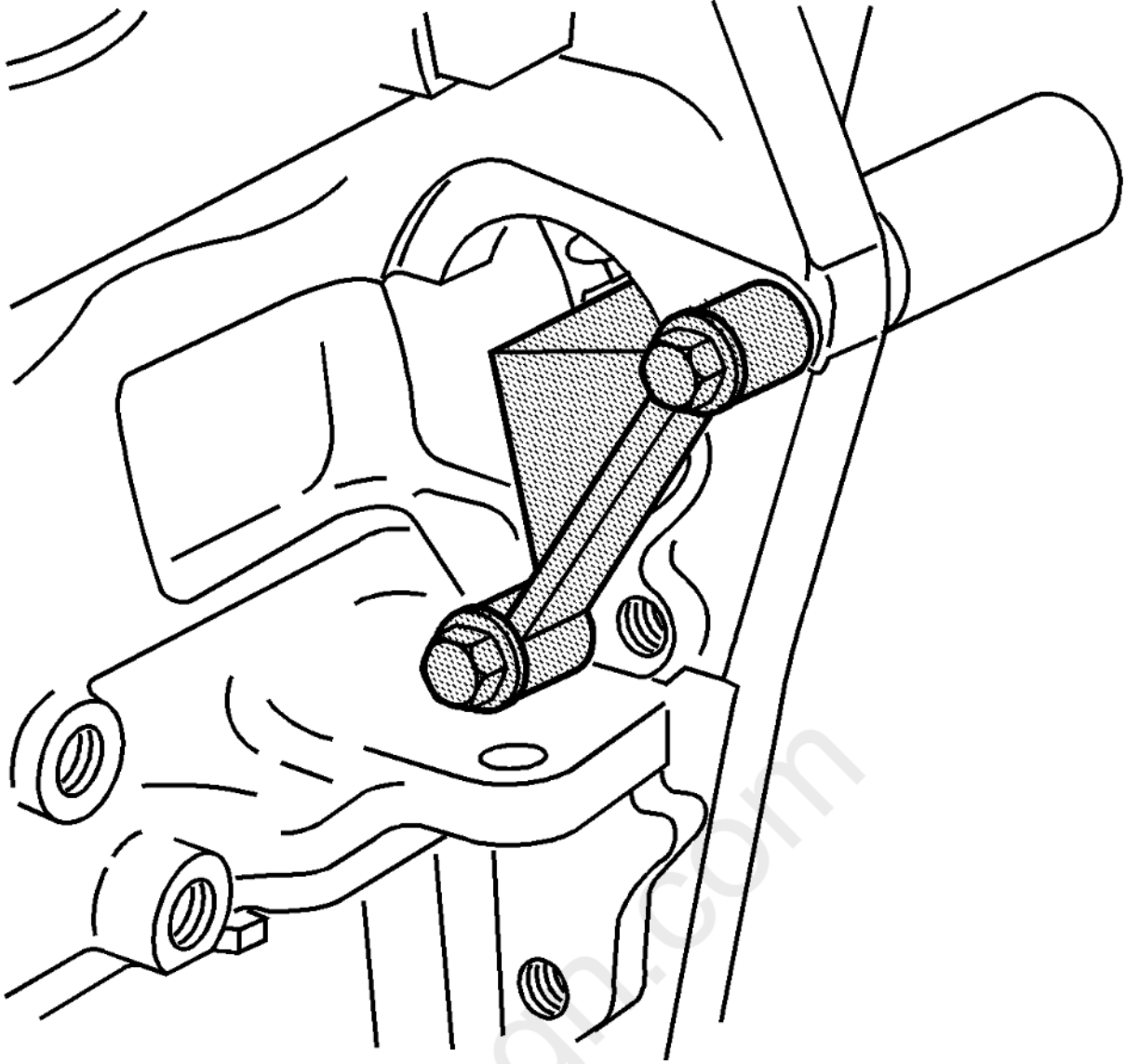

Fig. 16: Flywheel Holding Fixture
Courtesy of GENERAL MOTORS COMPANY

7. Remove the **EN 46106** tool from the starter mounting hole.

AUTOMATIC TRANSMISSION FLEX PLATE REMOVAL

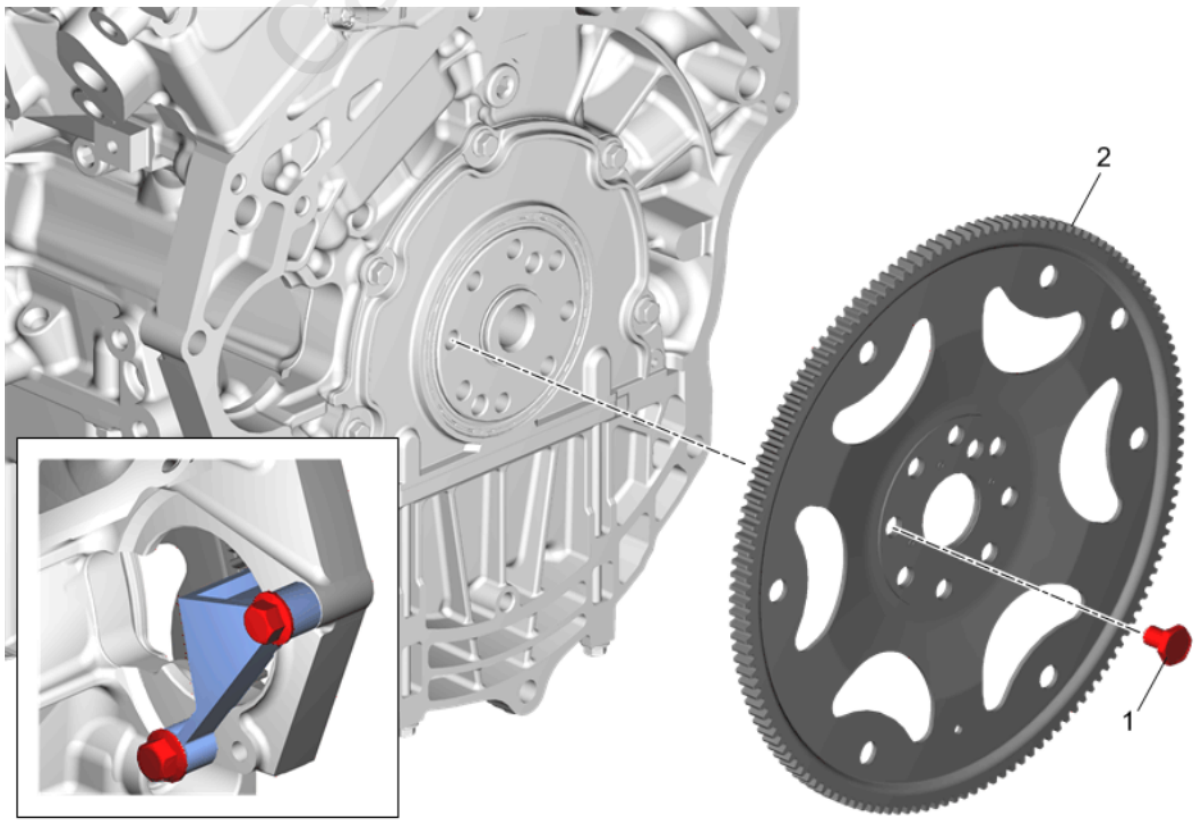

Fig. 17: Automatic Transmission Flex Plate
Courtesy of GENERAL MOTORS COMPANY

Callout	Component Name
1	Automatic Transmission Flex Plate Bolt **CAUTION:** **This vehicle is equipped with torque-to-yield or single use fasteners. Install a NEW torque-to-yield or single use fastener when installing this component. Failure to replace the torque-to-yield or single use fastener could cause damage to the vehicle or component.** **Procedure** 1. Install the **EN-46106** Flywheel Holding Tool through the starter mounting hole. 2. Remove the flex plate bolts (1) and discard 3. Remove the flex plate (2) from the crankshaft. 4. Remove the **EN-46106** Flywheel Holding Tool through the starter mounting hole. **Special Tools** **EN-46106** Flywheel Holding Tool Equivalent regional tools:**Special Tools**
2	Automatic Transmission Flex Plate

CAMSHAFT COVER REMOVAL - LEFT SIDE

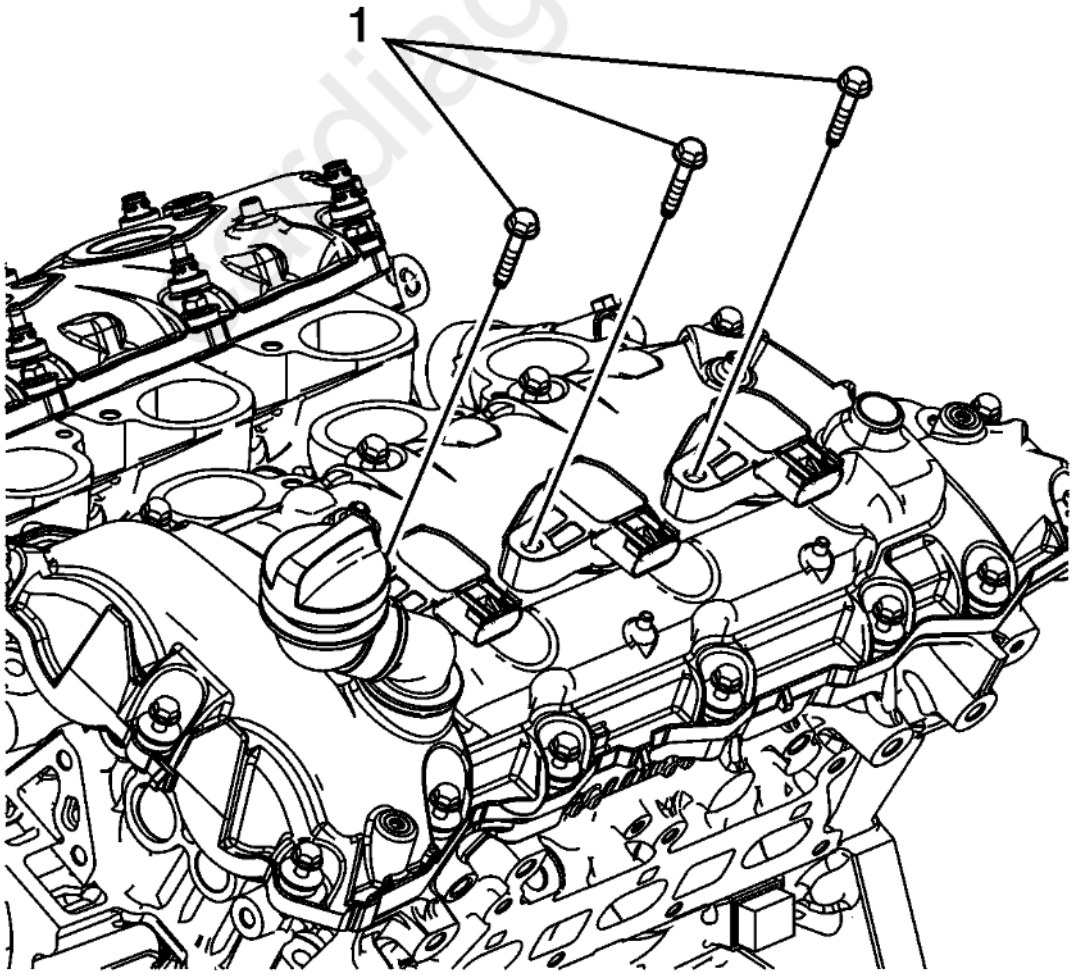

Fig. 18: View of Ignition Coil Bolts and Cylinder Heads
Courtesy of GENERAL MOTORS COMPANY

1. Remove the ignition coil bolts (1).

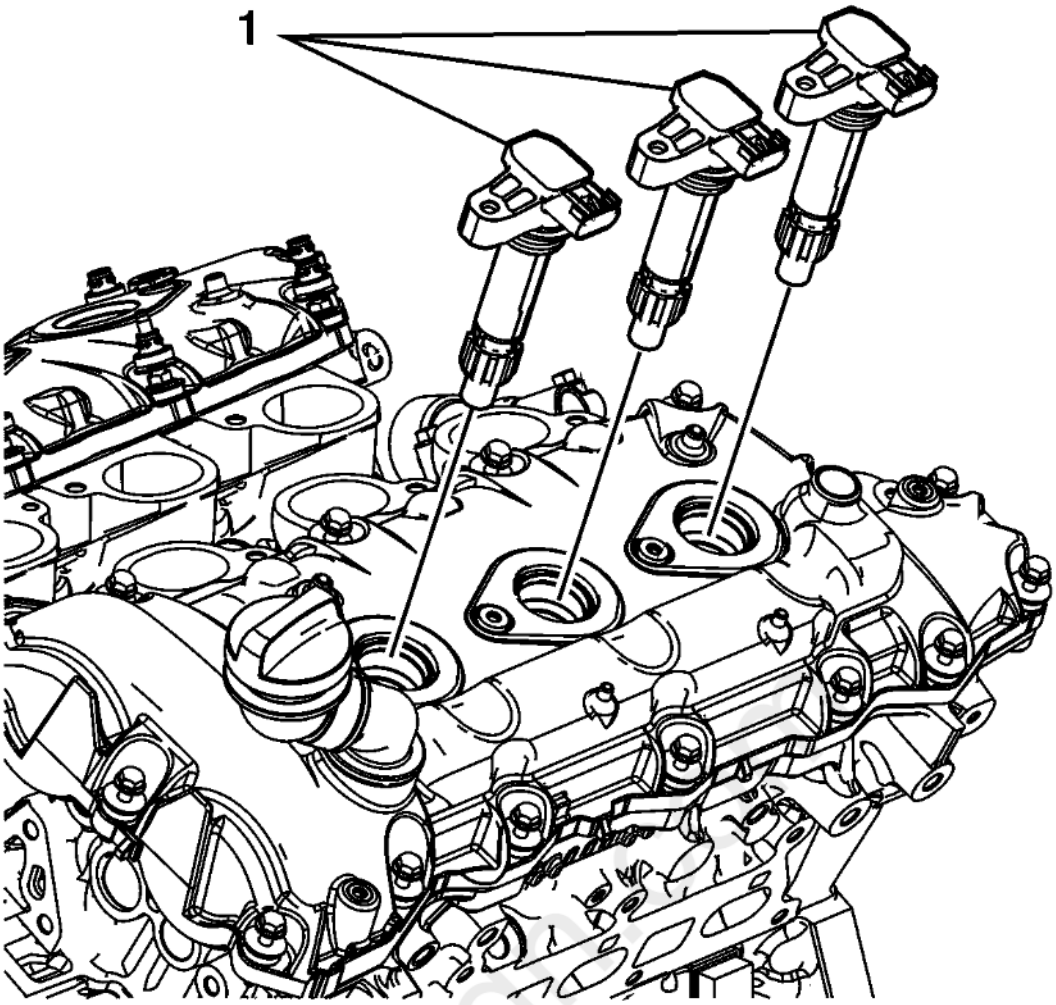

Fig. 19: View of Ignition Coils and Cylinder Head
Courtesy of GENERAL MOTORS COMPANY

2. Remove the ignition coils (1).

cardiagn.com

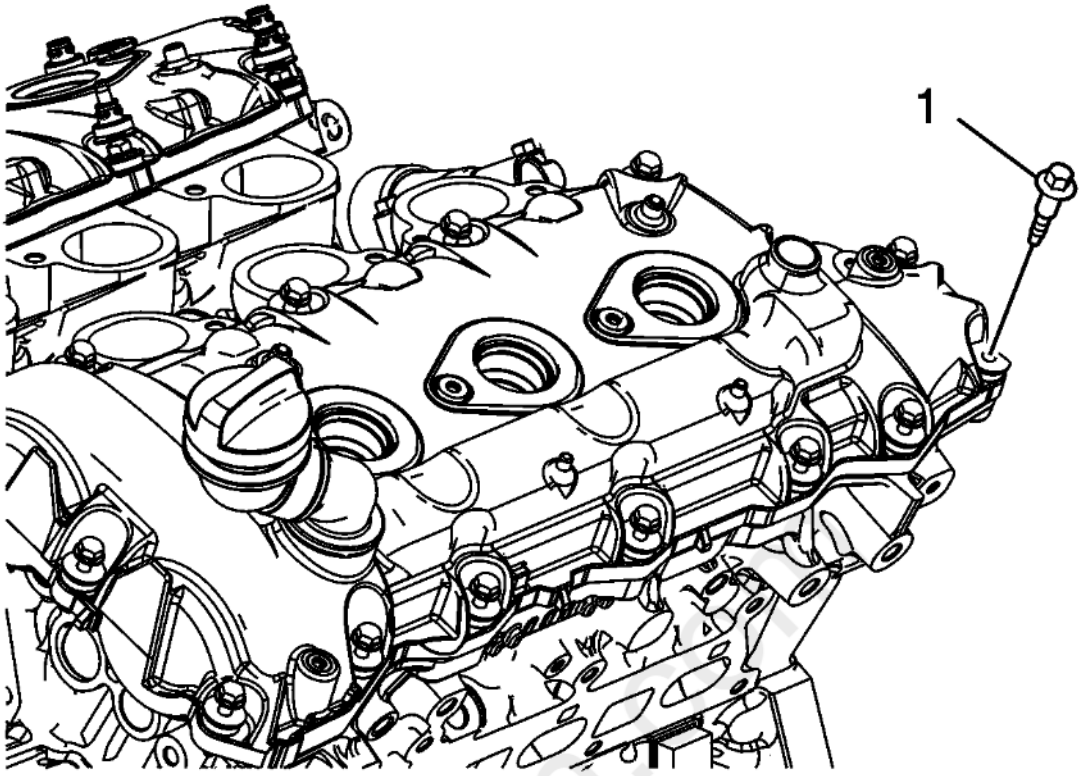

Fig. 20: View of Camshaft Cover and Bolts
Courtesy of GENERAL MOTORS COMPANY

3. Remove the left camshaft cover bolts (1).
4. Remove and discard the camshaft cover grommets and camshaft cover bolts if they are serviced with the grommet.

cardiagn

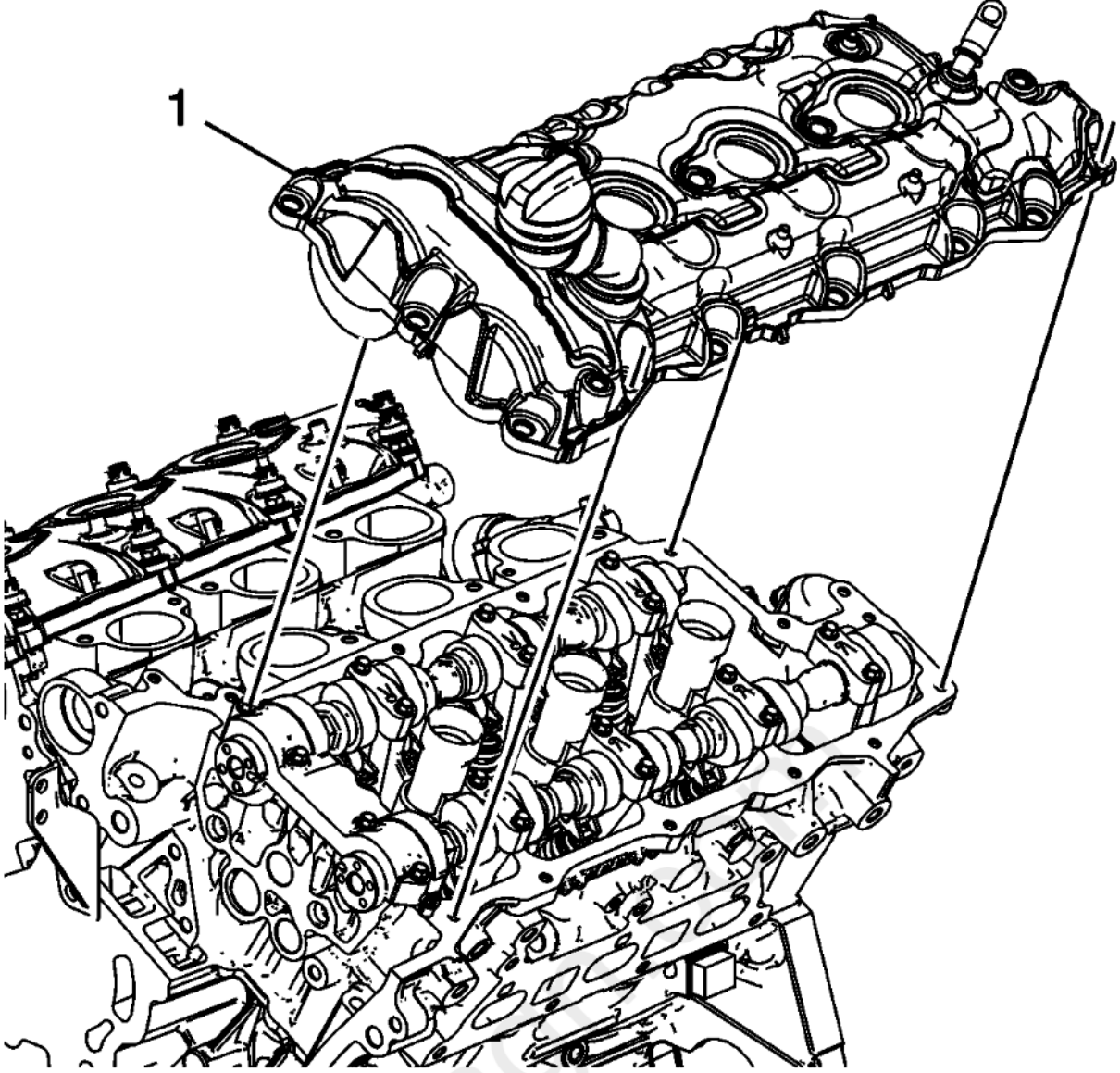

Fig. 21: View Of Left Camshaft Cover & Left Cylinder Head
Courtesy of GENERAL MOTORS COMPANY

5. Remove the left camshaft cover (1) from the left cylinder head.

CAMSHAFT COVER REMOVAL - RIGHT SIDE

carmanuals

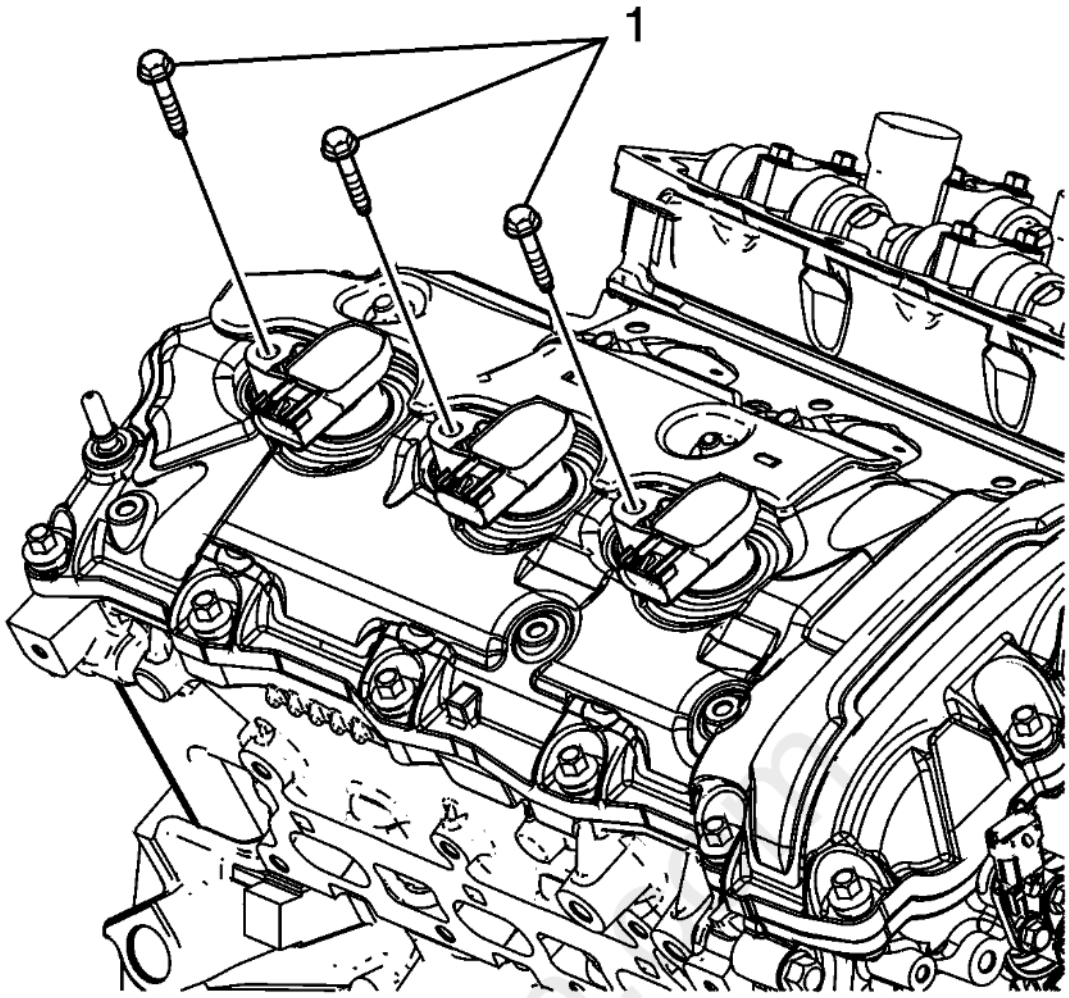

Fig. 22: Identifying Ignition Coil Bolts
Courtesy of GENERAL MOTORS COMPANY

1. Remove the ignition coil bolts (1).

cardiagn.com

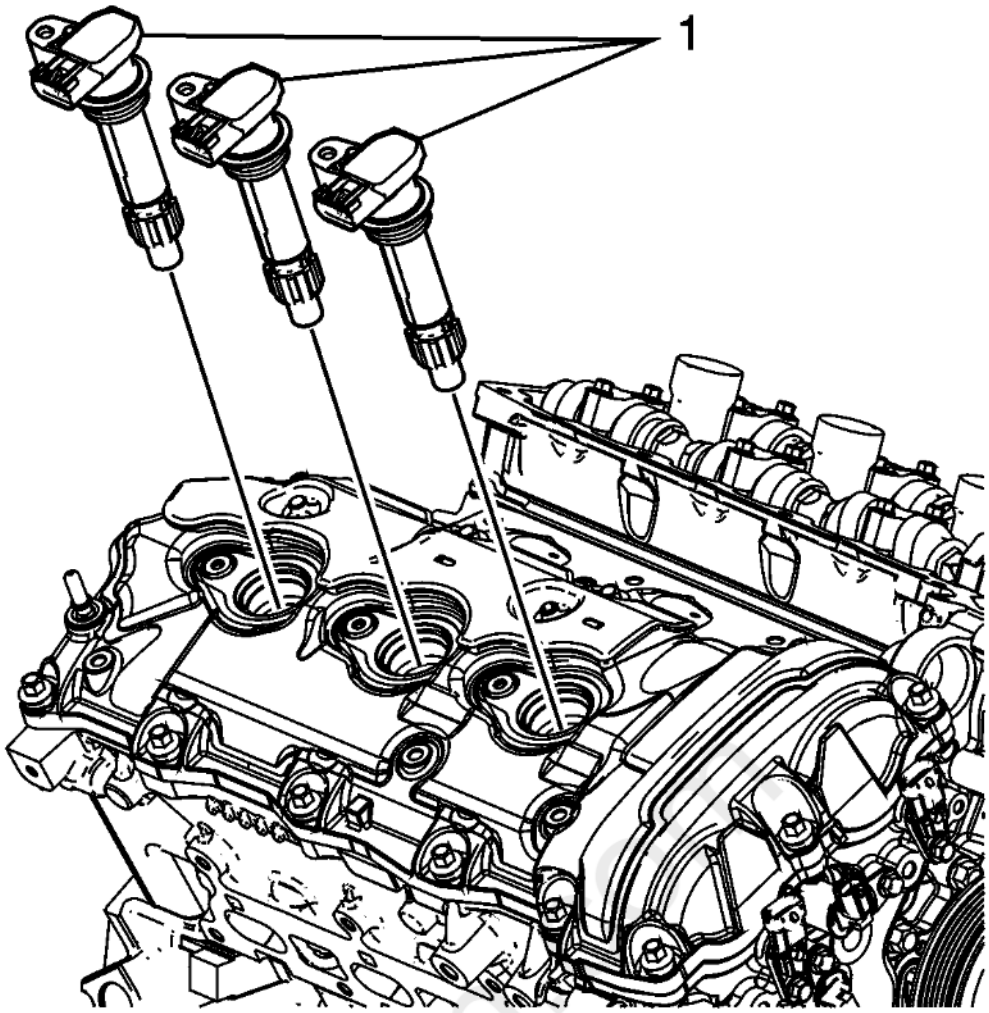

Fig. 23: View Of Ignition Coils
Courtesy of GENERAL MOTORS COMPANY

2. Remove the ignition coils (1).

cardiagn

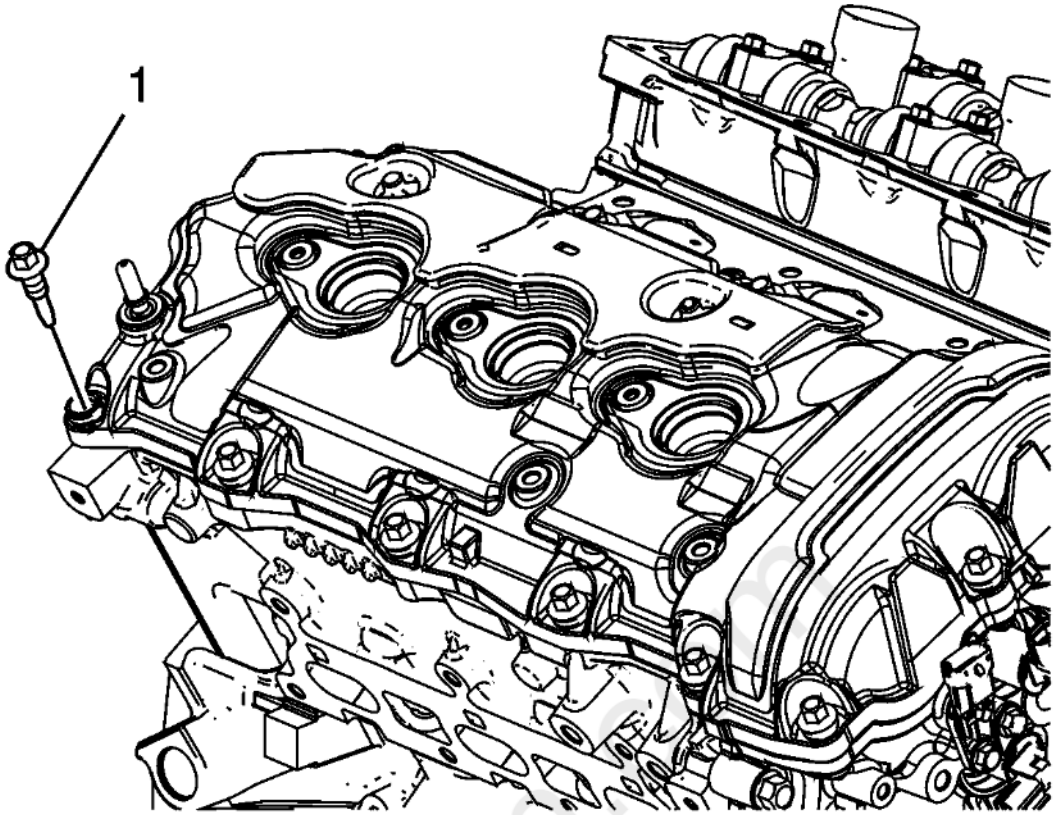

Fig. 24: View Of Camshaft Cover Bolts
Courtesy of GENERAL MOTORS COMPANY

3. Remove the right camshaft cover bolts (1).
4. Remove and discard the camshaft cover grommets and camshaft cover bolts if they are serviced with the grommet.

cardiagn.com

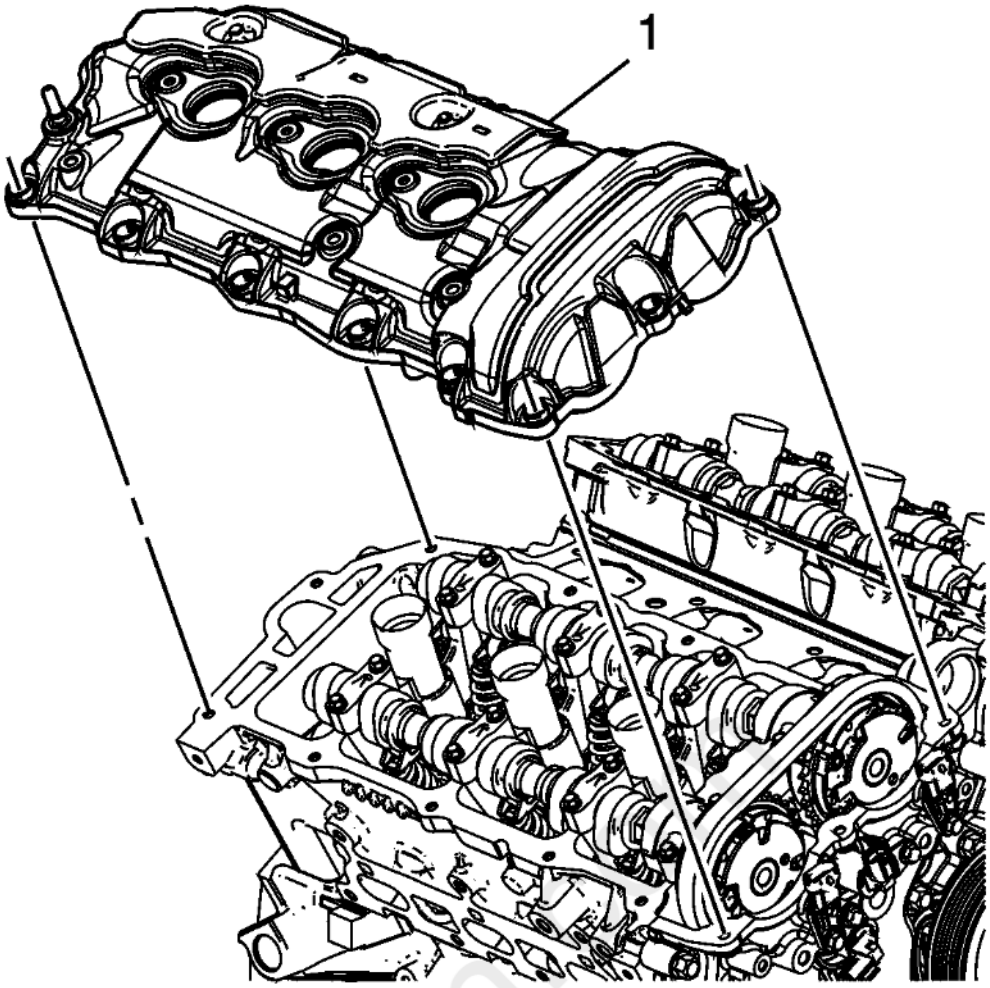

Fig. 25: View Of Right Camshaft Cover
Courtesy of GENERAL MOTORS COMPANY

5. Remove the right camshaft cover (1) from the right cylinder head.

WATER PUMP REMOVAL

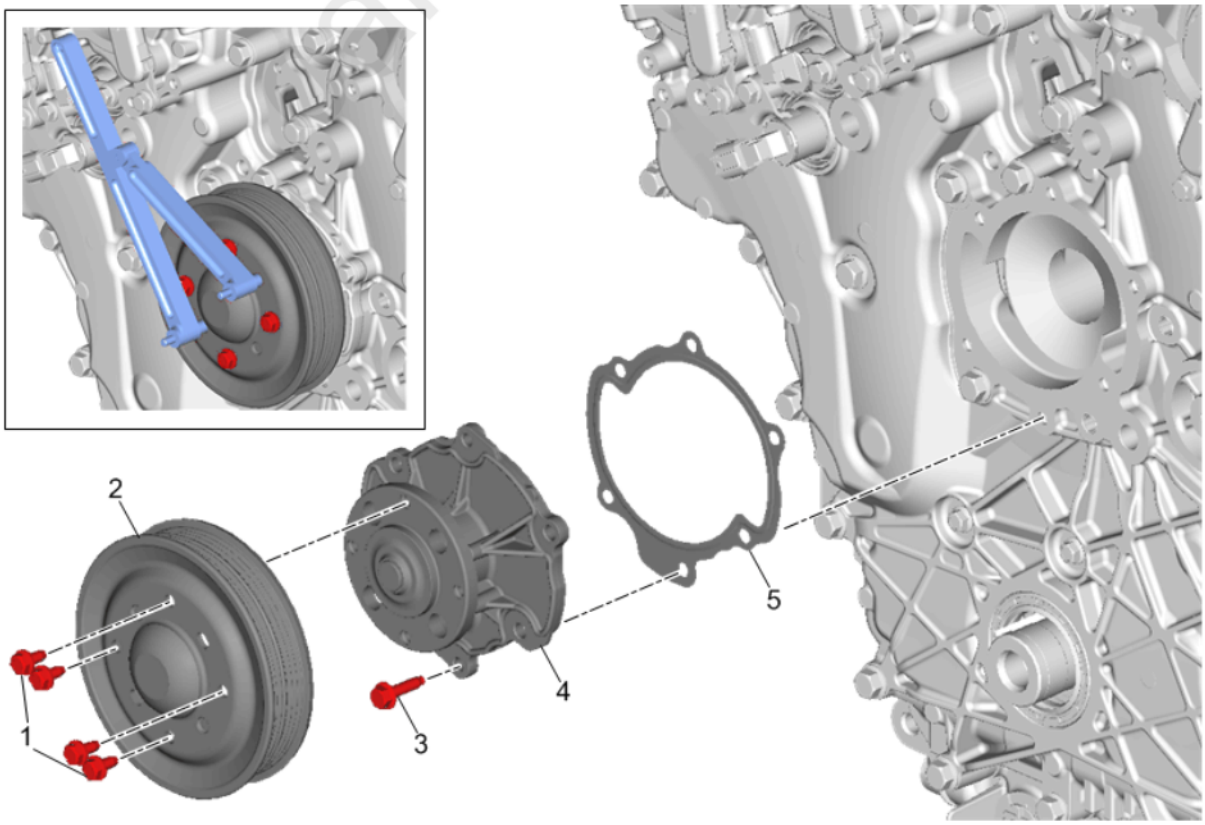

Fig. 26: Water Pump Components
Courtesy of GENERAL MOTORS COMPANY

Callout	Component Name
1	Water Pump Pulley Bolt (Qty: 4) **Procedure** 1. Install the **EN-46104** Water Pump Pulley Holding Tool onto the water pump pulley mounting holes. 2. Remove the water pump pulley bolts. 3. Remove the **EN-46104** Water Pump Pulley Holding Tool from the water pump pulley. **Special Tools** **EN - 46104** Water Pump Pulley Holding Tool Equivalent regional tools: **Special Tools**
2	Water Pump Pulley
3	Water Pump Bolt (Qty: 6) **CAUTION:** **This vehicle is equipped with torque-to-yield or single use fasteners. Install a NEW torque-to-yield or single use fastener when installing this component. Failure to replace the torque-to-yield or single use fastener could cause damage to the vehicle or component.** **NOTE:** **Remove and DISCARD the bolts.**
4	Water Pump
5	Water Pump Gasket **NOTE:** **Remove and DISCARD the gasket.**

ENGINE FRONT COVER REMOVAL

cardiagn.com

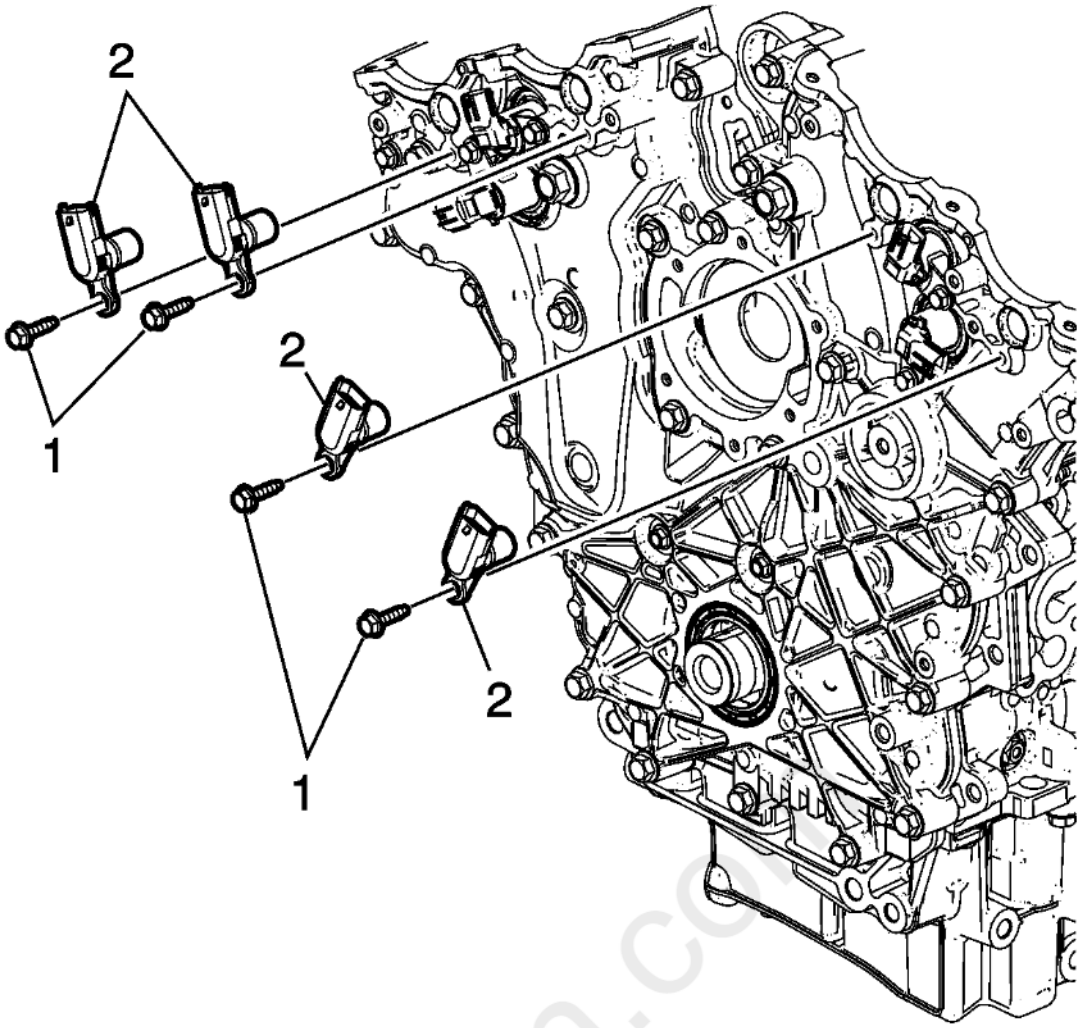

Fig. 27: Camshaft Position Sensors & Bolts
Courtesy of GENERAL MOTORS COMPANY

1. Remove the camshaft position sensor bolts (1).
2. Remove the camshaft position sensors (2).

cardiagn.com

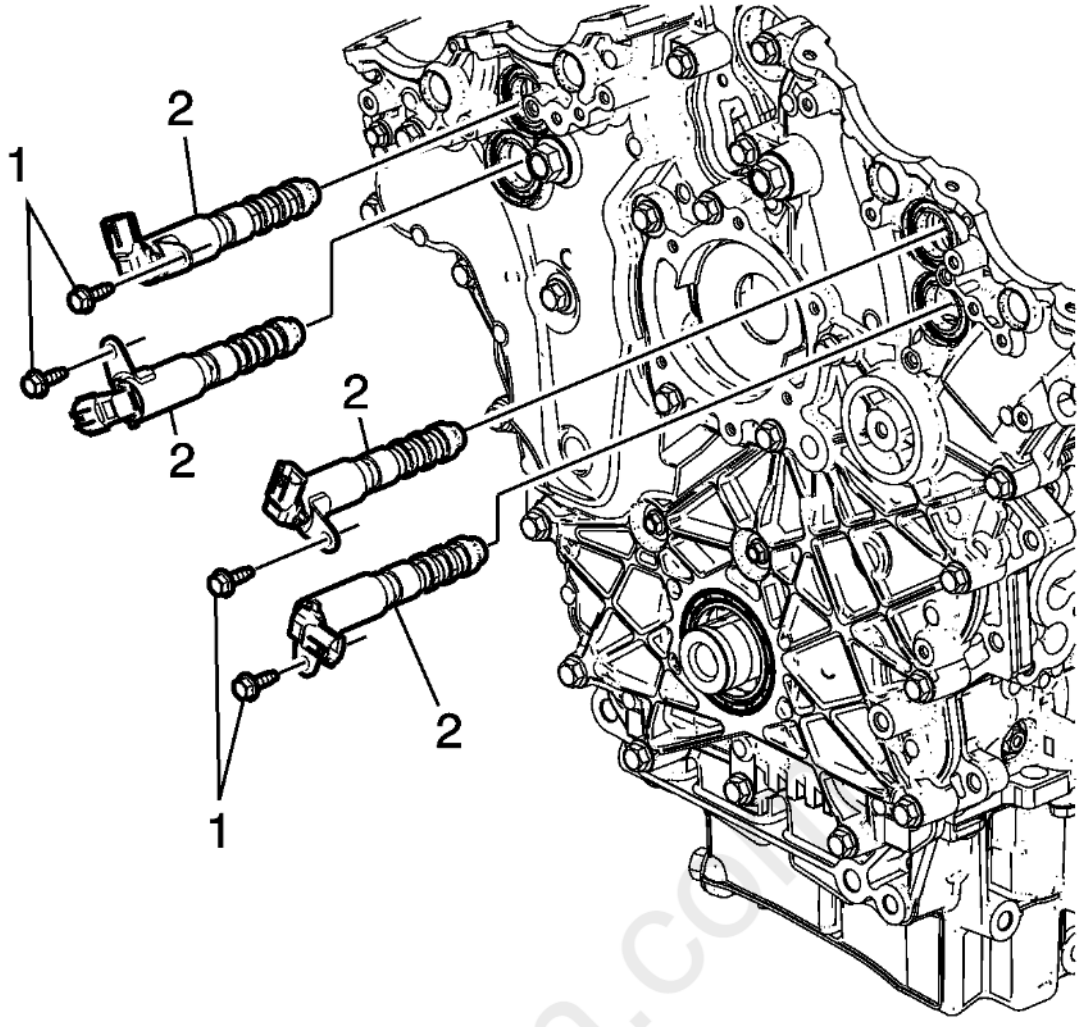

Fig. 28: Camshaft Position Actuator Valve And Bolts
Courtesy of GENERAL MOTORS COMPANY

3. Remove the camshaft position actuator valve bolts (1).

CAUTION: **The camshaft position actuator valves must be removed from the front cover prior to front cover removal or damage to the valves may occur.**

4. Remove the camshaft position actuator valves (2) from the front cover.

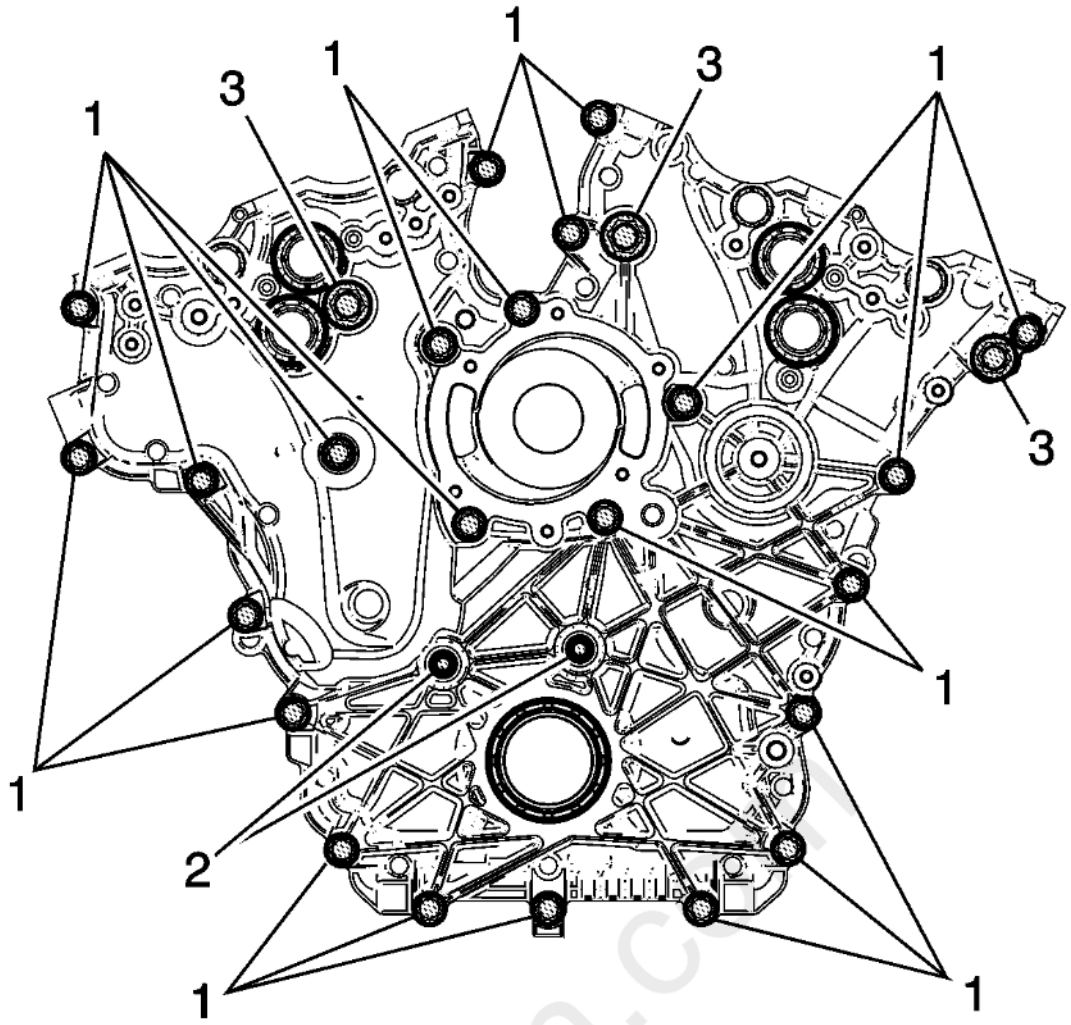

Fig. 29: Identifying Engine Front Cover Bolts
Courtesy of GENERAL MOTORS COMPANY

NOTE: **Engine front cover bolts in the number (3) location are model dependent and may have already been removed.**

NOTE: **There are a total of 23 M8 bolts (1) and 2 M6 bolts (2) that must be removed, and 3 optional M12 bolts (3) that may need to be removed before the front cover will separate from the engine block.**

5. Remove the engine front cover bolts (1 - 3).

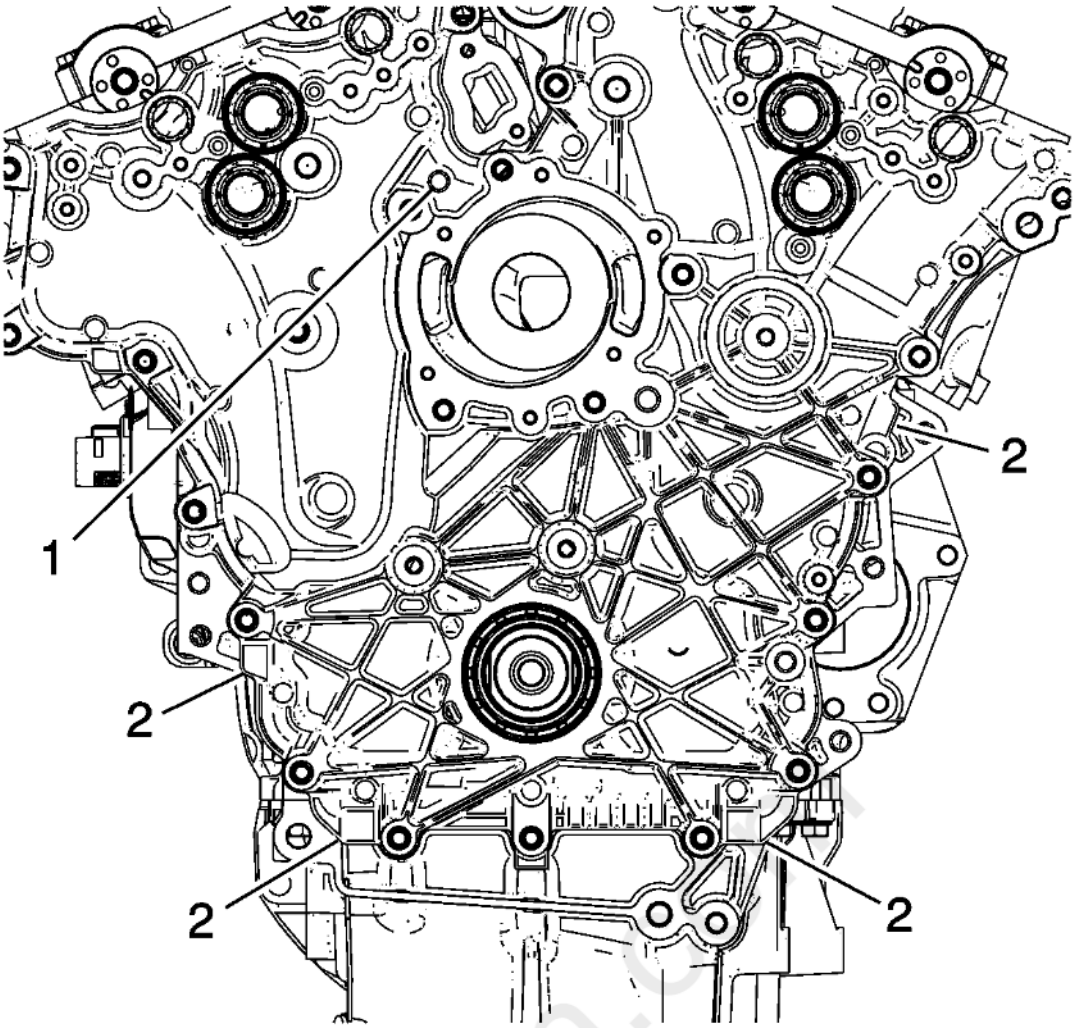

Fig. 30: Locating Jackscrew Hole
Courtesy of GENERAL MOTORS COMPANY

CAUTION: **Do not use the jackscrew hole without first removing all engine front cover bolts. Failure to remove all engine front cover bolts before using the jackscrew hole could result in damage to components.**

CAUTION: **Do not pry between the engine front cover and the camshaft position sensors or the camshaft position actuators in order to separate the RTV. Use the pry points and a bolt in the jackscrew hole in order to remove the engine front cover. Damage to the camshaft position sensors or the camshaft position actuators may occur if the camshaft position sensors or the camshaft position actuators are used to pry against in order to remove the engine front cover.**

6. Loosely install a 10 x 1.5 mm bolt in the jackscrew hole (1).
7. Ensure proper use of room temperature vulcanizing (RTV) sealant. **Use of Room Temperature Vulcanizing (RTV) and Anaerobic Sealant**
8. Using the pry points (2) located at the edge of the front cover and the jackscrew, separate the room temperature vulcanizing (RTV) sealant.

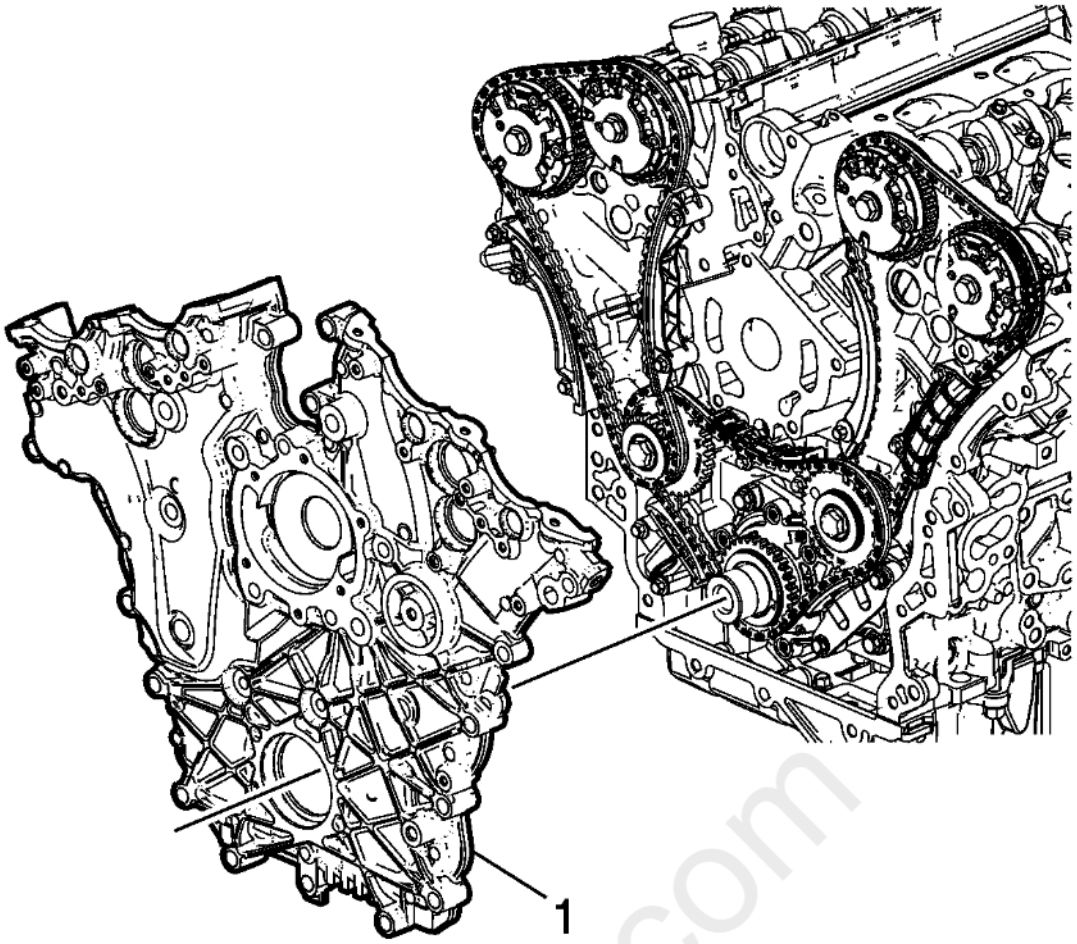

Fig. 31: View Of Engine Front Cover
Courtesy of GENERAL MOTORS COMPANY

9. Remove the engine front cover (1).

CAMSHAFT TIMING CHAIN COMPONENTS REMOVAL

Secondary Camshaft Drive Chain Components Removal - Right Side

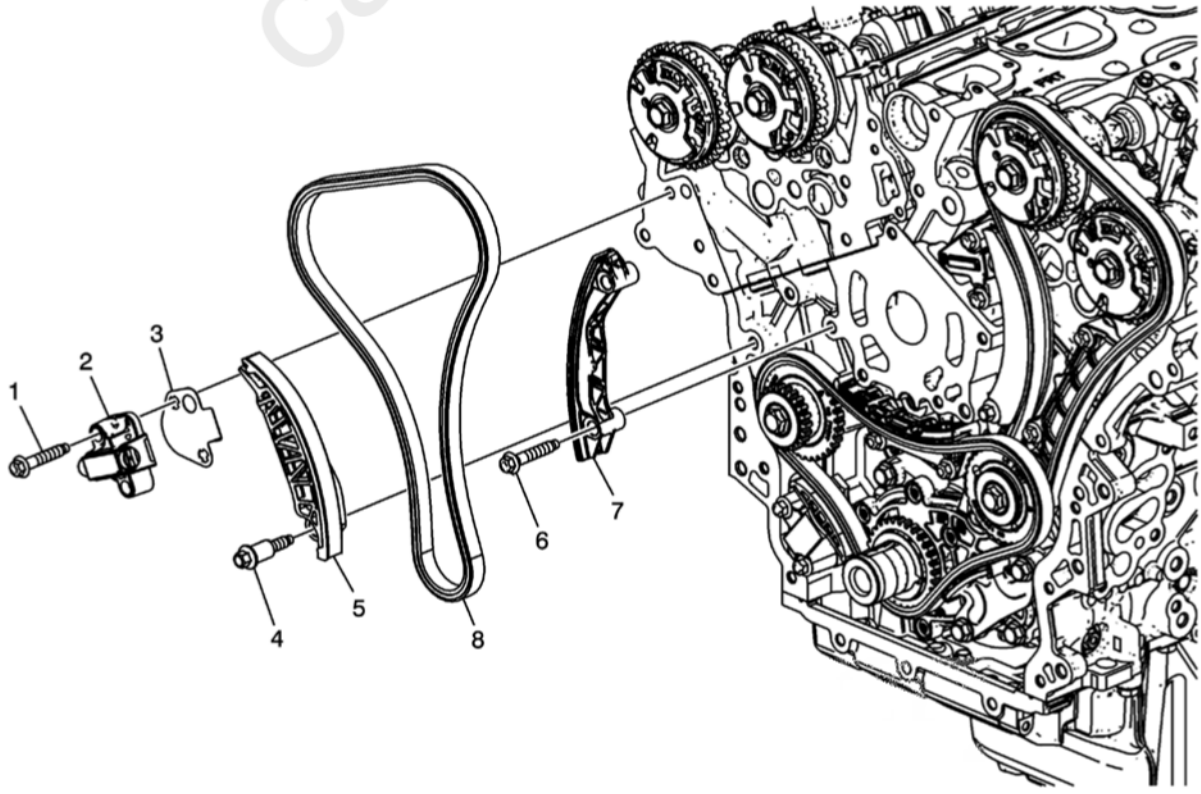

cardiagn.com

Fig. 32: Secondary Camshaft Drive Chain Components - Right Side
Courtesy of GENERAL MOTORS COMPANY

Secondary Camshaft Drive Chain Components Removal - Right Side

Callout	Component Name
1	Right Secondary Timing Chain Tensioner Bolt
2	Right Secondary Timing Chain Tensioner
3	Right Timing Chain Housing Gasket **NOTE:** **Discard the gasket.**
4	Right Secondary Timing Chain Guide Bolt
5	Right Secondary Timing Chain Guide
6	Right Pivot Arm Timing Chain Guide Bolt
7	Right Pivot Arm Timing Chain Guide
8	Secondary Camshaft Intermediate Drive Chain

Primary Camshaft Drive Chain Components Removal

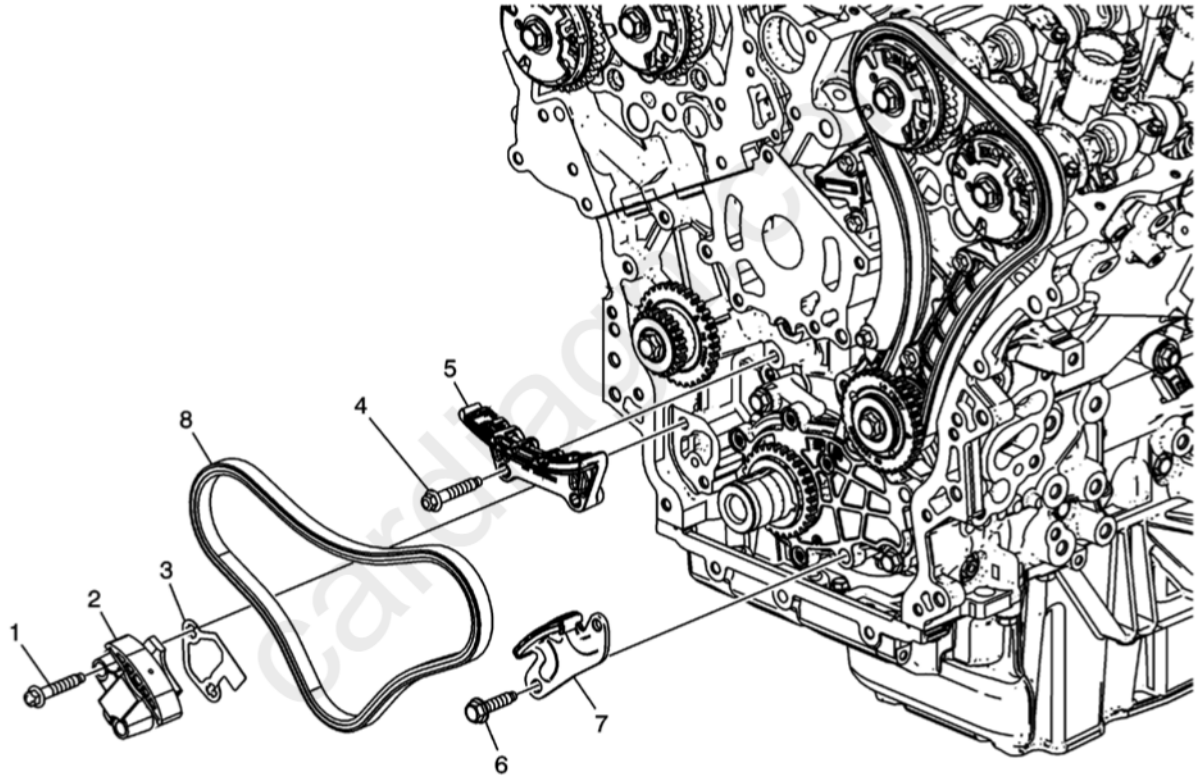

Fig. 33: Primary Camshaft Drive Chain Components
Courtesy of GENERAL MOTORS COMPANY

Primary Camshaft Drive Chain Components Removal

Callout	Component Name
1	Camshaft Intermediate Drive Chain Tensioner Bolt
2	Camshaft Intermediate Drive Chain Tensioner
3	Timing Chain Housing Gasket **NOTE:** **Discard the gasket.**
4	Upper Primary Timing Chain Guide Bolt
5	Upper Primary Timing Chain Guide
6	Lower Primary Timing Chain Guide Bolt
7	Lower Primary Timing Chain Guide

Callout	Component Name
8	Primary Camshaft Drive Intermediate Chain

Secondary Camshaft Drive Chain Components Removal - Left Side

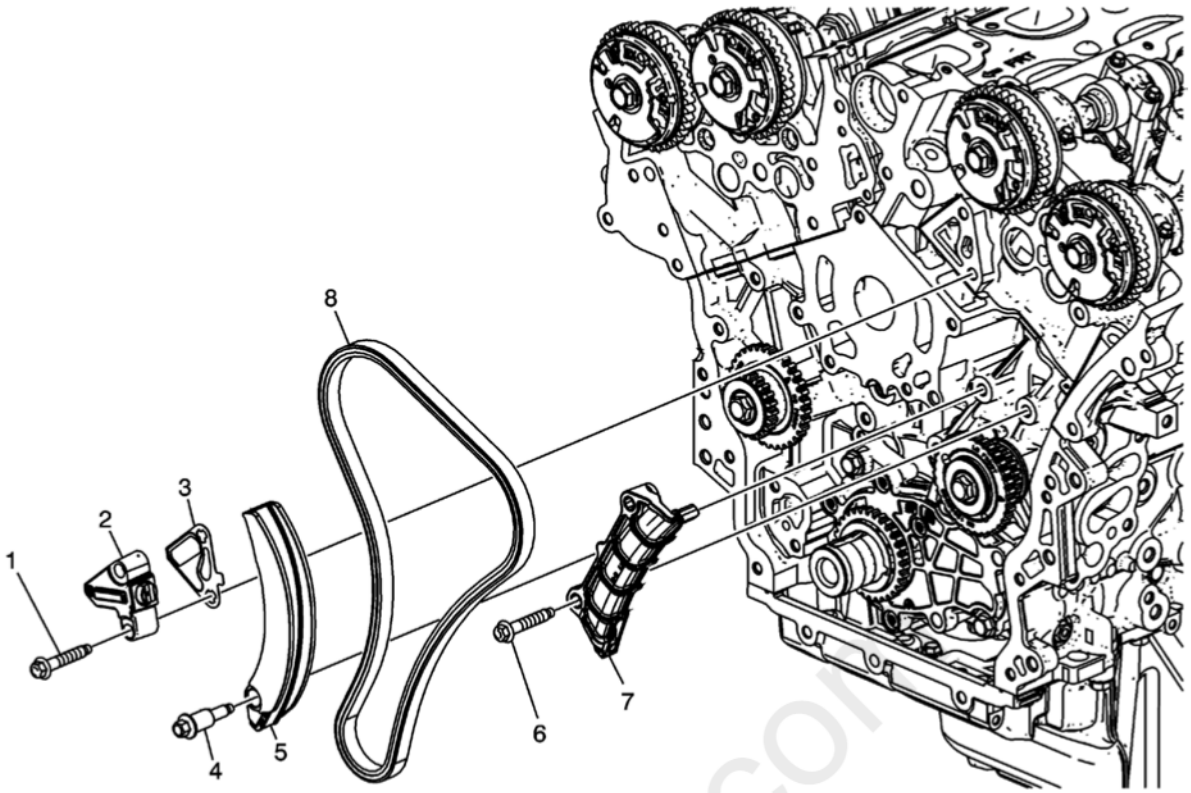

Fig. 34: Secondary Camshaft Drive Chain Components - Left Side
Courtesy of GENERAL MOTORS COMPANY

Secondary Camshaft Drive Chain Components Removal - Left Side

Callout	Component Name
1	Left Secondary Timing Chain Tensioner Bolt
2	Left Secondary Timing Chain Tensioner
3	Left Timing Chain Housing Gasket **NOTE:** **Discard the gasket.**
4	Left Pivot Arm Timing Chain Guide Bolt
5	Left Pivot Arm Timing Chain Guide
6	Left Secondary Timing Chain Guide Bolt
7	Left Secondary Timing Chain Guide
8	Secondary Camshaft Intermediate Drive Chain

TIMING CHAIN IDLER SPROCKET REMOVAL - RIGHT SIDE

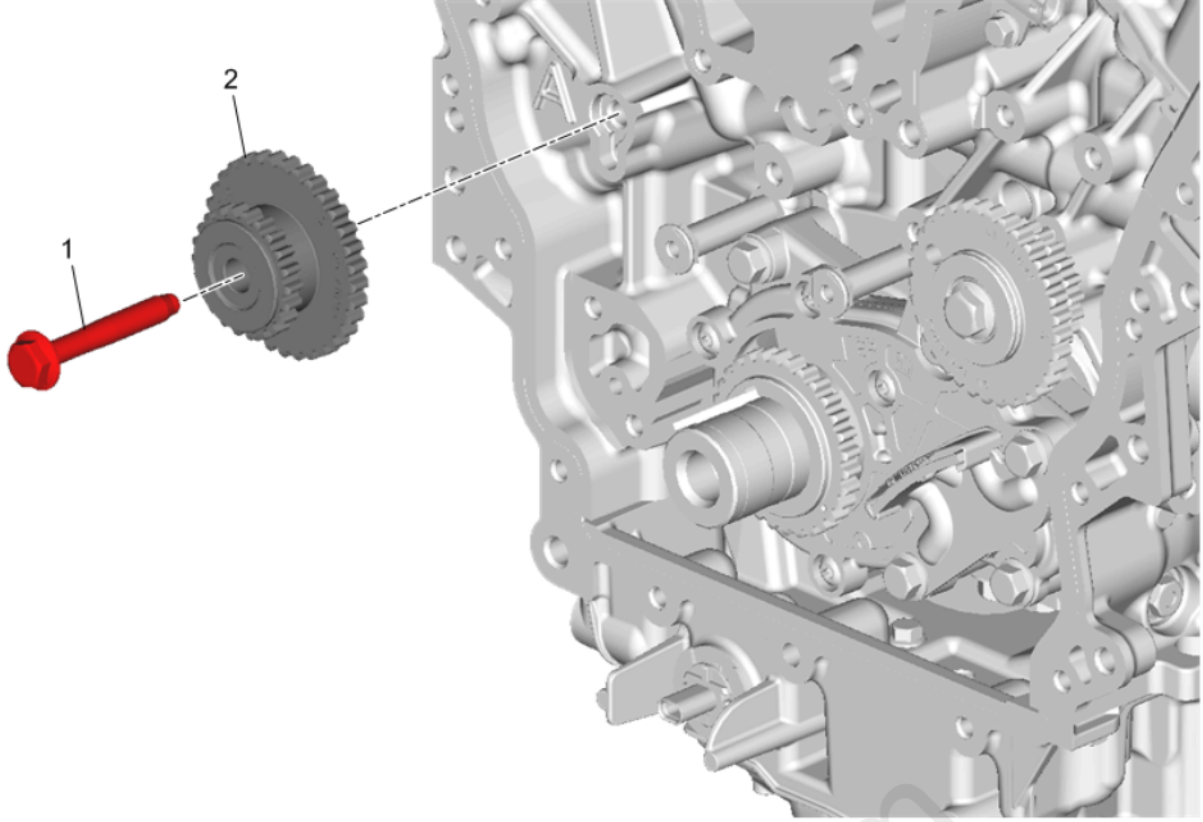

Fig. 35: Timing Chain Idler Sprocket And Bolt - Right Side
Courtesy of GENERAL MOTORS COMPANY

Callout	Component Name
1	Timing Chain Idler Sprocket Shaft Bolt
2	Right SideTiming Chain Idler Sprocket

TIMING CHAIN IDLER SPROCKET REMOVAL - LEFT SIDE

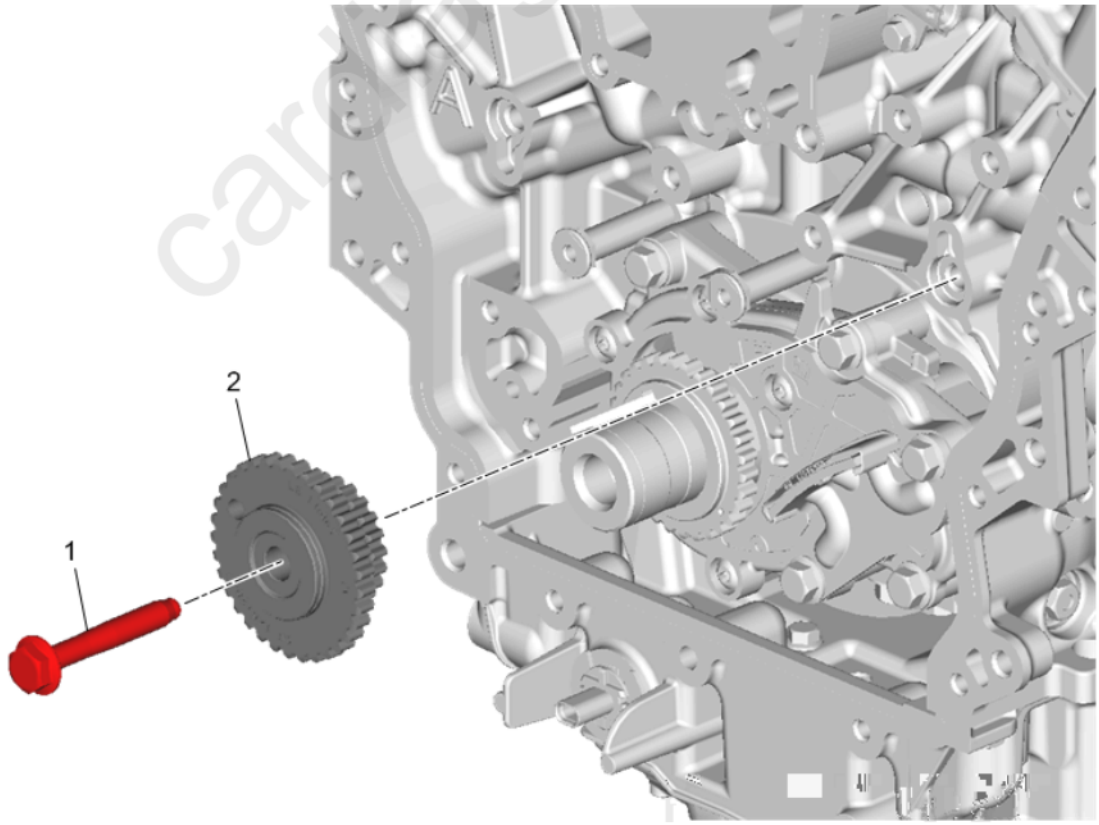

Fig. 36: Timing Chain Idler Sprocket And Bolt - Left Side
Courtesy of GENERAL MOTORS COMPANY

Callout	Component Name
1	Timing Chain Idler Sprocket Shaft Bolt

Callout	Component Name
2	Left SideTiming Chain Idler Sprocket

CRANKSHAFT SPROCKET REMOVAL

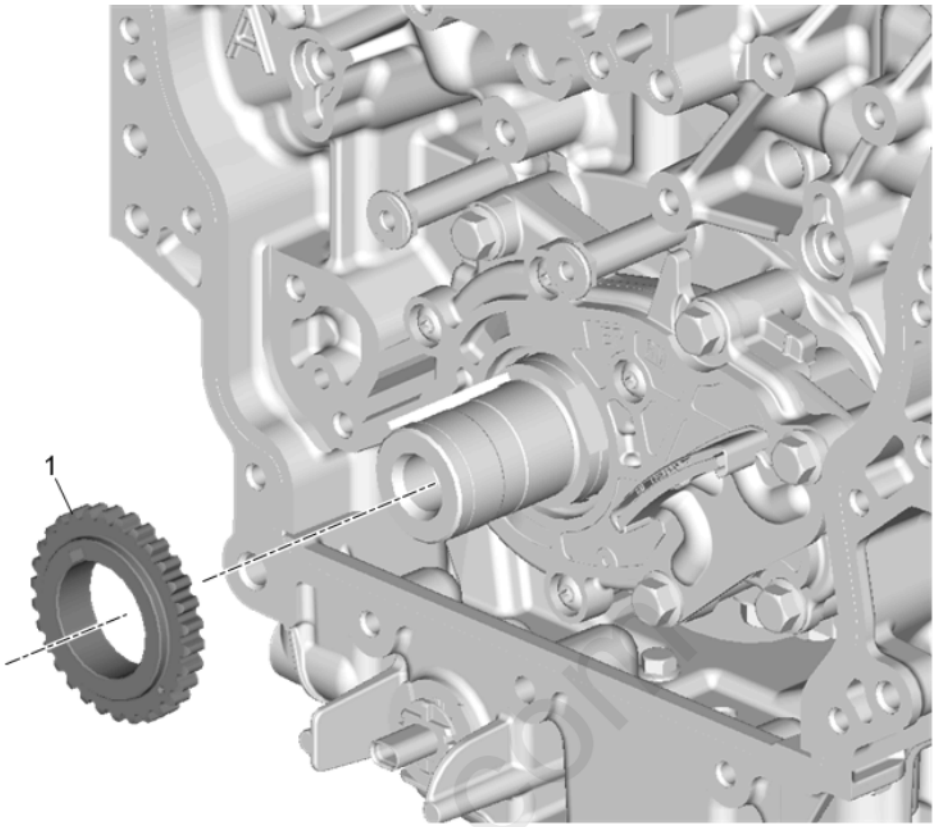

Fig. 37: View Of Crankshaft Sprocket
Courtesy of GENERAL MOTORS COMPANY

Callout	Component Name
1	Crankshaft Sprocket

CAMSHAFT POSITION ACTUATOR REMOVAL - LEFT SIDE EXHAUST

cardiagn.com

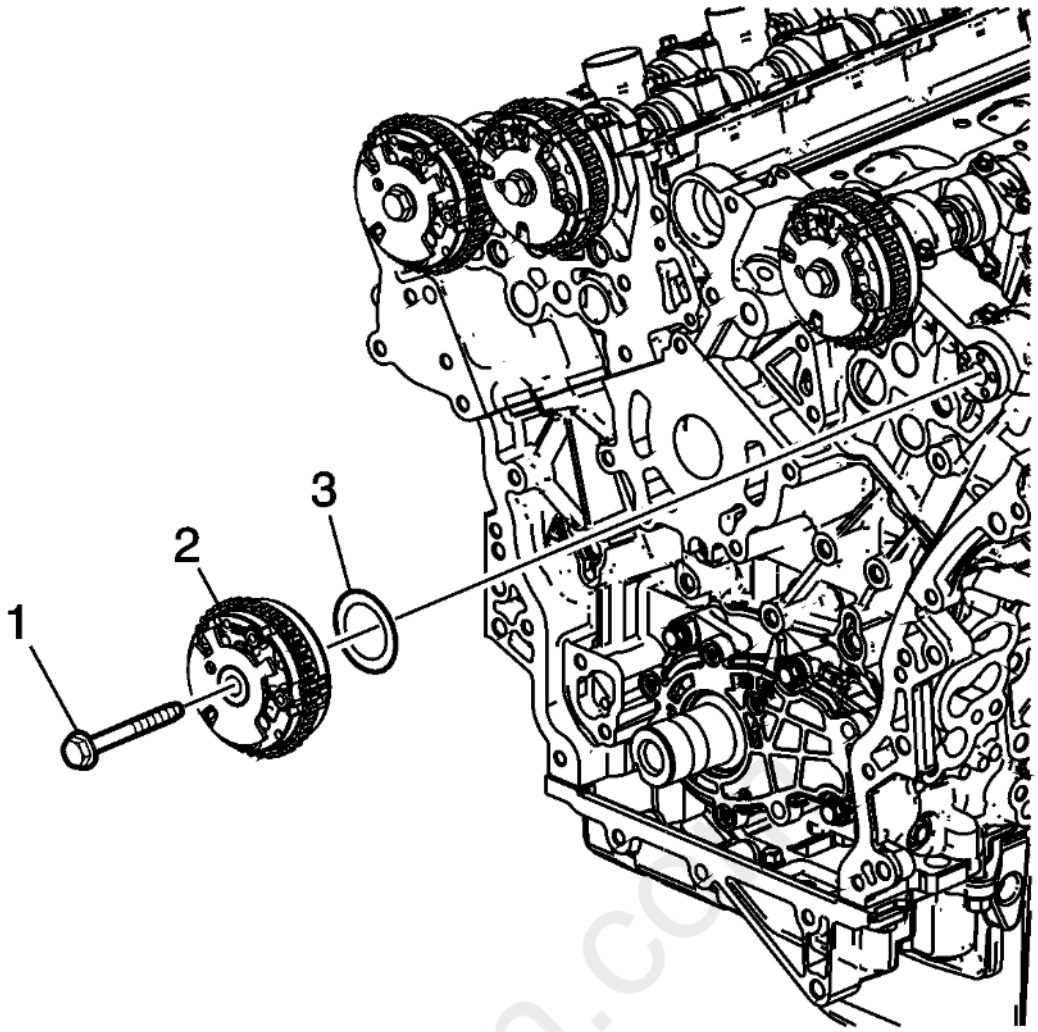

Fig. 38: Locating Exhaust Camshaft Position Actuator & Bolt
Courtesy of GENERAL MOTORS COMPANY

CAUTION: Refer to Torque Reaction Against Timing Drive Chain Caution .

1. Use an open wrench on the hex cast into the camshaft in order to prevent engine rotation when loosening the camshaft position actuator bolt.
2. Remove the left exhaust camshaft position actuator bolt (1).
3. Remove the left exhaust camshaft position actuator (2).
4. Remove the camshaft thrust washer if applicable (3).

CAMSHAFT POSITION ACTUATOR REMOVAL - LEFT SIDE INTAKE

cardiagn.com

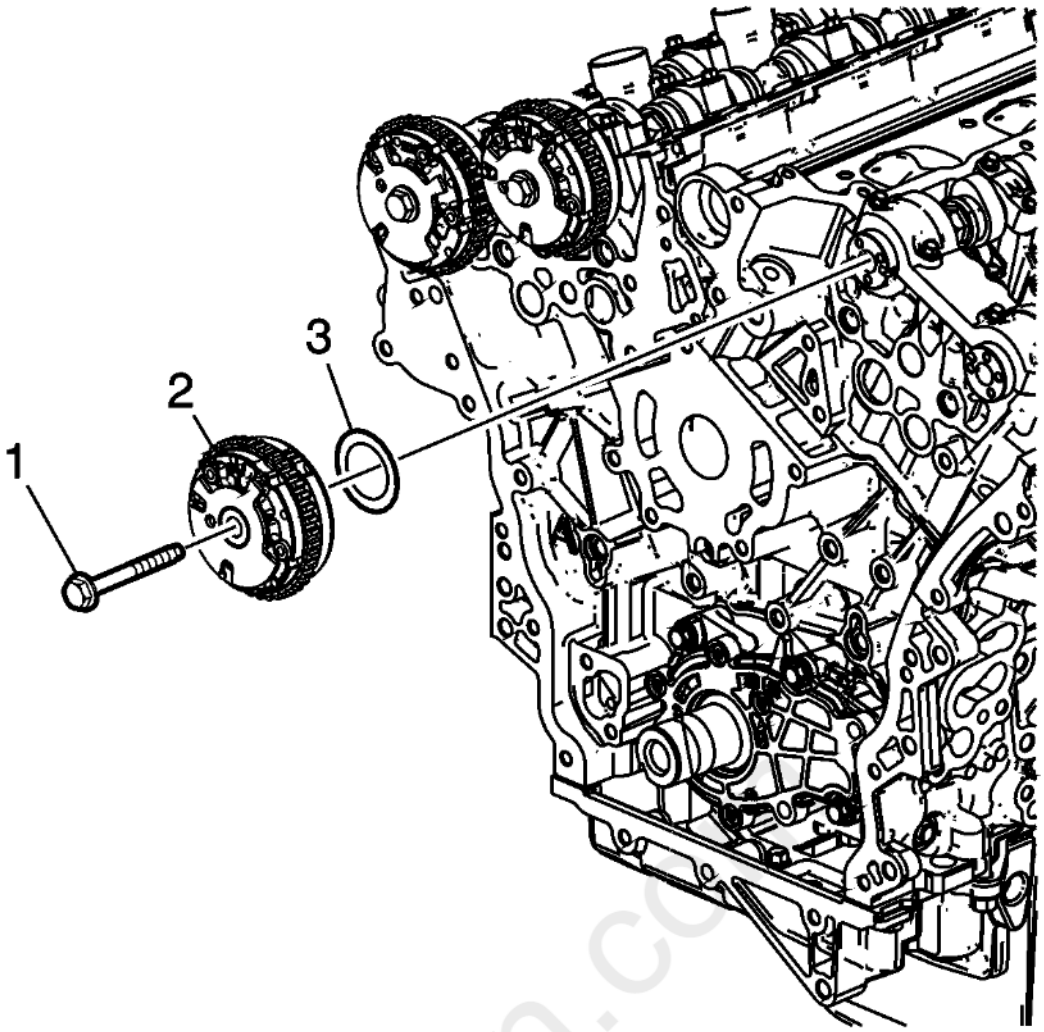

Fig. 39: View Of Camshaft Position Actuator Bolt
Courtesy of GENERAL MOTORS COMPANY

CAUTION: Refer to Torque Reaction Against Timing Drive Chain Caution .

1. Use an open wrench on the hex cast into the camshaft in order to prevent engine rotation when loosening the camshaft position actuator bolt.
2. Remove the left intake camshaft position actuator bolt (1).
3. Remove the left intake camshaft position actuator (2).
4. Remove the camshaft thrust washer if applicable (3).

CAMSHAFT POSITION ACTUATOR REMOVAL - RIGHT SIDE EXHAUST

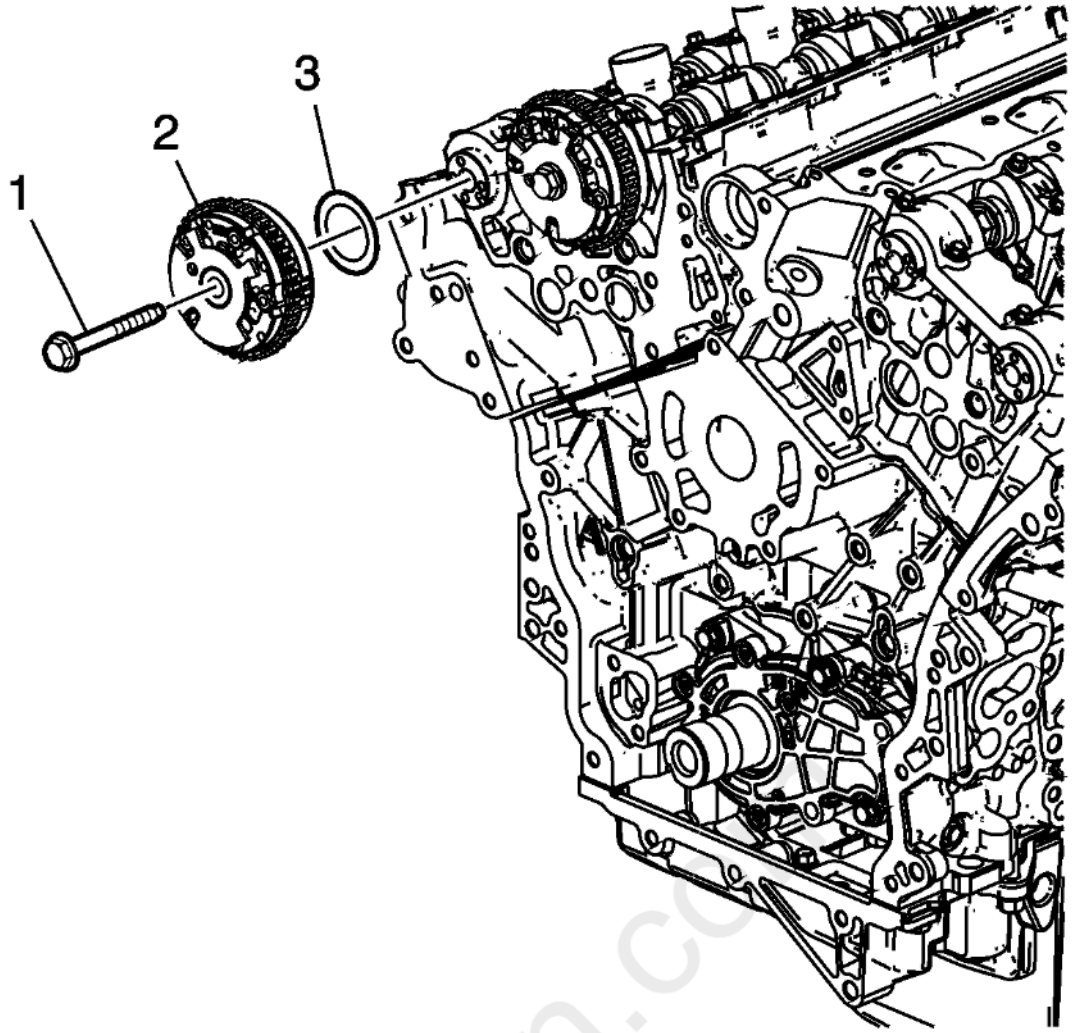

Fig. 40: Identifying Camshaft Position Actuator & Bolt
Courtesy of GENERAL MOTORS COMPANY

CAUTION: Refer to Torque Reaction Against Timing Drive Chain Caution .

1. Use an open wrench on the hex cast into the camshaft in order to prevent engine rotation when loosening the camshaft position actuator bolt.
2. Remove the right exhaust camshaft position actuator bolt (1).
3. Remove the right exhaust camshaft position actuator (2).
4. Remove the camshaft thrust washer if applicable (3).

CAMSHAFT POSITION ACTUATOR REMOVAL - RIGHT SIDE INTAKE

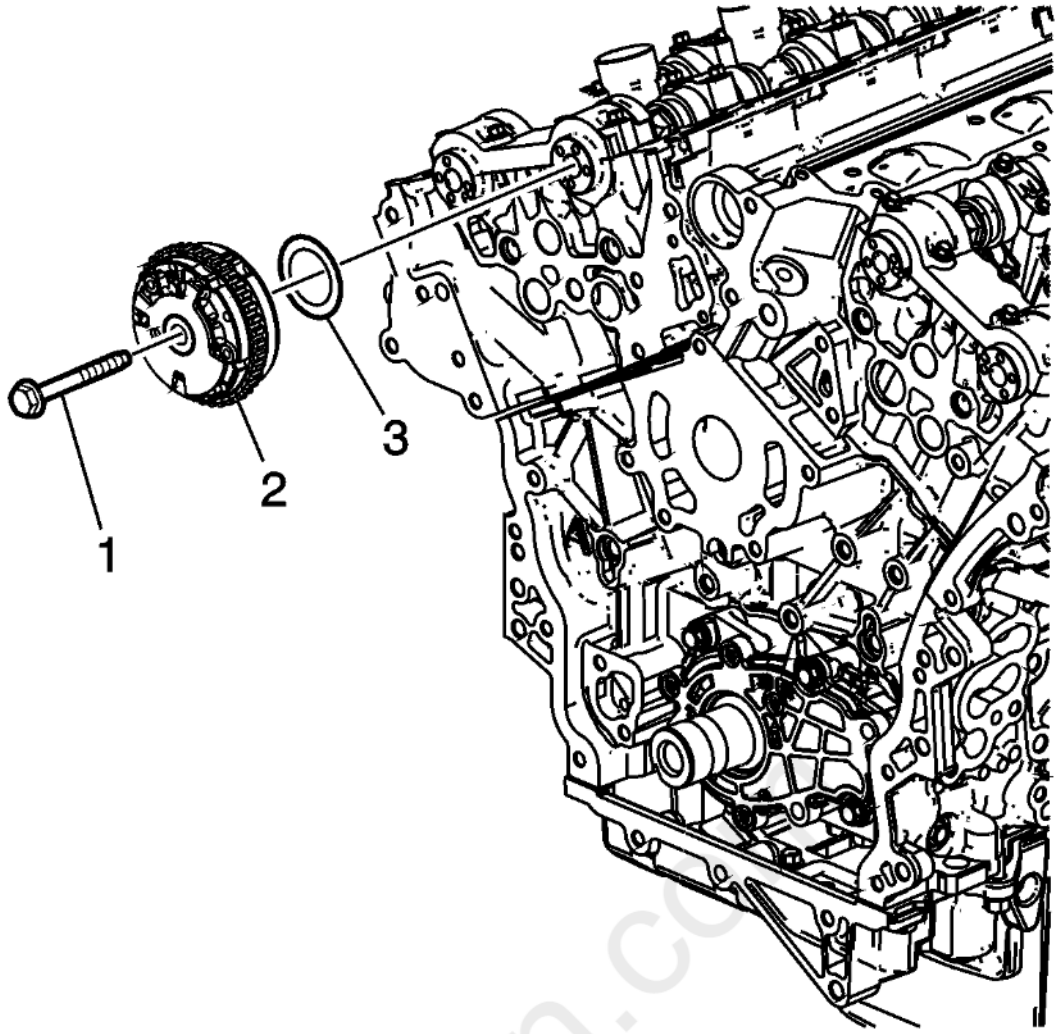

Fig. 41: Identifying Intake Camshaft Position Actuator & Bolt
Courtesy of GENERAL MOTORS COMPANY

CAUTION: Refer to Torque Reaction Against Timing Drive Chain Caution .

1. Use an open wrench on the hex cast into the camshaft in order to prevent engine rotation when loosening the camshaft position actuator bolt.
2. Remove the right intake camshaft position actuator bolt (1).
3. Remove the right intake camshaft position actuator (2).
4. Remove the camshaft thrust washer if applicable (3).

FUEL PUMP REMOVAL

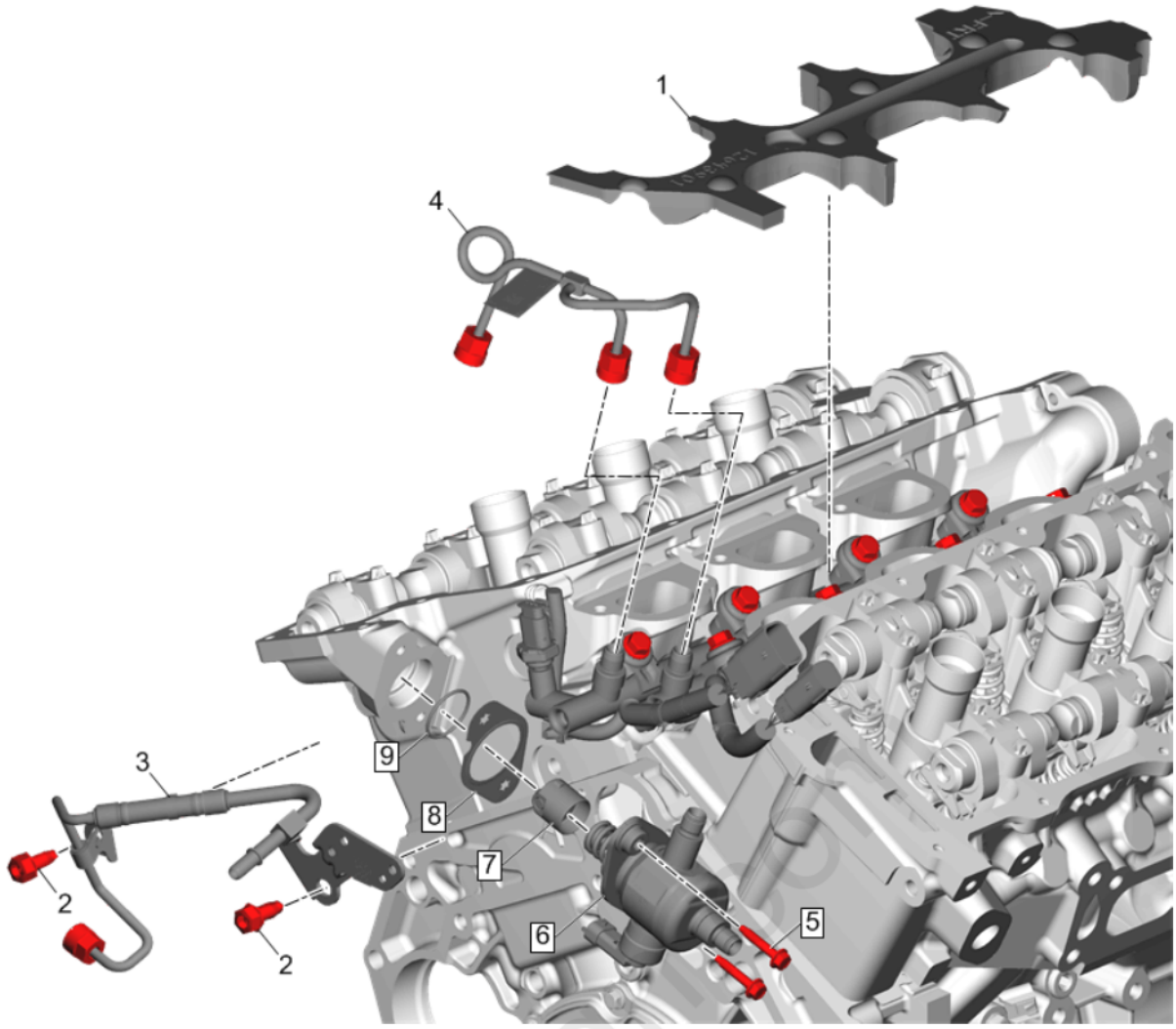

Fig. 42: Fuel Pump
Courtesy of GENERAL MOTORS COMPANY

Callout	Component Name
1	Fuel Injection Fuel Rail Noise Shield
2	Fuel Feed Pipe Bracket Bolt
3	Fuel Feed Pipe **NOTE:** **Remove and DISCARD the pipe.**
4	Fuel Feed Intermediate Pipe **NOTE:** **Remove and DISCARD the pipe.**
5	Fuel Pump Bolt **CAUTION:** **Alternately loosen the fuel pump bolts one turn at a time until the pump is fully disengaged from fuel pump lifter follower. Trying to remove the pump bolts without even side-to-side loosening may result in pump plunger damage** **NOTE:** **Remove and DISCARD the bolts.**
6	Fuel Pump

Callout	Component Name
7	Fuel Pump O-Ring **NOTE:** **Remove and DISCARD the O-ring seal.**
8	Fuel Pump Gasket **NOTE:** **Remove and DISCARD the gasket.**
9	Valve Lifter Follower

CAMSHAFT REMOVAL - LEFT SIDE

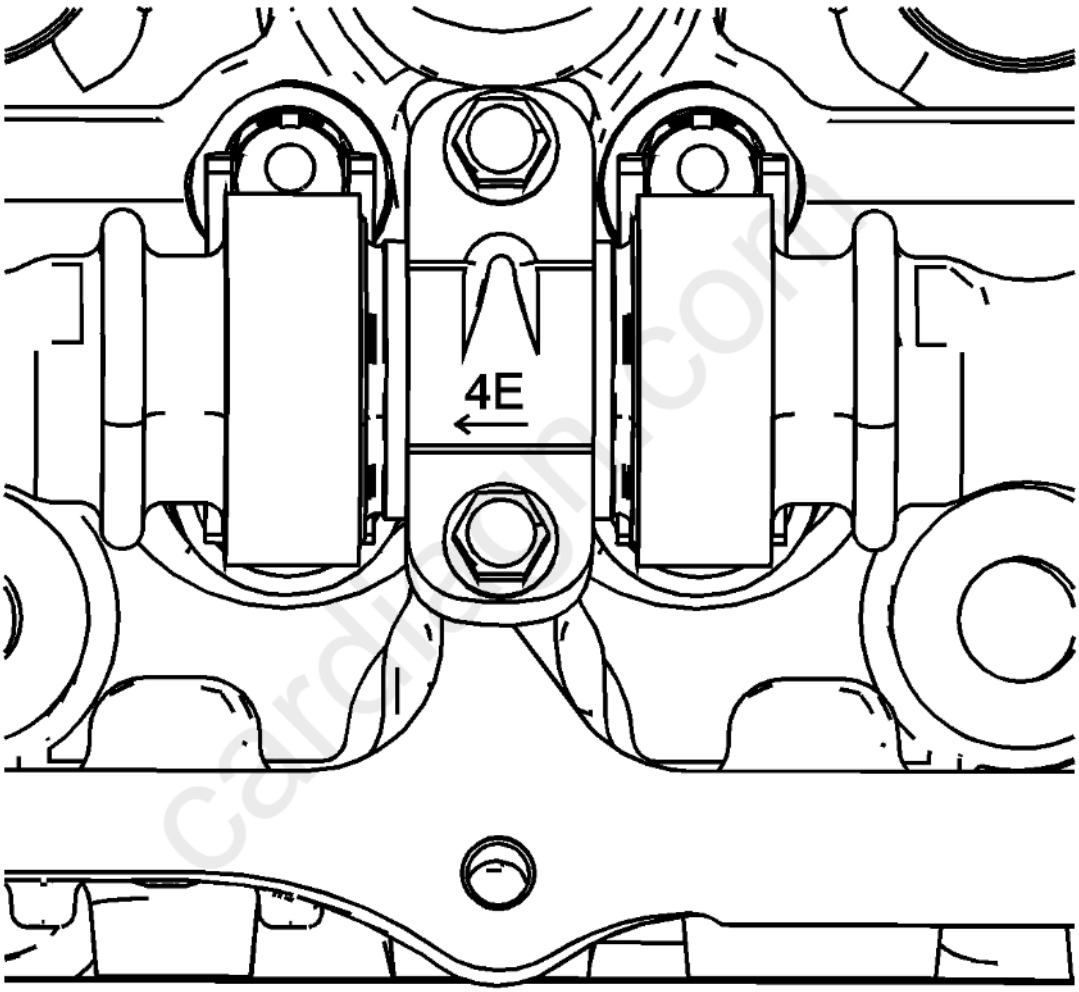

Fig. 43: Identifying Markings On Bearing Caps
Courtesy of GENERAL MOTORS COMPANY

1. Observe the markings on the bearing caps. Each bearing cap is marked in order to identify its location. The markings have the following meanings:
   - The raised feature must always be oriented toward the center of the cylinder head.
   - The I indicates the intake camshaft.
   - The E indicates the exhaust camshaft.
   - The number indicates the journal position from the front of the engine.

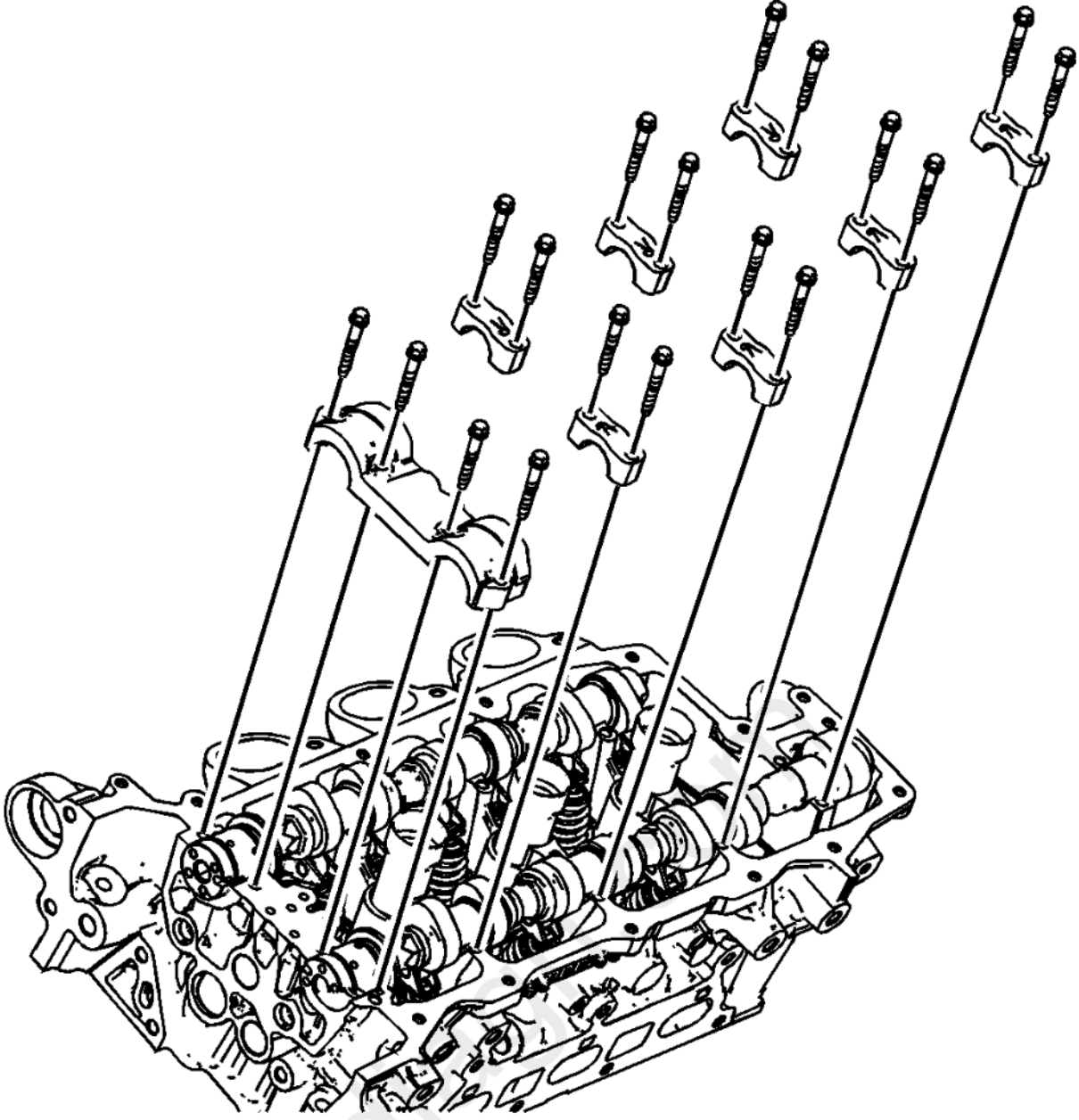

Fig. 44: Camshaft Bearing Caps And Bolts
Courtesy of GENERAL MOTORS COMPANY

2. Remove the camshaft bearing cap bolts.
3. Remove the camshaft bearing caps.

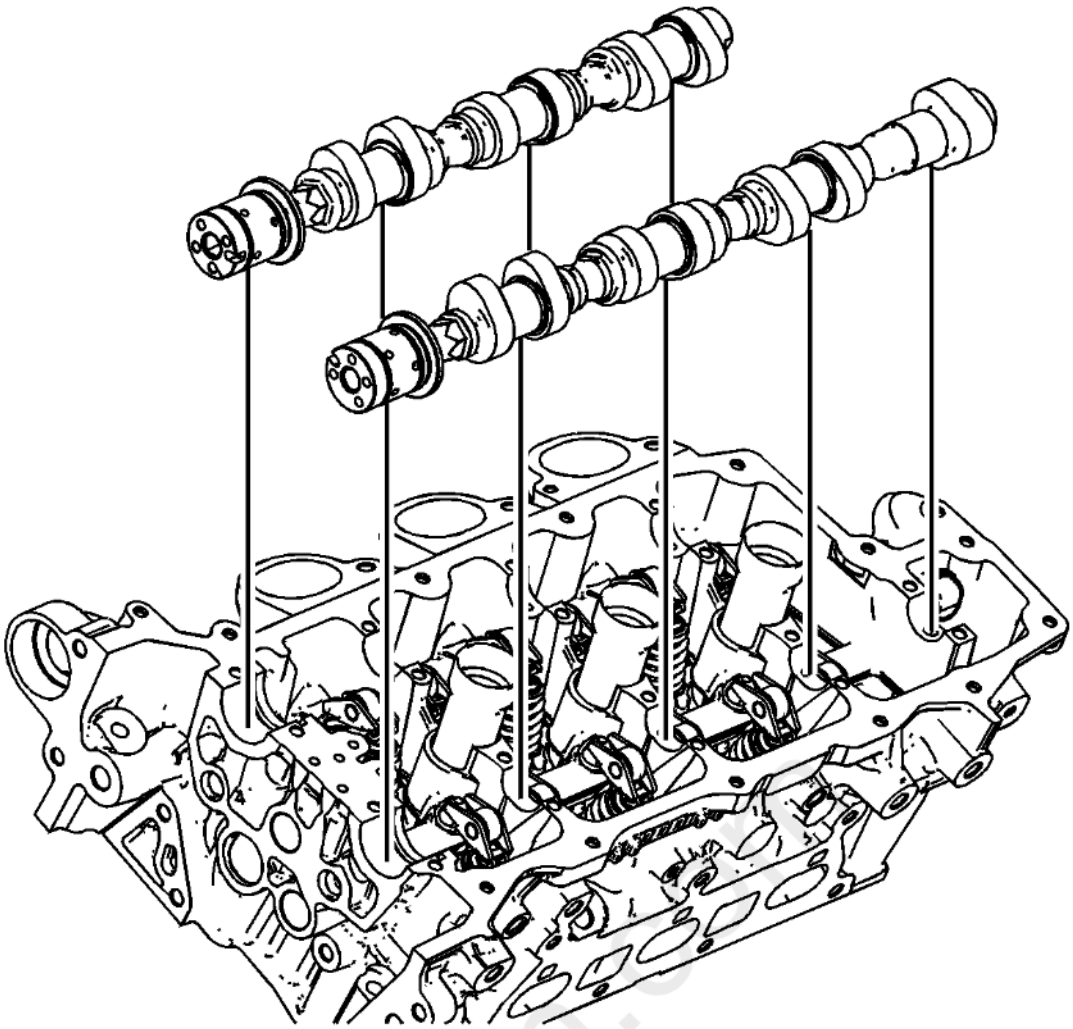

Fig. 45: View of Camshafts and Cylinder Head
Courtesy of GENERAL MOTORS COMPANY

NOTE: **Mark the camshafts upon removal to ensure installation is in the correct position.**

4. Remove the camshafts.

FUEL RAIL REMOVAL

Refer to **Cylinder Head Disassemble**.

VALVE ROCKER ARM REMOVAL - LEFT SIDE

cardiagn.com

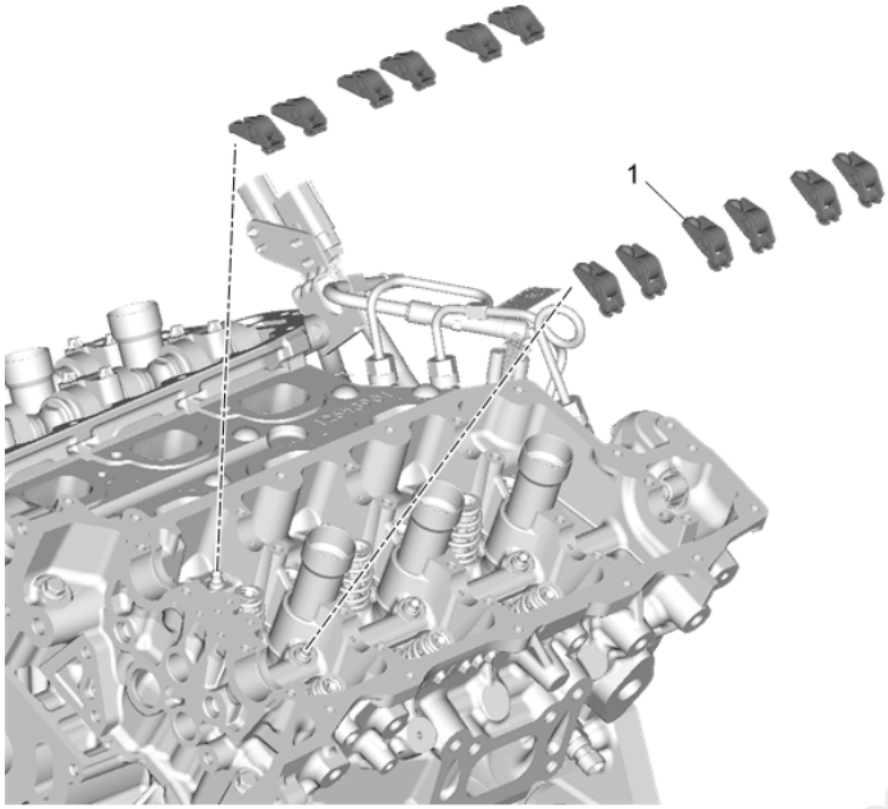

Fig. 46: Valve Rocker Arm - Left Side
Courtesy of GENERAL MOTORS COMPANY

Callout	Component Name
1	Valve Rocker Arm **NOTE:** **If the rocker arms are to be reused, keep in order so they can be reinstalled in the same position.**

VALVE LIFTER REMOVAL - LEFT SIDE

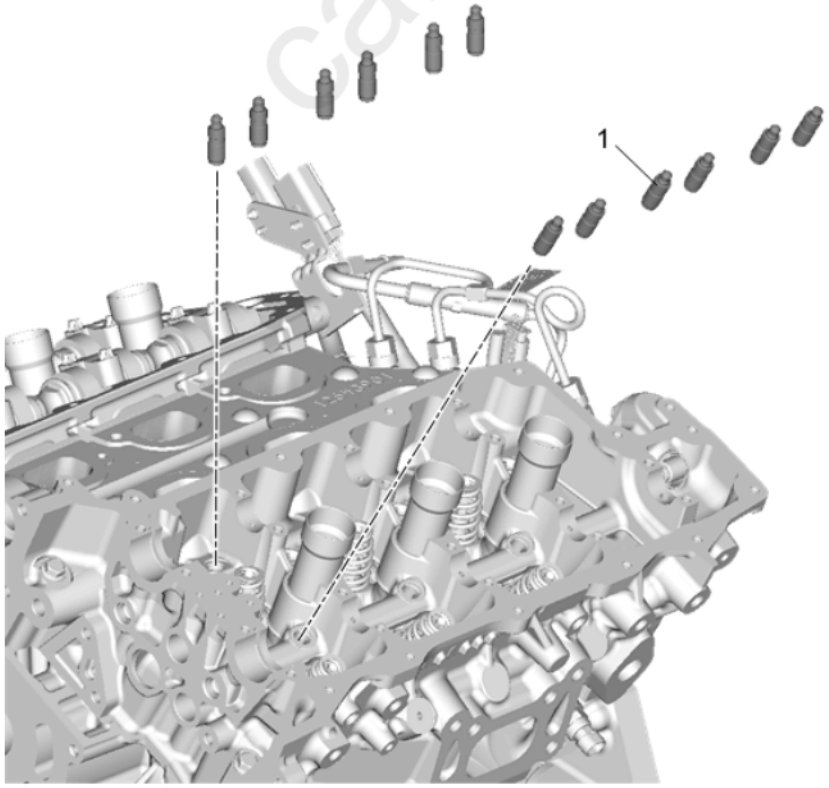

cardiagn.com

Fig. 47: Valve Lifter - Left Side
Courtesy of GENERAL MOTORS COMPANY

Callout	Component Name
1	Hydraulic Valve Lash Adjuster **NOTE:** • **Do not stroke/cycle the stationary hydraulic lash adjuster plunger without oil in the lower pressure chamber.** • **Do not allow the stationary hydraulic lash adjuster to tip over, plunger down, after the oil fill.** • **If the lifters are to be reused, keep in order so they can be reinstalled in the same position.**

CYLINDER HEAD REMOVAL - LEFT SIDE

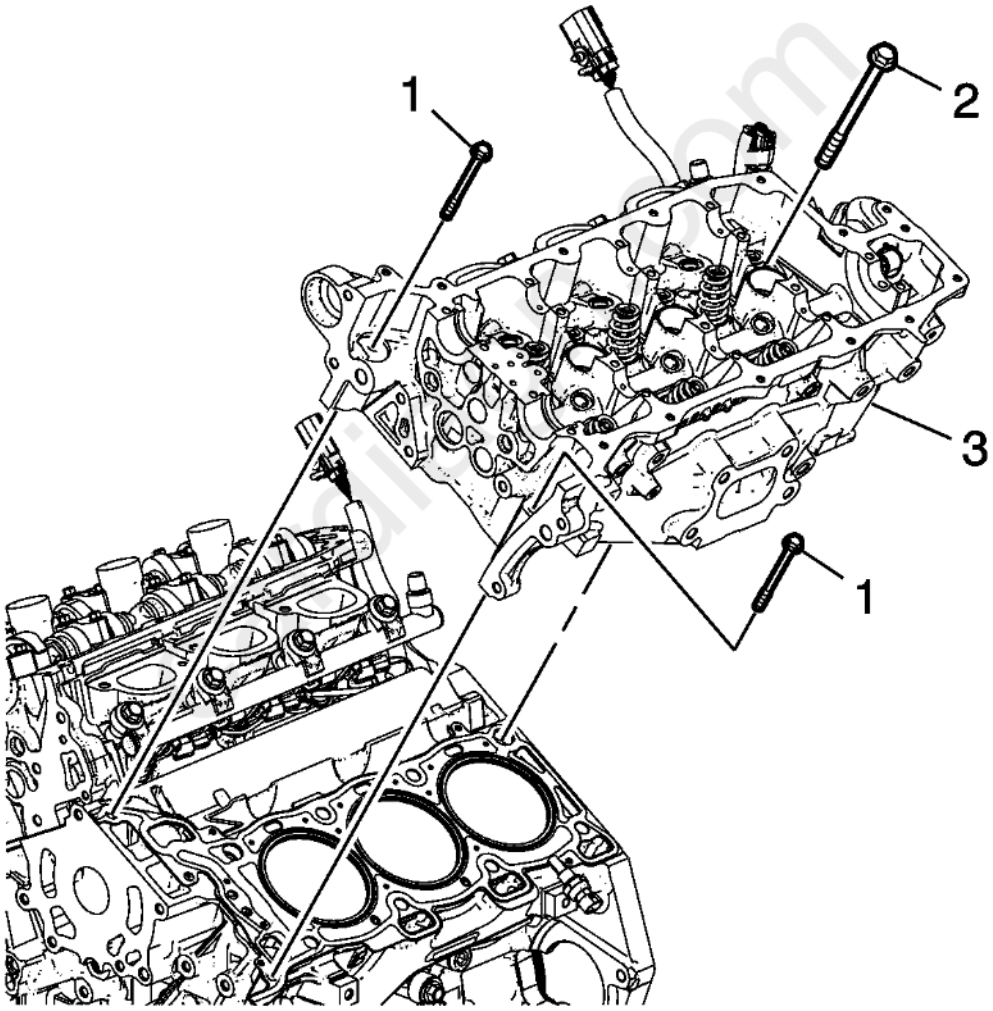

Fig. 48: View Of Left Cylinder Head & Bolts
Courtesy of GENERAL MOTORS COMPANY

1. Remove the two front M8 left cylinder head bolts (1) and discard.
2. Remove the left cylinder head bolts (2) and discard.
3. Remove the left cylinder head (3).

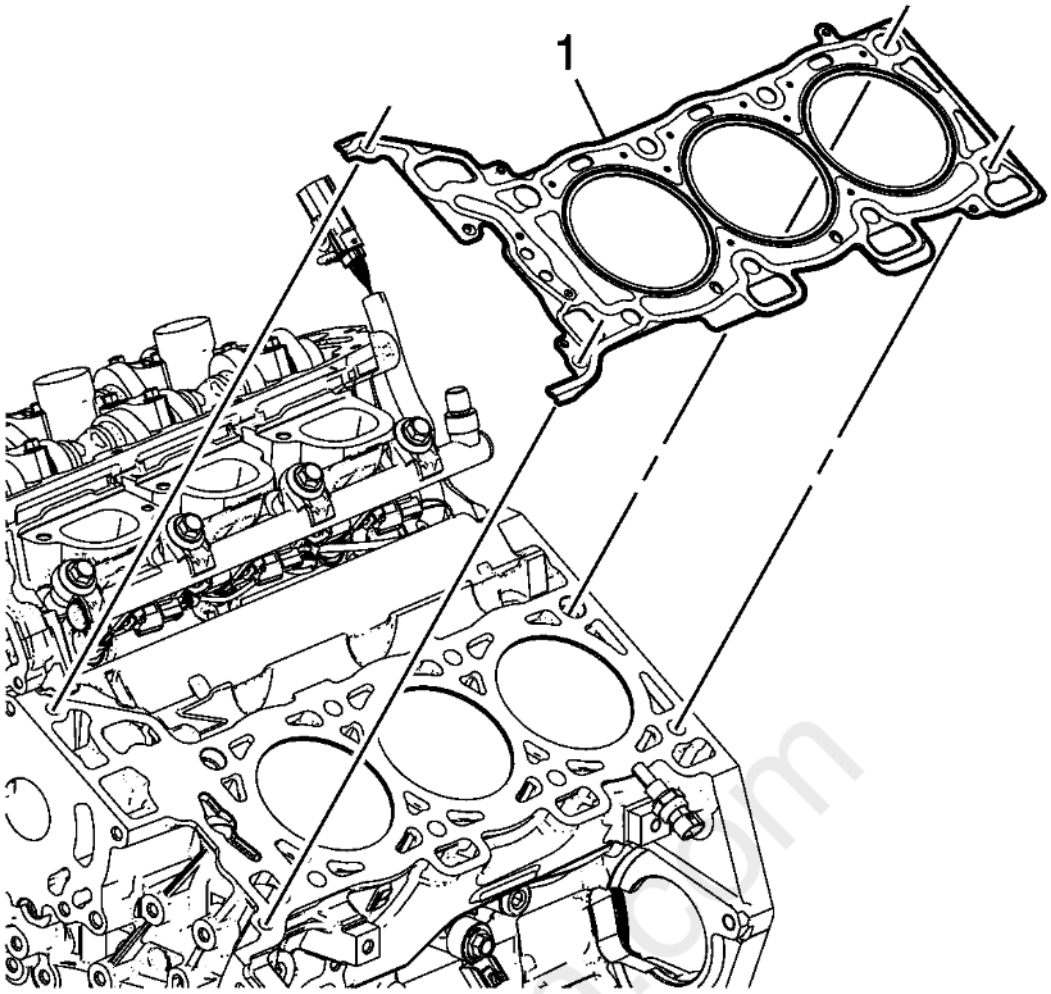

Fig. 49: View Of Left Cylinder Head Gasket
Courtesy of GENERAL MOTORS COMPANY

4. Remove and discard the left cylinder head gasket (1).

CAMSHAFT REMOVAL - RIGHT SIDE

cardiagn.com

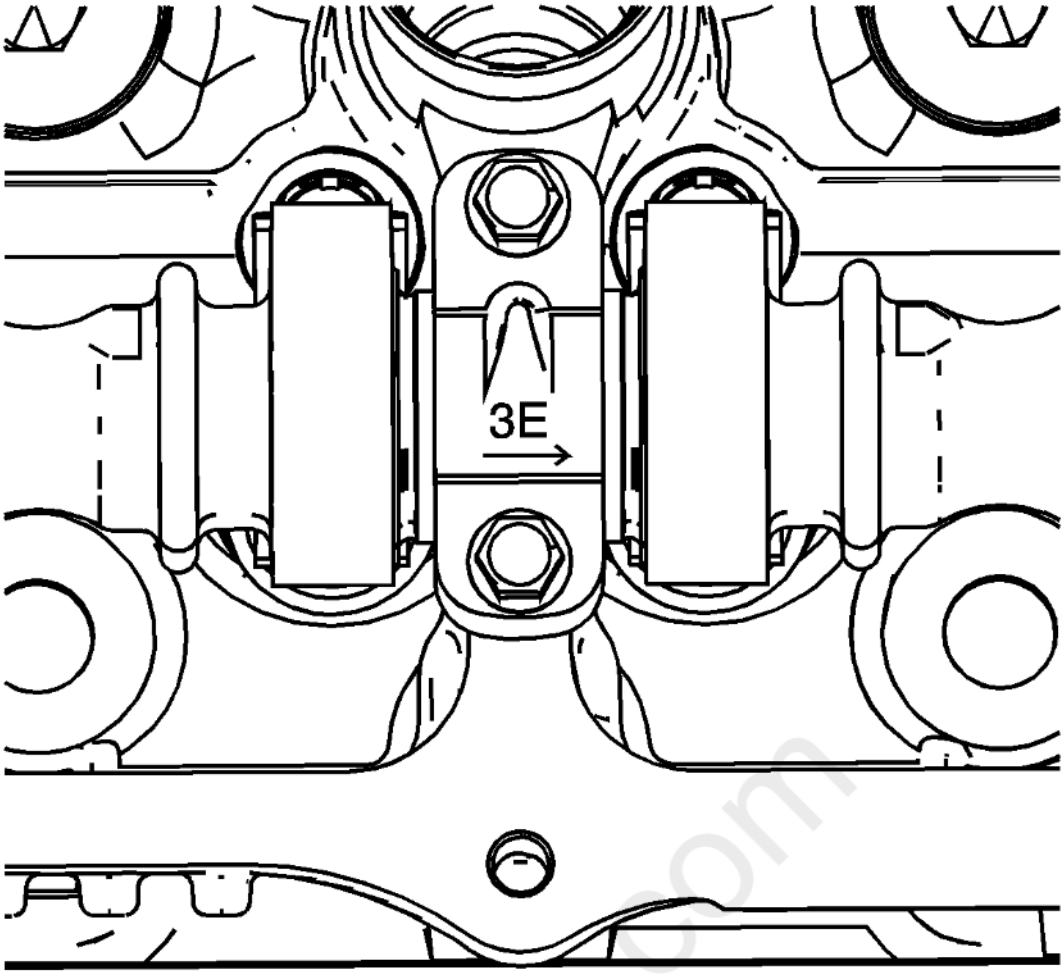

Fig. 50: Identifying Markings On Bearing Caps
Courtesy of GENERAL MOTORS COMPANY

1. Observe the markings on the bearing caps. Each bearing cap is marked in order to identify its location. The markings have the following meanings:
    - The raised feature must always be oriented toward the center of the cylinder head.
    - The I indicates the intake camshaft.
    - The E indicates the exhaust camshaft.
    - The number indicates the journal position from the front of the engine.

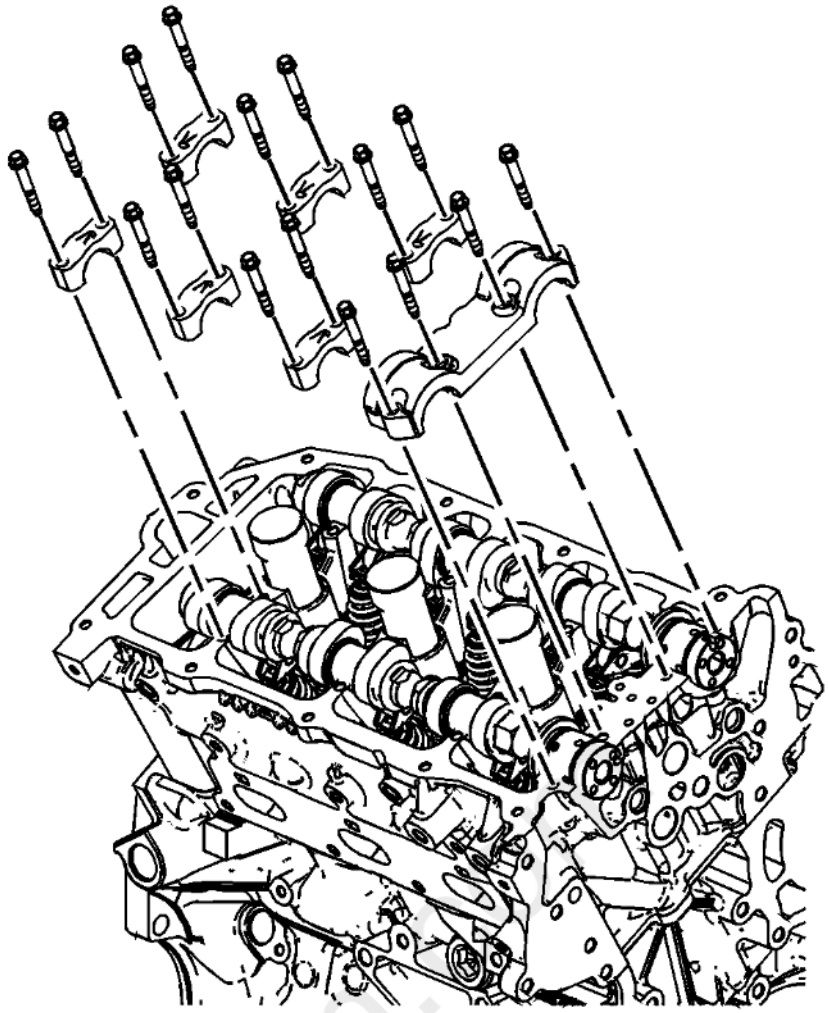

Fig. 51: View Of Camshaft Bearing Caps & Bolts
Courtesy of GENERAL MOTORS COMPANY

2. Remove the camshaft bearing cap bolts.
3. Remove the camshaft bearing caps.

cardiagn.com

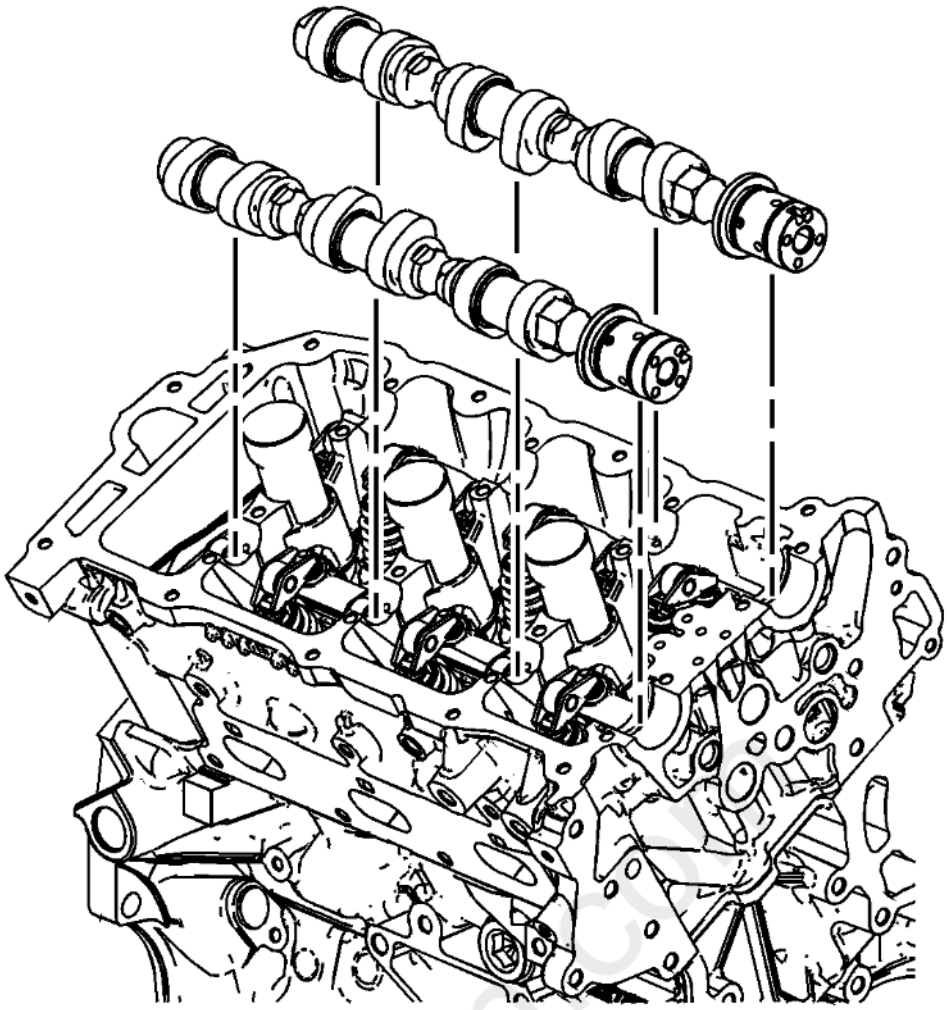

Fig. 52: Locating Camshafts
Courtesy of GENERAL MOTORS COMPANY

IMPORTANT: Mark the camshafts upon removal to ensure installation is in the correct position.

4. Remove the camshafts.

VALVE ROCKER ARM REMOVAL - RIGHT SIDE

cardiagn.com

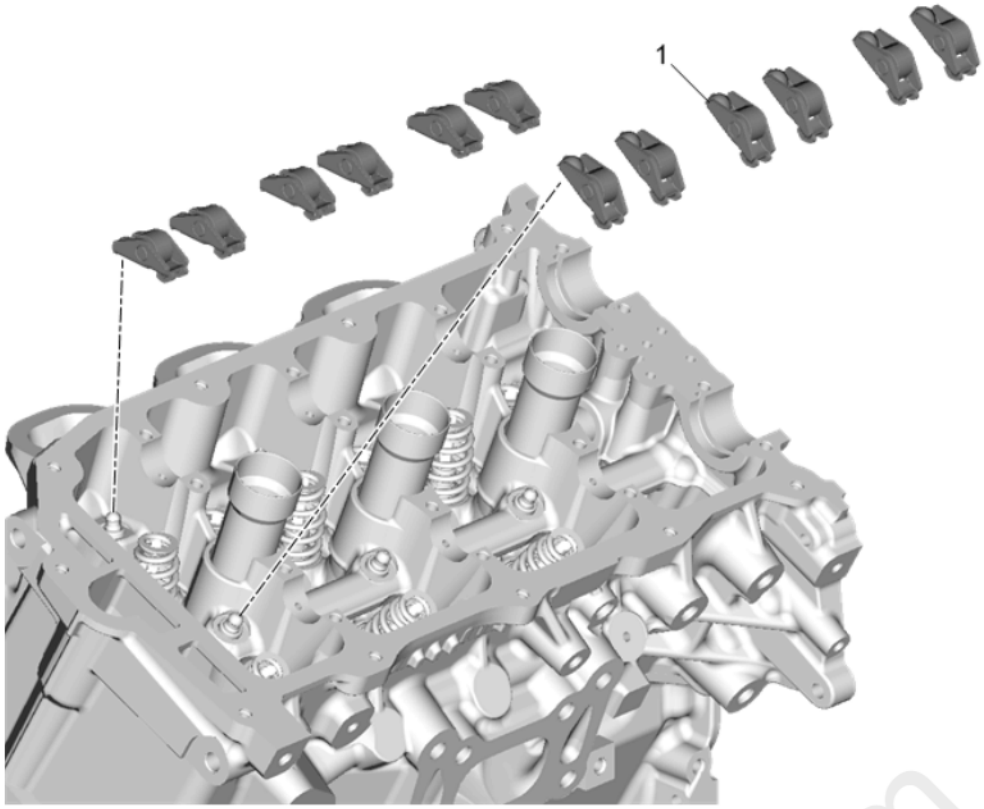

Fig. 53: Valve Rocker Arms - Right Side
Courtesy of GENERAL MOTORS COMPANY

Callout	Component Name
1	Valve Rocker Arm **NOTE:** **If the rocker arms are to be reused, keep in order so they can be reinstalled in the same position.**

VALVE LIFTER REMOVAL - RIGHT SIDE

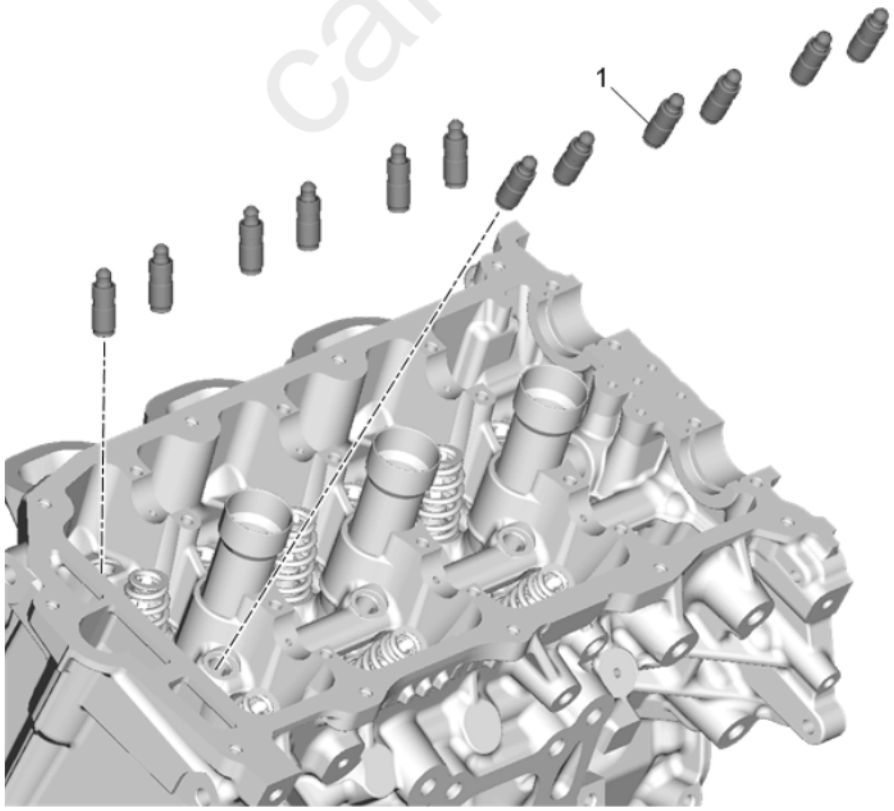

cardiagn.com

Fig. 54: Valve Lifter - Right Side
Courtesy of GENERAL MOTORS COMPANY

Callout	Component Name
1	Hydraulic Valve Lash Adjuster **NOTE:** • **Do not stroke/cycle the stationary hydraulic lash adjuster plunger without oil in the lower pressure chamber.** • **Do not allow the stationary hydraulic lash adjuster to tip over, plunger down, after the oil fill.** • **If the lifters are to be reused, keep in order so they can be reinstalled in the same position.**

CYLINDER HEAD REMOVAL - RIGHT SIDE

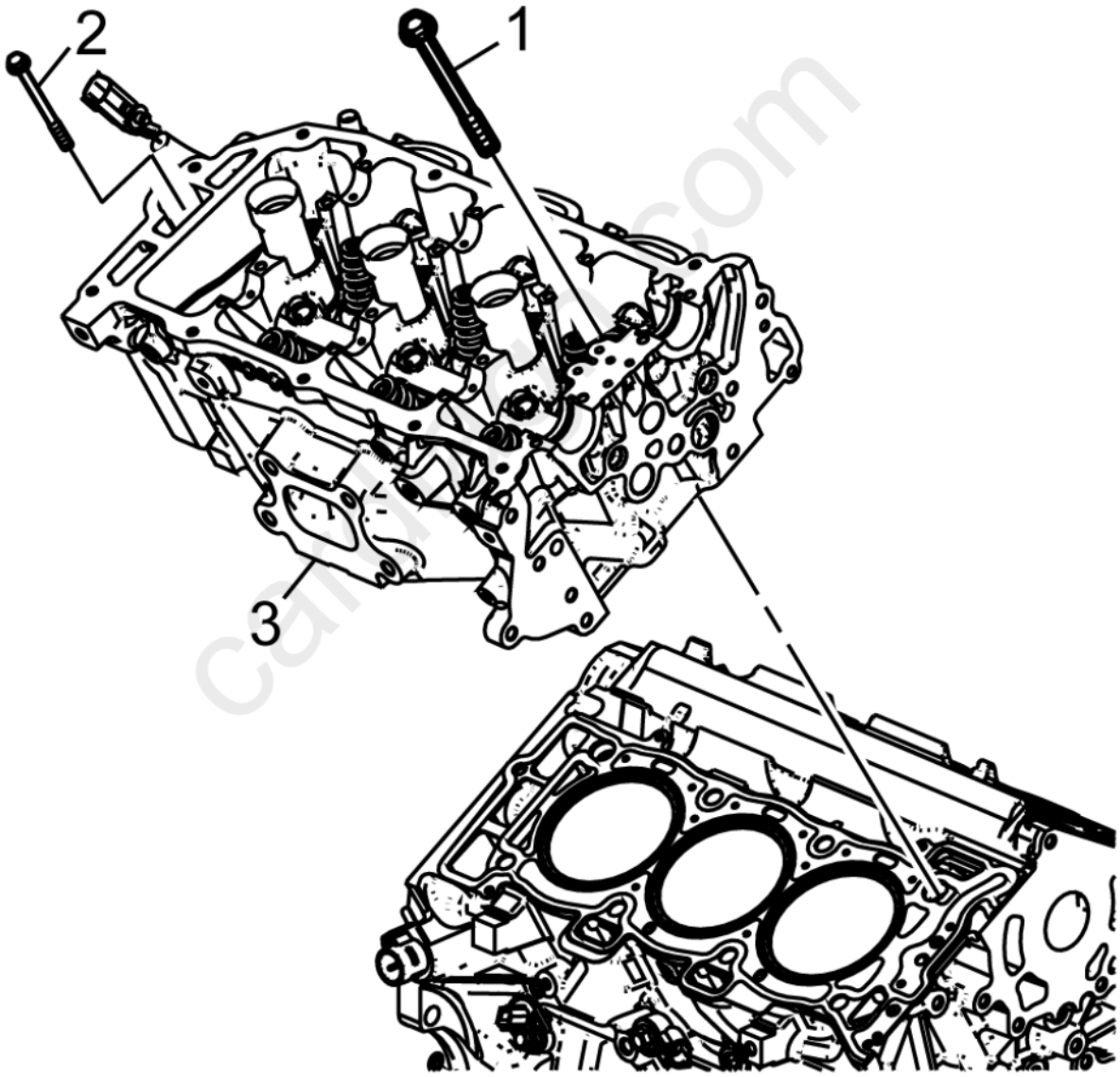

Fig. 55: View Of Right Cylinder Head & Bolts
Courtesy of GENERAL MOTORS COMPANY

1. Remove the right cylinder head bolts (1) and discard.
2. Remove the right cylinder head (2).

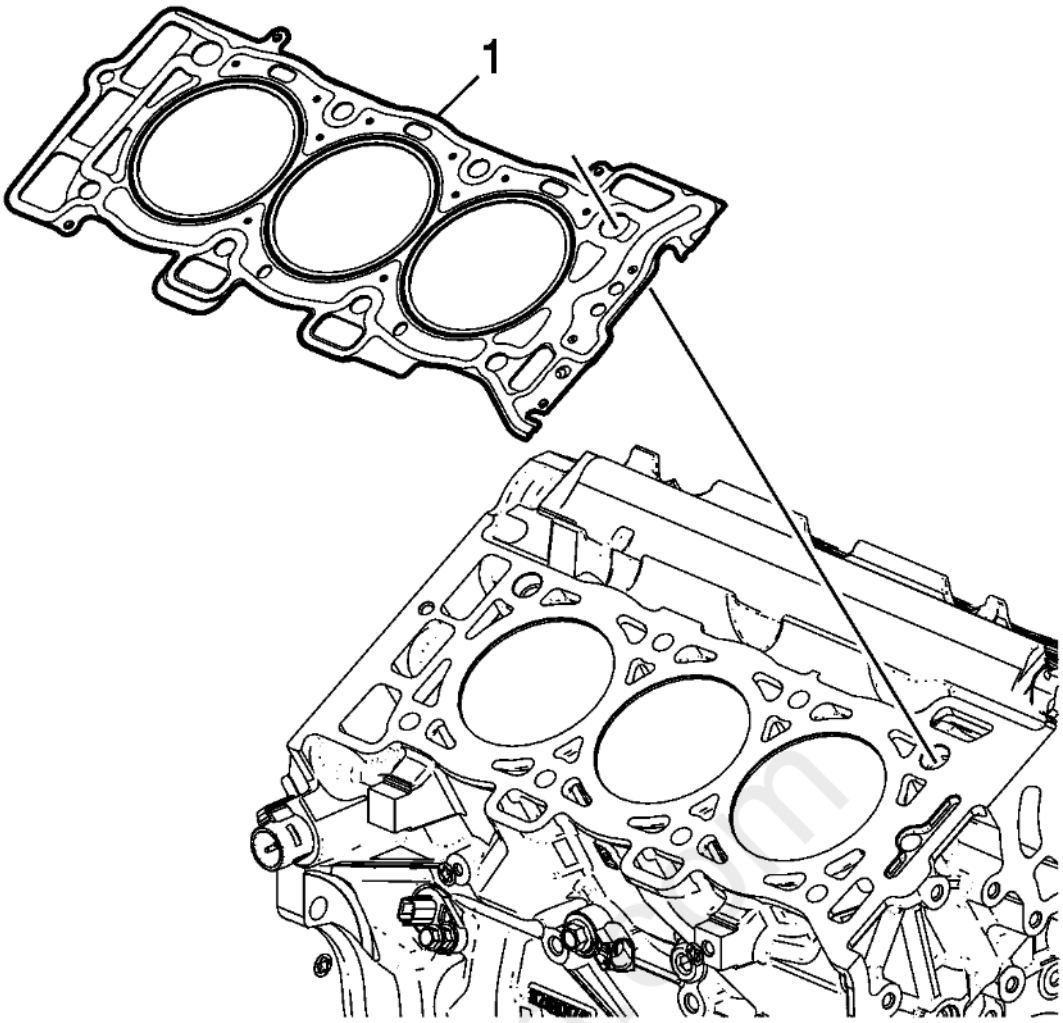

Fig. 56: View Of Right Cylinder Head Gasket
Courtesy of GENERAL MOTORS COMPANY

3. Remove and discard the right cylinder head gasket (1).

cardiagn.com

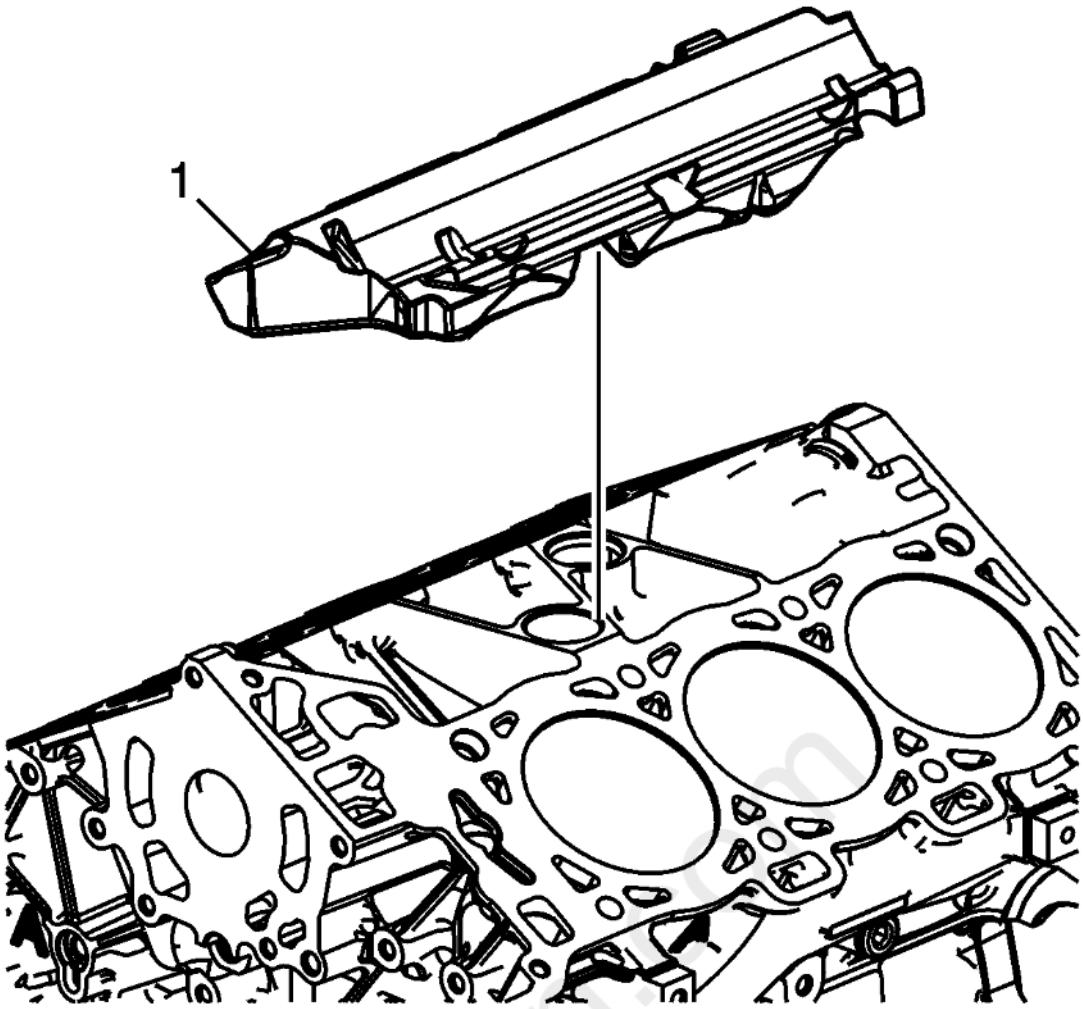

Fig. 57: Fuel Injection Fuel Rail Noise Shield-Lower
Courtesy of GENERAL MOTORS COMPANY

4. Remove the fuel injection fuel rail noise shield-lower (1).

OIL PAN REMOVAL

cardiagn.com

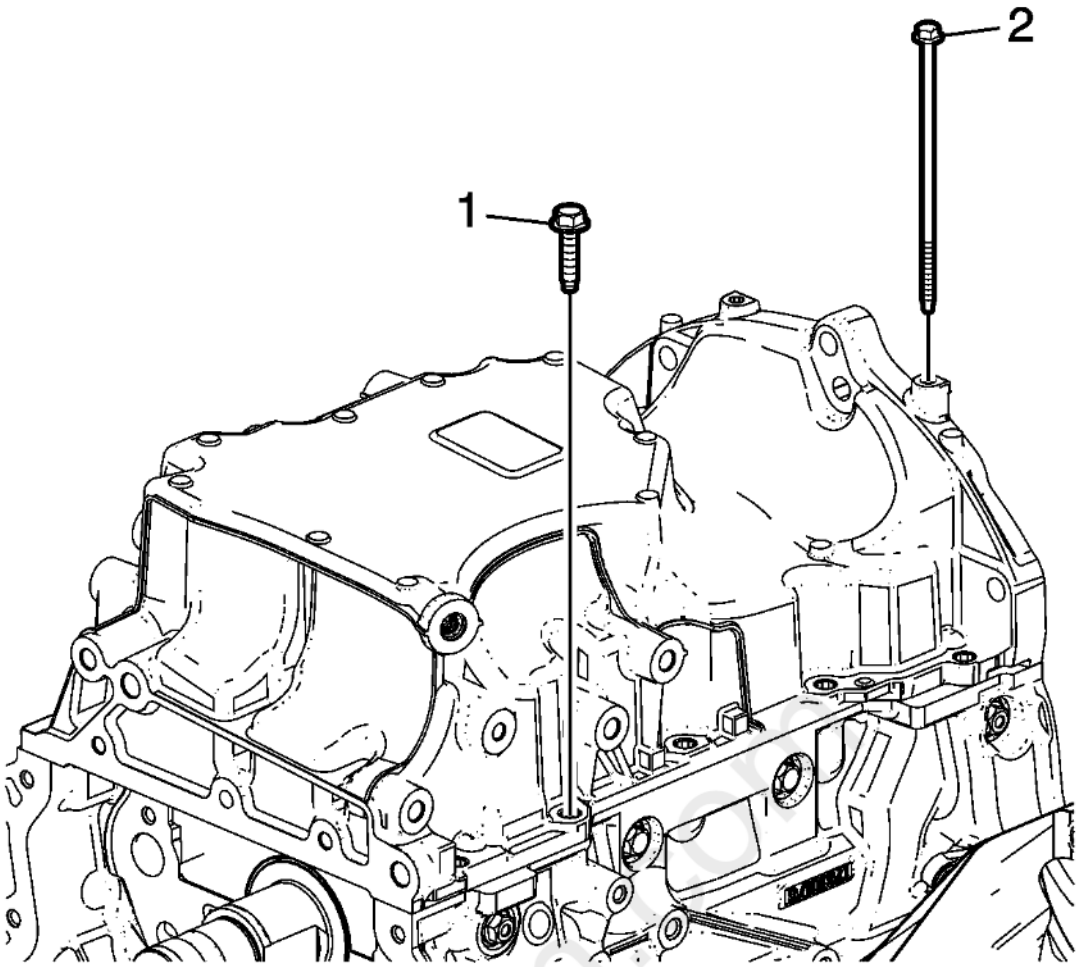

Fig. 58: Engine Oil Pan Bolts
Courtesy of GENERAL MOTORS COMPANY

1. Remove the oil pan bolts (1) and (2).
2. Using the pry points located at the edge of the oil pan separate the RTV sealant.

cardiagn.com

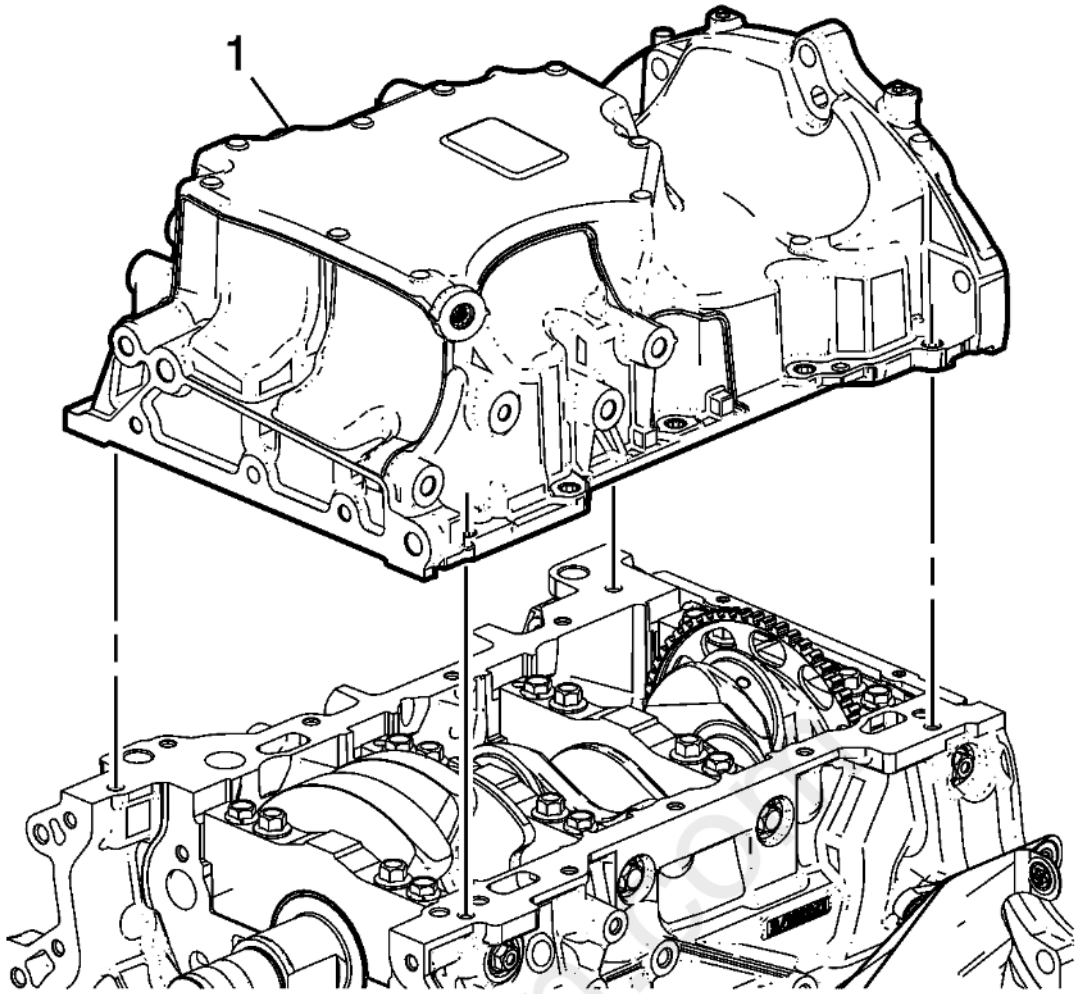

Fig. 59: View Of Engine Oil Pan
Courtesy of GENERAL MOTORS COMPANY

3. Remove the oil pan (1) from the block.

OIL PUMP REMOVAL

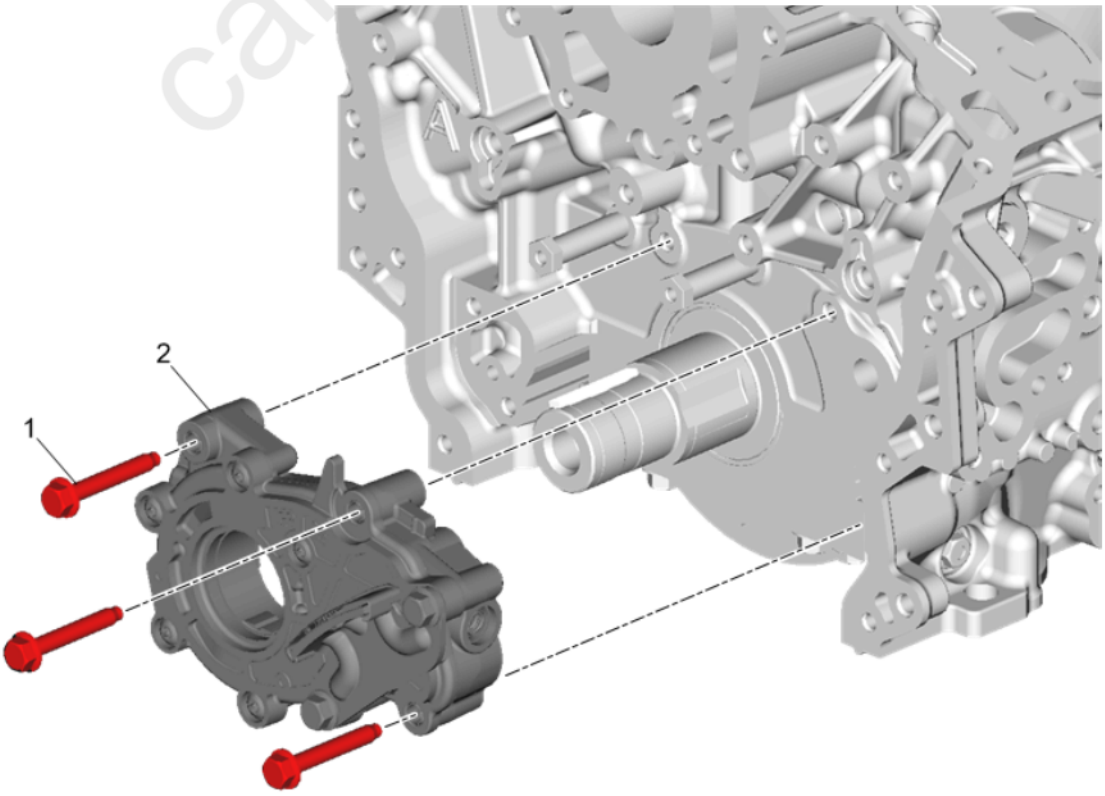

cardiagn.com

Fig. 60: Oil Pump
Courtesy of GENERAL MOTORS COMPANY

Callout	Component Name
1	Oil Pump Bolt (Qty: 3)
2	Oil Pump

CRANKSHAFT REAR OIL SEAL AND HOUSING REMOVAL

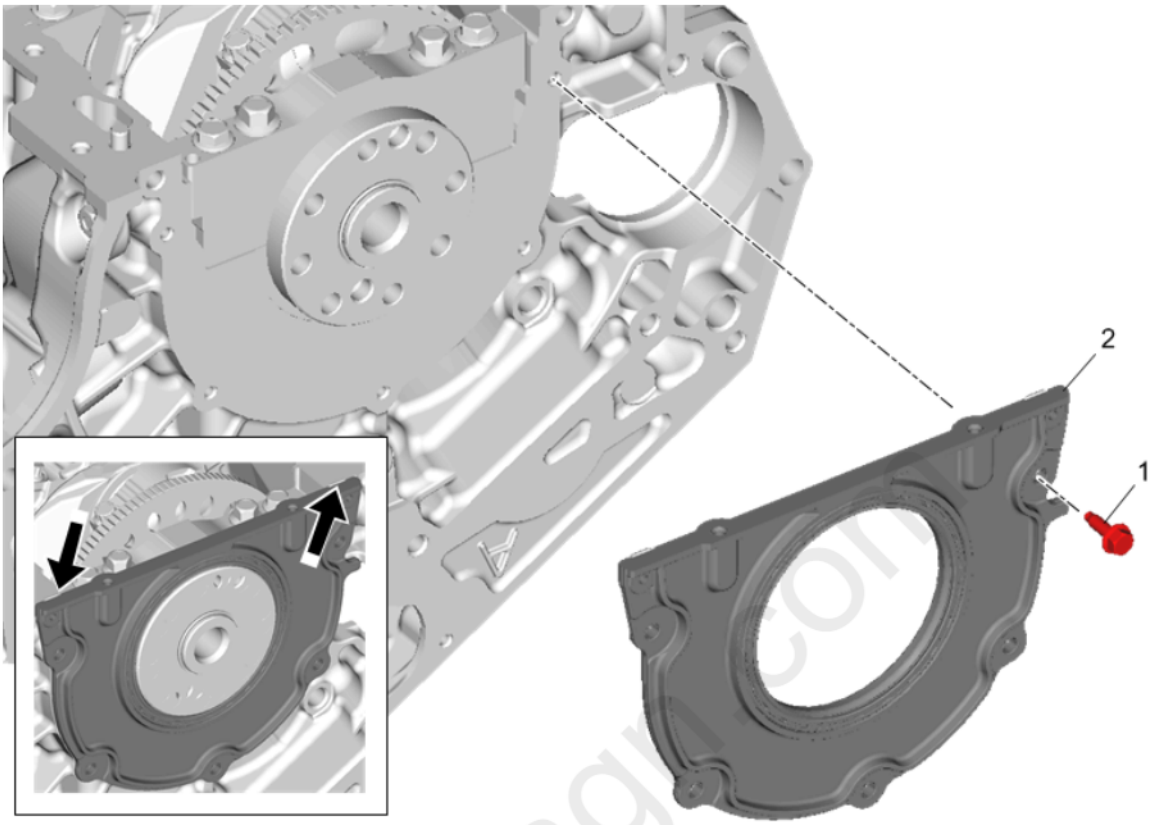

Fig. 61: Crankshaft Rear Oil Seal and Housing
Courtesy of GENERAL MOTORS COMPANY

Callout	Component Name
1	Crankshaft Rear Oil Seal Housing Bolt
2	Crankshaft Rear Oil Seal Housing **Procedure** • Ensure proper use of room temperature vulcanizing (RTV) sealant. **Use of Room Temperature Vulcanizing (RTV) and Anaerobic Sealant** • Use the pry points located at the edge of the crankshaft rear oil seal housing to separate the RTV sealant. • Remove and DISCARD the crankshaft rear oil seal housing.

PISTON, CONNECTING ROD, AND BEARING REMOVAL

Special Tools

EN 46121 Connecting Rod Guide Pin Set

For equivalent regional tools, refer to **Special Tools** .

NOTE:

- **An arrow/dot showing proper piston orientation is located on the top of the piston.**
- **If the connecting rod bearings have been used in a running engine, you must replace them with NEW connecting rod**

bearings for reassembly.

1. Before removing the connecting rods, check the connecting rod side clearance using the following procedure:
    1. Tap the connecting rod to one end of the crankshaft journal with a dead-blow or wooden hammer.
    2. Using feeler gauges, measure the clearance between the crankshaft counterweight and the connecting rod.
    3. The connecting rod side clearance should not exceed specifications. Refer to **Engine Mechanical Specifications** .
    4. If the end play exceeds the specified limits, measure the width of the crankpin end of the connecting rod. Refer to **Piston, Connecting Rod, and Bearing Cleaning and Inspection**.
    5. If the connecting rod width is significantly smaller than specified and severe wear is present on the side of the connecting rod, replace the connecting rod.
    6. If the connecting rod width is within specification and excessive scoring is present on the crankshaft journals, replace the crankshaft.
2. Using a marker, number each piston face. Draw an arrow along the centerline of the piston pointing toward the front of the engine.

CAUTION: **Do not use a stamp, punch or any other method that may distort or stress the connecting rod or connecting rod cap. Extensive engine damage may result from a connecting rod that is distorted or stressed.**

3. Mark the cylinder number on the connecting rod and the connecting rod cap with a scribe, paint stick or permanent marker.

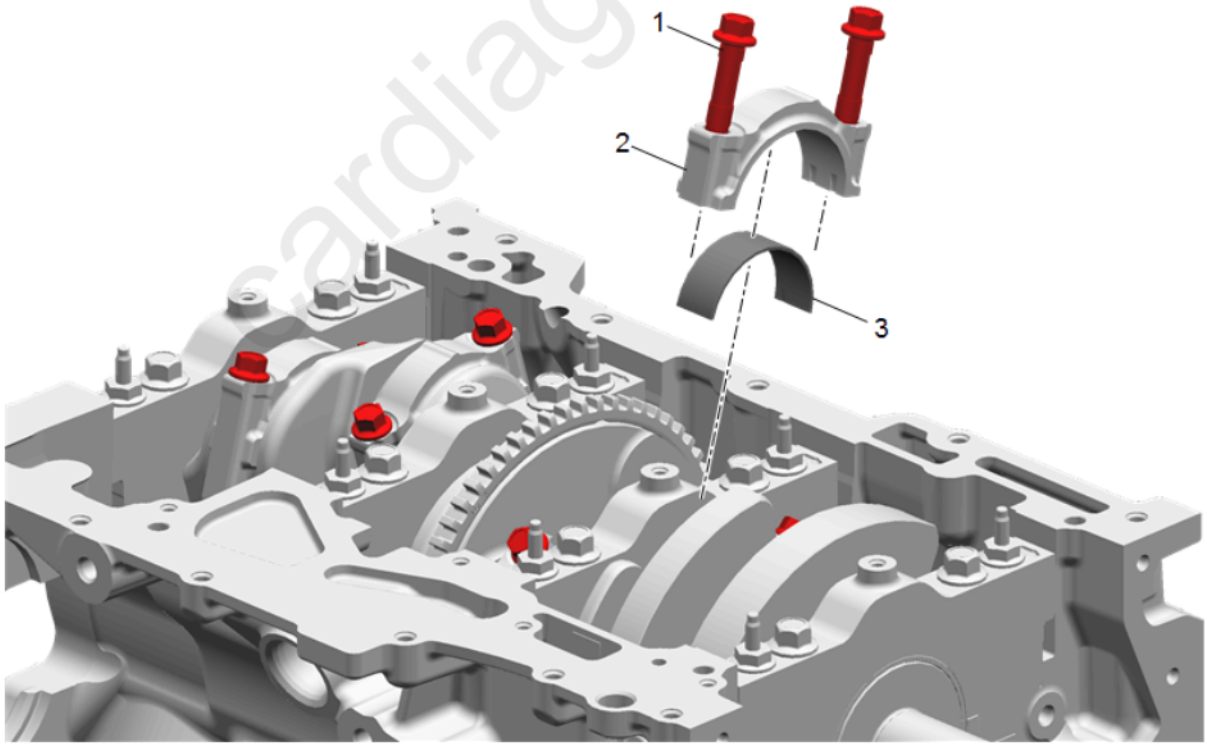

Fig. 62: View Of Connecting Rod Bearing & Cap
Courtesy of GENERAL MOTORS COMPANY

CAUTION: **Powdered metal connecting rods have rod bolts which yield when torqued. If the rod bolts are loosened or removed the rod bolts must be replaced. Rod bolts that are not replaced will not torque to the correct clamp load and can lead to serious engine damage.**

4. Remove the connecting rod bolts.

NOTE: **The connecting rod caps must remain with the original connecting rod.**

5. Remove the connecting rod cap.

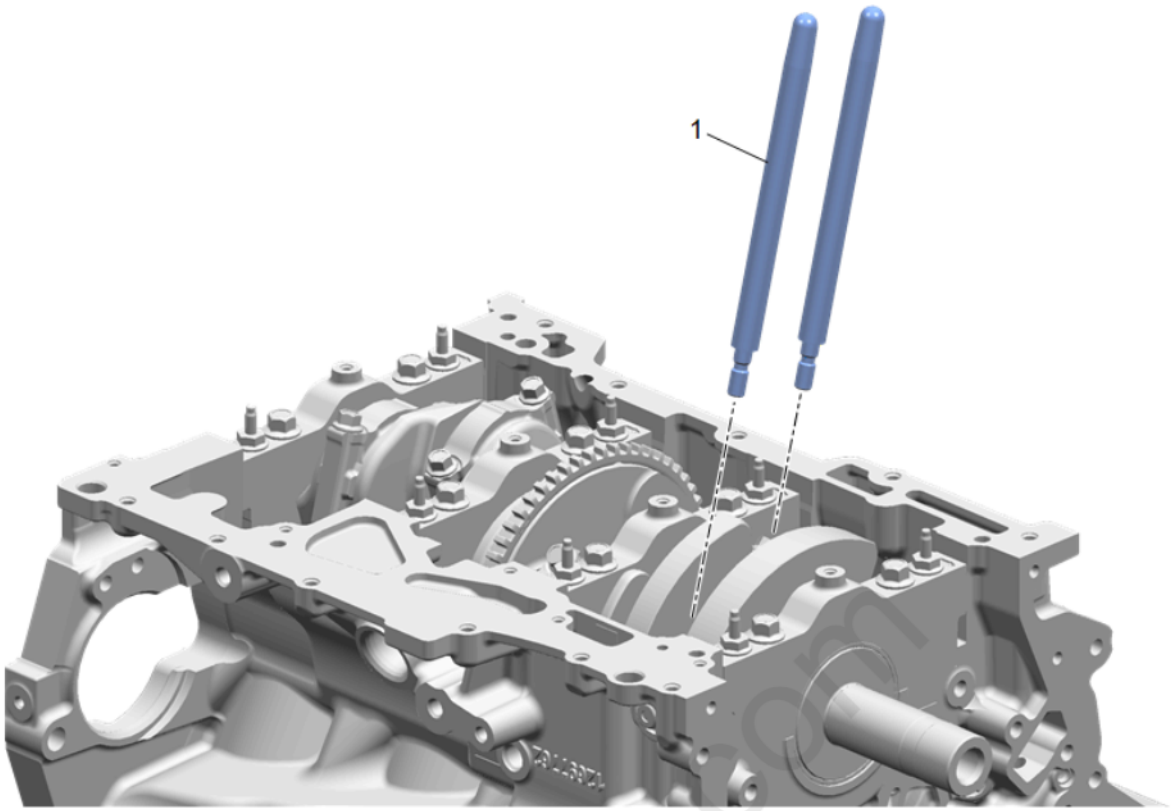

Fig. 63: Crankshaft Protector Pins Installed in Connecting Rod Bolt Holes
Courtesy of GENERAL MOTORS COMPANY

6. Install the **EN 46121** set into the connecting rod bolt holes.

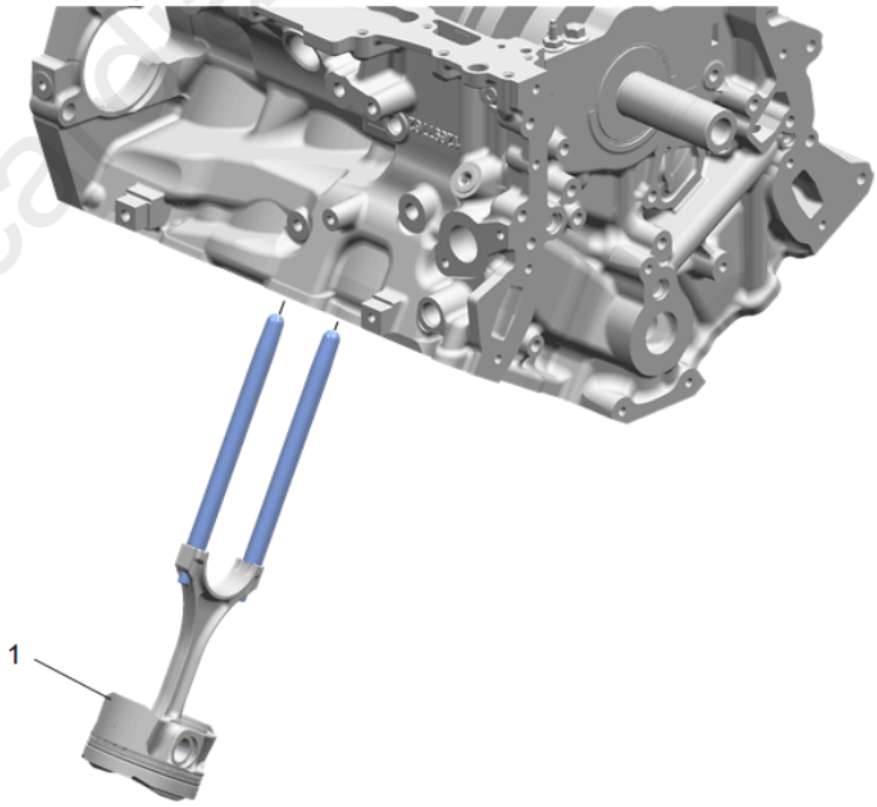

Fig. 64: View Of Connecting Rod & Piston Assembly
Courtesy of GENERAL MOTORS COMPANY

7. Using the **EN 46121** set, push the connecting rod and piston assembly through the top of the cylinder. DO NOT scratch the crankshaft journal or cylinder wall and DO NOT damage the oil

jets when removing the connecting rod and piston assembly.

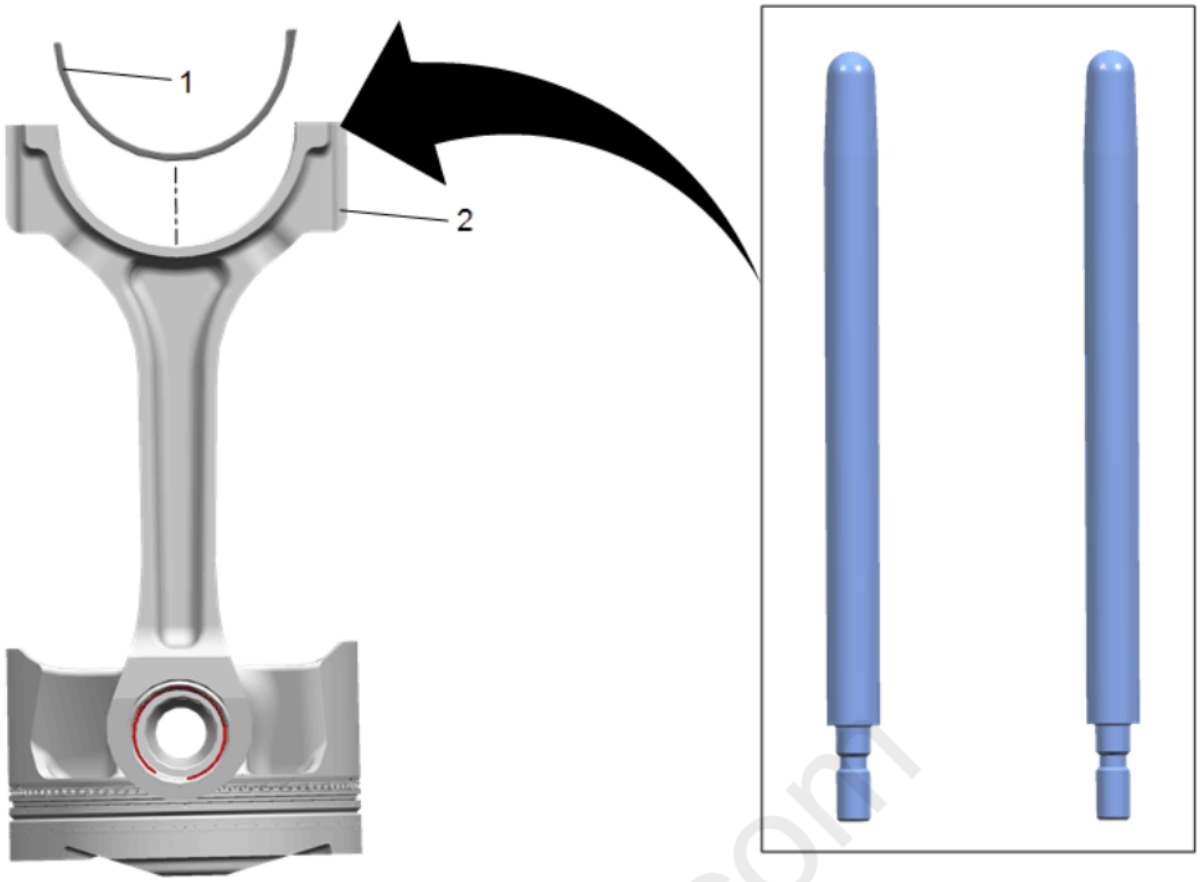

Fig. 65: View Of Piston/Connecting Rod Installation Tool
Courtesy of GENERAL MOTORS COMPANY

8. Remove the **EN 46121** set from the connecting rod bolt holes.
9. Remove the upper connecting rod bearing from the connecting rod.

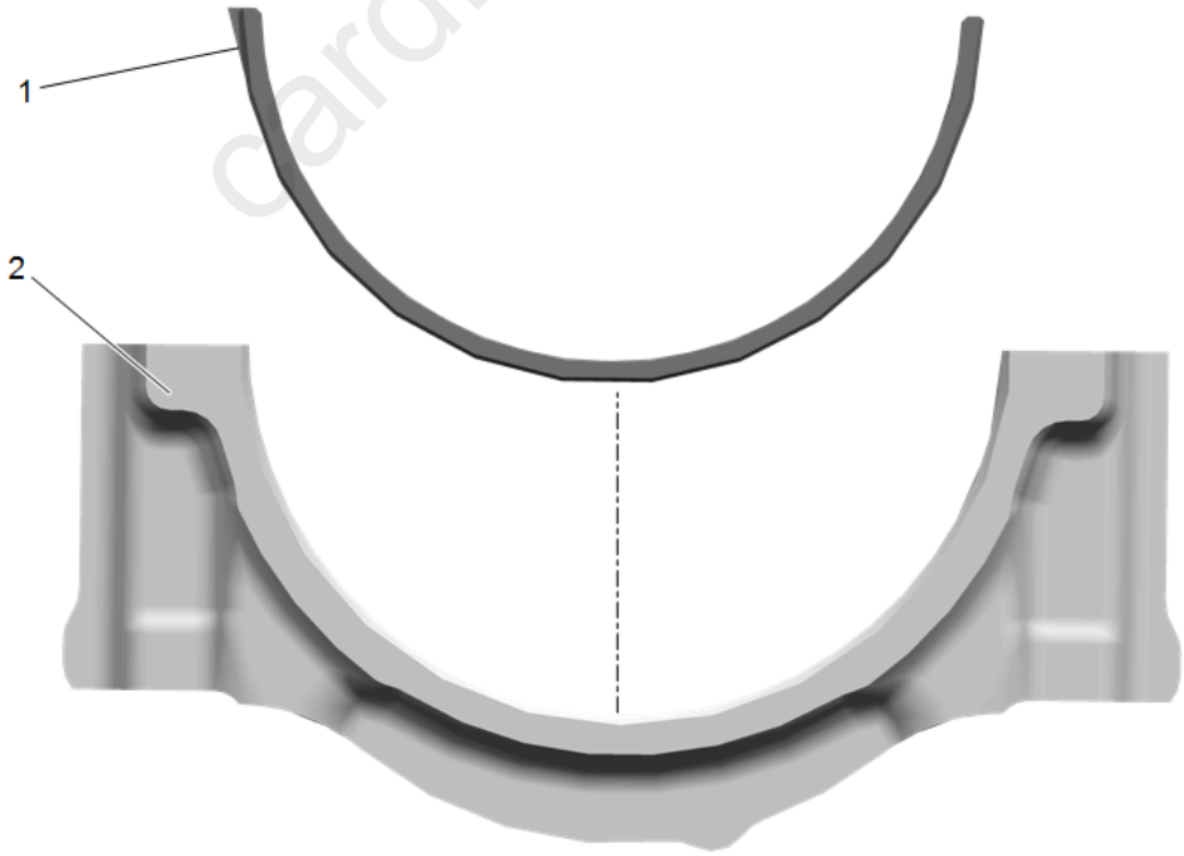

Fig. 66: View Of Lower Connecting Rod Cap & Bearing
Courtesy of GENERAL MOTORS COMPANY

cardiagn.com

10. Remove the lower connecting rod bearing from the connecting rod cap.

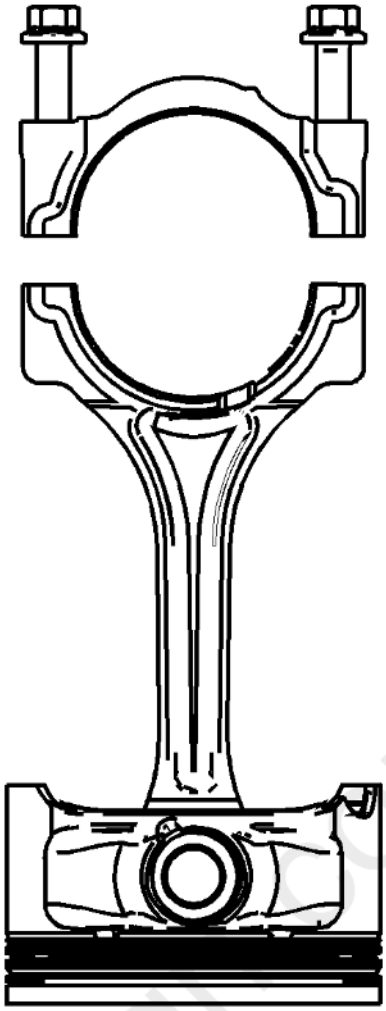

Fig. 67: View Of Connecting Rod Cap, Connecting Rod & Piston Assembly
Courtesy of GENERAL MOTORS COMPANY

11. Reattach the connecting rod cap to the connecting rod to prevent damage to their mating surfaces. The cap and rod are a matched set and must be kept together.

CRANKSHAFT AND BEARING REMOVAL

Special Tools

- **GE 6125-1B** Slide Hammer Adapter
- **EN 49102** Crankshaft Bearing Cap Remover

For equivalent regional tools, refer to **Special Tools** .

Crankshaft End Play Measurement

1. Place a dial indicator at the crankshaft nose.
2. Gently force the crankshaft to the extreme front and rear positions with a pry tool while monitoring the movement of the dial indicator.
3. The crankshaft end play should not exceed specifications. Refer to **Engine Mechanical Specifications** .
4. If the specifications are exceeded inspect the thrust bearing thrust OD and the crankshaft thrust wall for wear and/or excessive runout. Refer to **Engine Mechanical Specifications** .
5. Replace the thrust bearing or crankshaft as necessary.

Crankshaft Removal

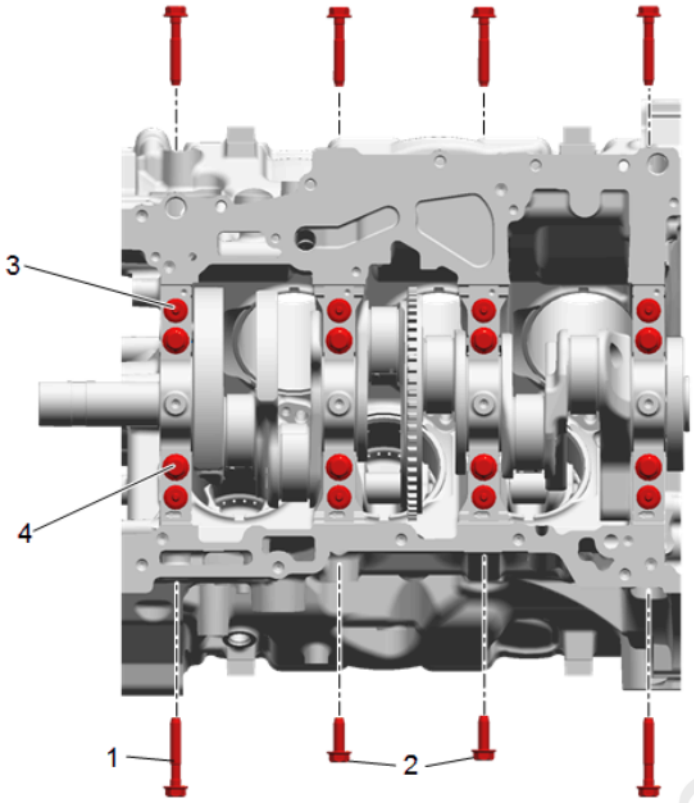

Fig. 68: Identifying Crankshaft Main Bearing Cap Side Bolts
Courtesy of GENERAL MOTORS COMPANY

1. Remove the crankshaft bearing cap side bolts.
2. Remove the crankshaft bearing cap outer bolts.
3. Remove the crankshaft bearing cap inner bolts.

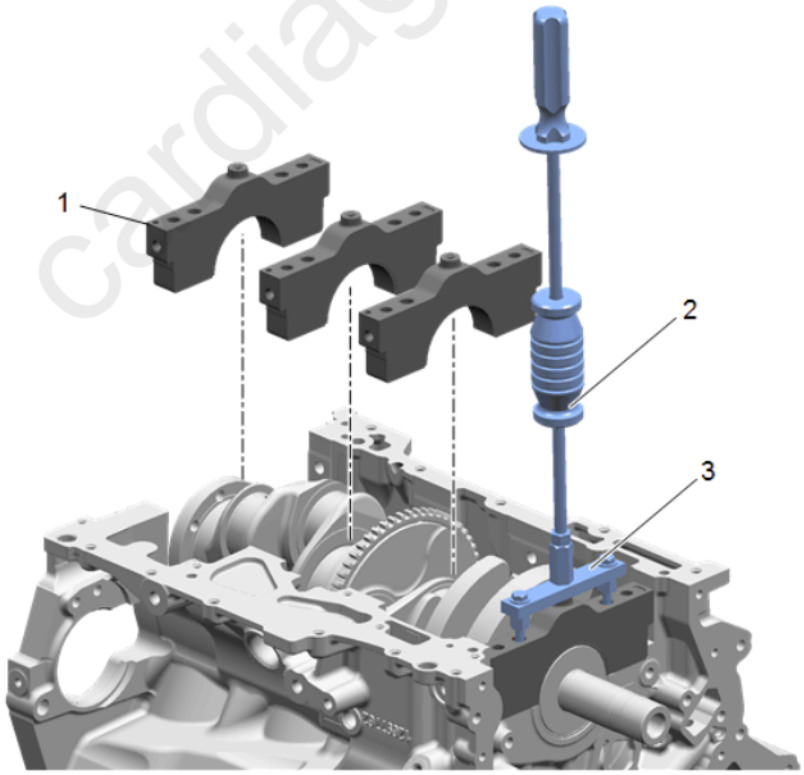

Fig. 69: View Of Crankshaft Main Bearing Caps
Courtesy of GENERAL MOTORS COMPANY

4. Remove the crankshaft bearing caps using the **GE 6125-1B** adapter (1) and **EN 49102** remover (2).

cardiagn.com

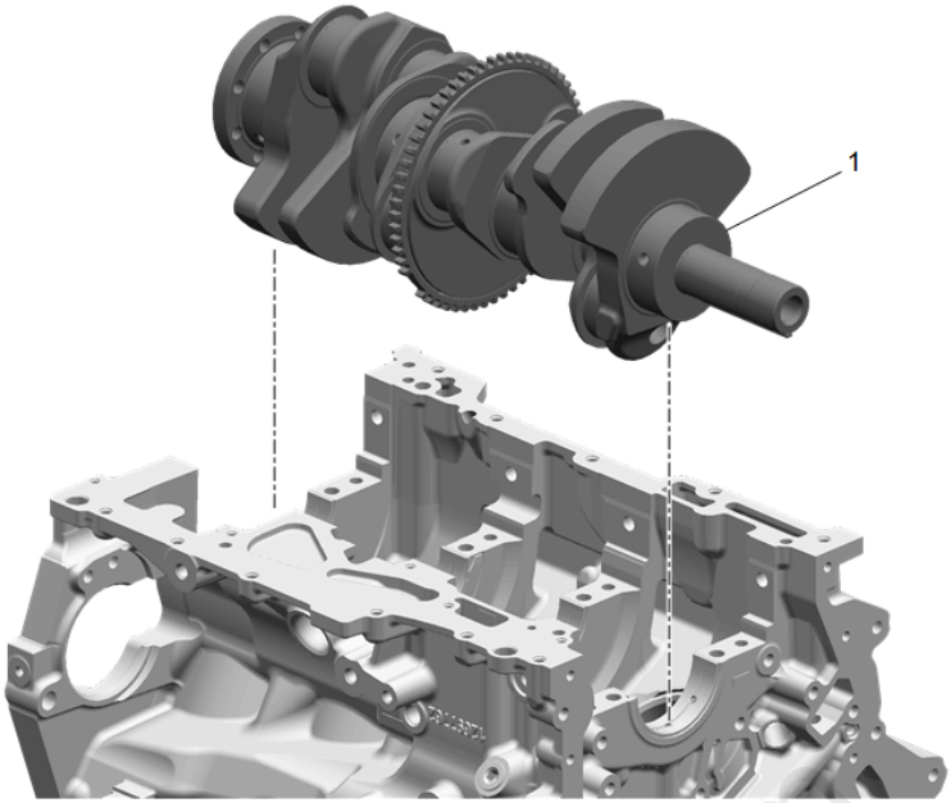

Fig. 70: View Of Crankshaft
Courtesy of GENERAL MOTORS COMPANY

5. Using two hands, lift the crankshaft straight up from the engine block.
6. Place the crankshaft in a secure place.

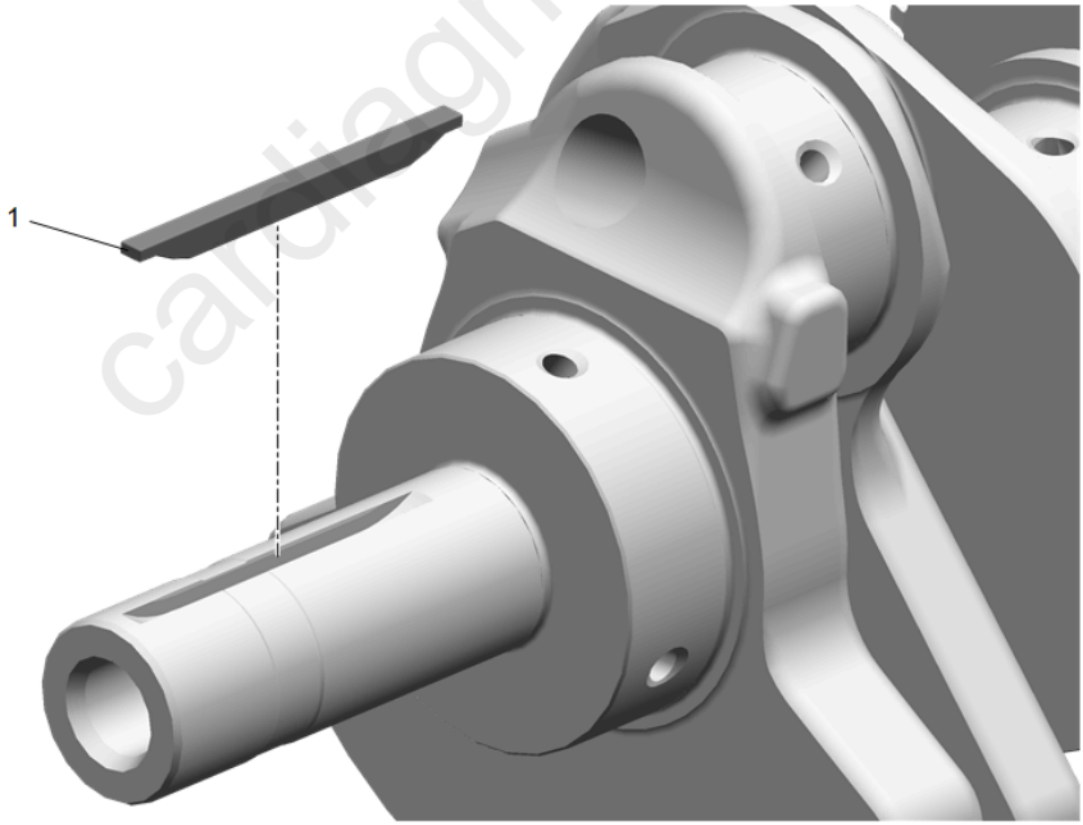

Fig. 71: Locating Crankshaft Sprocket Drive Pin
Courtesy of GENERAL MOTORS COMPANY

7. Remove the crankshaft key from the nose of the crankshaft, if damaged.

Crankshaft Bearing Removal

1. Prepare a piece of cardboard or equivalent, numbered 1 - 4 for bearing identification. Main bearing journals are numbered from the front of the engine.

cardiagn.com

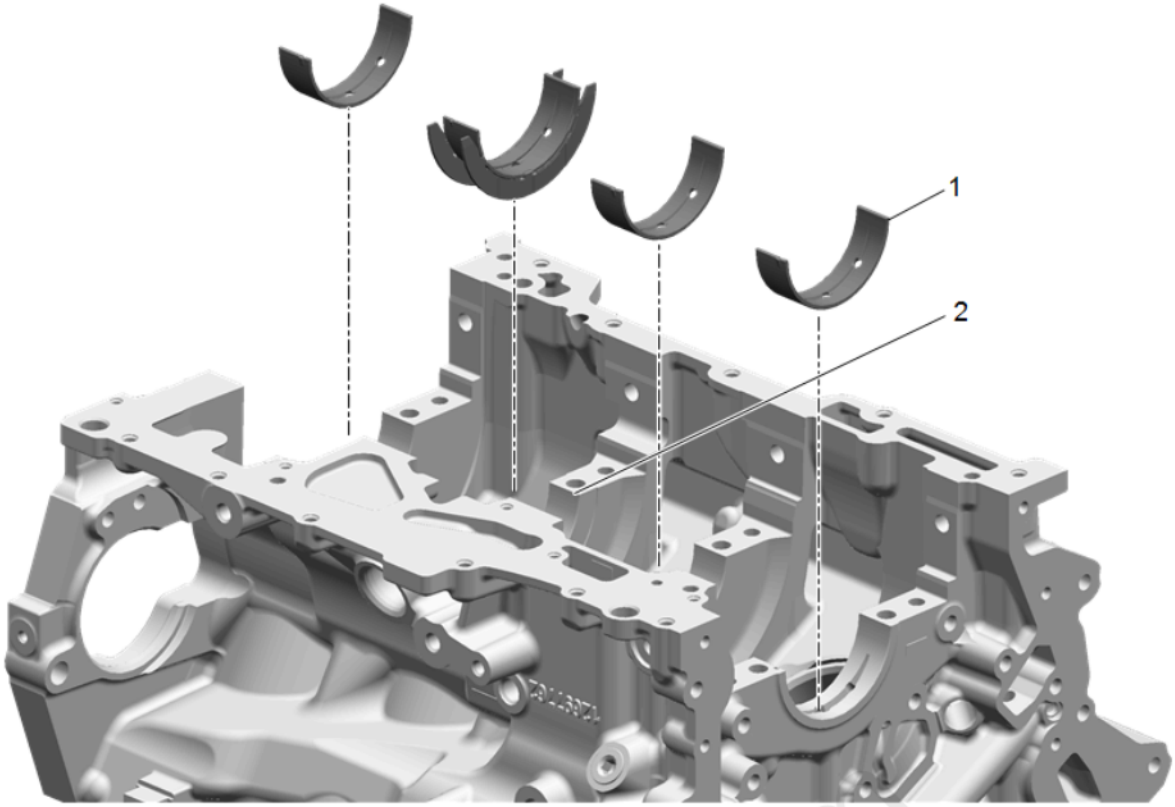

Fig. 72: Locating Thrust Bearing In Number 3 Journal
Courtesy of GENERAL MOTORS COMPANY

2. Remove the crankshaft upper bearing halves from the cylinder block. Note the position of the thrust bearing (1) at the number 3 journal (2).
3. Place the crankshaft upper bearing halves on the cardboard in the correct positions. Note that the number 3 bearing is the thrust bearing.

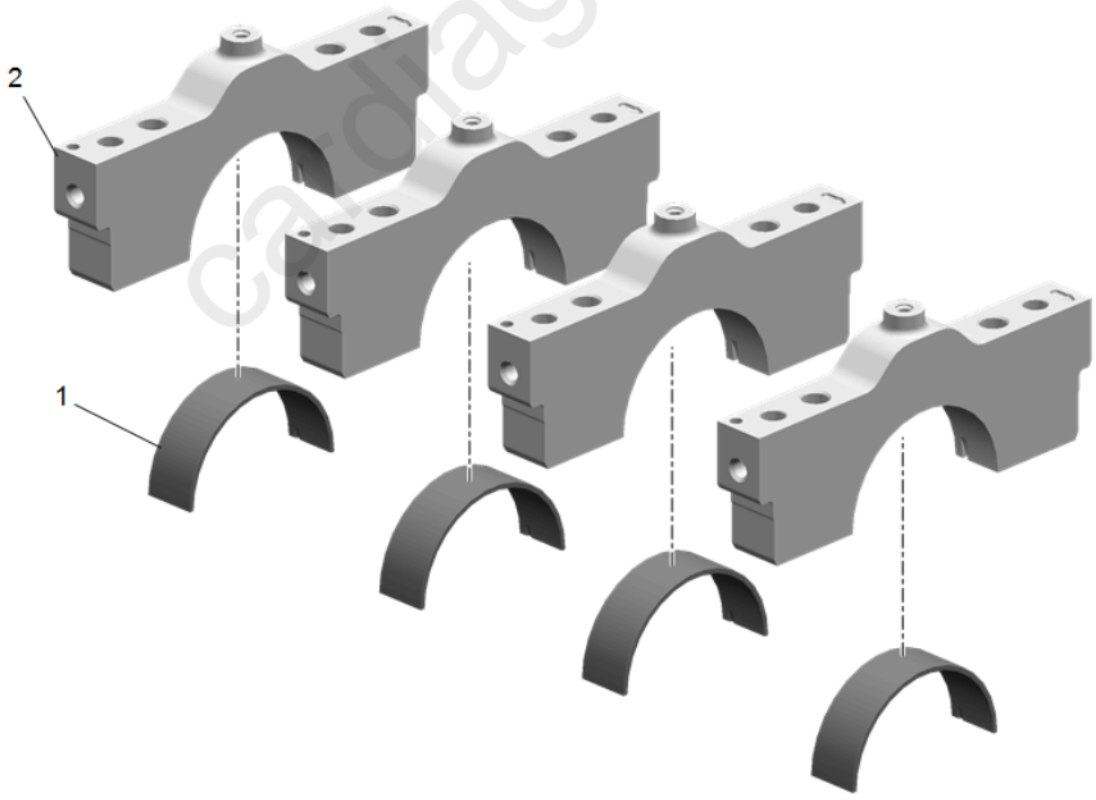

Fig. 73: View Of Crankshaft Bearing Caps & Lower Bearing Halves
Courtesy of GENERAL MOTORS COMPANY

4. Remove the crankshaft lower bearing halves from the crankshaft bearing caps.
5. Place the crankshaft lower bearing halves in the correct positions on the cardboard.

ENGINE BLOCK DISASSEMBLE

cardiagn.com

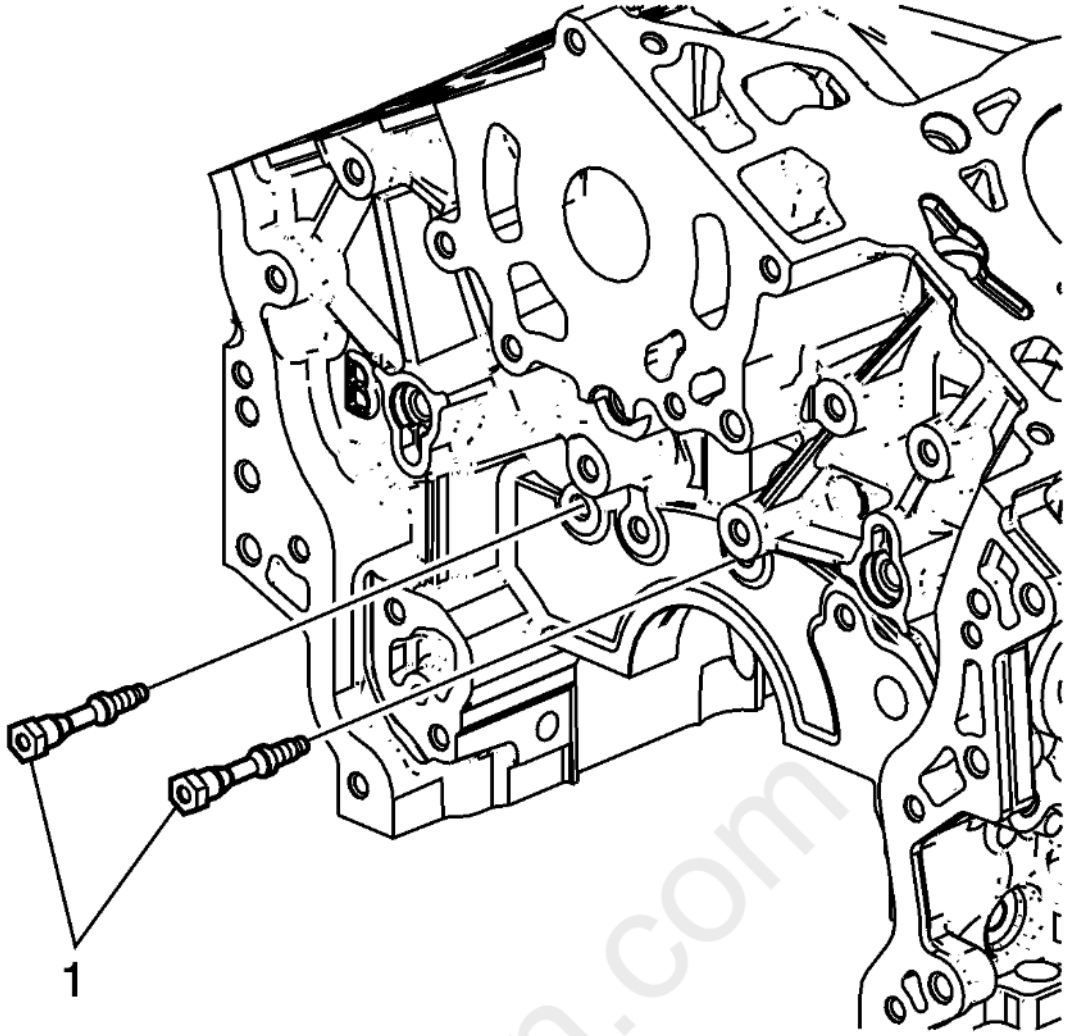

Fig. 74: Identifying Engine Front Cover Studs
Courtesy of GENERAL MOTORS COMPANY

1. Remove the engine front cover studs (1).

cardiagn.com

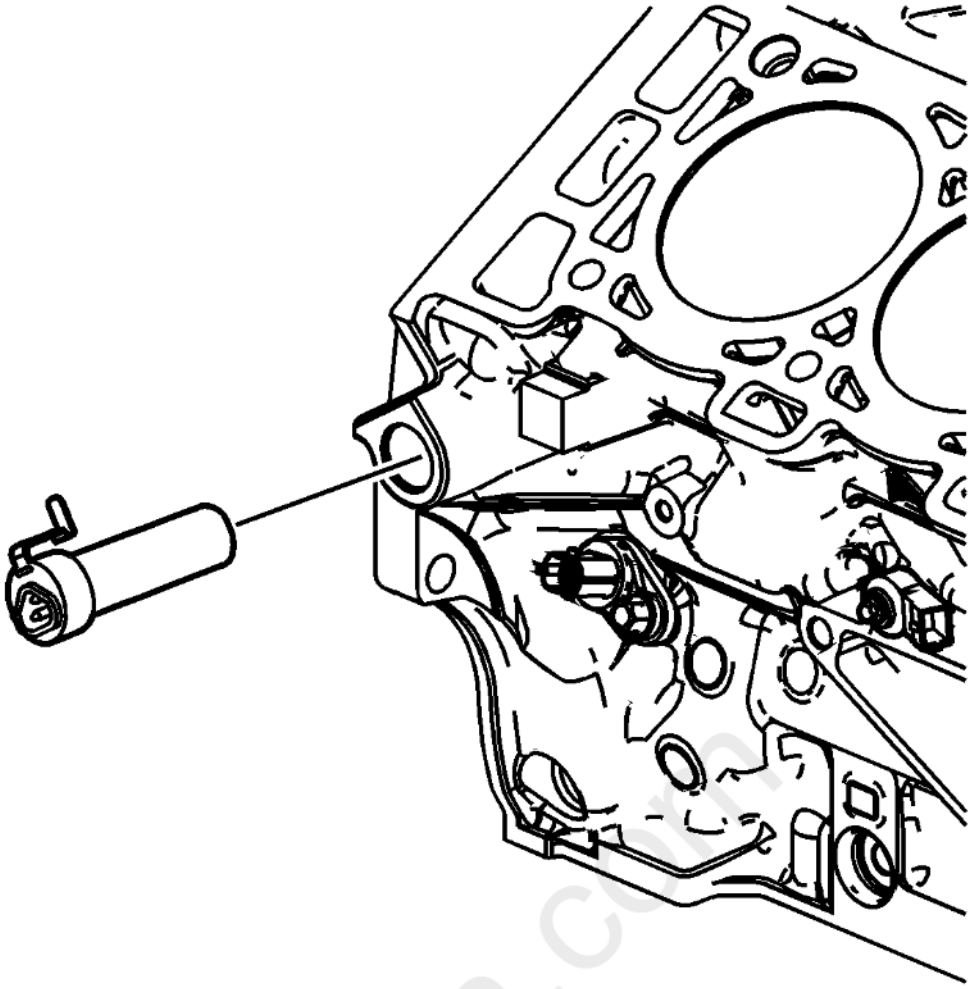

Fig. 75: View Of Block Heater Cartridge
Courtesy of GENERAL MOTORS COMPANY

2. Remove the block heater cartridge, if equipped.

cardiagn.com

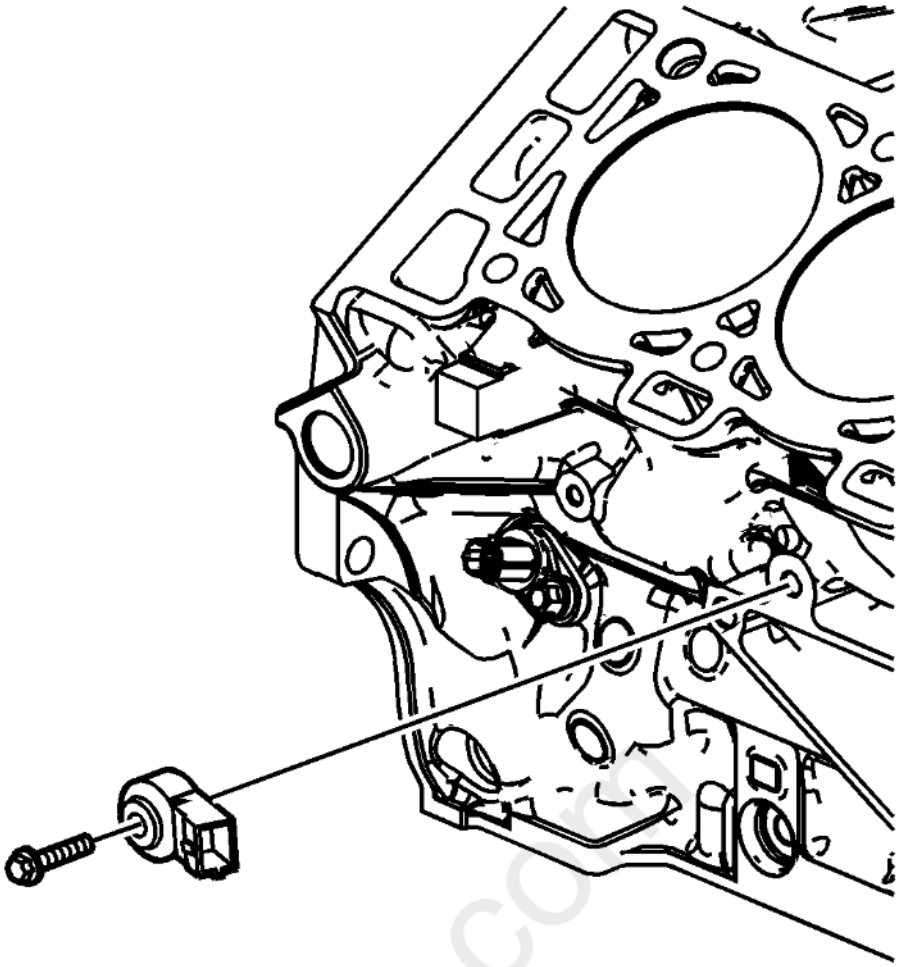

Fig. 76: View Of Right Knock Sensor
Courtesy of GENERAL MOTORS COMPANY

3. Remove the right knock sensor bolt.
4. Remove the right knock sensor.

cardiagn.com

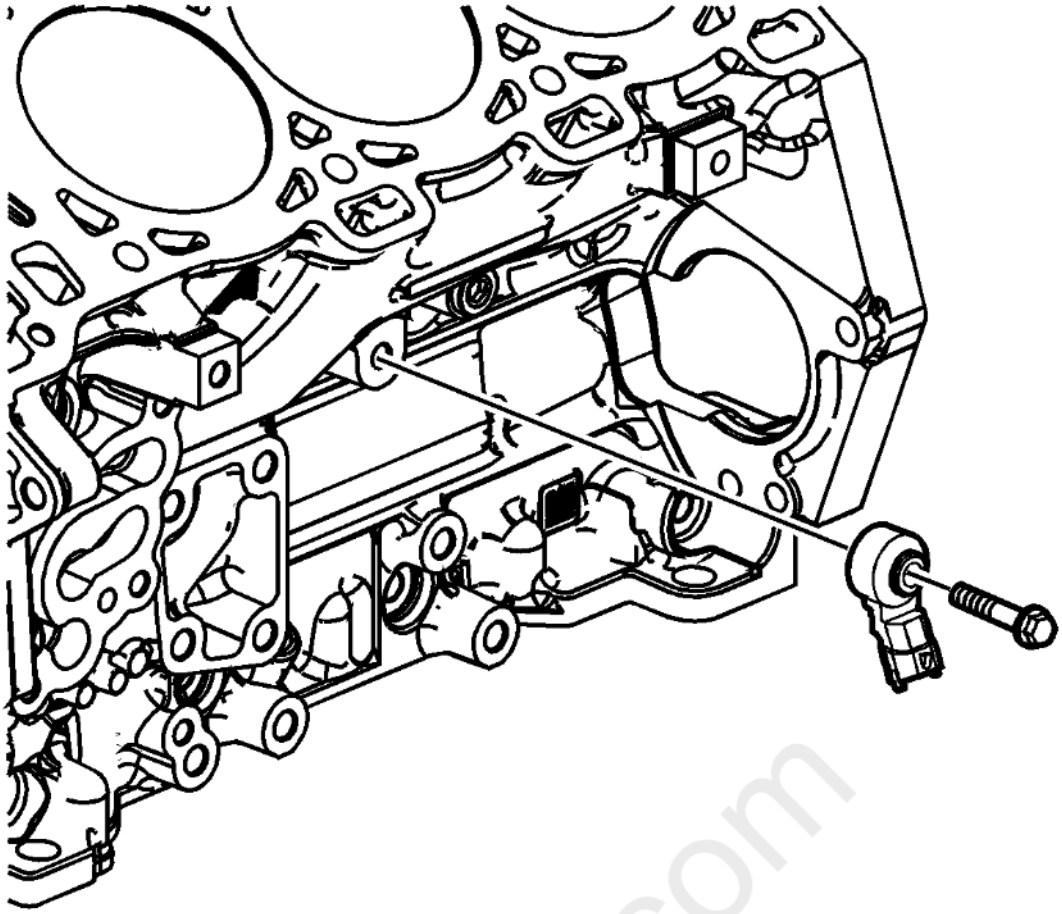

Fig. 77: Identifying Left Knock Sensor & Bolt
Courtesy of GENERAL MOTORS COMPANY

5. Remove the left knock sensor bolt.
6. Remove the left knock sensor.

cardiagn.com

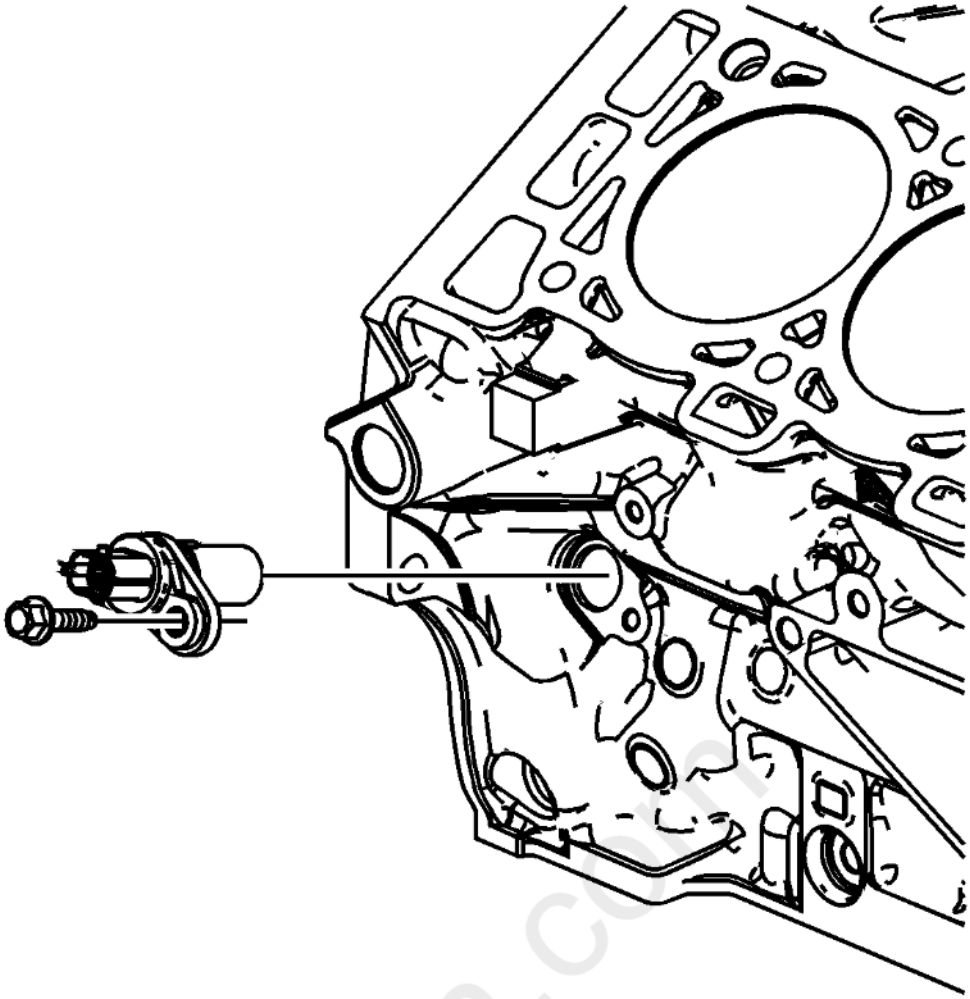

Fig. 78: View Of Crankshaft Position Sensor
Courtesy of GENERAL MOTORS COMPANY

7. Remove the crankshaft position sensor bolt.
8. Remove the crankshaft position sensor.

cardiagn.com

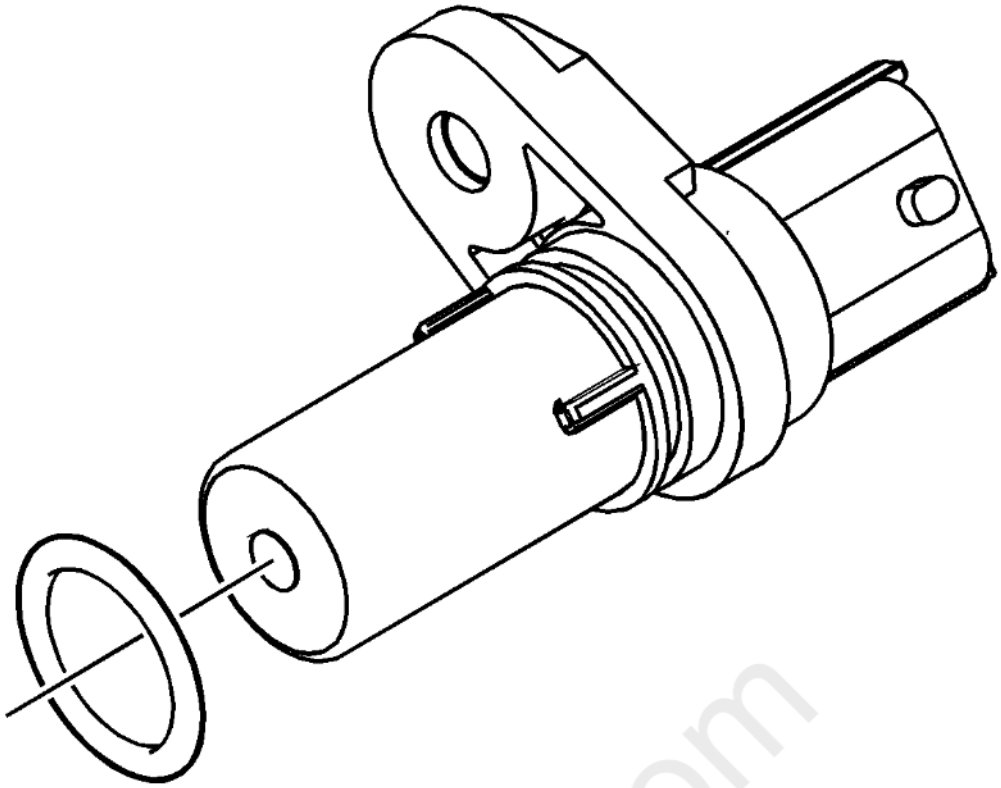

Fig. 79: View Of Crankshaft Position Sensor O-Ring
Courtesy of GENERAL MOTORS COMPANY

9. Remove the crankshaft position sensor O-ring, if damaged.

cardiagn.com

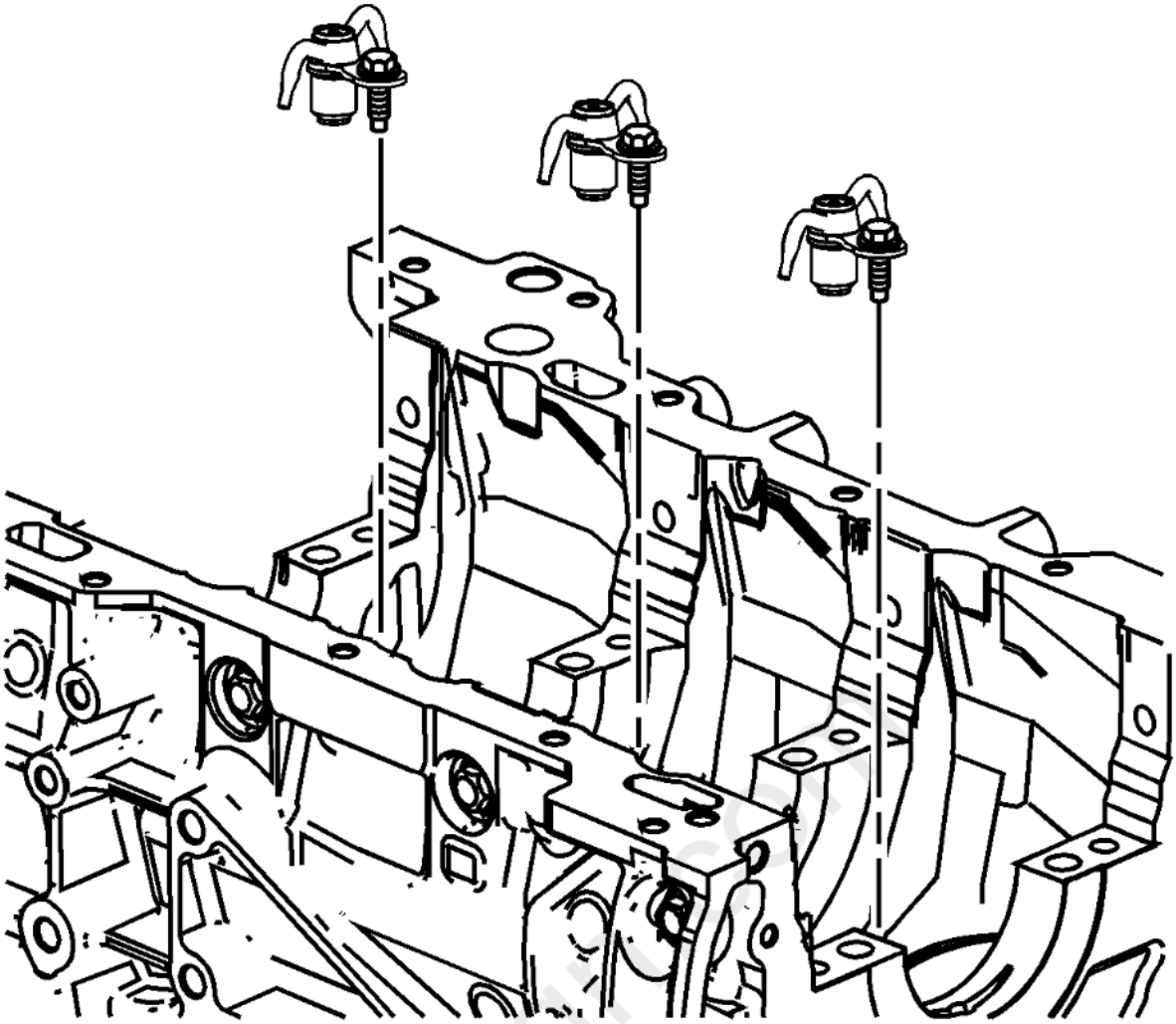

Fig. 80: Identifying Oil Jets & Bolts
Courtesy of GENERAL MOTORS COMPANY

10. Remove oil jet bolts.
11. Remove oil jets.

carmanuals

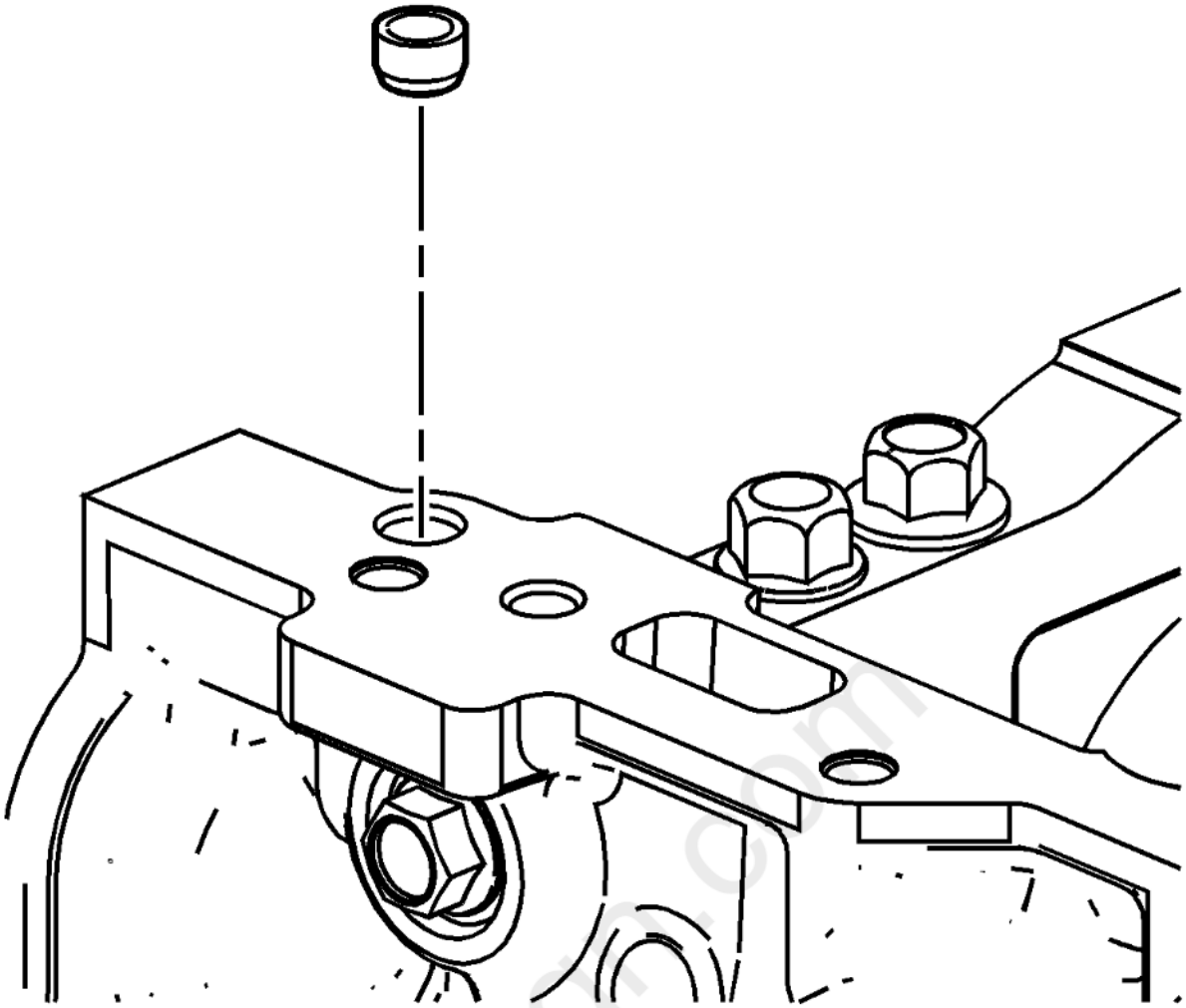

Fig. 81: Locating Right Front Oil Pan Rail Oil Gallery Expansion Plug
Courtesy of GENERAL MOTORS COMPANY

12. Remove the right front oil pan rail oil gallery expansion plug.

carmanuals.com

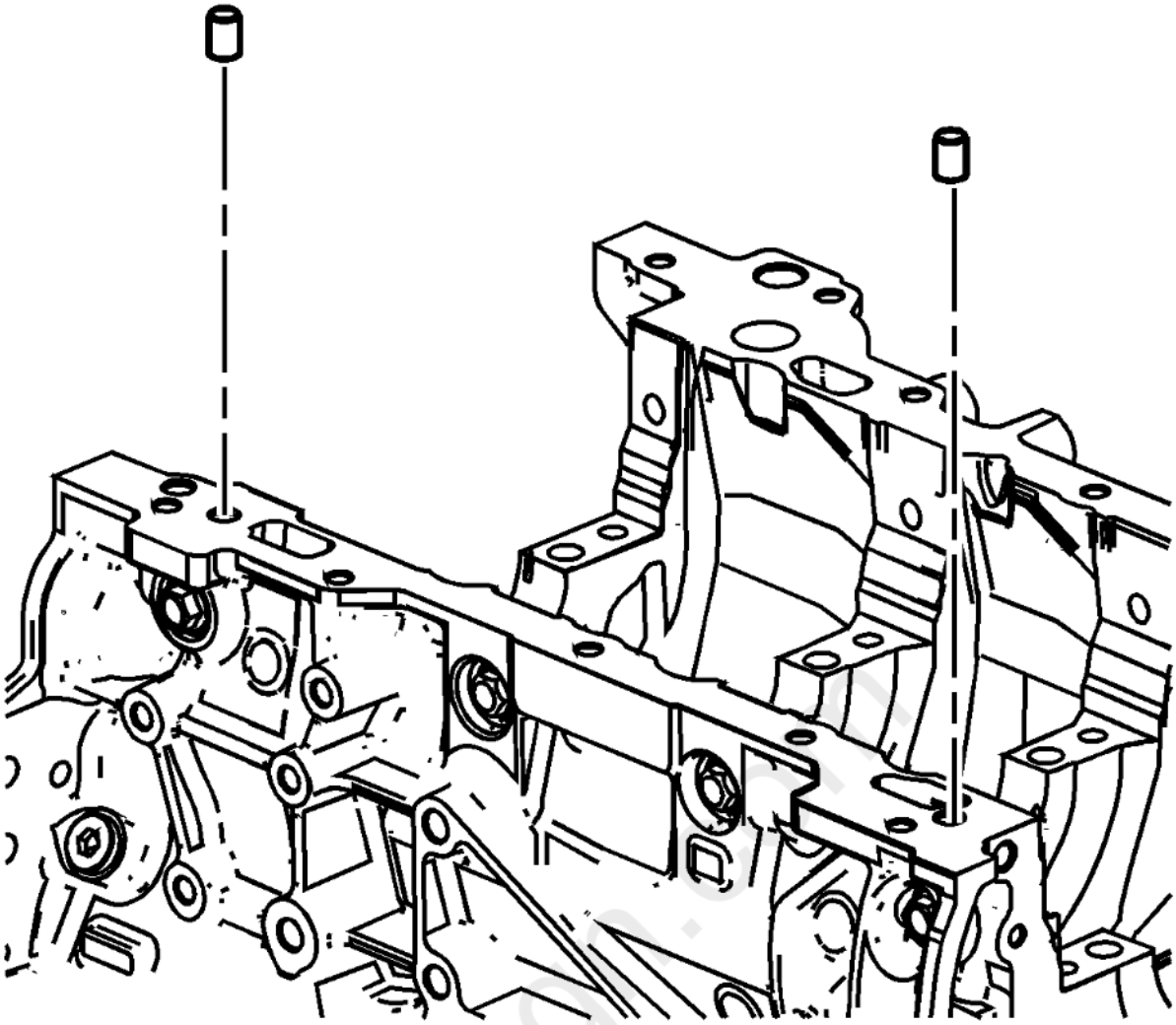

Fig. 82: Identifying Cylinder Block-To-Oil Pan Alignment Dowels
Courtesy of GENERAL MOTORS COMPANY

13. Remove the cylinder block-to-oil pan alignment dowels.

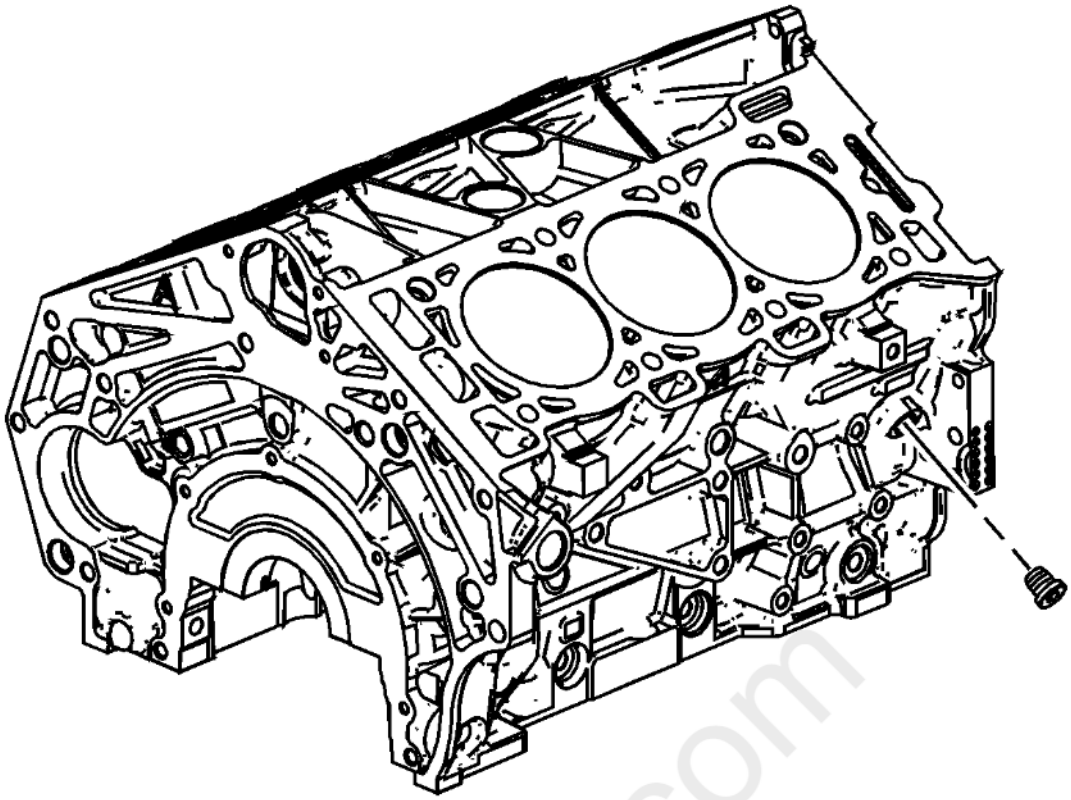

Fig. 83: Identifying M14 Right Side Oil Gallery Threaded Plug
Courtesy of GENERAL MOTORS COMPANY

14. Remove the M14 right side oil gallery threaded plug.

cardiagn.com

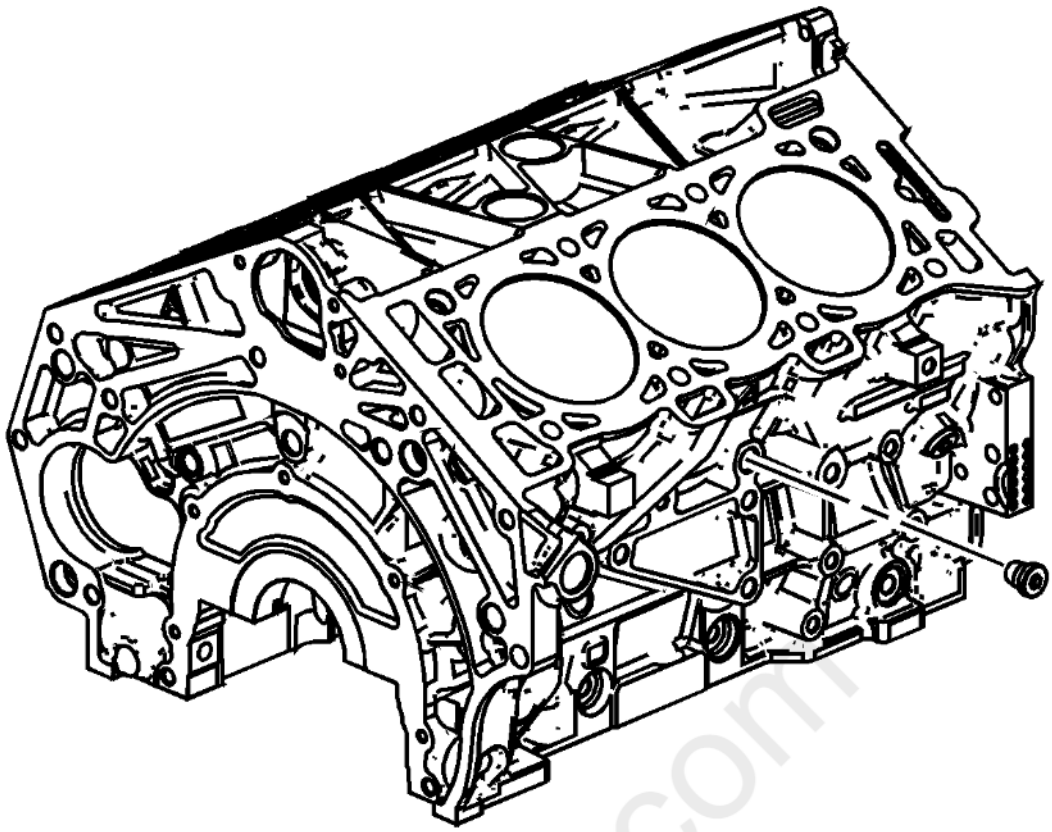

Fig. 84: Identifying M14 Right Side Coolant Drain Threaded Plug
Courtesy of GENERAL MOTORS COMPANY

15. Remove the M14 right side coolant drain threaded plug.

cardiagn.com

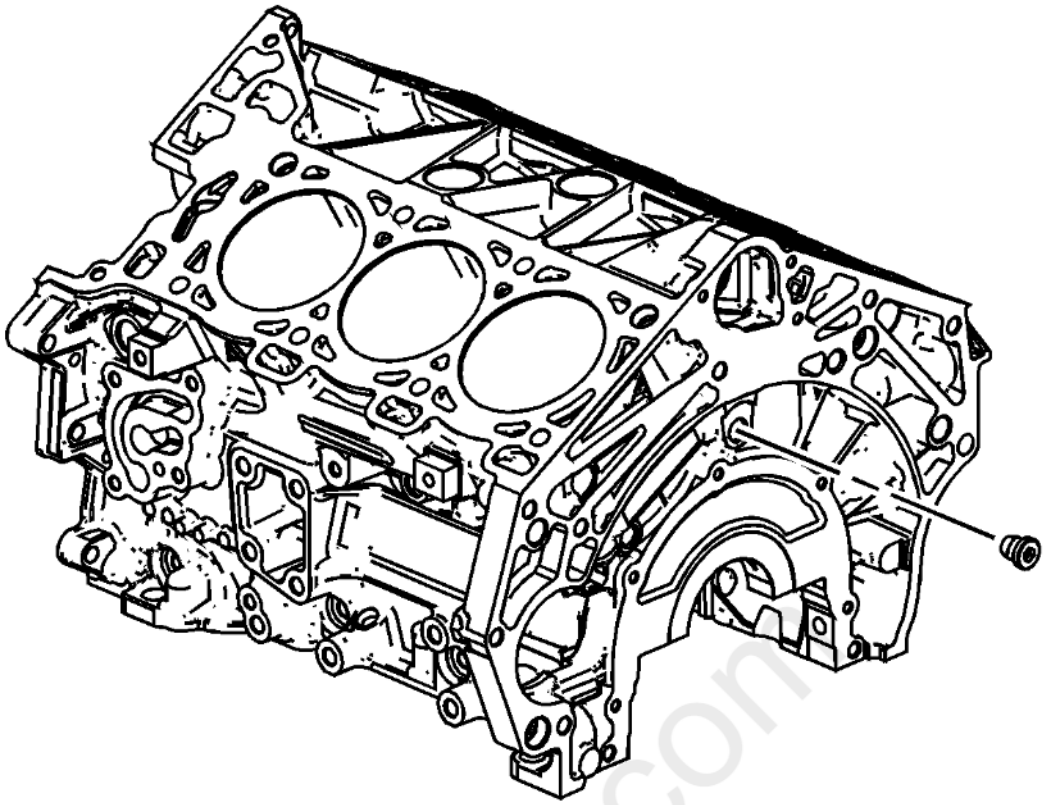

Fig. 85: Identifying M14 Rear Oil Gallery Threaded Plug
Courtesy of GENERAL MOTORS COMPANY

16. Remove the M14 rear oil gallery threaded plug.

cardiagn.com

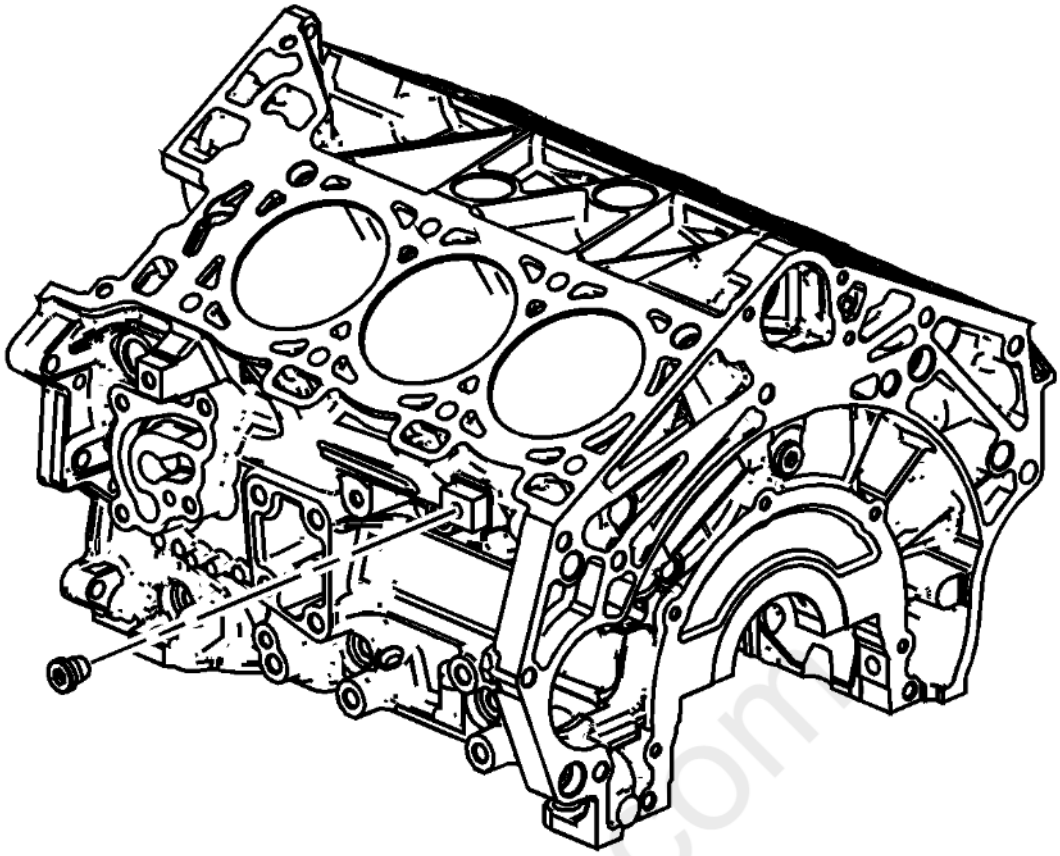

Fig. 86: View Of M14 Left Side Coolant Drain Threaded Plug
Courtesy of GENERAL MOTORS COMPANY

17. Remove the M14 left side coolant drain threaded plug.

cardiagn.com

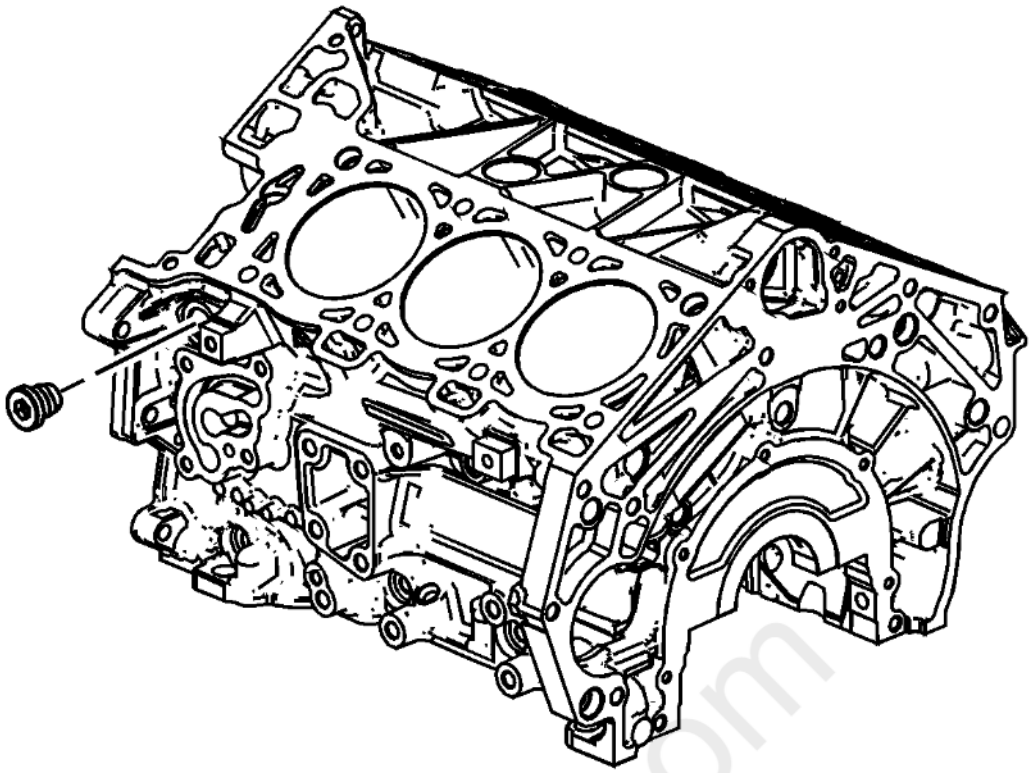

Fig. 87: Removing/Installing M20 Left Side Oil Gallery Threaded Plug
Courtesy of GENERAL MOTORS COMPANY

18. Remove the M20 left side oil gallery threaded plug.

cardiagn.com

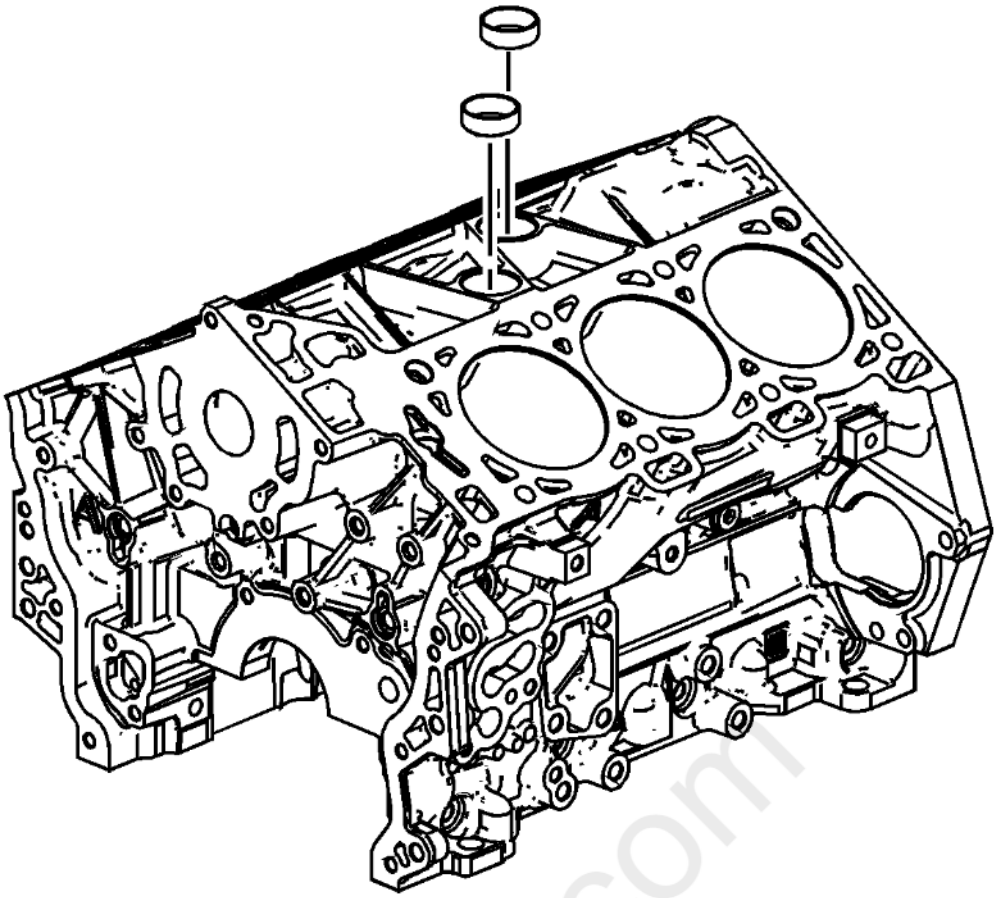

Fig. 88: Identifying Coolant Expansion Plugs
Courtesy of GENERAL MOTORS COMPANY

19. Remove the coolant expansion plugs.

cardiagn.com

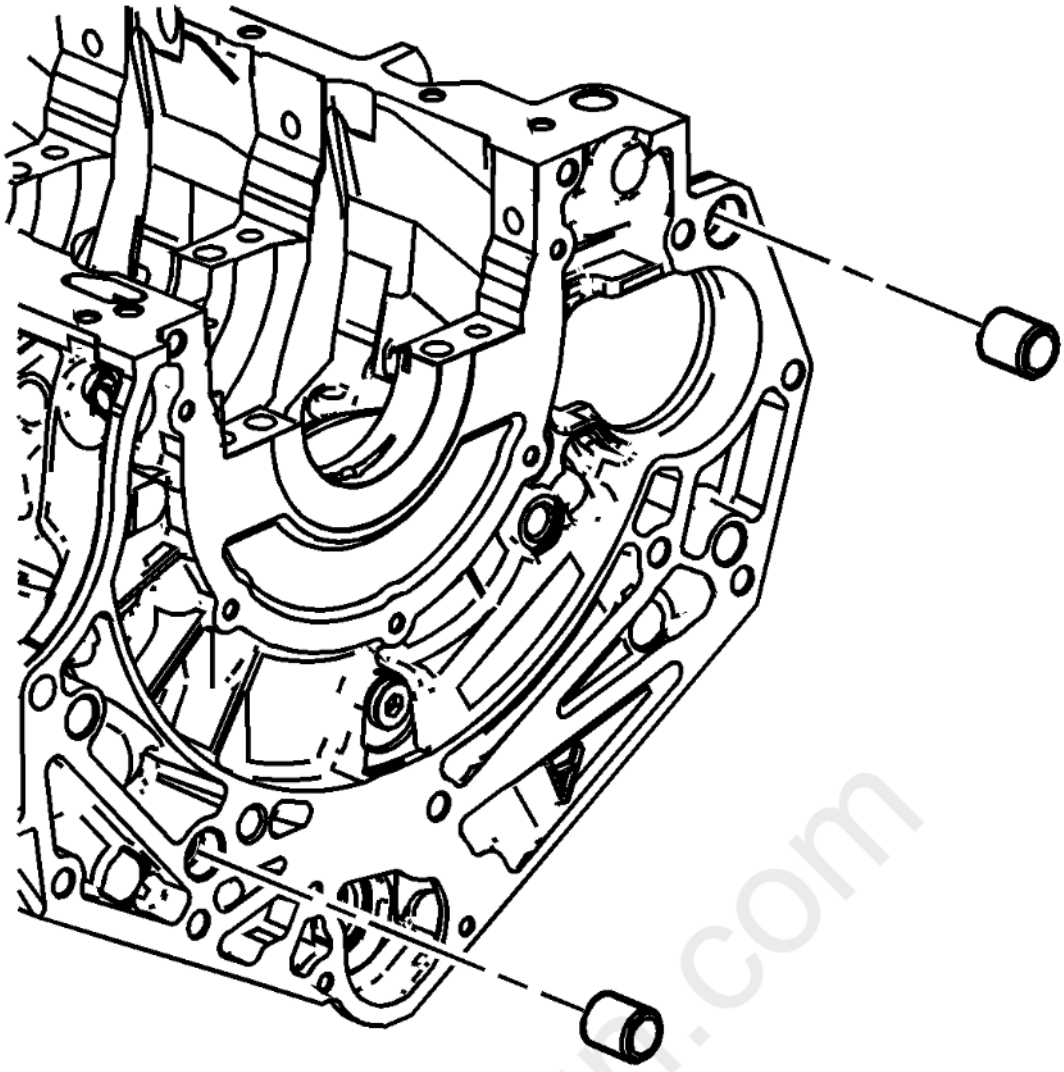

Fig. 89: Identifying Cylinder Block-To-Transmission Alignment Dowels
Courtesy of GENERAL MOTORS COMPANY

20. Remove the cylinder block-to-transmission alignment dowels.

carmgr.com

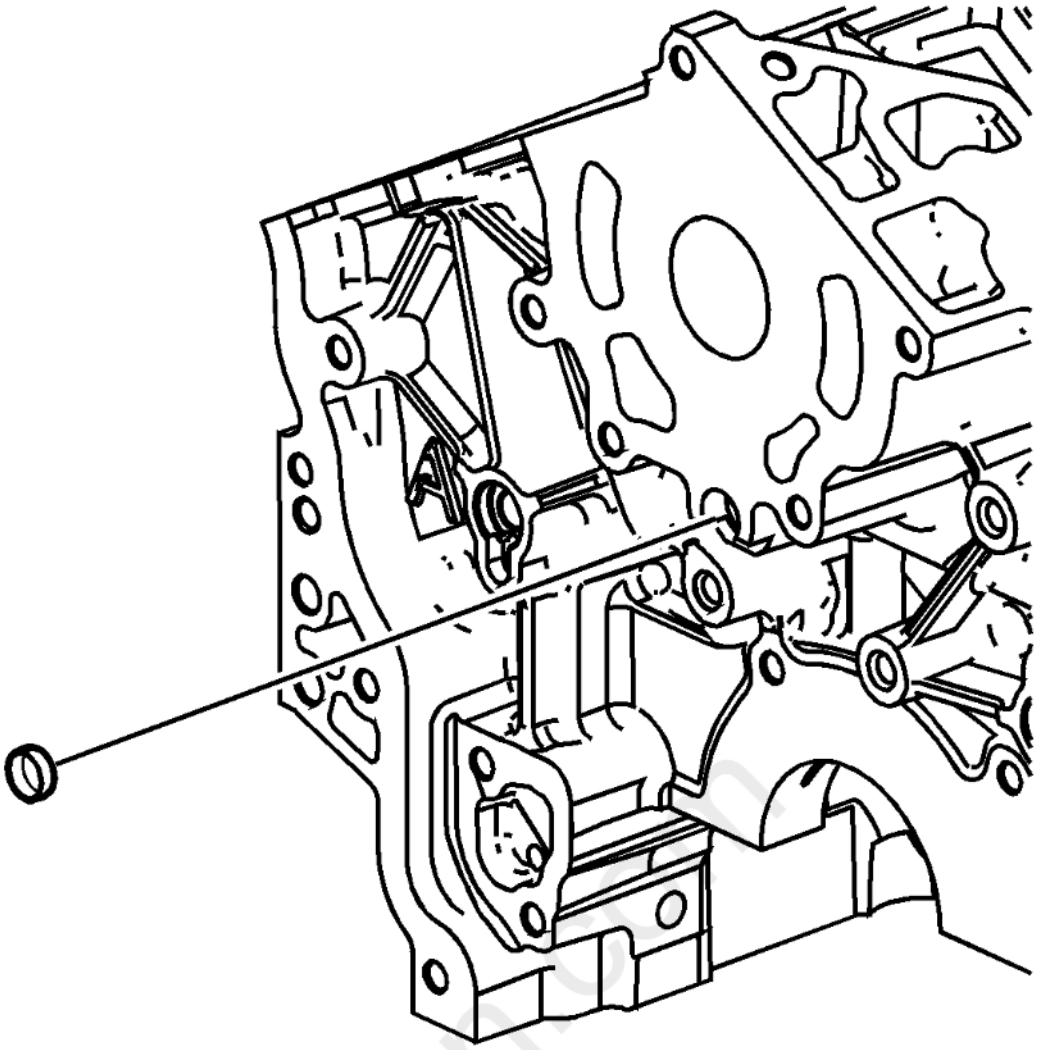

Fig. 90: View Of Front Oil Gallery Expansion Plug
Courtesy of GENERAL MOTORS COMPANY

21. Remove the front oil gallery expansion plug.

carmagnet.com

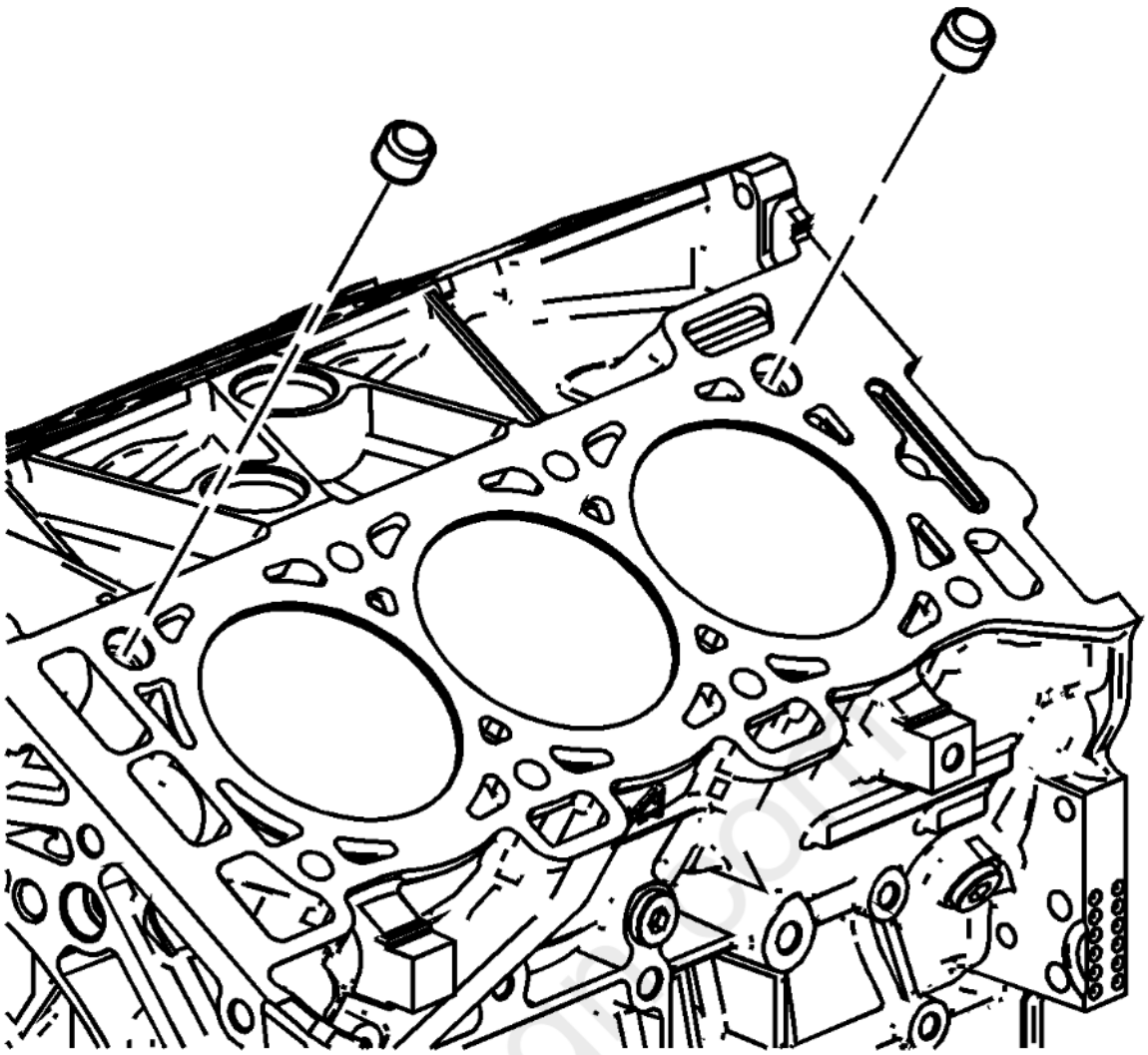

Fig. 91: Cylinder Block-To-Cylinder Head Alignment Dowels
Courtesy of GENERAL MOTORS COMPANY

22. Remove the cylinder block-to-cylinder head alignment dowels.

ENGINE BLOCK CLEANING AND INSPECTION

Special Tools

- **EN - 8087** Cylinder Bore Gauge
- **EN - 28410** Gasket Remover

For equivalent regional tools, refer to **Special Tools** .

Cleaning Procedure

1. Ensure proper use of room temperature vulcanizing (RTV) sealant. **Use of Room Temperature Vulcanizing (RTV) and Anaerobic Sealant**
2. Remove any old thread sealant, gasket material or sealant using **EN - 28410** Gasket Remover.
3. Clean all the following areas with solvent:
    - Sealing surfaces
    - Cooling passages
    - Oil passages
    - Bearing journals
4. Clean all threaded and through holes with solvent.

WARNING: Refer to **Safety Glasses Warning** .

5. Dry the engine block with compressed air.

Visual Inspection

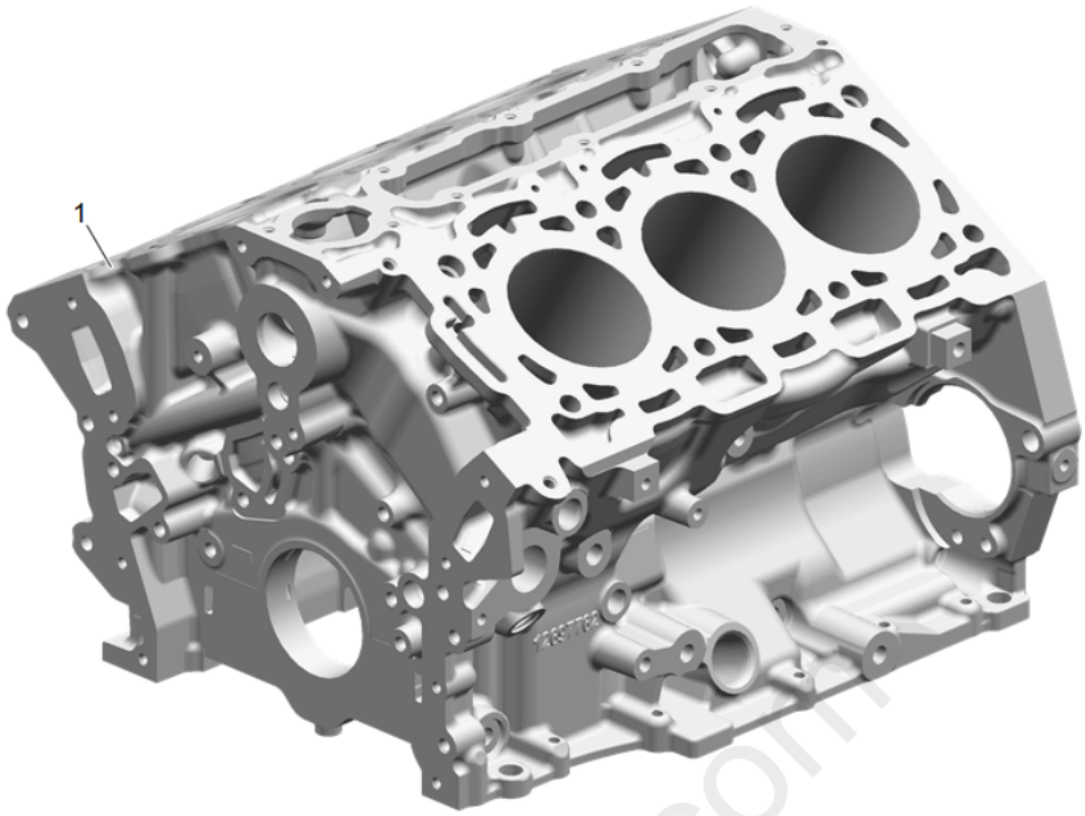

Fig. 92: View Of Engine Block
Courtesy of GENERAL MOTORS COMPANY

1. Inspect the crankshaft bearings journals for damage or spun bearings. The crankshaft bearing journals are not repairable, if the crankshaft bearing journals are damaged the cylinder block assembly must be replaced.
2. Inspect the primary camshaft drive chain tensioner mounting surface on the engine block for burrs or any defects that would degrade the sealing of the NEW primary camshaft drive chain tensioner gasket.
3. Inspect all sealing and mating surfaces for damage, repair or replace the cylinder block assembly if necessary.
4. Inspect all threaded and through holes for damage or excessive debris.
5. Inspect all bolts for damage, if damaged replace with NEW bolts only.
6. Check the cylinder condition. Some light vertical marks may be visible on the cylinder wall. In these areas, check that the honing marks are still visible in this marked area. If they are, the cylinder surface has not been compromised and the engine block can be used.
7. Inspect the cylinder walls for cracks or damage. The cylinder sleeves are not serviced separately, if the cylinders are damaged the cylinder block assembly must be replaced.
8. Inspect the engine block for cracks. Do not repair any cracks. If cracks are found, the cylinder block assembly must be replaced.
9. Repair any damaged threaded holes. Refer to **Thread Repair Specifications** , and **Thread Repair**.

Measuring Cylinder Bore Diameter

cardiagn.com

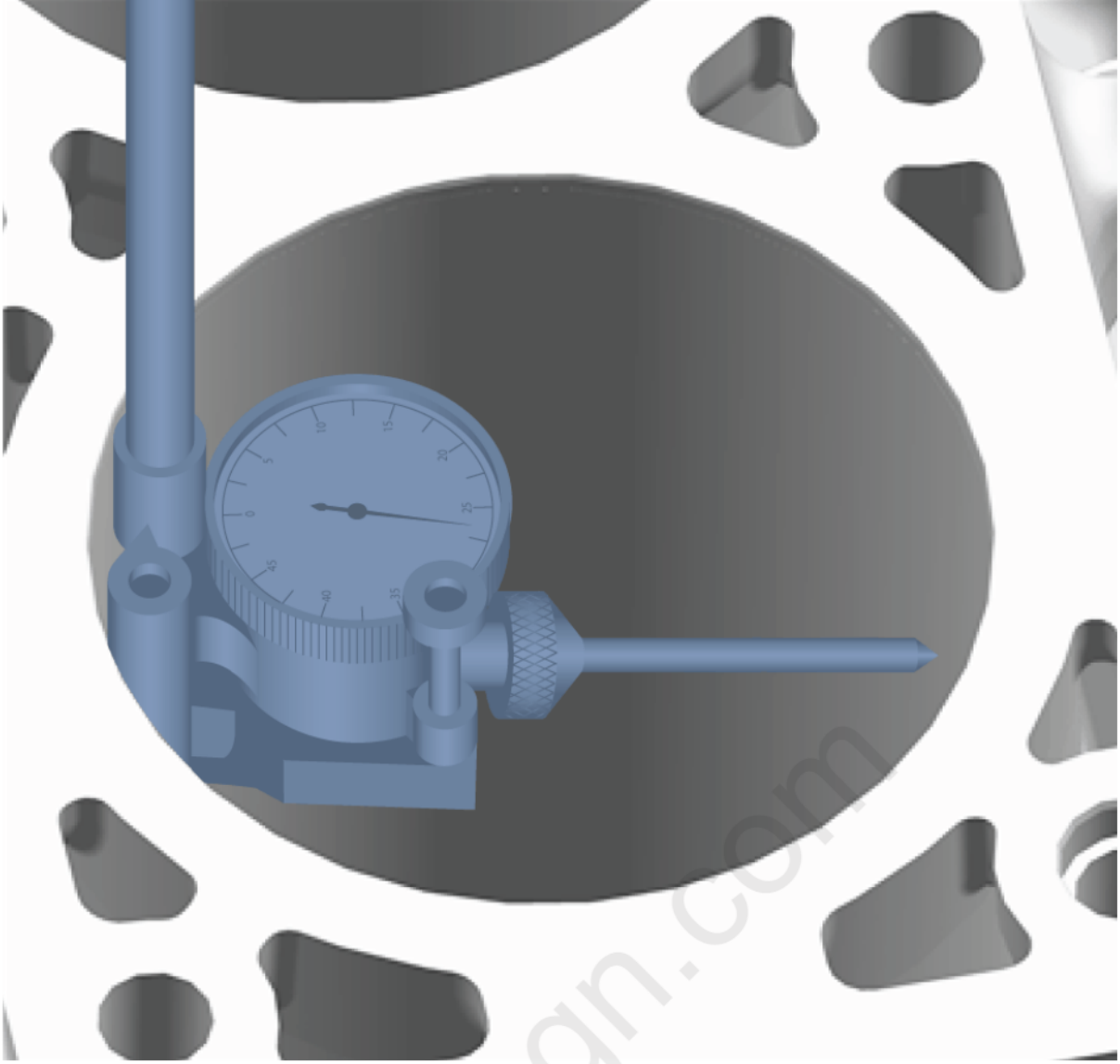

Fig. 93: Measuring Cylinder Bore
Courtesy of GENERAL MOTORS COMPANY

Measure the cylinder bore diameter 37 mm (1.457 in) from the deck face using the **EN - 8087** gauge.

Compare your results with the **Engine Mechanical Specifications** . If the cylinder diameter exceeds the specifications, the cylinder block may be oversized to 0.25 mm (0.010 in). There is only one size of oversized pistons and rings available for service.

Measuring Cylinder Bore Taper

1. Measure the cylinder bore along the thrust surfaces, perpendicular to the crankshaft centerline, at 10 mm (0.397 in) below the deck surface and record your measurement.
2. Measure the cylinder bore along the thrust surfaces, perpendicular to the crankshaft centerline, at 100 mm (3.976 in) below the deck surface and record your measurement.
3. Calculate the difference between the 2 measurements. The result will be the cylinder taper.
4. Compare your results with the **Engine Mechanical Specifications** . If the cylinders exceed the specifications, the cylinder block may be oversized to 0.25 mm (0.010 in). There is only one size of oversized pistons and rings available for service.

Measuring Cylinder Bore Out-of-Round

1. Measure both the thrust and non-thrust cylinder diameter at 10 mm (0.397 in) below the deck. Record your measurements.
2. Calculate the difference between the 2 measurements. The result will indicate out-of-round at the upper end of the cylinder.
3. Measure both the thrust and non-thrust cylinder diameter at 100 mm (3.976 in) below the deck surface. Record your measurements.

4. Calculate the difference between the 2 measurements. The result will indicate out-of-round at the lower end of the cylinder.
5. Compare your results with the **Engine Mechanical Specifications** . If the cylinders exceed these specifications, the cylinder block may be oversized to 0.25 mm (0.010 in). There is only one size of oversized pistons and rings available for service.

Deck Flatness Inspection

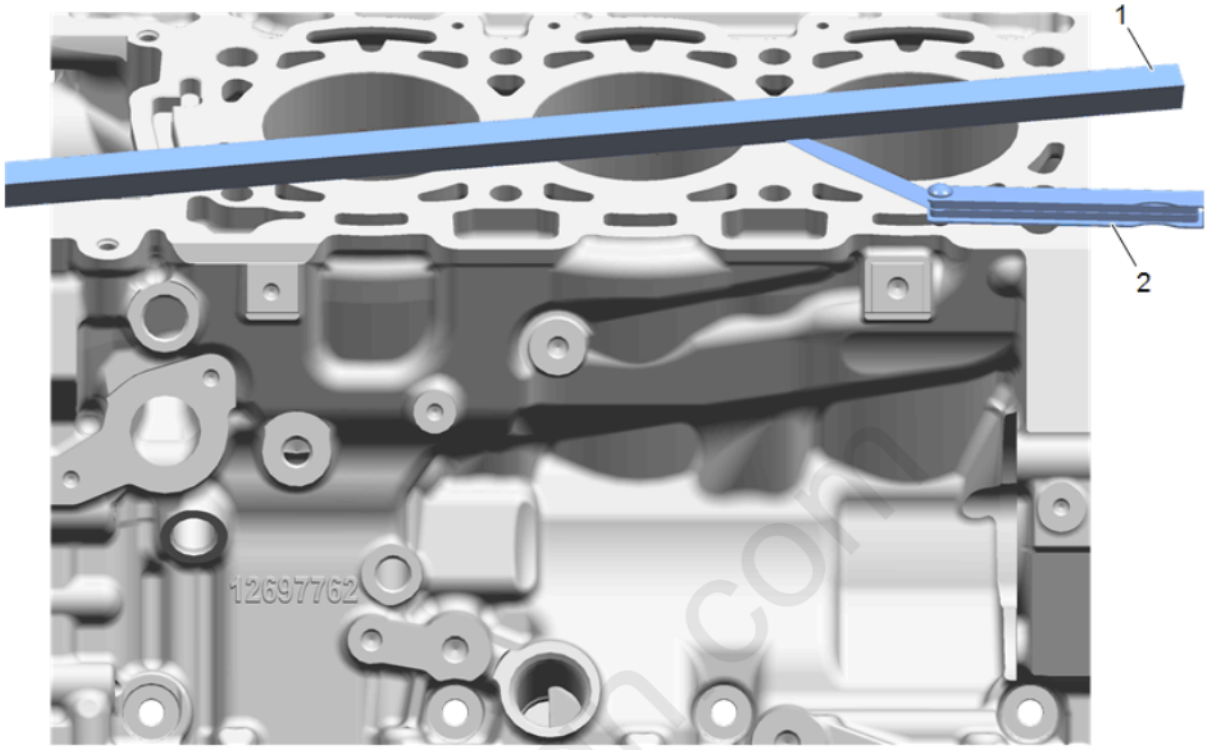

Fig. 94: Measuring Deck Flatness
Courtesy of GENERAL MOTORS COMPANY

1. Ensure the engine block decks are clean and free of gasket material.
2. Inspect the surface for any imperfections or scratches that could inhibit proper cylinder head gasket sealing.
3. Place a straight-edge diagonally across the cylinder block deck face surface.
4. Measure the clearance between the straight-edge and the cylinder block deck face using a feeler gauge at 4 points along the straight-edge.
5. If the warpage is less than 0.05 mm (0.002 in), the cylinder block deck surface does not require resurfacing.
6. If the warpage is between 0.05 - 0.20 mm (0.002 - 0.008 in) or any imperfections or scratches that could inhibit proper cylinder head gasket sealing are present, the cylinder block deck surface requires resurfacing.
7. If resurfacing is required the maximum amount that can be removed is 0.25 mm (0.010 in).
8. If the cylinder block deck surface requires more than 0.25 mm (0.010 in) material removal the block must be replaced.

CRANKSHAFT AND BEARING CLEANING AND INSPECTION

Cleaning Procedure

1. Clean the following components in solvent:
   - Crankshaft bearings
   - Connecting rod bearings
   - Crankshaft journals
   - Crankpin journals
   - Crankshaft oil passages

- Crankshaft threaded holes

WARNING: Refer to Safety Glasses Warning .

2. Dry the following components with compressed air:
   - Crankshaft bearings
   - Connecting rod bearings
   - Crankshaft journals
   - Crankpin journals
   - Crankshaft oil passages
   - Crankshaft threaded holes

Visual Inspection

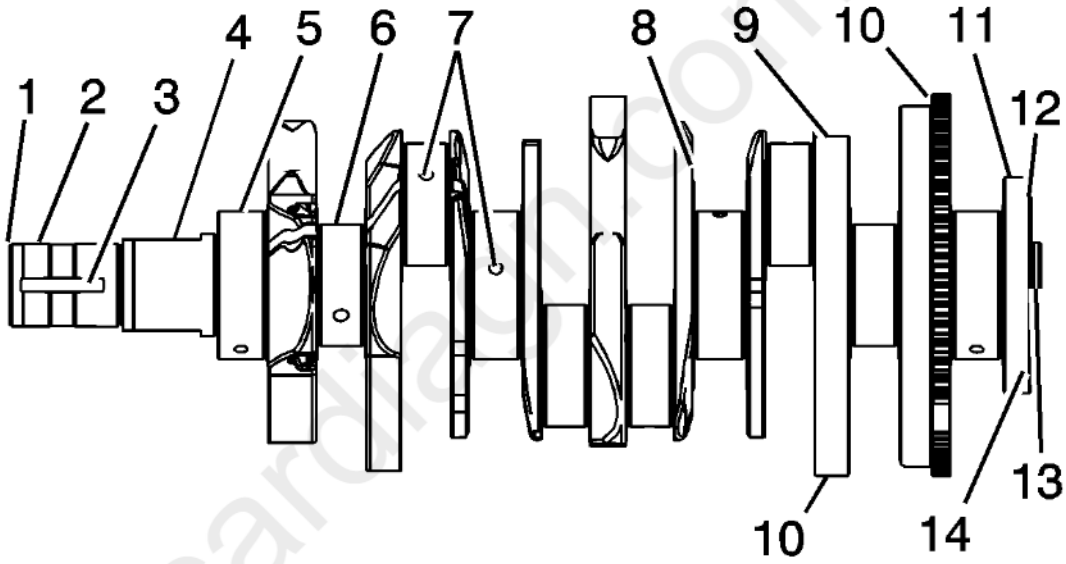

Fig. 95: Identifying Crankshaft Inspection Areas
Courtesy of GENERAL MOTORS COMPANY

1. Perform the following visual inspections:
   - Inspect the crankshaft balancer bolt hole (1) for thread damage.
   - Inspect the crankshaft balancer mounting area (2) for damage.
   - Inspect the crankshaft keyway (3) for damage.
   - Inspect the oil pump drive flats (4) for damage.
   - Inspect the crankshaft main journals (5) for damage.
   - Inspect the crankshaft connecting rod journals (6) for damage.
   - Inspect the crankshaft oil passages (7) for obstructions.
   - Inspect the crankshaft main bearing thrust wall surfaces (8) for damage.
   - Inspect the crankshaft counterweights (9) for damage.

- Inspect the crankshaft reluctor ring teeth (10) for damage.
- Inspect the crankshaft rear main oil seal surface (11) for damage.
- Inspect the crankshaft engine flywheel mounting surface (12) for damage.
- Inspect the crankshaft pilot hole (13) for damage.
- Inspect the crankshaft engine flywheel bolt holes (14) for thread damage.

2. Repair or replace the crankshaft as necessary.

Crankshaft Bearing Inspection

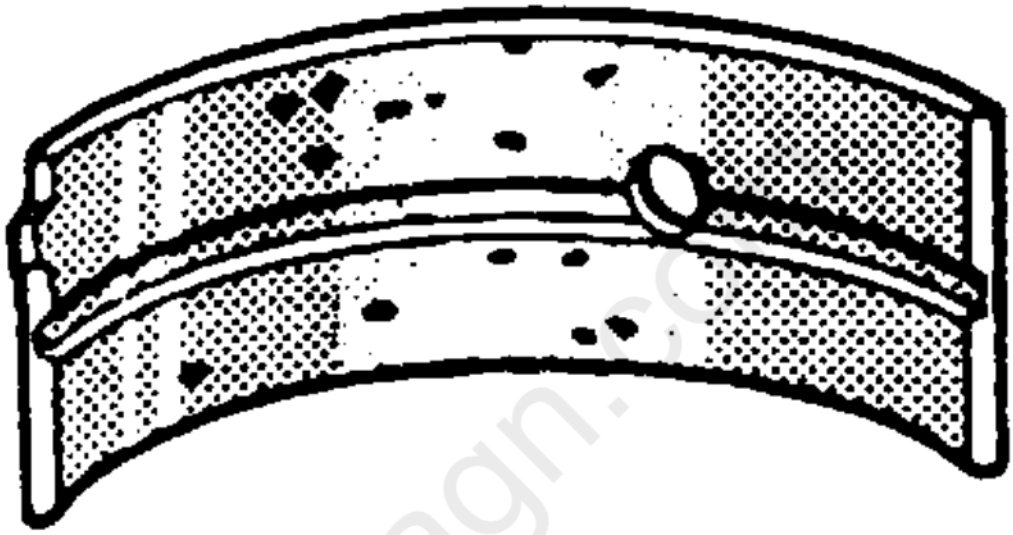

Fig. 96: Identifying Crankshaft Bearing Craters Or Pockets
Courtesy of GENERAL MOTORS COMPANY

NOTE:

- **All connecting rod and main journal bearings that have been used in a running engine must be replaced. Never re-use the crankshaft or connecting rod bearings.**
- **The following bearing wear conditions should be used to diagnose engine operating conditions or root cause of a condition.**

1. Inspect for fatigue indicated by craters or pockets. Flattened sections on the bearing halves also indicate fatigue.

cardiagn.com

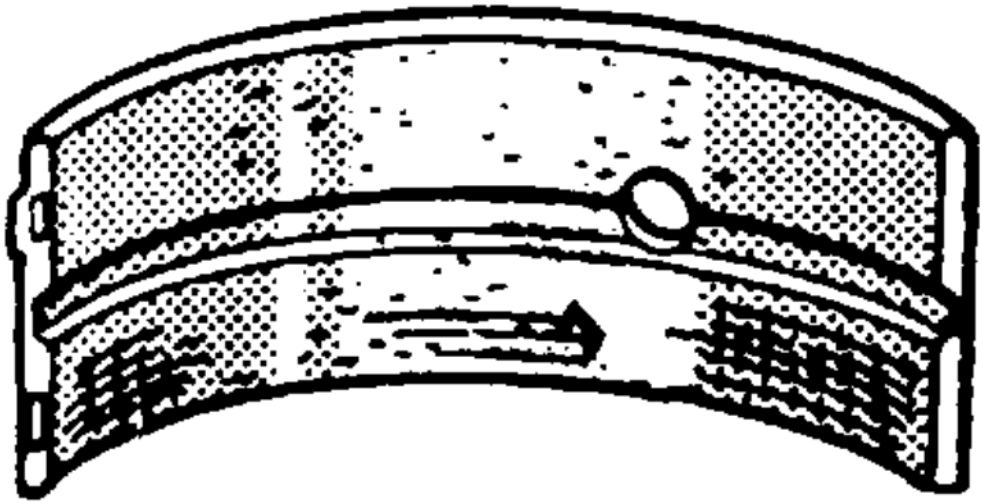

Fig. 97: Identifying Connecting Rod Bearing Scoring Or Discoloration
Courtesy of GENERAL MOTORS COMPANY

2. Inspect for excessive scoring or discoloration on both front and back of the bearing halves.
3. Inspect the main bearings for dirt embedded into the bearing material.

cardiagn.com

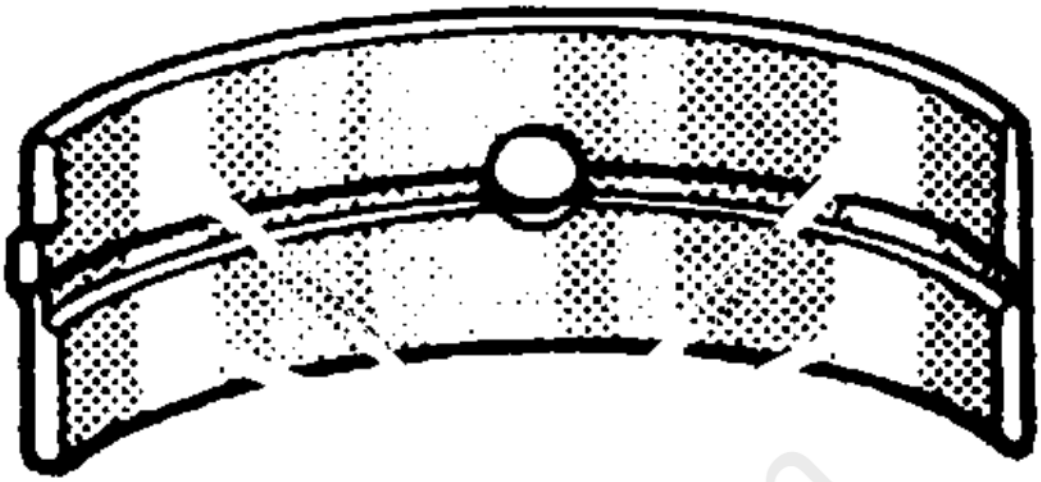

Fig. 98: View Of Crankshaft Bearing Improper Seating
Courtesy of GENERAL MOTORS COMPANY

4. Inspect for improper seating indicated by bright, polished sections.

Crankshaft Measurement

Special Tools

GE 7872 Magnetic Base Dial Indicator

For equivalent regional tools, refer to **Special Tools**

cardiagn.com

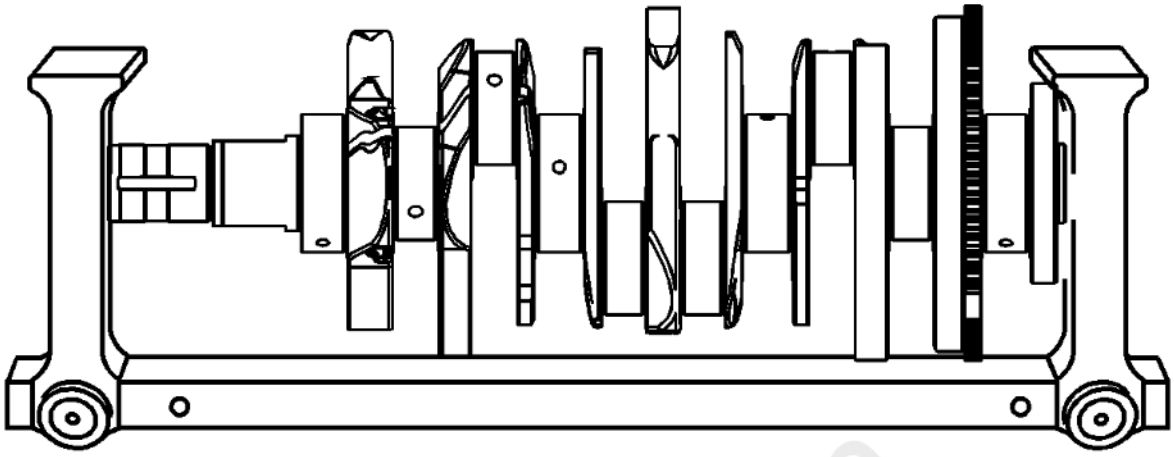

Fig. 99: View Of Crankshaft & Support
Courtesy of GENERAL MOTORS COMPANY

1. Using a suitable fixture, support the crankshaft.

carmagn.com

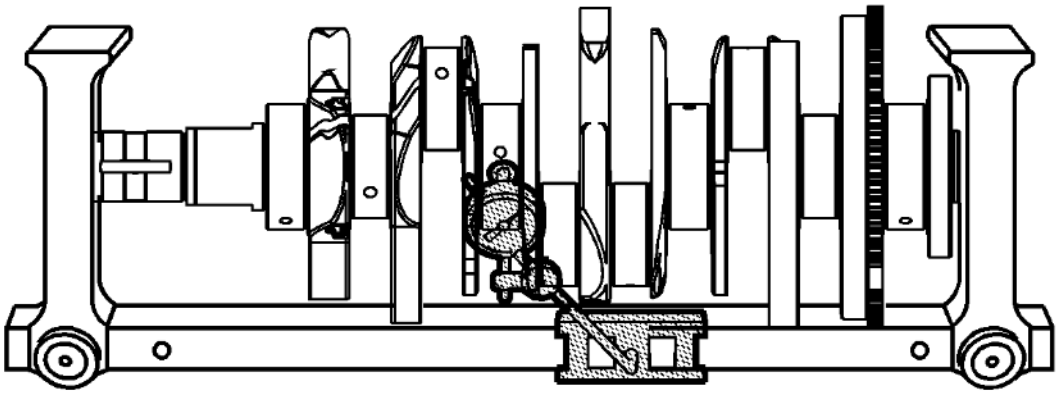

Fig. 100: Measuring Crankshaft Runout
Courtesy of GENERAL MOTORS COMPANY

2. Install the **GE 7872** indicator.
3. Measure the crankshaft runout using the **GE 7872** indicator. Refer to **Engine Mechanical Specifications** .

cardiagn.com

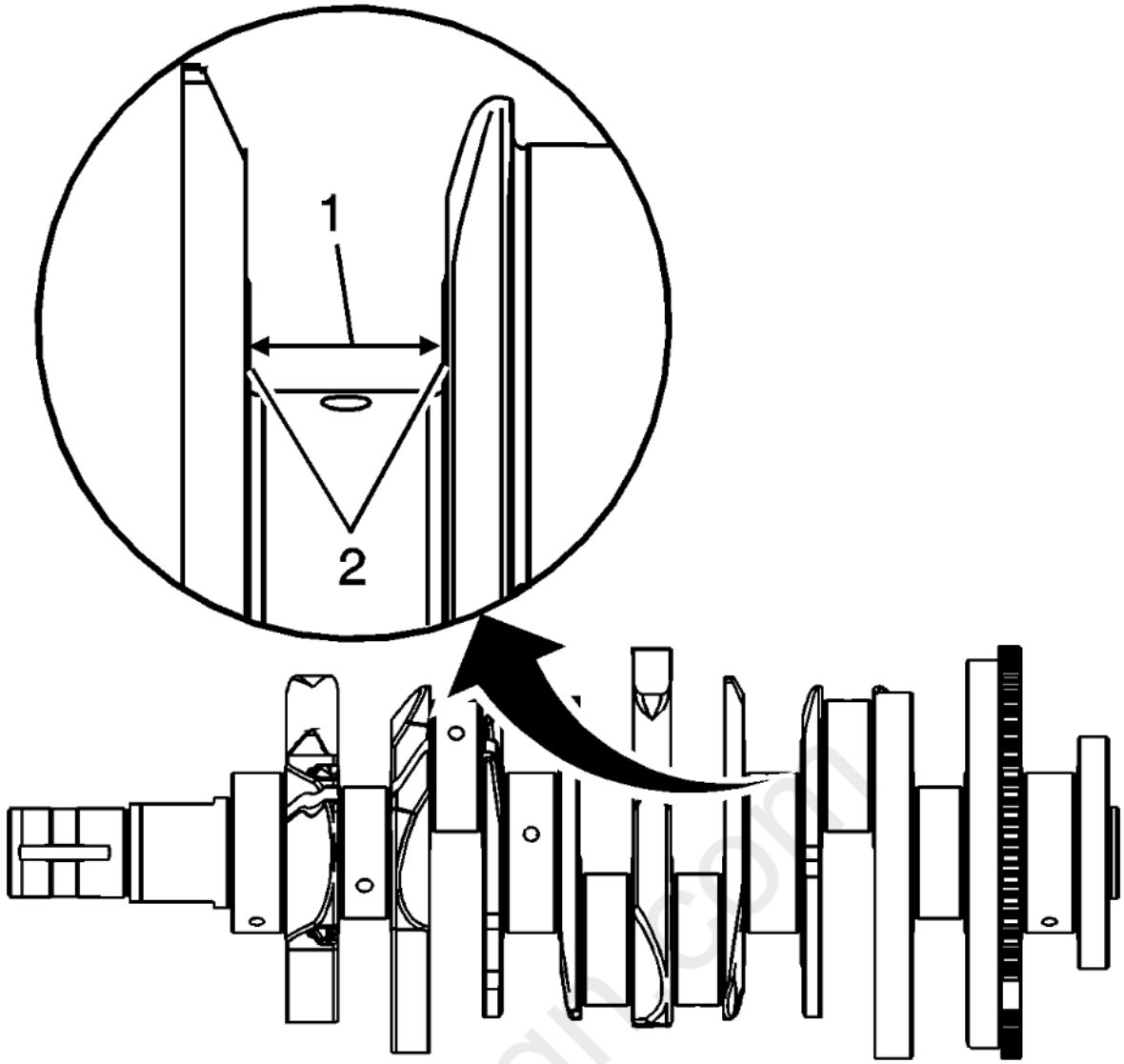

Fig. 101: Identifying Crankshaft Thrust Wall Width & Surface
Courtesy of GENERAL MOTORS COMPANY

4. Measure the crankshaft thrust wall width (1) for wear using an inside micrometer. Refer to **Engine Mechanical Specifications** .
5. Measure the crankshaft thrust wall surface (2) for runout using the **GE 7872** indicator. Refer to **Engine Mechanical Specifications** .
6. If the crankshaft journals are damaged or worn beyond specifications, the crankshaft may be ground 0.25 mm (0.010 in). There is only 1 size of oversized main bearings available for service.

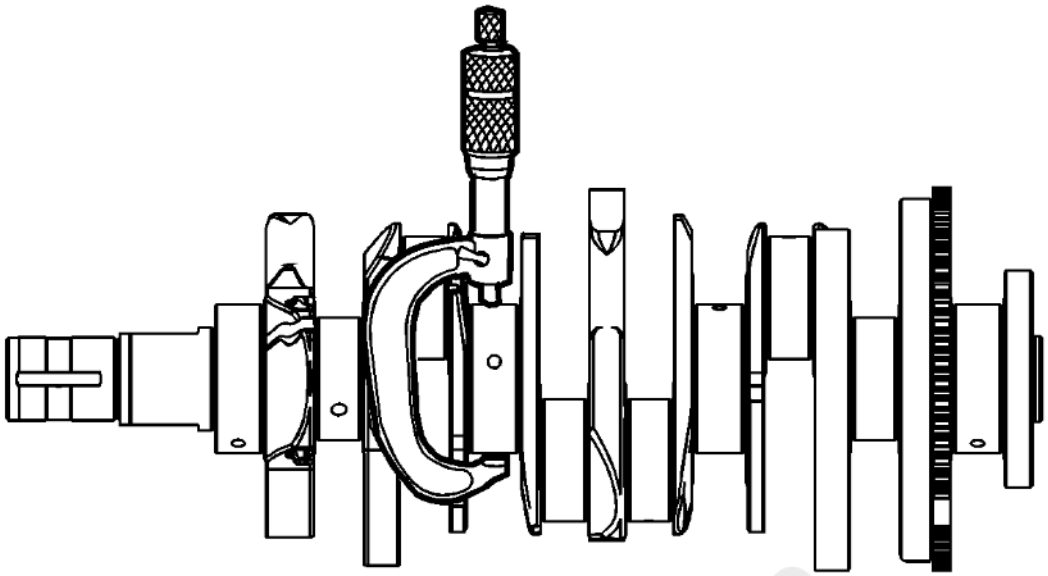

Fig. 102: Using Outside Micrometer To Inspect Crankshaft Main Journals
Courtesy of GENERAL MOTORS COMPANY

7. Inspect the crankshaft main journals for undersize, using an outside micrometer.

cardiagn.com

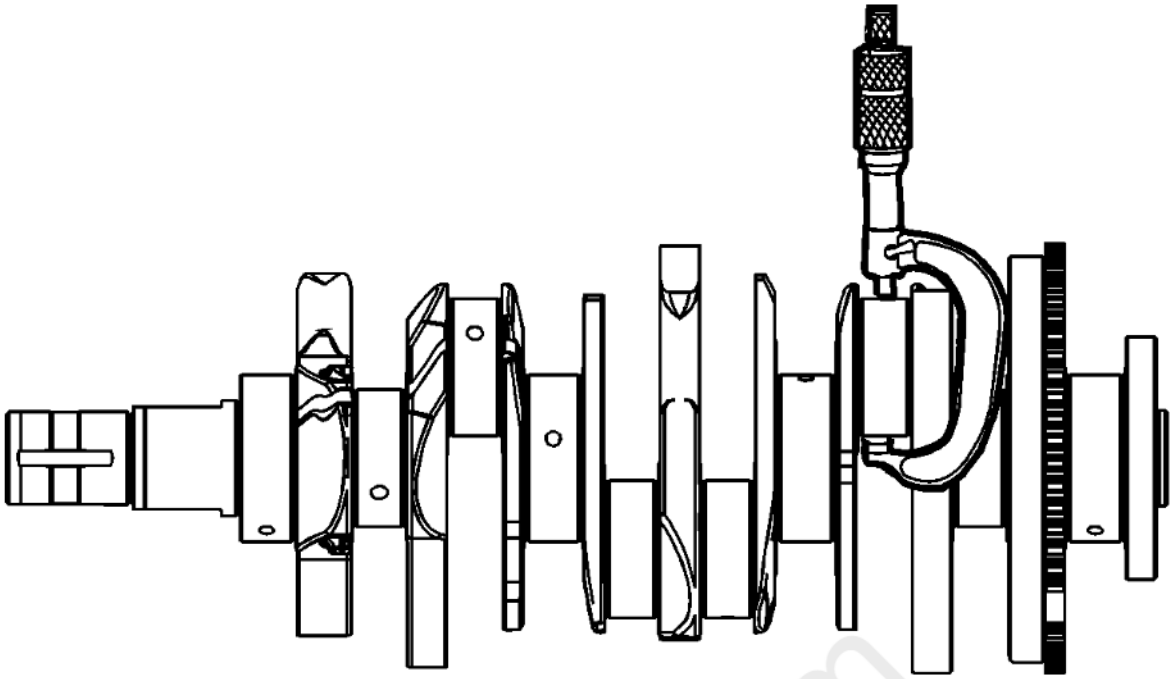

Fig. 103: View Of Micrometer & Crankshaft Journals
Courtesy of GENERAL MOTORS COMPANY

8. Inspect the crankpins for undersize using an outside micrometer.
9. Compare your measurements with those listed in the **Engine Mechanical Specifications** . If the crankpin journals are worn beyond the specifications, the crankshaft may be ground 0.25 mm (0.010 in). There is only 1 size of oversized connecting rod bearings available for service.

carofagn.com

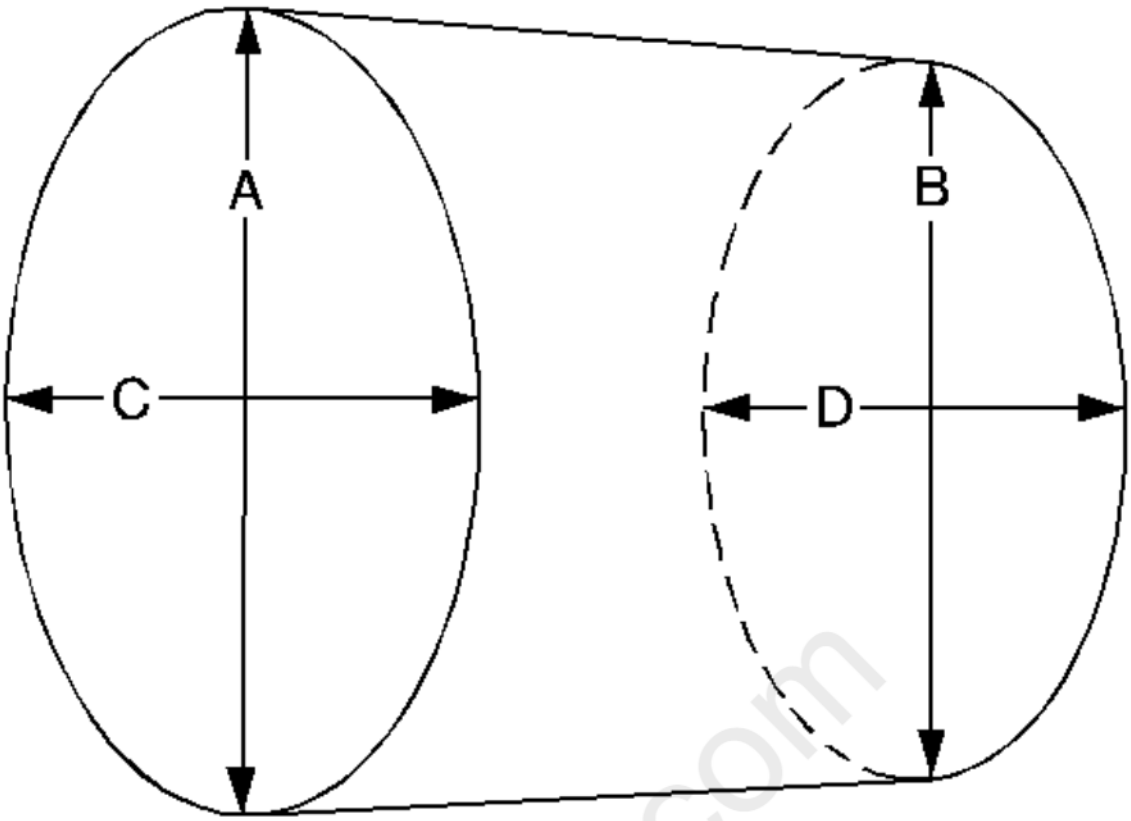

Fig. 104: Identifying Out-Of-Round Measurements
Courtesy of GENERAL MOTORS COMPANY

10. Measure the main bearing and crankpin journals for out-of-round using the following procedure:
    1. Using an outside micrometer, measure the journal at the extreme front and rear locations on the journal. Call these points A and B.
    2. Measure the journal in 2 new locations exactly 90 degrees from the first points. Call these points C and D.
    3. Subtract A from C and B from D. The differences will indicate journal out-of-round.
    4. The out-of-round should not exceed 0.004 mm (0.00016 in) maximum.
    5. If the journals are worn beyond the specifications, the crankshaft may be ground 0.25 mm (0.010 in). There is only 1 size of oversized crankshaft and connecting rod bearings available for service.
11. Measure the main bearing and crankpin journals for taper using the following procedure:
    1. Using an outside micrometer, measure the journal at the extreme front (A) and rear (B) of the journal parallel to the crankshaft centerline.
    2. Subtract the smallest from the largest measurement. The result will be the journal taper.
    3. If the main bearing journal taper exceeds 0.004 mm (0.00016 in), replace the crankshaft.
    4. If the journals are worn beyond the specifications, the crankshaft may be ground 0.25 mm (0.010 in). There is only 1 size of oversized crankshaft and connecting rod bearings available for service.

AUTOMATIC TRANSMISSION FLEX PLATE CLEANING AND INSPECTION

Cleaning Procedure

cardiagn.com

1. Clean the flex plate in solvent.

WARNING: **Refer to Safety Glasses Warning .**

2. Dry the flex plate with compressed air.

Inspection Procedure

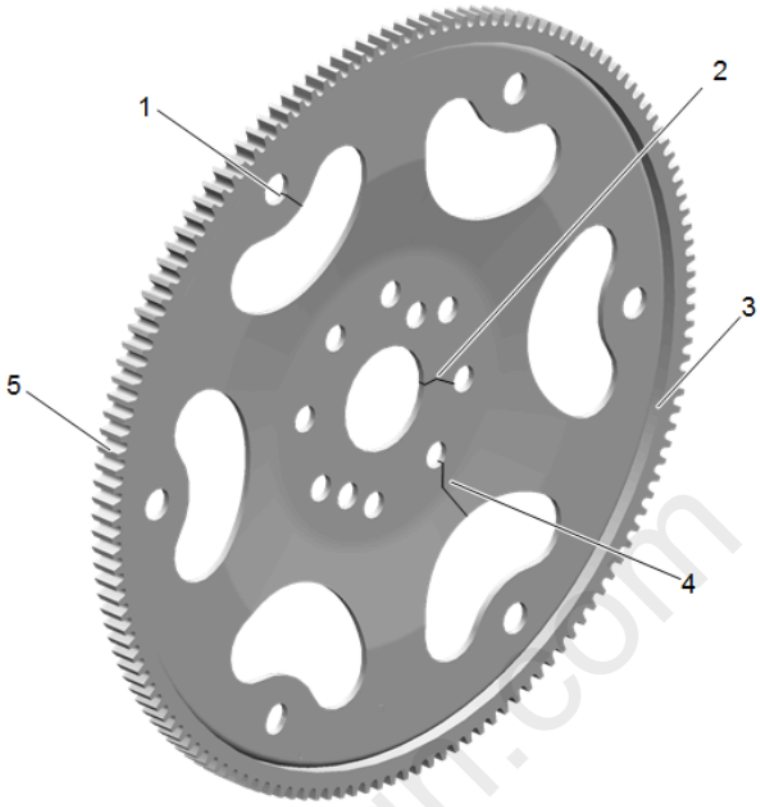

Fig. 105: Identifying Engine Flywheel Inspection Areas
Courtesy of GENERAL MOTORS COMPANY

1. Inspect the flex plate for the following conditions:
   - Stress cracks around the flex plate-to-torque converter mounting bolt hole locations (1) and/or flex plate-to-crankshaft (2, 4)

     NOTE: **Do not attempt to repair the welded areas that retain the ring gear to the flex plate. Install a NEW flex plate.**

   - Cracks at welded areas that retain the ring gear onto the flex plate (3)
   - Damaged or missing ring gear teeth (5)
2. Replace the flex plate as necessary.

CRANKSHAFT BALANCER CLEANING AND INSPECTION

Cleaning Procedure



Fig. 106: View Of Crankshaft Balancer
Courtesy of GENERAL MOTORS COMPANY

1. Clean the crankshaft balancer in solvent that is compatible with the rubber (1).

WARNING: **Refer to Safety Glasses Warning .**

2. Dry the crankshaft balancer with compressed air.

Inspection Procedure

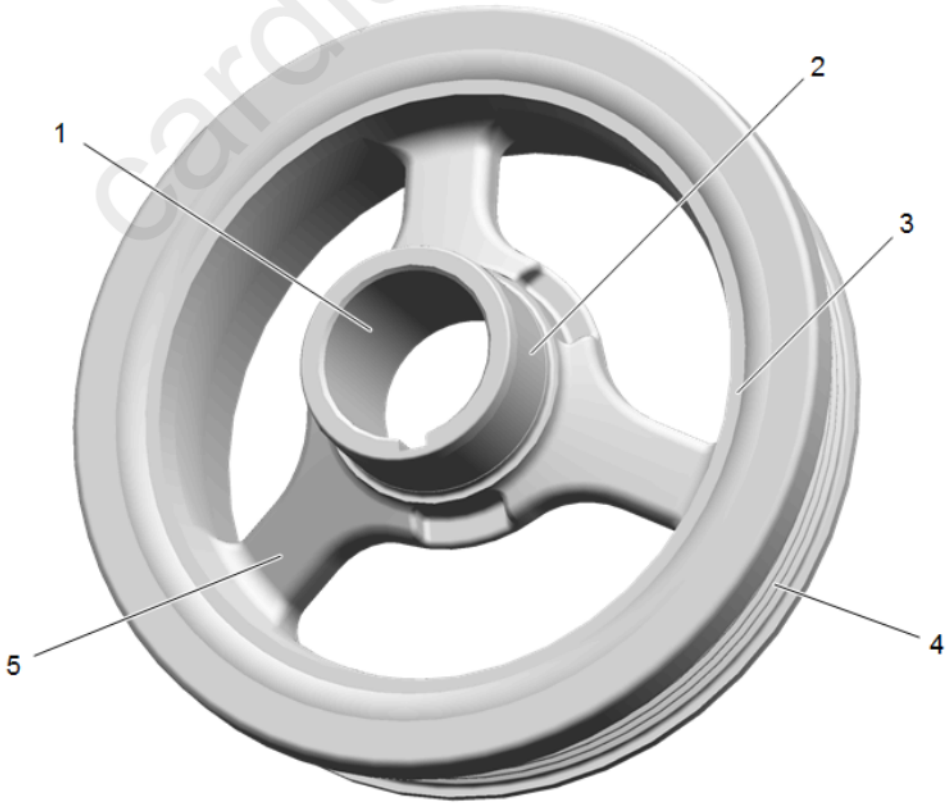

Fig. 107: Identifying Crankshaft Balancer Inspection Areas
Courtesy of GENERAL MOTORS COMPANY

1. Inspect the crankshaft balancer for the following:

cardiagn.com

- Worn or damaged hub-to-crankshaft surface (1)
- Worn, grooved or damaged hub seal surface (2)

  A crankshaft balancer hub seal surface with excessive scoring, grooves, rust or other damage must be replaced.

- Worn, chunking or deteriorated rubber between the hub and pulley (3)
- Damaged drive belt ribs (4)
- Damaged webs (5)

2. Repair or replace the crankshaft balancer as necessary.

PISTON AND CONNECTING ROD DISASSEMBLE

Special Tools

EN-46745 Piston Pin Clip Remover/Installer

For equivalent regional tools, refer to **Special Tools** .

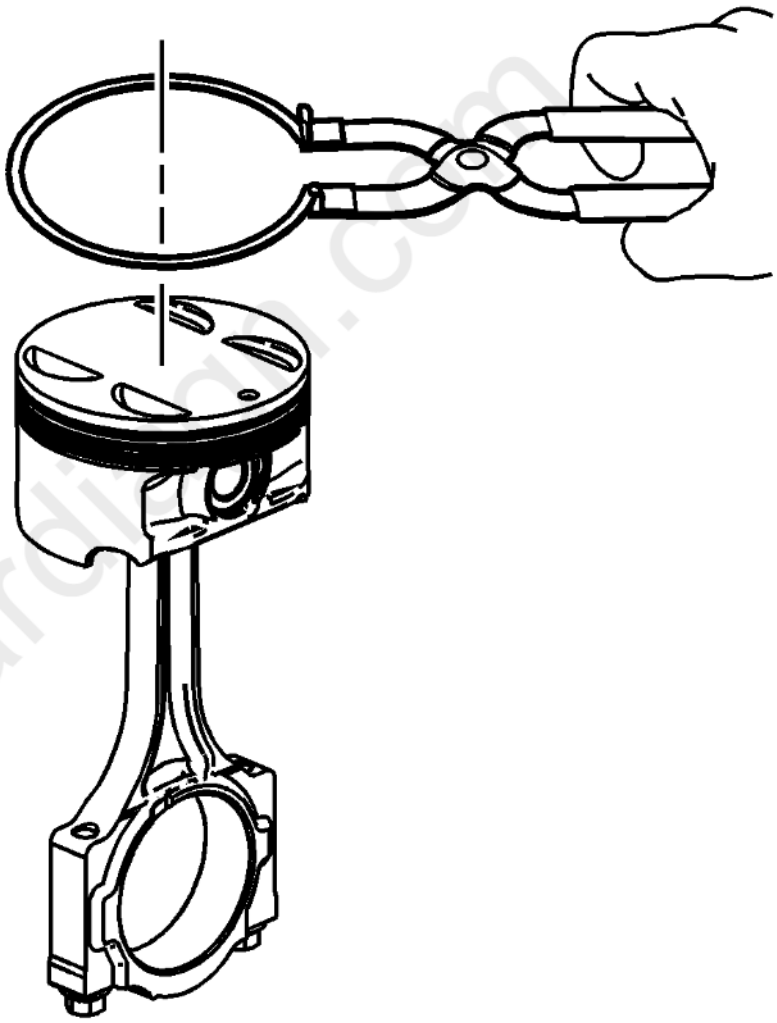

Fig. 108: View Of Piston Ring Expander
Courtesy of GENERAL MOTORS COMPANY

CAUTION: **You must use a piston ring expander to remove and install the piston rings. Only expand the rings far enough to fit over the piston lands. If the rings are overexpanded, the top ring will shatter and the others will distort.**

1. Remove the piston rings using a piston ring expander. Place each ring in a clean shop towel for storage.

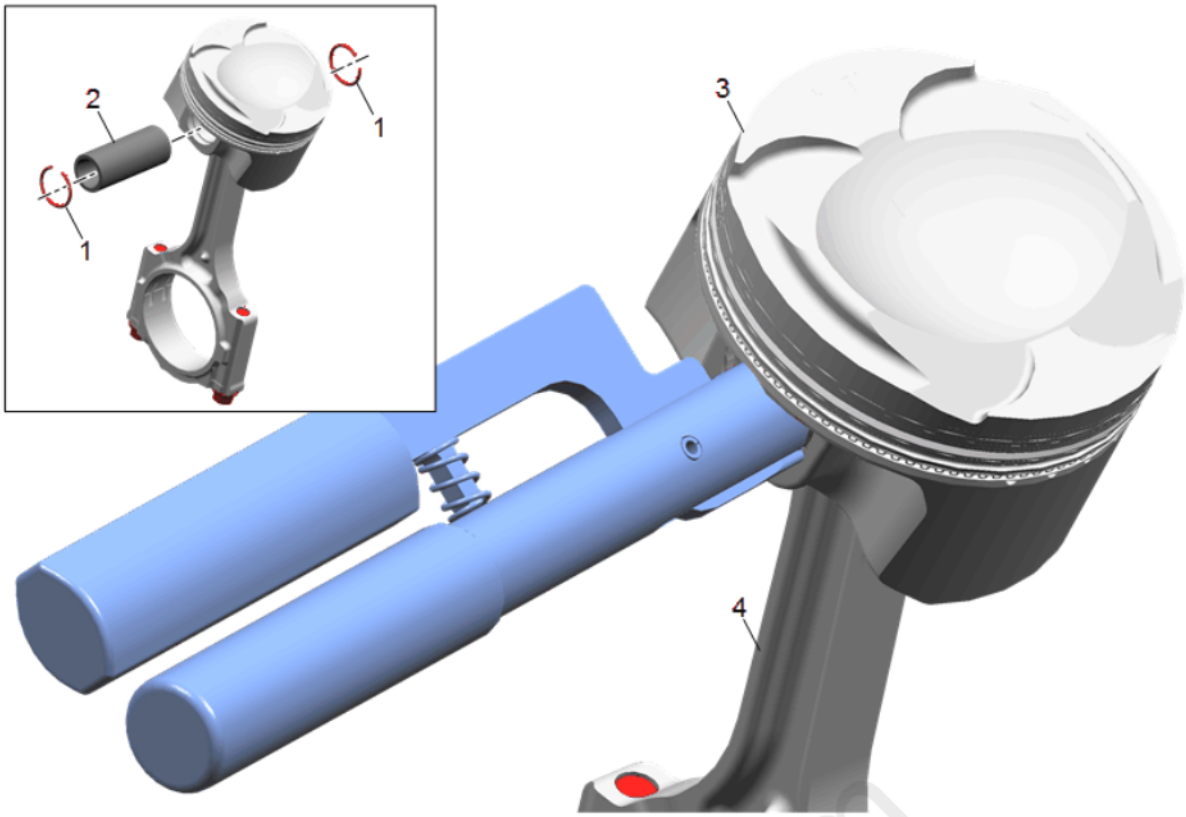

Fig. 109: Identifying Piston Pin Retainers Removal Access Notch
Courtesy of GENERAL MOTORS COMPANY

NOTE:

- **The connecting rod is non-directional and may be assembled/reassembled to the piston in either direction.**
- **DO NOT reuse the piston pin retainers.**

2. Using the **EN-46745** remover/installer, remove the piston pin retainers by using the removal access notch (1) in the side of the piston. Discard the piston pin retainers.

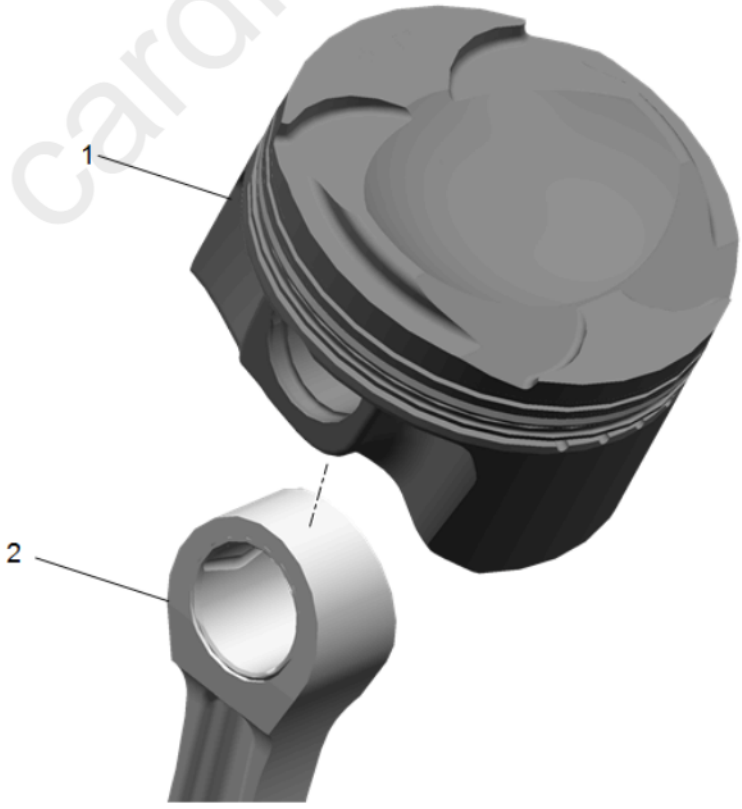

Fig. 110: View Of Piston Pin
Courtesy of GENERAL MOTORS COMPANY

3. Slide the piston pin out of the piston. The piston will disconnect from the connecting rod.

cardiagn.com

PISTON, CONNECTING ROD, AND BEARING CLEANING AND INSPECTION

Cleaning Procedure

NOTE: **DO NOT wire brush any part of the piston.**

1. Clean the piston skirts and the pins with a cleaning solvent.
2. Clean the piston ring grooves with a groove cleaner. Ensure that the oil ring holes and slots are clean.

WARNING: **Refer to Safety Glasses Warning .**

3. Dry the piston with compressed air.

Piston Inspection Procedure

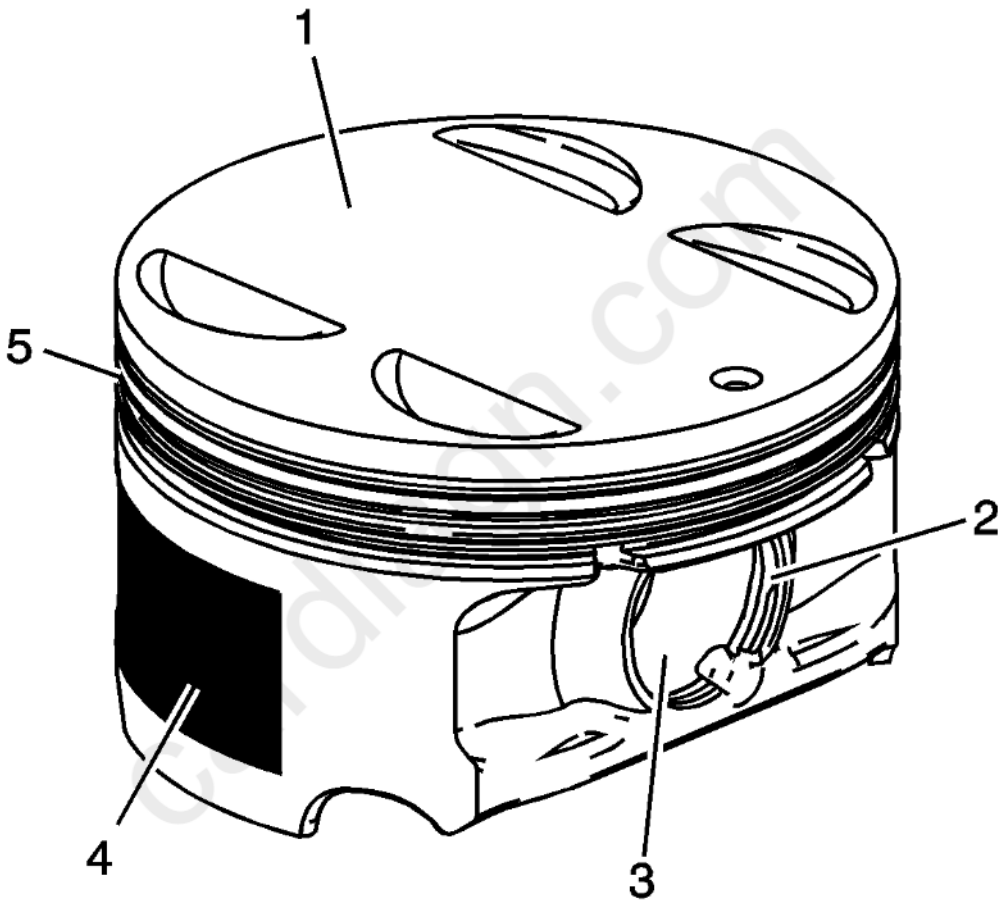

Fig. 111: Piston Inspection Areas
Courtesy of GENERAL MOTORS COMPANY

1. Inspect the pistons for the following conditions:
   - Cracked ring lands, skirts or pin bosses
   - Ring grooves for nicks, burrs that may cause binding (5)
   - Warped or worn ring lands (5)
   - Piston pin retainer grooves for burrs (2)
   - Eroded areas at the top of the piston (1)
   - Scuffed or damaged skirt coating (4)
   - Worn piston pin bores or worn piston pins (3)
2. Replace pistons that show any signs of damage or excessive wear.

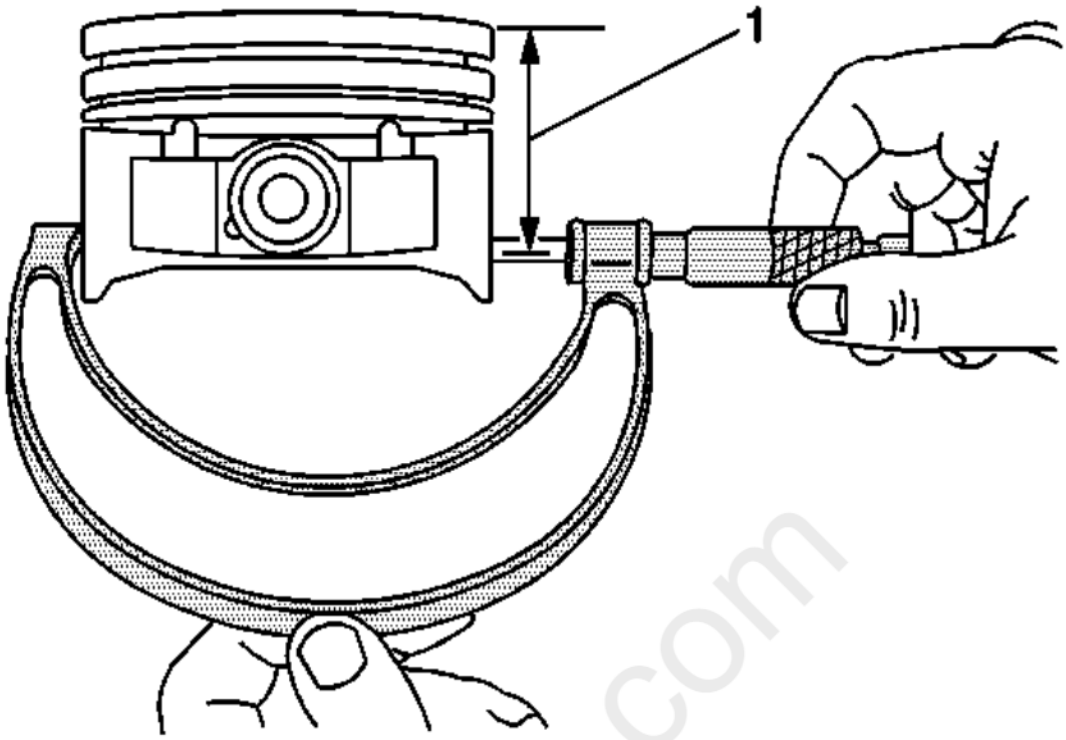

Fig. 112: Measuring Piston Width
Courtesy of GENERAL MOTORS COMPANY

1. Measure piston width using the following procedure:
    1. Using an outside micrometer, measure the width of the piston at 30 mm (1.181 in) below the crown, top (1), at the thrust surfaces of the piston, perpendicular to the piston pin centerline.
    2. Compare the measurement of the piston to its original cylinder by subtracting the piston width from the cylinder diameter.
    3. Check your measurements with the **Engine Mechanical Specifications** .
    4. If the clearance obtained through measurement is greater than the provided specifications and the cylinder bores are within specification, replace the piston.

cardiagn.com

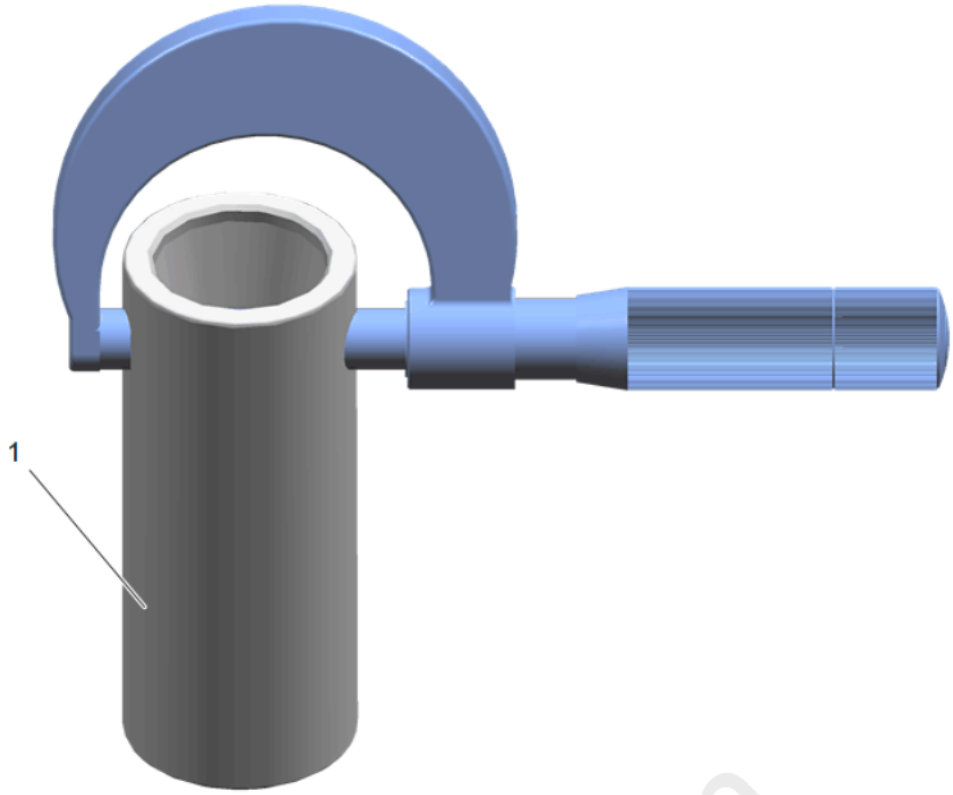

Fig. 113: Measuring Piston Pin Diameter
Courtesy of GENERAL MOTORS COMPANY

2. Measure the piston pin bore to piston pin clearances using the following procedure:
    1. Piston pin bores and pins must be free of varnish or scuffing.
    2. Use an outside micrometer to measure the piston pin in the piston contact areas.

cardiagn.com

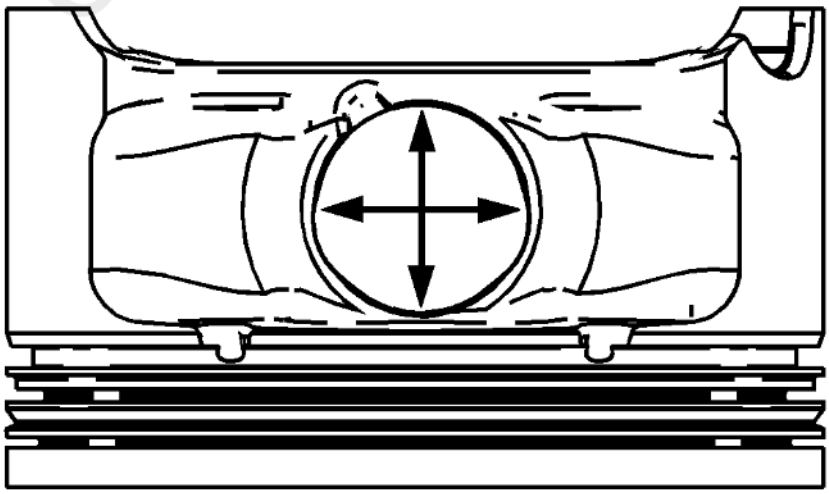

Fig. 114: Checking Piston Pin Bore Dimensions
Courtesy of GENERAL MOTORS COMPANY

3. Using an inside micrometer, measure the piston pin bore. Compare your result with the piston pin diameter and piston pin to piston pin bore clearance listed in the **Engine Mechanical Specifications** .
4. If the clearance is excessive, determine which piece is out of specification and replace as necessary.
5. You must replace the piston if any of its dimensions are out of specification.
6. If the new piston does not meet clearance specifications, the cylinder block may need to be oversized to 0.25 mm (0.010 in). There is only one size of oversized pistons and rings available for service.

Piston Ring Measurement Procedure

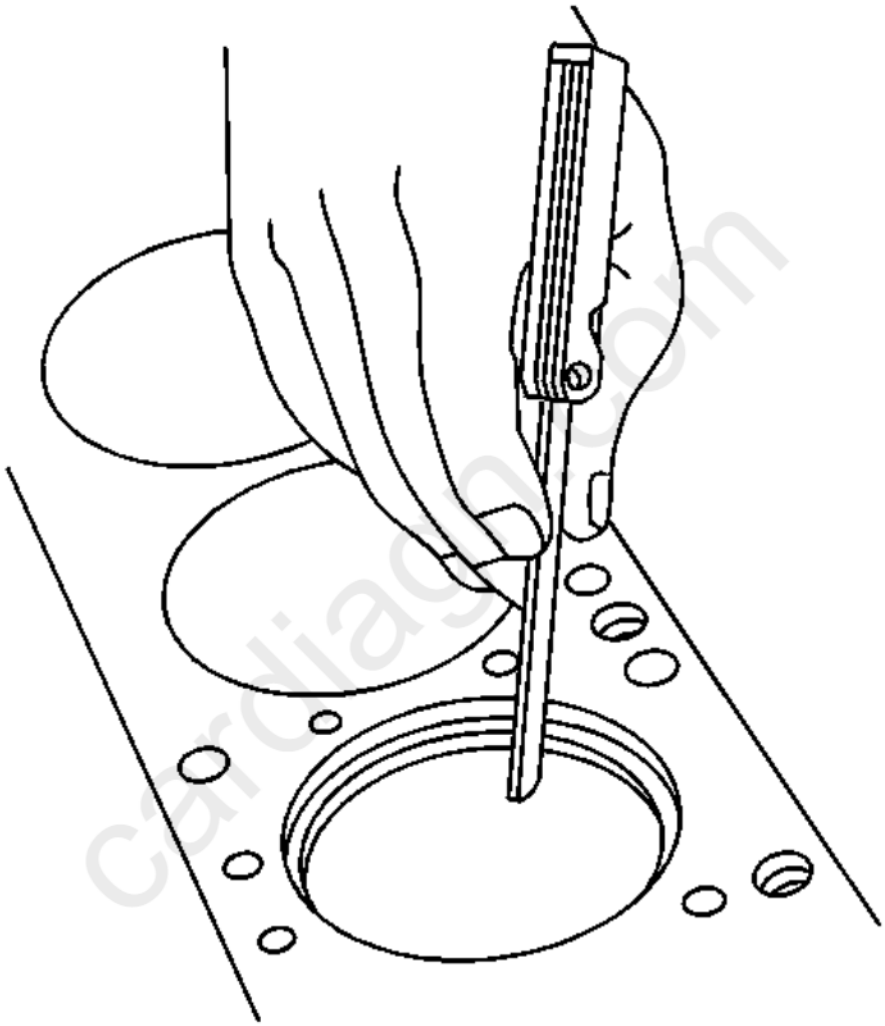

Fig. 115: Measuring Piston Ring End Gap
Courtesy of GENERAL MOTORS COMPANY

1. Measure the piston ring end gap using the following procedure:
    1. Place the piston ring in the area of the bore where the piston ring will travel approximately 25 mm (1 in) down from the deck surface. Ensure that the ring is square with the cylinder bore by positioning the ring with the piston head.
    2. Measure the end gap of the piston ring with feeler gauges. Refer to **Engine Mechanical Specifications** .
    3. If the clearance exceeds the provided specifications, the piston rings must be replaced.
    4. Repeat the procedure for all the piston rings.

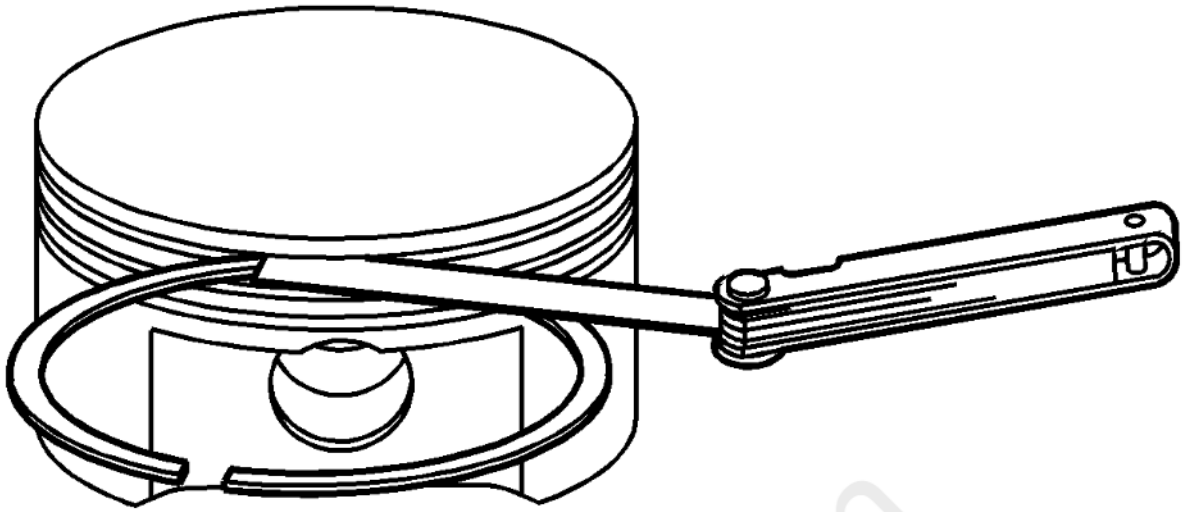

Fig. 116: Measuring Piston Ring Side Clearance
Courtesy of GENERAL MOTORS COMPANY

2. Measure the piston ring side clearance using the following procedure:
    1. Roll the piston ring entirely around the piston ring groove. If any binding is caused by the ring groove, dress the groove with a fine file. If any binding is caused by a distorted piston ring, replace the ring.
    2. With the piston ring on the piston, use feeler gauges to check clearance at multiple locations.
    3. Compare the measurements with piston ring side clearance listed in the **Engine Mechanical Specifications** .
    4. If the clearance is greater than specifications, replace the piston rings.

carmagn.com

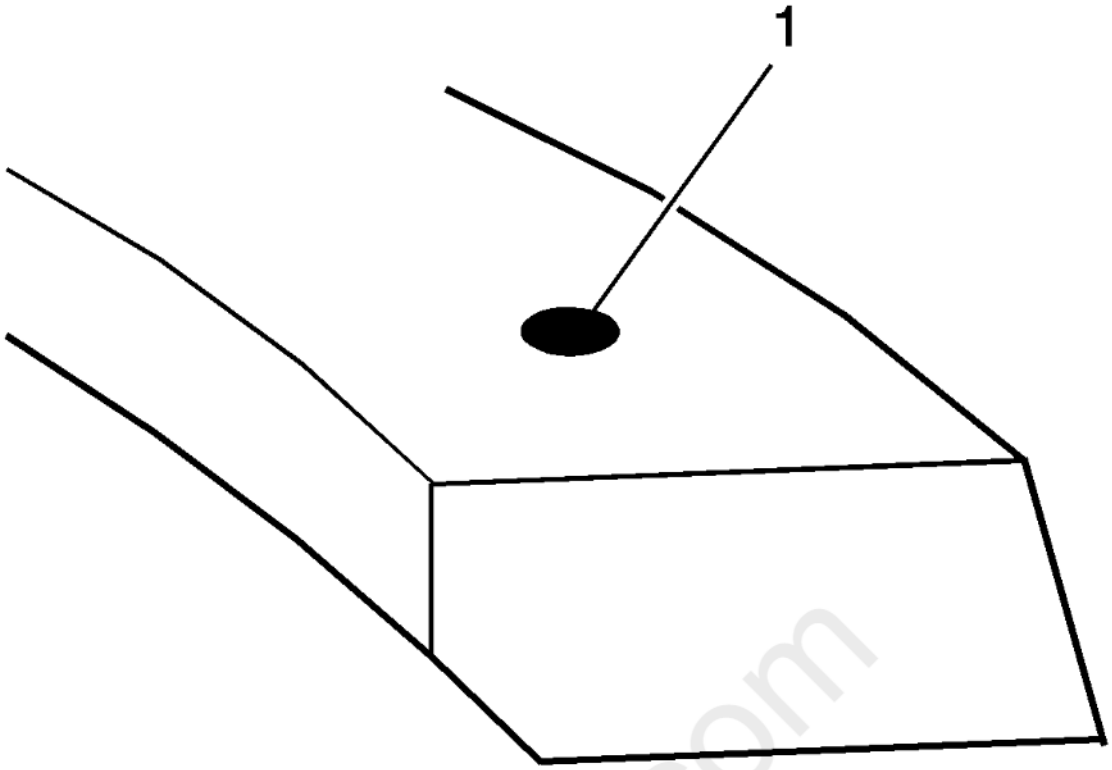

Fig. 117: View Of Lower Compression Piston Ring Mark
Courtesy of GENERAL MOTORS COMPANY

3. There is a locating dimple (1) on the compression rings near the end for identification. Install the compression rings with the dimple facing up.
4. If the new ring does not reduce the clearance to the proper specification, install a new piston.
5. If the new piston does not meet clearance specifications, the cylinder block may need to be oversized to 0.25 mm (0.010 in). There is only one size of oversized pistons and rings available for service.

Connecting Rod Cleaning Procedure

1. Clean the connecting rods in solvent.

WARNING: **Refer to Safety Glasses Warning .**

2. Dry the connecting rod using compressed air.
3. Remove the connecting rod cap and clean the threads.
4. Remove the connecting rod bearing and discard. Never reuse a connecting rod bearing used in a running engine.

Connecting Rod Visual Inspection Procedure

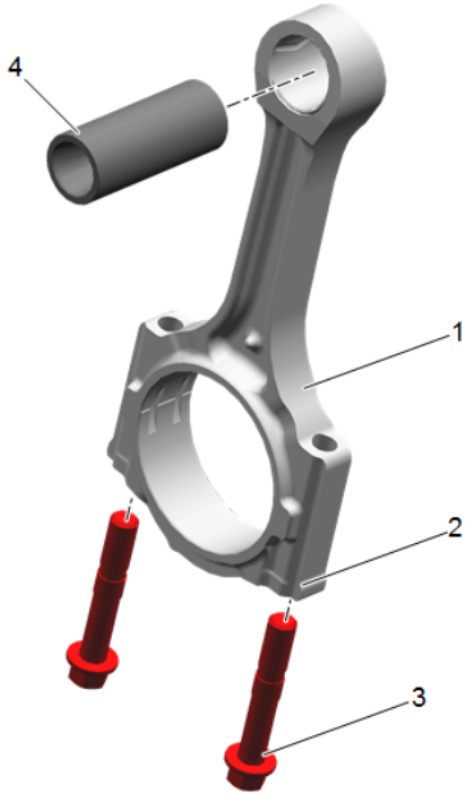

Fig. 118: Inspecting Connecting Rod Components
Courtesy of GENERAL MOTORS COMPANY

1. Inspect the piston pin bushing (4) for scoring or damage.
2. Inspect the connecting rod beam (1) for twisting or bending.
3. Inspect the rod cap (2) for any nicks or damage caused by possible interference.
4. Inspect for scratches or abrasion on the rod bearing seating surface.

NOTE: **DO NOT scrape the rod or rod cap.**

5. If the connecting rod bores contain minor scratches or abrasions, clean the bores in a circular direction with a light emery paper.

Connecting Rod Measurement Procedure

Piston Pin End

cardiagn.com

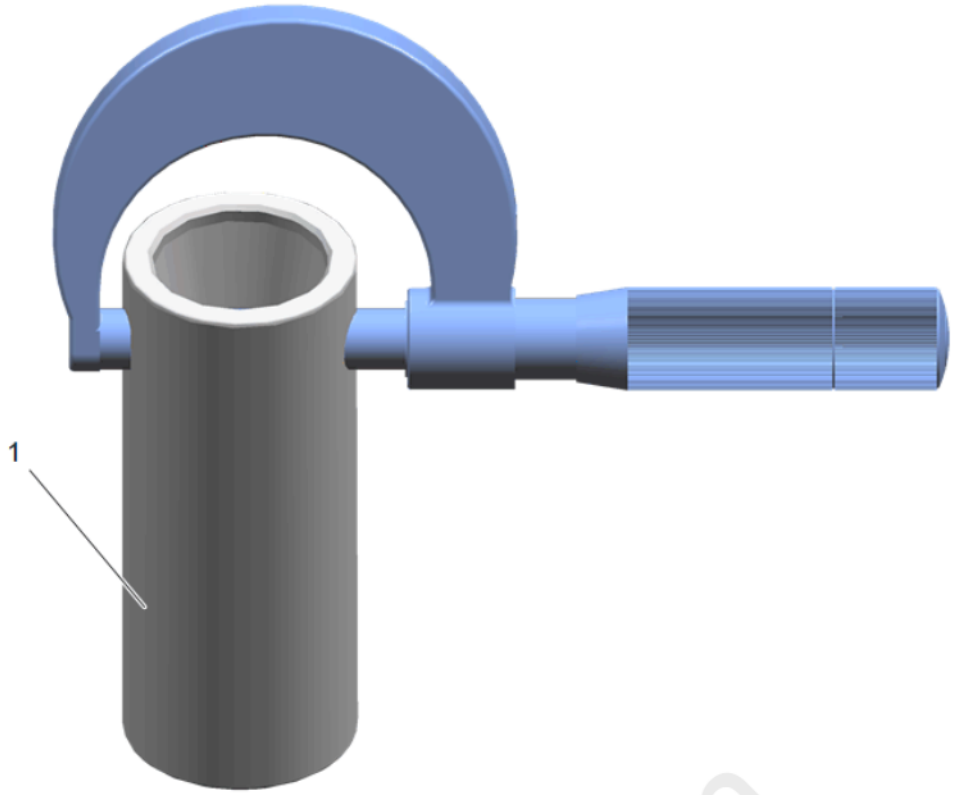

Fig. 119: Measuring Piston Pin Diameter
Courtesy of GENERAL MOTORS COMPANY

NOTE: **Measurements of all components should be taken with the components at normal room temperature.**

1. Using an outside micrometer, take 2 measurements of the piston pin in the area of the connecting rod contact.

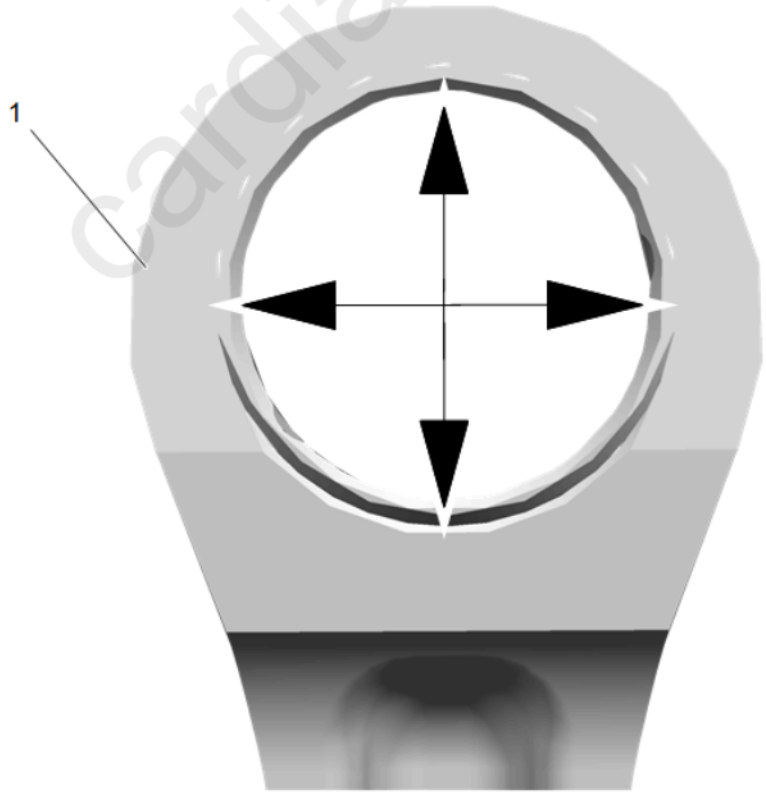

Fig. 120: Checking Connecting Rod Piston Pin Bore Dimensions
Courtesy of GENERAL MOTORS COMPANY

2. Using an inside micrometer, measure the connecting rod piston pin bore.
3. Subtract the piston pin diameter from the piston pin bore.

cardiagn.com

4. Compare the clearance measurements with the **Engine Mechanical Specifications** .
5. If the clearance is excessive, replace the piston pin. If a new pin does not resolve the clearance problem, replace the connecting rod.

Connecting Rod Crankshaft Bearing End

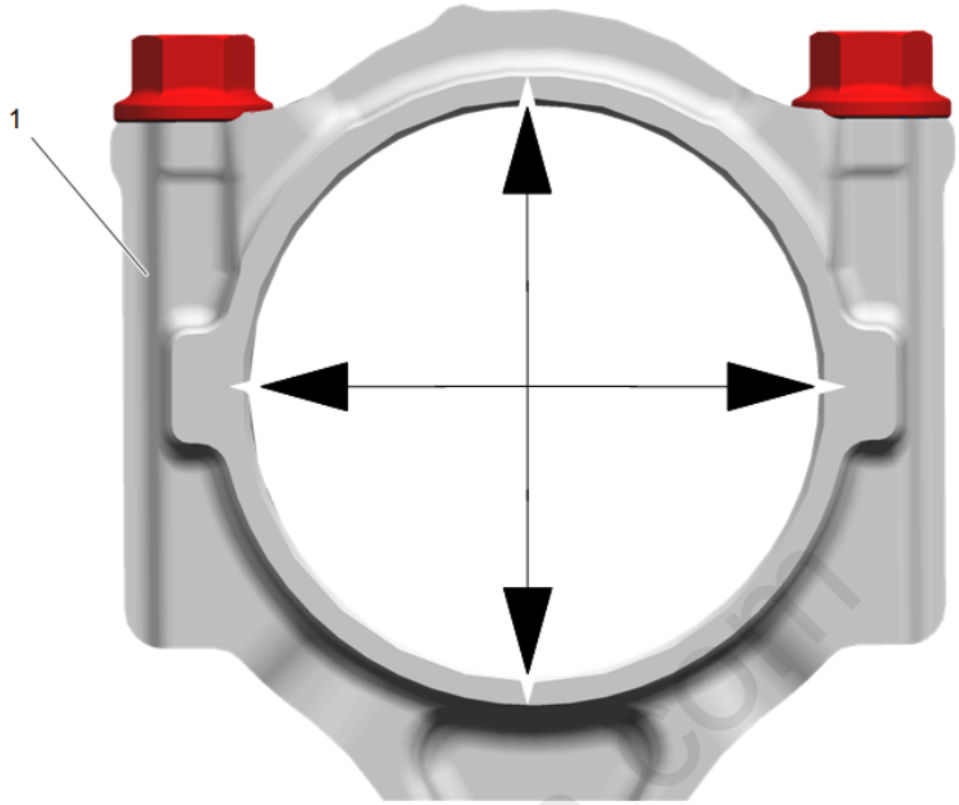

Fig. 121: Measuring Connecting Rod Crankshaft Bearing Bore
Courtesy of GENERAL MOTORS COMPANY

NOTE: **Measurements of all components should be taken with the components at normal room temperature.**

1. Using an inside micrometer, measure the connecting rod crankshaft bearing bore.
2. Compare the bore measurements with the **Engine Mechanical Specifications** .
3. Replace the connecting rod if the bore is out of specifications. DO NOT recondition the connecting rod.

PISTON AND CONNECTING ROD ASSEMBLE

Special Tools

- **EN-46121** Connecting Rod Guide Pin Set
- **EN-46745** Piston Pin Clip Remover/Installer

For equivalent regional tools, refer to **Special Tools**

Piston and Piston Pin Installation Procedure

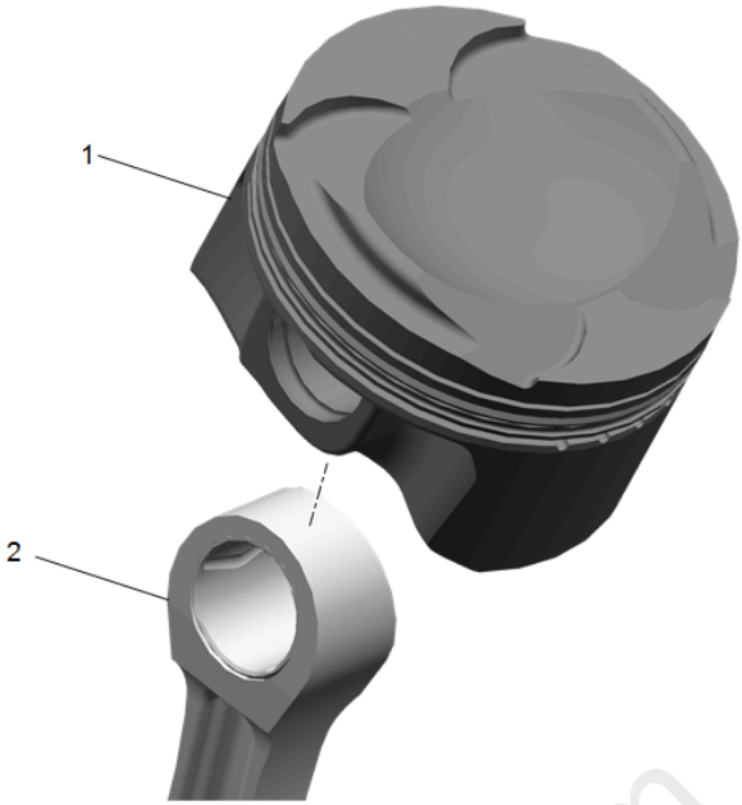

Fig. 122: View Of Piston Pin
Courtesy of GENERAL MOTORS COMPANY

NOTE:

- **The piston is directional and must be installed in the engine block in the proper direction. The dot on the top of the piston must face the front of the engine.**
- **The piston is model dependent and may not appear exactly as shown.**

1. Lubricate the piston pin bores in the piston and the connecting rod with GM prelube lubricant. Refer to **Adhesives, Fluids, Lubricants, and Sealers** for recommended lubricant.
2. Assemble the piston and piston pin to the connecting rod. Properly orient the piston when reusing a marked connecting rod.
3. Align the piston pin bore with the connecting rod pin bore.
4. Slide the piston pin into the piston and the connecting rod.

carmagic.com

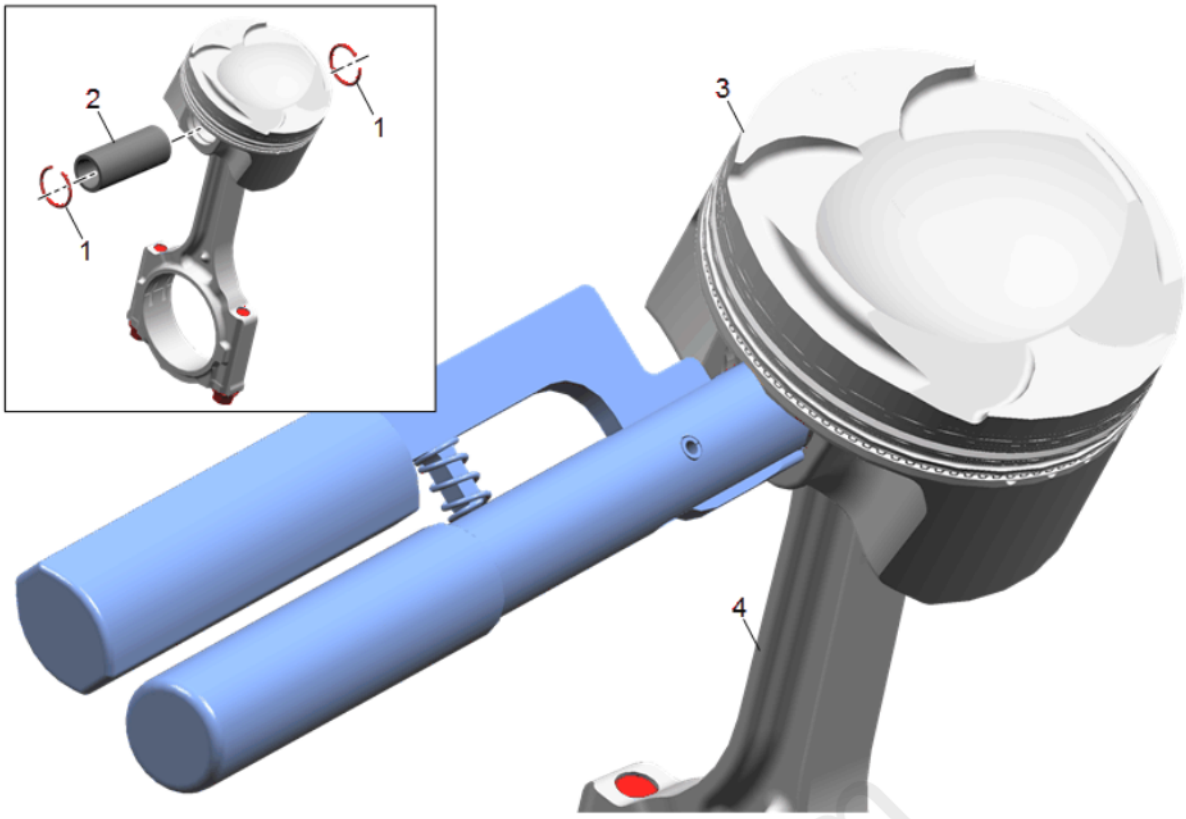

Fig. 123: Identifying Piston Pin Retainers Removal Access Notch
Courtesy of GENERAL MOTORS COMPANY

NOTE: **New piston pin retainers must be used. Never reuse the piston pin retainers.**

5. Install NEW piston pin retainers using the **EN-46745** remover/installer. Align the **EN-46745** remover/installer to the notch (1) in the piston.
6. Ensure that the piston pin retainers are fully seated in their grooves.
7. Repeat these procedures for the remaining pistons.

Piston Ring Installation Procedure

cardiagn.com

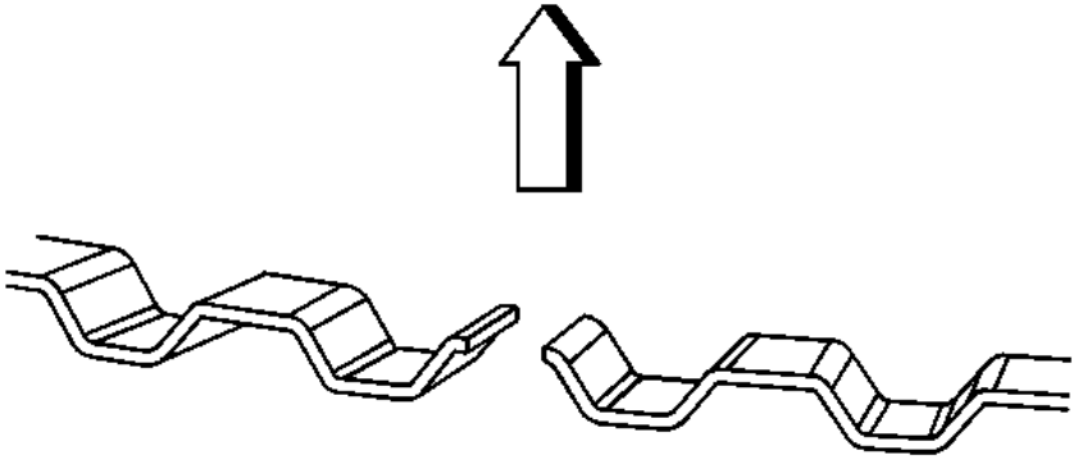

Fig. 124: Aligning Oil Control Ring Expander
Courtesy of GENERAL MOTORS COMPANY

1. Properly orient the oil control ring expander as shown before installation. The ends of the expander must be facing toward the top of the piston.

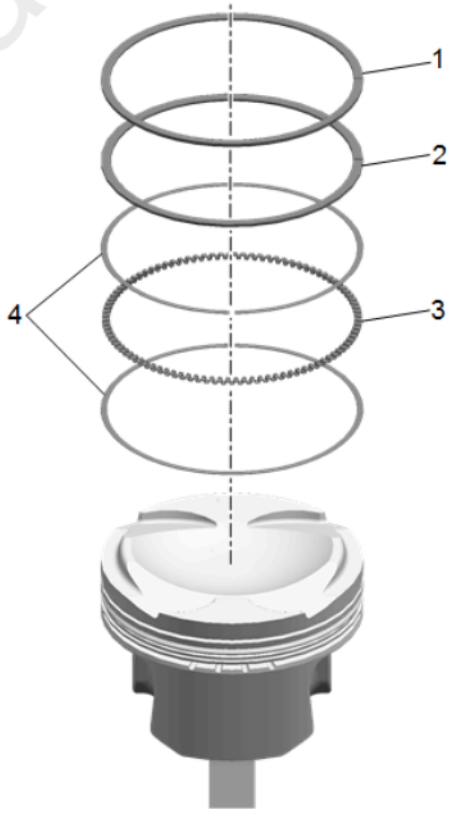

cardiagn.com

Fig. 125: Identifying Piston Rings
Courtesy of GENERAL MOTORS COMPANY

2. Using a piston ring expander, install the oil control ring assembly using the following procedure:
    1. Install the expander ring (3).
    2. Install the 2 oil scraper rings (4). Expand the rings only enough to clear the piston diameter. Overexpanding the piston rings will distort or crack the rings.

NOTE: **The lower compression piston ring (2) is thicker and will not fit in the upper compression rings (1) position.**

NOTE: **For the LY7, the upper compression ring is symmetrical and may be installed either side up. For all other RPO's, the mark on the piston ring should face the top of the piston.**

3. Install the lower compression piston ring (2) onto the piston with the mark facing the top of the piston.
4. Install the upper compression piston ring (1) onto the piston with the mark facing the top of the piston, if required.

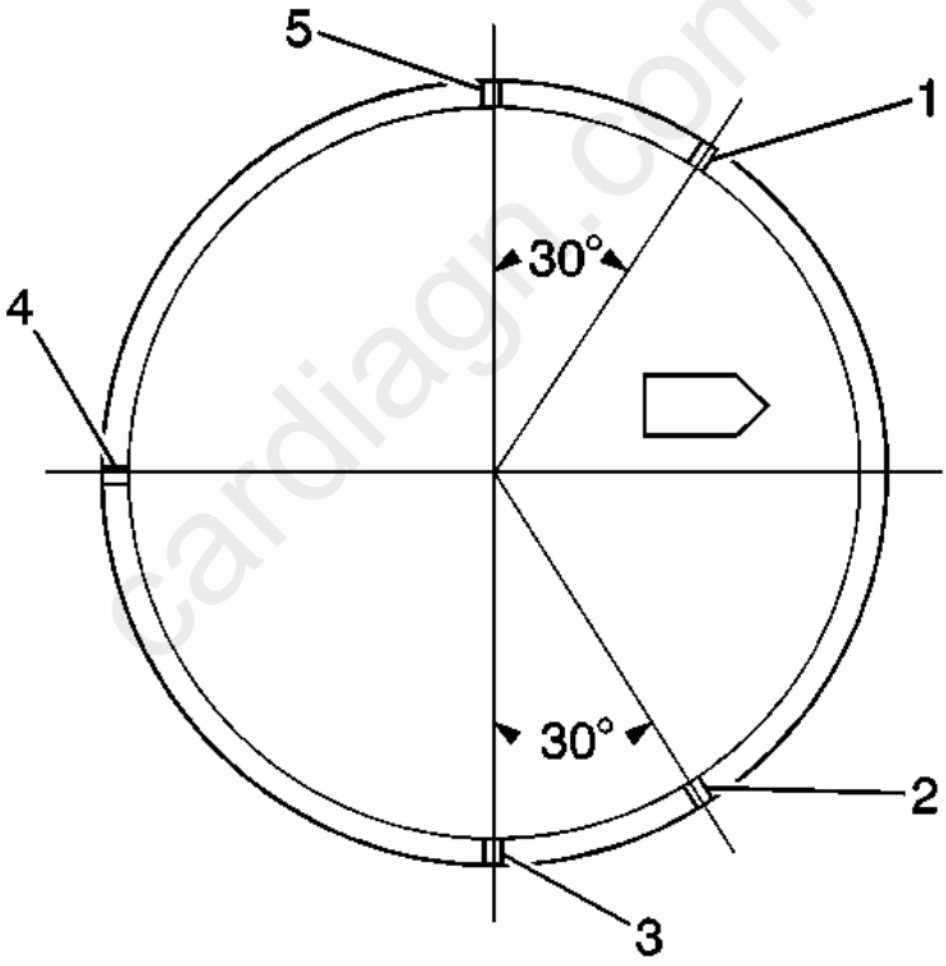

cardiagn.com

Fig. 126: Illustrating Ring Gap Positions
Courtesy of GENERAL MOTORS COMPANY

5. Once the rings are installed, set the ring gaps for the oil control, second and top ring as follows. Use the piston location arrow for reference.
    1. Lower oil control ring - position 1
    2. Upper oil control ring - position 2
    3. Top Ring - position 3

4. Oil control ring expander - position 4
5. Second ring - position 5

Connecting Rod Bearing Installation Procedure

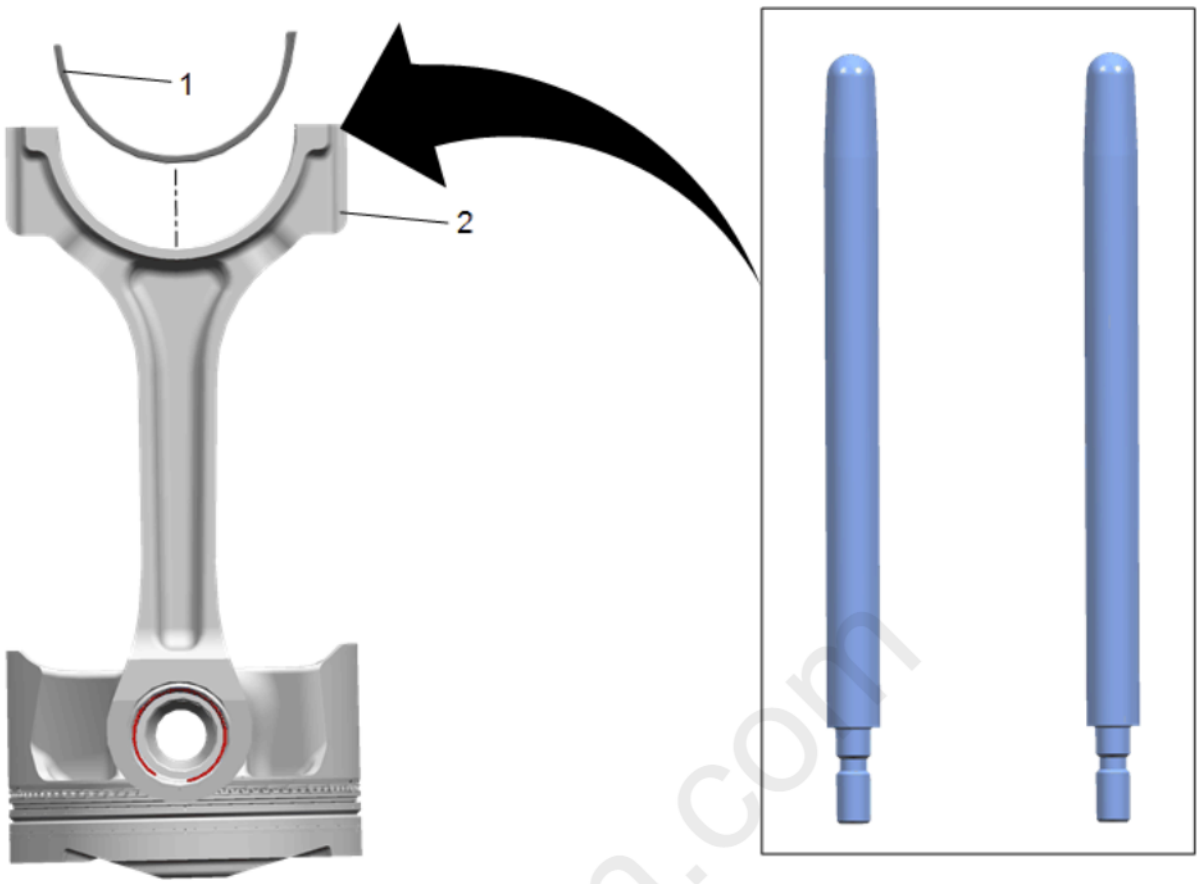

Fig. 127: View Of Piston/Connecting Rod Installation Tool
Courtesy of GENERAL MOTORS COMPANY

NOTE: **If the connecting rod bearings have been used in a running engine, you must replace them with NEW connecting rod bearings for reassembly.**

1. Clean the connecting rod and the connecting rod cap bearing bore with a lint-free cloth.
2. Clean all the oil from behind the connecting rod bearing halves.
3. Install NEW upper connecting rod bearings into position. Roll the bearing into position so that the lock tang engages the alignment slot. The bearing must fit flush in the connecting rod.
4. Install the **EN-46121** set into the connecting rod bolt holes.

cardiagn.com

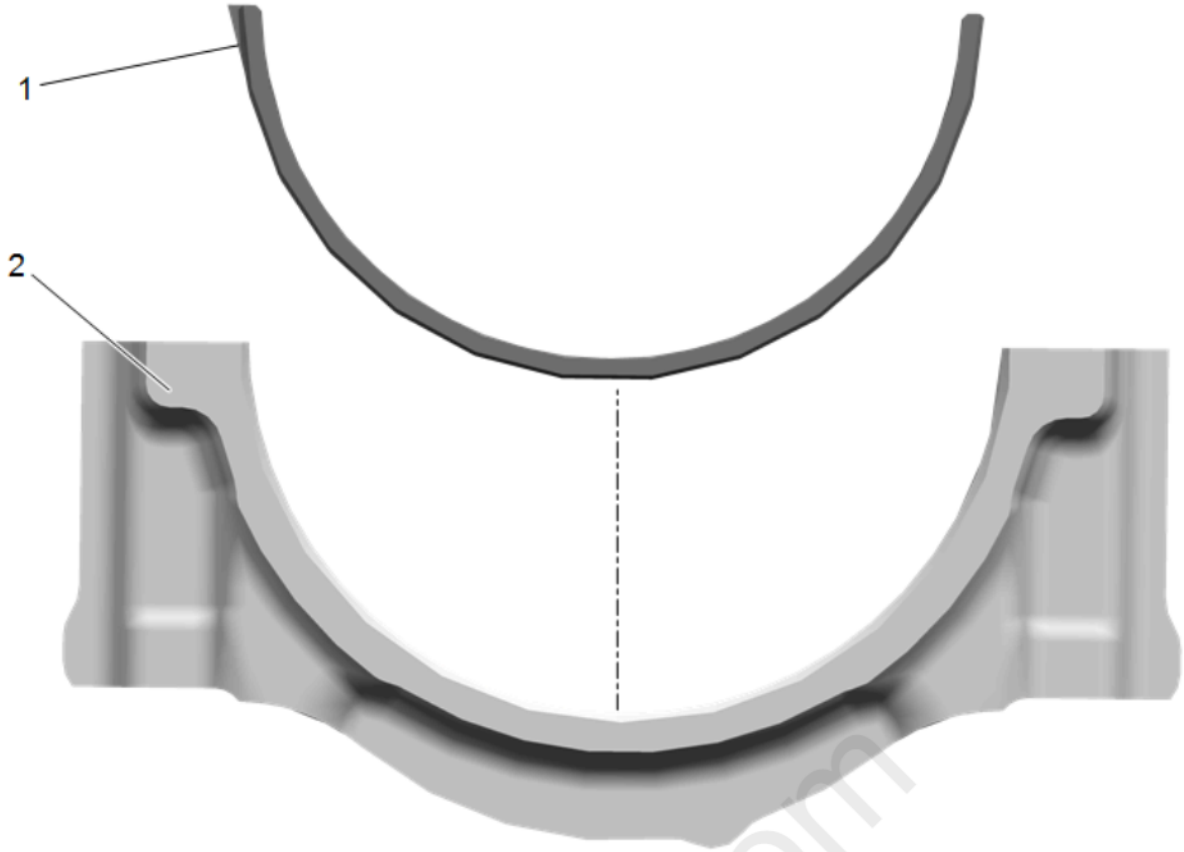

Fig. 128: View Of Lower Connecting Rod Cap & Bearing
Courtesy of GENERAL MOTORS COMPANY

5. Install NEW lower connecting rod bearings into position in the connecting rod cap. Roll the bearing into position so that the lock tang engages the alignment slot. The bearings must fit flush with the connecting rod cap.

CYLINDER HEAD DISASSEMBLE

Special Tools

- **EN-8062** Valve Spring Compressor - Head Off
- **EN-46116** Valve Stem Seal Remover/Installer
- **EN-46117** Valve Stem Key Remover/Installer
- **EN-46119** Off-Vehicle Valve Spring Compressor Adapter
- **EN-46122** Camshaft Position Actuator Check-Ball Valve Remover/Installer
- **EN-49248** Injector Rail Assembly Remover

For equivalent regional tools, refer to **Special Tools** .

cardiagn.com

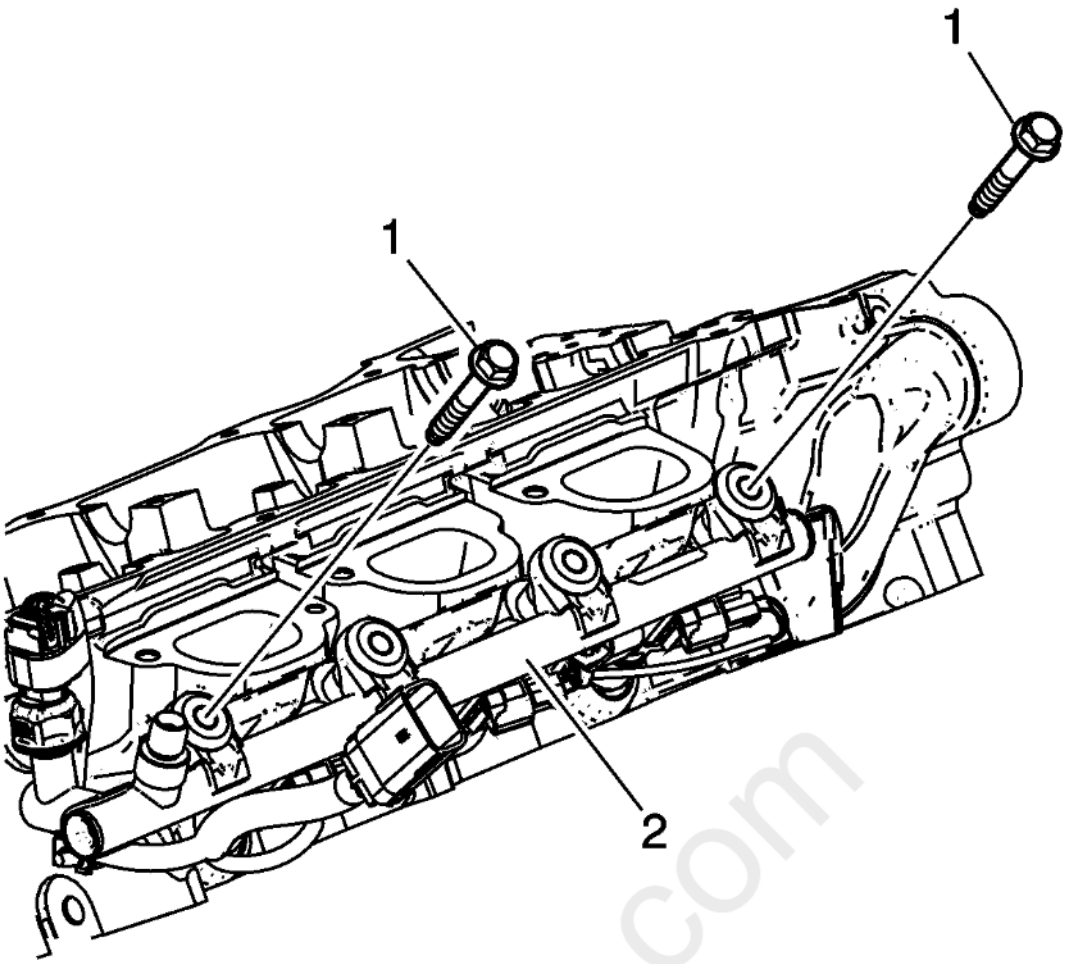

Fig. 129: Identifying Fuel Rail Bolts
Courtesy of GENERAL MOTORS COMPANY

1. Remove the fuel rail bolts (1).

cardiagn.com

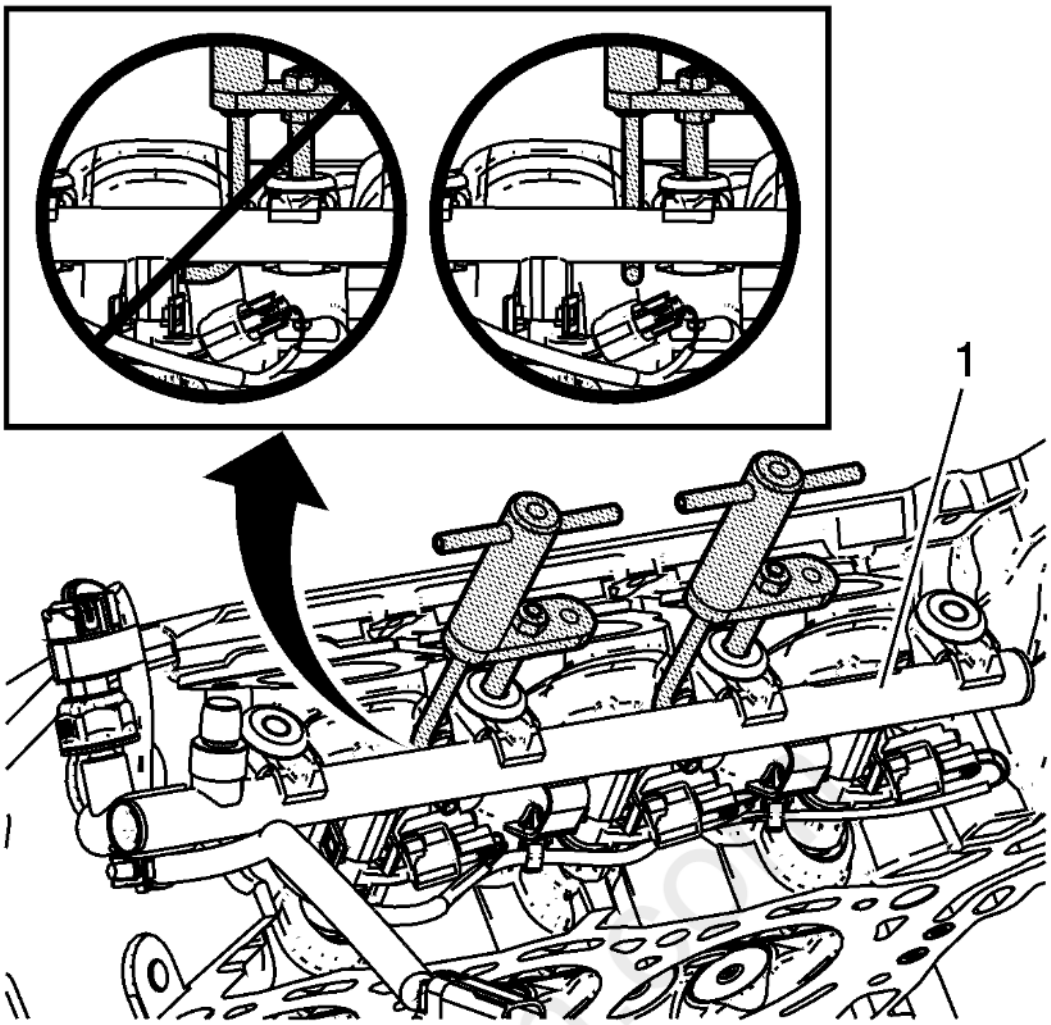

Fig. 130: Injector Rail Assembly & Remover
Courtesy of GENERAL MOTORS COMPANY

CAUTION:

- **Remove the fuel rail assembly carefully in order to prevent damage to the injector electrical connector terminals and the injector spray tips. Support the fuel rail after the fuel rail is removed in order to avoid damaging the fuel rail components.**
- **Cap the fittings and plug the holes when servicing the fuel system in order to prevent dirt and other contaminants from entering open pipes and passages.**

2. Remove the fuel rail and injectors (1) as an assembly using the **EN-49248** remover.

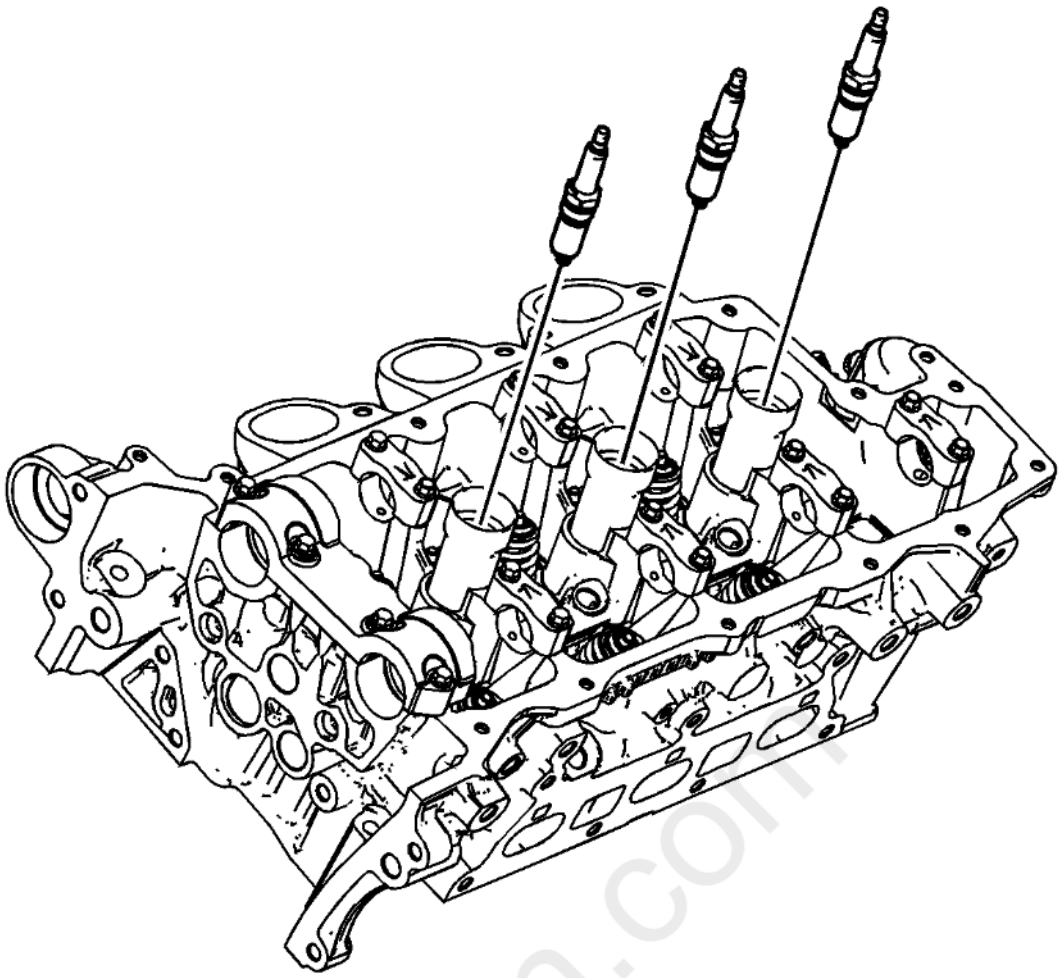

Fig. 131: View Of Spark Plugs
Courtesy of GENERAL MOTORS COMPANY

3. Remove the spark plugs.

cardiagn.com

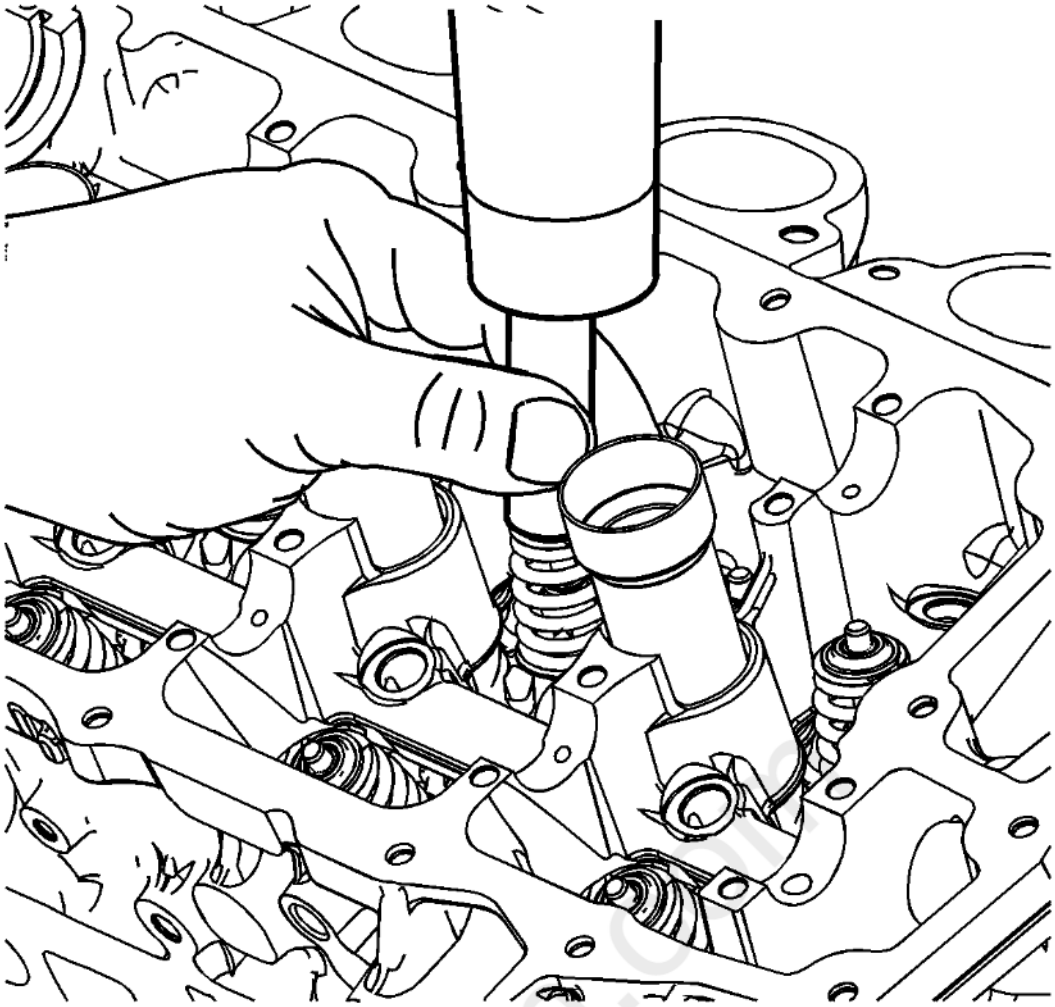

Fig. 132: Loosening Valve Keepers
Courtesy of GENERAL MOTORS COMPANY

NOTE: **Ensure valve heads will not contact anything during the following step in order to avoid bending or damage.**

4. Using an appropriately sized deep socket and a plastic hammer, lightly tap on the valve spring retainer to loosen the valve keepers.

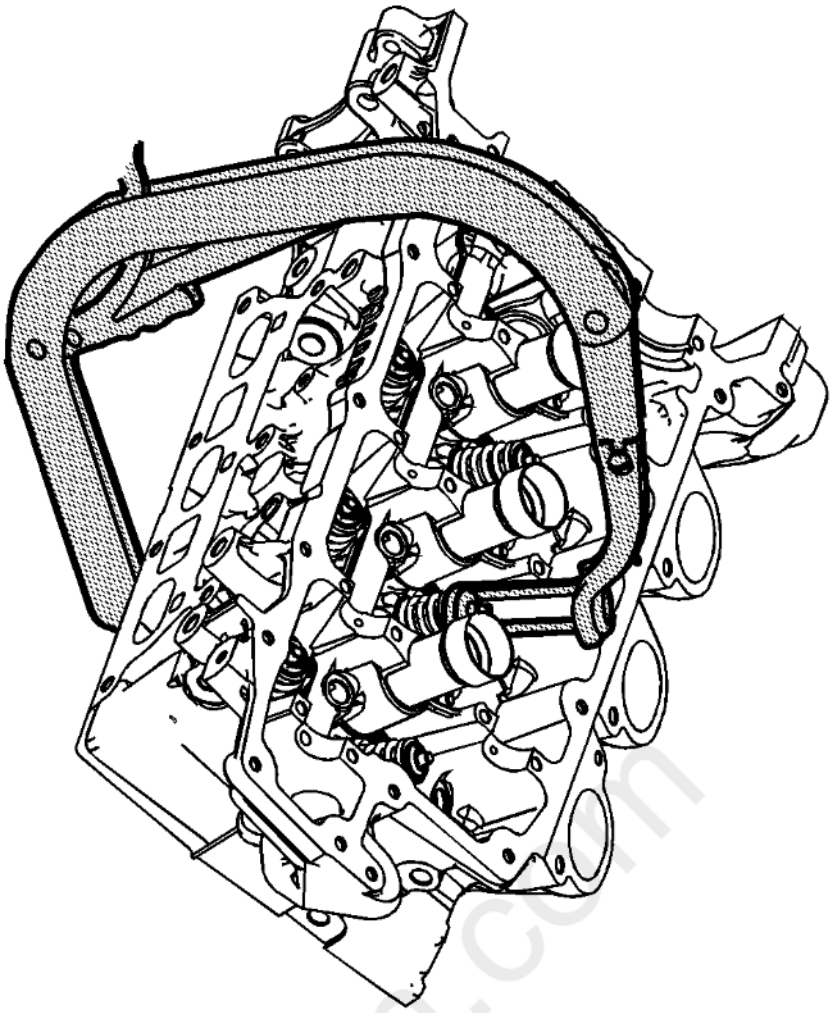

Fig. 133: Compressing Valve Spring
Courtesy of GENERAL MOTORS COMPANY

WARNING: **Compressed valve springs have high tension against the valve spring compressor. Valve springs that are not properly compressed by or released from the valve spring compressor can be ejected from the valve spring compressor with intense force. Use care when compressing or releasing the valve spring with the valve spring compressor and when removing or installing the valve stem keys. Failing to use care may cause personal injury.**

CAUTION: **Do not compress the valve springs to less than 24.0 mm (0.943 in). Contact between the valve spring retainer and the valve stem oil seal can cause potential valve stem oil seal damage.**

5. Compress the valve spring using the **EN-8062** compressor and the **EN-46119** adapter.

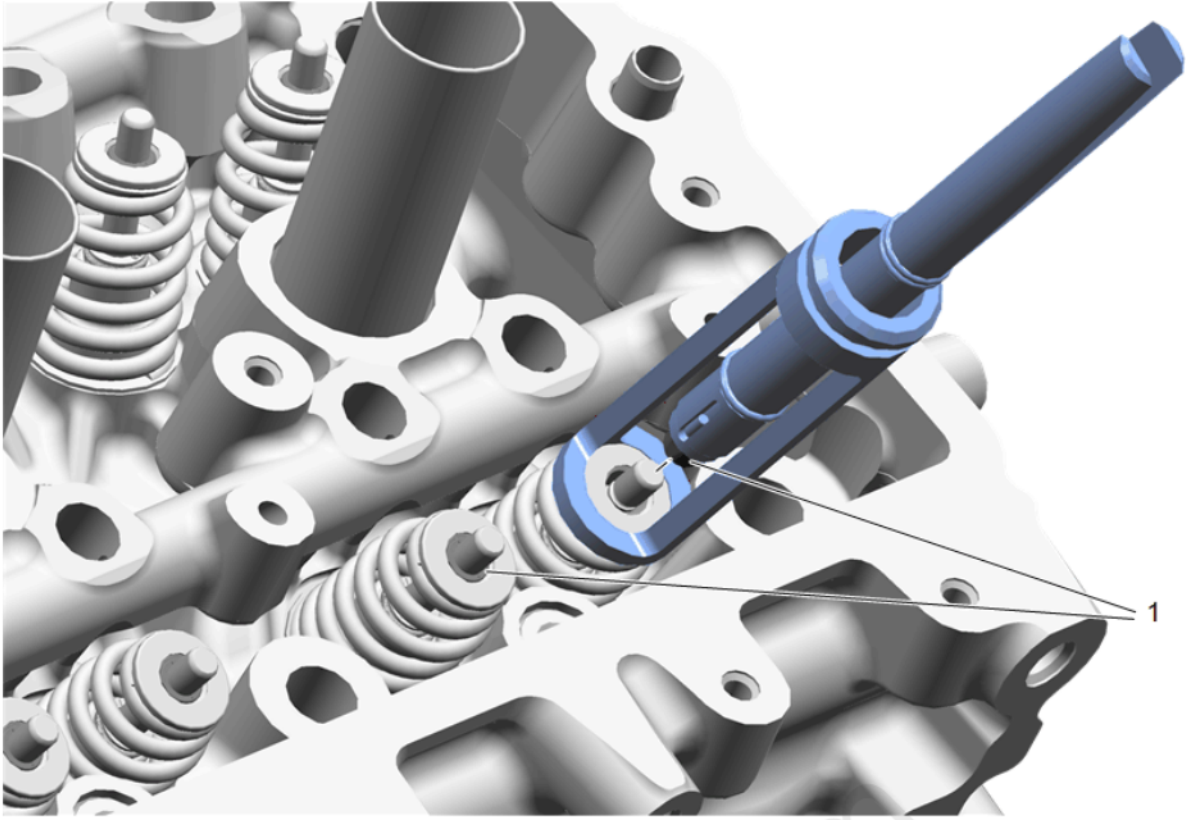

Fig. 134: Removing/Installing Valve Keepers
Courtesy of GENERAL MOTORS COMPANY

6. Use the magnet of the **EN-46117** remover/installer in order to remove the valve keepers.
7. Remove the valve spring compressor and the adapter.

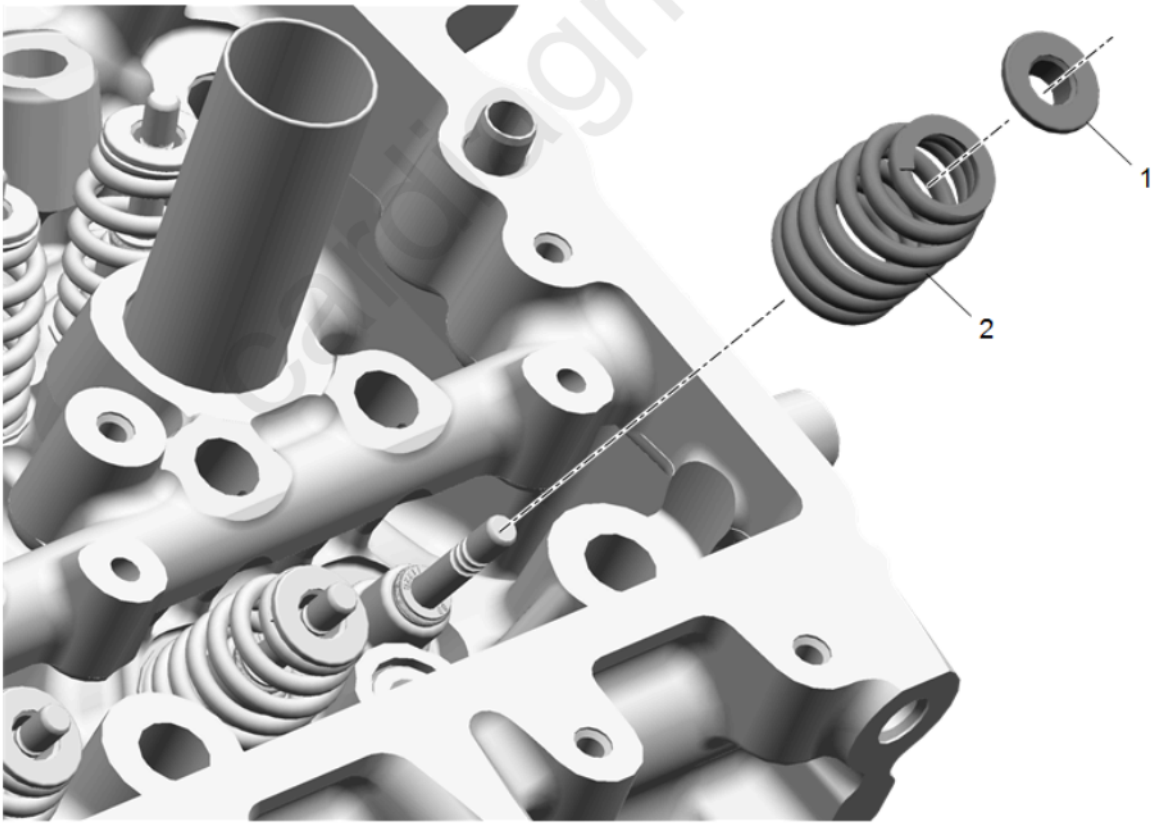

Fig. 135: View Of Valve Spring & Retainer
Courtesy of GENERAL MOTORS COMPANY

8. Remove the valve spring retainer.
9. Remove the valve spring.

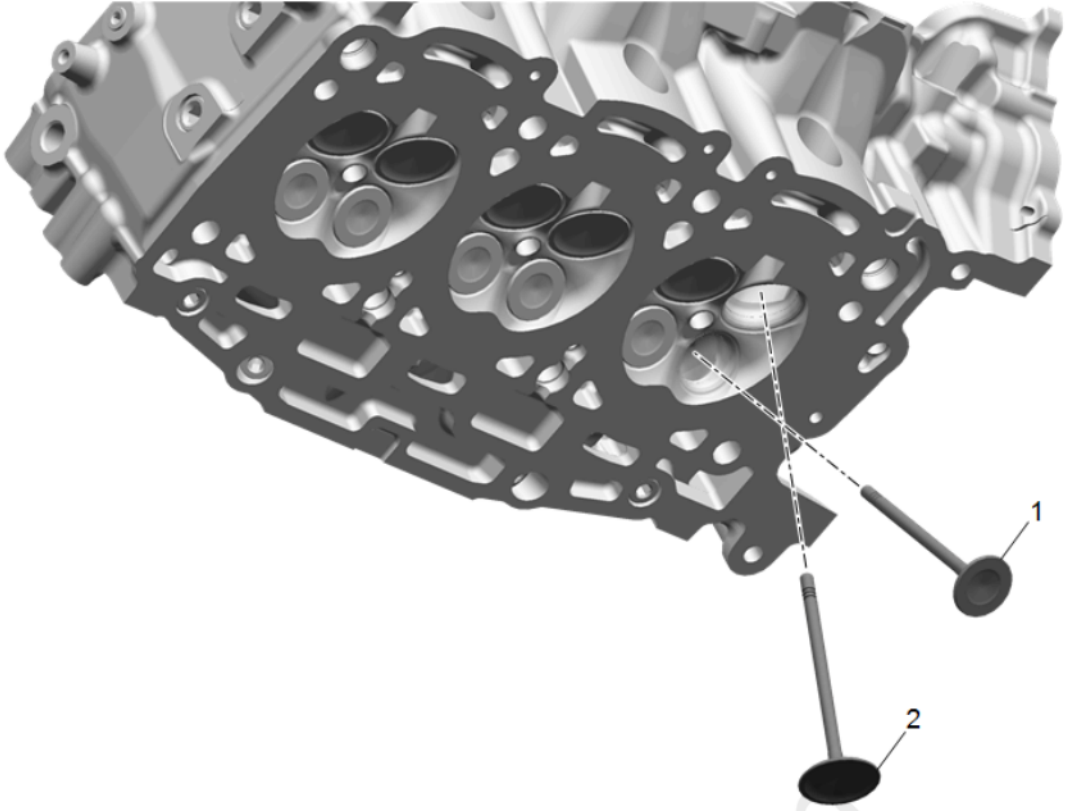

Fig. 136: View of Oil Seal and Valve Guide
Courtesy of GENERAL MOTORS COMPANY

10. Remove the valve.

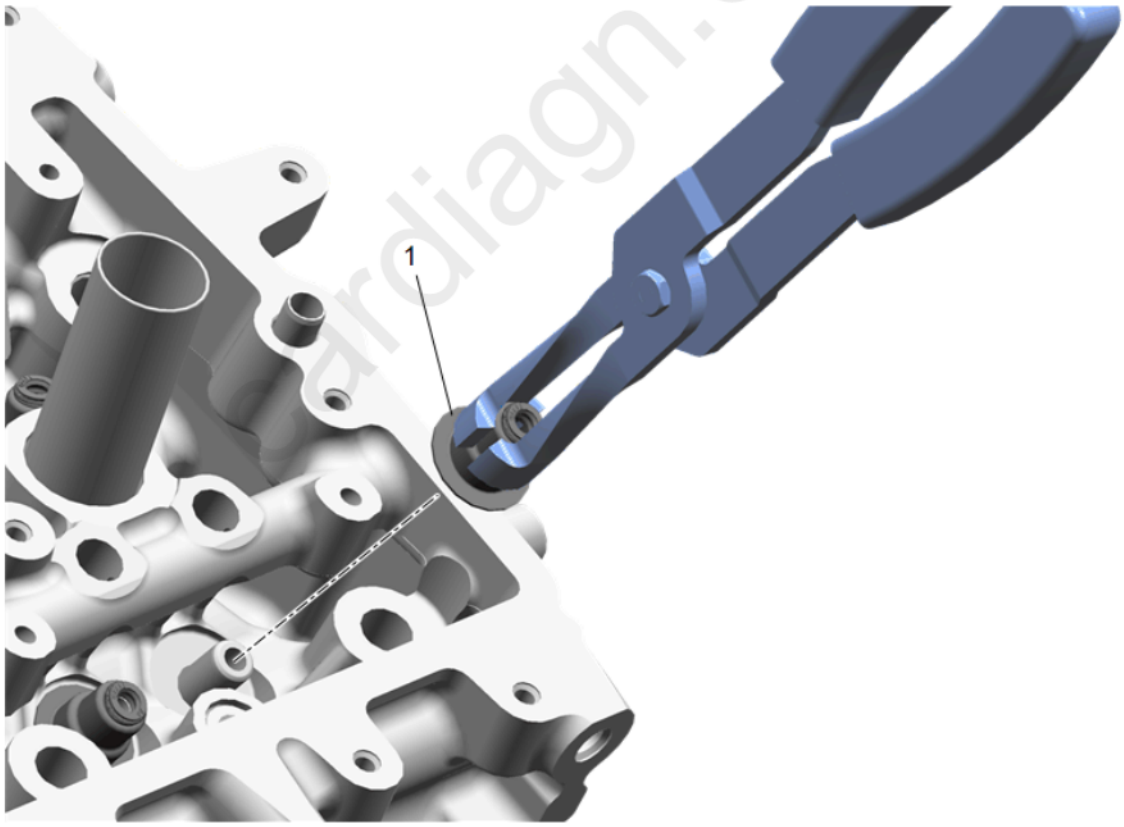

Fig. 137: Removing/Installing Valve Stem Oil Seals
Courtesy of GENERAL MOTORS COMPANY

NOTE: **NEVER reuse a valve stem oil seal.**

11. Remove the valve stem oil seal using the **EN-46116** remover/installer and discard.
12. Repeat these procedures for the remaining valves.

ardiagn.com

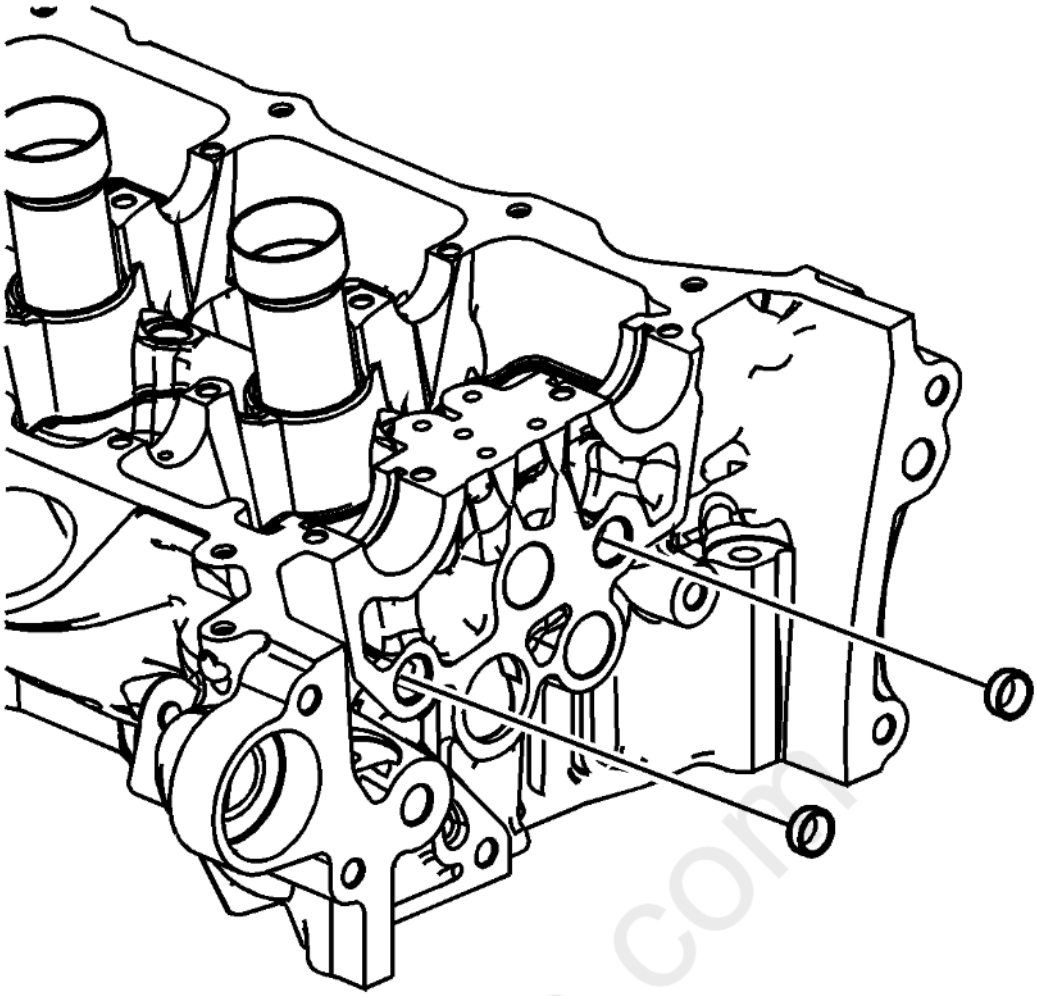

Fig. 138: View Of Cylinder Head Oil Gallery Expansion Plugs
Courtesy of GENERAL MOTORS COMPANY

13. Remove the cylinder head oil gallery expansion plugs.

cardiagn.com

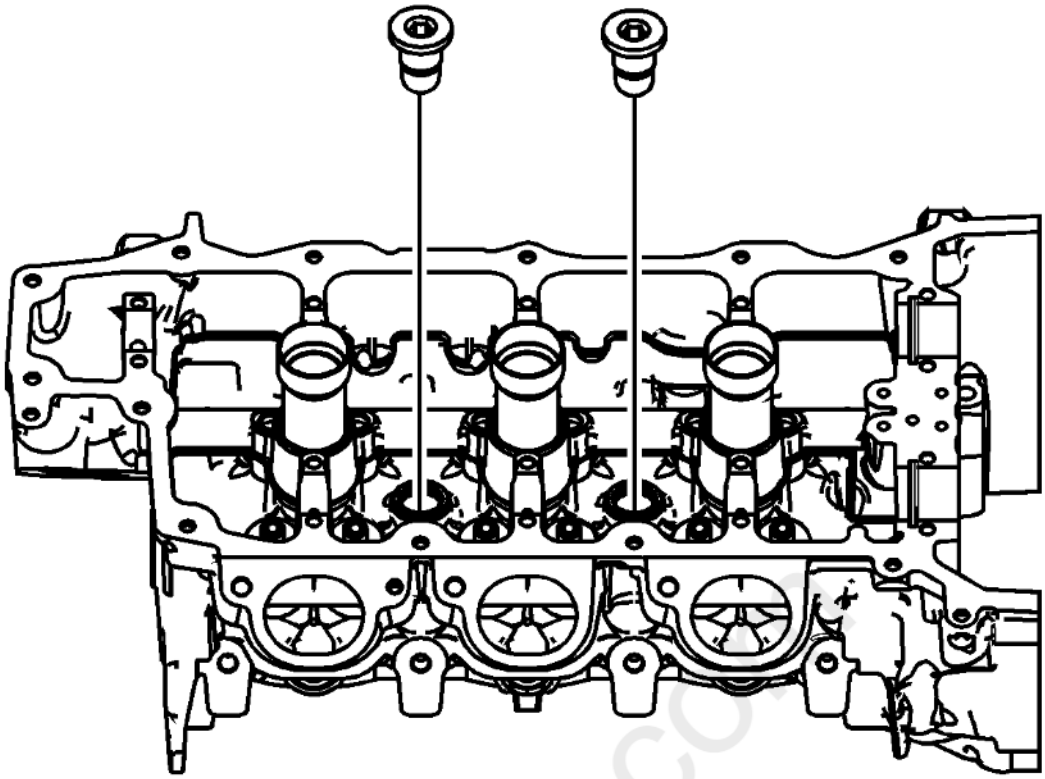

Fig. 139: View Of Cylinder Head Coolant Threaded Plugs
Courtesy of GENERAL MOTORS COMPANY

14. Remove the cylinder head coolant threaded plugs.

cardiagn.com

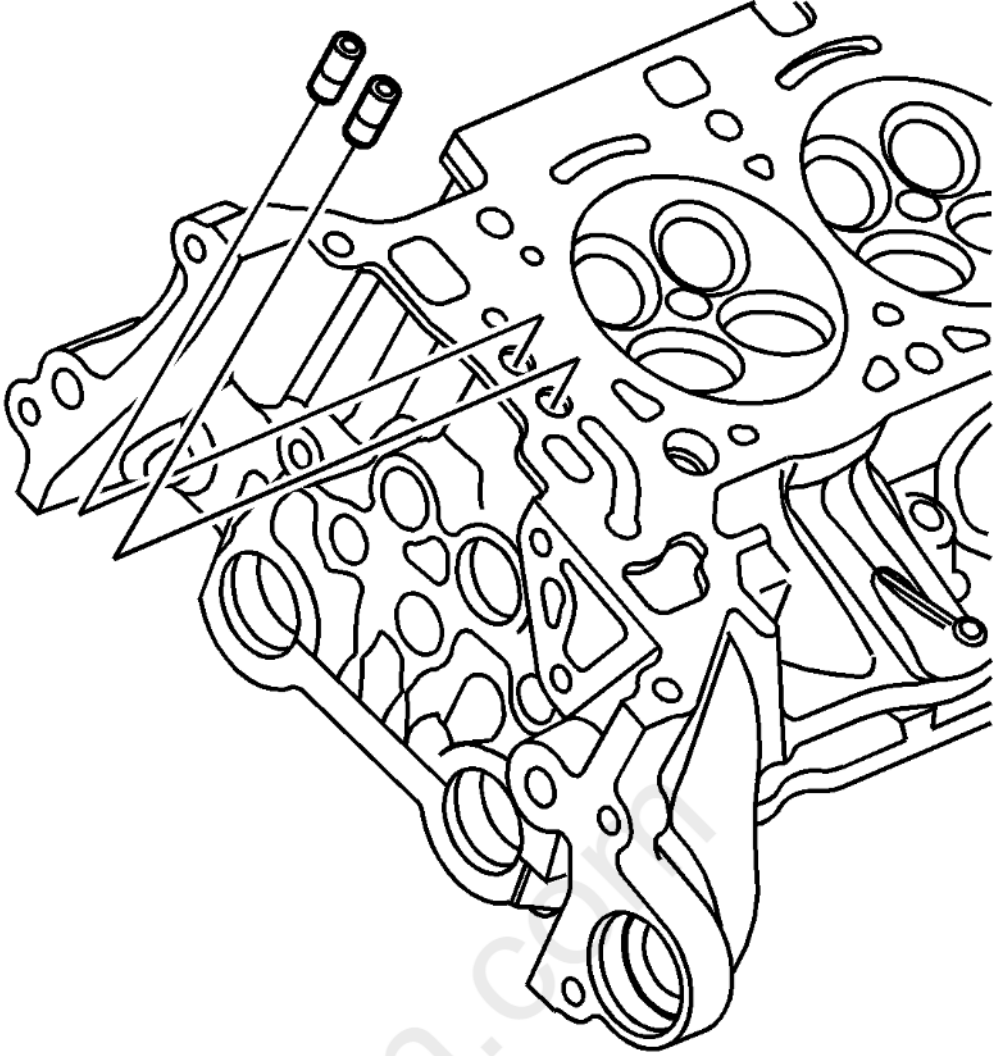

Fig. 140: View Of Camshaft Position Actuator Oil Feed Check Valve
Courtesy of GENERAL MOTORS COMPANY

15. Inspect the camshaft position actuator oil feed check valves. Damaged, restricted or clogged check valves must be replaced. If check valves are OK, disregard remaining steps which detail replacing the check valves.

cardiagn.com

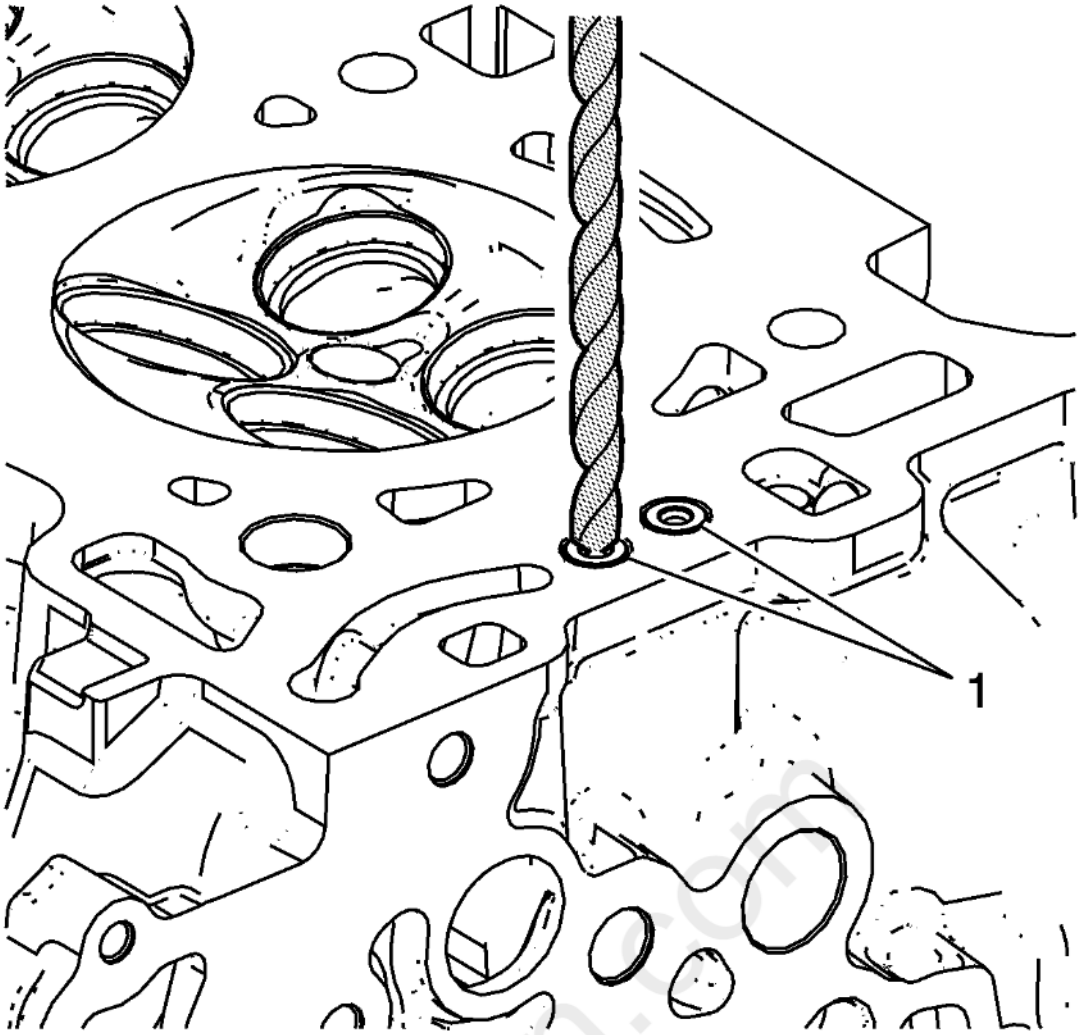

Fig. 141: Drill Out Top Portion Of Check Valve To Expose Internal Check Ball
Courtesy of GENERAL MOTORS COMPANY

16. Place cylinder head on firm surface with check valves (1) facing up. Protect all cylinder head components and machined surfaces.
17. Using drill bit EN-46122-3, drill out top portion of check valve to expose internal check ball.

carmanual.com

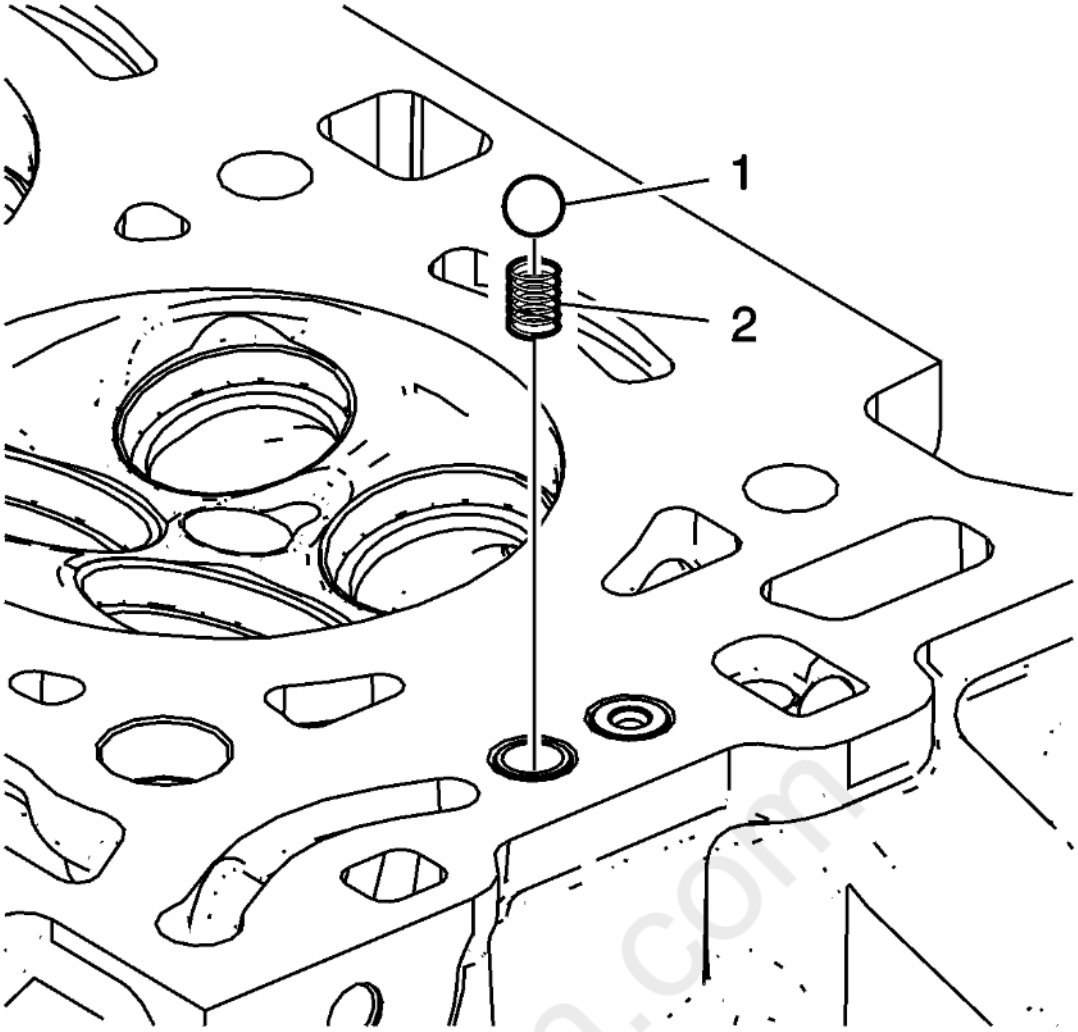

Fig. 142: Identifying Check Ball & Check Ball Spring
Courtesy of GENERAL MOTORS COMPANY

18. Remove check ball (1) and check ball spring (2) from inside of check valve.

cardiagn.com

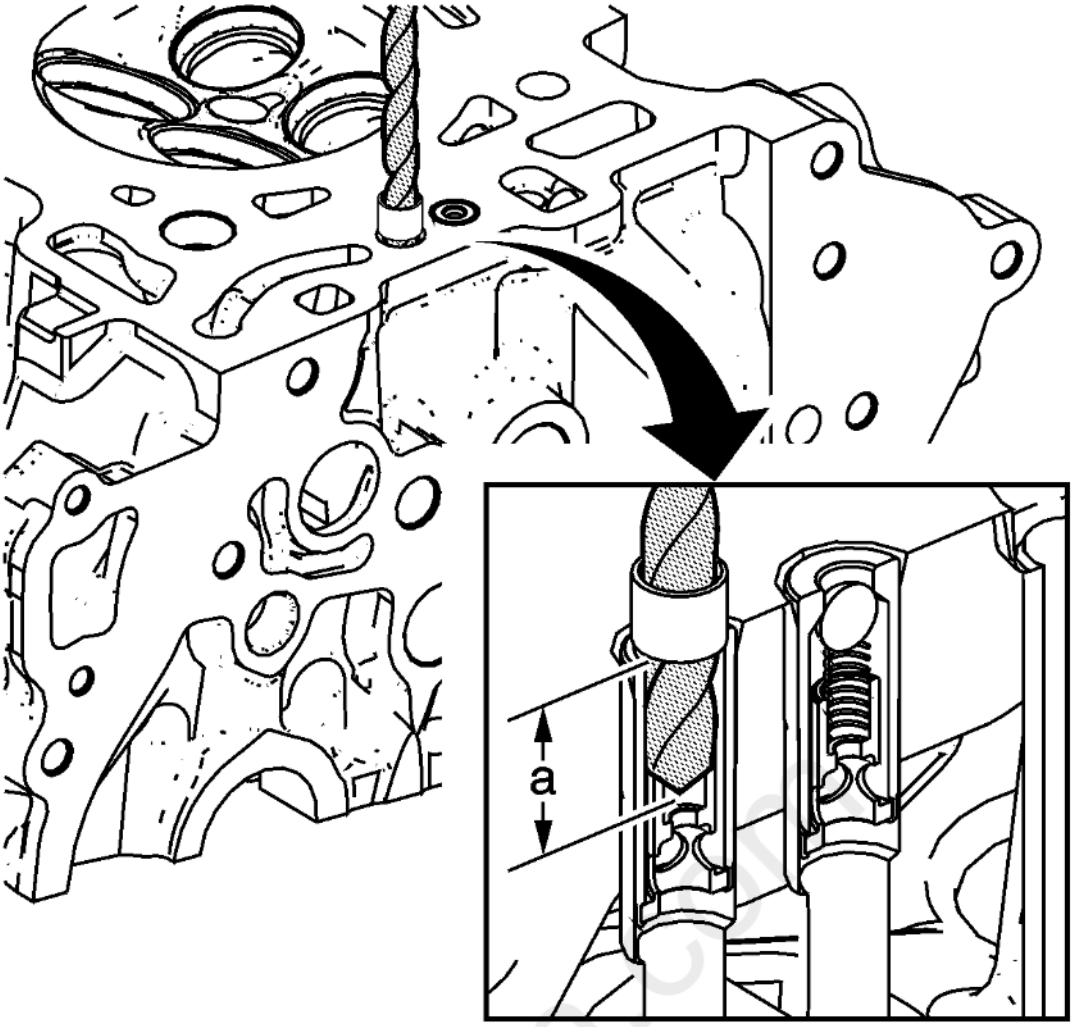

Fig. 143: Drill Remainder Of Check Valve Sleeve To A Depth Of Approximately 19 mm (0.75 In)
Courtesy of GENERAL MOTORS COMPANY

19. Continue drilling remainder of check valve sleeve to a depth of approximately 19 mm (0.75 in) (a) by placing tape on drill bit as a depth gauge. It is not necessary or desirable to drill completely through the bottom of the check valve.

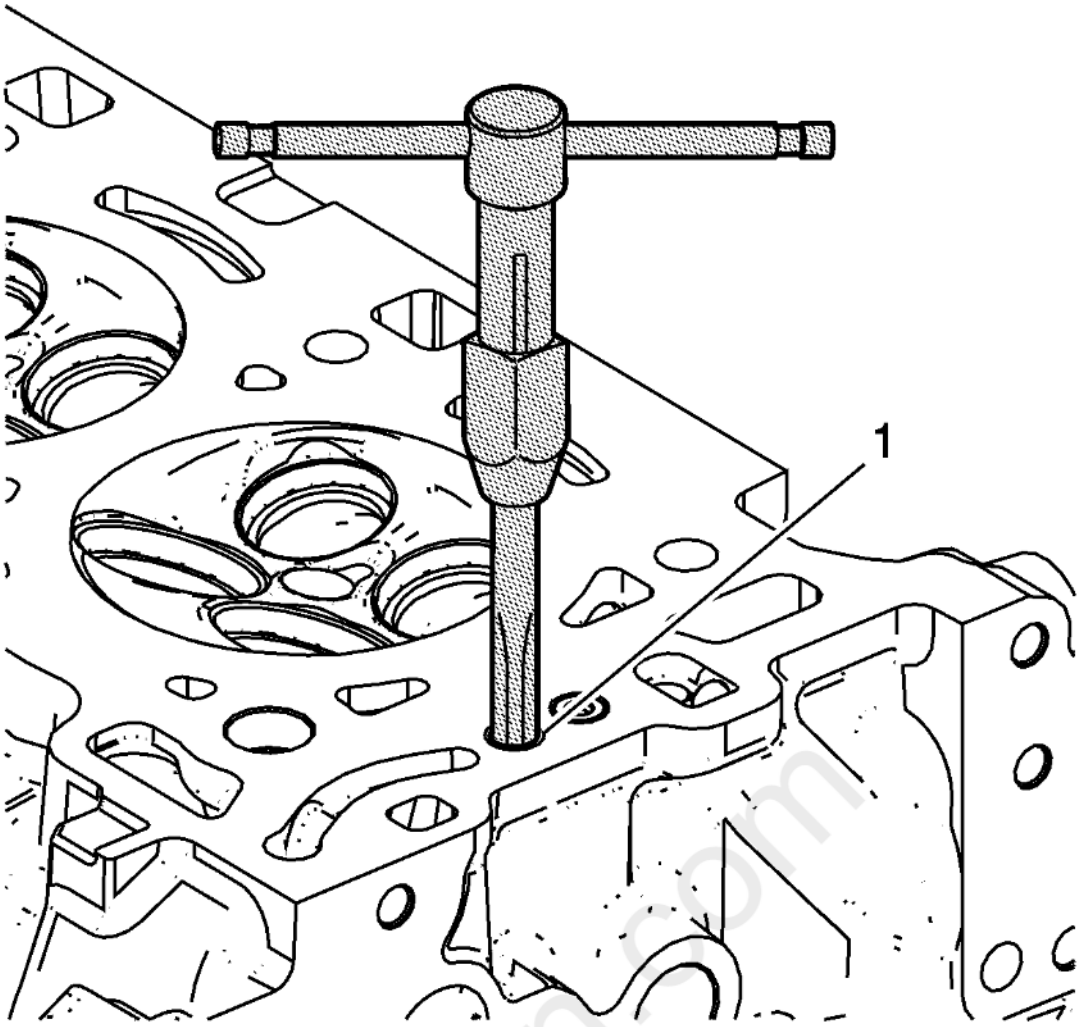

Fig. 144: Tapping Drilled Out Portion Of Check Valve
Courtesy of GENERAL MOTORS COMPANY

20. Lubricate tap **EN-46122 - 4** with lubricant included in **EN-46122** remover/installer. Tap drilled out portion of check valve (1) remaining in cylinder head. Tap to full depth possible until tap bottoms out in head.

cardiagn.com

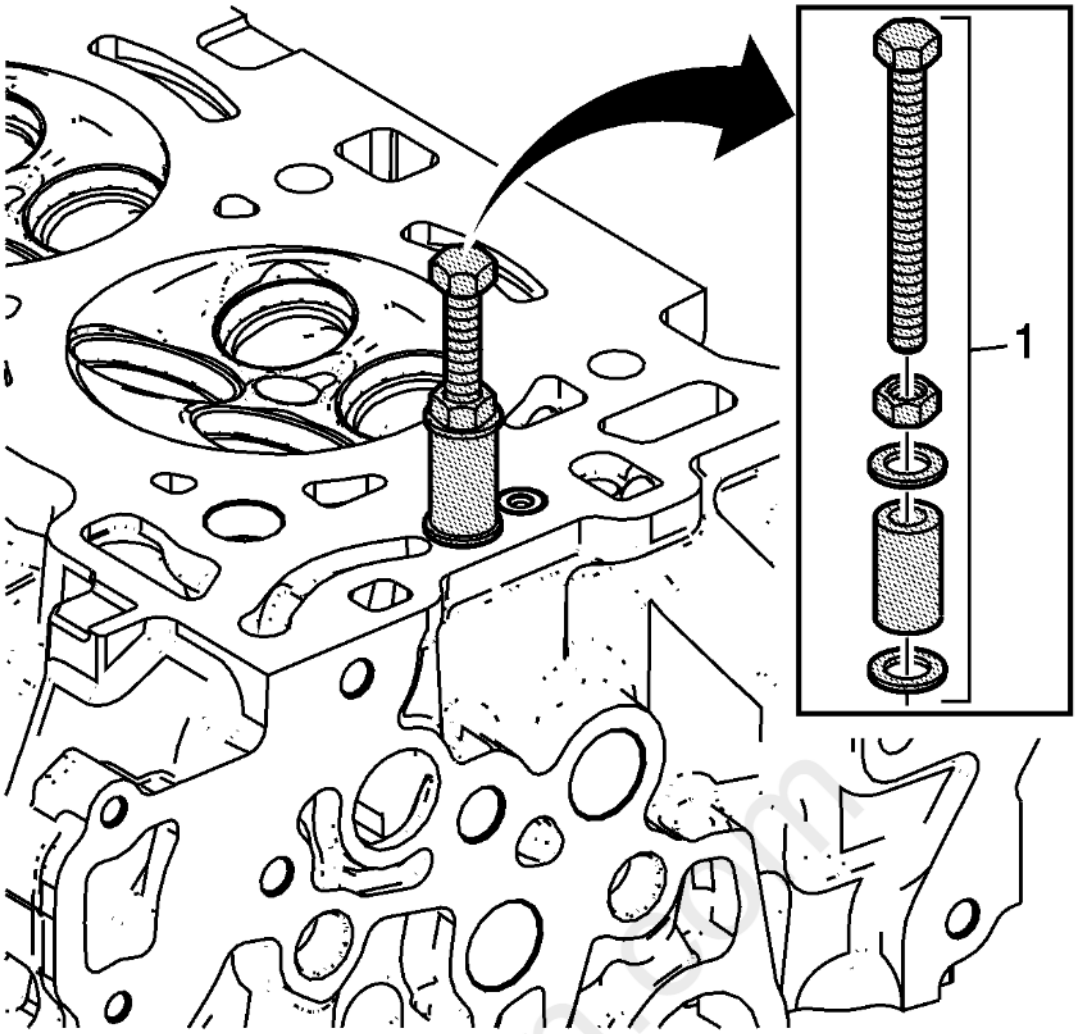

Fig. 145: Assembling Bolt, Nut, Washers & Collar EN-46122-2
Courtesy of GENERAL MOTORS COMPANY

21. Assemble bolt, nut, washers, and collar **EN-46122 - 2** (1) as shown. Position collar with slightly-larger inside diameter DOWN toward the cylinder head.
22. Screw bolt by hand fully down into threaded check valve sleeve, then lightly tighten nut against washer.

carmanuals.com

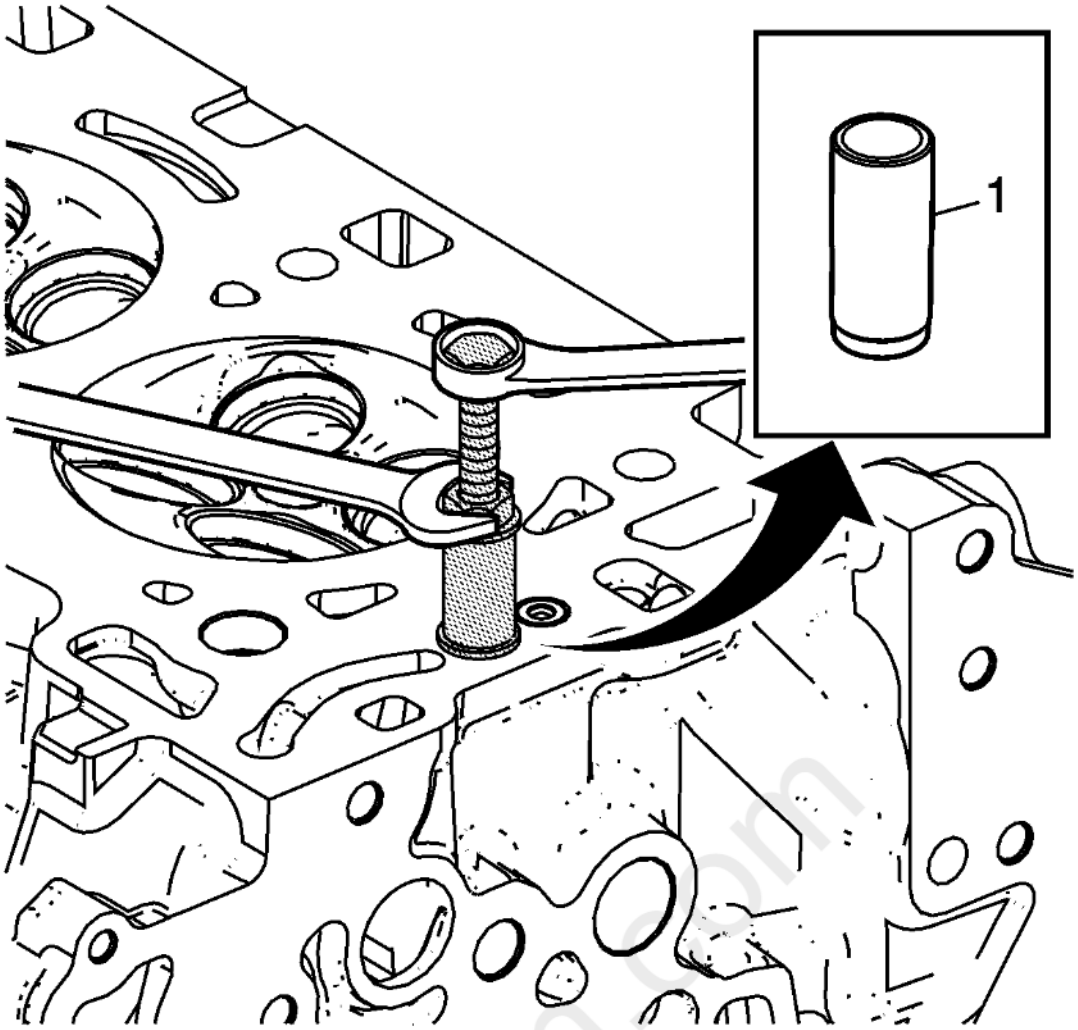

Fig. 146: Hold Bolt With One Wrench, And Use Another To Tighten The Nut Until The Check Valve Sleeve Is Removed From Cylinder Head
Courtesy of GENERAL MOTORS COMPANY

23. Hold bolt with one wrench, and use another to tighten the nut until the check valve sleeve (1) is removed from the cylinder head.
24. Clean check valve bore and related passages thoroughly to remove any drilling chips or other debris.

CYLINDER HEAD CLEANING AND INSPECTION

Special Tools

- **GE - 8001** Dial Indicator Set
- **GE - 8358** Carbon Removal Brush
- **EN - 28410** Gasket Remover
- **EN - 42096** Valve Guide Reamer
- **EN - 47909** Injector Bore and Sleeve Cleaning Kit

For equivalent regional tools, refer to **Special Tools** .

Cleaning Procedure

1. Ensure proper use of room temperature vulcanizing (RTV) sealant. **Use of Room Temperature Vulcanizing (RTV) and Anaerobic Sealant**
2. Remove any old thread sealant, gasket material or sealant using **EN - 28410** remover.
3. Clean all cylinder head surfaces with non-corrosive solvent.

WARNING: Refer to **Safety Glasses Warning** .

4. Blow out all the oil galleries using compressed air.
5. Remove any carbon deposits from the combustion chambers using the **GE - 8358** brush.
6. Clean any debris or build-up from the lifter pockets.

Visual Inspection

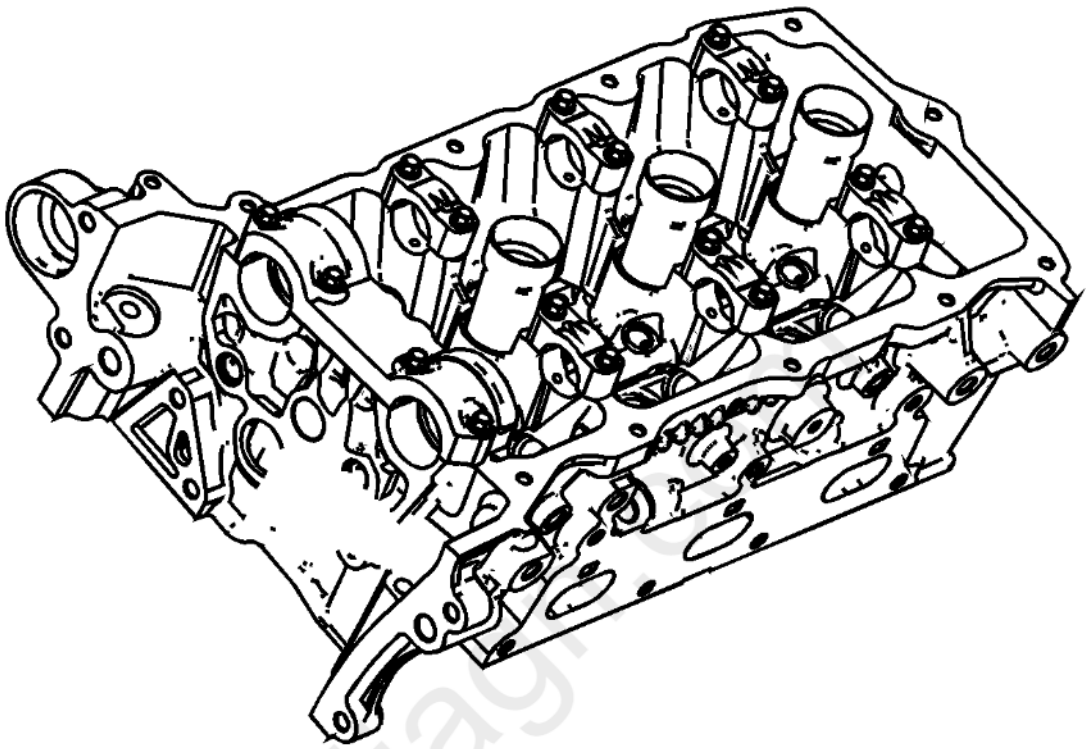

Fig. 147: View Of Cylinder Head
Courtesy of GENERAL MOTORS COMPANY

1. Inspect the cylinder head camshaft bearing surfaces for the following conditions:
    - Excessive scoring or pitting
    - Discoloration from overheating
    - Deformation from excessive wear
    - If the camshaft bearing journals appear to be scored or damaged, you must replace the cylinder head. DO NOT machine the camshaft bearing journals.
2. If any of the above conditions exist on the camshaft bearing surfaces, replace the cylinder head.
3. Inspect the cylinder head for the following:
    - Cracks, damage or pitting in the combustion chambers
    - Debris in the oil galleries - Continue to clean the galleries until all debris is removed.
    - Coolant leaks or damage to the deck face sealing surface - If coolant leaks are present, measure the surface warpage as described under Cylinder Head Measurement - Deck Flatness Inspection.
    - Burrs or any defects that would degrade the sealing of the NEW secondary camshaft drive chain tensioner gasket
    - Damage to any gasket surfaces
    - Damage to any threaded bolt holes
    - Burnt or eroded areas in the combustion chamber

- Cracks in the exhaust ports and combustion chambers
- External cracks in the water passages
- Restrictions in the intake or exhaust passages
- Restrictions in the cooling system passages
- Rusted, damaged or leaking core plugs

4. If the cylinder head is cracked or damaged, it must be replaced. No welding or patching of the cylinder head is recommended.

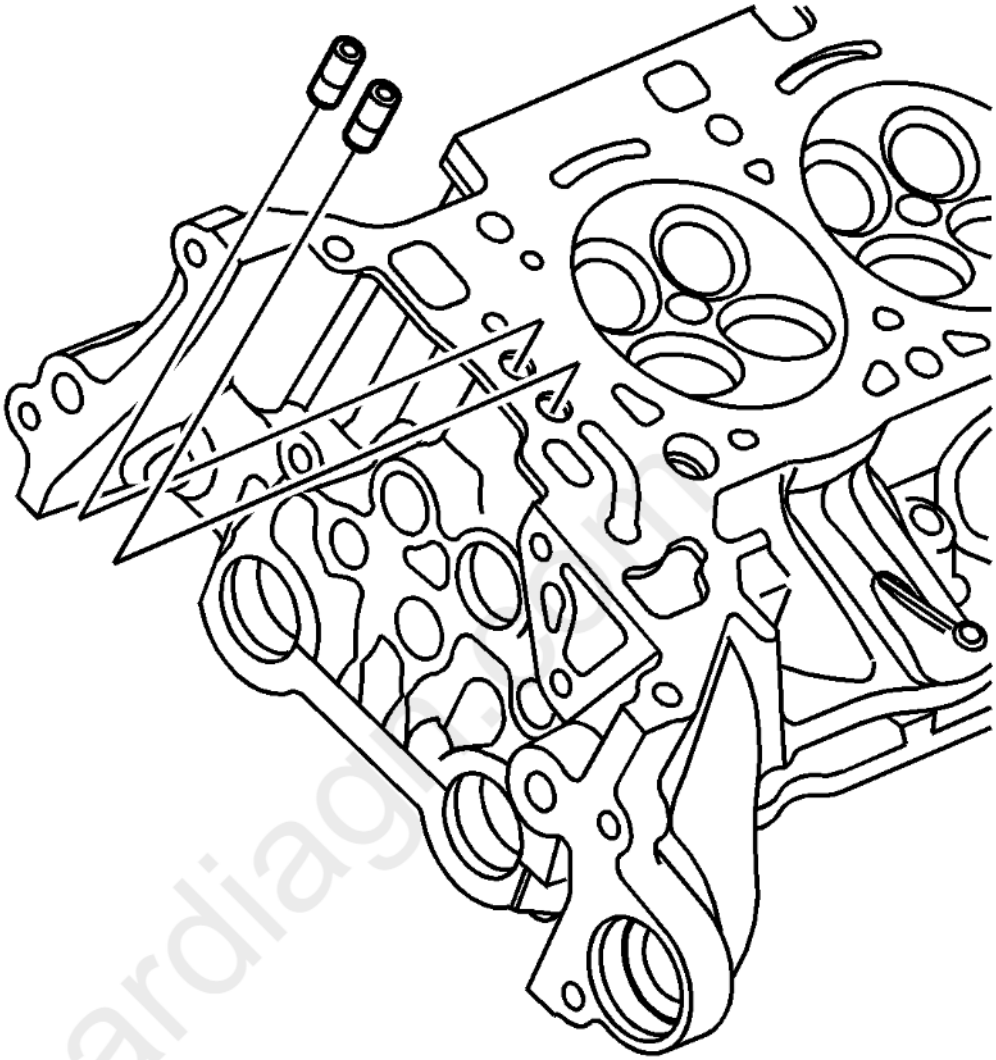

Fig. 148: View Of Camshaft Position Actuator Oil Feed Check Valve
Courtesy of GENERAL MOTORS COMPANY

5. Inspect the camshaft position actuator oil feed check valves. Damaged, restricted or clogged check valves must be replaced. Refer to **Cylinder Head Disassemble**.

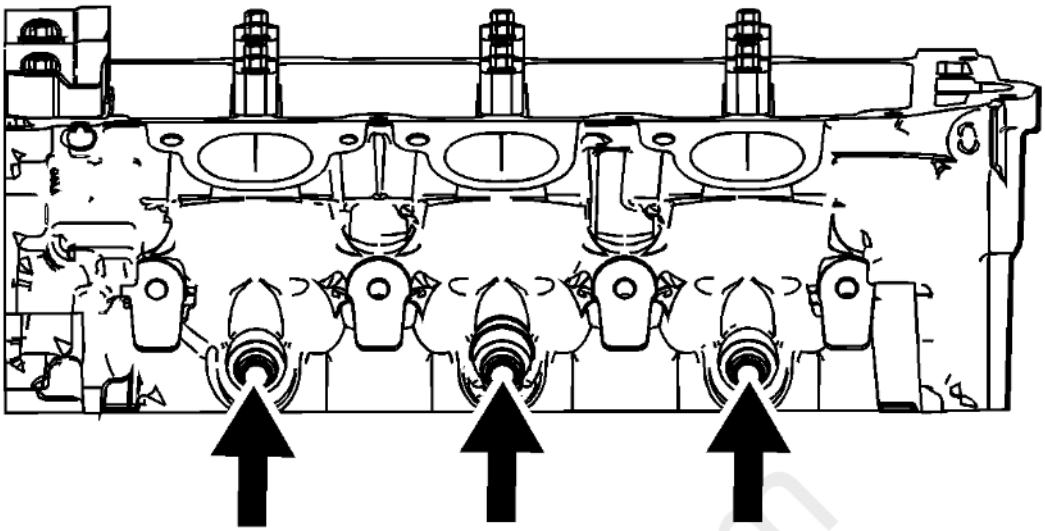

Fig. 149: View of Fuel Rail injector Bores
Courtesy of GENERAL MOTORS COMPANY

6. Inspect the fuel rail injector bores and clean with **EN-47909** kit, if required.

Cylinder Head Measurement

Camshaft Journal Clearance

1. Install the camshaft bearing cap in the cylinder head without the camshaft.

CAUTION: **Refer to Fastener Caution .**

2. Install the camshaft cap bolts and tighten to 10 N.m (89 lb in).
3. Measure the camshaft bearings using an inside micrometer.
4. Subtract the camshaft journal diameter from the camshaft bearing diameter. This will provide the running clearance. If the running clearance exceeds specifications and the camshaft journals are within specification, replace the cylinder head.

Camshaft Journal Alignment

1. Ensure the camshafts are serviceable.
2. Inspect the cylinder head camshaft bearing surfaces for any imperfections or scratches that could inhibit proper camshaft clearances. Repair minor imperfections or scratches.
3. Install the camshafts in the cylinder head.
4. Install the camshaft bearing caps.
5. Install the camshaft cap bolts and tighten to 10 N.m (89 lb in).
6. Ensure the camshafts spin freely in the cylinder head. If the camshaft does not run freely, replace the cylinder head.

cardiagn.com

Deck Flatness Inspection

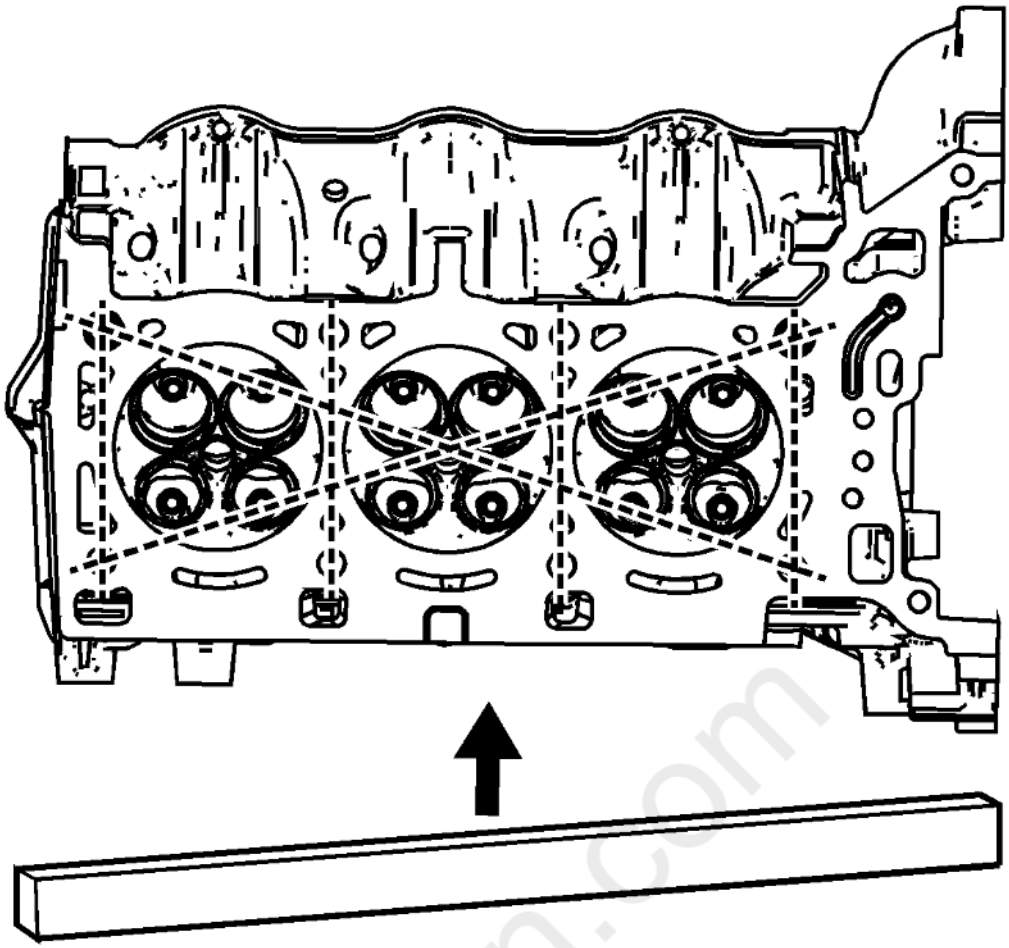

Fig. 150: Measuring Deck Flatness
Courtesy of GENERAL MOTORS COMPANY

1. Ensure the cylinder head decks are clean and free of gasket material.
2. Inspect the surface for any imperfections or scratches that could inhibit proper cylinder head gasket sealing.
3. Place a straight-edge diagonally across the cylinder head deck face surface.
4. Measure the clearance between the straight-edge and the cylinder head deck face using a feeler gauge at 4 points along the straight-edge.
5. If the warpage is less than 0.05 mm (0.002 in), the cylinder head deck surface does not require resurfacing.
6. If the warpage is between 0.05 - 0.20 mm (0.002 - 0.008 in) or any imperfections or scratches that could inhibit proper cylinder head gasket sealing are present, the cylinder head deck surface requires resurfacing.
7. If resurfacing is required the maximum amount that can be removed is 0.25 mm (0.010 in).
8. If the cylinder head deck surface requires more than 0.25 mm (0.010 in) material removal the head must be replaced.

Valve Guide Measurement

carmagn.com

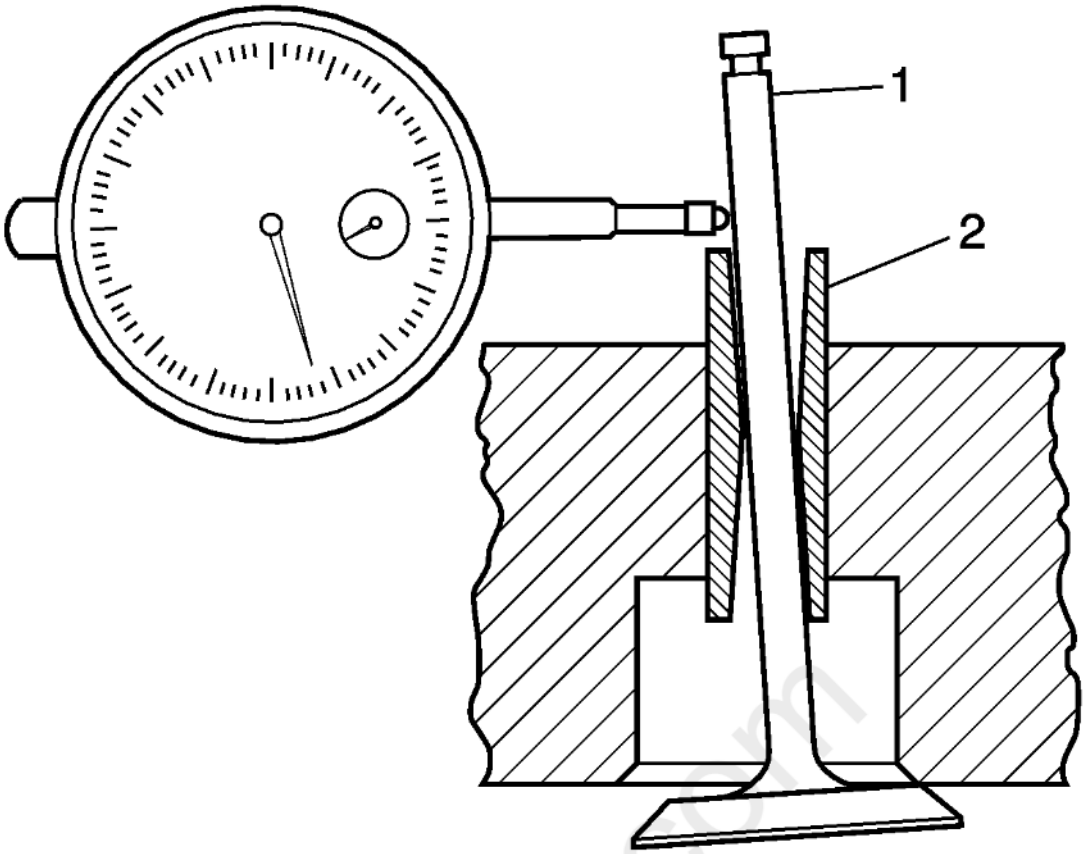

Fig. 151: Inspecting For Excessive Valve Stem To Guide Clearance
Courtesy of GENERAL MOTORS COMPANY

1. Measure the valve stem (1)-to-guide (2) clearance. Excessive valve stem-to-guide clearance may cause an excessive oil consumption and may also cause a valve to break. Insufficient clearance will result in noisy and sticky functioning of the valve and will disturb the engine assembly smoothness.
2. Clamp the **GE - 8001** set to the cylinder head at the camshaft cover rail.
3. Locate the dial indicator so that the movement of the valve stem from side to side, crossways to the cylinder head, will cause a direct movement of the indicator stem. The dial indicator stem must contact the side of the valve stem just above the valve guide.
4. Drop the valve head about 0.064 mm (0.0025 in) off the valve seat.
5. Use light pressure when moving the valve stem from side to side in order to obtain a clearance reading. Refer to **Engine Mechanical Specifications** for proper clearance.
    - If the clearance for the valve is greater than specifications and a new standard diameter valve stem will not bring the clearance within specifications, the valve guide may be oversized by 0.075 mm (0.003 in) using the **EN - 42096** reamer. There is 1 size of oversized valve stem available for service.
    - Valve guide wear at the bottom 10 mm (0.390 in) of the valve guide is not significant to normal operation.
    - If oversizing the guide does not bring the clearance within specifications, replace the cylinder head.

VALVE SPRING INSPECTION AND MEASUREMENT

Special Tools

EN 22738-B Valve Spring Tester

For equivalent regional tools, refer to **Special Tools** .

Inspection Procedure

1. Clean the valve springs in solvent.

   WARNING: Refer to Safety Glasses Warning .

2. Dry the valve springs with compressed air.
3. Inspect the valve springs for broken coils or coil ends.

Measurement Procedure

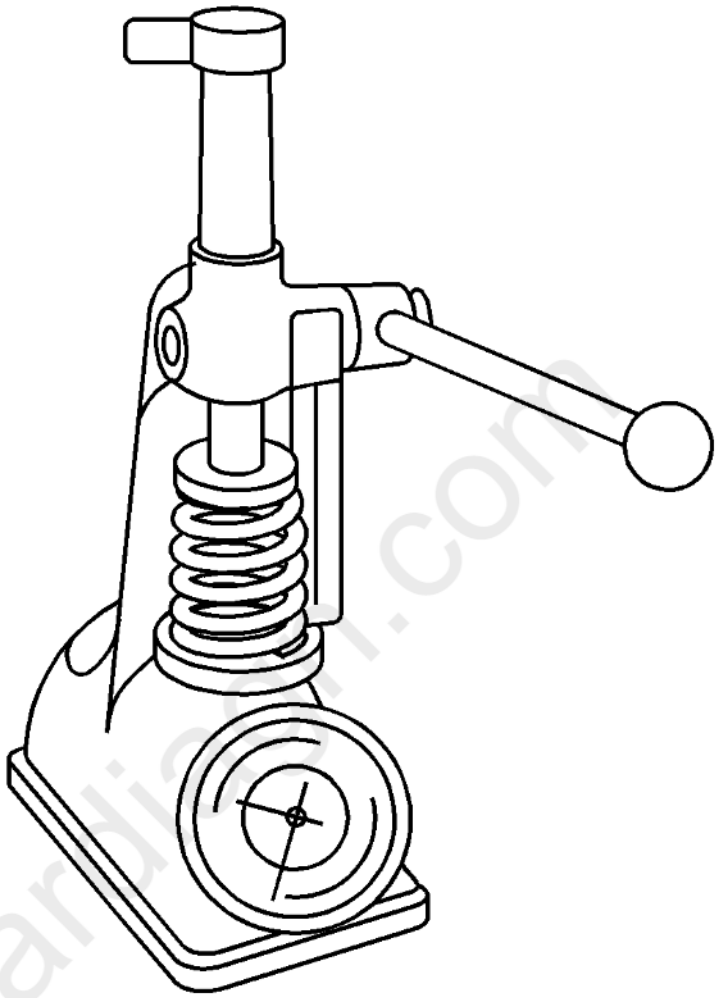

Fig. 152: Measuring Valve Spring Tension
Courtesy of GENERAL MOTORS COMPANY

1. Measure the valve spring tension using the **EN 22738-B** tester. Refer to Engine Mechanical Specifications .
2. If low valve spring load is found, replace the valve springs. DO NOT use shims to increase spring load. The use of shims can cause the valve spring to bottom out before the camshaft lobe is at peak lift.

VALVE AND SEAT GRINDING

Valve Cleaning Procedure

1. Use soft bristle wire brush to clean any carbon build-up from the valve head. DO NOT use a wire brush on any part of the valve stem. The valve stem is chrome plated to provide enhanced wear characteristics. Wire brushing the stem could remove the chrome plating.
2. Thoroughly clean the valve with solvent and wipe dry.

Valve Visual Inspection Procedure

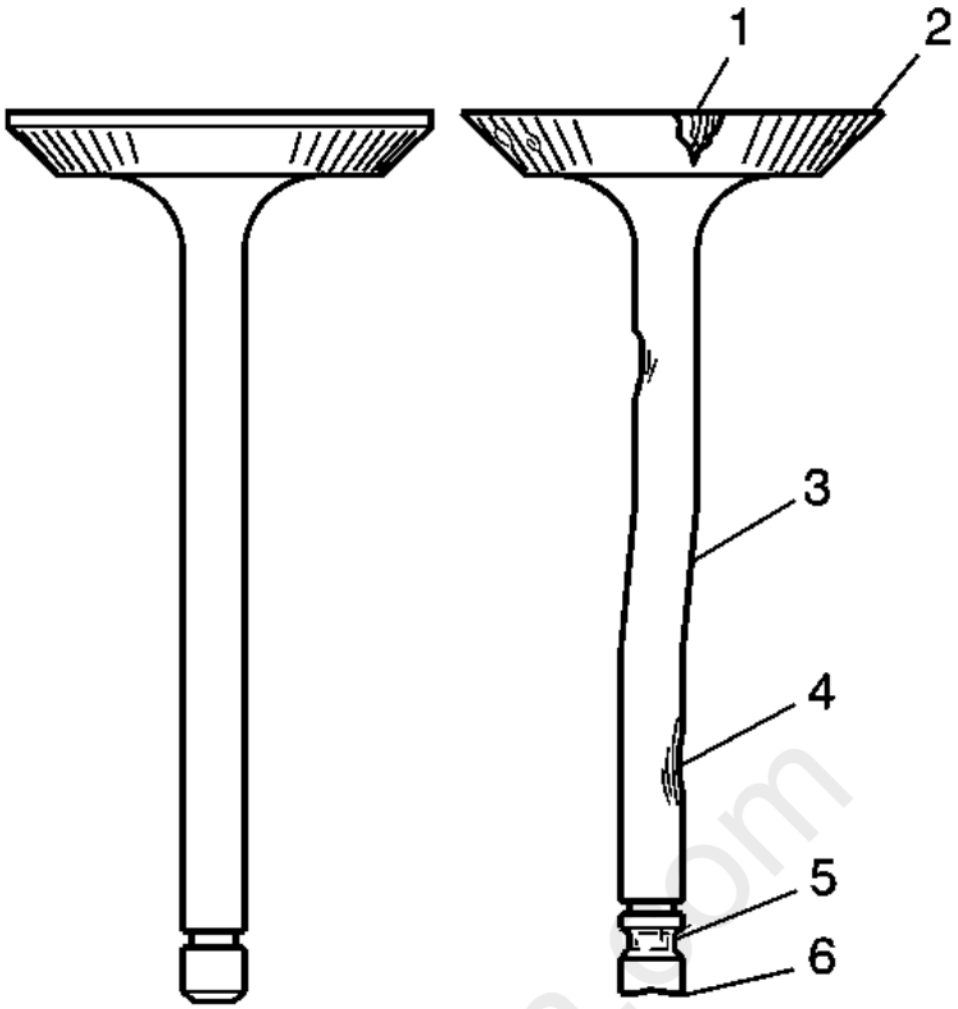

Fig. 153: Identifying Inspection Points For Valves Damage
Courtesy of GENERAL MOTORS COMPANY

1. Inspect the valve for damage from the head to tip for the following conditions:
    - Pitting in the valve seat area (1)
    - Lack of valve margin (2)
    - Bending in the valve stem (3)
    - Pitting or excessive wear in the stem (4)
    - Worn valve key grooves (5)
    - Worn valve tip (6)
2. Replace the valve if any of these conditions exist.

Valve Measurement Overview

NOTE: **The following measurement and reconditioning procedures must be followed to ensure proper engine performance.**

1. Proper valve service is critical to engine performance. Therefore, all detailed measurement procedures must be followed to identify components that are out of specification.
2. If the measurement procedures reveal that the valve seat must be reconditioned, it is critical to perform the measurement procedures after reconditioning. Valves for E85-compatible engines CANNOT be reconditioned. Any grinding, lapping, wire-brushing or other similar procedure will damage or destroy the coating that gives the valve the E-85 compatible features. If an E85-compatible valve is out of specification in any area, replace it.

Valve Seat Width Measurement Procedure

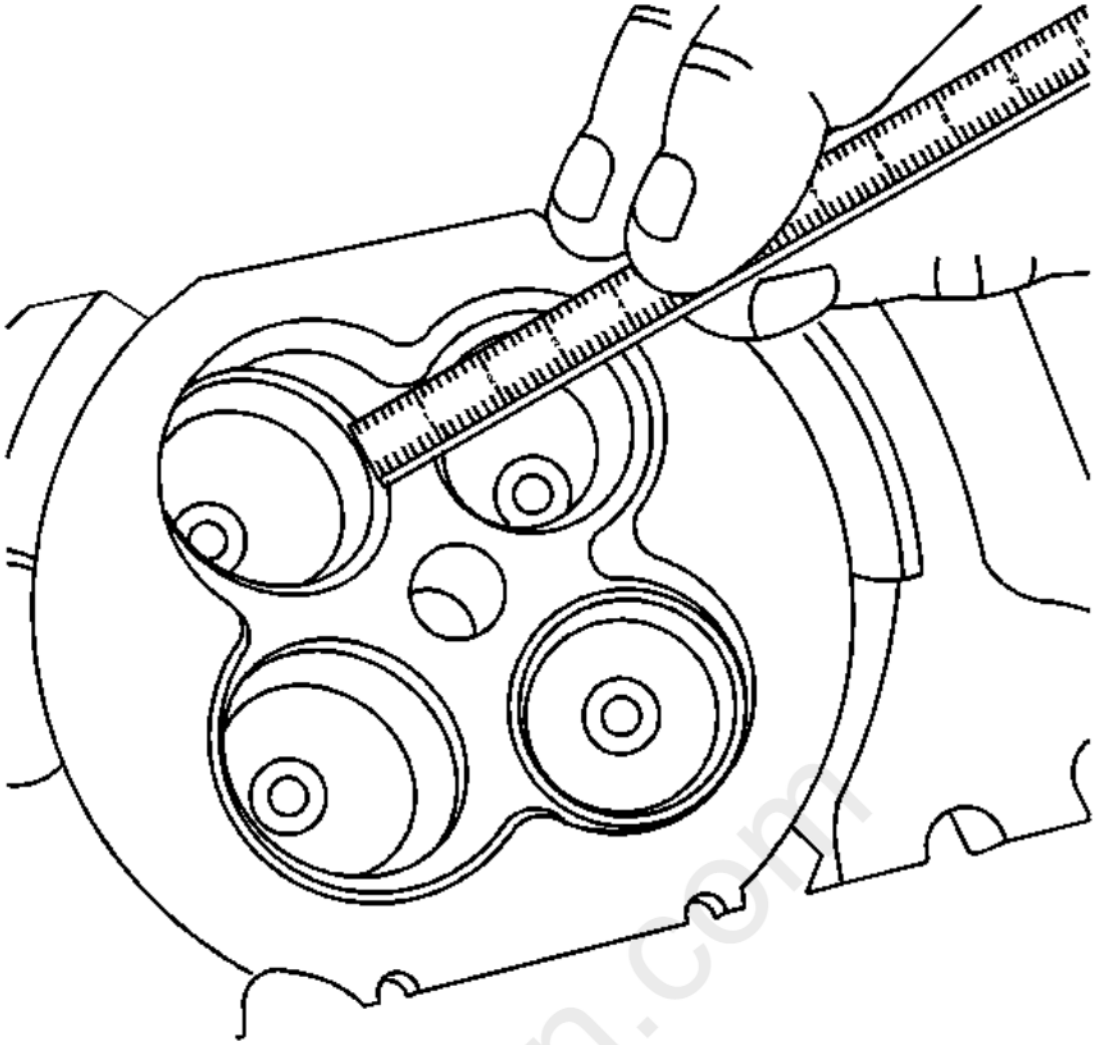

Fig. 154: Checking Valve Seat Width
Courtesy of GENERAL MOTORS COMPANY

1. Measure the valve seat width in the cylinder head using a proper scale.

cardiagn.com

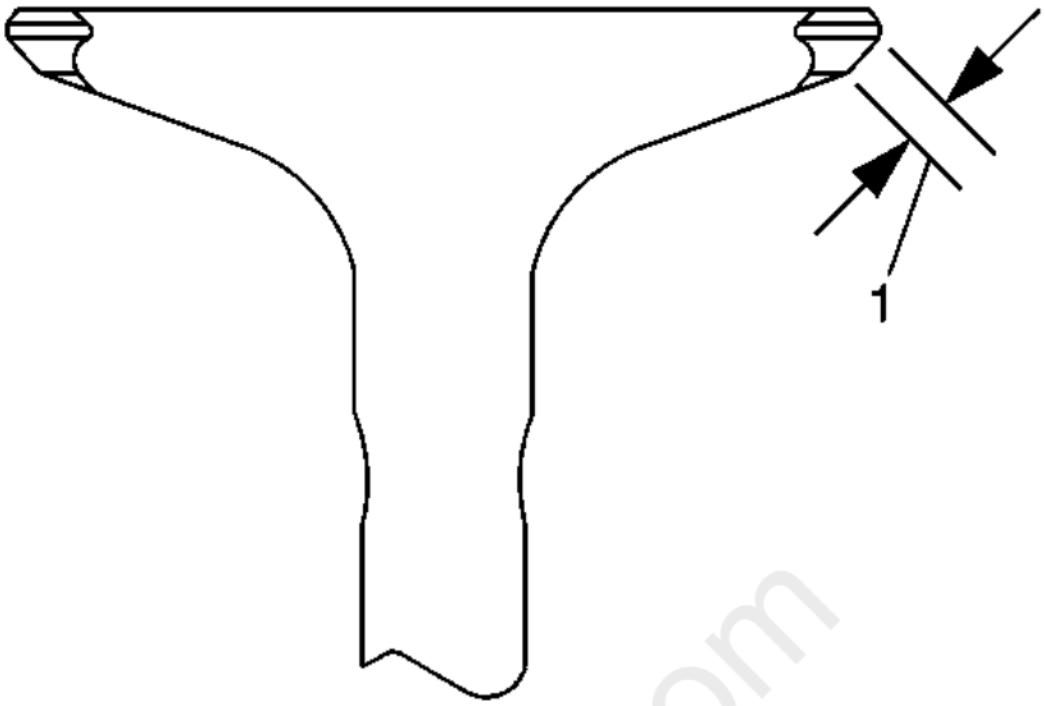

Fig. 155: Measuring Seat Width On Valve Face
Courtesy of GENERAL MOTORS COMPANY

2. Measure the seat width on the valve face (1) using a proper scale.

NOTE: **The seat contact area must be at least 0.5 mm (0.020 in) from the outer diameter (margin) of the valve. If the contact area is too close to the margins, the valve must be replaced.**

3. Compare your measurements with the specifications listed in **Engine Mechanical Specifications** .
4. If the seat widths are acceptable, check the valve seat roundness using the Valve Seat Roundness Measurement Procedure.
5. If the seat width is not acceptable, you must replace the valve. Proper valve seat width is critical to providing the correct amount of valve heat dissipation.

Valve Seat Roundness Measurement Procedure

1. Measure the valve seat roundness using a dial indicator attached to a tapered pilot installed in the guide. The pilot should have a slight bind when installed in the guide.

CAUTION: **The correct size pilot must be used. Do not use adjustable diameter pilots. Adjustable pilots may damage the valve guides.**

2. Compare your measurements with the specifications listed in **Engine Mechanical Specifications** .
3. If the valve seat exceeds the roundness specification, you must replace the valve.
4. If new valves are being used, the valve seat roundness must be within 0.05 mm (0.002 in).

Valve Margin Measurement Procedure

cardiagn.com

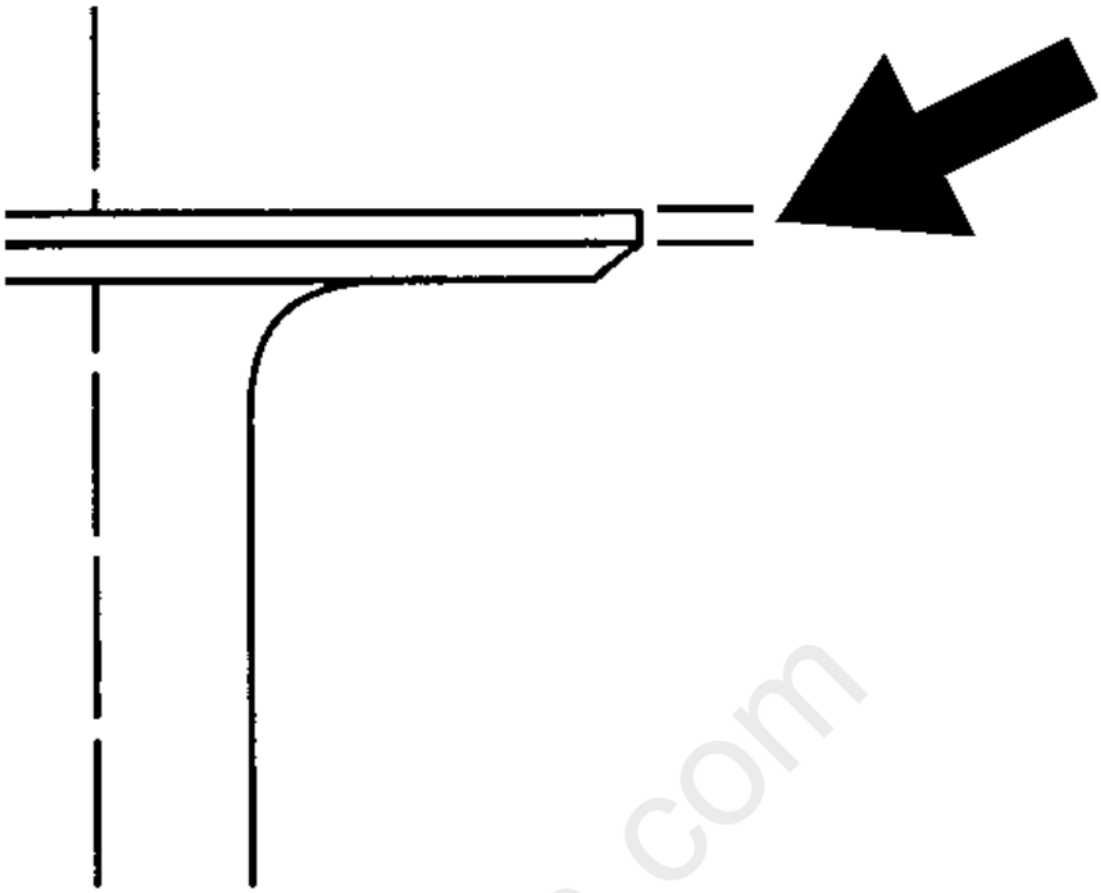

Fig. 156: View Of Valve Margin Measurement
Courtesy of GENERAL MOTORS COMPANY

1. Measure the valve margin using an appropriate scale.
2. Reference the specifications in this section for minimum valve margin and compare them to your measurements.
3. If the valve margins are beyond specification, replace the valves.
4. If the valve margins are within specification, test the valve for seat concentricity using the Valve-to-Seat Concentricity Measurement Procedure.

Valve-to-Seat Concentricity Measurement Procedure

NOTE:

- **Checking the valve-to-seat concentricity determines whether the valve and seat are sealing properly.**
- **You must measure the valve face and the valve seat to ensure proper valve sealing.**

cardiagn.com

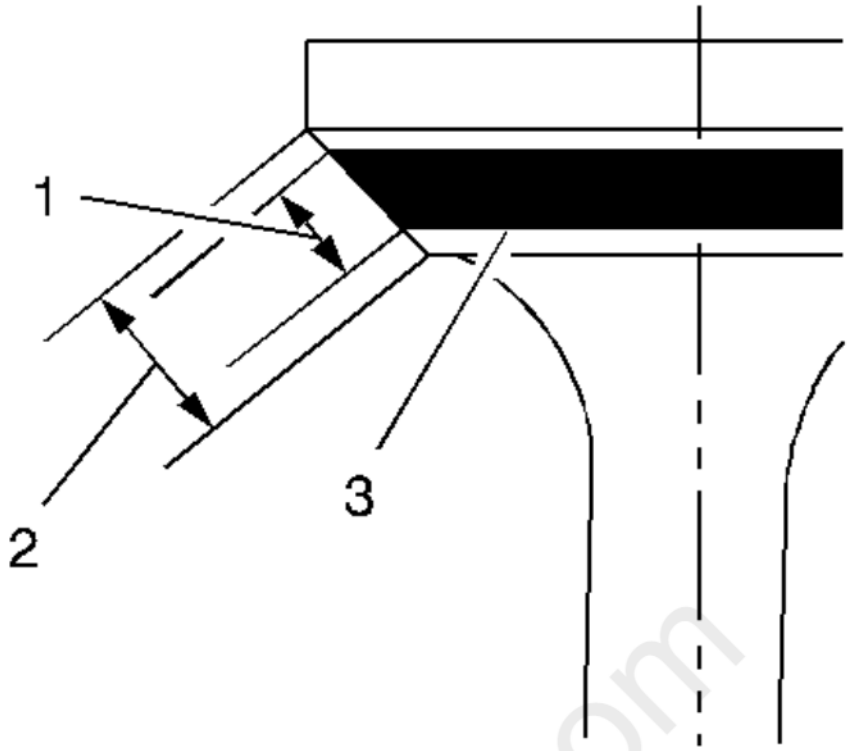

Fig. 157: View Of Valve Contact Face Measurements
Courtesy of GENERAL MOTORS COMPANY

1. Coat the valve face lightly with blue dye (3).
2. Install the valve in the cylinder head.
3. Turn the valve against the seat with enough pressure to wear off the dye.
4. Remove the valve from the cylinder head.
5. Inspect the valve face.
    - If the valve face is concentric, providing a proper seal-with the valve stem, a continuous mark will be made around the entire face (1).

      NOTE: **The wear mark MUST be at least 0.5 mm (0.020 in) from the outer diameter, the margin, of the valve. If the wear mark is too close to the margin, the seat must be reconditioned to move the contact area away from the margin.**

    - If the face is not concentric with the stem, the mark will NOT be continuous around the valve face. The valve should be replaced and the seat must be reconditioned using the Valve and Seat Reconditioning Procedure.

Valve and Seat Reconditioning Procedure

cardiagn.com

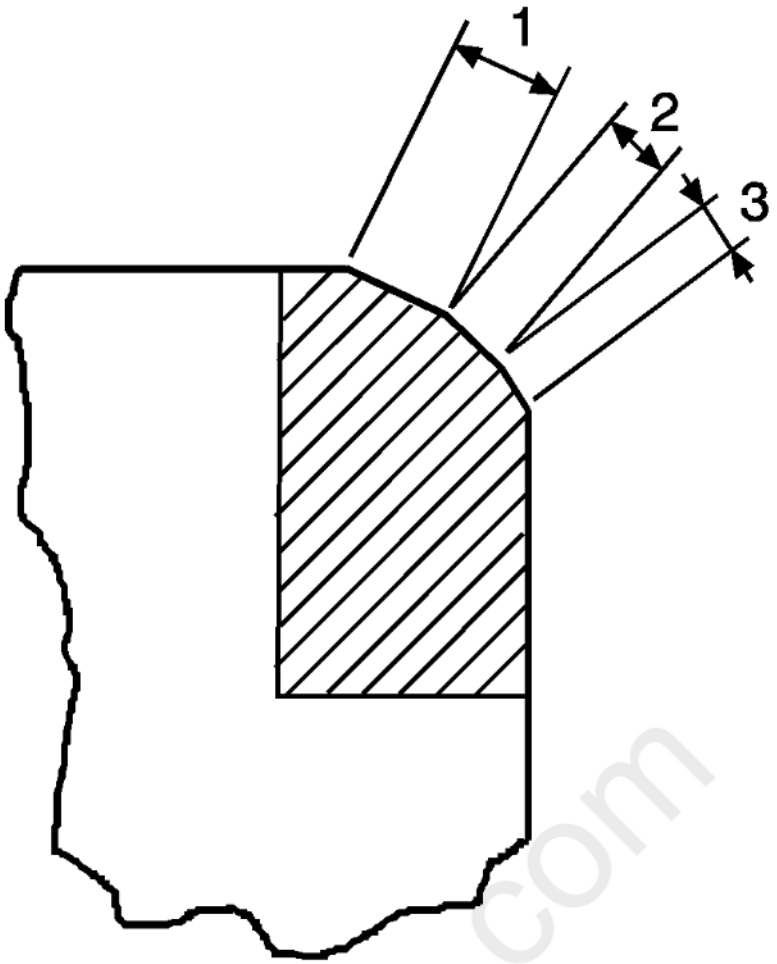

Fig. 158: View Of Valve Seat Proper Angles
Courtesy of GENERAL MOTORS COMPANY

NOTE:

- **If the valve seat width, roundness or concentricity is beyond specifications, you must grind the seats in order to ensure proper heat dissipation and prevent the buildup of carbon on the seats.**
- **A NEW valve must be used with any reconditioned seat.**

1. Grind the valve seats (2) to the proper angle specification listed in **Engine Mechanical Specifications** .
2. Using the proper angle specification listed in **Engine Mechanical Specifications** , grind, relieve, the valve seats (1) to correctly position the valve seating surface (2) to the valve.
3. Using the proper angle specification listed in **Engine Mechanical Specifications** , grind, undercut, the valve seats (3) to narrow the valve seat widths to the specifications listed in **Engine Mechanical Specifications** .
4. When grinding the seats, grind off as little material as possible. Cutting valve seat results in lowering the valve spring pressure.
5. Install the valve in the cylinder head. Do not lap the valves under any condition, whether the valves are new or used.
6. After obtaining the proper valve seat width in the cylinder head, you must re-measure the valve stem height using the Valve Stem Height Measurement Procedure.
7. If the valve stem height is acceptable, test the seats for concentricity using the Valve-to-Seat Concentricity Measurement Procedure.

Valve Stem Height Measurement Procedure

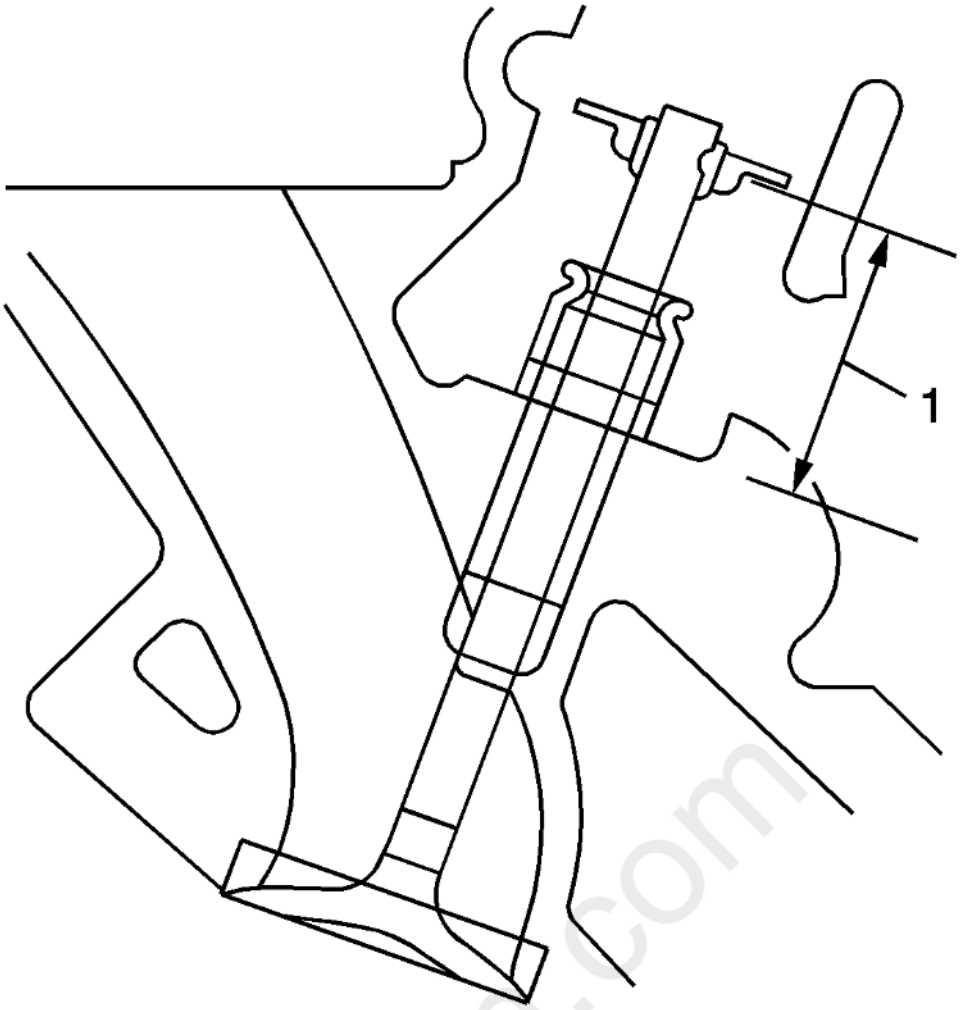

Fig. 159: Measuring Valve Stem Height
Courtesy of GENERAL MOTORS COMPANY

NOTE: **To determine the valve stem height measurement, measure from the valve spring seat to the valve spring retainer.**

1. Install the valve into the valve guide.
2. Ensure the valve is seated to the cylinder head valve seat.
3. Install the valve stem oil seal.
4. Install the valve spring retainer and valve stem locks.
5. Measure the distance (1) between the cylinder head to the bottom of the valve spring retainer. Refer to **Engine Mechanical Specifications** .
6. If the maximum height specification is exceeded, a new valve should be installed and the valve stem height re-measured.

CAUTION: **DO NOT grind the valve stem tip. The tip of the valve is hardened and grinding the tip will eliminate the hardened surface causing premature wear and possible engine damage.**

CAUTION: **DO NOT use shims in order to adjust valve stem height. The use of shims will cause the valve spring to bottom out before the camshaft lobe is at peak lift and engine damage could result.**

7. If the valve stem height still exceeds the maximum height specification, the cylinder head must be replaced.

FUEL RAIL AND INJECTORS CLEANING AND INSPECTION

Special Tools

- **EN-47909** Injector Bore and Sleeve Cleaning Kit
- **EN-49245** Injector Seal Installer Kit
- **EN-49247** Injector Retaining Clip Installer

For equivalent regional tools, refer to **Special Tools** .

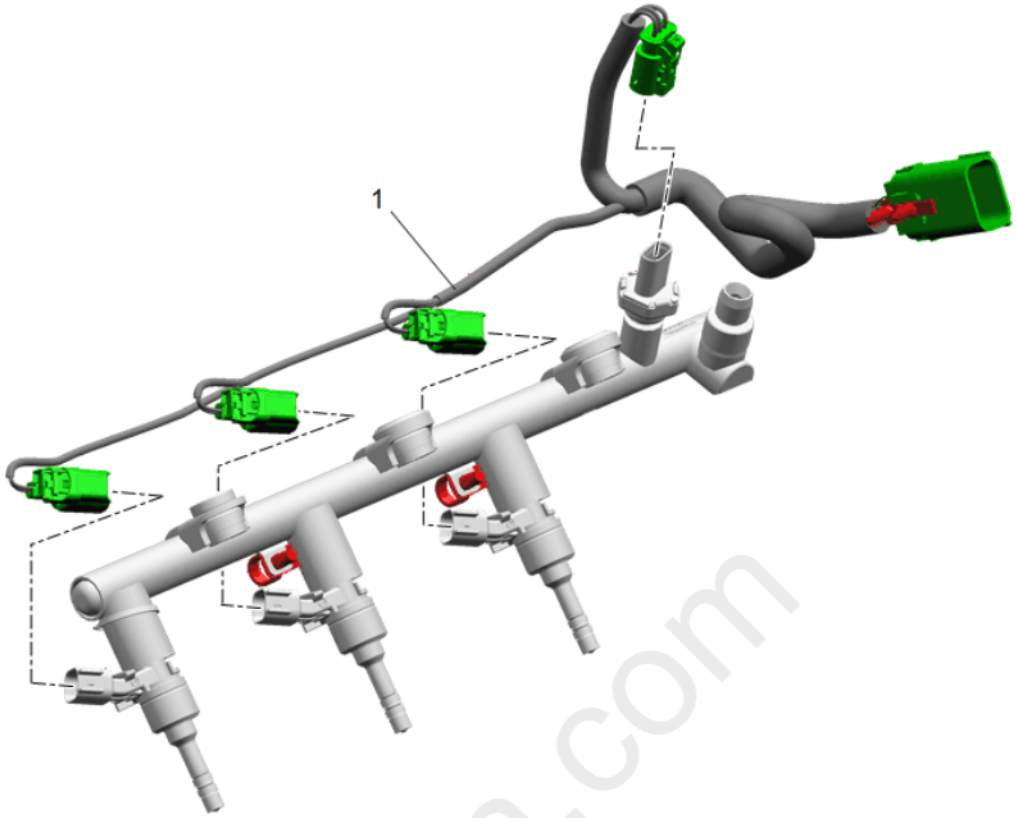

Fig. 160: View Of Fuel Rail Wiring Harness
Courtesy of GENERAL MOTORS COMPANY

1. Detach and remove the fuel rail wiring harness (1) from the fuel injector rail.

cardiagn.com

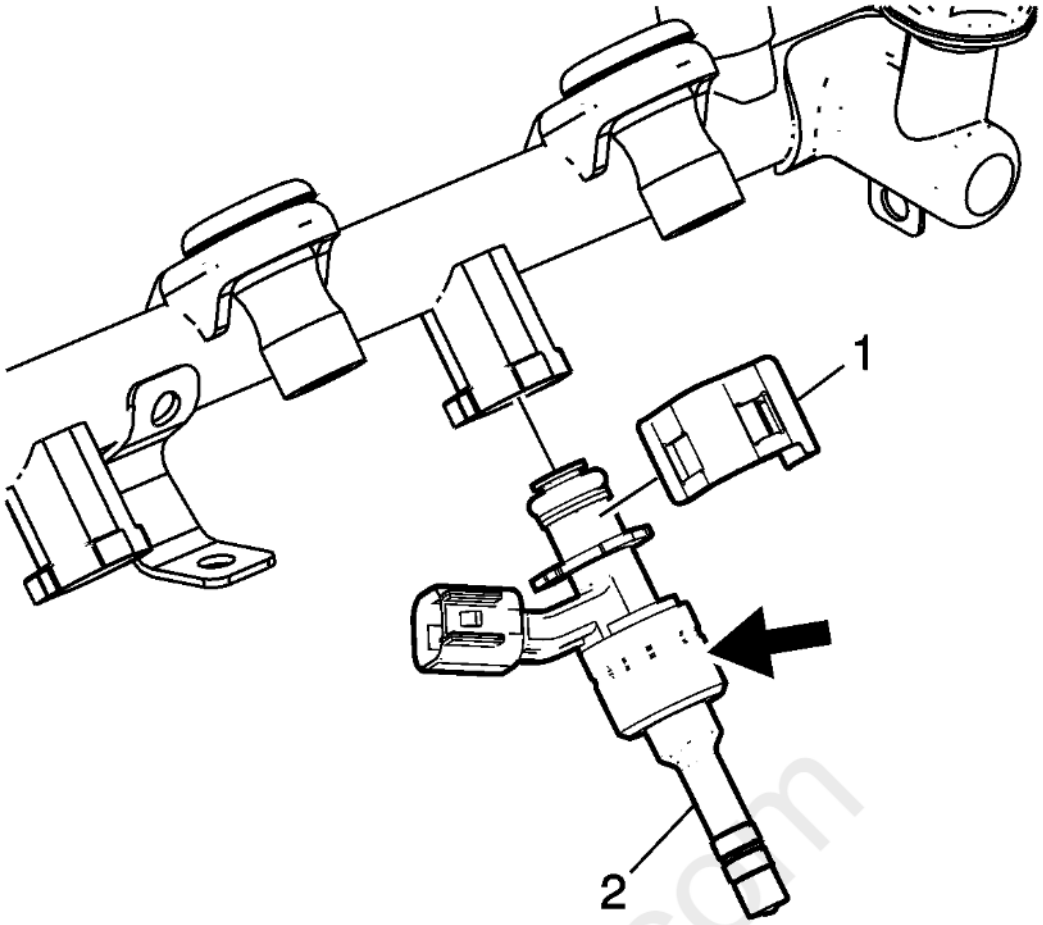

Fig. 161: View Of Fuel Injector & Retainer
Courtesy of GENERAL MOTORS COMPANY

2. Using a suitable tool remove the fuel injector to rail retainer (1) from the fuel injector rail by spreading both sides of the fuel injector to rail retainer at the same time.
3. Discard the fuel injector to rail retainer (1).
4. Carefully twist the fuel injector to remove the fuel injector (2) from the fuel injector rail.

cardiagn.com

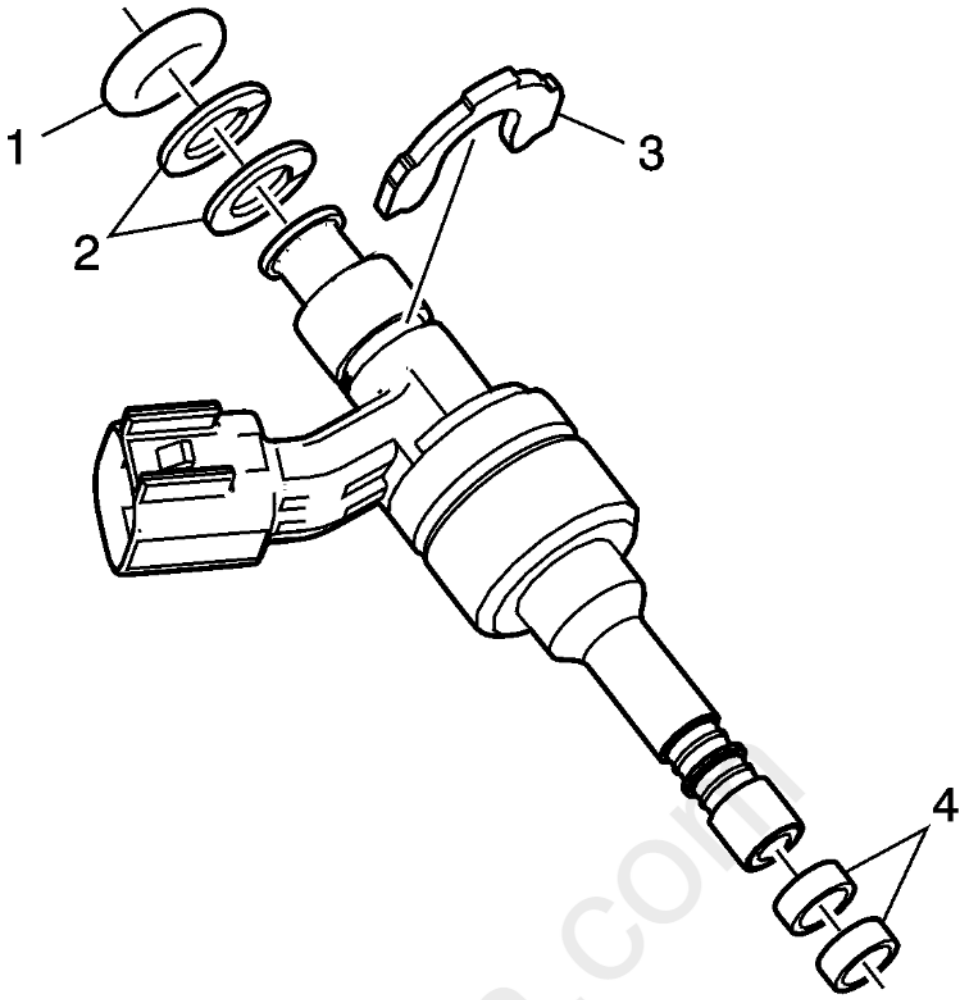

Fig. 162: View Of Fuel Injector Components
Courtesy of GENERAL MOTORS COMPANY

5. Using a suitable tool remove the fuel injector bushing (3).
6. Discard fuel injector bushing.
7. Remove and discard the following components:
    - Fuel injector O-ring (1).
    - Plastic spacers (2).
    - Fuel injector seals (4).

cardiagn.com

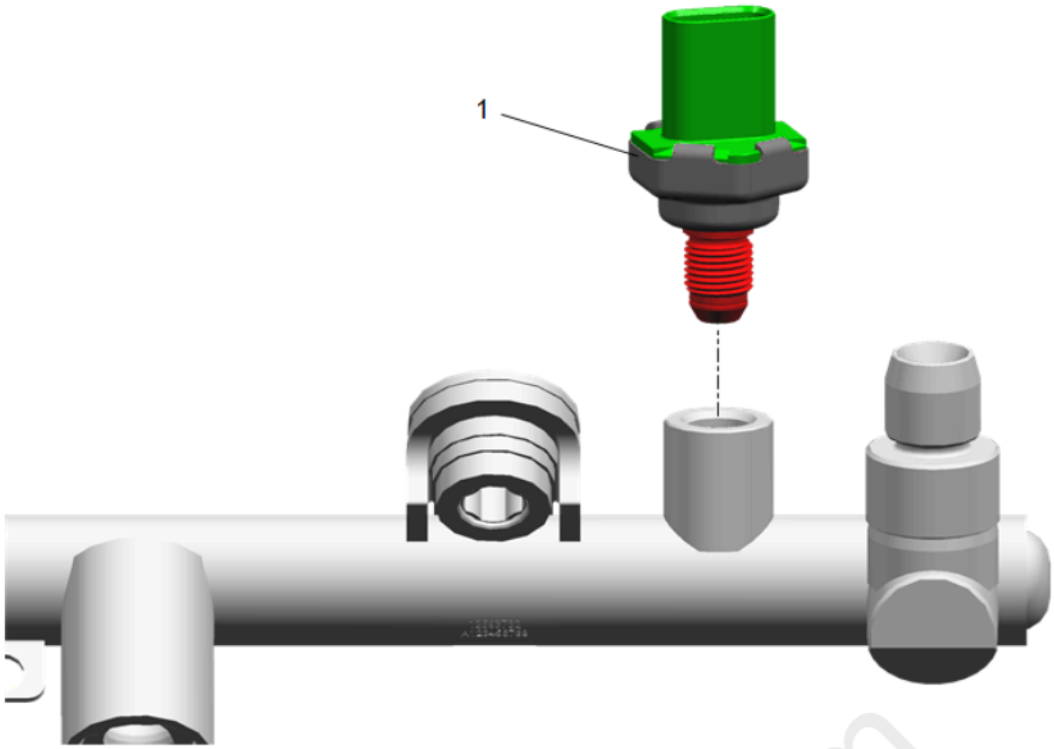

Fig. 163: Identifying Fuel Pressure Sensor
Courtesy of GENERAL MOTORS COMPANY

NOTE: **Do not apply force to the plastic housing of the fuel pressure sensor. Failure to comply will destroy the sensor.**

8. Remove the fuel pressure sensor (1) from the fuel injector rail.

NOTE: **Do not soak or submerge the fuel rail or injectors in solvent.**

9. Clean the exterior of the fuel injector rail and fuel injectors with solvent using the injector bore and sleeve cleaning kit **EN-47909** injector bore and sleeve cleaning kit.

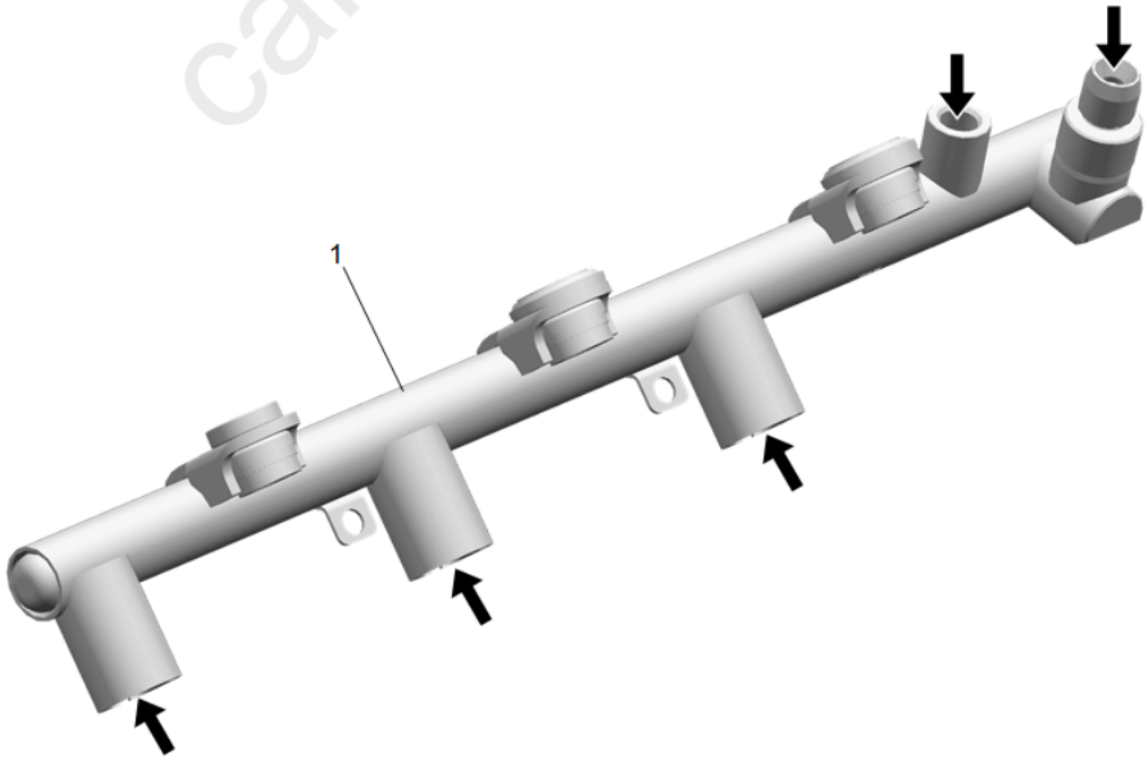

Fig. 164: Identifying Fuel Rail Inspection Areas
Courtesy of GENERAL MOTORS COMPANY

cardiagn.com

10. Inspect the fuel injector rail (1) for the following conditions:
    - Damage, debris or restrictions to the fuel rail
    - Damage, debris or restrictions to the fuel ports in the fuel rail
    - Damage to the mounting area for the fuel rail
    - Damage to the fuel rail mounting bolts or mounting bolt grommets/isolators
    - Damage to the threads on the fuel rail feed fitting
    - Damage to the threads in the fuel pressure sensor bore
    - Damage to the fuel pressure sensor connector, threads, or sealing face
11. If any of the above conditions are found, replace the fuel injector rails. Do not attempt to repair the fuel injector rails.

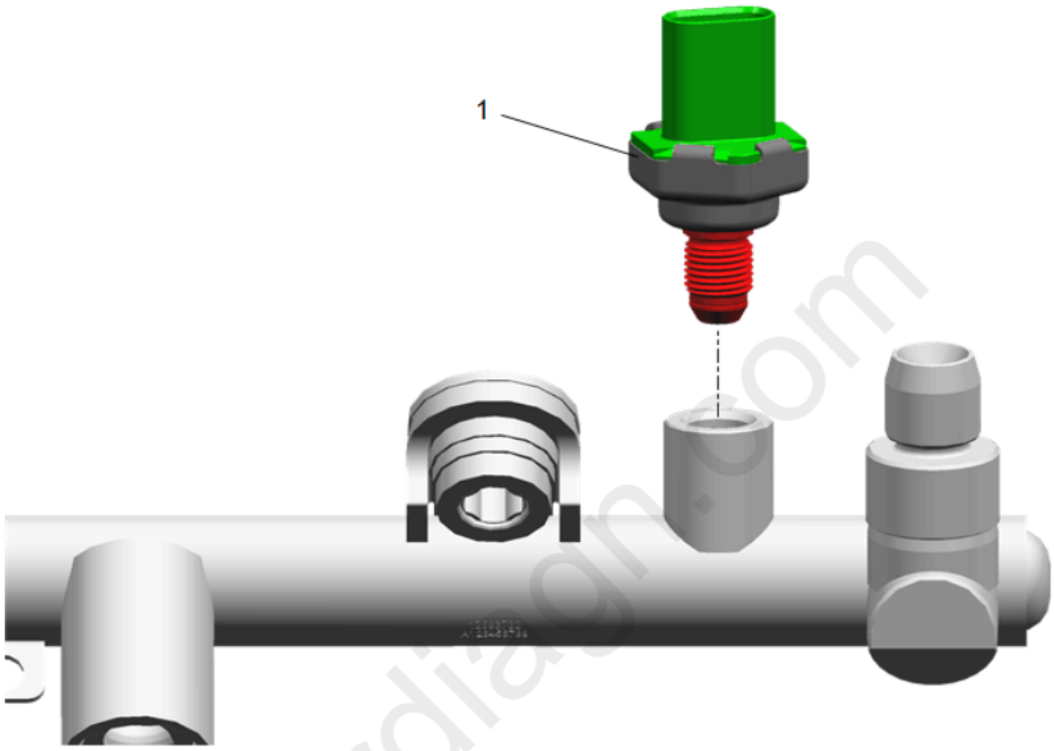

Fig. 165: Identifying Fuel Pressure Sensor
Courtesy of GENERAL MOTORS COMPANY

NOTE: **Do not apply force to the plastic housing of the fuel pressure sensor. Failure to comply will destroy the sensor.**

12. Install the fuel pressure sensor (1) to the fuel injector rail.

NOTE: **Ensure that the fuel rail threads have been cleaned of any excess fuel or the fuel pressure sensor will NOT seal properly.**

1. Lubricate the threads and the sealing area in the fuel rail with silicon free engine oil. Refer to **Adhesives, Fluids, Lubricants, and Sealers** for recommended lubricant.
2. Lubricate the threads and the sealing area on the fuel pressure sensor with silicon free engine oil. Refer to **Adhesives, Fluids, Lubricants, and Sealers** for recommended lubricant.
3. Install the fuel pressure sensor to the fuel injector rail and hand tighten.
4. Remove the fuel pressure sensor from the fuel injector rail and re-lubricate.

CAUTION: **Refer to Fastener Caution .**

5. Install the fuel pressure sensor to the fuel injector rail and tighten to 33 N.m (25 lb ft).

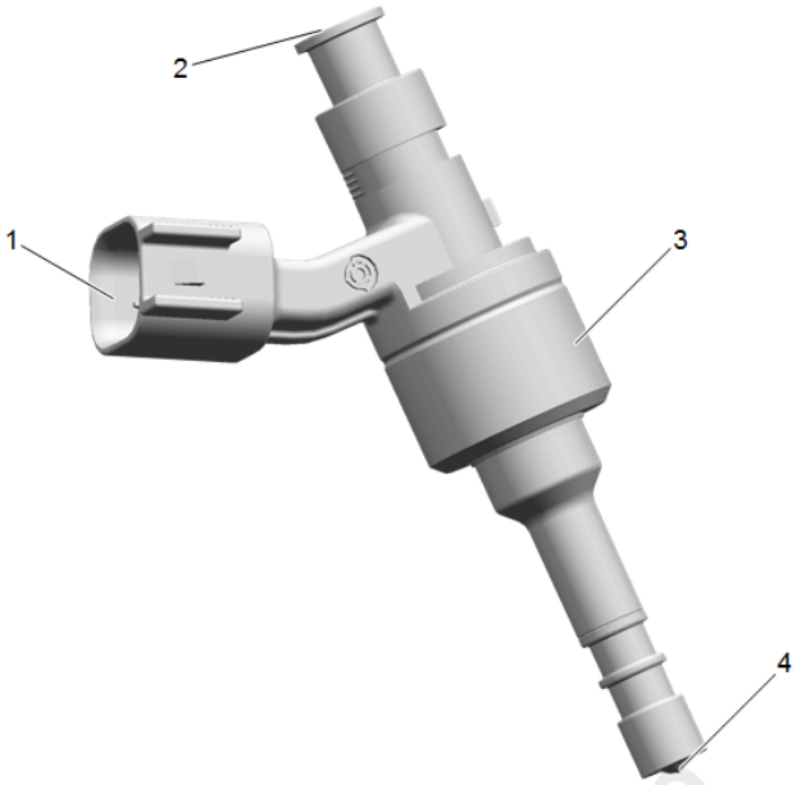

Fig. 166: Identifying Fuel Injector Components
Courtesy of GENERAL MOTORS COMPANY

13. Inspect the fuel injectors for the following conditions:
    - Damage to the fuel injector connector (1)
    - Damage to the fuel inlet cone (2)
    - Damage to the fuel injector body (3)
    - Damage to the fuel injector tip (4)
14. Replace the fuel injector if any of the above conditions are found. Do not attempt to repair the fuel injectors.

cardiagn.com

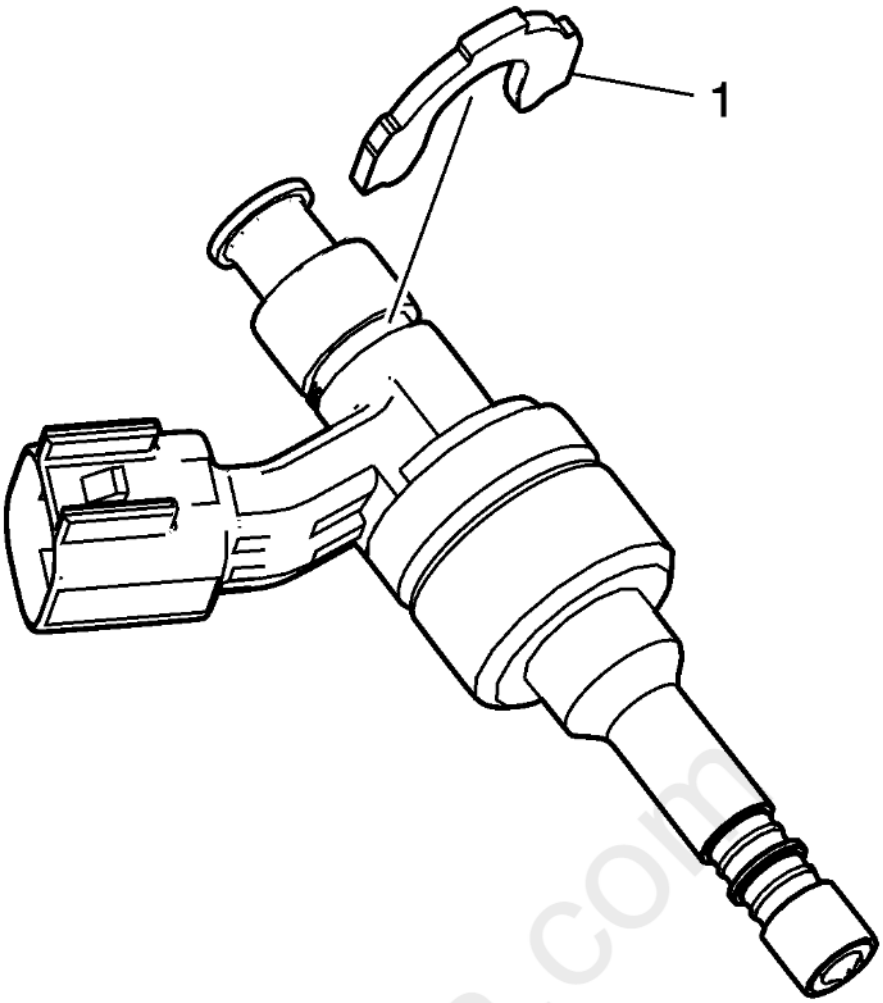

Fig. 167: Fuel Injector Bushing
Courtesy of GENERAL MOTORS COMPANY

NOTE:

- **The fuel injector bushing (1) is to be installed BEFORE O-ring or backup rings are installed.**
- **Listen for an audible click to confirm correct installation of the fuel injector bushing**

15. Install NEW fuel injector bushing (1) onto injector body. Bushing should seat with a distinct "snap" sound and feel. Ensure bushing is fully seated.

cardiagn.com

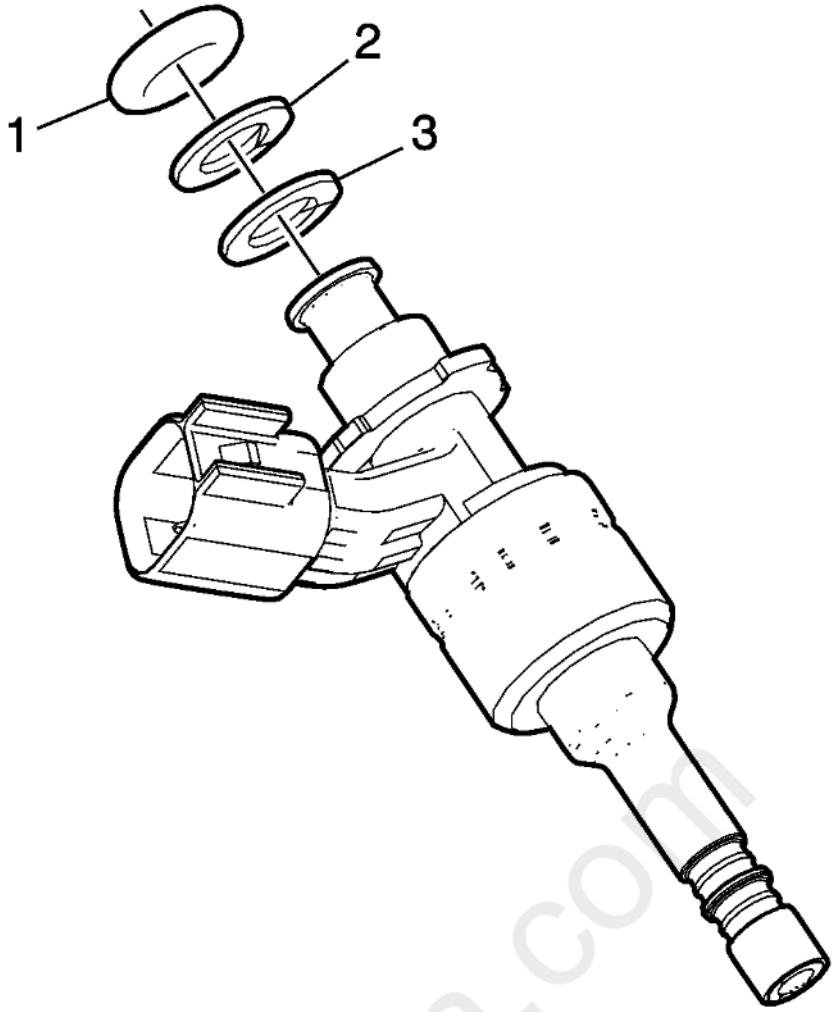

Fig. 168: View Of Injector O-Ring & Spacers
Courtesy of GENERAL MOTORS COMPANY

16. Install the NEW white plastic spacer (3) on the fuel injector first.
17. Install the brown plastic spacer (2) second.
18. Lubricate the NEW O-ring (1) with one drop of clean engine oil.

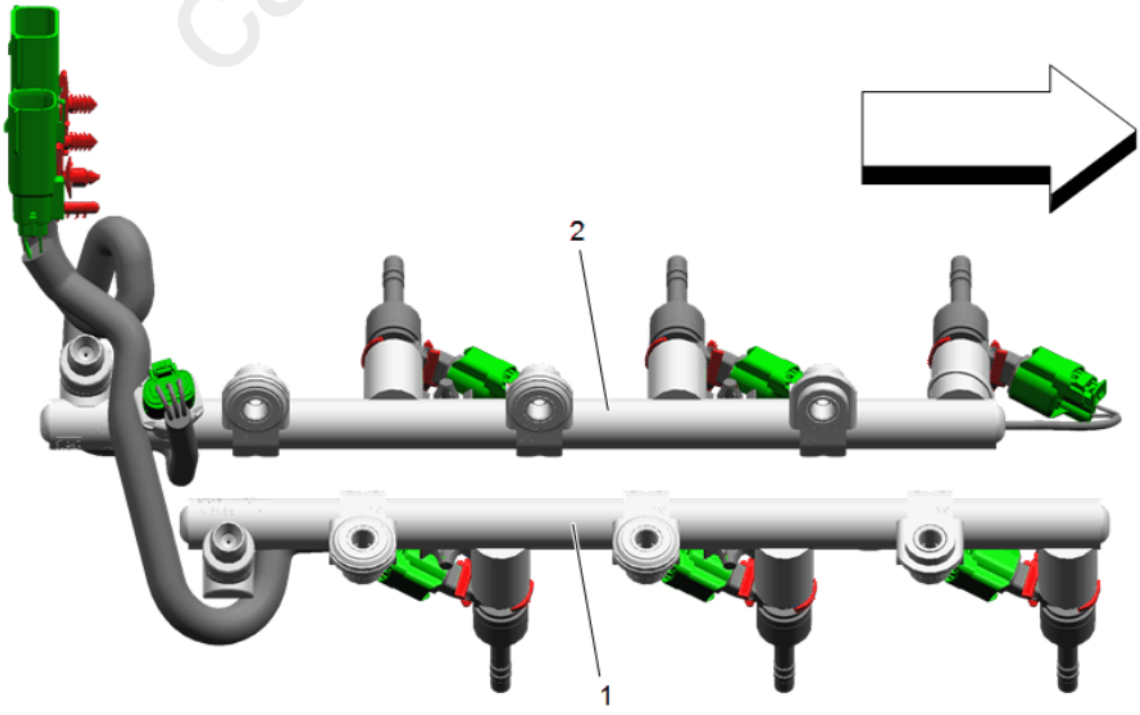

cardiagn.com

Fig. 169: Fuel Injector Wiring Harness Connectors
Courtesy of GENERAL MOTORS COMPANY

CAUTION: **Ensure the fuel injectors are installed in the correct orientation. Improper orientation of the fuel injectors may result in engine misfire and possible engine damage.**

19. The right side (bank 1) fuel injector wiring harness connectors (1) should point to the rear of the engine. The left side (bank 2) fuel injector wiring harness connectors (2) should point to the front of the engine.

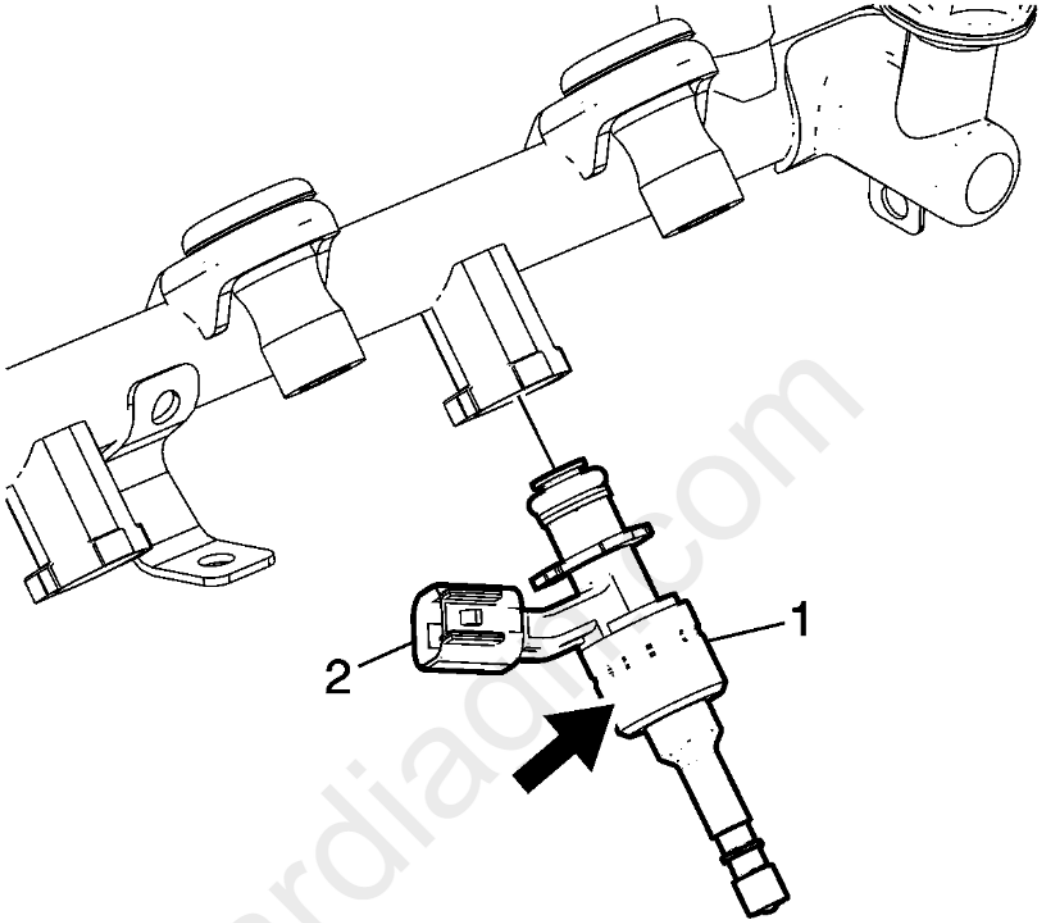

cardiagn.com

Fig. 170: View Of Injector Assembly
Courtesy of GENERAL MOTORS COMPANY

NOTE:

- **Do NOT install the Teflon injector tip/bore seals until AFTER the injectors are installed on the fuel rail.**
- **Make sure that the fuel injector connectors are placed in the correct position.**

20. Holding the largest diameter/body of the injector only, indicated by arrow in graphic, insert the injector assembly (1) into the fuel rail. Ensure correct orientation of the electrical connector (2).
21. Clamp the fuel rail in a bench vise USING SOFT JAWS to aid in holding the rail during the installation of the retainer.

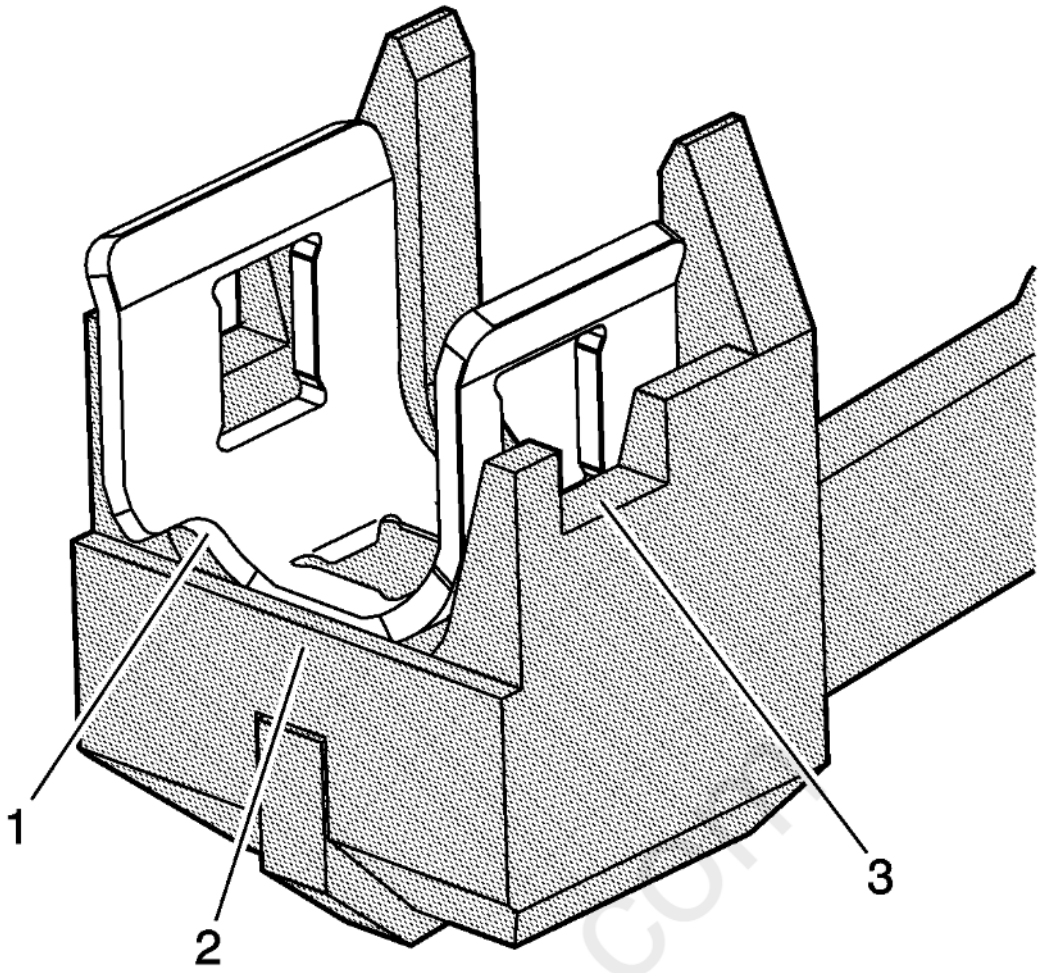

Fig. 171: Retainer Installer
Courtesy of GENERAL MOTORS COMPANY

NOTE: **Ensure the retainer is set properly into EN-49247 installer.**

- **The notch (1) should always face forward**
- **The fuel injector to fuel rail retainer should be behind the plate (2)**
- **The tool windows (3) allow for visual alignment**

22. Support the fuel injector fuel rail in a vise.
23. Install the fuel injector to fuel rail retainer to the **EN-49247** injector retaining clip installer.

cardiagn.com

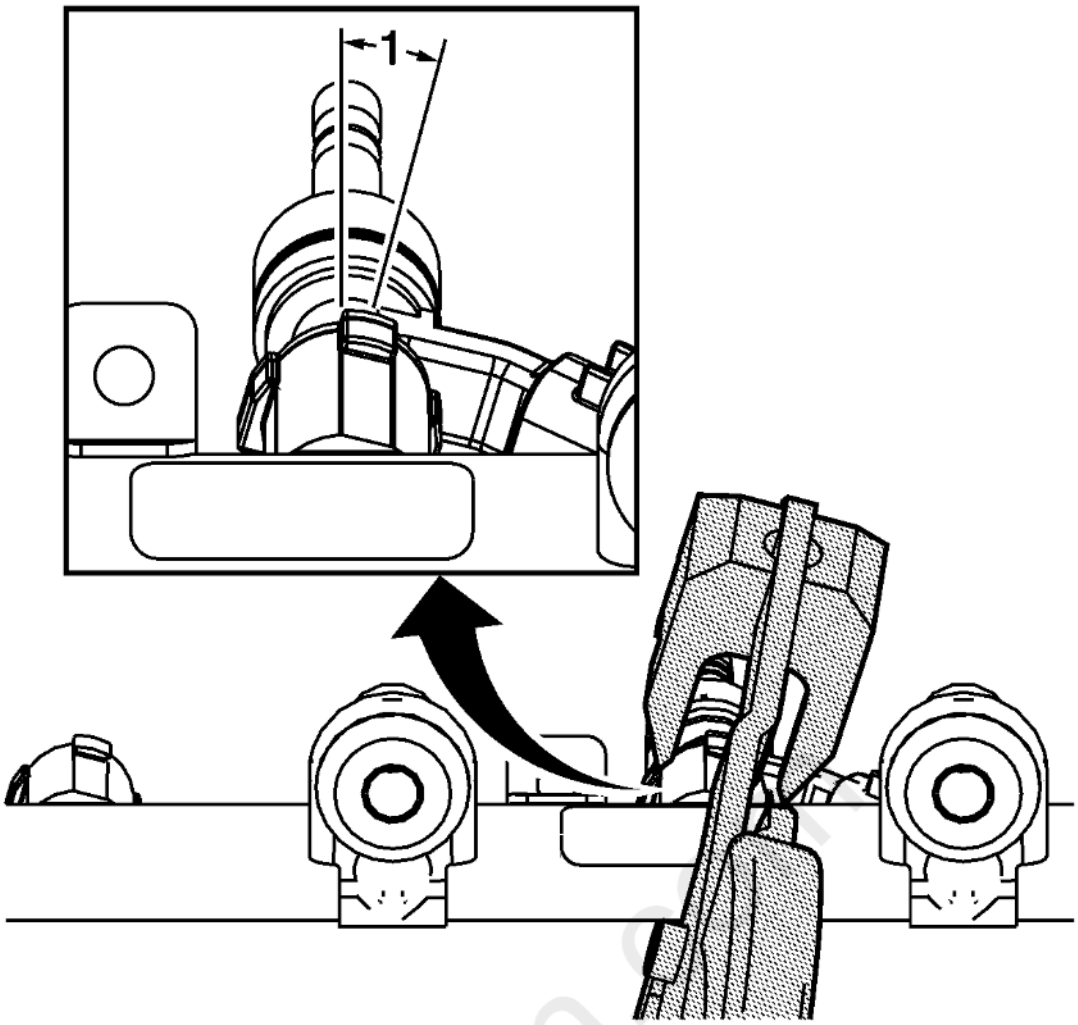

Fig. 172: Identifying 15-Degree Angle Of Rotation
Courtesy of GENERAL MOTORS COMPANY

NOTE: **Observe the following steps before installing the fuel injector to fuel rail retainer.**

24. There is a 15-degree angle of rotation (1) with the fuel injector rail flanges relative to the fuel injector rail. Hold the **EN-49247** injector retaining clip installer at a similar angle to aid the correct installation of the fuel injector to fuel rail retainer.

Cardiagn

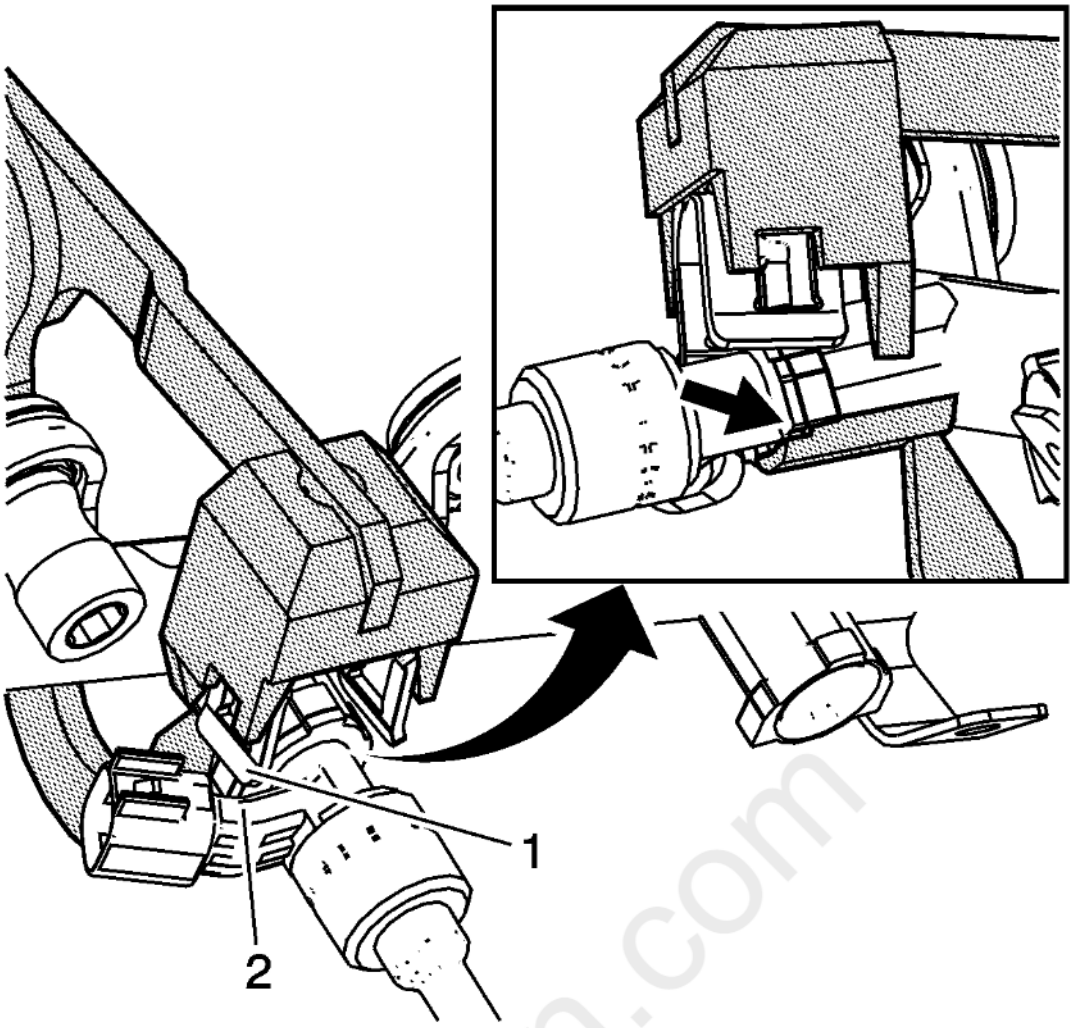

Fig. 173: Positioning Retainer Installer
Courtesy of GENERAL MOTORS COMPANY

25. When mounting the **EN-49247** injector retaining clip installer to the fuel injector rail, the fuel injector to fuel rail retainer should nearly be touching the electrical connector (2).
26. The base of the **EN-49247** injector retaining clip installer should be positioned as shown before squeezing the tool to complete the installation.

cardiagn.com

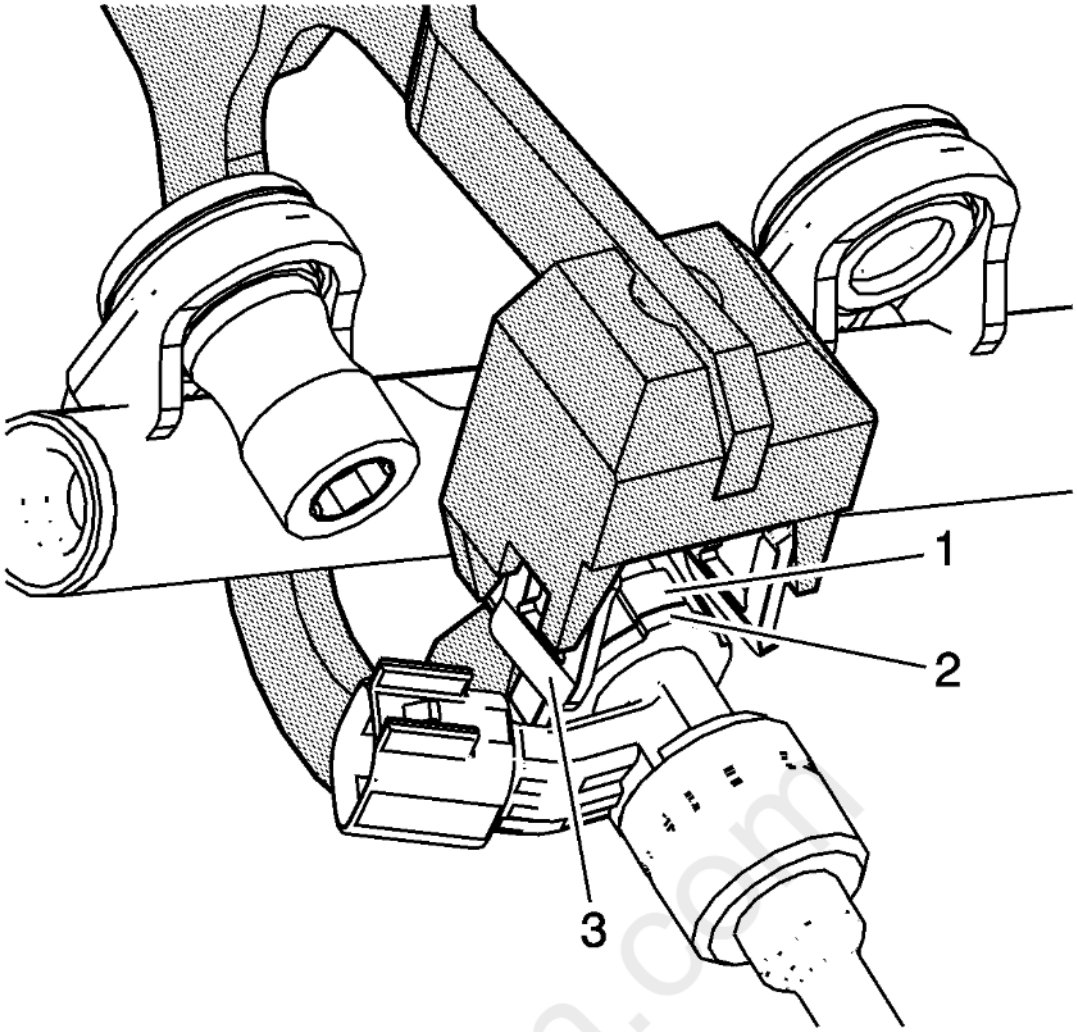

Fig. 174: Installing Fuel Injector Retainer
Courtesy of GENERAL MOTORS COMPANY

27. Hold the injector bushing (2) and fuel injector rail flanges (1) in alignment.
28. Hold the injector assembly firmly against the fuel injector rail to prevent a gap forming between the fuel injector and the fuel injector rail.
29. Install the fuel injector to fuel rail retainer (3).

cardiagn.com

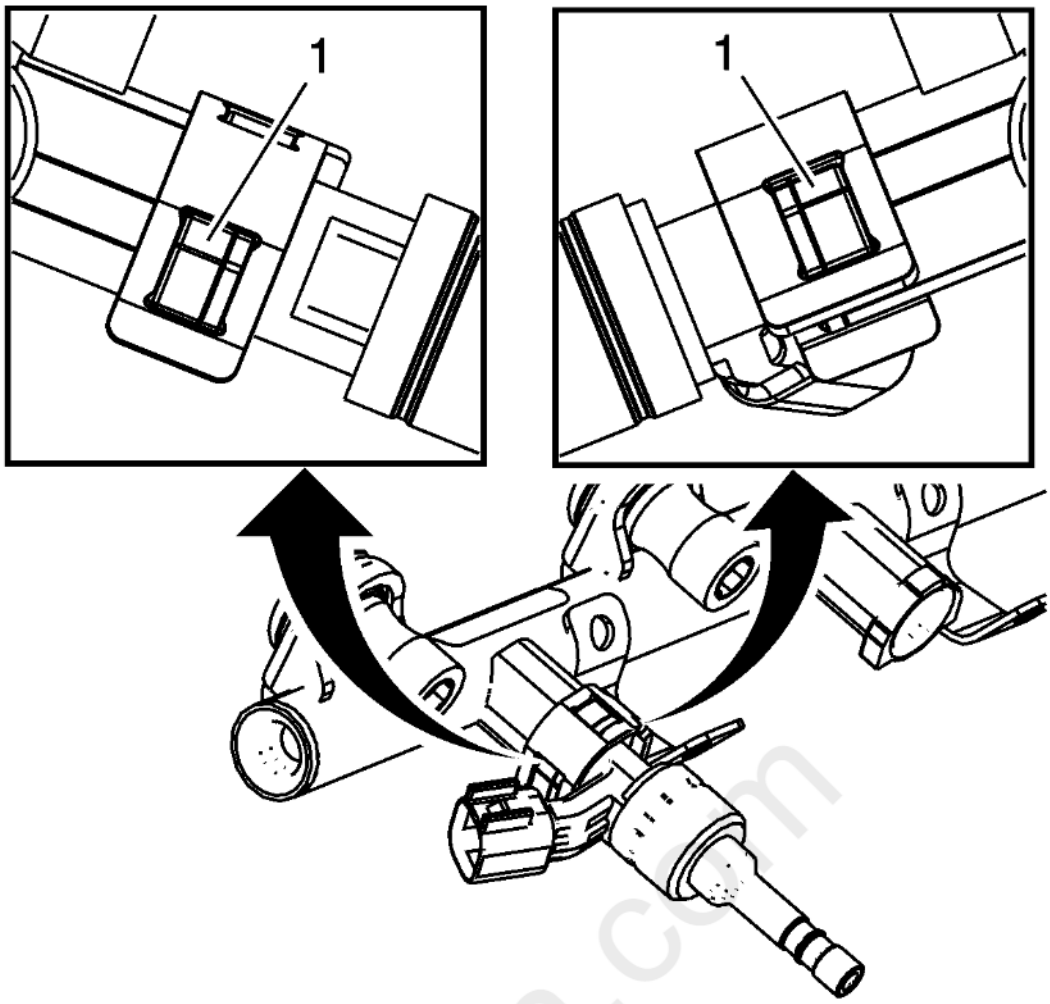

Fig. 175: Identifying Fuel Rail Flanges
Courtesy of GENERAL MOTORS COMPANY

CAUTION: **Ensure the fuel injector retainer is properly installed. Failure to completely install the retainers may degrade fuel injection system performance or cause system malfunction.**

30. Ensure all 3 fuel injector bushing tabs and fuel rail flanges (1) are properly and completely captured by the fuel injector retainer.
31. Repeat the above steps for the remaining fuel injectors until all the fuel injectors are installed and retained in the fuel injector rail.

carmagn.com

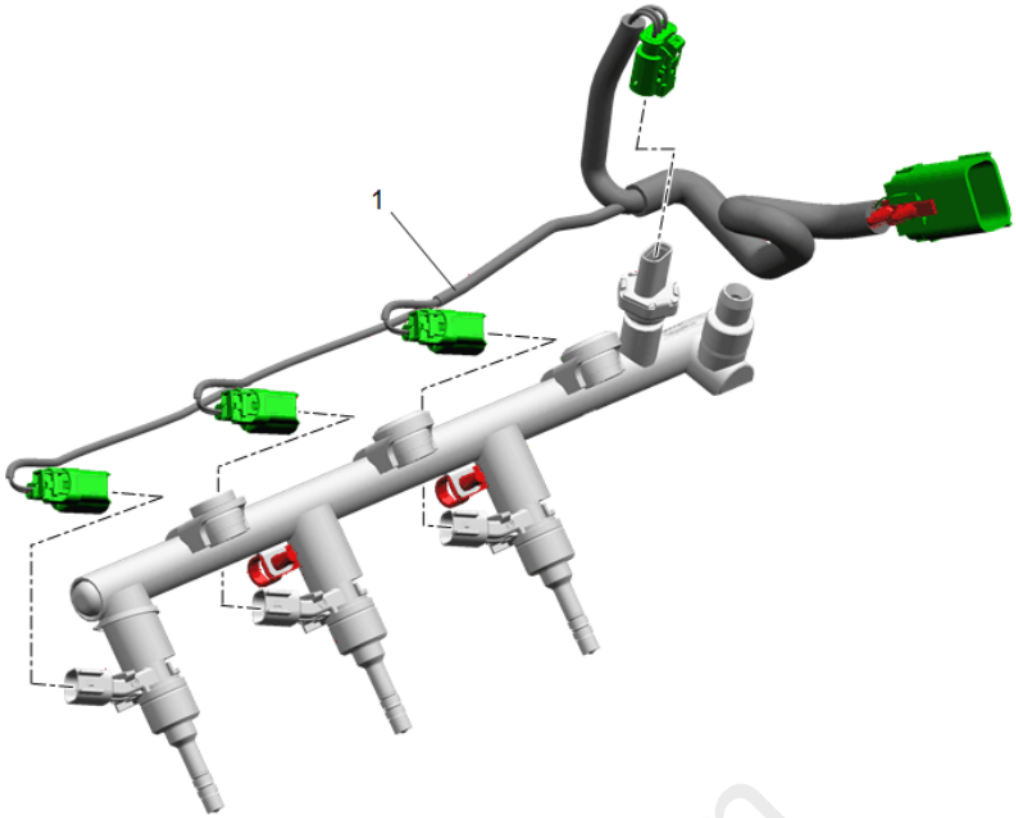

Fig. 176: View Of Fuel Rail Wiring Harness
Courtesy of GENERAL MOTORS COMPANY

32. Install the fuel injector rail wiring harness (1) to the fuel injector rail.

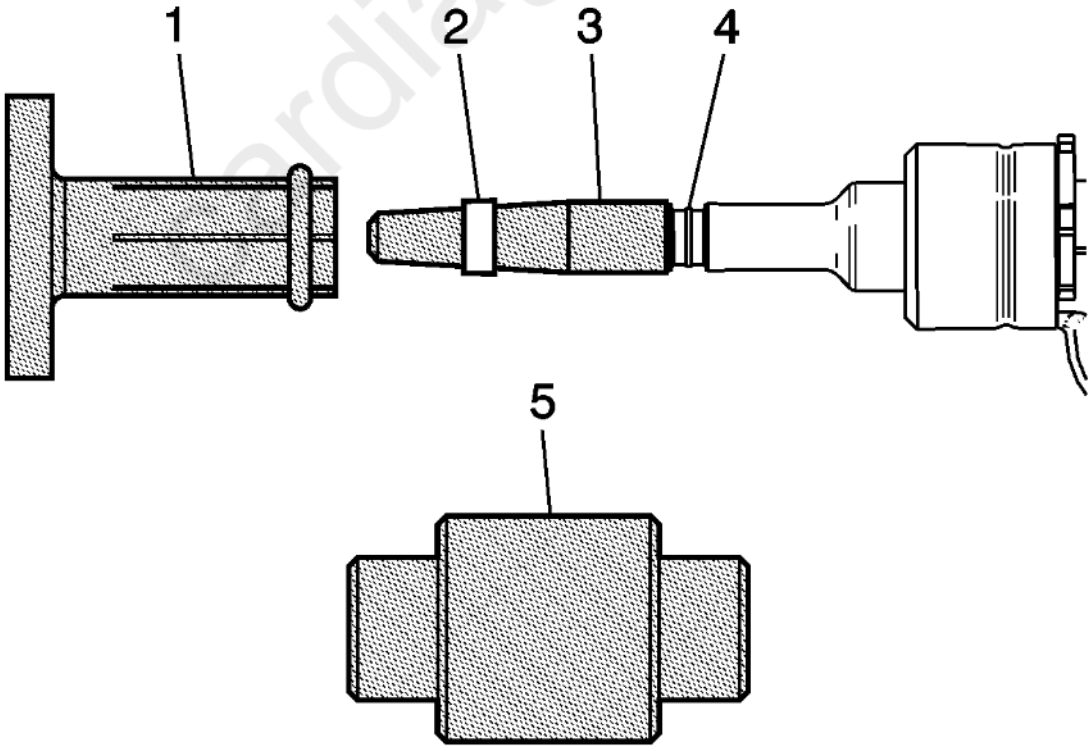

Fig. 177: Identifying Fuel Injector Tip & Seals
Courtesy of GENERAL MOTORS COMPANY

NOTE: **Do not use any type of lubricant when installing the NEW seals (2) on the fuel injector tip.**

33. Install the long protector (3) of the **EN-49245-1** fuel injector seal install/sizer to the fuel injector spray tip covering the first recessed area closest to the tip.
34. Place a NEW seal (2) onto long protector (3) of the **EN-49245-1** fuel injector seal install/sizer.
35. Using the pusher (1) of the **EN-49245-3** fuel injector seal install/sizer, push the seal (2) into the second recessed area (4) of the fuel injector.

NOTE: **The sizer (5) of the EN-49245-4 fuel injector seal install/sizer is two sided, and either direction will size the seal correctly.**

36. Compress the seal (2) with your fingers.
37. Resize the seal (2) using the sizer (5) of the **EN-49245-4** fuel injector seal install/sizer.

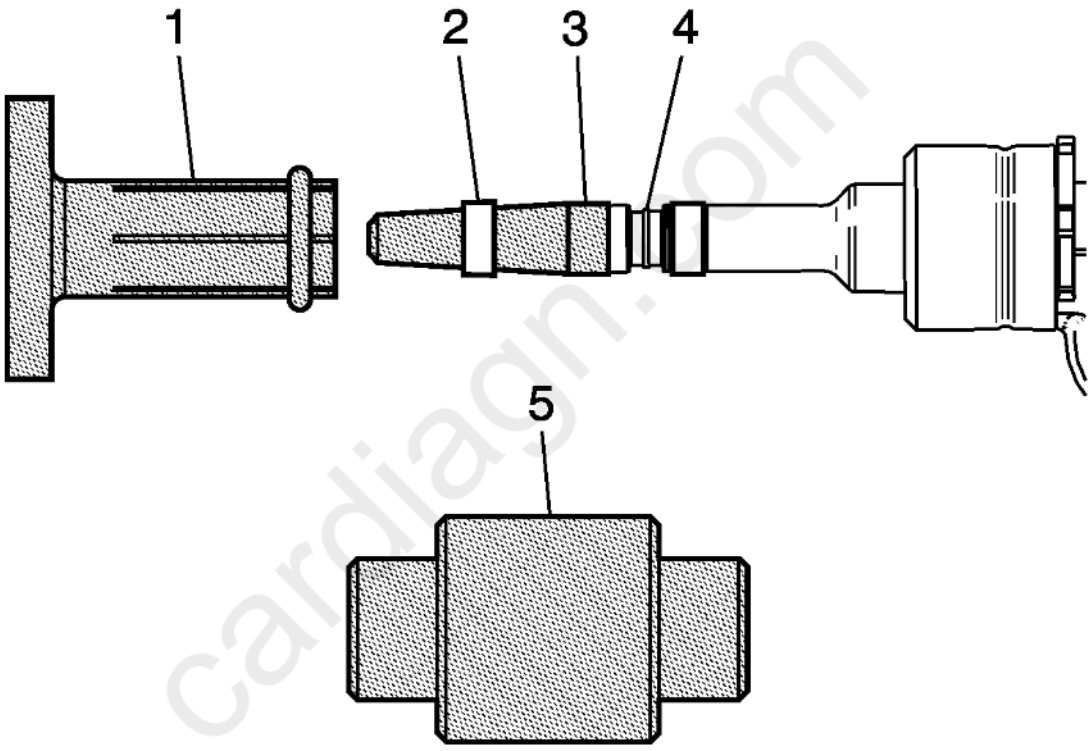

cardiagn.com

Fig. 178: Identifying Fuel Injector Tip & Seals
Courtesy of GENERAL MOTORS COMPANY

NOTE: **Do not use any type of lubricant when installing the NEW seals (2) on the fuel injector tip.**

38. Install the short protector (3) of the **EN-49245-2** fuel injector seal install/sizer to the fuel injector tip.
39. Place a NEW seal (2) onto the short protector (3) of **EN-49245-2** fuel injector seal install/sizer.
40. Using the pusher (1) of the **EN-49245-3** fuel injector seal install/sizer, push the seal (2) into the first recessed area (4) of the fuel injector.

NOTE: **The sizer (5) of the EN-49245-4 fuel injector seal install/sizer is two sided, and either direction will size the seal correctly.**

41. Compress the seal (2) with your fingers.
42. Resize the seal (2) using the sizer (5) of the **EN-49245-4** fuel injector seal install/sizer.

CYLINDER HEAD ASSEMBLE

Special Tools

- **EN 8062** Valve Spring Compressor - Head Off
- **EN 46116** Valve Stem Seal Remover/Installer
- **EN 46117** Valve Stem Key Remover/Installer
- **EN 46119** Off-Vehicle Valve Spring Compressor Adapter
- **EN 46122** Camshaft Position Actuator Check-Ball Valve Remover/Installer

For equivalent regional tools, refer to **Special Tools** .

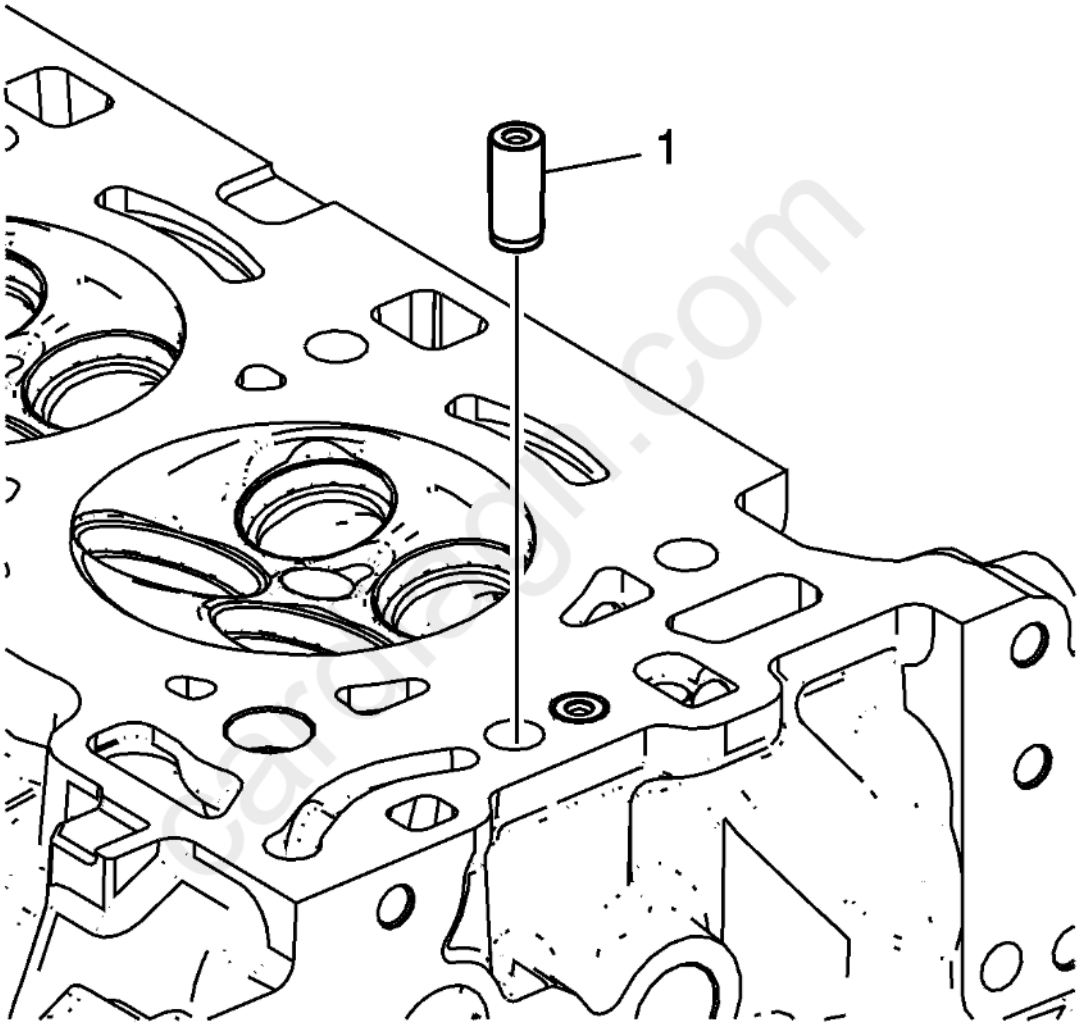

Fig. 179: Lubricate Outside Of New Check Valve
Courtesy of GENERAL MOTORS COMPANY

1. Use lubricant included with **EN 46122** remover/installer to lubricate outside of new check valve (1).
2. With the check ball end of the check valve facing UP, away from the head, insert the NEW check valve into the check valve bore in the cylinder head.

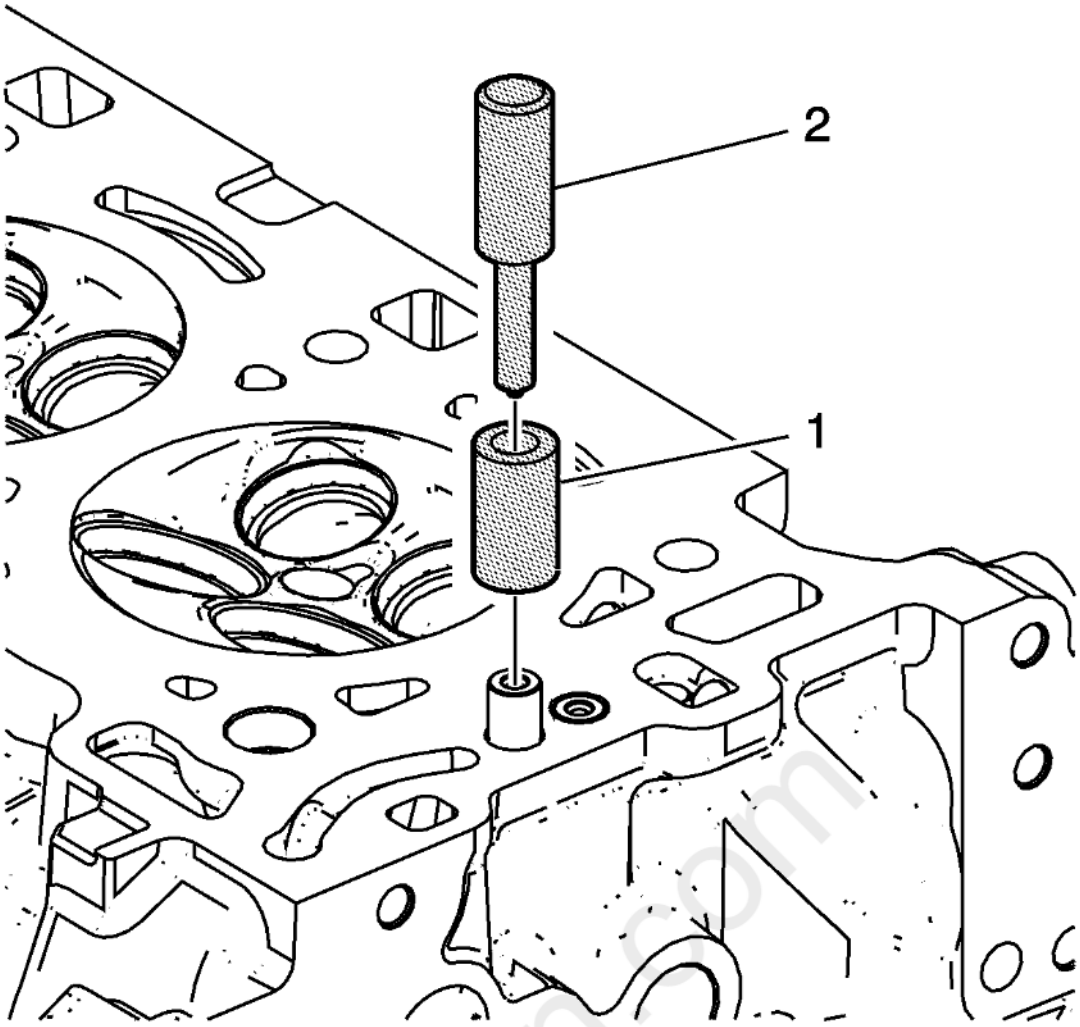

Fig. 180: Tapping Check Valve Into Place
Courtesy of GENERAL MOTORS COMPANY

3. Place collar EN 46122-2 (1) over the new check valve with the slightly-larger inside diameter of the collar DOWN toward the cylinder head.
4. Using the driver EN 46122-1 (2), lightly tap the new check valve into place until the driver stops against the top of the collar.

cardiagn.com

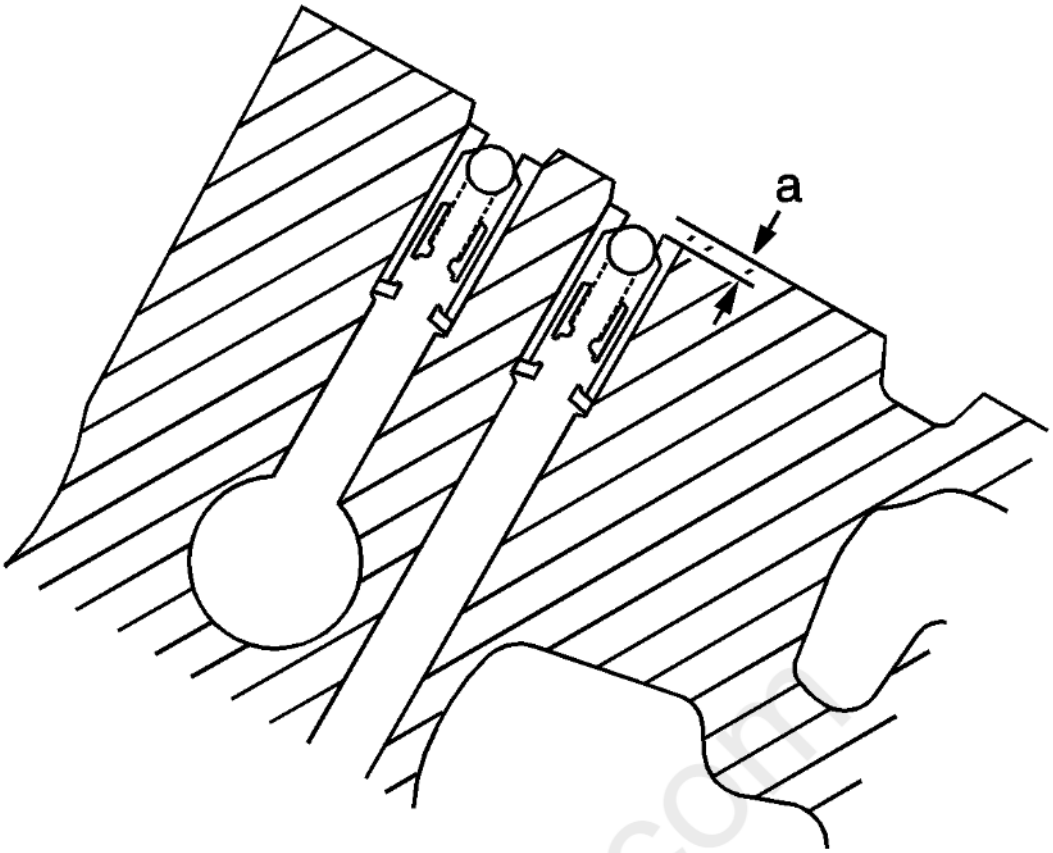

Fig. 181: Inspecting Camshaft Position Actuator Oil Feed Check Valve
Courtesy of GENERAL MOTORS COMPANY

5. Inspect the camshaft position actuator oil feed check valves in order to ensure they are properly installed in the cylinder head. The camshaft position actuator oil feed check valve should be flush to 2 mm (0.0787 in) below the cylinder head deck surface (a).

carmagn.com

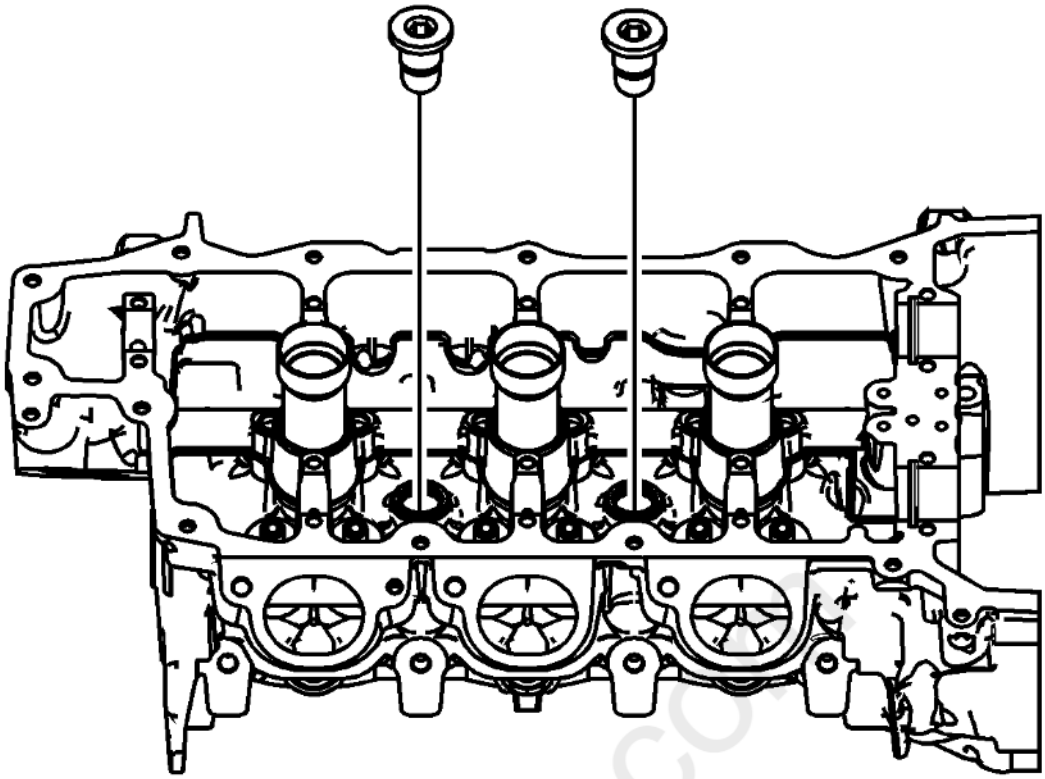

Fig. 182: View Of Cylinder Head Coolant Threaded Plugs
Courtesy of GENERAL MOTORS COMPANY

CAUTION: Refer to Fastener Caution .

6. Install the cylinder head coolant threaded plugs and tighten to 75 N.m (55 lb ft).

cardiagn.com

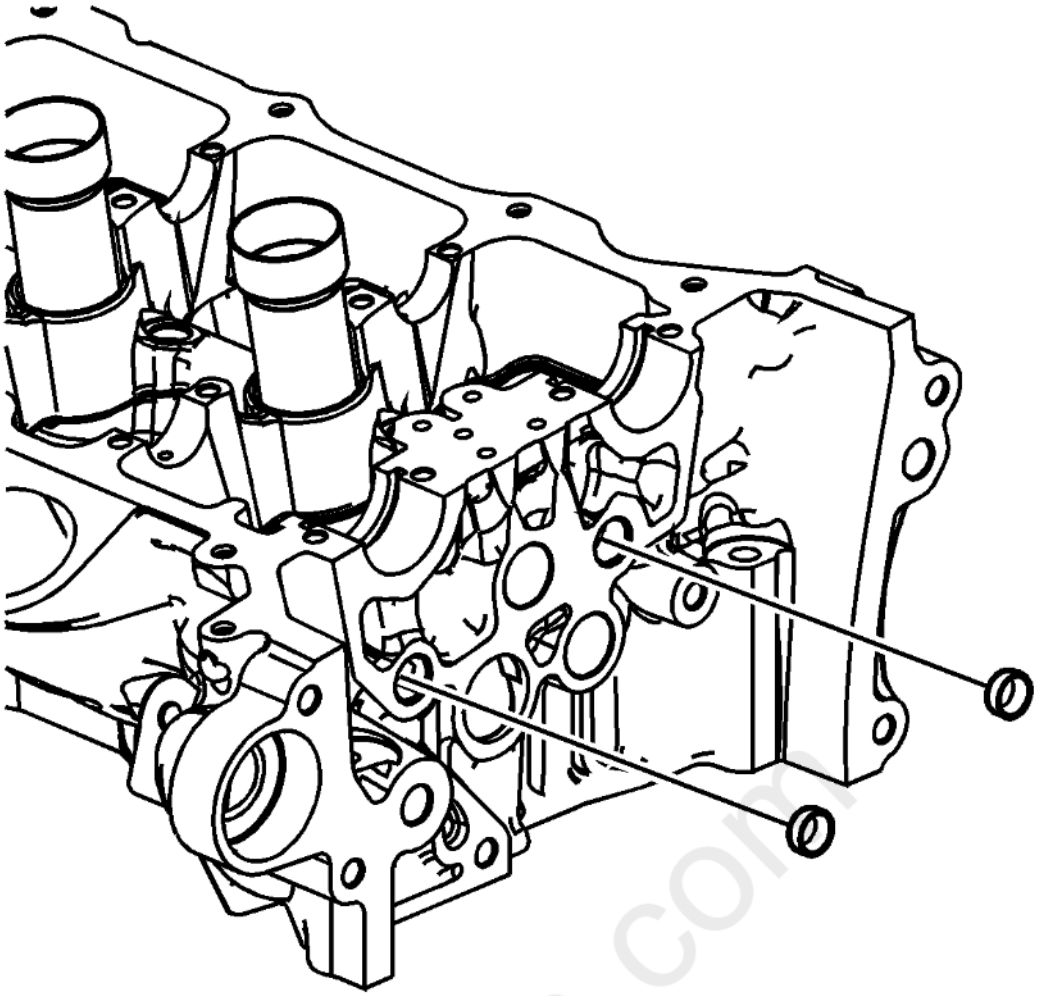

Fig. 183: View Of Cylinder Head Oil Gallery Expansion Plugs
Courtesy of GENERAL MOTORS COMPANY

7. Install the NEW cylinder head oil gallery expansion plugs.

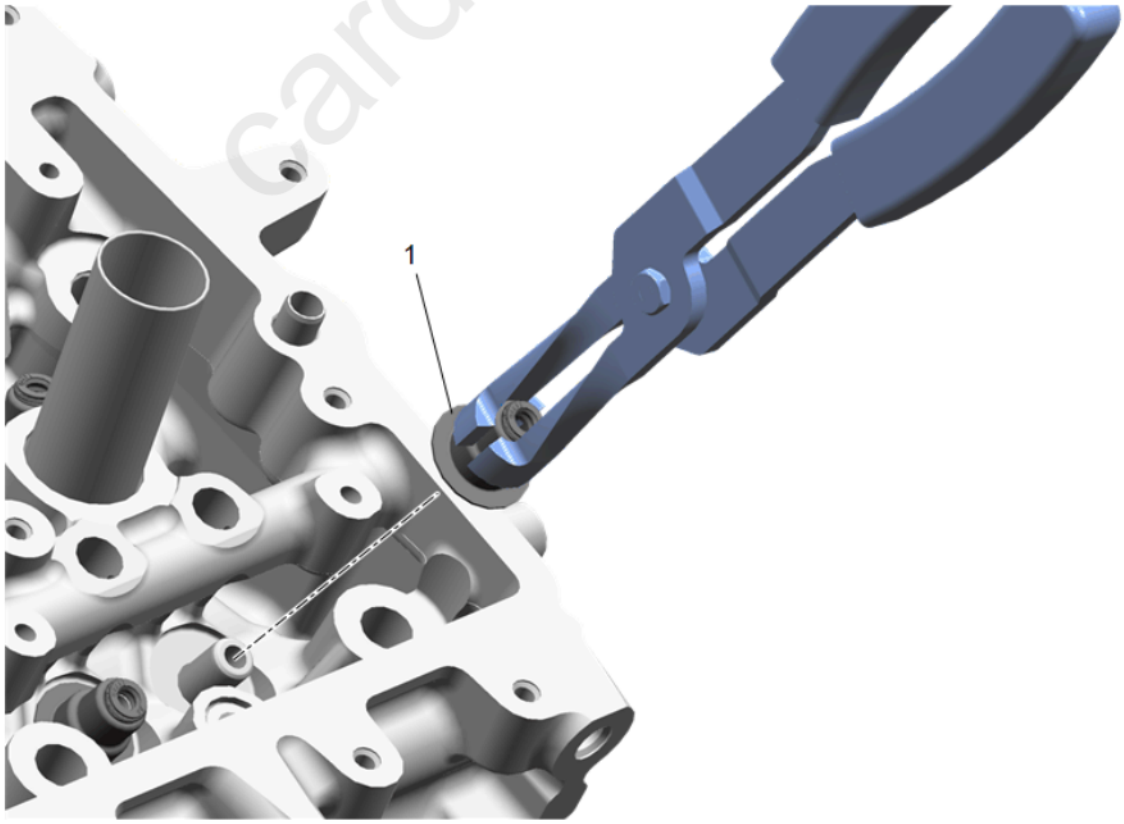

Fig. 184: Removing/Installing Valve Stem Oil Seals
Courtesy of GENERAL MOTORS COMPANY

Gardiagn.com

8. Place the valve stem oil seals onto the guides.

NOTE: **NEVER reuse a valve stem oil seal. Always use new seals when assembling the cylinder head.**

9. Mount a new valve stem oil seal using the **EN 46116** remover/installer.

NOTE: **Force should only be applied to the valve spring contact area of the new valve stem oil seal during installation.**

10. Push and twist the valve stem oil seal into position on the valve guide until the seal positively locks on the guide using the **EN 46116** remover/installer.
11. Lubricate the valve stem and valve guide ID with clean engine oil. Refer to **Adhesives, Fluids, Lubricants, and Sealers** for recommended lubricant.

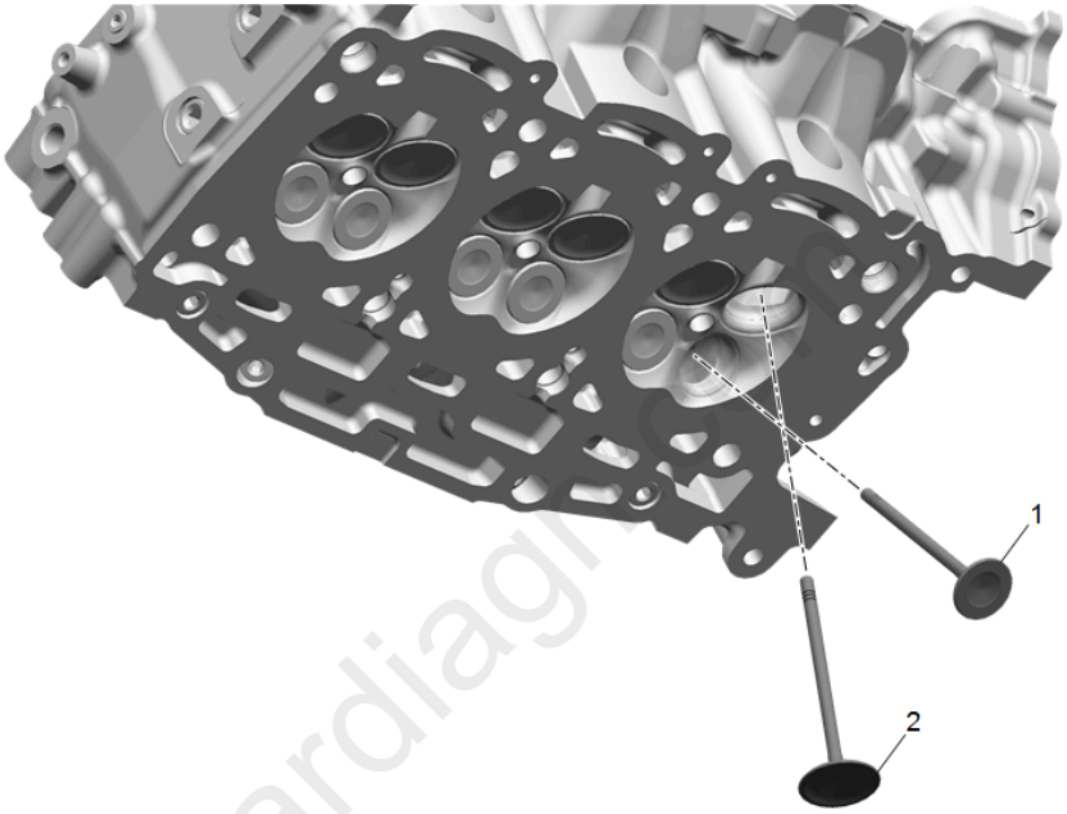

Fig. 185: View of Oil Seal and Valve Guide
Courtesy of GENERAL MOTORS COMPANY

NOTE: **The valve stem oil seal must not come loose from the valve guide when the valve is installed.**

12. Insert the valve into the valve guide until it bottoms on the valve seat.

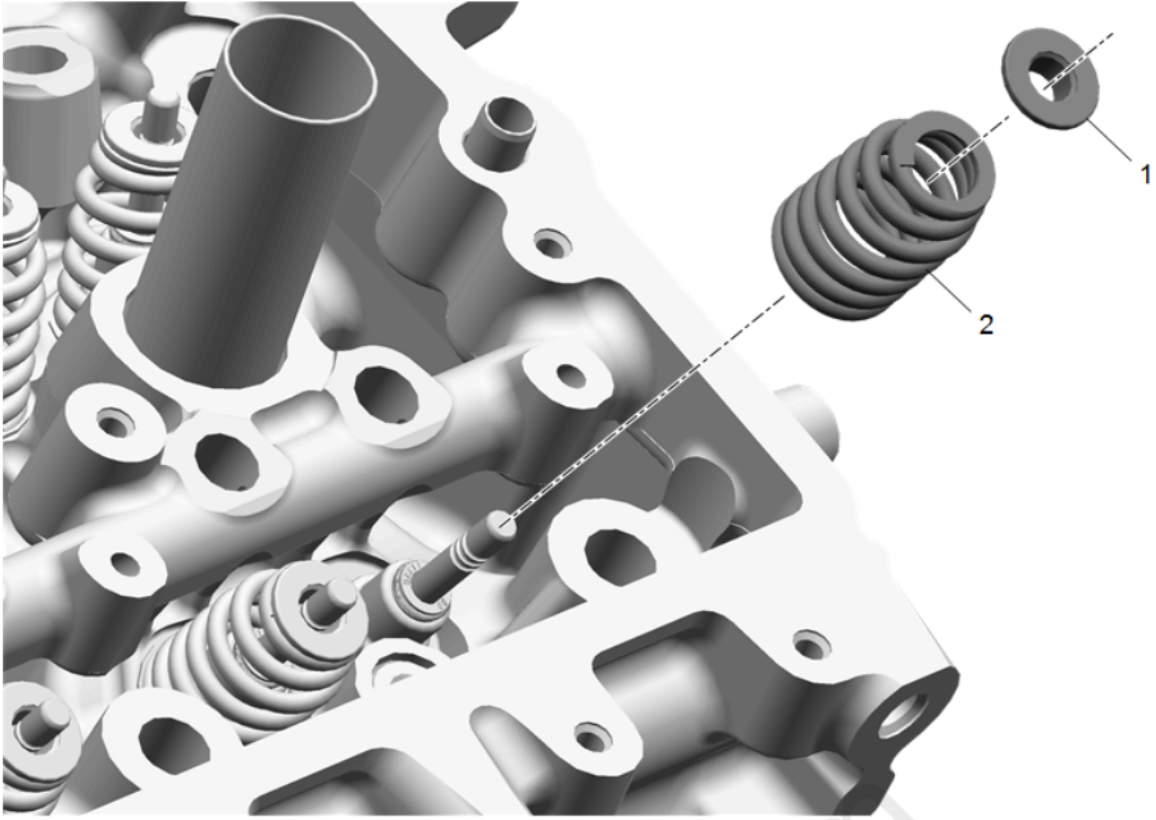

Fig. 186: View Of Valve Spring & Retainer
Courtesy of GENERAL MOTORS COMPANY

13. Position the valve spring on the spring seat.
14. Place the valve spring retainer onto the valve spring.

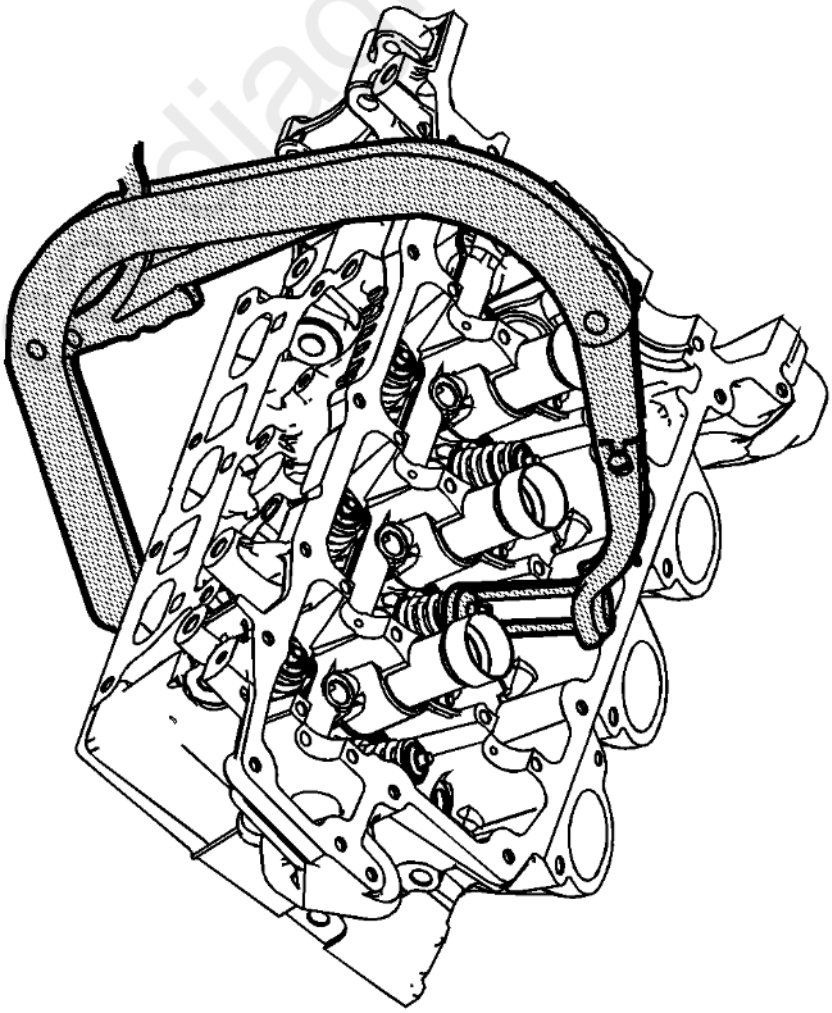

Fig. 187: Compressing Valve Spring
Courtesy of GENERAL MOTORS COMPANY

WARNING: **Compressed valve springs have high tension against the valve spring compressor. Valve springs that are not properly compressed by or released from the valve spring compressor can be ejected from the valve spring compressor with intense force. Use care when compressing or releasing the valve spring with the valve spring compressor and when removing or installing the valve stem keys. Failing to use care may cause personal injury.**

CAUTION: **Do not compress the valve springs to less than 24.0 mm (0.943 in). Contact between the valve spring retainer and the valve stem oil seal can cause potential valve stem oil seal damage.**

15. Compress the valve spring using the **EN 8062** compressor and the **EN 46119** adapter.

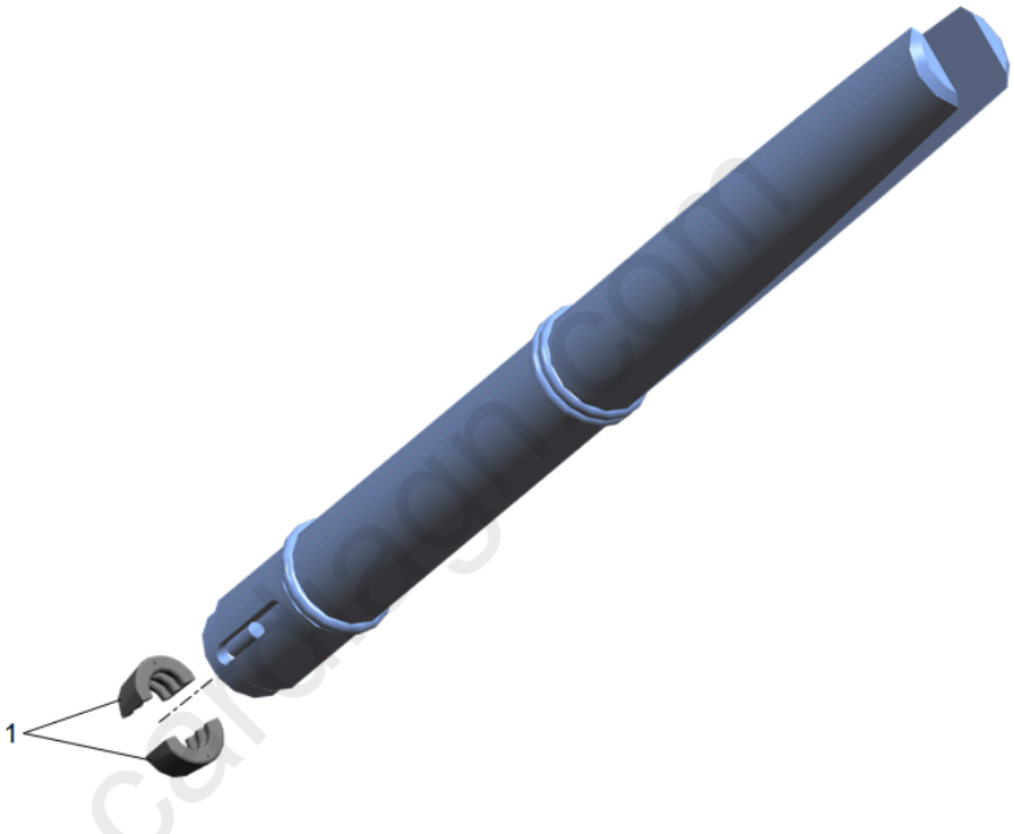

Fig. 188: View Of Valve Keepers
Courtesy of GENERAL MOTORS COMPANY

NOTE: **Ensure proper directional placement of valve keepers in the EN 46117 remover/installer. The valve keepers must be installed with the tapered end towards the valve stem seal.**

16. With the spring compressed, install the valve keepers into the **EN 46117** remover/installer.

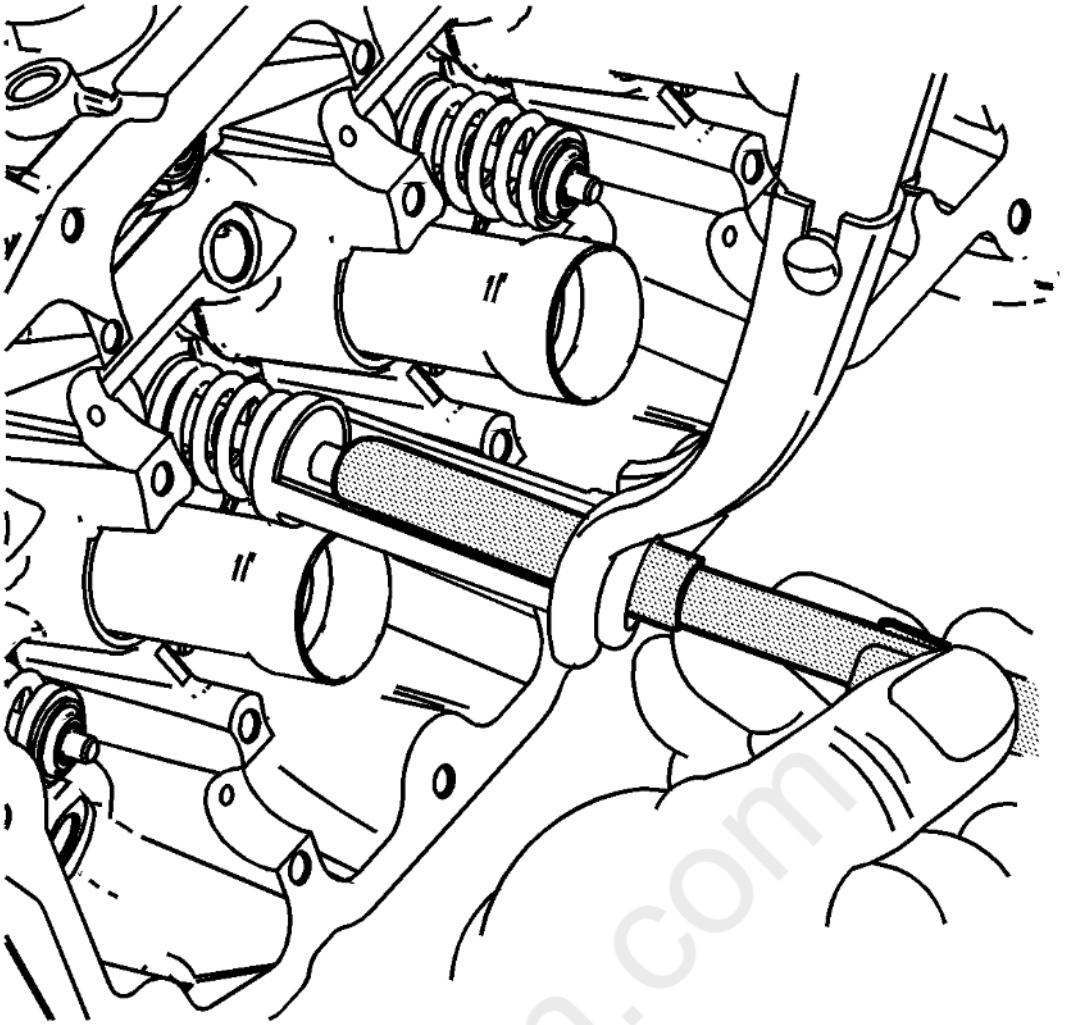

Fig. 189: Identifying Valve Spring Compressor & Adapter
Courtesy of GENERAL MOTORS COMPANY

17. Place the keepers into position by pushing the tool downward. While holding the tool lightly together in the area between the O-rings, using the thumb and forefinger, release tension on the **EN-46119** adapter and the **EN 8062** compressor. This will slowly push the **EN-46117** remover/installer off the valve stem, leaving the keepers in place.
18. Verify that the valve keepers are installed by placing a rag over the valve tip and tapping with a dead-blow hammer.

carmagn.com

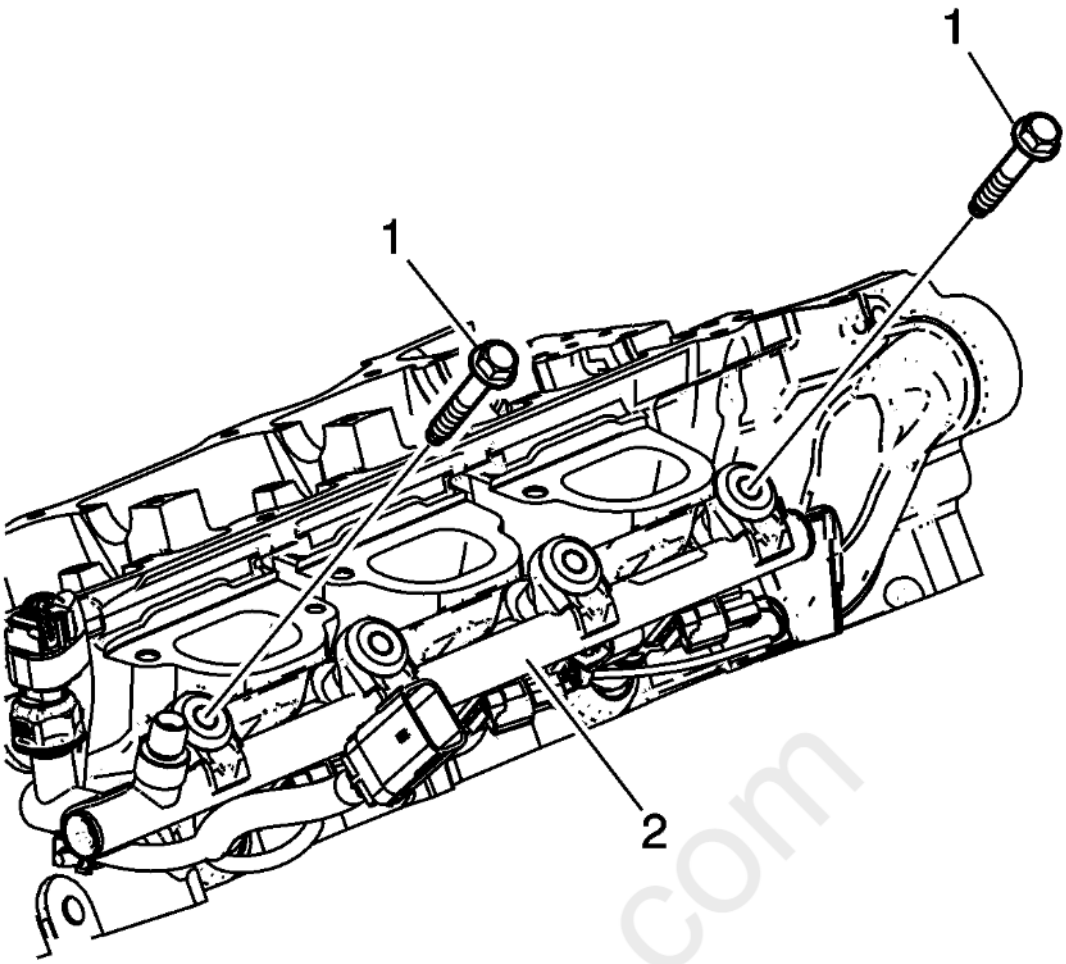

Fig. 190: Identifying Fuel Rail Bolts
Courtesy of GENERAL MOTORS COMPANY

NOTE: **If the fuel rail was removed from the cylinder head, the fuel injector tip seals must be replaced. Refer to Fuel Rail and Injectors Cleaning and Inspection.**

19. Install the fuel rail with injectors (2) into the cylinder head evenly.
20. Install and hand tighten the two outer fuel rail bolts (1) to seat the injectors in the injector bores.
21. Install and hand tighten the two inner fuel rail bolts.

carDiagn.com

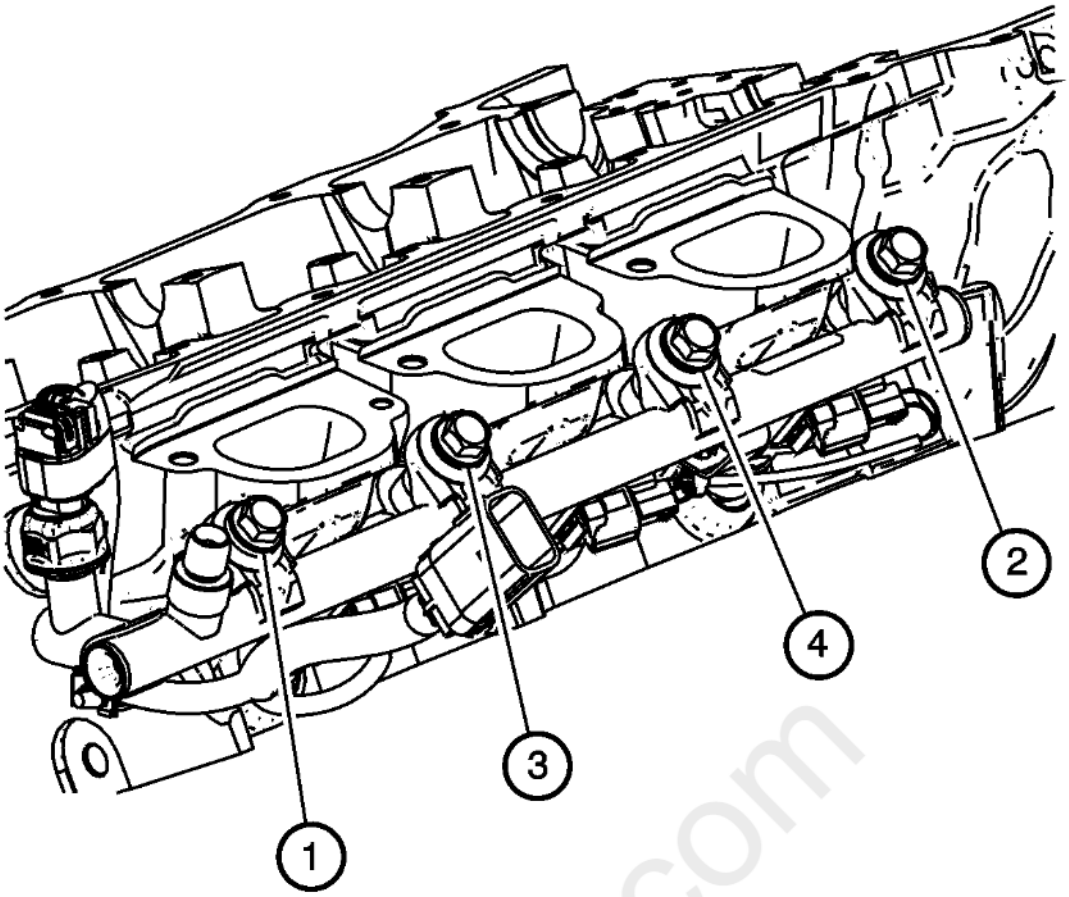

Fig. 191: Fuel Rail Bolt Tightening Sequence
Courtesy of GENERAL MOTORS COMPANY

22. Tighten the fuel rail bolts in the sequence shown to 25 N.m (18 lb ft).

CAMSHAFT CLEANING AND INSPECTION

Special Tools

GE 7872 Magnetic Base Dial Indicator

For equivalent regional tools, refer to **Special Tools** .

Cleaning Procedure

1. Clean the camshaft in solvent.

WARNING: **Refer to Safety Glasses Warning .**

2. Dry the camshaft with compressed air.

Visual Inspection

cardiagn.com

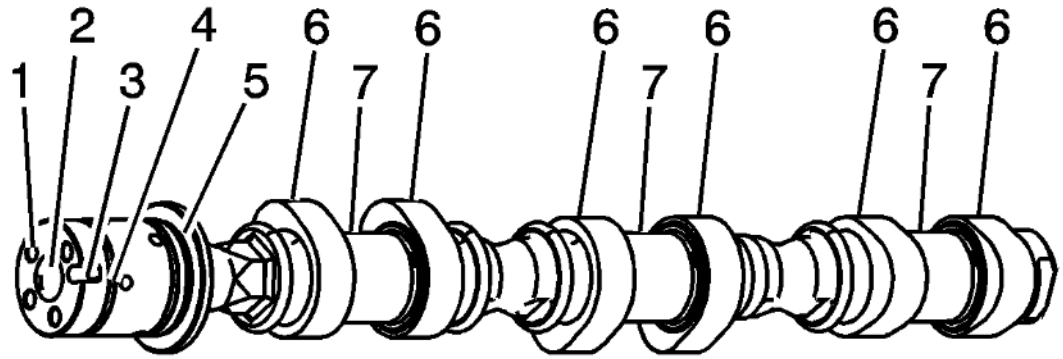

Fig. 192: Identifying Camshaft Inspection Areas
Courtesy of GENERAL MOTORS COMPANY

1. Inspect the camshaft oil feed holes (1) to the camshaft position actuator for dirt, debris or blockage.
2. Inspect the threaded hole (2) for damage.
3. Inspect the camshaft position actuator locating notch (3) for damage or wear.
4. Inspect the camshaft sealing grooves (4) for damage.
5. Inspect the camshaft thrust surface (5) for damage.
6. Inspect the camshaft lobes (6) and journals (7) for the following conditions:
    - Excessive scoring or pitting
    - Discoloration from overheating
    - Deformation from excessive wear, especially the camshaft lobes
7. If any of the above conditions exist on the camshaft, replace the camshaft.

Camshaft Measurement

cardiagn.com

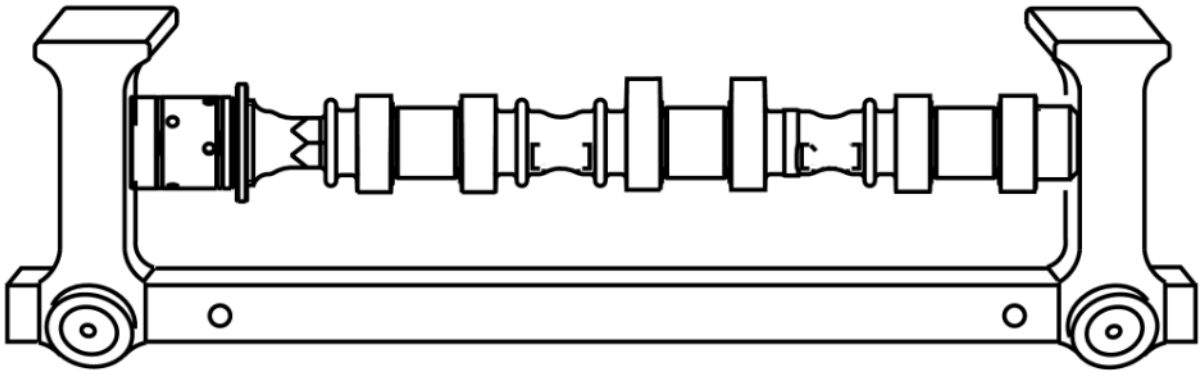

Fig. 193: Supporting Camshaft In Fixture
Courtesy of GENERAL MOTORS COMPANY

1. With the camshaft in a suitable fixture, measure the camshaft for wear.

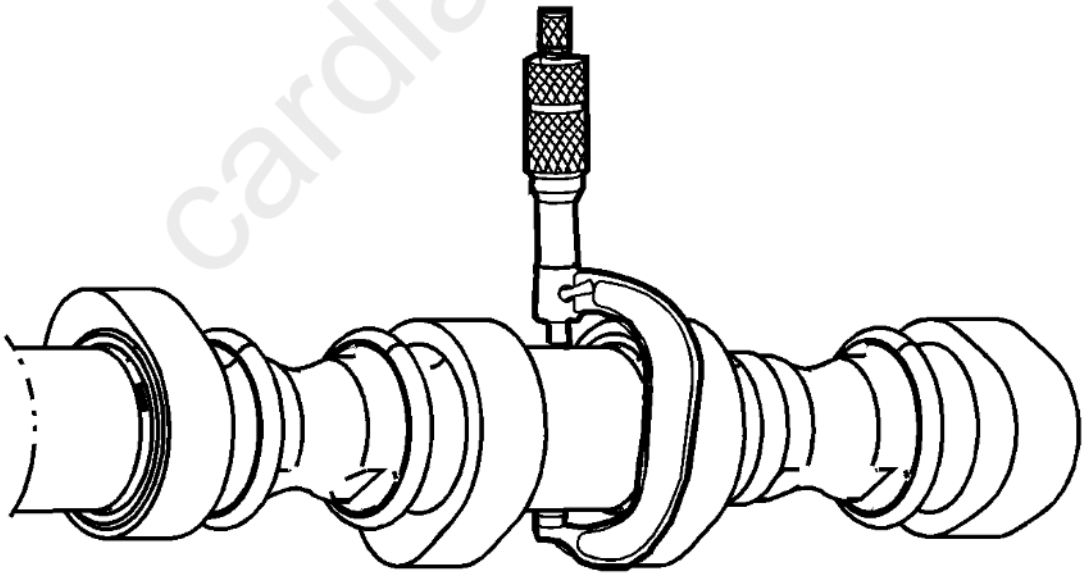

Fig. 194: Measuring Camshaft Journals
Courtesy of GENERAL MOTORS COMPANY

cardiagn.com

2. Measure the camshaft journals for diameter and out-of-round using an outside micrometer. Refer to **Engine Mechanical Specifications** .
    - If the diameter is smaller than specifications, replace the camshaft.
    - If the out-of-round exceeds specifications, replace the camshaft.

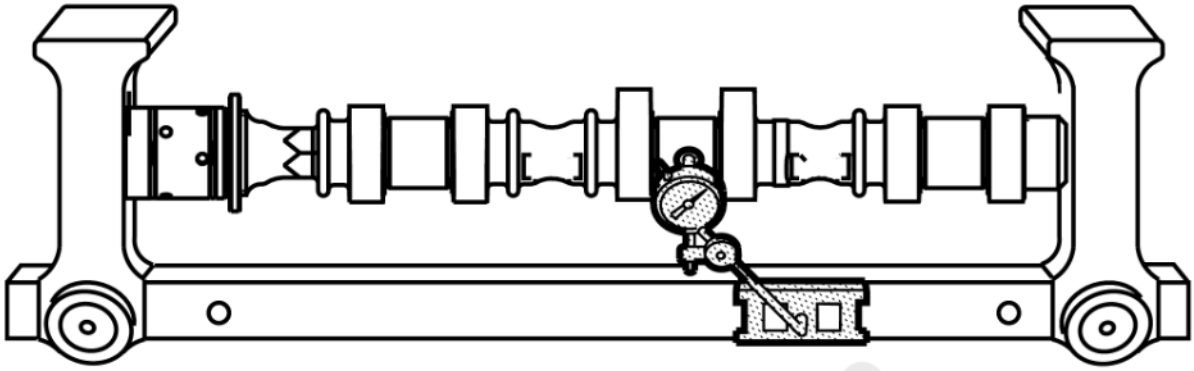

Fig. 195: Checking Camshaft Runout
Courtesy of GENERAL MOTORS COMPANY

3. Measure the camshaft runout using the **GE 7872** indicator. Refer to **Engine Mechanical Specifications** .

cardiagn.com

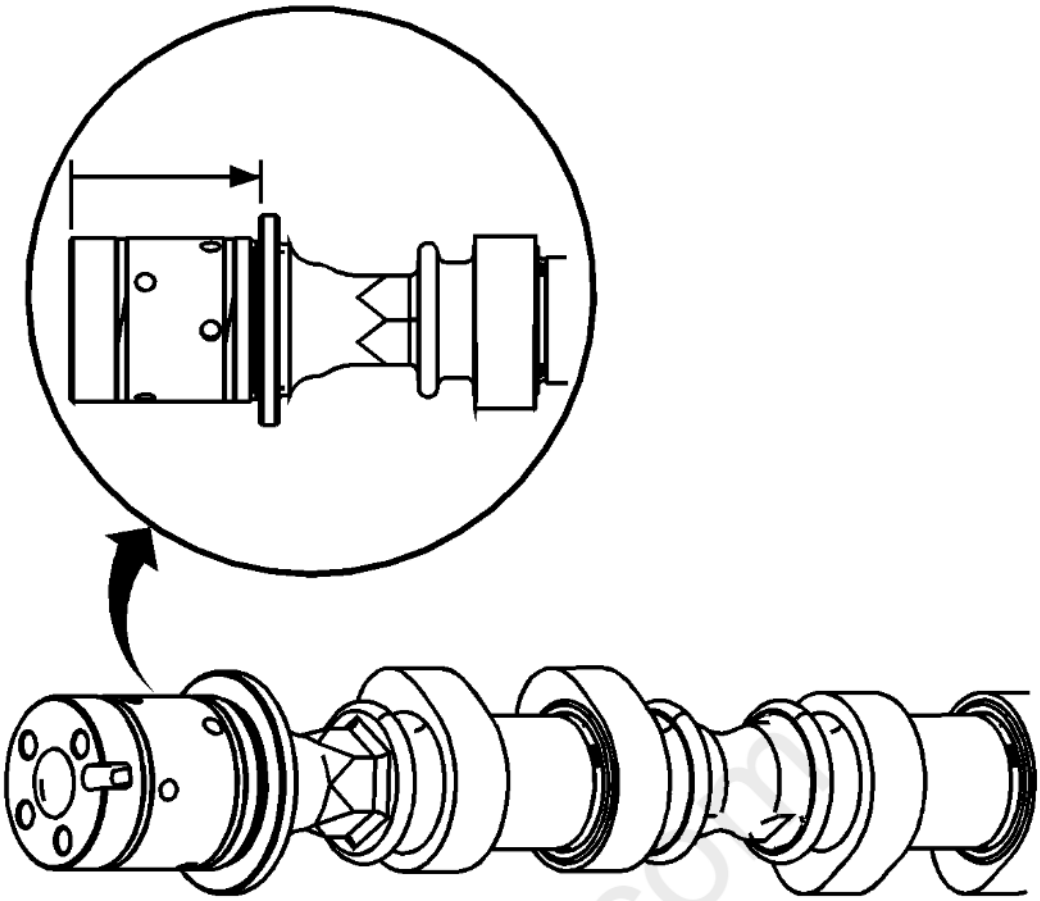

Fig. 196: Measuring Camshaft Thrust Width
Courtesy of GENERAL MOTORS COMPANY

4. Measure the camshaft thrust width for wear using a depth micrometer. Refer to **Engine Mechanical Specifications** .

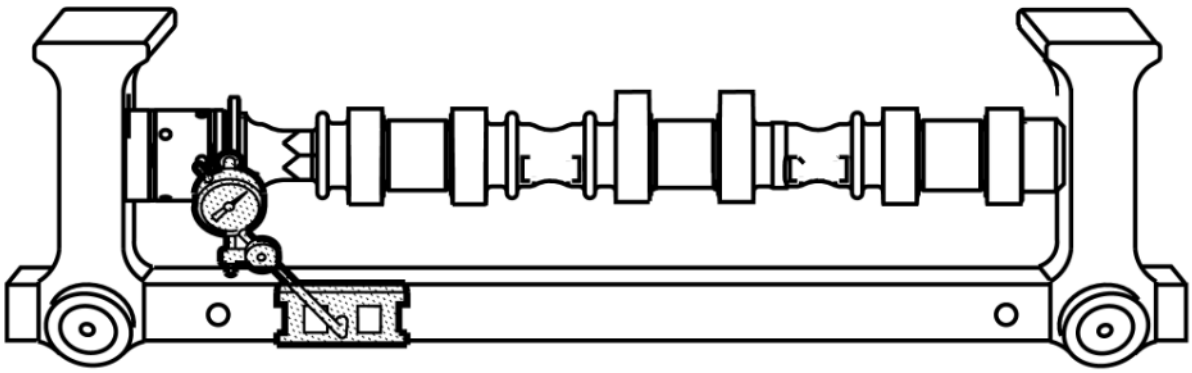

Fig. 197: Measuring Camshaft
Courtesy of GENERAL MOTORS COMPANY

cardiagn.com

5. Measure the camshaft thrust wall surface for runout using **GE 7872** indicator. Refer to **Engine Mechanical Specifications** .
6. If the camshaft is damaged or worn beyond specifications, replace the camshaft. No machining of the camshaft is allowed.

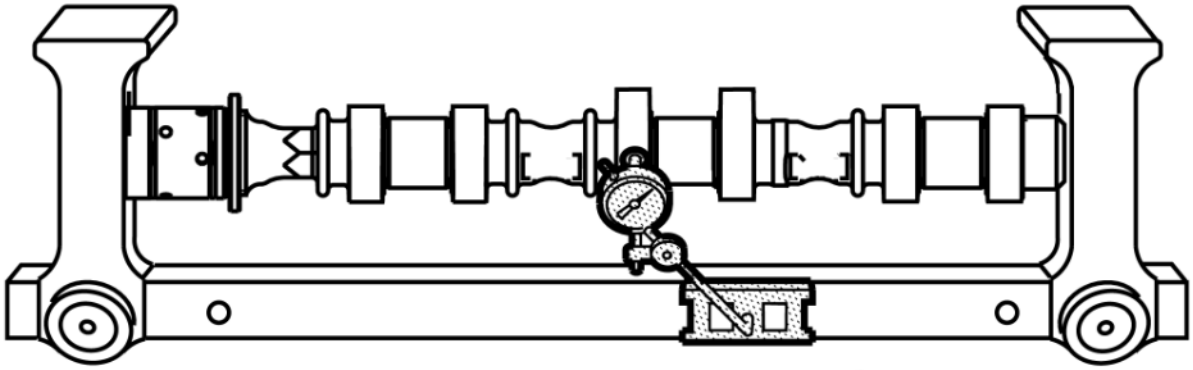

Fig. 198: Measuring Camshaft Lobes For Wear
Courtesy of GENERAL MOTORS COMPANY

7. Measure the camshaft lobes for wear using the **GE 7872** indicator.

cardiagn.com

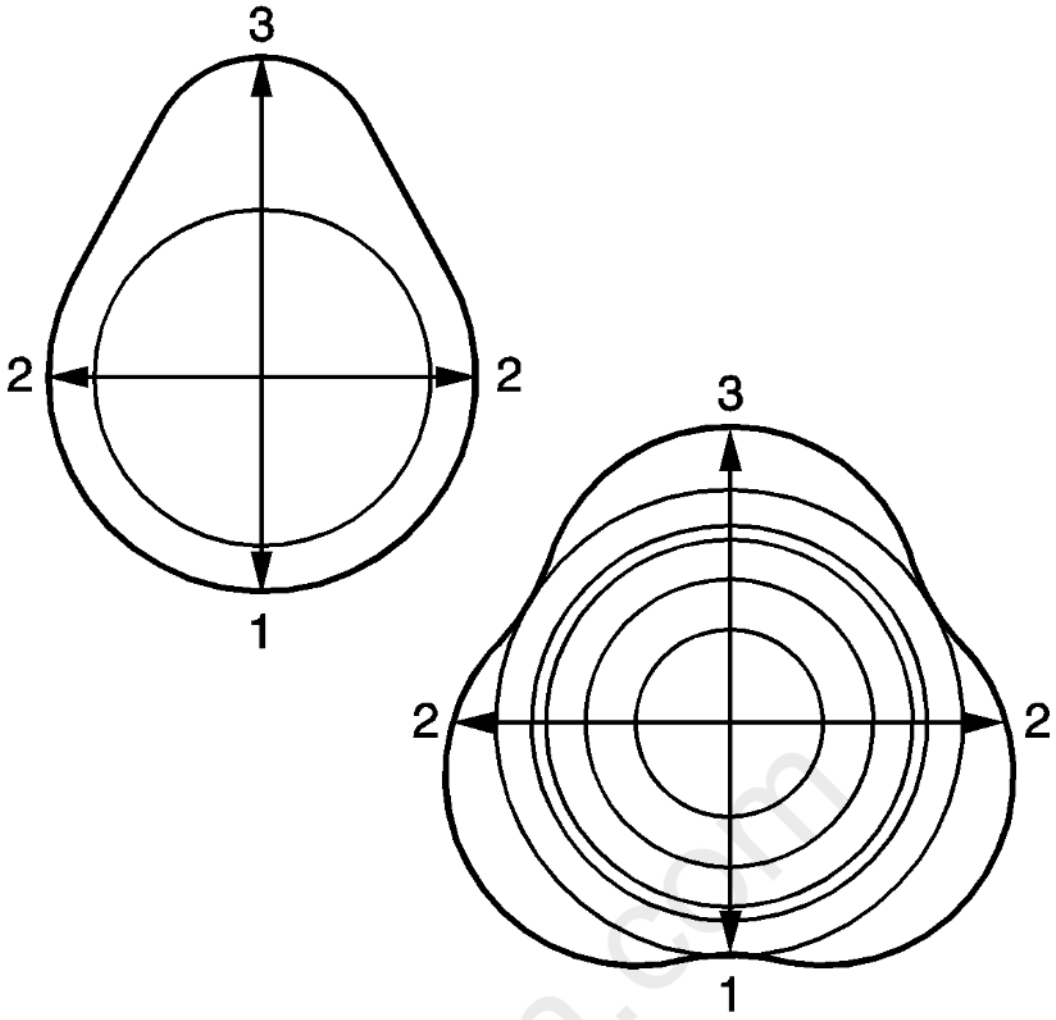

Fig. 199: View of Lobe Diagram
Courtesy of GENERAL MOTORS COMPANY

8. Place the **GE 7872** indicator with the indicator tip on the base circle (1) of the camshaft lobe.
    1. Place the **GE 7872** indicator at zero.
    2. Rotate the camshaft until the indicator tip is at the highest point (3) on the lobe. This reading is the lift of the camshaft lobe. Refer to **Engine Mechanical Specifications** .
    3. If the indicated measurement is significantly lower than these specifications, replace the camshaft or engine performance will be reduced.

VALVE LIFTER CLEANING AND INSPECTION

cardiagn.com

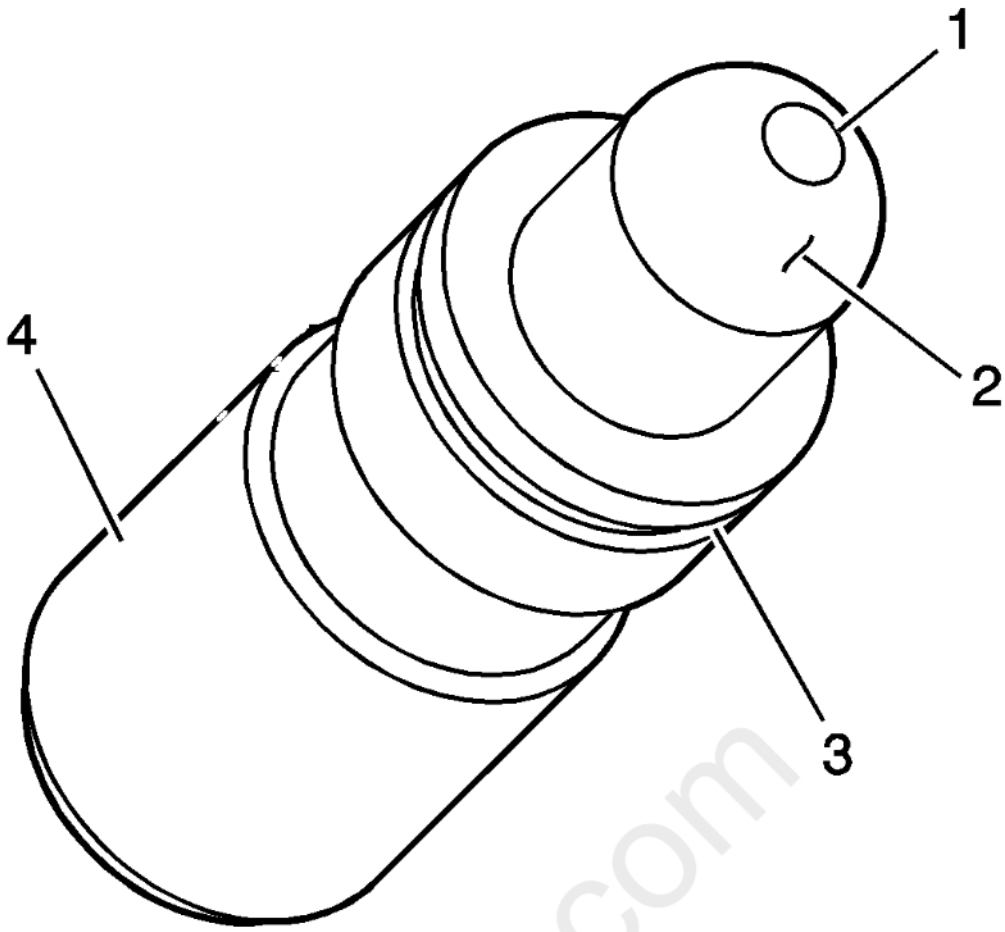

Fig. 200: Identifying Valve Lifter Inspection Points
Courtesy of GENERAL MOTORS COMPANY

CAUTION: **Refer to Valve Lifter Priming Caution .**

1. Inspect the stationary hydraulic lash adjuster (SHLA) in the following areas:
    - A plugged oil passage (1)
    - A scored or worn camshaft follower pivot area (2)
    - A damaged or broken retainer (3), some applications
    - A severely scuffed or worn SHLA body (4)
2. Replace the SHLA or SHLAs as necessary.

VALVE ROCKER ARM CLEANING AND INSPECTION

carmagn.com

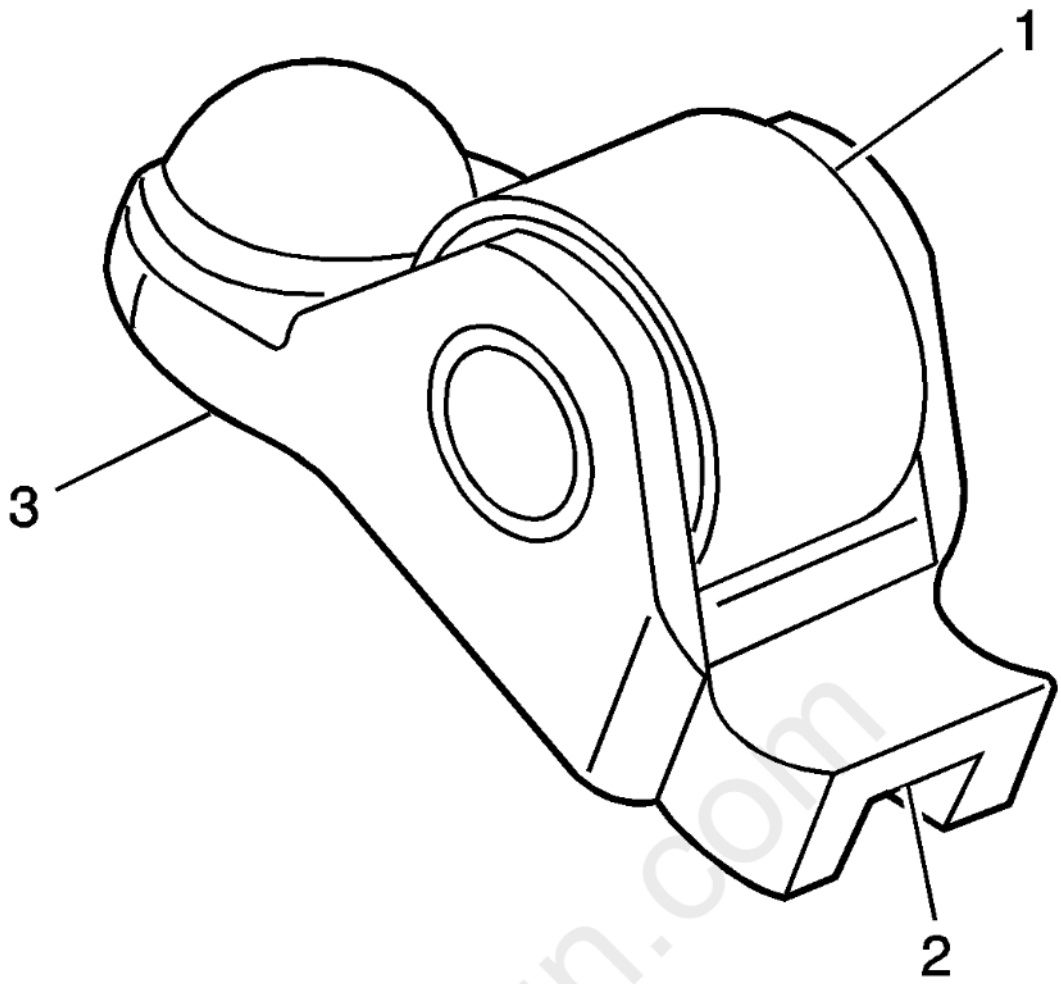

Fig. 201: Inspecting Valve Rocker Arms
Courtesy of GENERAL MOTORS COMPANY

1. Inspect the camshaft follower roller (1) for the following:
    - Flat spots
    - Excessive scoring and pitting
    - Ensure the roller spins freely
2. Inspect the camshaft follower valve tip area (2).
3. Inspect the camshaft follower stationary hydraulic lash adjuster (SHLA) pivot area (3).
4. Replace the camshaft follower or followers as necessary.

CAMSHAFT TIMING DRIVE COMPONENTS CLEANING AND INSPECTION

Cleaning Procedure

1. Clean all the following components with solvent:
    - Crankshaft sprocket
    - Primary timing drive chain
    - Primary timing drive chain shoe
    - Primary timing drive chain guides
    - Primary timing drive chain tensioner
    - Secondary timing drive chains
    - Secondary timing drive chain shoes
    - Secondary timing drive chain guides
    - Secondary timing drive chain tensioners

carmagn.com

- Timing component fastening bolts

2. Clean each camshaft position actuator's exterior with solvent.

WARNING: Refer to Safety Glasses Warning .

3. Dry the timing components with compressed air.

Visual Inspection

Camshaft Thrust Washers (If Equipped)

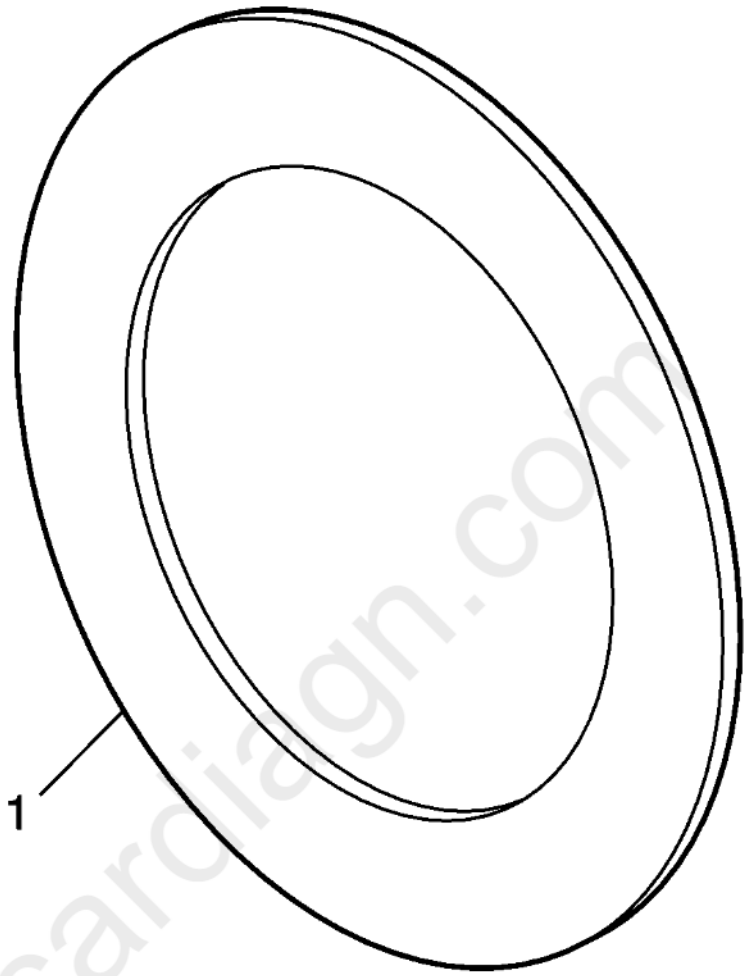

Fig. 202: Identifying Camshaft Thrust Washer
Courtesy of GENERAL MOTORS COMPANY

1. Inspect the camshaft thrust washers for deep scoring or uneven wear (1).
2. Replace as necessary.

Camshaft Position Actuators

cardiagn.com

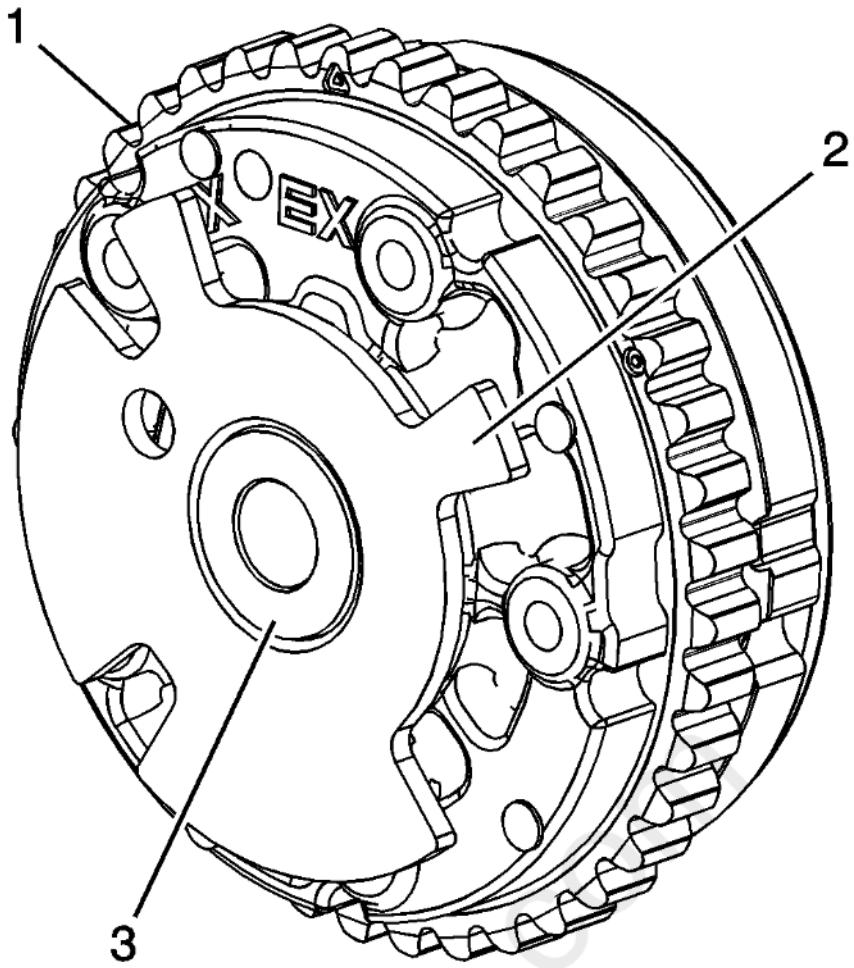

Fig. 203: View Of Camshaft Position Actuators Inspection Locations
Courtesy of GENERAL MOTORS COMPANY

NOTE: **Actual camshaft position actuators may vary in appearance from the ones shown.**

1. Inspect the front of the exhaust camshaft position actuators for the following:
    - Sprocket damage (1)
    - Reluctor/sensor wheel damage (2)
    - Camshaft position actuator bolt seating/sealing inner hub flange damage (3)

cardiagn.com

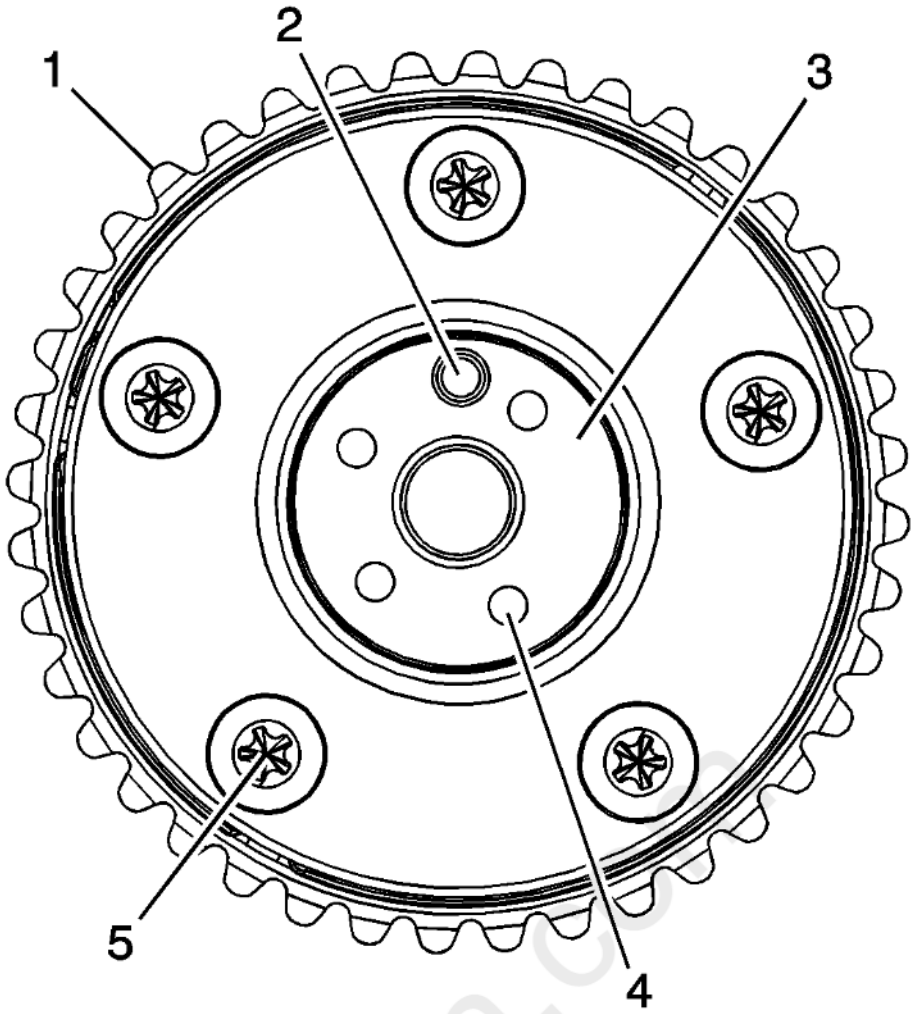

Fig. 204: View Of Exhaust Camshaft Position Actuators Inspection Locations
Courtesy of GENERAL MOTORS COMPANY

2. Inspect the back of the exhaust camshaft position actuators for the following:
    - Sprocket damage (1)
    - Camshaft locating pin damage (2)
    - Camshaft seating/sealing inner hub flange damage (3)
    - Blockage to the oil passages (4)
    - Loose or missing housing bolts (5)

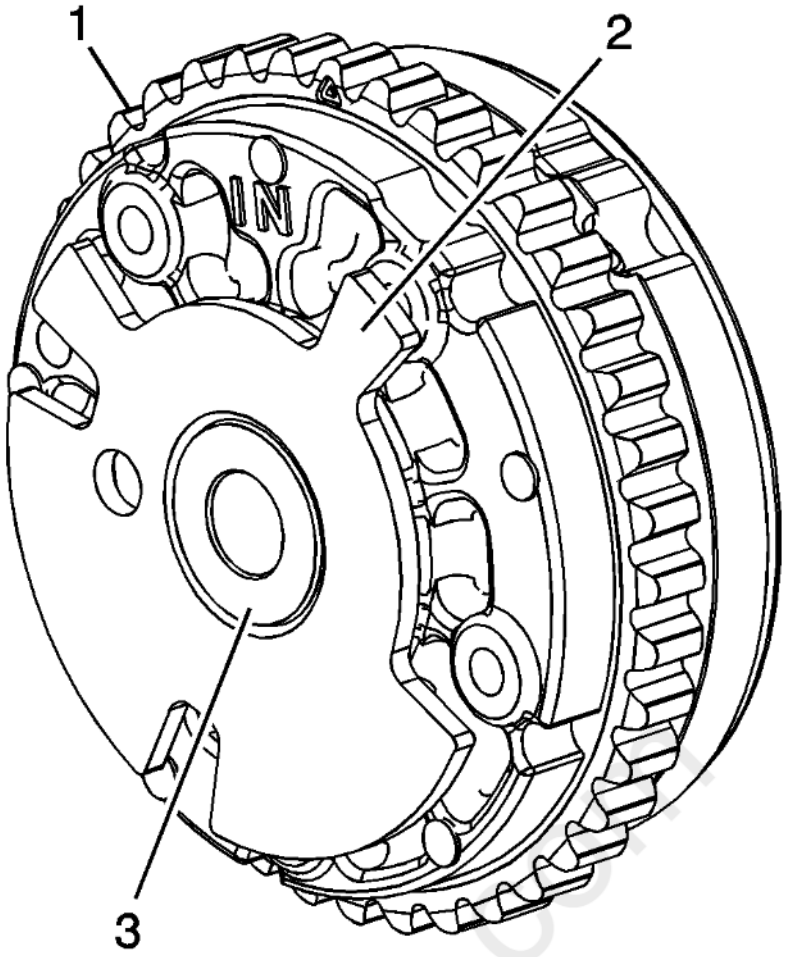

Fig. 205: View Of Left Intake Camshaft Position Actuators Inspection Locations
Courtesy of GENERAL MOTORS COMPANY

3. Inspect the front of the left intake camshaft position actuators for the following:
    - Sprocket damage (1)
    - Reluctor/sensor wheel damage (2)
    - Camshaft position actuator oil control valve bolt seating/sealing inner hub flange damage (3)

cardiagn.com

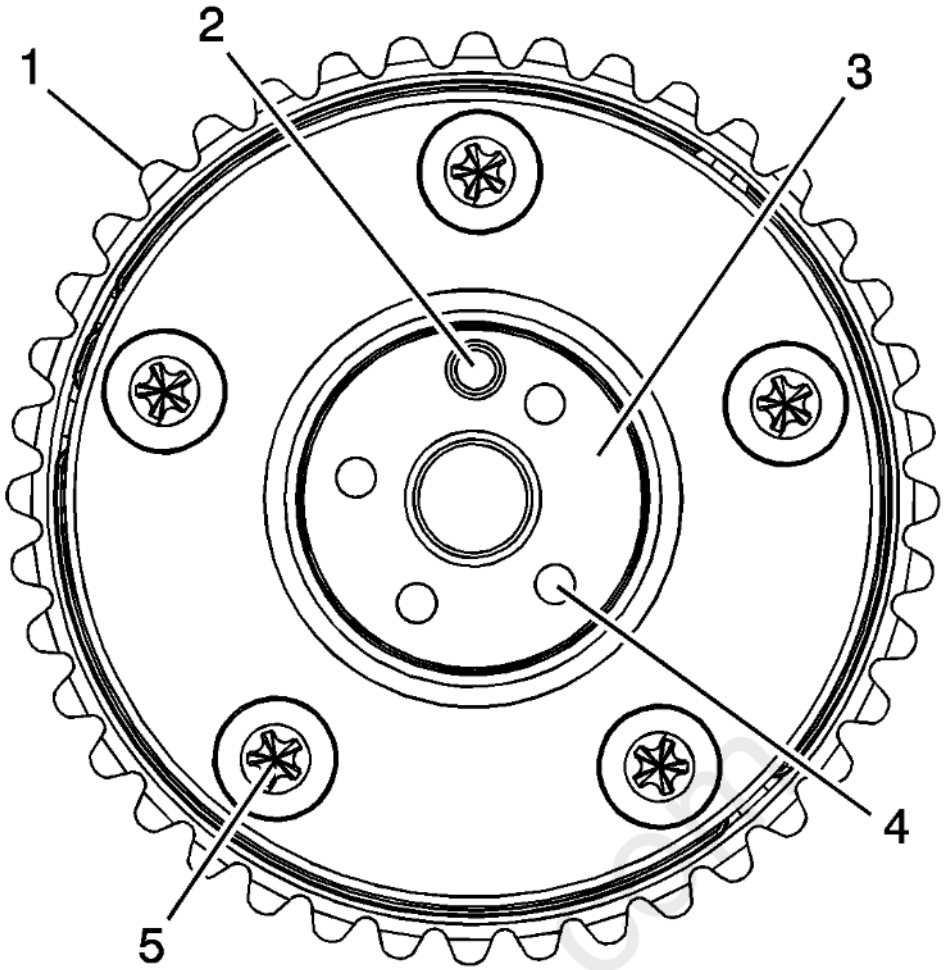

Fig. 206: View Of Left Intake Camshaft Position Actuators Inspection Locations
Courtesy of GENERAL MOTORS COMPANY

4. Inspect the back of the left intake camshaft position actuators for the following:
    - Sprocket damage (1)
    - Camshaft locating pin damage (2)
    - Camshaft seating/sealing inner hub flange damage (3)
    - Blockage to the oil passages (4)
    - Loose or missing housing bolts (5)

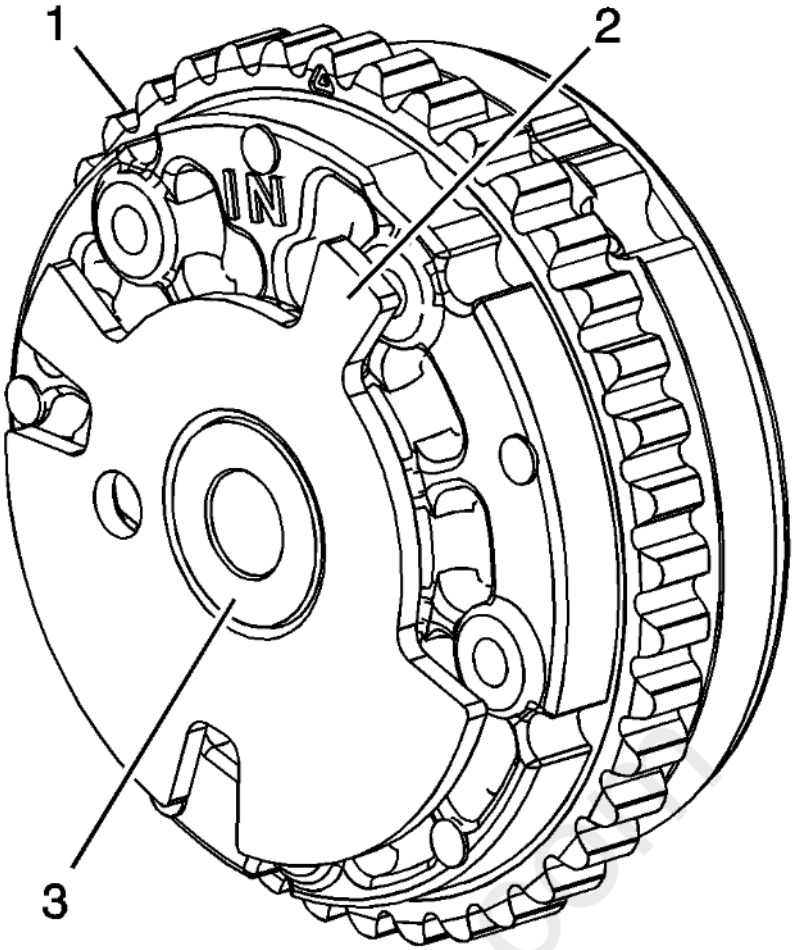

Fig. 207: View Of Right Intake Camshaft Position Actuators Inspection Locations
Courtesy of GENERAL MOTORS COMPANY

5. Inspect the front of the right intake camshaft position actuators for the following:
    - Sprocket damage (1)
    - Reluctor/sensor wheel damage (2)
    - Camshaft position actuator oil control valve bolt seating/sealing inner hub flange damage (3)

cardiagn.com

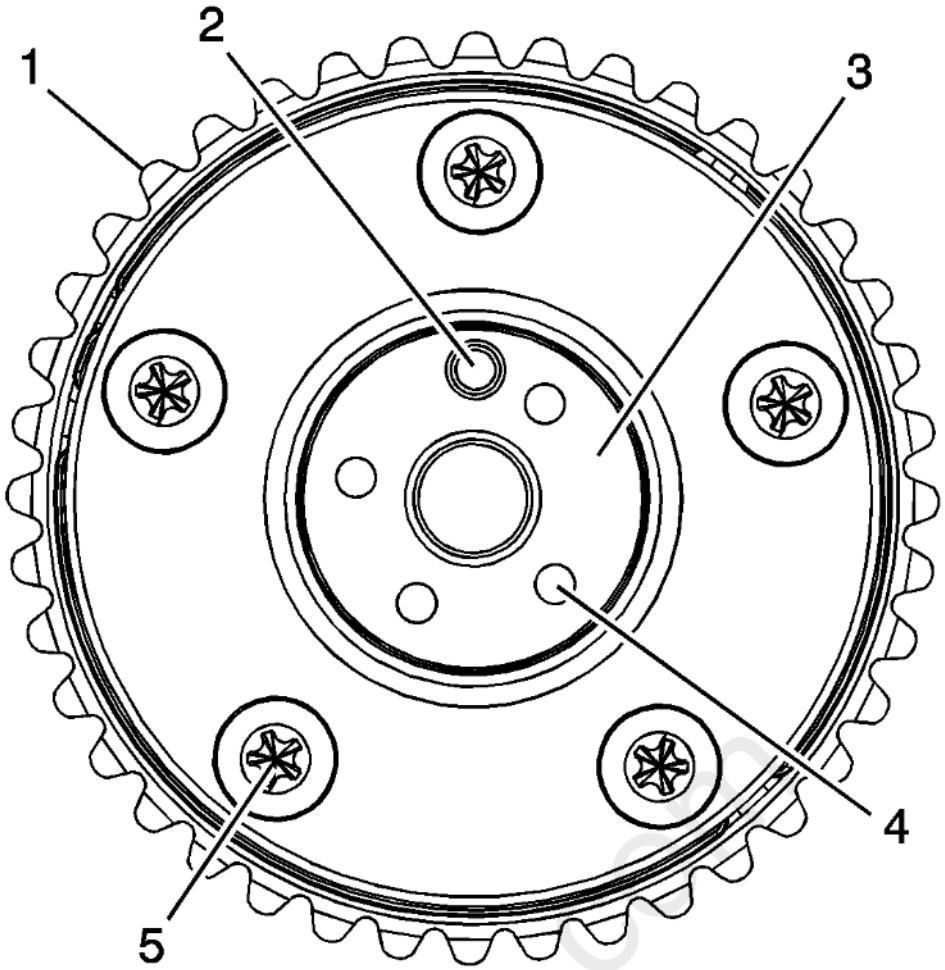

Fig. 208: View Of Left Intake Camshaft Position Actuators Inspection Locations
Courtesy of GENERAL MOTORS COMPANY

6. Inspect the back of the right intake camshaft position actuators for the following:
    - Sprocket damage (1)
    - Camshaft locating pin damage (2)
    - Camshaft seating/sealing inner hub flange damage (3)
    - Blockage to the oil passages (4)
    - Loose or missing housing bolts (5)
7. Replace a damaged camshaft position actuator.

Camshaft Position Actuator Oil Control Valves

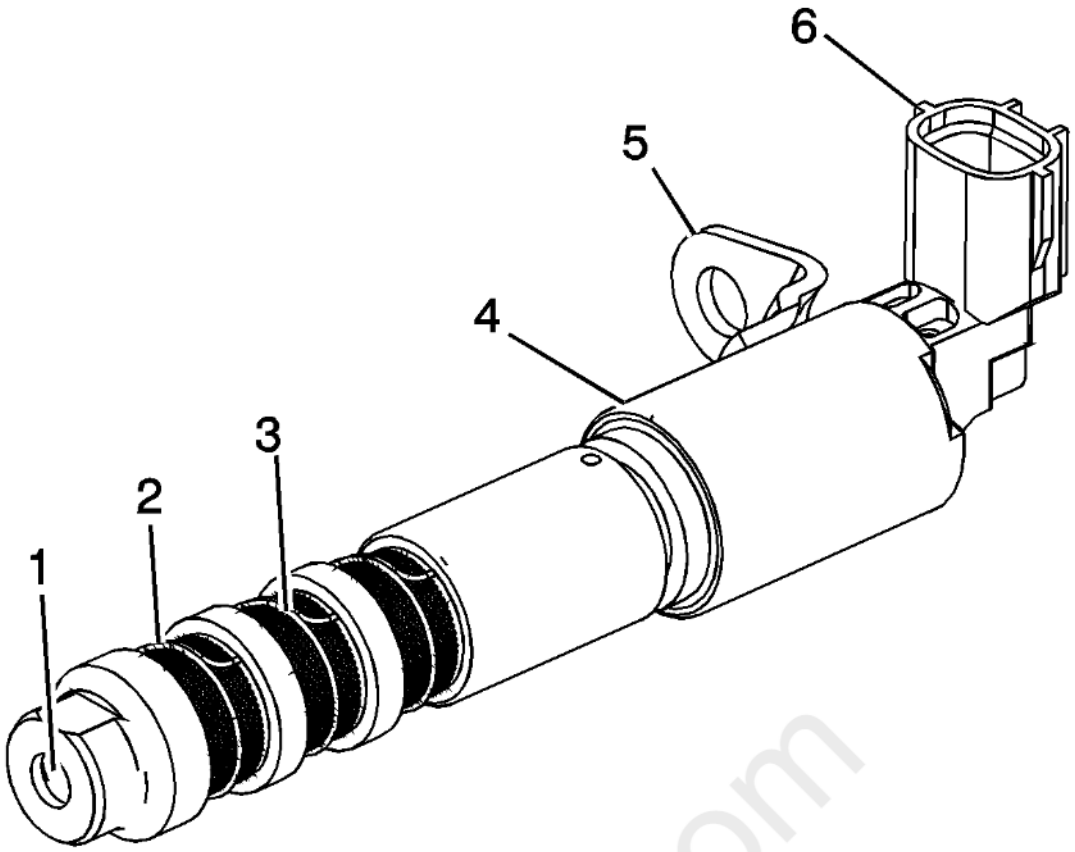

Fig. 209: Identifying Camshaft Position Actuator Oil Control Valves Inspection Areas
Courtesy of GENERAL MOTORS COMPANY

1. Inspect the camshaft position actuator oil control valves for the following:
    - Blockage to the oil passage (1)
    - Missing or damaged oil screen clip (2)
    - Blockage or damage to the oil screen (3)
    - Damage to the sealing surface for the camshaft position actuator oil control valve solenoid oil seal (4)
    - Damage to the bracket (5)
    - Damage to the wiring harness connection and/or terminals (6)
2. Replace a damaged camshaft position actuator oil control valve.

Left Intermediate Sprocket with Primary and Secondary Inverted Tooth (IT) Chain

carmagn.com

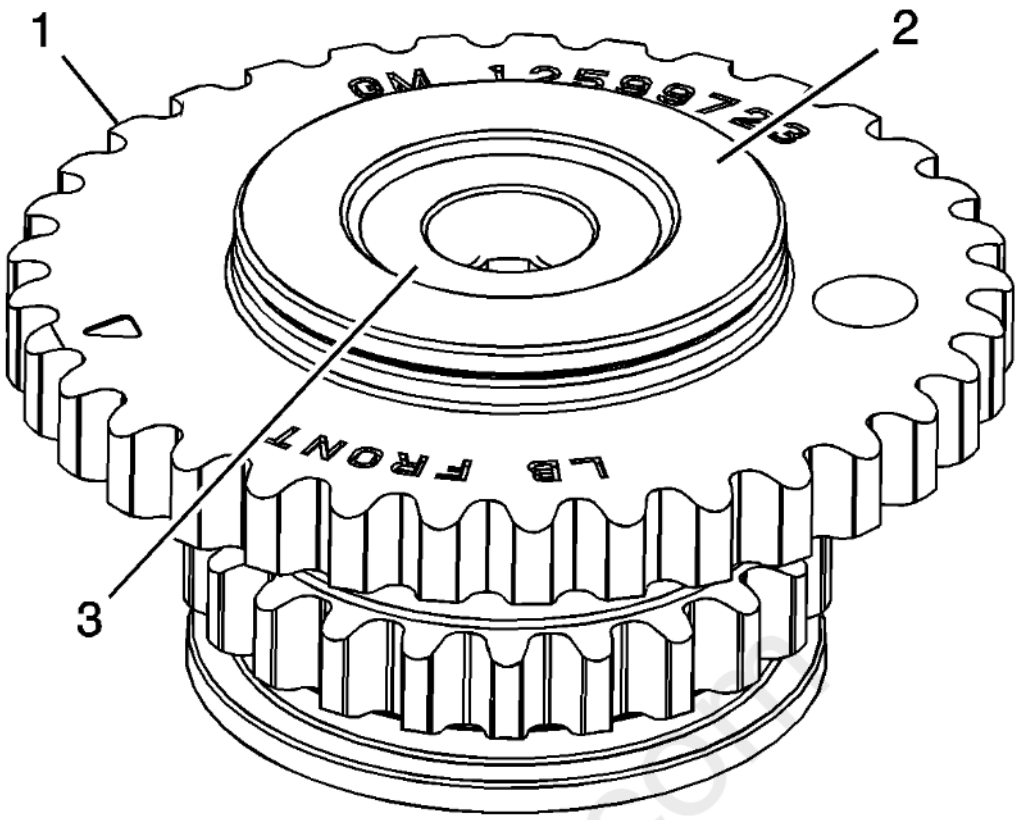

Fig. 210: View Of Left Intermediate Sprocket Inspection Locations
Courtesy of GENERAL MOTORS COMPANY

1. Inspect the front of the left intermediate sprocket for the following:
    - Damage to the primary camshaft drive chain sprocket (1)
    - Damage to the hub bearing (2) - Ensure the hub bearing spins freely. If the hub bearing wobbles, is noisy, or feels rough when rotated, replace the intermediate sprocket.
    - Damage to the bolt flange seating/sealing surface (3)

Cardiagn.com

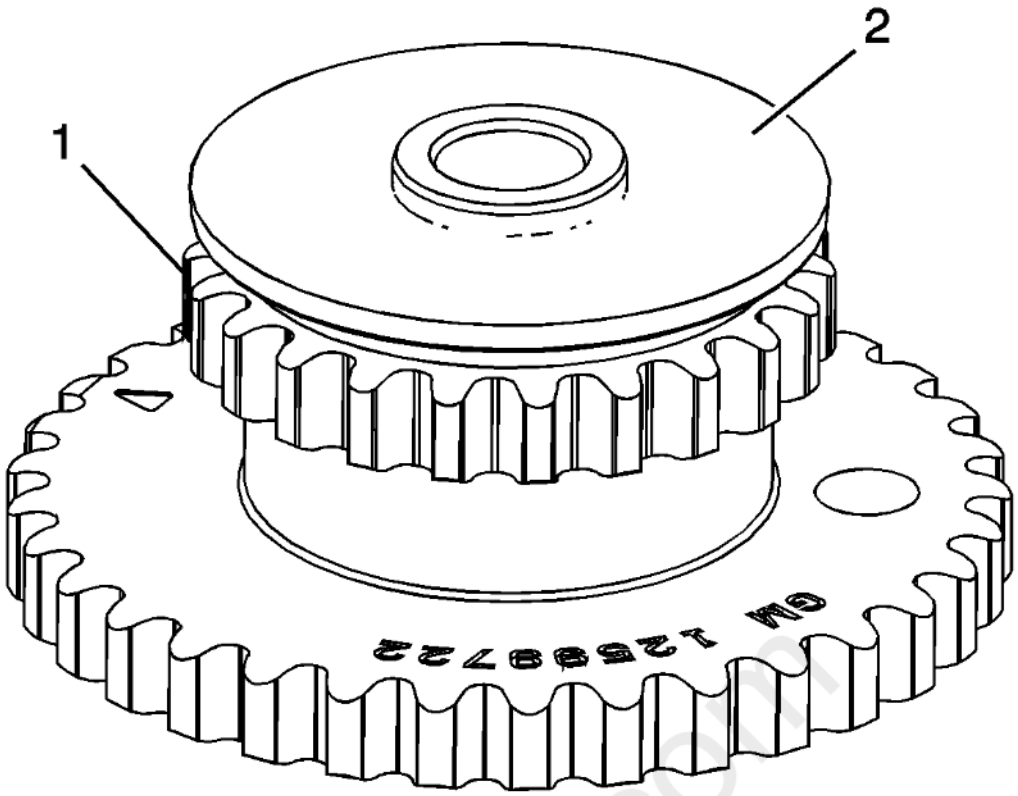

Fig. 211: View Of Left Intermediate Sprocket Inspection Locations
Courtesy of GENERAL MOTORS COMPANY

2. Inspect the back of the left intermediate sprocket for the following:
    - Damage to the left secondary camshaft drive chain sprocket (1)
    - Damage to the bearing hub-to-engine block sealing surface (2)
3. Replace a damaged left intermediate sprocket.

Right Intermediate Sprocket with Primary and Secondary Inverted Tooth (IT) Chain

cardiagn.com

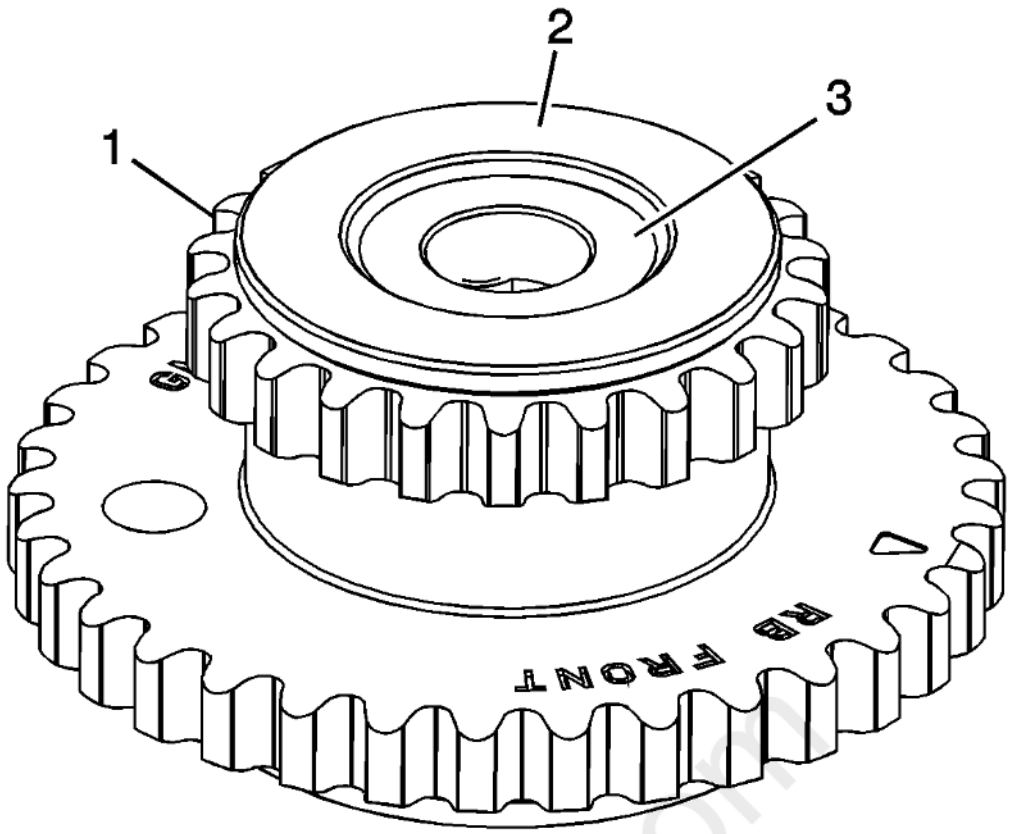

Fig. 212: View Of Right Intermediate Sprocket Inspection Locations
Courtesy of GENERAL MOTORS COMPANY

1. Inspect the front of the right intermediate sprocket for the following:
    - Damage to the right secondary camshaft drive chain sprocket (1)
    - Damage to the hub bearing (2) - Ensure the hub bearing spins freely. If the hub bearing wobbles, is noisy, or feels rough when rotated, replace the intermediate sprocket.
    - Damage to the bolt flange seating/sealing surface (3)

carDiagn.com

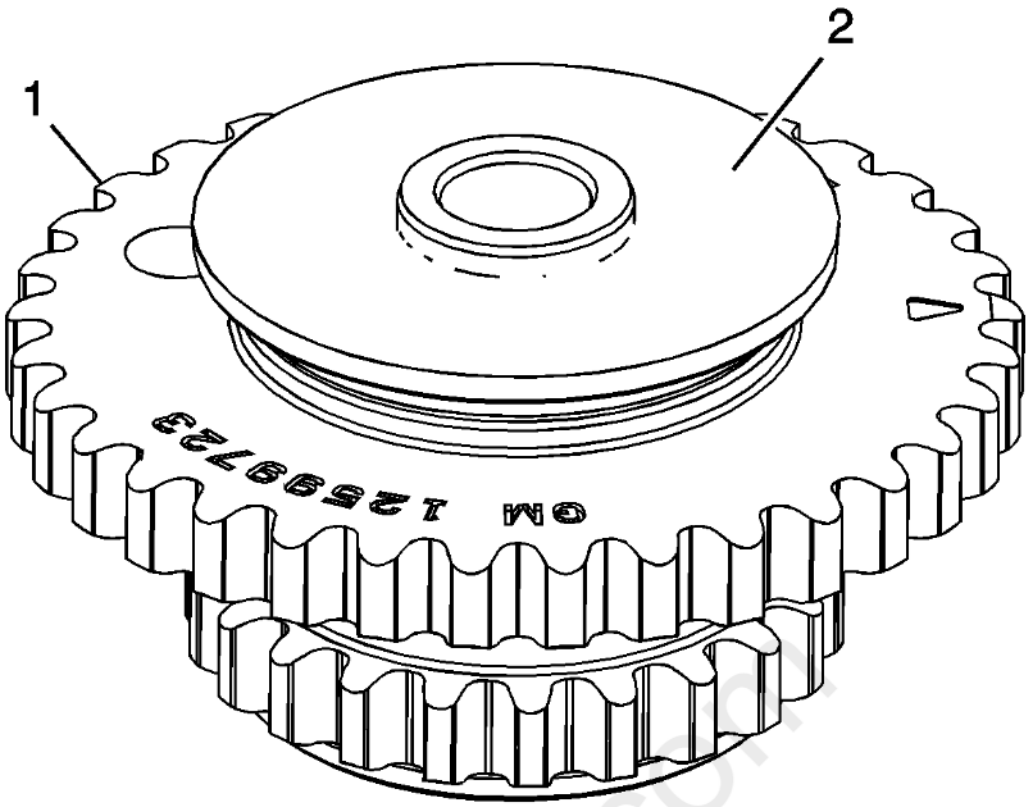

Fig. 213: View Of Right Intermediate Sprocket Inspection Locations
Courtesy of GENERAL MOTORS COMPANY

2. Inspect the back of the right intermediate sprocket for the following:
    - Damage to the primary camshaft drive chain sprocket (1)
    - Damage to the bearing hub-to-engine block sealing surface (2)
3. Replace a damaged right intermediate sprocket.

Crankshaft Sprocket with Primary Inverted Tooth (IT) Chain

carDiagn.com

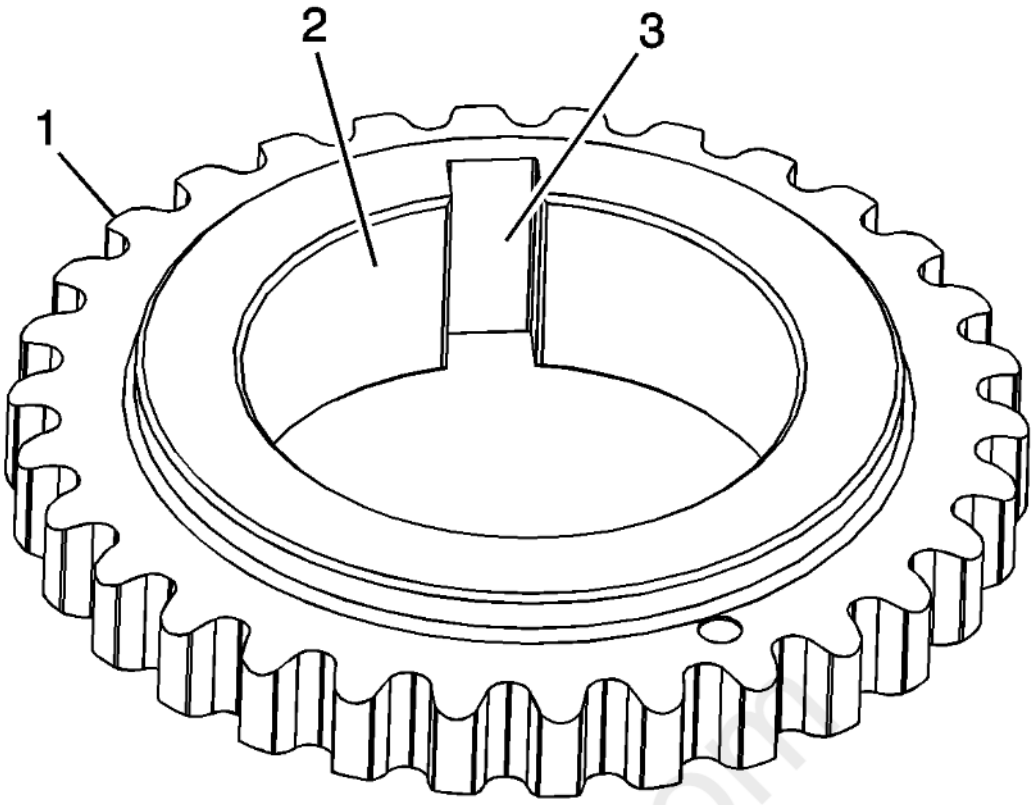

Fig. 214: View Of Crankshaft Sprocket Inspection Locations
Courtesy of GENERAL MOTORS COMPANY

1. Inspect the crankshaft sprocket for the following:
    - Sprocket damage (1)
    - Bore damage (2)
    - Keyway damage (3)
2. Replace a damaged crankshaft sprocket.

Secondary Timing Chains with Inverted Tooth (IT) Chain

cardiagn.com

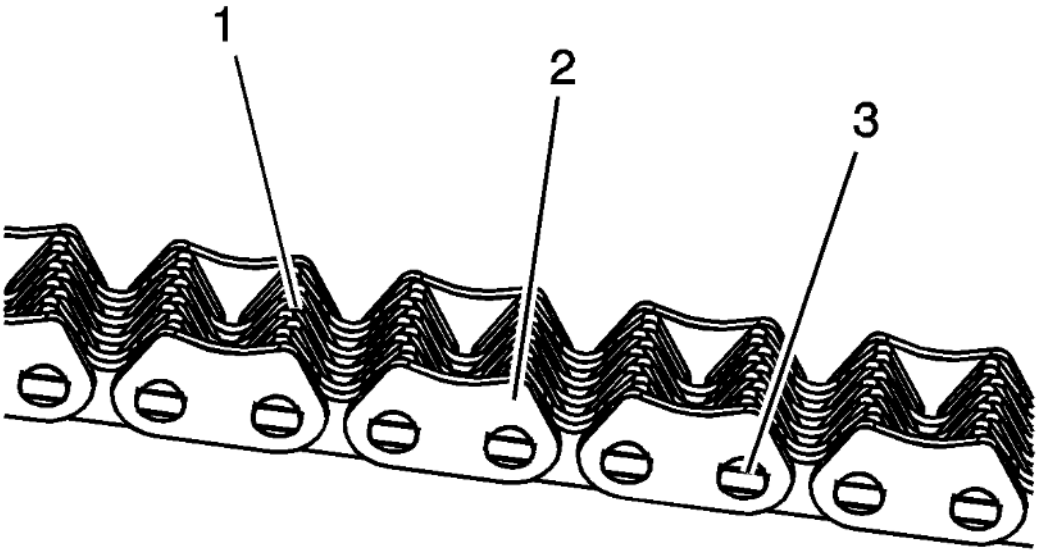

Fig. 215: Identifying Primary & Secondary Timing Chain Inspection Locations
Courtesy of GENERAL MOTORS COMPANY

1. Inspect the secondary timing chain for the following:
    - Binding or worn links (1)
    - Loose links (2)
    - Loose pins (3)
2. Replace a damaged secondary timing chain.

Primary Timing Chain with Inverted Tooth (IT) Chain

cardiagn.com

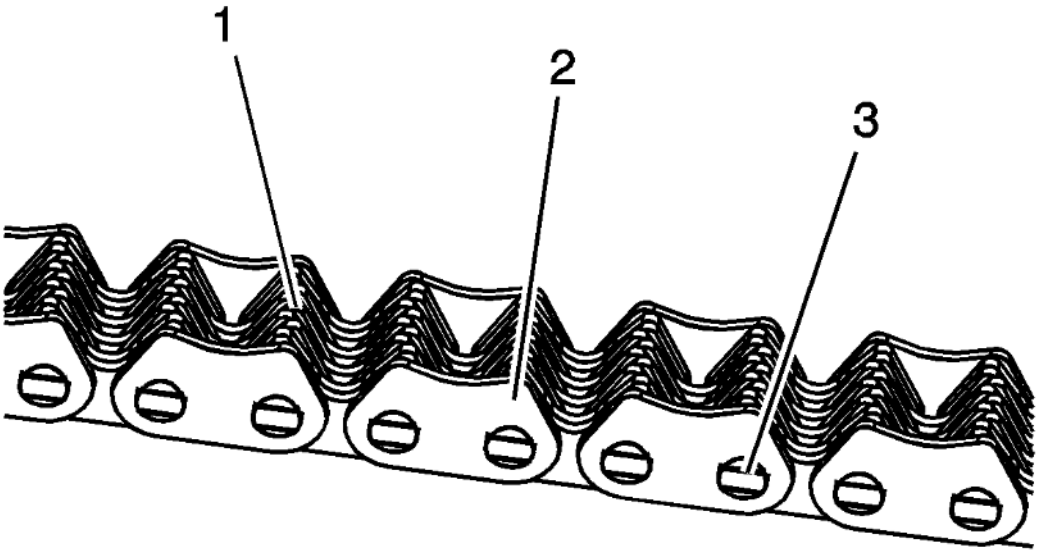

Fig. 216: Identifying Primary & Secondary Timing Chain Inspection Locations
Courtesy of GENERAL MOTORS COMPANY

1. Inspect the primary timing chain for the following:
    - Binding or worn links (1)
    - Loose links (2)
    - Loose pins (3)
2. Replace a damaged primary timing chain.

Primary Timing Chain Upper Guide

cardiagn.com

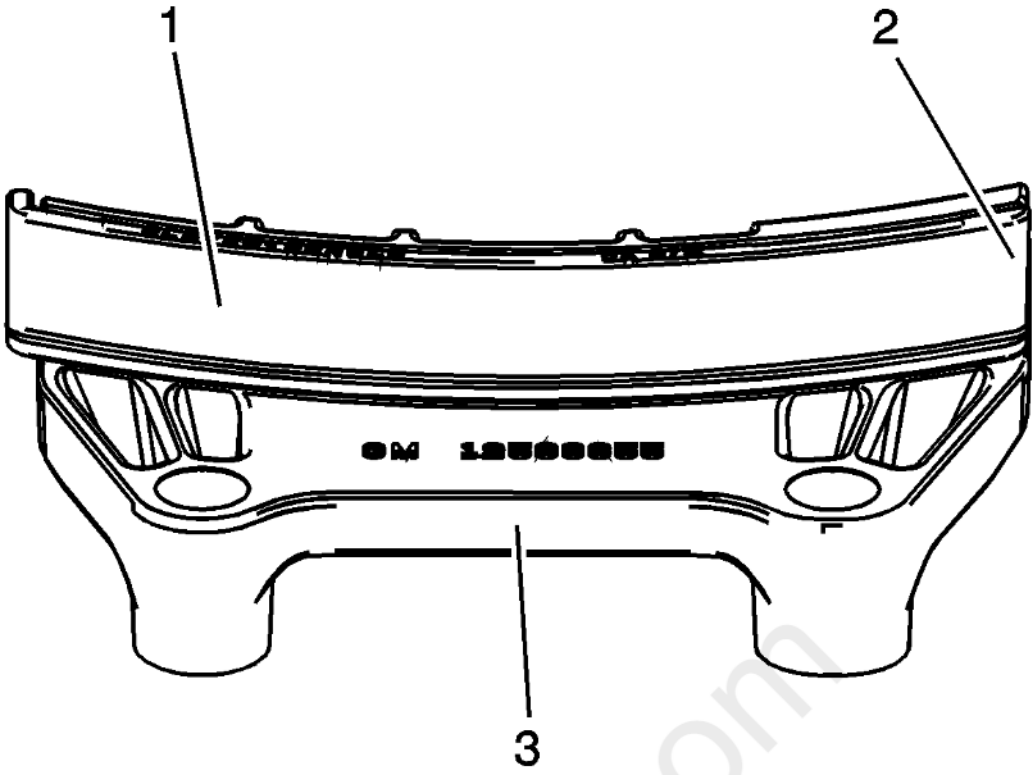

Fig. 217: View Of Primary Timing Chain Upper Guide Inspection Locations
Courtesy of GENERAL MOTORS COMPANY

1. Inspect the primary timing chain upper guide for the following:
    - Worn guide surface (1)
    - Cracked or broken guide surface (2)
    - Cracked or damaged guide base (3)
2. Replace a damaged primary timing chain upper guide.

Primary Timing Chain Lower Guide

cardiagn.com

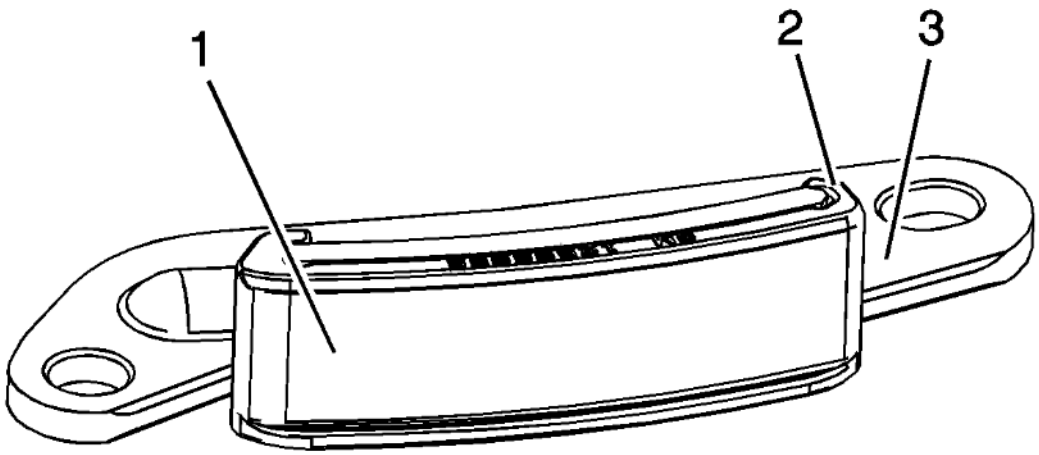

Fig. 218: View Of Primary Camshaft Drive Chain Lower Guide Inspection Locations
Courtesy of GENERAL MOTORS COMPANY

1. Inspect the primary timing chain lower guide for the following:
    - Worn guide surface (1)
    - Cracked or broken guide surface (2)
    - Cracked or damaged guide base (3)
2. Replace a damaged primary timing chain lower guide.

Left Secondary Timing Chain Guide

cardiagn.com

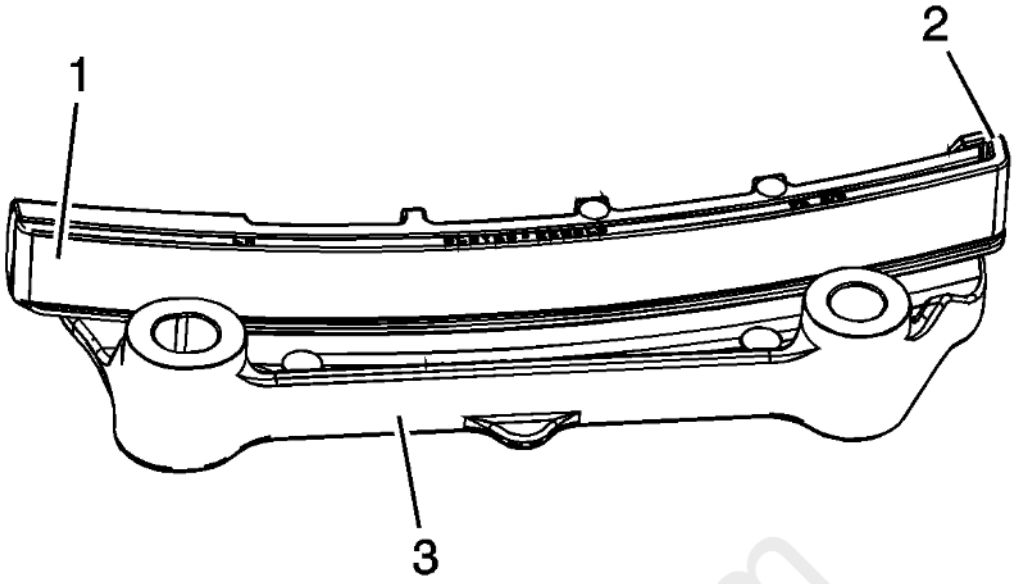

Fig. 219: View Of Left Secondary Timing Chain Guide Inspection Locations
Courtesy of GENERAL MOTORS COMPANY

1. Inspect the left secondary timing chain guides for the following:
    - Worn guide surface (1)
    - Cracked or broken guide surface (2)
    - Cracked or damaged guide base (3)
2. Replace a damaged left secondary timing chain guide.

Right Secondary Timing Chain Guide

cardiagn.com

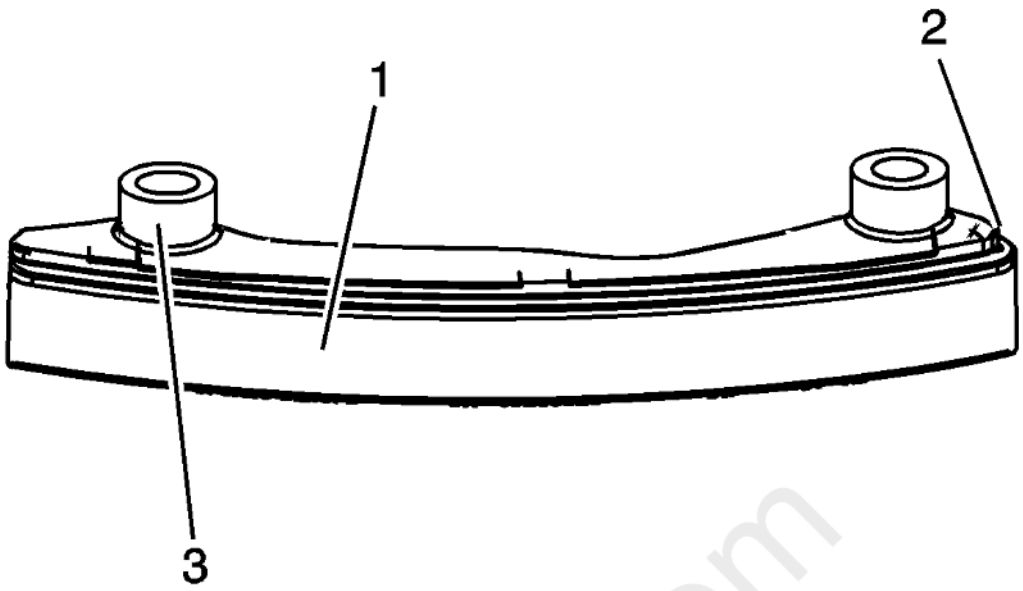

Fig. 220: Identifying Right Secondary Timing Chain Guide Inspection Locations
Courtesy of GENERAL MOTORS COMPANY

1. Inspect the right secondary timing chain guides for the following:
    - Worn guide surface (1)
    - Cracked or broken guide surface (2)
    - Cracked or damaged guide base (3)
2. Replace a damaged right secondary timing chain guide.

Left Secondary Timing Chain Shoe

cardiagn.com

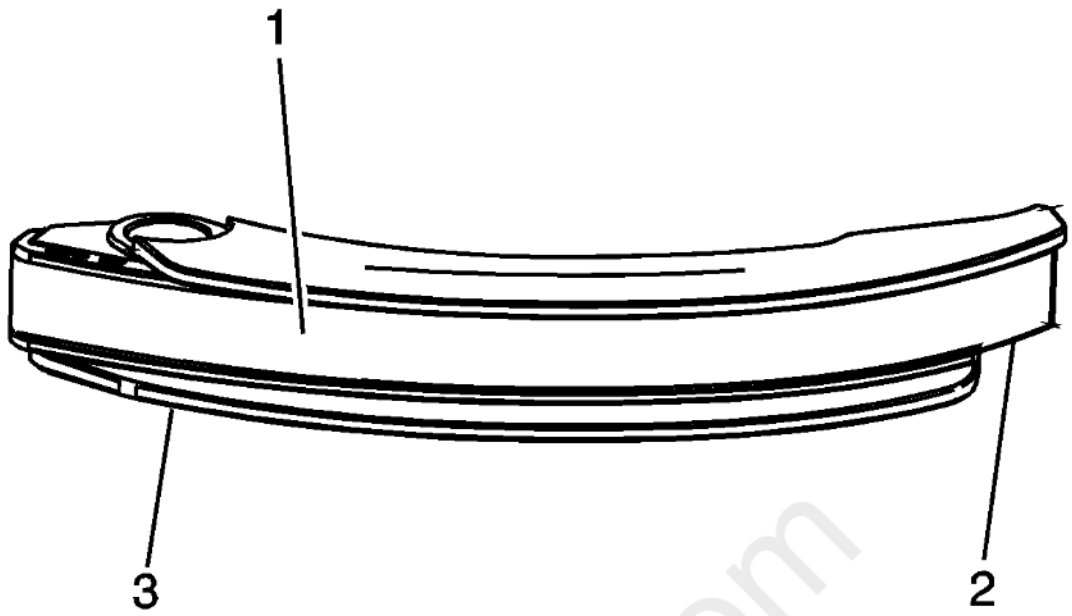

Fig. 221: View Of Left Secondary Timing Chain Shoe Inspection Locations
Courtesy of GENERAL MOTORS COMPANY

1. Inspect the front of the left secondary timing chain shoe for the following:
    - Worn shoe surface (1)
    - Cracked or broken shoe surface (2)
    - Cracked or damaged shoe (3)

cardiagn.com

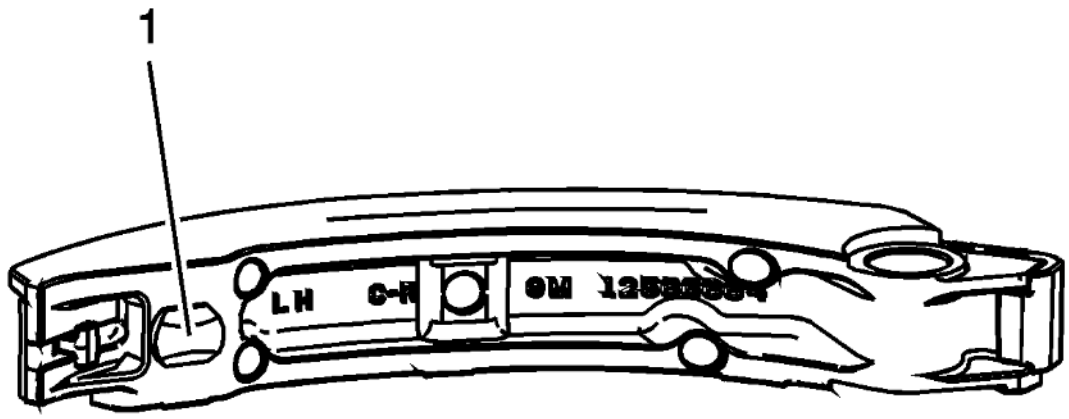

Fig. 222: View of Left Secondary Timing Chain Tensioner Contact Pad
Courtesy of GENERAL MOTORS COMPANY

2. Inspect the back of the left secondary timing chain shoe for a damaged, worn, or missing left secondary timing chain tensioner contact pad (1).
3. Replace a damaged left secondary timing chain shoe.

Right Secondary Timing Chain Shoe

carmagn.com

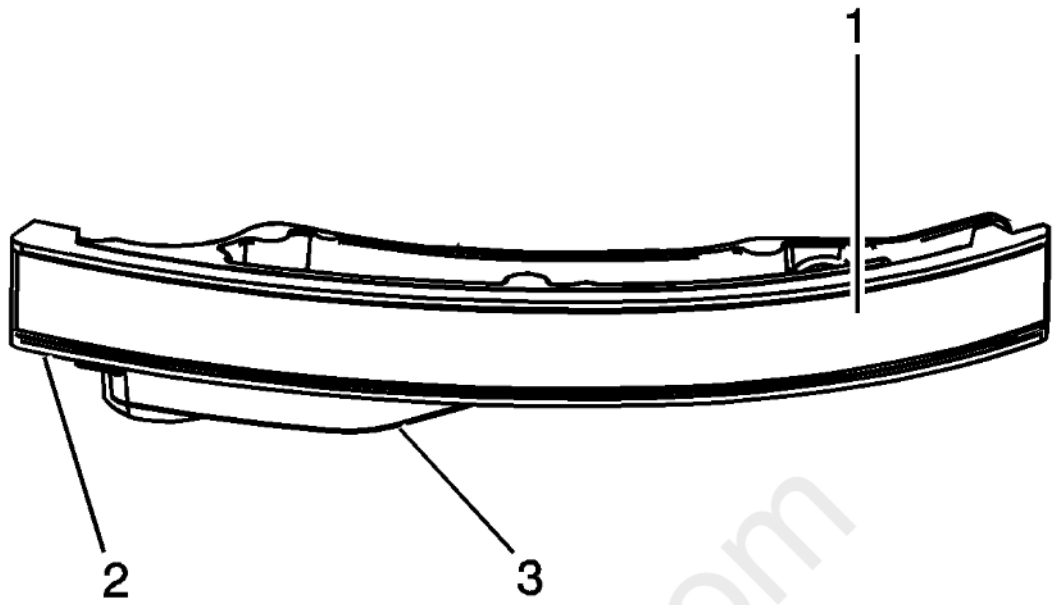

Fig. 223: Identifying Right Secondary Timing Chain Shoe
Courtesy of GENERAL MOTORS COMPANY

1. Inspect the front of the right secondary timing chain shoe for the following:
    - Worn shoe surface (1)
    - Cracked or broken shoe surface (2)
    - Cracked or damaged shoe (3)

cardiagn.com

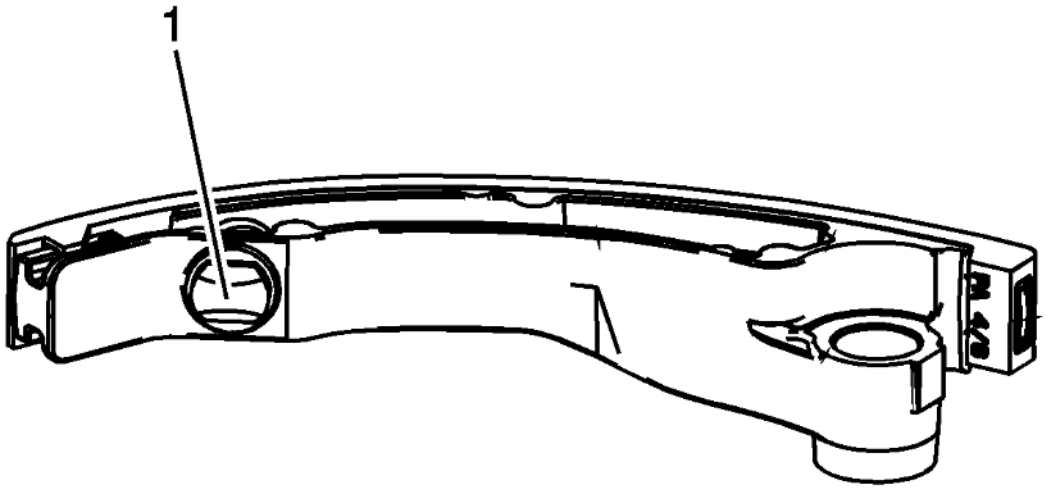

Fig. 224: Inspecting Right Secondary Timing Chain Tensioner Contact Pad
Courtesy of GENERAL MOTORS COMPANY

2. Inspect the back of the right secondary timing chain shoe for a damaged, worn, or missing right secondary timing chain tensioner contact pad (1).
3. Replace a damaged right secondary timing chain shoe.

Primary Timing Chain Tensioner

carmagn.com

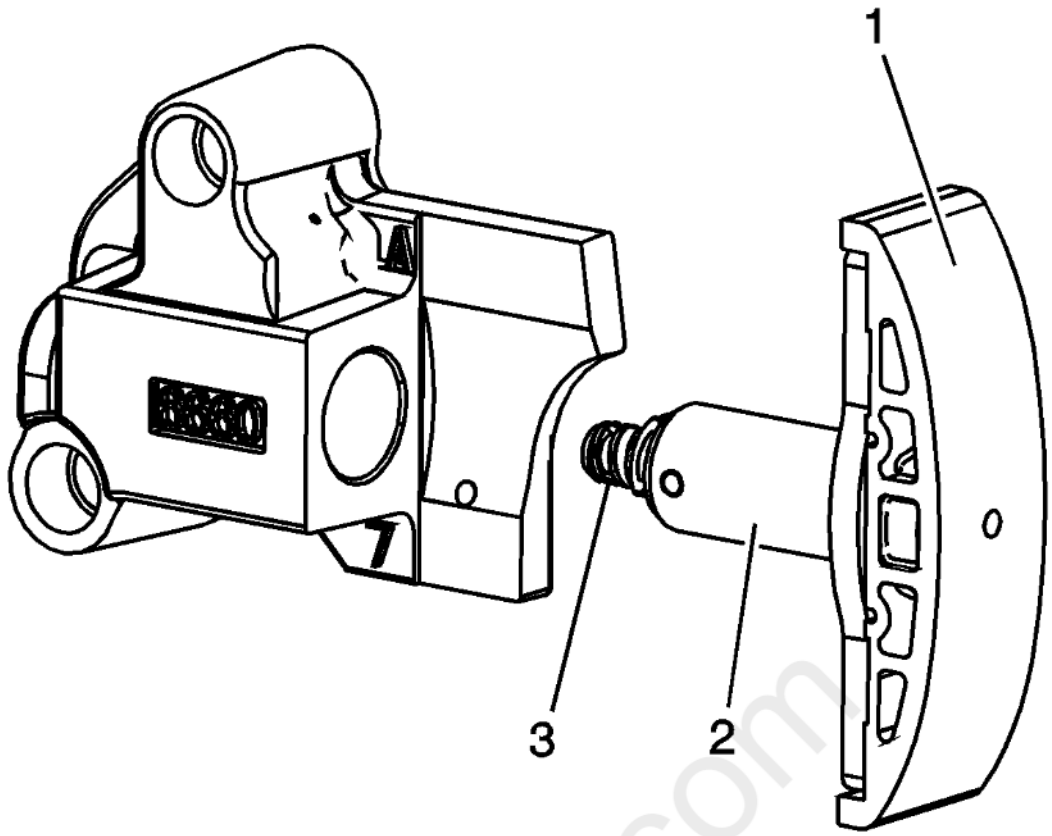

Fig. 225: View Of Primary Timing Chain Tensioner Inspection Locations
Courtesy of GENERAL MOTORS COMPANY

1. Inspect the primary timing chain tensioner for worn primary timing chain tensioner shoe surface (1).
2. Inspect the primary timing chain tensioner for locked or binding timing chain tensioner. Reset the plunger (3) and ensure the plunger moves freely (2) in and out of the body of the tensioner. Refer to **Camshaft Timing Chain Components Installation**.
3. Replace a damaged primary timing chain tensioner.

Left Secondary Timing Chain Tensioner

Cardiagn.com

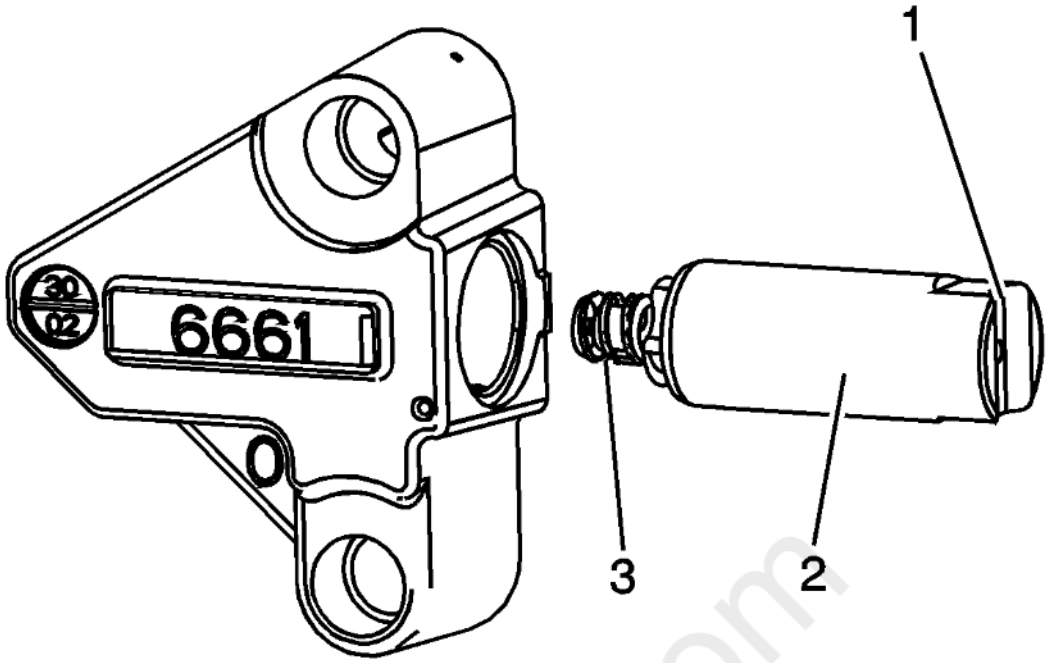

Fig. 226: View Of Left Secondary Timing Chain Tensioner Inspection Locations
Courtesy of GENERAL MOTORS COMPANY

1. Inspect the left secondary timing chain tensioner for damaged plunger-to-shoe contact surface (1).
2. Inspect the left secondary timing chain tensioner for locked or binding timing chain tensioner. Reset the plunger (3) and ensure the plunger moves freely (2) in and out of the body of the tensioner. Refer to **Camshaft Timing Chain Components Installation**.
3. Replace a damaged left secondary timing chain tensioner.

Right Secondary Timing Chain Tensioner

cardiagn.com

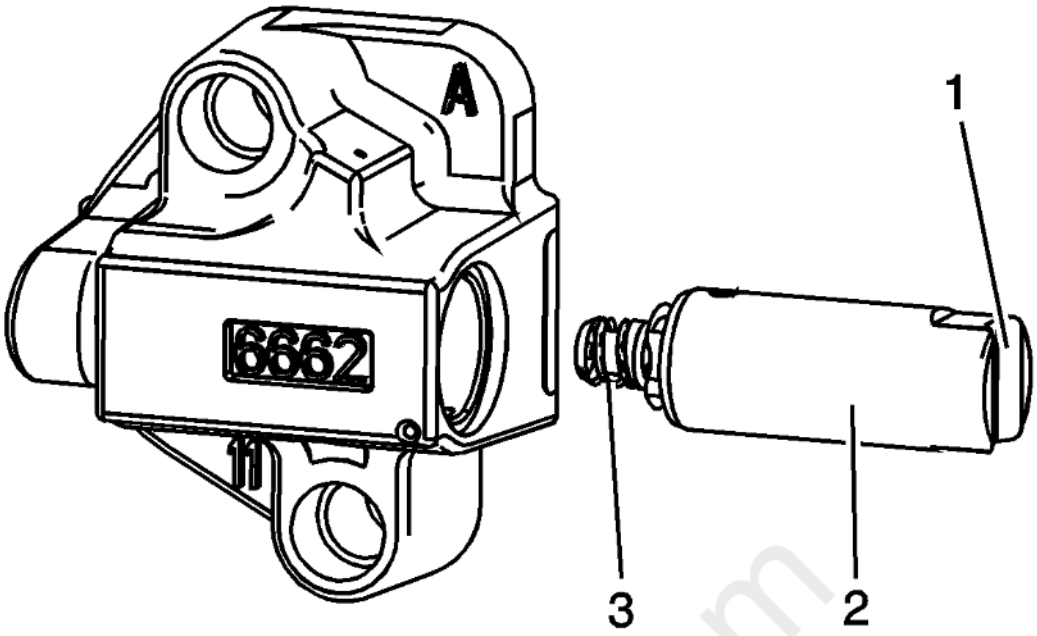

Fig. 227: View Of Right Secondary Timing Chain Tensioner Inspection Locations
Courtesy of GENERAL MOTORS COMPANY

1. Inspect the right secondary timing chain tensioner for damaged plunger-to-shoe contact surface (1).
2. Inspect the right secondary timing chain tensioner for locked or binding timing chain tensioner. Reset the plunger (3) and ensure the plunger moves freely (2) in and out of the body of the tensioner. Refer to **Camshaft Timing Chain Components Installation**.
3. Replace a damaged right secondary timing chain tensioner.

OIL PUMP DISASSEMBLE

cardiagn.com

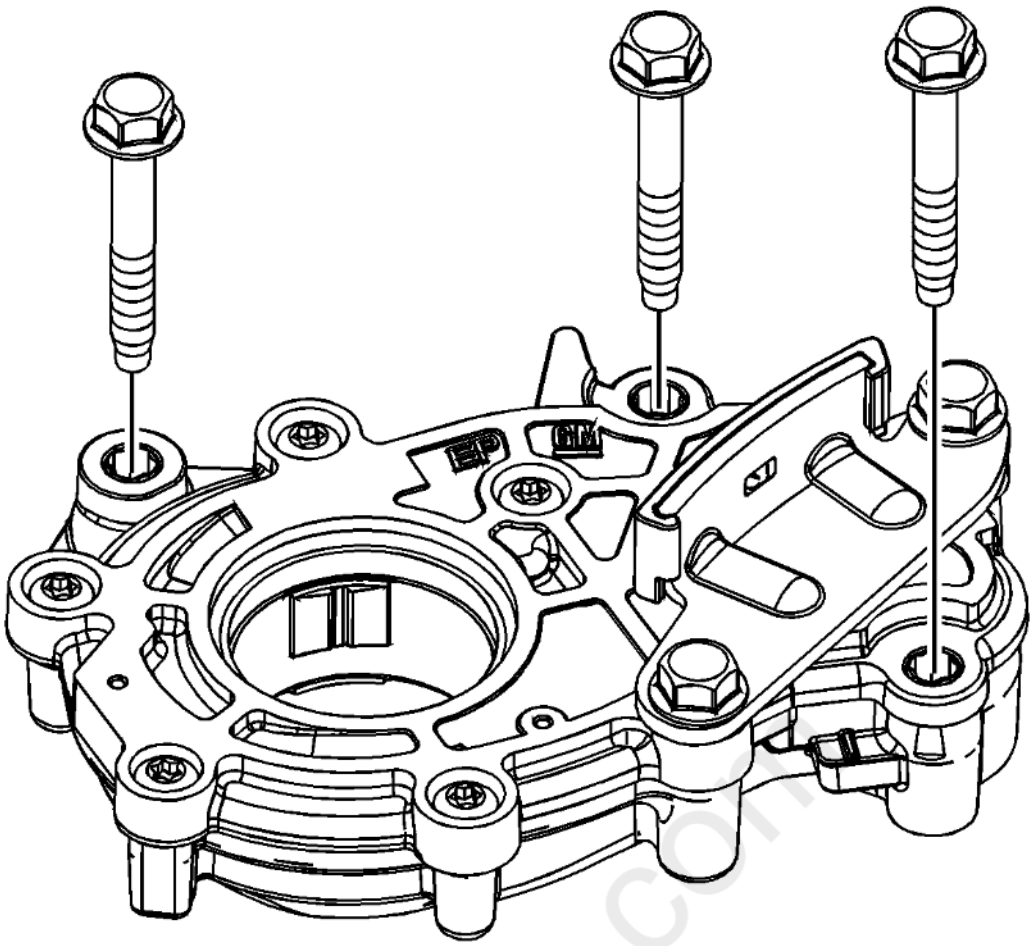

Fig. 228: Identifying Oil Pump Mounting Bolts
Courtesy of GENERAL MOTORS COMPANY

IMPORTANT: There are no serviceable components within the oil pump. Disassemble the pump only to diagnose an oiling concern. A disassembled oil pump must not be reused. A disassembled oil pump must be replaced.

1. Remove the oil pump mounting bolts.

carDiagn.com

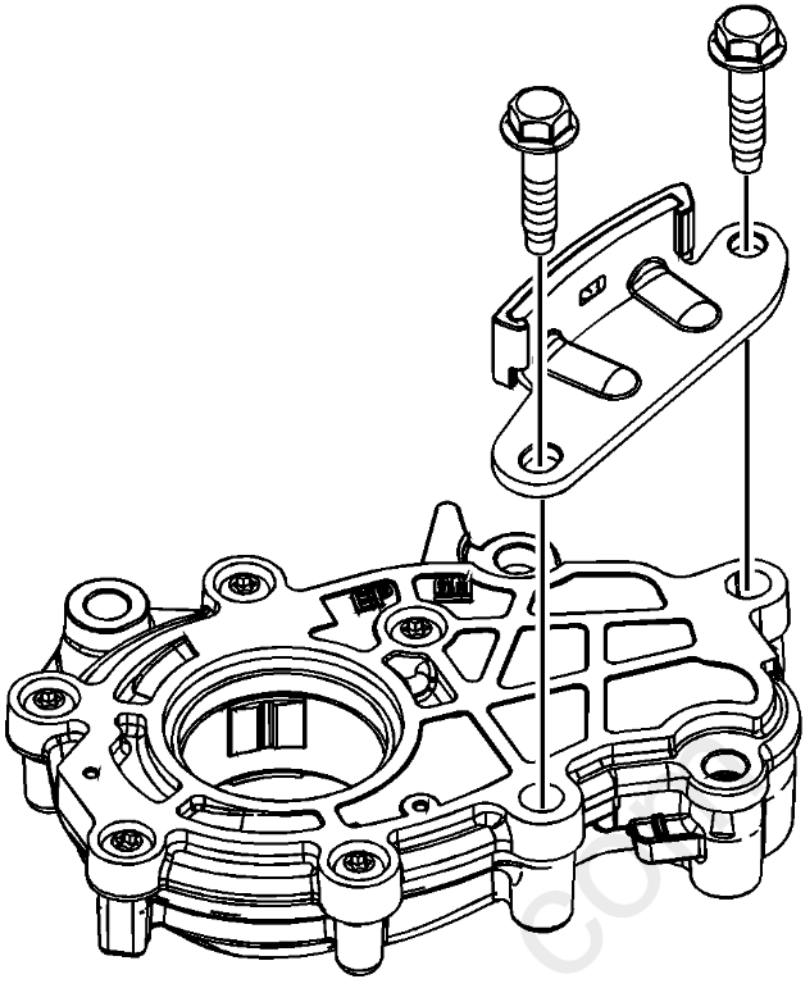

Fig. 229: View Of Oil Pump Mounting Bolts
Courtesy of GENERAL MOTORS COMPANY

2. Remove the primary camshaft drive chain lower guide bolts.
3. Remove the primary camshaft drive chain lower guide.

carmagn.com

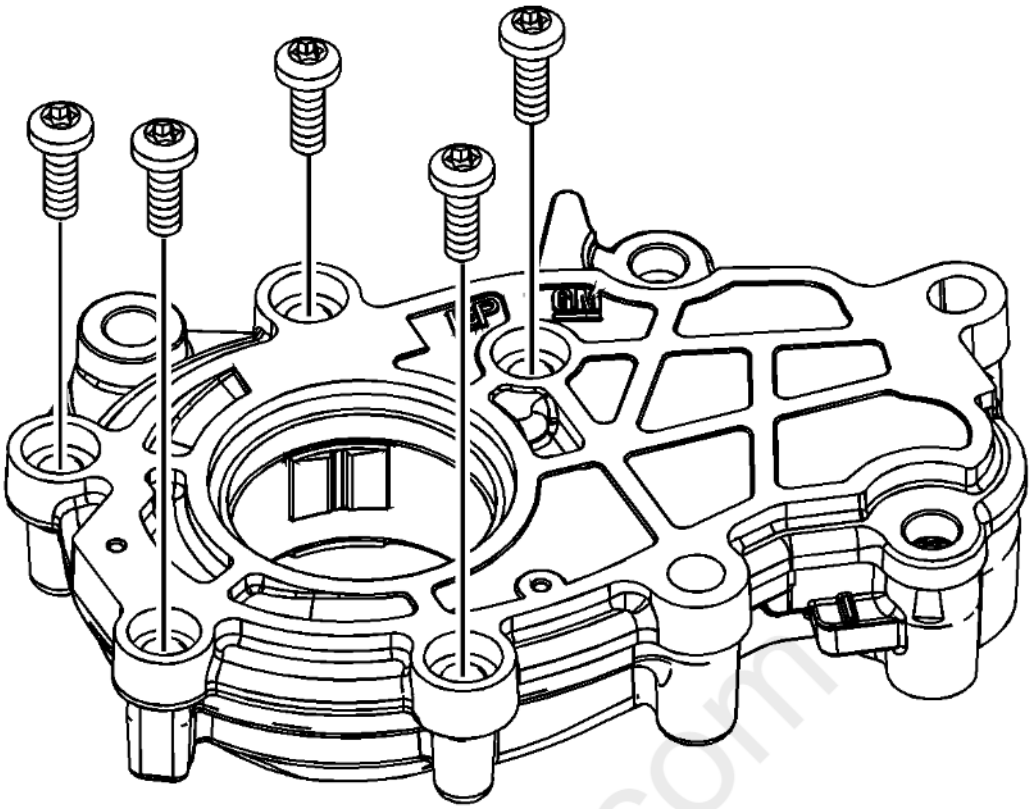

Fig. 230: View Of Oil Pump Cover Bolts
Courtesy of GENERAL MOTORS COMPANY

4. Remove the bolts holding the oil pump cover to the oil pump housing.

cardiagn.com

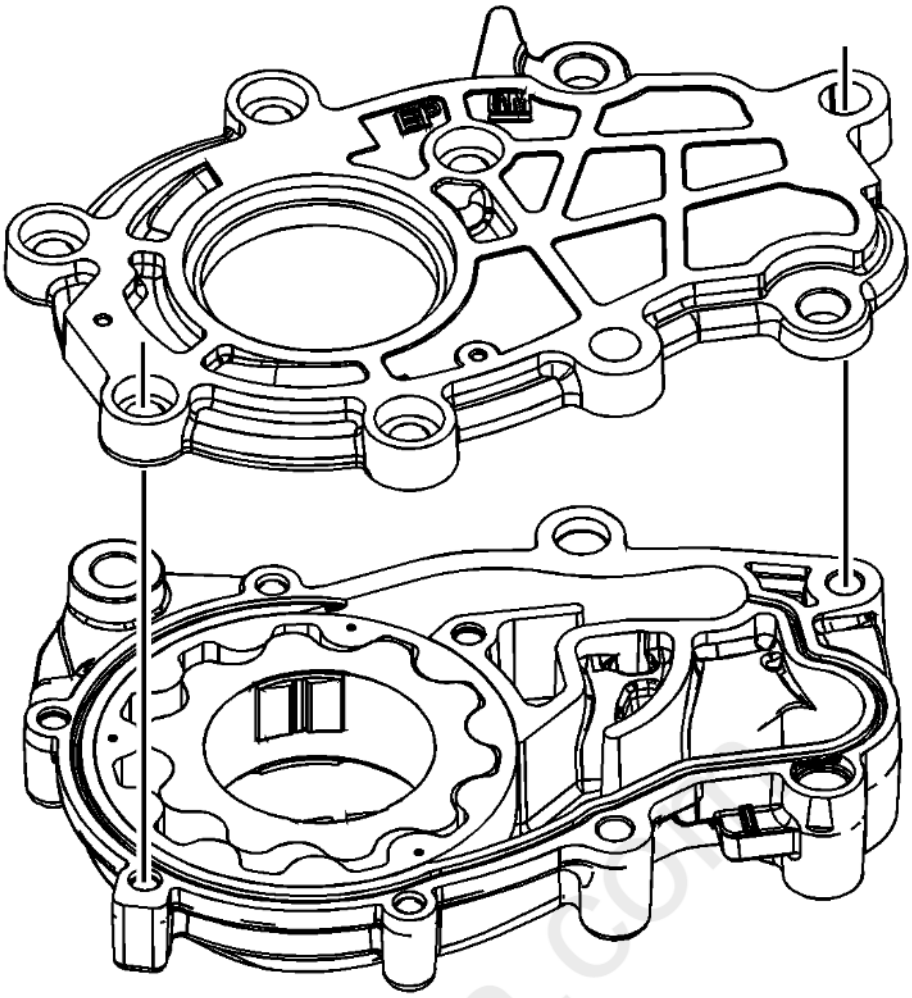

Fig. 231: View Of Oil Pump Housing & Cover
Courtesy of GENERAL MOTORS COMPANY

5. Remove the oil pump cover from the oil pump housing.

cardiagn.com

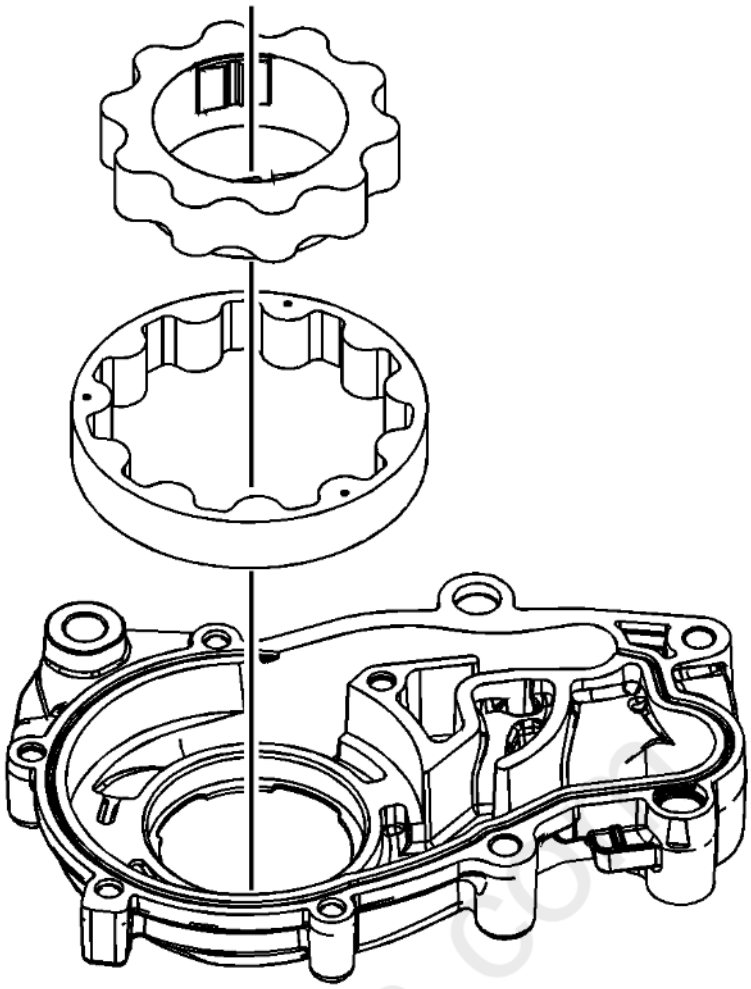

Fig. 232: Inner & Outer Rotors In Oil Pump Cover
Courtesy of GENERAL MOTORS COMPANY

6. Remove the inner oil pump drive gear.
7. Remove the outer oil pump driven gear.

cardiagn.com

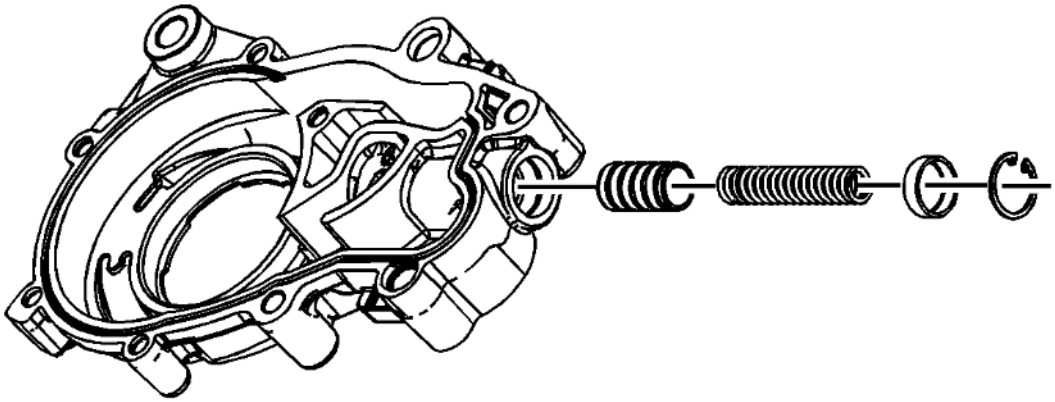

Fig. 233: Identifying Oil Pressure Relief Valve Components
Courtesy of GENERAL MOTORS COMPANY

8. Remove the clip, holding the cap, for the oil relief valve components.
9. Remove the cap, spring, and plunger from the oil pump housing.

OIL PUMP CLEANING AND INSPECTION

Cleaning Procedure

1. Clean the oil pump components with non-corrosive solvent.

WARNING: **Refer to Safety Glasses Warning .**

2. Dry the oil pump components with compressed air.

Inspection Procedure

cardiagn.com

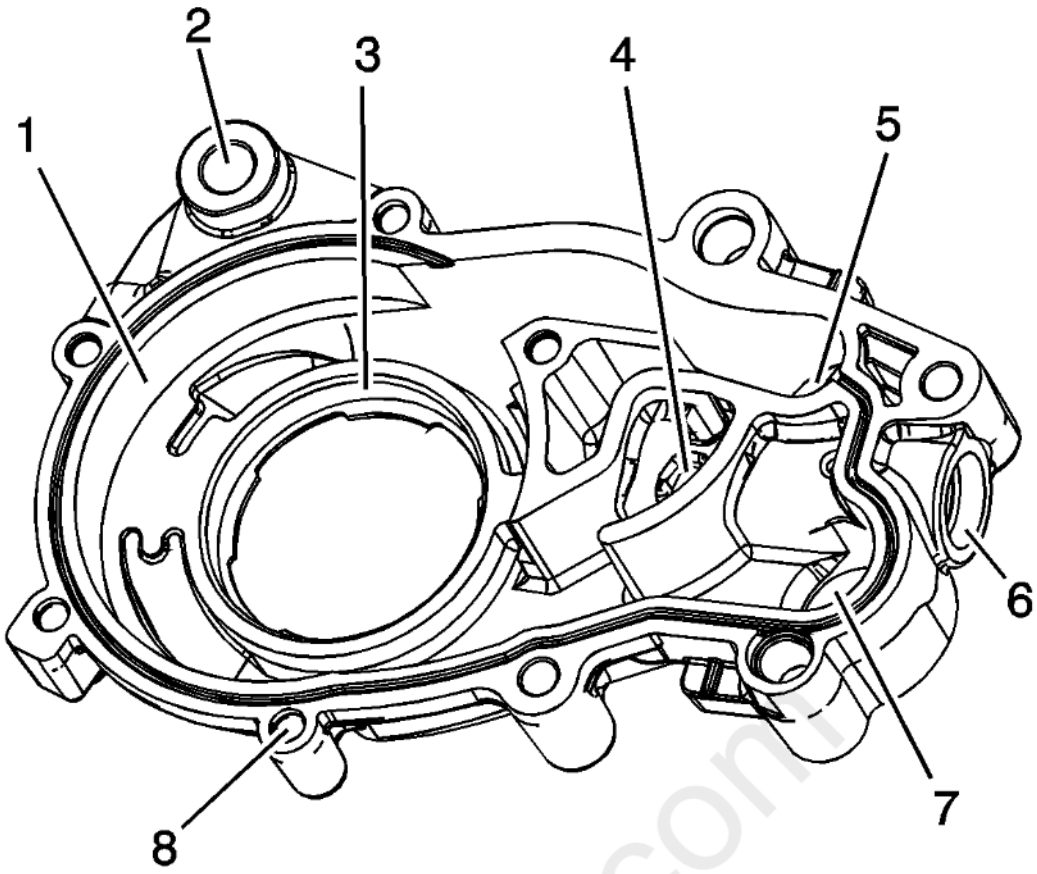

Fig. 234: Identifying Oil Pump Inspection Areas
Courtesy of GENERAL MOTORS COMPANY

NOTE: **There are no serviceable components within the oil pump. Disassemble the pump only to diagnose an oiling concern. A disassembled oil pump must not be reused. A disassembled oil pump must be replaced.**

1. Inspect the oil pump housing for the following:
   - Damage, scoring, or debris on the housing surface for the driven gear (1)
   - Damage to the oil pump mounting bosses (2)
   - Damage, scoring, or debris on the housing surface for the drive gear (3)
   - Damage, scoring, or debris in the oil pump relief valve port (4)
   - Damage, scoring, or debris in the oil pump intake port (5)
   - Damage, scoring, or debris in the oil pump relief valve bore (6)
   - Damage, scoring, or debris in the oil pump output port (7)
   - Damage to the threads in the oil pump housing for the oil pump cover bolts (8)

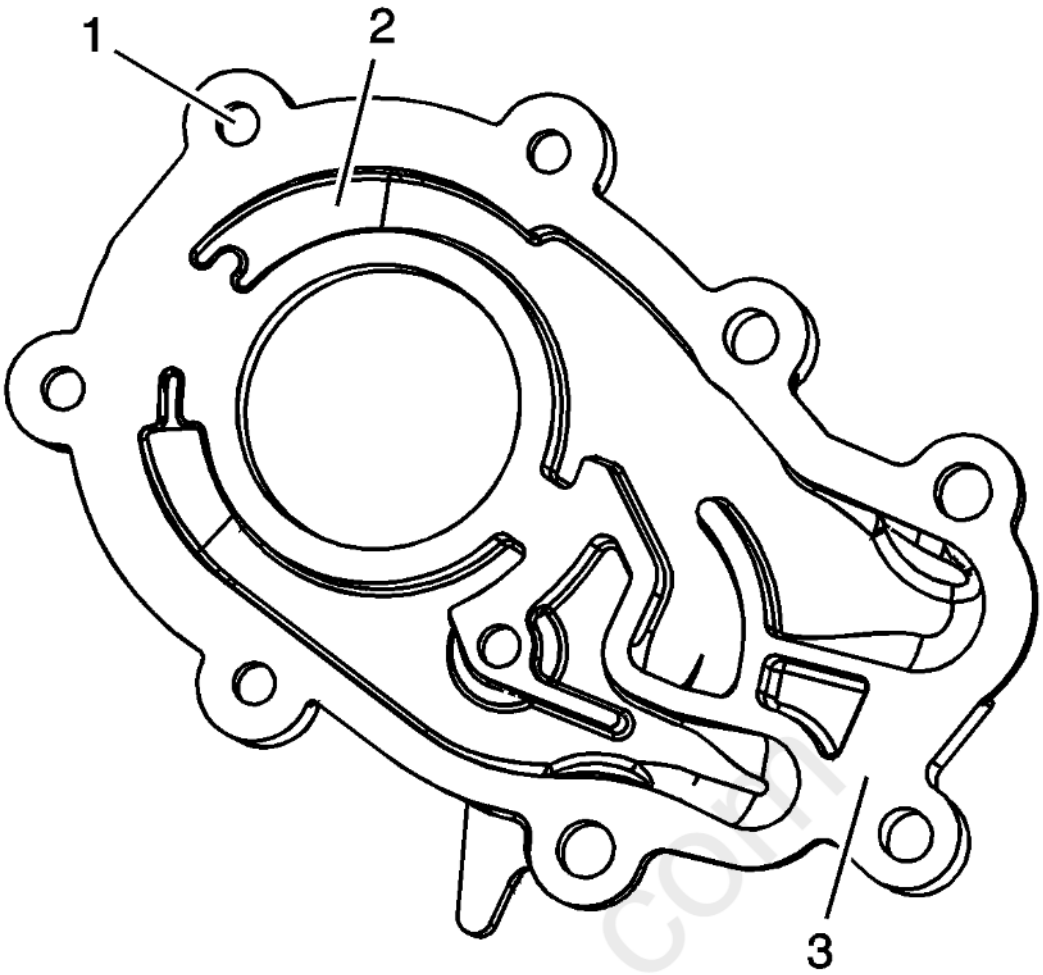

Fig. 235: View Of Oil Pump Inspection Locations
Courtesy of GENERAL MOTORS COMPANY

2. Inspect the oil pump cover for the following conditions:
    - Damage to the oil pump cover mounting bosses (1)
    - Damage, scoring, or debris in the oil pump cover oil passages (2)
    - Damage to the sealing surface between the oil pump cover and the oil pump housing (3)

cardiagn.com

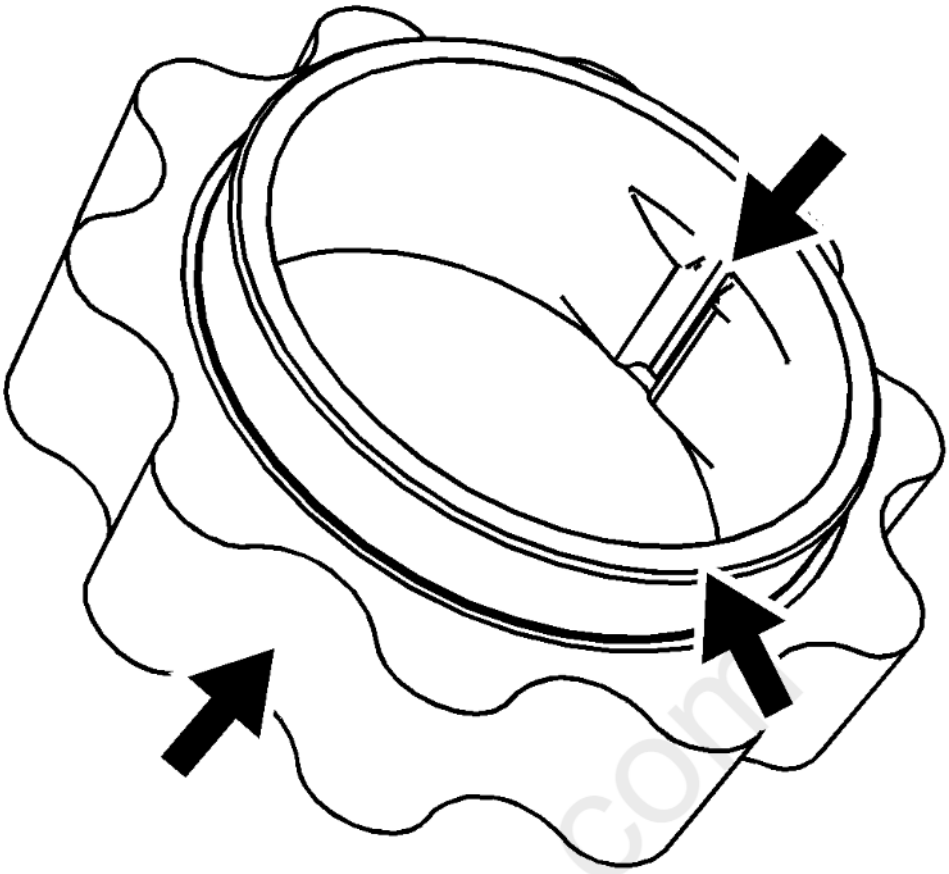

Fig. 236: View Of Inner Drive Gear Inspection Locations
Courtesy of GENERAL MOTORS COMPANY

3. Inspect the inner drive gear for damage. If inner diameter damage is found, ensure the crankshaft is also inspected.

carmagn.com

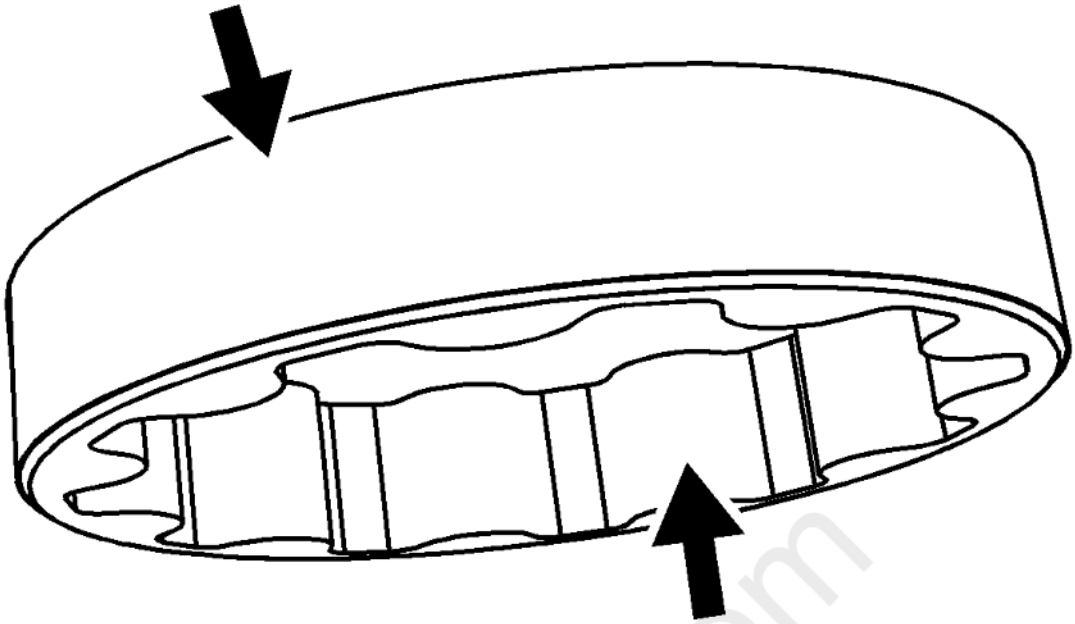

Fig. 237: Identifying Inspection Areas Inner/Outer Driven Gear
Courtesy of GENERAL MOTORS COMPANY

4. Inspect the outer driven gear for damage.

carmagn.com

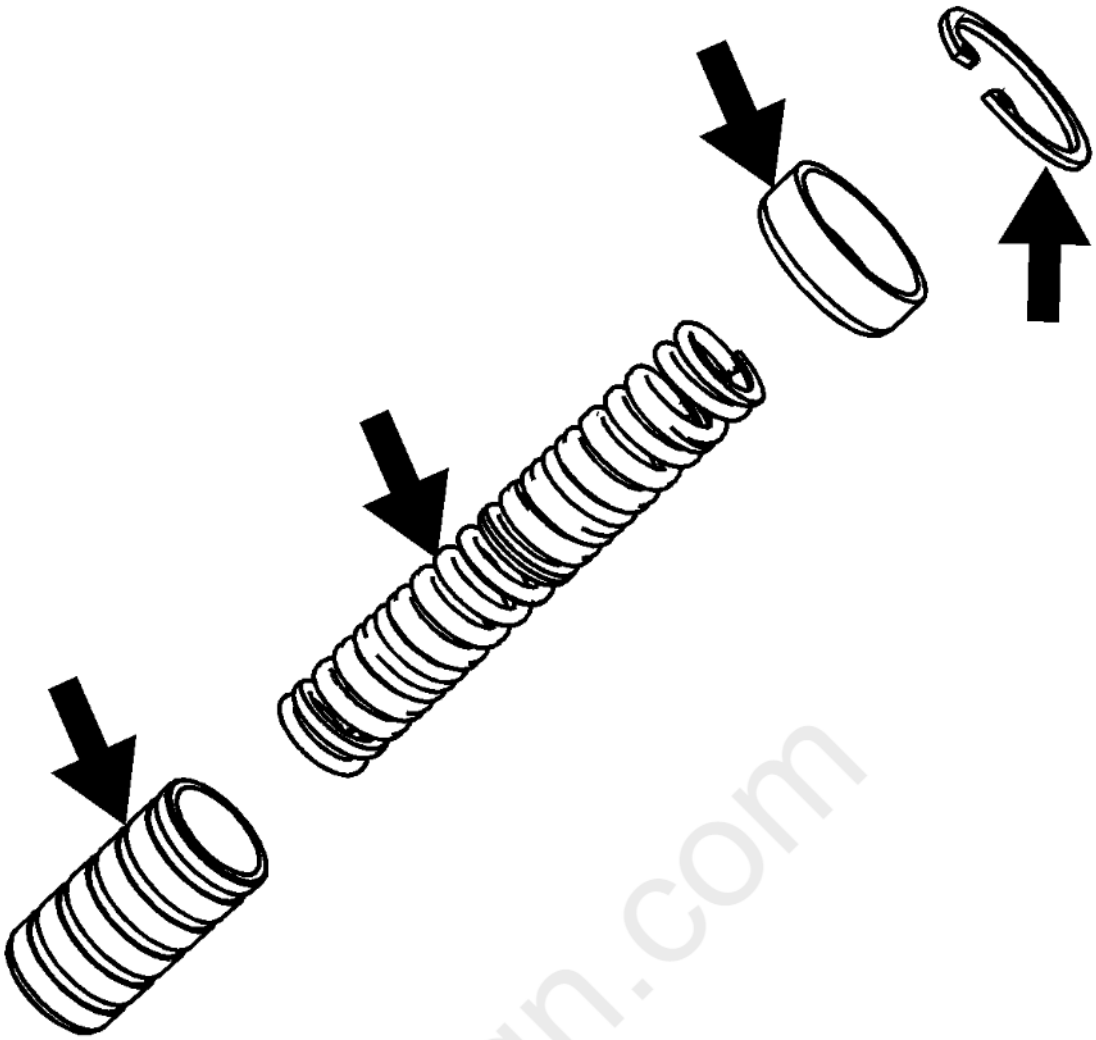

Fig. 238: Inspecting Oil Pump Relief Valve Components
Courtesy of GENERAL MOTORS COMPANY

5. Inspect the oil pump relief valve components for debris or damage.

carmgn.com

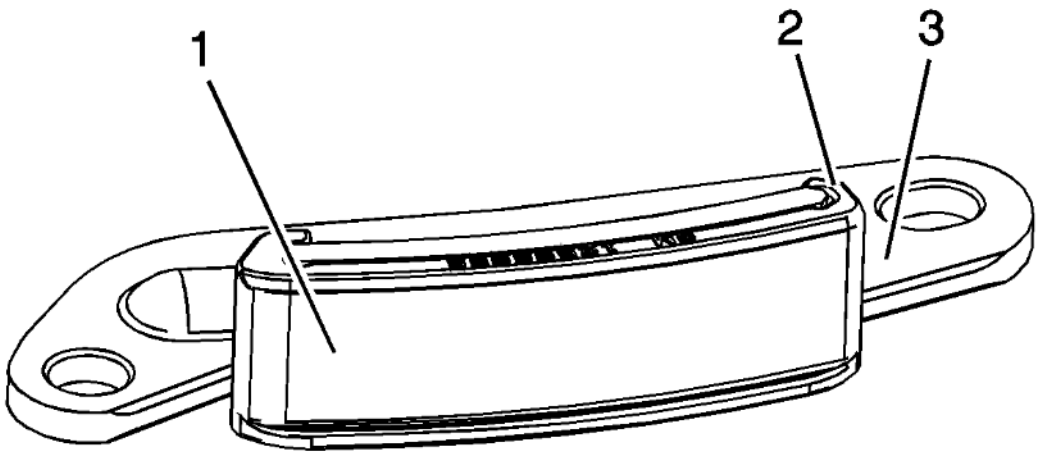

Fig. 239: View Of Primary Camshaft Drive Chain Lower Guide Inspection Locations
Courtesy of GENERAL MOTORS COMPANY

6. Inspect the primary camshaft drive chain lower guide for damage (1 - 3).
7. If debris or damage is present within the oil pump, further inspection of all of the engine components is necessary.

OIL FILTER ADAPTER DISASSEMBLE

cardiagn.com

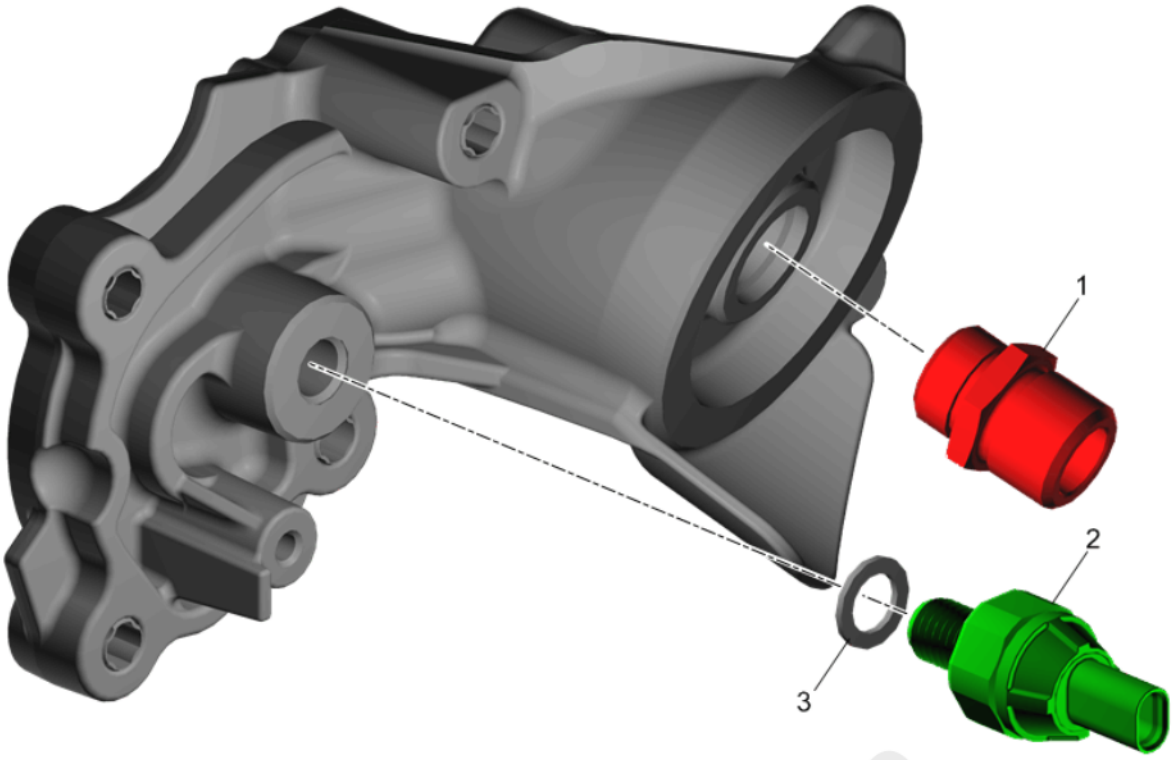

Fig. 240: Oil Filter Adapter
Courtesy of GENERAL MOTORS COMPANY

Callout	Component Name
1	Oil Filter Fitting
2	Engine Oil Pressure Sensor
3	Engine Oil Pressure Sensor Seal

OIL FILTER ADAPTER CLEANING AND INSPECTION

Cleaning Procedure

1. Clean the oil filter adapter components with non-corrosive solvent.

   WARNING: Refer to Safety Glasses Warning .

2. Dry the oil filter adapter components with compressed air.

Inspection Procedure

cardiagn.com

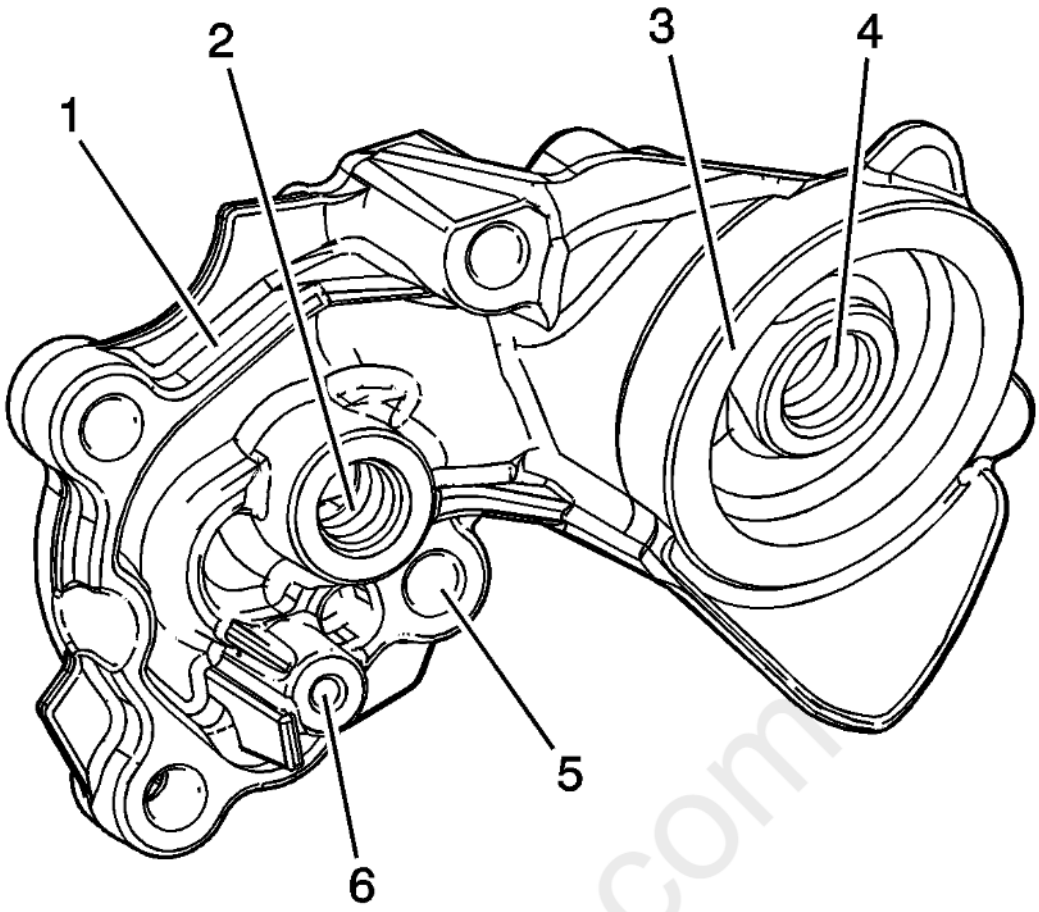

Fig. 241: Identifying Oil Filter Adapter Components
Courtesy of GENERAL MOTORS COMPANY

NOTE: **The internal parts of the oil filter adapter housing are not serviced separately. If wear or damage is noted, replace the entire oil filter adapter assembly.**

1. Inspect the oil filter adapter housing for cracks, casting imperfections or damage (1).
2. Inspect the threads for the oil pressure sender (2) or the bracket (6) for damage.
3. Inspect the oil filter sealing surface (3) for damage.
4. Inspect the threads for the oil filter fitting (4) for damage.
5. Inspect the mounting holes (5) for damage.

carmagn.com

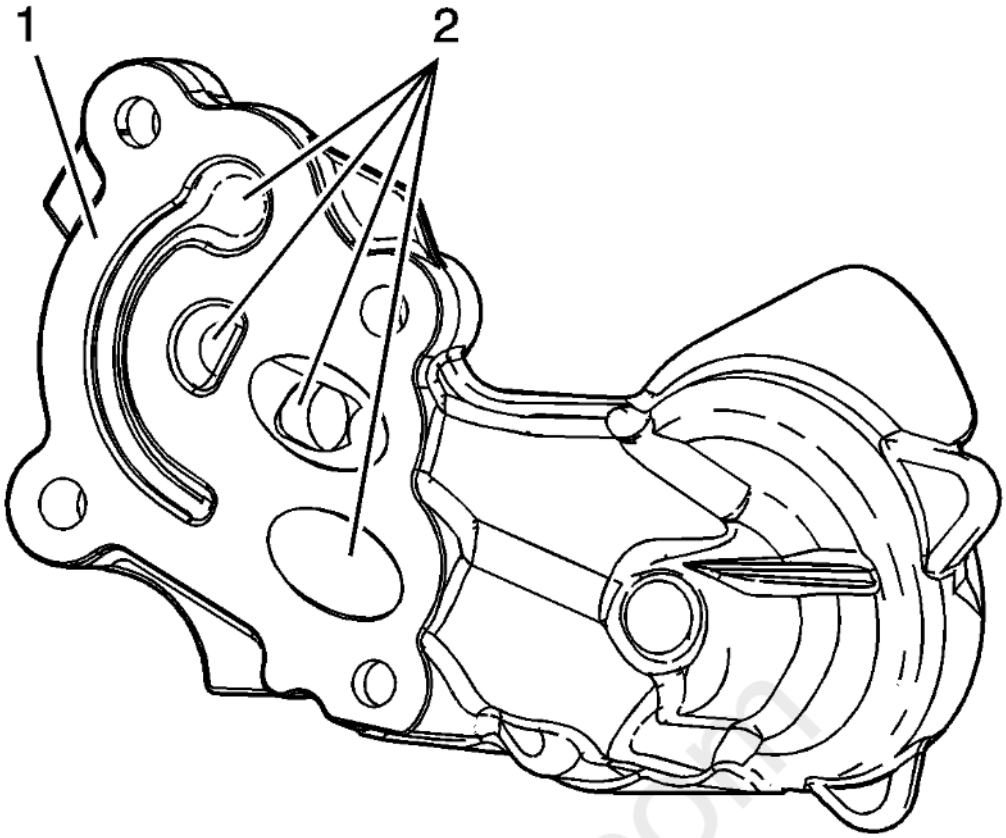

Fig. 242: Identifying Inspection Areas Of Oil Filter Adapter Housing Surfaces
Courtesy of GENERAL MOTORS COMPANY

6. Inspect the oil filter adapter housing gasket sealing surface (1) for damage.
7. Inspect the oil filter adapter housing passages (2) for damage or blockage.
8. Repair or replace the oil filter adapter housing as necessary.

OIL FILTER ADAPTER ASSEMBLE

carmagn.com

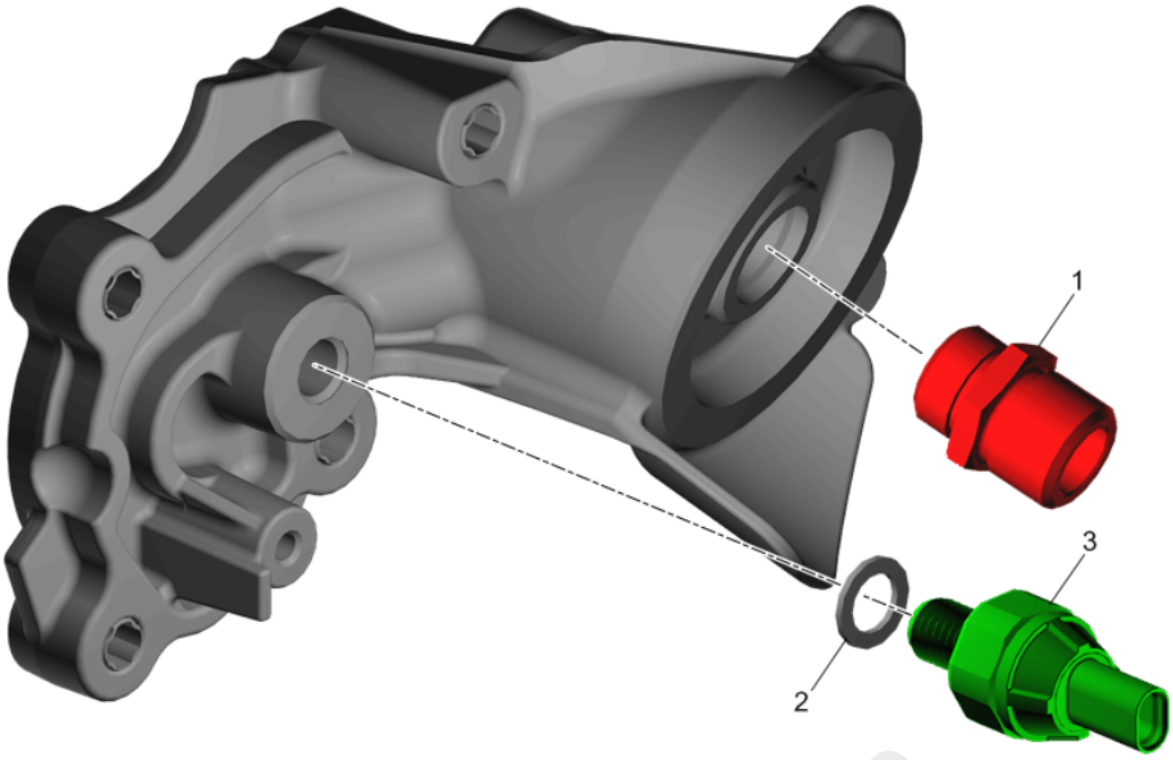

Fig. 243: Oil Filter Adapter
Courtesy of GENERAL MOTORS COMPANY

Callout	Component Name
1	Oil Filter Fitting **CAUTION:** **Refer to Fastener Caution .** **Tighten** 50 N.m (37 lb ft)
2	Engine Oil Pressure Sensor Seal
3	Engine Oil Pressure Sensor **Tighten** 20 N.m (15 lb ft)

OIL PAN DISASSEMBLE

cardiagn.com

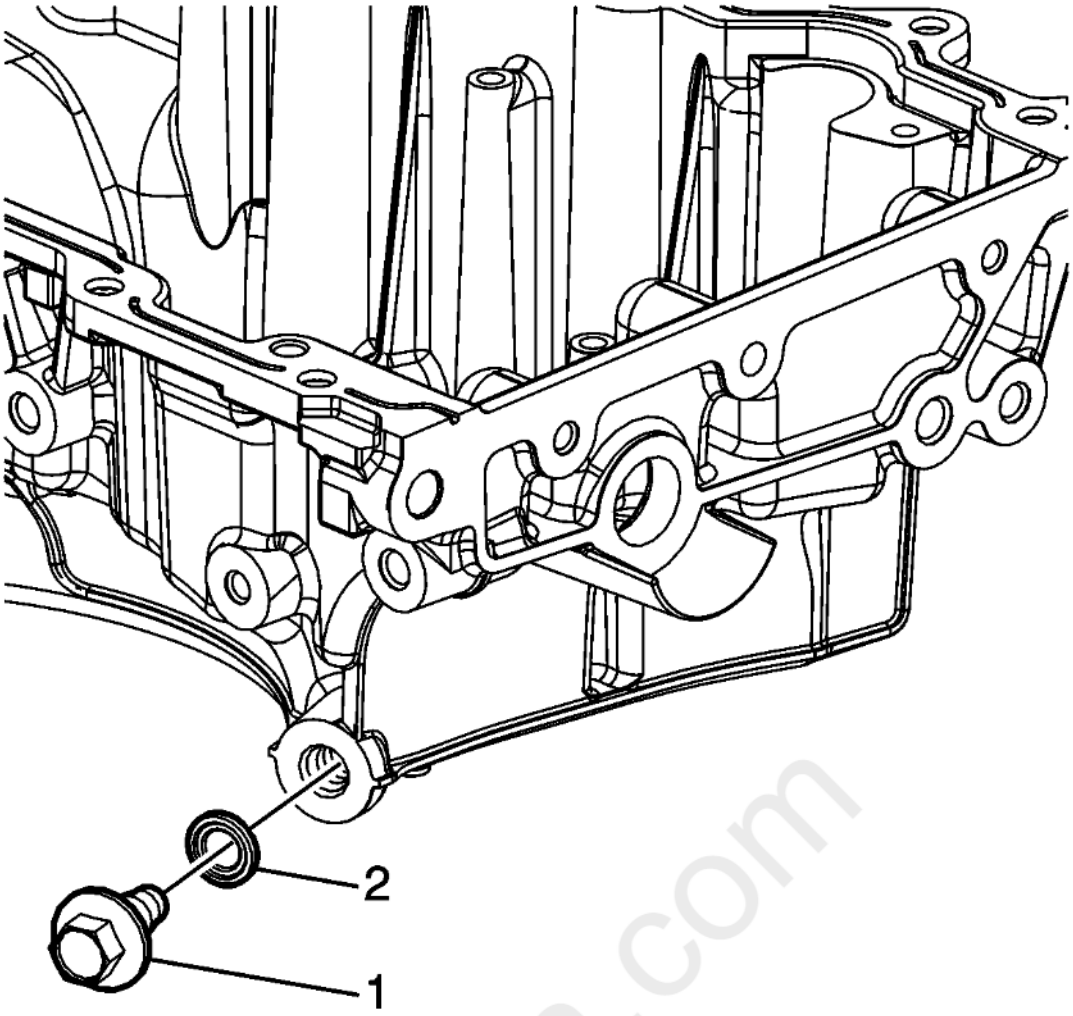

Fig. 244: Oil Pan Drain Plug And Seal
Courtesy of GENERAL MOTORS COMPANY

1. Remove the oil pan drain plug (1) and seal (2).

cardiagn.com

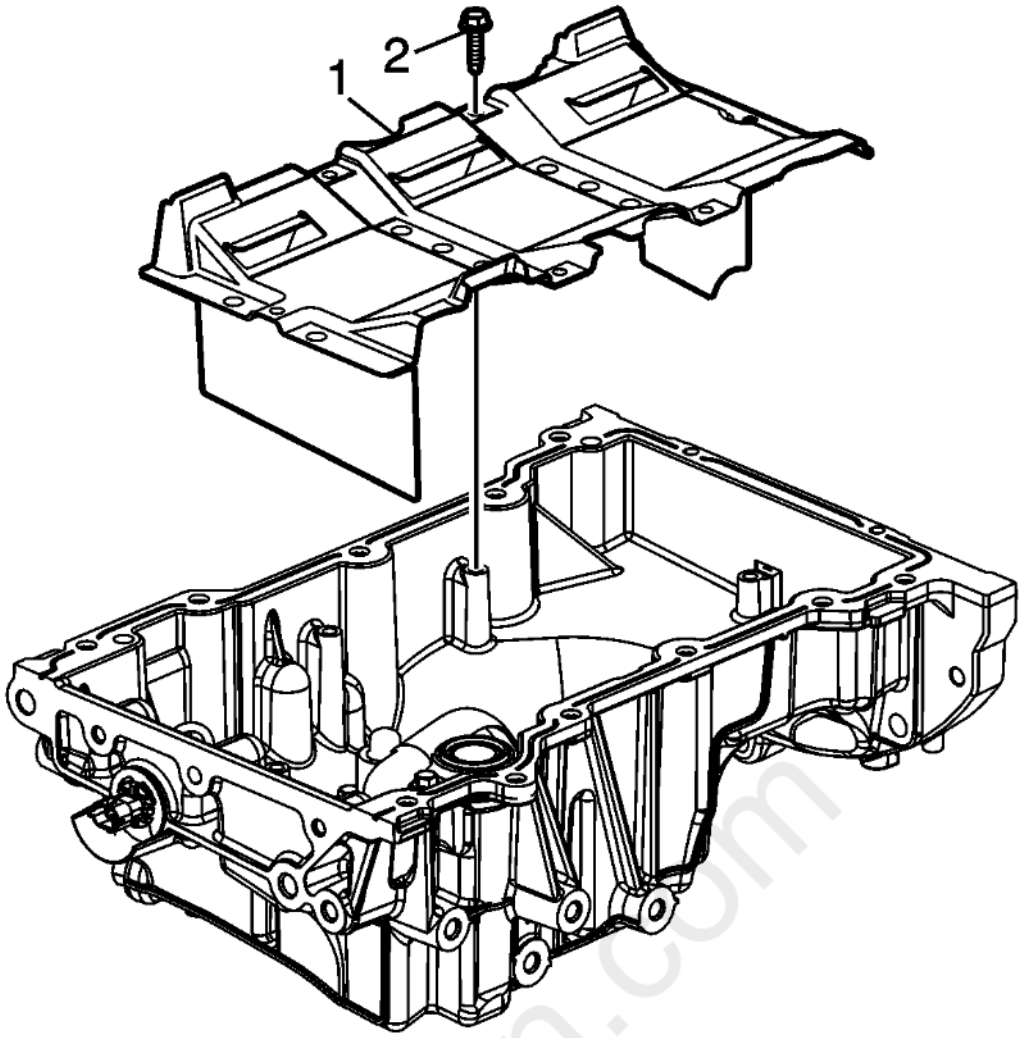

Fig. 245: Oil Pan Scraper
Courtesy of GENERAL MOTORS COMPANY

2. Remove the oil pan scraper bolts (2).
3. Remove the oil pan scraper (1).

cardiagn.com

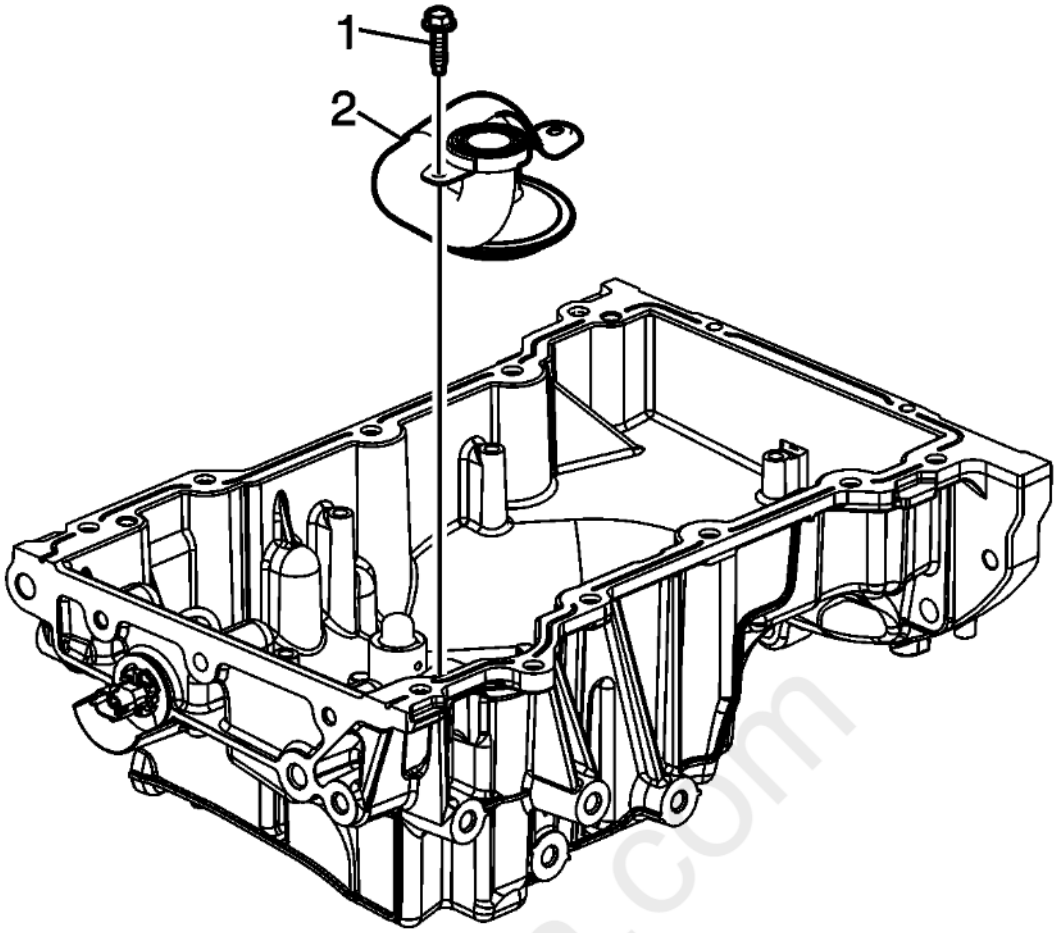

Fig. 246: Oil Suction Pipe Bolts
Courtesy of GENERAL MOTORS COMPANY

4. Remove the oil suction pipe bolts (1).
5. Remove the oil suction pipe (2).

cardiagn.com

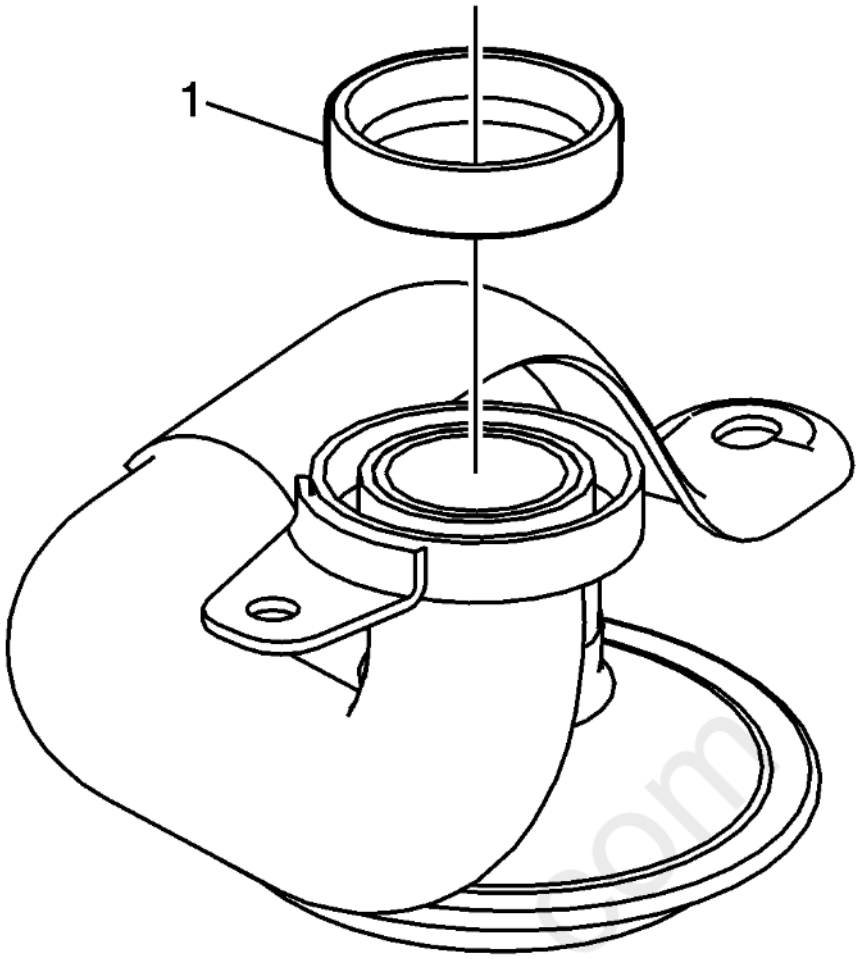

Fig. 247: Oil Suction Pipe Seal
Courtesy of GENERAL MOTORS COMPANY

6. Remove the oil suction pipe seal (1).

cardiagn.com

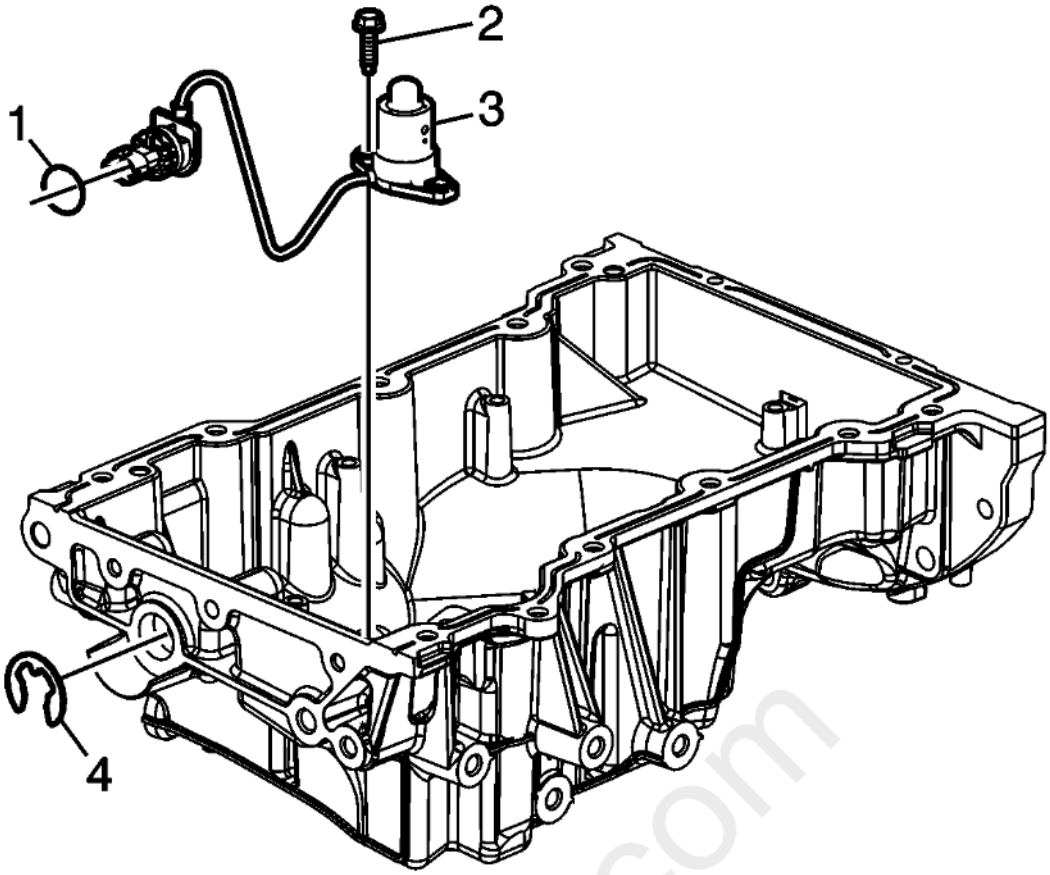

Fig. 248: Engine Oil Level Switch, Seal & Clip
Courtesy of GENERAL MOTORS COMPANY

7. Remove the engine oil level switch clip (4)
8. Remove the engine oil level switch bolt (2).
9. Remove the engine oil level switch (3).
10. Remove the engine oil level switch seal (1).

OIL PAN CLEANING AND INSPECTION

Special Tools

EN-28410 Gasket Remover

For equivalent regional tools, refer to **Special Tools**

Cleaning Procedure

1. Ensure proper use of room temperature vulcanizing (RTV) sealant. **Use of Room Temperature Vulcanizing (RTV) and Anaerobic Sealant**
2. Remove any old thread sealant, gasket material or sealant using **EN-28410** remover.
3. Clean the oil pan and oil pan components in solvent.
4. Clean out debris from the bolt holes.

WARNING: **Refer to Safety Glasses Warning .**

5. Dry the oil pan and oil pan components with compressed air.

Inspection Procedure

carmagn.com

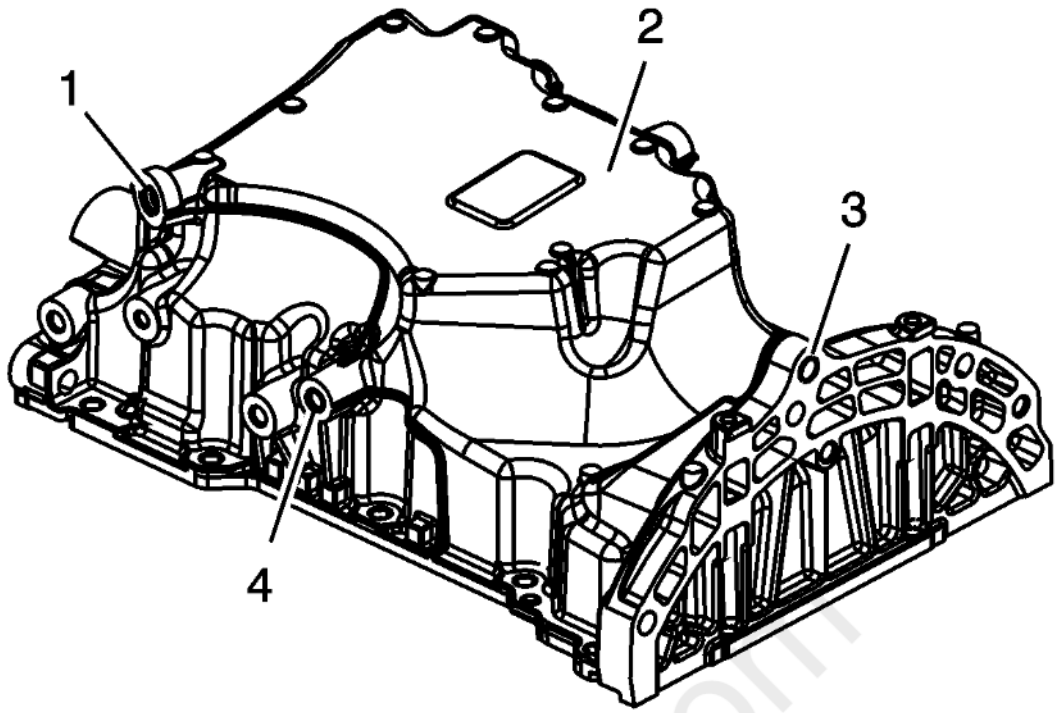

Fig. 249: Oil Pan Inspection Points
Courtesy of GENERAL MOTORS COMPANY

1. Inspect the exterior of the oil pan for the following conditions:
    - Dents or damage to the exterior (2)
    - Damage to the drain plug or drain plug hole (1)
    - Damage to the brace mounting bosses (4)
    - Damage to the mounting bosses (3)

cardiagn.com

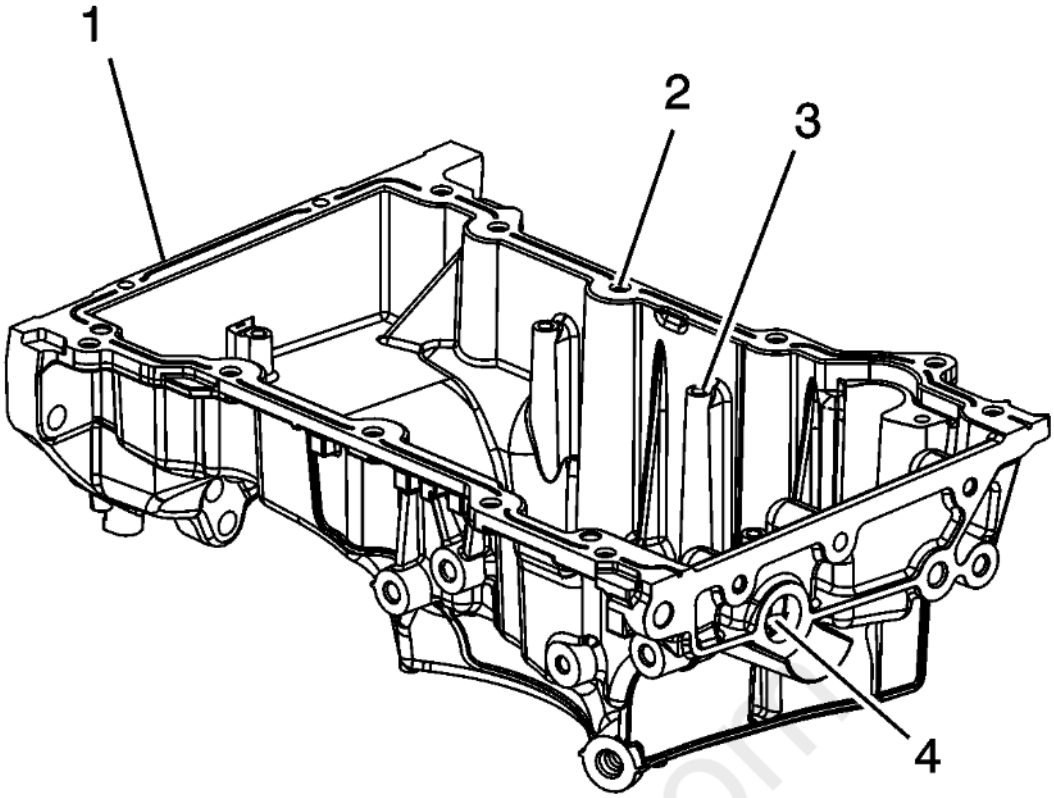

Fig. 250: Oil Pan Scraper Inspection Points
Courtesy of GENERAL MOTORS COMPANY

2. Inspect the interior of the oil pan for the following conditions:
    - Gouges or damage to the oil pan sealing surfaces (1)
    - Damage to the oil pan scraper mounting holes (2)
    - Damage to the bolt holes (3)
    - Damage to the engine oil level switch hole (4)
3. Repair or replace the oil pan and/or oil pan components as necessary.

OIL PUMP SUCTION PIPE AND SCREEN CLEANING AND INSPECTION

Cleaning Procedure

1. Clean the oil pump pipe and screen with solvent.

WARNING: Refer to Safety Glasses Warning .

2. Dry the oil pump pipe and screen with compressed air.

Inspection Procedure

carDiagn.com

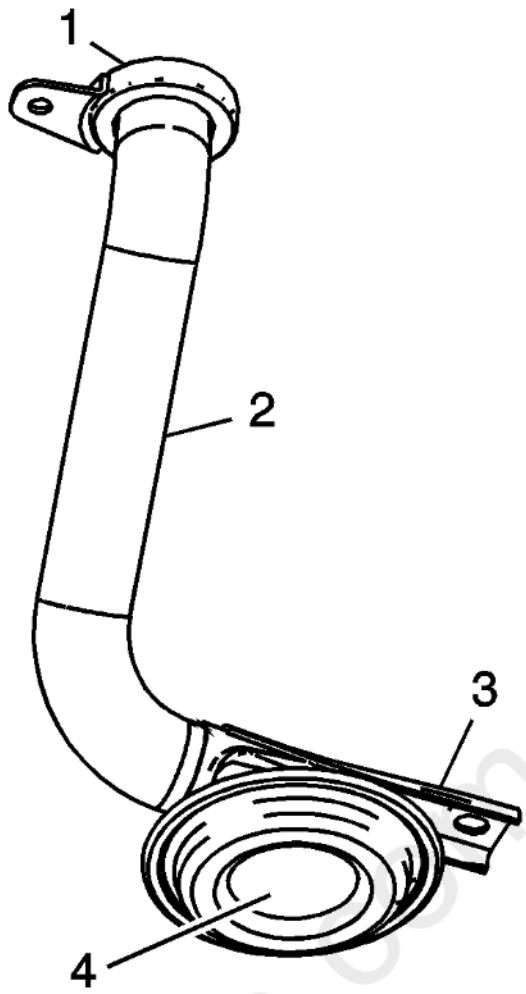

Fig. 251: Inspecting Oil Pump Pipe
Courtesy of GENERAL MOTORS COMPANY

1. Inspect the mounting surface (1) for possible leakage paths.
2. Inspect the oil pump pipe tube (2) for cracks, imperfections and/or damage.
3. Inspect the oil pump pipe support bracket (3) for cracks or damage.
4. Inspect the oil pump screen (4) for blockage, foreign material, tears, cracks and/or damage.

OIL PAN ASSEMBLE

CAUTION: **Refer to Fastener Caution .**

carmagn.com

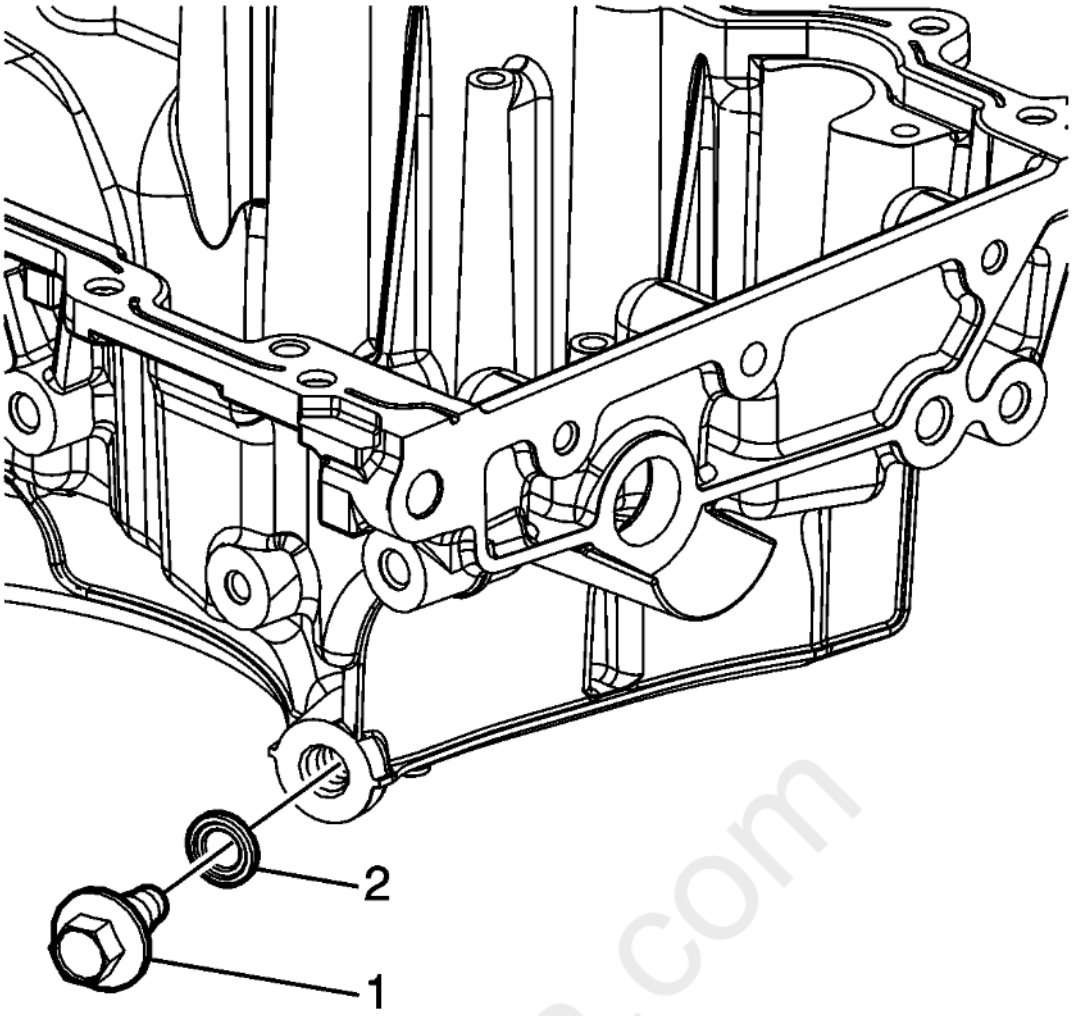

Fig. 252: Oil Pan Drain Plug And Seal
Courtesy of GENERAL MOTORS COMPANY

1. Install the oil pan drain plug (1) and NEW O-ring seal (2) and tighten to 25 N.m (18 lb ft).

cardiagn.com

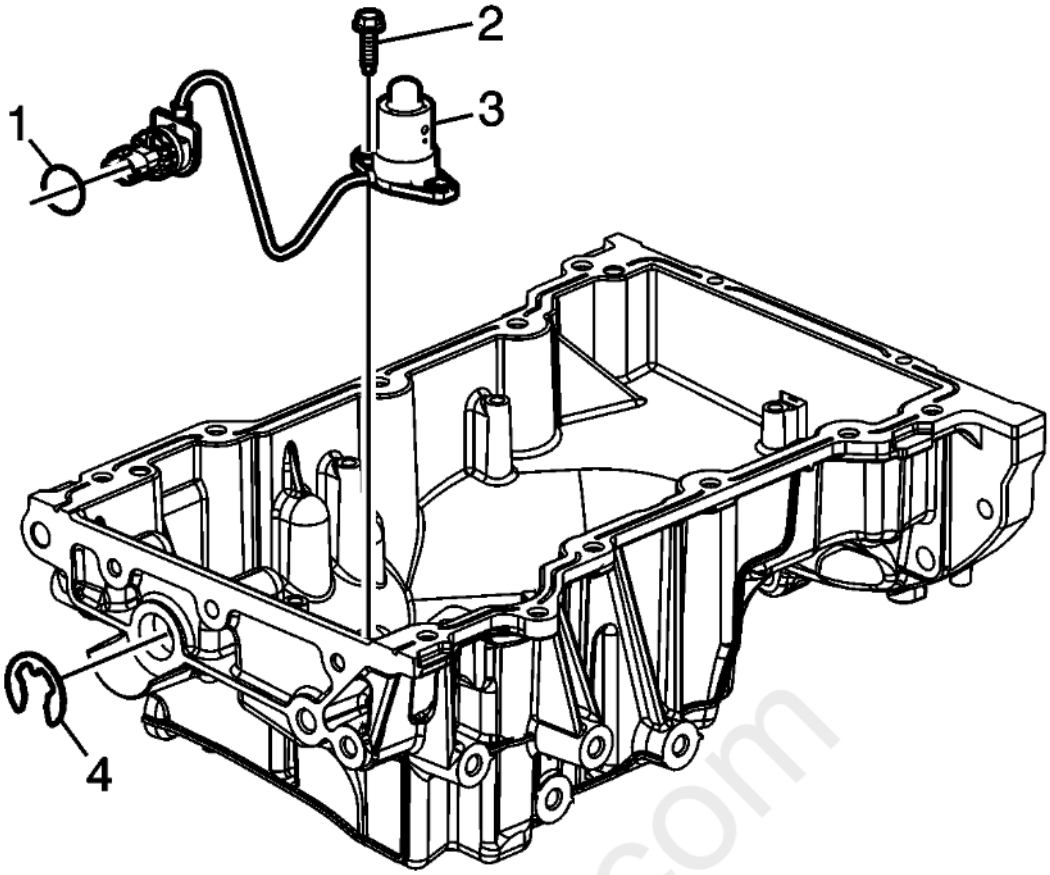

Fig. 253: Engine Oil Level Switch, Seal & Clip
Courtesy of GENERAL MOTORS COMPANY

2. Install the NEW engine oil level switch seal (1).
3. Install the engine oil level switch (3).
4. Install the engine oil level switch bolts (2) and tighten to 10 N.m (89 lb in).
5. Install NEW engine oil level switch clip (4).

cardiagn.com

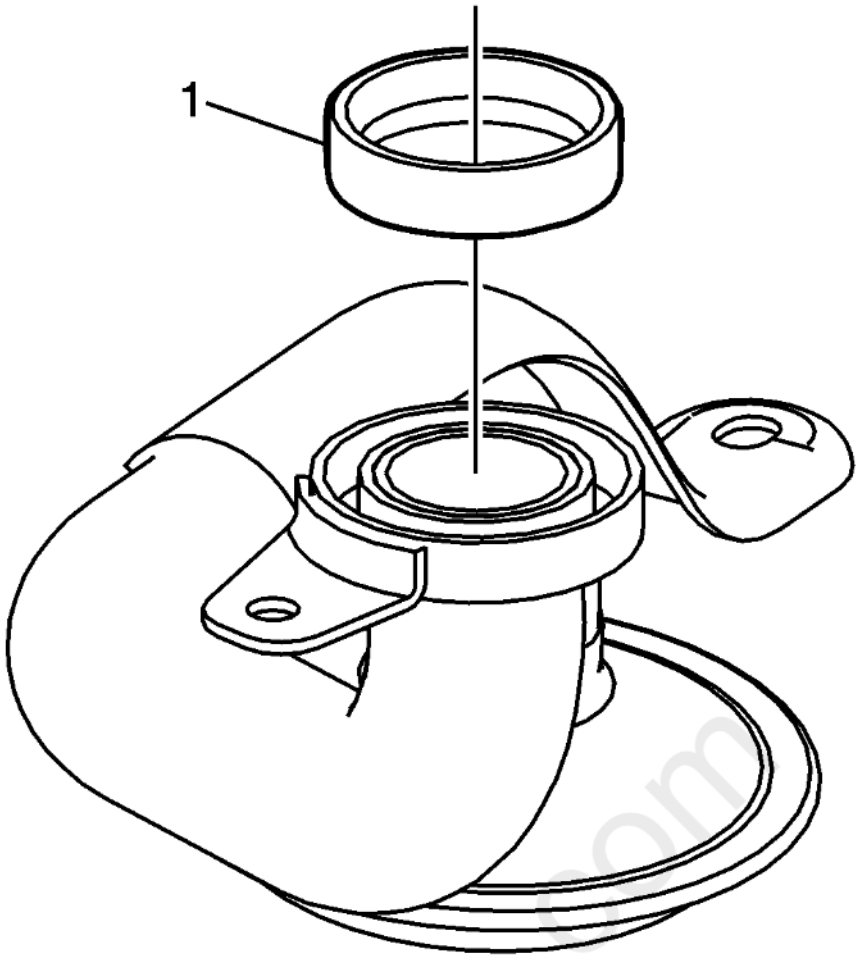

Fig. 254: Oil Suction Pipe Seal
Courtesy of GENERAL MOTORS COMPANY

6. Install the NEW oil suction pipe seal (1).

cardiagn.com

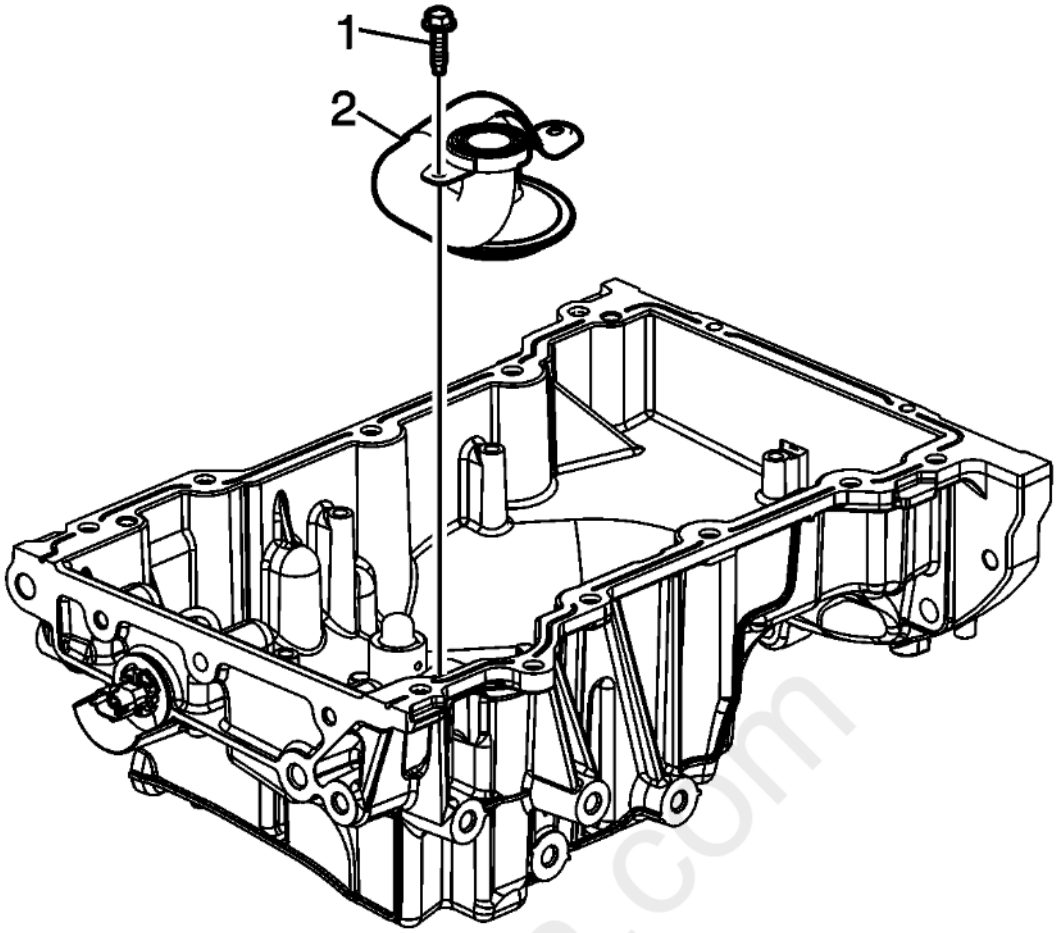

Fig. 255: Oil Suction Pipe Bolts
Courtesy of GENERAL MOTORS COMPANY

7. Install the oil suction pipe (2).
8. Install the oil suction pipe bolts (1) and tighten to 10 N.m (89 lb in).

cardiagn.com

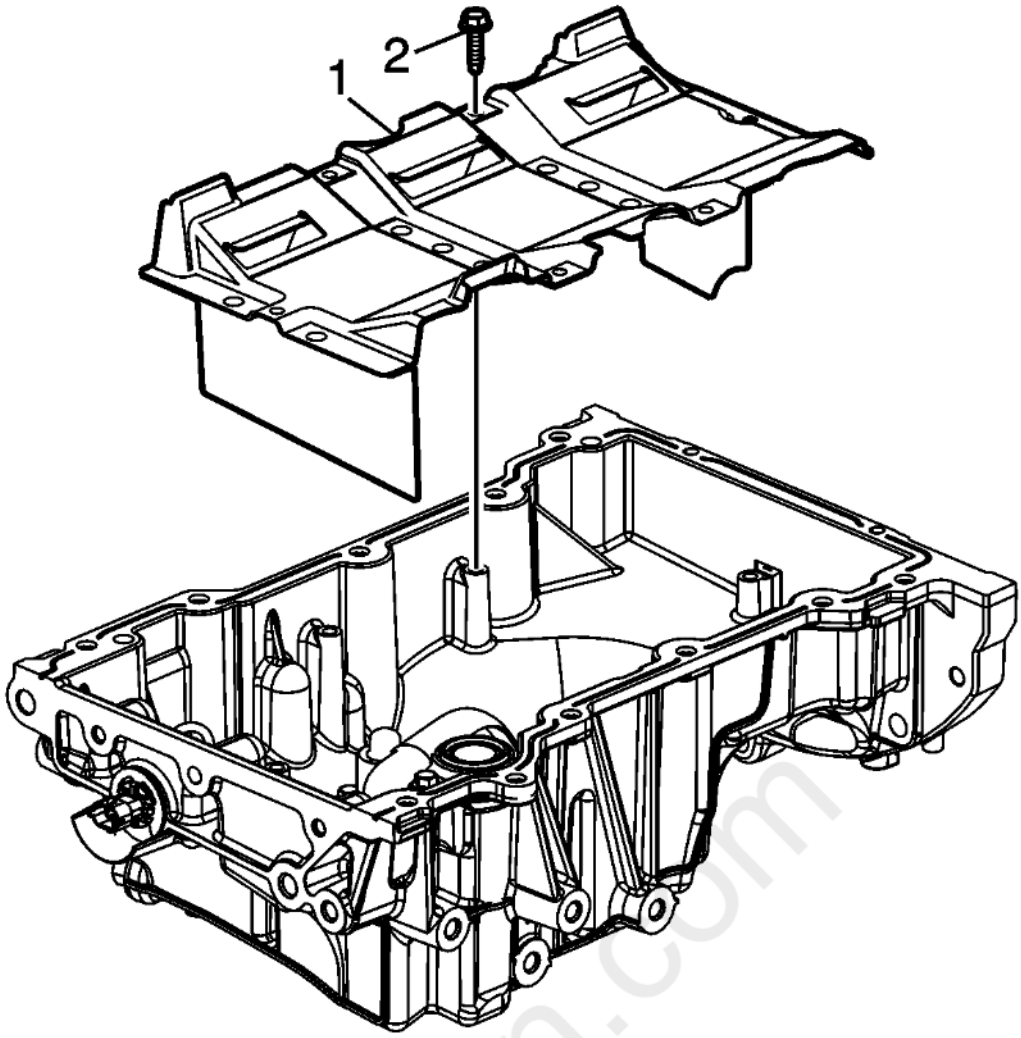

Fig. 256: Oil Pan Scraper
Courtesy of GENERAL MOTORS COMPANY

9. Install the oil pan scraper (1).
10. Install the oil pan scraper bolts (2) and tighten to 10 N.m (89 lb in).

ENGINE FRONT COVER DISASSEMBLE

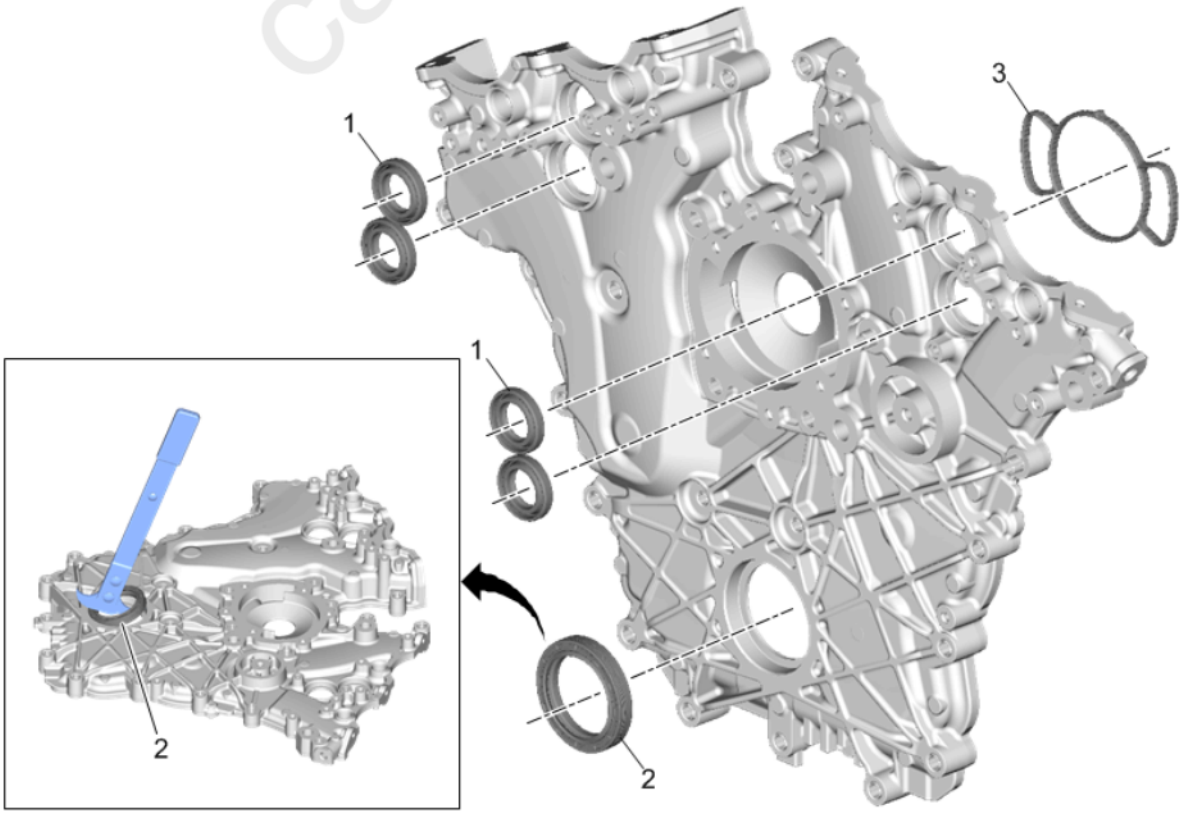

cardiagn.com

Fig. 257: Engine Front Cover
Courtesy of GENERAL MOTORS COMPANY

Callout	Component Name
1	Camshaft Position Actuator Solenoid Valve Seal (Qty: 4) **NOTE:** **Remove and DISCARD the seal.**
2	Crankshaft Front Oil Seal **Procedure** 1. Remove - Crankshaft Front Oil Seal **EN-45000** Seal Remover **Special Tools** **EN-45000** Seal Remover Equivalent regional tools:**Special Tools**
3	Engine Front Cover Gasket **NOTE:** **Remove and DISCARD the gasket.**

ENGINE FRONT COVER CLEANING AND INSPECTION

Special Tools

EN - 28410 Gasket Remover

For equivalent regional tools, refer to **Special Tools** .

Cleaning Procedure

cardiagn.com

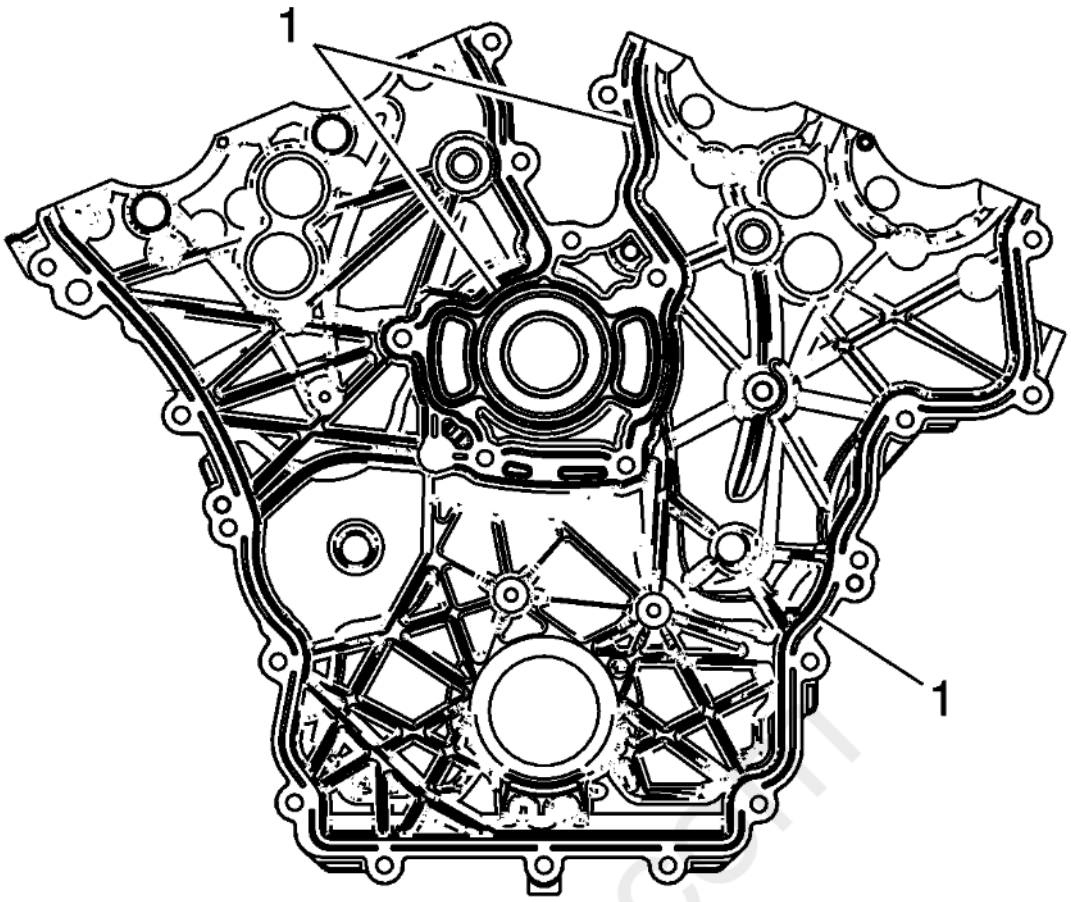

Fig. 258: Sealant On Engine Front Cover
Courtesy of GENERAL MOTORS COMPANY

1. Ensure proper use of room temperature vulcanizing (RTV) sealant. **Use of Room Temperature Vulcanizing (RTV) and Anaerobic Sealant**

   Remove any RTV sealant (1) from the engine front cover using **EN - 28410** remover.

2. Clean out debris from the bolt holes.
3. Clean the engine front cover in solvent.

   WARNING: **Refer to Safety Glasses Warning .**

4. Dry the engine front cover with compressed air.

Inspection Procedure

cardiagn.com

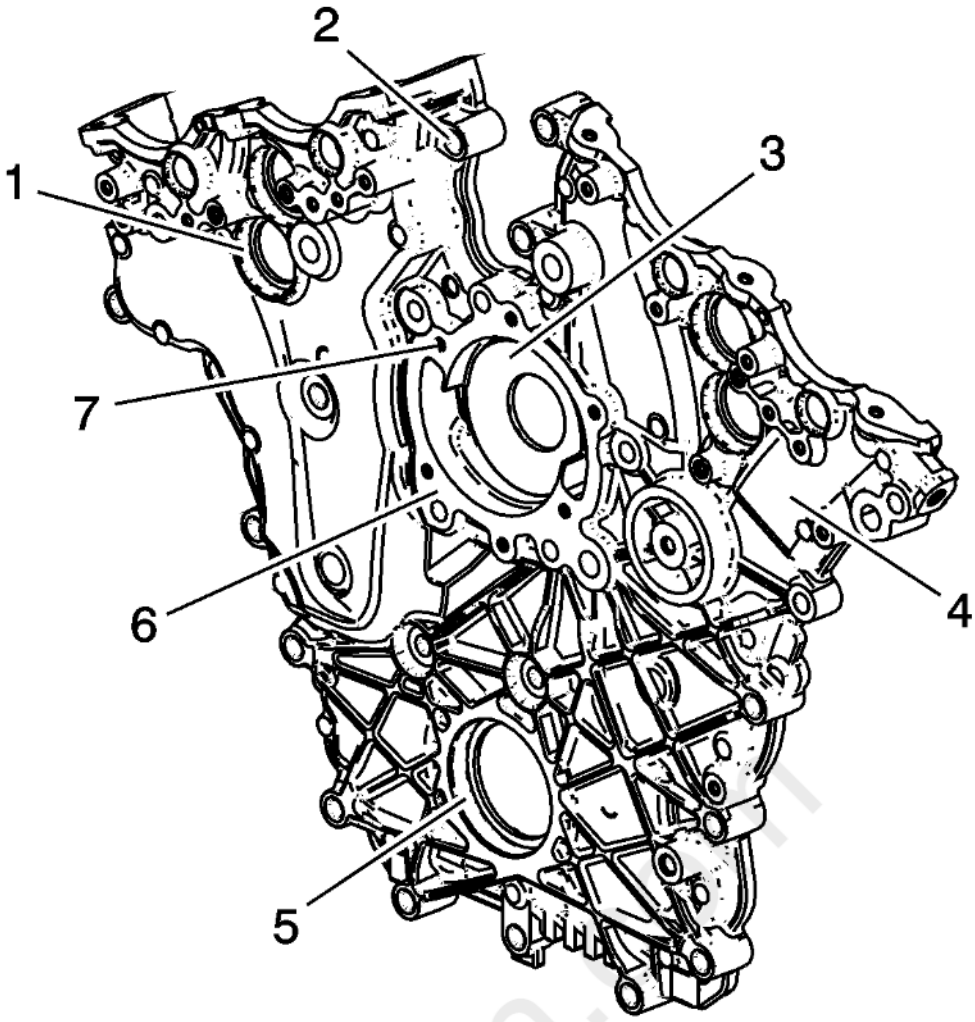

Fig. 259: View Of Exterior Of Engine Front Cover
Courtesy of GENERAL MOTORS COMPANY

1. Inspect the exterior of the engine front cover for the following conditions:
    - Damage to the water pump bolt hole threads (7)
    - Gouges or damage to the water pump sealing surfaces (6)
    - Damage to the crankshaft front oil seal bore (5)
    - Damage to the camshaft position actuator valve oil seal bores (1)
    - Damage to the engine front cover bolt holes (2)
    - Damage and/or corrosion to the engine coolant passage (3)
    - Dents or damage to the exterior (4)

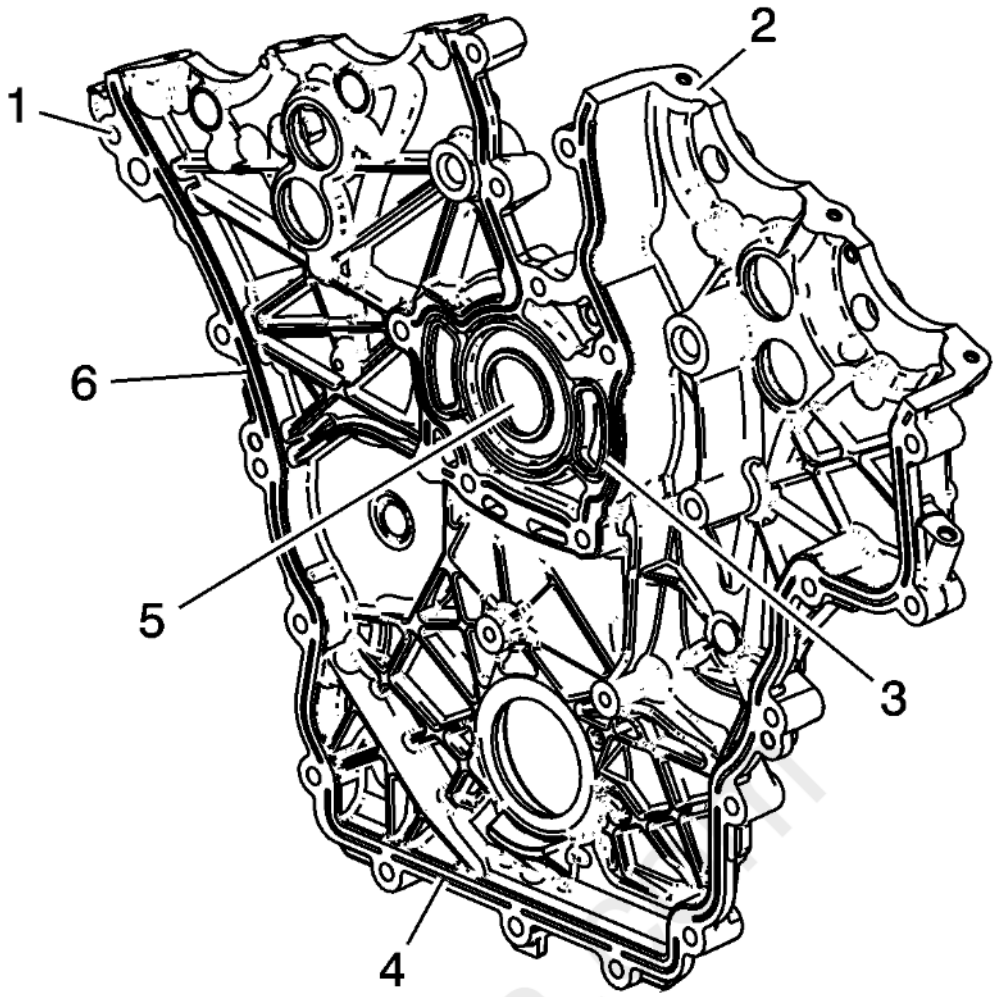

Fig. 260: View Of Interior Of Engine Front Cover
Courtesy of GENERAL MOTORS COMPANY

2. Inspect the interior of the engine front cover for the following conditions:
    - Gouges or damage to the engine front cover sealing surfaces to the engine block (6), oil pan (4), and/or camshaft covers (2)
    - Damage and/or corrosion to the engine coolant passage (5)
    - Damage to the crankshaft front oil seal bore
    - Gouges or damage to the O-ring sealing areas
    - Gouges or damage to the water pump seal area (3)
    - Damage to the engine front cover bolt holes (1)
3. Repair or replace the engine front cover as necessary.

ENGINE FRONT COVER ASSEMBLE

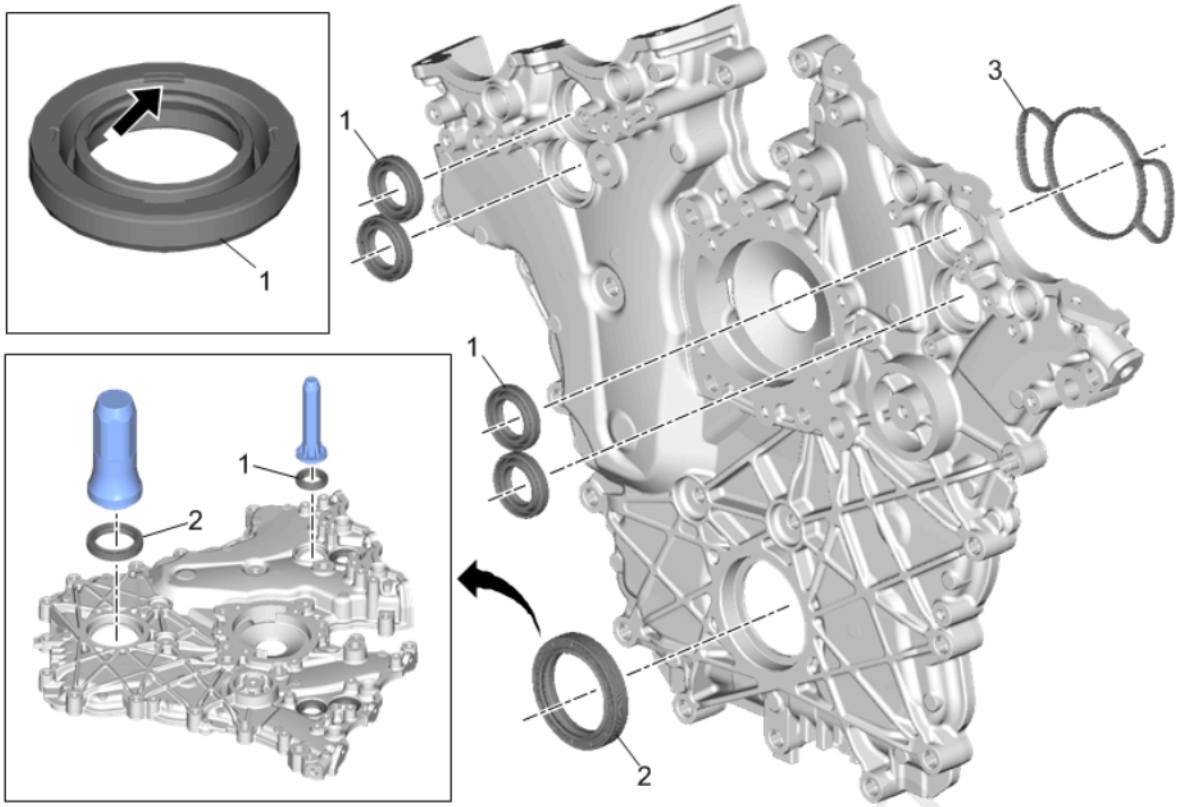

Fig. 261: Engine Front Cover
Courtesy of GENERAL MOTORS COMPANY

Callout	Component Name
1	Camshaft Position Actuator Solenoid Valve Seal (Qty: 4) **Procedure** 1. Place the seal into position with the notches in the seal down. The notches will face inboard when properly installed. 2. Install - Camshaft Position Actuator Solenoid Valve Seal **EN-46103** Camshaft Actuator Valve Seal Installer **NOTE:** **Install a NEW seal. Do NOT reuse the old seal.** **Special Tools** **EN-46103** Camshaft Actuator Valve Seal Installer Equivalent regional tools:**Special Tools**
2	Crankshaft Front Oil Seal **Procedure** 1. Install - Crankshaft Front Oil Seal **EN-29184** Oil Seal Installer **NOTE:** **Do not lubricate the crankshaft front oil seal or crankshaft balancer sealing surfaces. The crankshaft balancer is installed into a dry seal.** **Special Tools** **EN-29184** Oil Seal Installer Equivalent regional tools:**Special Tools**

cardiagn.com

Callout	Component Name
3	Engine Front Cover Gasket **NOTE:** **Install a NEW gasket. Do NOT reuse the old gasket.**

CAMSHAFT COVER DISASSEMBLE

Left Camshaft Cover

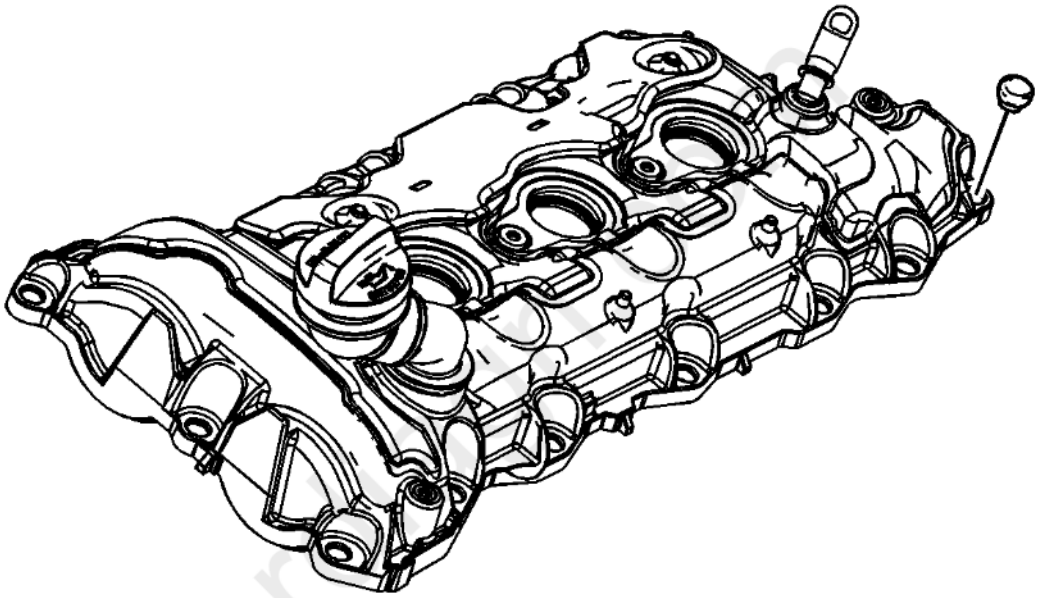

Fig. 262: View of Left Camshaft Cover Bolt Grommets
Courtesy of GENERAL MOTORS COMPANY

1. Remove and discard the left camshaft cover bolt grommets.

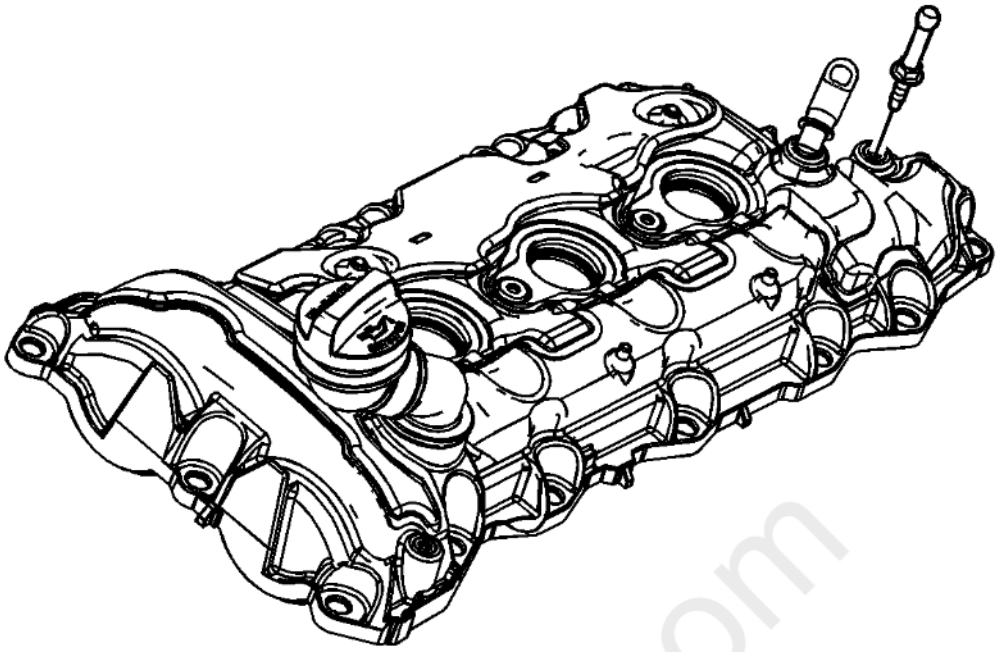

Fig. 263: View of Fuel Injector Sight Shield Cover Ballstud
Courtesy of GENERAL MOTORS COMPANY

2. Remove the fuel injector sight shield ballstud.

cardiagn.com

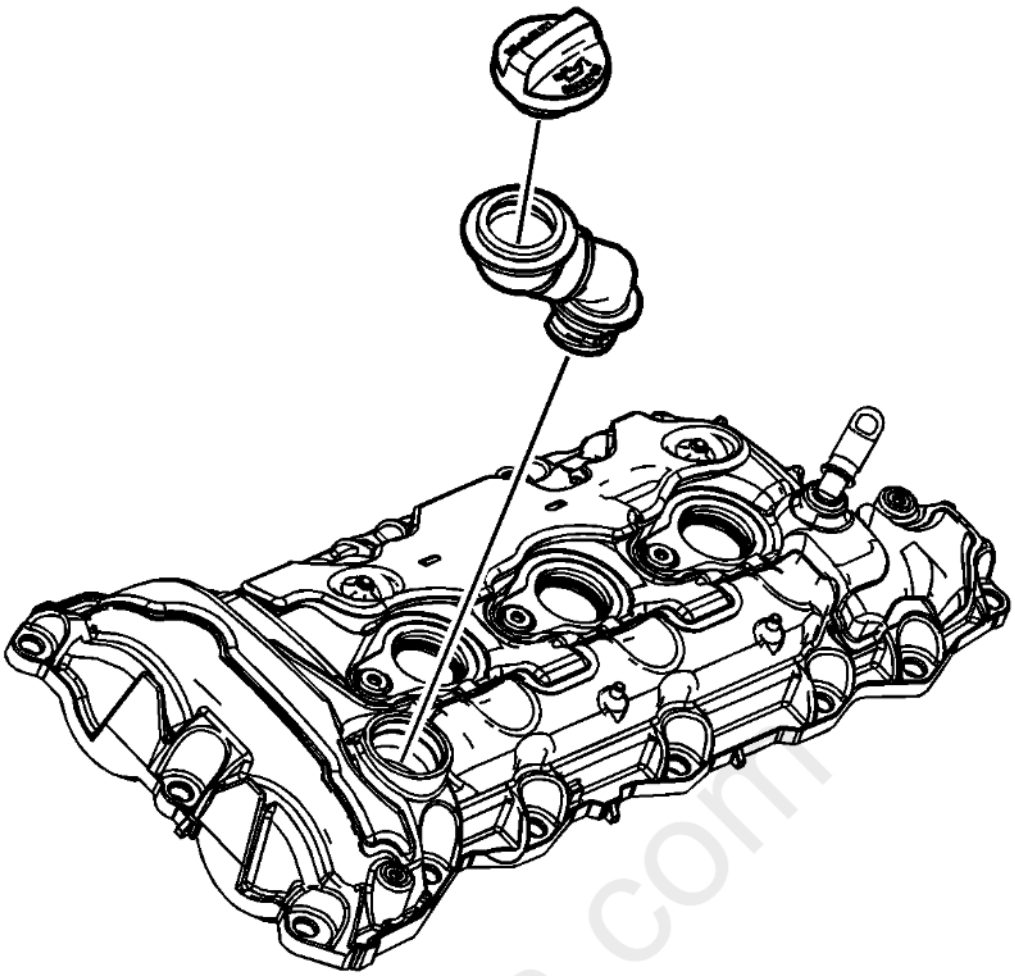

Fig. 264: View of Oil Filter Cap Assembly
Courtesy of GENERAL MOTORS COMPANY

3. Remove the oil fill cap.

cardiagn.com

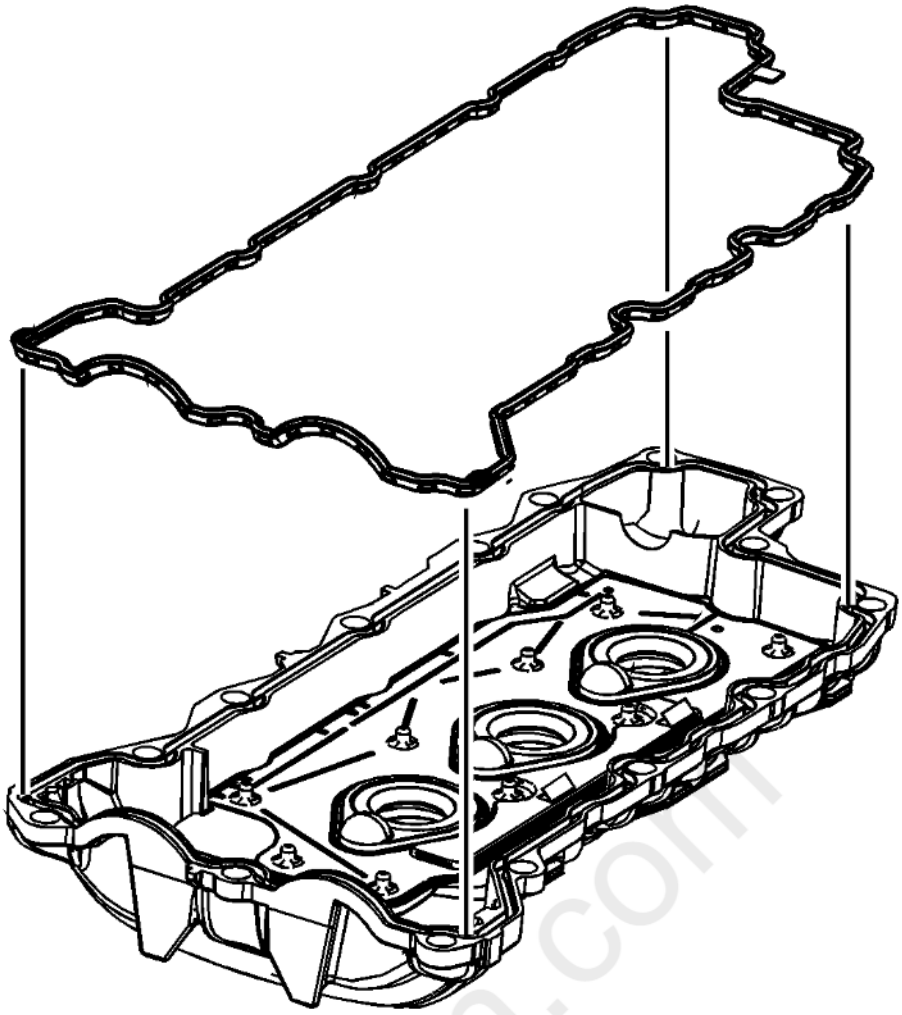

Fig. 265: View of Left Camshaft Cover Gasket Assembly
Courtesy of GENERAL MOTORS COMPANY

NOTE: **Do not reuse the camshaft cover gasket and spark plug shield tube seals.**

4. Remove and discard the left camshaft cover gasket.

cardiagn.com

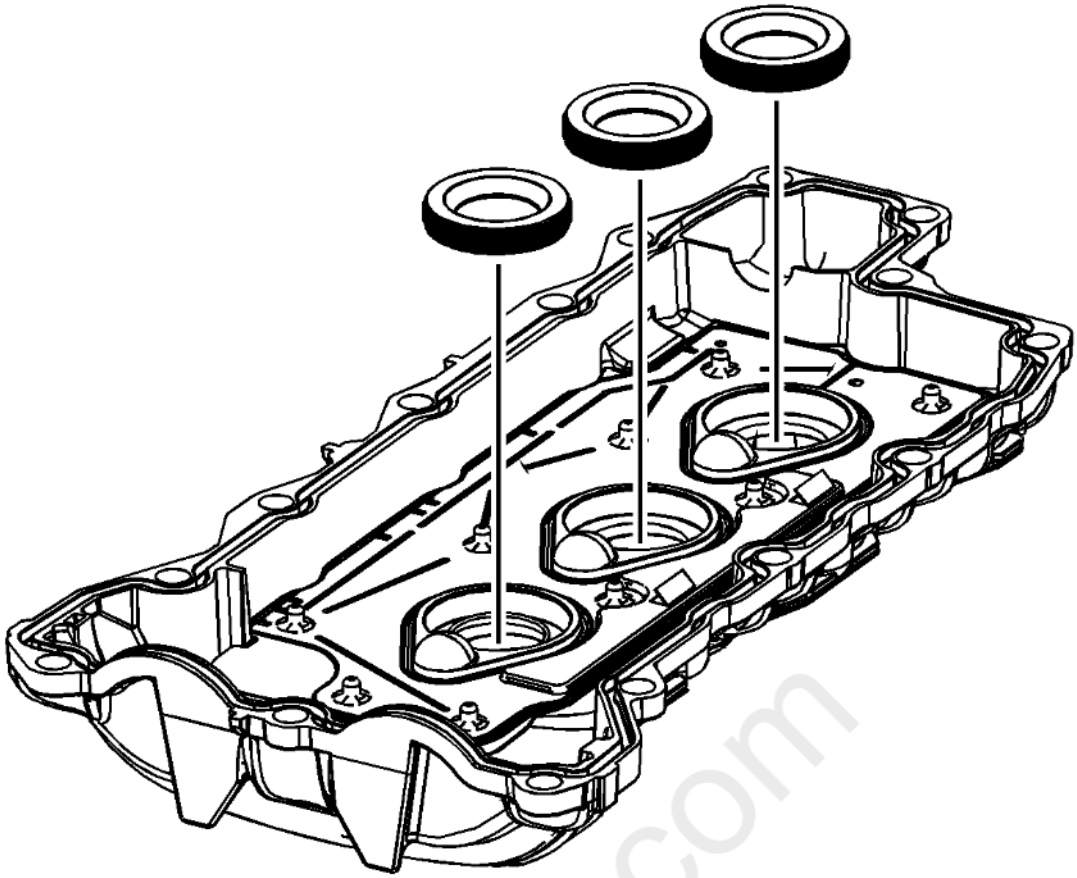

Fig. 266: View Of Right Spark Plug Shield Tube Seals
Courtesy of GENERAL MOTORS COMPANY

5. Remove and discard the left spark plug shield tube seals.

Right Camshaft Cover

cardiagn.com

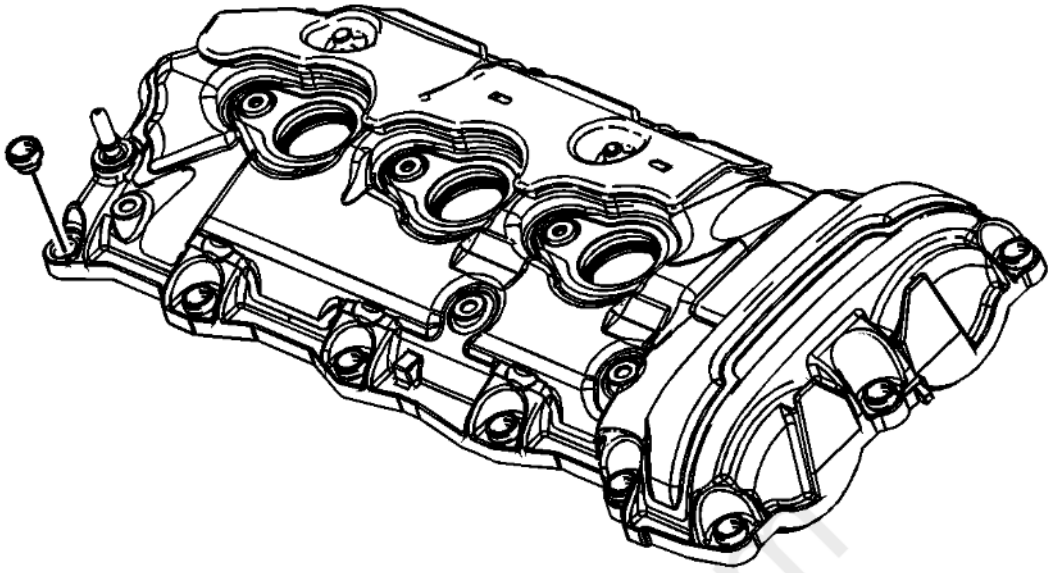

Fig. 267: View Of Right Camshaft Cover Bolt Grommet
Courtesy of GENERAL MOTORS COMPANY

1. Remove and discard the right camshaft cover bolt grommets.

cardiagn.com

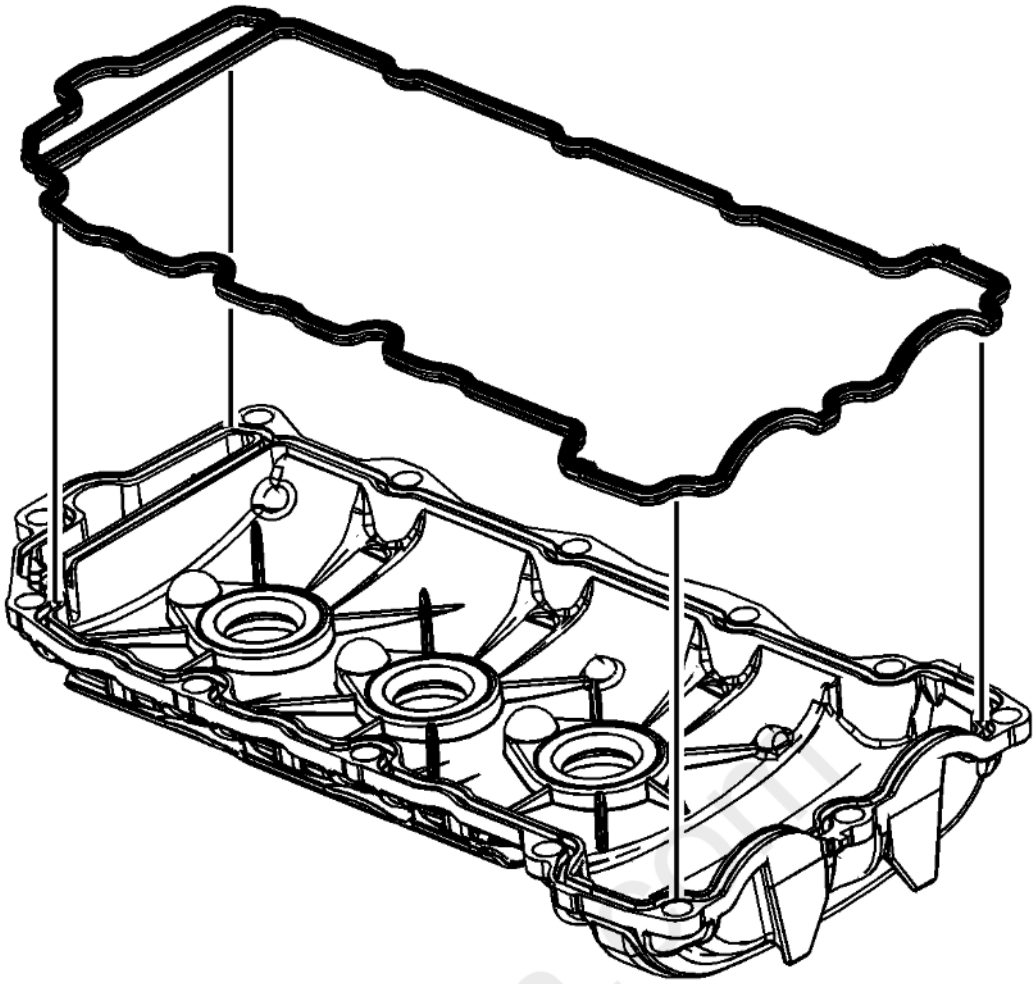

Fig. 268: View Of Right Camshaft Cover Gasket
Courtesy of GENERAL MOTORS COMPANY

NOTE: **Do not reuse the camshaft cover gasket and spark plug shield tube seals.**

2. Remove and discard the right camshaft cover gasket.

cardiagn.com

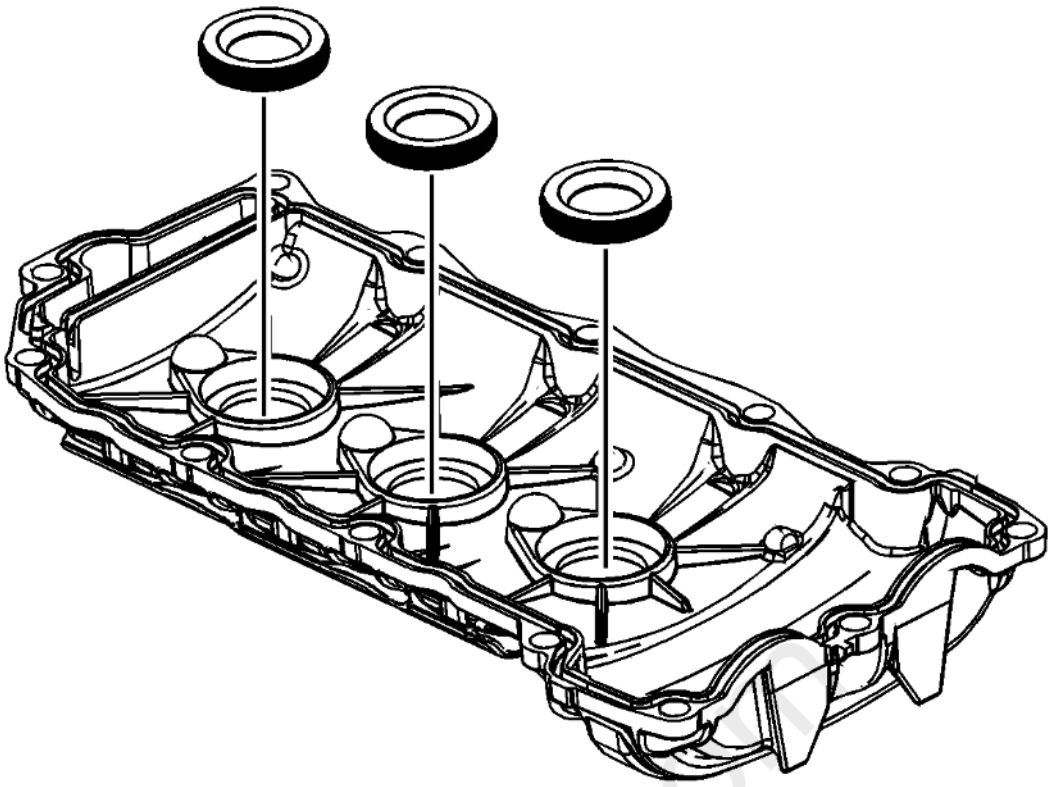

Fig. 269: View Of Right Spark Plug Shield Tube Seals
Courtesy of GENERAL MOTORS COMPANY

3. Remove and discard the right spark plug shield tube seals.

CAMSHAFT COVER CLEANING AND INSPECTION

Cleaning Procedure

1. Clean the camshaft covers in solvent.

WARNING: **Refer to Safety Glasses Warning .**

2. Dry the camshaft covers with compressed air.

Inspection Procedure

1. Inspect each camshaft cover for the dents or damage to the exterior. A dented or damaged camshaft cover may:
   - Leak engine oil
   - Affect crankcase ventilation
   - Interfere with the camshafts
   - Interfere with the ignition coil sealing
   - Allow water or condensation to enter the engine

cardiagn.com

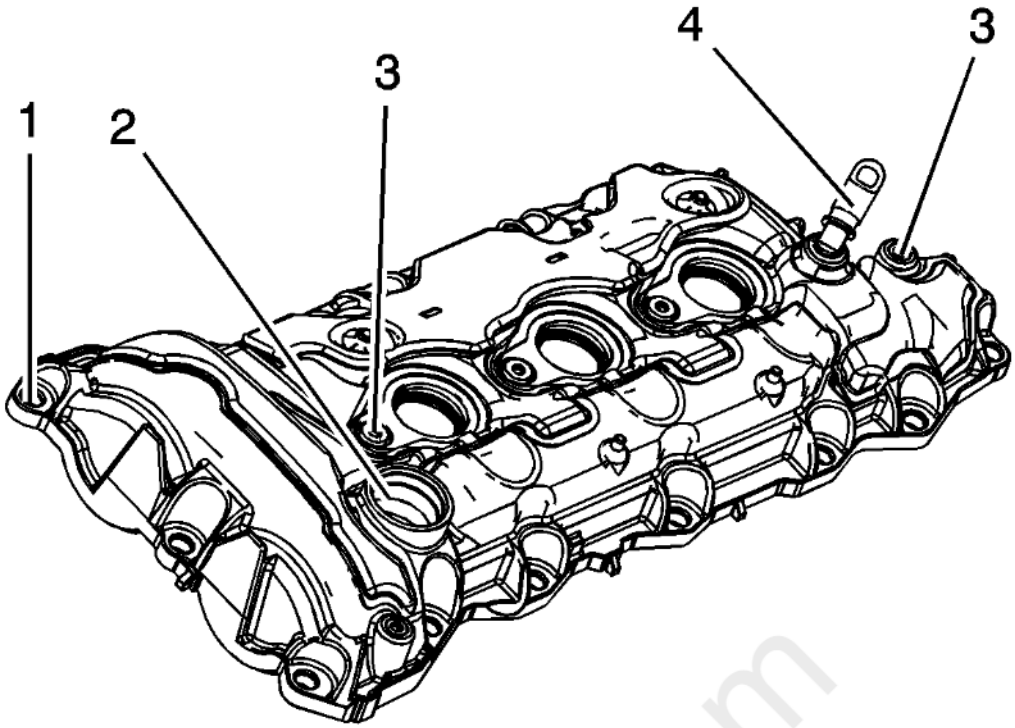

Fig. 270: Identifying Inspection Points Of Left Camshaft Cover
Courtesy of GENERAL MOTORS COMPANY

2. Inspect the exterior of the left camshaft cover for the following conditions:
    - Damage to the camshaft cover bolt holes (1)
    - Damage to the oil fill hole (2)
    - Damage to the mounting holes (3) for the ignition coil assembly and fuel injector sight shield ballstud.
    - Damage to the positive crankcase ventilation (PCV) hose connector (4) - A damaged PCV hose connector is replaceable.

cardiagn.com

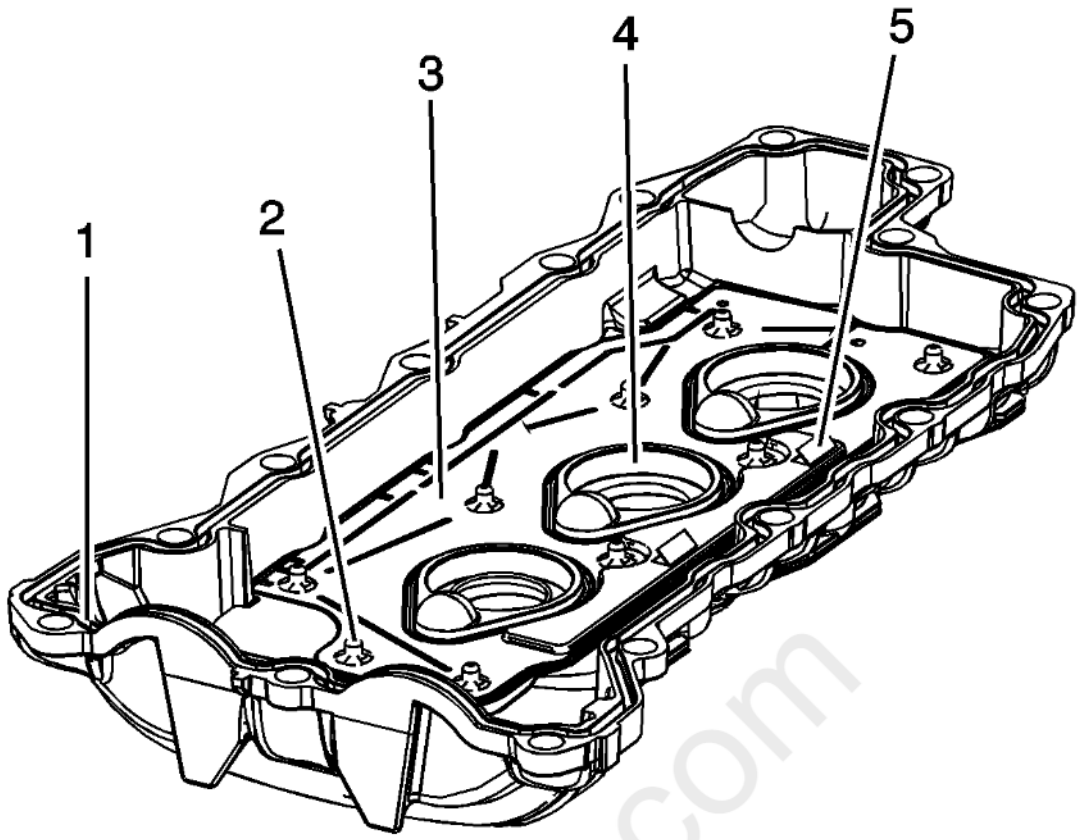

Fig. 271: Identifying Inspection Points Of Left Camshaft Cover Interior
Courtesy of GENERAL MOTORS COMPANY

3. Inspect the interior of the left camshaft cover for the following conditions:
    - Gouges or damage to the camshaft cover sealing groove (1)
    - Damaged, loose or missing baffle fasteners (2)
    - Damaged, loose or missing baffle (3)
    - Gouges or damage to the spark plug shield seal bore (4)
    - Restrictions to the ventilation system (5)

cardiagn.com

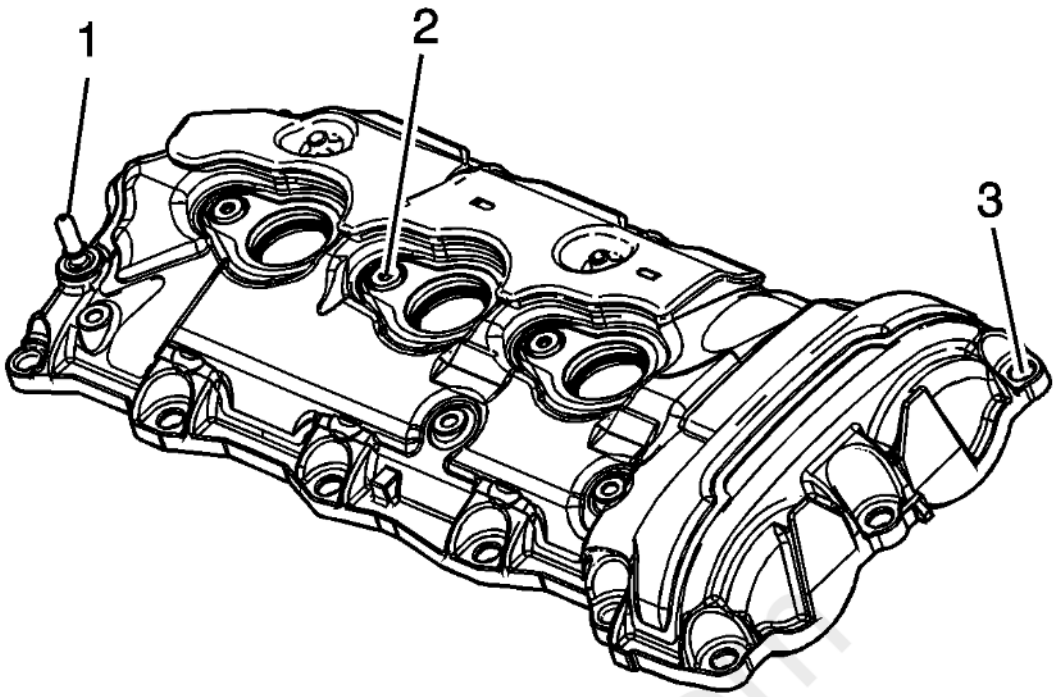

Fig. 272: View Of Right Camshaft Cover Inspection Locations
Courtesy of GENERAL MOTORS COMPANY

4. Inspect the exterior of the right camshaft cover for the following conditions:
    - Damage to the PCV orifice (1) - A damaged PCV orifice can be replaced. Refer to PCV Orifice Replacement.
    - Damage to the mounting holes (2) for the ignition coil assembly
    - Damage to the camshaft cover bolt holes (3)

carmagn.com

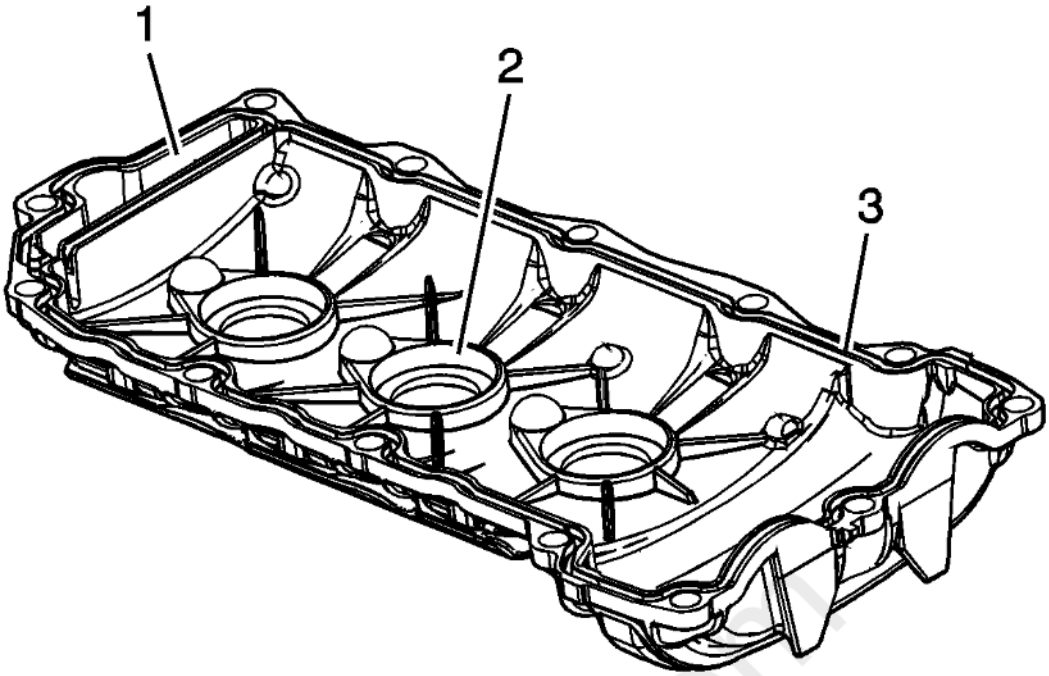

Fig. 273: View Of Right Camshaft Cover Inspection Locations
Courtesy of GENERAL MOTORS COMPANY

5. Inspect the interior of the right camshaft cover for the following conditions:
    - Restrictions to the ventilation system (1)
    - Gouges or damage to the spark plug shield seal bore (2)
    - Gouges or damage to the camshaft cover sealing groove (3)
6. Repair or replace the camshaft cover or covers as necessary.

PCV Orifice Replacement

carmagn.com

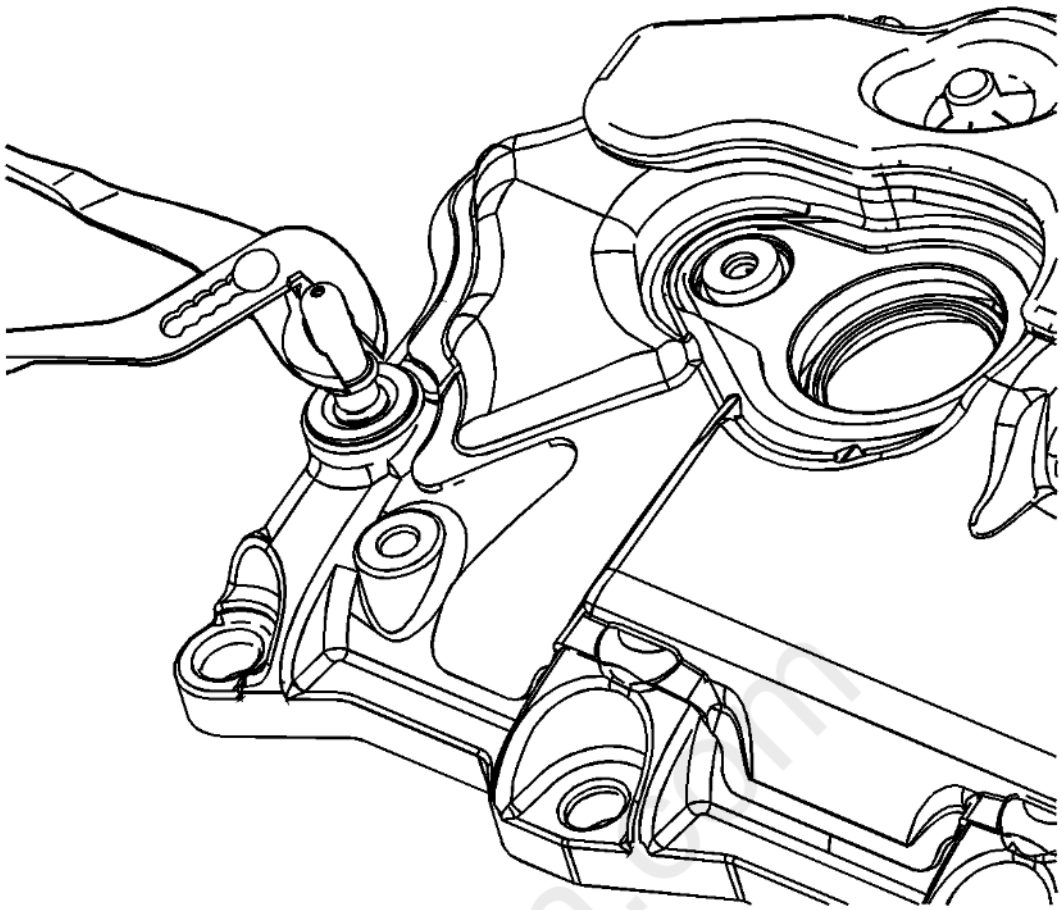

Fig. 274: View Of PCV Orifice
Courtesy of GENERAL MOTORS COMPANY

NOTE: **If the PCV orifice is damaged or plugged and cannot be cleaned out, the PCV orifice can be replaced.**

1. Remove the old PCV orifice by gripping the neck of the orifice with pliers and twisting and pulling out of the right camshaft cover.

carDiagn.com

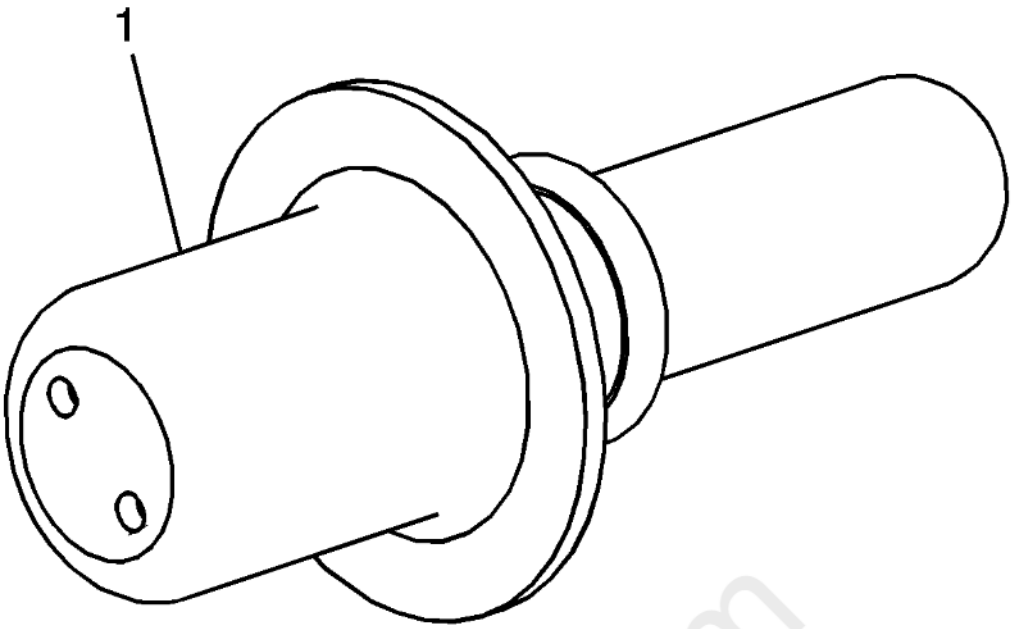

Fig. 275: Identifying Sealant Area On PCV Orifice
Courtesy of GENERAL MOTORS COMPANY

2. Ensure proper use of room temperature vulcanizing (RTV) sealant. **Use of Room Temperature Vulcanizing (RTV) and Anaerobic Sealant**
3. Apply sealant to the NEW PCV orifice (1). Refer to **Adhesives, Fluids, Lubricants, and Sealers** for recommended sealant.

carmagn.com

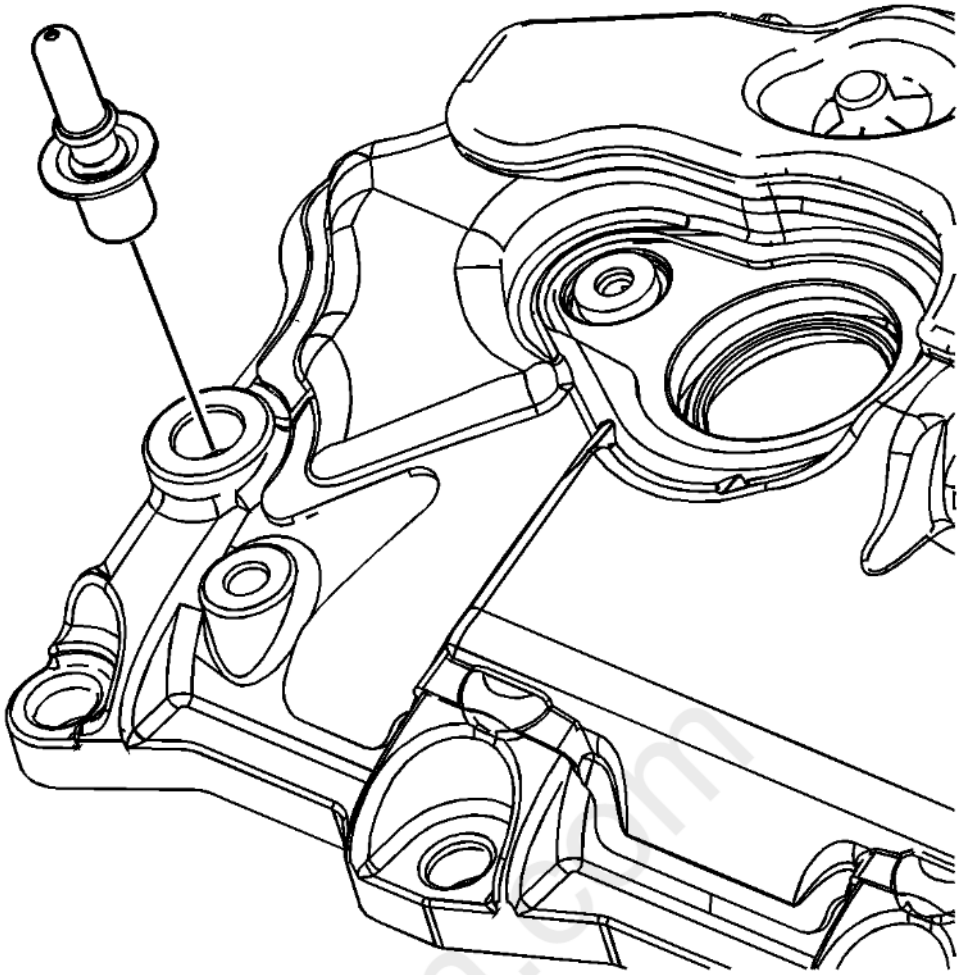

Fig. 276: View Of PCV Orifice & Right Camshaft Cover
Courtesy of GENERAL MOTORS COMPANY

4. Install the NEW PCV orifice into the right camshaft cover. After insertion, twist the PCV orifice in order to eliminate any vertical leak paths in the sealant.

PCV Fitting Replacement

carmanuals.com

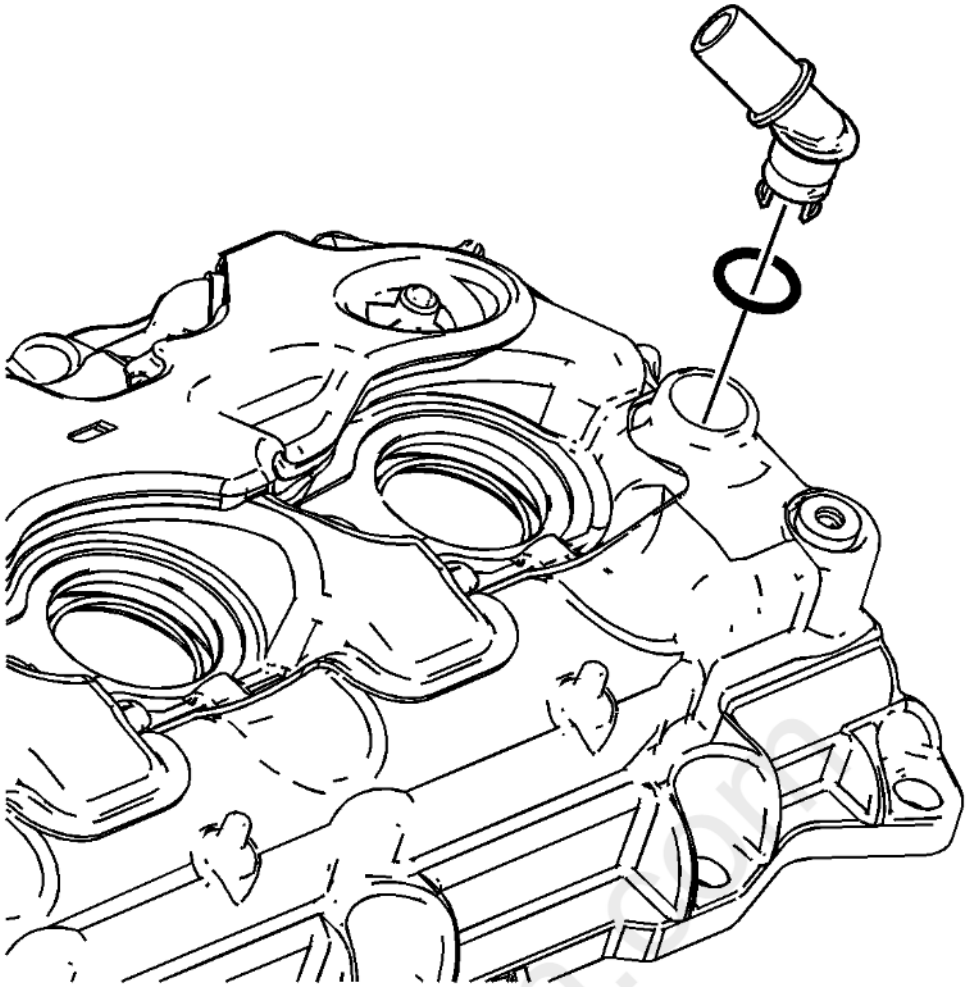

Fig. 277: View Of PCV Fitting & O-Ring
Courtesy of GENERAL MOTORS COMPANY

NOTE: **If the PCV fitting is damaged or plugged and cannot be cleaned out, the PCV fitting can be replaced.**

1. Remove the old PCV fitting.
2. Install the new PCV fitting with a NEW O-ring.

CAMSHAFT COVER ASSEMBLE

Special Tools

- **DT 5590** Bearing and Seal Driver
- **J-25254-A** Oil Seal Installer

For equivalent regional tools, refer to **Special Tools** .

Left Camshaft Cover

carDiagn.com

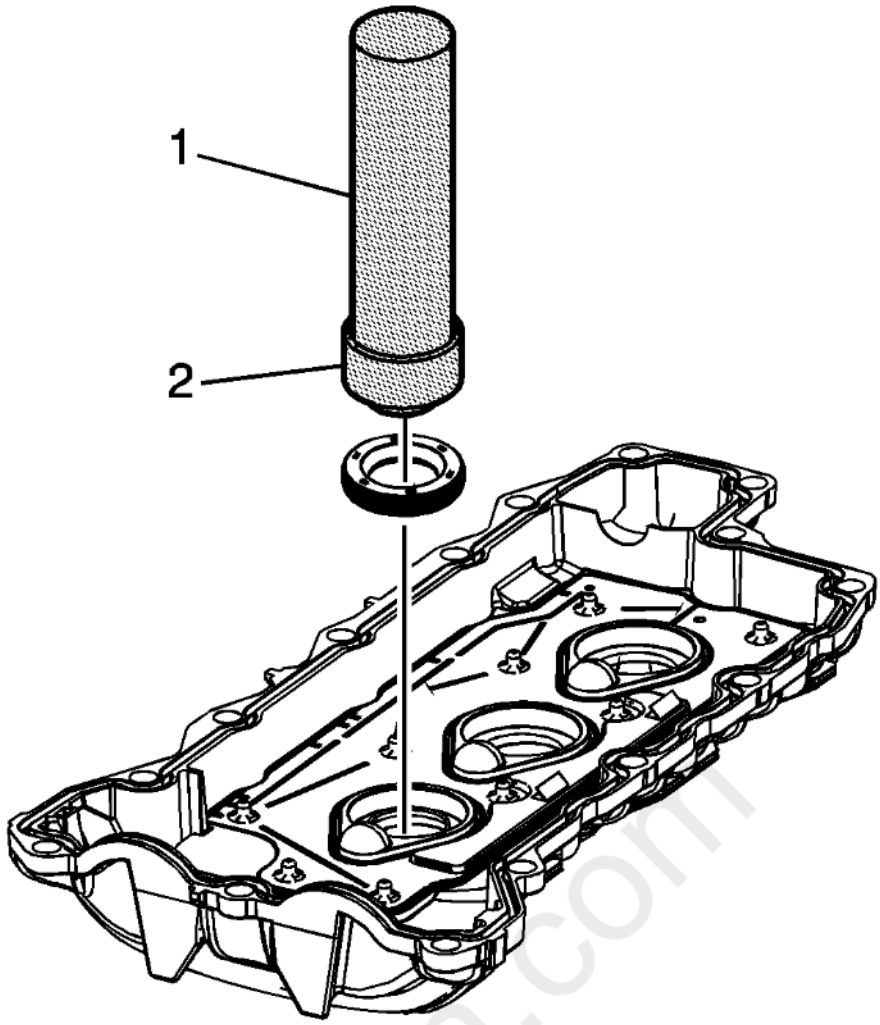

Fig. 278: Left Spark Plug Shield Tube Seals And Special Tools
Courtesy of GENERAL MOTORS COMPANY

1. Install the NEW left spark plug shield tube seals using the **DT 5590** driver (1) and **J-25254-A** installer (2).

cardiagn.com

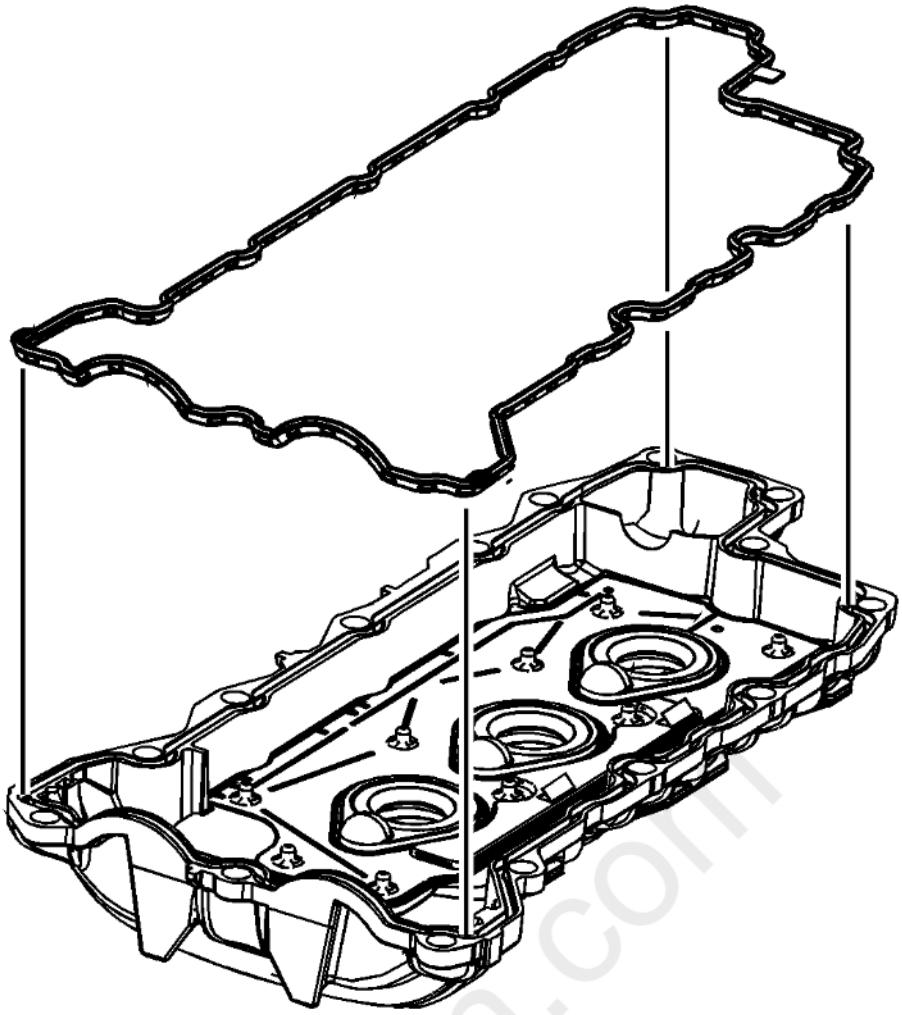

Fig. 279: View of Left Camshaft Cover Gasket Assembly
Courtesy of GENERAL MOTORS COMPANY

2. Install the NEW left camshaft cover gasket.

cardiagn.com

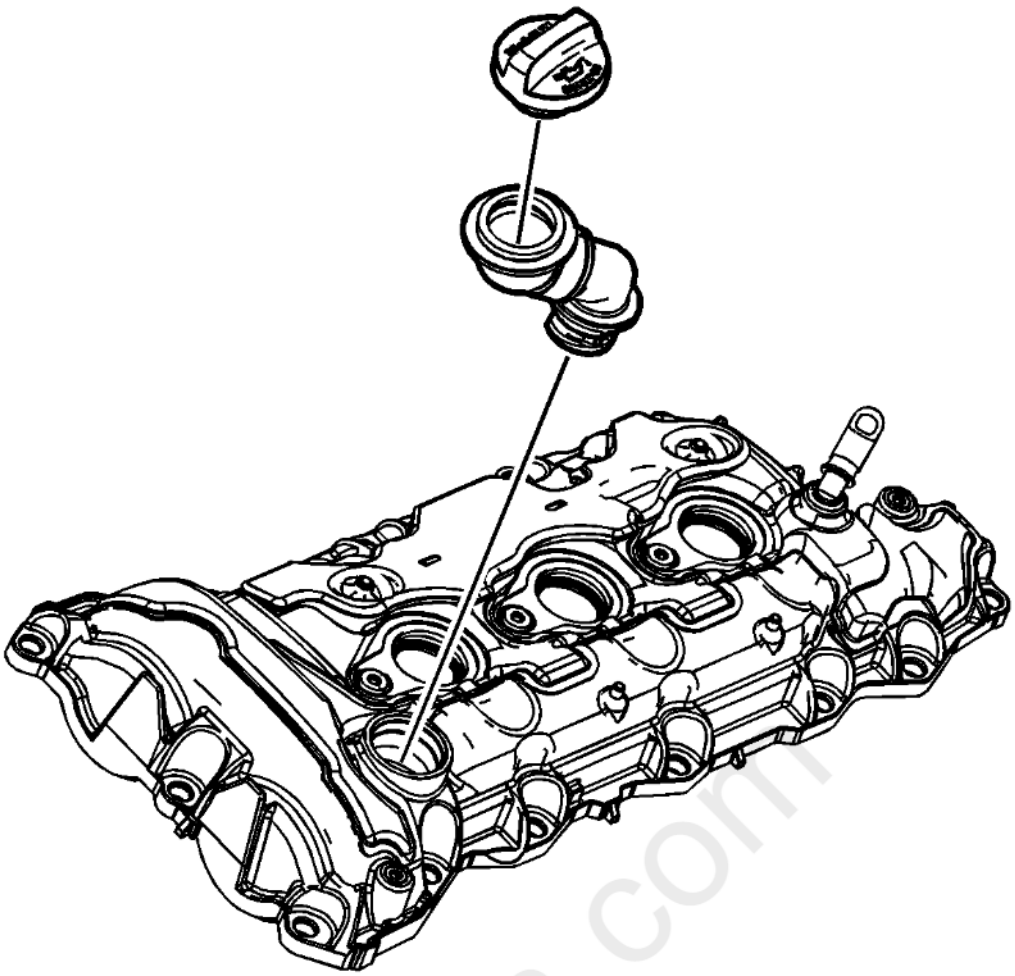

Fig. 280: View of Oil Filter Cap Assembly
Courtesy of GENERAL MOTORS COMPANY

3. Install the oil fill cap.

cardiagn.com

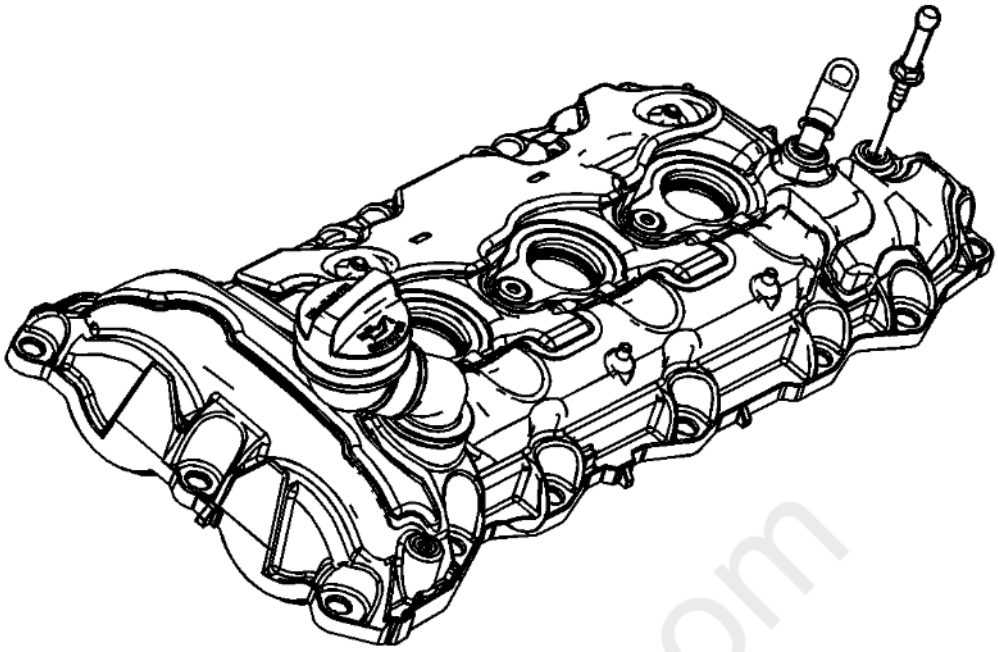

Fig. 281: View of Fuel Injector Sight Shield Cover Ballstud
Courtesy of GENERAL MOTORS COMPANY

CAUTION: **Refer to Fastener Caution .**

4. Install the fuel injector sight shield cover ballstud and tighten to 10 N.m (89 lb in).

cardiagn.com

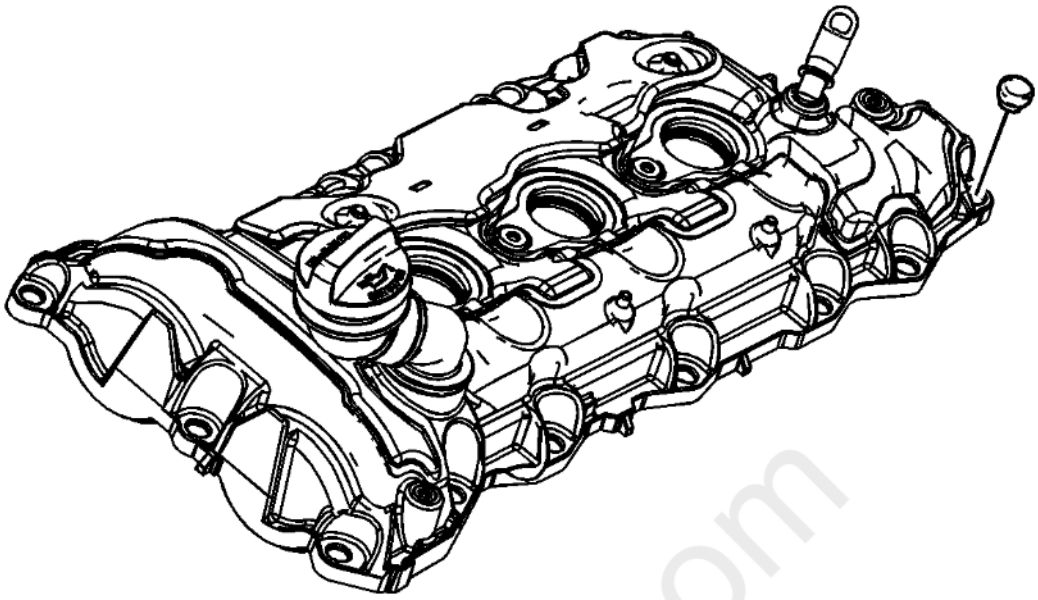

Fig. 282: View of Left Camshaft Cover Bolt Grommets
Courtesy of GENERAL MOTORS COMPANY

NOTE: **The camshaft cover bolt grommet must be installed into the camshaft cover bolt hole before installing the camshaft cover bolt.**

5. Install the NEW left camshaft cover bolt grommets.

Right Camshaft Cover

carduagn.com

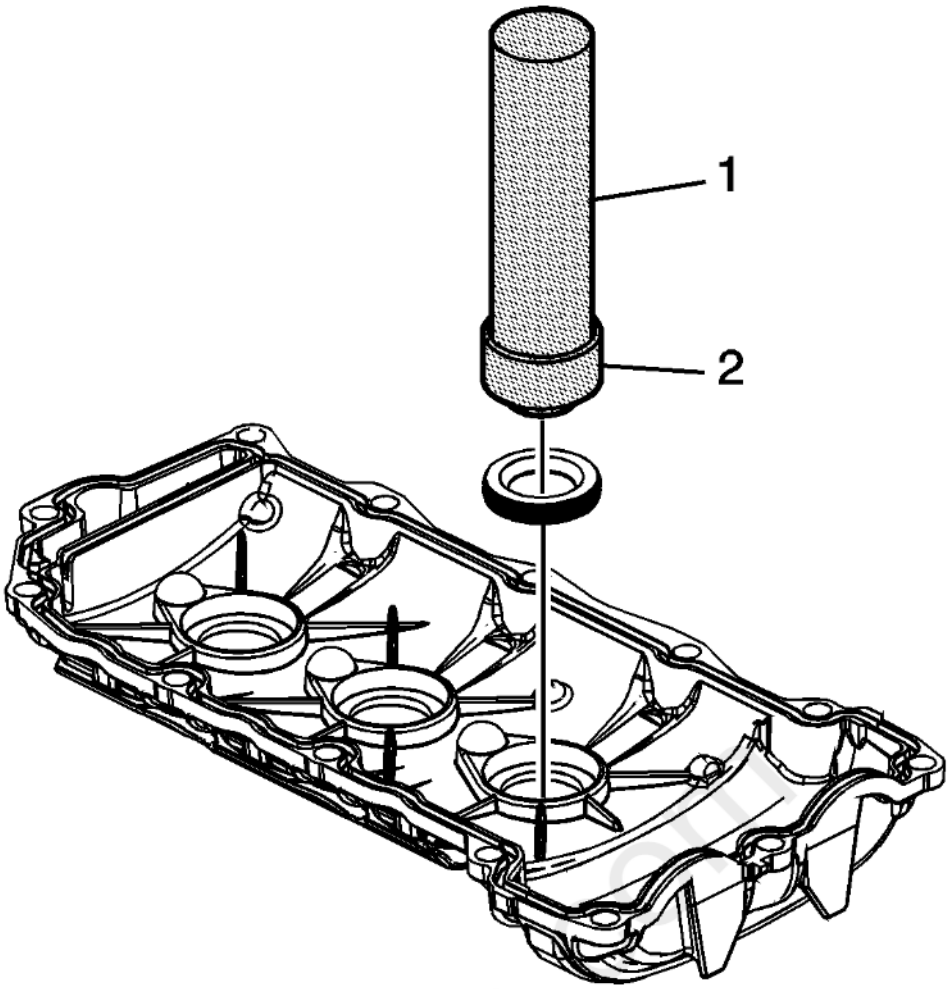

Fig. 283: Installing Spark Plug Shield Tube Coil Seal
Courtesy of GENERAL MOTORS COMPANY

1. Install the NEW right spark plug shield tube coil seals using the **DT 5590** driver (1) and **J-25254-A** installer (2).

cardiagn.com

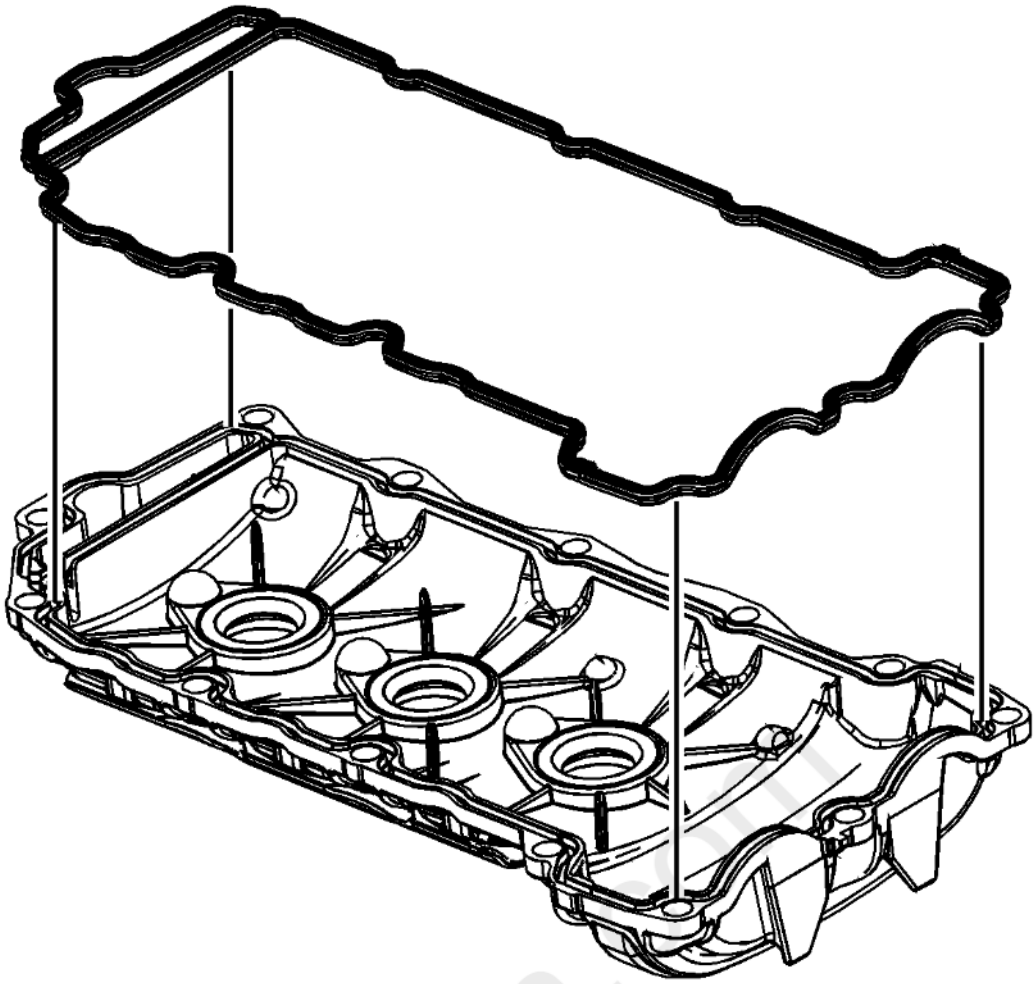

Fig. 284: View Of Right Camshaft Cover Gasket
Courtesy of GENERAL MOTORS COMPANY

2. Install the NEW right camshaft cover gasket.

cardiagn.com

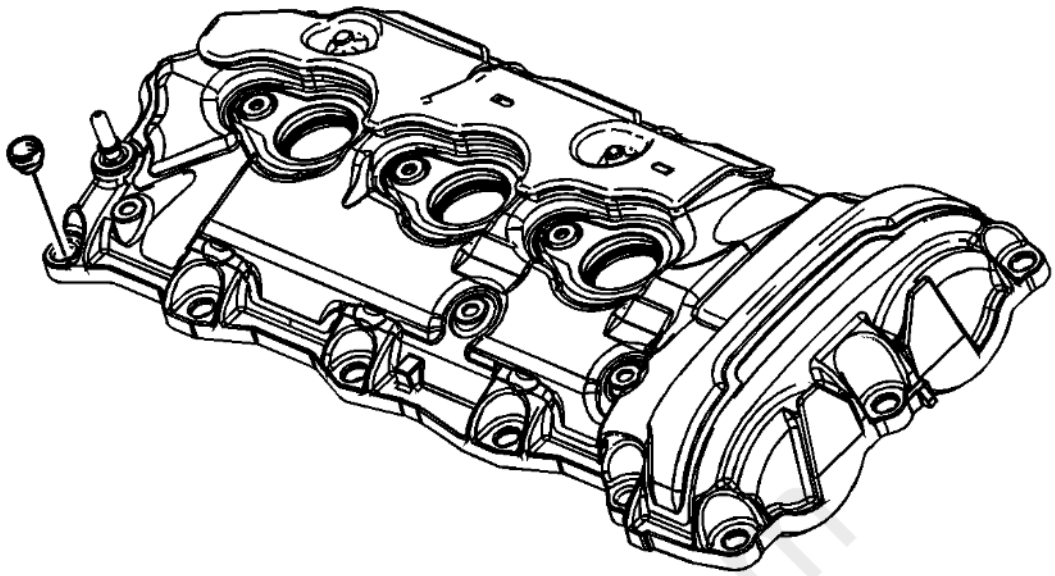

Fig. 285: View Of Right Camshaft Cover Bolt Grommets
Courtesy of GENERAL MOTORS COMPANY

NOTE: **The camshaft cover bolt grommet must be installed into the camshaft cover bolt hole before installing the camshaft cover bolt.**

3. Install the NEW right camshaft cover bolt grommets.

INTAKE MANIFOLD DISASSEMBLE

cardiagn.com

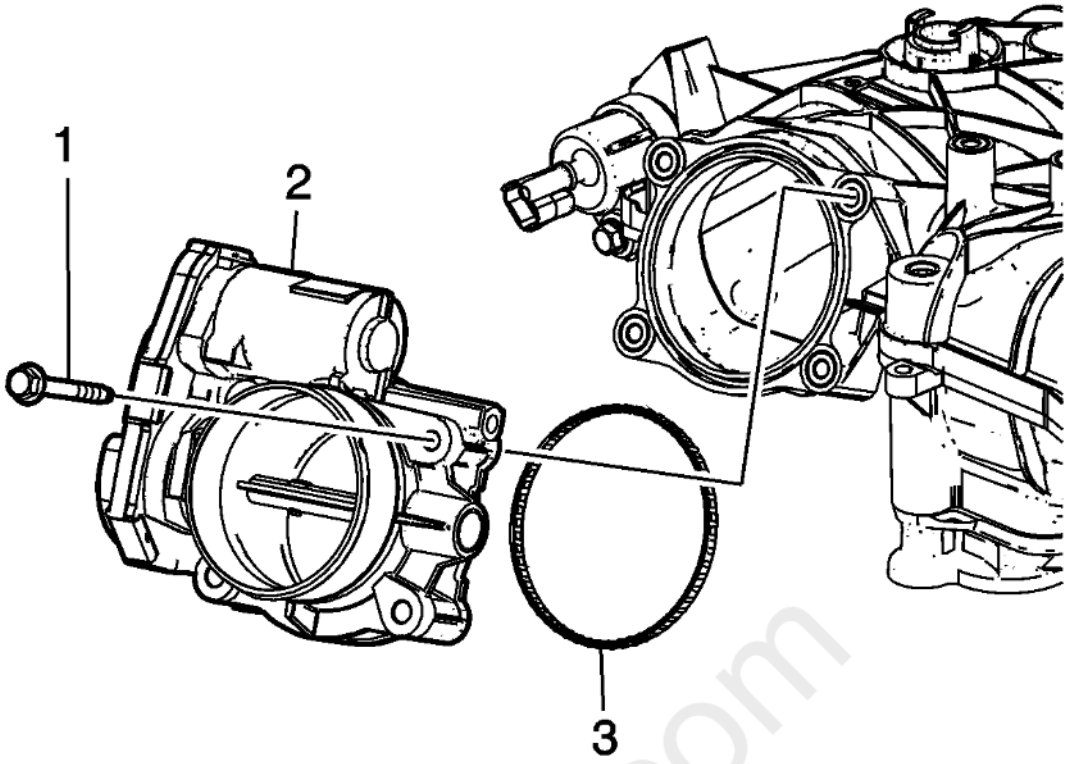

Fig. 286: Throttle Body Components
Courtesy of GENERAL MOTORS COMPANY

1. Remove the throttle body bolts (1).
2. Remove the throttle body (2).
3. Remove and discard the throttle body seal (3).

cardiagn.com

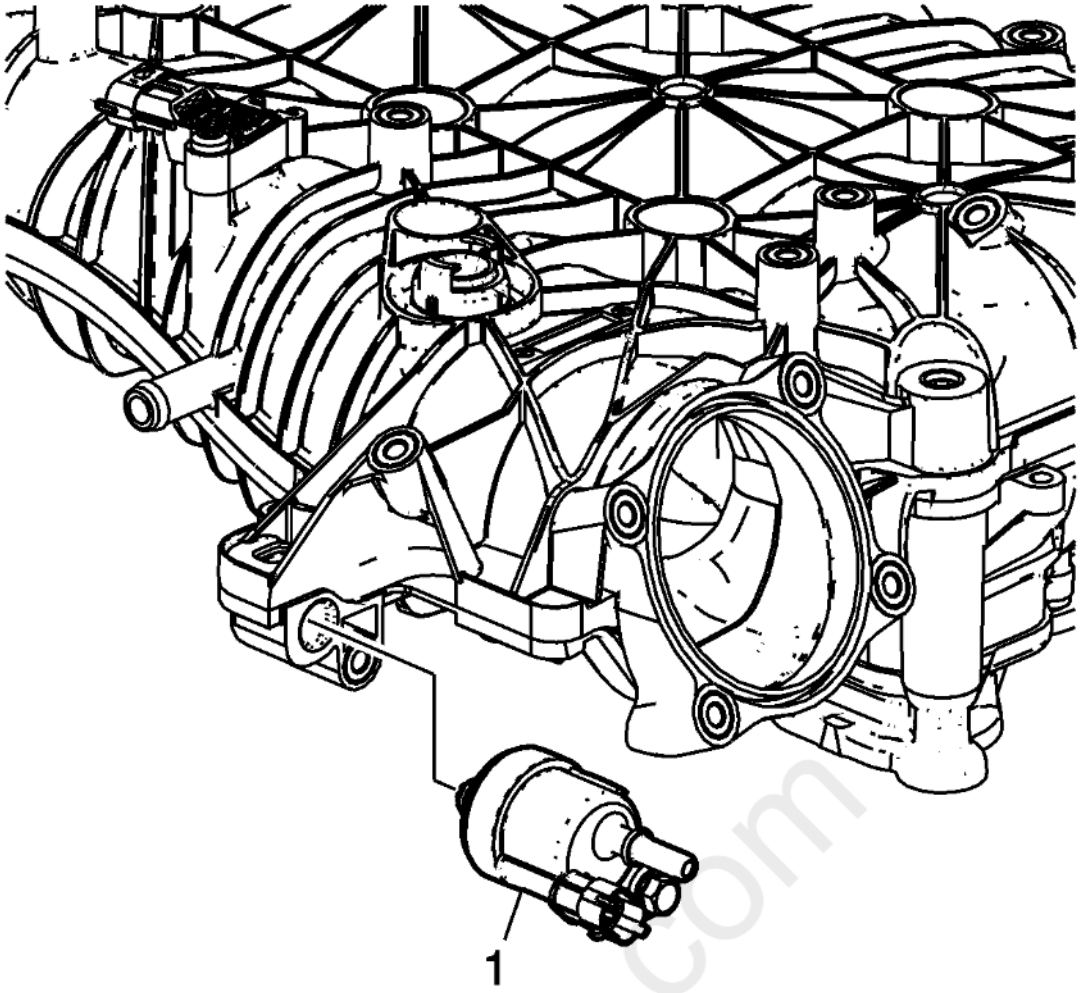

Fig. 287: EVAP Solenoid
Courtesy of GENERAL MOTORS COMPANY

4. Loosen the evaporative (EVAP) solenoid bolt.
5. Remove the EVAP solenoid (1).

cardiagn.com

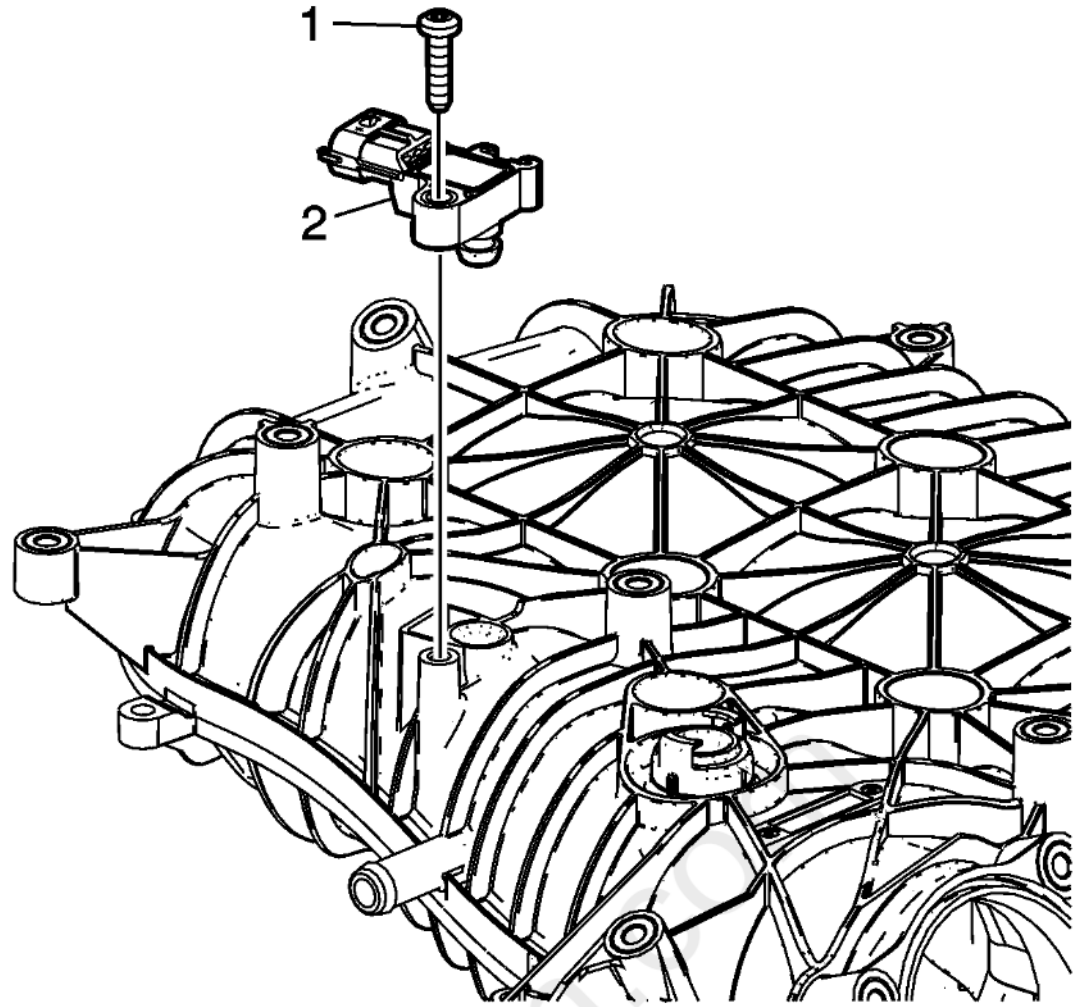

Fig. 288: MAP Sensor
Courtesy of GENERAL MOTORS COMPANY

6. Remove the manifold absolute pressure (MAP) sensor bolt (1).
7. Remove the MAP sensor (2).

cardiagn

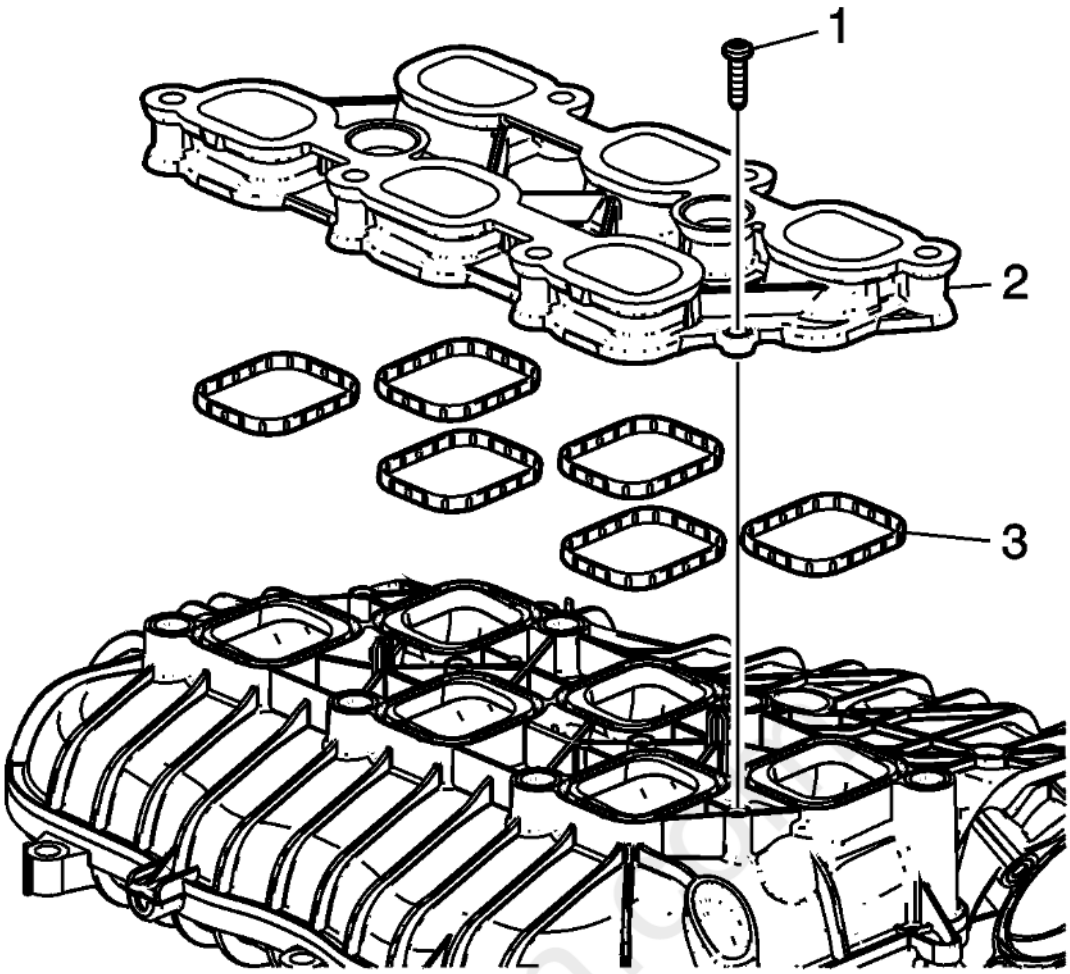

Fig. 289: Lower Intake Manifold Gaskets
Courtesy of GENERAL MOTORS COMPANY

8. Remove the lower intake manifold bolts (1) and lower intake manifold (2).
9. Remove and discard the lower intake manifold gaskets (3).

cardiagn.com

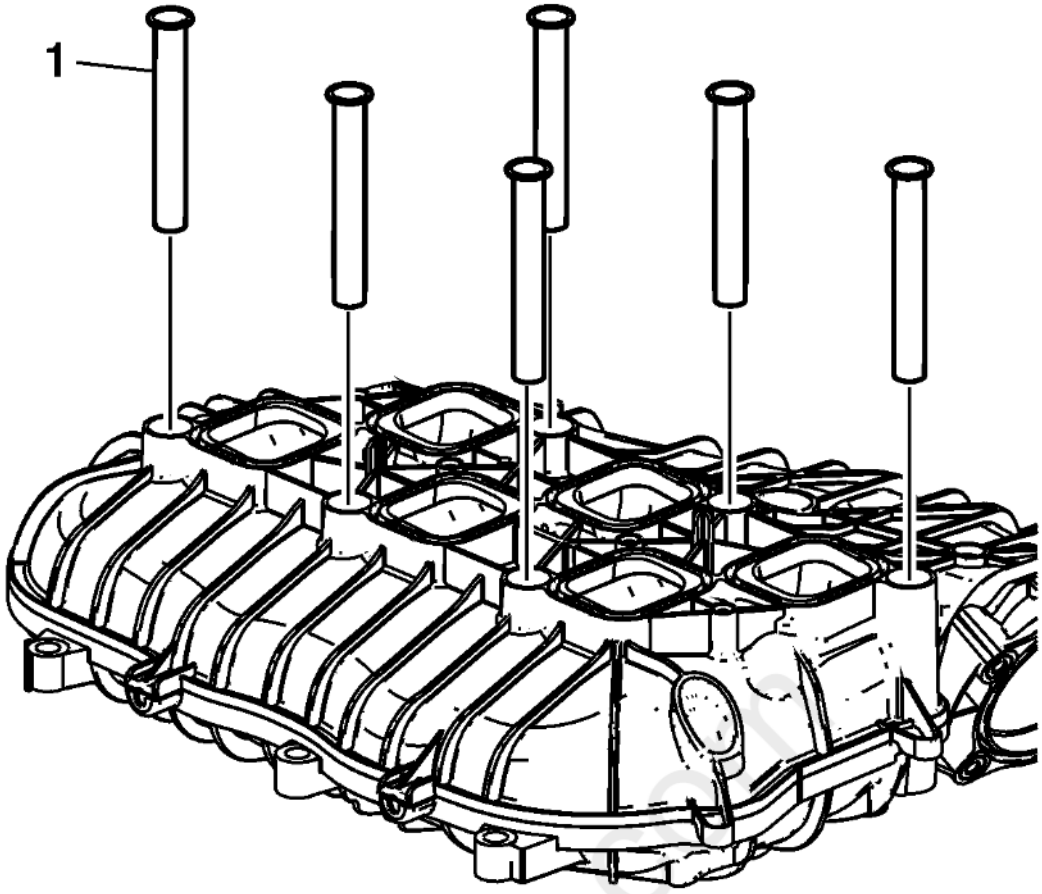

Fig. 290: Plastic Compression Limiters
Courtesy of GENERAL MOTORS COMPANY

10. Remove and discard the plastic compression limiters (1).

INTAKE MANIFOLD CLEANING AND INSPECTION

Intake Manifold Cleaning Procedure

1. Remove any remaining gasket and/or gasket material from the following:
    - Throttle body
    - Intake manifold
2. Clean the following intake manifold areas in solvent.
    - Intake manifold gasket sealing areas
    - Intake manifold passages
    - Brake booster hose passage
    - Evaporative emission (EVAP) solenoid passage
    - Positive crankcase ventilation (PCV) vacuum hose passages

WARNING: **Refer to Safety Glasses Warning .**

3. Dry the intake manifold and throttle body with compressed air.

Inspection Procedure

cardiagn.com

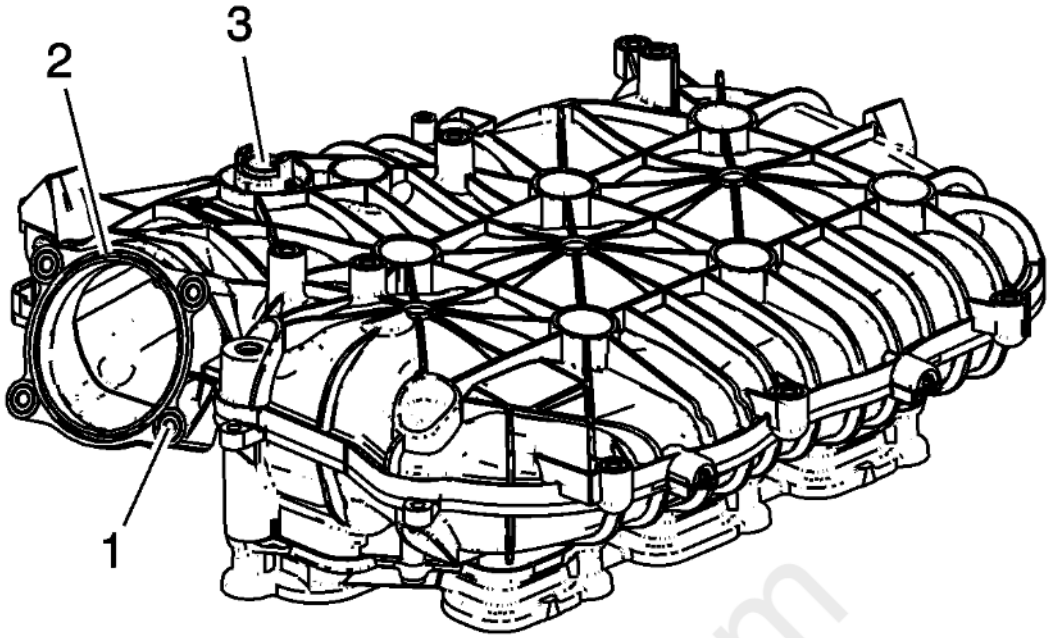

Fig. 291: Inspecting Intake Manifold
Courtesy of GENERAL MOTORS COMPANY

1. Inspect the intake manifold for the following conditions:
    - Damage to the throttle body bolt holes (1)
    - Damage, debris or restrictions to the PCV system hose ports (3)
    - Damage to the gasket sealing surface for the throttle body (2)

cardiagn.com

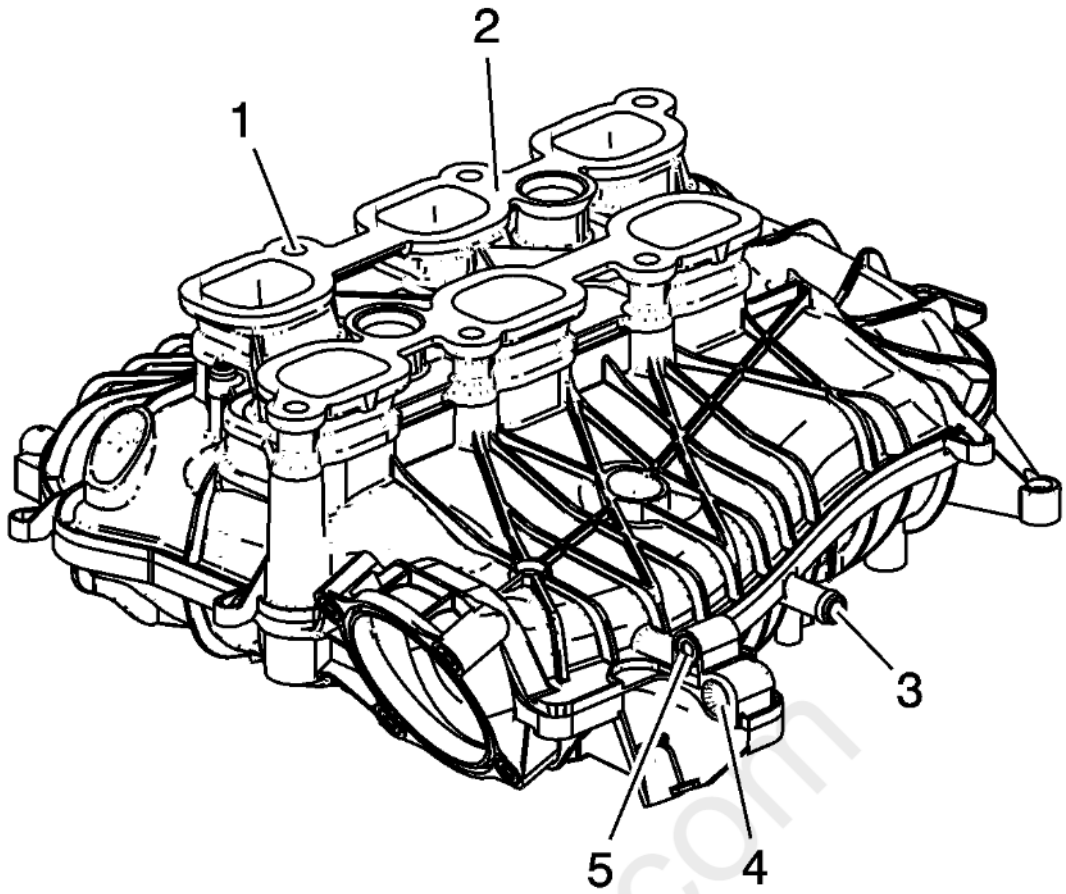

Fig. 292: Inspection Areas Of Intake Manifold
Courtesy of GENERAL MOTORS COMPANY

2. Inspect the intake manifold for the following conditions:
    - Damage, debris or restrictions to the brake vacuum booster hose port (3)
    - Damage to the intake manifold bolt bosses (1)
    - Damage to the EVAP purge solenoid mounting boss (5)
    - Damage, debris or restrictions to the EVAP purge solenoid port (4)
    - Gouges or damage to the intake manifold sealing surfaces (2)

cardiagn.com

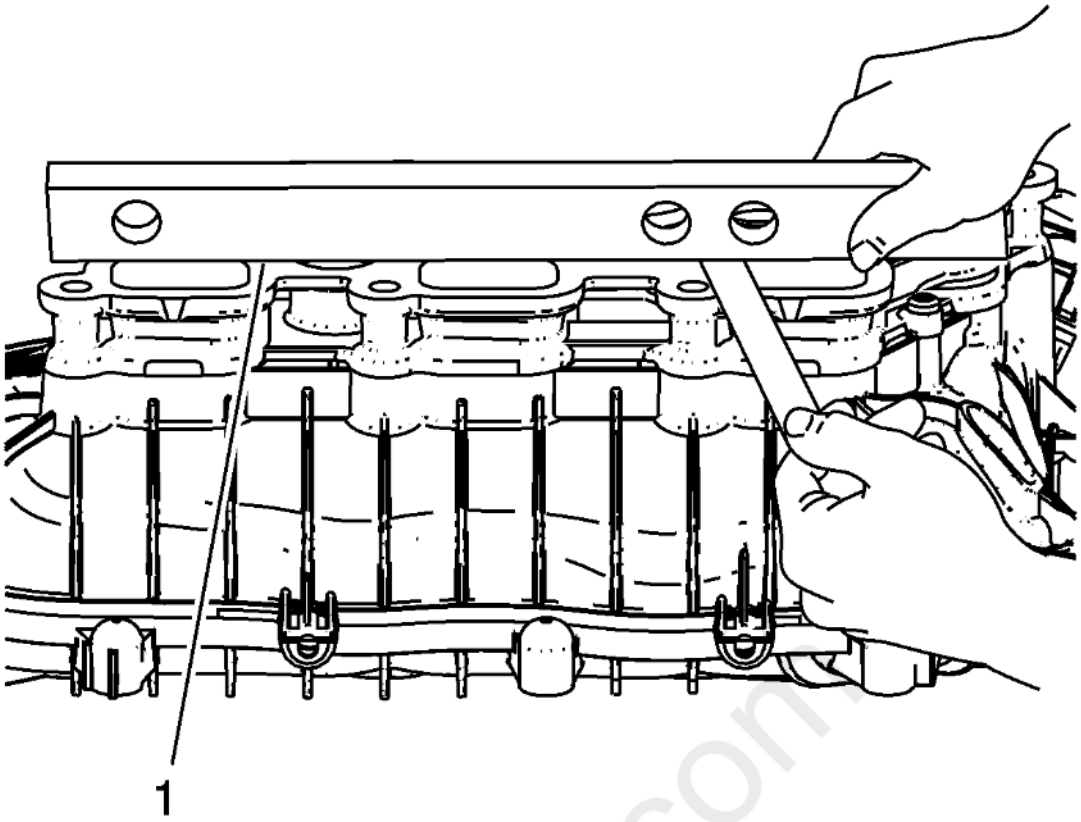

Fig. 293: Inspecting Intake Manifold Sealing Surface
Courtesy of GENERAL MOTORS COMPANY

3. Inspect the intake manifold sealing surface (1) for warpage.
    1. Locate a straight edge across the intake manifold sealing surface.
    2. Insert a feeler gauge between the intake manifold and the straight edge. An intake manifold with warpage in excess of 0.50 mm (0.020 in) must be replaced.
4. Repair or replace the intake manifold as necessary.

INTAKE MANIFOLD ASSEMBLE

cardiagn.com

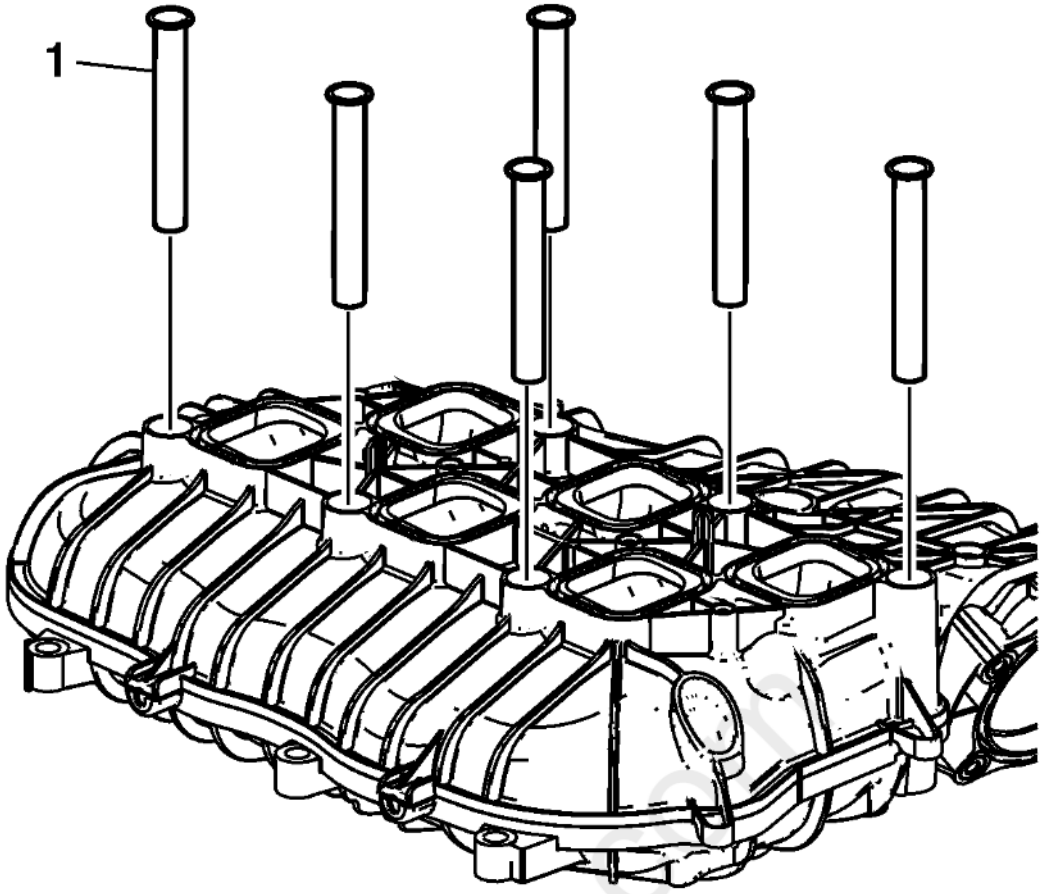

Fig. 294: Plastic Compression Limiters
Courtesy of GENERAL MOTORS COMPANY

1. Install the NEW plastic compression limiters (1).

cardiagn.com

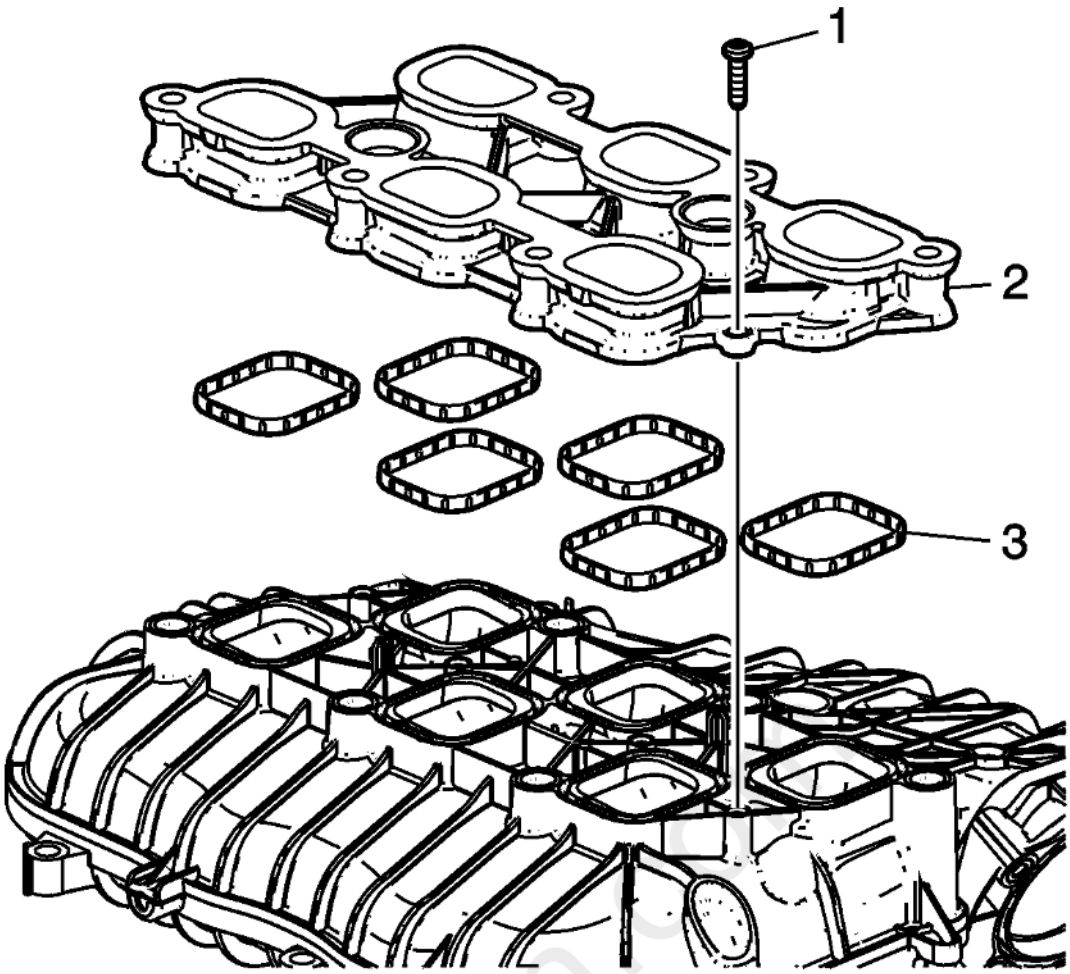

Fig. 295: Lower Intake Manifold Gaskets
Courtesy of GENERAL MOTORS COMPANY

2. Install the NEW lower intake manifold gaskets (3).
3. Install the lower intake manifold (2) and bolts (1).

CAUTION: **Refer to Fastener Caution .**

4. Tighten the lower intake manifold bolts (1) to 7 N.m (62 lb in).

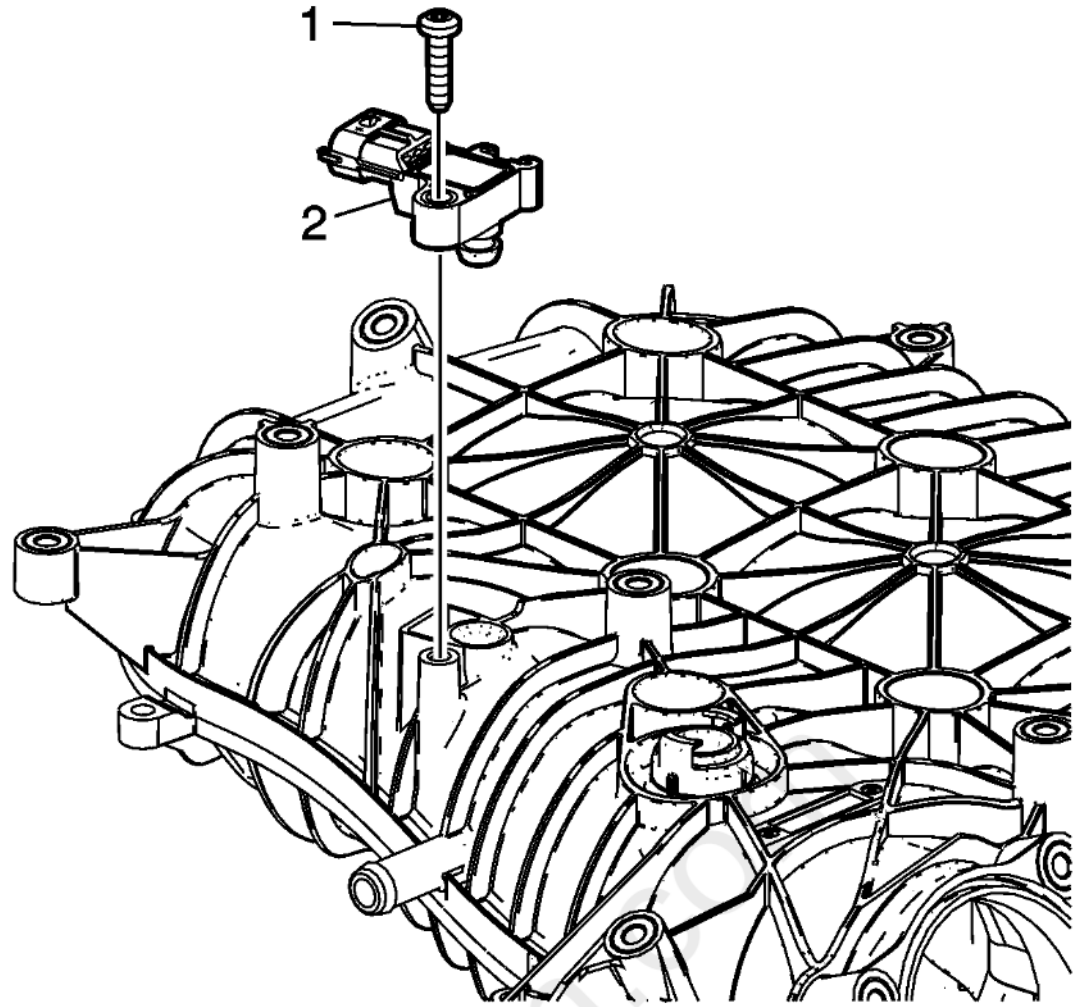

Fig. 296: MAP Sensor
Courtesy of GENERAL MOTORS COMPANY

5. Install the MAP sensor (2).
6. Install the MAP sensor bolt (1) and tighten to 4 N.m (35 lb in).

cardiagn

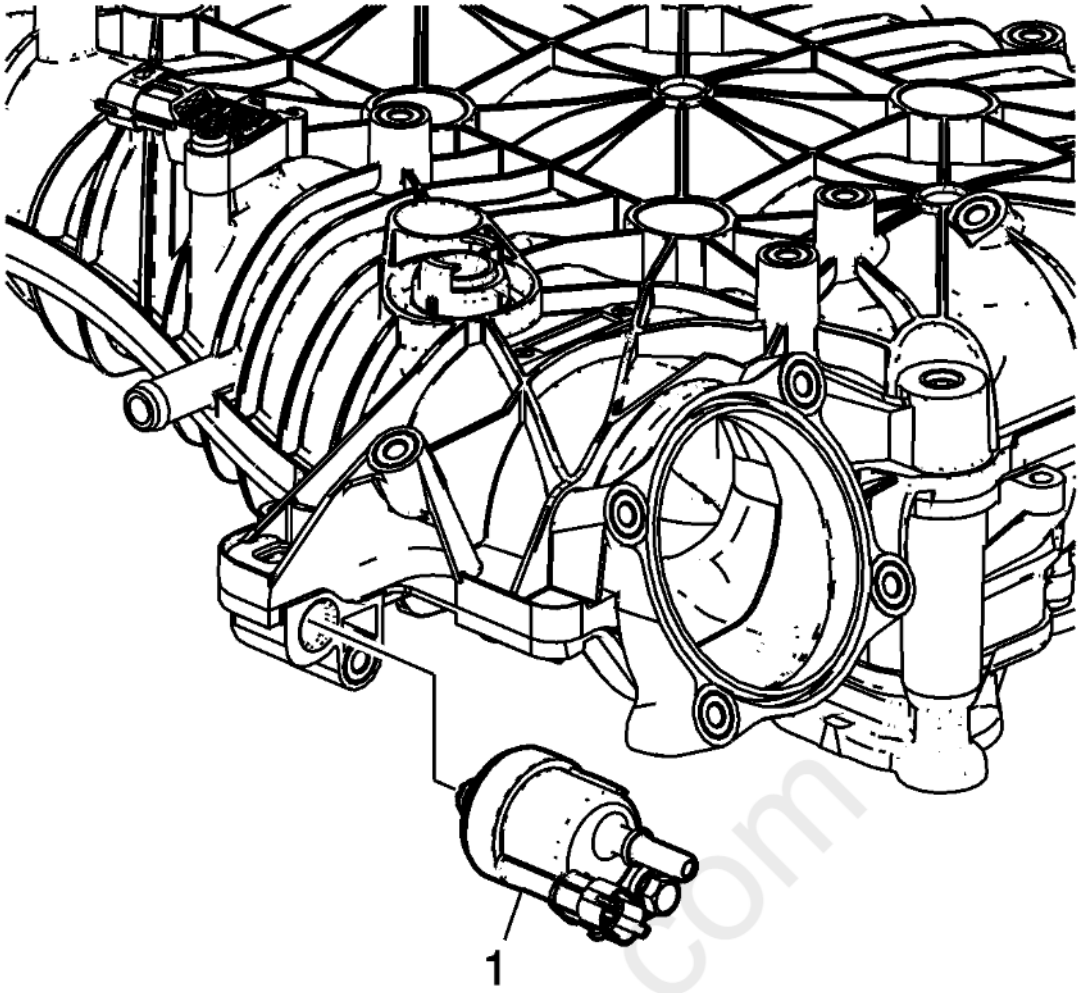

Fig. 297: EVAP Solenoid
Courtesy of GENERAL MOTORS COMPANY

7. Install the EVAP solenoid (1).
8. Tighten the EVAP solenoid bolt to 10 N.m (89 lb in).

cardiagn.com

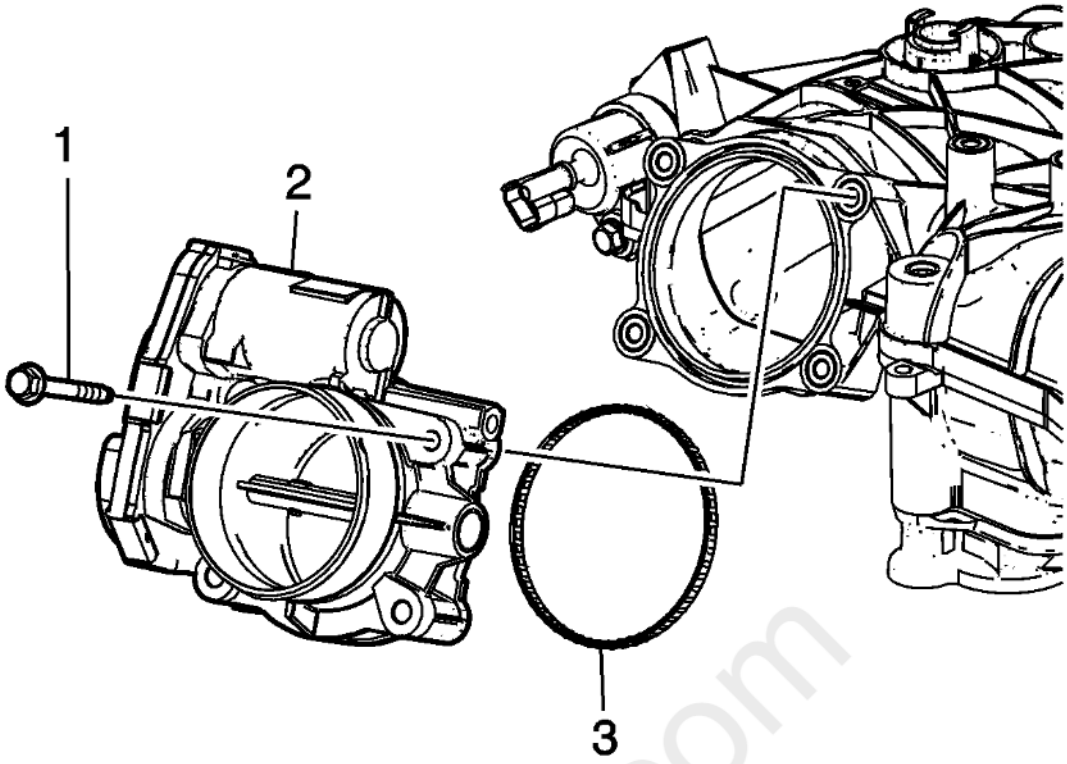

Fig. 298: Throttle Body Components
Courtesy of GENERAL MOTORS COMPANY

9. Install the NEW throttle body seal (3).
10. Install the throttle body (2).
11. Install the throttle body bolts (1) and tighten to 10 N.m (89 lb in).

WATER PUMP CLEANING AND INSPECTION

Cleaning Procedure

CAUTION: **Do not immerse the water pump in solvent. The solvent may enter the water pump's permanently lubricated bearings and cause premature bearing failure.**

1. Remove the old gasket material from the water pump sealing surfaces.
2. Clean all excess dirt and debris from the water pump housing.

Inspection Procedure

cardiagn.com

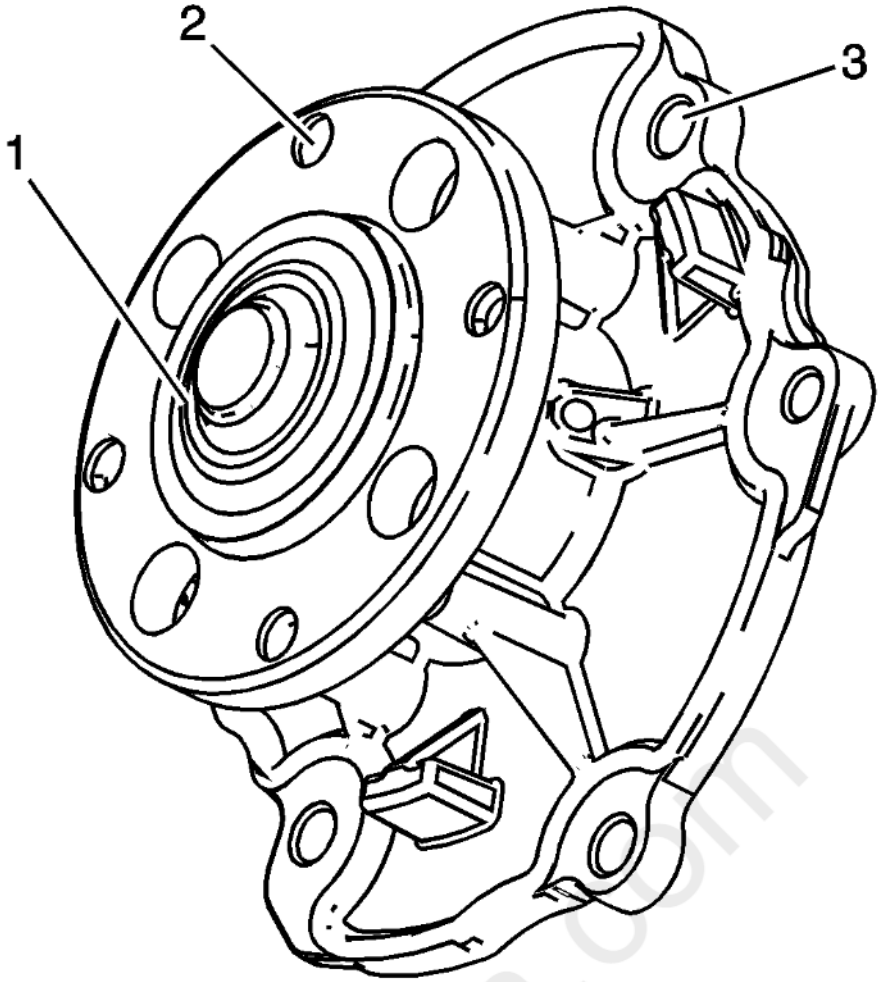

Fig. 299: Inspecting Water Pump & Hub
Courtesy of GENERAL MOTORS COMPANY

1. Rotate the water pump hub (1). The water pump hub and impeller should turn straight and smoothly. If the hub wobbles, is noisy, or feels rough when rotated, replace the water pump.
2. Inspect the exterior of the water pump for the following:
    - Damage to the water pump hub bolt threads (2) for the water pump pulley
    - Damage to the water pump bolt holes (3)

carmagn.com

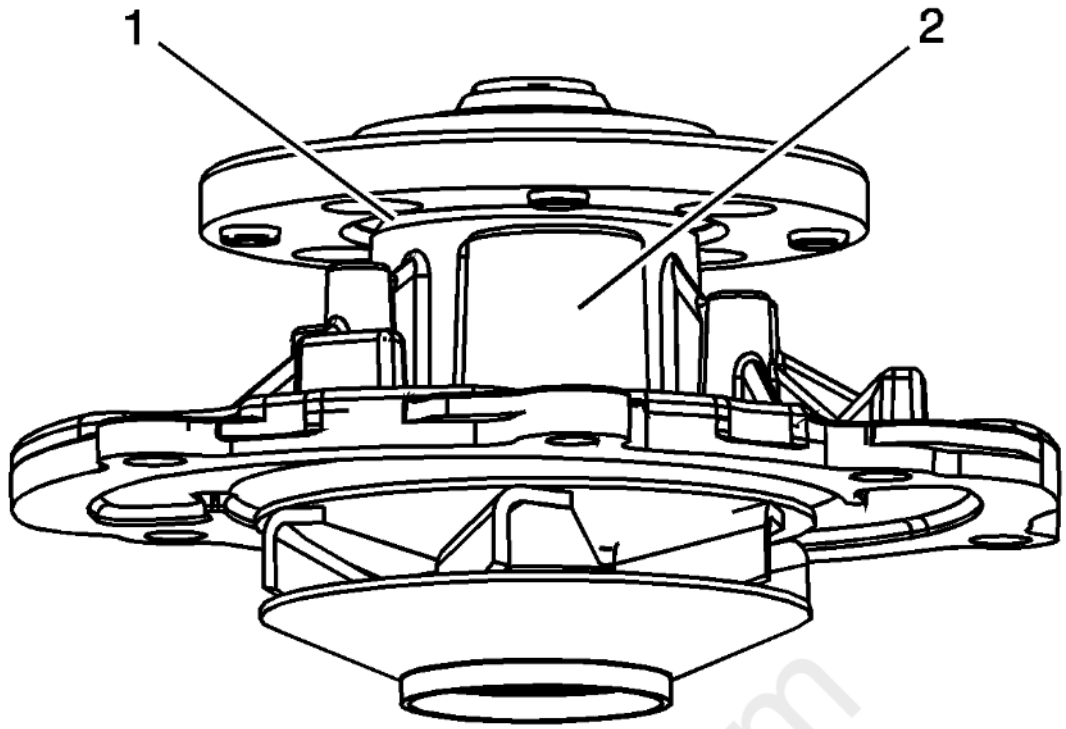

Fig. 300: Checking Water Pump Shaft & Weep Hole For Leakage
Courtesy of GENERAL MOTORS COMPANY

3. Examine the water pump shaft (1) and the weep hole reservoir (2) in the water pump body for signs of leakage. If coolant leakage is evident, replace the water pump.

carmagn.com

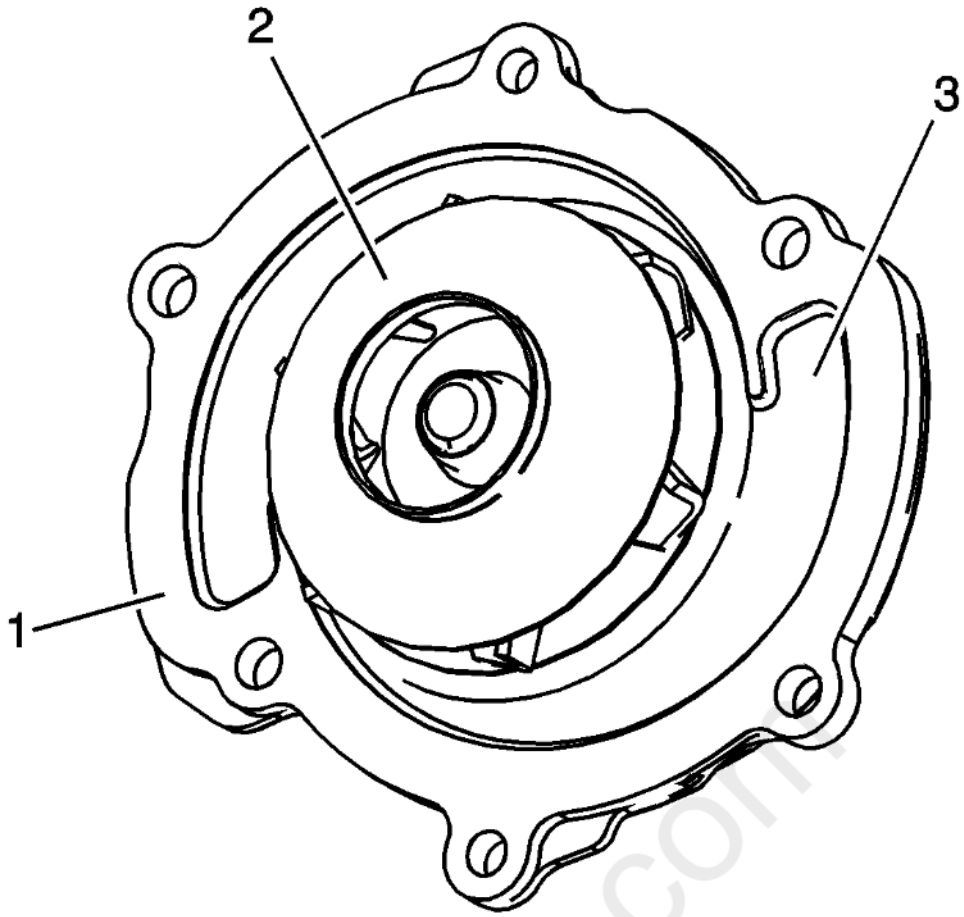

Fig. 301: Inspecting Interior Of Water Pump For Damage
Courtesy of GENERAL MOTORS COMPANY

4. Inspect the interior of the water pump for the following:
    - Damage to the water pump gasket sealing surface (1)
    - Damage, corrosion or restrictions to the water pump impeller (2)
    - Damage, corrosion or restrictions to the coolant passages (3)
5. Repair or replace the water pump as necessary.

THREAD REPAIR

Special Tools

- **EN 42385-700** High Feature Thread Repair Kit
- **EN 42385-2000** Thread Insert Kit
- **EN 43965** Thread Repair Extension Kit

For equivalent regional tools, refer to **Special Tools** .

The thread repair process involves a solid, thin walled, self-locking, carbon steel, bushing type insert. During the insert installation process, the installation driver tool cold-rolls the bottom internal threads and expands the bottom external threads of the insert into the base material. This action mechanically locks the insert into place.

carqiagn.com

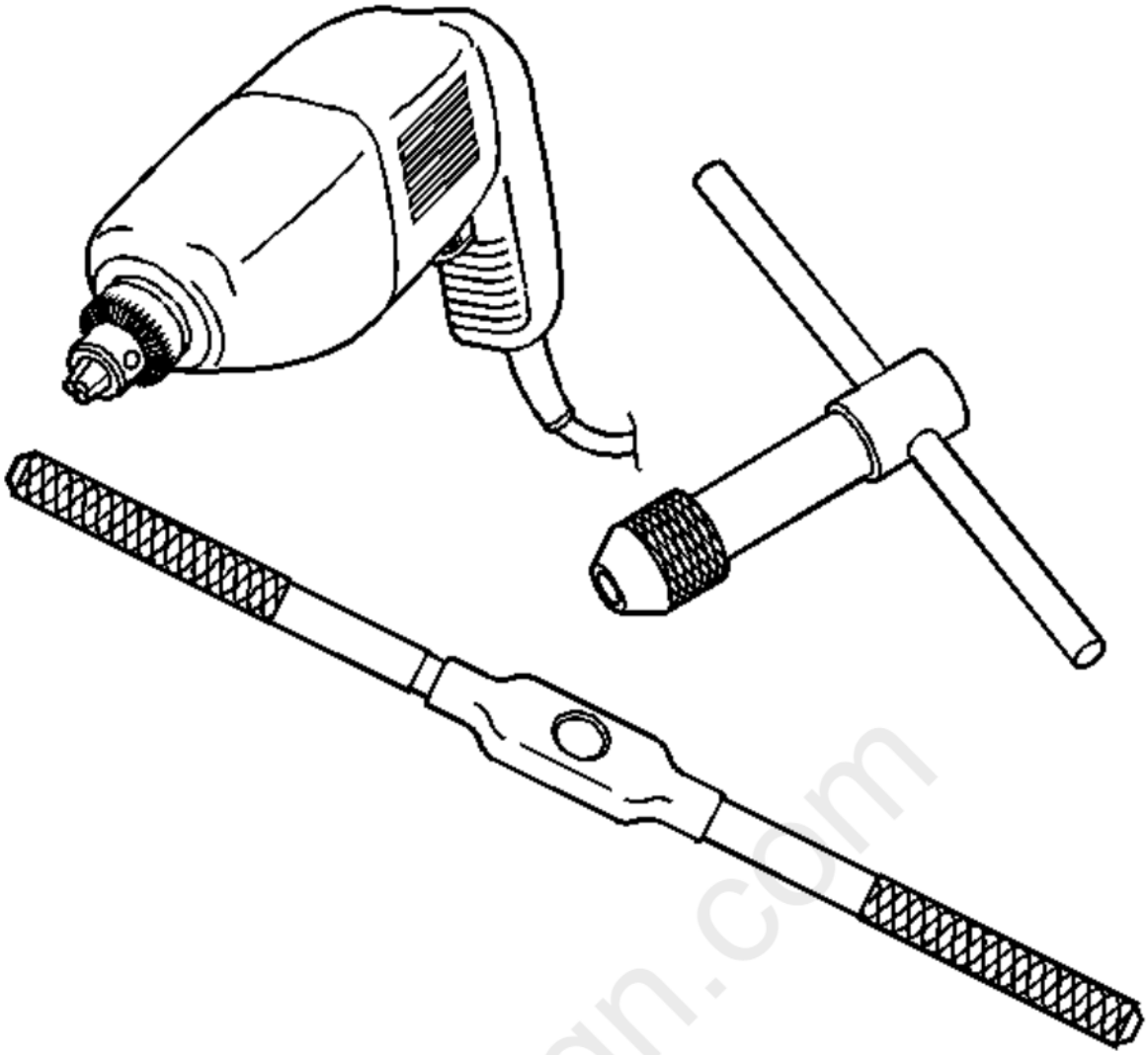

Fig. 302: View Of J 42385-400 Tool Kit
Courtesy of GENERAL MOTORS COMPANY

The drill bit and counter bore tool from the tool kit **EN 42385-700** kit and **EN 42385-2000** insert kit is designed for use with either a suitable tap wrench or drill motor. Limited access and larger hole repair may process better using a tap wrench. An extension from kit **EN 43965** extension kit may also be necessary to drive the thread repair tooling dependent on access to the hole being repaired. Use only a tap wrench when tapping the hole and during installation of the insert.

carujagn.com

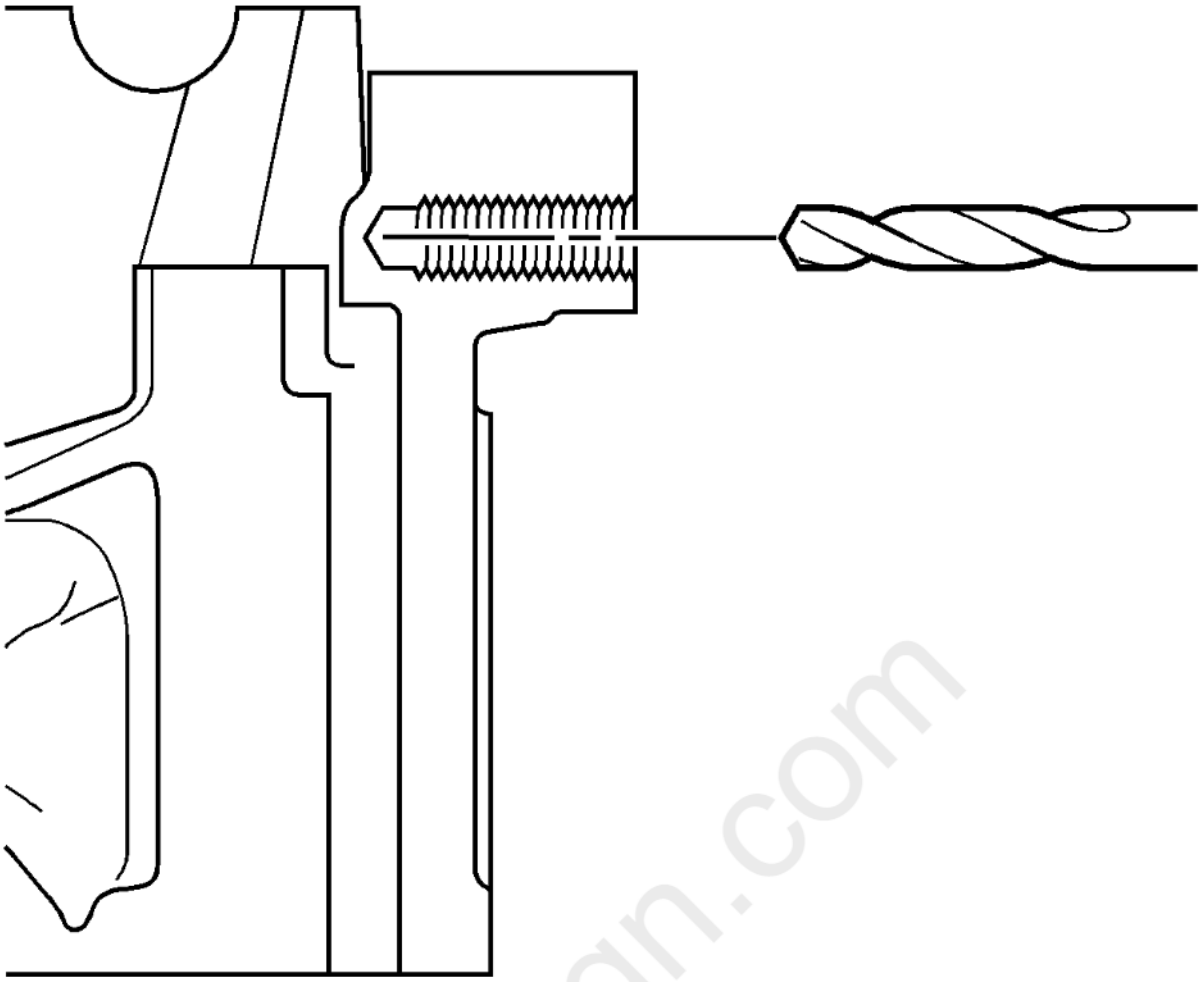

Fig. 303: Drilled Hole Centerline
Courtesy of GENERAL MOTORS COMPANY

It is critical that the drilling, counterboring and tapping of the hole to be repaired follows the same centerline as the original hole.

cardiagn.com

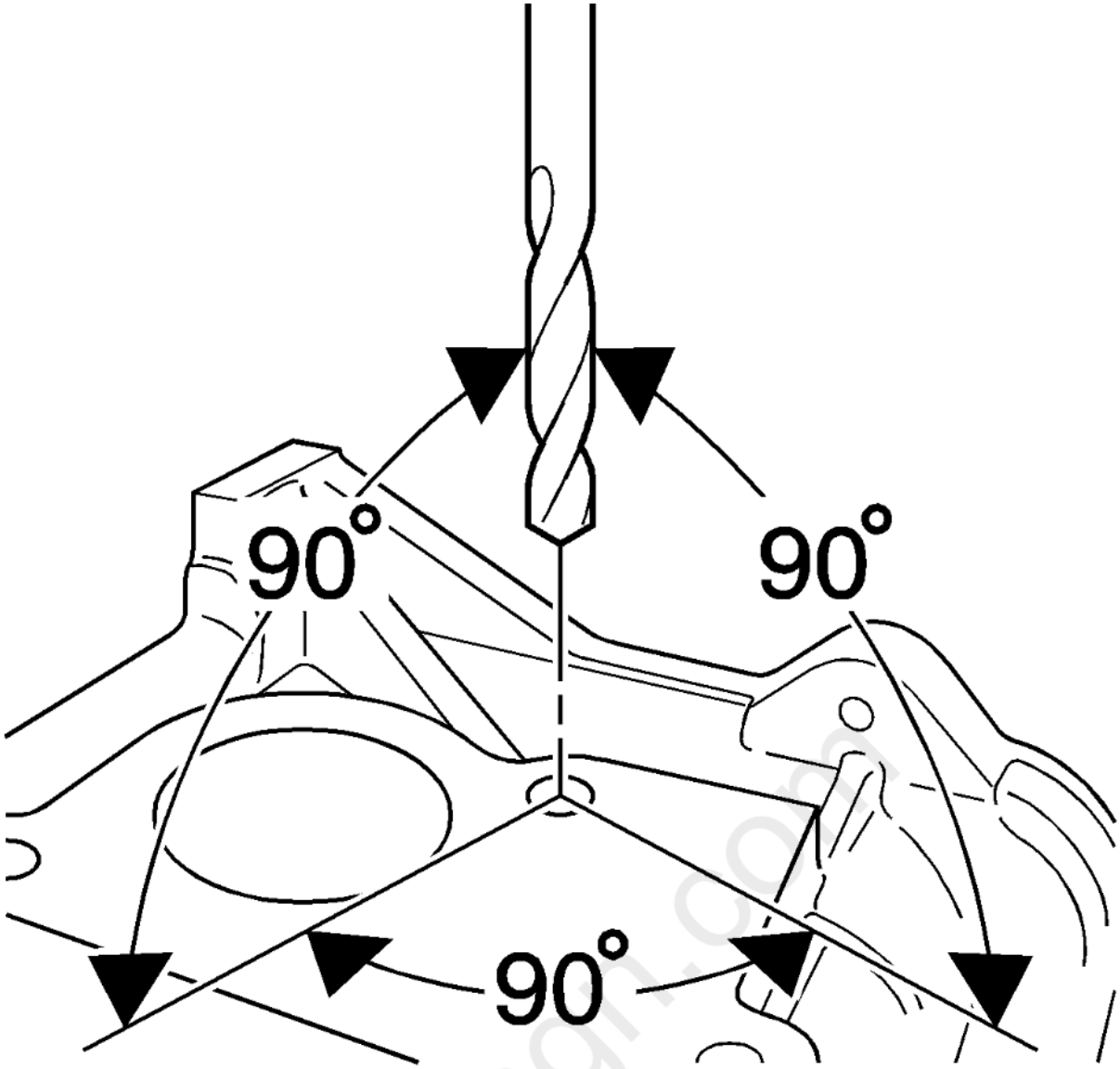

Fig. 304: Identifying Proper Drilling Angle
Courtesy of GENERAL MOTORS COMPANY

During the drilling and tapping of the hole being repaired ensure the tooling is consistently machining perpendicular to the surface of the base material.

cardiagn.com

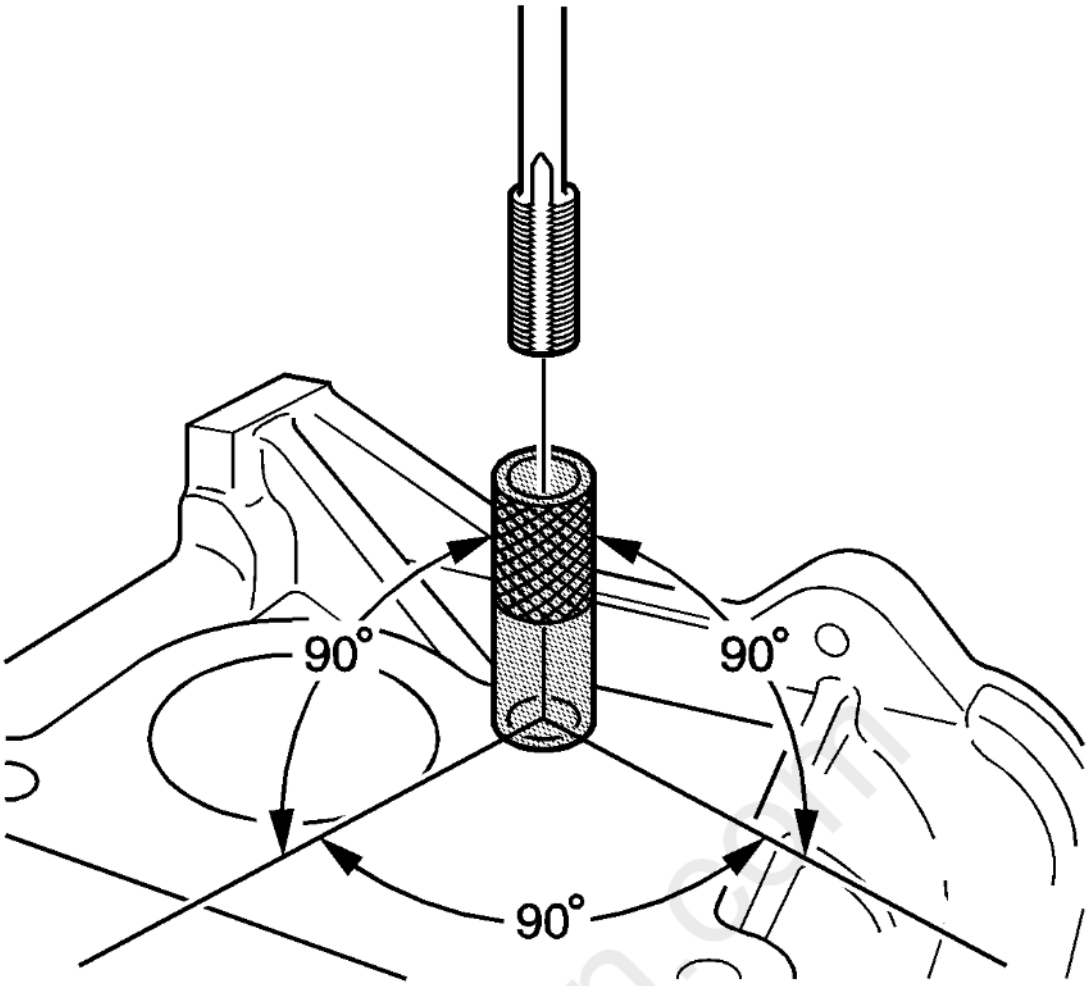

Fig. 305: View Of Tapping Guide
Courtesy of GENERAL MOTORS COMPANY

If the threaded hole being repaired has a base surface perpendicular to the hole centerline, tapping guides are available to aid in tapping the hole.

Tap Size	Tap Guide	Tap Size	Tap Guide	Tap Size	Tap Guide
-	EN 42385-	-	EN 42385-	-	EN 42385-
6 x 1.0	729	10 x 1.5	731	14 x 1.5	736
8 x 1.25	730	12 x 1.5	732	20 x 1.5	737

Standard Thread Repair - Flush Hole

Cardiagn OBD

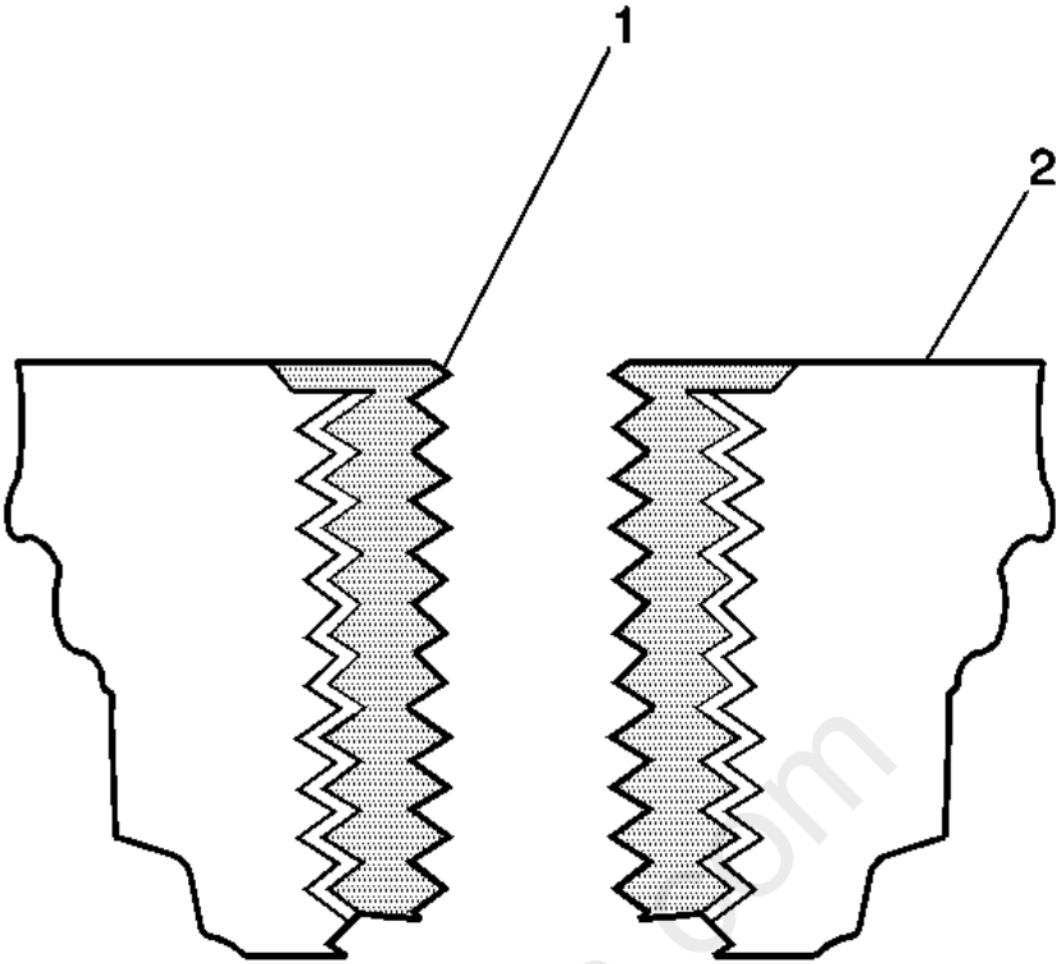

Fig. 306: View Of Bushing Type Insert & Base Material
Courtesy of GENERAL MOTORS COMPANY

WARNING: Refer to Safety Glasses Warning .

NOTE: The use of a cutting type fluid is recommended when performing the drilling, counterboring and tapping procedures. Refer to Adhesives, Fluids, Lubricants, and Sealers for recommended cutting fluid.

When installed to the proper depth, the flange (1) of the insert will be seated against the counterbore of the drilled/tapped hole and just below the surface (2) of the base material.

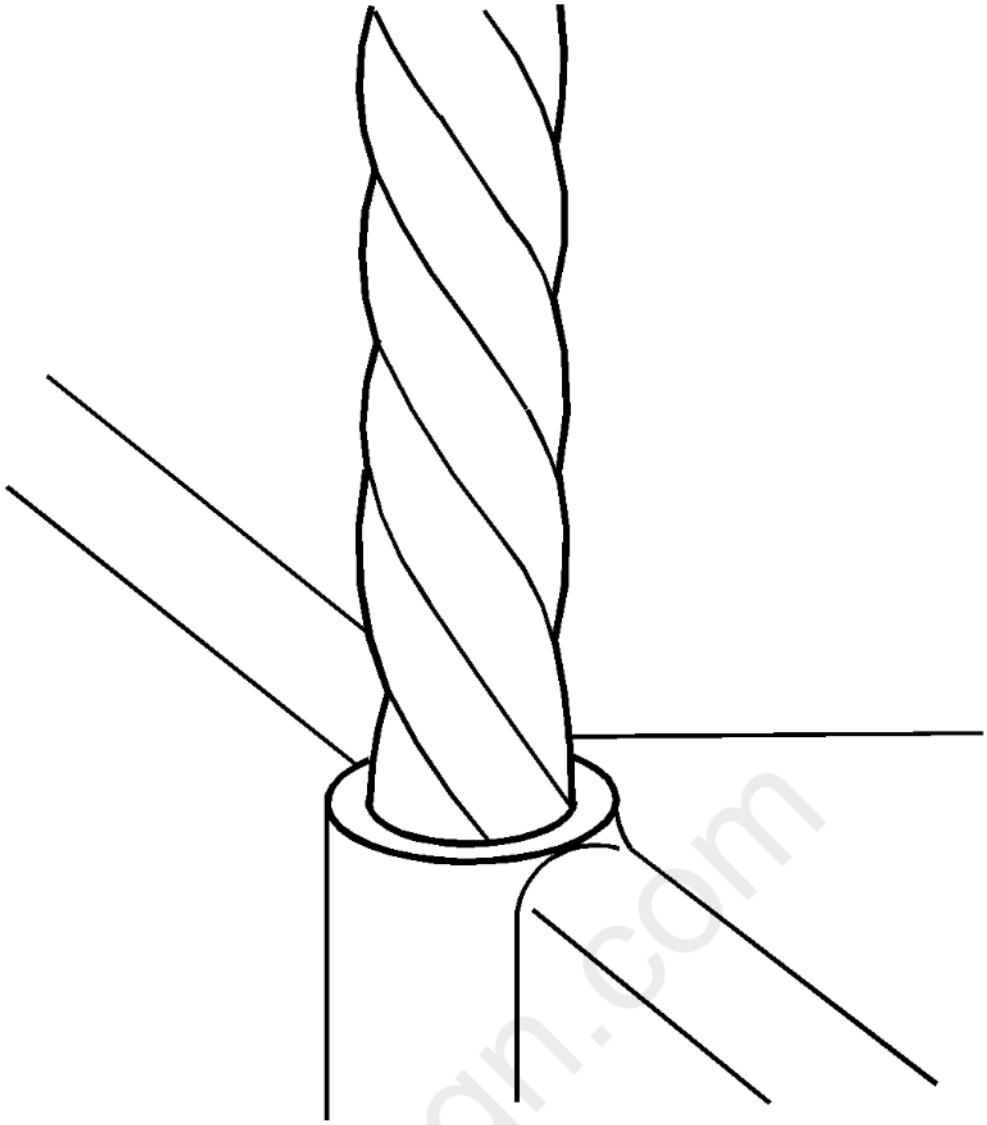

Fig. 307: Drilling Out Threads Of Damaged Hole
Courtesy of GENERAL MOTORS COMPANY

NOTE:

- **During the drilling process, it is necessary to repeatedly remove the drill and clean chips from the hole and the flutes of the drill.**
- **Do NOT drill any further than the original hole depth.**

1. Drill out the threads of the damaged hole.

Specifications

- M6 inserts require a minimum drill depth of 15 mm (0.59 in).
- M8 inserts require a minimum drill depth of 20 mm (0.79 in).
- M10 inserts require a minimum drill depth of 23.5 mm (0.93 in).

cardiagn.com

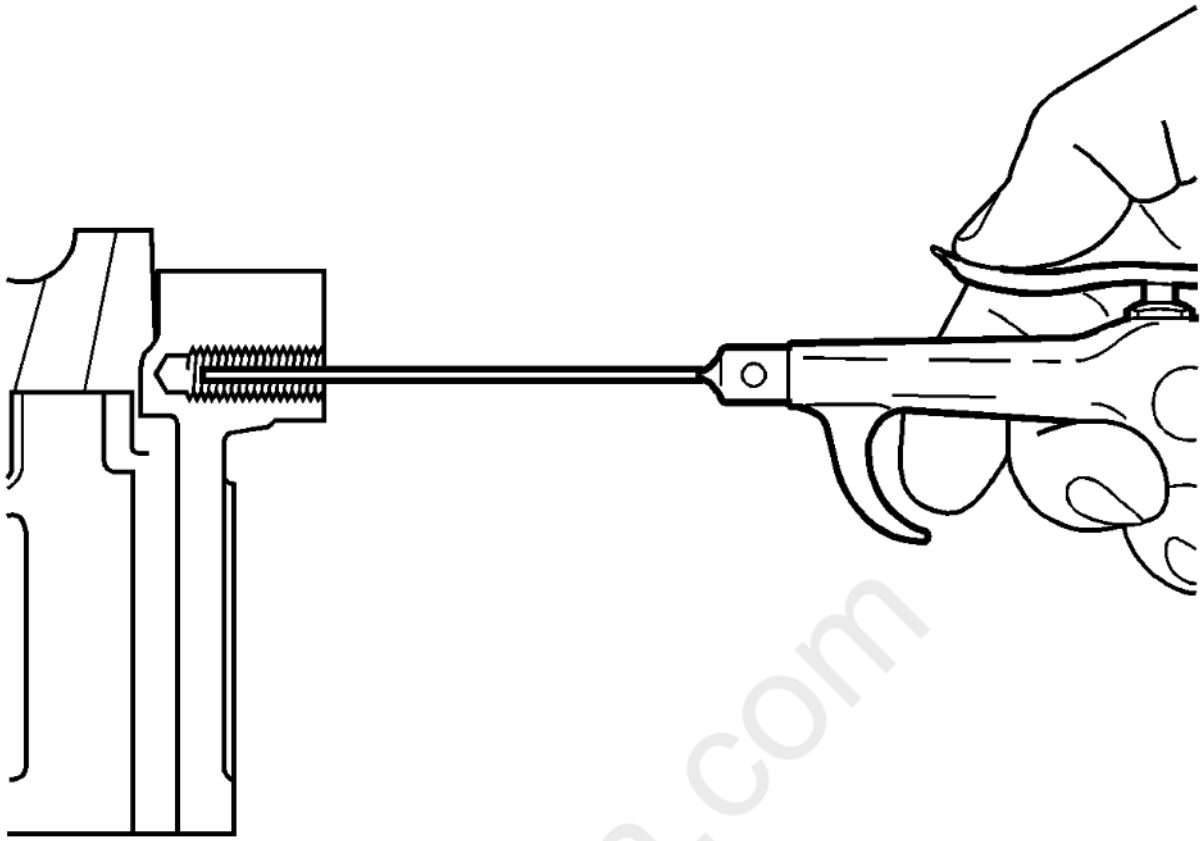

Fig. 308: Cleaning Out Metal Chips
Courtesy of GENERAL MOTORS COMPANY

NOTE: **All chips must be removed from the drilled hole prior to tapping.**

2. Using compressed air, clean out any chips.

cardiagn.com

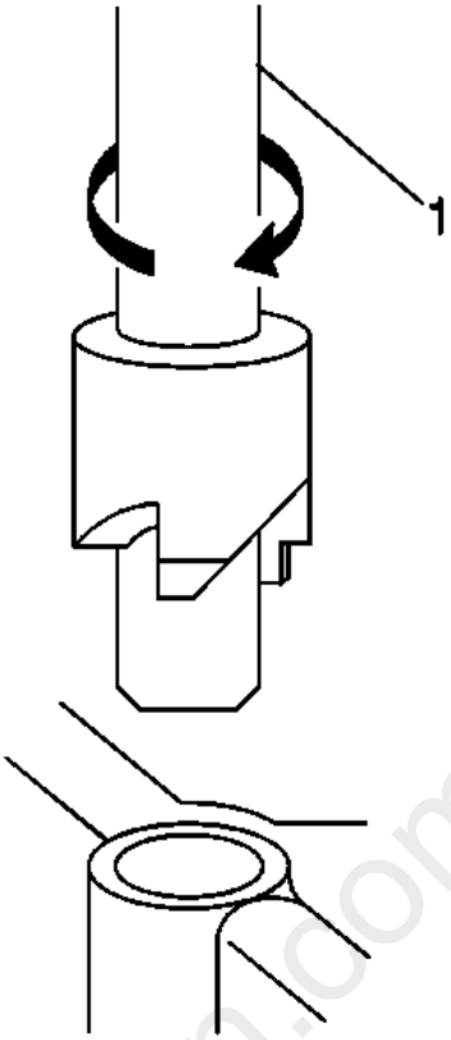

Fig. 309: Identifying Tool Used To Counterbore The Hole
Courtesy of GENERAL MOTORS COMPANY

NOTE: **A properly counterbored hole will show a slight burnishing on the surface of the base material for 360 degrees around the drilled hole.**

3. Counterbore the drilled hole to the full depth permitted by the tool (1).

cardiagn.com

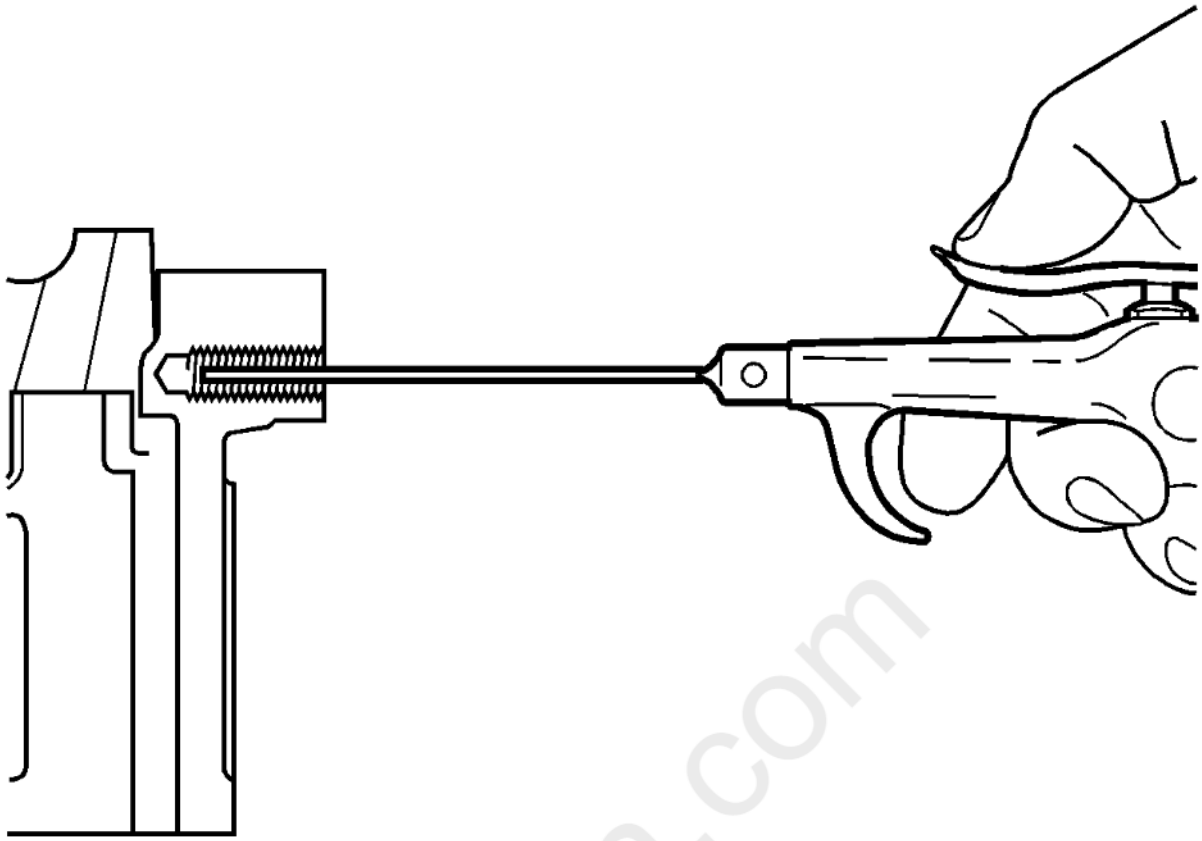

Fig. 310: Cleaning Out Metal Chips
Courtesy of GENERAL MOTORS COMPANY

NOTE: **All chips must be removed from the drilled hole prior to tapping.**

4. Using compressed air, clean out any chips.

cardiagn.com

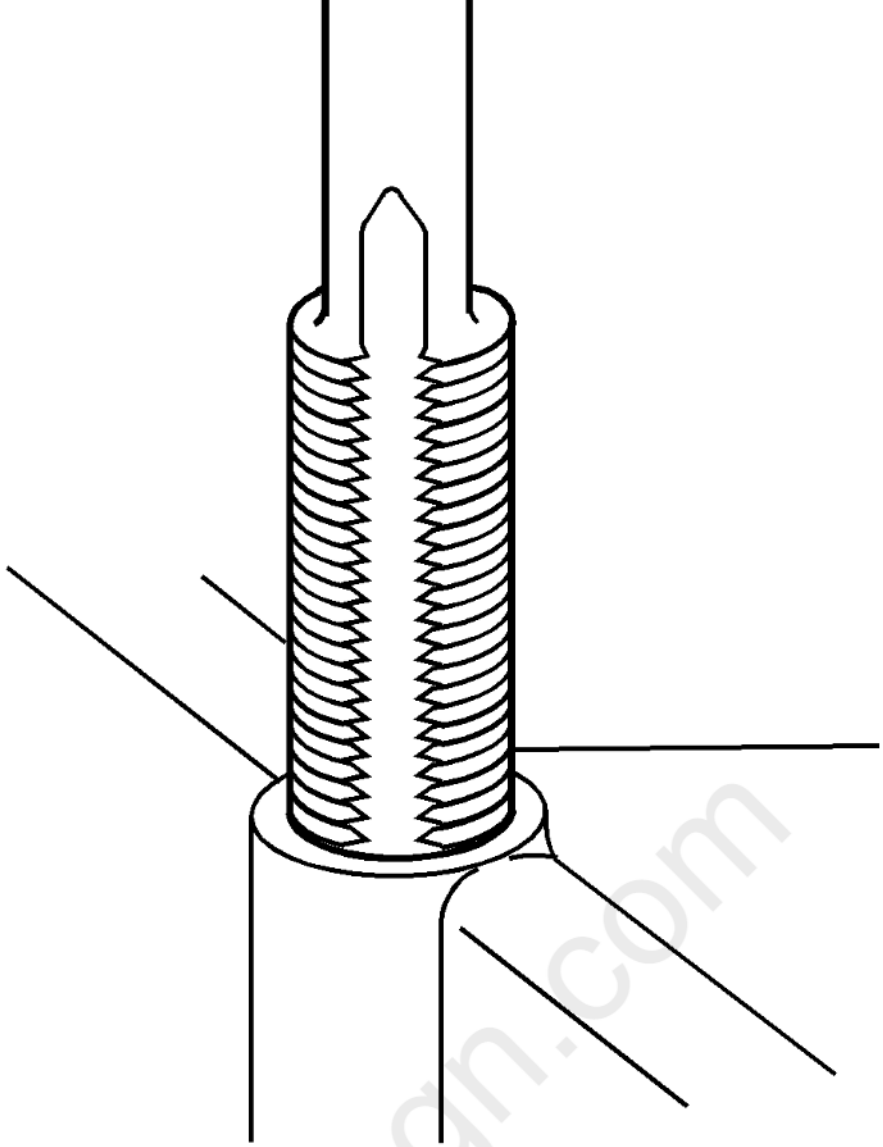

Fig. 311: Tapping Threads Of Drilled Hole
Courtesy of GENERAL MOTORS COMPANY

NOTE:

- **During the tapping process, it is necessary to repeatedly remove the tap and clean chips from the hole and the flutes of the tap.**
- **Ensure the tap has created full threads at least to the depth equal to the insert length.**

5. Using a suitable tapping wrench, tap the threads of the drilled hole by hand only.

Specifications

- M6 inserts require a minimum tap depth of 15 mm (0.59 in).
- M8 inserts require a minimum tap depth of 20 mm (0.79 in).
- M10 inserts require a minimum tap depth of 23.5 mm (0.93 in).

cardiagn.com

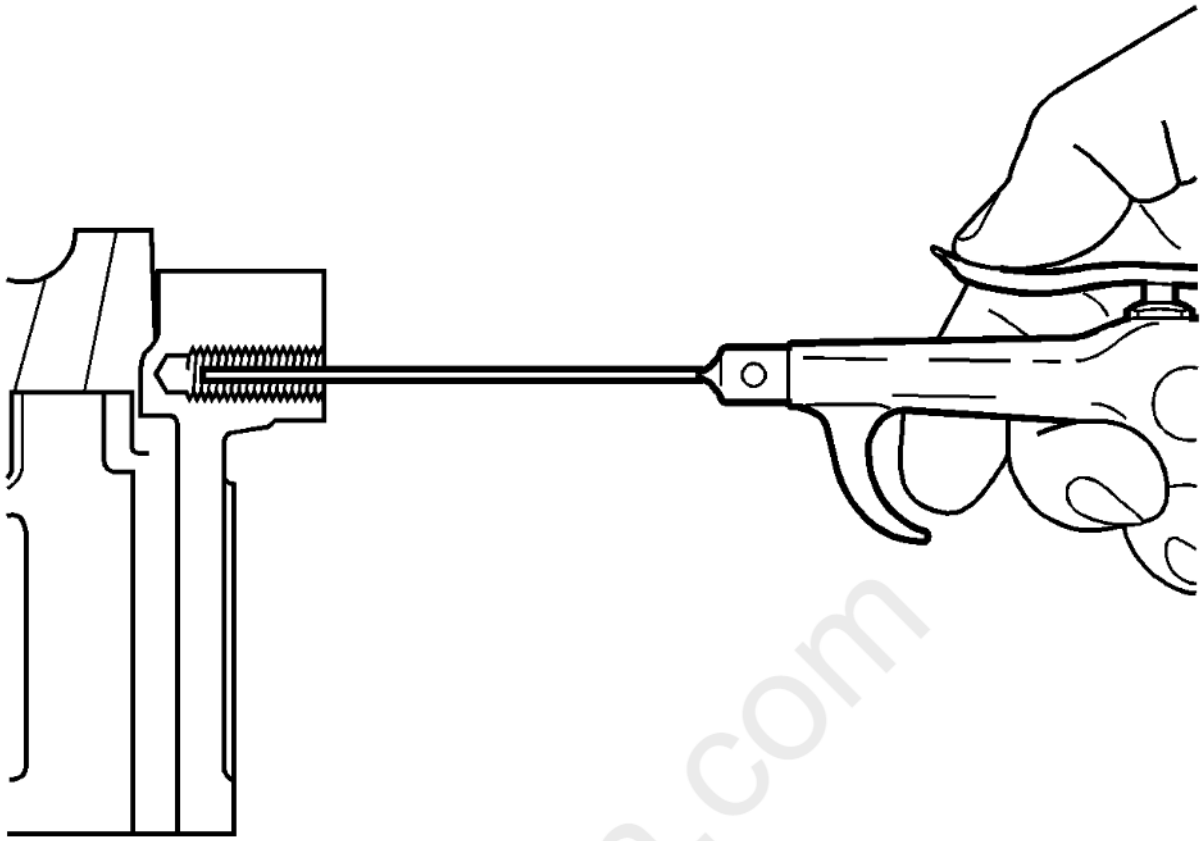

Fig. 312: Cleaning Out Metal Chips
Courtesy of GENERAL MOTORS COMPANY

NOTE: **All chips must be removed from the tapped hole prior to insert installation.**

6. Using compressed air, clean out any chips.

cardiagn.com

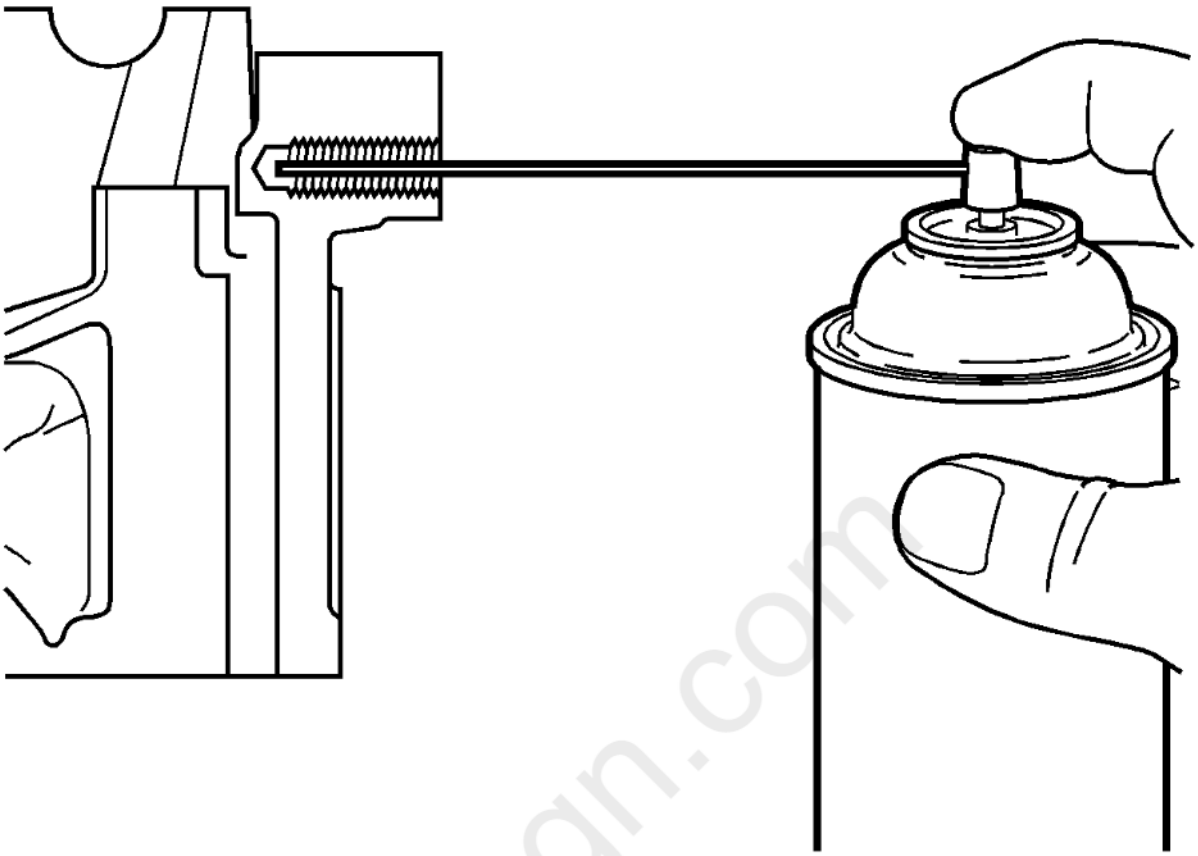

Fig. 313: Spraying Cleaner Into Tapped Hole
Courtesy of GENERAL MOTORS COMPANY

7. Spray cleaner into the tapped hole. Refer to **Adhesives, Fluids, Lubricants, and Sealers** for recommended cleaner.

cardiagn.com

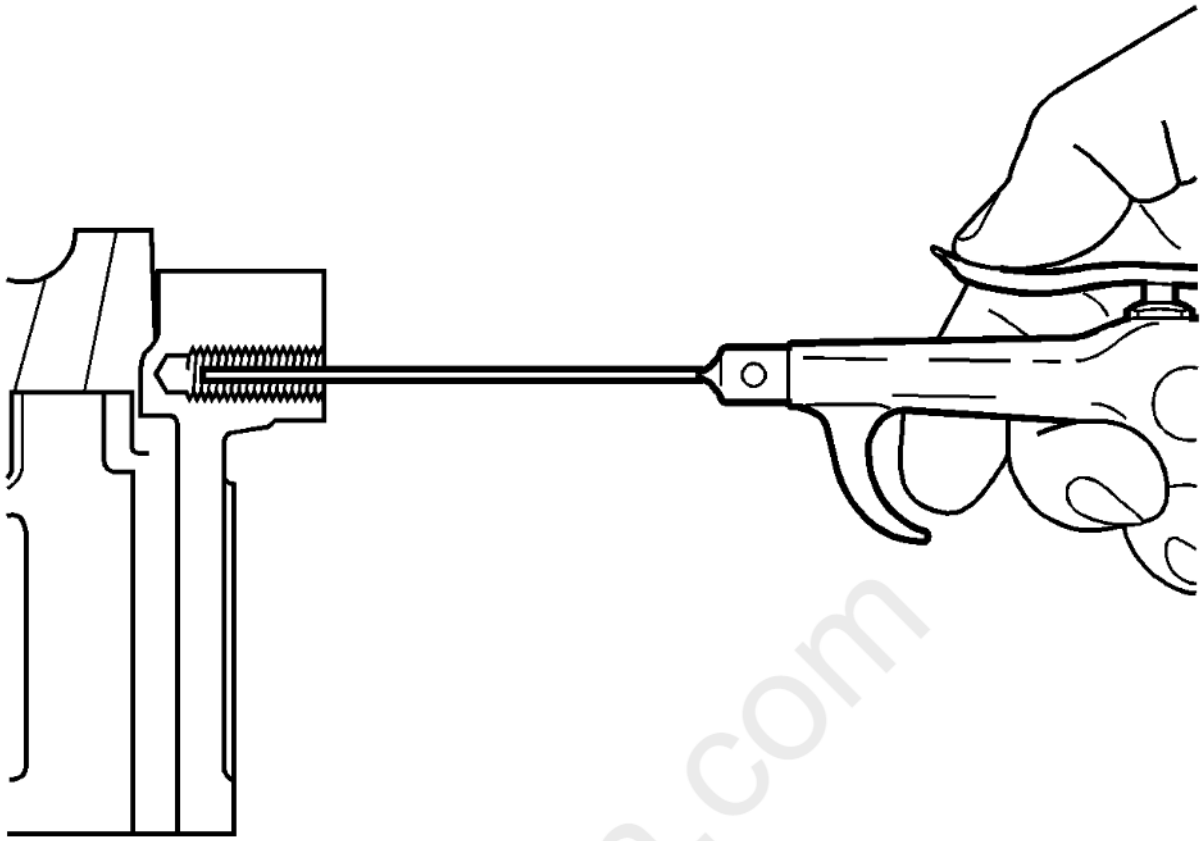

Fig. 314: Cleaning Out Metal Chips
Courtesy of GENERAL MOTORS COMPANY

NOTE: **All chips must be removed from the tapped hole prior to insert installation.**

8. Using compressed air, clean out any chips.

cardiagn.com

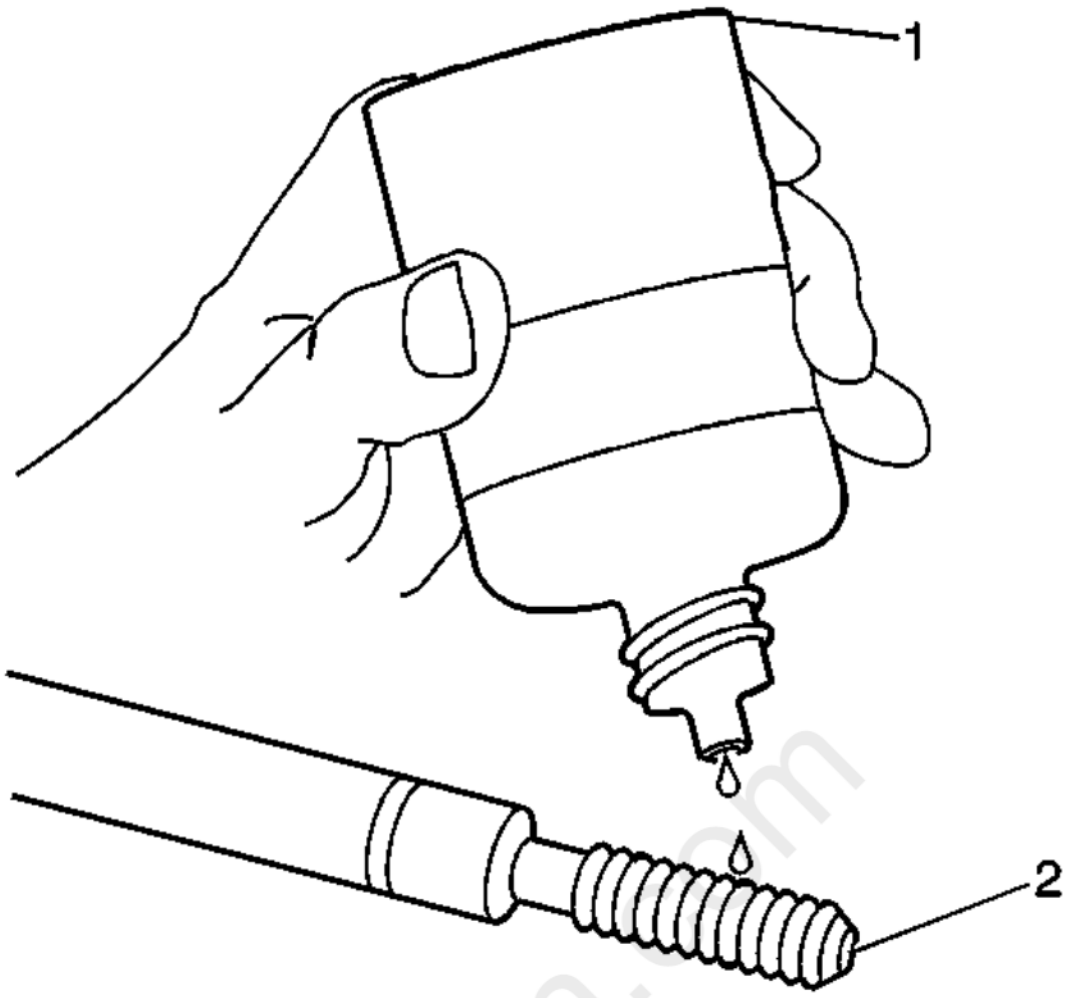

Fig. 315: Lubricating Installer Tool Using Driver Oil
Courtesy of GENERAL MOTORS COMPANY

NOTE: **Do not allow oil or other foreign material to contact the outside diameter (OD) of the insert.**

9. Lubricate the threads of the driver installation tool (2) with the EN 42385-110 (1).

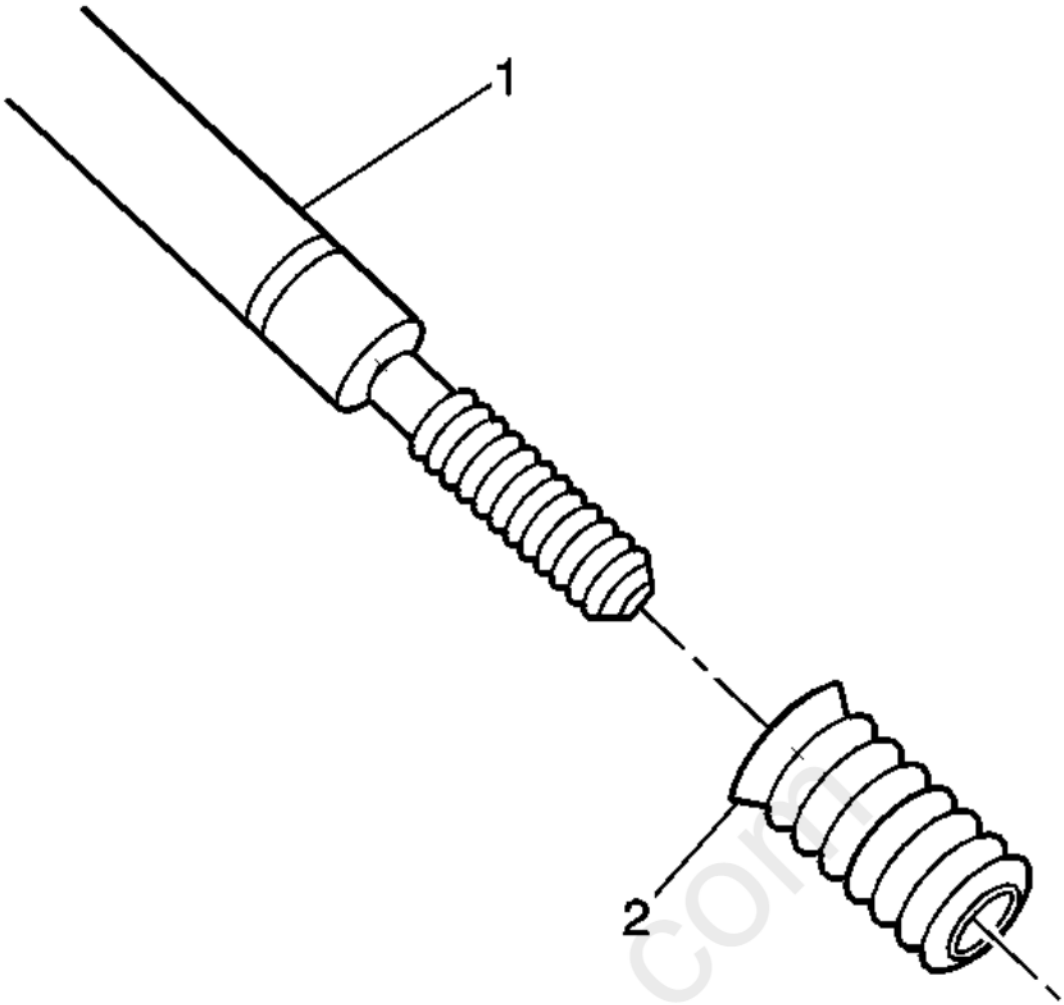

Fig. 316: View of Bushing Type Insert
Courtesy of GENERAL MOTORS COMPANY

10. Install the insert (2) onto the driver installation tool (1).

cardiagn.com

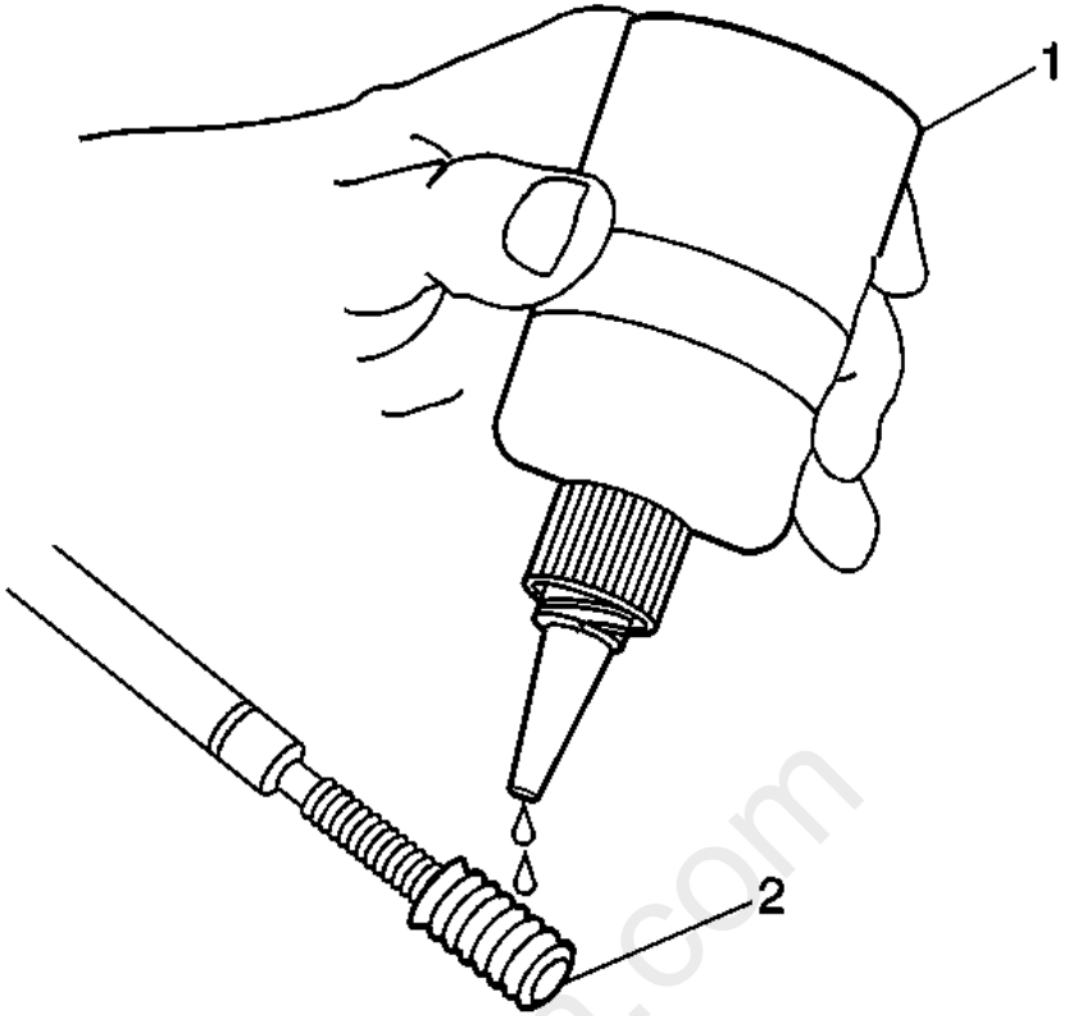

Fig. 317: Applying Threadlock To Insert
Courtesy of GENERAL MOTORS COMPANY

11. Apply threadlock sealant, EN 42385-109, LOCTITE 277Ã‚Â® or equivalent (1) to the insert OD threads (2). Refer to **Adhesives, Fluids, Lubricants, and Sealers** for recommended sealant.

carmagn.com

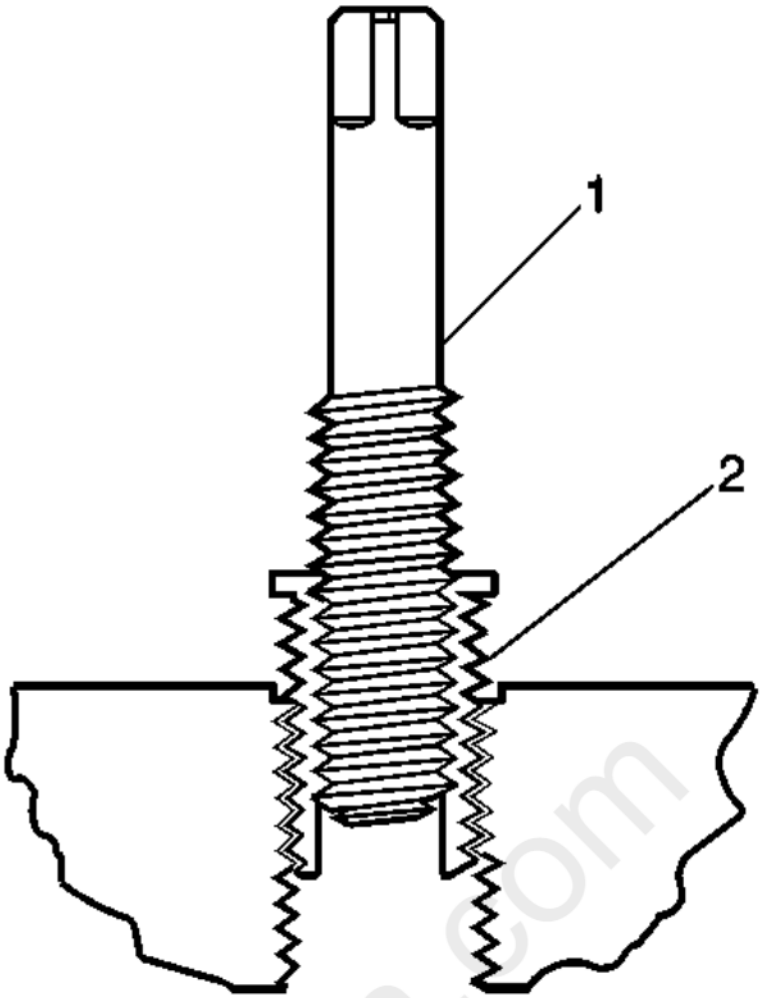

Fig. 318: View Of Insert In Tapped Bolt Hole
Courtesy of GENERAL MOTORS COMPANY

12. Install the insert (2) into the tapped hole by hand only.

NOTE: **If the insert will not thread down until the flange contacts the counterbored surface, remove the insert immediately with a screw extracting tool and inspect the tapped hole for any remaining chips and/or improper tapping.**

13. Install the insert until the flange (2) of the insert contacts the counterbored surface.

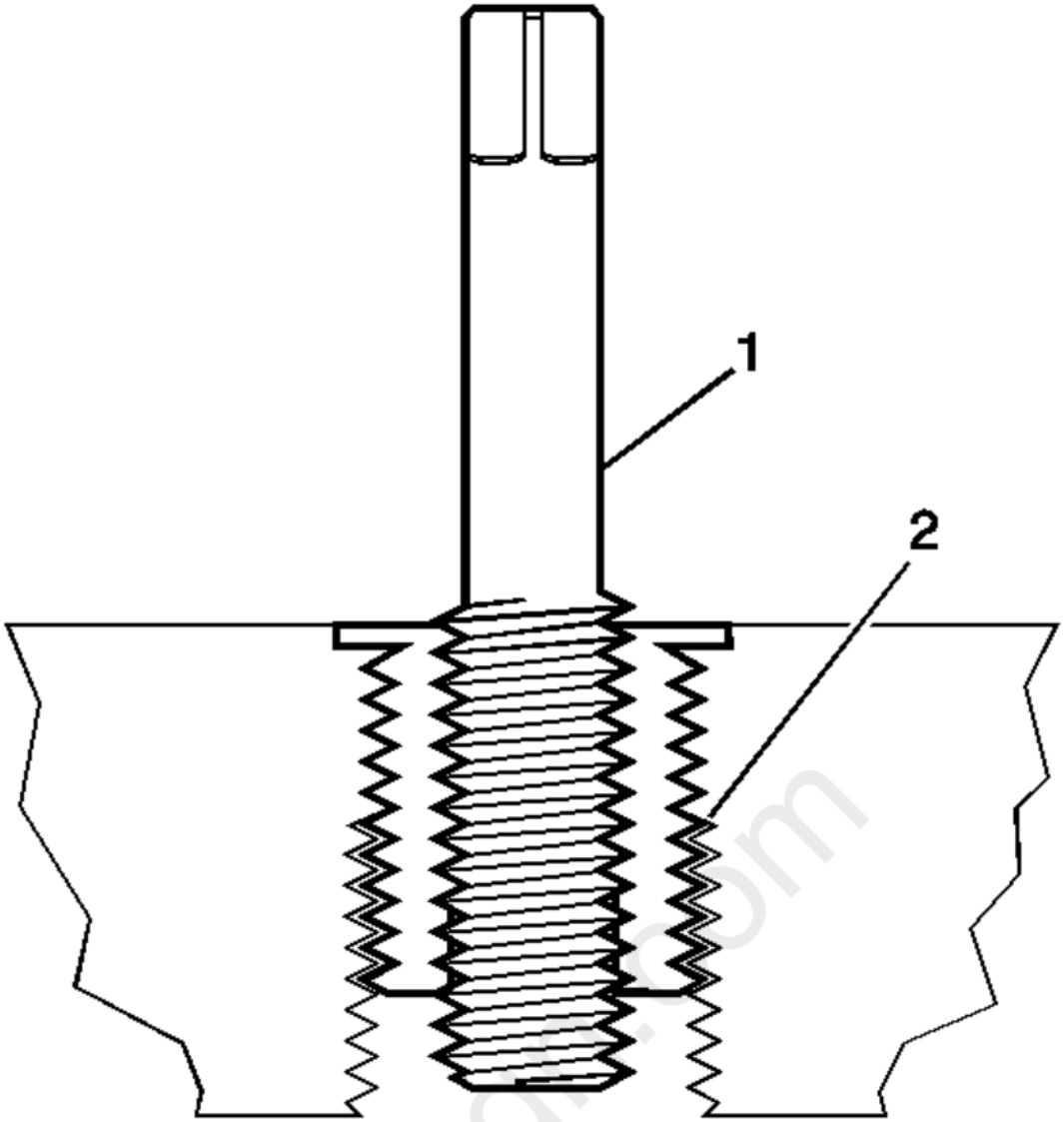

Fig. 319: View Insert & Tool - Standard Thread
Courtesy of GENERAL MOTORS COMPANY

NOTE: **The driver installation tool will tighten up before screwing completely through the insert. This is acceptable. The threads at the bottom of the insert are being formed and the insert is mechanically locking the insert into the base material threads.**

14. Continue to rotate the driver installation tool (1) through the insert (2).

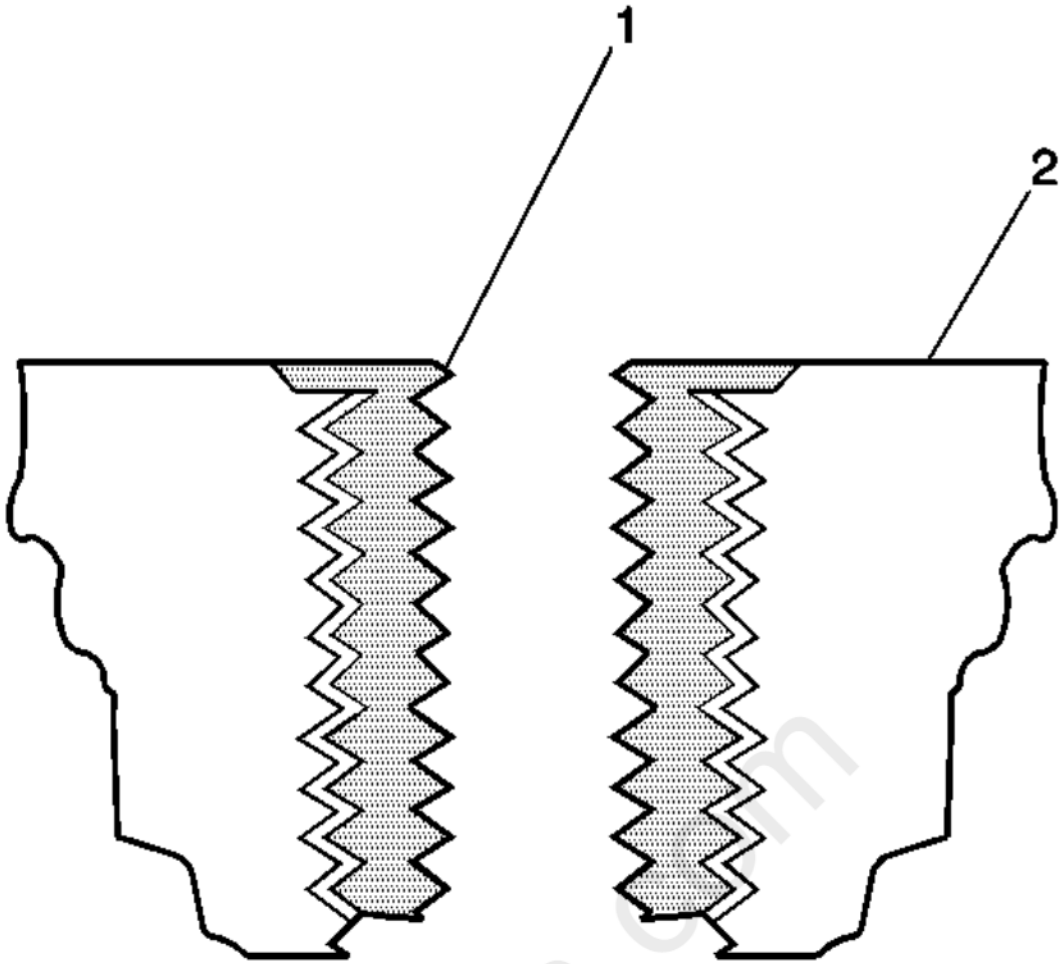

Fig. 320: View Of Bushing Type Insert & Base Material
Courtesy of GENERAL MOTORS COMPANY

15. Inspect the insert for proper installation into the tapped hole. A properly installed insert (1) will be either flush or slightly below flush with the surface of the base material (2).

cardiagn.com

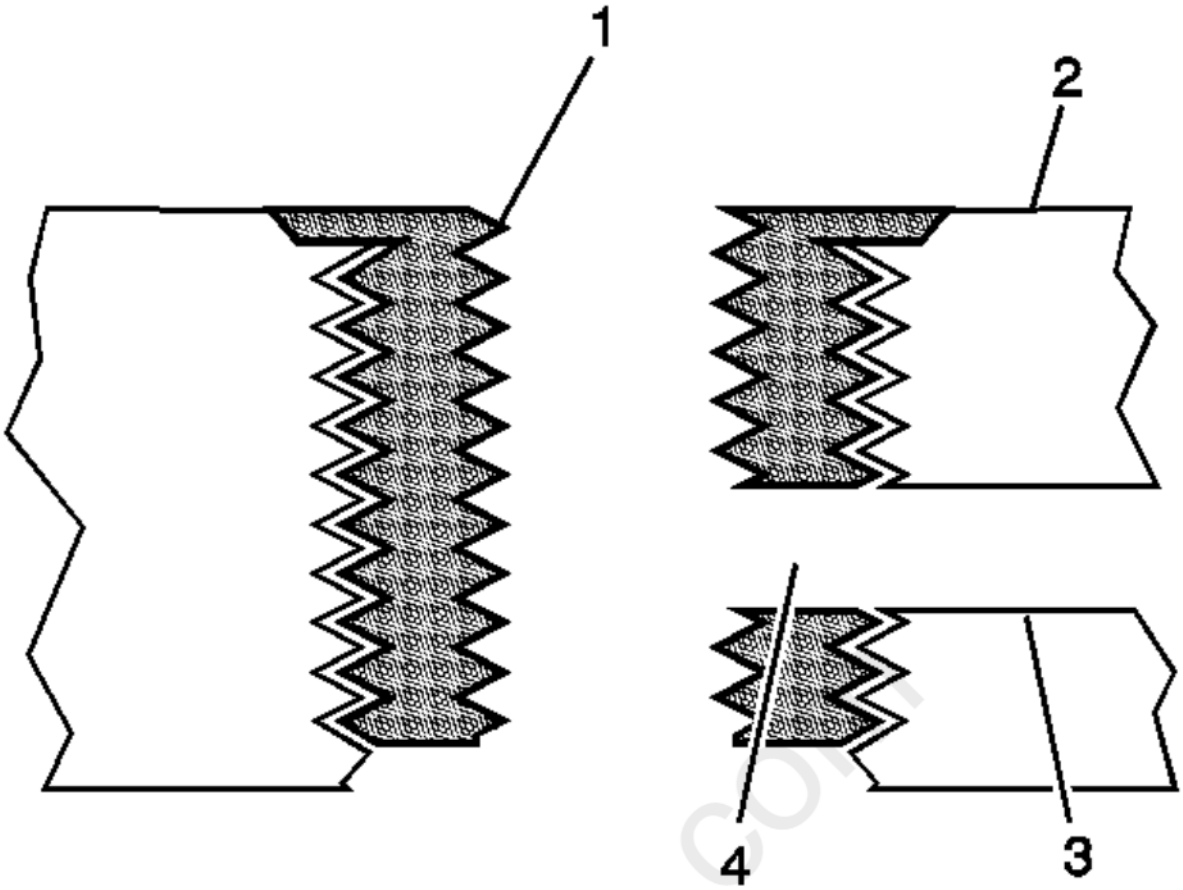

Fig. 321: View Of Restricted Engine Coolant Passages - Standard Thread Repair
Courtesy of GENERAL MOTORS COMPANY

16. Any installed insert that restricts or blocks an oil or engine coolant passage (3) will need to have the oil or engine coolant passage drilled out (4) to the original size of the oil or engine coolant passage. After drilling the restriction or blockage, clean out any chips and thread the installation driver tool through the insert again to remove any burrs caused by the drilling of the oil or engine coolant passage.

Recessed Thread Repair

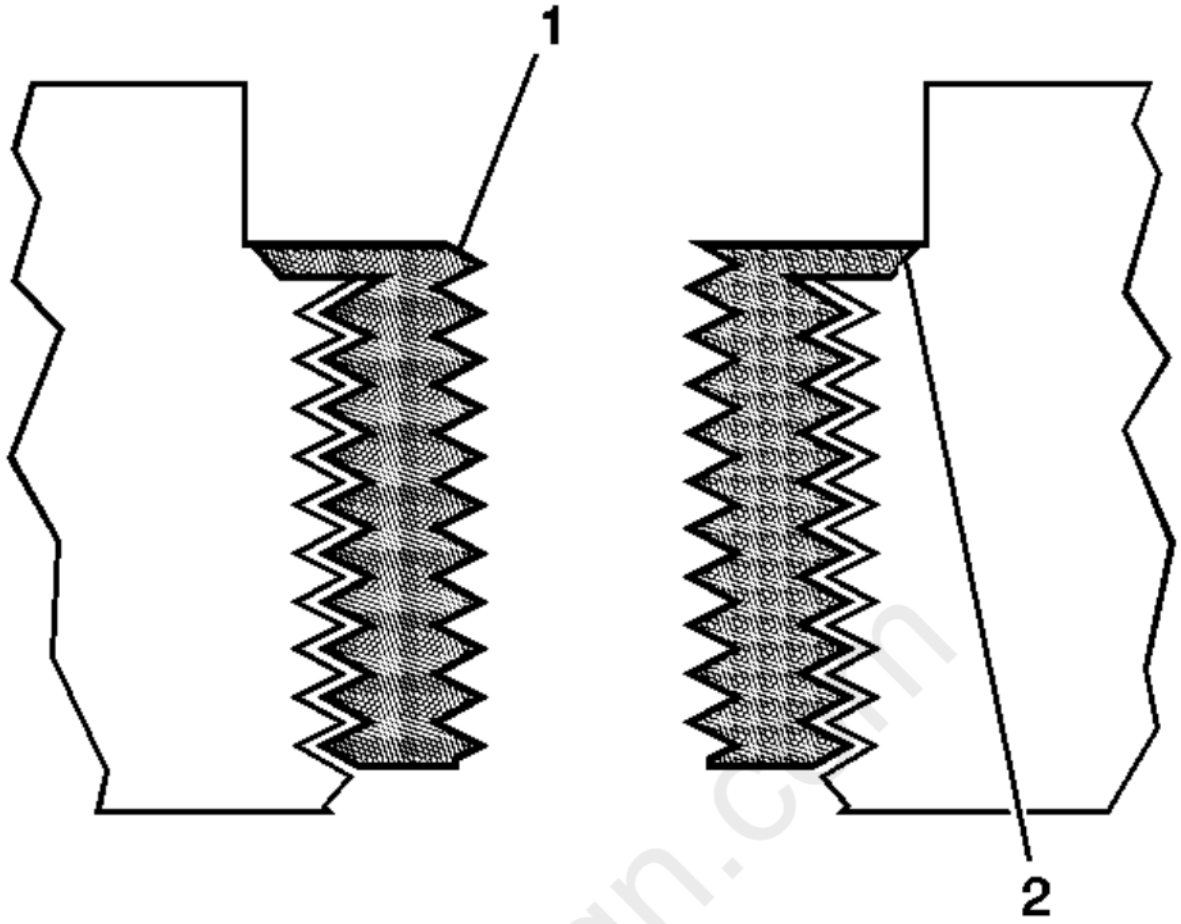

Fig. 322: Inspecting Insert For Proper Installation - Recessed Thread
Courtesy of GENERAL MOTORS COMPANY

WARNING: Refer to Safety Glasses Warning .

NOTE:

- The use of a cutting type fluid, WD 40Ã‚Â® or equivalent is recommended when performing the drilling, counterboring and tapping procedures. Refer to Adhesives, Fluids, Lubricants, and Sealers for recommended cutting fluid.
- Do NOT remove the original stop collar from a counterbore drill.

When installed to the proper depth, the flange of the insert (1) will be seated against the counterbore (2) of the drilled/tapped hole.

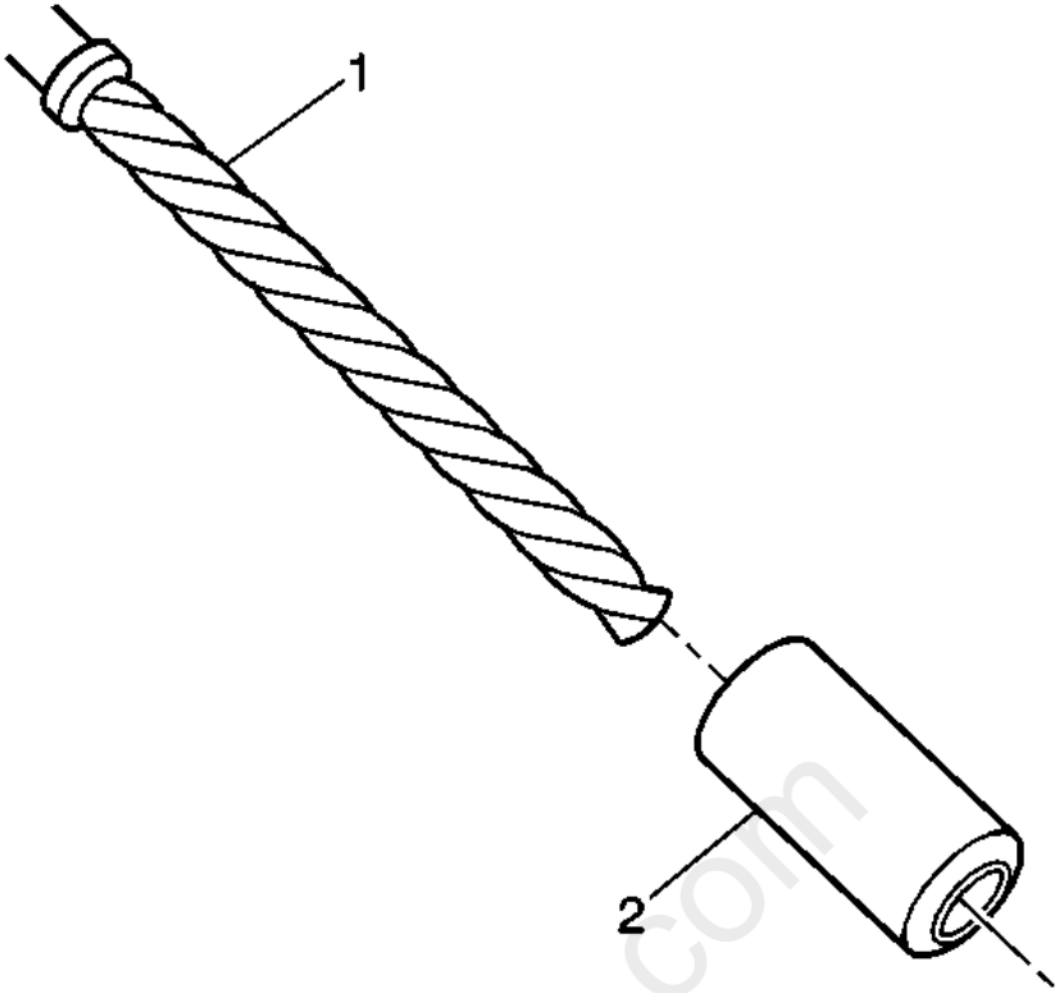

Fig. 323: View Of Stop Collar & Counterbore Drill
Courtesy of GENERAL MOTORS COMPANY

1. Install a stop collar (2) on the counterbore drill (1), if required.

cardiagn.com

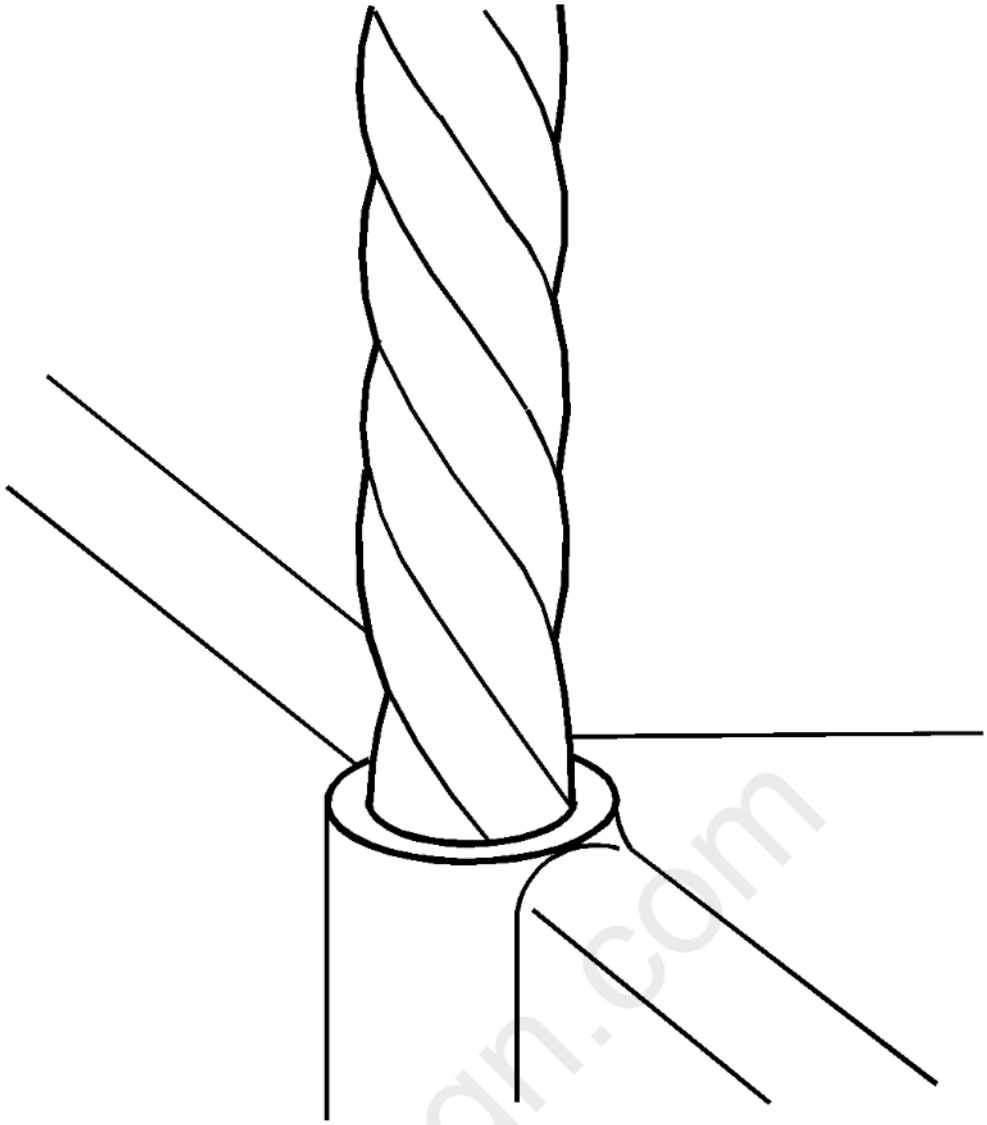

Fig. 324: Drilling Out Threads Of Damaged Hole
Courtesy of GENERAL MOTORS COMPANY

NOTE:

- **During the drilling process, it is necessary to repeatedly remove the drill and clean chips from the hole and the flutes of the drill.**
- **Drill the hole until the stop collar contacts the surface of the base material.**

2. Drill out the threads of the damaged hole.

cardiagn.com

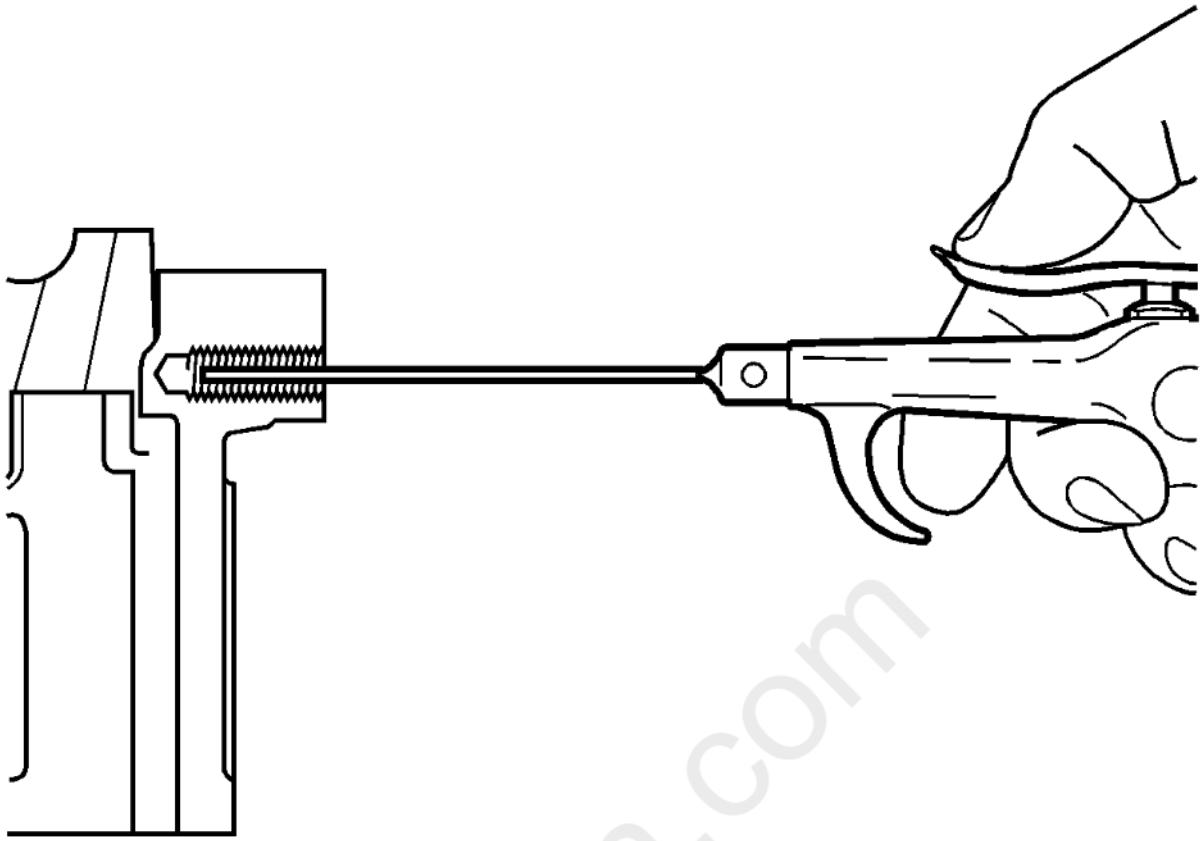

Fig. 325: Cleaning Out Metal Chips
Courtesy of GENERAL MOTORS COMPANY

NOTE: **All chips must be removed from the drilled hole prior to tapping.**

3. Using compressed air, clean out any chips.

cardiagn.com

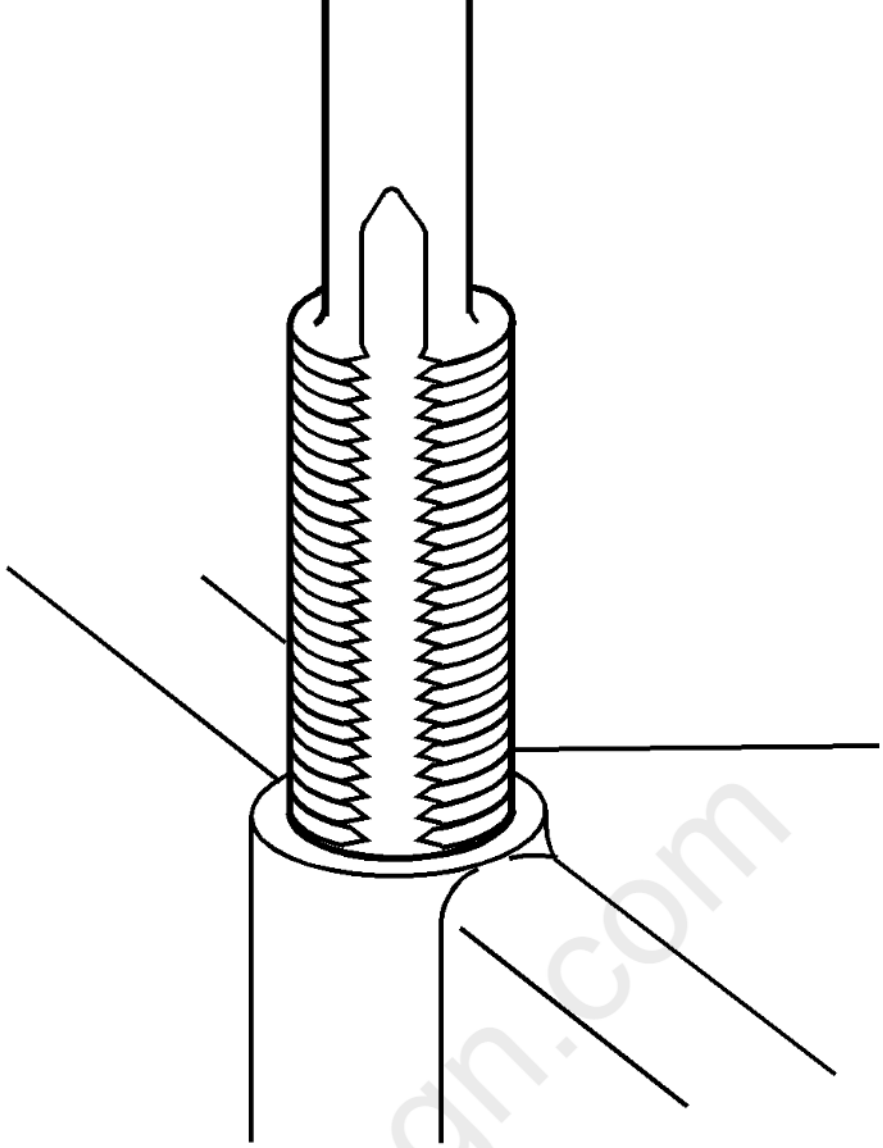

Fig. 326: Tapping Threads Of Drilled Hole
Courtesy of GENERAL MOTORS COMPANY

NOTE:

- **During the tapping process, it is necessary to repeatedly remove the tap and clean chips from the hole and the flutes of the tap.**
- **Ensure the tap has created full threads at least to the depth equal to the insert length.**

4. Using a suitable tapping wrench, tap the threads of the drilled hole by hand only.

cardiagn.com

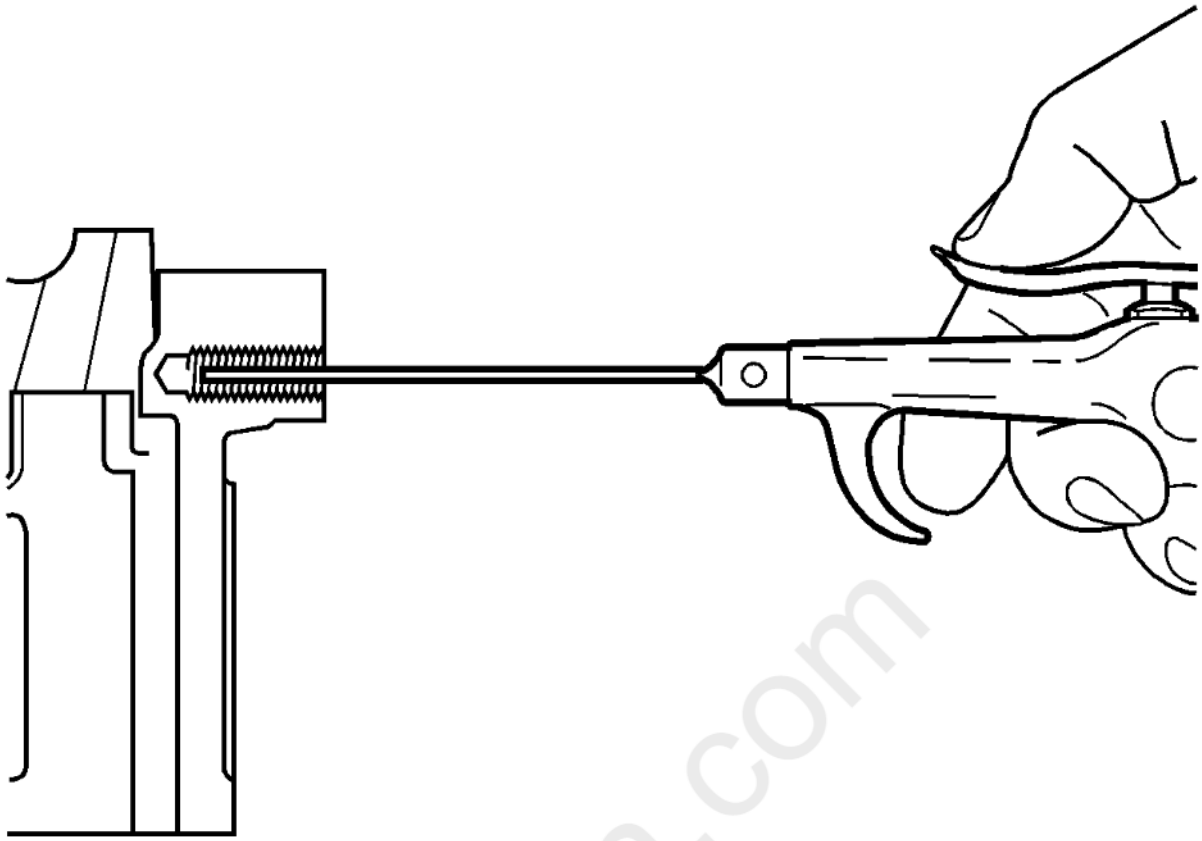

Fig. 327: Cleaning Out Metal Chips
Courtesy of GENERAL MOTORS COMPANY

NOTE: **All chips must be removed from the tapped hole prior to insert installation.**

5. Using compressed air, clean out any chips.

cardiagn.com

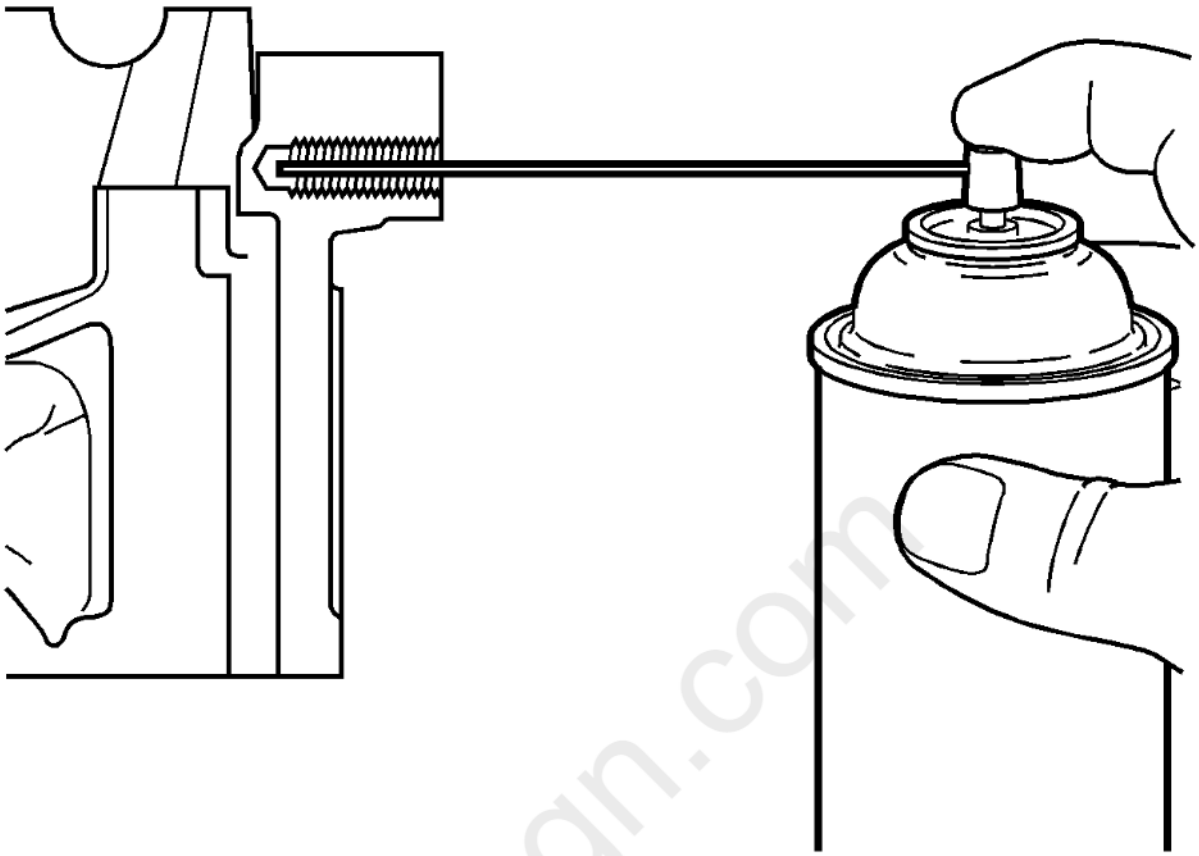

Fig. 328: Spraying Cleaner Into Tapped Hole
Courtesy of GENERAL MOTORS COMPANY

6. Spray cleaner into the tapped hole. Refer to **Adhesives, Fluids, Lubricants, and Sealers** for recommended cleaner.

cardiagn.com

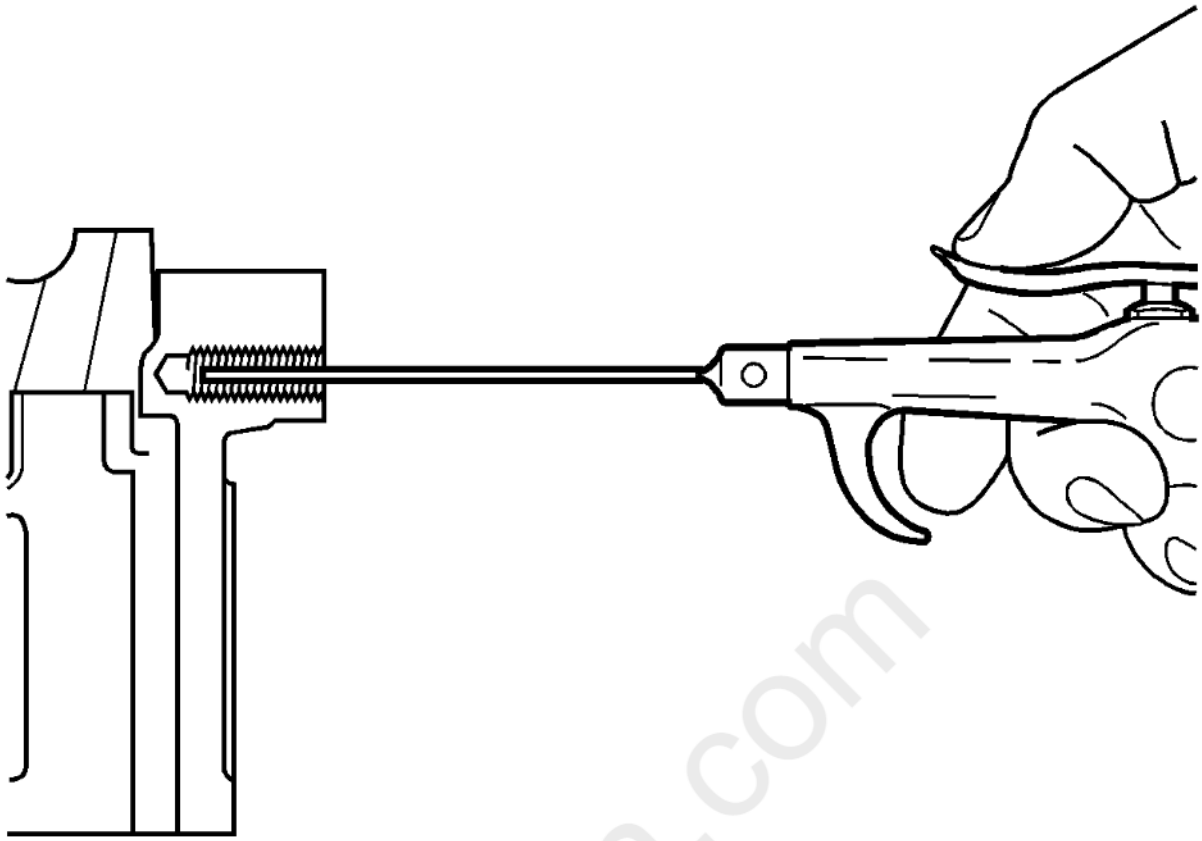

Fig. 329: Cleaning Out Metal Chips
Courtesy of GENERAL MOTORS COMPANY

NOTE: **All chips must be removed from the tapped hole prior to insert installation.**

7. Using compressed air, clean out any chips.

cardiagn.com

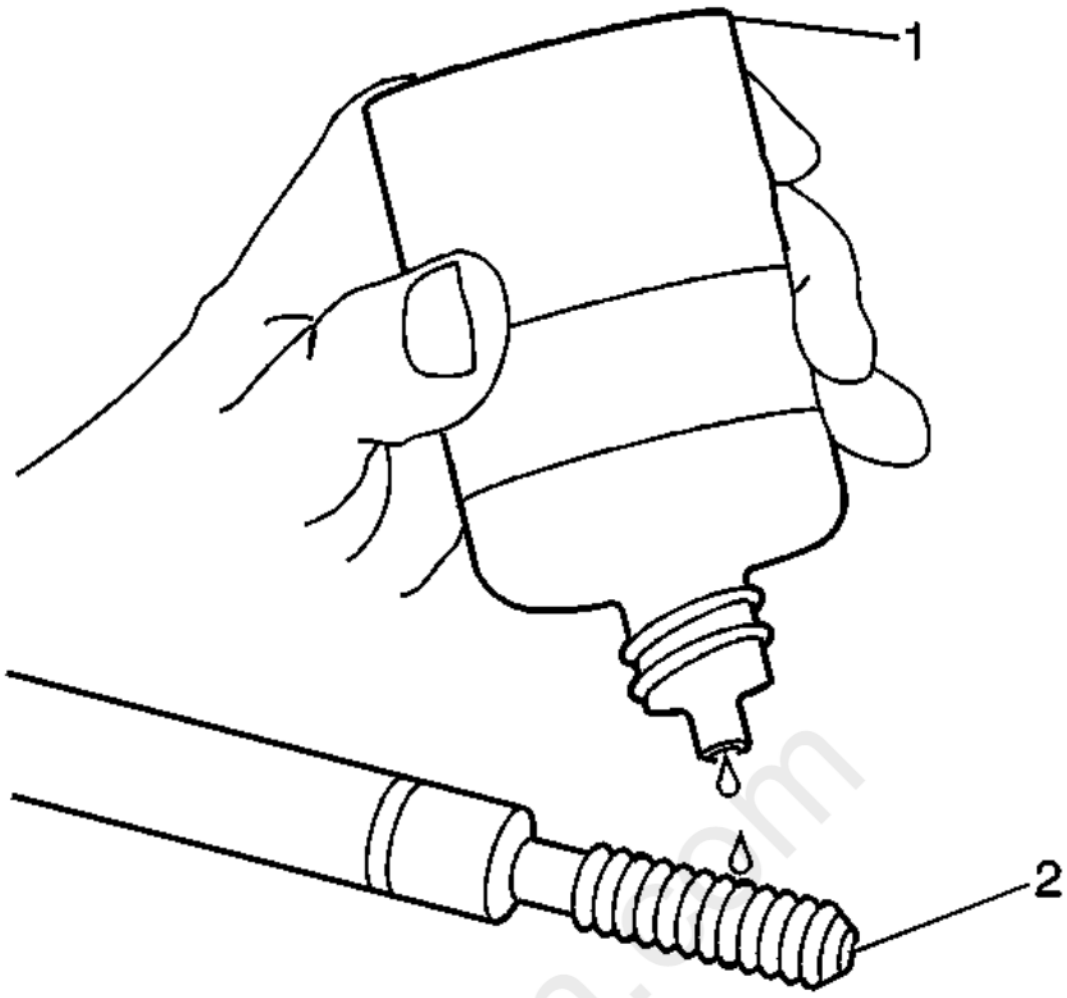

Fig. 330: Lubricating Installer Tool Using Driver Oil
Courtesy of GENERAL MOTORS COMPANY

NOTE: **Do not allow oil or other foreign material to contact the outside diameter (OD) of the insert.**

8. Lubricate the threads of the driver installation tool (2) with the EN 42385-110 (1).

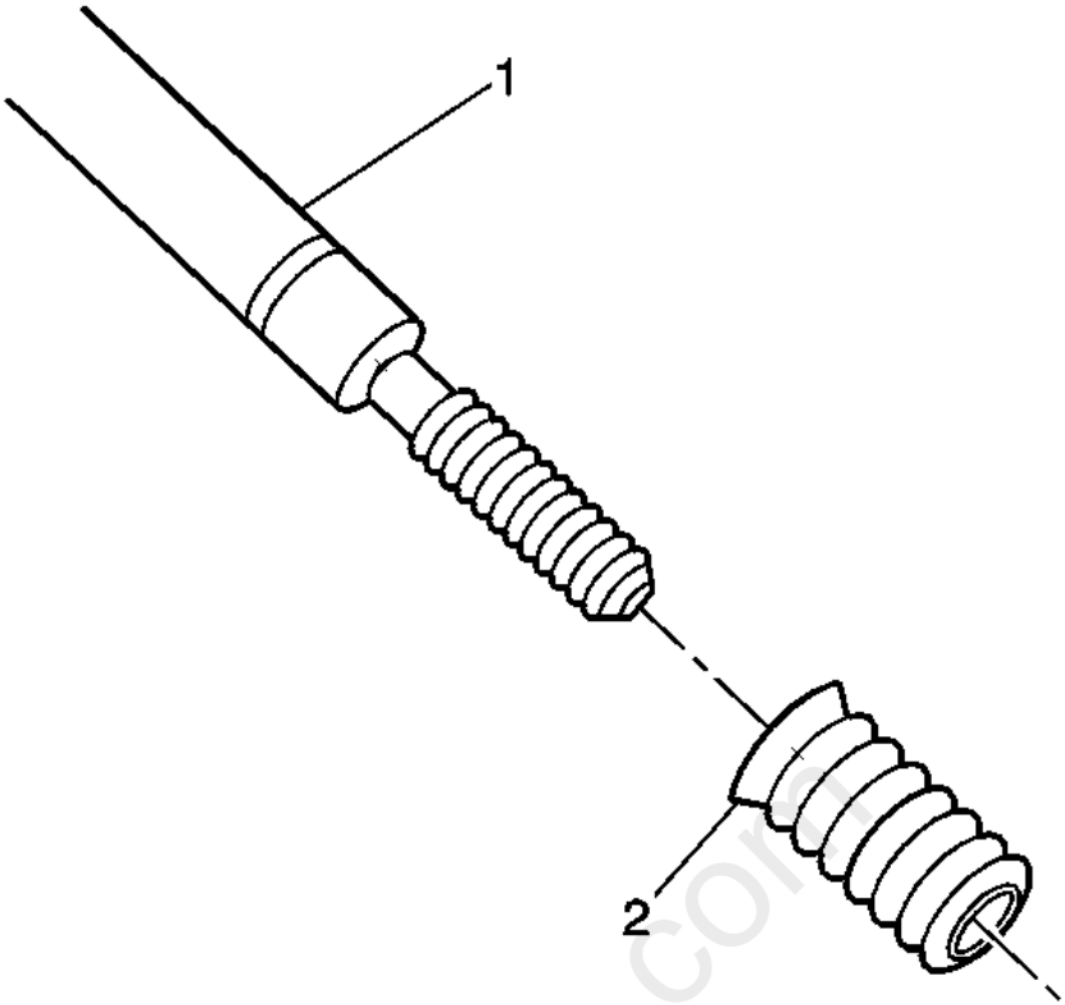

Fig. 331: View of Bushing Type Insert
Courtesy of GENERAL MOTORS COMPANY

9. Install the insert (2) onto the driver installation tool (1).

cardiagn.com

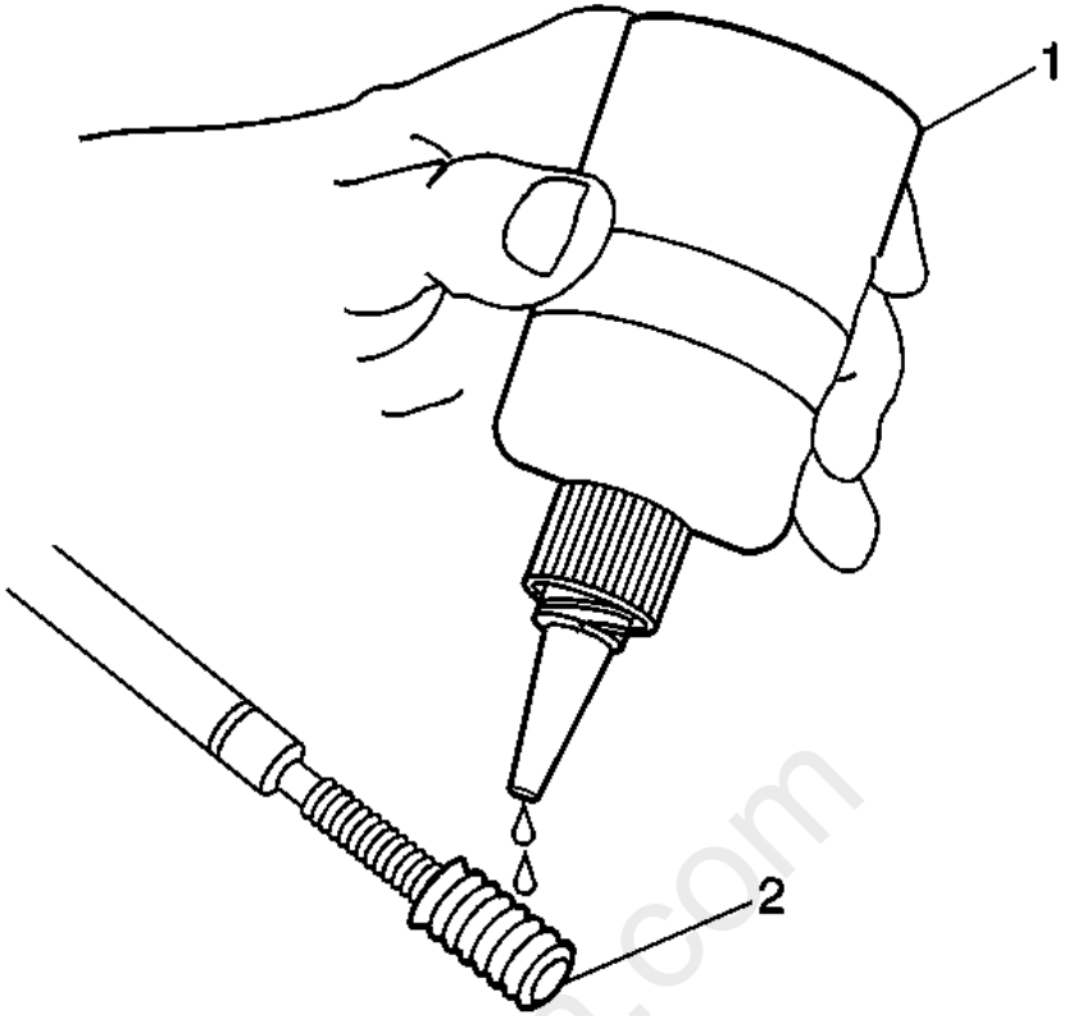

Fig. 332: Applying Threadlock To Insert
Courtesy of GENERAL MOTORS COMPANY

10. Apply threadlock sealant, EN 42385-109, LOCTITE 277Ã‚Â® or equivalent (1) to the insert OD threads (2). Refer to **Adhesives, Fluids, Lubricants, and Sealers** for recommended sealant.

carmgn.com

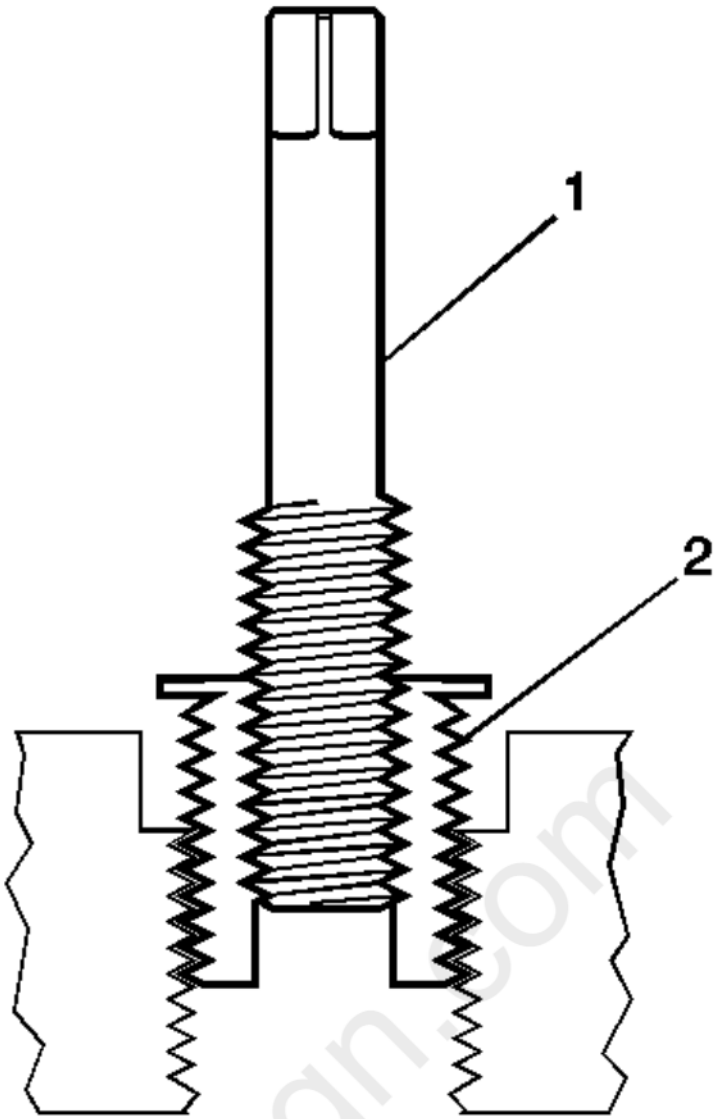

Fig. 333: Installing Insert - Recessed Thread
Courtesy of GENERAL MOTORS COMPANY

11. Install the insert (2) into the tapped hole by hand only.

cardiagn.com

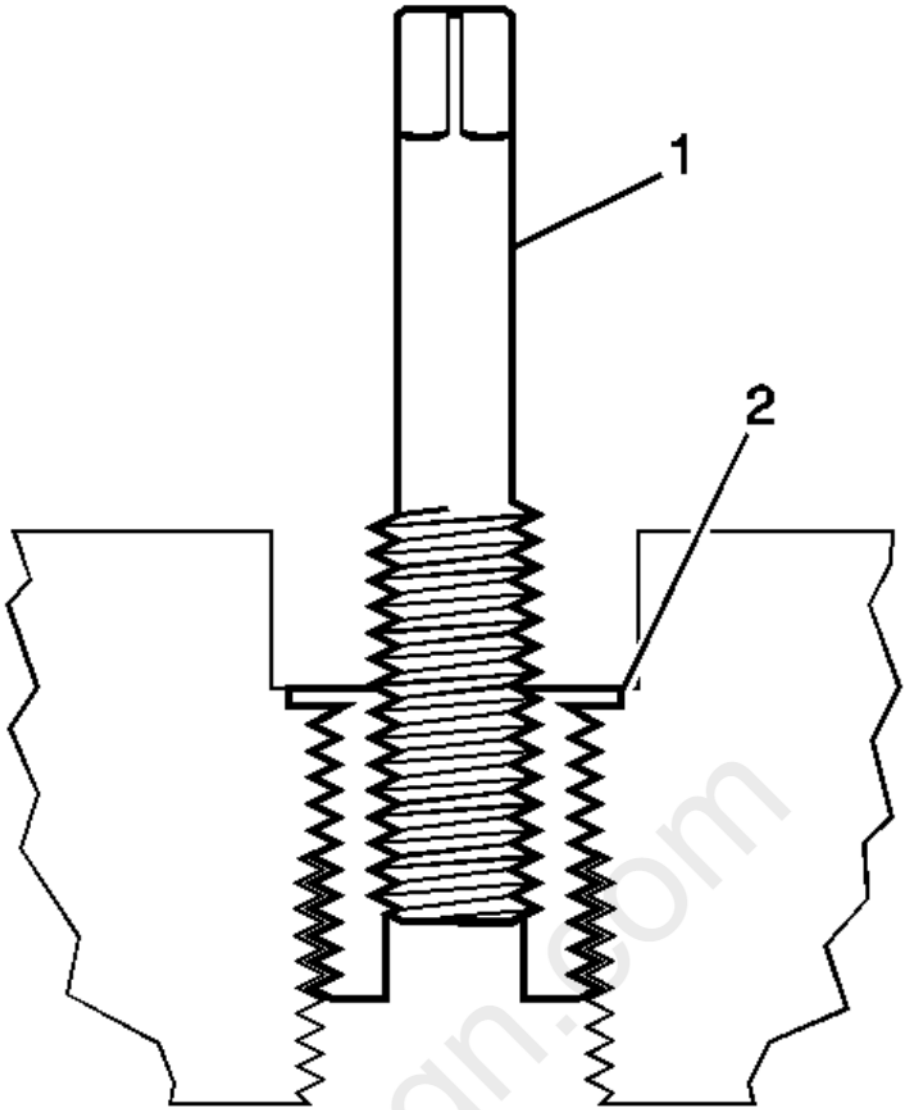

Fig. 334: View Of Installed Insert - Recessed Thread
Courtesy of GENERAL MOTORS COMPANY

NOTE: **If the insert will not thread down until the flange contacts the counterbored surface remove the insert immediately with a screw extracting tool and inspect the tapped hole for any remaining chips and/or improper tapping.**

12. Install the insert until the flange (2) of the insert contacts the counterbored surface.

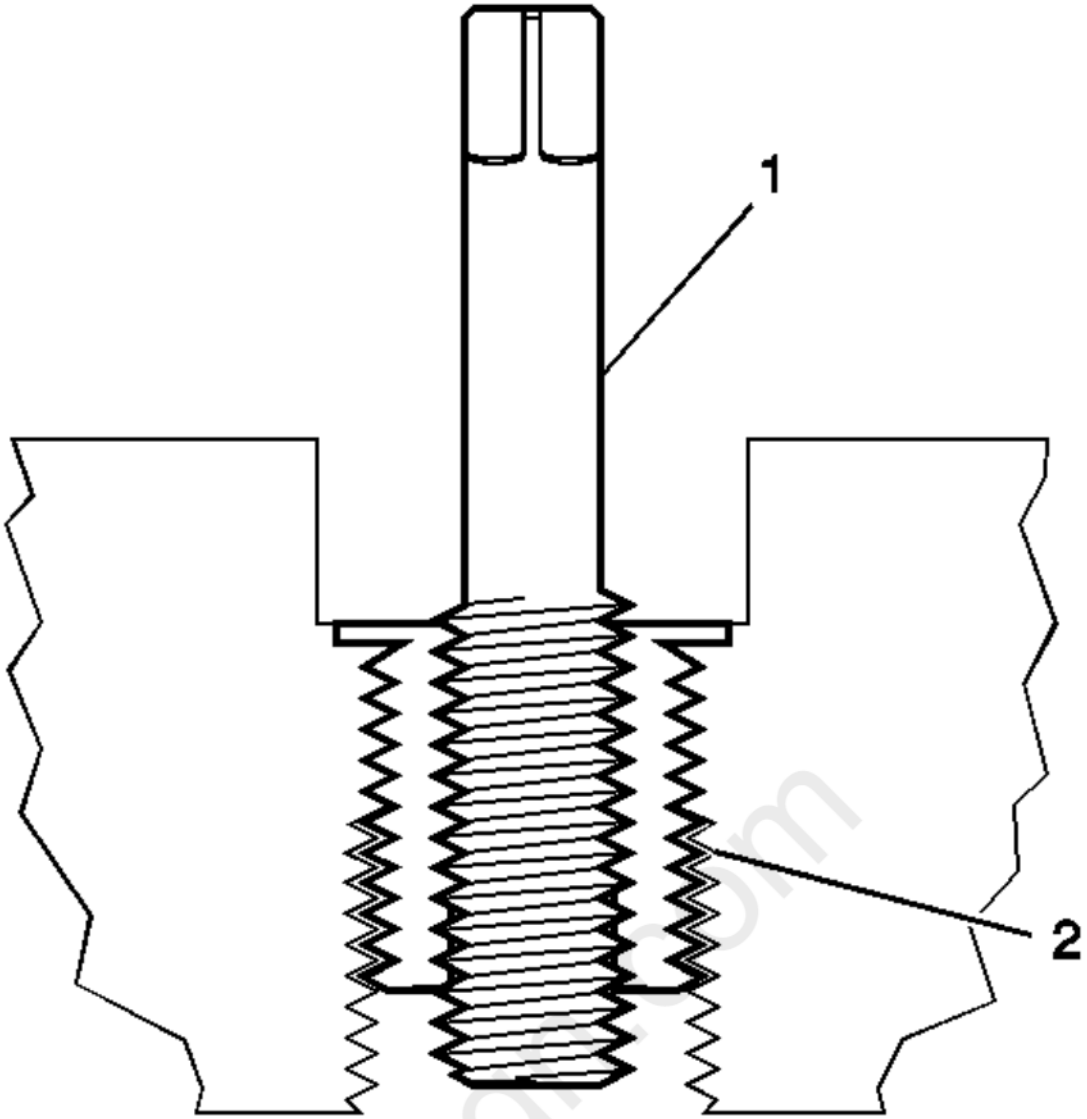

Fig. 335: Installed Insert - Recessed Thread Repair
Courtesy of GENERAL MOTORS COMPANY

NOTE: **The driver installation tool will tighten up before screwing completely through the insert. This is acceptable. The threads at the bottom of the insert are being formed and the insert is mechanically locking the insert into the base material threads.**

13. Continue to rotate the driver installation tool (1) through the insert (2).

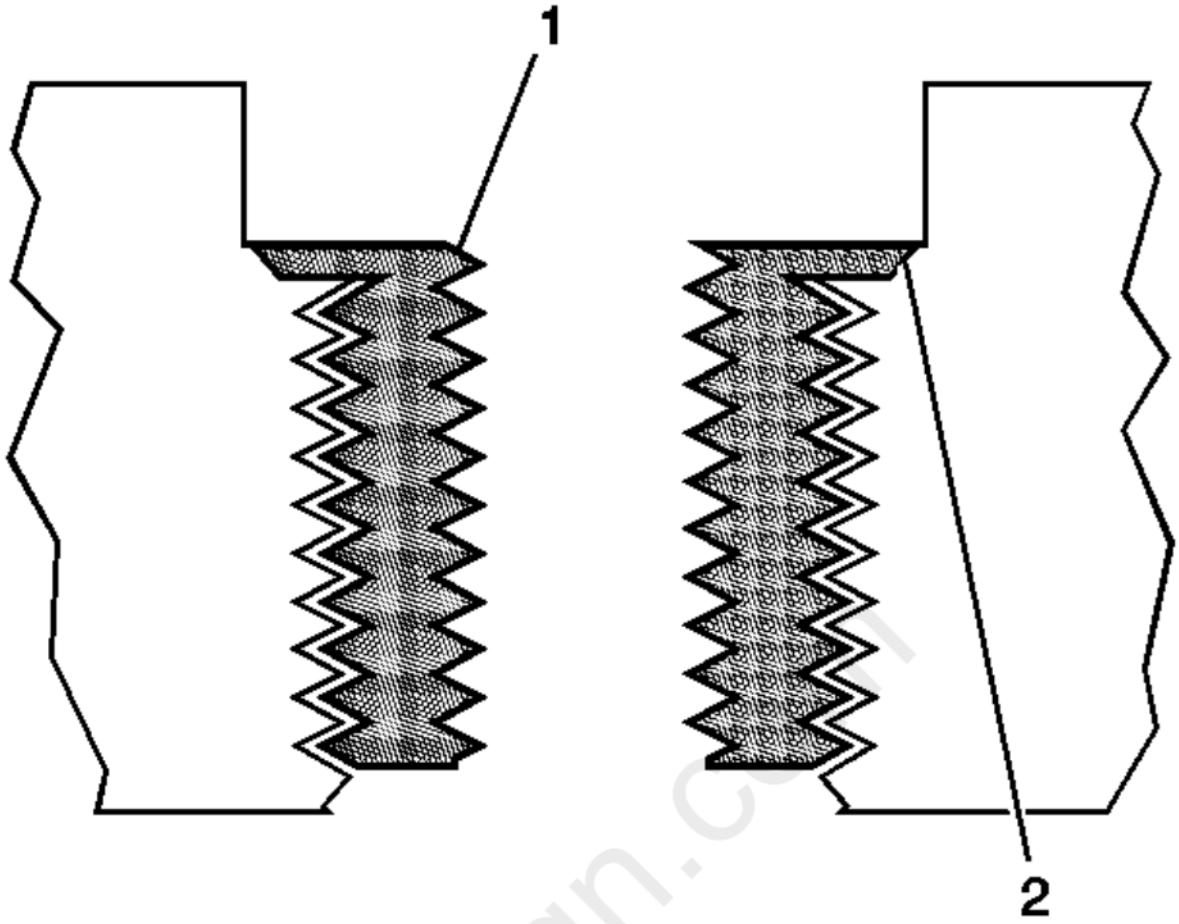

Fig. 336: Inspecting Insert For Proper Installation - Recessed Thread
Courtesy of GENERAL MOTORS COMPANY

14. Inspect the insert (1) for proper installation (2) into the tapped hole.

cardiagn.com

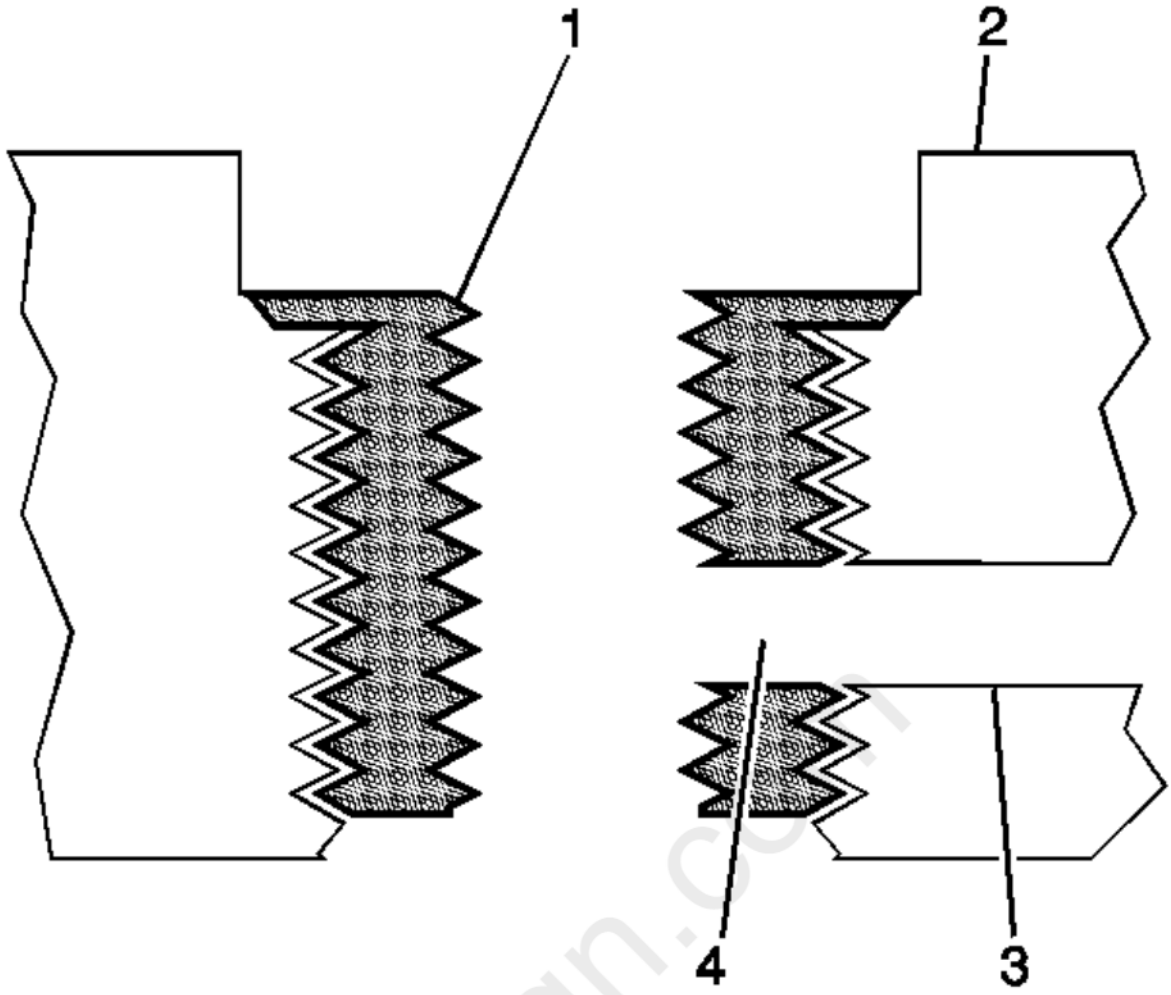

Fig. 337: View Of Restricted Engine Coolant Passage - Recessed Thread Repair
Courtesy of GENERAL MOTORS COMPANY

15. Any installed insert that restricts or blocks an oil or engine coolant passage (3) will need to have the oil or engine coolant passage drilled out (4) to the original size of the oil or engine coolant passage. After drilling the restriction or blockage, clean out any chips and thread the installation driver tool through the insert again to remove any burrs caused by the drilling of the oil or engine coolant passage.

Tapered Pipe Thread Repair

The thread repair insert for tapered pipe threads is coated with a clear silver zinc coating.

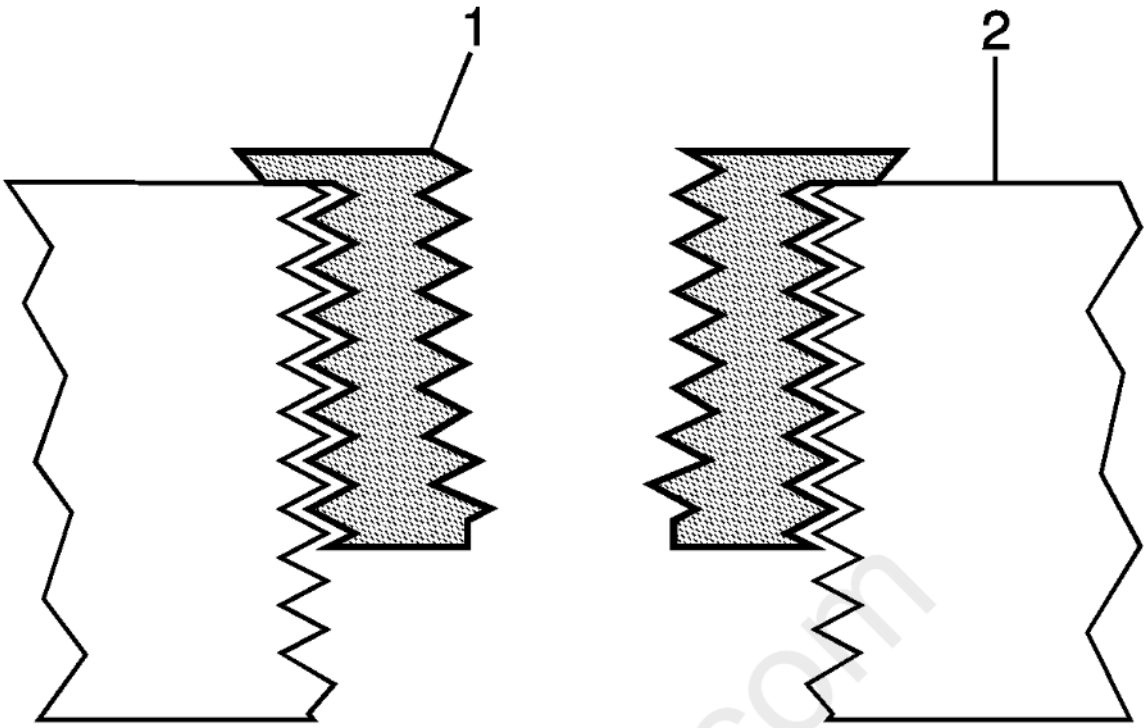

Fig. 338: Inspecting Insert For Proper Installation - Tapered Thread
Courtesy of GENERAL MOTORS COMPANY

WARNING: Refer to Safety Glasses Warning .

NOTE: The use of a cutting type fluid, WD 40Ã‚Â® or equivalent is recommended when performing the drilling, counterboring and tapping procedures. Refer to Adhesives, Fluids, Lubricants, and Sealers for recommended cutting fluid.

When installed to the proper depth, the flange (1) of the insert will be seated against surface (2) of the base material of the drilled/tapped hole.

cardiagn.com

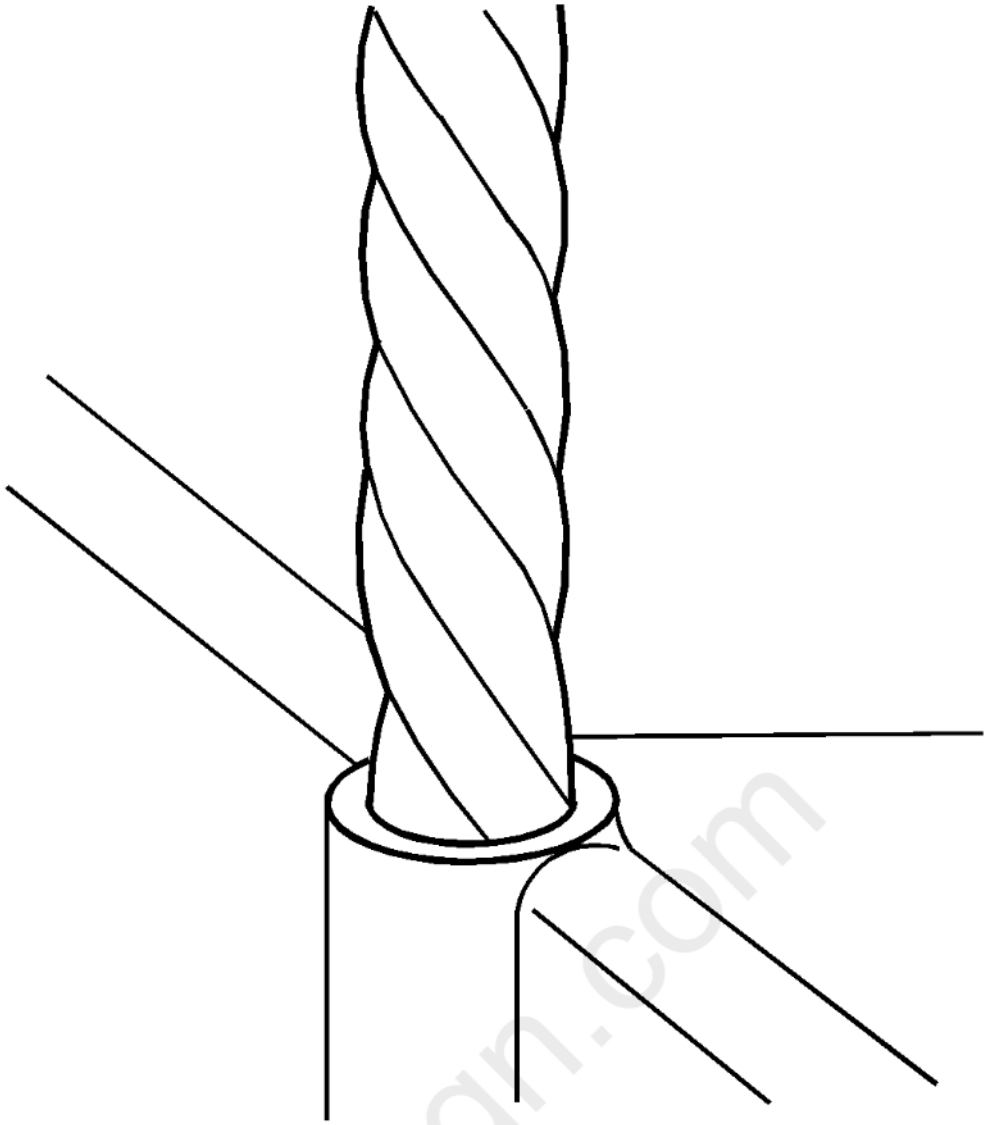

Fig. 339: Drilling Out Threads Of Damaged Hole
Courtesy of GENERAL MOTORS COMPANY

NOTE:

- **During the drilling process, it is necessary to repeatedly remove the drill and clean chips from the hole and the flutes of the drill.**
- **Drill the hole until the stop collar contacts the surface of the base material.**

1. Drill out the threads of the damaged hole.

carDiagn.com

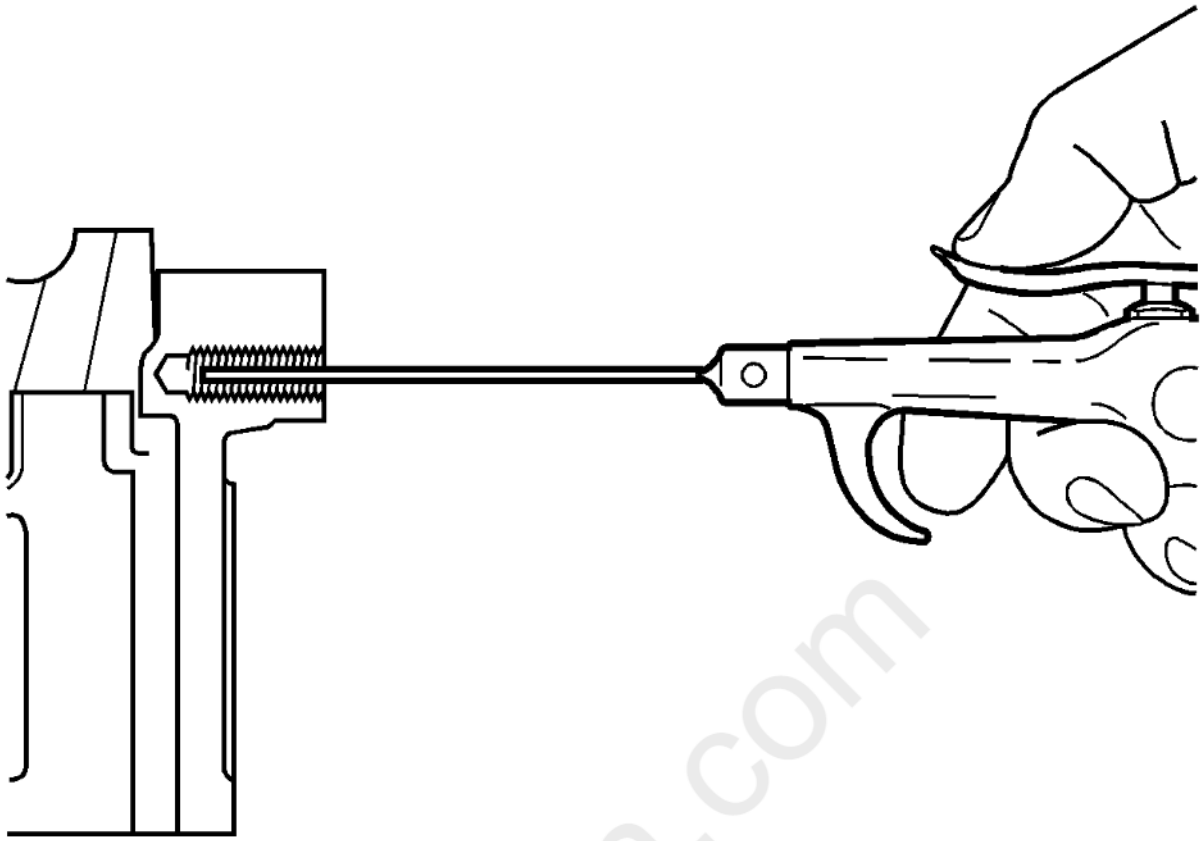

Fig. 340: Cleaning Out Metal Chips
Courtesy of GENERAL MOTORS COMPANY

NOTE: **All chips must be removed from the drilled hole prior to tapping.**

2. Using compressed air, clean out any chips.

cardiagn.com

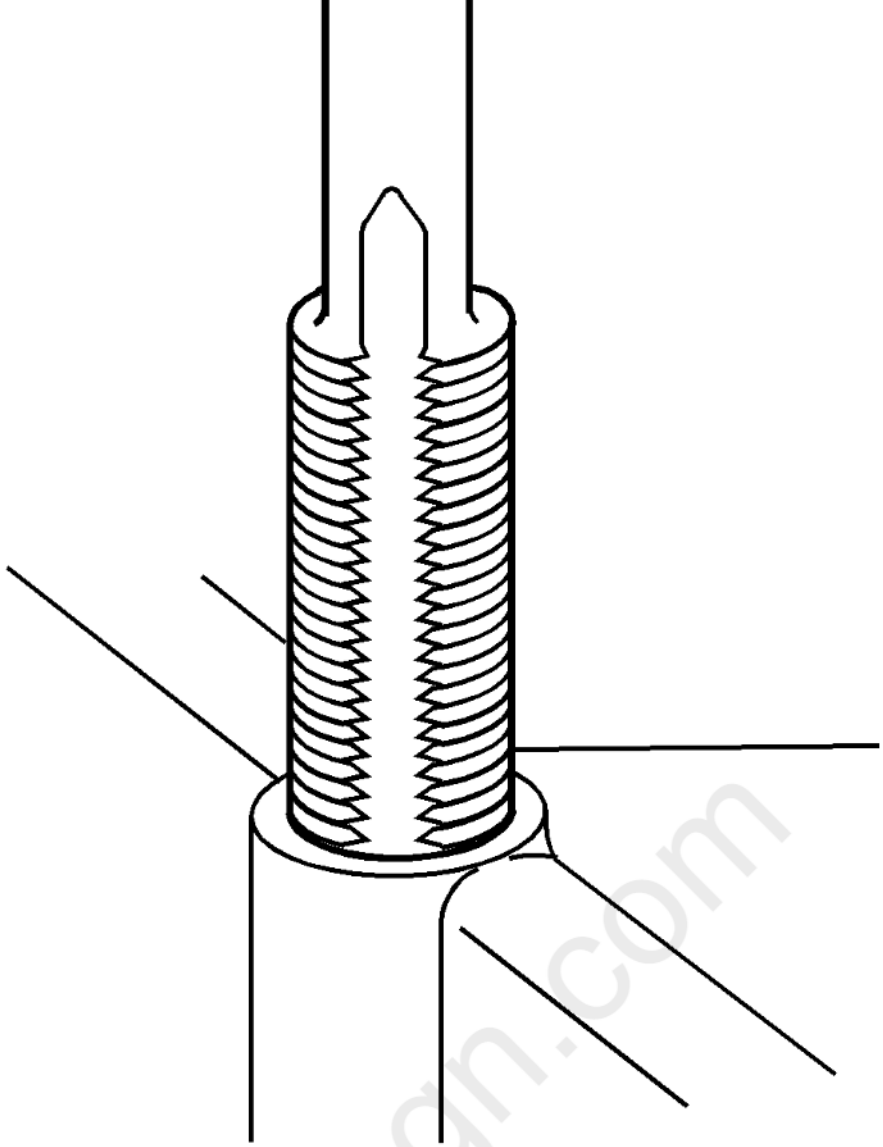

Fig. 341: Tapping Threads Of Drilled Hole
Courtesy of GENERAL MOTORS COMPANY

NOTE:

- **During the tapping process, it is necessary to repeatedly remove the tap and clean chips from the hole and the flutes of the tap.**
- **Ensure the tap has created full threads at least to the depth equal to the insert length.**

3. Using a suitable tapping wrench, tap the threads of the drilled hole by hand only.

cardiagn.com

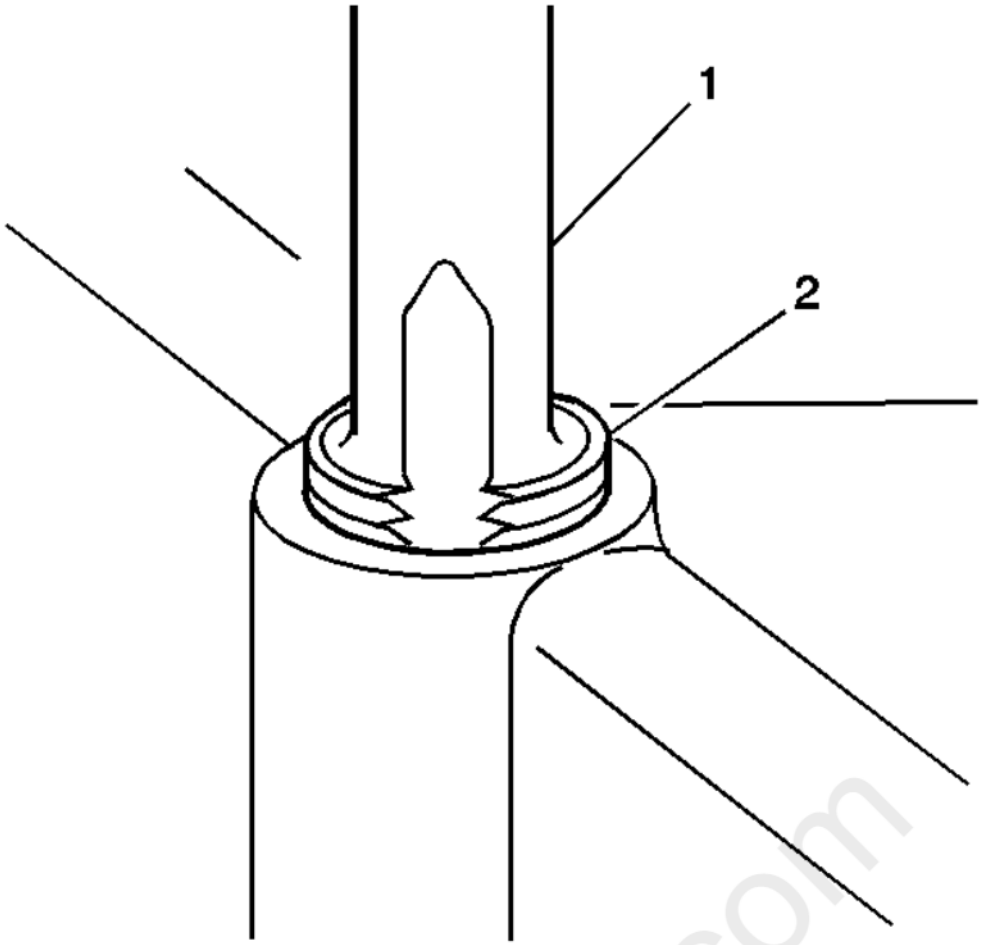

Fig. 342: View Of Proper Tapping Distance - Tapered Thread
Courtesy of GENERAL MOTORS COMPANY

4. Tap the drilled hole until the threads at the top of the tap (2) are down to the surface of the base material.

cardiagn.com

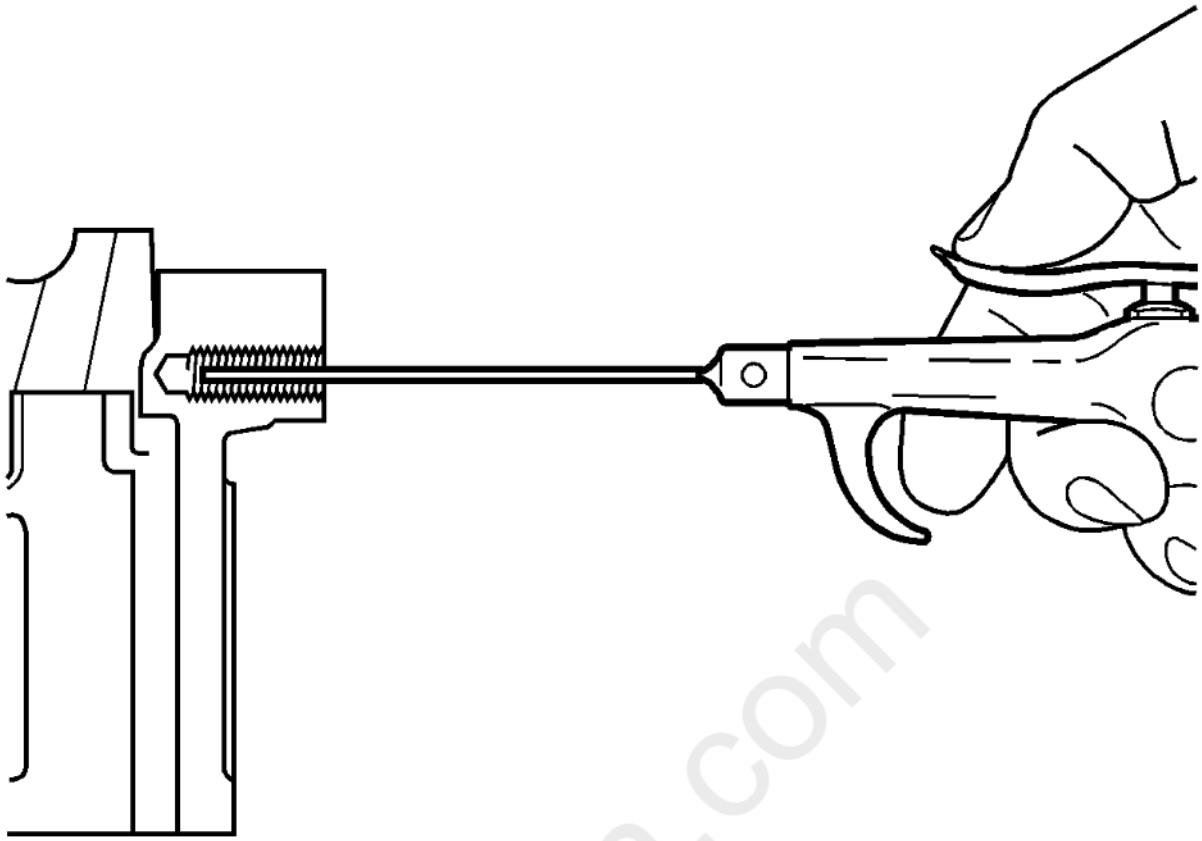

Fig. 343: Cleaning Out Metal Chips
Courtesy of GENERAL MOTORS COMPANY

NOTE: **All chips must be removed from the tapped hole prior to insert installation.**

5. Using compressed air, clean out any chips.

cardiagn.com

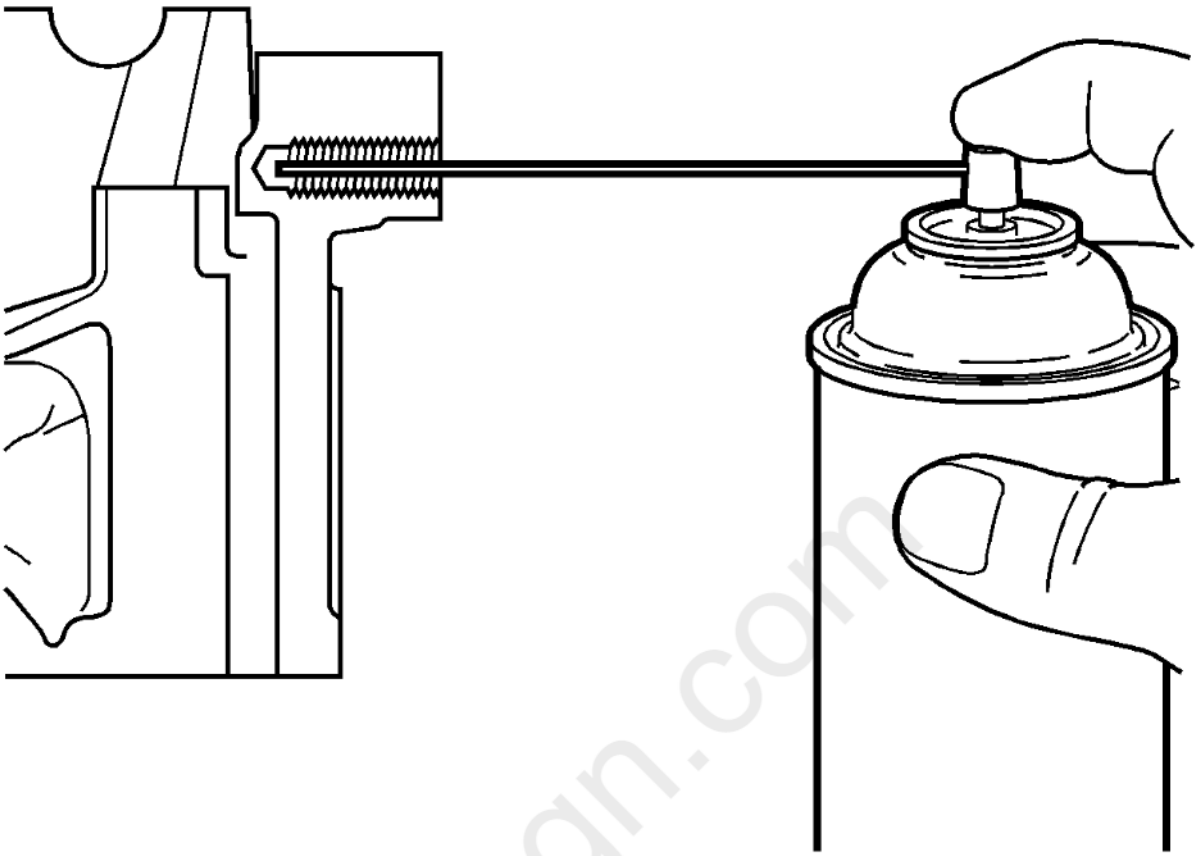

Fig. 344: Spraying Cleaner Into Tapped Hole
Courtesy of GENERAL MOTORS COMPANY

6. Spray cleaner into the tapped hole. Refer to **Adhesives, Fluids, Lubricants, and Sealers** for recommended cleaner.

cardiagn.com

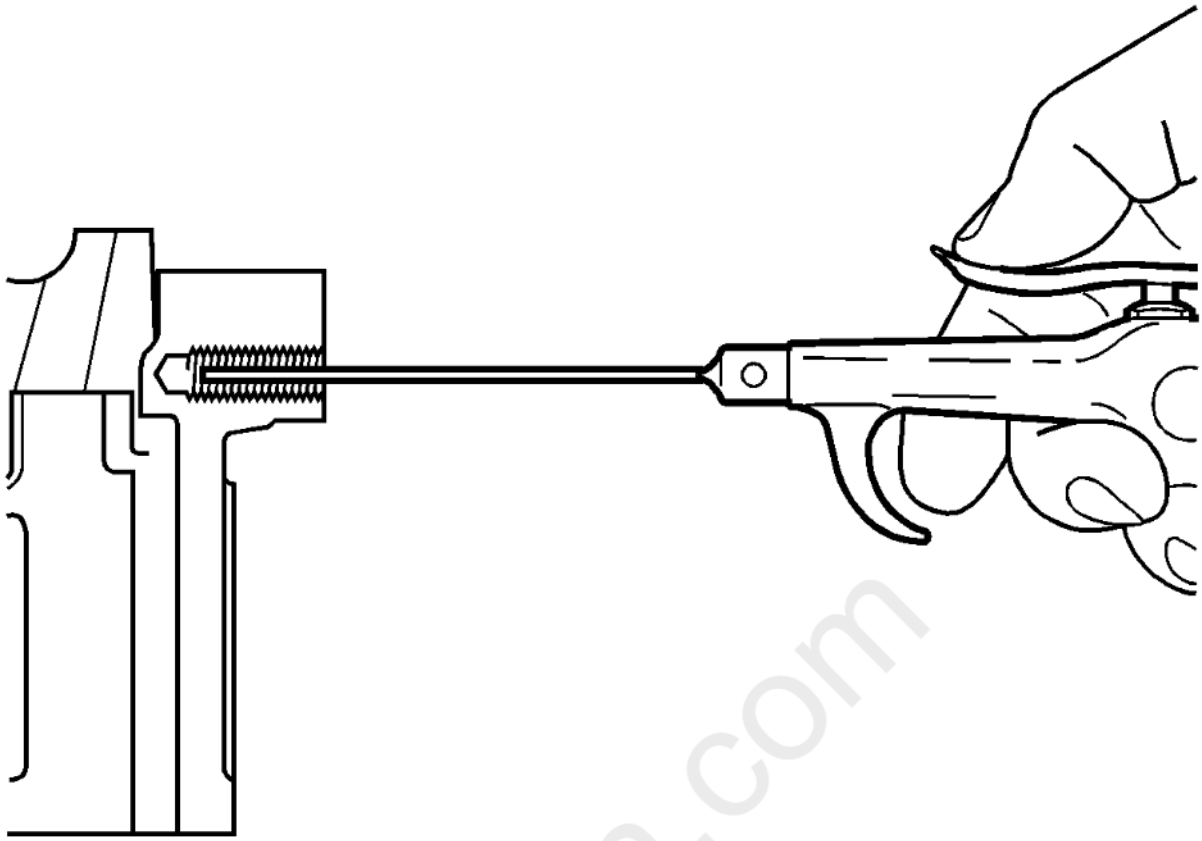

Fig. 345: Cleaning Out Metal Chips
Courtesy of GENERAL MOTORS COMPANY

NOTE: **All chips must be removed from the tapped hole prior to insert installation.**

7. Using compressed air, clean out any chips.

cardiagn.com

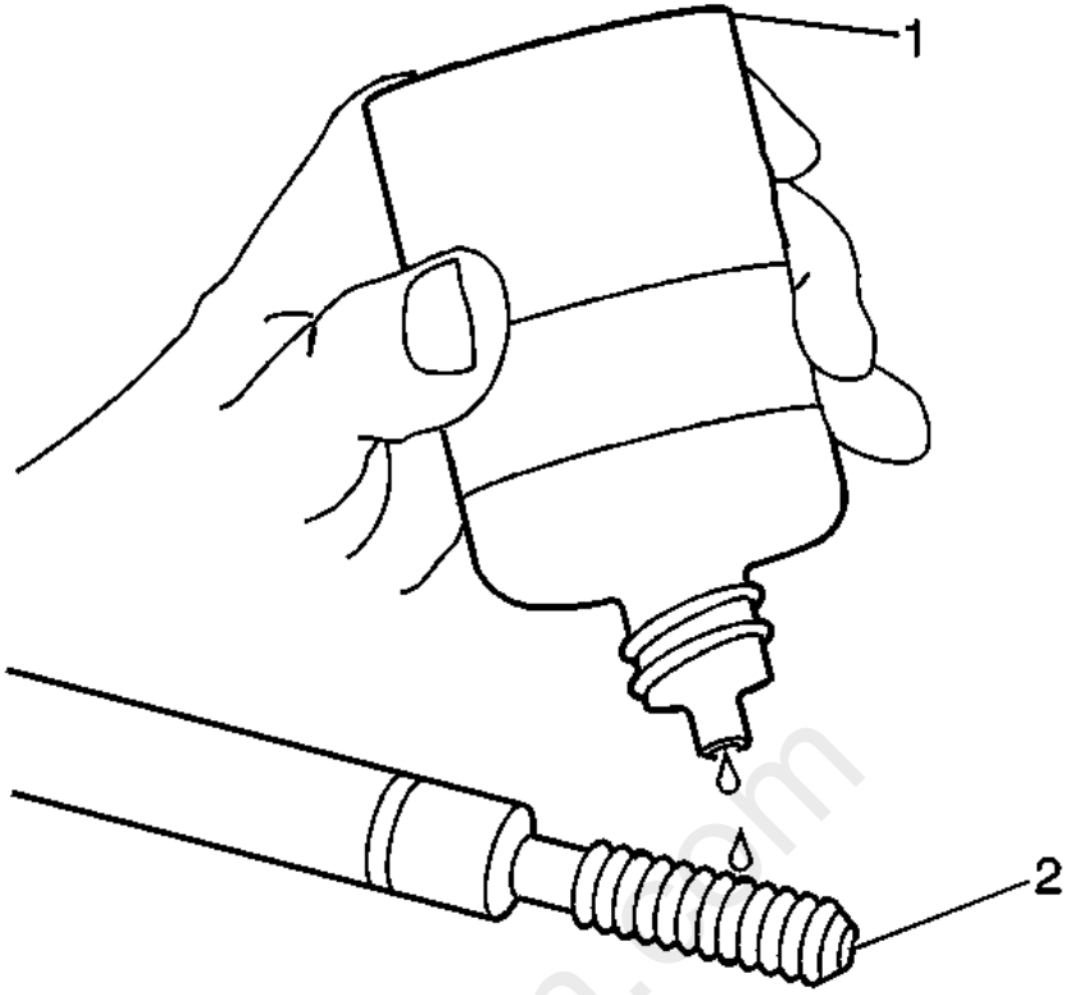

Fig. 346: Lubricating Installer Tool Using Driver Oil
Courtesy of GENERAL MOTORS COMPANY

NOTE: **Do not allow oil or other foreign material to contact the outside diameter (OD) of the insert.**

8. Lubricate the threads of the driver installation tool (2) with the EN 42385-110 (1).

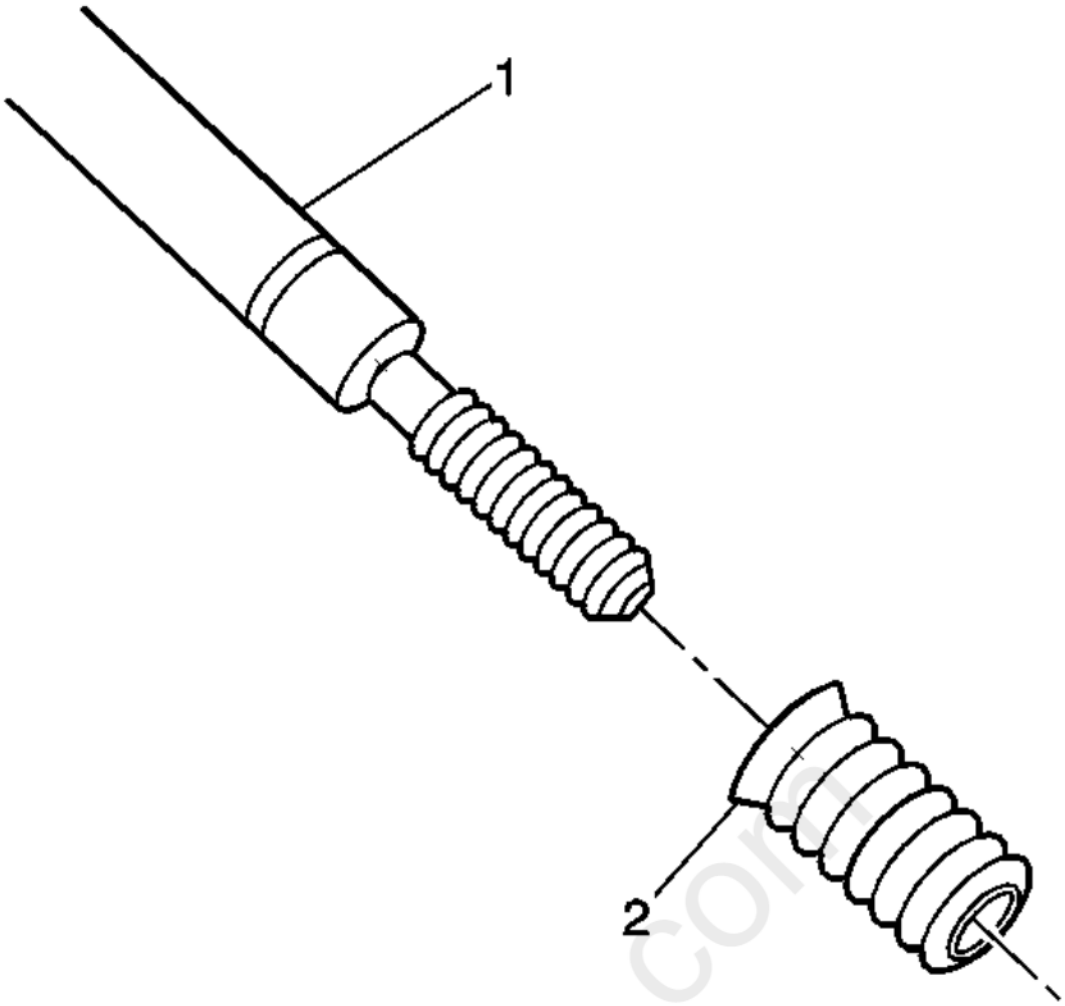

Fig. 347: View of Bushing Type Insert
Courtesy of GENERAL MOTORS COMPANY

9. Install the insert (2) onto the driver installation tool (1).

cardiagn.com

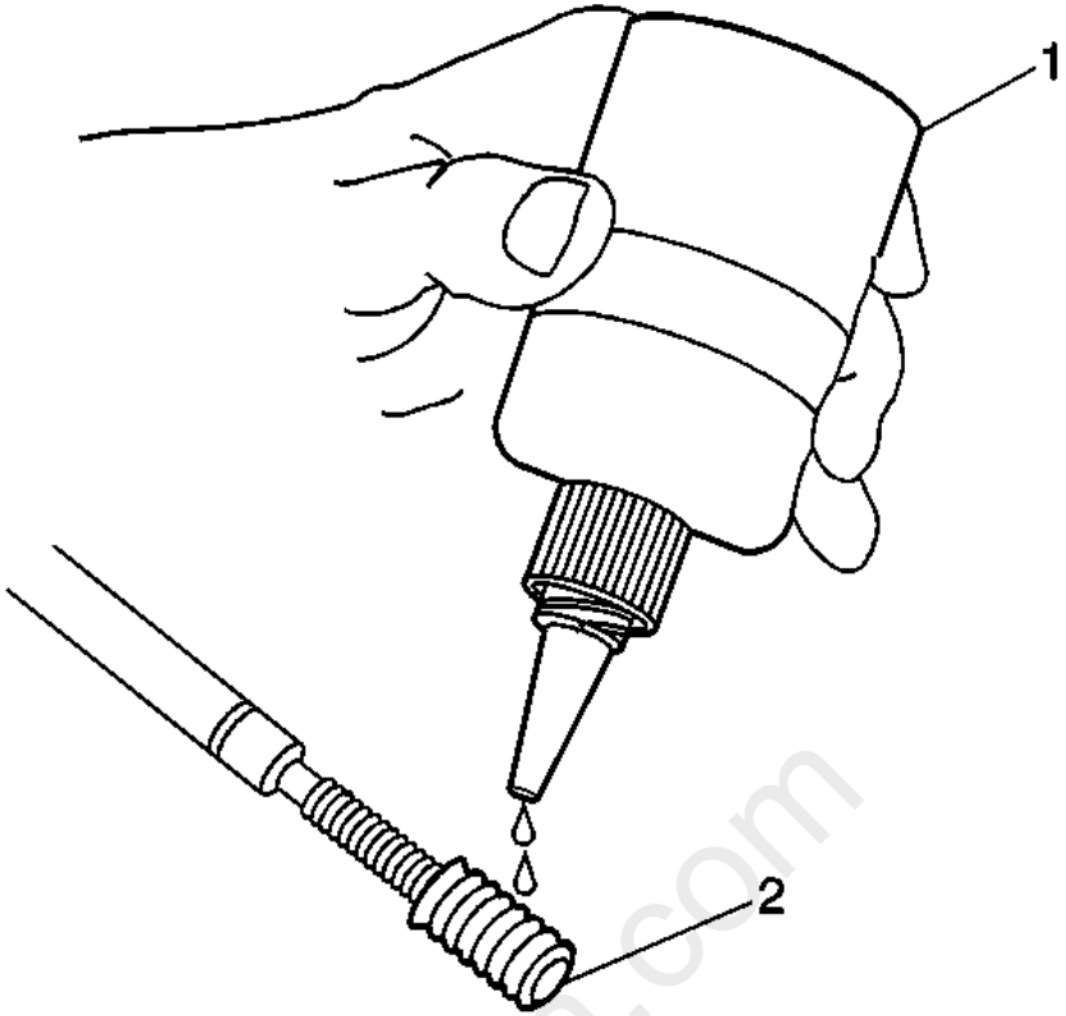

Fig. 348: Applying Threadlock To Insert
Courtesy of GENERAL MOTORS COMPANY

10. Apply threadlock sealant, EN 42385-109, LOCTITE 277Ã‚Â® or equivalent (1) to the insert OD threads (2). Refer to **Adhesives, Fluids, Lubricants, and Sealers** for recommended sealant.

carmgn.com

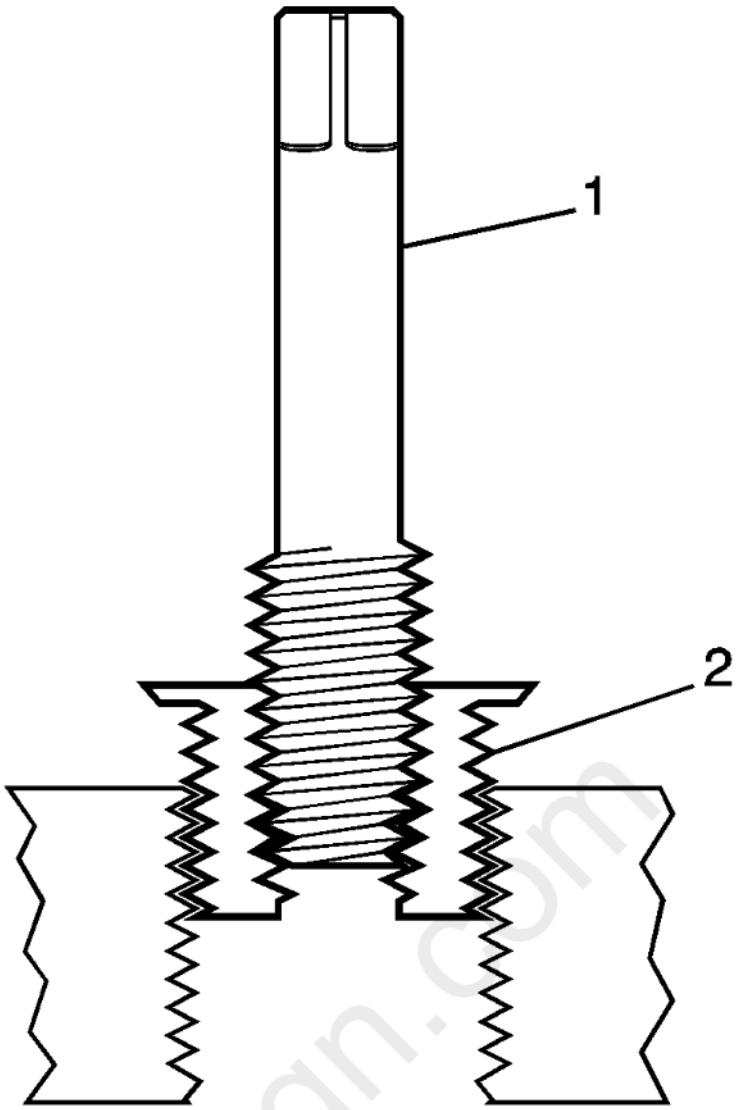

Fig. 349: View Of Insert - Tapered Thread
Courtesy of GENERAL MOTORS COMPANY

11. Install the insert (2) into the tapped hole by hand only.

cardiagn.com

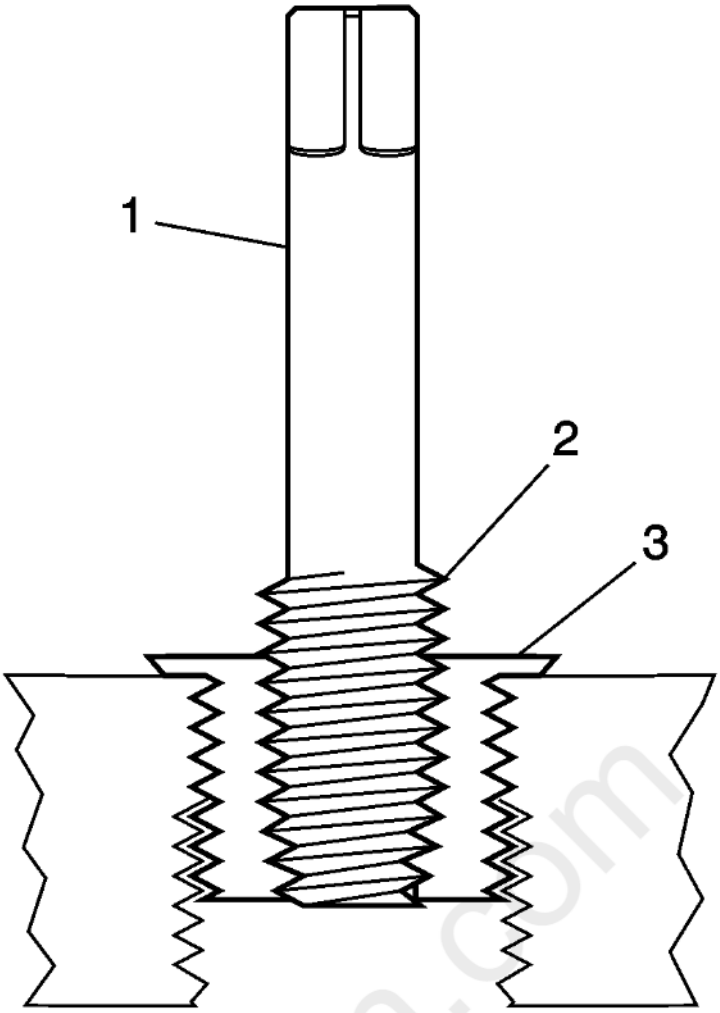

Fig. 350: View Of Insert - Tapered Pipe Thread Repair
Courtesy of GENERAL MOTORS COMPANY

NOTE: **If the insert will not thread down until the flange contacts the surface of the base material remove the insert immediately with a screw extracting tool and inspect the tapped hole for any remaining chips and/or improper tapping.**

12. Install the insert until the flange of the insert (3) contacts the surface of the base material.

NOTE: **The driver installation tool will tighten up before screwing completely through the insert. This is acceptable. The threads at the bottom of the insert are being formed and the insert is mechanically locking the insert into the base material threads.**

13. Continue to rotate the driver installation tool (1) until the top of the threaded section (2) is level with the top of the insert (3).

carmagn.com

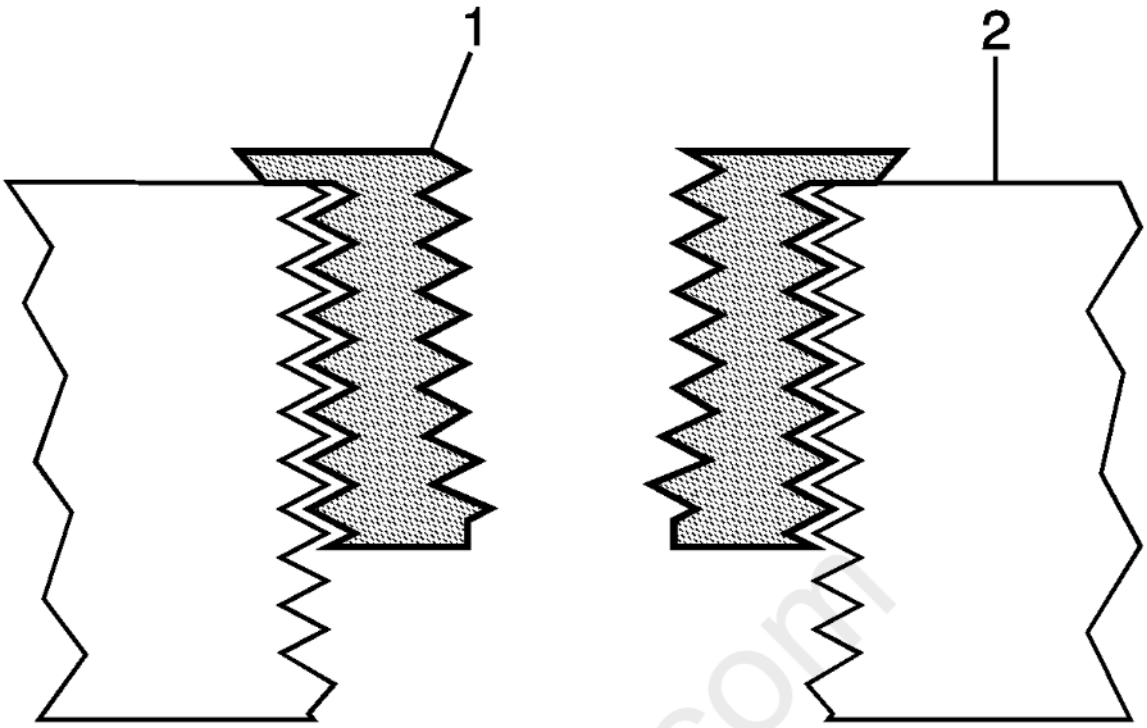

Fig. 351: Inspecting Insert For Proper Installation - Tapered Thread
Courtesy of GENERAL MOTORS COMPANY

14. Inspect the insert (1) for proper installation (2) into the tapped hole.

cardiagn.com

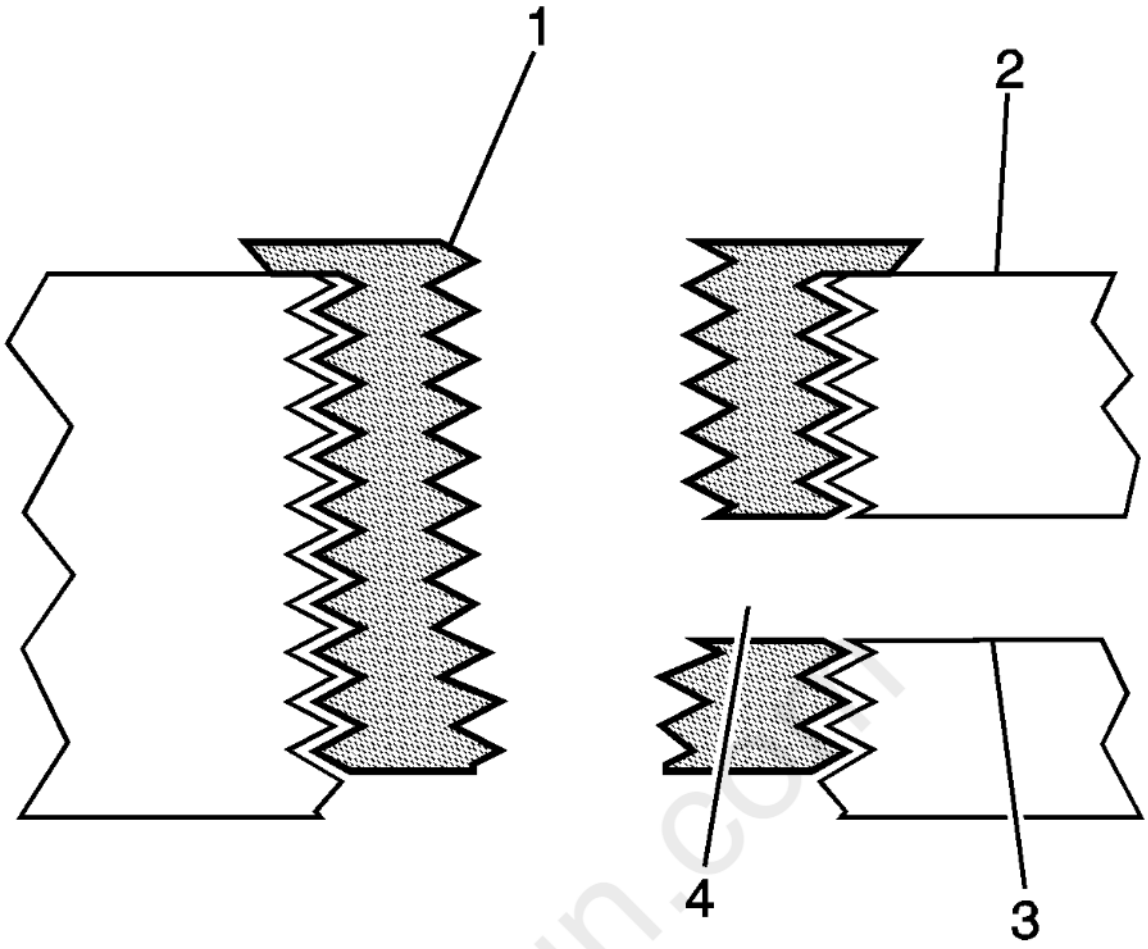

Fig. 352: View Of Restricted Engine Coolant Passages - Tapered Pipe Thread Repair
Courtesy of GENERAL MOTORS COMPANY

15. Any installed insert that restricts or blocks an oil or engine coolant passage (3) will need to have the oil or engine coolant passage drilled out (4) to the original size of the oil or engine coolant passage. After drilling the restriction or blockage, clean out any chips and thread the installation driver tool through the insert again to remove any burrs caused by the drilling of the oil or engine coolant passage.

Cylinder Head Bolt Hole Thread Repair

Special Tools

- **EN 42385-700** High Feature Thread Repair Kit
- **EN 42385-2000** Thread Insert Kit

For equivalent regional tools, refer to **Special Tools** .

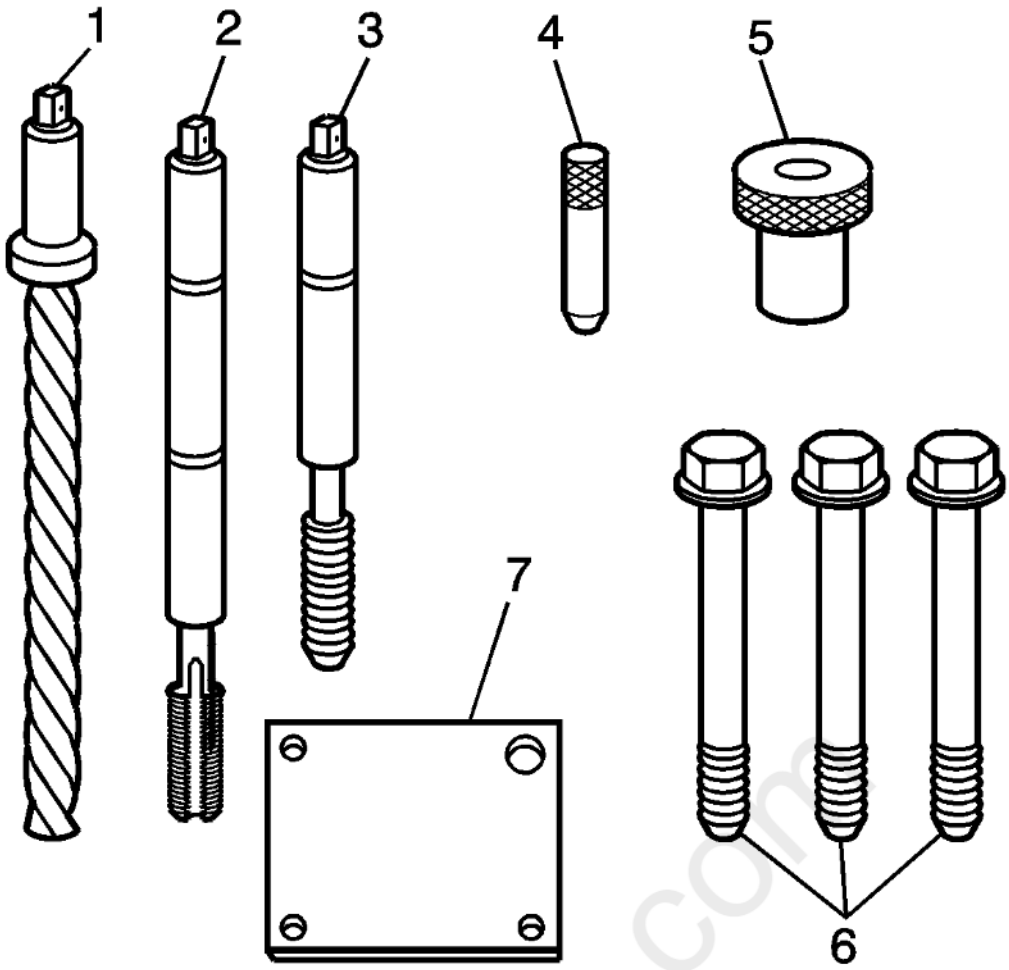

Fig. 353: Identifying Cylinder Head Bolt Hole Thread Repair Kit Components
Courtesy of GENERAL MOTORS COMPANY

The cylinder head bolt hole thread repair tooling are in the kits **EN 42385-2000** insert kit and **EN 42385-700** kit. The cylinder head bolt hole thread repair components consist of the following:

- EN 42385-723 Drill (1)
- EN 42385-724 Tap (2)
- EN 42385-725 Installation driver (3)
- EN 42385-303 Alignment pin (4)
- EN 42385-302 Bushing (5)
- EN 42385-733 Bolts (6)
- EN 42385-401 Fixture plate (7)

WARNING: **Refer to Safety Glasses Warning .**

NOTE:

- **Remove the fixture plate prior to installing the insert with the installer tool.**
- **The use of a cutting type fluid, WD 40Ã‚Â®; or equivalent is recommended when performing the drilling, counterboring and tapping procedures. Refer to Adhesives, Fluids, Lubricants, and Sealers for recommended cutting fluid.**

When installed to the proper depth, the flange of the insert will be seated against the counterbore of the drilled/tapped hole.

cardiagn.com

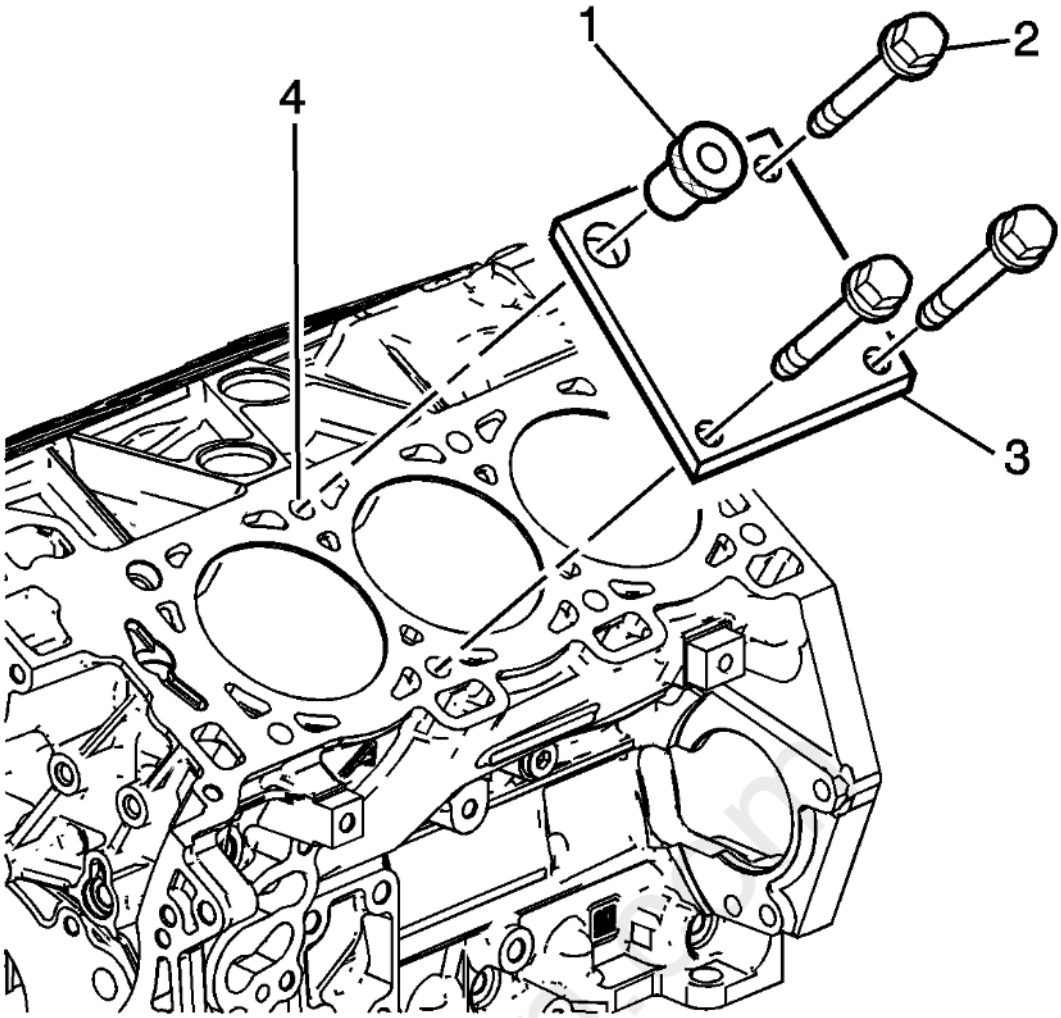

Fig. 354: View Of Fixture Plate & Components - Cylinder Head Bolt Hole
Courtesy of GENERAL MOTORS COMPANY

1. Position the fixture plate (3) with the bushing (1) installed over the cylinder head bolt hole to be repaired (4).
2. Loosely install the fixture plate bolts (2) into the remaining cylinder head bolt holes.

cardiagn.com

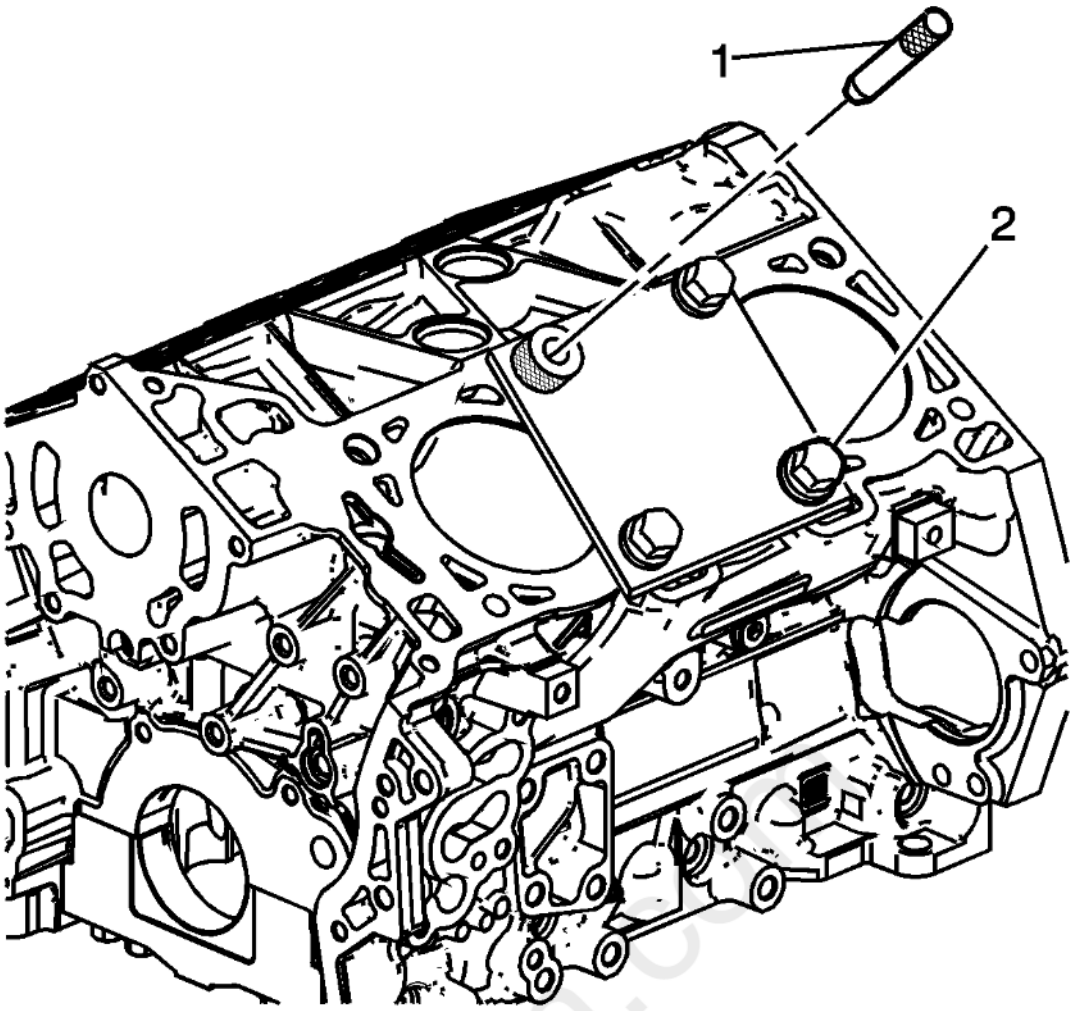

Fig. 355: Locating Alignment Pin
Courtesy of GENERAL MOTORS COMPANY

3. Position the alignment pin (1) through the bushing and into the cylinder head bolt hole.
4. With the alignment pin in the desired cylinder head bolt hole, tighten the fixture retaining bolts (2).
5. Remove the alignment pin (1) from the cylinder head bolt hole.

cardiagn.com

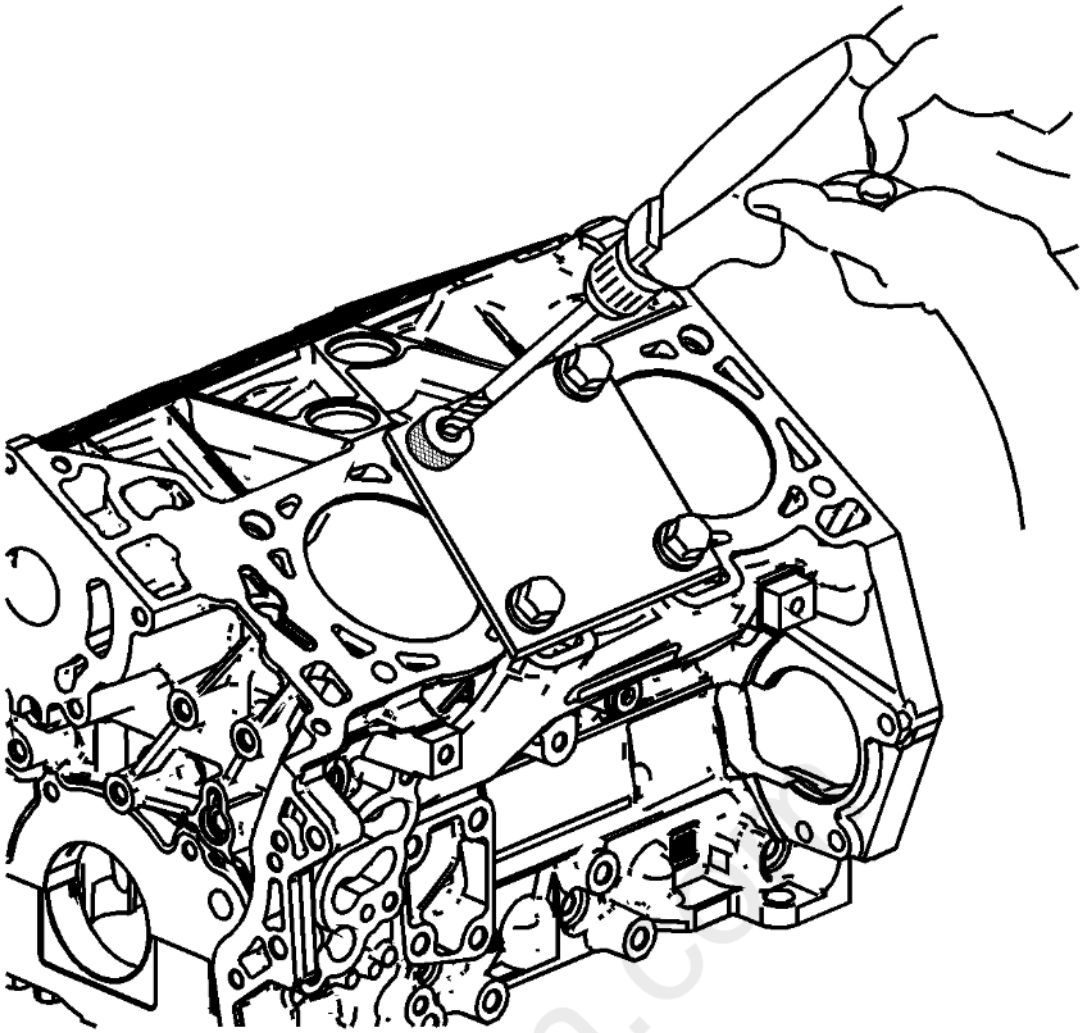

Fig. 356: Drilling Out Threads Of Damaged Hole - Cylinder Head Bolt Hole
Courtesy of GENERAL MOTORS COMPANY

NOTE:

- **During the drilling process, it is necessary to repeatedly remove the drill and clean chips from the hole and the flutes of the drill.**
- **Drill the hole until the stop collar contacts the top of the drill bushing.**

6. Drill out the threads of the damaged hole.

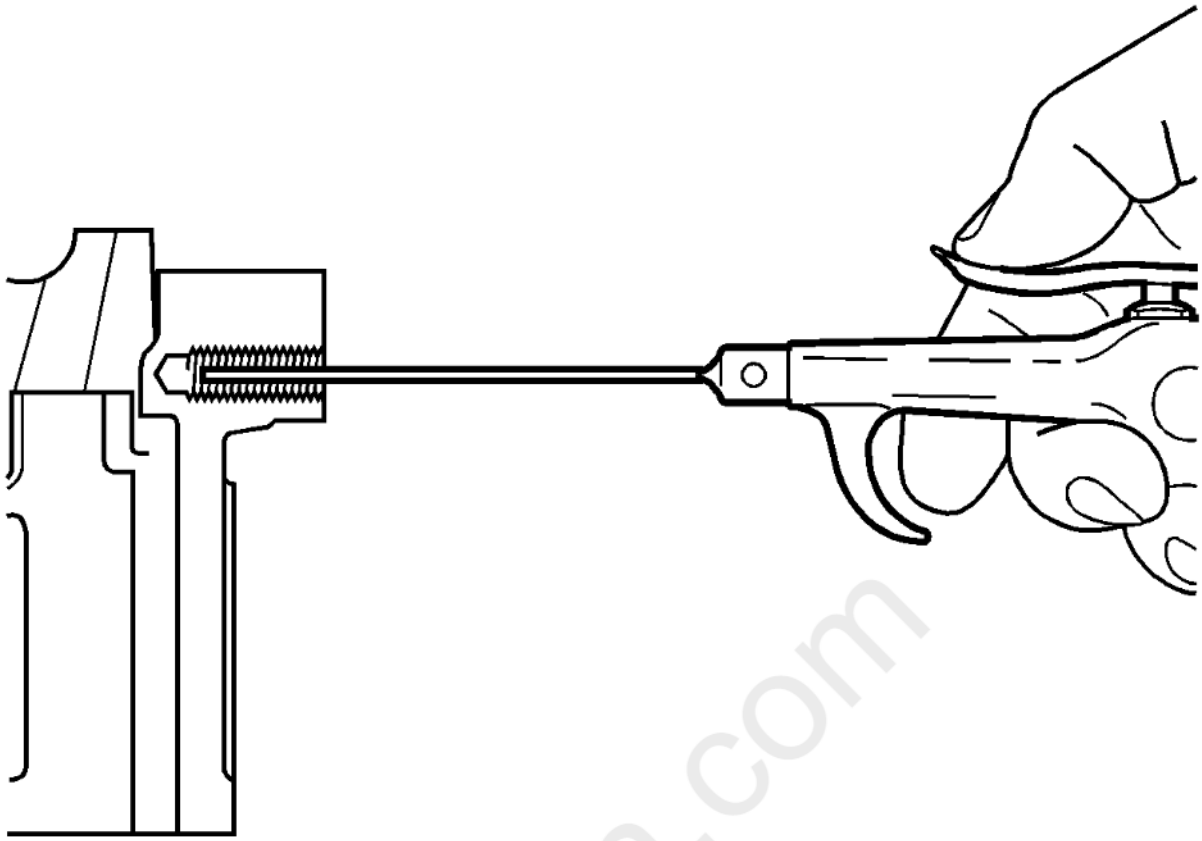

Fig. 357: Cleaning Out Metal Chips
Courtesy of GENERAL MOTORS COMPANY

NOTE: **All chips must be removed from the drilled hole prior to tapping.**

7. Using compressed air, clean out any chips.

cardiagn.com

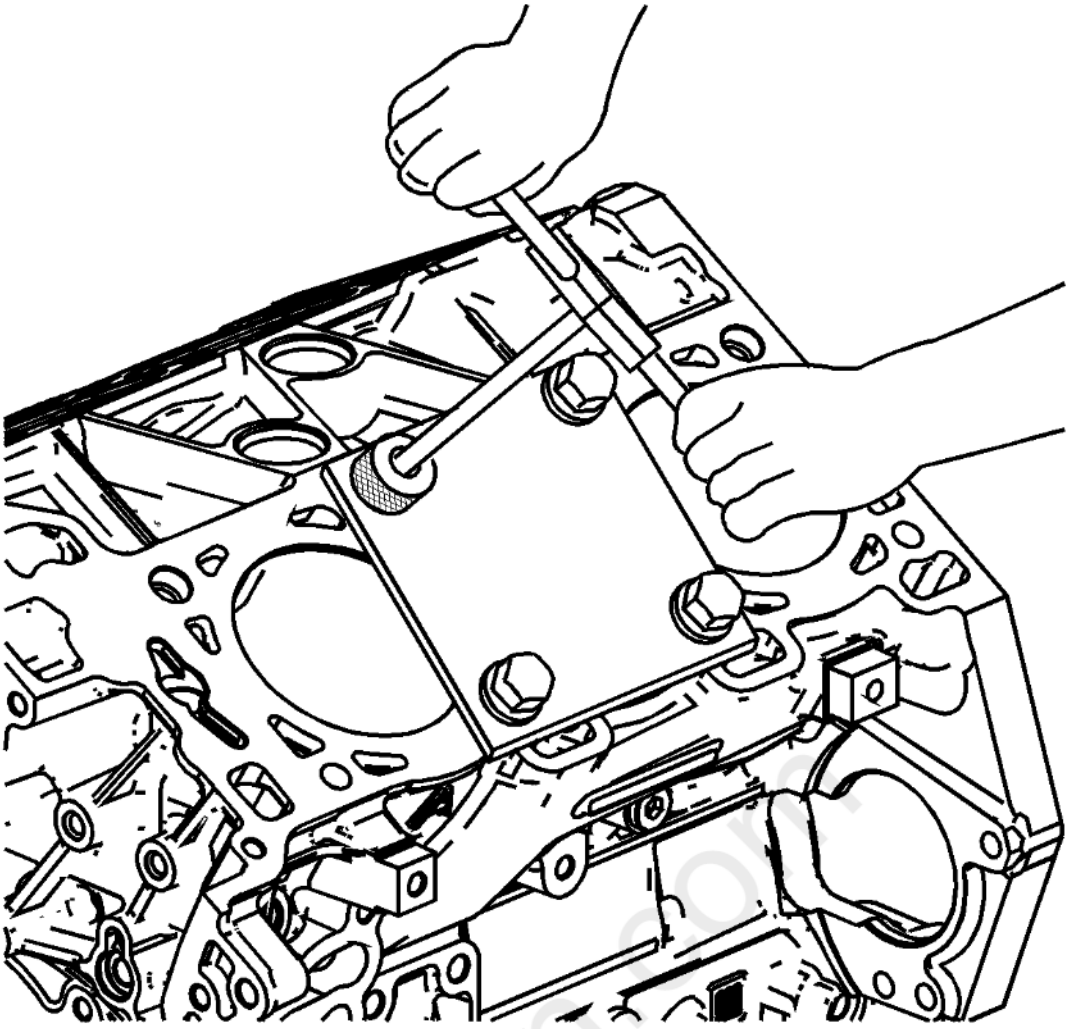

Fig. 358: Tapping Threads Of Drilled Hole Using Tapping Wrench - Cylinder Head Bolt Hole
Courtesy of GENERAL MOTORS COMPANY

NOTE:

- **During the tapping process, it is necessary to repeatedly remove the tap and clean chips from the hole and the flutes of the tap.**
- **Ensure the tap has created full threads at least to the depth equal to the insert length.**

8. Using a suitable tapping wrench, tap the threads of the drilled hole by hand only.

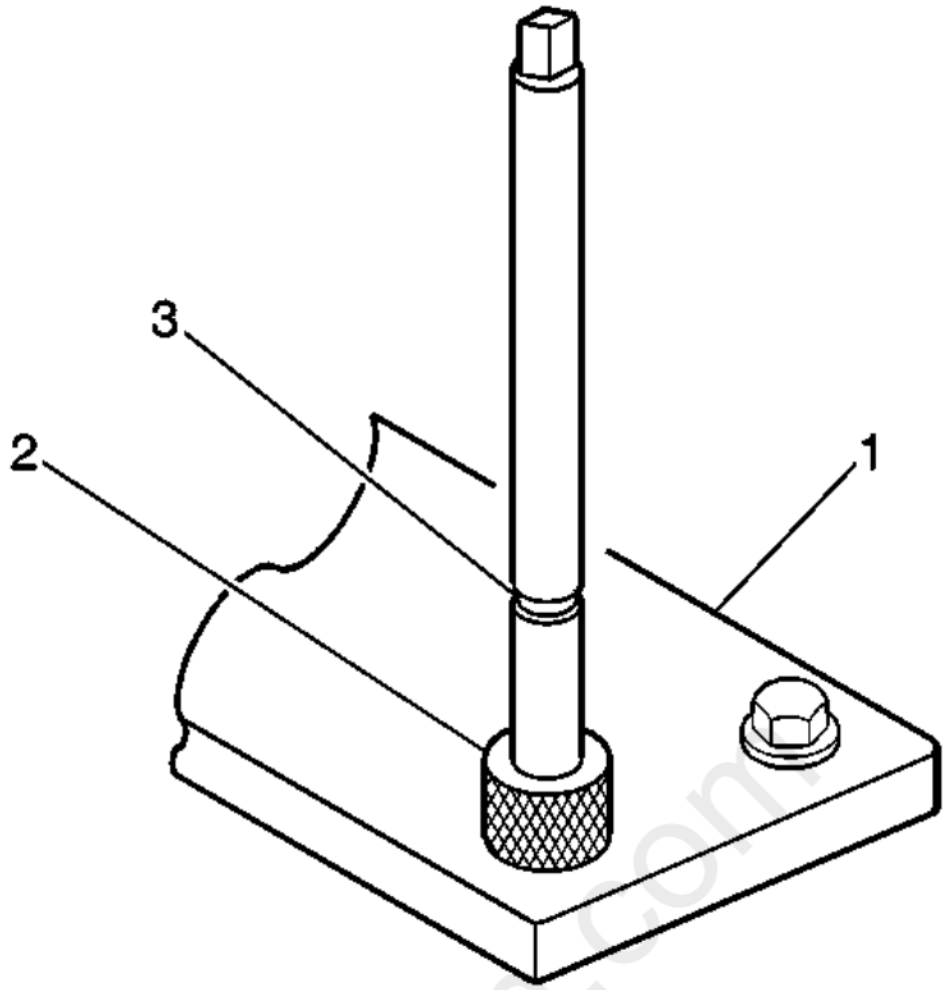

Fig. 359: View Of Fixture Plate, Drill Bushing & Tool Marking
Courtesy of GENERAL MOTORS COMPANY

9. In order to tap the new threads for the insert to the proper depth, rotate the tap into the cylinder head bolt hole until the mark (3) on the tap aligns with the top of the drill bushing (2).

cardiagn.com

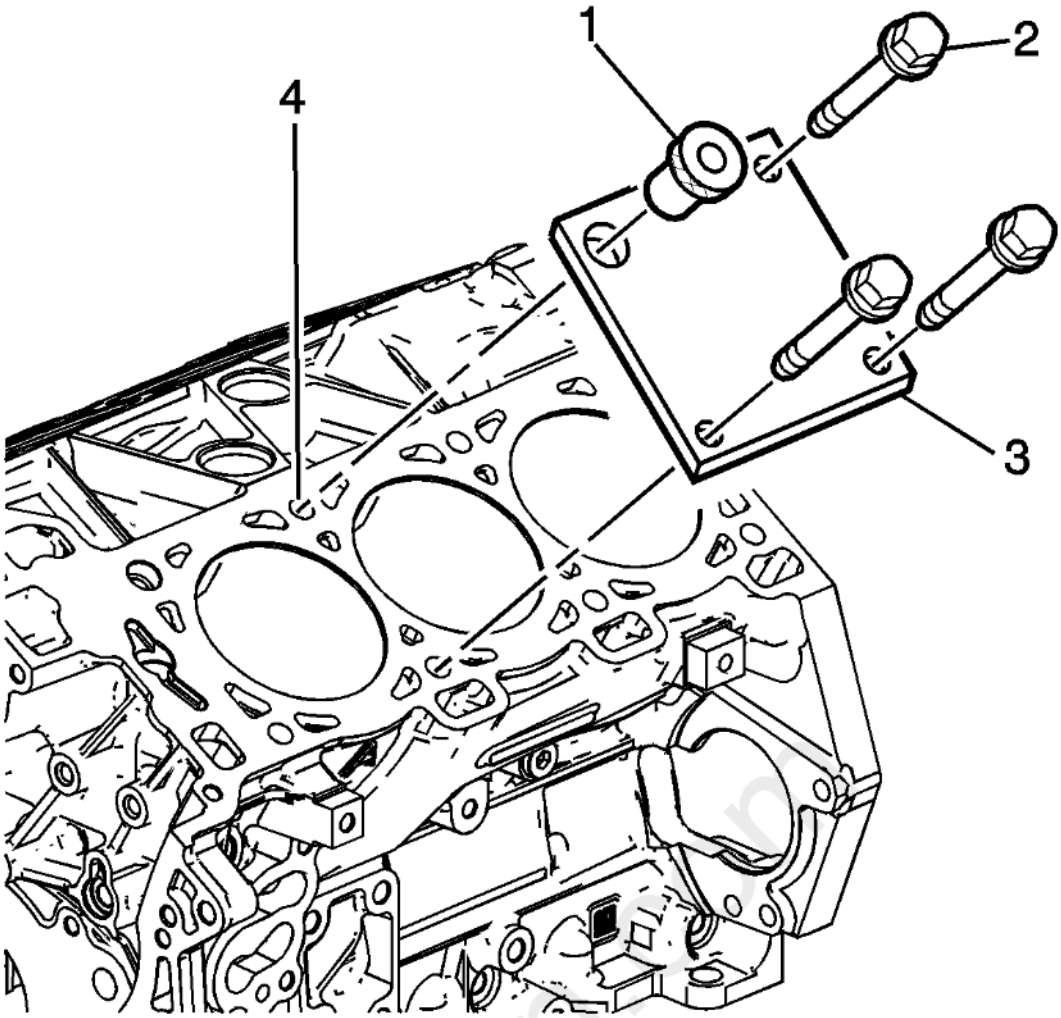

Fig. 360: View Of Fixture Plate & Components - Cylinder Head Bolt Hole
Courtesy of GENERAL MOTORS COMPANY

NOTE: **Remove the fixture plate prior to installing the insert with the installer tool.**

10. Remove the fixture plate bolts (2).
11. Remove the fixture plate (3) and bushing (1).

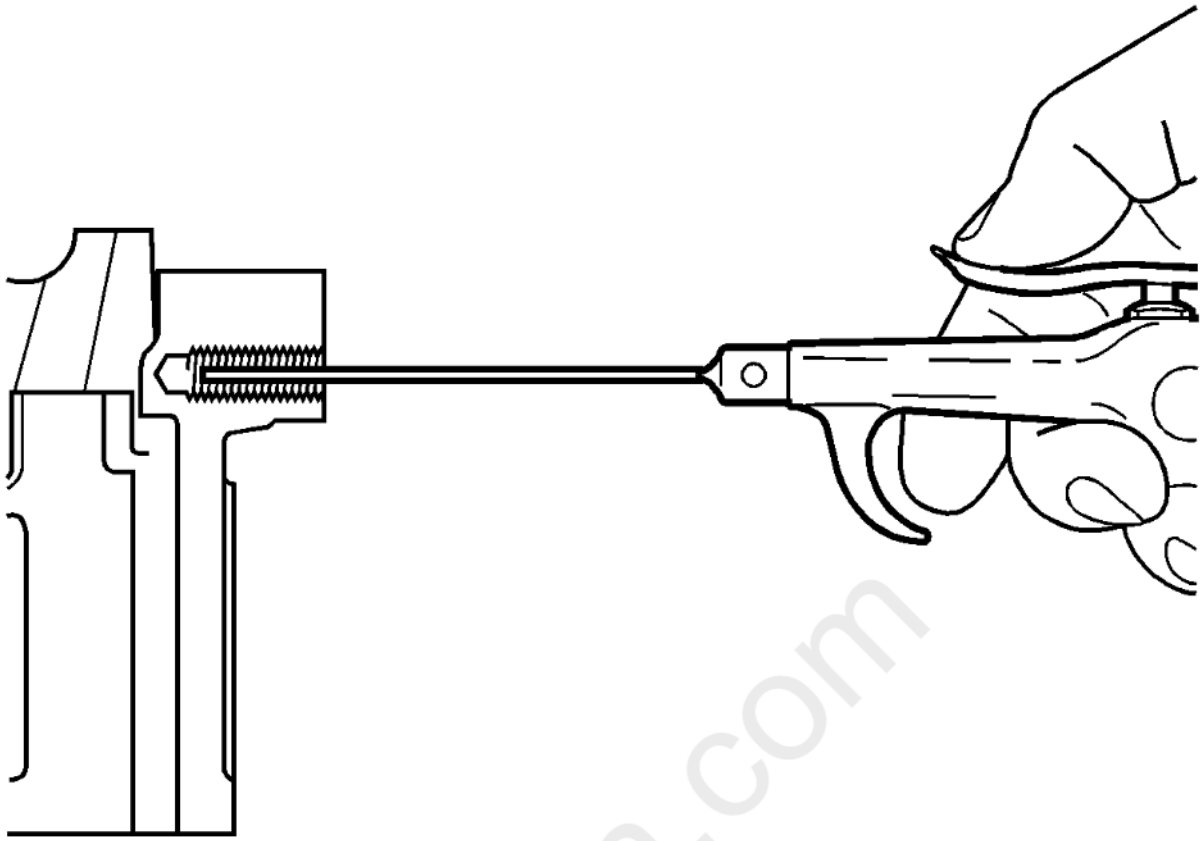

Fig. 361: Cleaning Out Metal Chips
Courtesy of GENERAL MOTORS COMPANY

NOTE: **All chips must be removed from the tapped hole prior to insert installation.**

12. Using compressed air, clean out any chips.

cardiagn.com

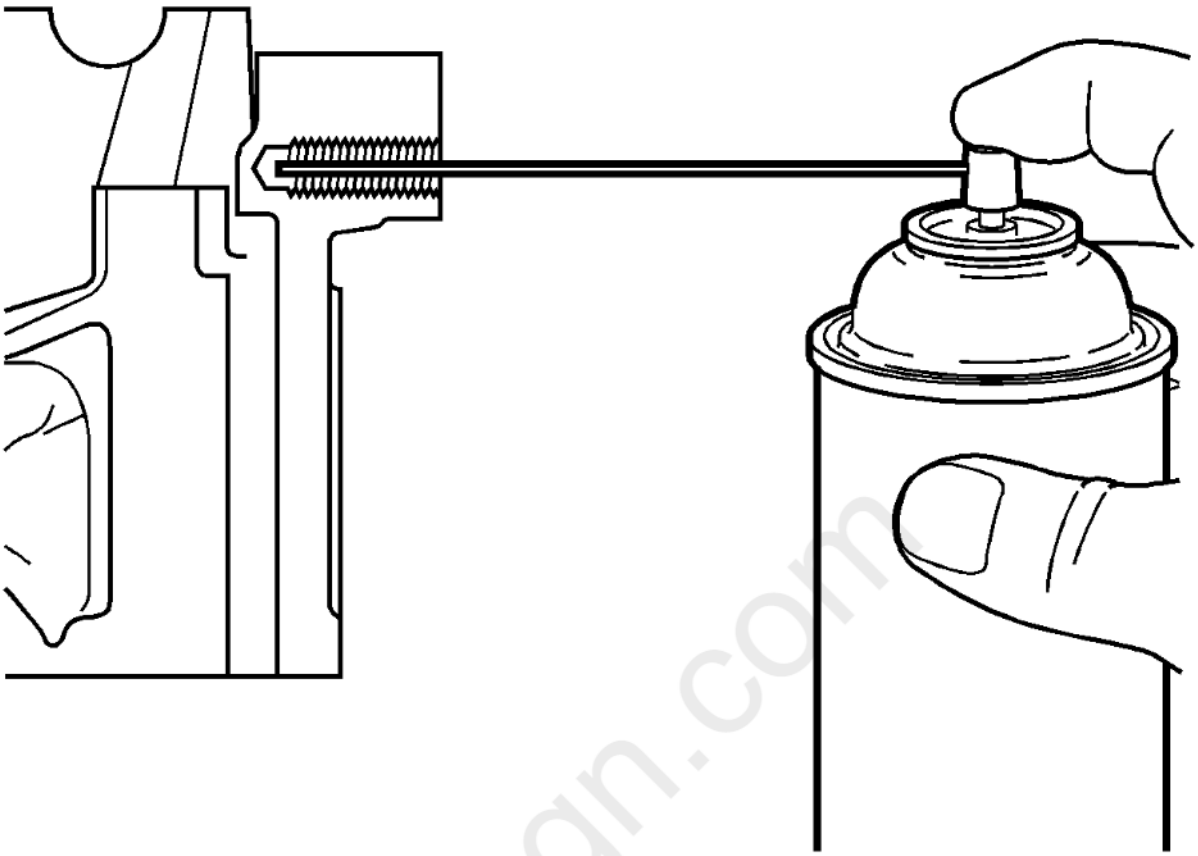

Fig. 362: Spraying Cleaner Into Tapped Hole
Courtesy of GENERAL MOTORS COMPANY

13. Spray cleaner into the tapped hole. Refer to **Adhesives, Fluids, Lubricants, and Sealers** for recommended cleaner.

cardiagn.com

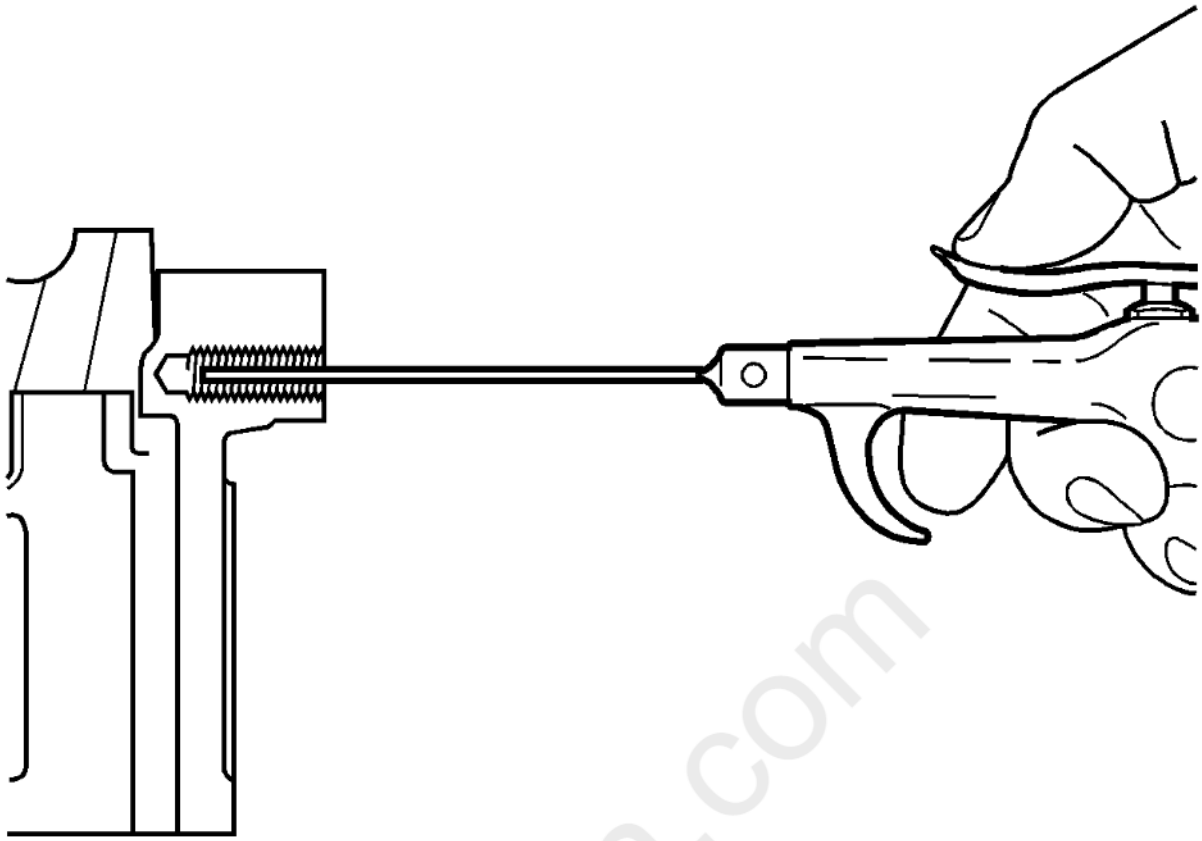

Fig. 363: Cleaning Out Metal Chips
Courtesy of GENERAL MOTORS COMPANY

NOTE: **All chips must be removed from the tapped hole prior to insert installation.**

14. Using compressed air, clean out any chips.

cardiagn.com

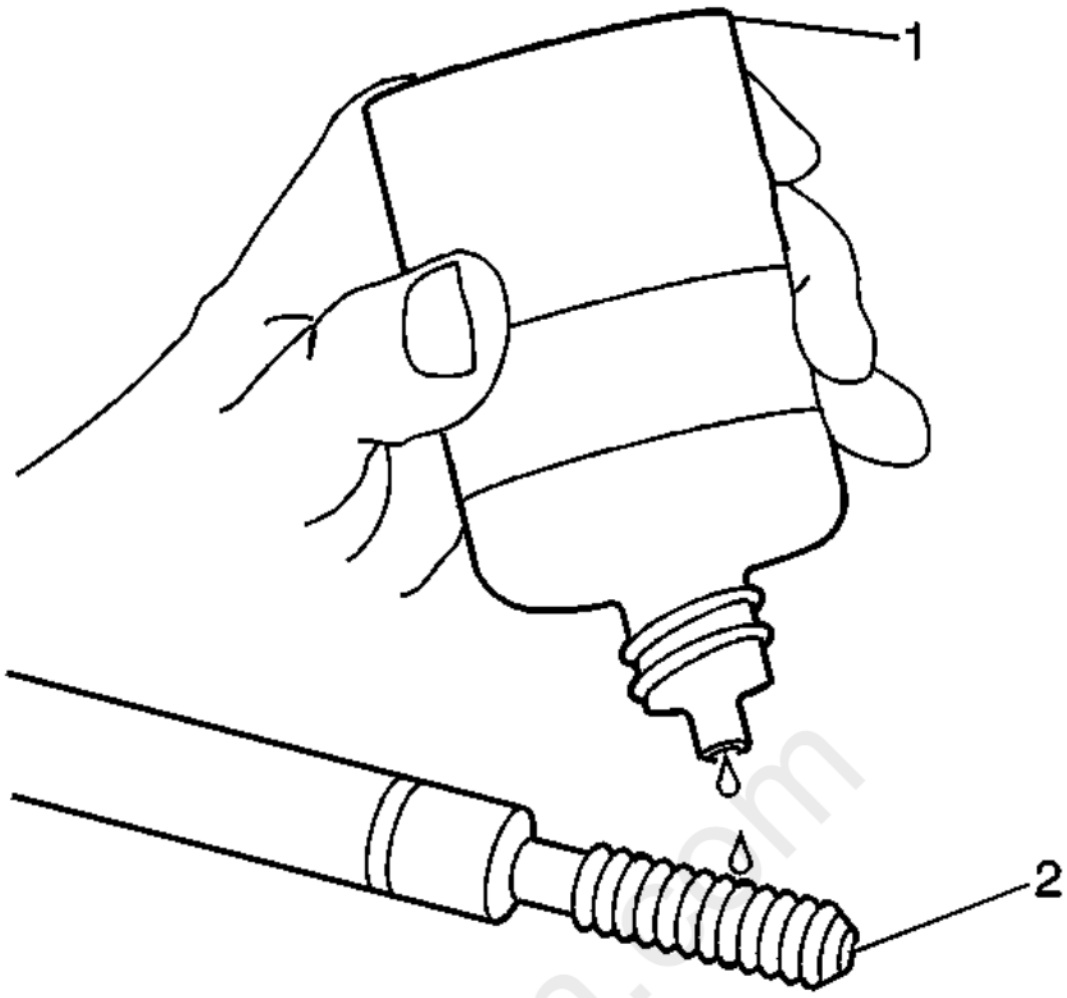

Fig. 364: Lubricating Installer Tool Using Driver Oil
Courtesy of GENERAL MOTORS COMPANY

NOTE: **Do not allow oil or other foreign material to contact the outside diameter (OD) of the insert.**

15. Lubricate the threads of the driver installation tool (2) with the EN 42385-110 (1).

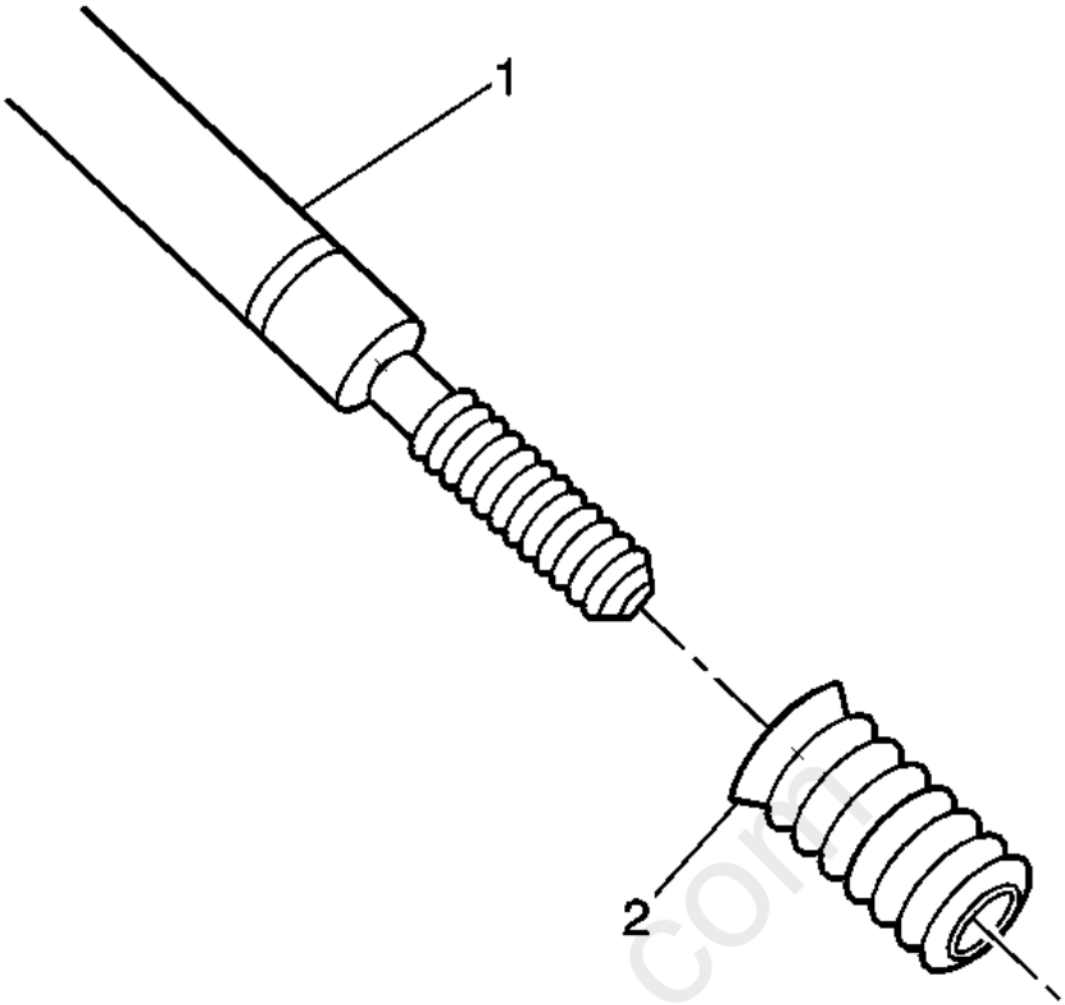

Fig. 365: View of Bushing Type Insert
Courtesy of GENERAL MOTORS COMPANY

16. Install the insert (2) onto the driver installation tool (1).

cardiagn.com

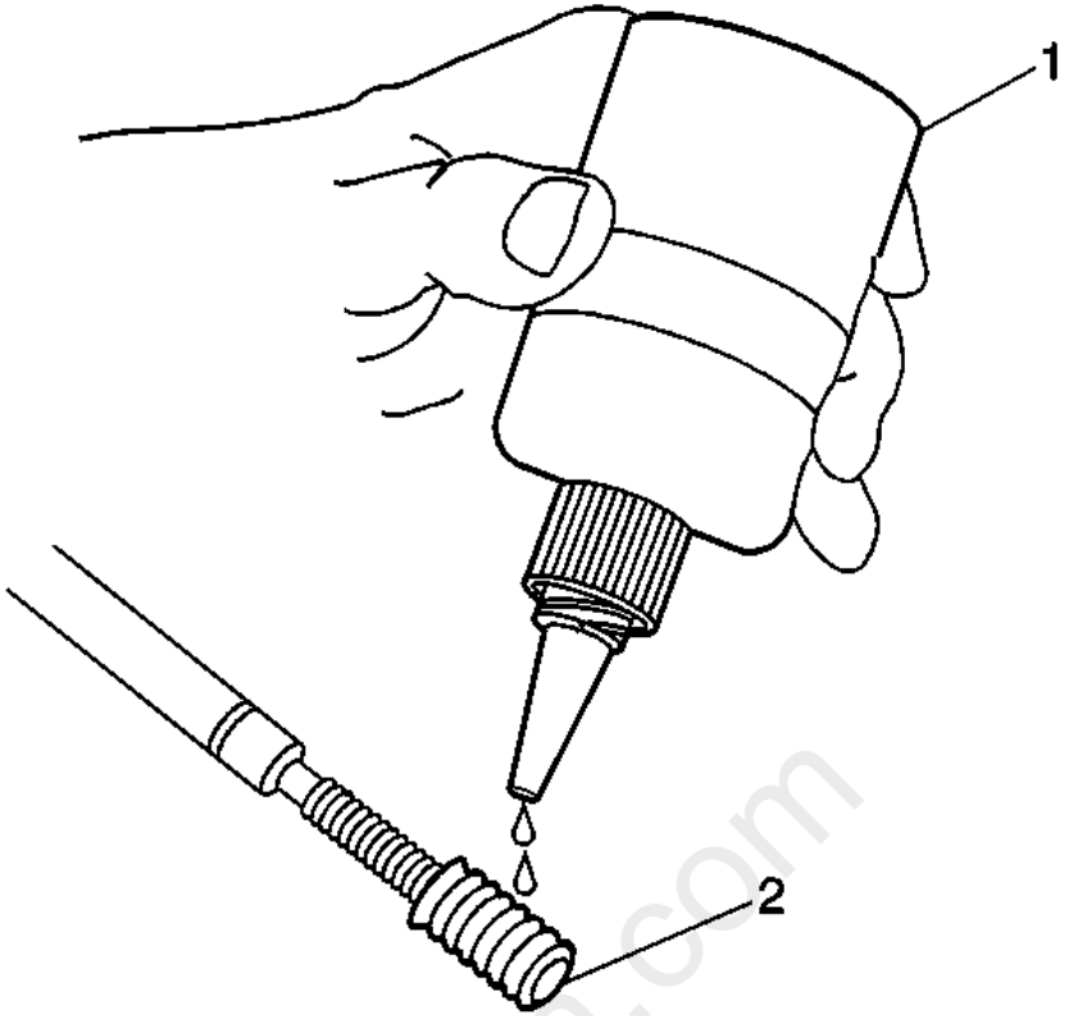

Fig. 366: Applying Threadlock To Insert
Courtesy of GENERAL MOTORS COMPANY

17. Apply threadlock sealant, EN 42385-109, LOCTITE 277Ã‚Â®; or equivalent (1) to the insert OD threads (2). Refer to **Adhesives, Fluids, Lubricants, and Sealers** for recommended sealant.

carmgn.com

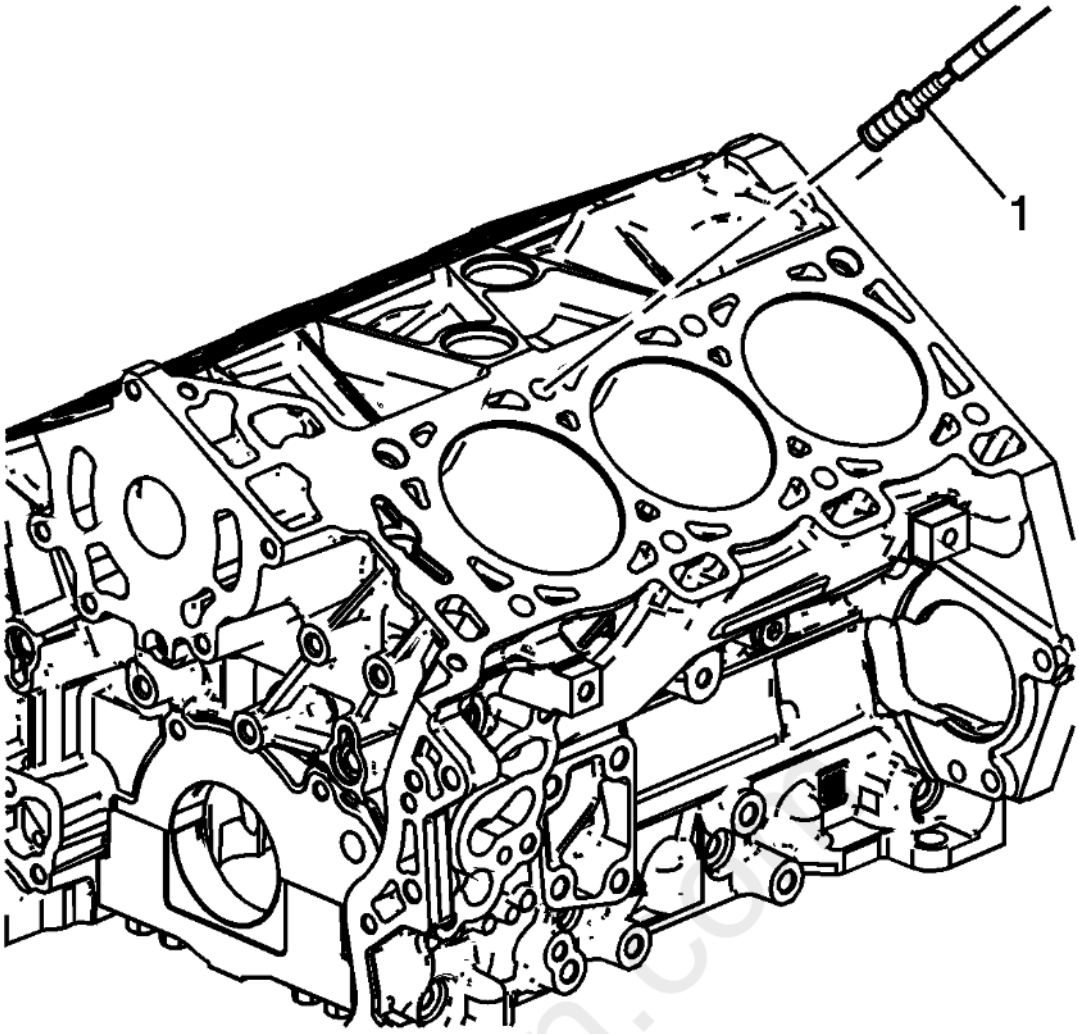

Fig. 367: Installing Installation Driver By Hand
Courtesy of GENERAL MOTORS COMPANY

18. Install the insert and installation driver (1) into the tapped hole by hand only.
19. Start the insert into the threaded hole.

NOTE: **If the insert will not thread down until the flange contacts the counterbored surface remove the insert immediately with a screw extracting tool and inspect the tapped hole for any remaining chips and/or improper tapping.**

20. Install the insert until the flange of the insert contacts the counterbored surface.

NOTE: **The driver installation tool will tighten up before screwing completely through the insert. This is acceptable. The threads at the bottom of the insert are being formed and the insert is mechanically locking the insert into the base material threads.**

21. Continue to rotate the driver installation tool through the insert.

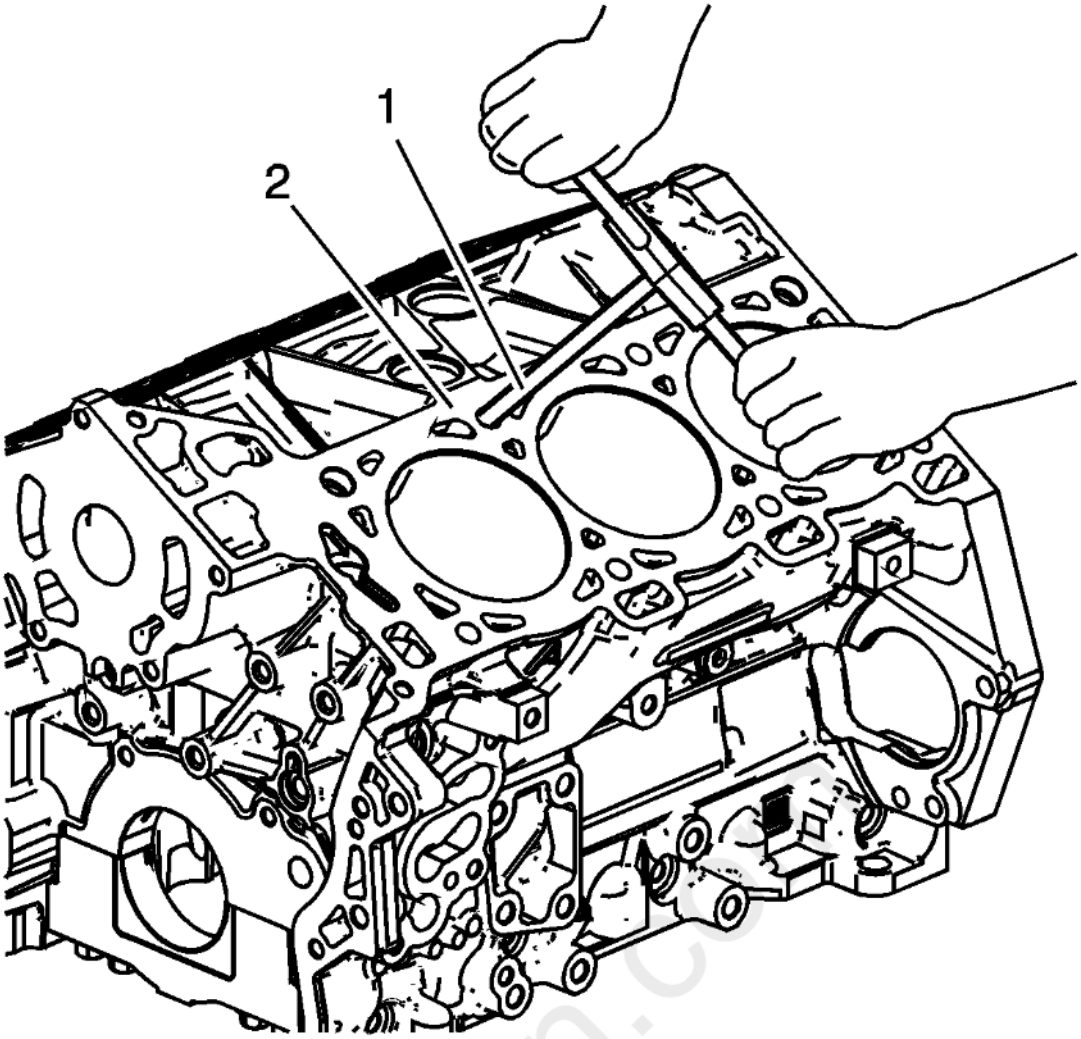

Fig. 368: View Of Driver Installation Tool & Surface Of Engine Block Deck
Courtesy of GENERAL MOTORS COMPANY

22. In order to completely form the new threads in the insert, rotate the driver installation tool through the insert until the mark (1) on the driver installation tool aligns with the surface of the engine block deck (2).
23. Inspect the insert for proper installation into the tapped hole.

Crankshaft Main Bolt Hole Thread Repair

Special Tools

- **EN 42385-700** High Feature Thread Repair Kit
- **EN 42385-2000** Thread Insert Kit

For equivalent regional tools, refer to **Special Tools** .

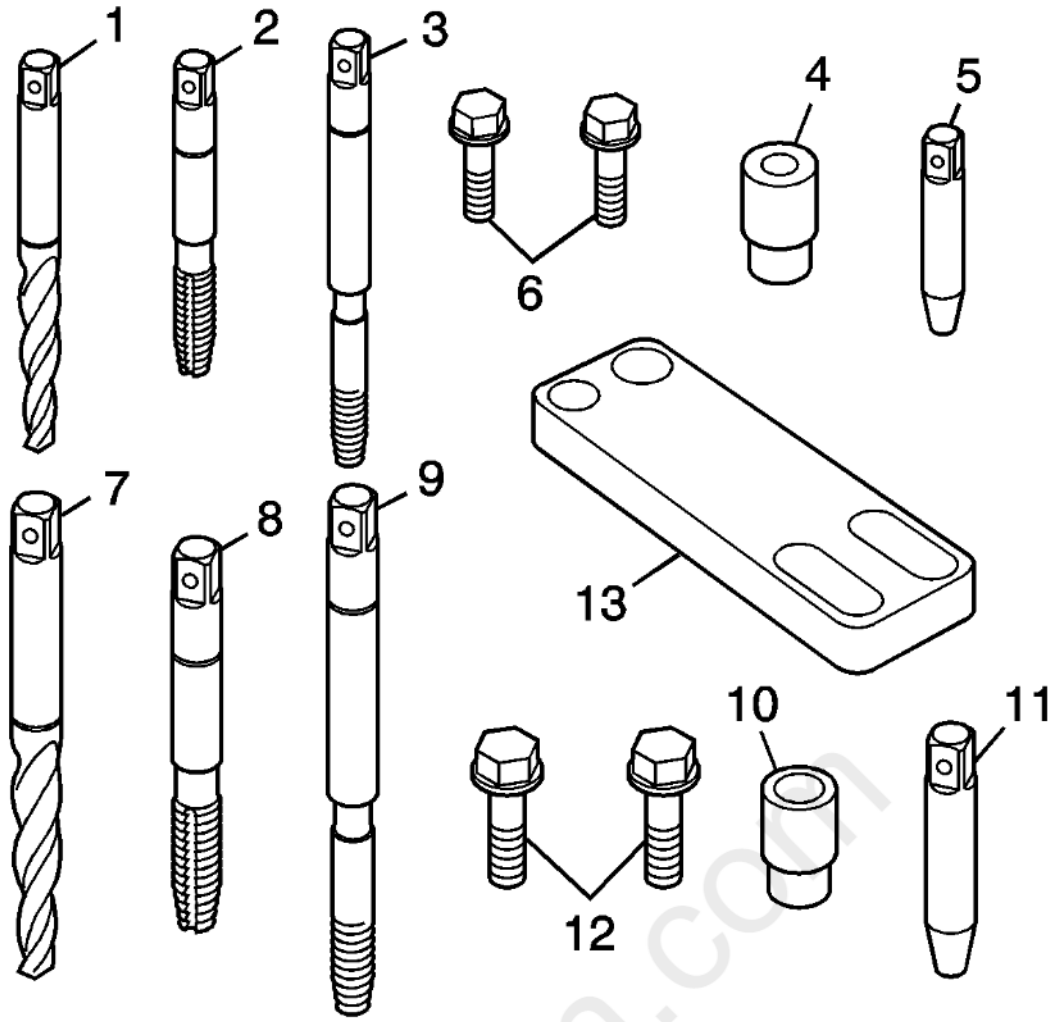

Fig. 369: High Feature Thread Repair Kit
Courtesy of GENERAL MOTORS COMPANY

NOTE:

- **In order to repair some crankshaft main bolt holes it will be necessary to mount the fixture plate upside down.**
- **Do NOT remove the fixture plate prior to installing the insert with the installation driver. The fixture plate remains in position throughout the thread repair process.**

The crankshaft main bearing bolt hole thread repair tooling are in the kits **EN 42385-2000** insert kit and **EN 42385-700** kit. The crankshaft main bearing bolt hole thread repair components consist of the following:

- EN 42385-702 Drill (1) for outboard holes
- EN 42385-703 Tap (2) for outboard holes
- EN 42385-704 Installation driver (3) for outboard holes
- EN 42385-726 Bushing (4) for outboard holes
- EN 42385-727 Alignment pin (5) for outboard holes
- EN 42385-728 Bolts (6) for outboard holes
- EN 42385-720 Drill (7) for inboard holes
- EN 42385-721 Tap (8) for inboard holes
- EN 42385-722 Installation driver (9) for inboard holes
- EN 42385-713 Bushing (10)
- EN 42385-308 Alignment pin (11)
- EN 42385-734 Bolts (12)
- EN 42385-712 Fixture plate (13)

WARNING: Refer to Safety Glasses Warning .

NOTE:

- **Ensure the fixture plate is installed during the machining and installation processes of the insert.**
- **The use of a cutting type fluid, WD 40Ã‚Â® or equivalent is recommended when performing the drilling, counterboring and tapping procedures. Refer to Adhesives, Fluids, Lubricants, and Sealers for recommended cutting fluid.**

When installed to the proper depth, the flange of the insert will be seated against the counterbore of the drilled/tapped hole.

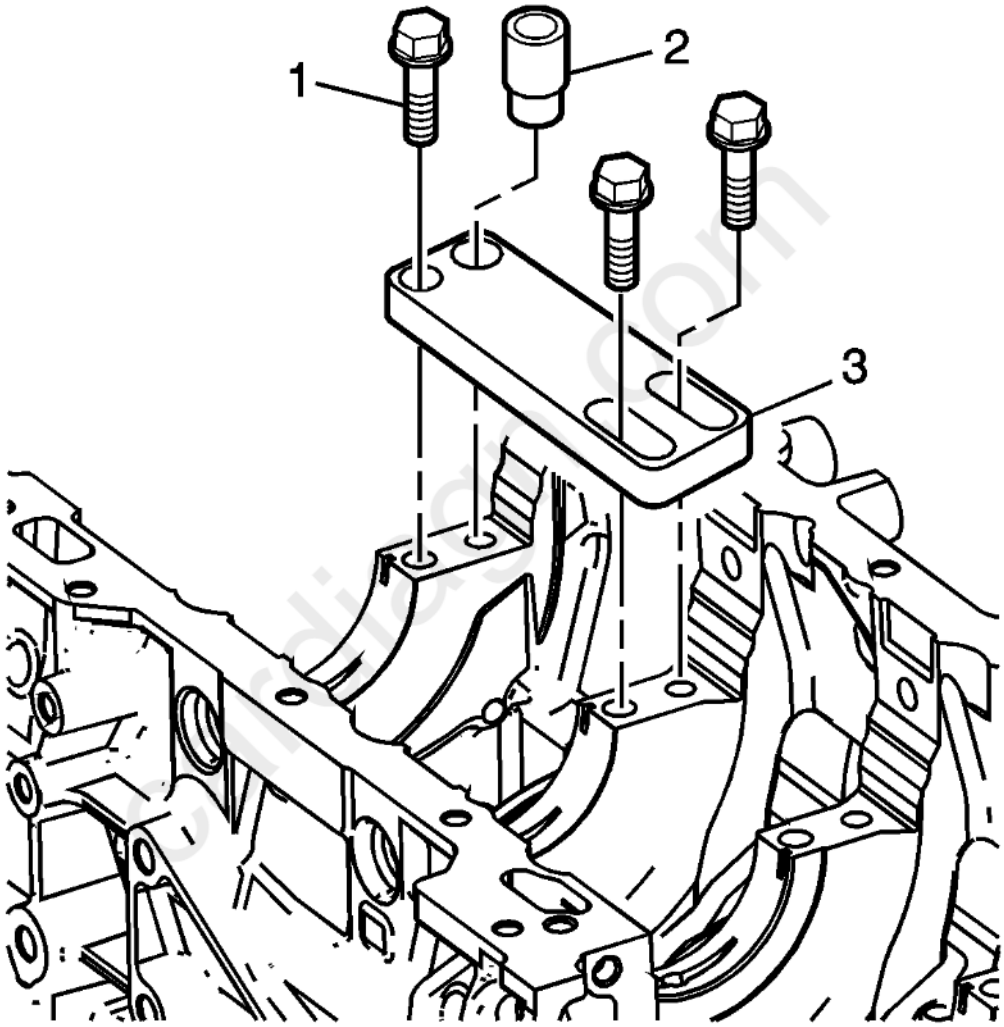

Fig. 370: Identifying Fixture Plate Over Crankshaft Main Cap Bolt Hole
Courtesy of GENERAL MOTORS COMPANY

1. Position the fixture plate (3) with the bushing (2) installed over the crankshaft main cap bolt hole to be repaired.
2. Loosely install the fixture plate bolts (1) into the remaining crankshaft main cap bolt holes.

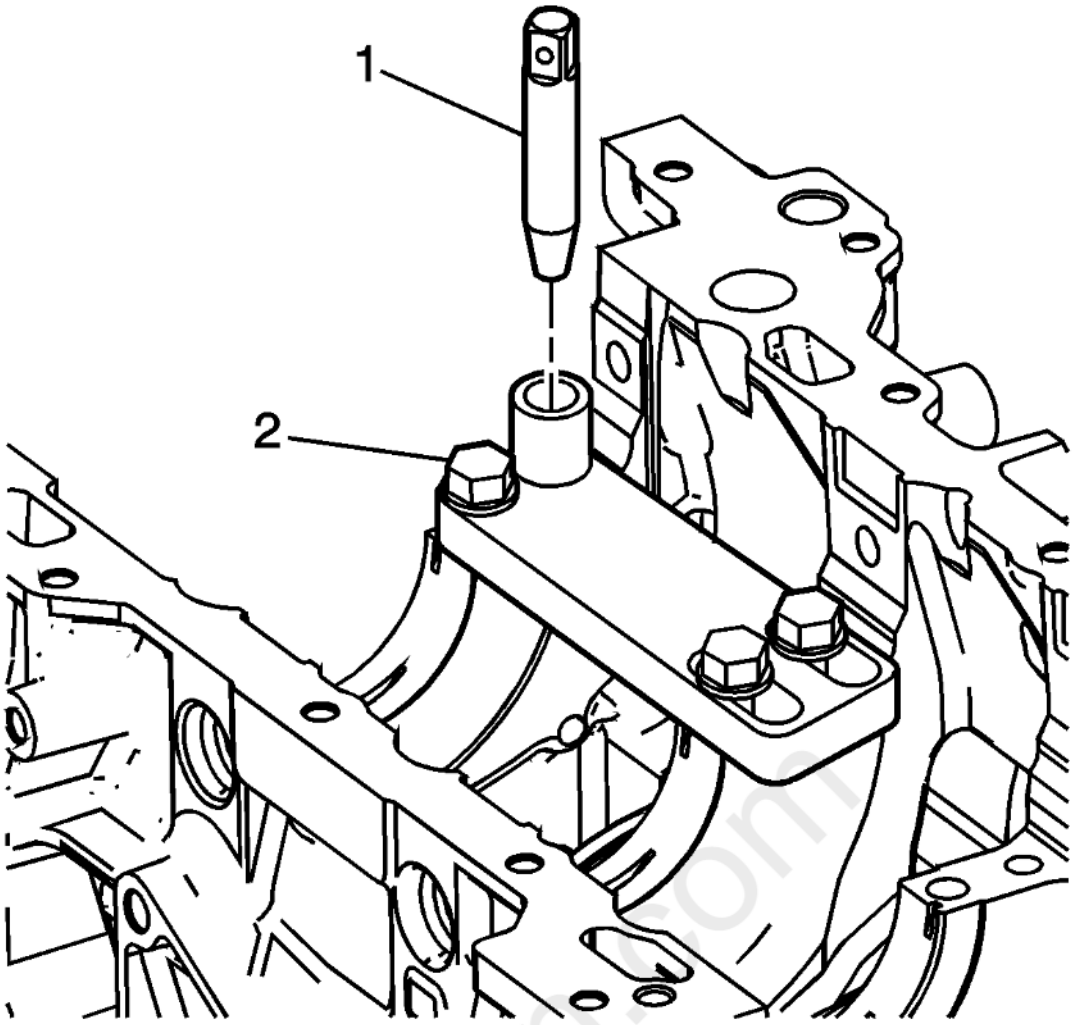

Fig. 371: Identifying Alignment Pin & Bushing
Courtesy of GENERAL MOTORS COMPANY

3. Position the alignment pin (1) through the bushing and into the crankshaft main cap bolt hole.
4. With the alignment pin in the desired crankshaft main cap bolt hole, tighten the fixture retaining bolts (2).
5. Remove the alignment pin (1) from the crankshaft main cap bolt hole.

cardiagn.com

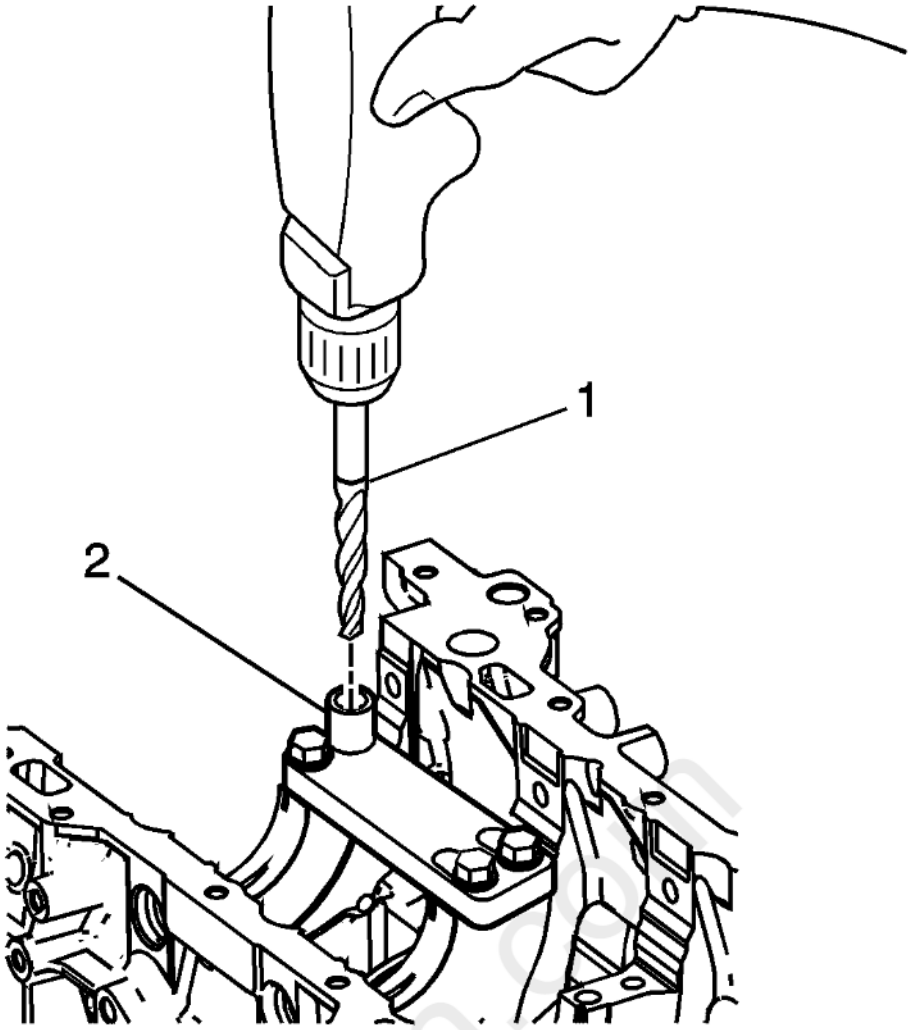

Fig. 372: Aligning Drill & Drill Bushing
Courtesy of GENERAL MOTORS COMPANY

NOTE:

- **During the drilling process, it is necessary to repeatedly remove the drill and clean chips from the hole and the flutes of the drill.**
- **Drill the crankshaft main bolt hole until the mark (1) on the drill aligns with the top of the drill bushing (2).**

6. Drill out the threads of the damaged hole.

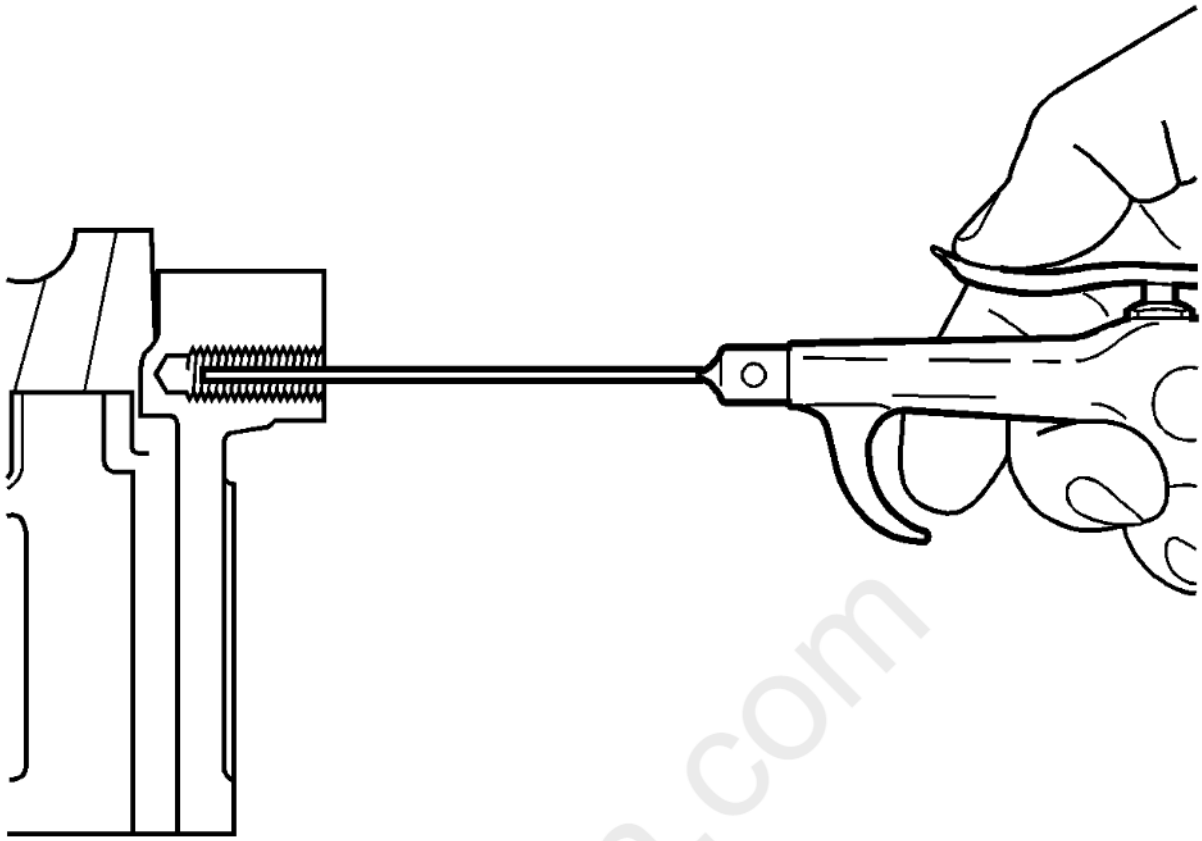

Fig. 373: Cleaning Out Metal Chips
Courtesy of GENERAL MOTORS COMPANY

NOTE: **All chips must be removed from the drilled hole prior to tapping.**

7. Using compressed air, clean out any chips.

cardiagn.com

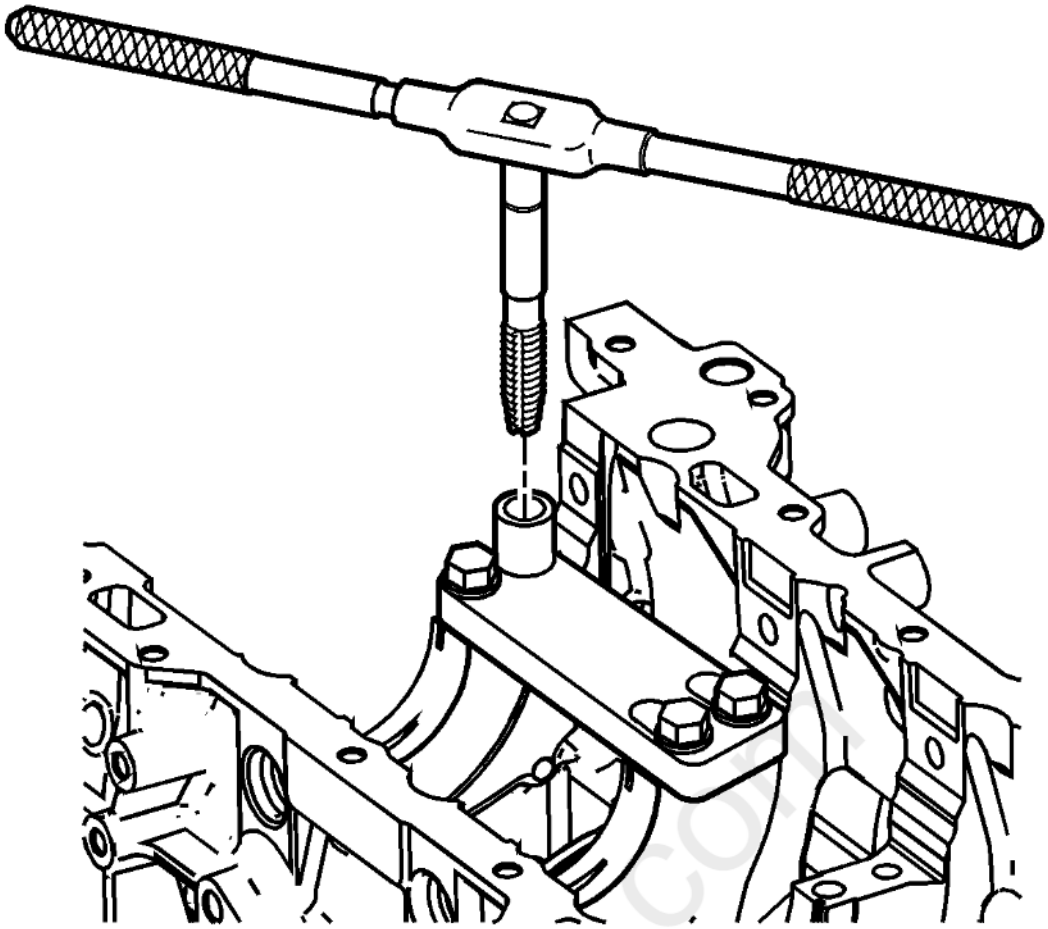

Fig. 374: View Of Tapping Wrench
Courtesy of GENERAL MOTORS COMPANY

NOTE:

- **Do not remove the fixture plate, ensure the fixture plate is installed during the machining and installation processes of the insert.**
- **During the tapping process, it is necessary to repeatedly remove the tap and clean chips from the hole and the flutes of the tap.**
- **Ensure the tap has created full threads at least to the depth equal to the insert length.**

8. Using a suitable tapping wrench, tap the threads of the drilled hole by hand only.

cardiagn.com

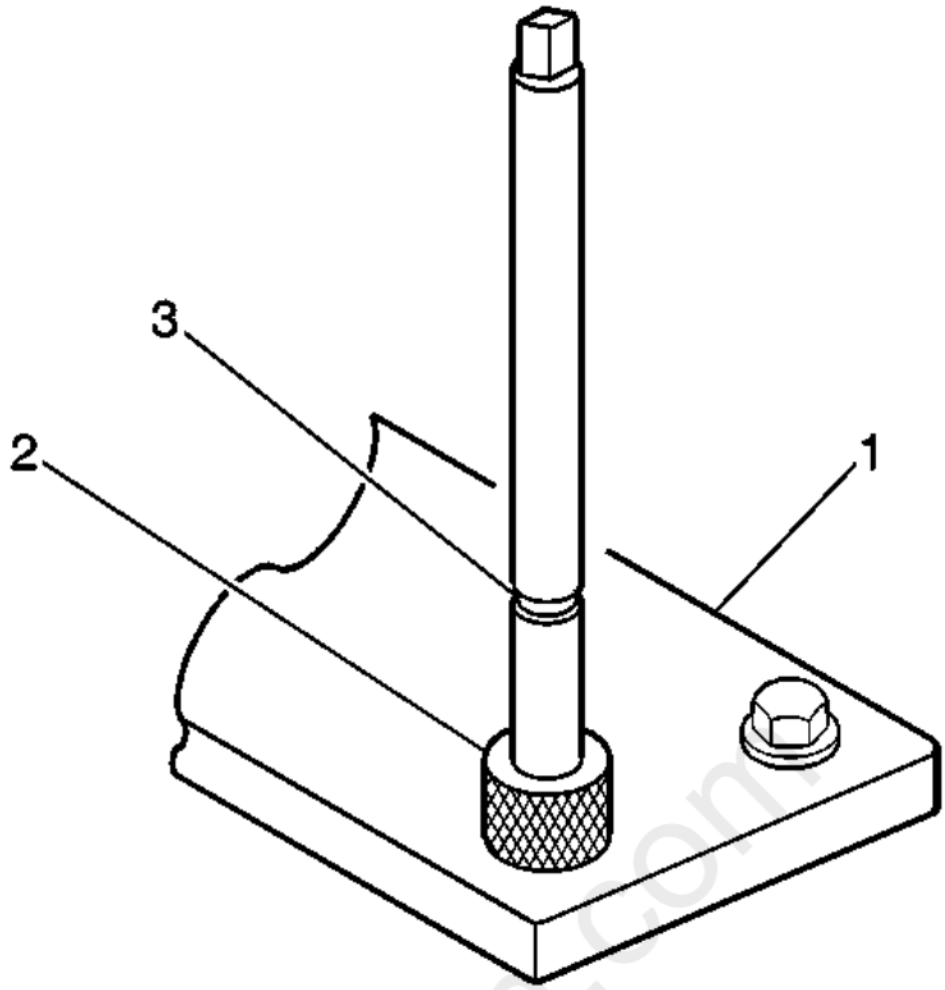

Fig. 375: View Of Fixture Plate, Drill Bushing & Tool Marking
Courtesy of GENERAL MOTORS COMPANY

9. In order to tap the new threads for the insert to the proper depth, rotate the tap into the crankshaft main cap bolt hole until the mark (3) on the tap aligns with the top of the drill bushing (2).

cardiagn.com

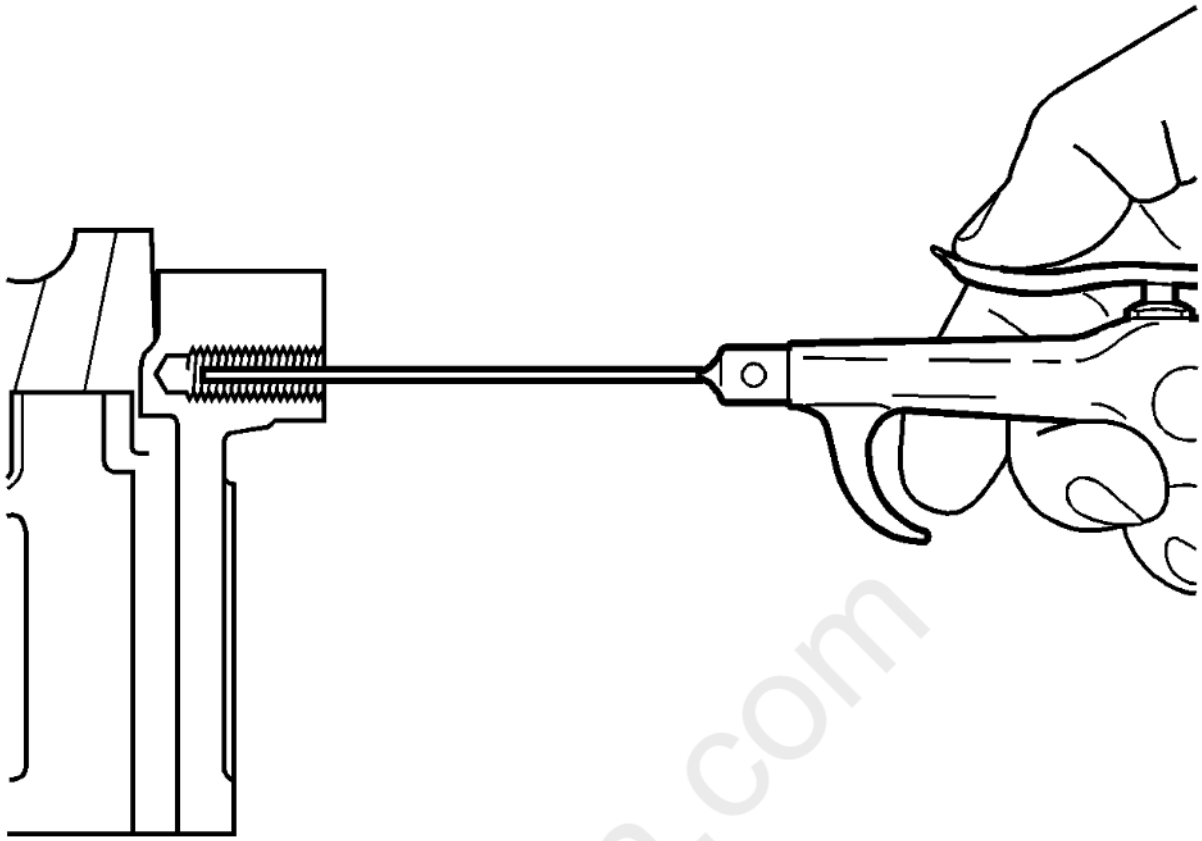

Fig. 376: Cleaning Out Metal Chips
Courtesy of GENERAL MOTORS COMPANY

NOTE: **All chips must be removed from the tapped hole prior to insert installation.**

10. Using compressed air, clean out any chips.

cardiagn.com

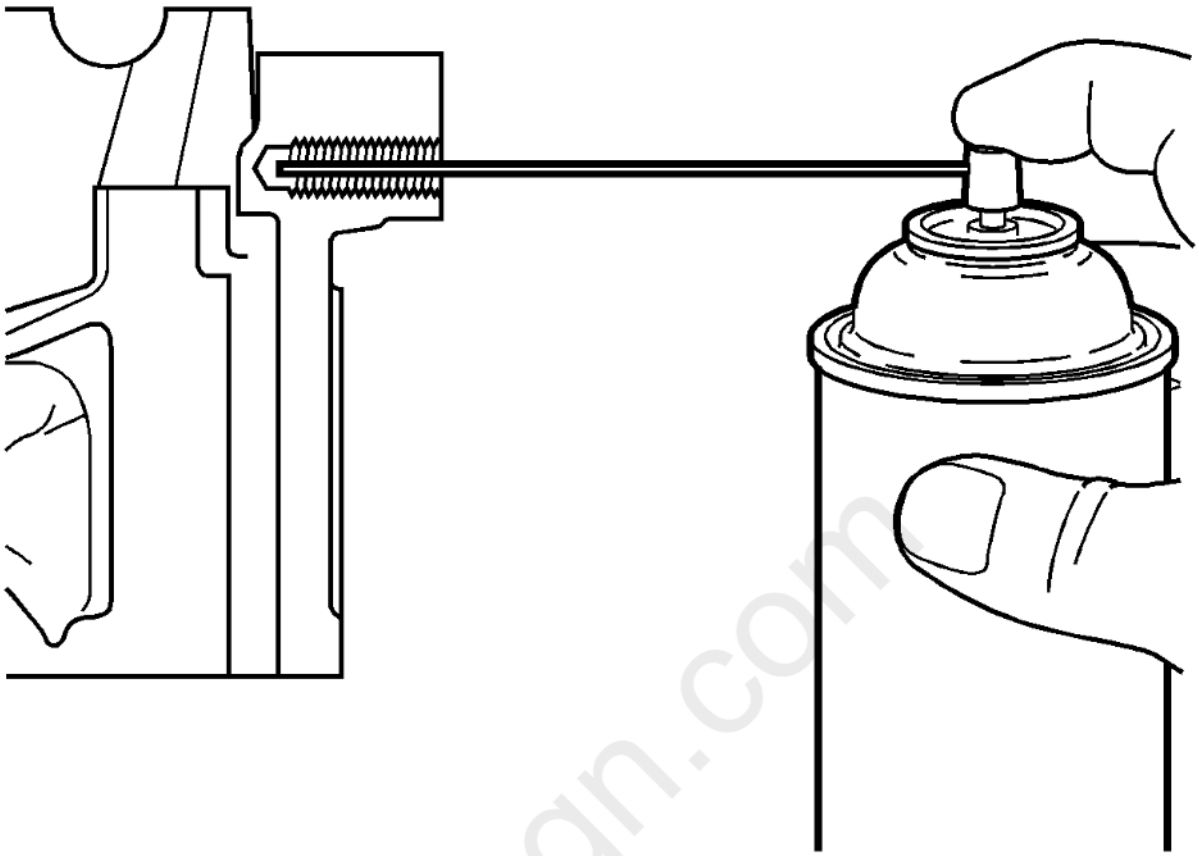

Fig. 377: Spraying Cleaner Into Tapped Hole
Courtesy of GENERAL MOTORS COMPANY

11. Spray cleaner into the tapped hole. Refer to **Adhesives, Fluids, Lubricants, and Sealers** for recommended cleaner.

cardiagn.com

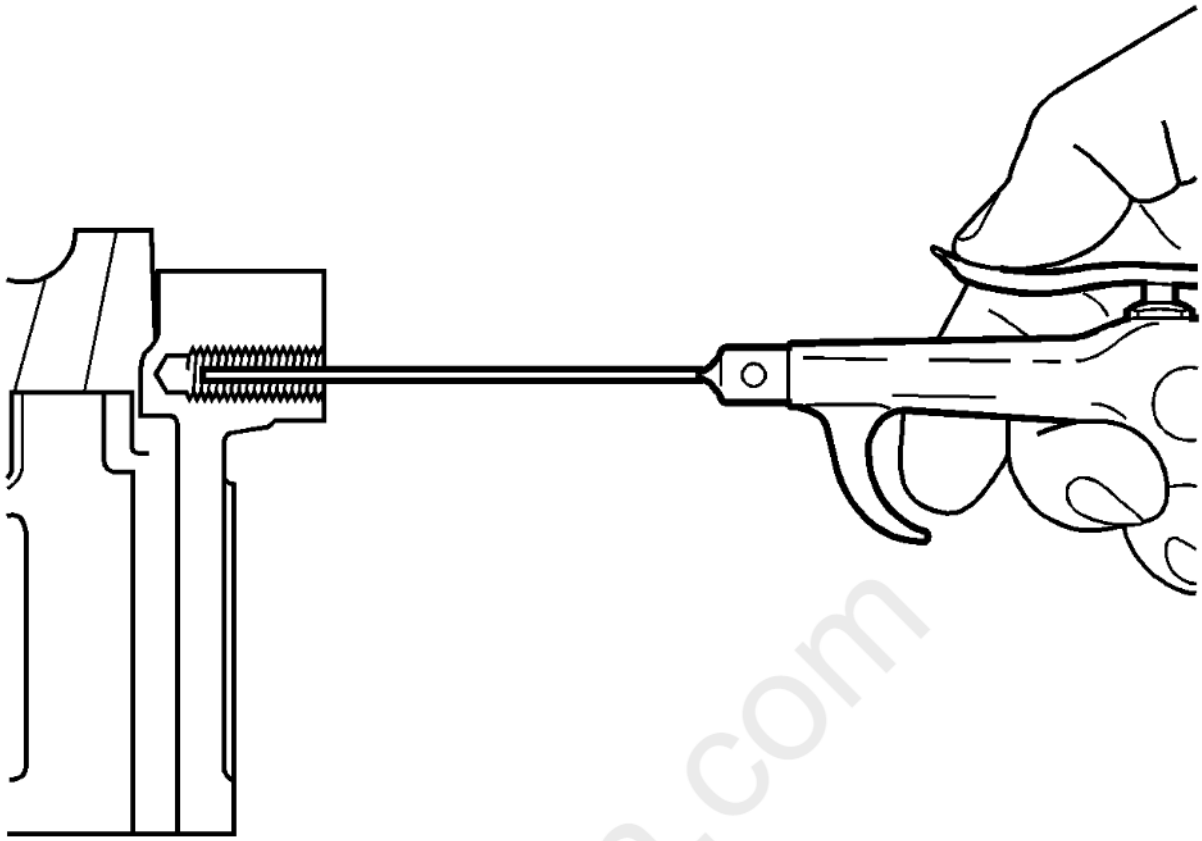

Fig. 378: Cleaning Out Metal Chips
Courtesy of GENERAL MOTORS COMPANY

NOTE: **All chips must be removed from the tapped hole prior to insert installation.**

12. Using compressed air, clean out any chips.

cardiagn.com

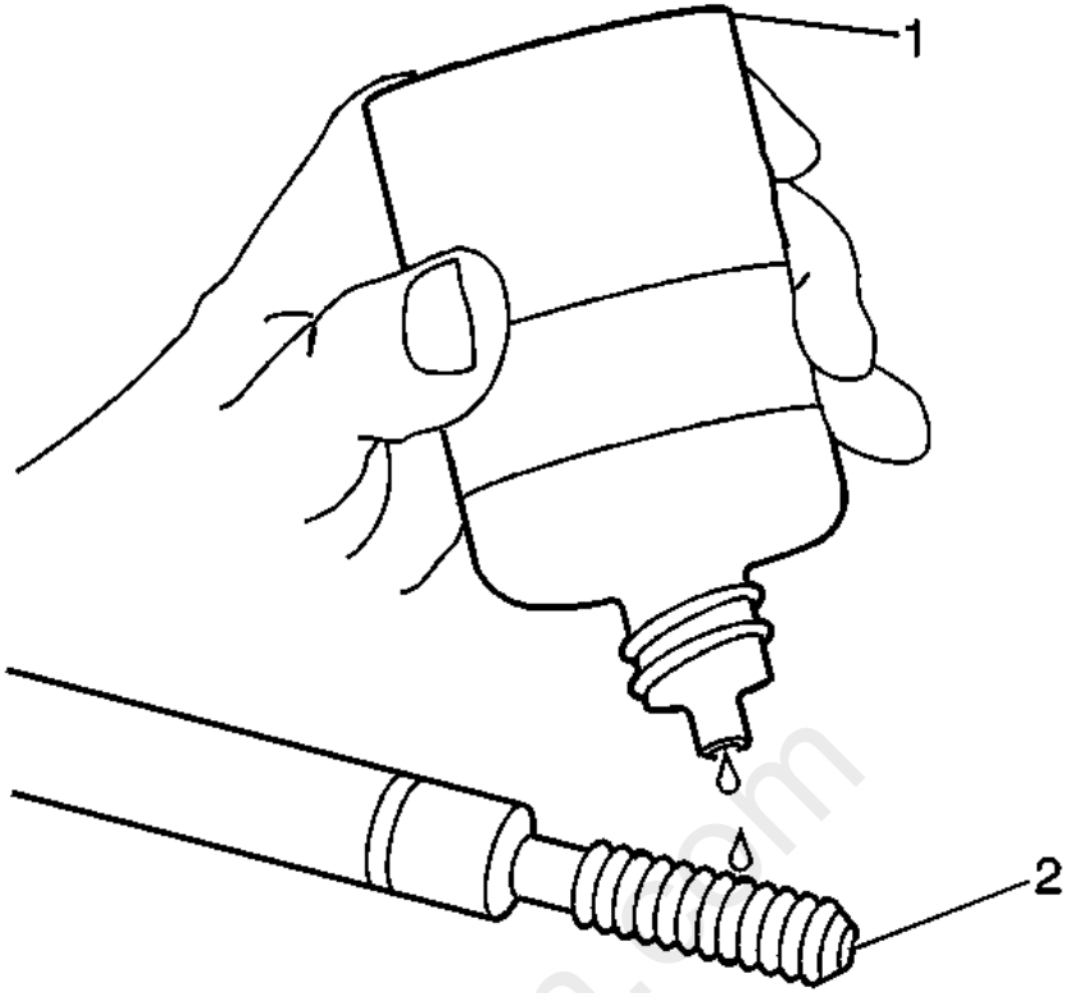

Fig. 379: Lubricating Installer Tool Using Driver Oil
Courtesy of GENERAL MOTORS COMPANY

NOTE:

- **Do not remove the fixture plate, ensure the fixture plate is installed during the installation process of the insert.**
- **Do not allow oil or other foreign material to contact the outside diameter (OD) of the insert.**

13. Lubricate the threads of the driver installation tool (2) with the EN 42385-110 (1).

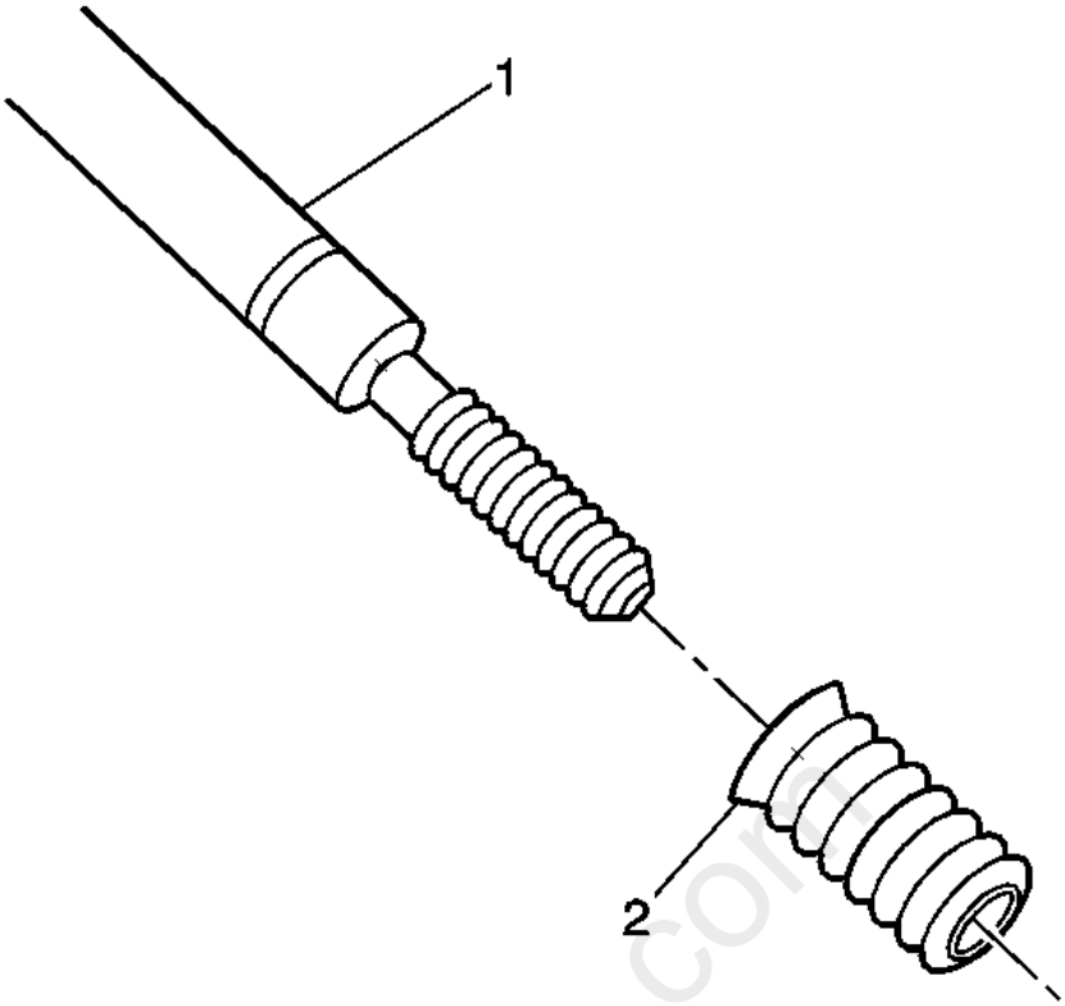

Fig. 380: View of Bushing Type Insert
Courtesy of GENERAL MOTORS COMPANY

14. Install the insert (2) onto the driver installation tool (1).

cardiagn.com

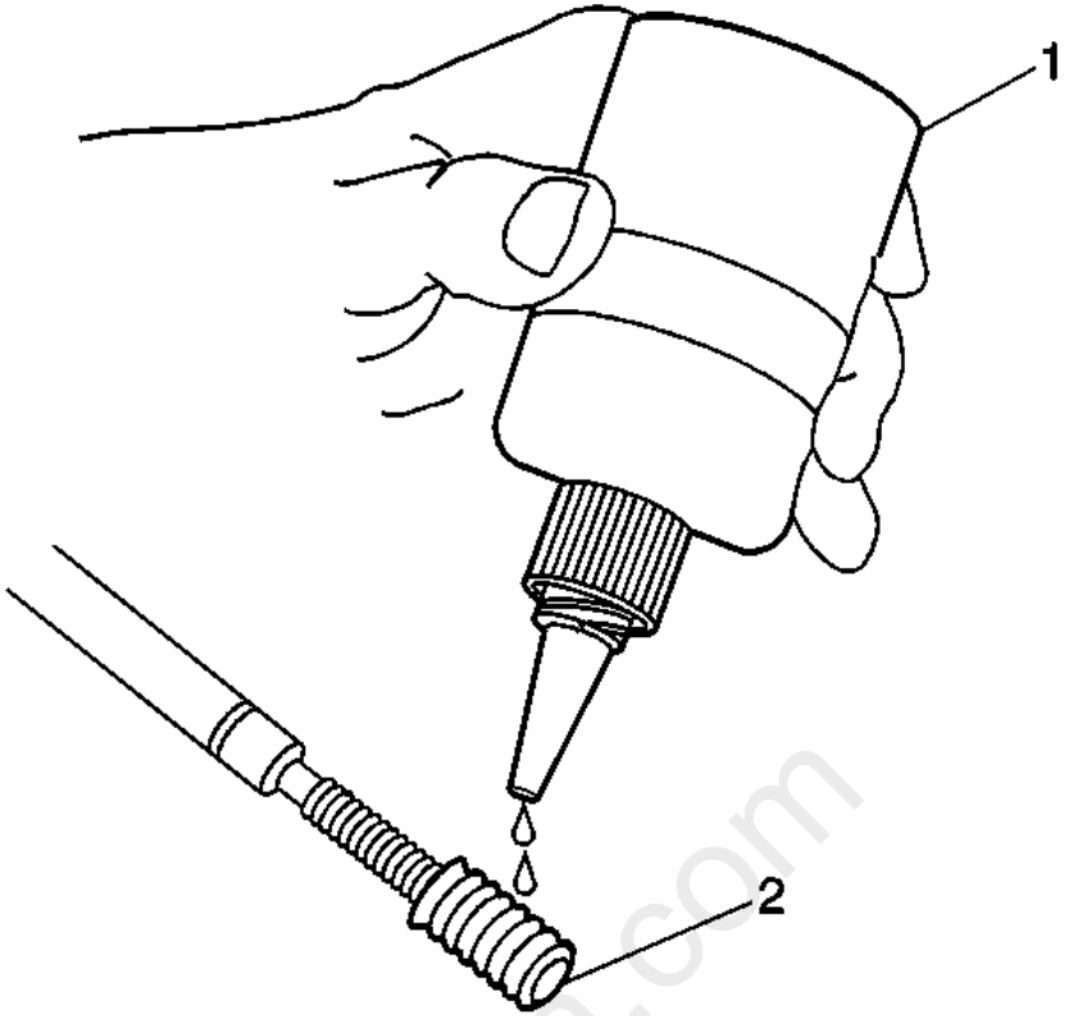

Fig. 381: Applying Threadlock To Insert
Courtesy of GENERAL MOTORS COMPANY

15. Apply threadlock sealant, EN 42385-109, LOCTITE 277Ã‚Â®, or equivalent (1) to the insert OD threads (2). Refer to **Adhesives, Fluids, Lubricants, and Sealers** for recommended sealant.

carmgn.com

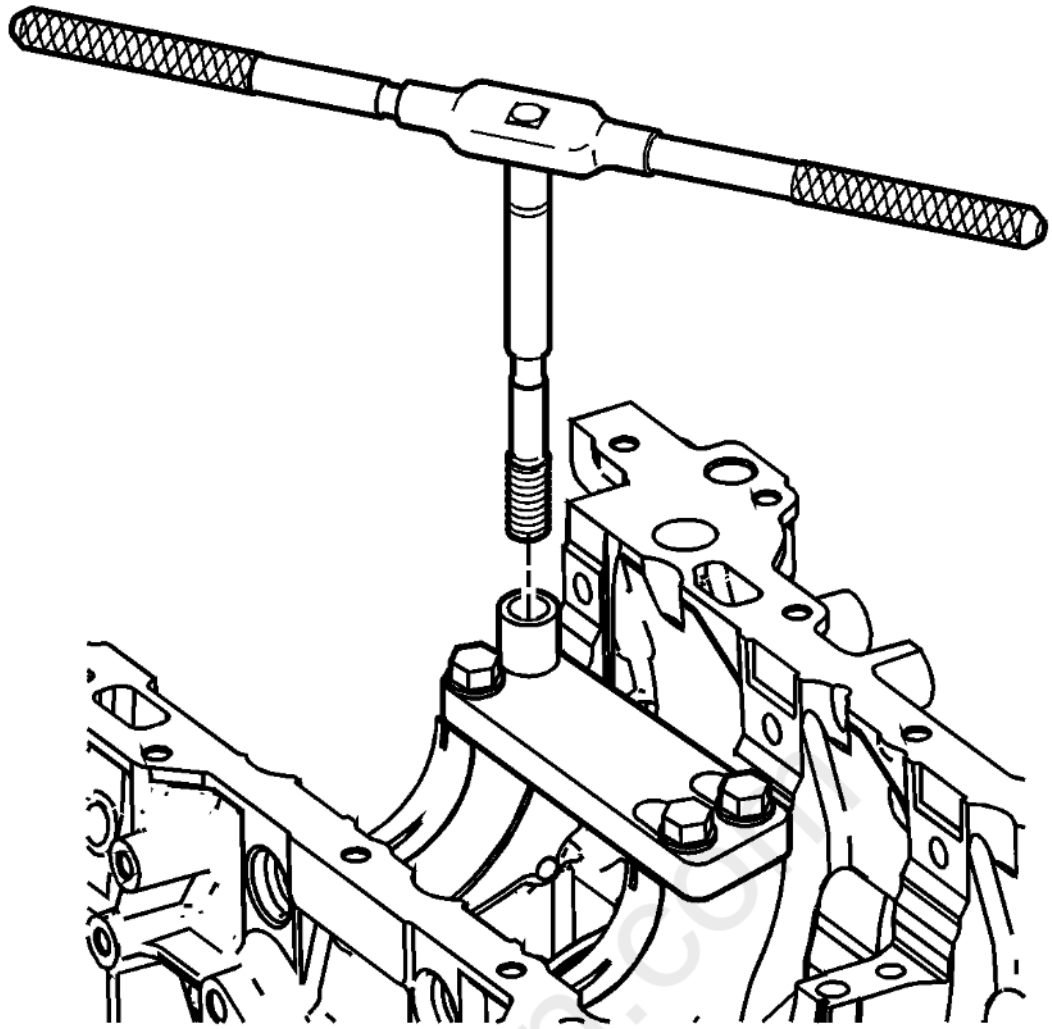

Fig. 382: Identifying Tapping Wrench
Courtesy of GENERAL MOTORS COMPANY

16. Install the insert and installation driver into the tapped hole by hand only.
17. Start the insert into the threaded hole.

NOTE: **If the insert will not thread down until the flange contacts the counterbored surface remove the insert immediately with a screw extracting tool and inspect the tapped hole for any remaining chips and/or improper tapping.**

18. Install the insert until the flange of the insert contacts the counterbored surface.

NOTE: **The driver installation tool will tighten up before screwing completely through the insert. This is acceptable. The threads at the bottom of the insert are being formed and the insert is mechanically locking the insert into the base material threads.**

19. Continue to rotate the driver installation tool through the insert.

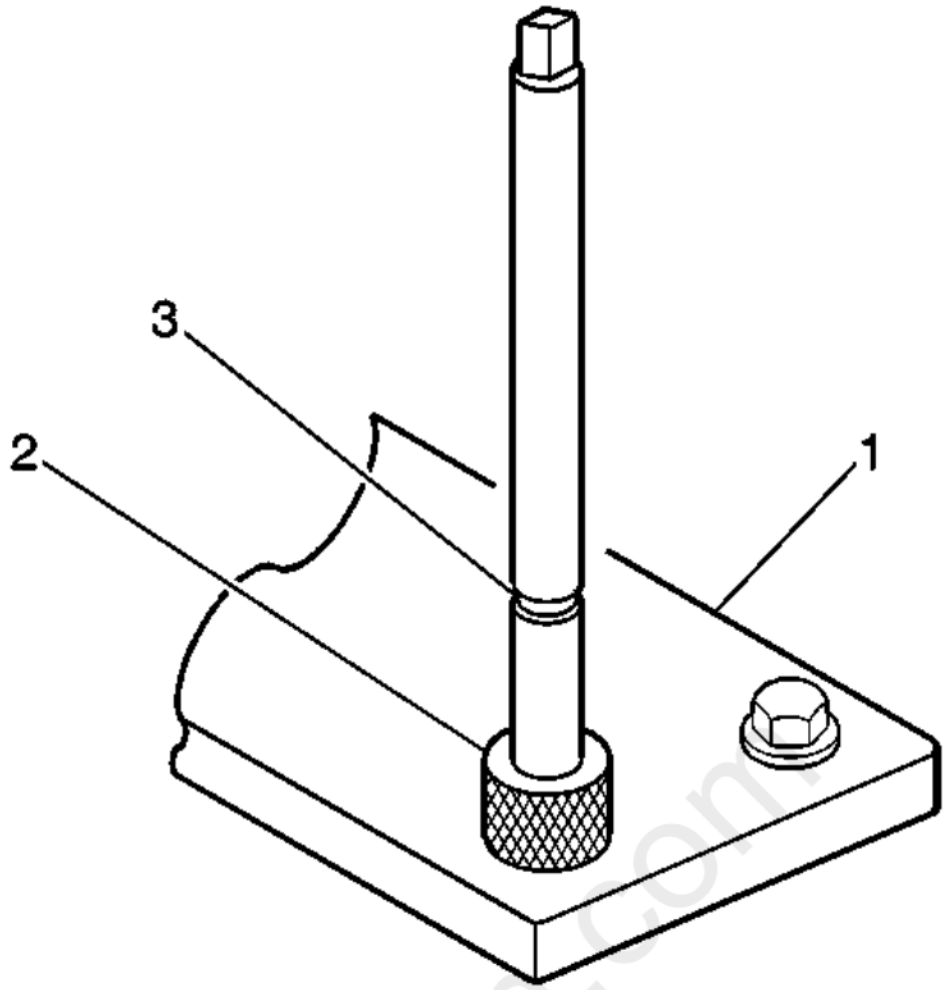

Fig. 383: View Of Fixture Plate, Drill Bushing & Tool Marking
Courtesy of GENERAL MOTORS COMPANY

20. Rotate the driver installation tool until the mark (3) on the driver installation tool aligns with the top of the drill bushing (2).
21. Inspect the insert for proper installation into the tapped hole.

cardiagn.com

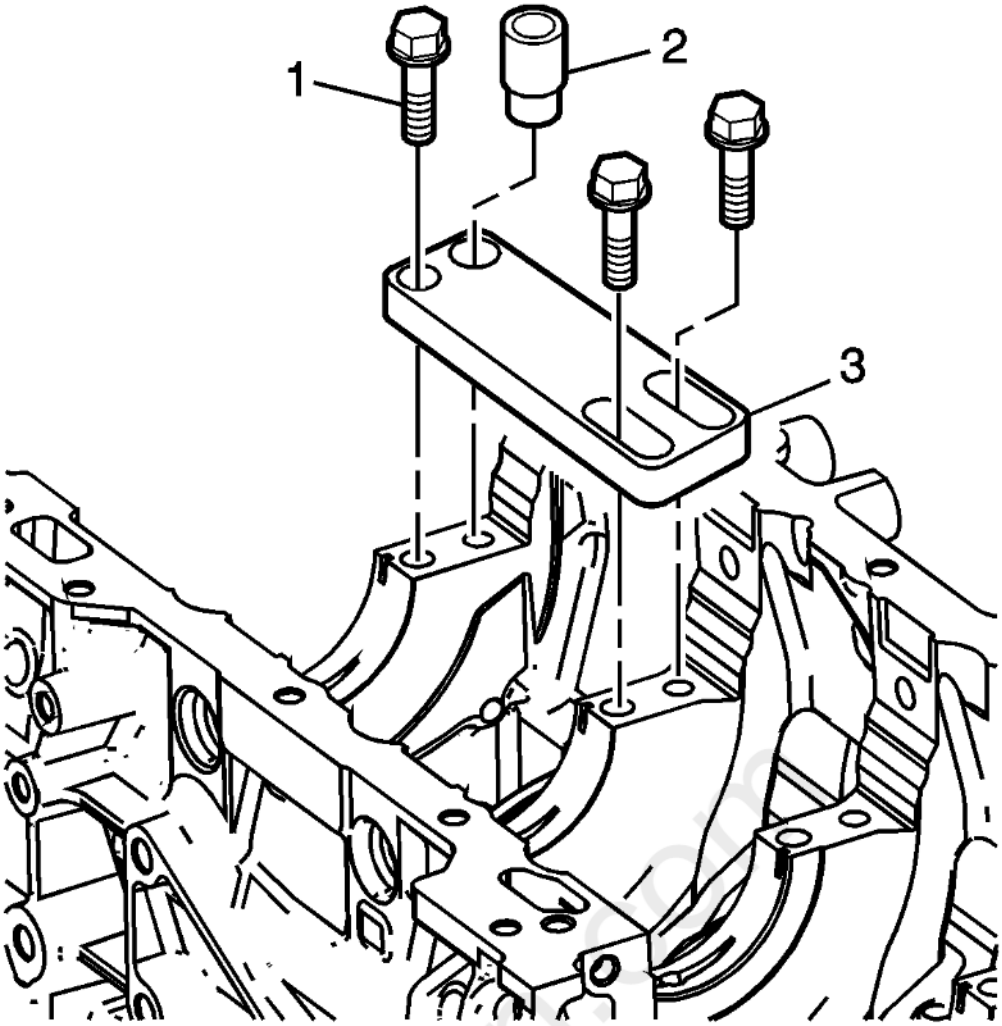

Fig. 384: Identifying Fixture Plate Over Crankshaft Main Cap Bolt Hole
Courtesy of GENERAL MOTORS COMPANY

22. Remove the fixture plate bolts (1).
23. Remove the fixture plate (3) and bushing (2).

Inboard Bolt Holes

cardiagn.com

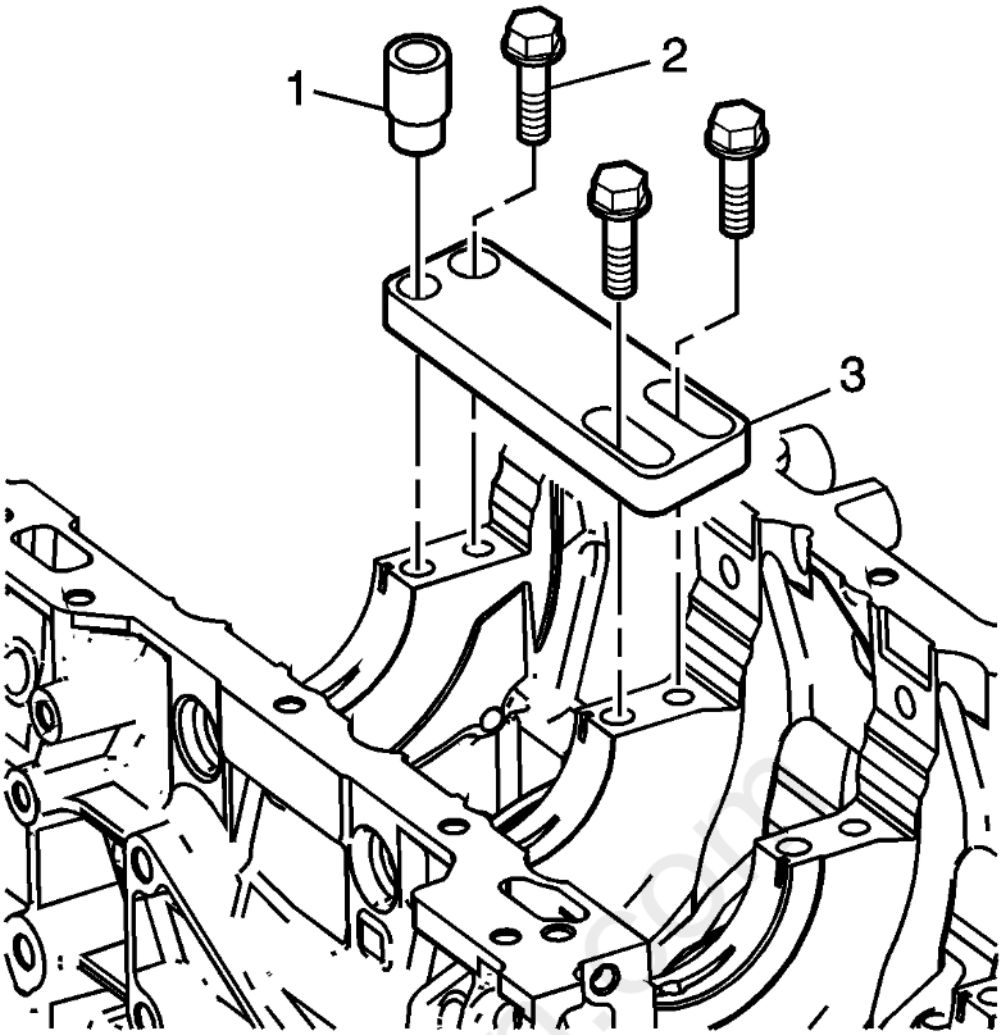

Fig. 385: View Of Fixture Plate & Components - Inboard Bolt Holes
Courtesy of GENERAL MOTORS COMPANY

WARNING: Refer to Safety Glasses Warning .

NOTE:

- Ensure the fixture plate is installed during the machining and installation processes of the insert.
- The use of a cutting type fluid, WD 40Ã‚Â® or equivalent is recommended when performing the drilling, counterboring and tapping procedures. Refer to Adhesives, Fluids, Lubricants, and Sealers for recommended cutting fluid.

  When installed to the proper depth, the flange of the insert will be seated against the counterbore of the drilled/tapped hole.

1. Position the fixture plate (3) with the bushing (1) installed over the crankshaft main cap bolt hole to be repaired.
2. Loosely install the fixture plate bolts (2) into the remaining crankshaft main cap bolt holes.

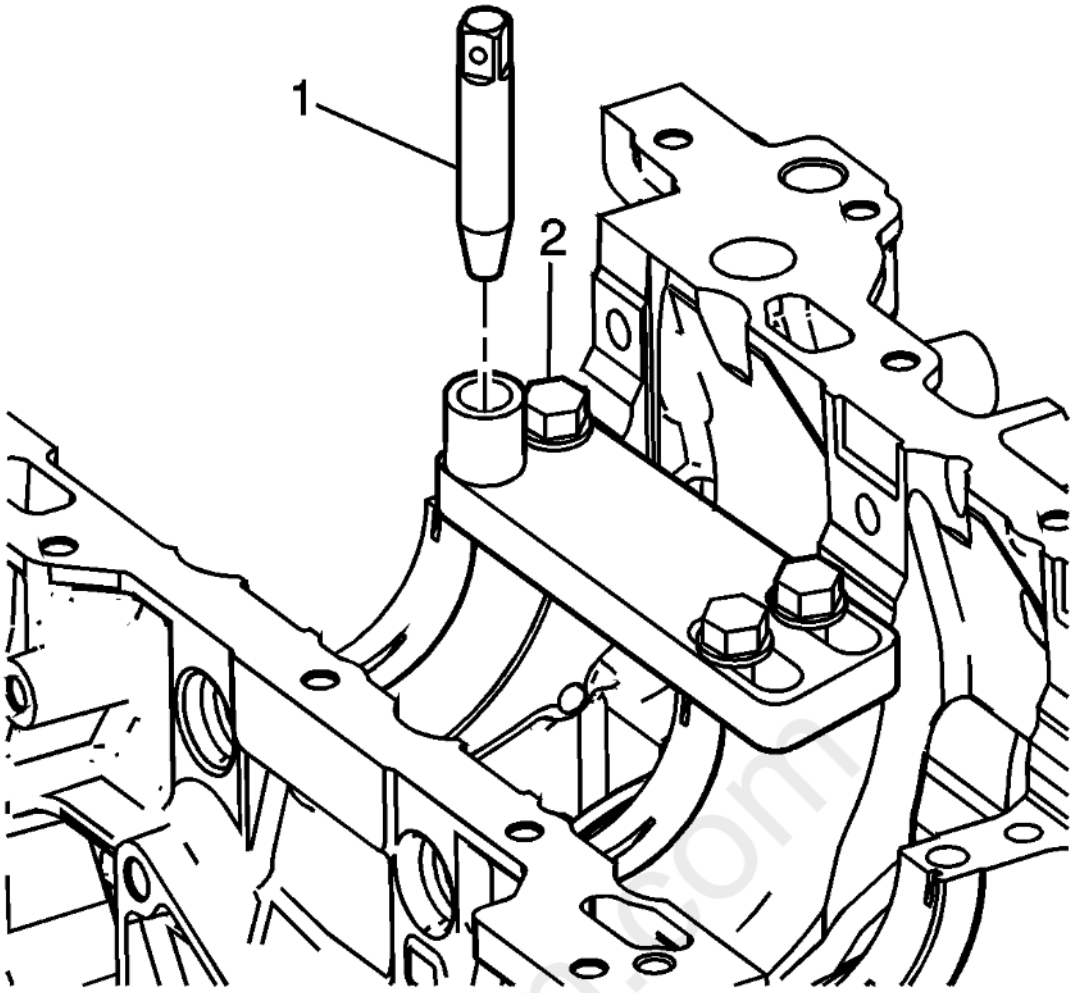

Fig. 386: Locating Alignment Pin
Courtesy of GENERAL MOTORS COMPANY

3. Position the alignment pin (1) through the bushing and into the crankshaft main cap bolt hole.
4. With the alignment pin in the desired crankshaft main cap bolt hole, tighten the fixture retaining bolts (2).
5. Remove the alignment pin (1) from the crankshaft main cap bolt hole.

cardiagn.com

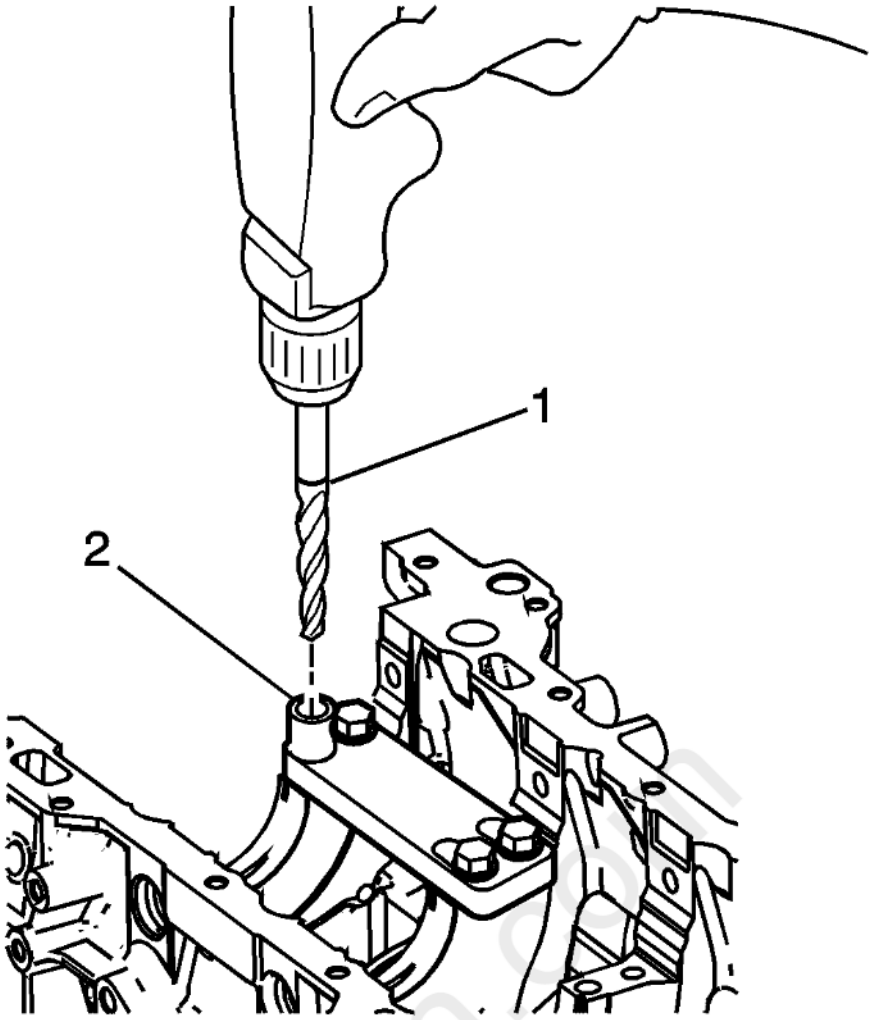

Fig. 387: Drilling Out Threads Of Damaged Hole - Inboard Bolt Holes
Courtesy of GENERAL MOTORS COMPANY

NOTE:

- **During the drilling process, it is necessary to repeatedly remove the drill and clean chips from the hole and the flutes of the drill.**
- **Drill the crankshaft main bolt hole until the mark (1) on the drill aligns with the top of the drill bushing (2).**

6. Drill out the threads of the damaged hole.

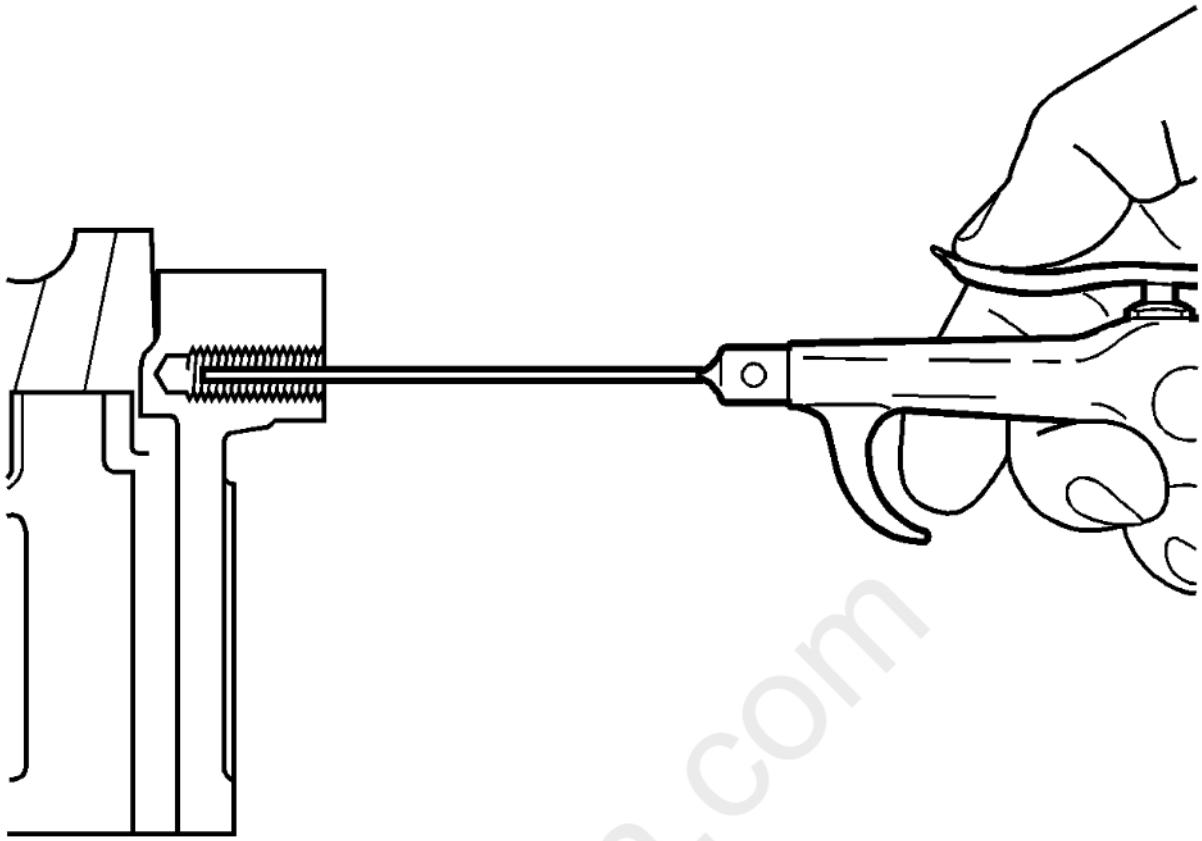

Fig. 388: Cleaning Out Metal Chips
Courtesy of GENERAL MOTORS COMPANY

NOTE: **All chips must be removed from the drilled hole prior to tapping.**

7. Using compressed air, clean out any chips.

cardiagn.com

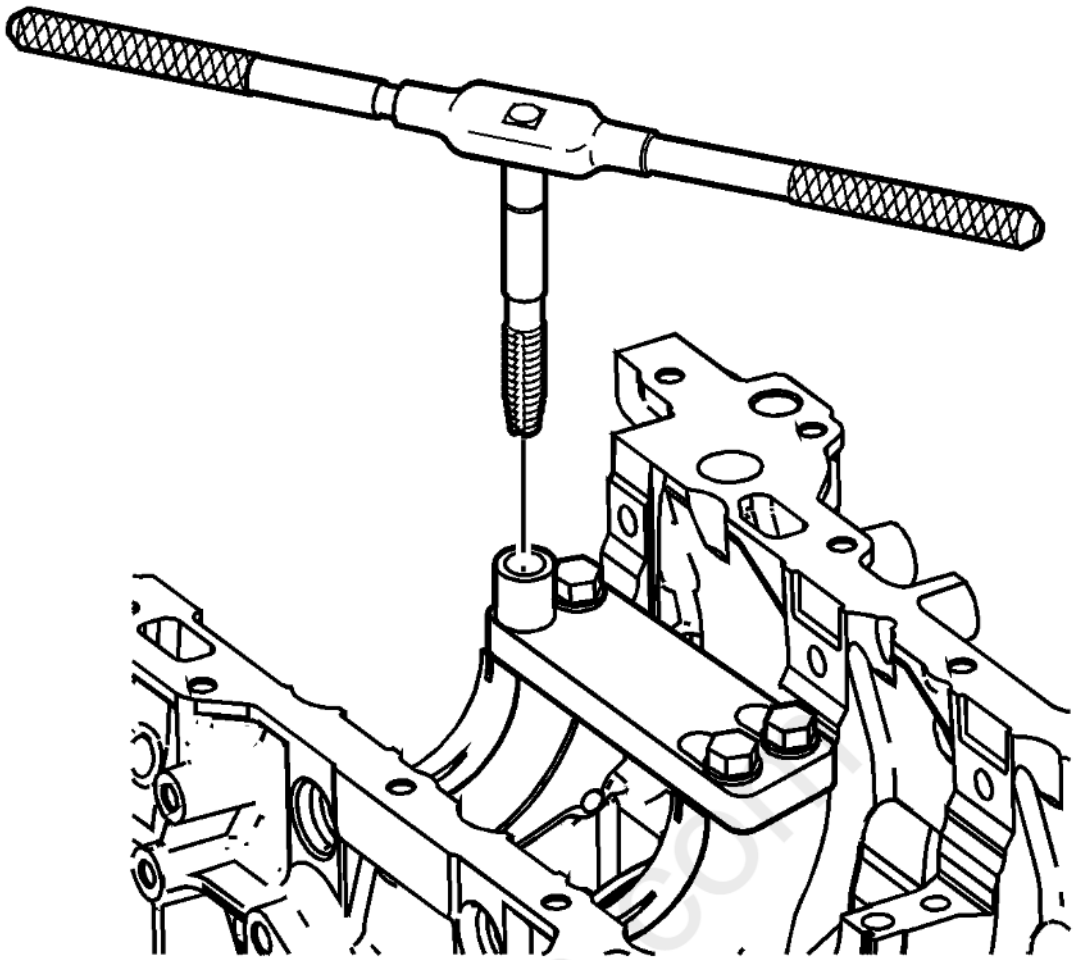

Fig. 389: Positioning Tapping Wrench
Courtesy of GENERAL MOTORS COMPANY

NOTE:

- **Do not remove the fixture plate, ensure the fixture plate is installed during the machining and installation processes of the insert.**
- **During the tapping process, it is necessary to repeatedly remove the tap and clean chips from the hole and the flutes of the tap.**
- **Ensure the tap has created full threads at least to the depth equal to the insert length.**

8. Using a suitable tapping wrench, tap the threads of the drilled hole by hand only.

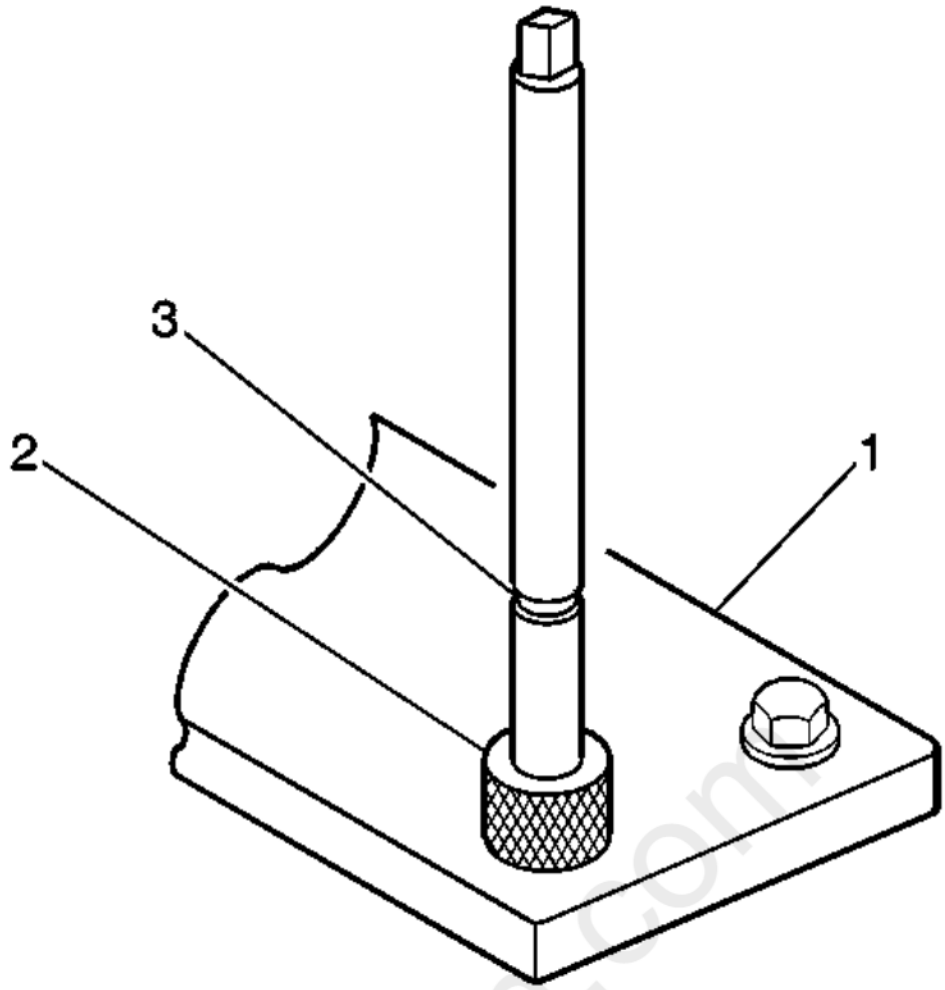

Fig. 390: View Of Fixture Plate, Drill Bushing & Tool Marking
Courtesy of GENERAL MOTORS COMPANY

9. In order to tap the new threads for the insert to the proper depth, rotate the tap into the crankshaft main cap bolt hole until the mark (3) on the tap aligns with the top of the drill bushing (2).

cardiagn.com

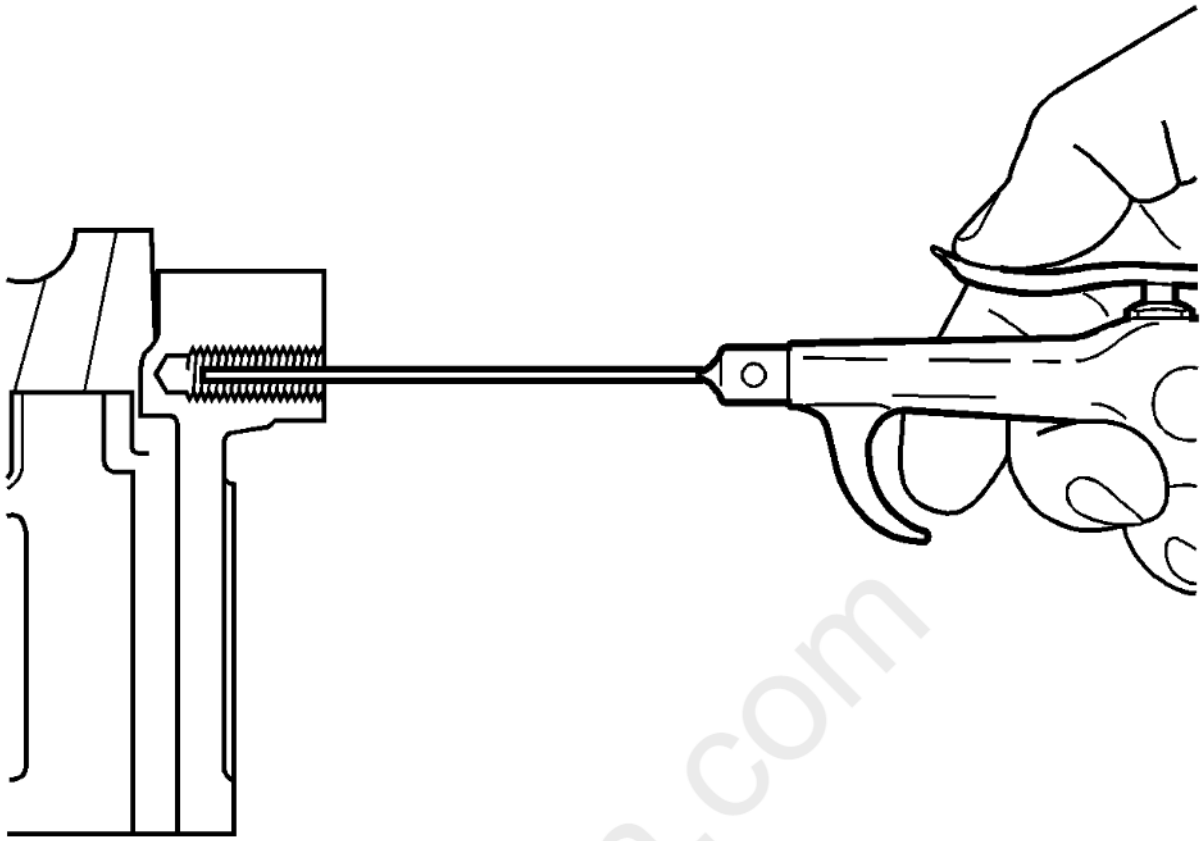

Fig. 391: Cleaning Out Metal Chips
Courtesy of GENERAL MOTORS COMPANY

NOTE: **All chips must be removed from the tapped hole prior to insert installation.**

10. Using compressed air, clean out any chips.

cardiagn.com

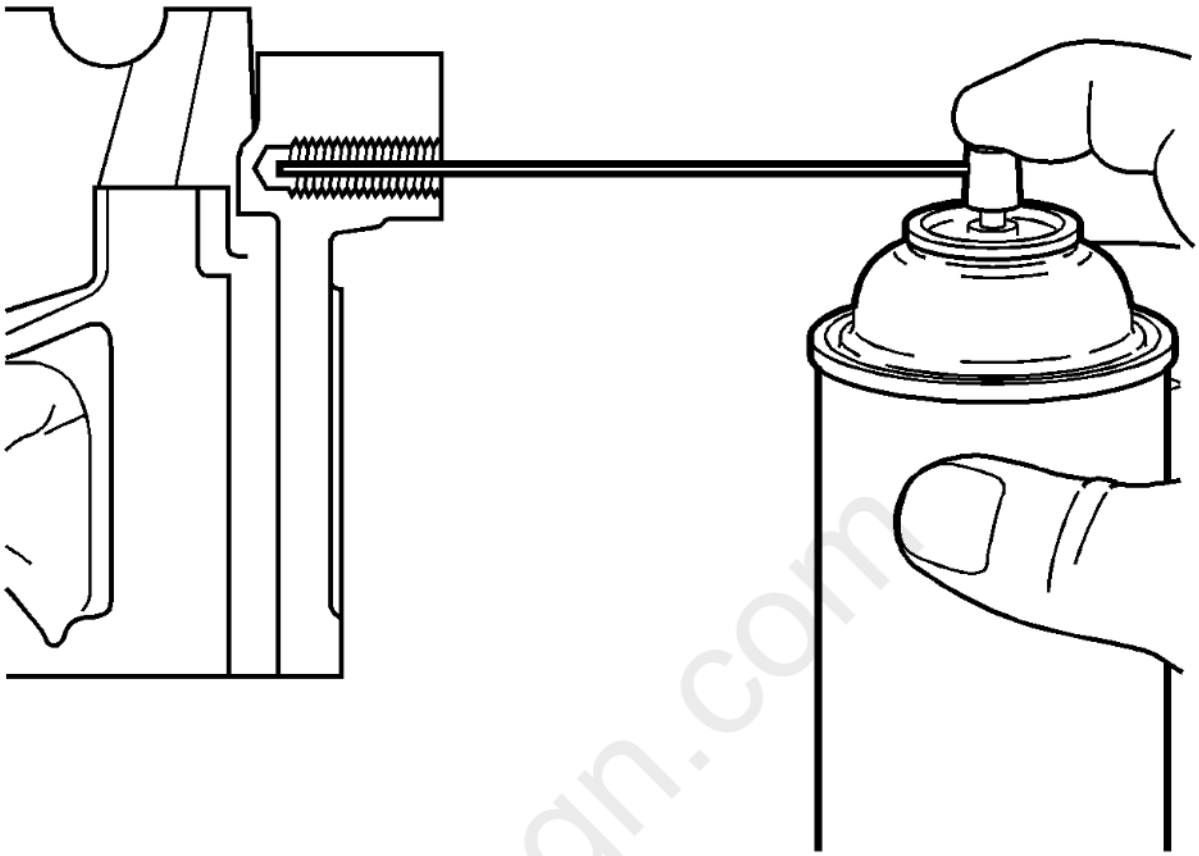

Fig. 392: Spraying Cleaner Into Tapped Hole
Courtesy of GENERAL MOTORS COMPANY

11. Spray cleaner into the tapped hole. Refer to **Adhesives, Fluids, Lubricants, and Sealers** for recommended cleaner.

cardiagn.com

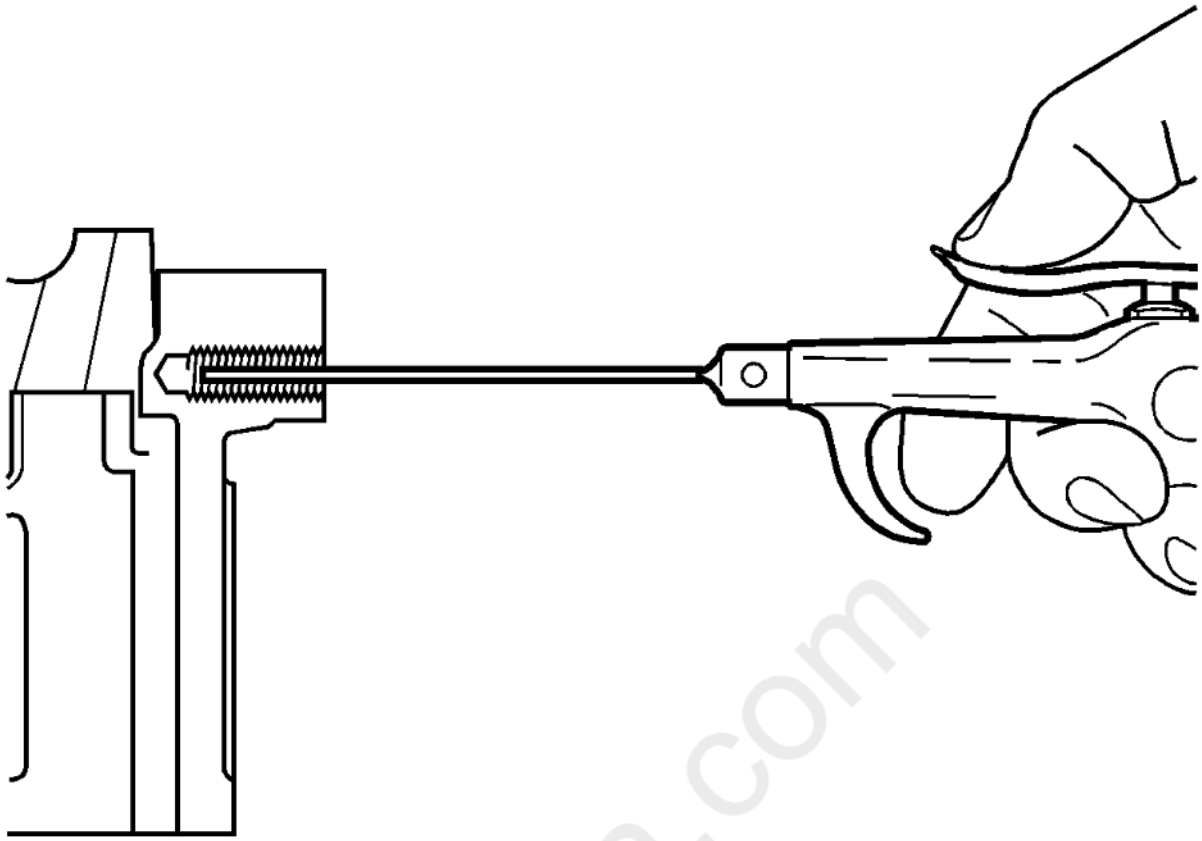

Fig. 393: Cleaning Out Metal Chips
Courtesy of GENERAL MOTORS COMPANY

NOTE: **All chips must be removed from the tapped hole prior to insert installation.**

12. Using compressed air, clean out any chips.

cardiagn.com

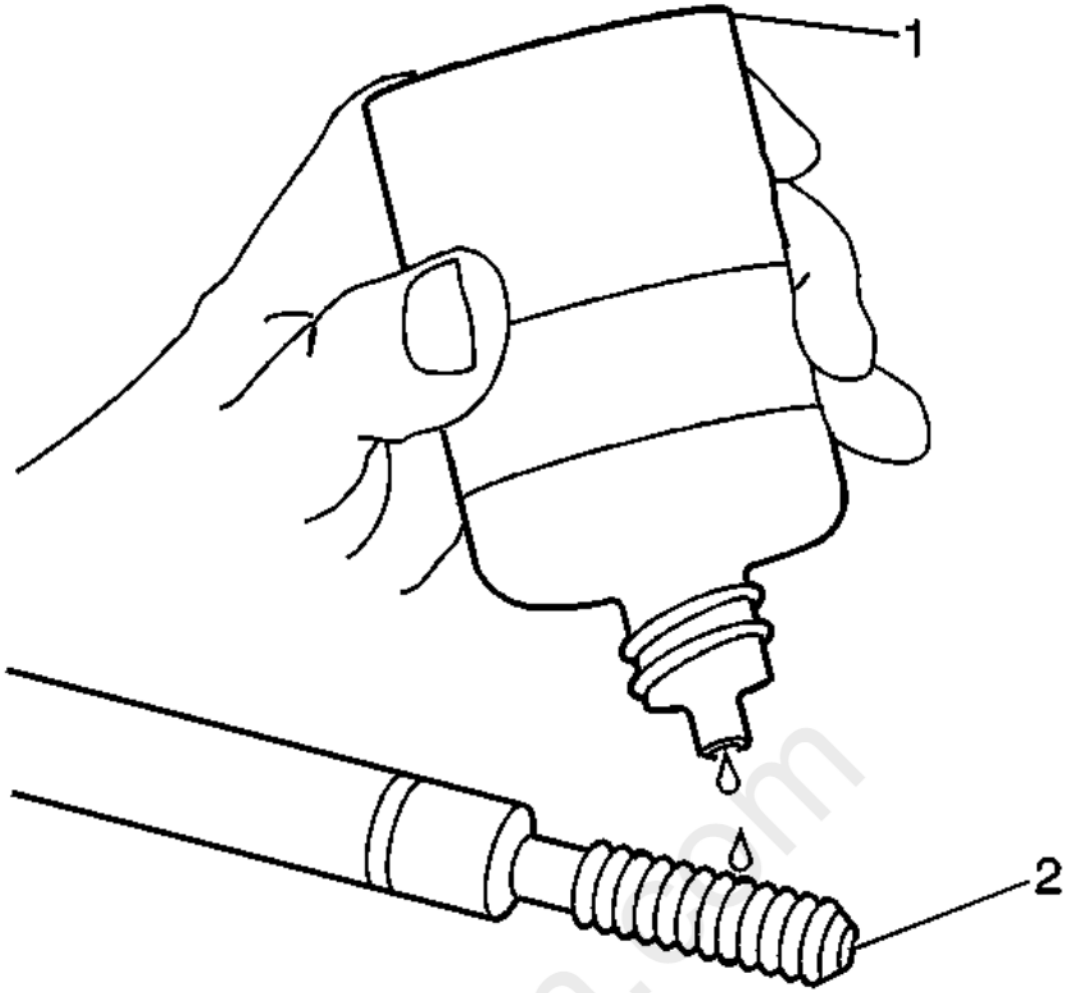

Fig. 394: Lubricating Installer Tool Using Driver Oil
Courtesy of GENERAL MOTORS COMPANY

NOTE:

- **Do not remove the fixture plate, ensure the fixture plate is installed during the installation process of the insert.**
- **Do not allow oil or other foreign material to contact the outside diameter (OD) of the insert.**

13. Lubricate the threads of the driver installation tool (2) with the EN 42385-110 (1).

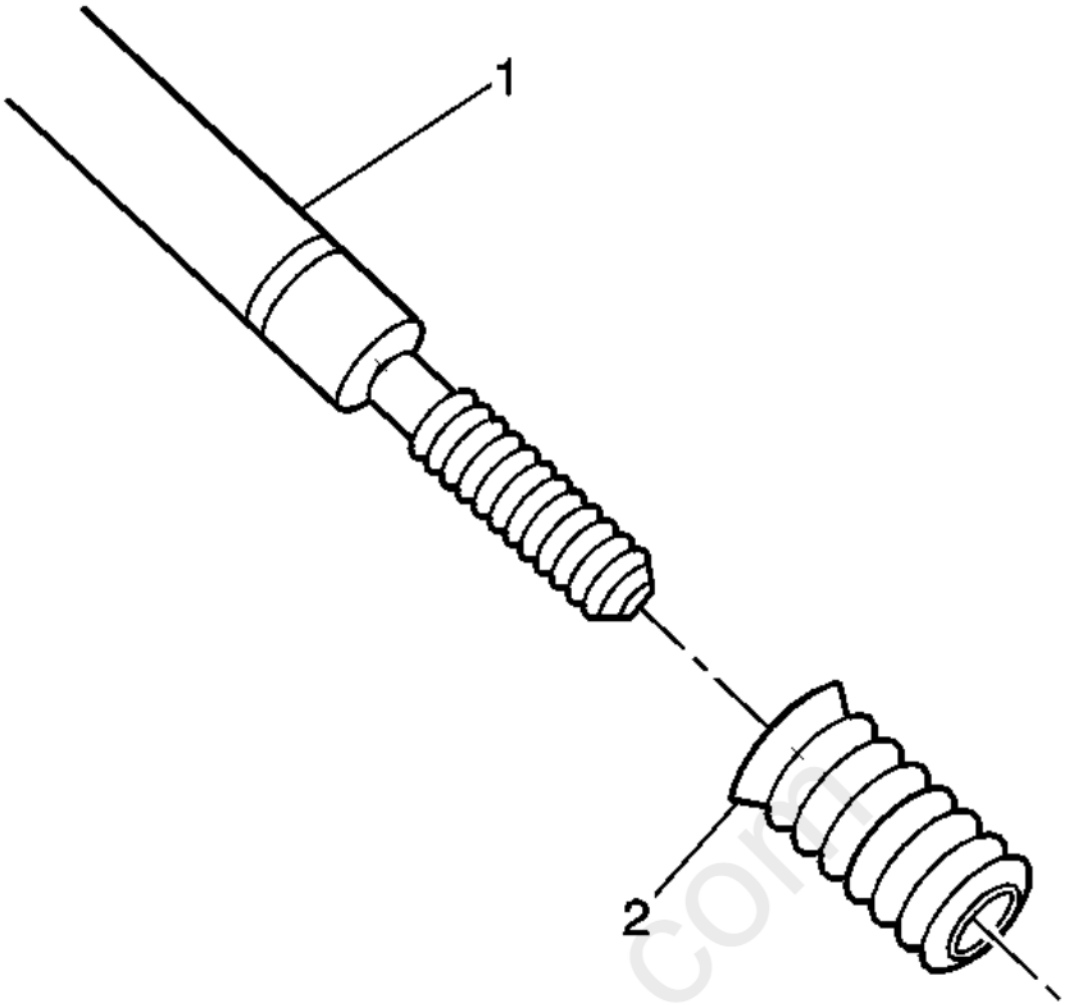

Fig. 395: View of Bushing Type Insert
Courtesy of GENERAL MOTORS COMPANY

14. Install the insert (2) onto the driver installation tool (1).

cardiagn.com

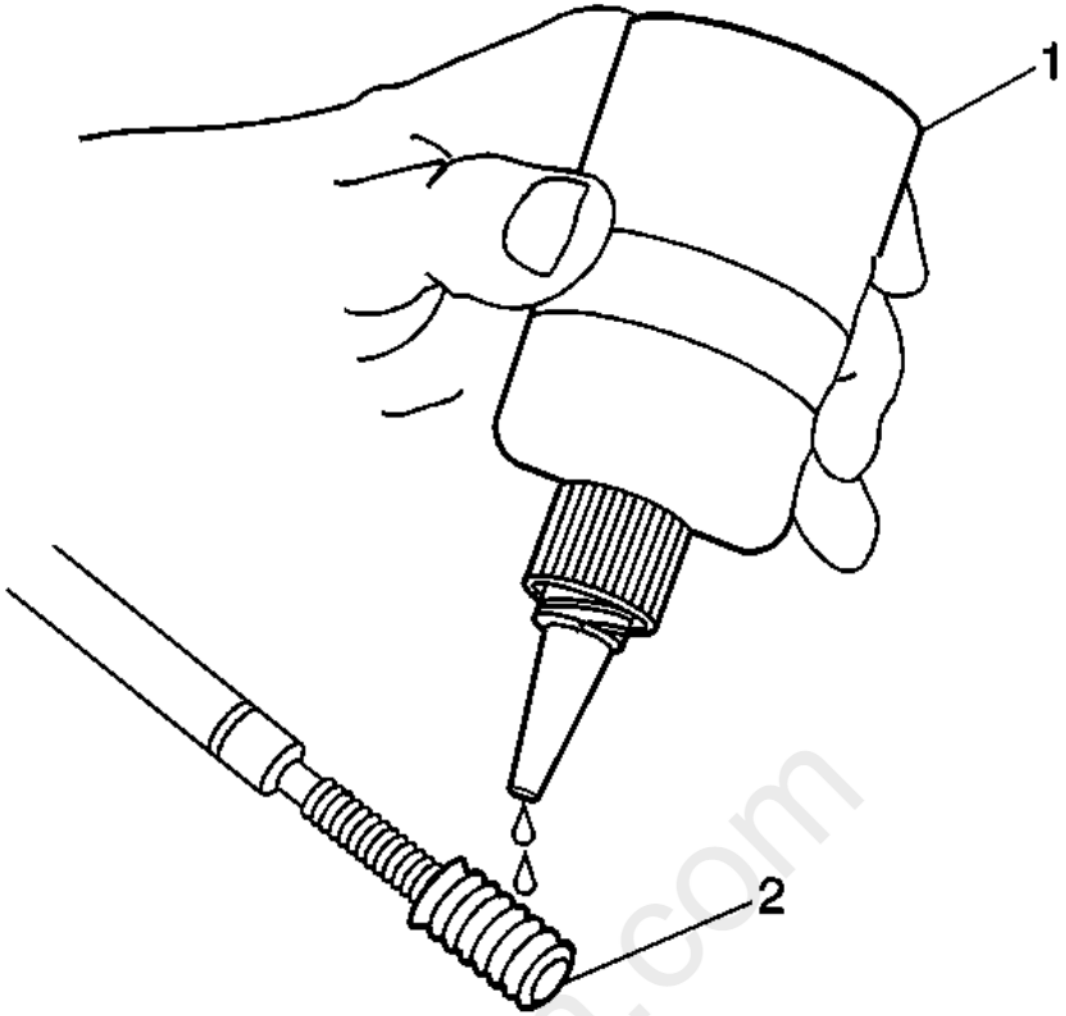

Fig. 396: Applying Threadlock To Insert
Courtesy of GENERAL MOTORS COMPANY

15. Apply threadlock sealant, EN 42385-109, LOCTITE 277Ã‚Â®, or equivalent (1) to the insert OD threads (2). Refer to **Adhesives, Fluids, Lubricants, and Sealers** for recommended sealant.

carmagn.com

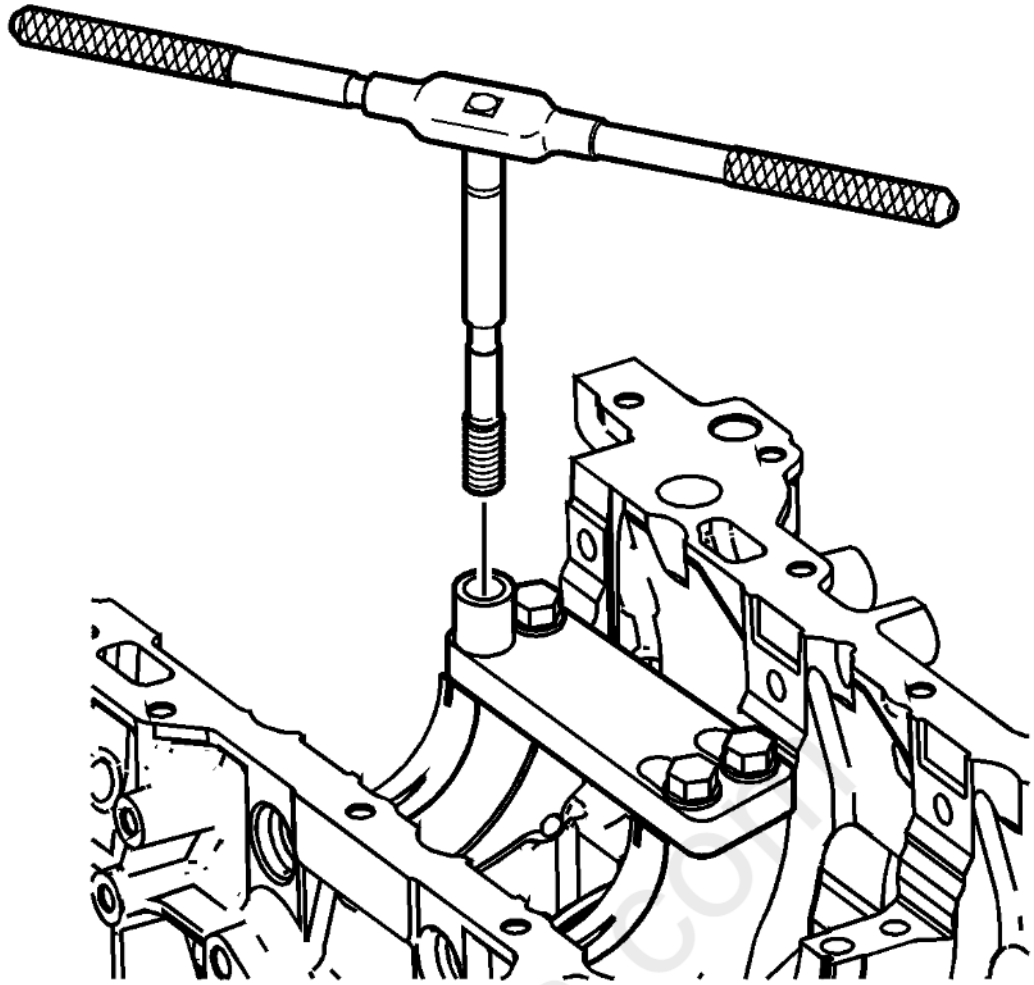

Fig. 397: View Of Insert & Installation Driver
Courtesy of GENERAL MOTORS COMPANY

16. Install the insert and installation driver into the tapped hole by hand only.
17. Start the insert into the threaded hole.

NOTE: **If the insert will not thread down until the flange contacts the counterbored surface remove the insert immediately with a screw extracting tool and inspect the tapped hole for any remaining chips and/or improper tapping.**

18. Install the insert until the flange of the insert contacts the counterbored surface.

NOTE: **The driver installation tool will tighten up before screwing completely through the insert. This is acceptable. The threads at the bottom of the insert are being formed and the insert is mechanically locking the insert into the base material threads.**

19. Continue to rotate the driver installation tool through the insert.

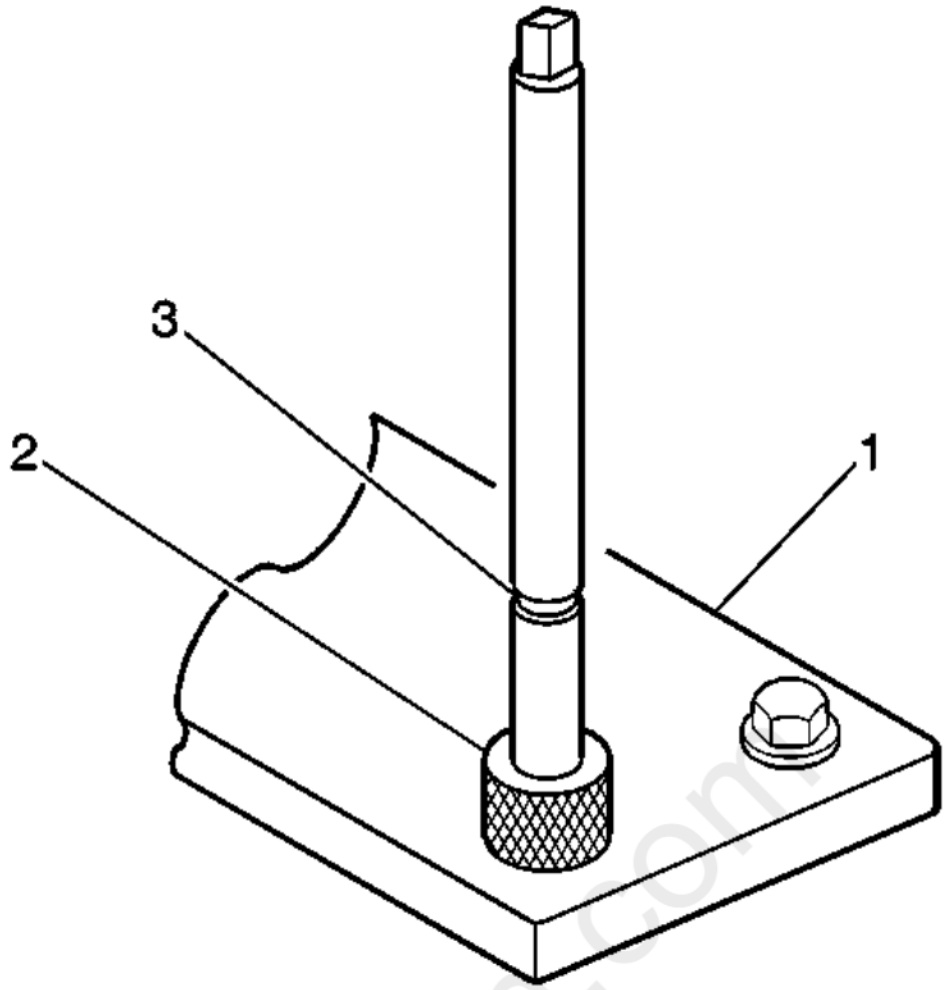

Fig. 398: View Of Fixture Plate, Drill Bushing & Tool Marking
Courtesy of GENERAL MOTORS COMPANY

20. Rotate the driver installation tool until the mark (3) on the driver installation tool aligns with the top of the drill bushing (2).
21. Inspect the insert for proper installation into the tapped hole.

cardiagn.com

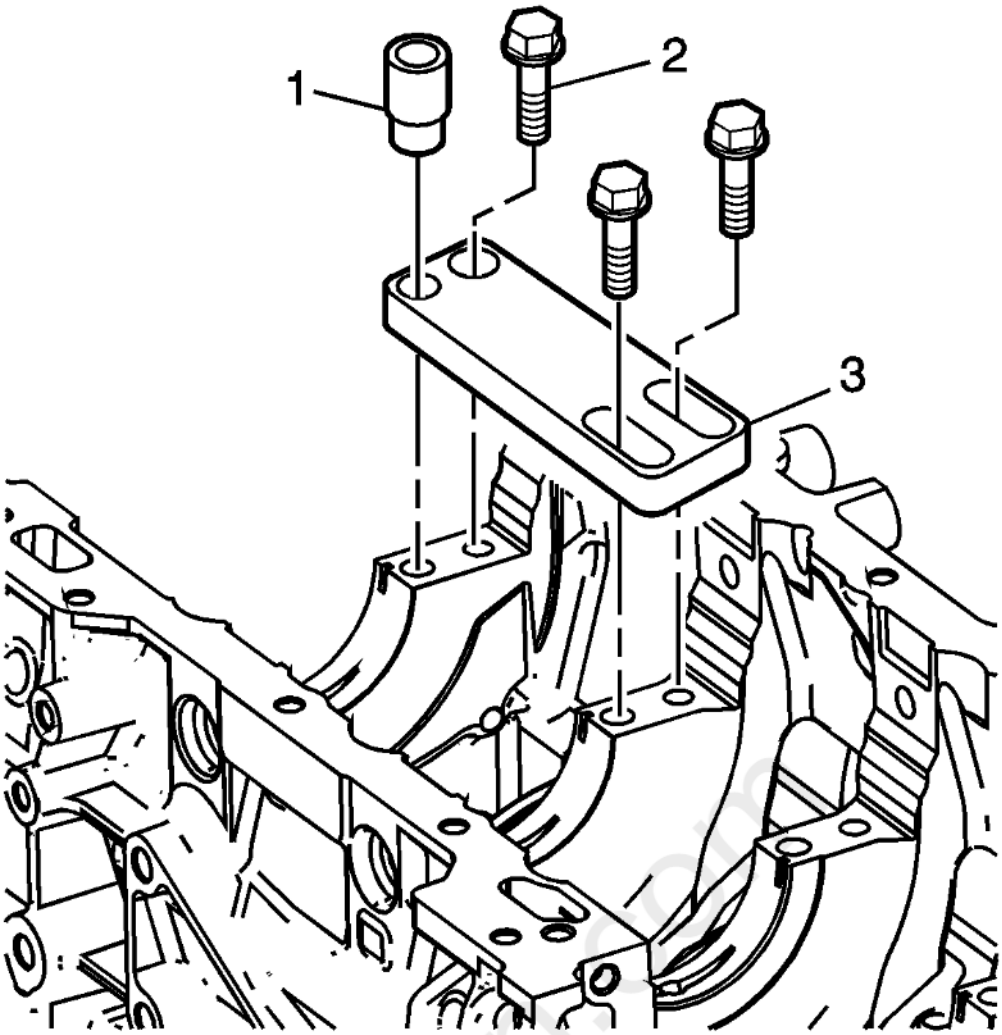

Fig. 399: View Of Fixture Plate & Components - Inboard Bolt Holes
Courtesy of GENERAL MOTORS COMPANY

22. Remove the fixture plate bolts (2).
23. Remove the fixture plate (3) and bushing (1).

SERVICE PRIOR TO ASSEMBLY

- Dirt will cause premature wear of the rebuilt engine. Clean all the components.
- Use the proper tools to measure the components when checking for excessive wear. Components not within the manufacturer's specification must be repaired or replaced.
- When the components are reinstalled into an engine, return the components to their original location, position, and direction.
- During assembly, lubricate all the moving parts with clean engine oil (unless otherwise specified). This will provide initial lubrication when the engine is first started.

ENGINE BLOCK ASSEMBLE

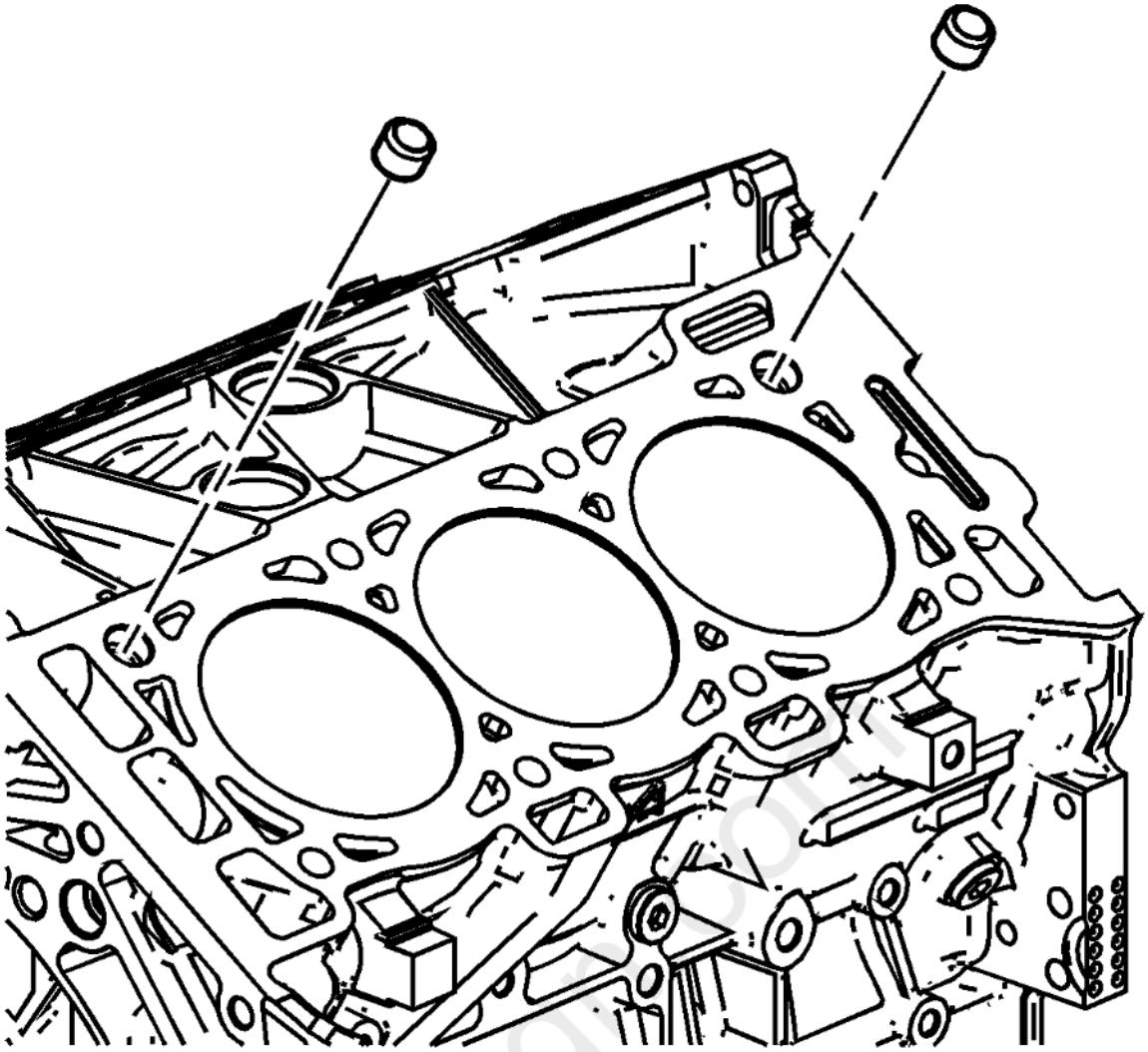

Fig. 400: Cylinder Block-To-Cylinder Head Alignment Dowels
Courtesy of GENERAL MOTORS COMPANY

1. Install the cylinder block-to-cylinder head alignment dowels.

carmanuals.com

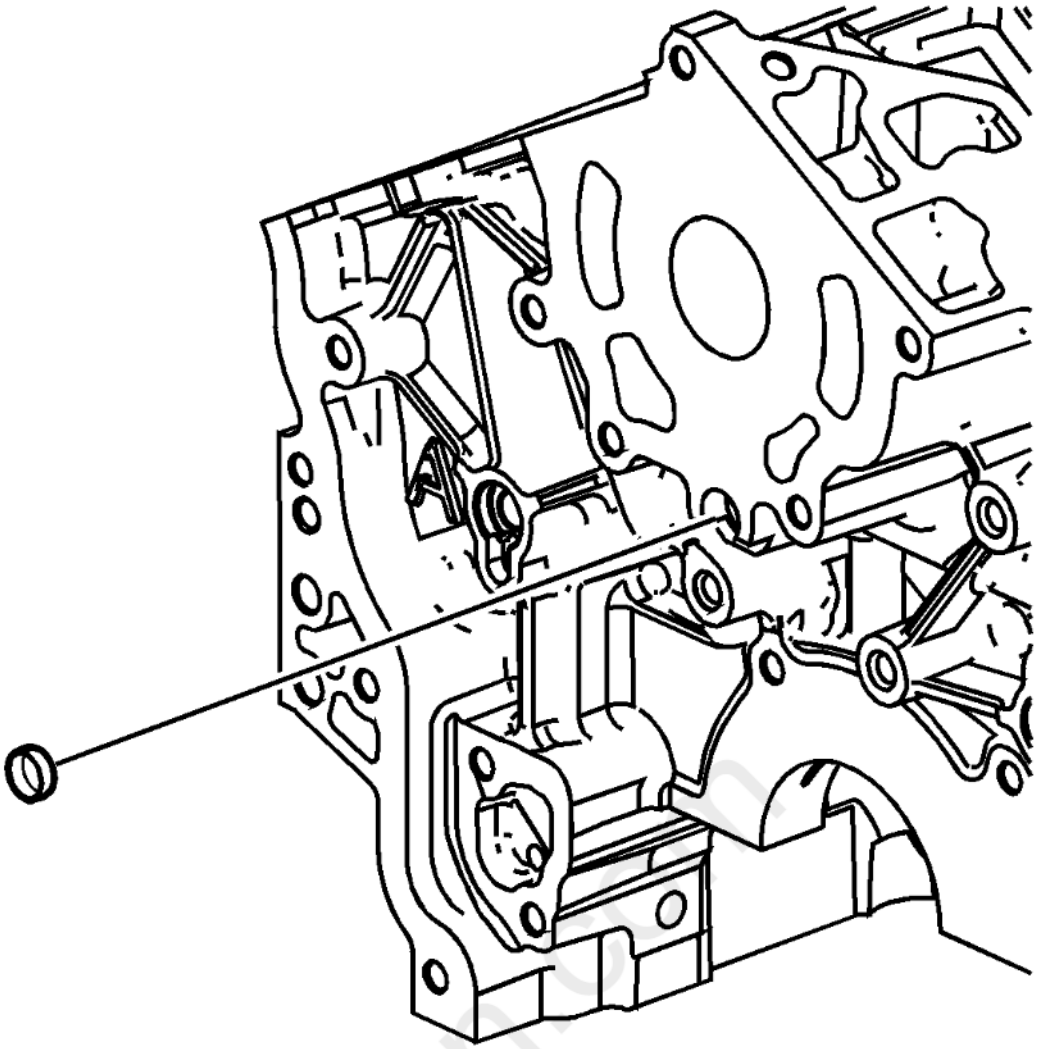

Fig. 401: View Of Front Oil Gallery Expansion Plug
Courtesy of GENERAL MOTORS COMPANY

2. Install the NEW front oil gallery expansion plug.
3. Ensure the NEW front oil gallery expansion plug is installed to the proper depth.

carmagnet.com

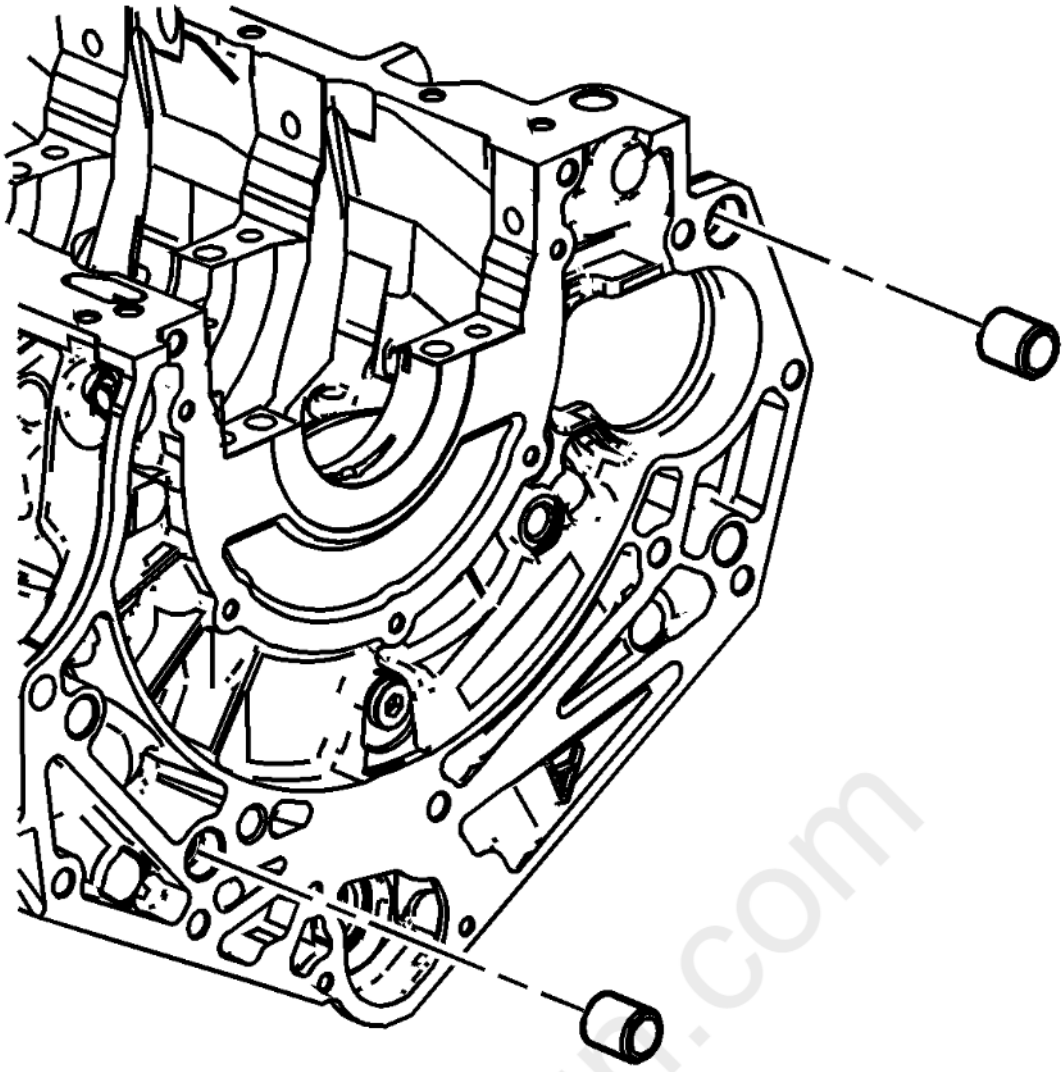

Fig. 402: Identifying Cylinder Block-To-Transmission Alignment Dowels
Courtesy of GENERAL MOTORS COMPANY

4. Install the cylinder block-to-transmission alignment dowels.

carmagr.com

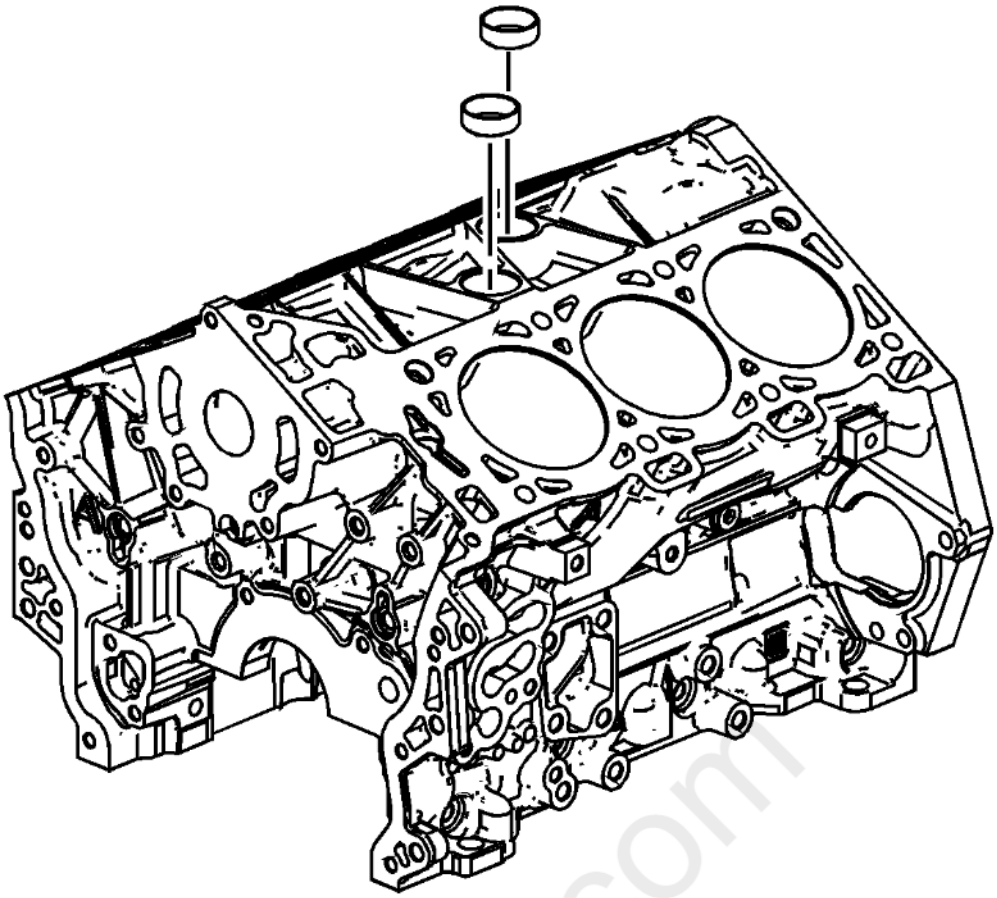

Fig. 403: Identifying Coolant Expansion Plugs
Courtesy of GENERAL MOTORS COMPANY

5. Ensure proper use of room temperature vulcanizing (RTV) sealant. **Use of Room Temperature Vulcanizing (RTV) and Anaerobic Sealant**

   Apply the RTV sealant on the NEW coolant expansion plugs. Refer to **Adhesives, Fluids, Lubricants, and Sealers** for recommended sealant.

6. Install the NEW coolant expansion plugs.
7. Ensure the NEW coolant expansion plugs are installed to the proper depth.

Carmagn.com

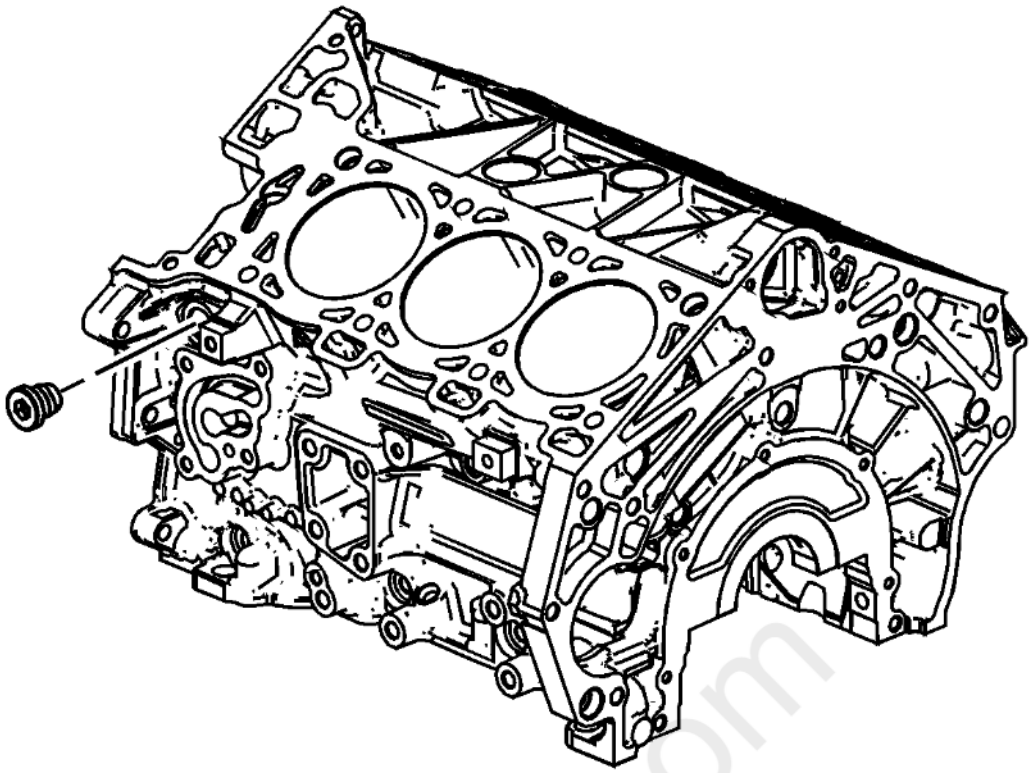

Fig. 404: Removing/Installing M20 Left Side Oil Gallery Threaded Plug
Courtesy of GENERAL MOTORS COMPANY

8. Apply thread sealant on the threads of the M20 left side oil gallery threaded plug. Refer to **Adhesives, Fluids, Lubricants, and Sealers** for recommended sealant.

CAUTION: **Refer to Fastener Caution .**

9. Install the M20 left side oil gallery threaded plug and tighten to 75 N.m (55 lb ft).

cardiagn.com

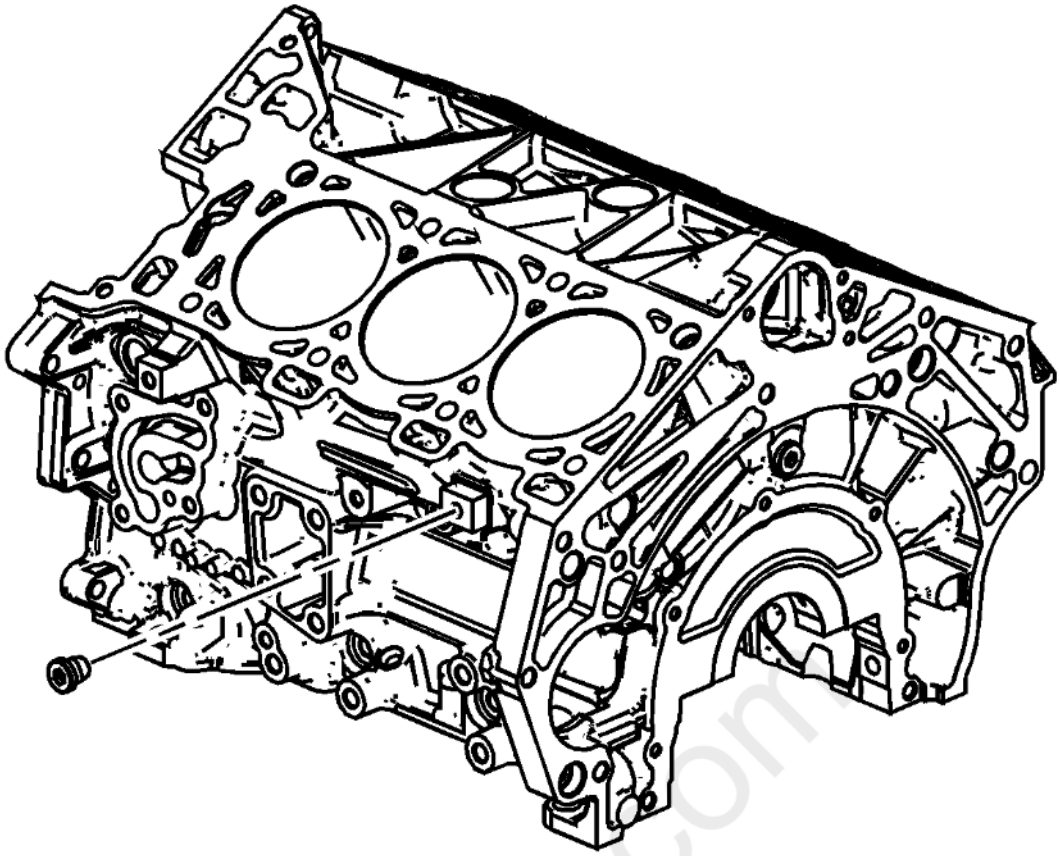

Fig. 405: View Of M14 Left Side Coolant Drain Threaded Plug
Courtesy of GENERAL MOTORS COMPANY

10. Apply thread sealant on the threads of the M14 left side coolant drain threaded plug. Refer to **Adhesives, Fluids, Lubricants, and Sealers** for recommended sealant.
11. Install the M14 left side coolant drain threaded plug and tighten to 50 N.m (37 lb ft).

carmagn.com

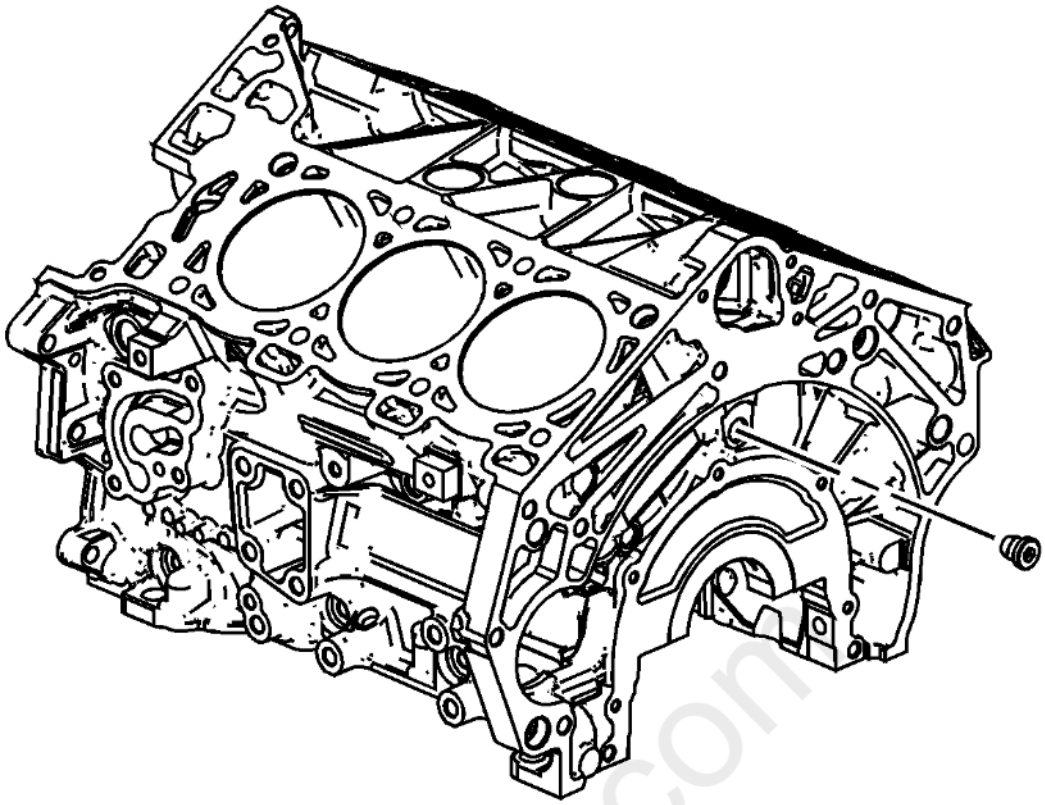

Fig. 406: Identifying M14 Rear Oil Gallery Threaded Plug
Courtesy of GENERAL MOTORS COMPANY

12. Apply thread sealant on the threads of the M14 rear oil gallery threaded plug. Refer to **Adhesives, Fluids, Lubricants, and Sealers** for recommended sealant.
13. Install the M14 rear oil gallery threaded plug and tighten to 50 N.m (37 lb ft).

carmagn.com

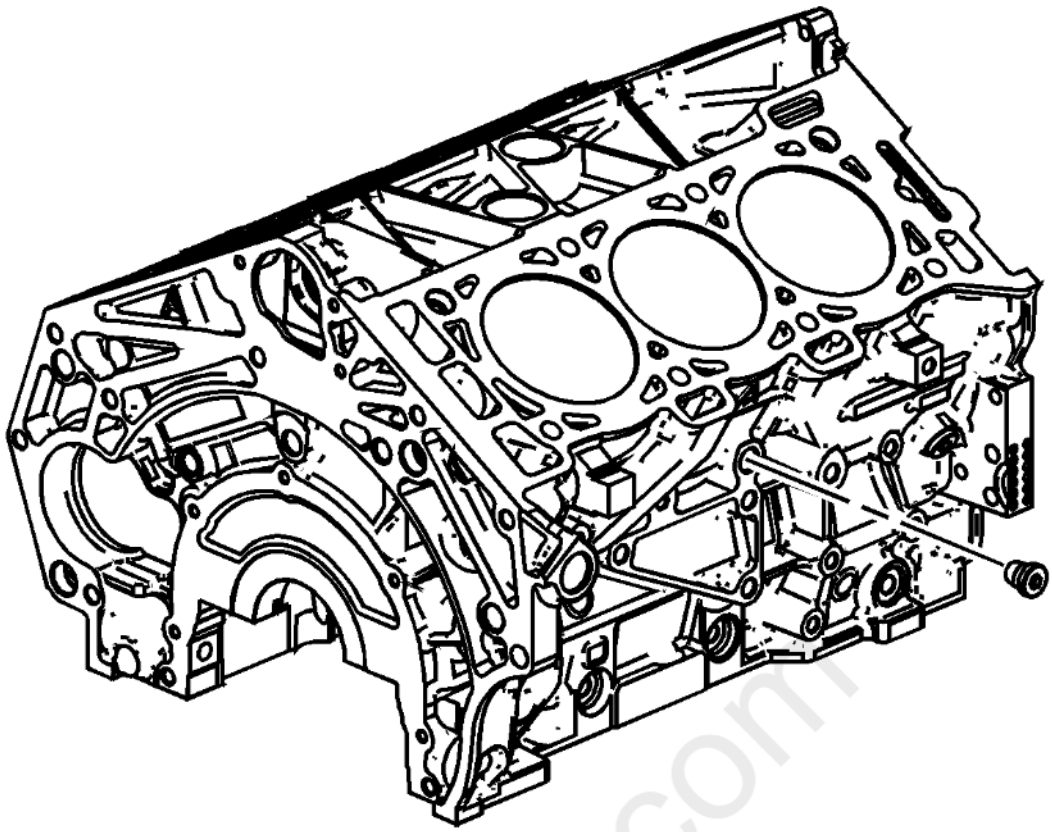

Fig. 407: Identifying M14 Right Side Coolant Drain Threaded Plug
Courtesy of GENERAL MOTORS COMPANY

14. Apply thread sealant on the threads of the M14 right side coolant drain threaded plug. Refer to **Adhesives, Fluids, Lubricants, and Sealers** for recommended sealant.
15. Install the M14 right side coolant drain threaded plug and tighten to 50 N.m (37 lb ft).

carmagn.com

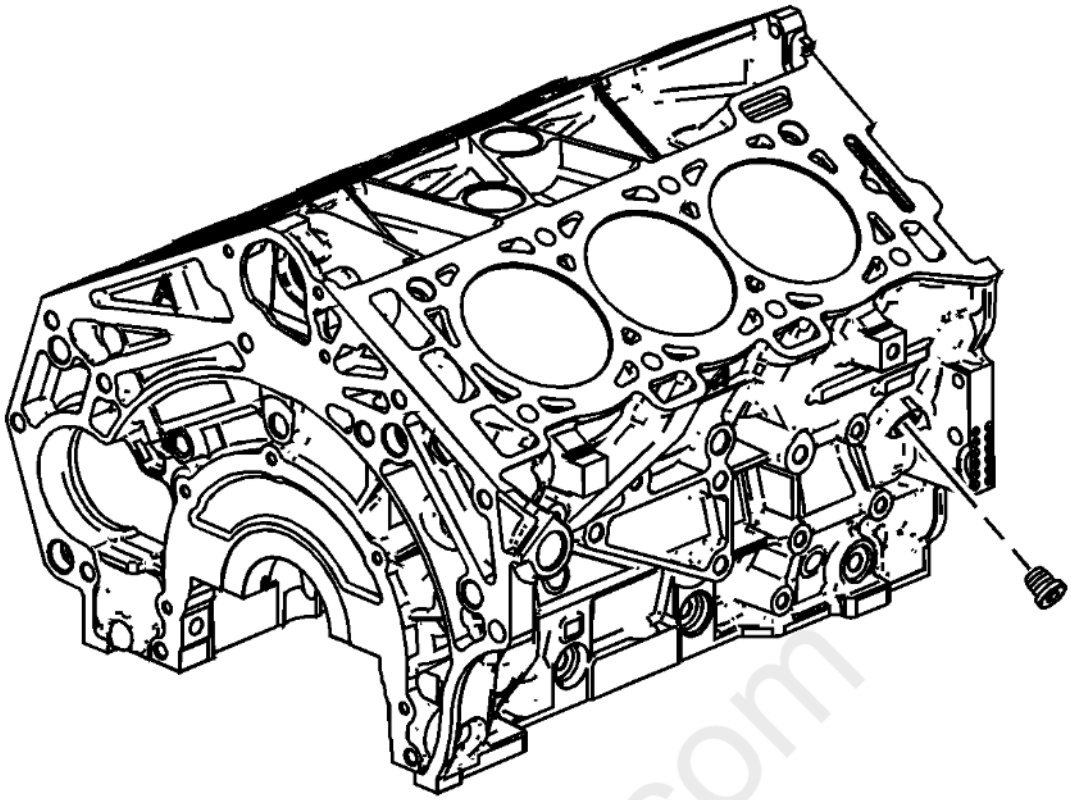

Fig. 408: Identifying M14 Right Side Oil Gallery Threaded Plug
Courtesy of GENERAL MOTORS COMPANY

16. Apply thread sealant on the threads of the M14 right side oil gallery threaded plug. Refer to **Adhesives, Fluids, Lubricants, and Sealers** for recommended sealant.
17. Install the M14 right side oil gallery threaded plug and tighten to 50 N.m (37 lb ft).

carmagn.com

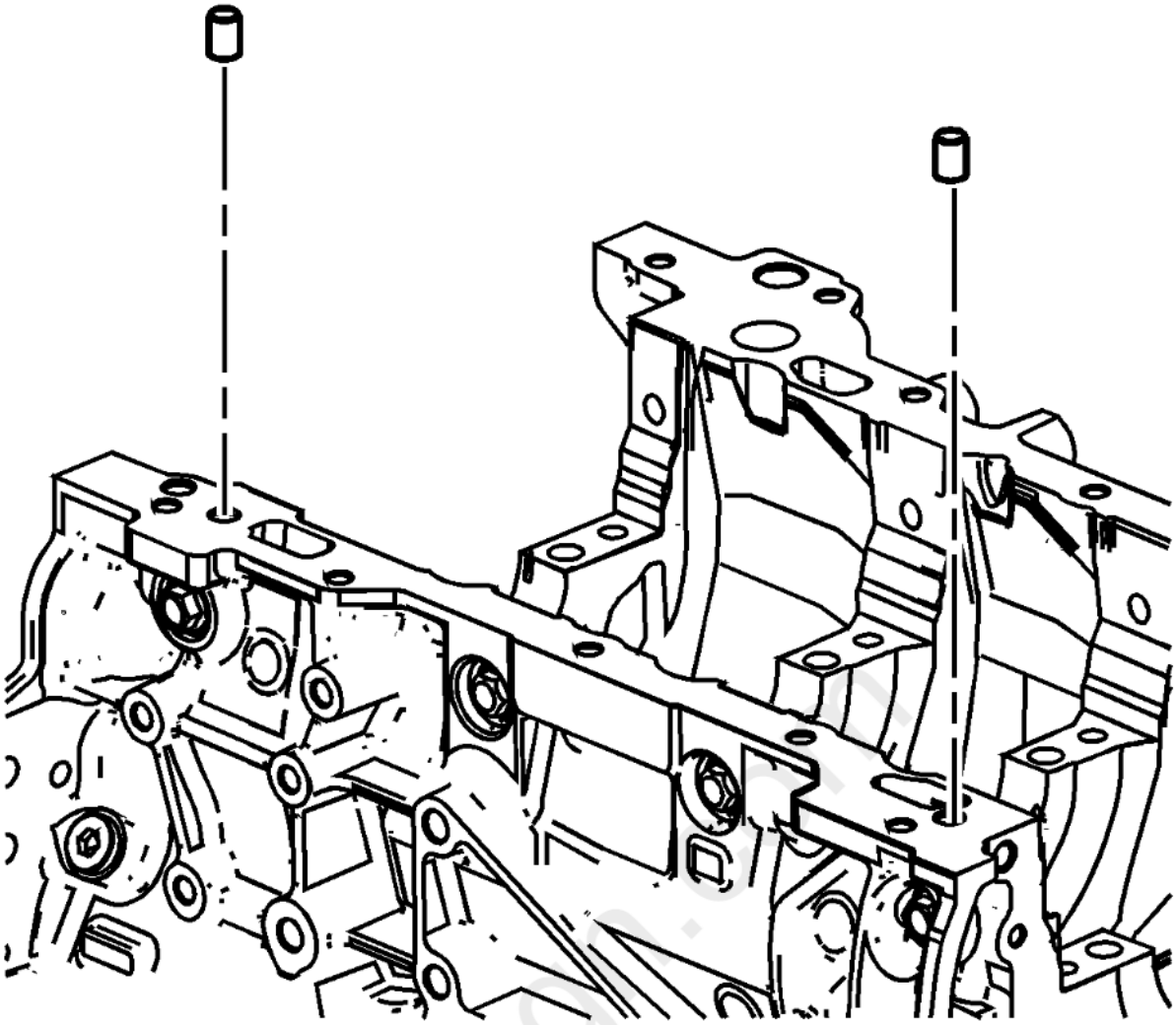

Fig. 409: Identifying Cylinder Block-To-Oil Pan Alignment Dowels
Courtesy of GENERAL MOTORS COMPANY

18. Install the cylinder block-to-oil pan alignment dowels.

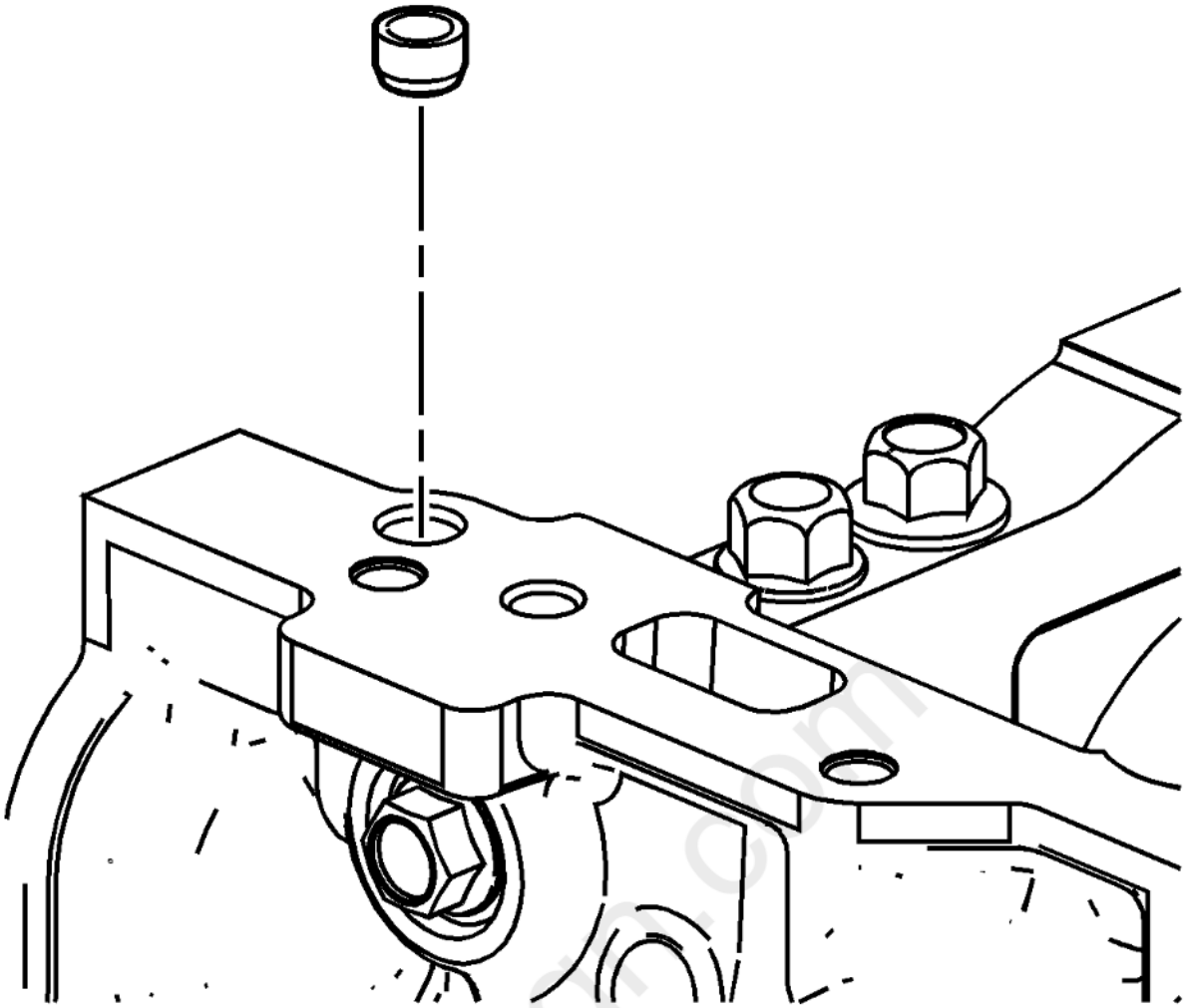

Fig. 410: Locating Right Front Oil Pan Rail Oil Gallery Expansion Plug
Courtesy of GENERAL MOTORS COMPANY

19. Install the NEW right front oil pan rail oil gallery expansion plug.
20. Ensure the NEW right front oil pan rail oil gallery expansion plug is installed to the proper depth.

carmanuals.com

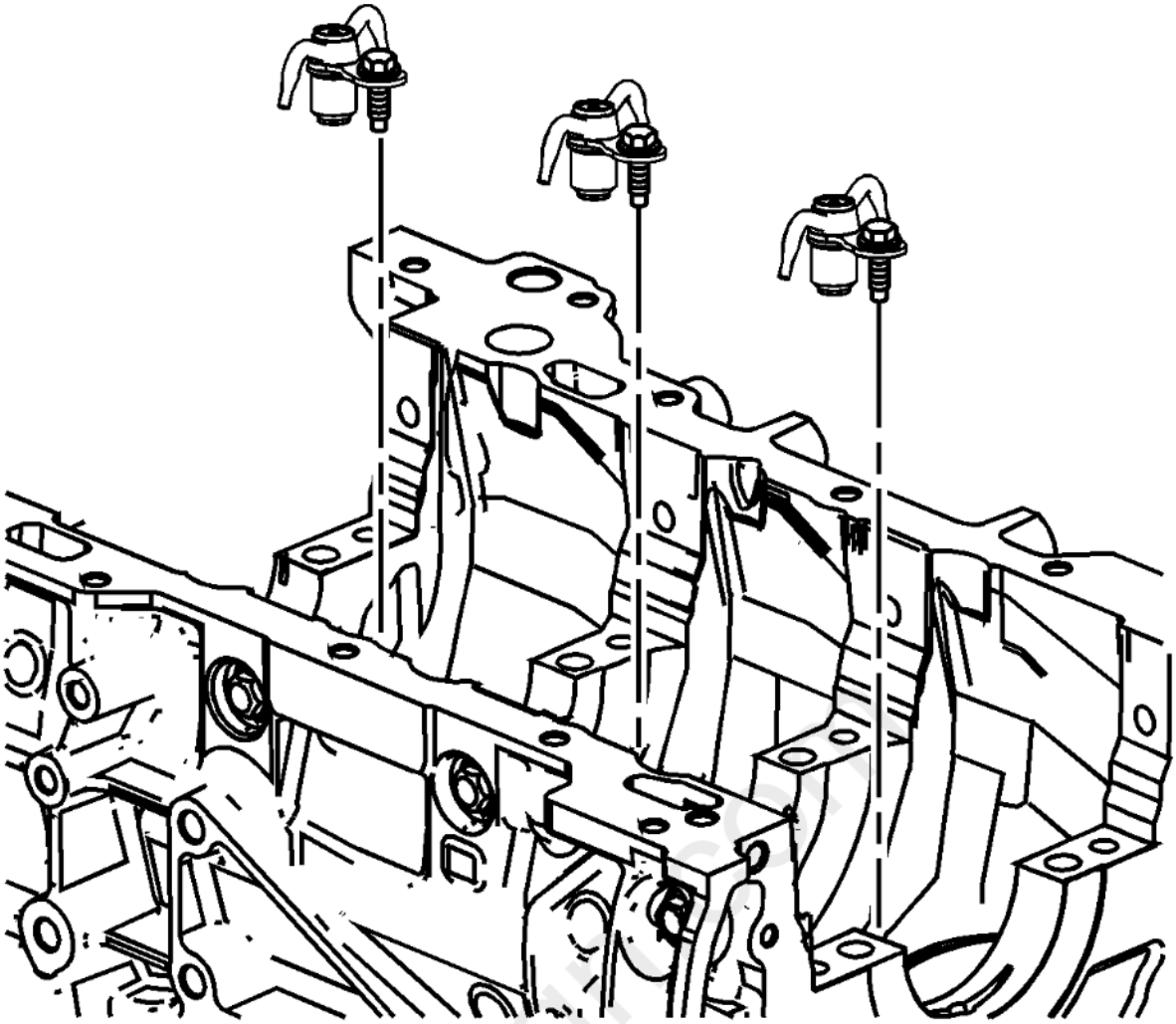

Fig. 411: Identifying Oil Jets & Bolts
Courtesy of GENERAL MOTORS COMPANY

21. Install the oil jets.
22. Install the oil jet bolts and tighten to 10 N.m (89 lb in).

carmanuals

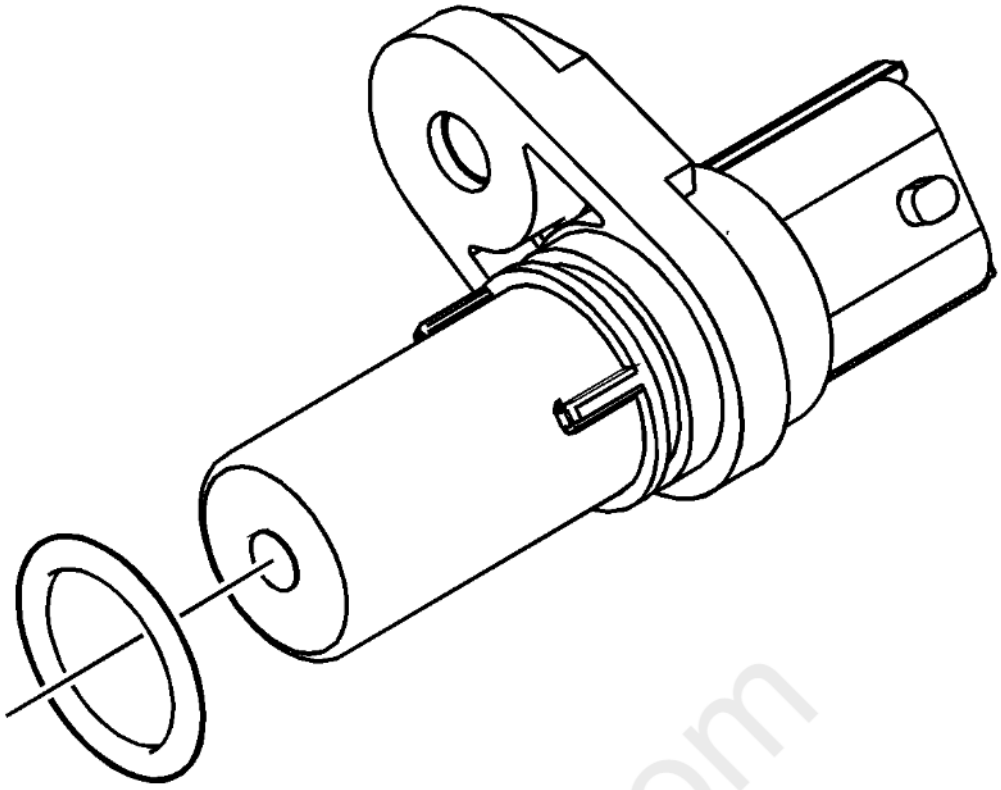

Fig. 412: View Of Crankshaft Position Sensor O-Ring
Courtesy of GENERAL MOTORS COMPANY

23. Install the NEW crankshaft position sensor O-ring, if damaged.

cardiagn.com

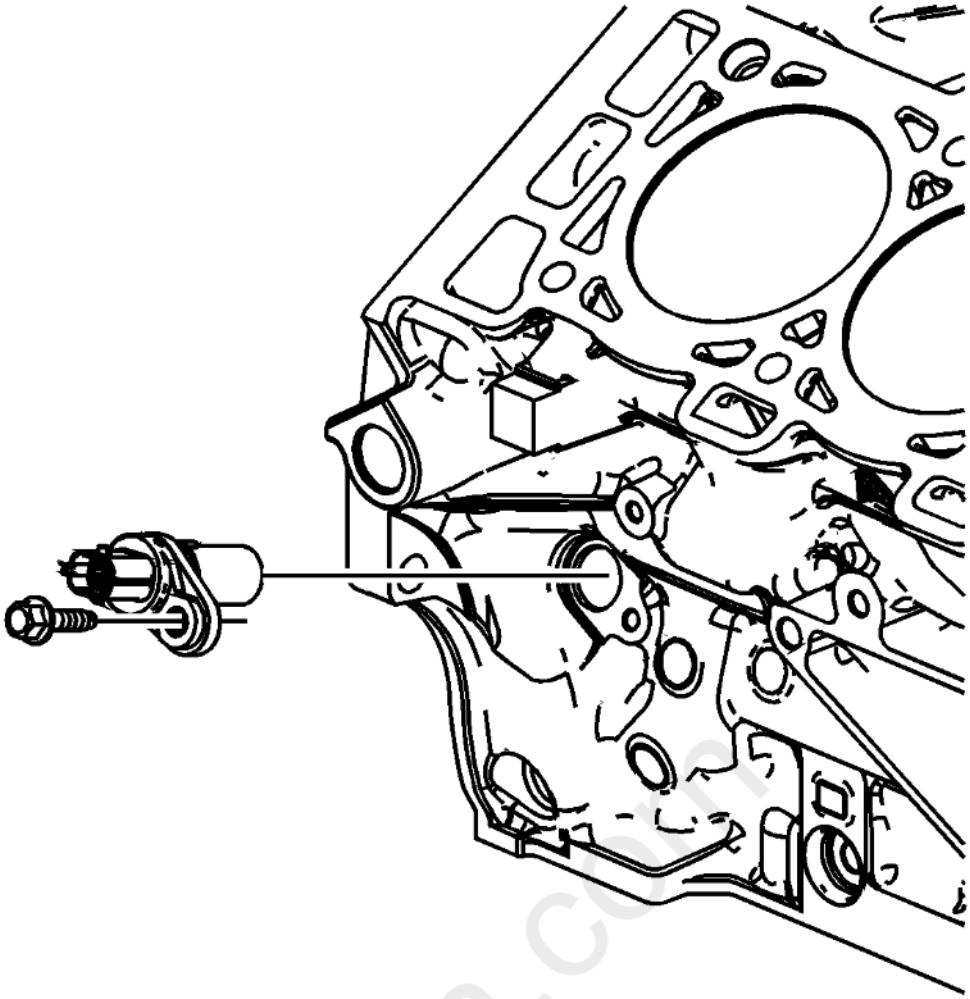

Fig. 413: View Of Crankshaft Position Sensor
Courtesy of GENERAL MOTORS COMPANY

24. Install the crankshaft position sensor.
25. Install the crankshaft position sensor bolt and tighten to 10 N.m (89 lb in).

cardiagn.com

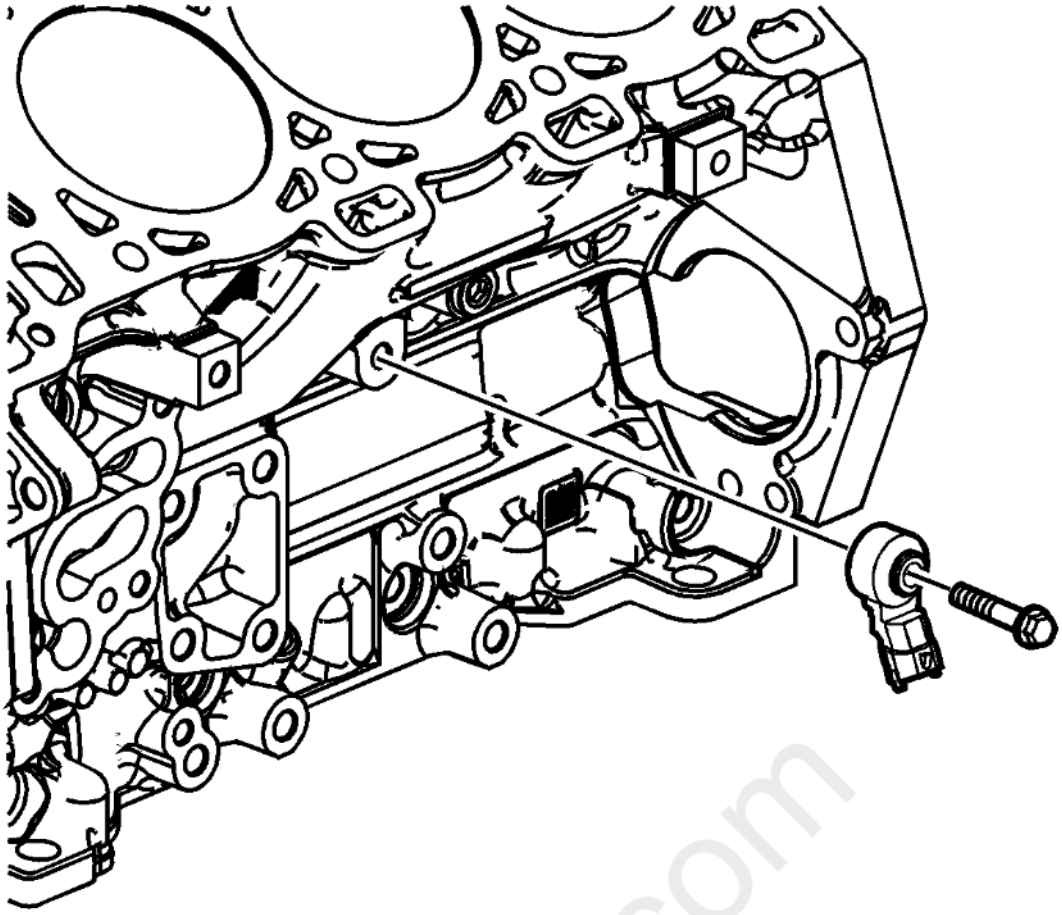

Fig. 414: Identifying Left Knock Sensor & Bolt
Courtesy of GENERAL MOTORS COMPANY

26. Install the left knock sensor to the cylinder block, as shown.
27. Install the left knock sensor bolt and tighten to 25 N.m (18 lb ft).
28. Ensure proper sensor orientation.

cardiagn.com

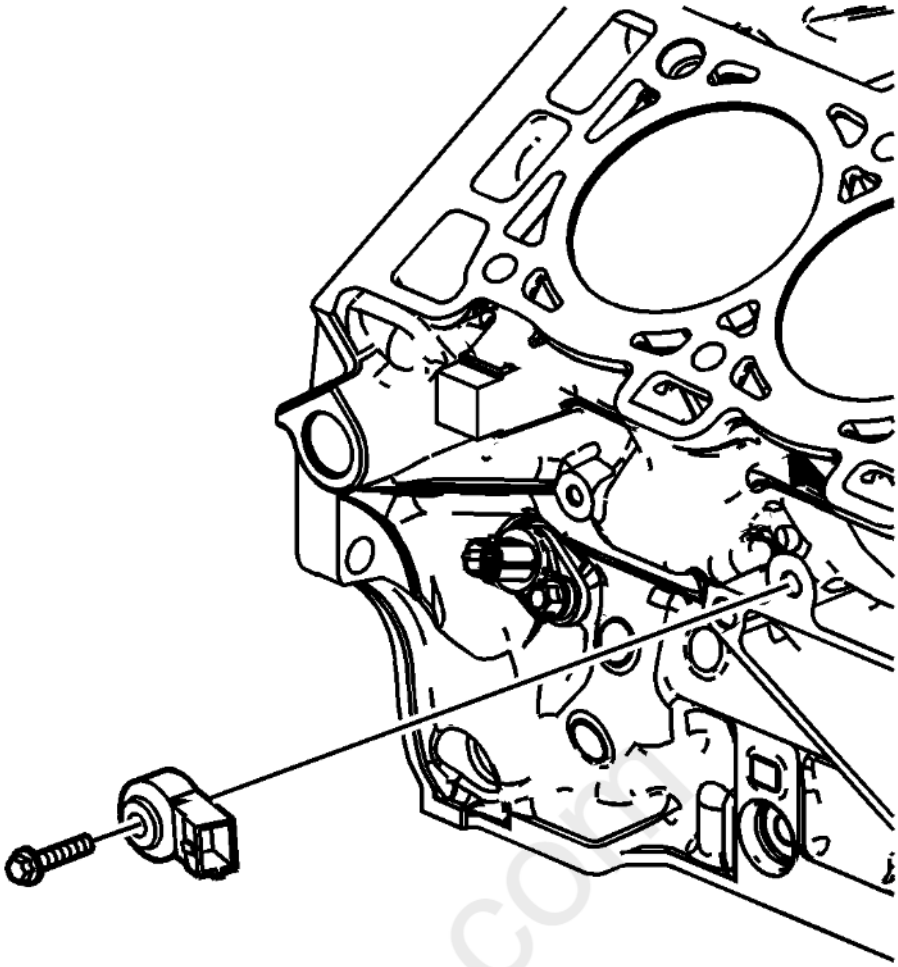

Fig. 415: View Of Right Knock Sensor
Courtesy of GENERAL MOTORS COMPANY

29. Install the right knock sensor to the cylinder block, as shown.
30. Install the right knock sensor bolt and tighten to 25 N.m (18 lb ft).
31. Ensure proper sensor orientation.

carmagn.com

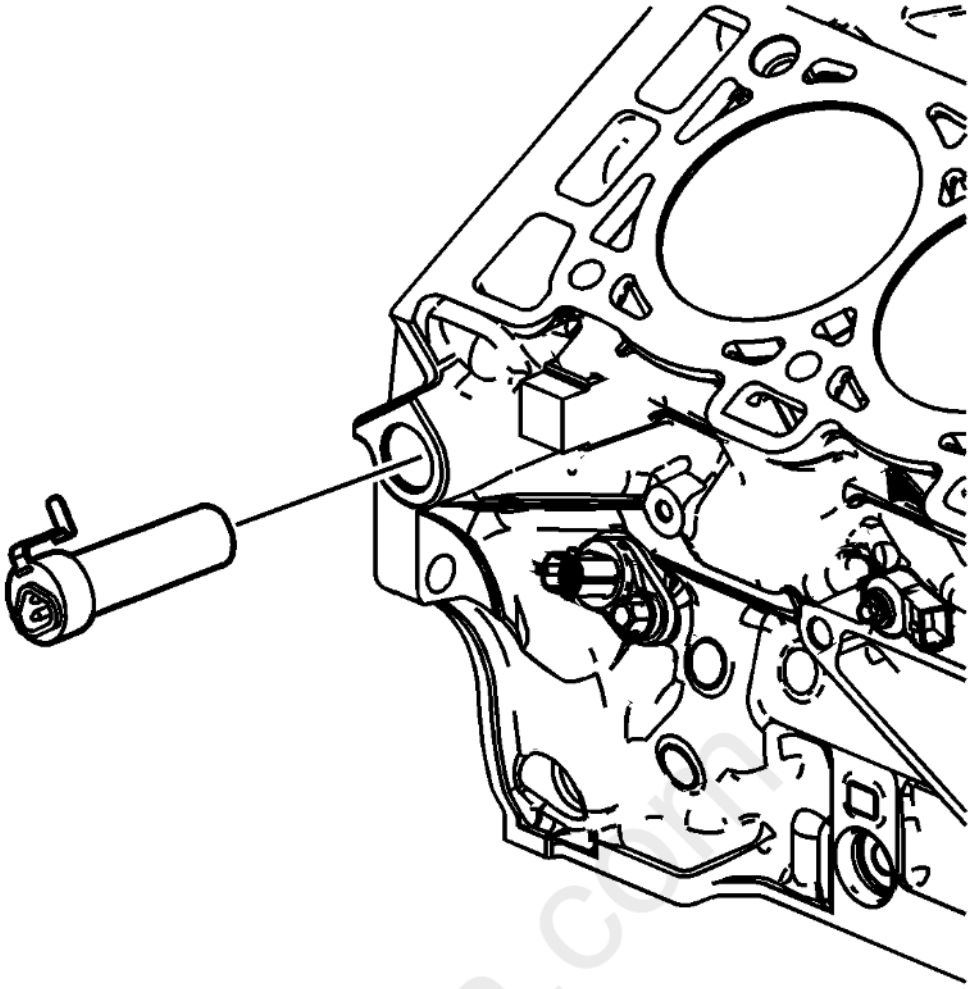

Fig. 416: View Of Block Heater Cartridge
Courtesy of GENERAL MOTORS COMPANY

32. Install the block heater cartridge, if equipped.

cardiagn.com

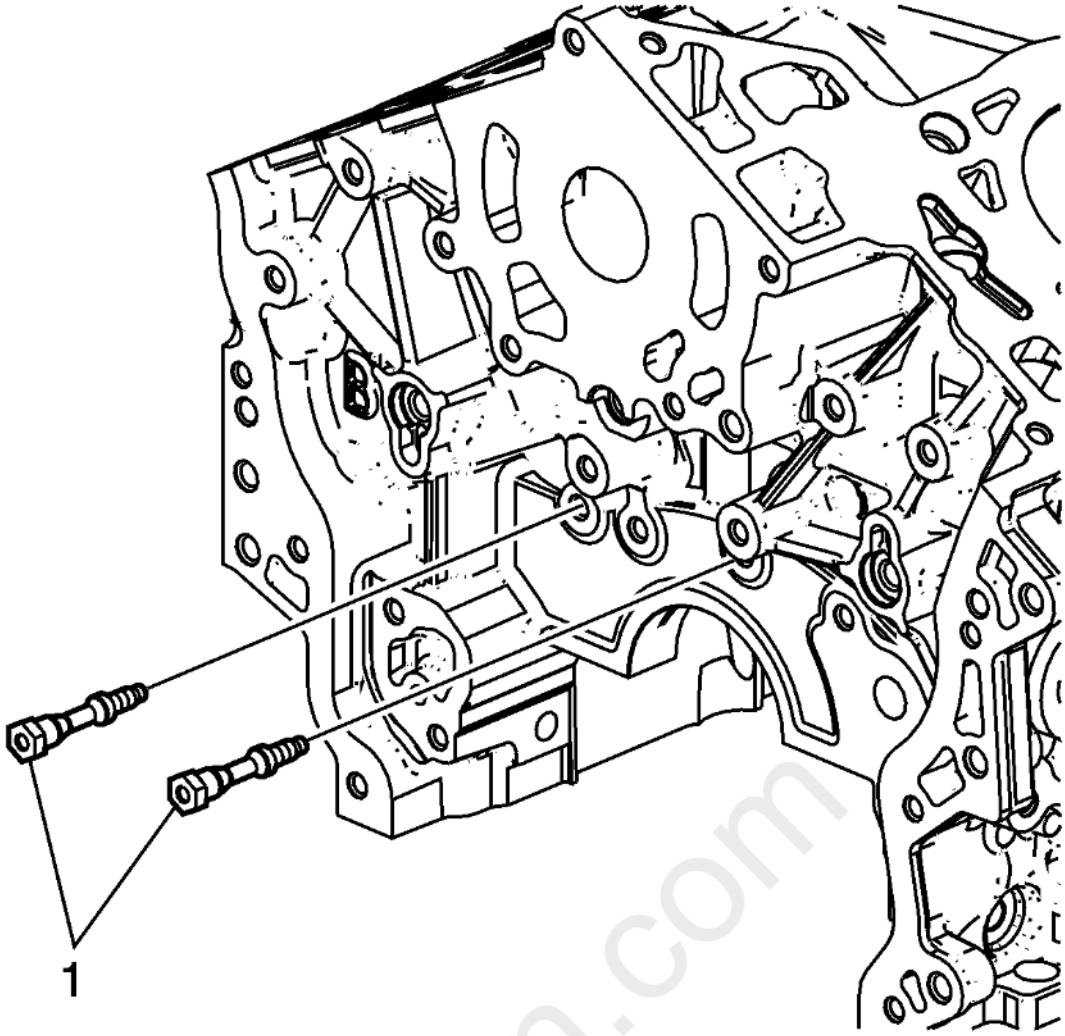

Fig. 417: Identifying Engine Front Cover Studs
Courtesy of GENERAL MOTORS COMPANY

33. Install the engine front cover studs (1) and tighten to 15 N.m (11 lb ft).

CRANKSHAFT AND BEARING INSTALLATION

Special Tools

- **GE 6125-1B** Slide Hammer Adapter
- **EN 45059** Angle Meter
- **EN 49102** Crankshaft Bearing Cap Remover

For equivalent regional tools, refer to **Special Tools** .

Crankshaft Bearing Installation Procedure

NOTE: **If the crankshaft bearings have been used in a running engine, you must replace them with NEW crankshaft bearings for reassembly.**

1. Clean the crankcase crank bore with a lint-free cloth.
2. Clean all the oil from the backside of new bearing halves.

cardiagn.com

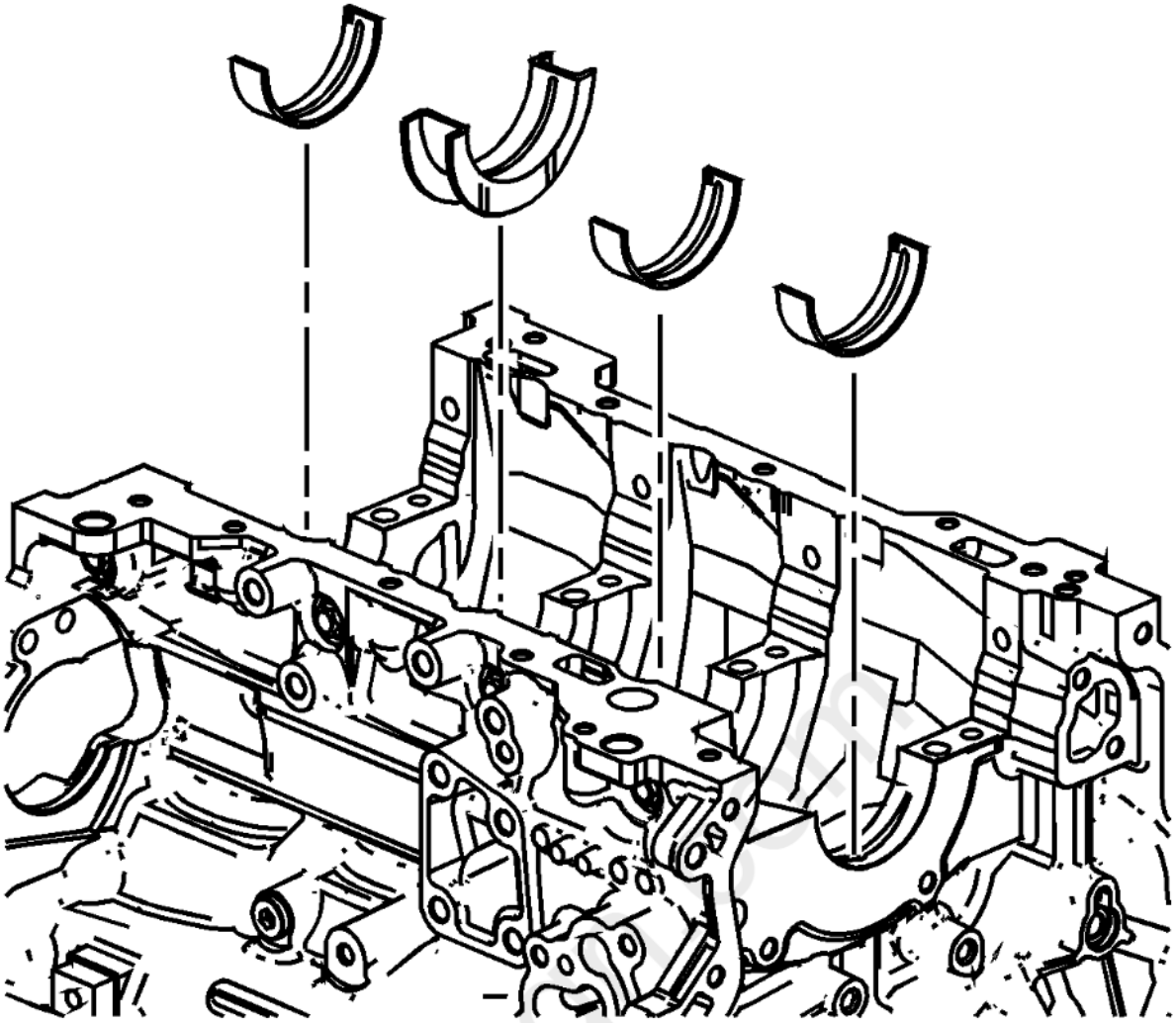

Fig. 418: View Of Upper Crankshaft Bearings
Courtesy of GENERAL MOTORS COMPANY

3. Install the NEW upper crankshaft bearings into position. The thrust bearing belongs in the number 3 journal. Ensure that the upper bearing insert contains the oil transfer hole and groove. Roll the bearing into position so that the lock tang engages the crank slot. The bearing must fit flush with the upper crankcase.

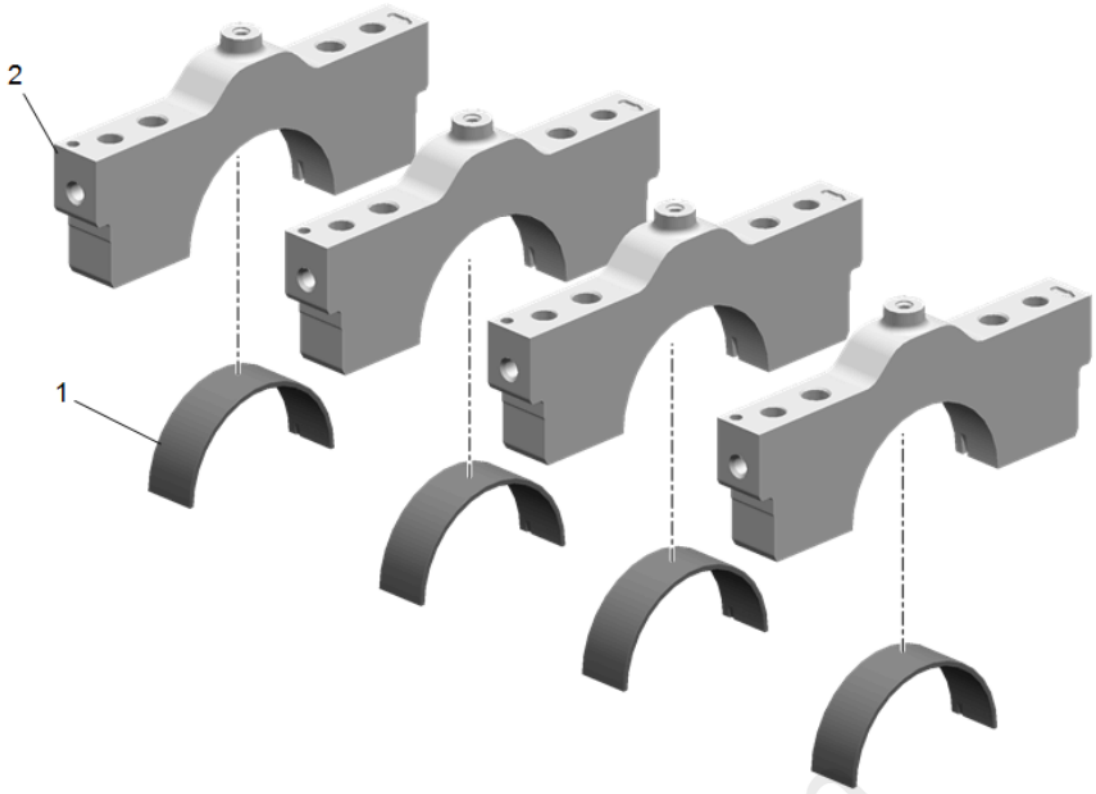

Fig. 419: View Of Crankshaft Bearing Caps & Lower Bearing Halves
Courtesy of GENERAL MOTORS COMPANY

4. Install the NEW lower crankshaft bearings into position in the main bearing caps. The lower crankshaft bearings are identified by NO grooves or holes. The bearings must fit flush with the crankshaft bearing caps.

Crankshaft Installation Procedure

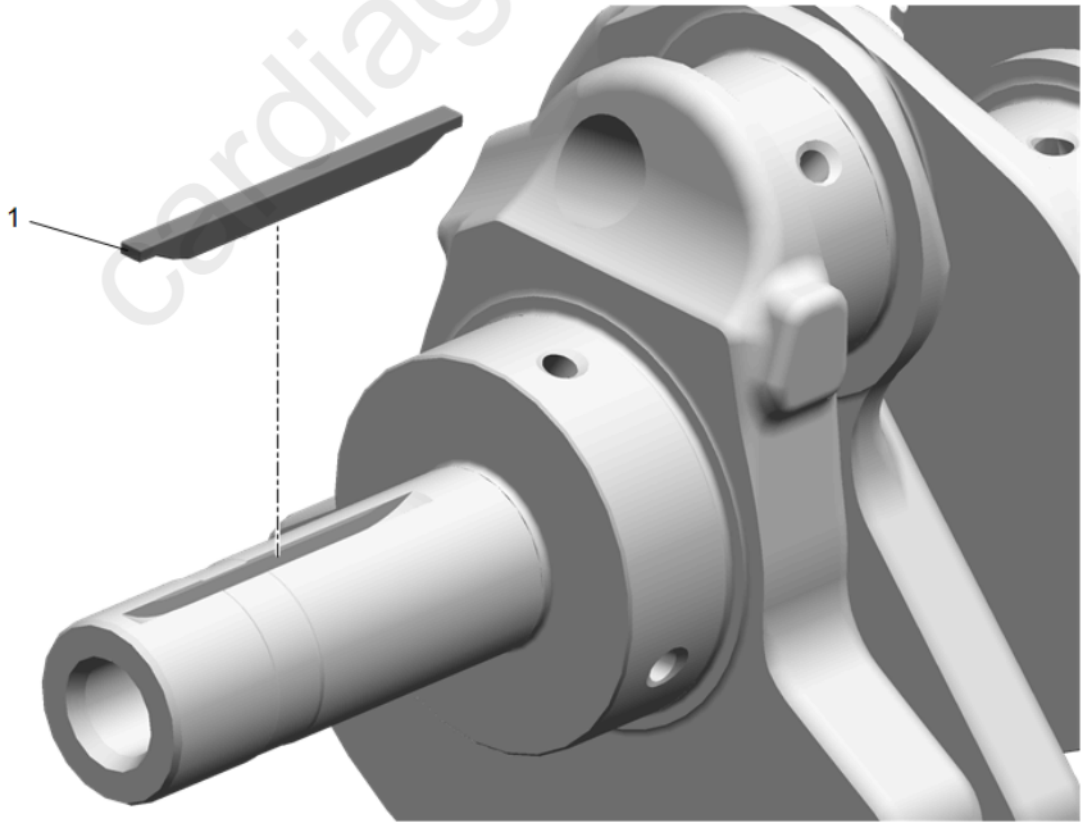

Fig. 420: Locating Crankshaft Sprocket Drive Pin
Courtesy of GENERAL MOTORS COMPANY

1. If removed, install the crankshaft key. Lightly tap the key in place with a small soft face, bronze/plastic, hammer until it bottoms in the keyway.

cardiagn.com

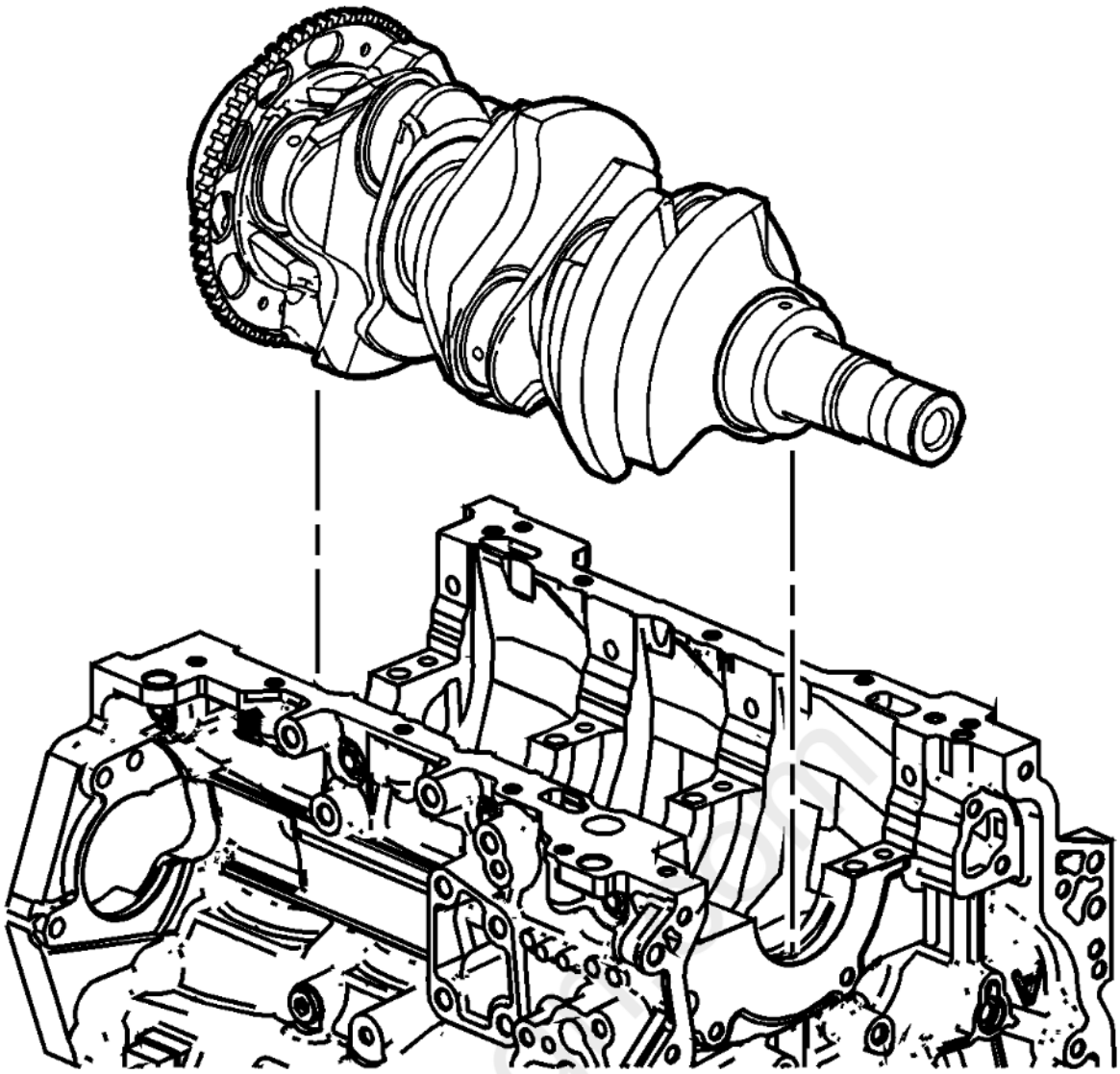

Fig. 421: View Of Crankshaft
Courtesy of GENERAL MOTORS COMPANY

2. Gently lower the crankshaft into position in the cylinder block.

Crankshaft Bearing Clearance Measurement Procedure

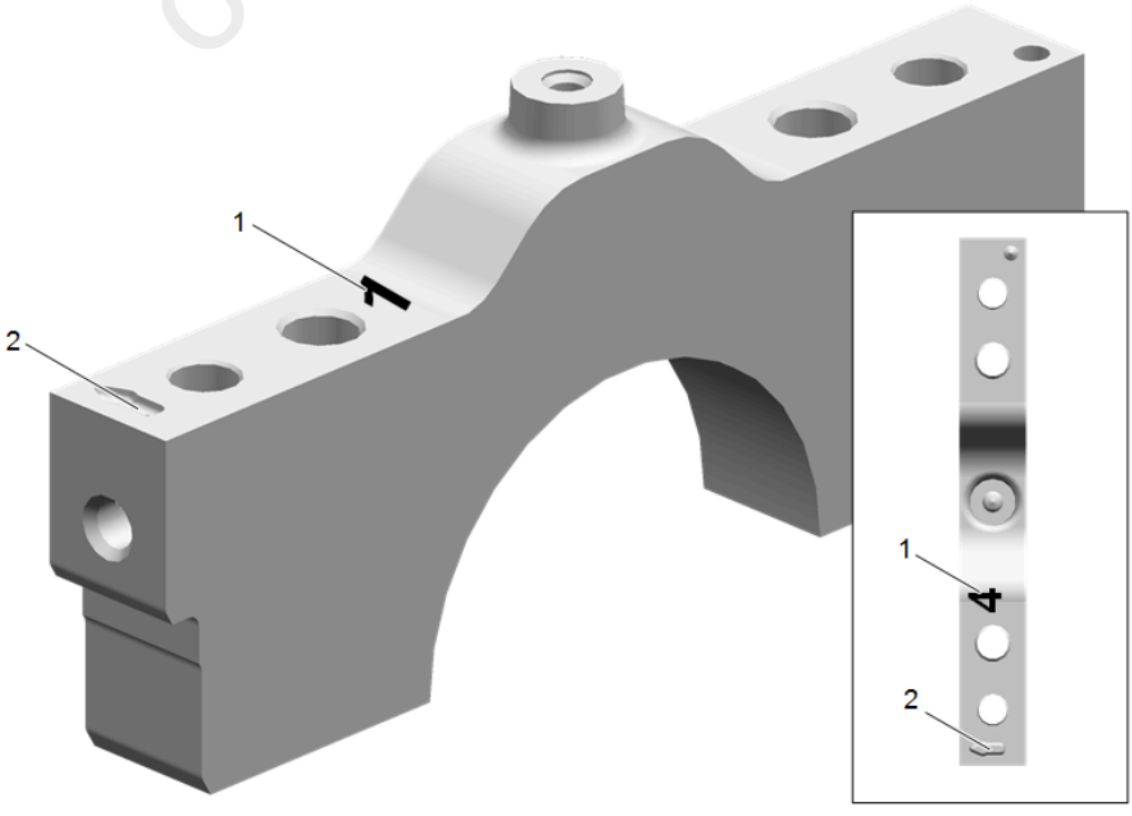

Fig. 422: Identifying Front Main Bearing Cap
Courtesy of GENERAL MOTORS COMPANY

1. Place a length of fresh, room temperature plastic gaging material all the way across all the crankshaft bearing journals.
2. Identify the proper order of the main bearing caps. The main bearing caps are numbered 1 (1) through 4, with the front main bearing cap marked with the number 1. The arrow (2) is to be oriented to the front of the engine.

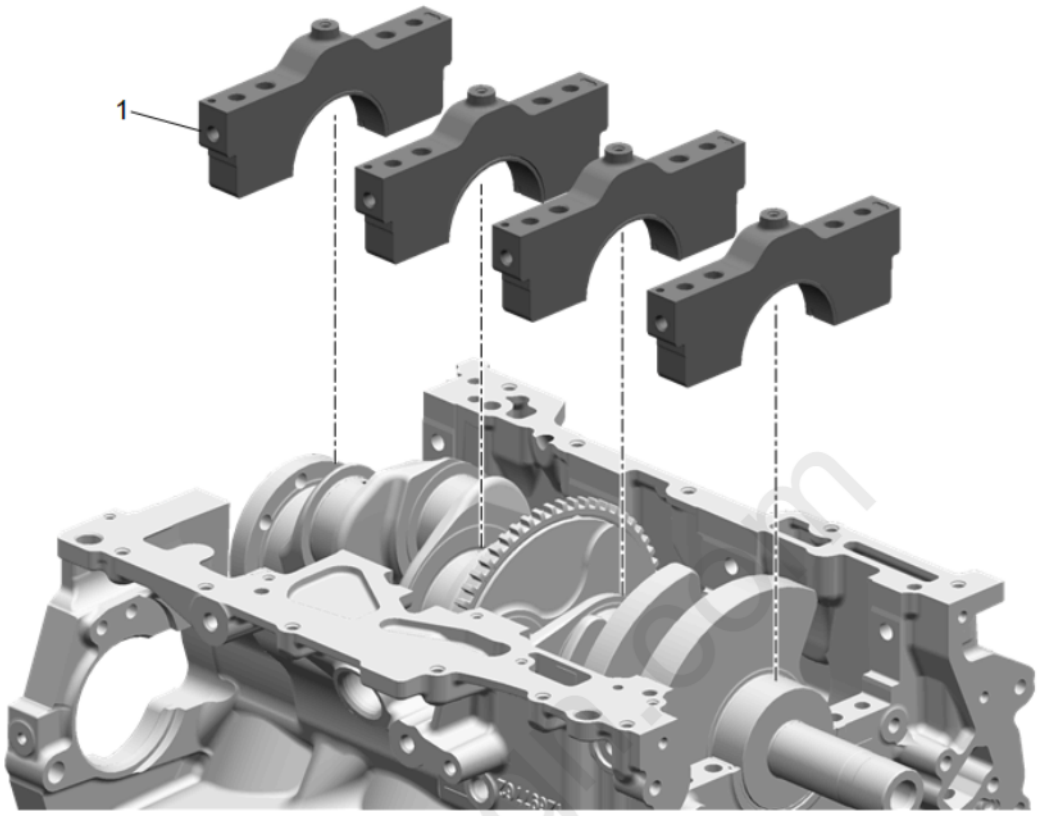

Fig. 423: View Of Crankshaft Main Bearing Caps
Courtesy of GENERAL MOTORS COMPANY

3. Install the crankshaft main bearing caps.
4. Loosely install the original inner main cap bolts.
5. Loosely install the original outer main cap bolts.

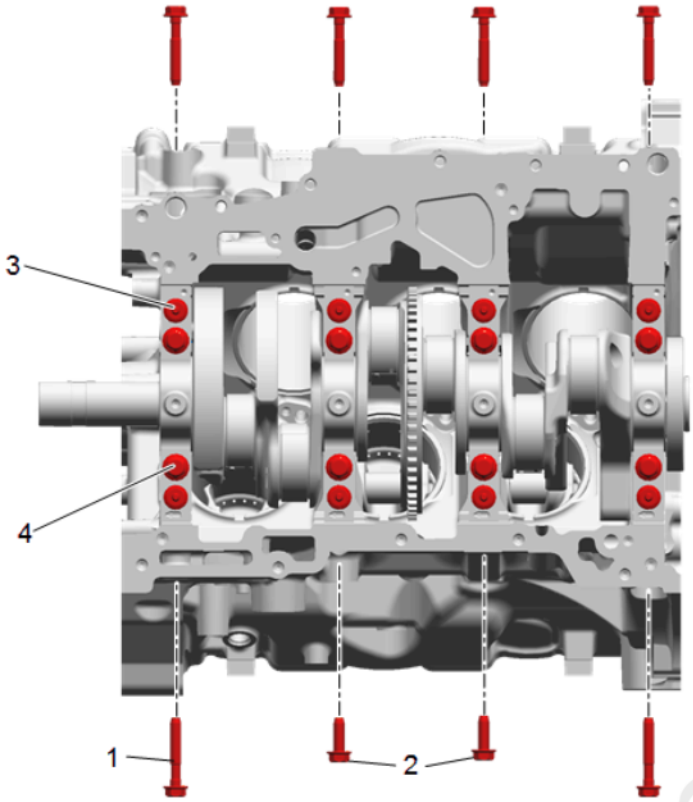

Fig. 424: Identifying Crankshaft Main Bearing Cap Side Bolts
Courtesy of GENERAL MOTORS COMPANY

6. Loosely install the original short/inner side main cap bolts.
7. Loosely install the original long/outer side main cap bolts.

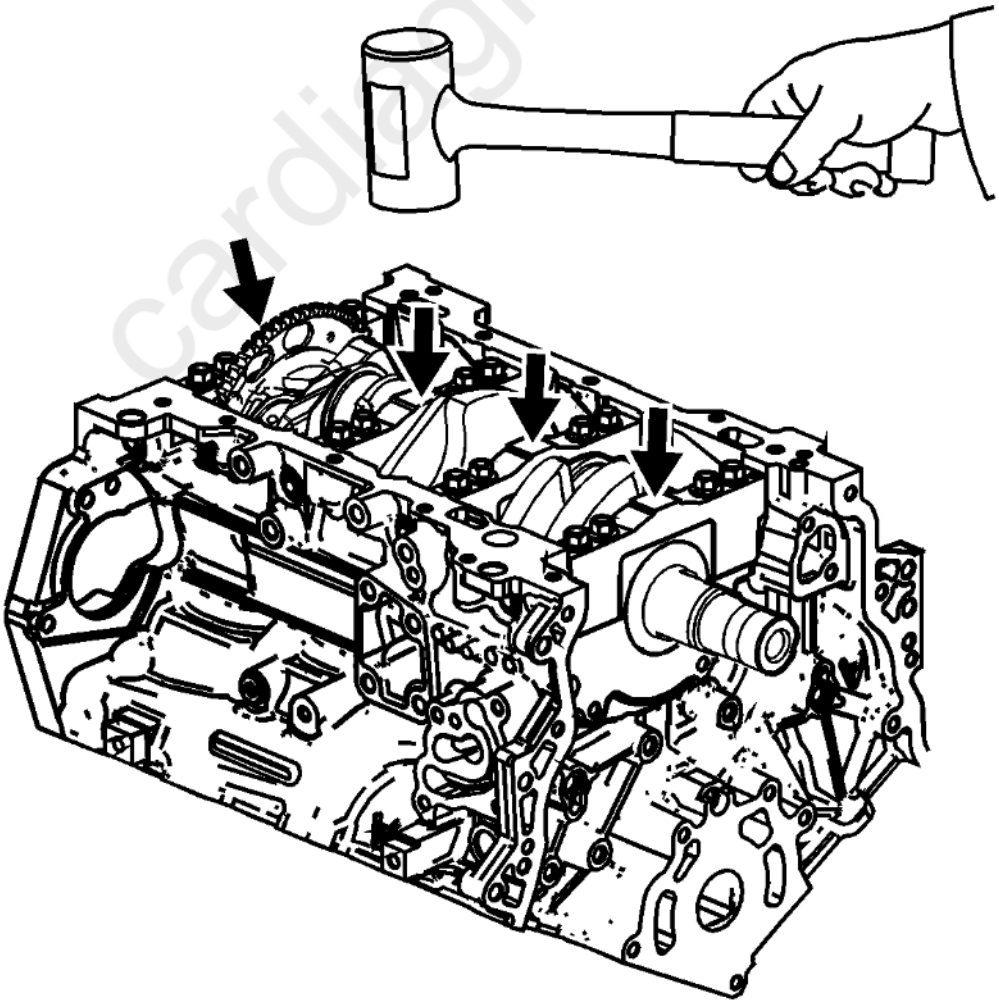

cardiagn.com

Fig. 425: Setting Crankshaft Main Bearing Caps
Courtesy of GENERAL MOTORS COMPANY

8. Tap the crankshaft main bearing caps with a soft-faced hammer.

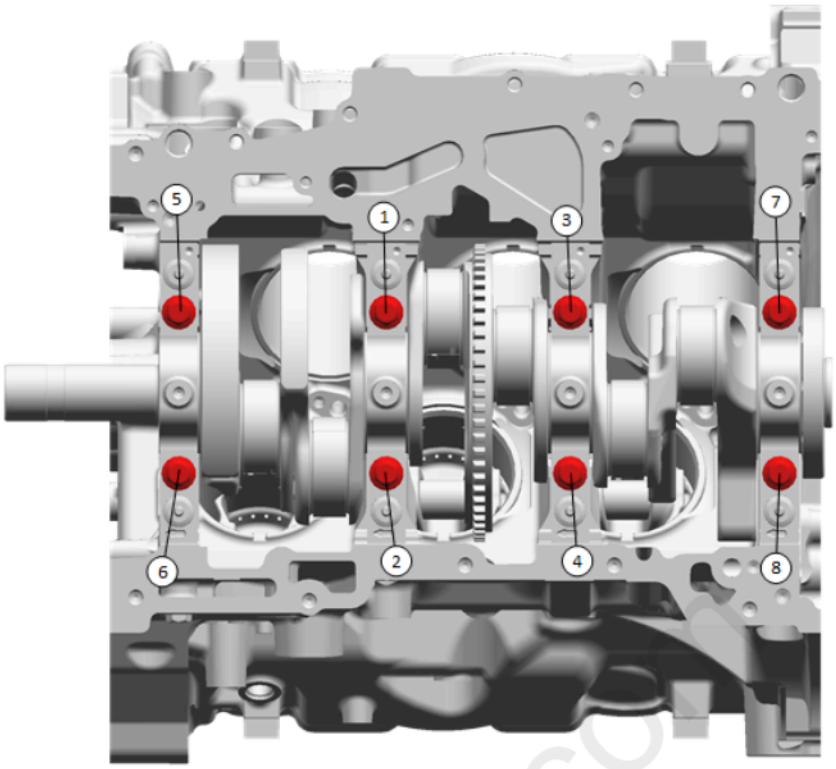

Fig. 426: Identifying Crankshaft Main Bearing Inboard Bolt Tightening Sequence
Courtesy of GENERAL MOTORS COMPANY

9. Tighten the main caps bolts using the **EN 45059** meter in the following sequence:

CAUTION: **Refer to Fastener Caution .**

10. Tighten the inboard bolts (1 - 8) first, in two passes.
    1. Tighten the inboard bolts to 20 N.m (15 lb ft) on the first pass.
    2. Tighten the inboard bolts (1 - 8) an additional 80 degrees on the 2nd pass.

cardiagn.com

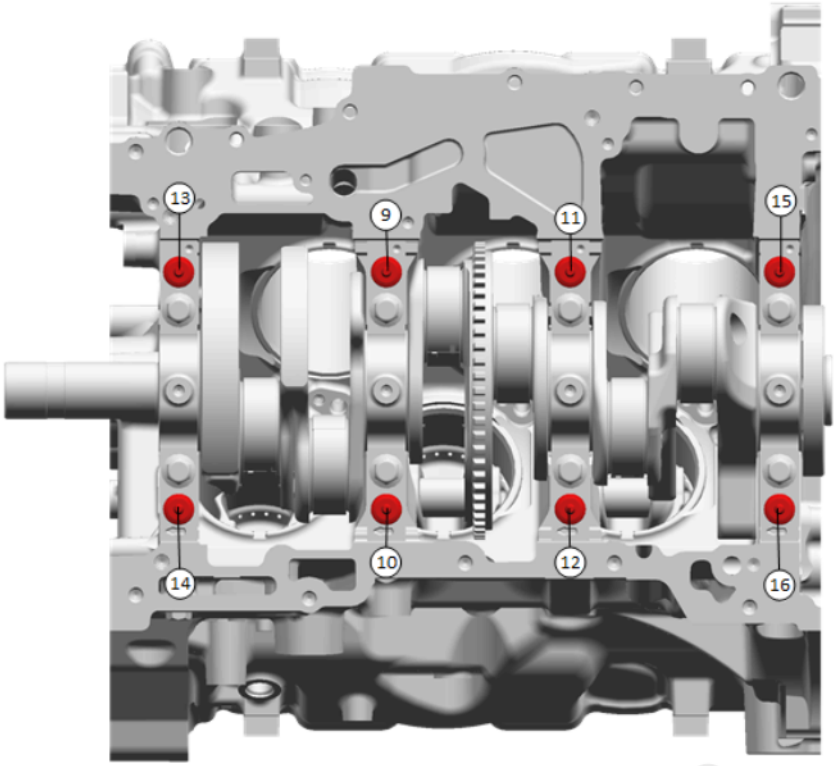

Fig. 427: Identifying Outboard Crankshaft Main Bearing Bolt Tightening Sequence
Courtesy of GENERAL MOTORS COMPANY

11. Tighten the outboard bolts (9 - 16) second, in two passes.
    1. Tighten the outboard bolts to 15 N.m (11 lb ft) on the first pass.
    2. Tighten the outboard bolts (9 - 16) an additional 110 degrees on the 2nd pass.

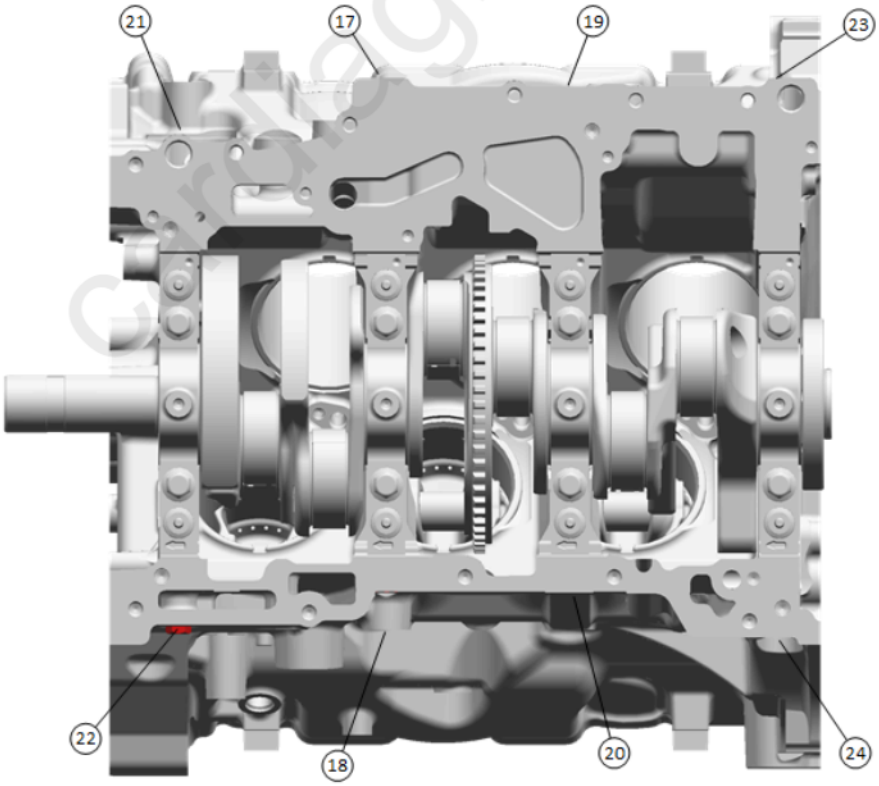

Fig. 428: Identifying Short/Inner Crankshaft Main Bearing (Bolt Tightening Sequence)
Courtesy of GENERAL MOTORS COMPANY

12. Tighten the short/inner bolts (17 - 20) third, in two passes.
    1. Tighten the short/inner bolts to 30 N.m (22 lb ft) on the first pass.
    2. Tighten the short/inner bolts (17 - 20) an additional 60 degrees on the 2nd pass.
13. Tighten the long/outer bolts (21 - 24) fourth, in two passes.

1. Tighten the long/outer bolts to 30 N.m (22 lb ft) on the first pass.
2. Tighten the long/outer bolts (21 - 24) an additional 60 degrees on the 2nd pass.

NOTE: **Do not rotate the crankshaft.**

14. After reaching final torque, allow the assembly to sit for 2 minutes.

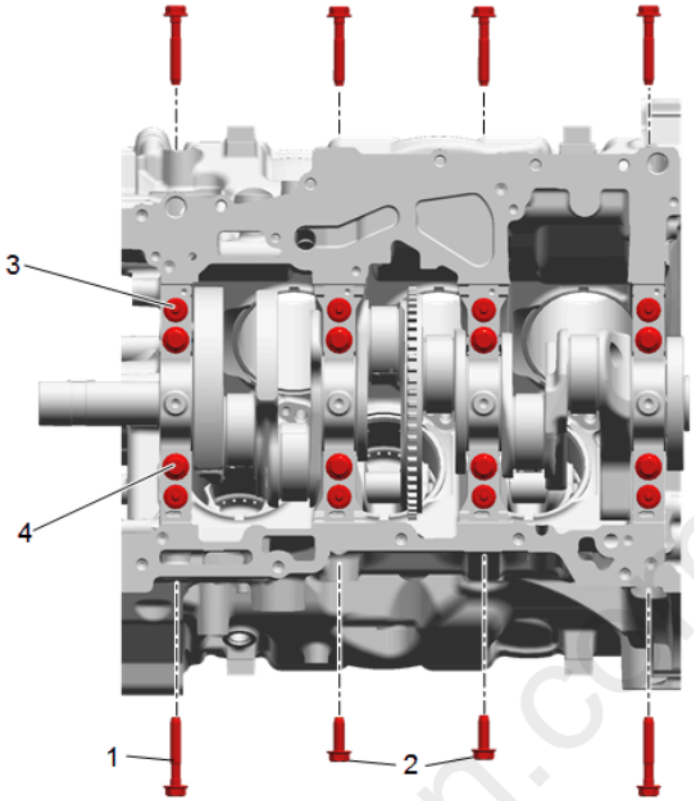

Fig. 429: Identifying Crankshaft Main Bearing Cap Side Bolts
Courtesy of GENERAL MOTORS COMPANY

15. Remove the crankshaft bearing cap side bolts.

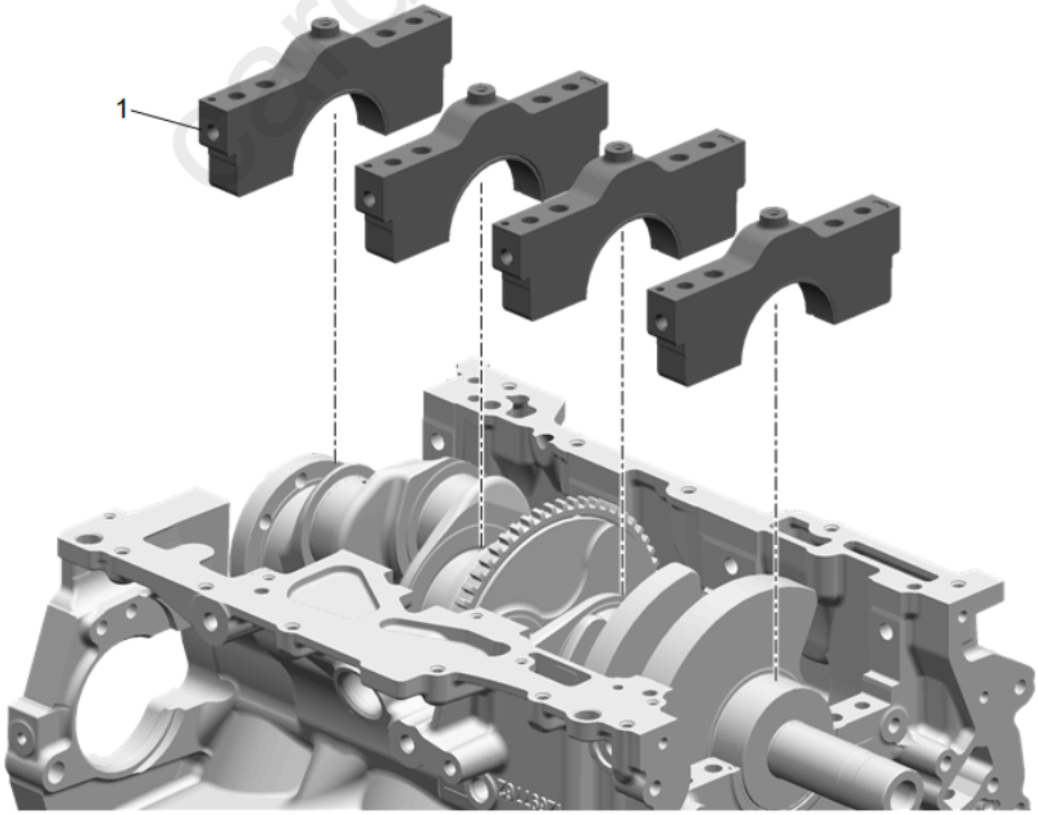

Fig. 430: View Of Crankshaft Main Bearing Caps
Courtesy of GENERAL MOTORS COMPANY

16. Remove the crankshaft bearing cap outer bolts.
17. Remove the crankshaft bearing cap inner bolts.
18. Remove the crankshaft bearing caps using the **GE 6125-1B** adapter and **EN 49102** remover.

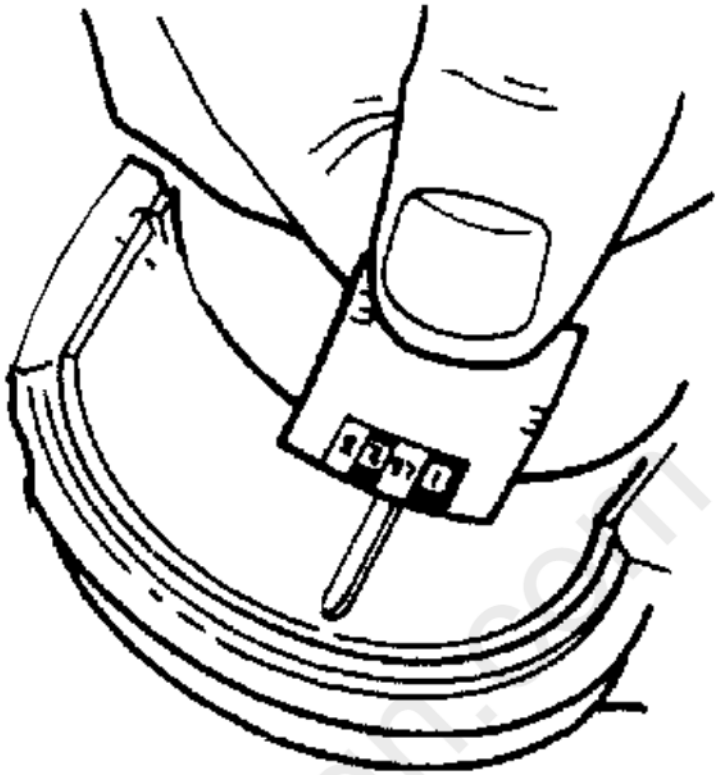

Fig. 431: Measuring Plastigage
Courtesy of GENERAL MOTORS COMPANY

19. Determine the crankshaft bearing clearance by comparing the width of the flattened plastic gaging material at its widest point with the graduation on the gaging material container.

NOTE: **The crankshaft bearings CAN be reused after checking the clearance if the bearings have never been used in a running engine.**

20. Compare your measurements with the **Engine Mechanical Specifications** . If the new bearings do not provide the proper crankshaft to bearing clearance, inspect the following:
    1. Re-measure the crankshaft journals for the correct specified size and ensure the proper new bearings are being installed. If the crankshaft journals are incorrectly sized, replace or regrind the crankshaft. Crankshaft machining is permitted and undersized bearings are available.
    2. Re-measure the engine block crankshaft bearing bore diameter to ensure proper size. The engine block crankshaft bearing bore is not machinable and the block must be replaced if out of specification.
21. Clean the plastic gaging material from the crankshaft bearing journals with a soft, lint-free cloth.

cardiagn.com

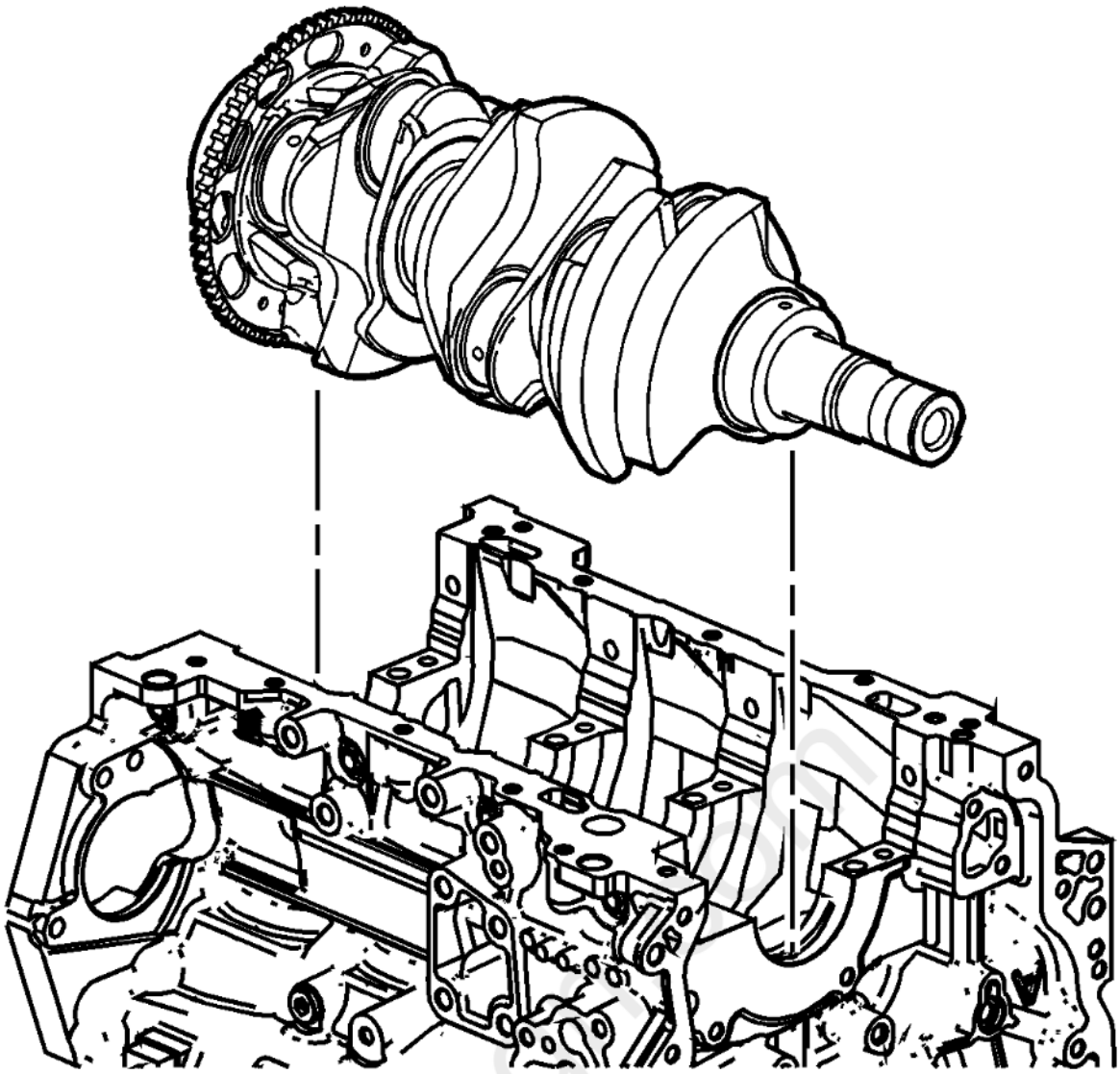

Fig. 432: View Of Crankshaft
Courtesy of GENERAL MOTORS COMPANY

22. Lift the crankshaft out of the cylinder block.

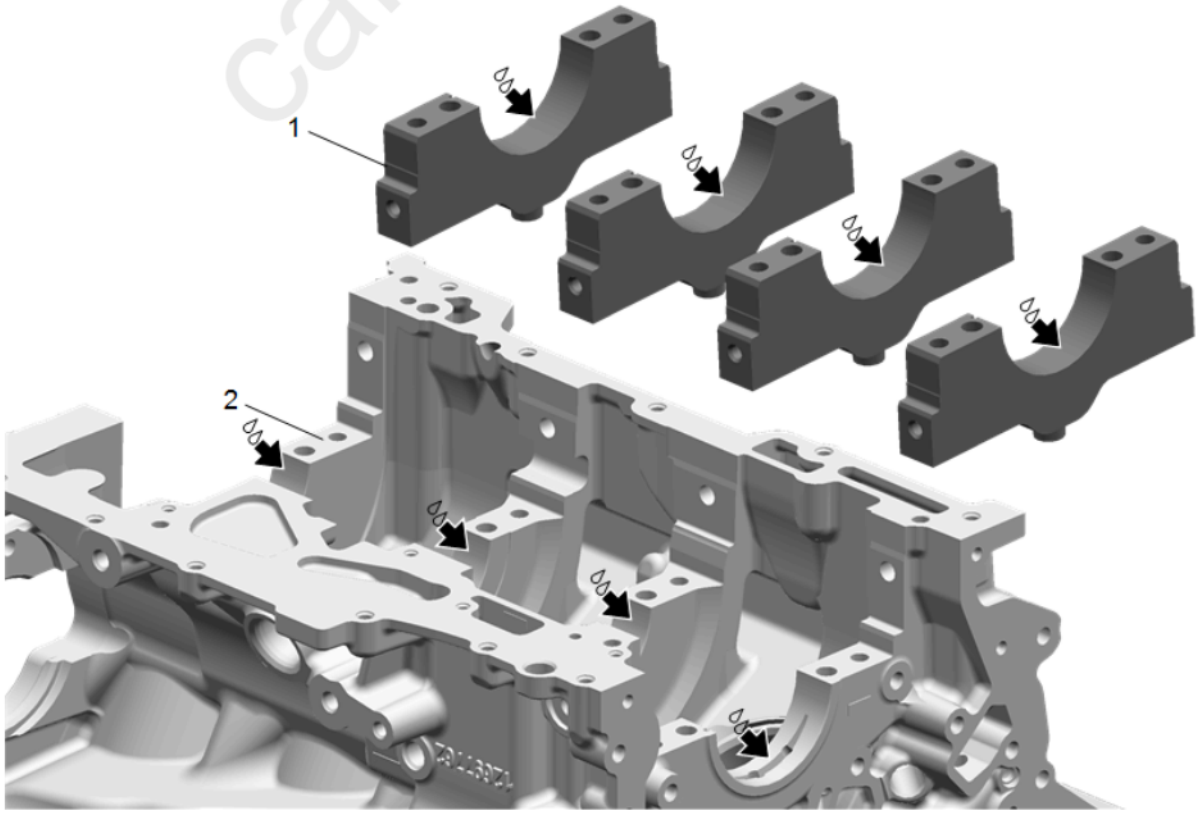

Fig. 433: Prelubing Upper & Lower Bearing Surfaces
Courtesy of GENERAL MOTORS COMPANY

23. Apply a liberal amount of crankshaft prelube or clean engine oil to the upper and lower bearing surfaces. Refer to **Adhesives, Fluids, Lubricants, and Sealers** for recommended lubricant.

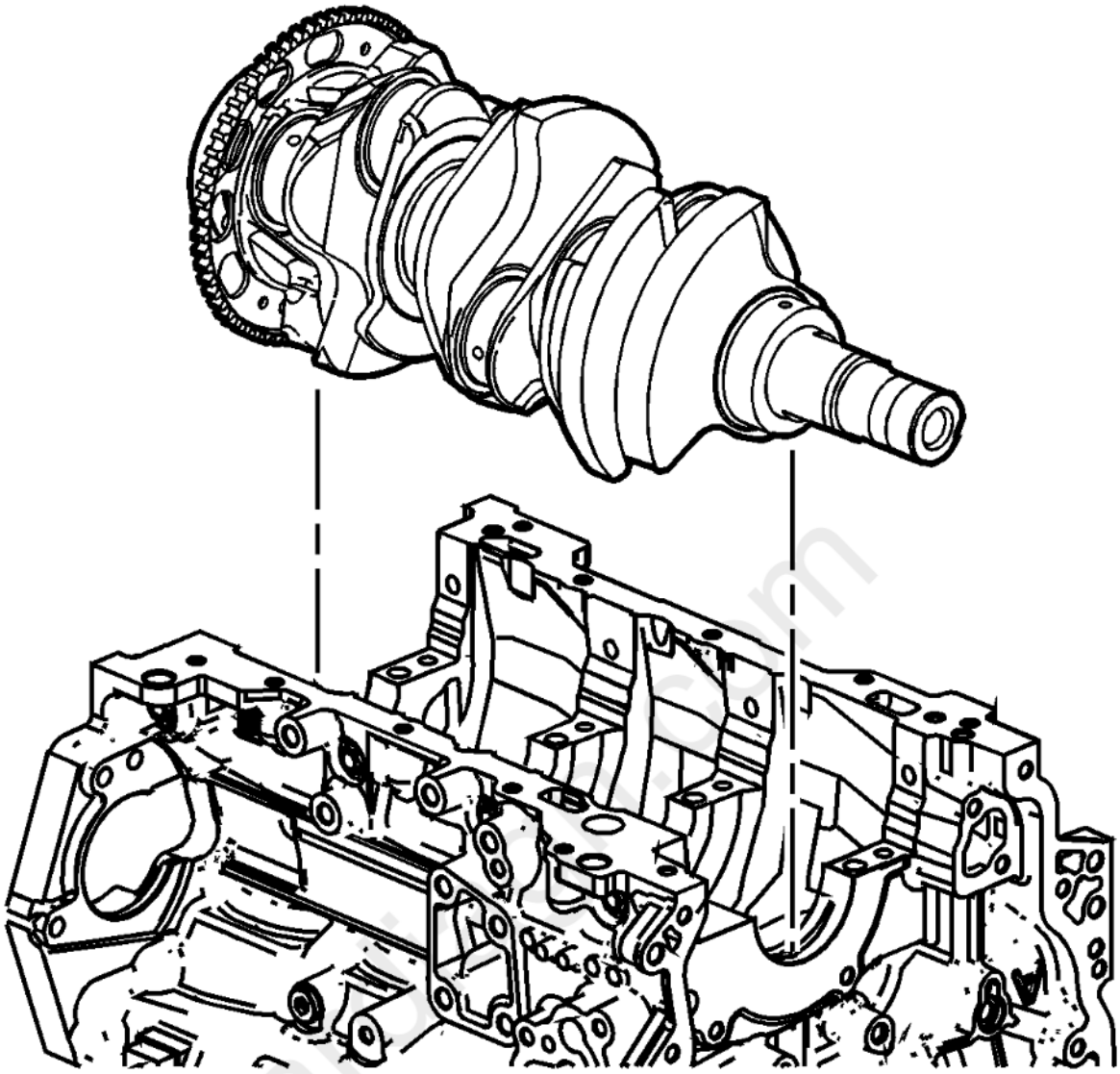

Fig. 434: View Of Crankshaft
Courtesy of GENERAL MOTORS COMPANY

24. Gently lower the crankshaft into position in the cylinder block.

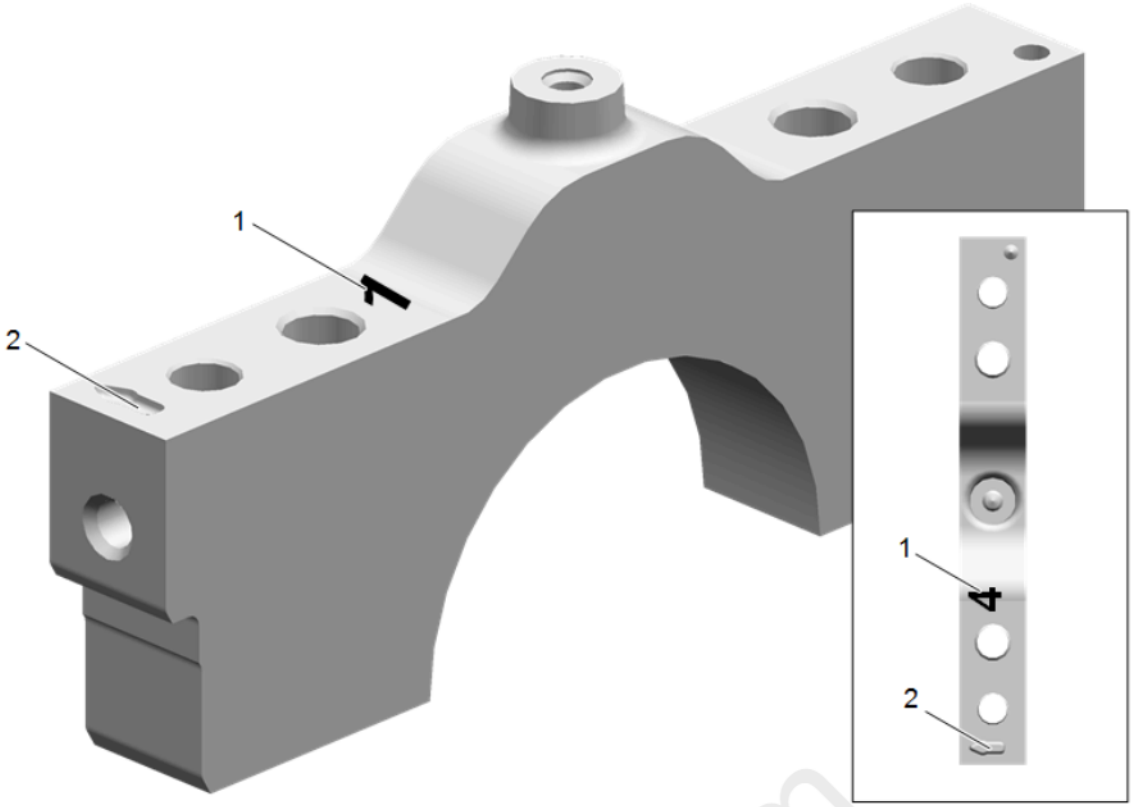

Fig. 435: Identifying Front Main Bearing Cap
Courtesy of GENERAL MOTORS COMPANY

25. Identify the proper order of the main bearing caps. The main bearing caps are numbered 1 (1) through 4, with the front main bearing cap marked with the number 1. The arrow (2) is to be oriented to the front of the engine.

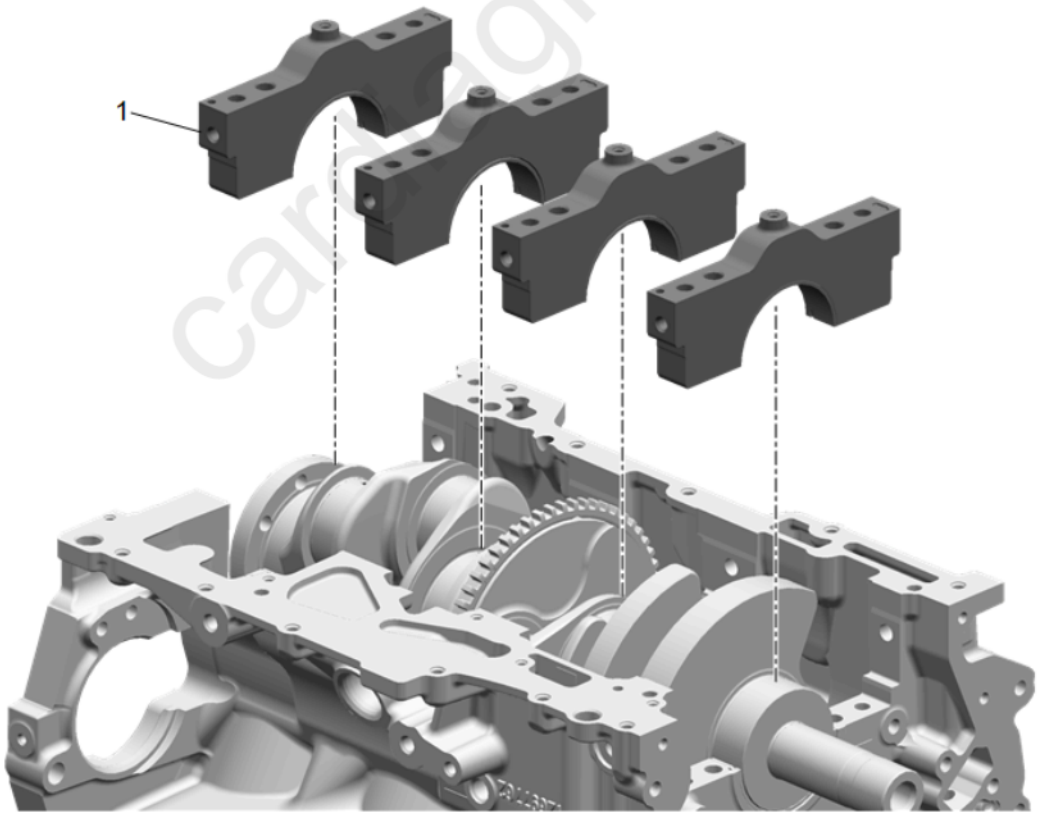

Fig. 436: View Of Crankshaft Main Bearing Caps
Courtesy of GENERAL MOTORS COMPANY

26. Install the crankshaft main bearing caps.

CAUTION: **This vehicle is equipped with torque-to-yield or single use fasteners. Install a NEW torque-to-yield or single use fastener when installing**

this component. Failure to replace the torque-to-yield or single use fastener could cause damage to the vehicle or component.

27. Loosely install the NEW inner main cap bolts.
28. Loosely install the NEW outer main cap bolts.

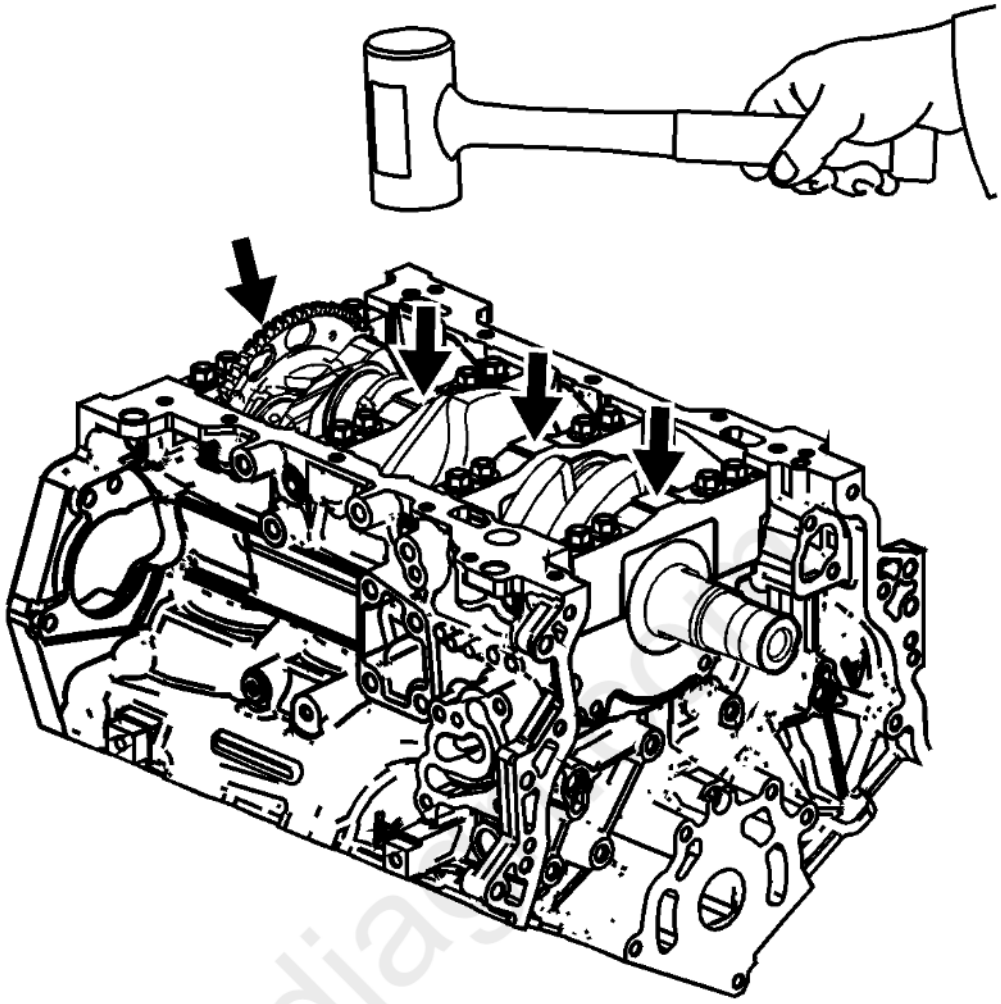

Fig. 437: Setting Crankshaft Main Bearing Caps
Courtesy of GENERAL MOTORS COMPANY

29. Tap the crankshaft main bearing caps with a soft-faced hammer.

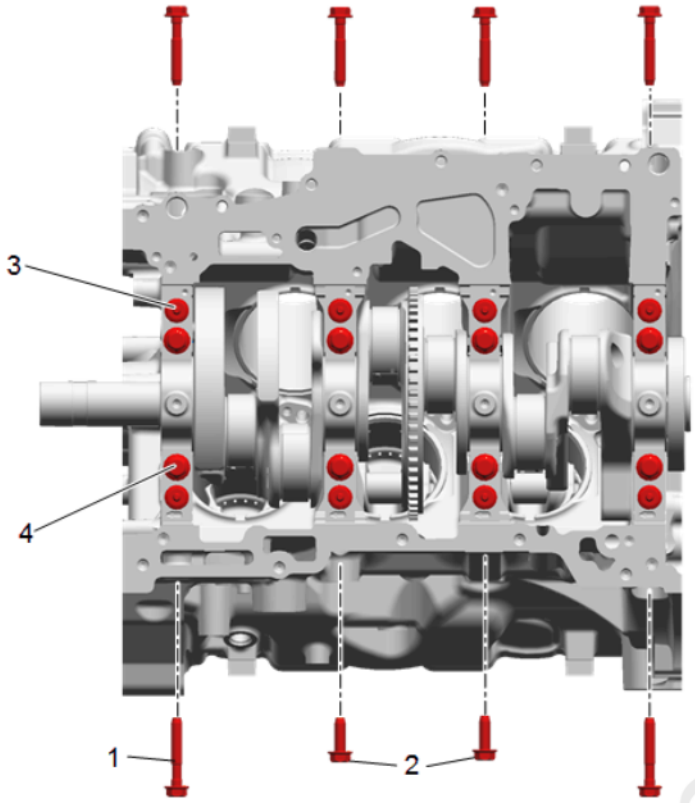

Fig. 438: Identifying Crankshaft Main Bearing Cap Side Bolts
Courtesy of GENERAL MOTORS COMPANY

30. Loosely install the NEW short/inner side main cap bolts.
31. Loosely install the NEW long/outer side main cap bolts.

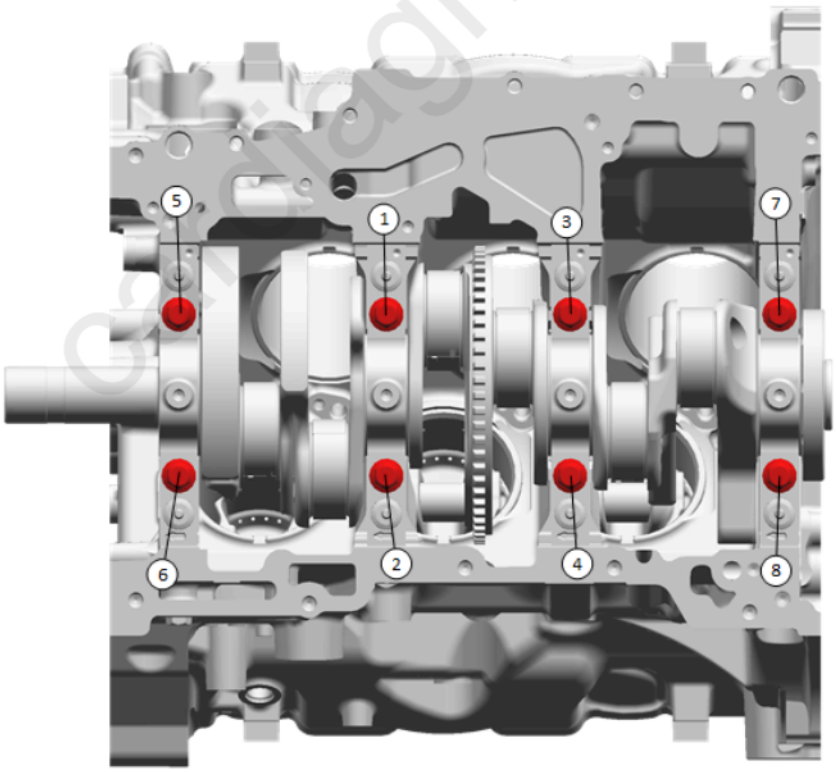

Fig. 439: Identifying Crankshaft Main Bearing Inboard Bolt Tightening Sequence
Courtesy of GENERAL MOTORS COMPANY

32. Tighten the main cap bolts using the **EN 45059** meter in the following sequence:
33. Tighten the inboard bolts (1 - 8) first, in two passes.
    1. Tighten the inboard bolts to 20 N.m (15 lb ft) on the first pass.
    2. Tighten the inboard bolts (1 - 8) an additional 80 degrees on the 2nd pass.

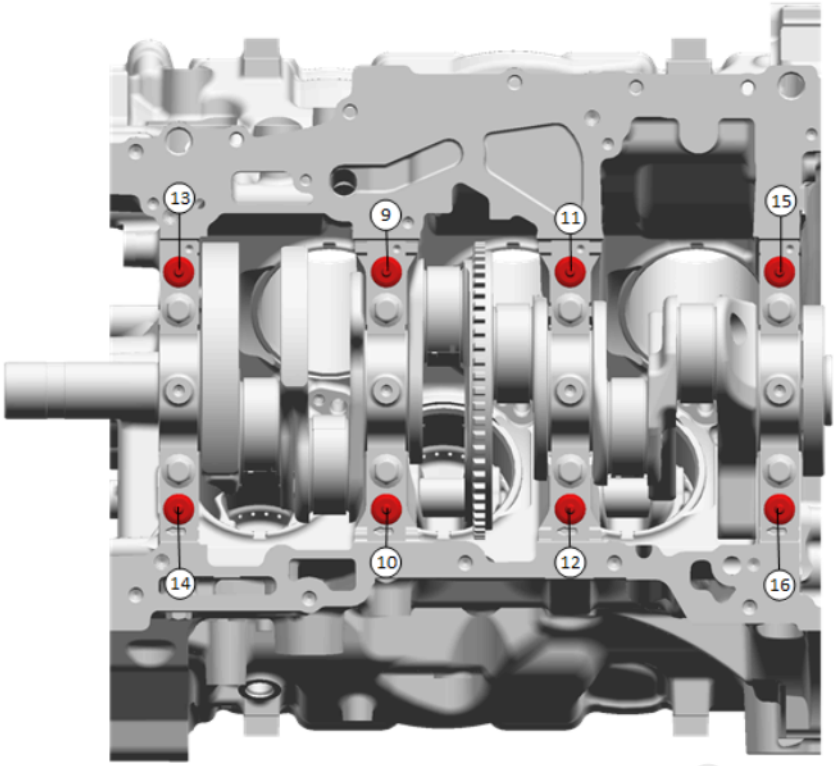

Fig. 440: Identifying Outboard Crankshaft Main Bearing Bolt Tightening Sequence
Courtesy of GENERAL MOTORS COMPANY

34. Tighten the outboard bolts (9 - 16) second, in two passes.
    1. Tighten the outboard bolts to 15 N.m (11 lb ft) on the first pass.
    2. Tighten the outboard bolts (9 - 16) an additional 110 degrees on the 2nd pass.

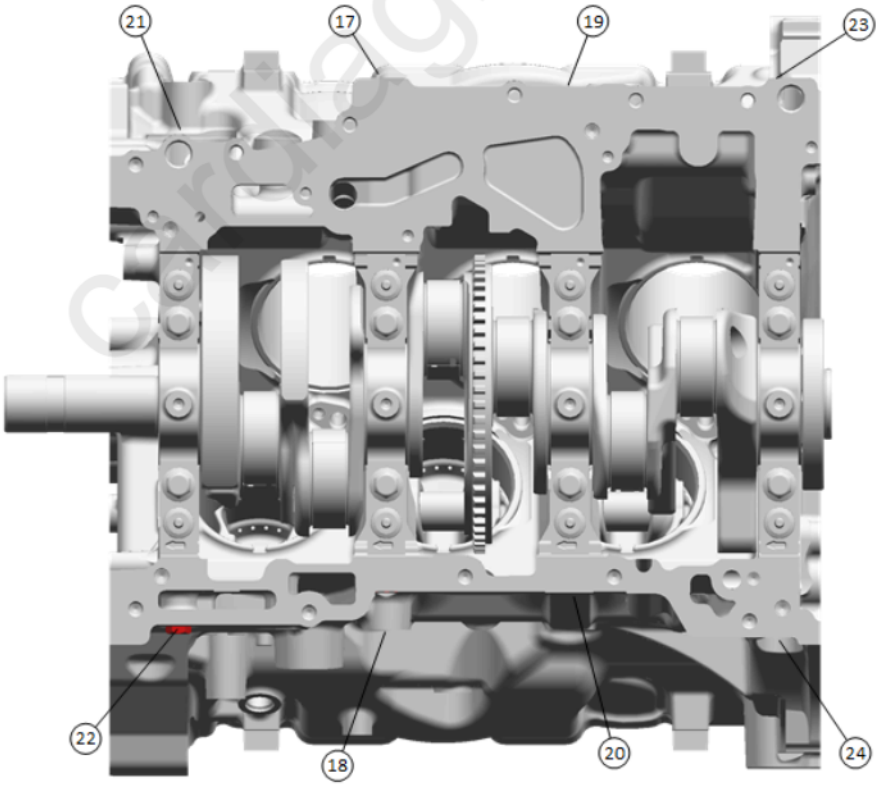

Fig. 441: Identifying Short/Inner Crankshaft Main Bearing (Bolt Tightening Sequence)
Courtesy of GENERAL MOTORS COMPANY

35. Tighten the short/inner bolts (17 - 20) third, in two passes.
    1. Tighten the short/inner bolts to 30 N.m (22 lb ft) on the first pass.
    2. Tighten the short/inner bolts (17 - 20) an additional 60 degrees on the 2nd pass.
36. Tighten the long/outer bolts (21 - 24) fourth, in two passes.

1. Tighten the long/outer bolts to 30 N.m (22 lb ft) on the first pass.
2. Tighten the long/outer bolts (21 - 24) an additional 60 degrees on the 2nd pass.

37. Ensure that the crankshaft turns without binding or noise.

PISTON, CONNECTING ROD, AND BEARING INSTALLATION

Special Tools

- **EN-43690-A** Rod Bearing Clearance Checking Tool
- **EN-45059** Angle Meter
- **EN-46121** Connecting Rod Guide Pin Set
- **EN-48589** Crankshaft Rotation Socket

For equivalent regional tools, refer to **Special Tools** .

Piston and Connecting Rod Assembly Procedure

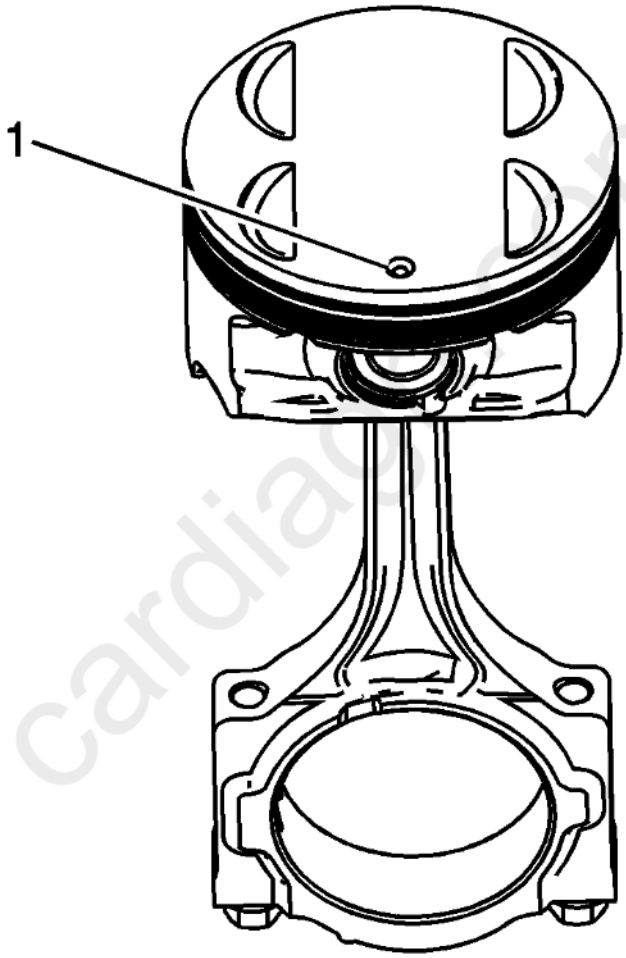

Fig. 442: Identifying Proper Piston Orientation With Dot On Piston
Courtesy of GENERAL MOTORS COMPANY

1. Liberally lubricate the cylinder walls, piston rings and piston skirts with engine oil.

NOTE:

- **The piston is directional and must be installed in the engine block in the proper direction. The dot on the top of the piston must face the front of the engine.**
- **Ensure the Bowl of the piston faces the intake.**

2. Select the correctly numbered piston/connecting rod assembly for the cylinder. A dot (1) showing proper piston orientation is located on the top of the piston.

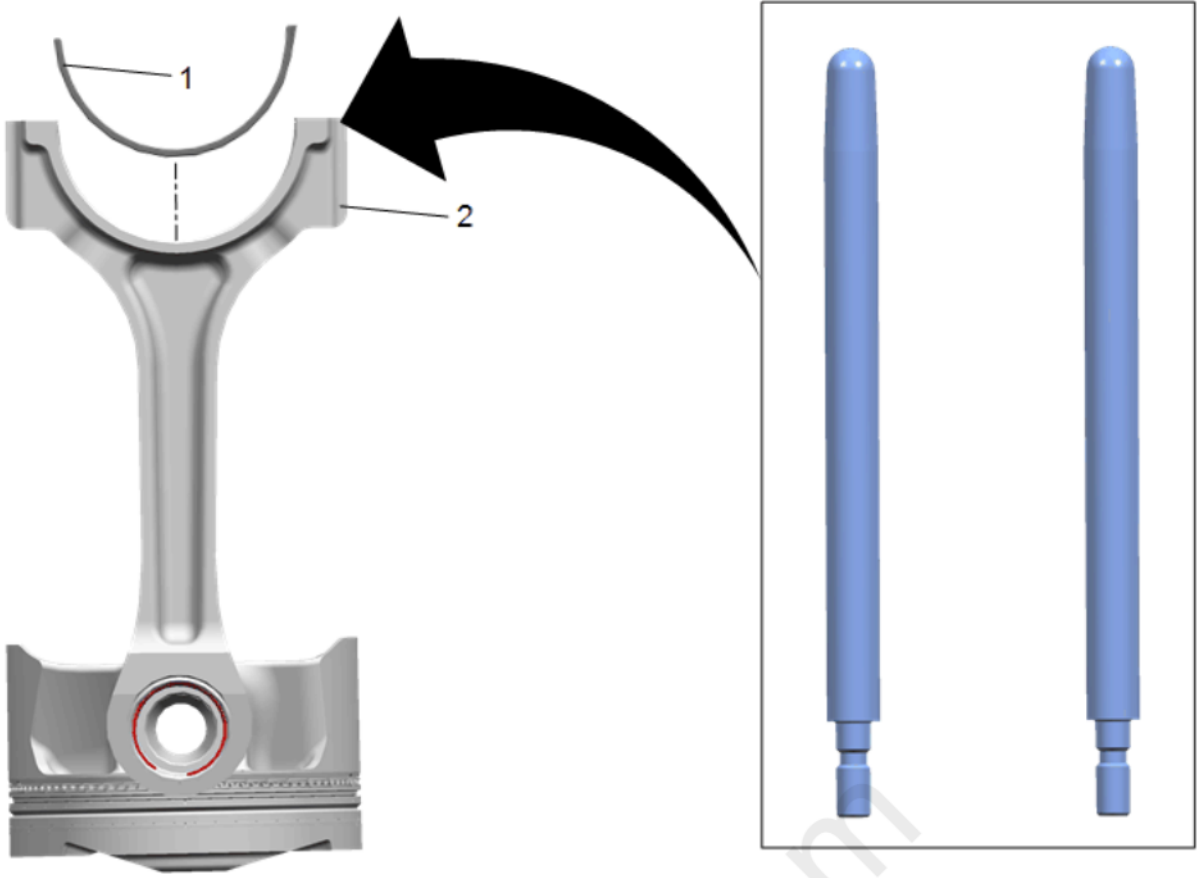

Fig. 443: View Of Piston/Connecting Rod Installation Tool
Courtesy of GENERAL MOTORS COMPANY

NOTE: **If the connecting rod bearings have been used in a running engine, you must replace them with NEW connecting rod bearings for reassembly.**

3. Install the connecting rod bearing into the connecting rod.
4. Install the **EN 46121** pin set into the connecting rod bolt holes.
5. Compress the piston rings using the a ring compressor sleeve or equivalent.

NOTE: **When installing a piston into a cylinder, use a ring compressor sleeve or equivalent for best results. The following features should be looked for when selecting a ring compressor sleeve.**

1. **Hard anodized and Teflon coated for low friction and prolonged wear resistance.**
2. **Smooth radius that tapers down to the specific bore size.**
3. **Sleeve should compress the piston rings smoothly and evenly.**
4. **Using a ring compressor sleeve greatly reduces the difficulty with installing thin high-performance oil rings.**

If a ring compressor sleeve is unavailable, a universal ring compressor will work but is more difficult to use.

carlagn.com

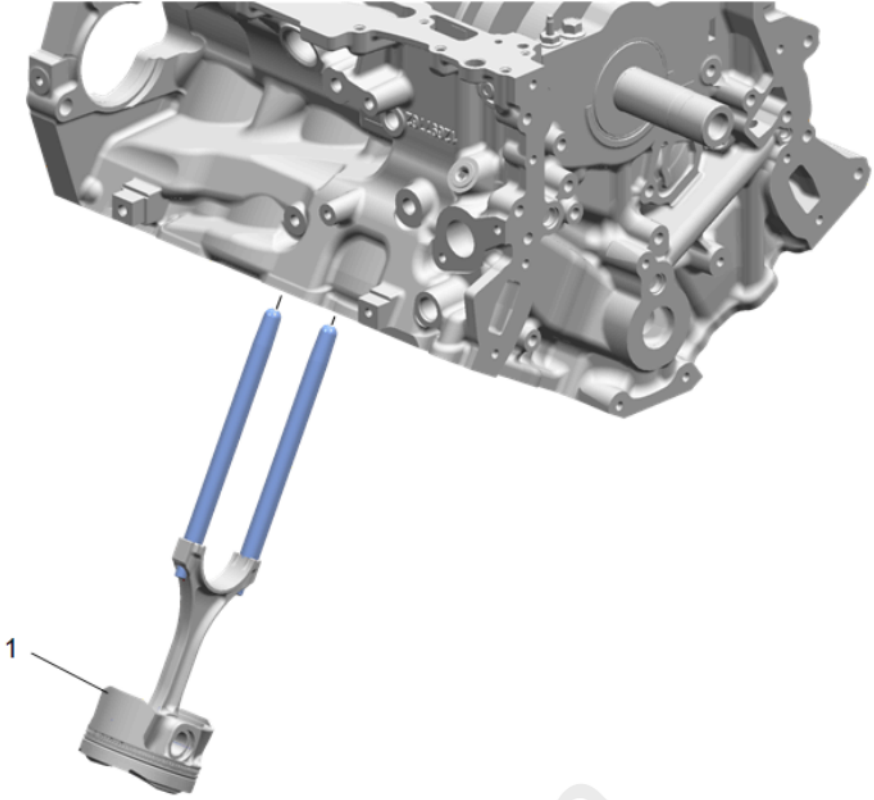

Fig. 444: View Of Connecting Rod & Piston Assembly
Courtesy of GENERAL MOTORS COMPANY

NOTE: **Extreme care must be used when installing the piston and connecting rod in order to be sure the rod does not scrape or nick the cylinder bore, the oil jets, or the crankshaft surfaces.**

6. Using both hands, slowly guide the piston and connecting rod assembly into the cylinder from the top and bottom of the cylinder. DO NOT allow the connecting rod to contact the cylinder wall.
7. Tap the piston into its bore with a hammer handle. Guide the connecting rod to the connecting rod journal using the **EN-46121** set while gently tapping the piston into place. Hold the ring compressor sleeve or equivalent against the engine block until all the rings have entered the cylinder bore.

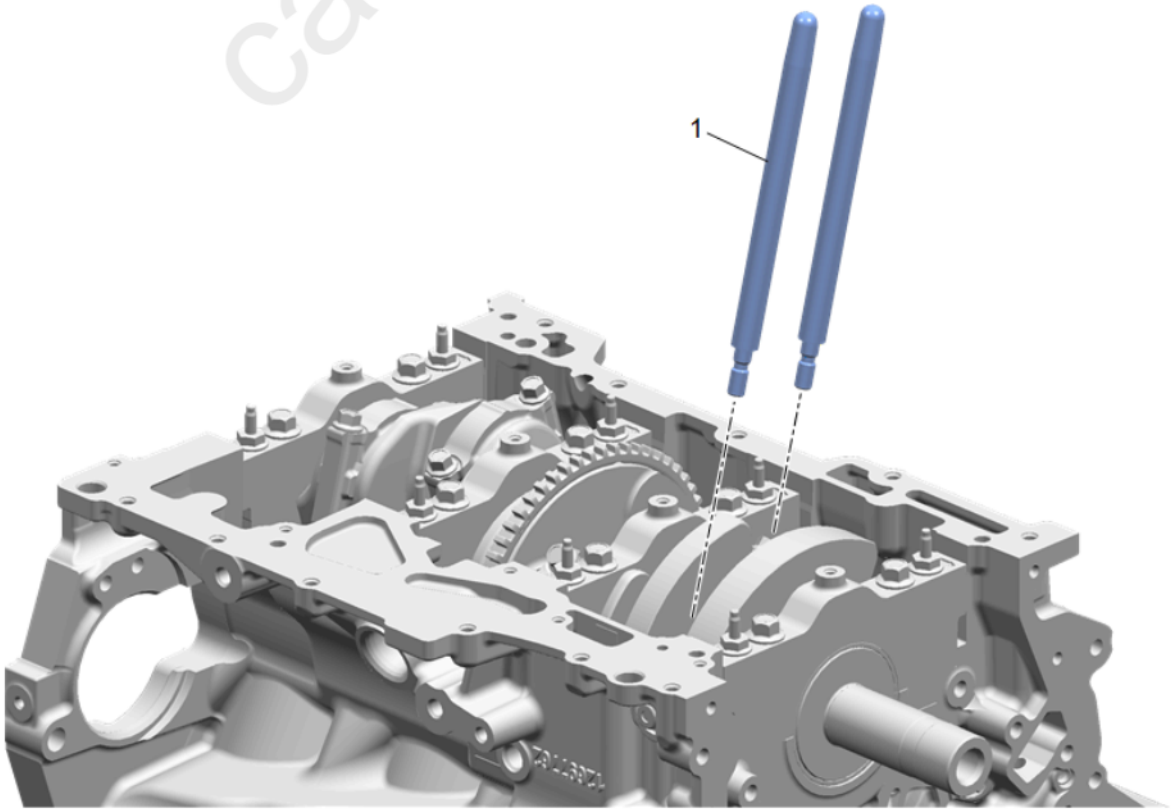

Fig. 445: Crankshaft Protector Pins Installed in Connecting Rod Bolt Holes
Courtesy of GENERAL MOTORS COMPANY

8. Remove the **EN 46121** pin set from the connecting rod bolt holes.

Connecting Rod Bearing Clearance Measurement Procedure - Using Plastic Gaging

NOTE: **Connecting rod bearings that have been run in an engine should NEVER be reused.**

Before final assembly it is important to check the clearance of the new connecting rod bearings.

1. Place a length of fresh, room temperature plastic gaging material all the way across the connecting rod bearing journal.
2. Install the connecting rod bearing into the connecting rod cap.

NOTE: **The connecting rod is non-directional therefore the connecting rod bearing lock tangs can face inboard or outboard.**

3. Install the connecting rod end cap on its original connecting rod and ensure the bearing lock tangs are aligned on the same side of the rod.

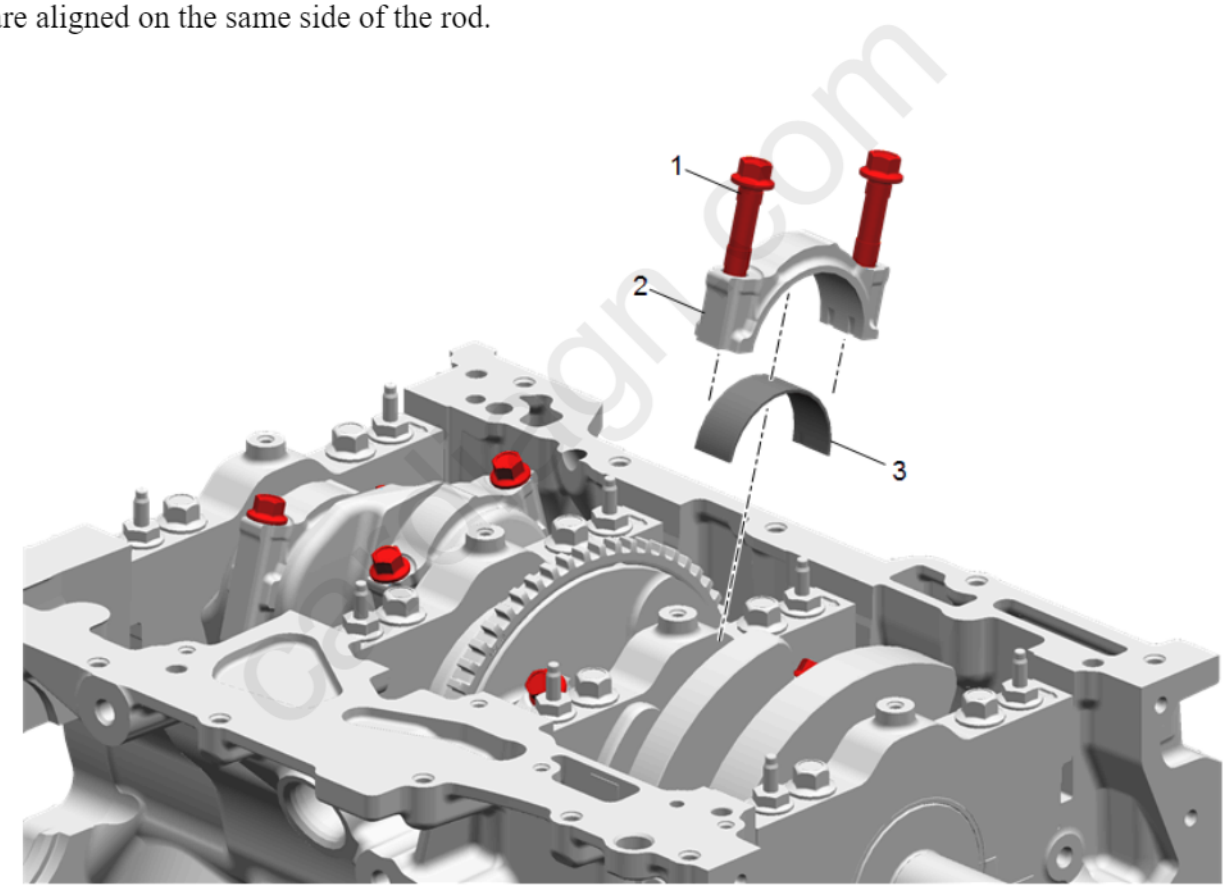

Fig. 446: View Of Connecting Rod Bearing & Cap
Courtesy of GENERAL MOTORS COMPANY

CAUTION: Refer to Fastener Caution .

CAUTION: **Do not lubricate the NEW connecting rod bolts. The NEW bolts have a pre-applied graphite lubricant. Applying lubricant to the connecting rod bolts will effect the clamp load when the connecting rod bolts are torqued. Improper clamp load can lead to component failure and extensive engine damage.**

NOTE: **Reuse the old connecting rod bolts ONLY for measuring the connecting rod bearing clearance.**

4. Install the connecting rod bolts into the connecting rod cap.

5. Tighten the connecting rod bolts.
    1. First Pass

       Tighten the connecting rod bolts to 25 N.m (18 lb ft).

    2. Final Pass

       Tighten the connecting rod bolts an additional 110 degrees using the **EN 45059** meter.

6. Allow the assembly to sit for at least 2 minutes.
7. Remove the connecting rod cap bolts.
8. Remove the connecting rod cap.

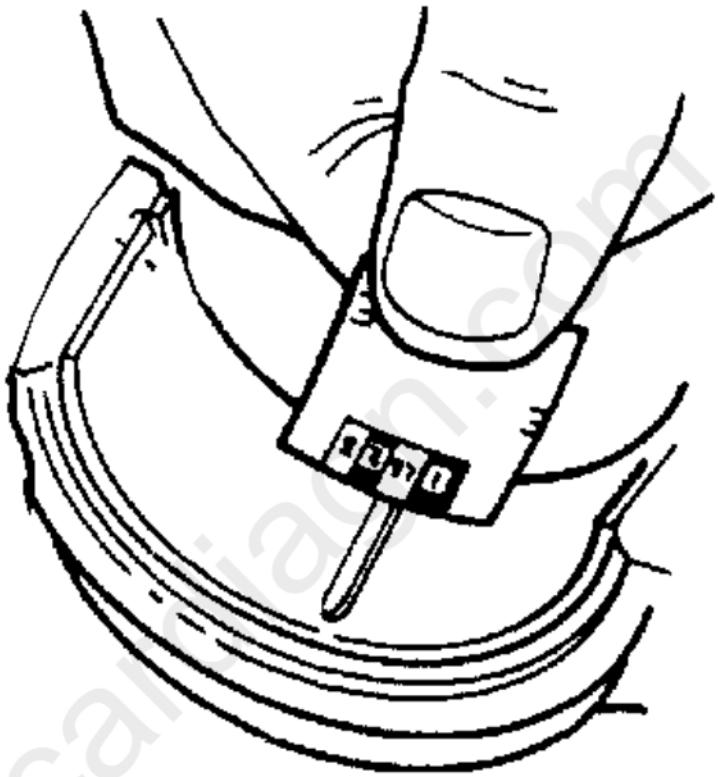

Fig. 447: Measuring Plastigage
Courtesy of GENERAL MOTORS COMPANY

9. Determine the connecting rod bearing clearance by comparing the width of the flattened plastic gaging material at its widest point with the graduation on the gaging material container.
10. Compare your measurements with the engine mechanical specifications. If the new bearings do not provide the proper crankshaft to connecting rod bearing clearance, inspect the following:
    1. Re-measure the crankshaft connecting rod journals for the correct specified size and ensure the proper new bearings are being installed. If the crankshaft connecting rod journals are incorrectly sized, replace or regrind the crankshaft. Crankshaft machining is permitted and undersized bearings are available.
    2. Re-measure the connecting rod bearing bore diameter to ensure proper size. The connecting rod is not machinable and the connecting rod must be replaced if out of specification.

11. Clean the plastic gaging material from the connecting rod bearing journals using a soft lint-free cloth.

Connecting Rod Bearing Clearance Measurement Procedure - Using EN-43690-A

The **EN-43690-A** checking tool has been developed as a more accurate method to measure connecting rod bearing clearances. The instructions below provide an overview of tool set-up and usage. For more detailed information, refer to the tool instruction sheets as supplied by the tool manufacturer.

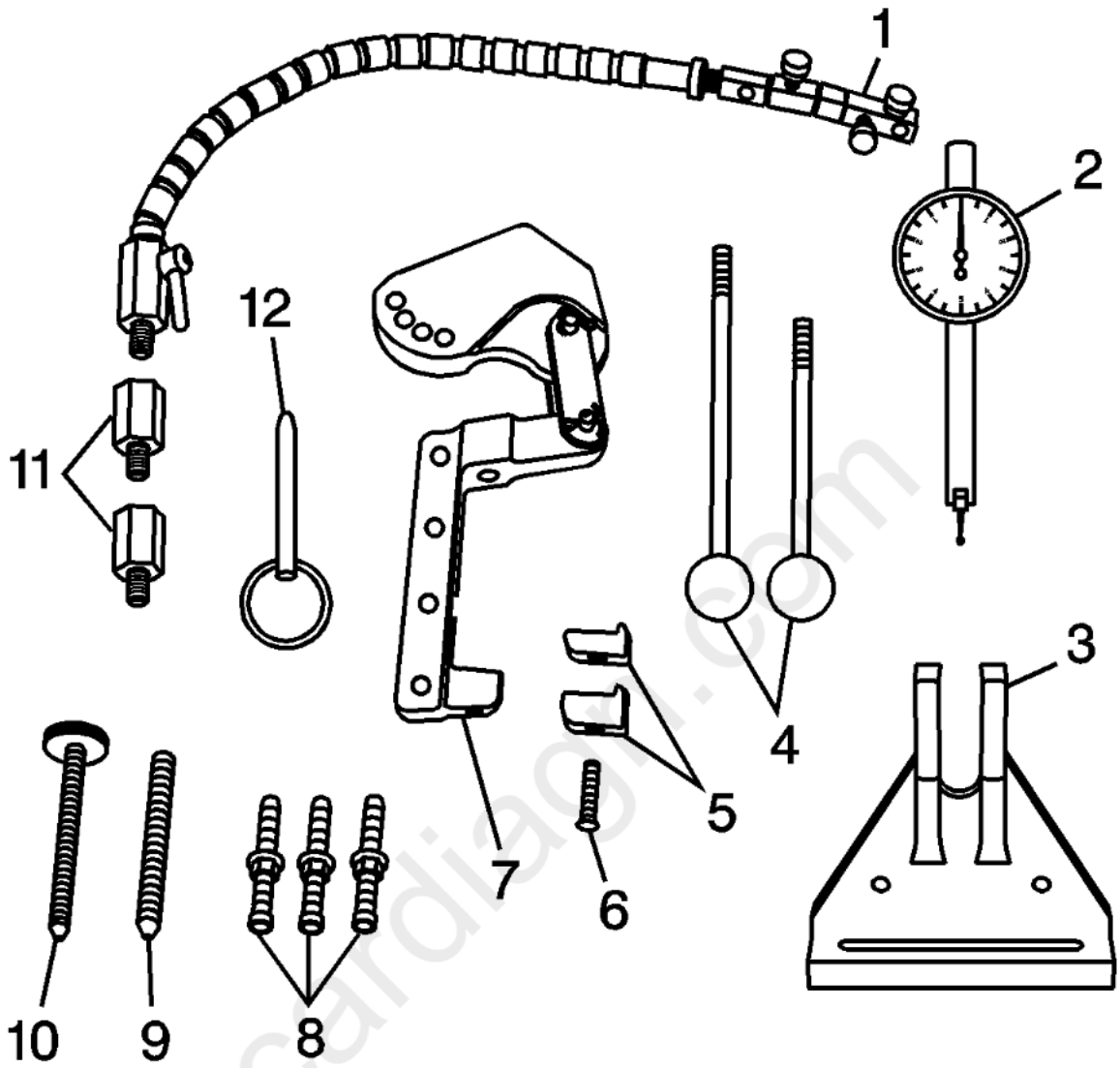

Fig. 448: Identifying Rod Bearing Clearance Checking Tool
Courtesy of GENERAL MOTORS COMPANY

EN 43690-A checking tool

- EN 43690-20 Swivel Base (1)
- EN 43690-19 Dial Indicator (2)
- EN 43690-2 Base (3)
- EN 43690-5, -6 Handle (4)
- EN 43690-10, -11 Foot (5)
- 280307 Screw (6)
- EN 43690-1 Pivot Arm Assembly (7)
- EN 43690-3, -7, -8 Screws (8)
- 280319 Screw (9)
- 280311 Screw (10)
- EN 43690-17, -18 Adapter (11)

- 280310 Pin (12)

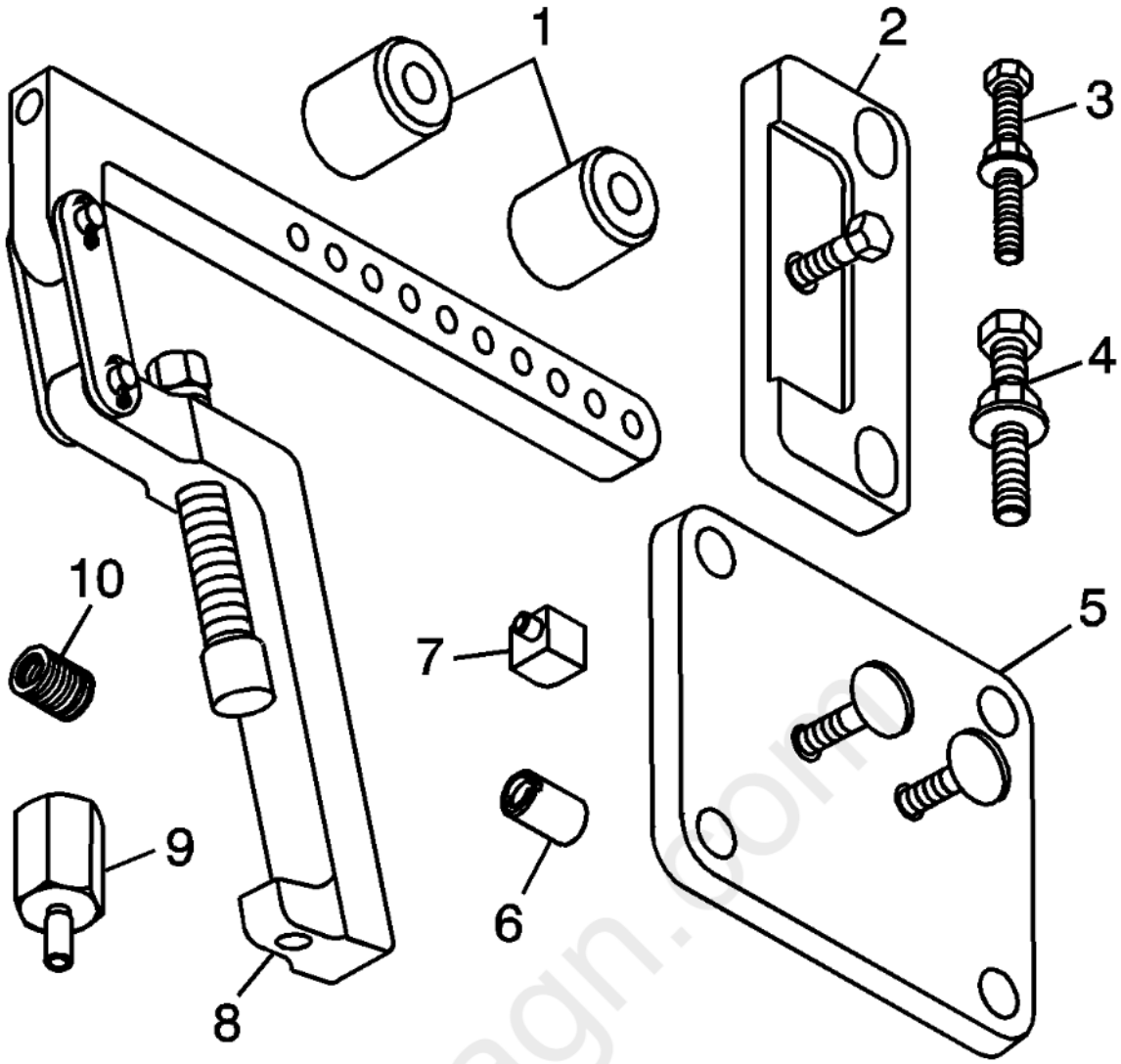

Fig. 449: Identifying Rod Bearing Clearance Tool - Adapter Kit
Courtesy of GENERAL MOTORS COMPANY

EN 43690-A adapter kit

- EN 43690-104 Spacer (1)
- EN 43690-105 Retainer Plate (2)
- 505478 Bolt (3)
- 511341 Bolt (4)
- EN 43690-106 Retainer Plate (5)
- EN 43690-107 Cap (6)
- EN 43690-102 Foot (7)
- EN 43690-101 Pivot Arm Assembly (8)
- EN 43690-103 Adapter (9)
- 505439 Adapter (10)

cardiagn.com

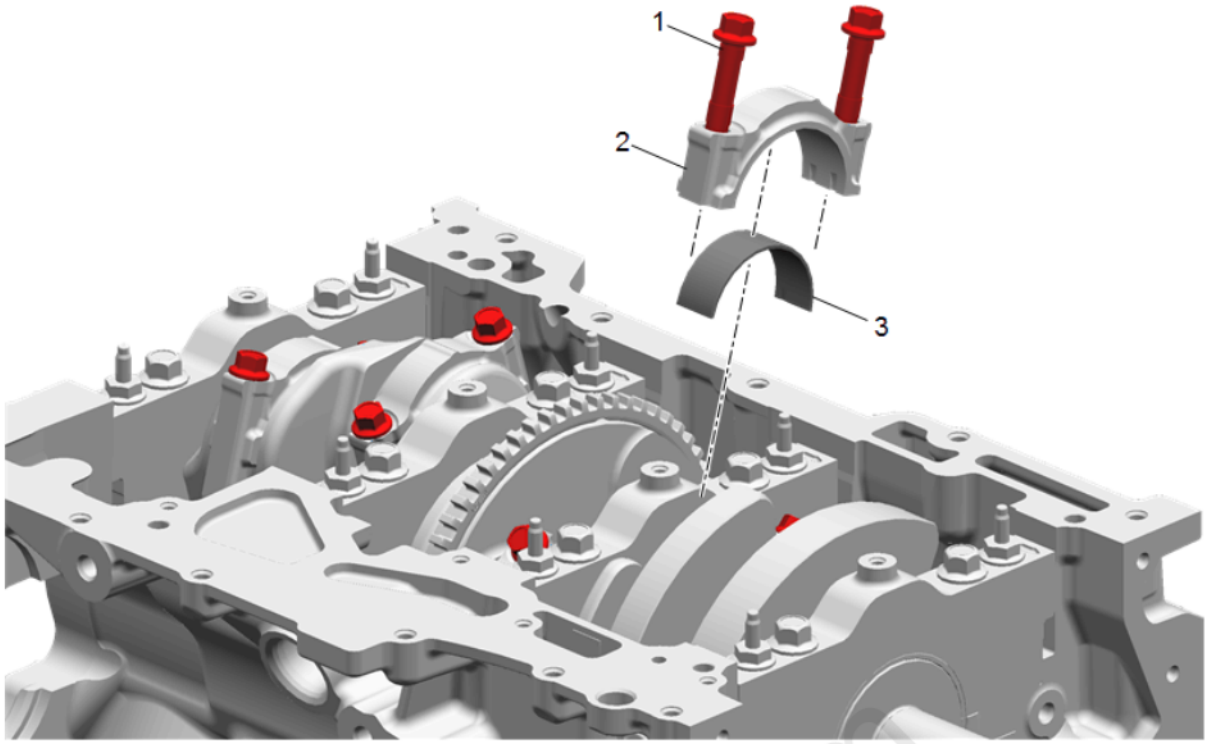

Fig. 450: View Of Connecting Rod Bearing & Cap
Courtesy of GENERAL MOTORS COMPANY

NOTE: **Connecting rod bearings that have been run in an engine should NEVER be reused.**

Before final assembly it is important to check the clearance of the new connecting rod bearings.

1. Install the connecting rod bearing into the connecting rod cap.

NOTE: **The connecting rod is non-directional therefore the connecting rod bearing lock tangs can face inboard or outboard.**

2. Install the connecting rod end cap on its original connecting rod and ensure the bearing lock tangs are aligned on the same side of the rod.

CAUTION: **Refer to Fastener Caution .**

CAUTION: **Do not lubricate the NEW connecting rod bolts. The NEW bolts have a pre-applied graphite lubricant. Applying lubricant to the connecting rod bolts will effect the clamp load when the connecting rod bolts are torqued. Improper clamp load can lead to component failure and extensive engine damage.**

NOTE: **Reuse the old connecting rod bolts ONLY for measuring the connecting rod bearing clearance.**

3. Install the connecting rod bolts into the connecting rod cap.
4. Tighten the connecting rod bolts.
    1. First Pass

       Tighten the connecting rod bolts to 25 N.m (18 lb ft).

    2. Final Pass

       Tighten the connecting rod bolts an additional 110 degrees using the **EN 45059** meter.

cardiagn.com

5. Rotate the crankshaft until the crankshaft journal and the connecting rod to be measured is in the 12 o'clock position.

NOTE: **The crankshaft must be secure with no movement or rotation in order to obtain an accurate reading.**

6. Remove the crankshaft main bolts required to install the retainer plate EN 43690-105.

NOTE: **Do not allow the EN 43690-105 retainer plate screw to contact the reluctor ring.**

7. Install the EN 43690-105 and crankshaft main bolts.
8. Loosen the connecting rod bolts until the torque reading is zero.
9. Re-tighten the connecting rod bolts.
    1. First Pass

       Tighten the connecting rod bolts to 25 N.m (18 lb ft).

    2. Final Pass

       Tighten the connecting rod bolts an additional 110 degrees using the **EN 45059** meter.
10. During and after installation, ensure each piston is positioned properly in the correct cylinder. The locating arrow on the top of each piston must be pointing toward the front of the engine.
11. Repeat these procedures for the remaining piston/connecting rod assemblies using the **EN-48589** socket in order to rotate the crankshaft.

Connecting Rod Final Assembly Procedure

1. Guide the connecting rod away from the crankshaft connecting rod journal in order to lubricate the crankshaft connecting rod bearing journal.
2. Apply a liberal amount of crankshaft prelube or clean engine oil to the crankshaft connecting rod bearing journal. Refer to **Adhesives, Fluids, Lubricants, and Sealers** for recommended lubricant.
3. Guide the connecting rod to the crankshaft connecting rod journal.
4. Install the connecting rod end cap on its original connecting rod and ensure the bearing lock tangs are aligned on the same side of the rod.

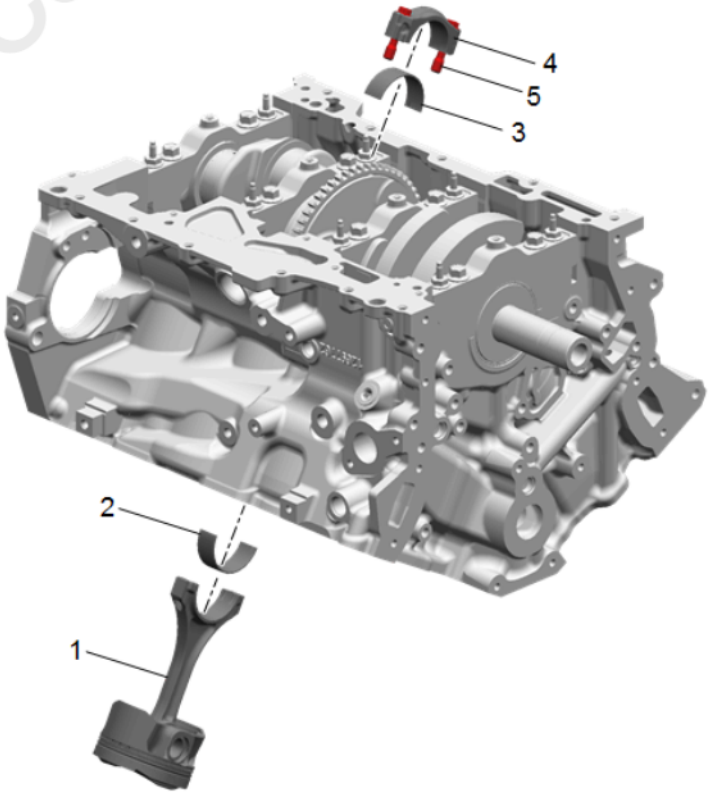

cardiagn.com

Fig. 451: Identifying Piston & Connecting Rod Assembly
Courtesy of GENERAL MOTORS COMPANY

CAUTION: **Do not lubricate the NEW connecting rod bolts. The NEW bolts have a pre-applied graphite lubricant. Applying lubricant to the connecting rod bolts will effect the clamp load when the connecting rod bolts are torqued. Improper clamp load can lead to component failure and extensive engine damage.**

CAUTION: **This vehicle is equipped with torque-to-yield or single use fasteners. Install a NEW torque-to-yield or single use fastener when installing this component. Failure to replace the torque-to-yield or single use fastener could cause damage to the vehicle or component.**

5. Install the NEW connecting rod bolts into the connecting rod cap.
6. Tighten the connecting rod bolts.
    1. First Pass

       Tighten the connecting rod bolts to 25 N.m (18 lb ft).

    2. Final Pass

       Tighten the connecting rod bolts an additional 110 degrees using the **EN 45059** meter.
7. During and after installation, ensure each piston is positioned properly in the correct cylinder. The locating arrow on the top of each piston must be pointing toward the front of the engine.
8. Repeat these procedures for the remaining piston/connecting rod assemblies using the **EN 45059** meter in order to rotate the crankshaft.

CRANKSHAFT REAR OIL SEAL AND HOUSING INSTALLATION

cardiagn.com

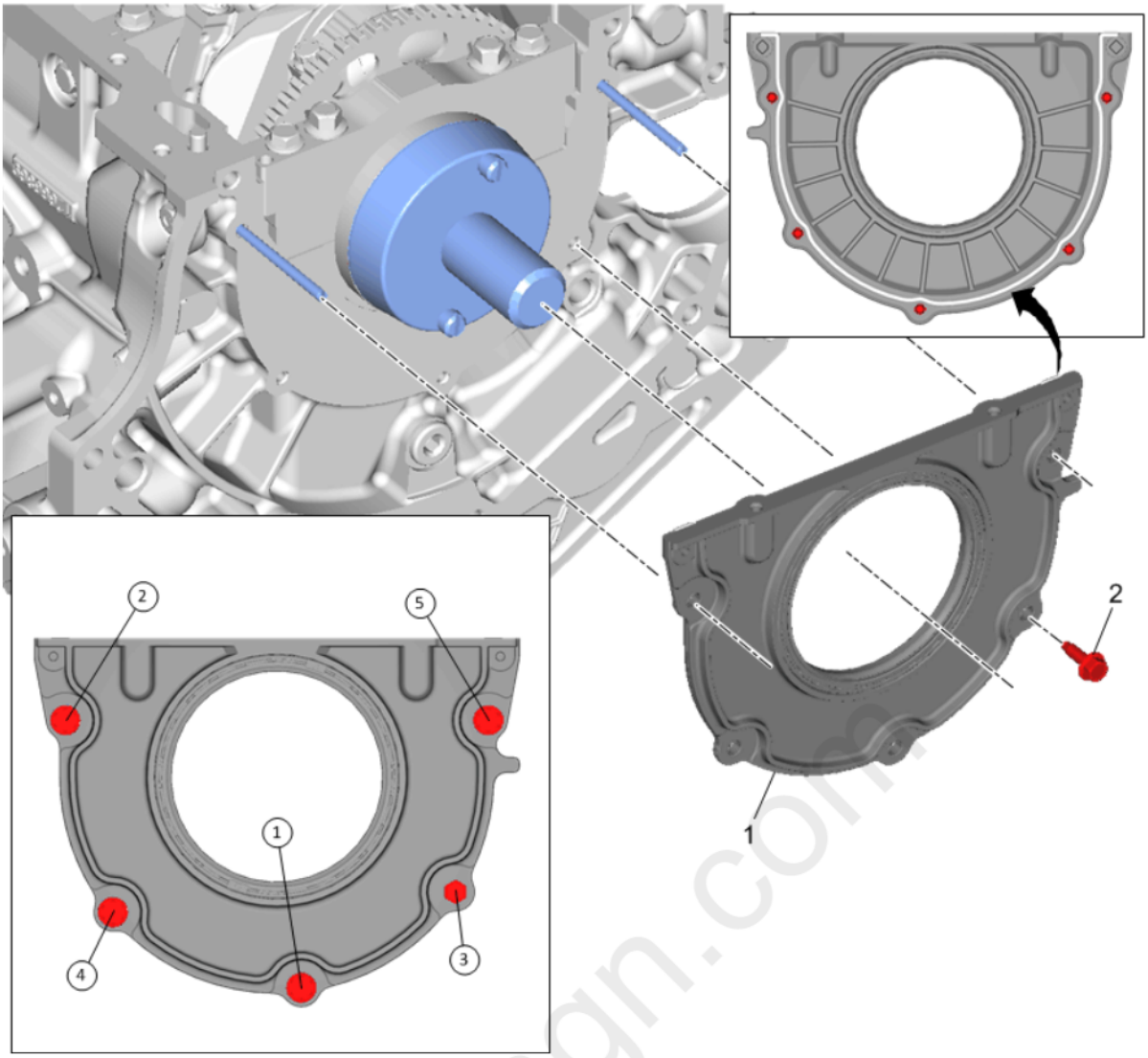

Fig. 452: Crankshaft Rear Oil Seal and Housing (With Tightening Sequence)
Courtesy of GENERAL MOTORS COMPANY

Callout	Component Name

carmagn.com

Callout	Component Name
1	Crankshaft Rear Oil Seal Housing **Procedure** 1. Install the 6 mm (0.236 in) guides from the **EN-46109** pin set into the 2 crankshaft rear oil seal housing corner bolt holes of the engine block. 2. Install the **EN-47839** tool with the **EN-42183** handle onto the rear of the crankshaft flange. 3. Ensure proper use of room temperature vulcanizing (RTV) sealant. **Use of Room Temperature Vulcanizing (RTV) and Anaerobic Sealant** 4. Place a 3 mm (0.118 in) bead of RTV sealant to the NEW crankshaft rear oil seal housing as shown. **Adhesives, Fluids, Lubricants, and Sealers** **NOTE:** **DO NOT allow any engine oil on the area where the crankshaft rear oil seal housing is to be installed.** 5. Install a NEW crankshaft rear oil seal housing to the engine block. 6. Remove the **EN-46109** pin set 6 mm (0.236 in) guides from the engine block. 7. Install the crankshaft rear oil seal housing bolts and tighten in sequence. 8. Remove the **EN-47839** tool and **EN-42183** handle from the crankshaft flange. **Special Tools** • **EN-42183** Handle • **EN-46109** Guide Pin Set • **EN-47839** Crankshaft Rear Oil Seal Installation Tool Equivalent regional tools:**Special Tools** .
2	Crankshaft Rear Oil Seal Housing Bolt **CAUTION:** **Refer to Fastener Caution .** **Tighten in sequence** 10 N.m (89 lb in)

OIL PUMP INSTALLATION

cardiagn.com

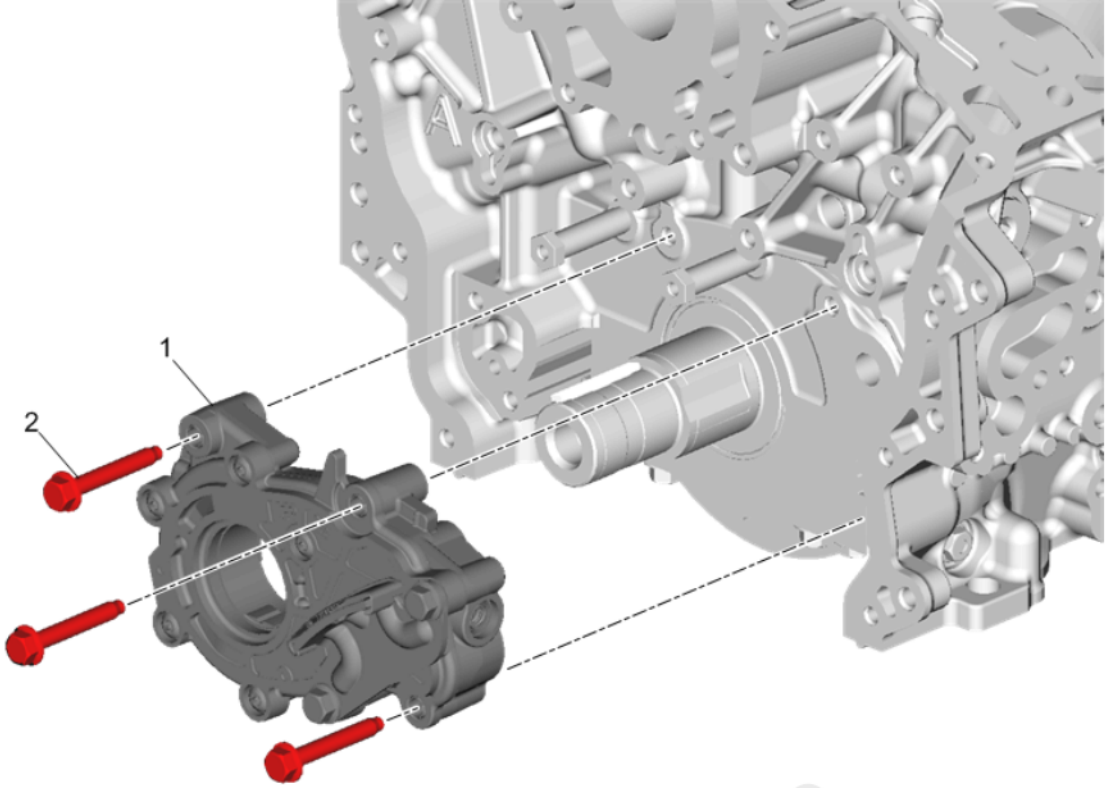

Fig. 453: Oil Pump
Courtesy of GENERAL MOTORS COMPANY

Callout	Component Name
1	Oil Pump **Procedure** 1. Align the oil pump drive gear with the crankshaft flats and install the oil pump to the engine block. 2. Align the pump body with the mounting holes in the cylinder block.
2	Oil Pump Bolt (Qty: 3) **CAUTION:** **Refer to Fastener Caution .** **Tighten** 15 N.m (11 lb ft)

OIL PAN INSTALLATION

cardiagn.com

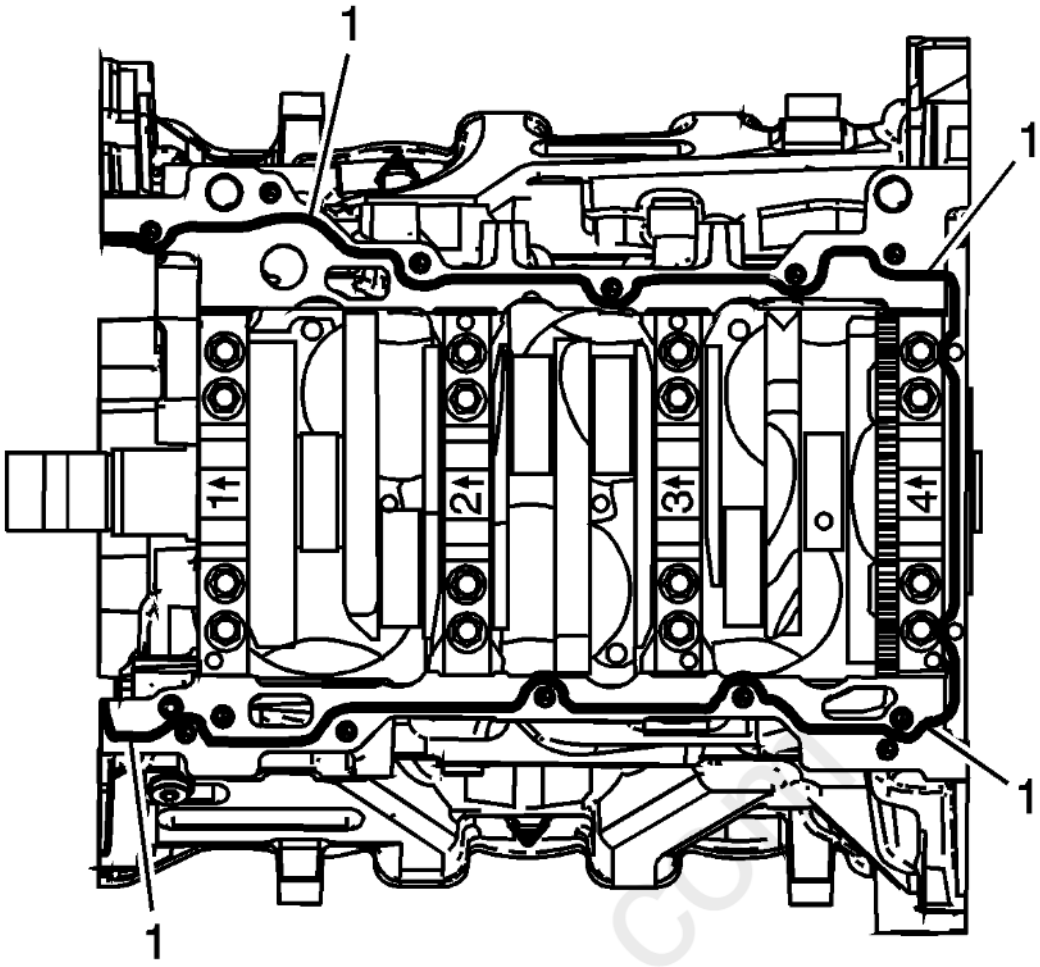

Fig. 454: Identifying Sealant Application Locations On Block Pan Rail & Crankshaft Rear Oil Seal Housing
Courtesy of GENERAL MOTORS COMPANY

1. Ensure proper use of room temperature vulcanizing (RTV) sealant. **Use of Room Temperature Vulcanizing (RTV) and Anaerobic Sealant**
2. Place a 3 mm (0.118 in) bead of RTV sealant, on the block pan rail and the crankshaft rear oil seal housing (1). Refer to **Adhesives, Fluids, Lubricants, and Sealers** .

carlagn.com

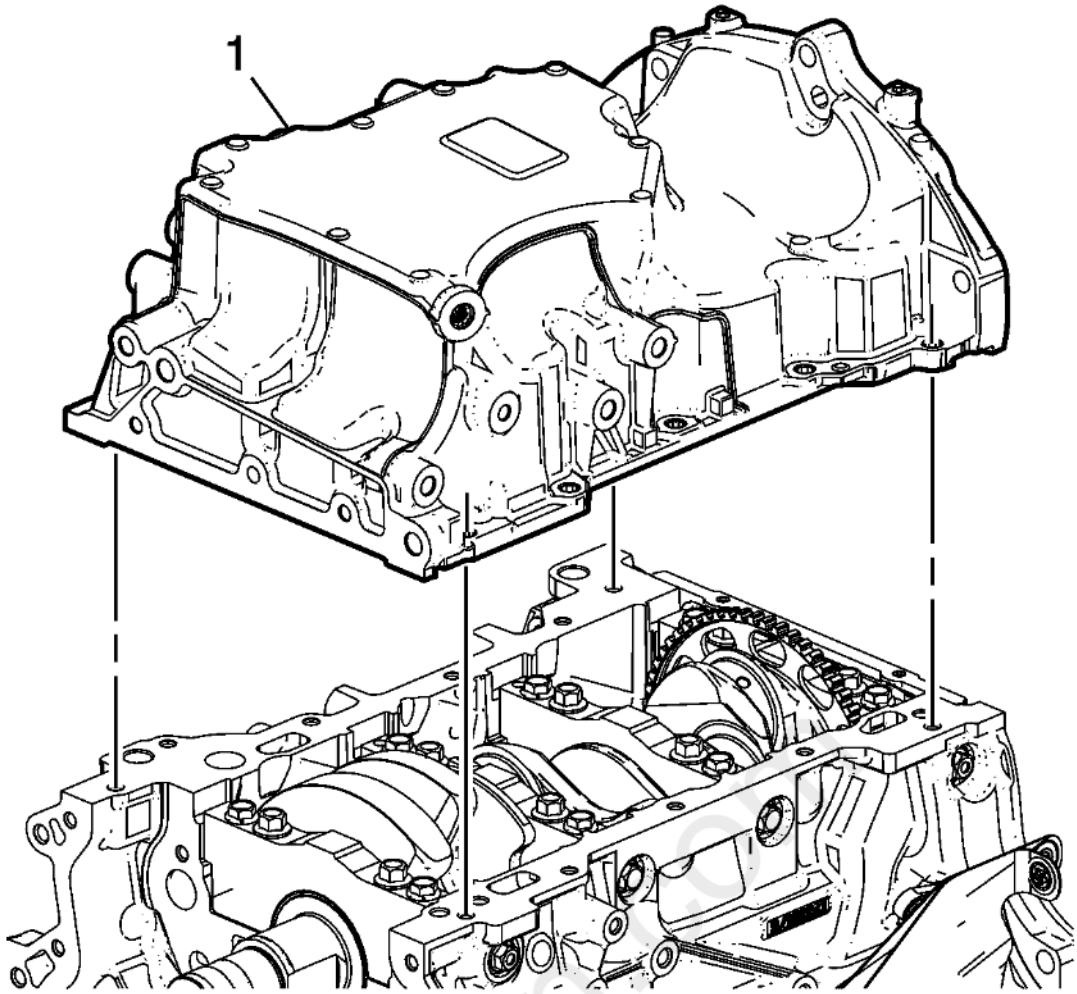

Fig. 455: View Of Engine Oil Pan
Courtesy of GENERAL MOTORS COMPANY

3. Position the oil pan (1) onto the block.

cardiagn.com

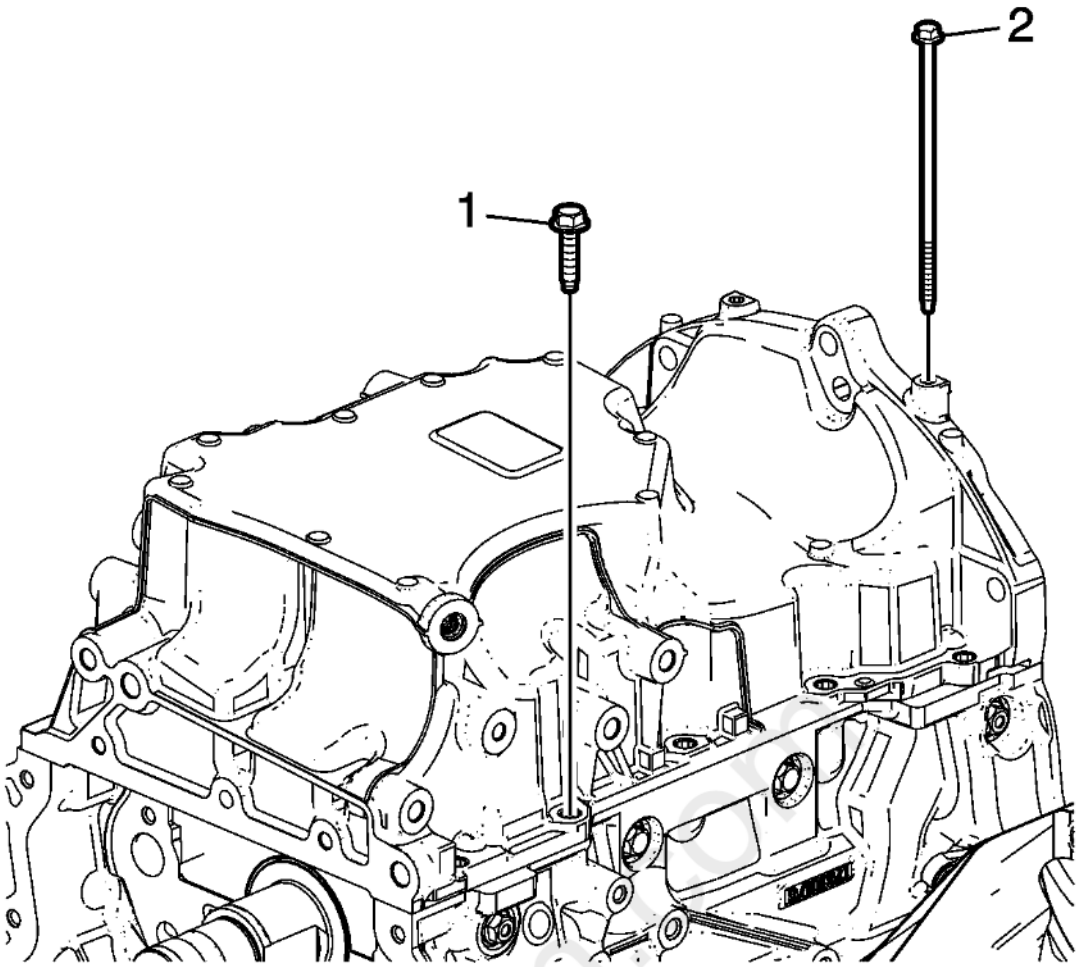

Fig. 456: Engine Oil Pan Bolts
Courtesy of GENERAL MOTORS COMPANY

4. Loosely install the oil pan bolts (1) and (2).

cardiagn.com

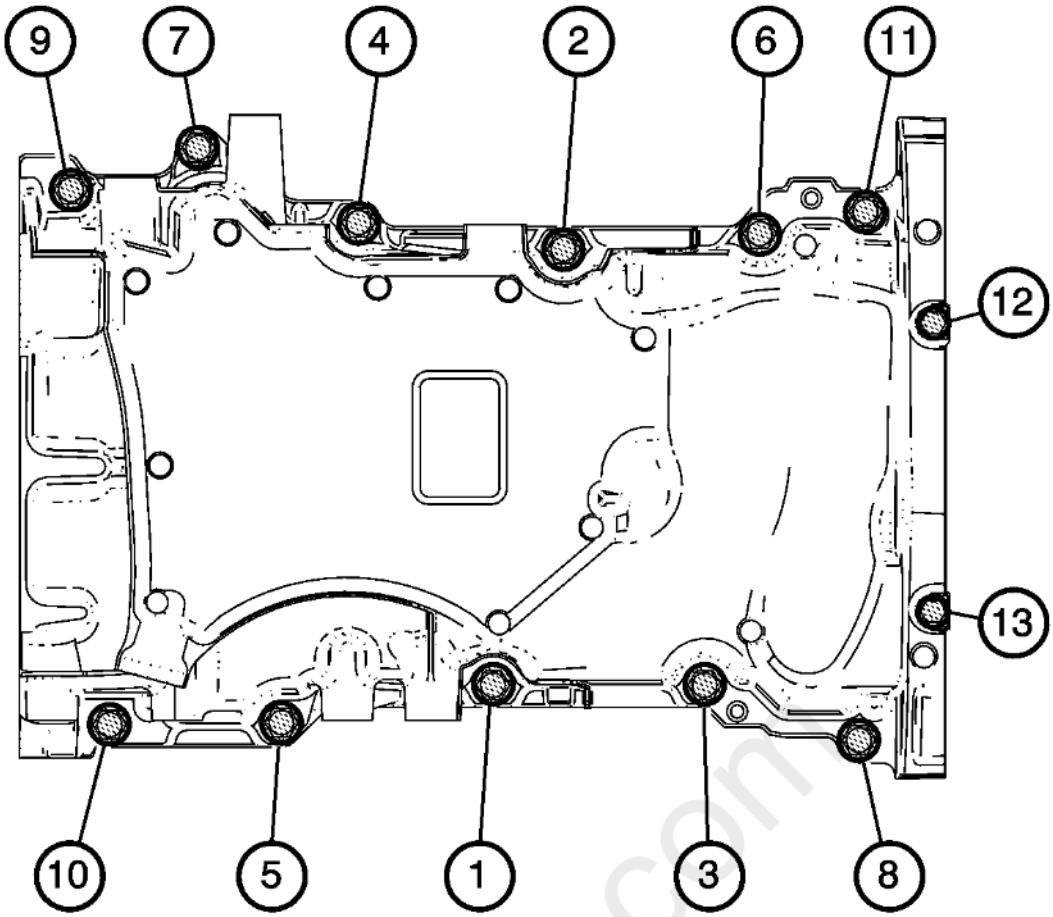

Fig. 457: Engine Oil Pan Bolt Tightening Sequence
Courtesy of GENERAL MOTORS COMPANY

CAUTION: **Refer to Fastener Caution .**

5. Tighten the oil pan bolts in sequence shown.
    1. Tighten the 8 mm bolts (1 - 11) to 25 N.m (18 lb ft).
    2. Tighten the 6 mm bolts (12, 13) to 10 N.m (89 lb in).

CYLINDER HEAD INSTALLATION - RIGHT SIDE

Special Tools

EN - 45059 Angle Meter

For equivalent regional tools, refer to **Special Tools** .

cardiagn.com

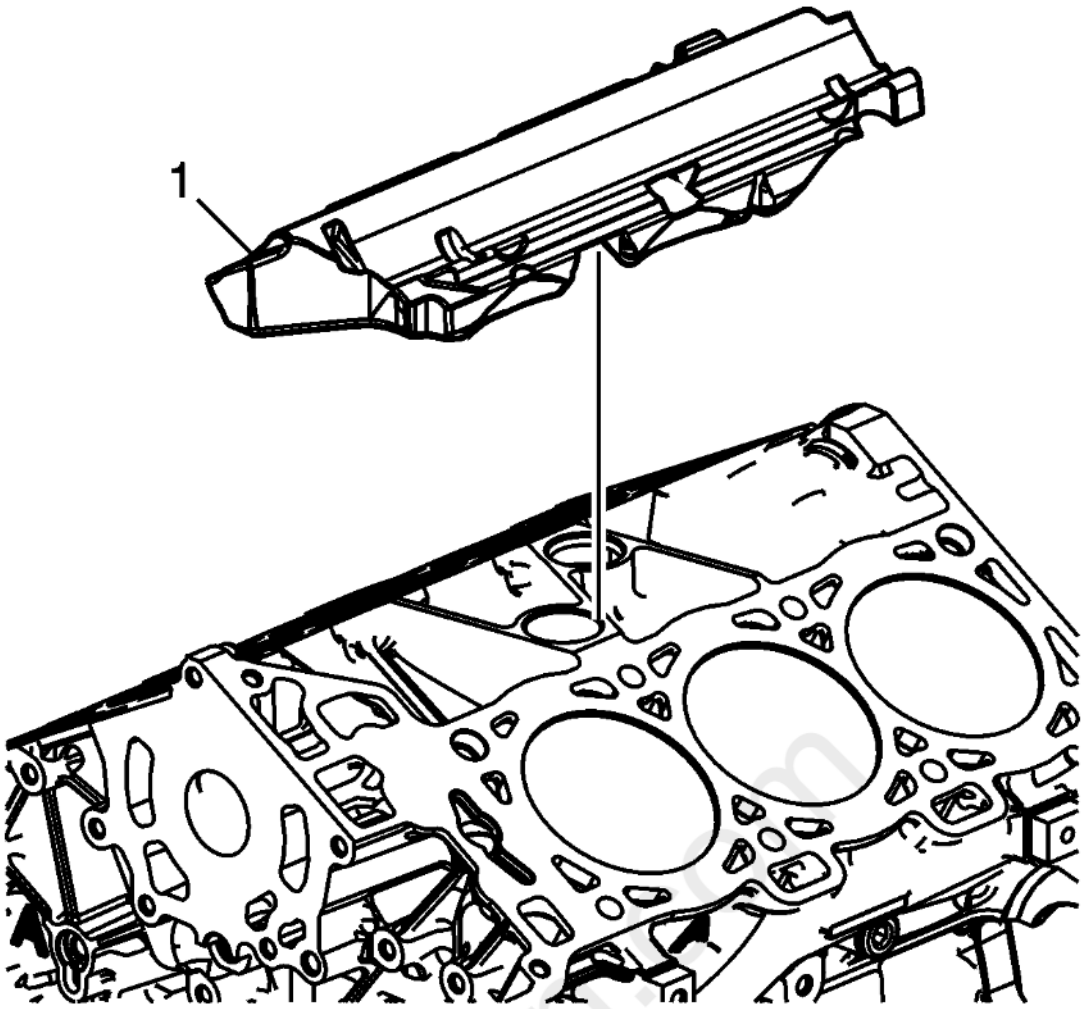

Fig. 458: Fuel Injection Fuel Rail Noise Shield-Lower
Courtesy of GENERAL MOTORS COMPANY

1. Install the fuel injection fuel rail noise shield-lower (1).

cardiagn.com

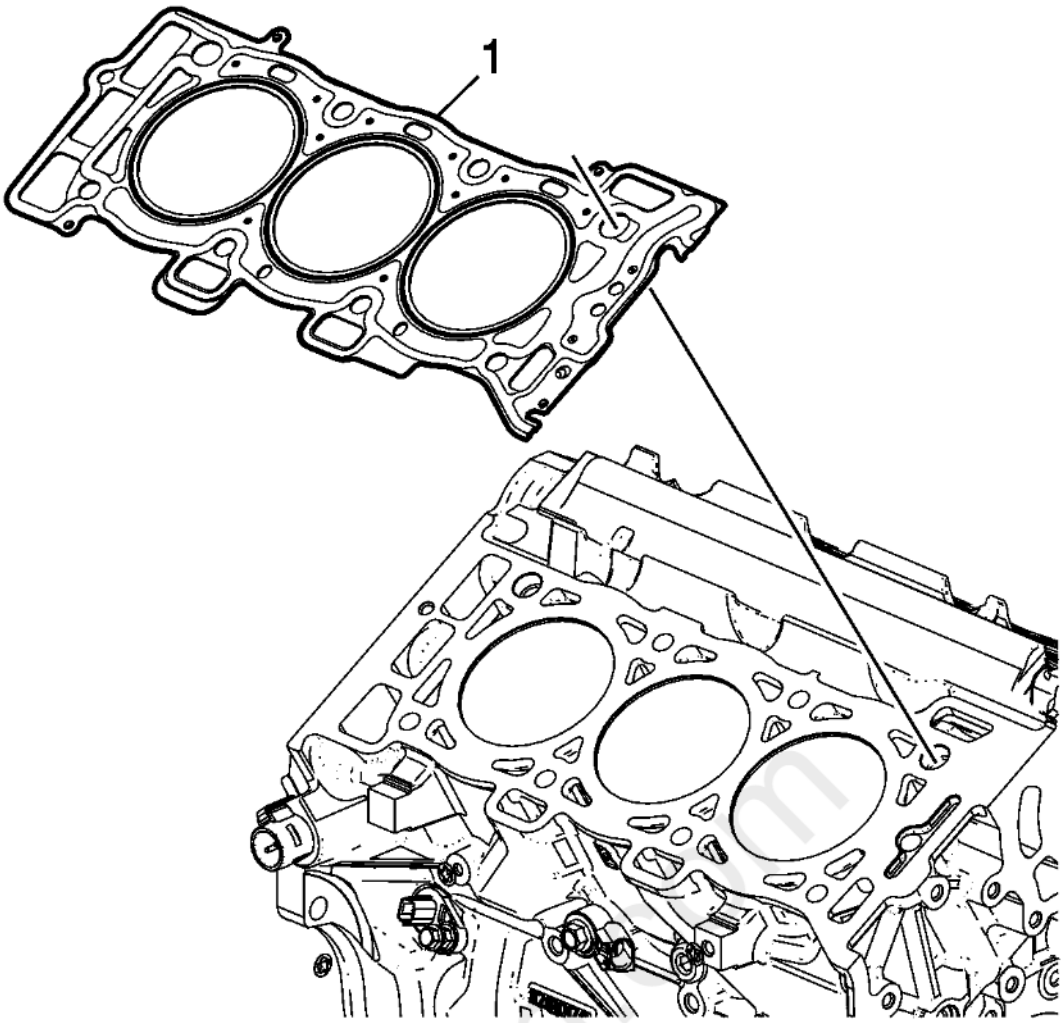

Fig. 459: View Of Right Cylinder Head Gasket
Courtesy of GENERAL MOTORS COMPANY

2. Ensure the cylinder head locating pins are securely mounted in the cylinder block deck face.
3. Install a NEW right cylinder head gasket (1) using the deck face locating pins for retention.

cardiagn.com

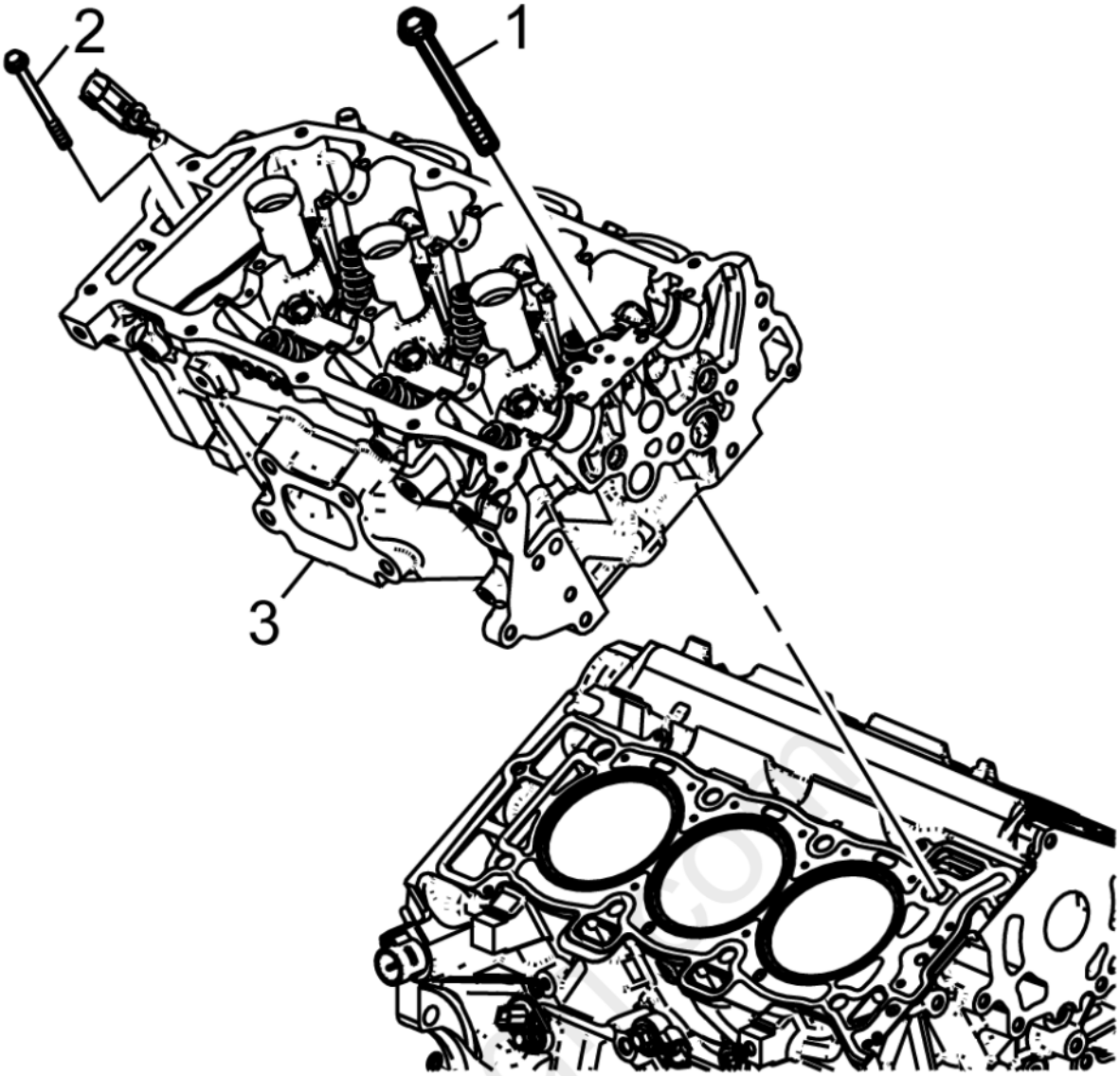

Fig. 460: View Of Right Cylinder Head & Bolts
Courtesy of GENERAL MOTORS COMPANY

4. Align the right cylinder head (2) with the deck face locating pins.
5. Place the right cylinder head in position on the deck face.

carmanuals.com

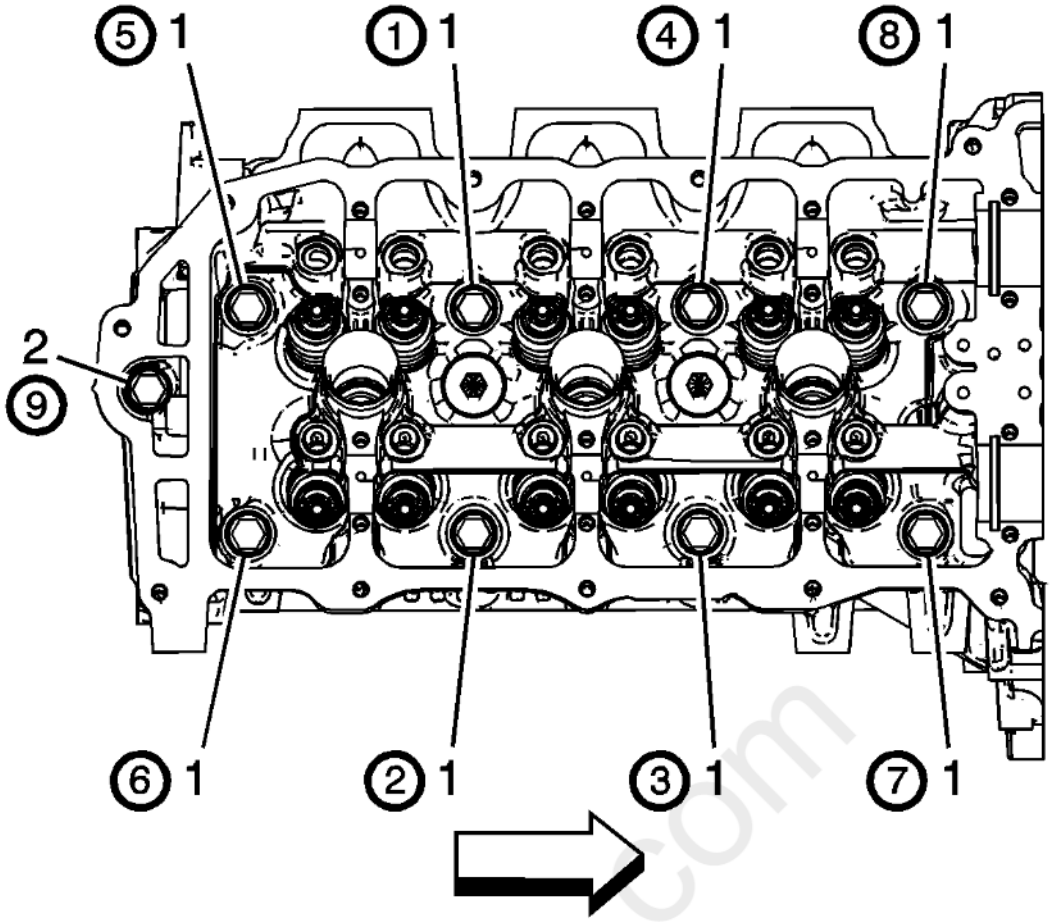

Fig. 461: Identifying M11 Cylinder Head Bolt Tightening Sequence
Courtesy of GENERAL MOTORS COMPANY

CAUTION: Refer to Fastener Caution .

CAUTION: This vehicle is equipped with torque-to-yield or single use fasteners. Install a NEW torque-to-yield or single use fastener when installing this component. Failure to replace the torque-to-yield or single use fastener could cause damage to the vehicle or component.

NOTE: DO NOT allow oil on the cylinder head bolt bosses.

6. Install the NEW M11 cylinder head bolts (1).
    1. Tighten the M11 cylinder head bolts a first pass in sequence to 30 N.m (22 lb ft).
    2. Tighten the M11 cylinder head bolts a second pass in sequence an additional 150 degrees using the **EN 45059** meter.
7. Install the NEW M8 cylinder head bolt (2).
    1. Tighten the M8 cylinder head bolt a first pass to 15 N.m (11 lb ft).
    2. Tighten the M8 cylinder head bolt a second pass an additional 75 degrees using the **EN 45059** meter.

VALVE LIFTER INSTALLATION - RIGHT SIDE

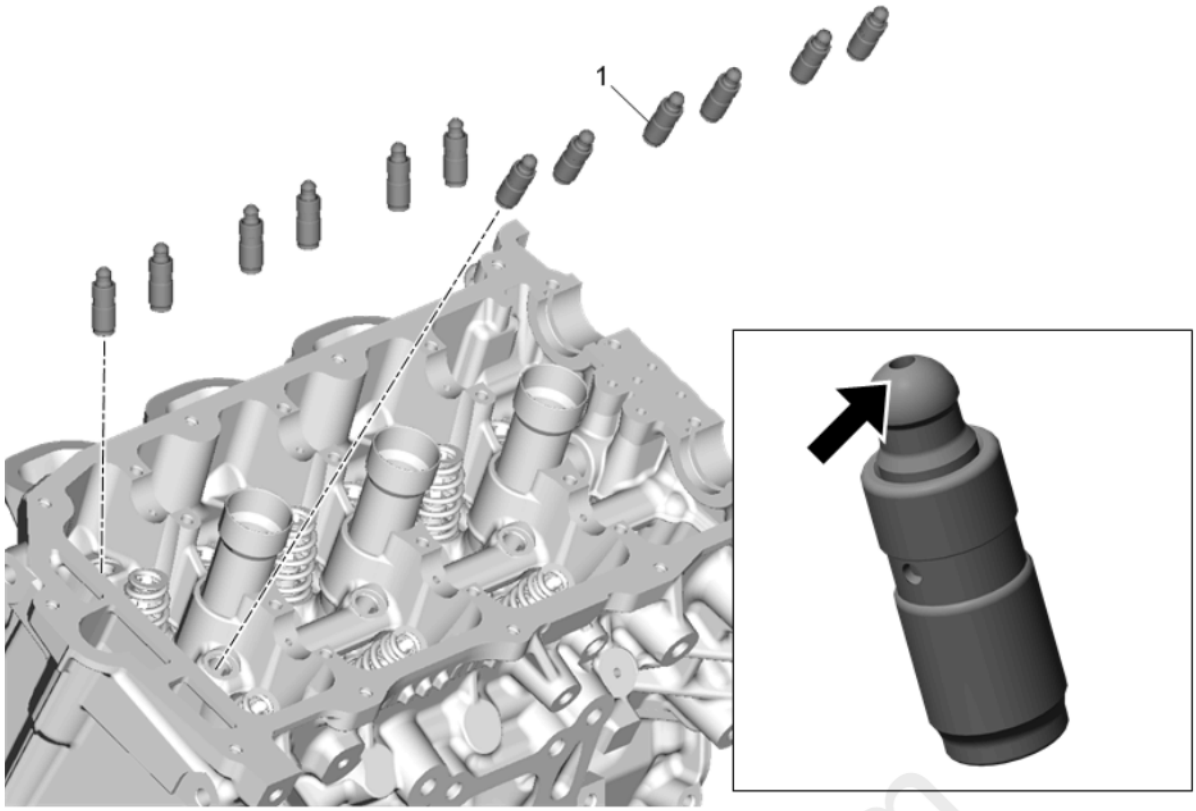

Fig. 462: Valve Lifter - Right Side
Courtesy of GENERAL MOTORS COMPANY

Callout	Component Name
1	Hydraulic Valve Lash Adjuster **NOTE:** • **Do not stroke/cycle the stationary hydraulic lash adjuster plunger without oil in the lower pressure chamber.** • **Do not allow the stationary hydraulic lash adjuster to tip over, plunger down, after the oil fill.** **Procedure** 1. Fill the stationary hydraulic lash adjuster (SHLA) with clean engine oil. **Adhesives, Fluids, Lubricants, and Sealers** Take precautions to prevent scratching the pivot sphere area of the SHLA. 2. Lubricate the SHLA bores in the cylinder head with clean engine oil. 3. Install the SHLAs in the cylinder head. 4. Apply a liberal amount of lubricant to the SHLA pivot spheres.

VALVE ROCKER ARM INSTALLATION - RIGHT SIDE

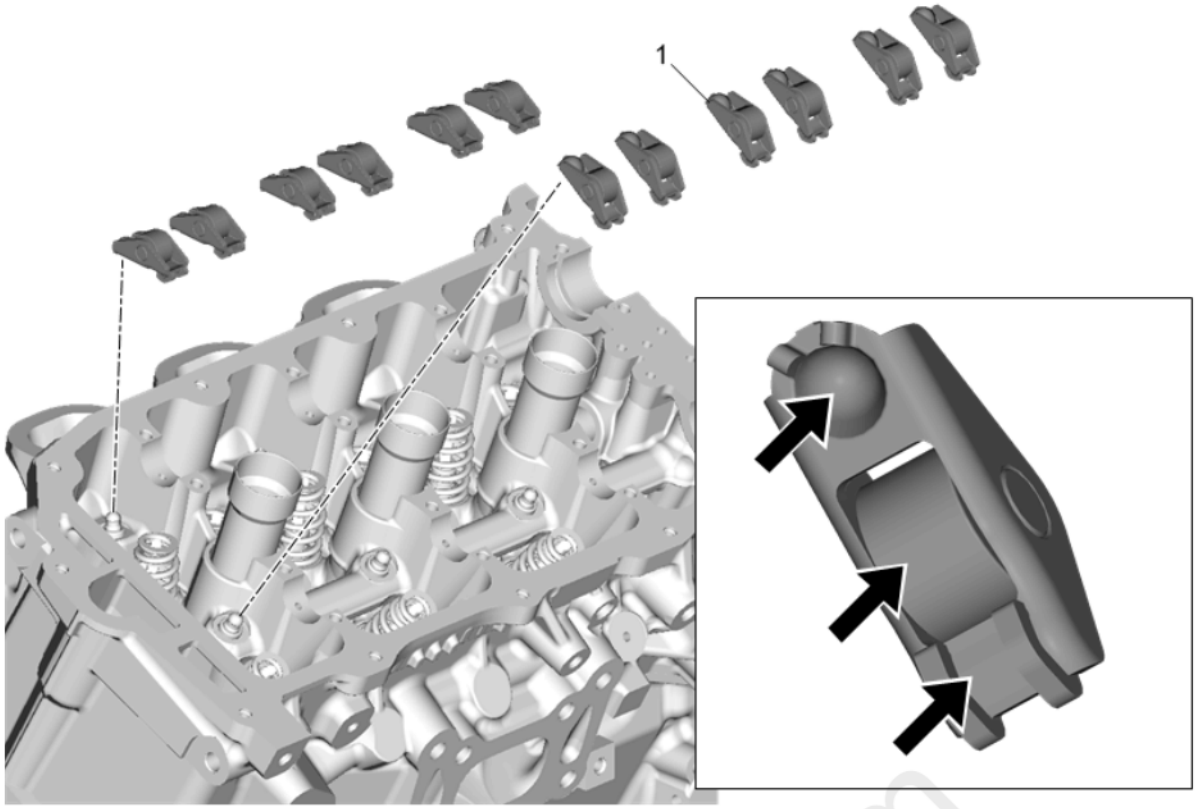

Fig. 463: Valve Rocker Arm - Right Side
Courtesy of GENERAL MOTORS COMPANY

Callout	Component Name
1	Valve Rocker Arm **Procedure** 1. Apply a liberal amount of lubricant to the pivot pocket, roller and valve slot areas of the camshaft followers. **Adhesives, Fluids, Lubricants, and Sealers** **NOTE:** **The follower must be positioned squarely on the valve tip so that the full width of the roller will completely contact the camshaft lobe. If the followers are being reused you must put them back in their original location.** 2. Place the camshaft followers in position on the valve tip and stationary hydraulic lash adjuster (SHLA). 3. The rounded head end of the follower goes on the SHLA while the flat end goes on the valve tip. 4. Clean the camshaft journals and carriers with a clean, lint-free cloth.

CAMSHAFT INSTALLATION - RIGHT SIDE

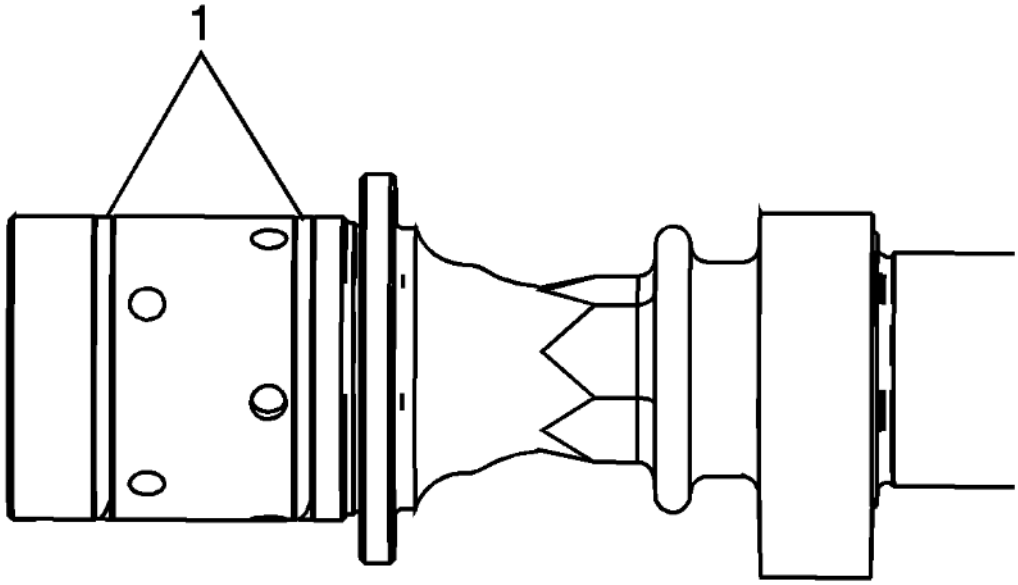

Fig. 464: Locating Camshaft Sealing Rings In Camshaft Grooves
Courtesy of GENERAL MOTORS COMPANY

1. Ensure that the camshaft sealing rings (1) are in place in the camshaft grooves. Camshaft sealing rings must be in place below the surface of the camshaft journal in order to avoid being pinched between the cylinder head and the camshaft caps.

carmagn.com

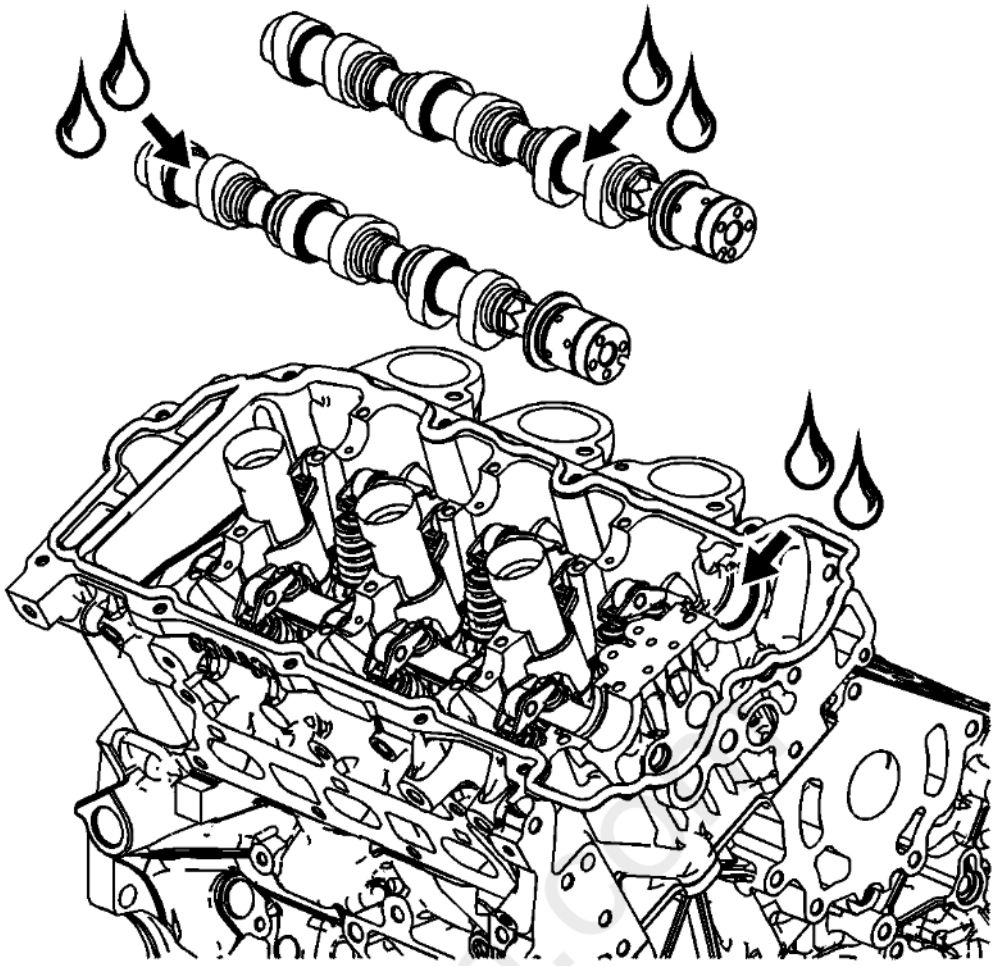

Fig. 465: Applying Liberal Amount Of Lubricant Or Equivalent To Camshaft Journals & Right Cylinder Head Camshaft Carriers
Courtesy of GENERAL MOTORS COMPANY

2. Apply a liberal amount of lubricant to the camshaft journals and the right cylinder head camshaft carriers. Refer to **Adhesives, Fluids, Lubricants, and Sealers** for recommended lubricant.

cardiagn.com

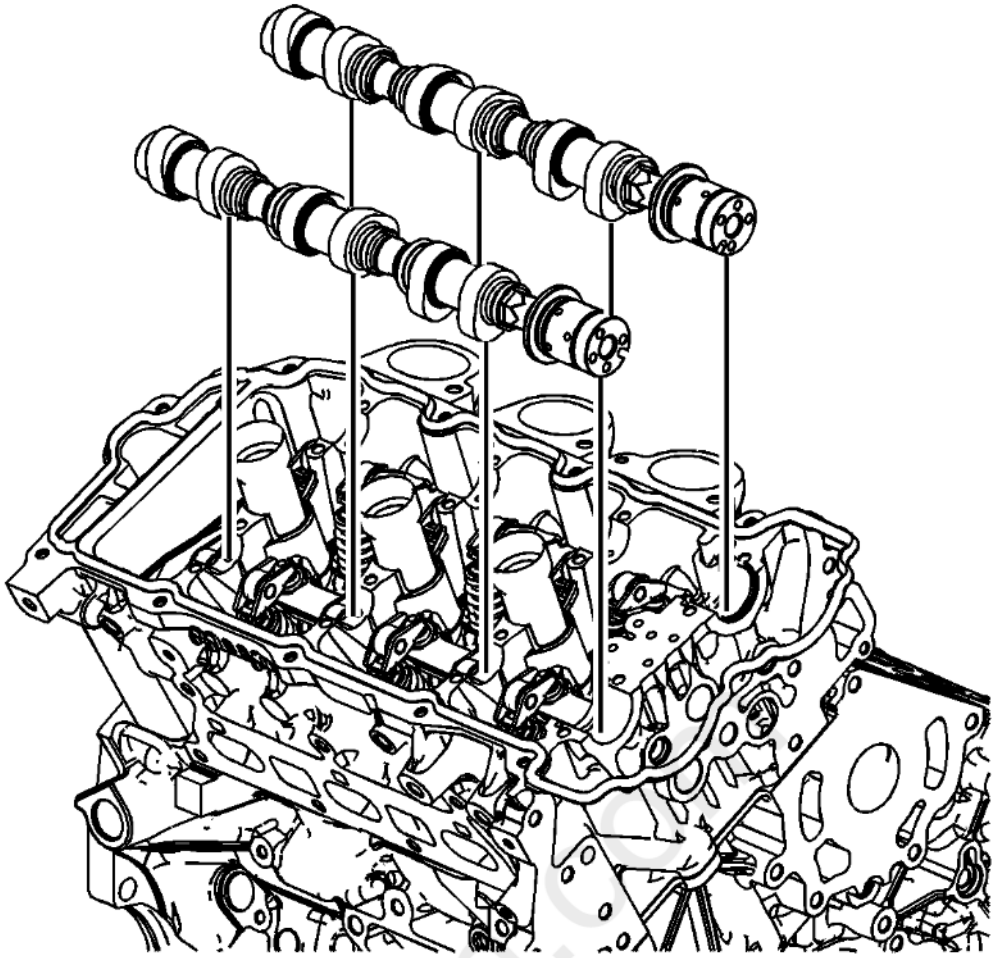

Fig. 466: Positioning Right Intake & Right Exhaust Camshafts In Right Cylinder Head
Courtesy of GENERAL MOTORS COMPANY

NOTE: **The right intake camshaft has a laser inscription marking on the rear of the shaft to identify it as right bank intake (RI).**

3. Place the right intake and right exhaust camshafts in position in the right cylinder head.

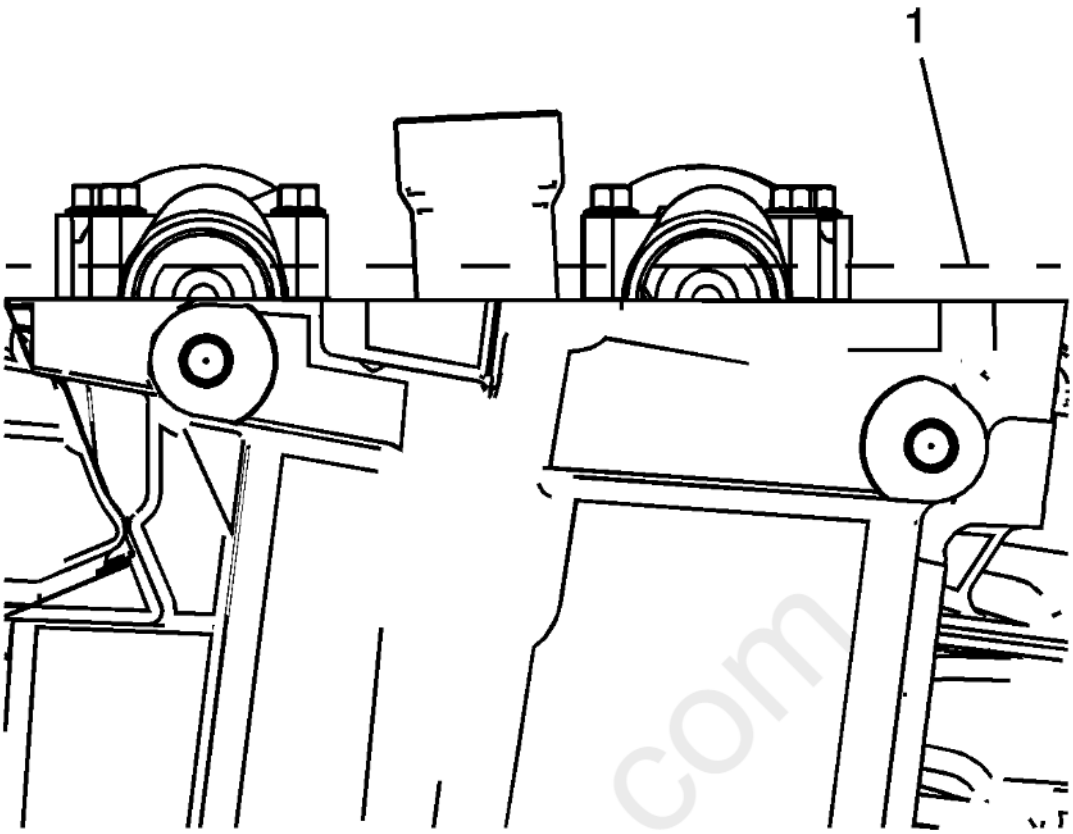

Fig. 467: Identifying Camshaft Neutral (Low Tension) Position
Courtesy of GENERAL MOTORS COMPANY

4. Position the camshaft lobes in a neutral position with the flats on the back of the camshafts up and parallel (1) with the right cylinder head camshaft cover rail.

cardiagn.com

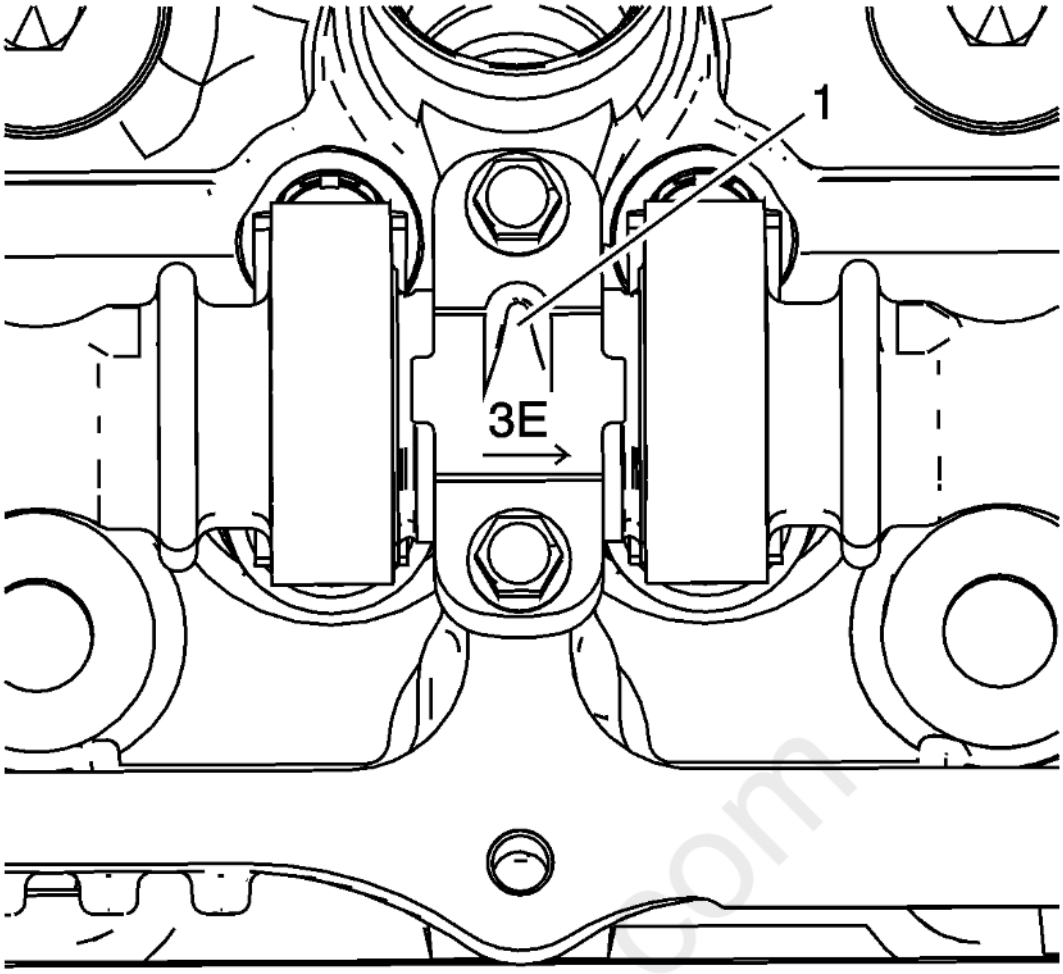

Fig. 468: Right Cylinder Head Camshaft Bearing Cap Markings
Courtesy of GENERAL MOTORS COMPANY

5. Observe the markings on the right cylinder head camshaft bearing caps. Each bearing cap is marked in order to identify its location. The markings have the following meanings:
    - The raised feature (1) must always be oriented toward the center of the cylinder head.
    - The I indicates the intake camshaft.
    - The E indicates the exhaust camshaft.
    - The number 1, 3, 5 indicates the cylinder position from the front of the engine.
6. Apply a liberal amount of lubricant to the camshaft bearing caps. Refer to **Adhesives, Fluids, Lubricants, and Sealers** for recommended lubricant.

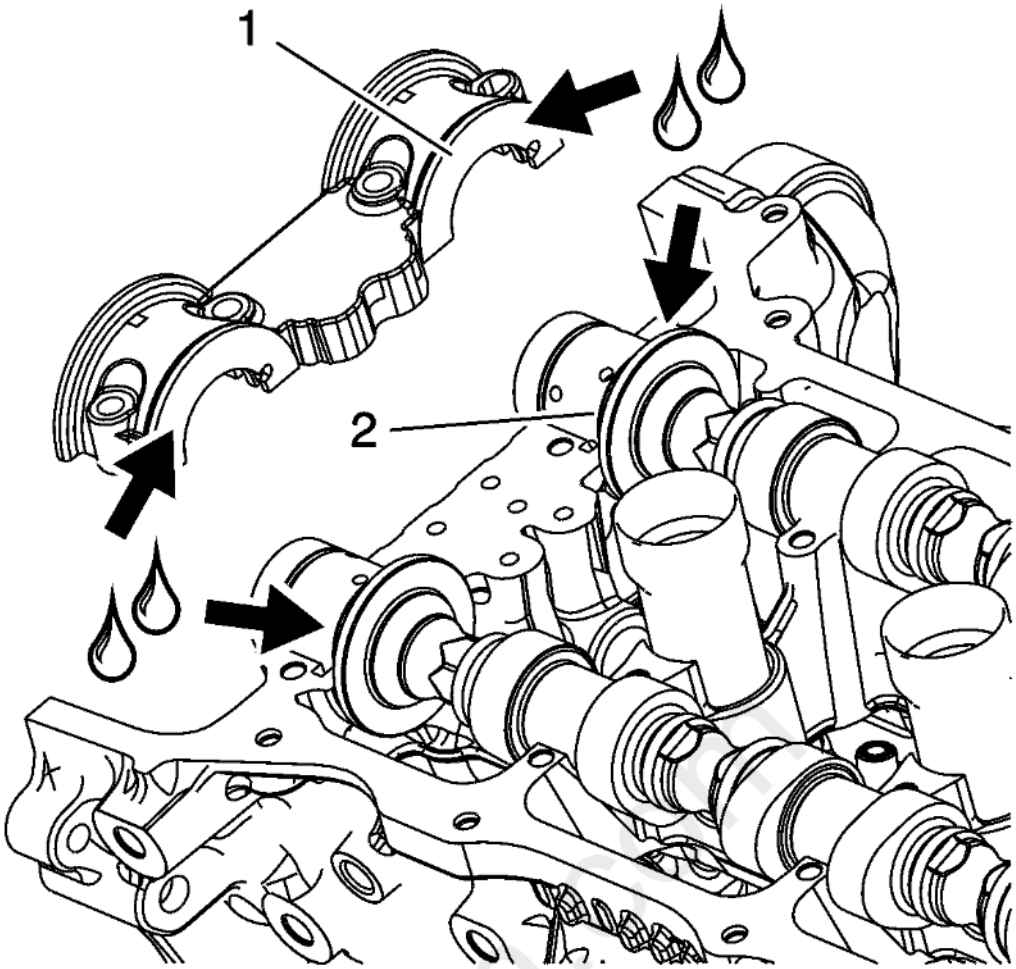

Fig. 469: Camshaft Bearing Cap And Camshaft Thrust Surface
Courtesy of GENERAL MOTORS COMPANY

7. Apply a liberal amount of lubricant to the camshaft bearing cap (1) and camshaft thrust surface (2). Refer to **Adhesives, Fluids, Lubricants, and Sealers** for recommended lubricant.

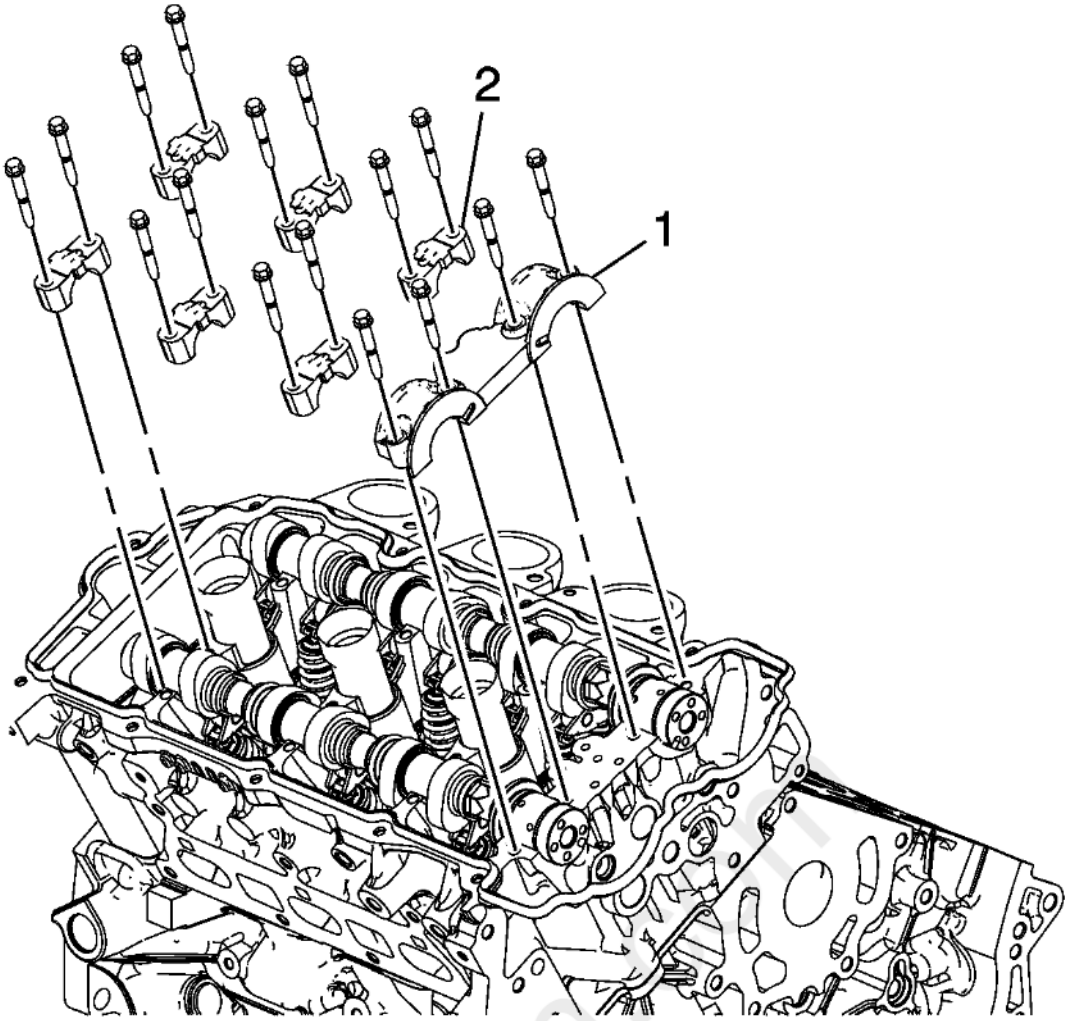

Fig. 470: Camshaft Bearing Caps And Bolts
Courtesy of GENERAL MOTORS COMPANY

8. Install the camshaft bearing thrust caps (1) in the first journal of the right cylinder head.
9. Install the remaining bearing caps (2) with their orientation mark toward the center of the cylinder head.
10. Hand start all the camshaft bearing cap bolts.

carDiagn.com

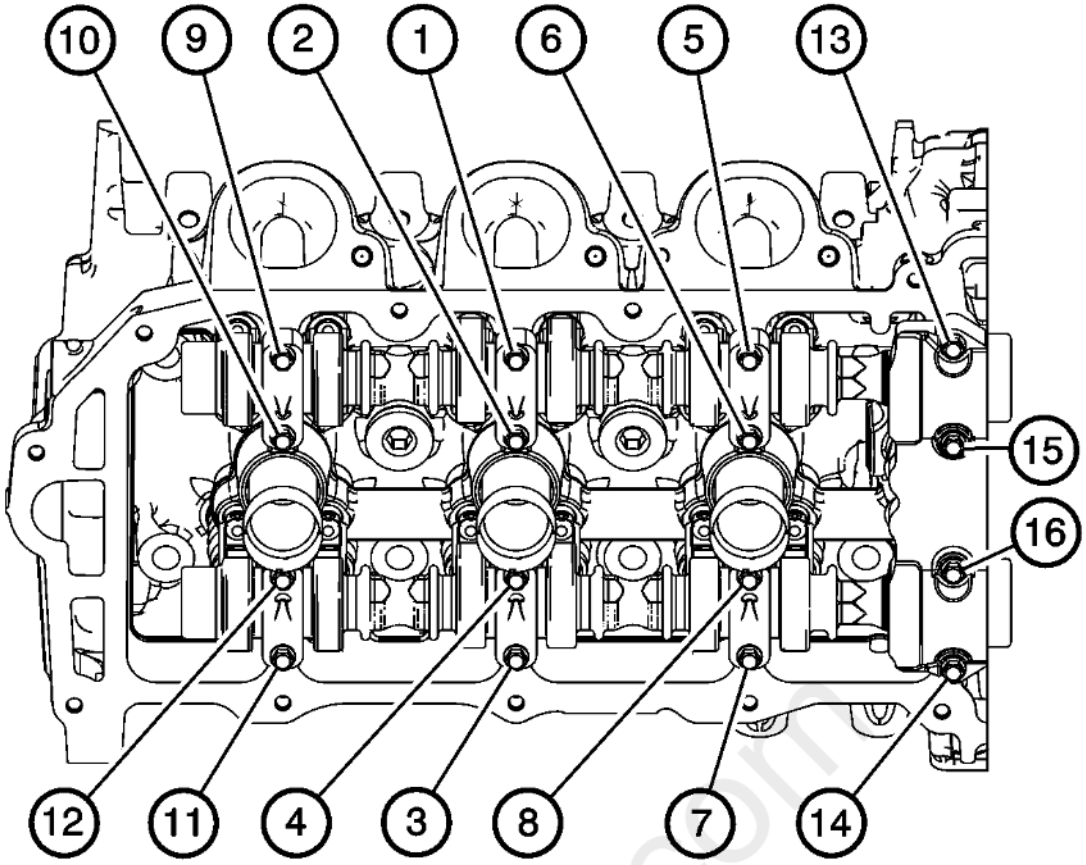

Fig. 471: Camshaft Bearing Cap Bolts Tighten Sequence
Courtesy of GENERAL MOTORS COMPANY

CAUTION: Refer to Fastener Caution .

CAUTION: **This vehicle is equipped with torque-to-yield or single use fasteners. Install a NEW torque-to-yield or single use fastener when installing this component. Failure to replace the torque-to-yield or single use fastener could cause damage to the vehicle or component.**

11. Tighten the camshaft bearing cap bolts in the sequence shown and tighten to 10 N.m (89 lb in).
12. Loosen the center intake camshaft bearing cap bolts (1, 2) and the center exhaust camshaft bearing cap bolts (3, 4).
13. Retighten the center camshaft bearing cap bolts (1, 2, 3, 4) and retighten the camshaft bearing cap bolts to 10 N.m (89 lb in).

FUEL RAIL INSTALLATION

Refer to Cylinder Head Assemble.

CYLINDER HEAD INSTALLATION - LEFT SIDE

Special Tools

EN 45059 Angle Meter

For equivalent regional tools, refer to Special Tools .

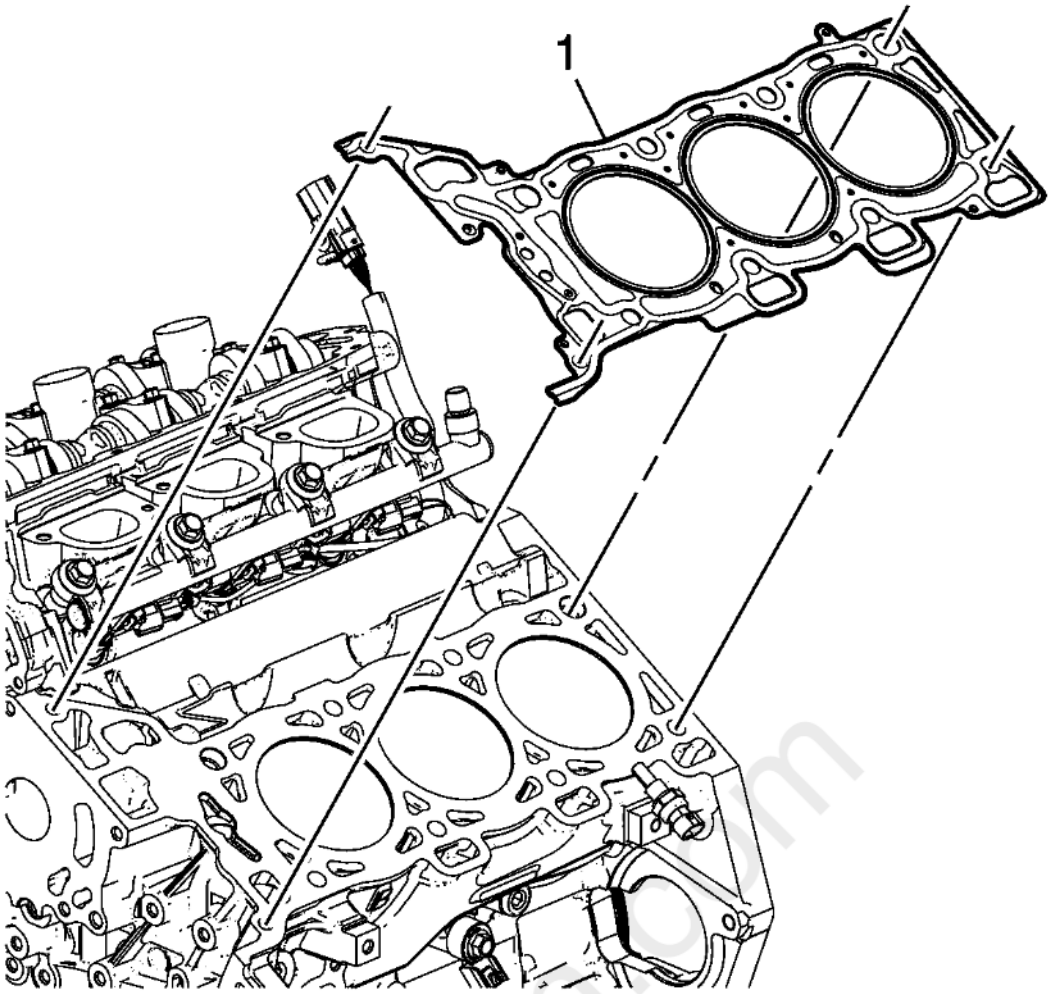

Fig. 472: View Of Left Cylinder Head Gasket
Courtesy of GENERAL MOTORS COMPANY

1. Ensure the cylinder head locating pins are securely mounted in the cylinder block deck face.
2. Install a NEW left cylinder head gasket (1) using the deck face locating pins for retention.

cardiagn.com

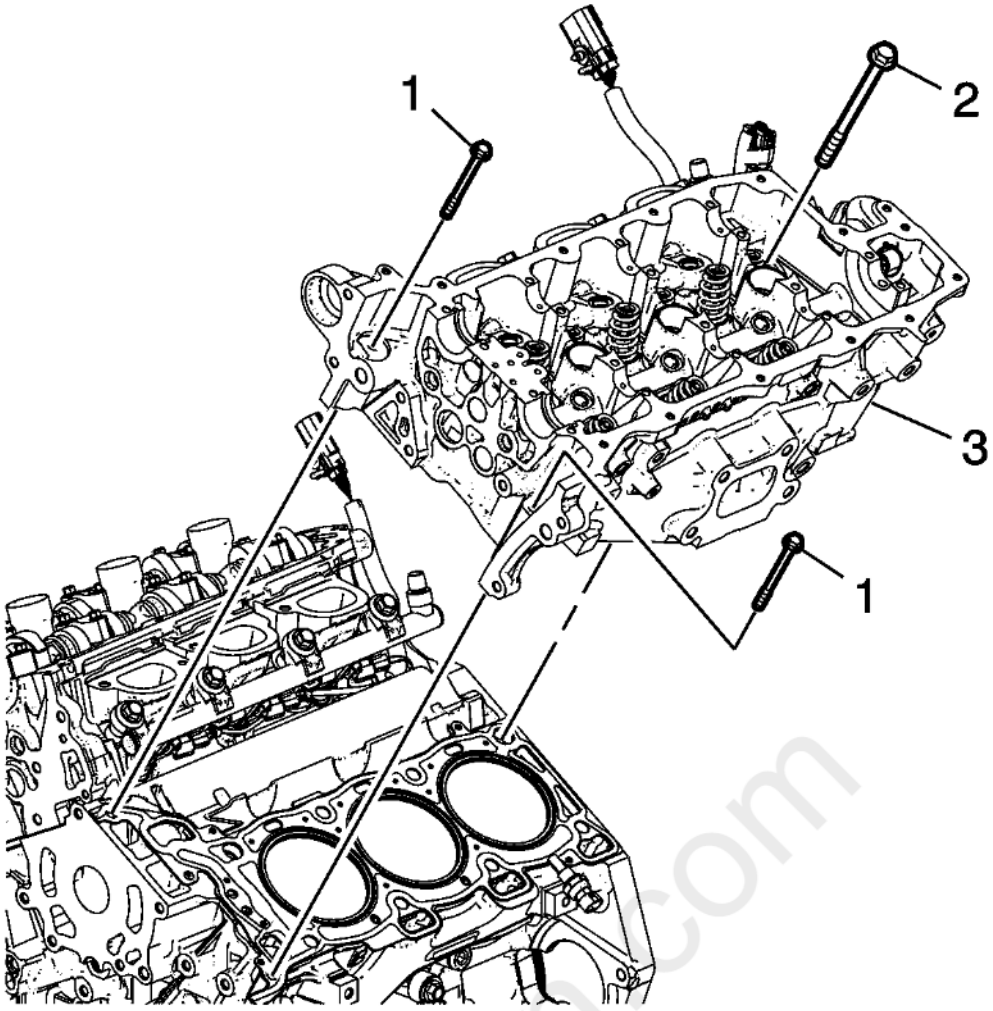

Fig. 473: View Of Left Cylinder Head & Bolts
Courtesy of GENERAL MOTORS COMPANY

3. Align the left cylinder head (3) with the deck face locating pins.
4. Place the left cylinder head in position on the deck face.

cardiagn.com

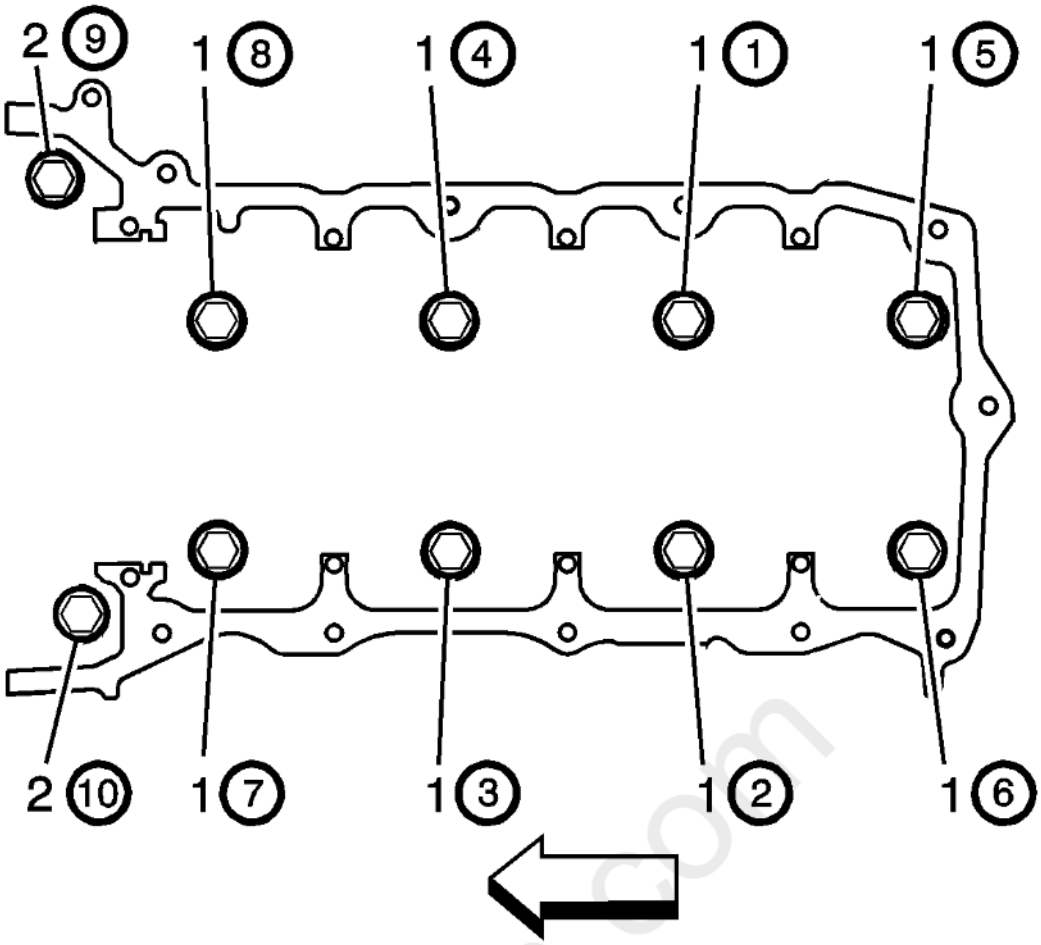

Fig. 474: Identifying M11 Cylinder Head Bolt Tightening Sequence
Courtesy of GENERAL MOTORS COMPANY

CAUTION: Refer to Fastener Caution .

CAUTION: This vehicle is equipped with torque-to-yield or single use fasteners. Install a NEW torque-to-yield or single use fastener when installing this component. Failure to replace the torque-to-yield or single use fastener could cause damage to the vehicle or component.

NOTE: DO NOT allow oil on the cylinder head bolt bosses.

5. Install the NEW M11 cylinder head bolts (1).
    1. Tighten the M11 cylinder head bolts a first pass in sequence to 30 N.m (22 lb ft).
    2. Tighten the M11 cylinder head bolts a second pass in sequence an additional 150 degrees using the **EN 45059** meter.
6. Install the 2 NEW front M8 left cylinder head bolts (2).
    1. Tighten the M8 cylinder head bolts a first pass to 15 N.m (11 lb ft).
    2. Tighten the M8 cylinder head bolts a second pass in sequence an additional 75 degrees using the **EN 45059** meter.

VALVE LIFTER INSTALLATION - LEFT SIDE

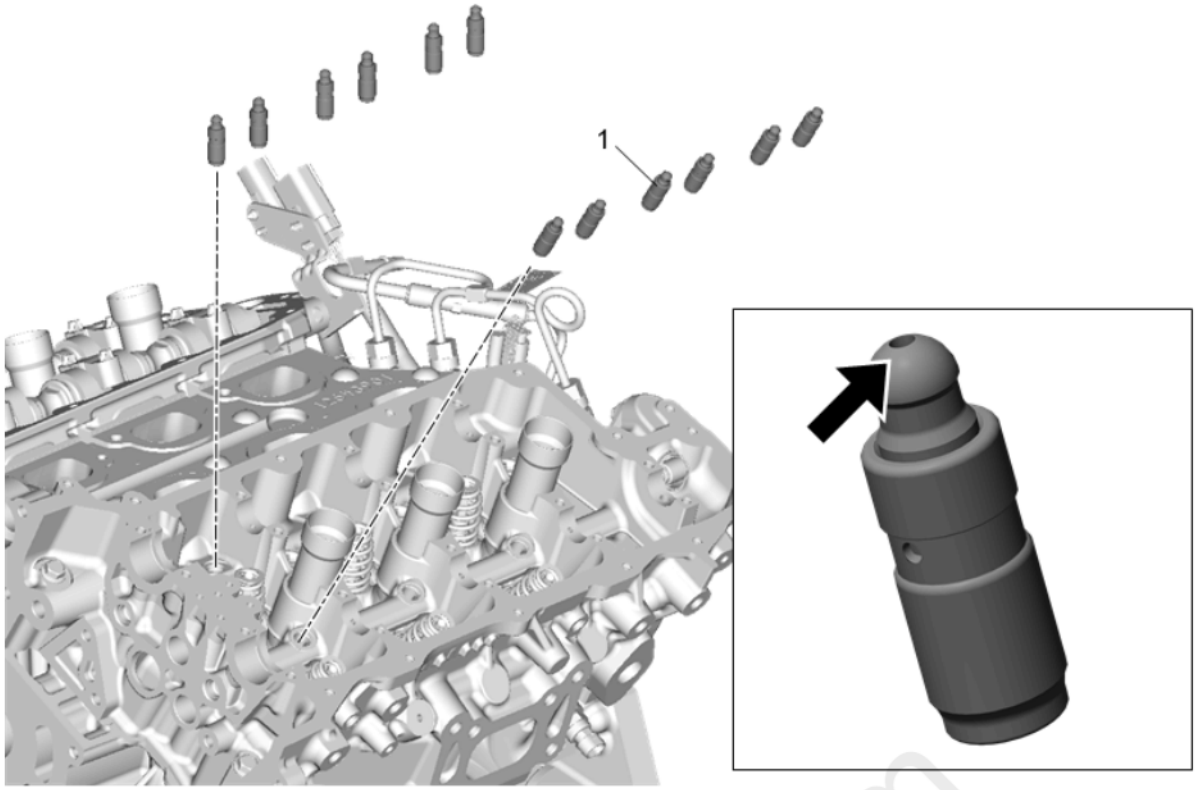

Fig. 475: Valve Lifter - Left Side
Courtesy of GENERAL MOTORS COMPANY

Callout	Component Name
1	Hydraulic Valve Lash Adjuster **NOTE:** • **Do not stroke/cycle the stationary hydraulic lash adjuster plunger without oil in the lower pressure chamber.** • **Do not allow the stationary hydraulic lash adjuster to tip over, plunger down, after the oil fill.** **Procedure** 1. Fill the stationary hydraulic lash adjuster (SHLA) with clean engine oil. Adhesives, Fluids, Lubricants, and Sealers Take precautions to prevent scratching the pivot sphere area of the SHLA. 2. Lubricate the SHLA bores in the cylinder head with clean engine oil. 3. Install the SHLAs in the cylinder head. 4. Apply a liberal amount of lubricant to the SHLA pivot spheres.

VALVE ROCKER ARM INSTALLATION - LEFT SIDE

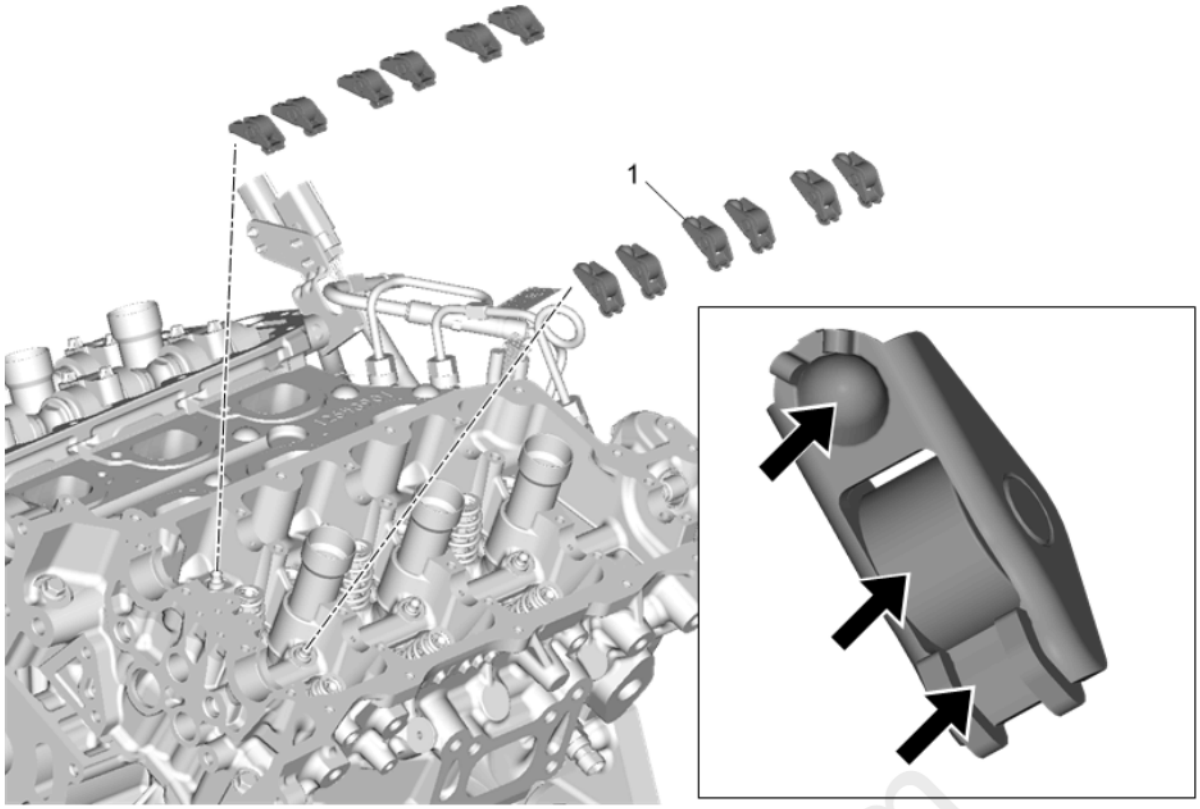

Fig. 476: Valve Rocker Arm - Left Side
Courtesy of GENERAL MOTORS COMPANY

Callout	Component Name
1	Valve Rocker Arm **Procedure** 1. Apply a liberal amount of lubricant to the pivot pocket, roller and valve slot areas of the camshaft followers. **Adhesives, Fluids, Lubricants, and Sealers** **NOTE:** **The follower must be positioned squarely on the valve tip so that the full width of the roller will completely contact the camshaft lobe. If the followers are being reused you must put them back in their original location.** 2. Place the camshaft followers in position on the valve tip and stationary hydraulic lash adjuster (SHLA). 3. The rounded head end of the follower goes on the SHLA while the flat end goes on the valve tip. 4. Clean the camshaft journals and carriers with a clean, lint-free cloth.

CAMSHAFT INSTALLATION - LEFT SIDE

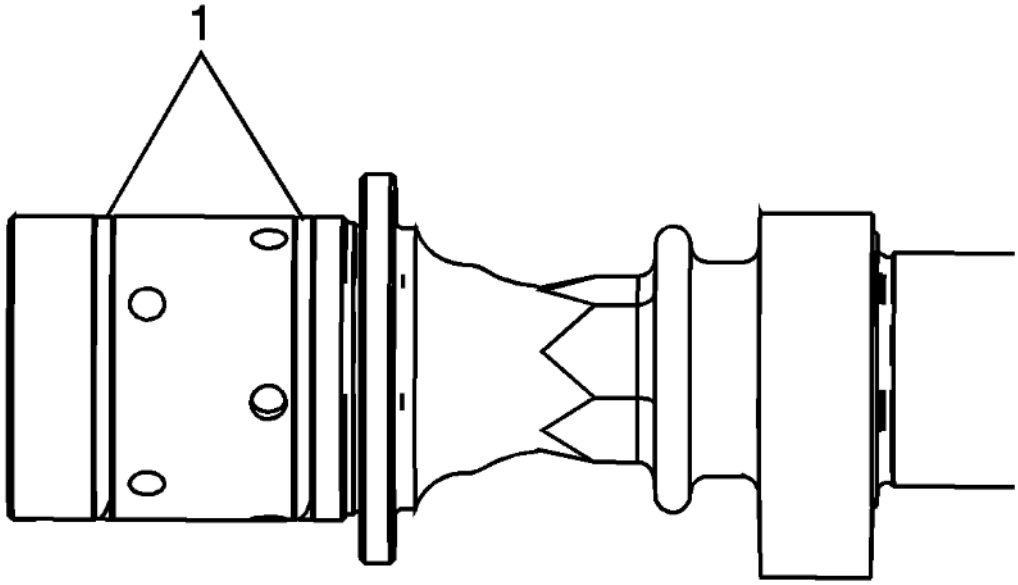

Fig. 477: Locating Camshaft Sealing Rings In Camshaft Grooves
Courtesy of GENERAL MOTORS COMPANY

1. Ensure that the camshaft sealing rings (1) are in place in the camshaft grooves. Camshaft sealing rings must be in place below the surface of the camshaft journal in order to avoid being pinched between the cylinder head and the camshaft caps.

carmagn.com

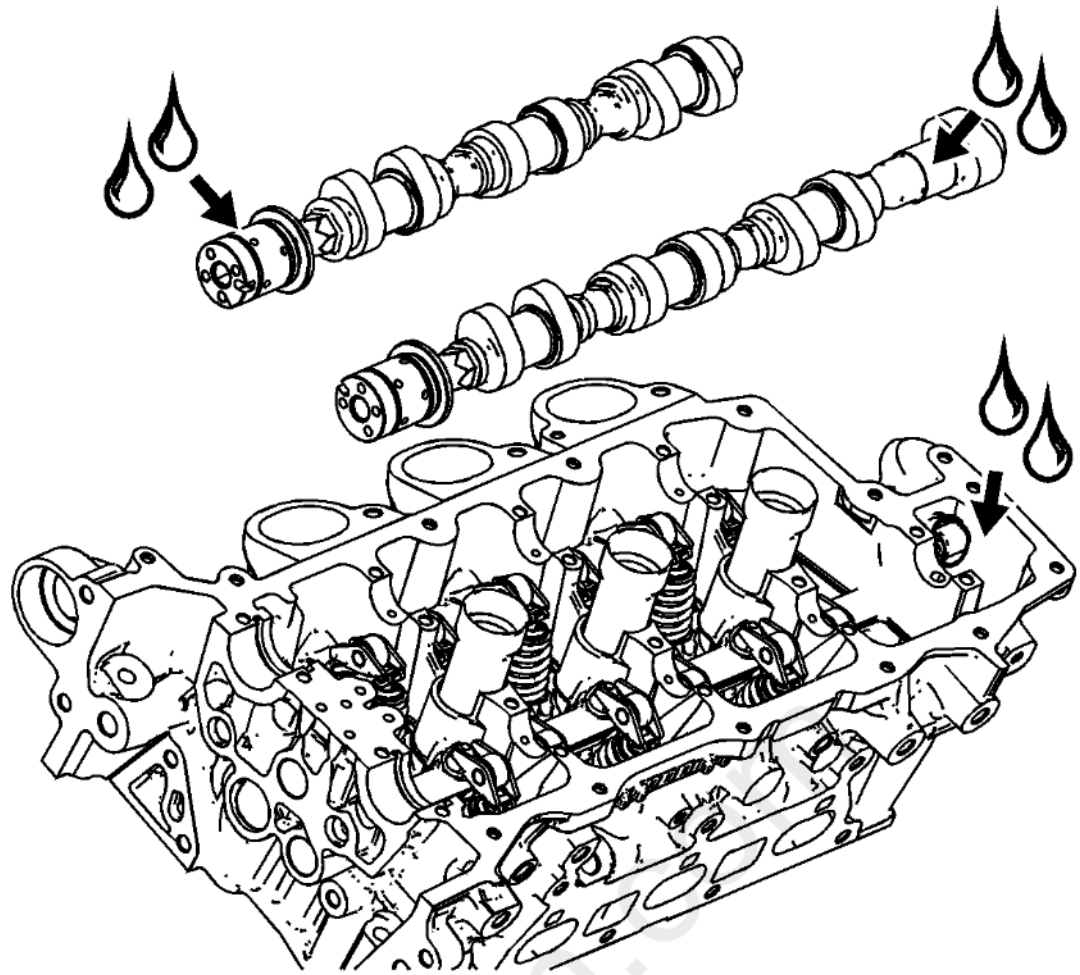

Fig. 478: Lubricating Camshaft Journals
Courtesy of GENERAL MOTORS COMPANY

2. Apply a liberal amount of lubricant to the camshaft journals and the left cylinder head camshaft carriers. Refer to **Adhesives, Fluids, Lubricants, and Sealers** for recommended lubricant.

carmagn.com

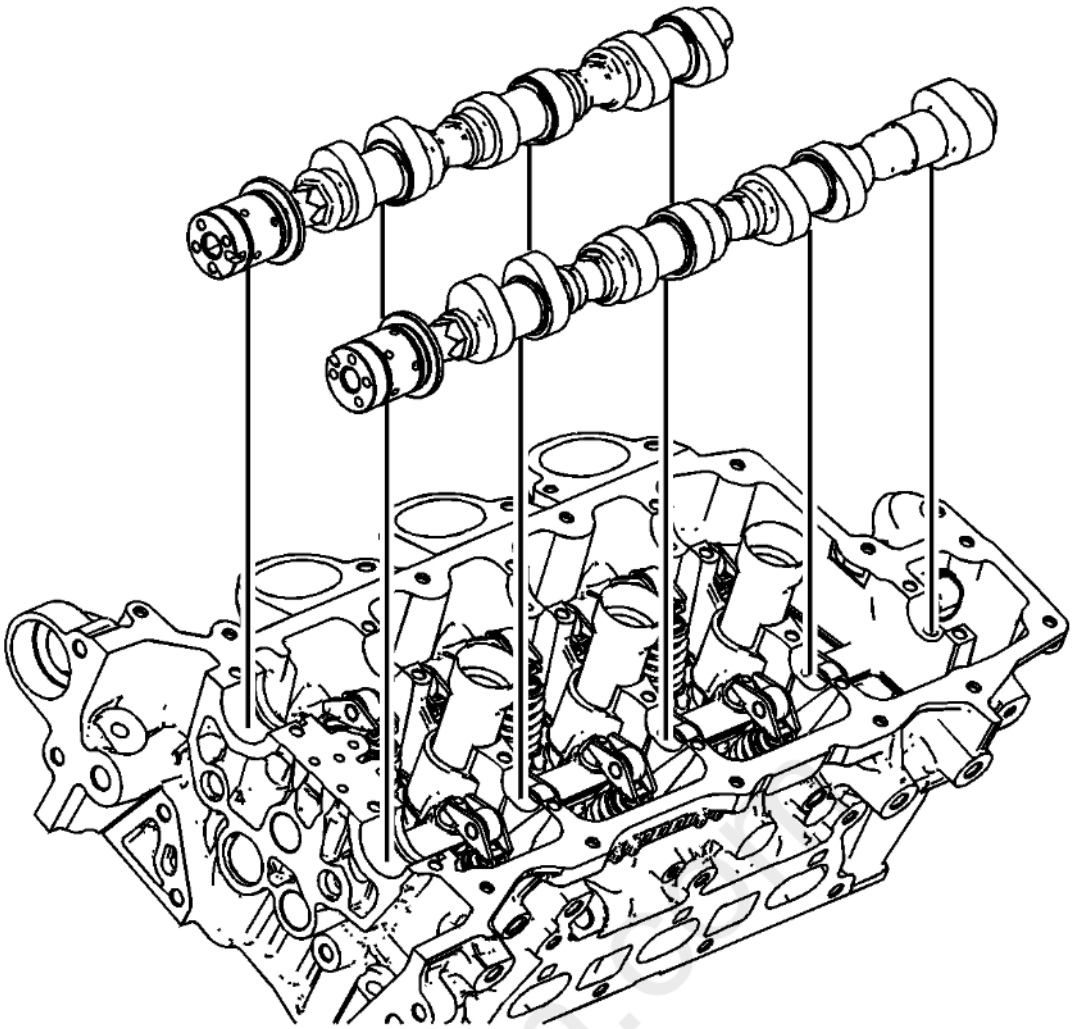

Fig. 479: View of Camshafts and Cylinder Head
Courtesy of GENERAL MOTORS COMPANY

NOTE: **The left intake camshaft has a laser inscription marking on the rear of the shaft to identify it as left bank intake (LI).**

3. Place the left intake and left exhaust camshafts in position in the left cylinder head.

carmanual.com

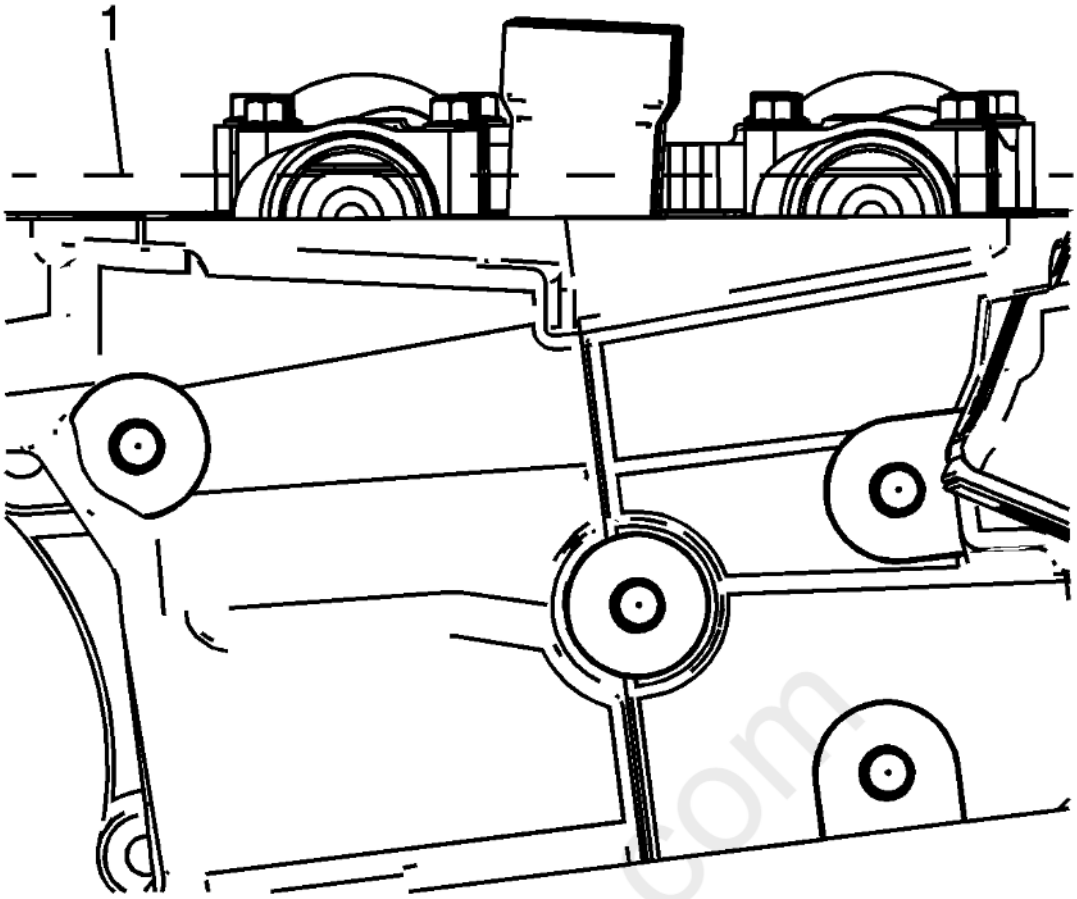

Fig. 480: View Of Camshaft Flats Parallel With Camshaft Cover Rail
Courtesy of GENERAL MOTORS COMPANY

4. Position the camshaft lobes in a neutral position with the flats on the back of the camshafts up and parallel (1) with the left cylinder head camshaft cover rail.

carmanual.com

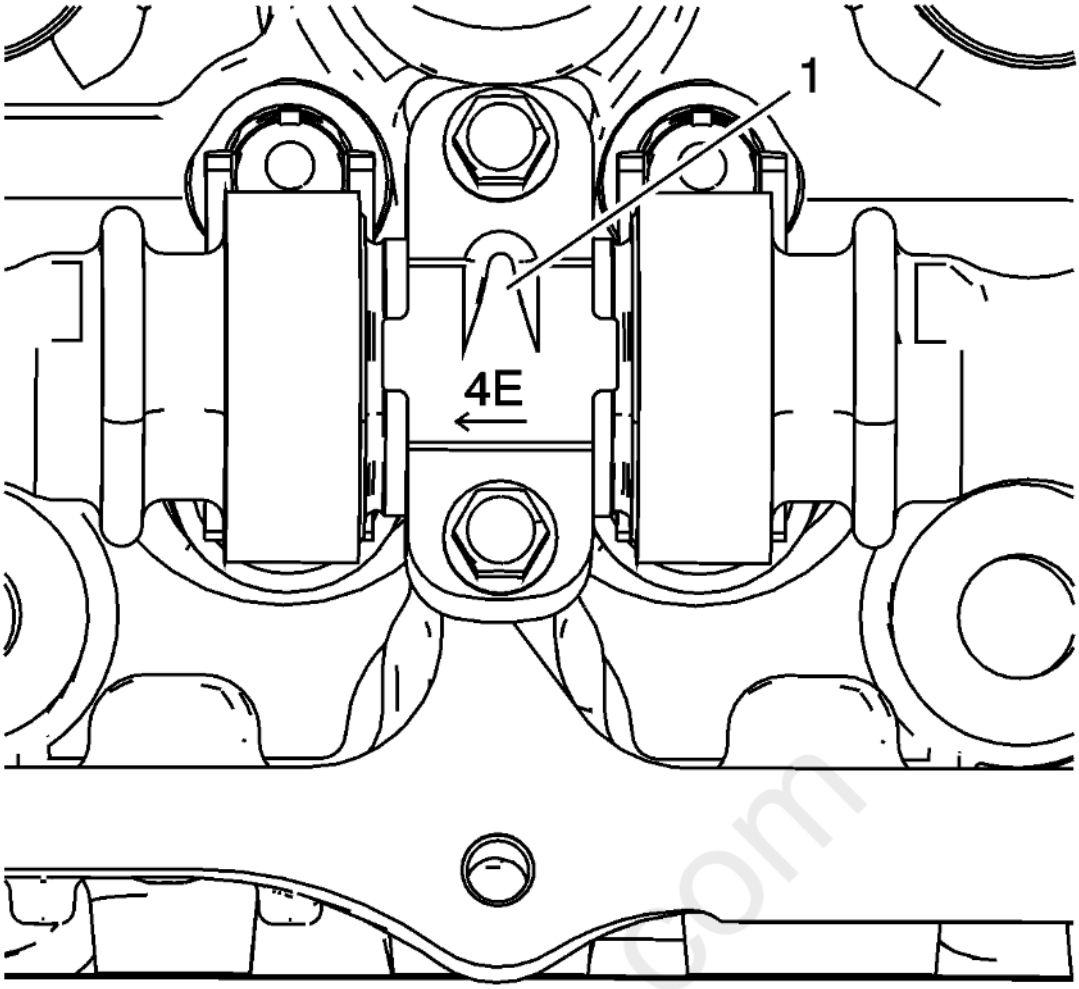

Fig. 481: Left Cylinder Head Camshaft Bearing Cap Markings
Courtesy of GENERAL MOTORS COMPANY

5. Observe the markings on the left cylinder head camshaft bearing caps. Each bearing cap is marked in order to identify its location. The markings have the following meanings:
    - The raised feature (1) must always be oriented toward the center of the cylinder head.
    - The I indicates the intake camshaft.
    - The E indicates the exhaust camshaft.
    - The number 2, 4, 6 indicates the cylinder position from the front of the engine.
6. Apply a liberal amount of lubricant to the camshaft bearing caps. Refer to **Adhesives, Fluids, Lubricants, and Sealers** for recommended lubricant.

cardiagn.com

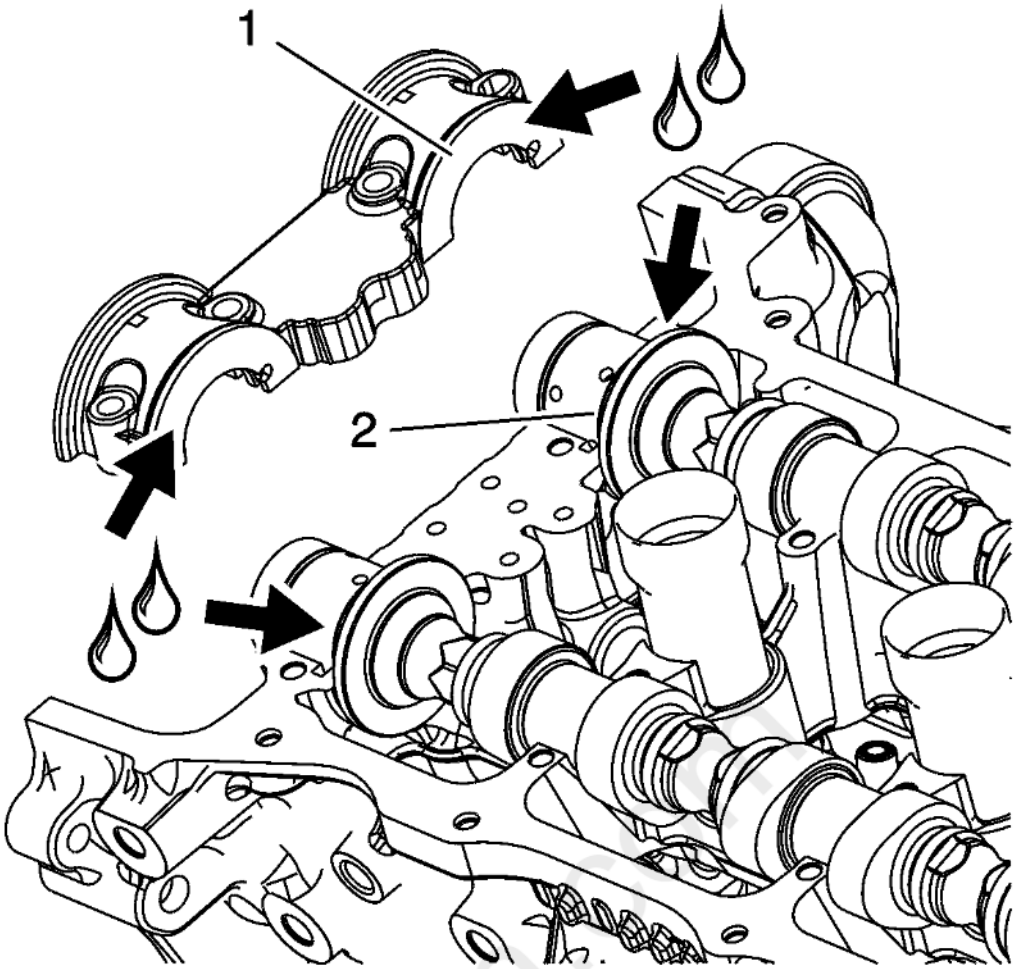

Fig. 482: Camshaft Bearing Cap And Camshaft Thrust Surface
Courtesy of GENERAL MOTORS COMPANY

7. Apply a liberal amount of lubricant to the camshaft bearing cap (1) and camshaft thrust surface (2). Refer to **Adhesives, Fluids, Lubricants, and Sealers** for recommended lubricant.

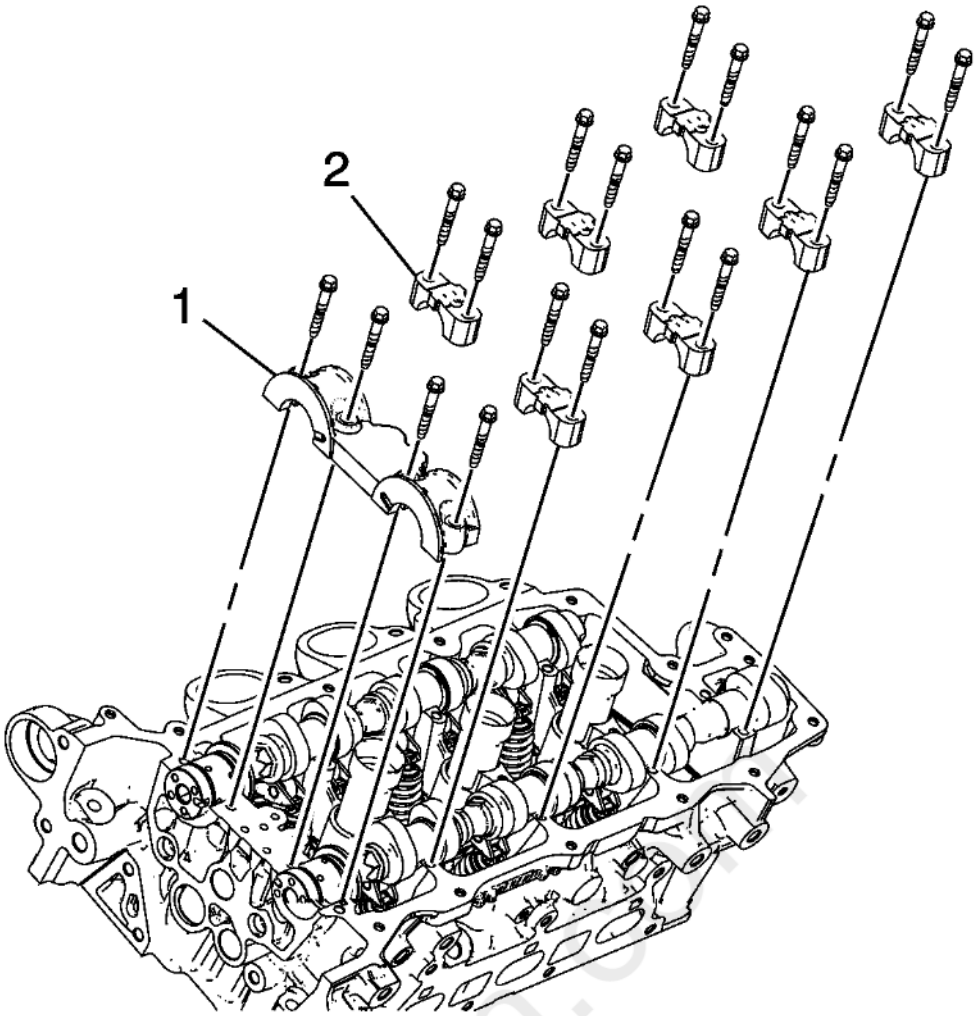

Fig. 483: Camshaft Bearing Caps And Bolts
Courtesy of GENERAL MOTORS COMPANY

8. Install the camshaft bearing thrust cap (1) in the first journal of the left cylinder head.
9. Install the remaining bearing caps (2) with their orientation mark toward the center of the cylinder head.
10. Hand start all the camshaft bearing cap bolts.

carDiagn.com

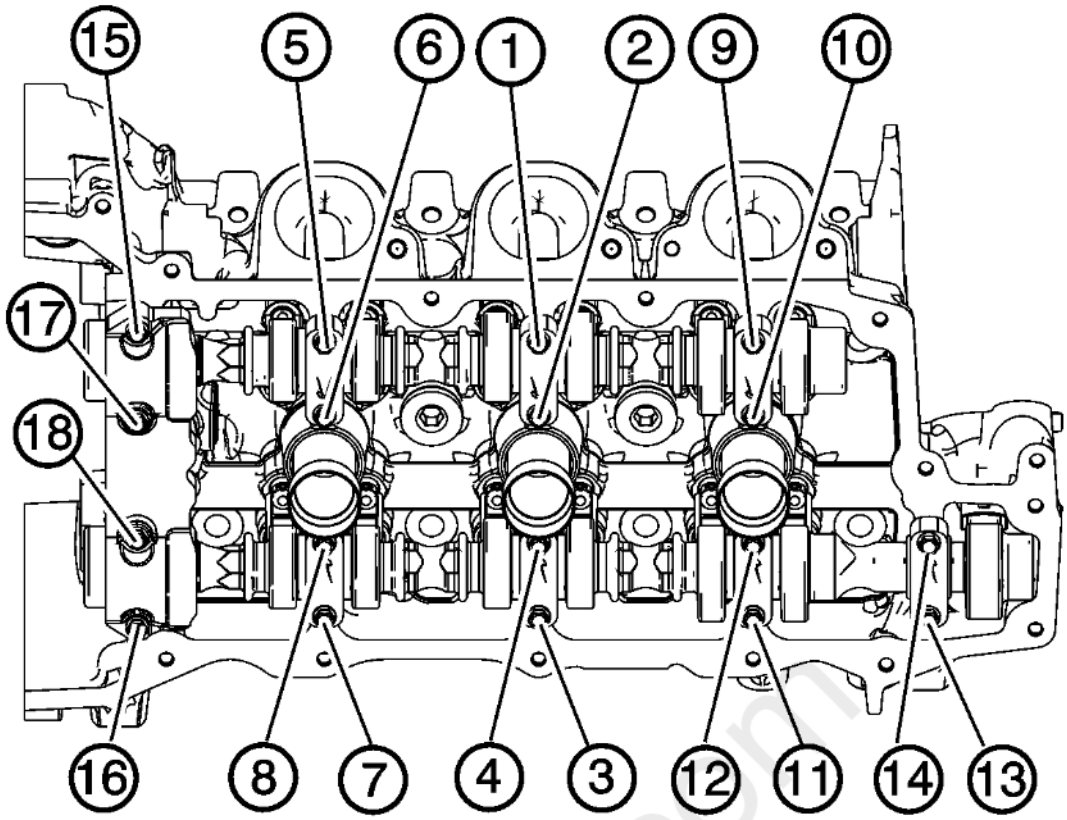

Fig. 484: Identifying Camshaft Bearing Cap Bolt Tightening Sequence
Courtesy of GENERAL MOTORS COMPANY

CAUTION: **Refer to Fastener Caution .**

11. Tighten the camshaft bearing cap bolts in the sequence shown and tighten to 10 N.m (89 lb in).
12. Loosen the center intake camshaft bearing cap bolts 1, 2 and the center exhaust camshaft bearing cap bolts 3, 4.
13. Retighten the center camshaft bearing cap bolts 1, 2, 3, 4 and retighten the camshaft bearing cap bolts to 10 N.m (89 lb in).

FUEL PUMP INSTALLATION

Special Tools

EN - 48896 HP Fuel Pump Installation Alignment Gauge

For equivalent regional tools, refer to **Special Tools** .

Cardiagn.com

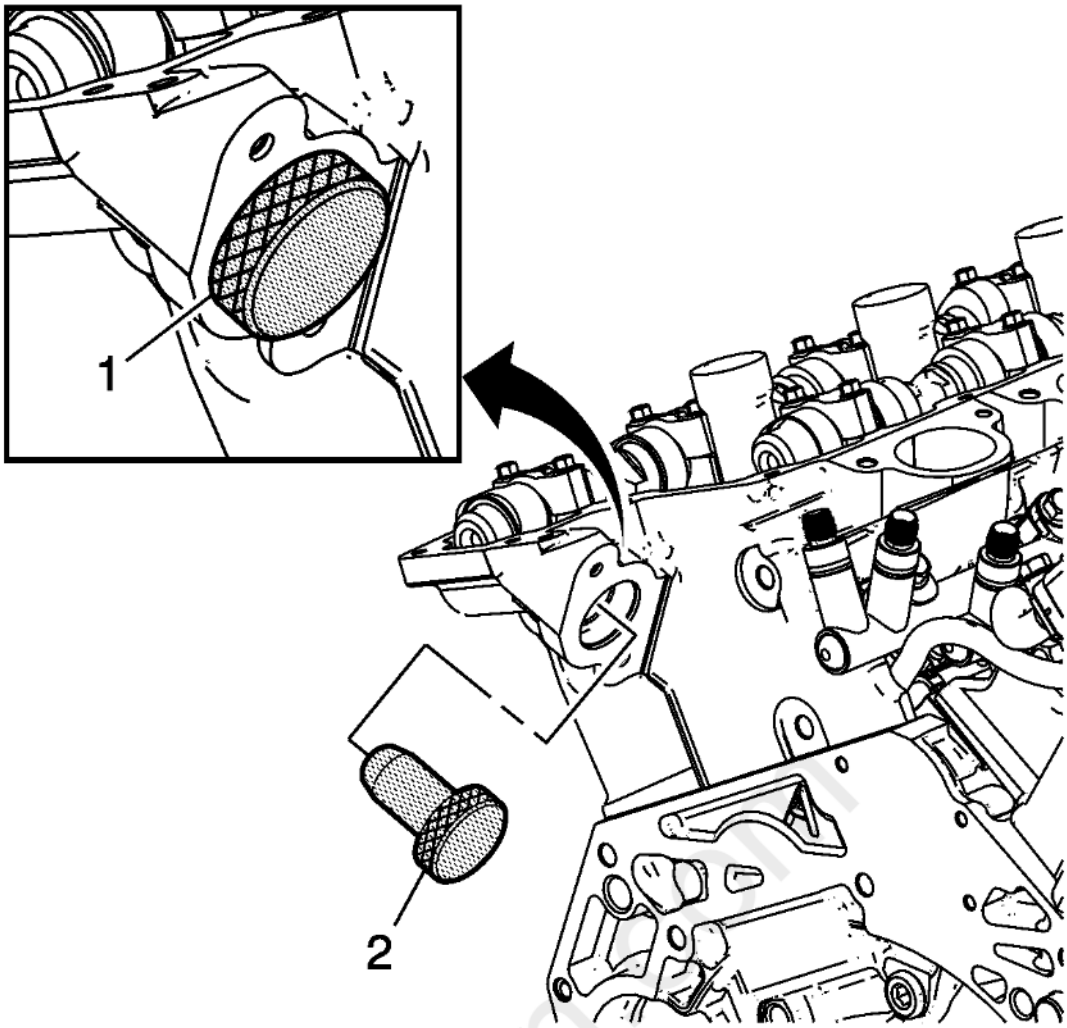

Fig. 485: View Of Alignment Gauge
Courtesy of GENERAL MOTORS COMPANY

NOTE: **The camshaft must be in the base circle position before the high pressure fuel pump is installed.**

1. Use the **EN - 48896** alignment gauge (2) to ensure that the camshaft lobe is in the base circle position. At base circle position, the tool will be flush with the head (1).

Cardiagn.com

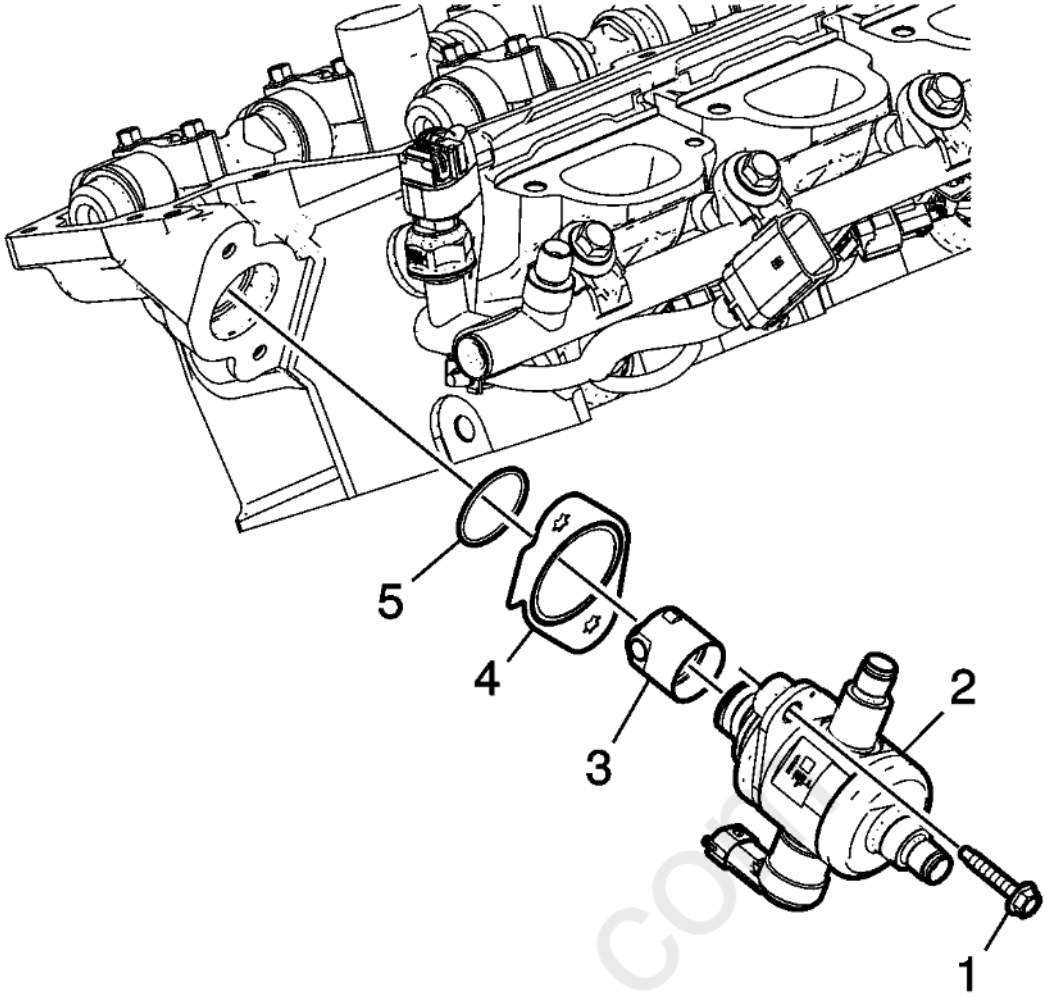

Fig. 486: Identifying High Pressure Fuel Pump Components
Courtesy of GENERAL MOTORS COMPANY

2. Lubricate the high pressure fuel pump cylinder head bore with clean engine oil.

NOTE: **Ensure that the high pressure fuel pump roller lifter is oriented properly, the camshaft is at base circle and the number 1 piston is at top dead center (TDC) on the exhaust stroke.**

3. Lubricate the high pressure fuel pump roller lifter with clean engine oil and install into the cylinder head bore.
4. Install a NEW high pressure fuel pressure fuel pump gasket (4).

NOTE: **If a high pressure pump is replaced on an engine which originally had a pump WITH a gasket, it must be rebuilt WITH a pump kit that includes the gasket; if a high pressure pump is replaced on an engine which originally had a pump WITHOUT a gasket, it must be rebuilt WITHOUT a gasket.**

5. Lubricate NEW high pressure fuel pump O-ring (5) with one drop of clean engine oil and install.

NOTE: **Ensure the plastic bolt retainers are installed in the high pressure fuel pump mounting holes before installing.**

6. Install the valve lifter follower (3).
7. Install the high pressure fuel pump (2).

CAUTION: **Refer to Fastener Caution .**

CAUTION: **Alternately hand-tighten the fuel pump bolts one turn at a time until**

the pump is fully seated. Trying to draw down the pump without even side-to-side tightening may result in pump plunger damage.

CAUTION: **This vehicle is equipped with torque-to-yield or single use fasteners. Install a NEW torque-to-yield or single use fastener when installing this component. Failure to replace the torque-to-yield or single use fastener could cause damage to the vehicle or component.**

8. Start and hand-tighten the NEW high pressure fuel pump bolts (1) evenly.
    1. Tighten the fuel pump bolts (1) a first pass in sequence to 15 N.m (11 lb ft).
    2. Tighten the fuel pump bolts (1) a second pass in an additional 60 degrees.

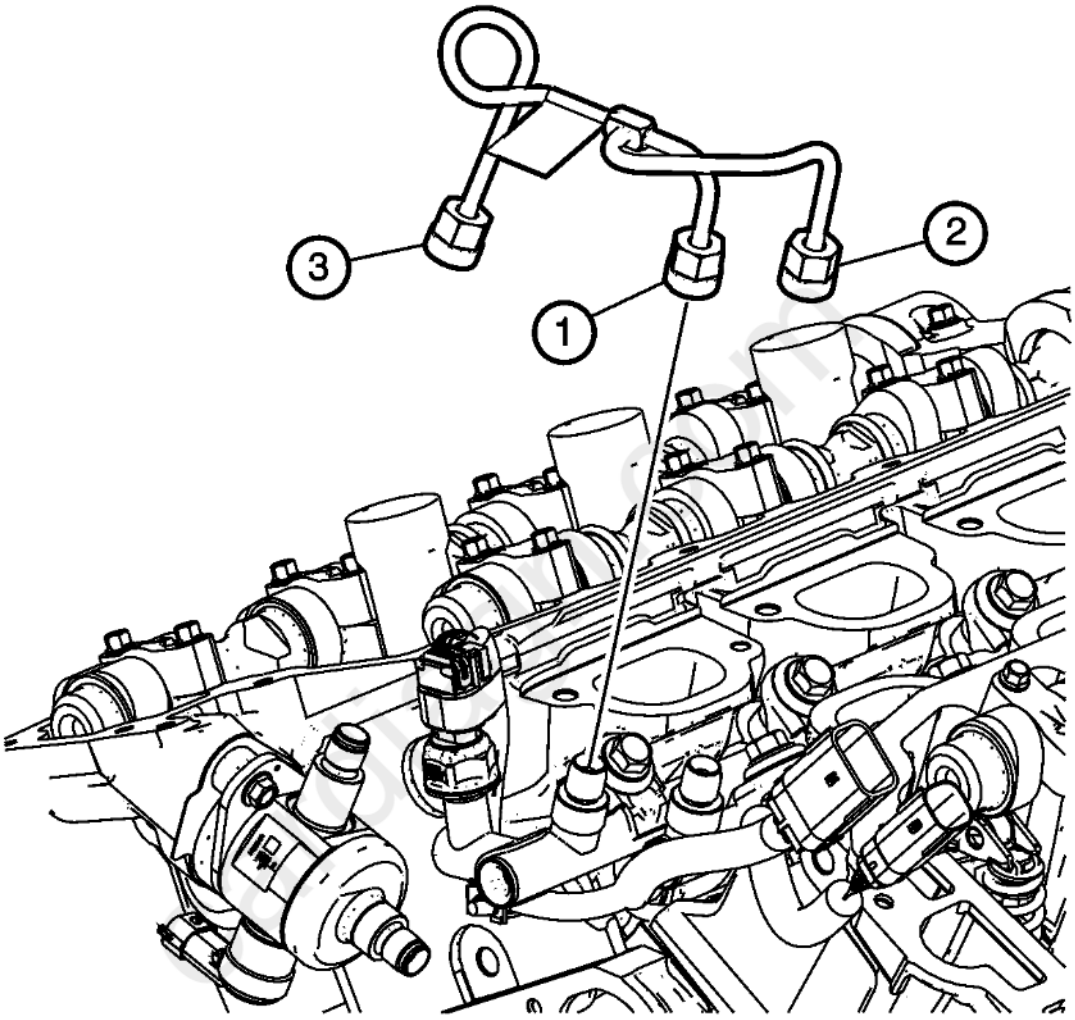

Fig. 487: Identifying Fuel Rail Crossover Pipe Components
Courtesy of GENERAL MOTORS COMPANY

NOTE:

- **DO NOT reuse the high pressure fuel rail crossover pipe.**
- **The tightening order and torque are critical to proper fuel system fit and function. Be sure to follow installation and tightening steps exactly.**

9. Install the NEW high pressure LH to RH fuel rail crossover pipe by starting all three fuel crossover pipe fitting nuts (1), (2) and (3) to finger-tight only.
10. Tighten the fuel rail crossover pipe fittings to 28 N.m (21 lb ft) in the following order: (1) left fuel rail, (2) right fuel rail, then (3) fuel pump.

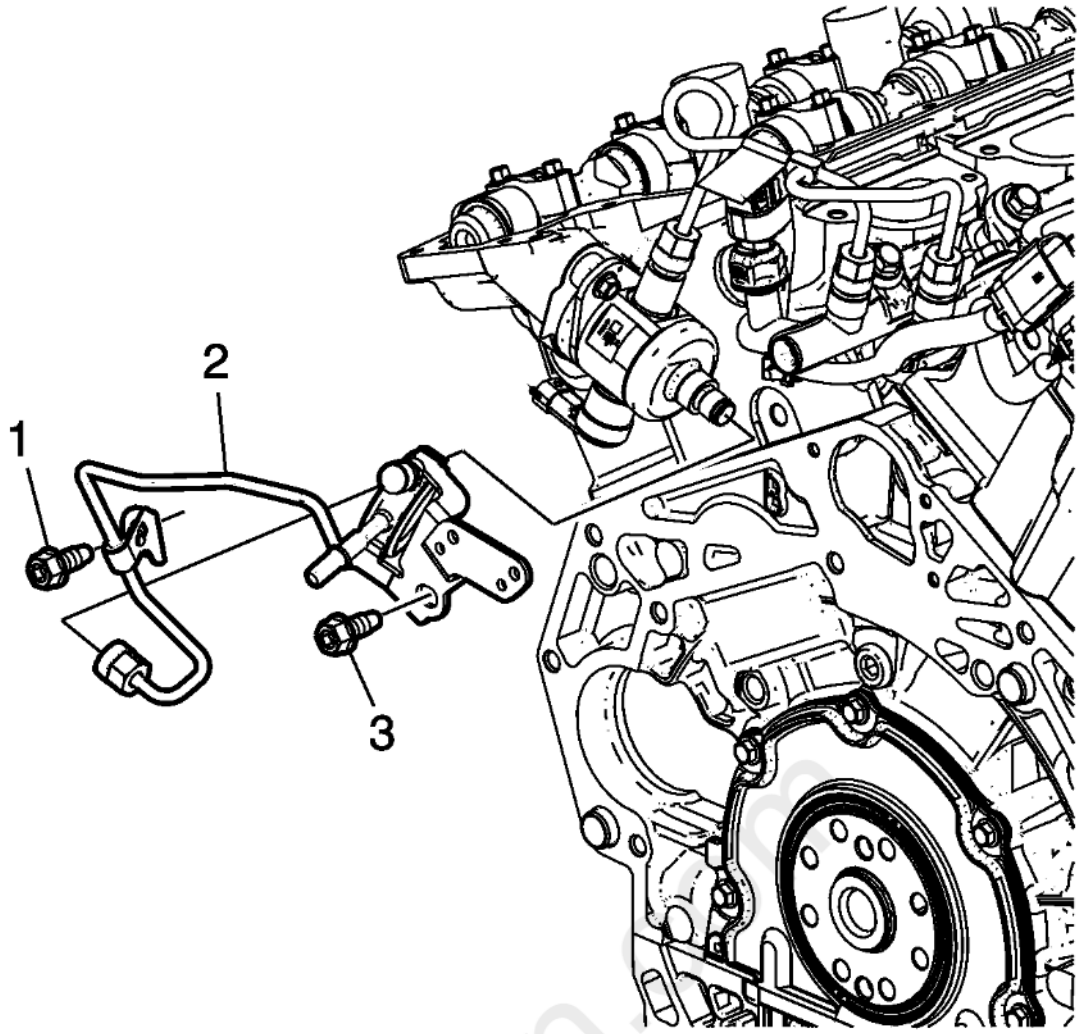

Fig. 488: View Of Fuel Feed Pipe Components
Courtesy of GENERAL MOTORS COMPANY

11. Install the NEW fuel feed pipe (2) by installing the fuel line nut to the fuel pump finger-tight.
12. Install the fuel feed pipe bolts finger tight (1 and 3).
13. Tighten the fuel feed pipe bolts (1 and 3) to 50 N.m (37 lb ft).
14. Tighten the fuel feed pipe fitting nut to 28 N.m (21 lb ft).
15. Install the fuel rail wiring connectors to the fuel feed pipe bracket.

carmanuals.com

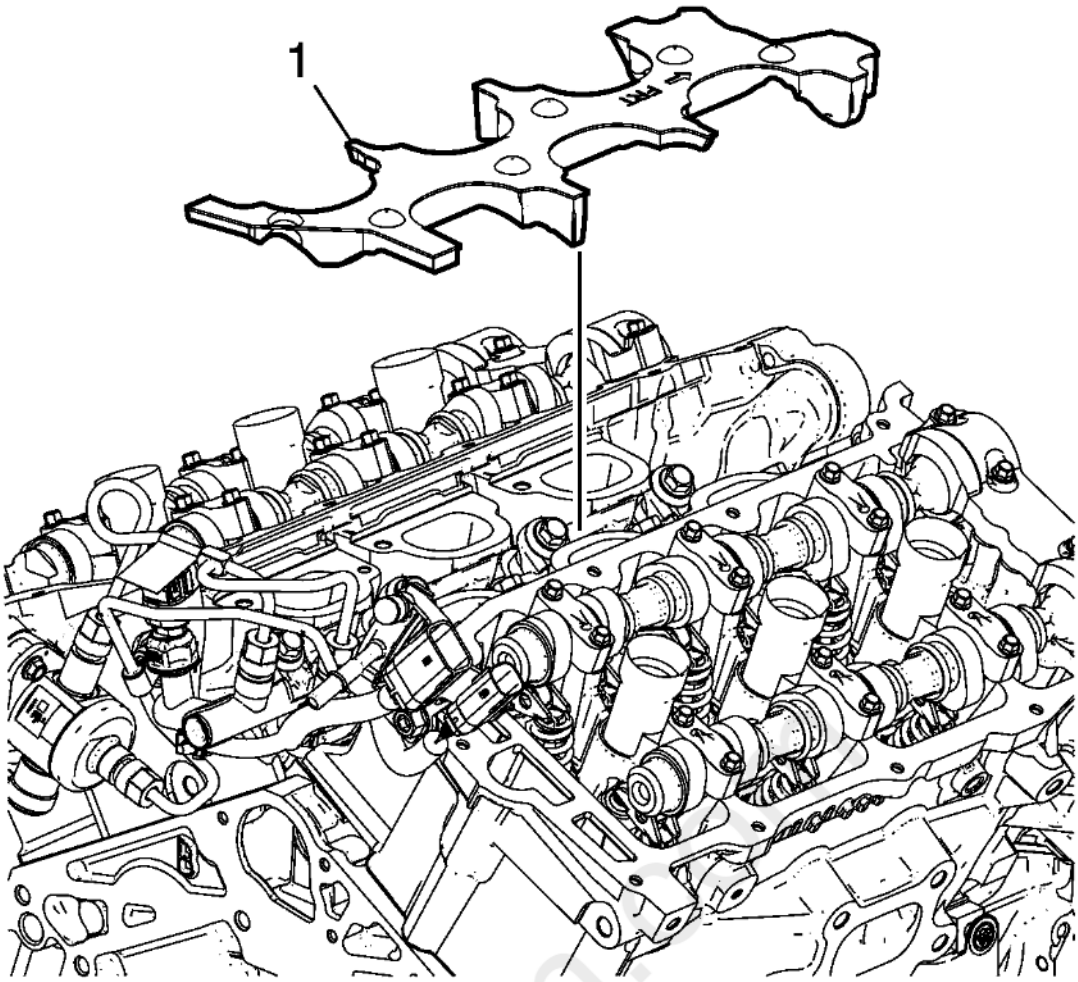

Fig. 489: Identifying Fuel Rail Noise Shield
Courtesy of GENERAL MOTORS COMPANY

16. Install the fuel rail noise shield (1).

CAMSHAFT POSITION ACTUATOR INSTALLATION - RIGHT SIDE INTAKE

cardiagn.com

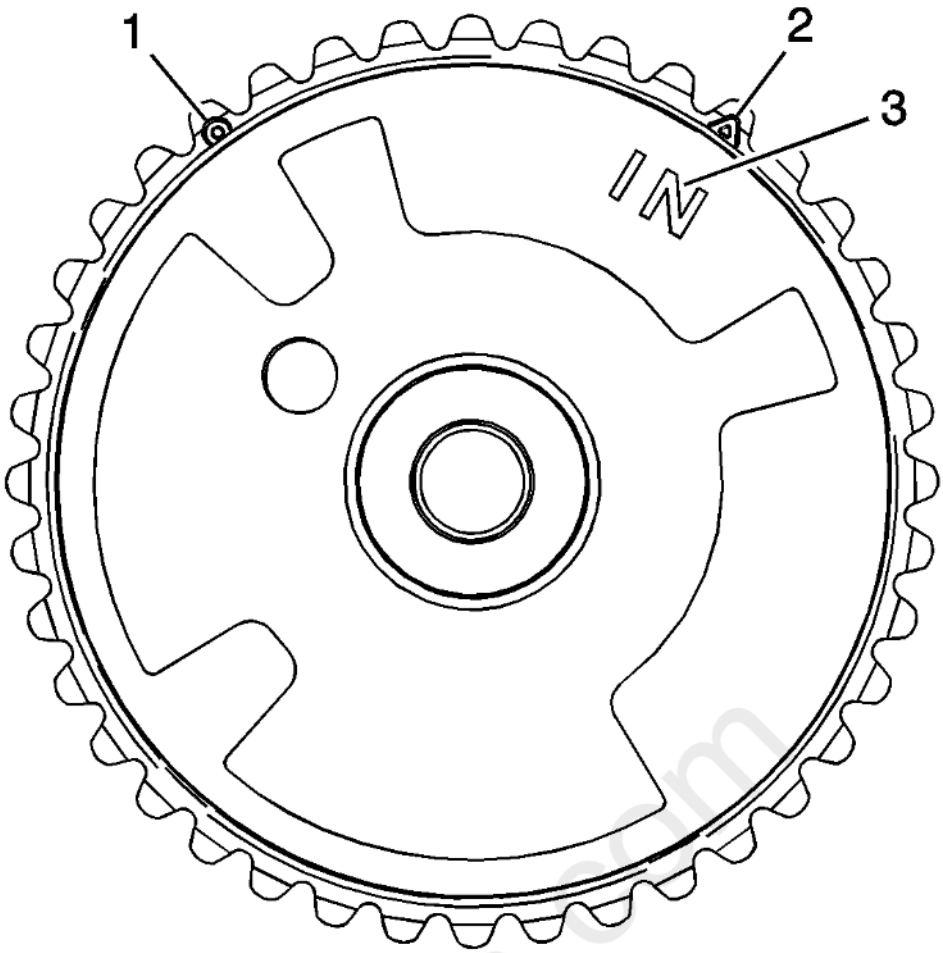

Fig. 490: View Of Camshaft Position Actuator Markings
Courtesy of GENERAL MOTORS COMPANY

1. Ensure the proper camshaft position actuator is installed. Observe the body of the camshaft position actuator for the "IN" marking (3). The marking is for an intake camshaft position actuator.

carguign.com

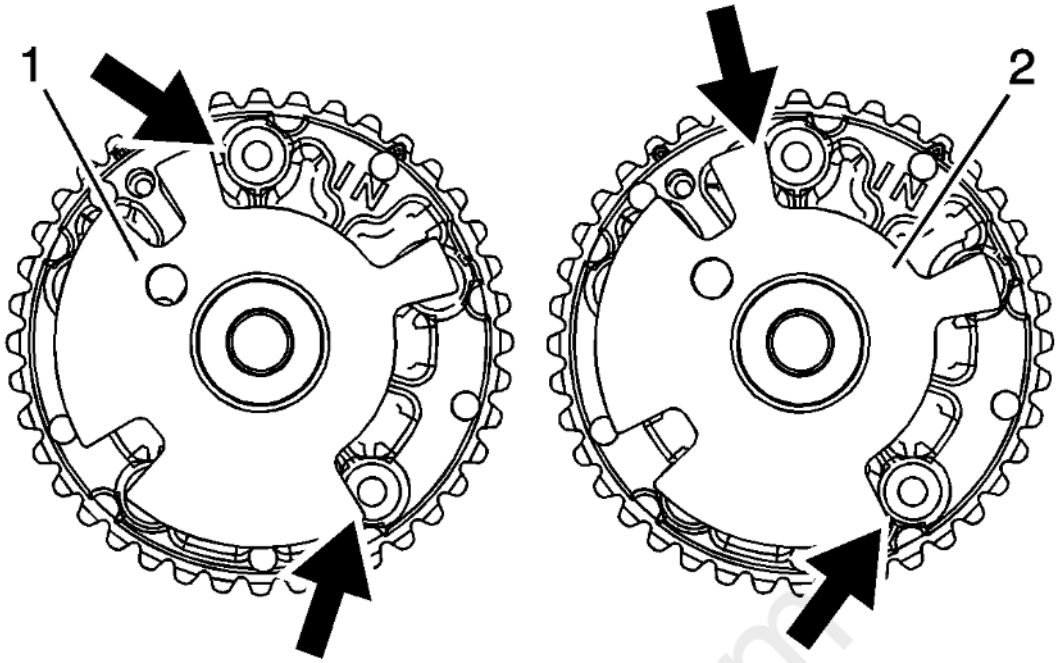

Fig. 491: View Of Right Intake Camshaft Position Actuator & Left Intake Camshaft Position Actuator
Courtesy of GENERAL MOTORS COMPANY

CAUTION: Ensure the proper camshaft position actuator is installed in the correct position. Failure to install the proper camshaft position actuator can effect engine performance and set an engine code.

2. Ensure the proper camshaft position actuator is being installed. The reluctor wheel on the right intake camshaft position actuator (1) is indexed in a different position compared to the left intake camshaft position actuator (2).

cadlagn.com

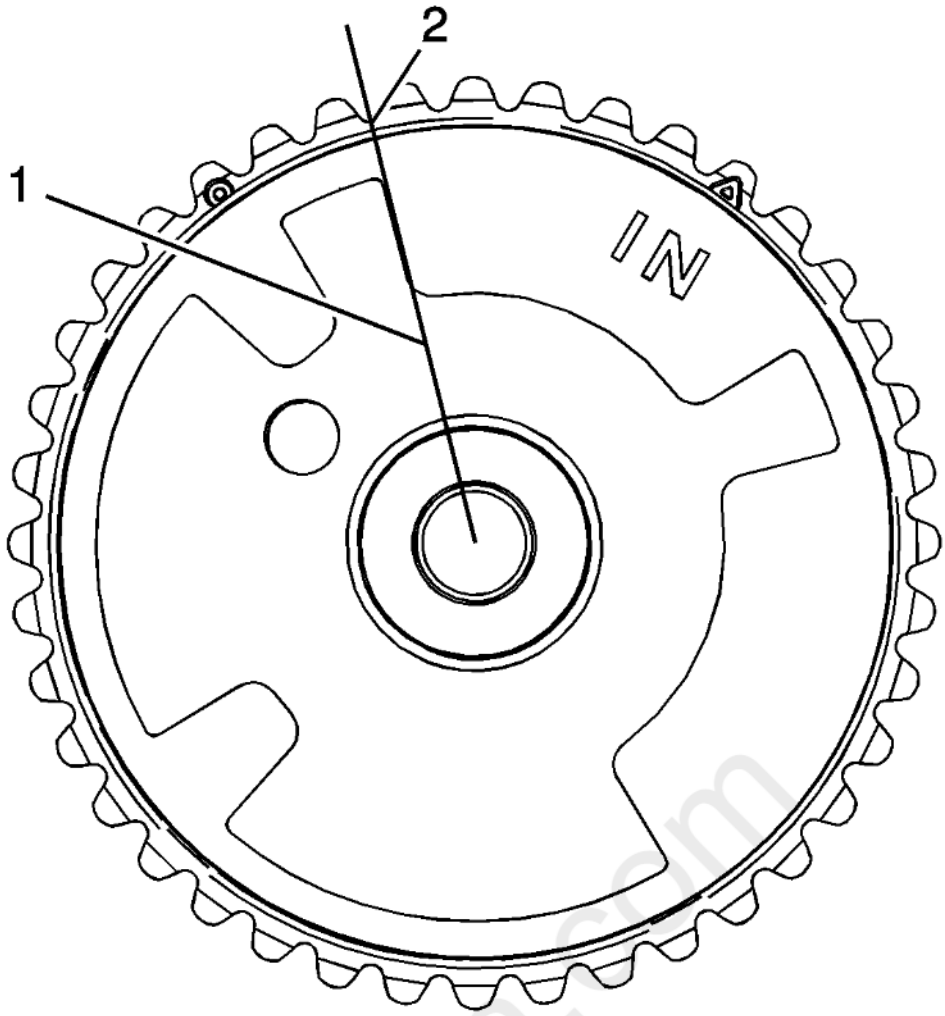

Fig. 492: View Of Reluctor Wheel & Valley
Courtesy of GENERAL MOTORS COMPANY

3. On the right intake camshaft actuator the edge of the reluctor wheel (1) lines up with the valley (2) of the sprocket tooth.

cardiagn.com

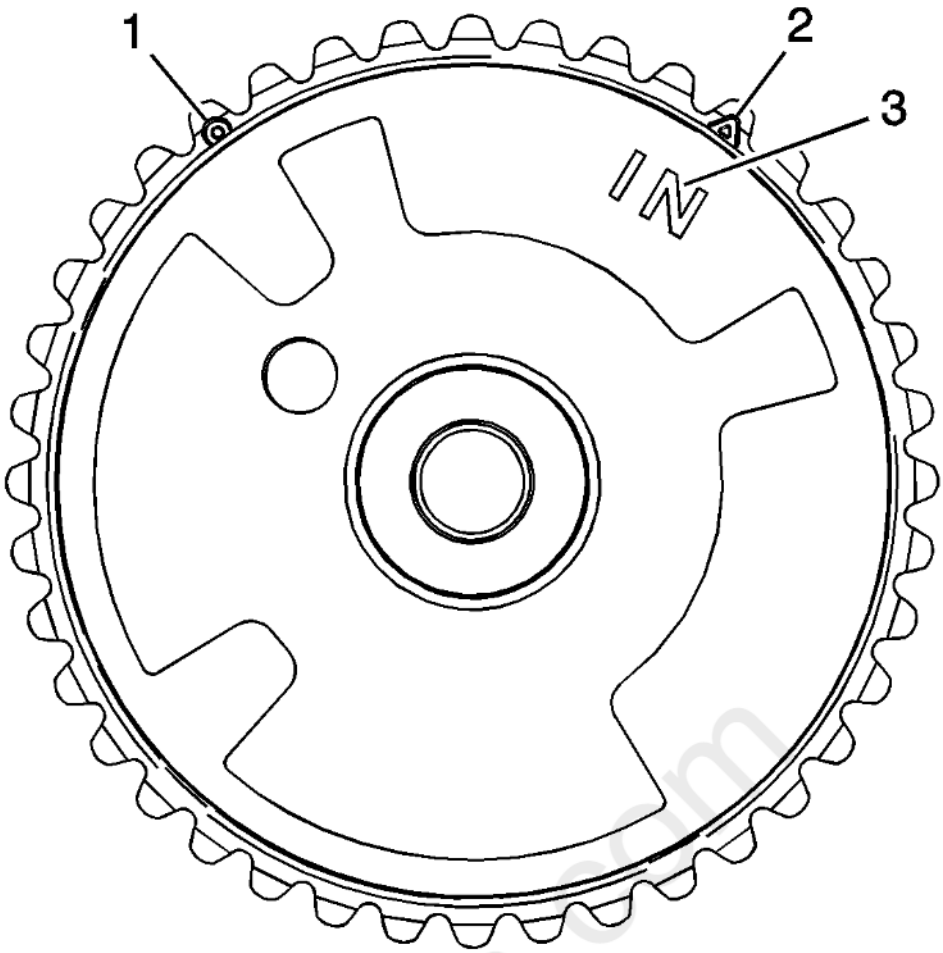

Fig. 493: View Of Camshaft Position Actuator Markings
Courtesy of GENERAL MOTORS COMPANY

4. Ensure the proper timing mark is used. Observe the outer ring of the camshaft position actuator for the triangle marking (2). The triangle marking is for alignment to the highlighted timing chain link on the right side of the engine.

CAUTION: **Refer to Torque Reaction Against Timing Drive Chain Caution .**

5. Use an open wrench on the hex cast into the camshaft in order to prevent camshaft rotation when tightening the camshaft position actuator bolt.

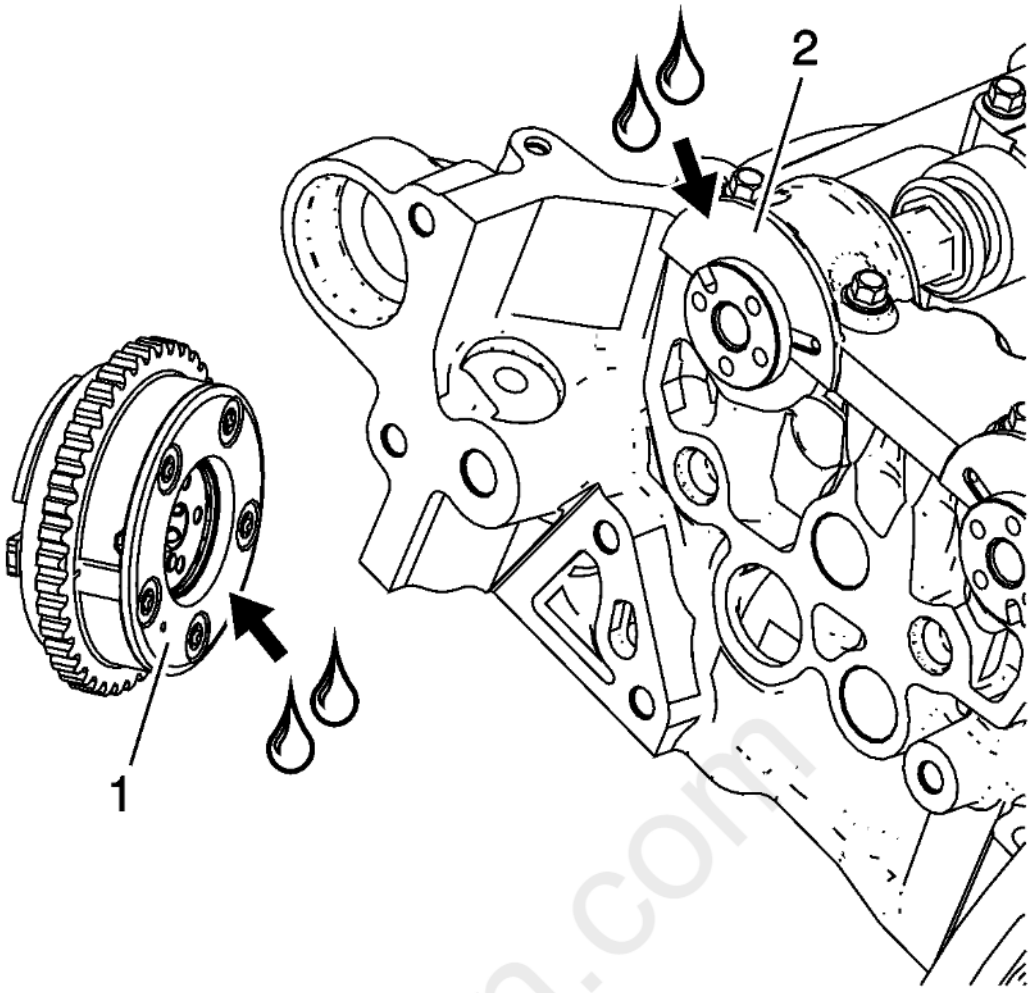

Fig. 494: Applying Lubricant To Back Of Camshaft Position Actuator And Front Of Camshaft Bearing Cap
Courtesy of GENERAL MOTORS COMPANY

6. Apply a liberal amount of lubricant to the back of the camshaft position actuator (1) and front of the camshaft bearing cap (2). Refer to **Adhesives, Fluids, Lubricants, and Sealers** for recommended lubricant.

cardiagn.com

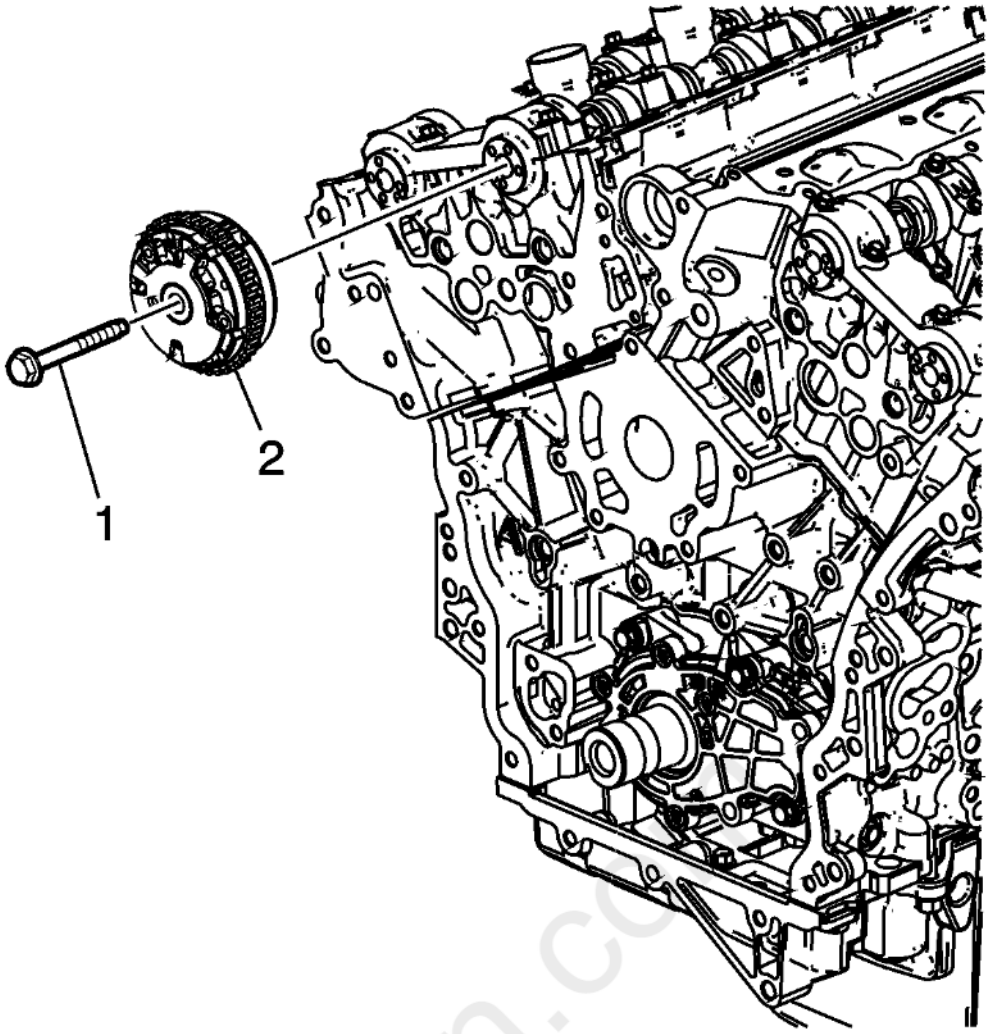

Fig. 495: Right Intake Camshaft Position Actuator
Courtesy of GENERAL MOTORS COMPANY

7. Install the right intake camshaft position actuator (2).

CAUTION: Refer to Fastener Caution .

8. Install the camshaft position actuator bolt (1) and tighten to 58 N.m (43 lb ft).

CAMSHAFT POSITION ACTUATOR INSTALLATION - RIGHT SIDE EXHAUST

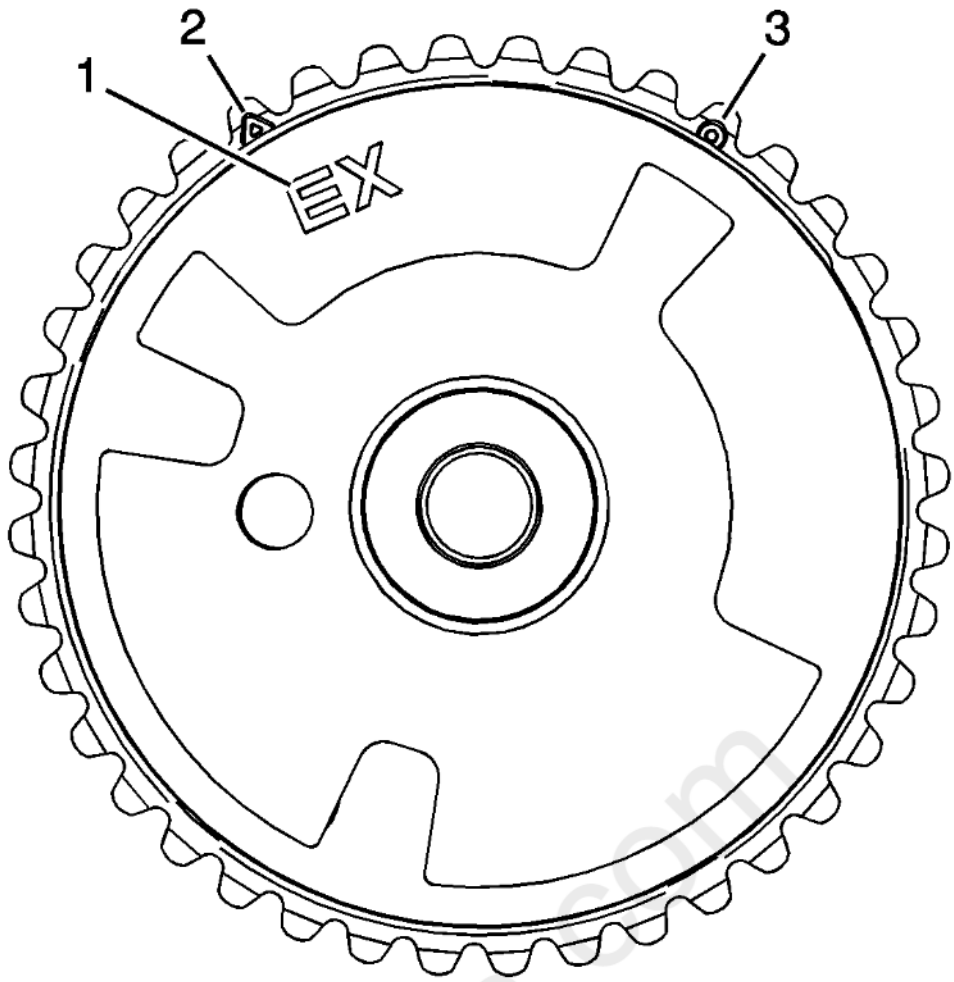

Fig. 496: View Of EX Marking, Triangle & Circle Marking
Courtesy of GENERAL MOTORS COMPANY

1. Ensure the proper camshaft position actuator is installed. Observe the body of the camshaft position actuator for the "EX" marking (1). The marking is for an exhaust camshaft position actuator.
2. Ensure the proper timing mark is used. Observe the outer ring of the camshaft position actuator for the triangle marking (2). The marking is for alignment to the highlighted timing chain link on the right side of the engine.

CAUTION: **Refer to Torque Reaction Against Timing Drive Chain Caution .**

3. Use an open wrench on the hex cast into the camshaft in order to prevent camshaft rotation when tightening the camshaft position actuator bolt.

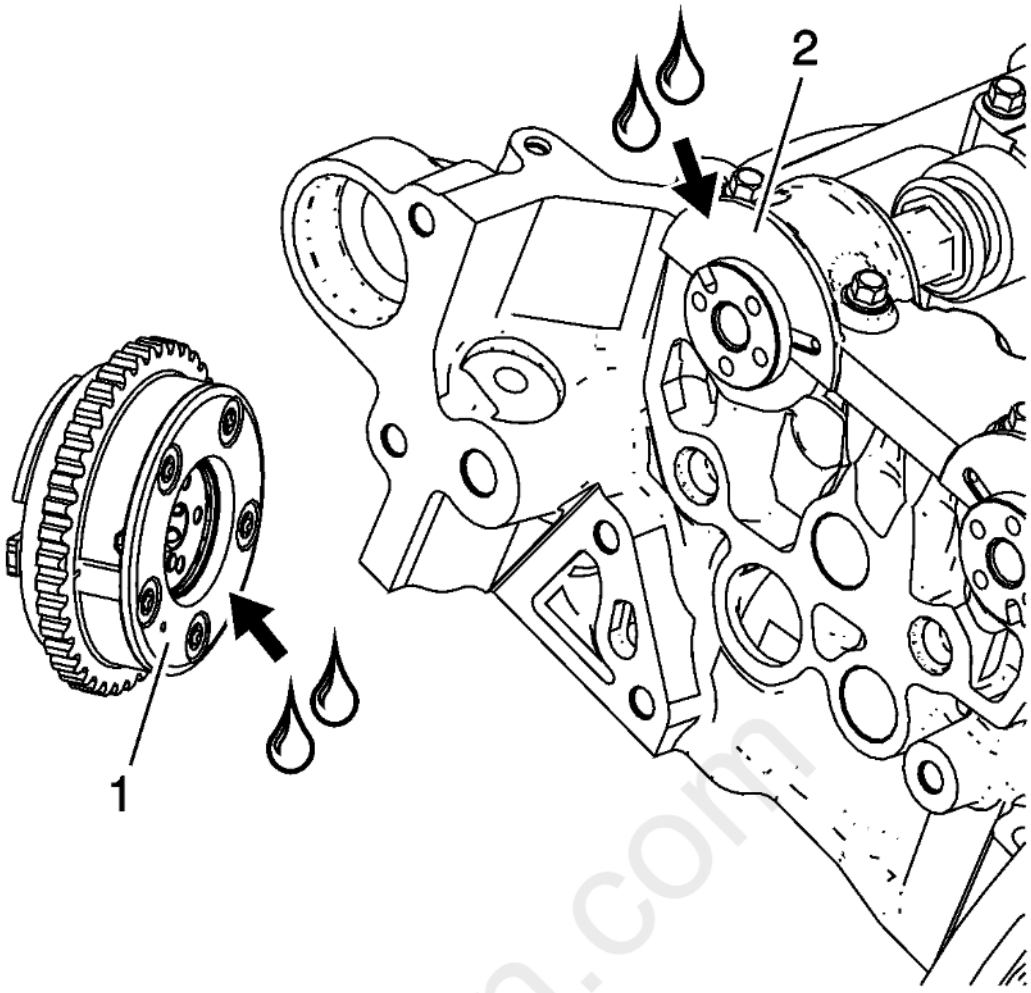

Fig. 497: Applying Lubricant To Back Of Camshaft Position Actuator And Front Of Camshaft Bearing Cap
Courtesy of GENERAL MOTORS COMPANY

4. Apply a liberal amount of lubricant to the back of the camshaft position actuator (1) and front of the camshaft bearing cap (2). Refer to **Adhesives, Fluids, Lubricants, and Sealers** for recommended lubricant.

cardiagn.com

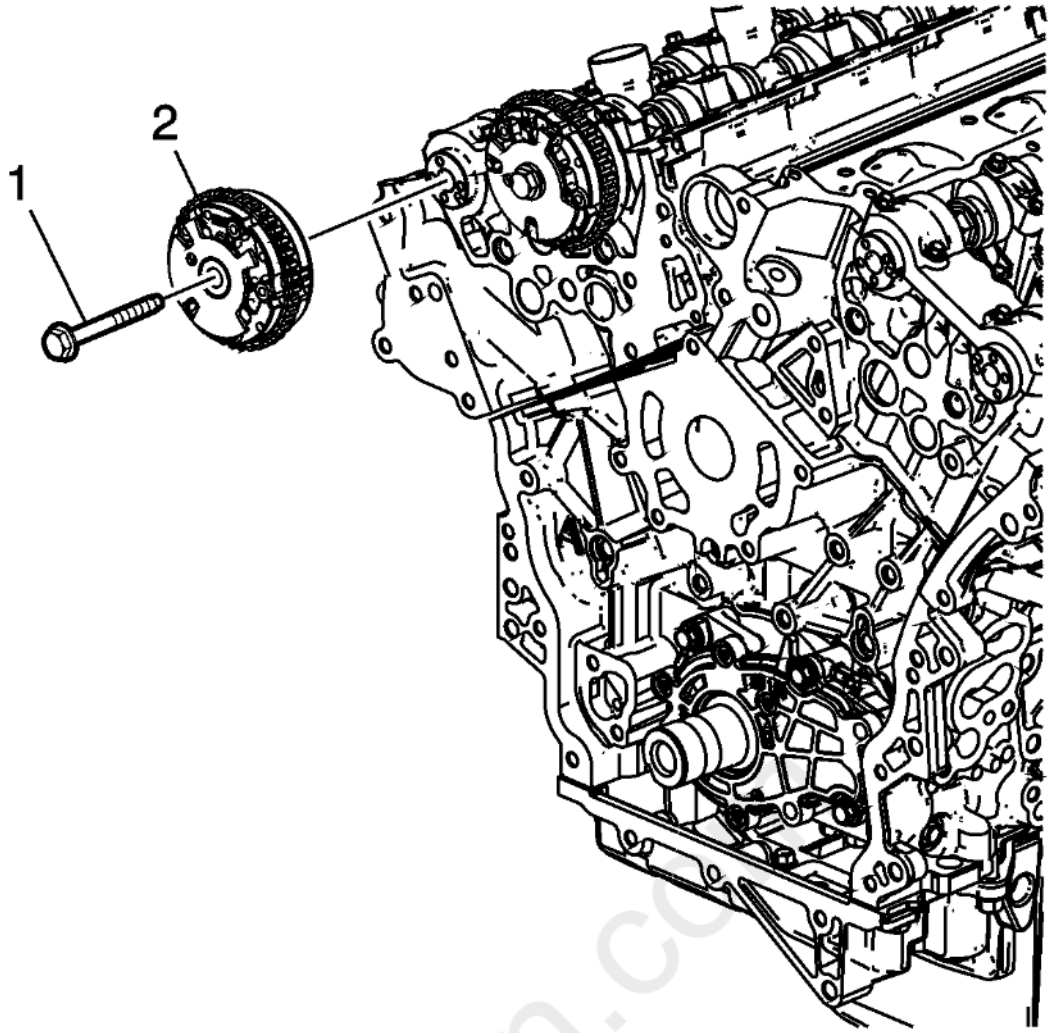

Fig. 498: Right Exhaust Camshaft Position Actuator
Courtesy of GENERAL MOTORS COMPANY

5. Install the right exhaust camshaft position actuator (2).

CAUTION: Refer to Fastener Caution .

6. Install the camshaft position actuator bolt (1) and tighten to 58 N.m (43 lb ft).

CAMSHAFT POSITION ACTUATOR INSTALLATION - LEFT SIDE INTAKE

cardiagn.com

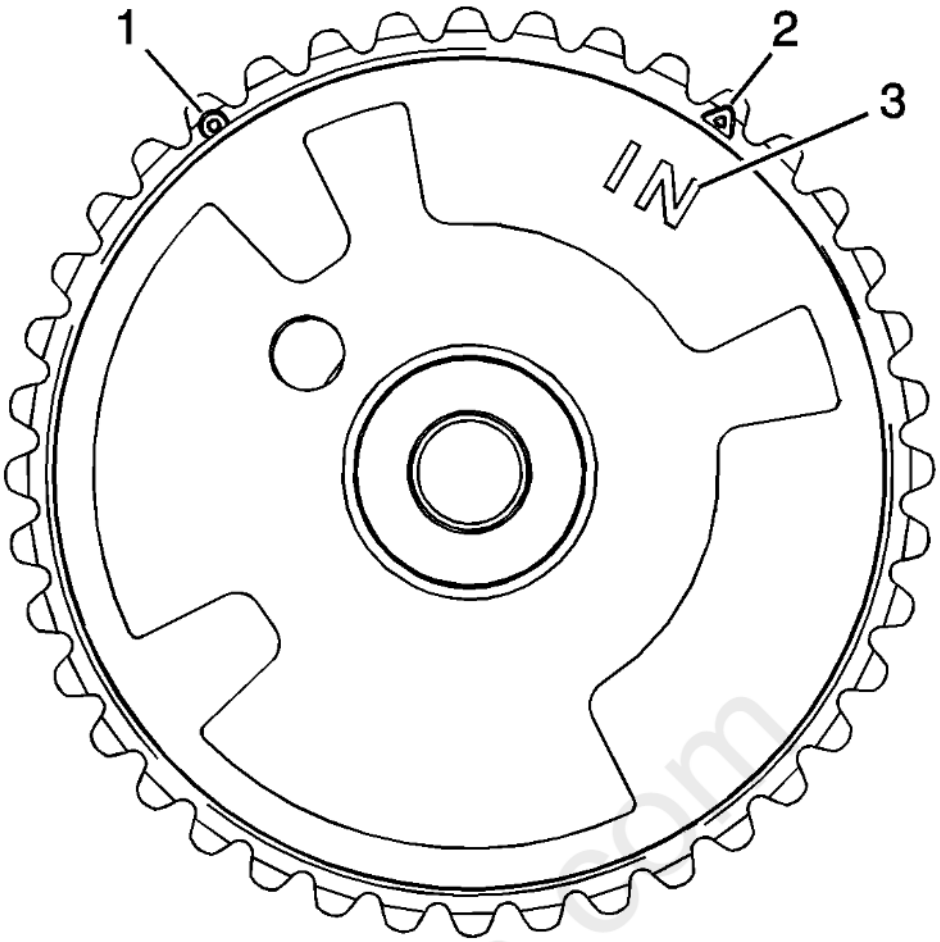

Fig. 499: Identifying Camshaft Position Actuator Marks
Courtesy of GENERAL MOTORS COMPANY

1. Ensure the proper camshaft position actuator is installed. Observe the body of the camshaft position actuator for the "IN" marking (3). The marking is for an intake camshaft position actuator.

carquest.com

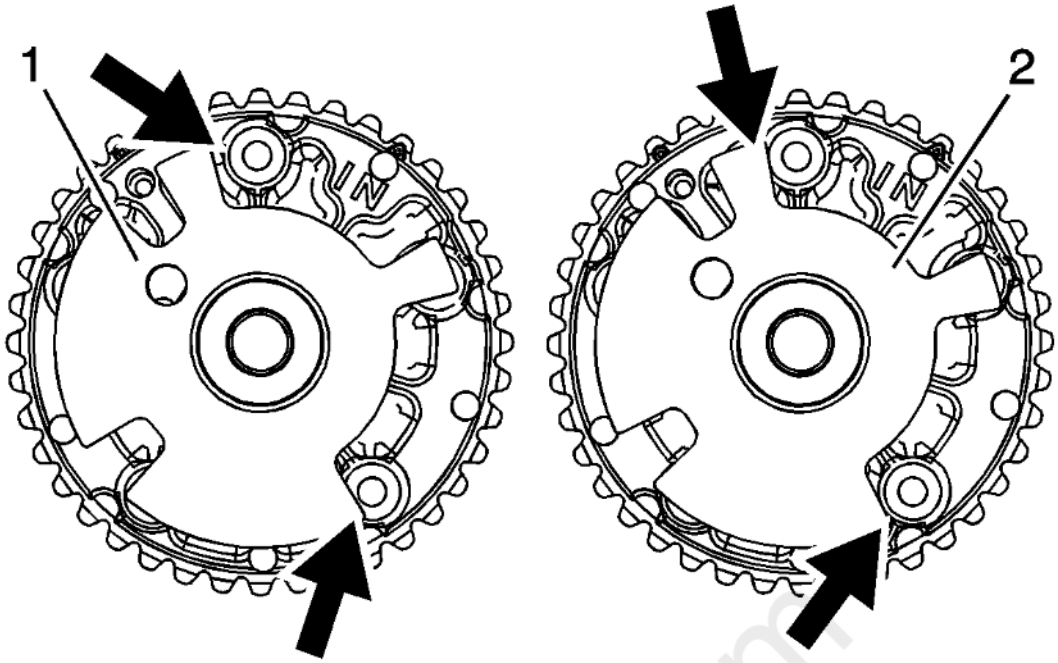

Fig. 500: View Of Right Intake Camshaft Position Actuator & Left Intake Camshaft Position Actuator
Courtesy of GENERAL MOTORS COMPANY

CAUTION: Ensure the proper camshaft position actuator is installed in the correct position. Failure to install the proper camshaft position actuator can effect engine performance and set an engine code.

2. Ensure the proper camshaft position actuator is being installed. The reluctor wheel on the right intake camshaft position actuator (1) is indexed in a different position compared to the left intake camshaft position actuator (2).

cardiagn.com

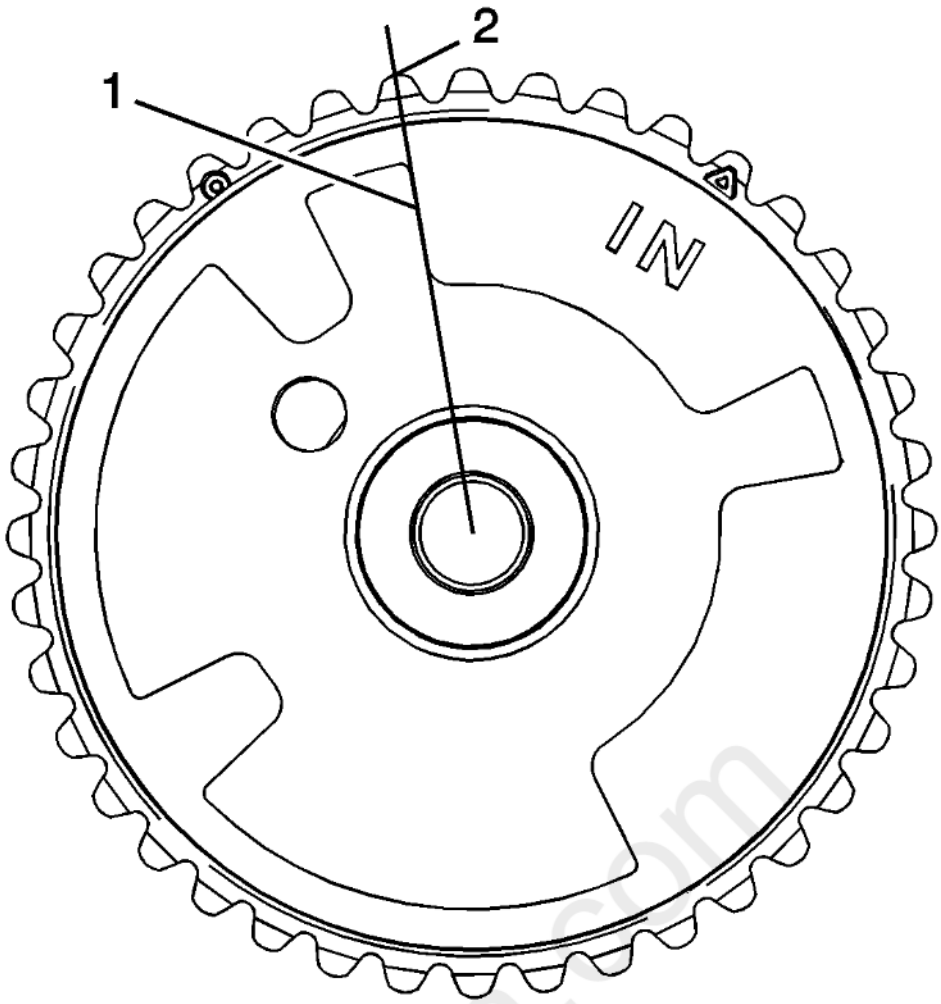

Fig. 501: View Of Reluctor Wheel Lines Up With Peak
Courtesy of GENERAL MOTORS COMPANY

3. On the left intake camshaft actuator the edge of the reluctor wheel (1) lines up with the peak (2) of the sprocket tooth.

cardiagn.com

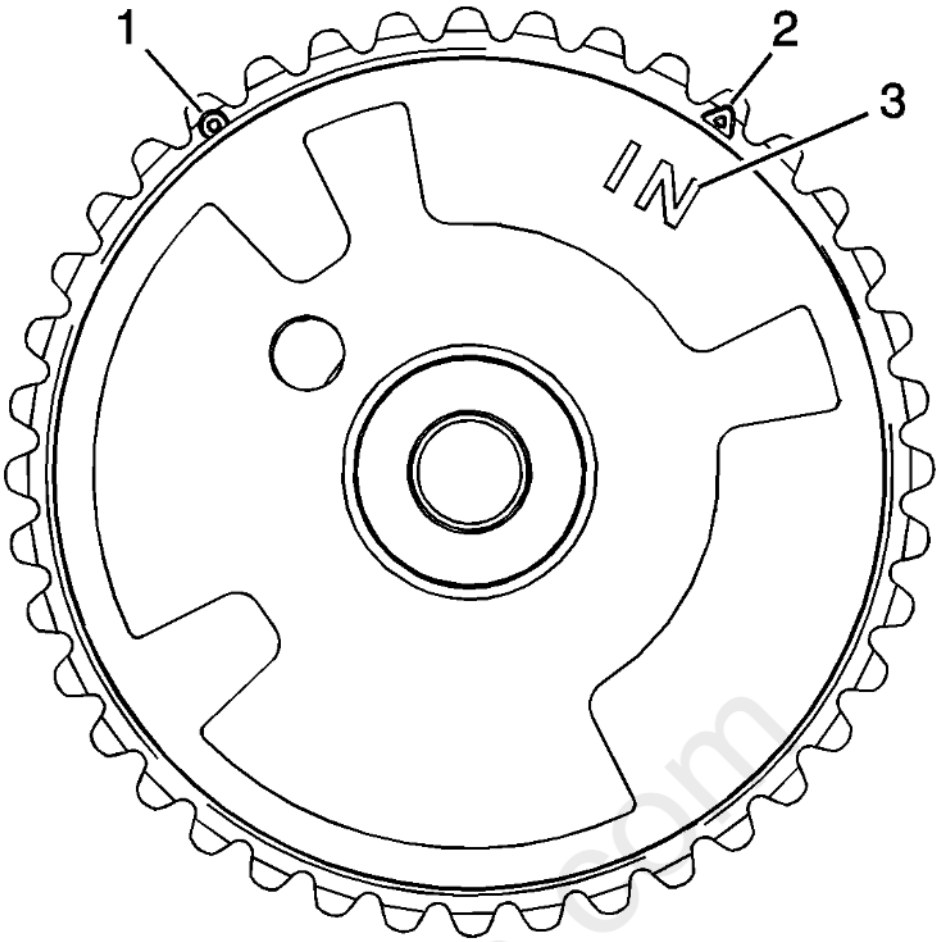

Fig. 502: Identifying Camshaft Position Actuator Marks
Courtesy of GENERAL MOTORS COMPANY

4. Ensure the proper timing mark is used. Observe the outer ring of the camshaft position actuator for the circle marking (1). The circle marking is for alignment to the highlighted timing chain link on the left side of the engine.

CAUTION: **Refer to Torque Reaction Against Timing Drive Chain Caution .**

5. Use an open wrench on the hex cast into the camshaft in order to prevent camshaft rotation when tightening the camshaft position actuator bolt.

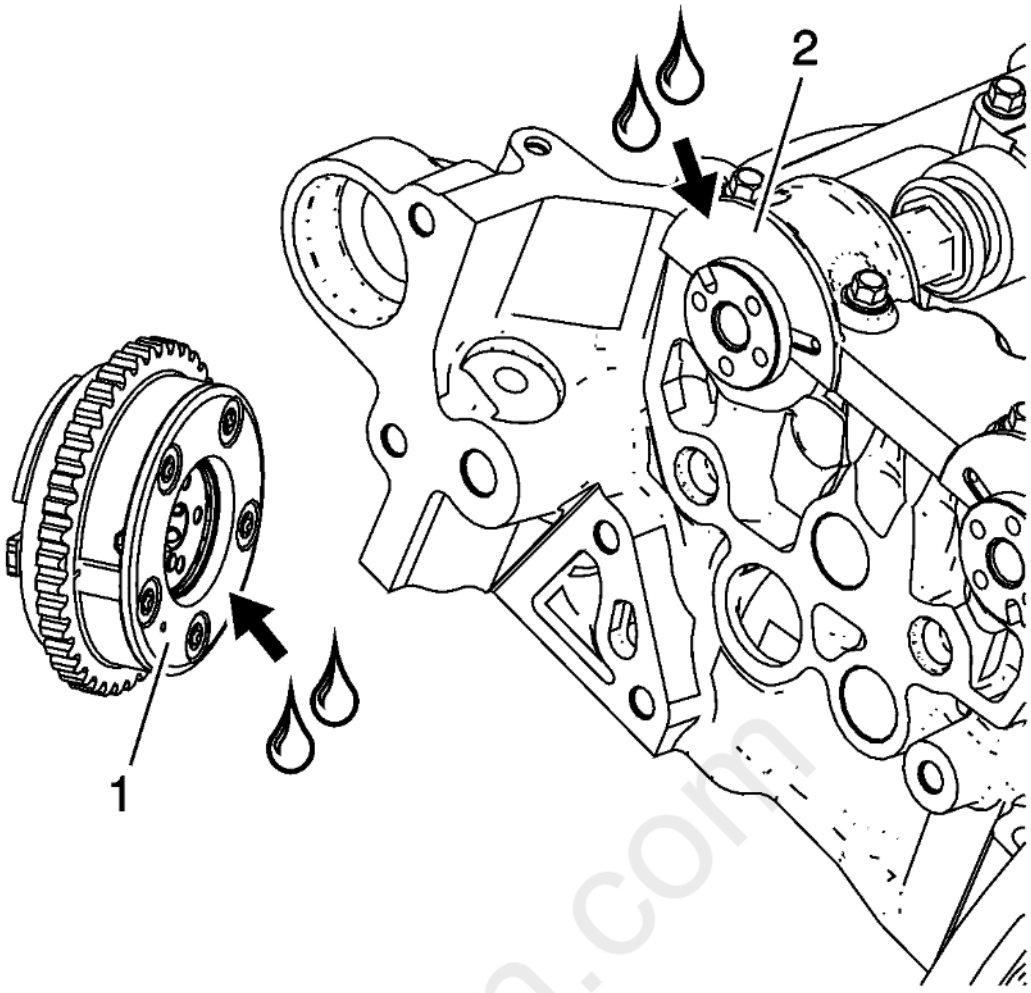

Fig. 503: Applying Lubricant To Back Of Camshaft Position Actuator And Front Of Camshaft Bearing Cap
Courtesy of GENERAL MOTORS COMPANY

6. Apply a liberal amount of lubricant to the back of the camshaft position actuator (1) and front of the camshaft bearing cap (2). Refer to **Adhesives, Fluids, Lubricants, and Sealers** for recommended lubricant.

cardiagn.com

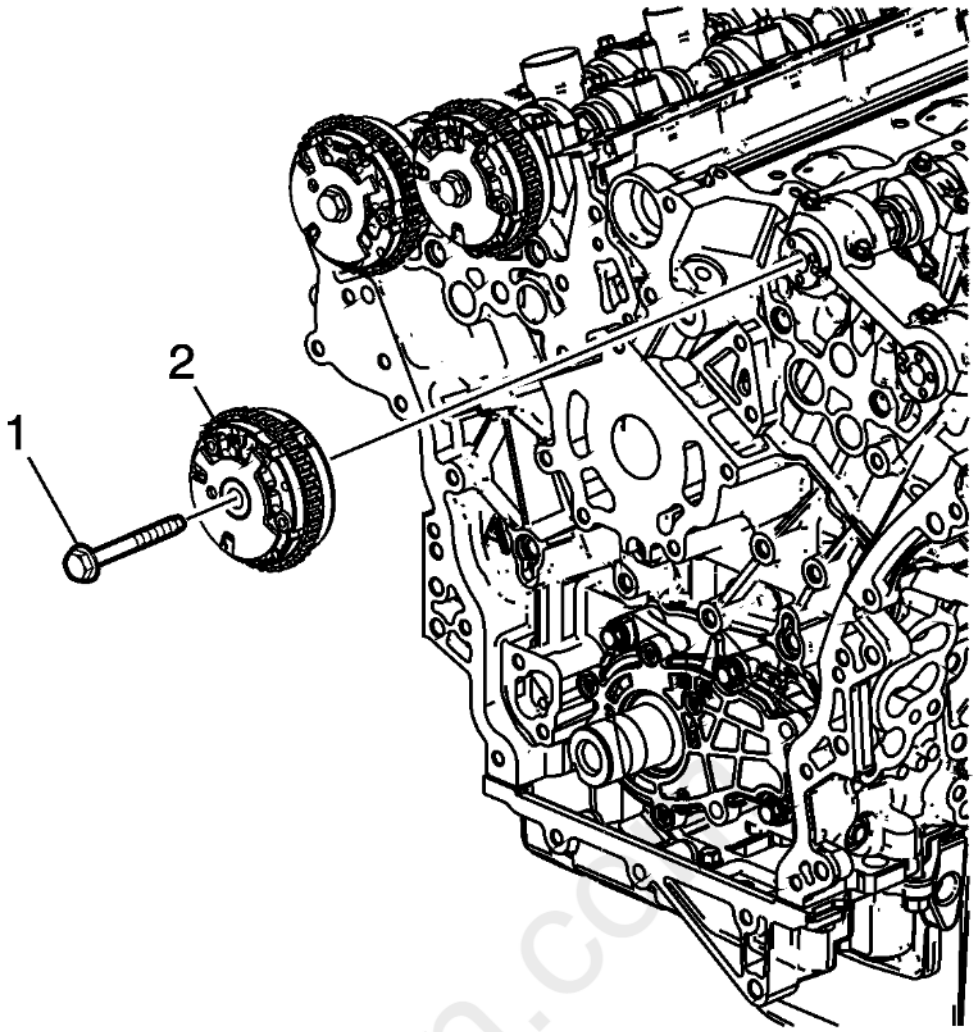

Fig. 504: Left Intake Camshaft Position Actuator
Courtesy of GENERAL MOTORS COMPANY

7. Install the left intake camshaft position actuator (2).

CAUTION: Refer to Fastener Caution .

8. Install the camshaft position actuator bolt (1) and tighten to 58 N.m (43 lb ft).

CAMSHAFT POSITION ACTUATOR INSTALLATION - LEFT SIDE EXHAUST

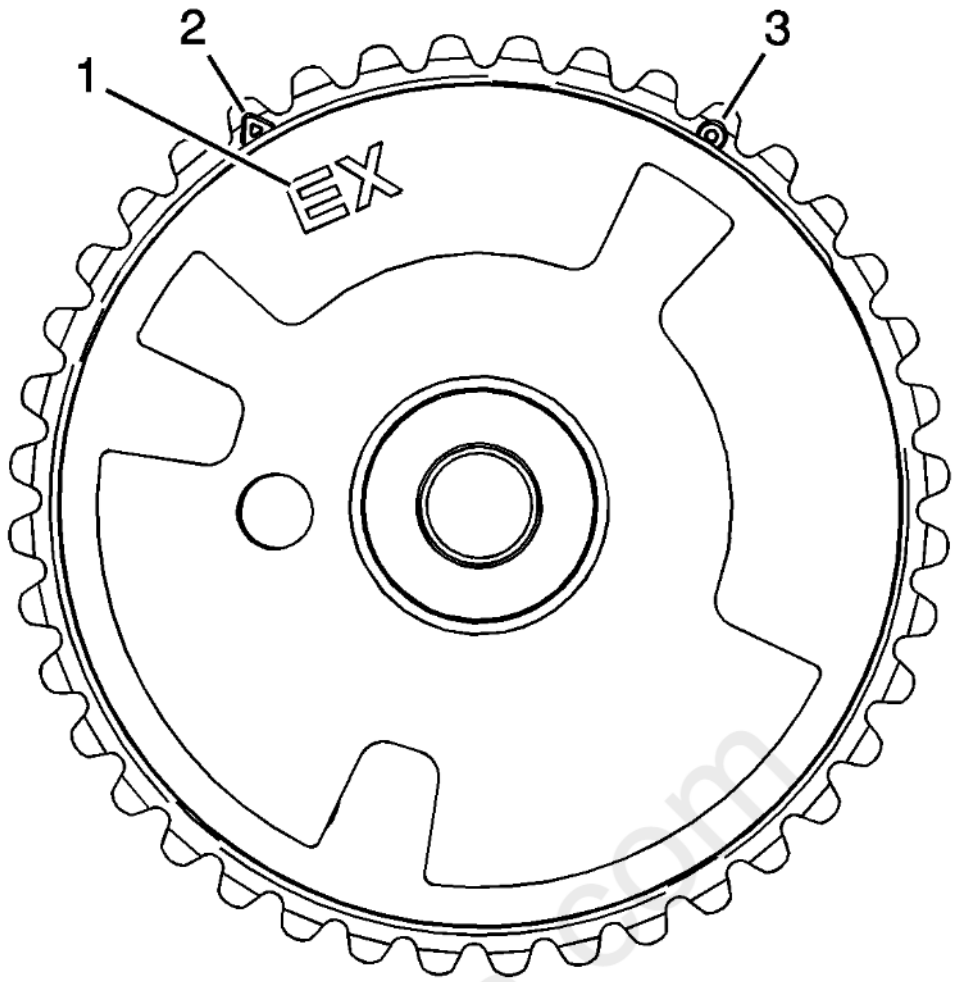

Fig. 505: View Of EX Marking, Triangle & Circle Marking
Courtesy of GENERAL MOTORS COMPANY

1. Ensure the proper camshaft position actuator is installed. Observe the body of the camshaft position actuator for the "EX" marking (1). The marking is for an exhaust camshaft position actuator.
2. Ensure the proper timing mark is used. Observe the outer ring of the camshaft position actuator for the circle marking (3). The marking is for alignment to the highlighted timing chain link on the left side of the engine.

CAUTION: **Refer to Torque Reaction Against Timing Drive Chain Caution .**

3. Use an open wrench on the hex cast into the camshaft in order to prevent camshaft rotation when tightening the camshaft position actuator bolt.

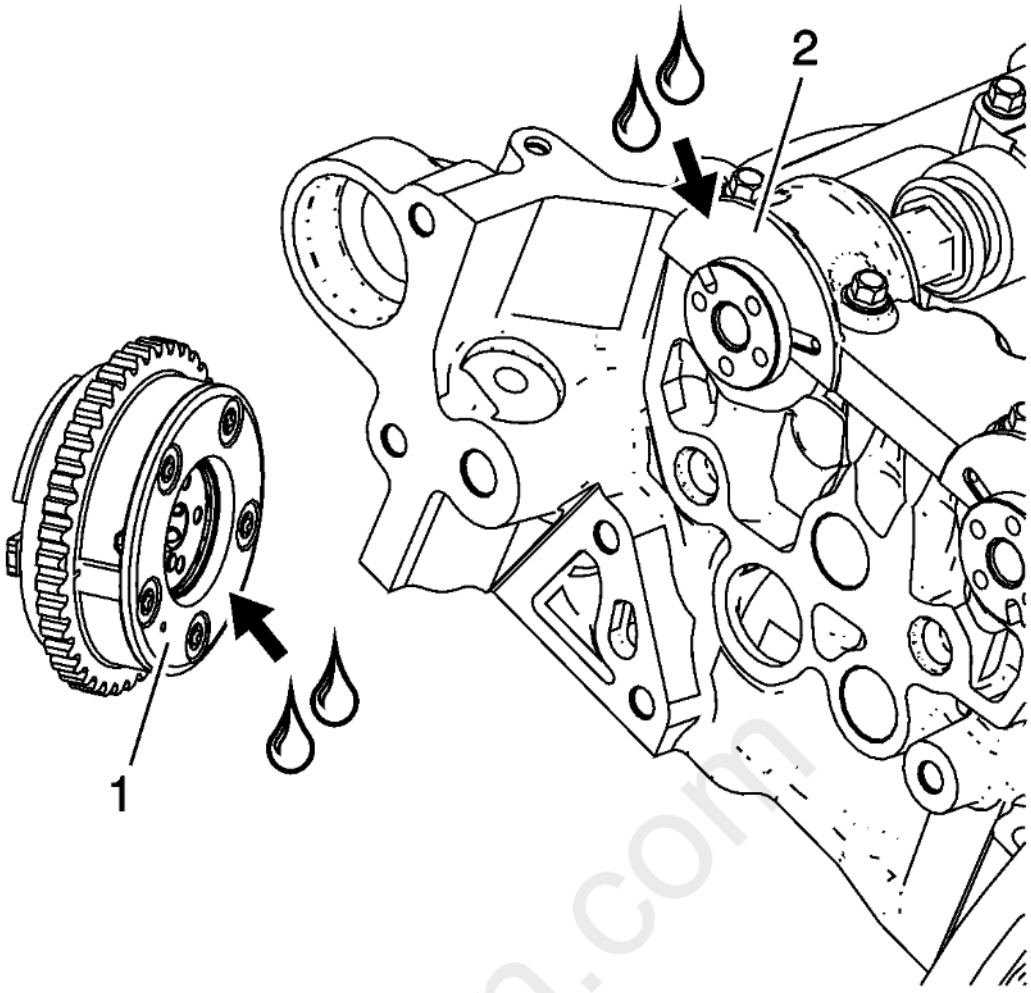

Fig. 506: Applying Lubricant To Back Of Camshaft Position Actuator And Front Of Camshaft Bearing Cap
Courtesy of GENERAL MOTORS COMPANY

4. Apply a liberal amount of lubricant to the back of the camshaft position actuator (1) and front of the camshaft bearing cap (2). Refer to **Adhesives, Fluids, Lubricants, and Sealers** for recommended lubricant.

cardiagn.com

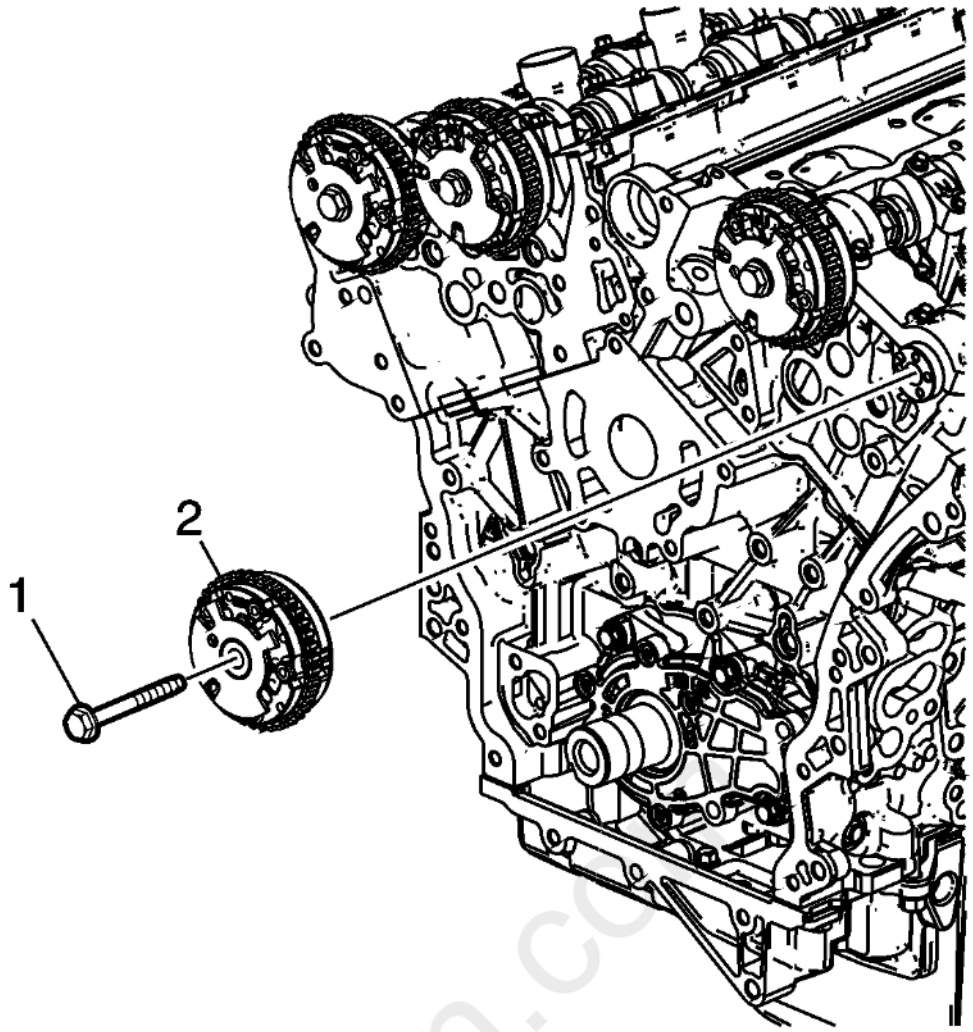

Fig. 507: Left Exhaust Camshaft Position Actuator
Courtesy of GENERAL MOTORS COMPANY

5. Install the left exhaust camshaft position actuator (2).

CAUTION: Refer to Fastener Caution .

6. Install the camshaft position actuator bolt (1) and tighten to 58 N.m (43 lb ft).

CRANKSHAFT SPROCKET INSTALLATION

cardiagn.com

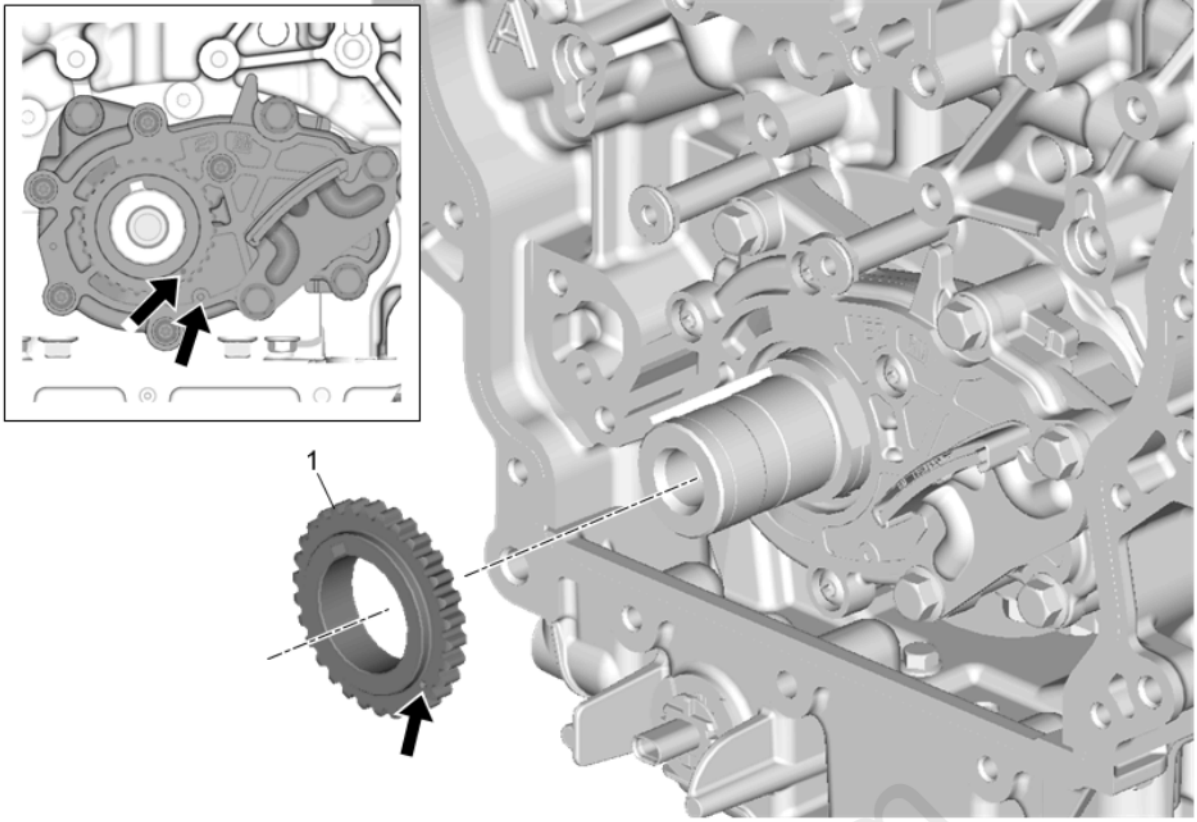

Fig. 508: Crankshaft Sprocket
Courtesy of GENERAL MOTORS COMPANY

Callout	Component Name
1	Crankshaft Sprocket **Procedure** 1. Ensure the crankshaft sprocket is installed with the timing mark visible. 2. Install the crankshaft sprocket onto the nose of the crankshaft. 3. Align the notch in the crankshaft sprocket with the pin in the crankshaft. 4. Slide the crankshaft sprocket on the crankshaft nose until the crankshaft sprocket contacts the step in the crankshaft. 5. Ensure the crankshaft is in the stage one timing position with the crankshaft sprocket timing mark aligned to the stage one timing mark on the oil pump cover using the **EN-48589** socket. Refer to: **Timing Chain Alignment Diagram** **Special Tools** **EN-48589** Crankshaft Rotation Socket Equivalent regional tools:**Special Tools**

TIMING CHAIN IDLER SPROCKET INSTALLATION - LEFT SIDE

carlagn.com

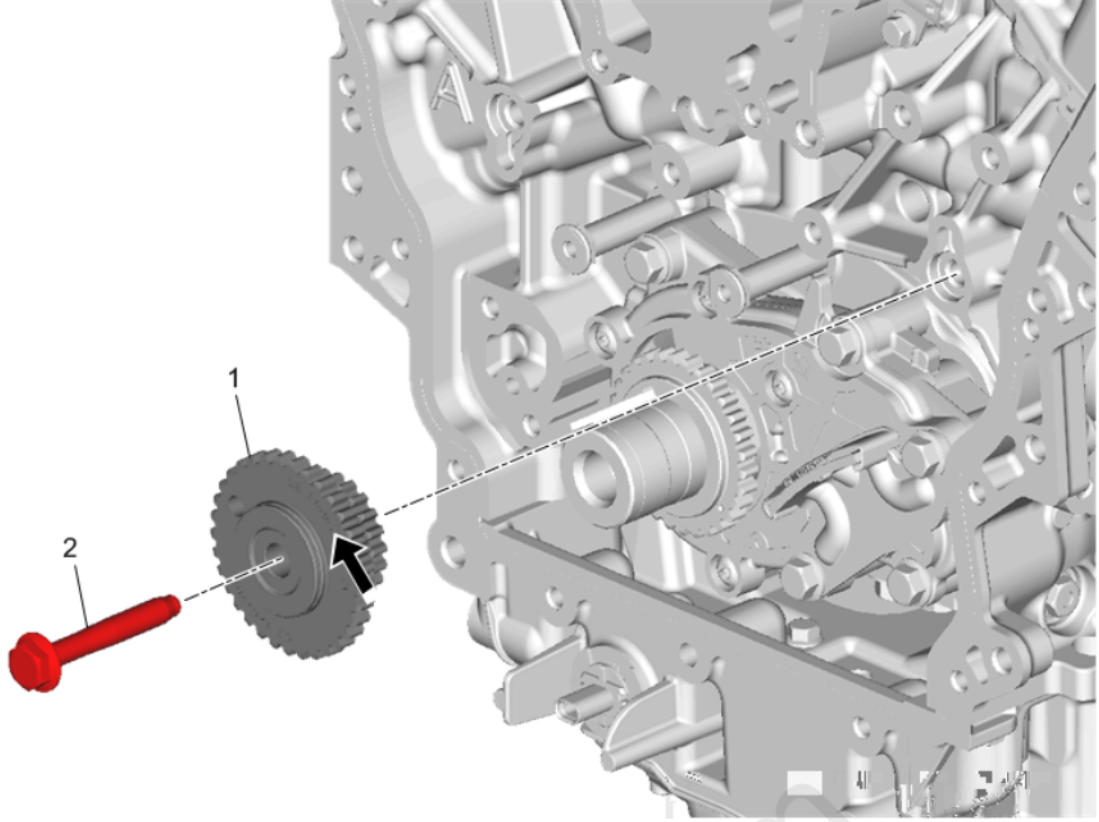

Fig. 509: Timing Chain Idler Sprocket - Left Side
Courtesy of GENERAL MOTORS COMPANY

Callout	Component Name
1	Left SideTiming Chain Idler Sprocket **Procedure** 1. Ensure that the left timing chain idler sprocket is being installed. The recessed hub and the larger sprocket of the left timing chain idler sprocket is installed outward. 2. Place the left camshaft intermediate drive chain idler to the cylinder block.
2	Timing Chain Idler Sprocket Shaft Bolt **CAUTION:** **Refer to Fastener Caution .** **Tighten** 58 N.m (43 lb ft)

CAMSHAFT TIMING CHAIN COMPONENTS INSTALLATION

Secondary Camshaft Intermediate Drive Chain Installation - Left Side - Step 1

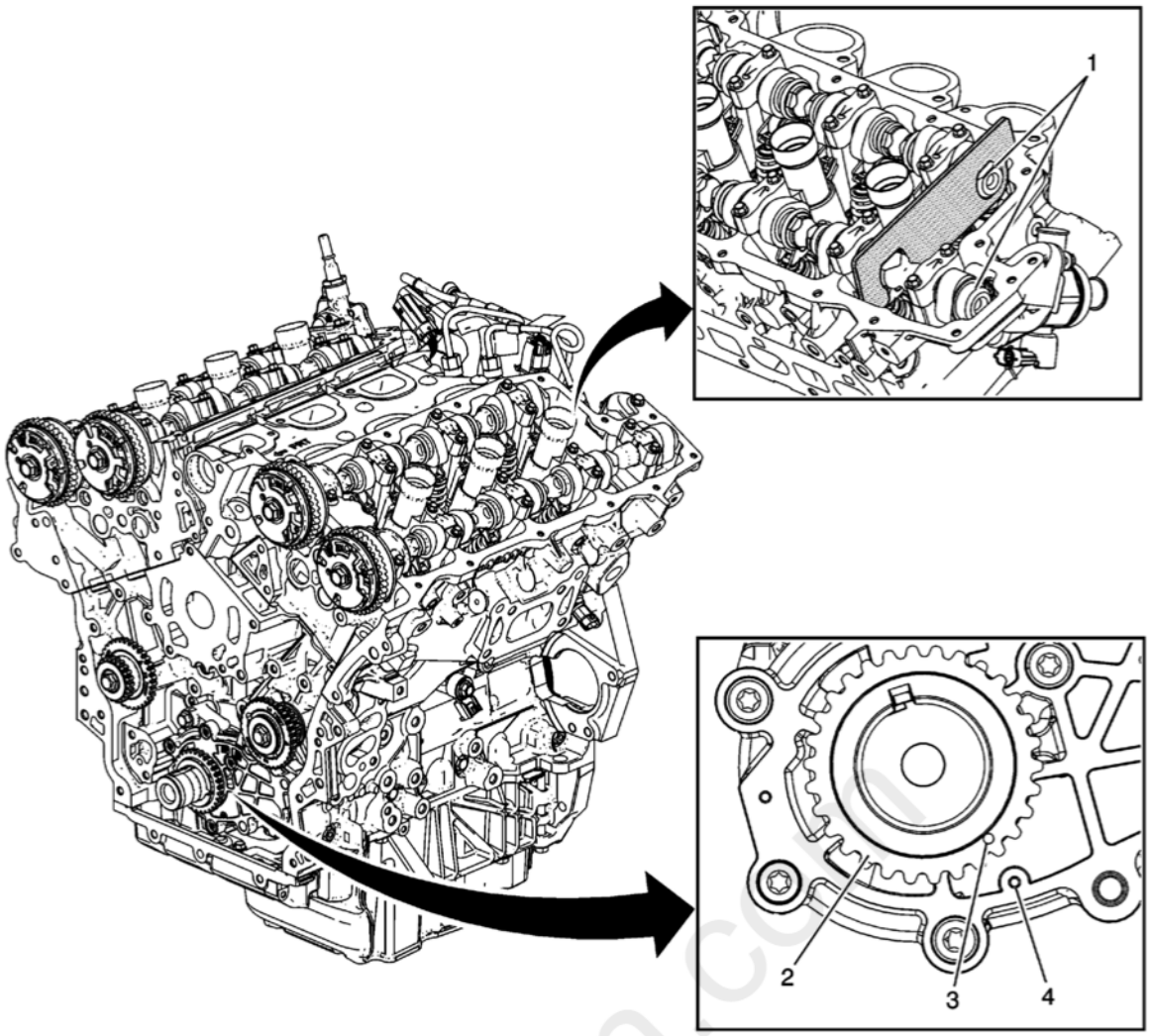

Fig. 510: Secondary Camshaft Intermediate Drive Chain Components - Left Side - Step 1
Courtesy of GENERAL MOTORS COMPANY

Secondary Camshaft Intermediate Drive Chain Installation - Left Side - Step 1

Callout	Component Name
NOTE: If you are performing this procedure for the first time, it is recommended that you view video 56510.12V from the common training website before beginning (U.S. Dealers Only). To search for the video number, click on the catalog icon on the home page. Canadian dealers should view Tech Assist video 16038.01W on the LMS website and a related video on GM Global Connect (Library-Service>Technician Review>TAC Talk Video Help). Seewww.centerlearning.com for more information.	

Callout	Component Name
1	Left Intake and Exhaust Camshaft **Procedure** **NOTE:** • **There should be no need to rotate the camshaft more than 10 degrees. Using the hex cast into the camshaft rotate the camshaft in order to install the EN-48383 retaining tools.** • **All camshafts must be locked in place before installation of any camshaft drive chains.** 1. Install the **EN-48383 - 1** retaining tool onto the rear of the left camshafts. 2. Ensure the **EN-48383 - 1** retaining tool is fully seated onto the camshafts. **Special Tools** **EN-48383** Camshaft Retaining Tools For equivalent regional tools, refer to **Special Tools** .
2	Crankshaft Sprocket **NOTE:** **Ensure the crankshaft is in the stage one timing position with the crankshaft sprocket timing mark (3) aligned to the stage one timing mark on the oil pump cover (4) using the EN-48589 socket. Refer to Timing Chain Alignment Diagram .** **Special Tools** **EN-48589** Crankshaft Rotation Socket For equivalent regional tools, refer to **Special Tools** .
3	Crankshaft Sprocket Timing Mark
4	Stage One Timing Mark On The Oil Pump Cover

Secondary Camshaft Intermediate Drive Chain Installation - Left Side - Step 2

cardiagn.com

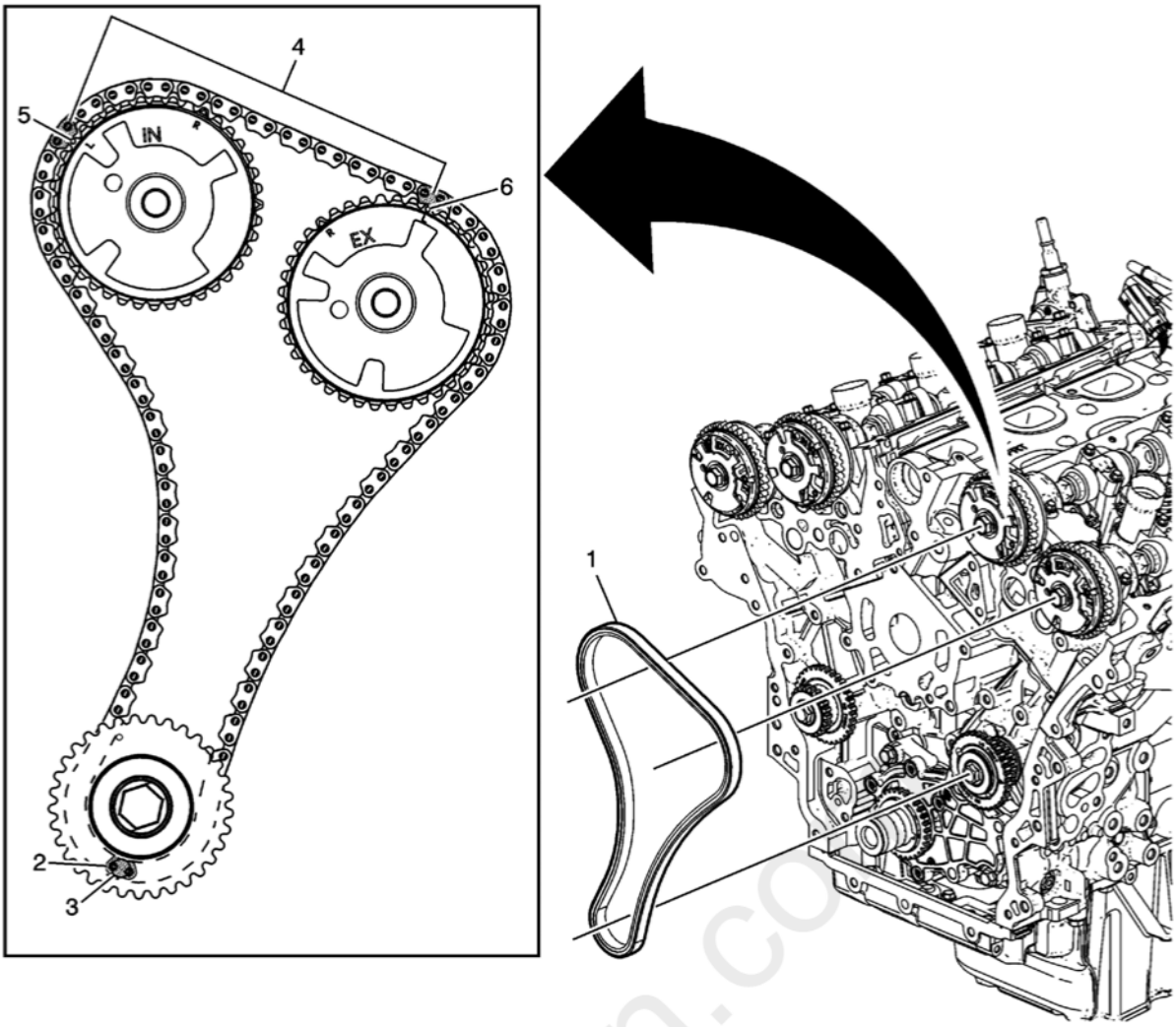

Fig. 511: Secondary Camshaft Intermediate Drive Chain Components - Left Side - Step 2
Courtesy of GENERAL MOTORS COMPANY

Secondary Camshaft Intermediate Drive Chain Installation - Left Side - Step 2

Callout	Component Name
NOTE: Ensure that the left (L) camshaft position actuator sprocket alignment circle marks are used during this step.	

Callout	Component Name
1	Secondary Camshaft Intermediate Drive Chain **Procedure** **NOTE:** **Once the lower timing link is aligned, it may be helpful to hold the drive chain in position using a small flat blade screwdriver through the idler sprocket alignment access hole.** 1. Place the left secondary camshaft drive chain around the inner sprocket of the left camshaft intermediate drive chain idler with the camshaft drive chain timing link (2) aligned to the alignment access hole (3) in the left camshaft intermediate drive chain idler outer sprocket. 2. Wrap the secondary camshaft drive chain around both left (L) actuator drive sprockets. 3. Align the left (L) intake camshaft position actuator sprocket alignment circle mark (5) with the camshaft drive chain timing link. 4. Align the left (L) exhaust camshaft position actuator sprocket alignment circle mark (6) with the camshaft drive chain timing link. 5. Once aligned, ensure there are 10 chain links (4) between timing marks for the left (L) camshaft position actuator sprockets.
2	Timing Camshaft Drive Chain
3	Alignment Access Hole
4	10 Chain Links Between Timing Marks for the Left (L) Camshaft Position Actuator Sprockets
5	Left (L) Intake Camshaft Position Actuator Sprocket Alignment Circle Mark
6	Left (L) Exhaust Camshaft Position Actuator Sprocket Alignment Circle Mark

Secondary Camshaft Drive Chain Guide and Shoe Installation - Left

cardiagn.com

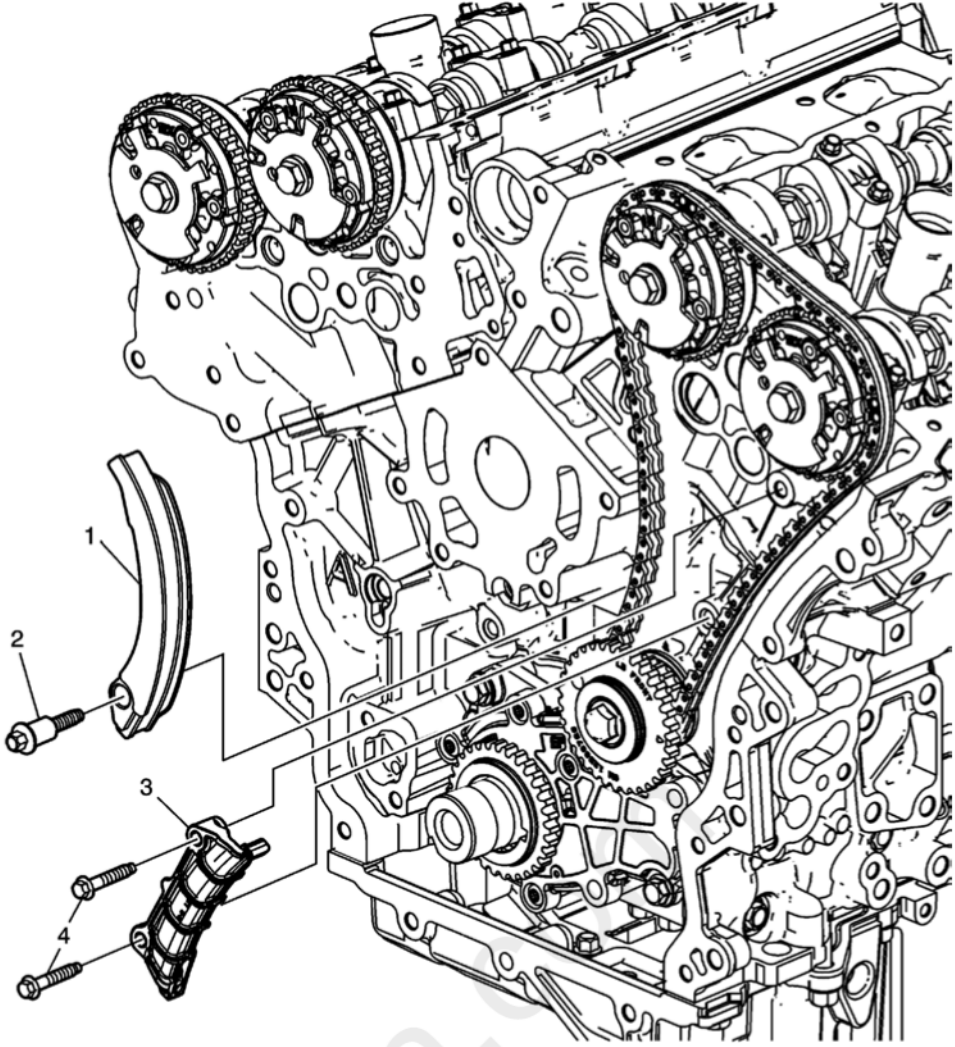

Fig. 512: Secondary Camshaft Drive Chain Guide And Shoe - Left
Courtesy of GENERAL MOTORS COMPANY

Secondary Camshaft Drive Chain Guide and Shoe Installation - Left

Callout	Component Name
1	Left Pivot Arm Timing Chain Guide
2	Left Pivot Arm Timing Chain Guide Bolt **CAUTION:** **Refer to Fastener Caution .** **Tighten** 25 N.m (18 lb ft)
3	Left Secondary Timing Chain Guide
4	Left Secondary Timing Chain Guide Bolt **Tighten** 25 N.m (18 lb ft)

Secondary Camshaft Drive Chain Tensioner Installation - Left Side

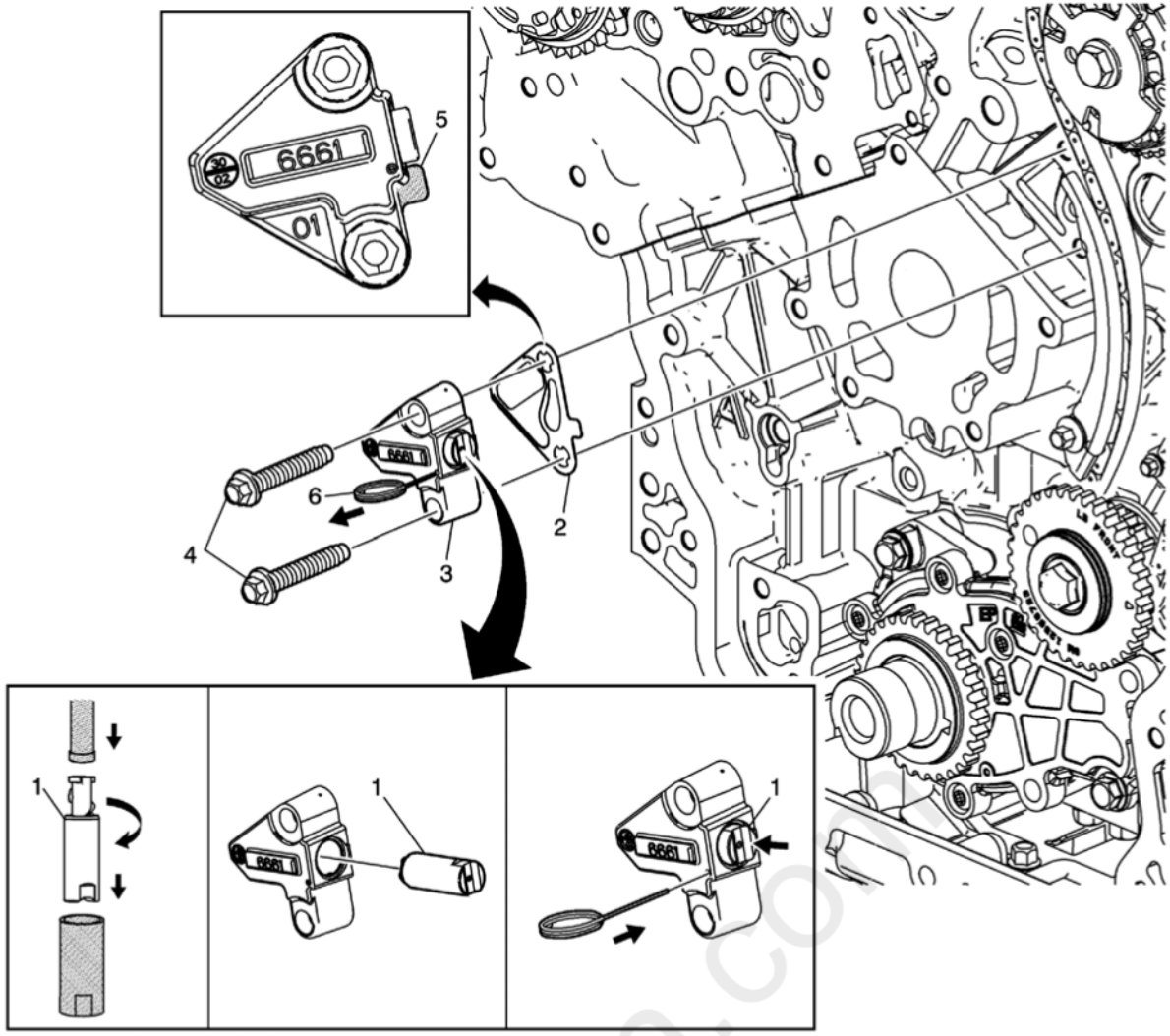

Fig. 513: Secondary Camshaft Drive Chain Tensioner And Components - Left Side
Courtesy of GENERAL MOTORS COMPANY

Secondary Camshaft Drive Chain Tensioner Installation - Left Side

Callout	Component Name
1	Left Secondary Timing Chain Tensioner Plunger. **Procedure** 1. Reset the left secondary camshaft drive chain tensioner plunger using **EN - 45027** tensioner tool. 2. Install left secondary camshaft drive chain tensioner plunger into body. 3. Compress the plunger into the body and lock the left secondary camshaft drive chain tensioner by inserting the **EN-46112** tensioner retraction pins into the access hole in the side of the left secondary camshaft drive chain tensioner body. 4. Slowly release pressure on the left secondary camshaft drive chain tensioner. The left secondary camshaft drive chain tensioner should remain compressed. **Special Tools** • **EN-45027** Tensioner Tool • **EN-46112** Tensioner Retraction Pins For equivalent regional tools, refer to **Special Tools** .

Callout	Component Name
2	Left Timing Chain Housing Gasket **NOTE:** **Ensure the left secondary camshaft drive chain tensioner mounting surface on the left cylinder head does not have any burrs or defects that would degrade the sealing of the NEW left secondary camshaft drive chain tensioner gasket.**
3	Left Secondary Timing Chain Tensioner
4	Left Secondary Timing Chain Tensioner Bolt **Procedure** 1. Place the chain tensioner into position and loosely install the bolts to the block. 2. Verify the proper placement of the drive chain tensioner gasket tab (5). 3. Tighten the drive chain tensioner bolts in two passes. 4. Verify the timing marks are in the correct position before releasing the drive chain tensioner. 5. Release the drive chain tensioner by pulling out the **EN - 46112** tensioner retraction pins pin (6) and unlocking the tensioner plunger. 6. Verify the left secondary camshaft drive chain timing mark alignments by referring to **Timing Chain Alignment Diagram** - Stage One. **Tighten** • First Pass 5 N.m (44 lb in) • Second Pass 25 N.m (18 lb ft)
5	Left Timing Chain Housing Gasket Tab
6	**EN - 46112** Pin

Primary Camshaft Intermediate Drive Chain Installation

cardiagn.com

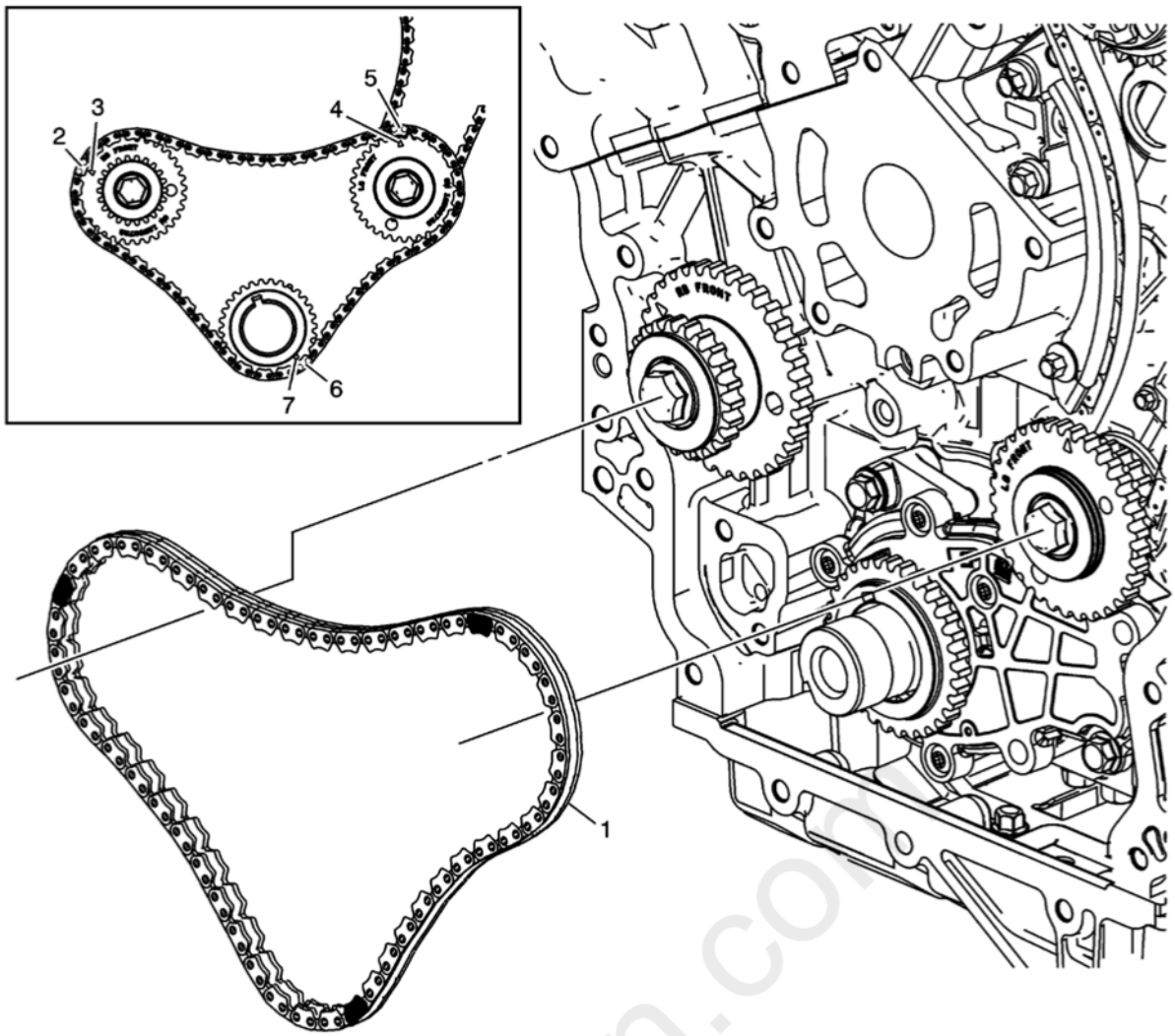

Fig. 514: Primary Camshaft Intermediate Drive Chain Components
Courtesy of GENERAL MOTORS COMPANY

Primary Camshaft Intermediate Drive Chain Installation

Callout	Component Name
1	Primary Camshaft Drive Intermediate Chain **Procedure** 1. Wrap the primary camshaft drive chain around the large sprockets of each camshaft intermediate drive chain idler and the crankshaft sprocket. 2. The left camshaft intermediate drive chain idler timing mark (2) will align with camshaft drive chain timing link (3). 3. The right camshaft intermediate drive chain idler timing mark (4) will align with camshaft drive chain timing link (5). 4. The crankshaft sprocket timing mark (7) will align with camshaft drive chain timing link (6).
2	Left Camshaft Intermediate Drive Chain Idler Timing Mark
3	Camshaft Drive Chain Timing Link
4	Right Camshaft Intermediate Drive Chain Idler Timing Mark
5	Camshaft Drive Chain Timing Link
6	Camshaft Drive Chain Timing Link
7	Crankshaft Sprocket Timing Mark

Primary Timing Chain Guide Installation - Lower and Upper

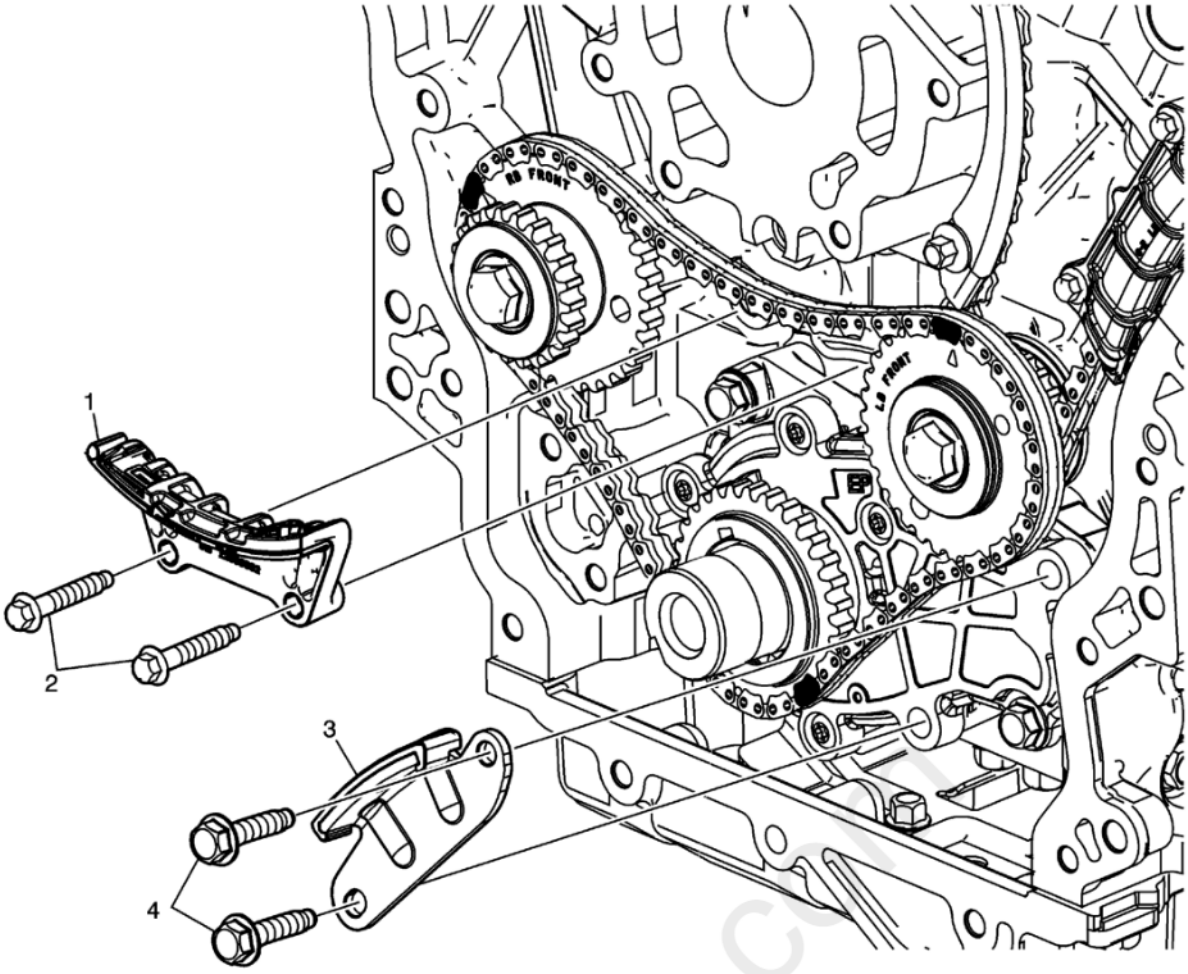

Fig. 515: Primary Timing Chain Guide & Bolts - Lower and Upper
Courtesy of GENERAL MOTORS COMPANY

Primary Timing Chain Guide Installation - Lower and Upper

Callout	Component Name
1	Upper Primary Timing Chain Guide
2	Upper Primary Timing Chain Guide Bolt **Tighten** 25 N.m (18 lb ft)
3	Lower Primary Timing Chain Guide
4	Lower Primary Timing Chain Guide Bolt **Tighten** 25 N.m (18 lb ft)

Primary Camshaft Intermediate Drive Chain Tensioner Installation

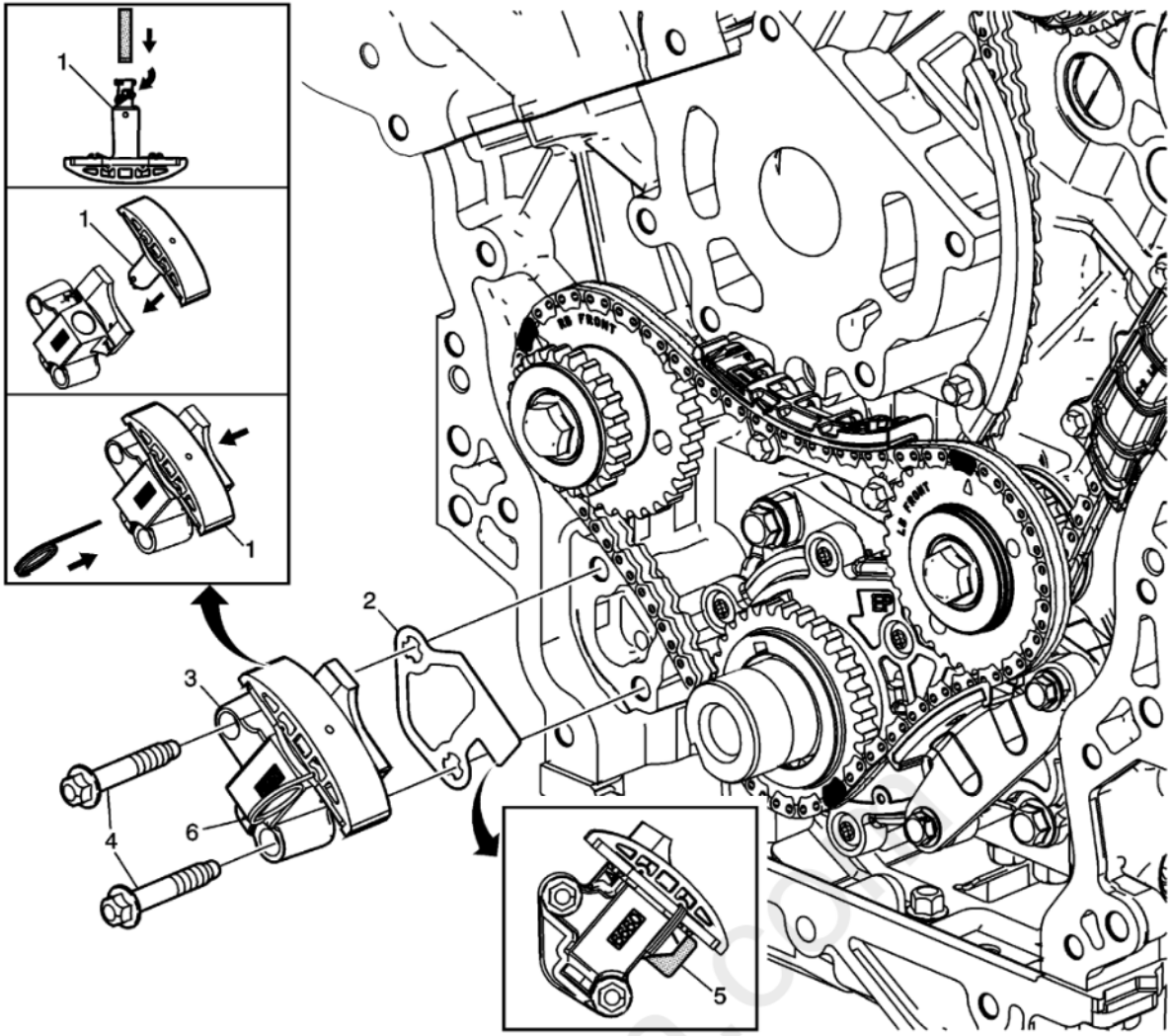

Fig. 516: Primary Camshaft Intermediate Drive Chain Tensioner & Components
Courtesy of GENERAL MOTORS COMPANY

Primary Camshaft Intermediate Drive Chain Tensioner Installation

Callout	Component Name
1	Camshaft Intermediate Drive Chain Tensioner Plunger. **Procedure** 1. Reset the primary camshaft drive chain tensioner plunger using **EN - 45027** tensioner tool. 2. Install primary camshaft drive chain tensioner plunger into body. 3. Compress the plunger into the body and lock the primary camshaft drive chain tensioner by inserting the **EN-46112** tensioner retraction pins into the access hole in the side of the primary camshaft drive chain tensioner body. 4. Slowly release pressure on the primary camshaft drive chain tensioner. The primary camshaft drive chain tensioner should remain compressed. **Special Tools** • **EN-45027** Tensioner Tool • **EN - 46112** Tensioner Retraction Pins For equivalent regional tools, refer to **Special Tools** .

Callout	Component Name
2	Timing Chain Housing Gasket **NOTE:** **Ensure the primary camshaft drive chain tensioner mounting surface on the engine block does not have any burrs or defects that would degrade the sealing of the NEW primary camshaft drive chain tensioner gasket.**
3	Camshaft Intermediate Drive Chain Tensioner
4	Camshaft Intermediate Drive Chain Tensioner Bolt **Procedure** 1. Place the drive chain tensioner into position and loosely install the bolts to the block. 2. Verify the proper placement of the drive chain tensioner gasket tab (5). 3. Tighten the drive chain tensioner bolts in two passes. 4. Verify the timing marks are in the correct position before releasing the drive chain tensioner. 5. Release the drive chain tensioner by pulling out the **EN - 46112** pin (6) and unlocking the tensioner plunger. 6. Verify the primary and left secondary camshaft drive chain timing mark alignments by referring to **Timing Chain Alignment Diagram** - Stage One. **Tighten** • First Pass 5 N.m (44 lb in) • Second Pass 25 N.m (18 lb ft)
5	Timing Chain Housing Gasket Tab
6	**EN - 46112** Pin

Stage 1 Alignment Position to the Stage 2 Alignment Position

cardiagn.com

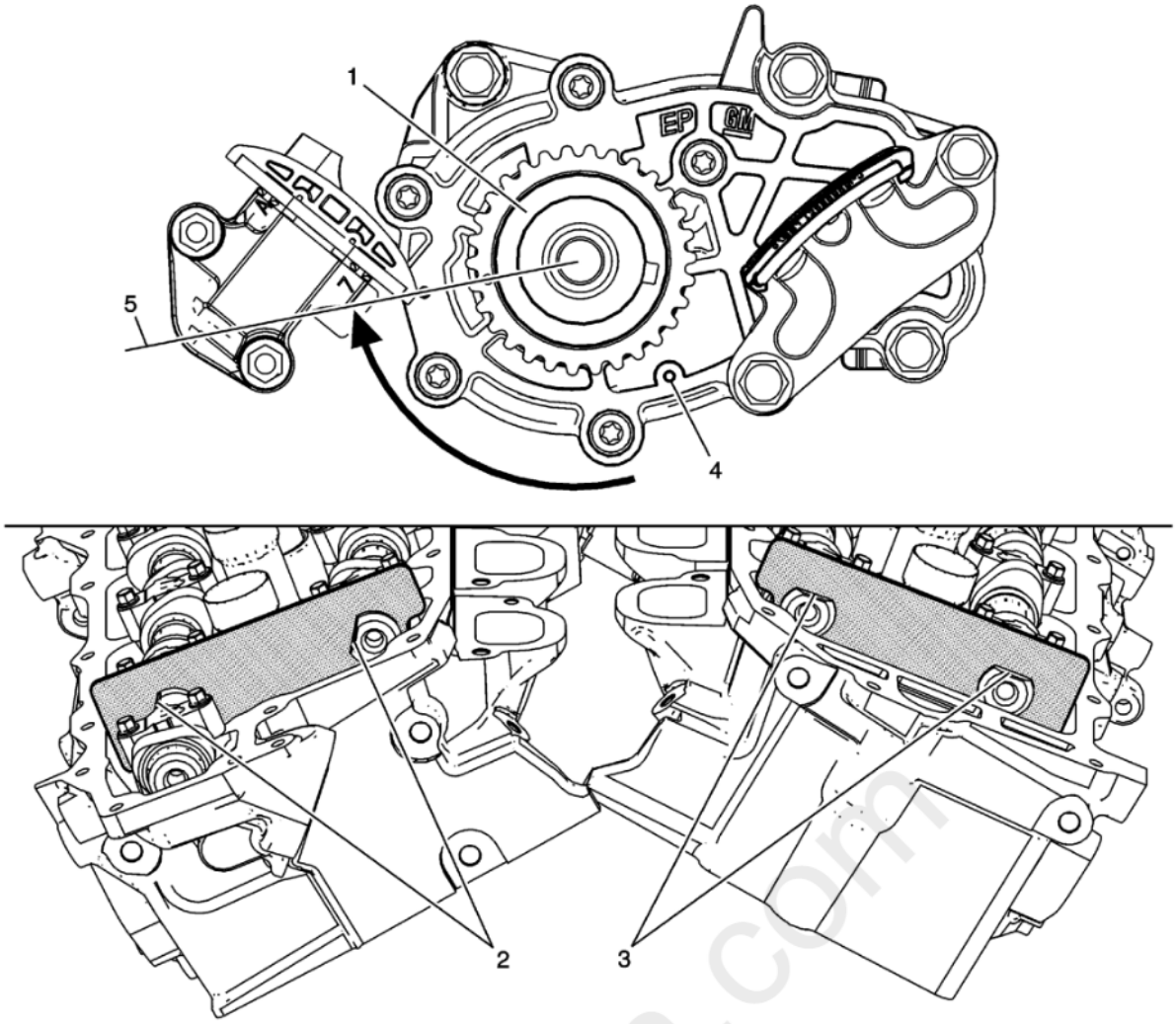

Fig. 517: Crankshaft Sprocket, Camshafts & Alignment Positions
Courtesy of GENERAL MOTORS COMPANY

Stage 1 Alignment Position to the Stage 2 Alignment Position

Callout	Component Name
Preliminary Procedure Remove the EN 48383-1 from the rear of the left camshafts.	
1	Crankshaft Sprocket **Procedure** Using the **EN - 48589** crankshaft rotation socket, rotate the crankshaft and crankshaft sprocket from the stage one alignment position (4) to the stage two alignment position (5), 115 crankshaft degrees, in order to install the right secondary camshaft drive chain components. **Special Tools** **EN-48589** Crankshaft Rotation Socket For equivalent regional tools, refer to **Special Tools** .

carmagn.com

Callout	Component Name
2	Left Intake and Exhaust Camshaft **Procedure** **NOTE:** • **There should be no need to rotate the camshaft more than 10 degrees. Using the hex cast into the camshaft rotate the camshaft in order to install the EN-48383-2 retainer.** • **All camshafts must be locked in place before installation of any camshaft drive chains.** 1. Install the **EN-48383-2** retainer onto the rear of the left camshafts. 2. Ensure the **EN-48383-2** retainer is fully seated onto the camshafts. **Special Tools** **EN-48383** Crankshaft Rotation Tools For equivalent regional tools, refer to **Special Tools** .
3	Right Intake and Exhaust Camshaft **Procedure** **NOTE:** • **There should be no need to rotate the camshaft more than 10 degrees. Using the hex cast into the camshaft rotate the camshaft in order to install the EN-48383-3 retainer.** • **All camshafts must be locked in place before installation of any camshaft drive chains.** 1. Install the **EN-48383-3** retainer onto the rear of the right camshafts. 2. Ensure the **EN-48383-3** retainer is fully seated onto the camshafts. **Special Tools** **EN - 48383** Crankshaft Rotation Tools For equivalent regional tools, refer to **Special Tools** .
4	Stage One Alignment Position
5	Stage Two Alignment Position

Secondary Camshaft Intermediate Drive Chain Installation - Right Side

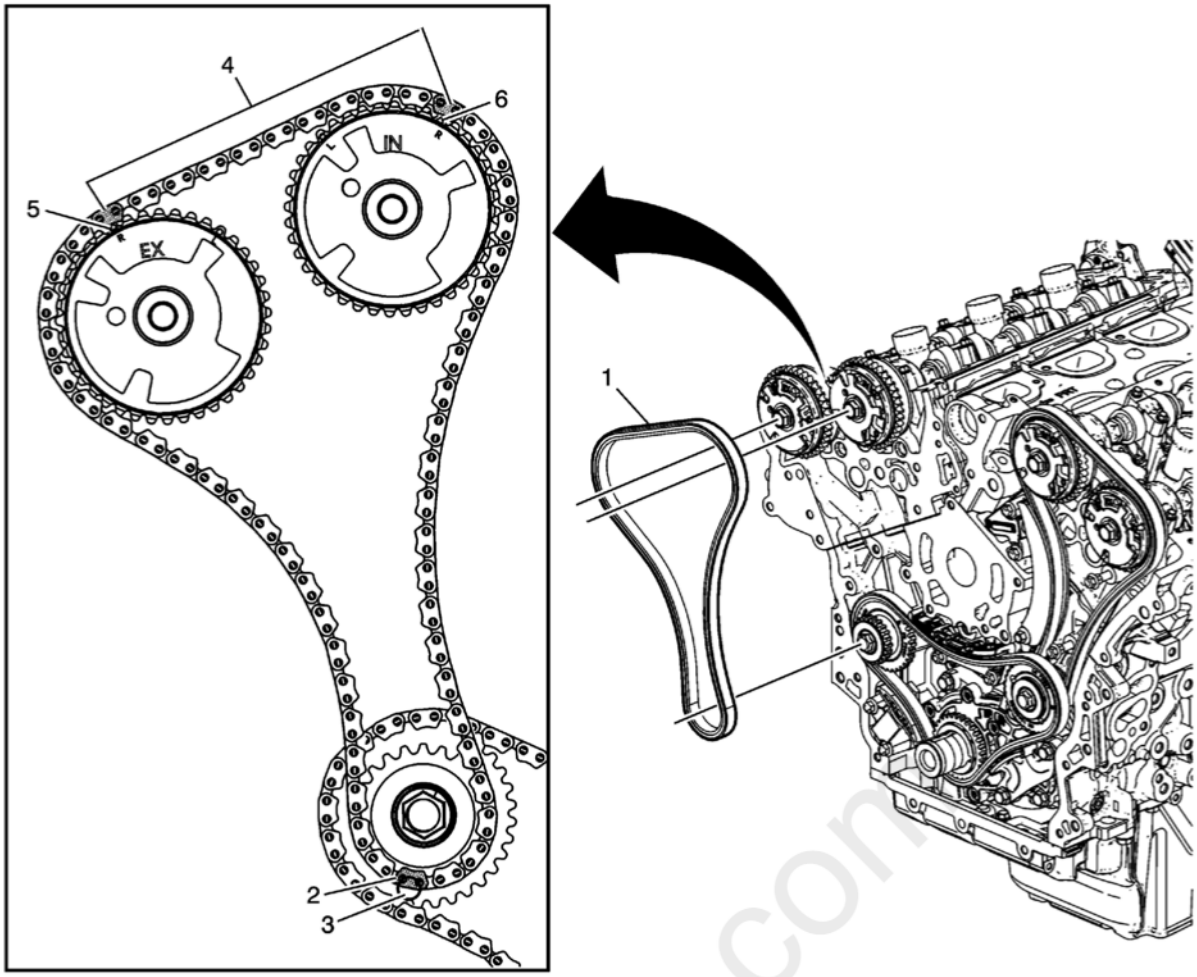

Fig. 518: Secondary Camshaft Intermediate Drive Chain - Right Side
Courtesy of GENERAL MOTORS COMPANY

Secondary Camshaft Intermediate Drive Chain Installation - Right Side

Callout	Component Name
NOTE: Ensure that the right (R) camshaft position actuator sprocket alignment triangle marks are used during this step.	

cardiagn.com

Callout	Component Name
1	Secondary Camshaft Intermediate Drive Chain **NOTE:** **Ensure that the crankshaft is in the stage 2 timing drive assembly position.** **Procedure** 1. Place the secondary camshaft intermediate drive chain around the right camshaft intermediate drive chain idler outer sprocket, aligning the camshaft drive chain timing link (2) with the alignment access hole (3) in the right camshaft intermediate drive chain idler inner sprocket. 2. Wrap the secondary camshaft intermediate drive chain around both right (R) actuator drive sprockets. 3. Align the right (R) intake camshaft position actuator sprocket alignment triangle mark (5) with the camshaft drive chain timing link. 4. Align the right (R) exhaust camshaft position actuator sprocket alignment triangle mark (6) with the camshaft drive chain timing link. 5. Once aligned, ensure there are 10 chain links (4) between timing marks for the right (R) camshaft position actuator sprockets. 6. There will be 22 links between the right camshaft intermediate drive chain idler timing camshaft drive chain link and each right camshaft position actuator sprocket timing camshaft drive chain link.
2	Camshaft Drive Chain Timing Link
3	Alignment Access Hole
4	10 Chain Links Between Timing Marks for the Right (R) Camshaft Position Actuator Sprockets
5	Right (R) Intake Camshaft Position Actuator Sprocket Alignment Triangle Mark
6	Right (R) Exhaust Camshaft Position Actuator Sprocket Alignment Triangle Mark

Secondary Camshaft Drive Chain Guide and Shoe Installation - Right Side

cardiagn.com

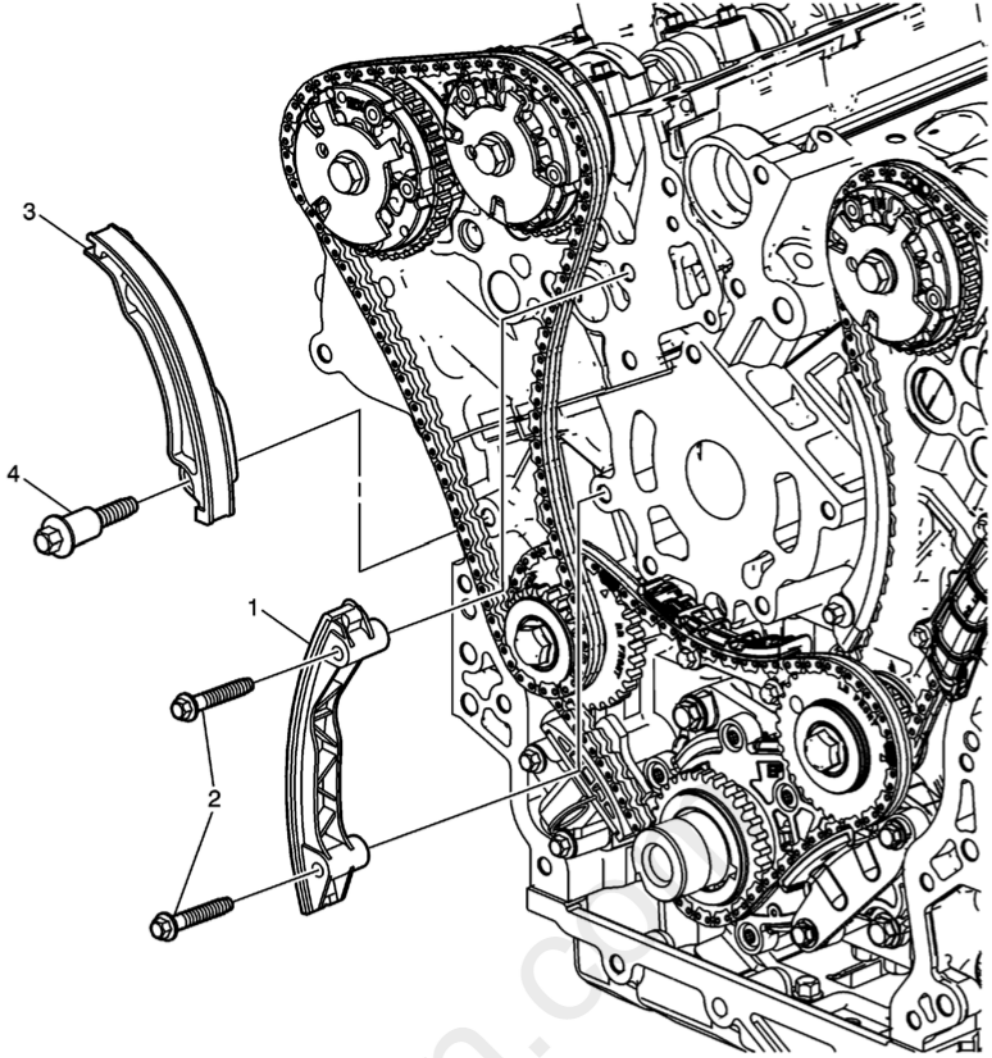

Fig. 519: Secondary Camshaft Drive Chain Guide And Shoe - Right Side
Courtesy of GENERAL MOTORS COMPANY

Secondary Camshaft Drive Chain Guide and Shoe Installation - Right Side

Callout	Component Name
1	Right Pivot Arm Timing Chain Guide
2	Right Pivot Arm Timing Chain Guide Bolt **Tighten** 25 N.m (18 lb ft)
3	Right Secondary Timing Chain Guide
4	Right Secondary Timing Chain Guide Bolt **Tighten** 25 N.m (18 lb ft)

Secondary Camshaft Drive Chain Tensioner Installation - Right Side

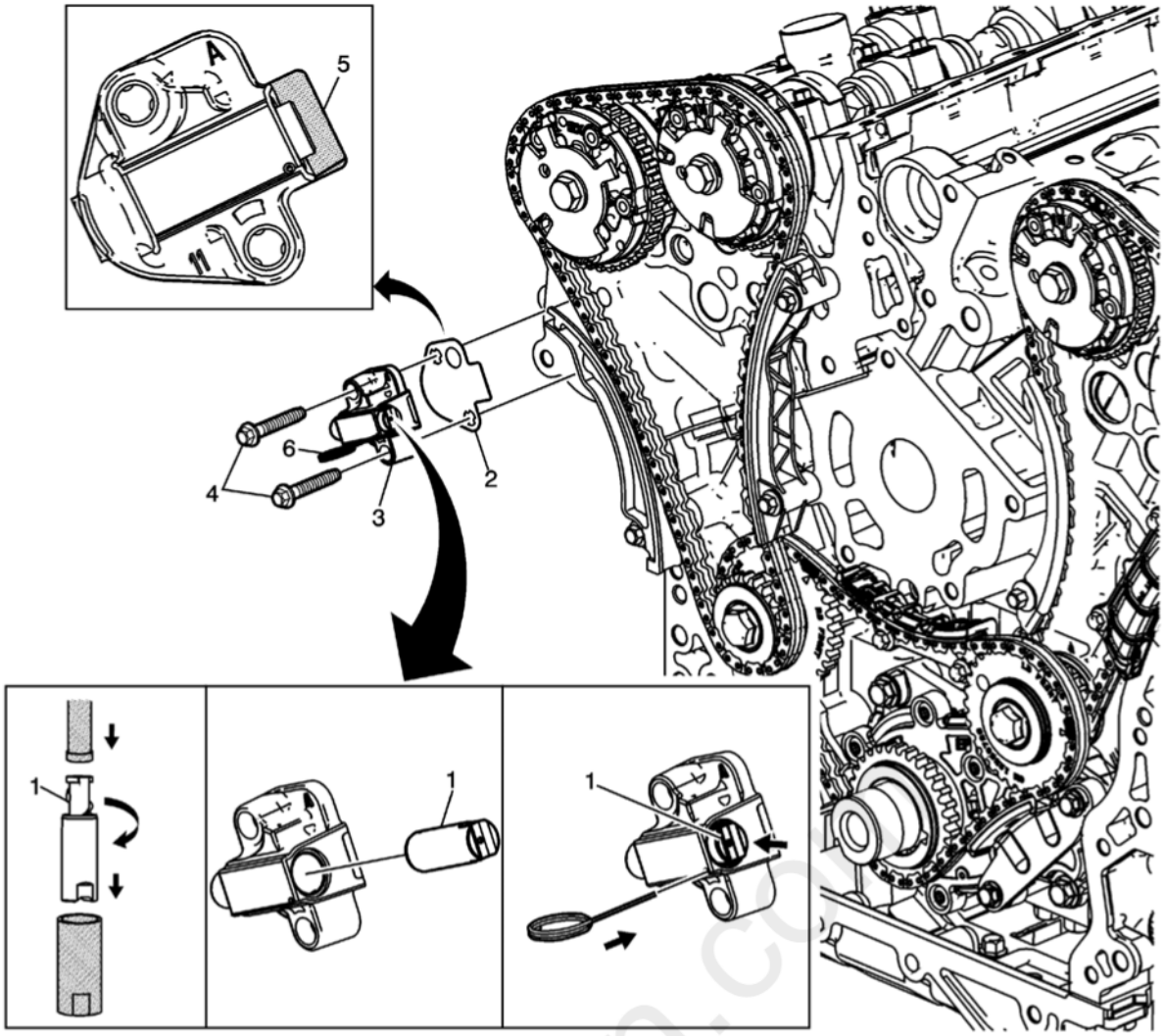

Fig. 520: Secondary Camshaft Drive Chain Tensioner - Right Side
Courtesy of GENERAL MOTORS COMPANY

Secondary Camshaft Drive Chain Tensioner Installation - Right Side

Callout	Component Name
1	Right Secondary Timing Chain Tensioner Plunger **Procedure** 1. Reset the right secondary camshaft drive chain tensioner plunger using **EN - 45027** tensioner tool. 2. Install right secondary camshaft drive chain tensioner plunger into body. 3. Compress the plunger into the body and lock the right secondary camshaft drive chain tensioner by inserting the **EN - 46112** tensioner retraction pins into the access hole in the side of the right secondary camshaft drive chain tensioner body. 4. Slowly release pressure on the right secondary camshaft drive chain tensioner. The right secondary camshaft drive chain tensioner should remain compressed. **Special Tools** • **EN-45027** Tensioner Tool • **EN - 46112** Tensioner Retraction Pins For equivalent regional tools, refer to **Special Tools** .

Callout	Component Name
2	Right Timing Chain Housing Gasket **NOTE:** **Ensure the right secondary camshaft drive chain tensioner mounting surface on the right cylinder head does not have any burrs or defects that would degrade the sealing of the NEW right secondary camshaft drive chain tensioner gasket.**
3	Right Secondary Timing Chain Tensioner
4	Right Secondary Timing Chain Tensioner Bolt **Procedure** 1. Place the right secondary drive chain tensioner into position and loosely install the bolts to the block. 2. Verify the proper placement of the right secondary drive chain tensioner gasket tab (5). 3. Tighten the drive chain tensioner bolts in two passes. 4. Verify the timing marks are in the correct position before releasing the drive chain tensioner. 5. Release the right secondary drive chain tensioner by pulling out the **EN - 46112** pin (6) and unlocking the tensioner plunger. 6. Verify all primary and secondary camshaft drive chain timing mark alignments by referring to **Timing Chain Alignment Diagram** - Stage One. **Tighten** • First Pass 5 N.m (44 lb in) • Second Pass 25 N.m (18 lb ft)
5	Right Timing Chain Housing Gasket Tab
6	**EN-46112** Pin

TIMING CHAIN IDLER SPROCKET INSTALLATION - RIGHT SIDE

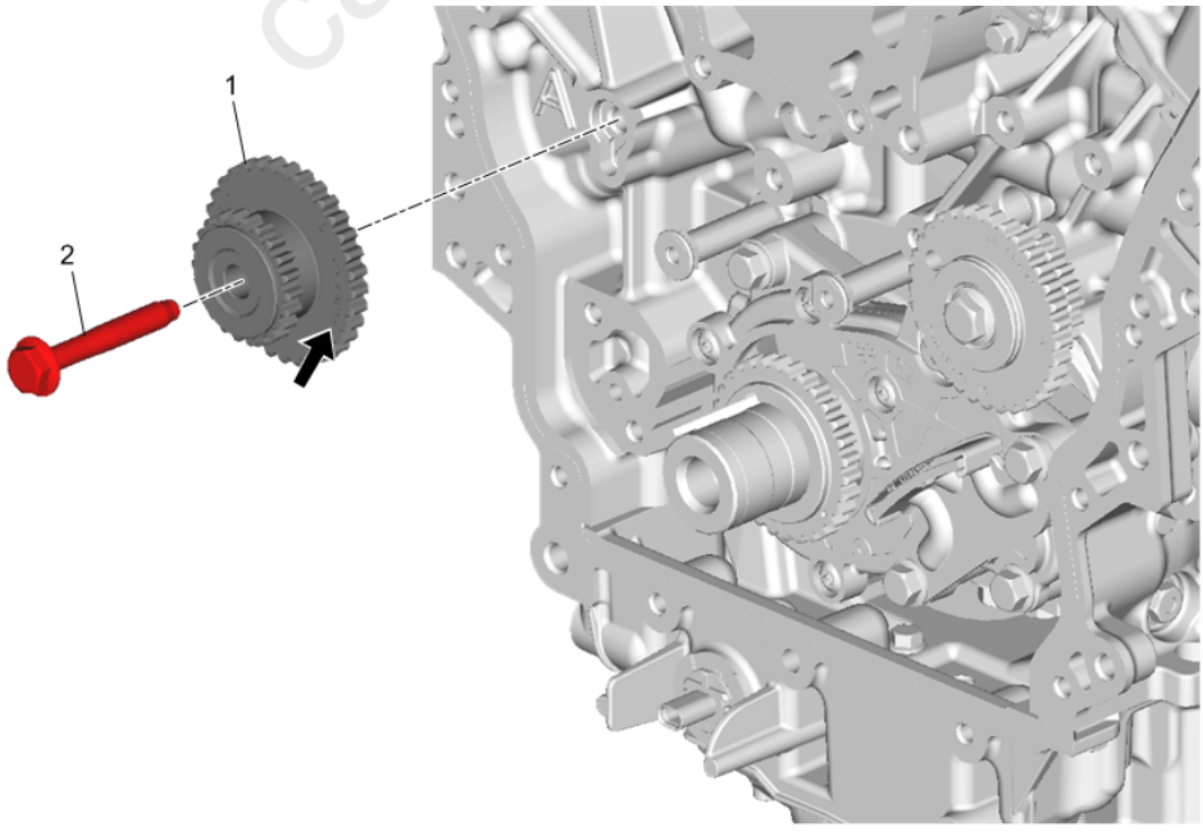

cardiagn.com

Fig. 521: Timing Chain Idler Sprocket - Right Side
Courtesy of GENERAL MOTORS COMPANY

Callout	Component Name
1	Right SideTiming Chain Idler Sprocket 1. Ensure that the right timing chain idler sprocket is being installed. The raised hub and the larger sprocket of the right timing chain idler sprocket is installed towards the block. 2. Place the right timing chain idler sprocket to the cylinder block.
2	Timing Chain Idler Sprocket Shaft Bolt **CAUTION:** **Refer to Fastener Caution .** **Tighten** 58 N.m (43 lb ft)

ENGINE FRONT COVER INSTALLATION

Special Tools

EN - 46109 Guide Pins

For equivalent regional tools, refer to **Special Tools** .

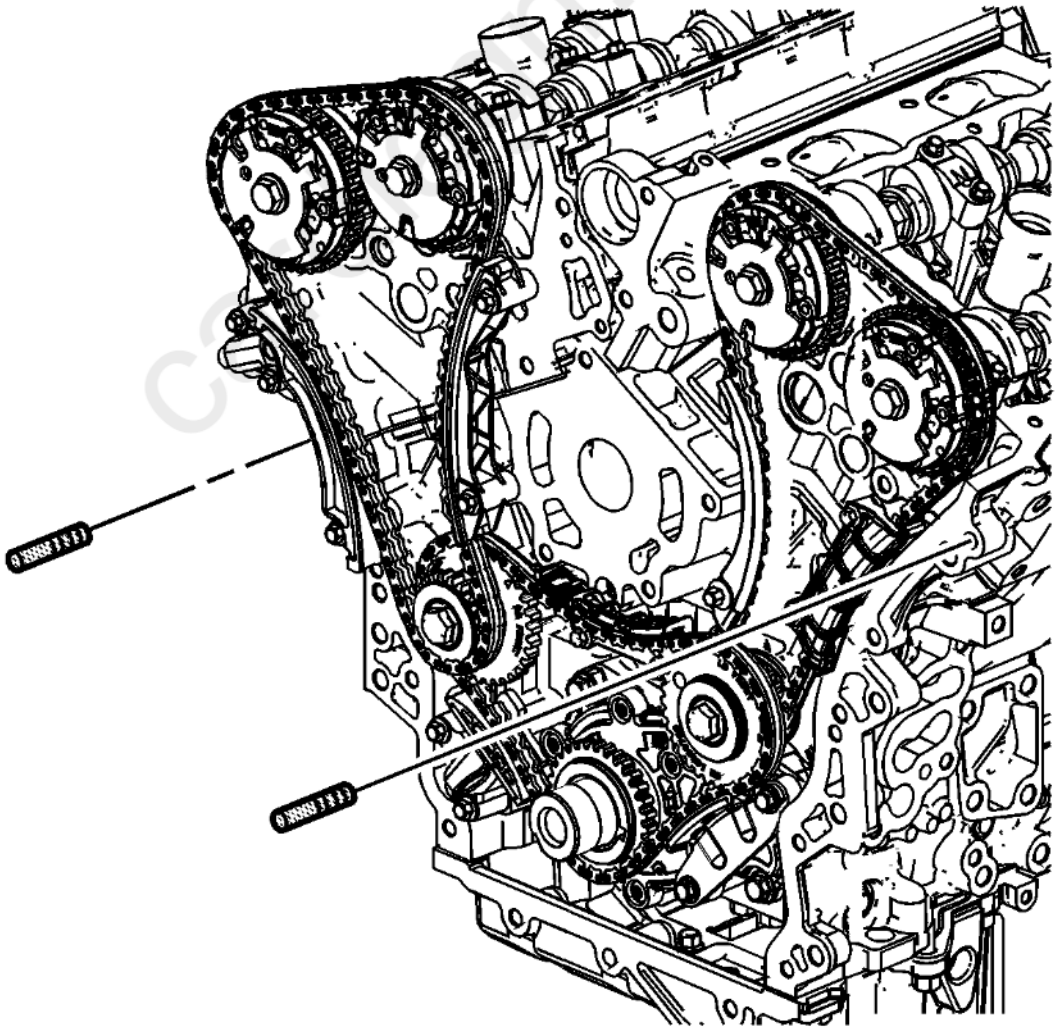

Fig. 522: Identifying Cylinder Block Guide Studs
Courtesy of GENERAL MOTORS COMPANY

1. Install the 8 mm (0.315 in) guide from the **EN - 46109** pins into the cylinder block positions as shown.

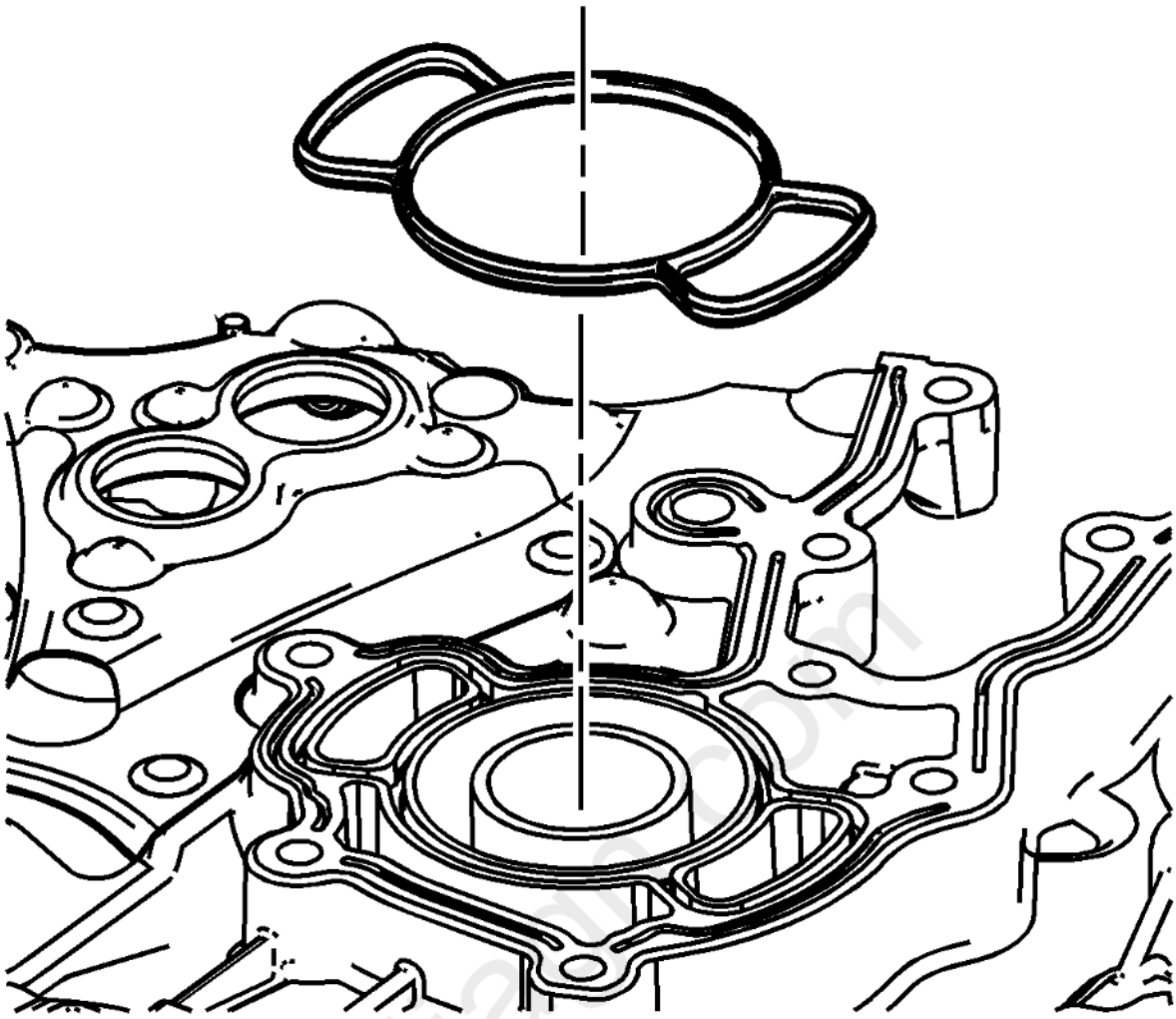

Fig. 523: Identifying Water Pump Seal
Courtesy of GENERAL MOTORS COMPANY

2. Install the NEW engine front cover to cylinder block seal.

cardiagn.com

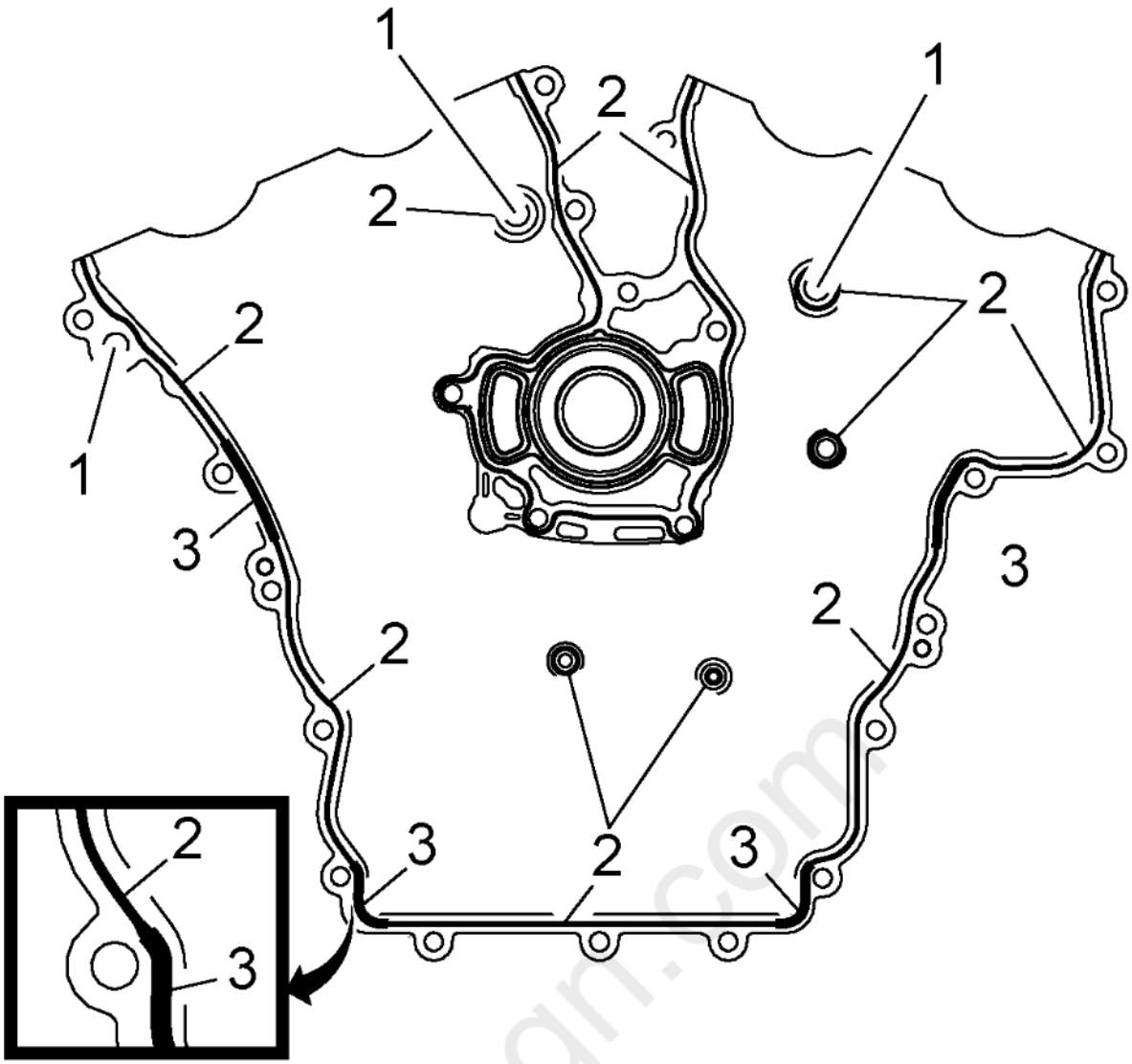

Fig. 524: Applying Sealant
Courtesy of GENERAL MOTORS COMPANY

NOTE:

- **No RTV sealant should be visible in the M12 bolt holes (1) upon final assembly of front cover to engine.**
- **Keep the RTV bead path on the outward edge of the t-joints to ensure proper sealant coverage.**

3. Ensure proper use of room temperature vulcanizing (RTV) sealant. **Use of Room Temperature Vulcanizing (RTV) and Anaerobic Sealant**
4. Apply a 3 mm (0.118 in) bead of RTV sealant on the engine front cover as shown (2).
5. Apply a 5 mm (0.197 in) bead of RTV sealant on the engine front cover as shown (3). Refer to **Adhesives, Fluids, Lubricants, and Sealers** for recommended sealant.

cardiagn.com

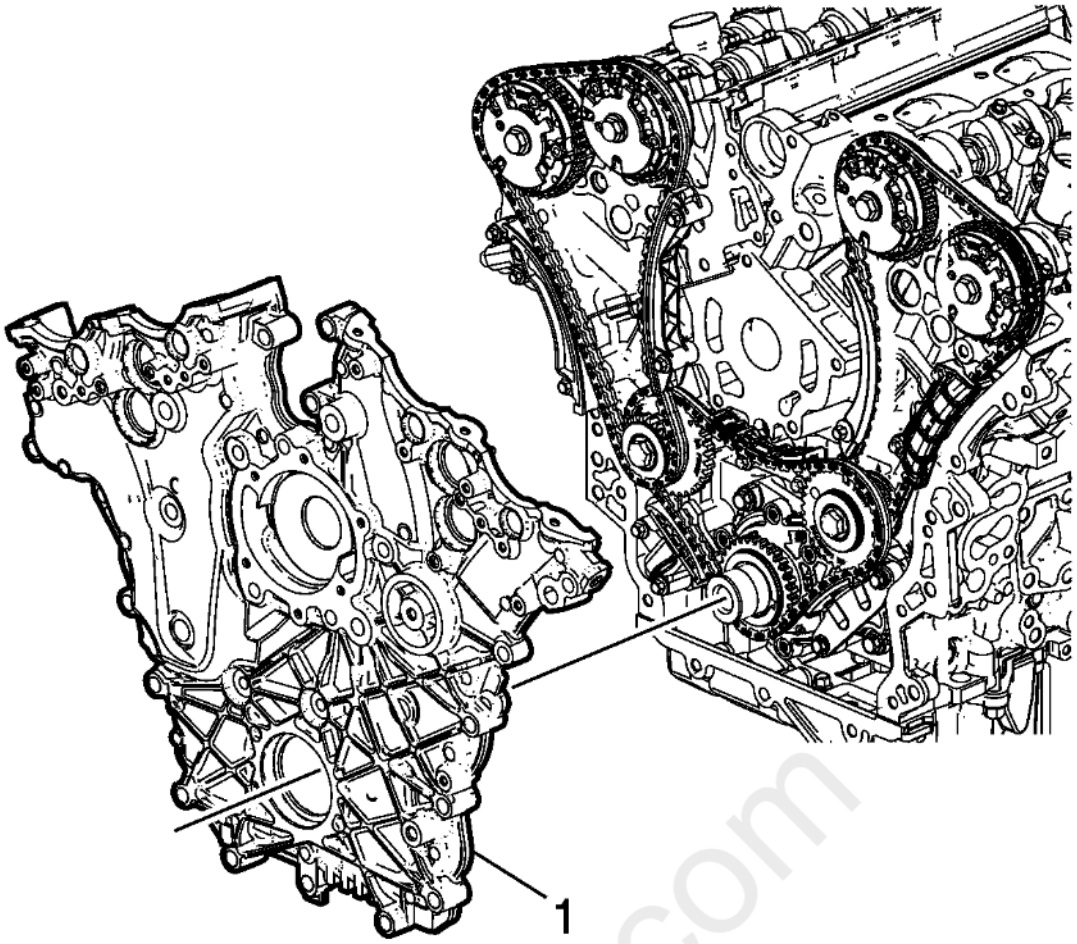

Fig. 525: View Of Engine Front Cover
Courtesy of GENERAL MOTORS COMPANY

6. Place the engine front cover (1) onto the **EN - 46109** pins and slide into position.
7. Remove the **EN - 46109** pins from the cylinder block.
8. Hand start all the engine front cover bolts.

cardiagn.com

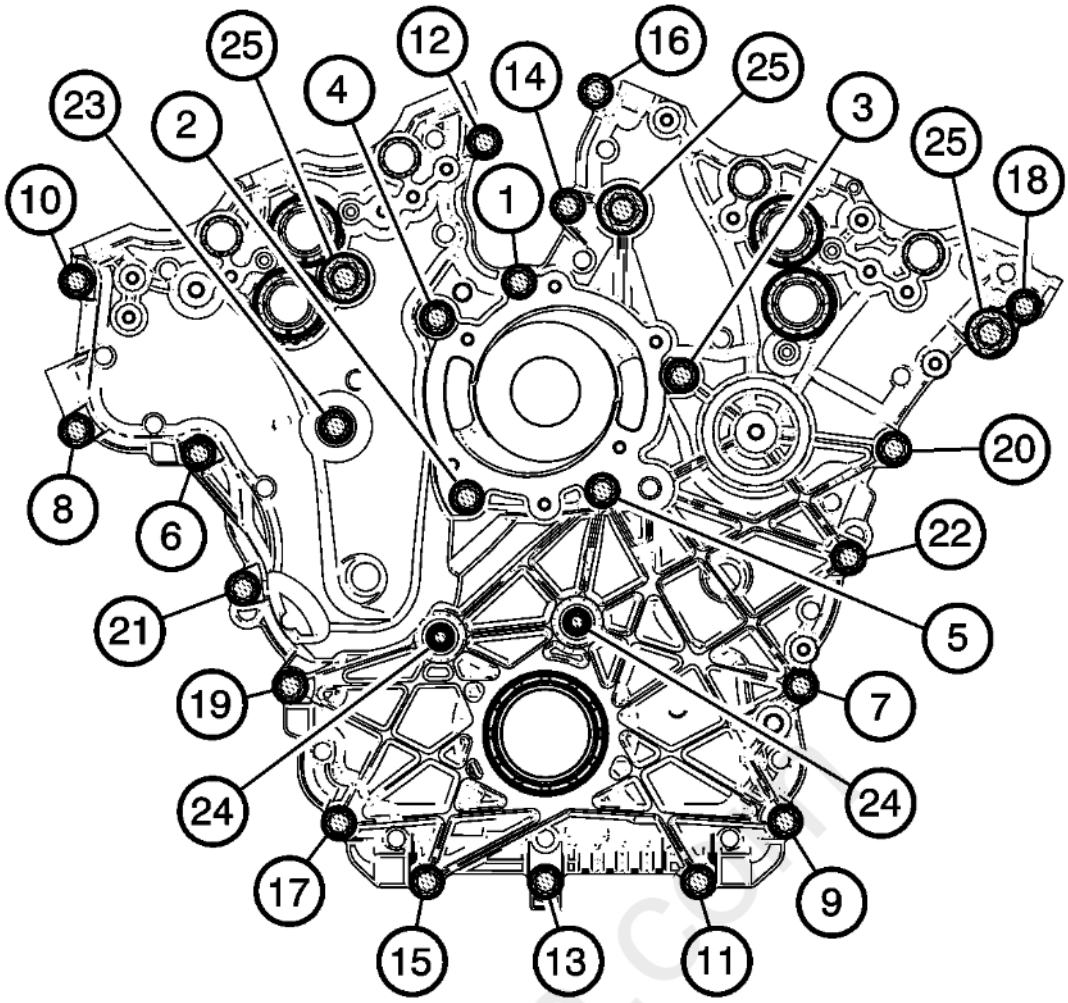

Fig. 526: Identifying Engine Front Cover Bolt Tightening Sequence
Courtesy of GENERAL MOTORS COMPANY

CAUTION: **Refer to Fastener Caution .**

NOTE: **Engine front cover bolts in the number (25) location are model dependent and may not apply.**

9. Tighten the engine front cover bolts (1 - 23) in the sequence shown to 20 N.m (15 lb ft).
    1. Tighten the engine front cover bolts (1 - 23) a second pass in sequence to 20 N.m (15 lb ft).
    2. Tighten the engine front cover bolts (1 - 23) a third pass in sequence an additional 60 degrees.
    3. Tighten the engine front cover bolts (24) to 15 N.m (11 lb ft).
    4. Tighten the engine front cover bolts (25) to 65 N.m (48 lb ft).

Cardiagn.com

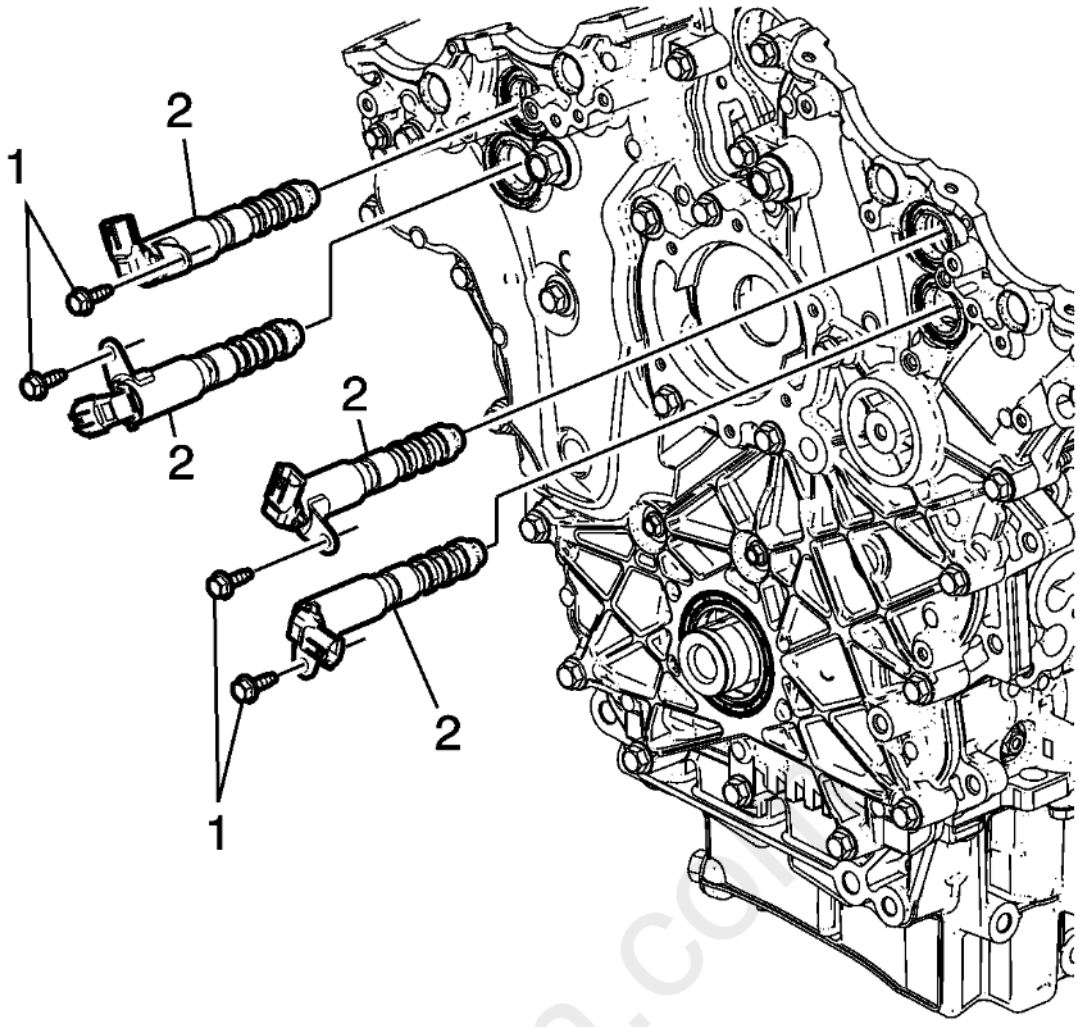

Fig. 527: Camshaft Position Actuator Valve And Bolts
Courtesy of GENERAL MOTORS COMPANY

10. Place the camshaft position actuator valves (2) in position on the front cover.
11. Install the camshaft position actuator valve bolts (1) and tighten to 10 N.m (89 lb in).

cardiagn.com

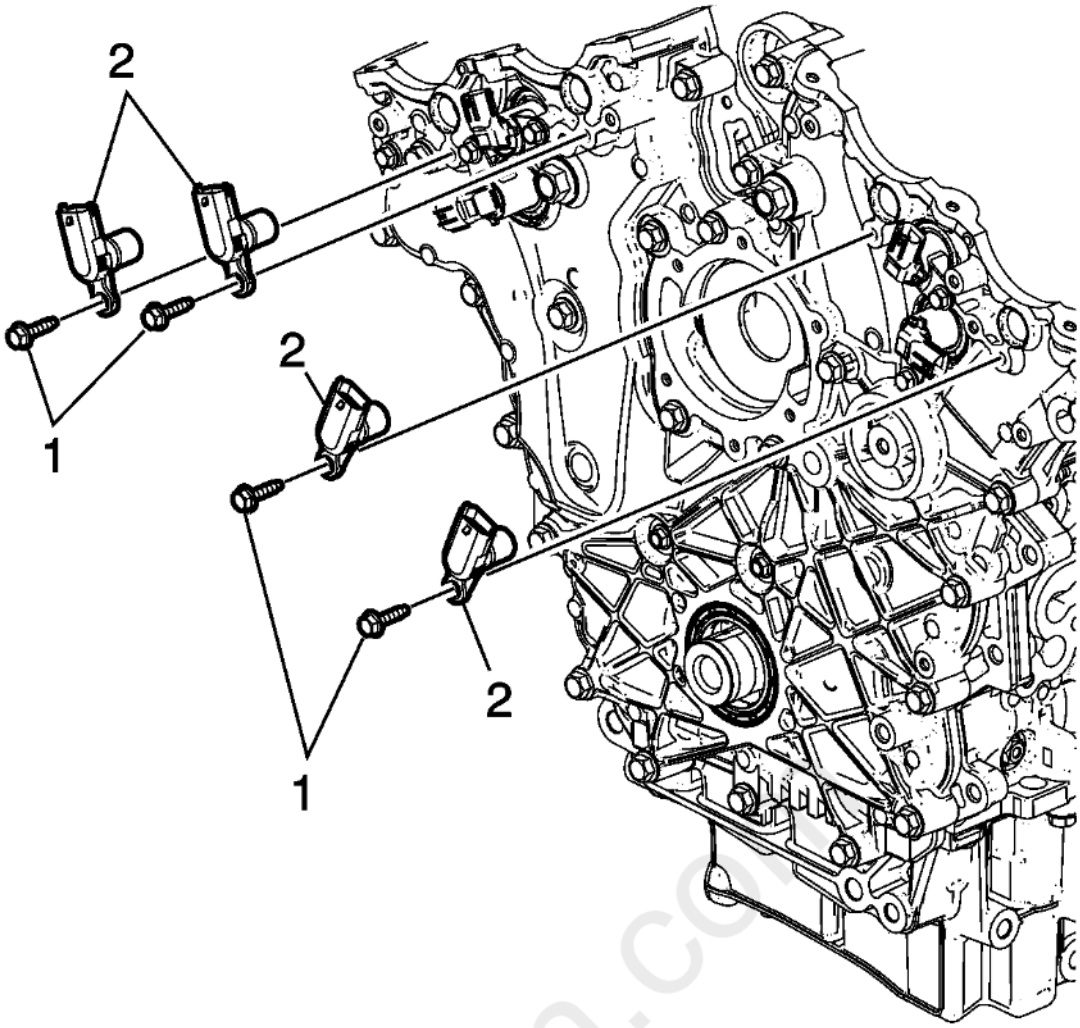

Fig. 528: Camshaft Position Sensors & Bolts
Courtesy of GENERAL MOTORS COMPANY

NOTE: **Inspect the camshaft position sensor O-ring seals. If the seals are damaged, the entire camshaft position sensor must be replaced.**

12. Place the camshaft position sensors (2) in position on the front cover.
13. Install the camshaft position sensor bolts (1) and tighten to 10 N.m (89 lb in).

WATER PUMP INSTALLATION

cardiagn.com

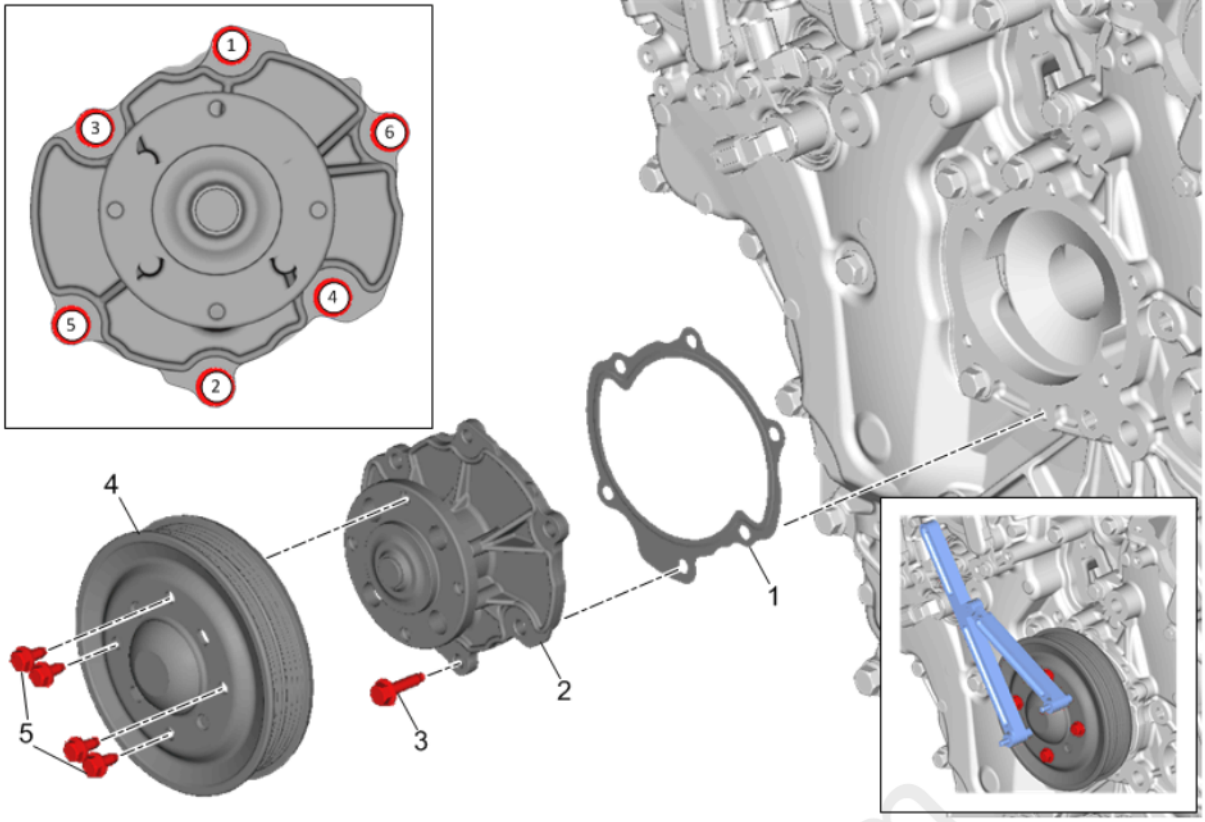

Fig. 529: Water Pump And Bolts With Tightening Sequence
Courtesy of GENERAL MOTORS COMPANY

Callout	Component Name
1	Water Pump Gasket **NOTE:** **Install a NEW gasket.**
2	Water Pump

cardiagn.com

Callout	Component Name
3	Water Pump Bolt (Qty: 6) **CAUTION:** **Refer to Fastener Caution .** **CAUTION:** **This vehicle is equipped with torque-to-yield or single use fasteners. Install a NEW torque-to-yield or single use fastener when installing this component. Failure to replace the torque-to-yield or single use fastener could cause damage to the vehicle or component.** **NOTE:** **Install NEW bolts.** **Tighten in sequence** • **First Pass:** 10 N.m (89 lb in) • **Second Pass:** 10 N.m (89 lb in) • **Final Pass:** 45 degrees
4	Water Pump Pulley **Procedure** 1. Install the **EN-46104** Water Pump Pulley Holding Tool onto the water pump pulley mounting holes. 2. Install the water pump pulley bolts. 3. Remove the **EN-46104** Water Pump Pulley Holding Tool from the water pump pulley. **Special Tools** **EN-46104** Water Pump Pulley Holding Tool Equivalent regional tools: **Special Tools**
5	Water Pump Pulley Bolt (Qty: 4) **Tighten** 10 N.m (89 lb in)

CAMSHAFT COVER INSTALLATION - LEFT SIDE

Special Tools

- **EN-46101** Spark Plug Tube Seal Guide
- **EN-48383** Camshaft Retaining Tools

For equivalent regional tools, refer to **Special Tools** .

carmagn.com

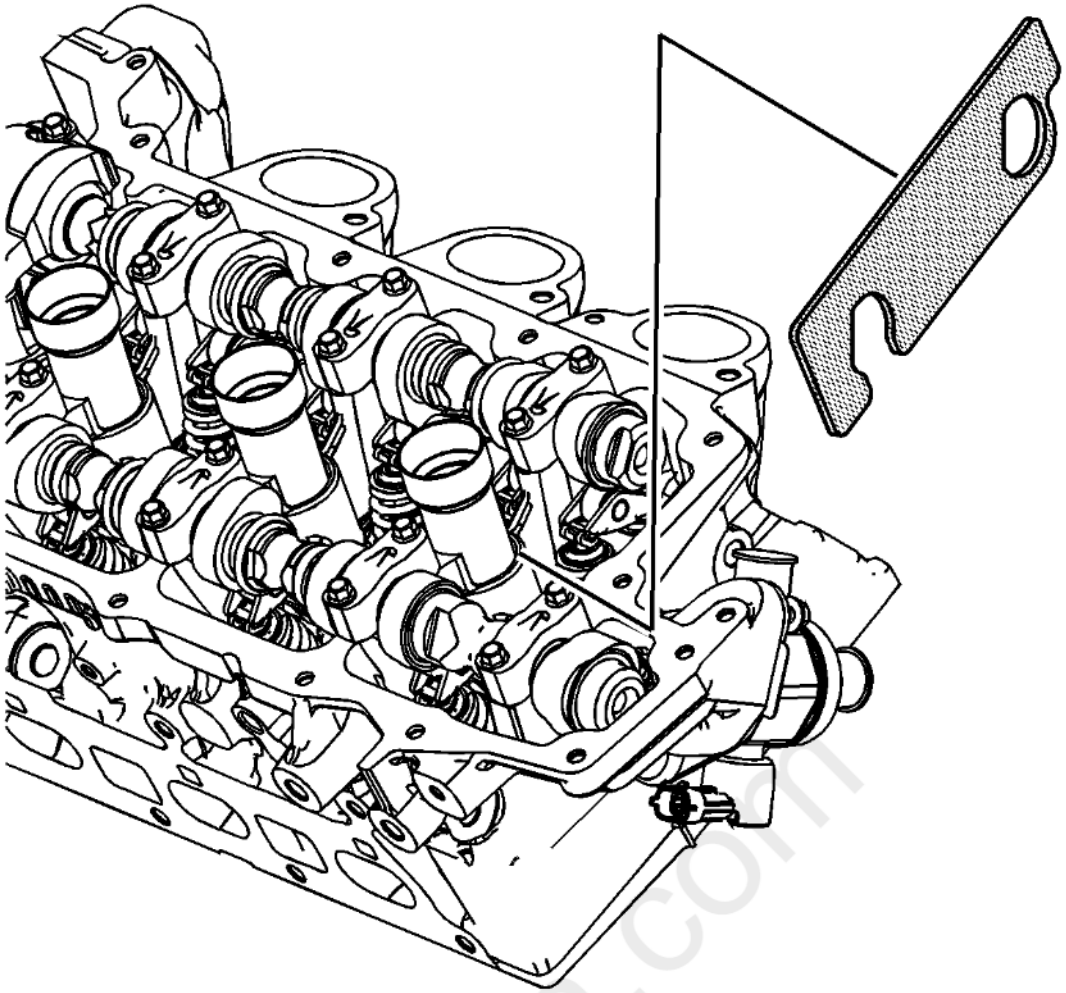

Fig. 530: Camshaft Retaining Tool & Camshaft
Courtesy of GENERAL MOTORS COMPANY

1. Remove the **EN-48383-2** from the rear of the left camshafts.

cardiagn.com

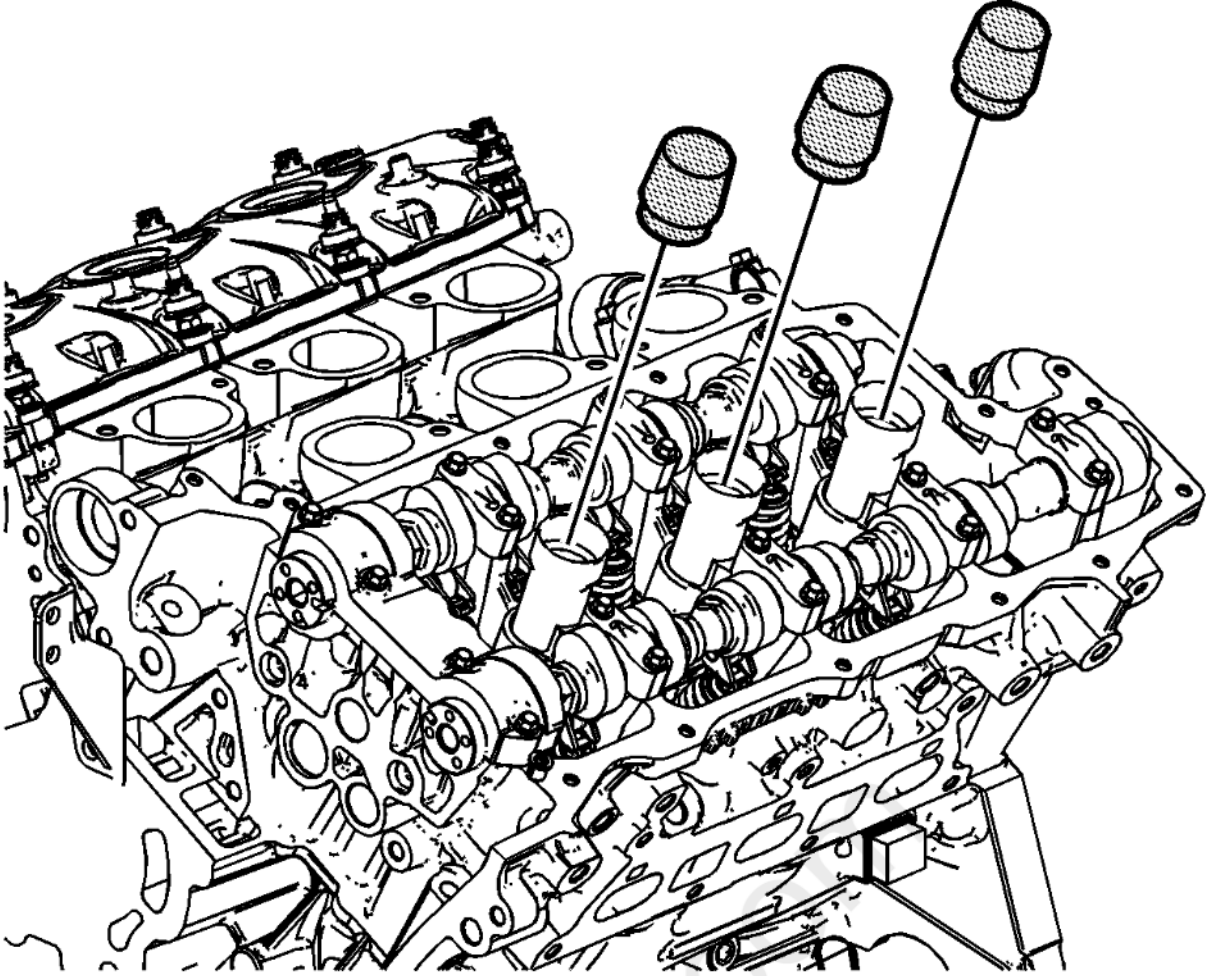

Fig. 531: View Of Spark Plug Tubes & Left Cylinder Head
Courtesy of GENERAL MOTORS COMPANY

2. Install the **EN-46101** guide onto the spark plug tubes of the left cylinder head.

cardiagn.com

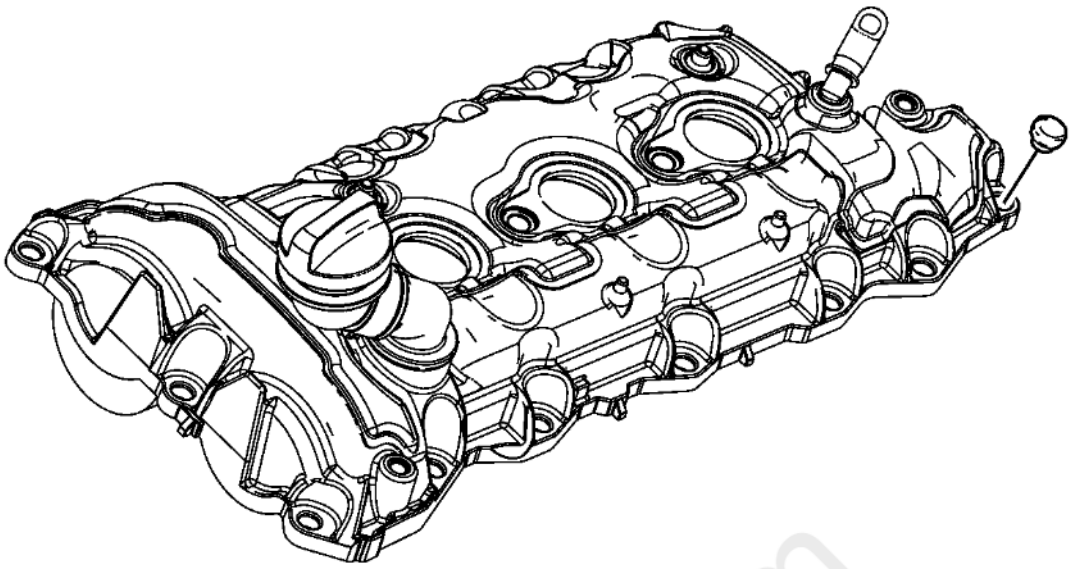

Fig. 532: View of Camshaft Cover
Courtesy of GENERAL MOTORS COMPANY

3. Install the NEW camshaft cover bolt grommets prior to installing the camshaft cover bolts.
4. Wipe the camshaft cover sealing surface on the left cylinder head with a clean, lint-free cloth.

cardiagn.com

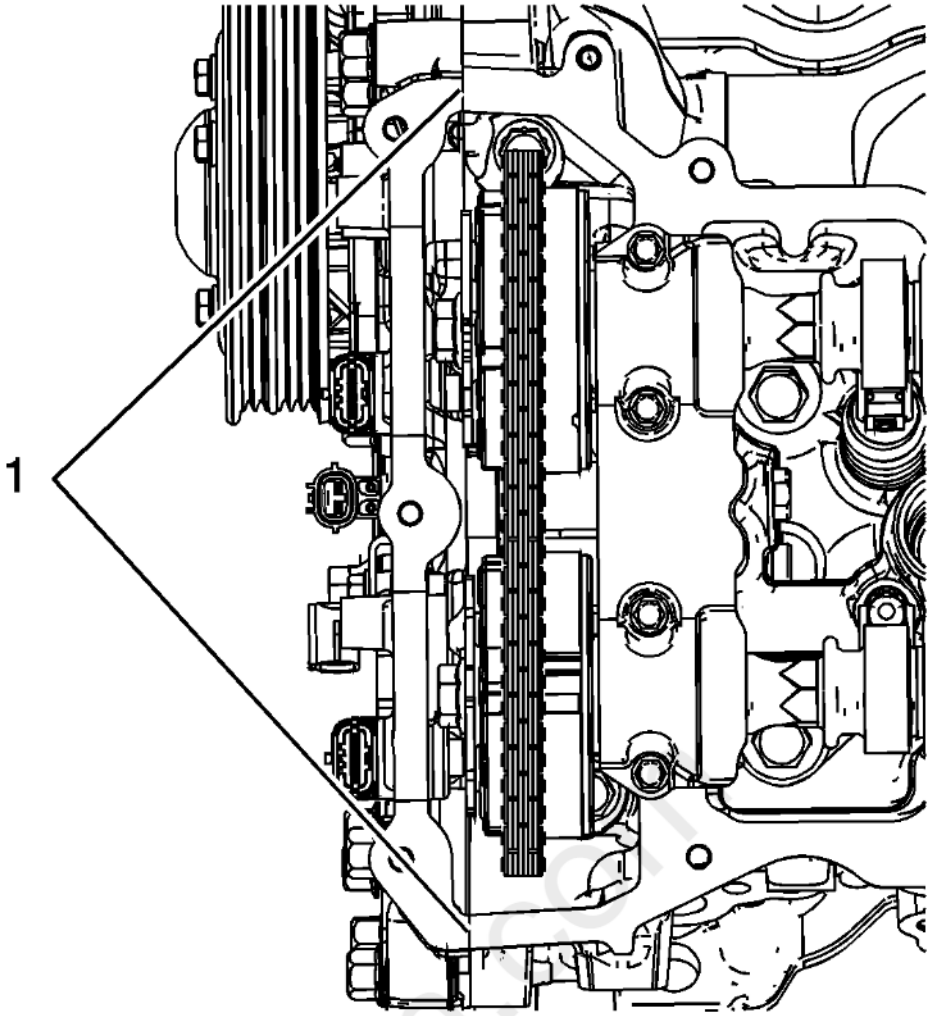

Fig. 533: Locating Engine Front Cover Split Lines
Courtesy of GENERAL MOTORS COMPANY

5. Ensure proper use of room temperature vulcanizing (RTV) sealant. **Use of Room Temperature Vulcanizing (RTV) and Anaerobic Sealant**
6. Place a bead 8 mm (0.3150 in) in diameter by 4 mm (0.1575 in) in height of RTV sealant, on the engine front cover split lines (1). Refer to **Adhesives, Fluids, Lubricants, and Sealers** .

carmanual.com

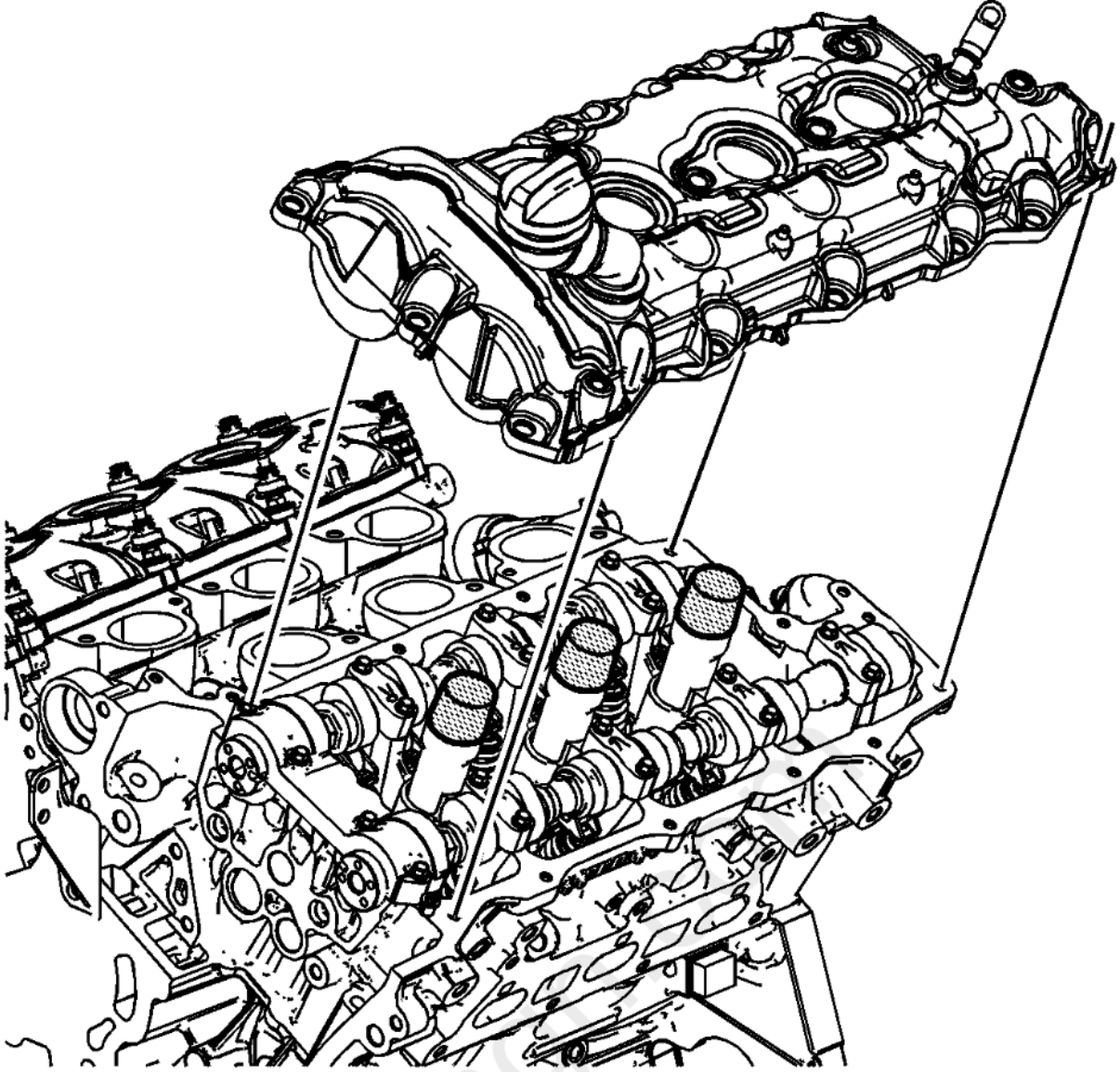

Fig. 534: View of Camshaft Cover & Cylinder Head
Courtesy of GENERAL MOTORS COMPANY

7. Place the left camshaft cover into position onto the left cylinder head.

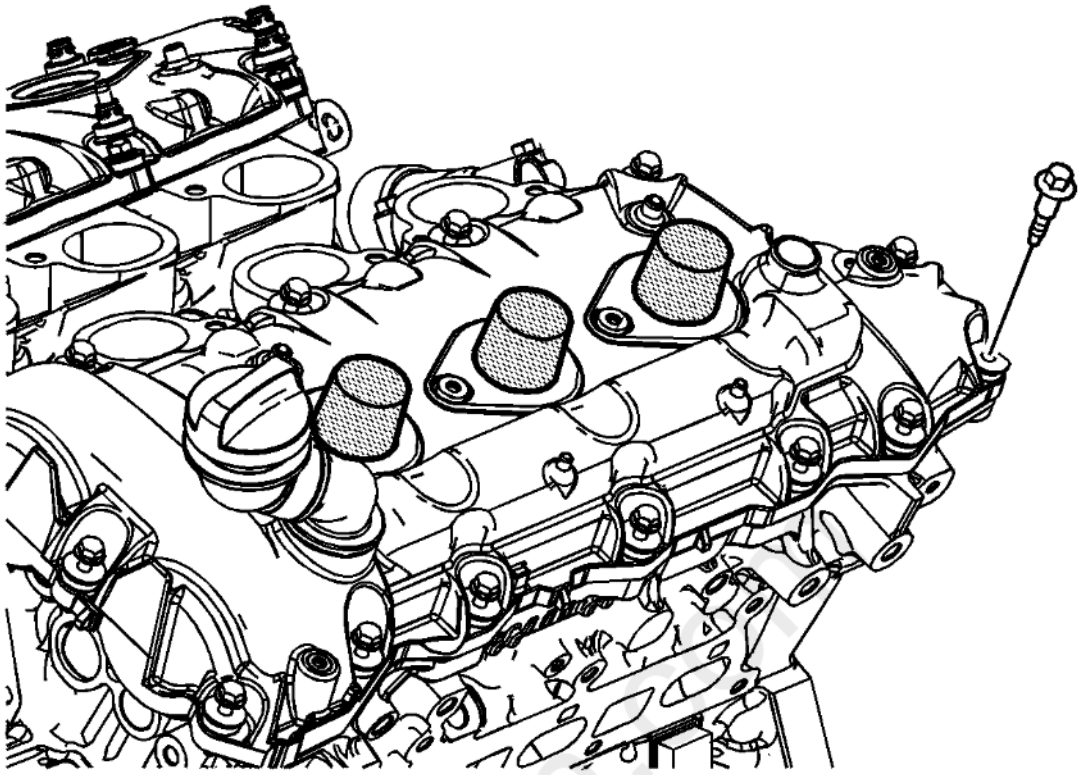

Fig. 535: View of Camshaft Cover & Bolts
Courtesy of GENERAL MOTORS COMPANY

8. Loosely install the left camshaft cover bolts.

cardiagn

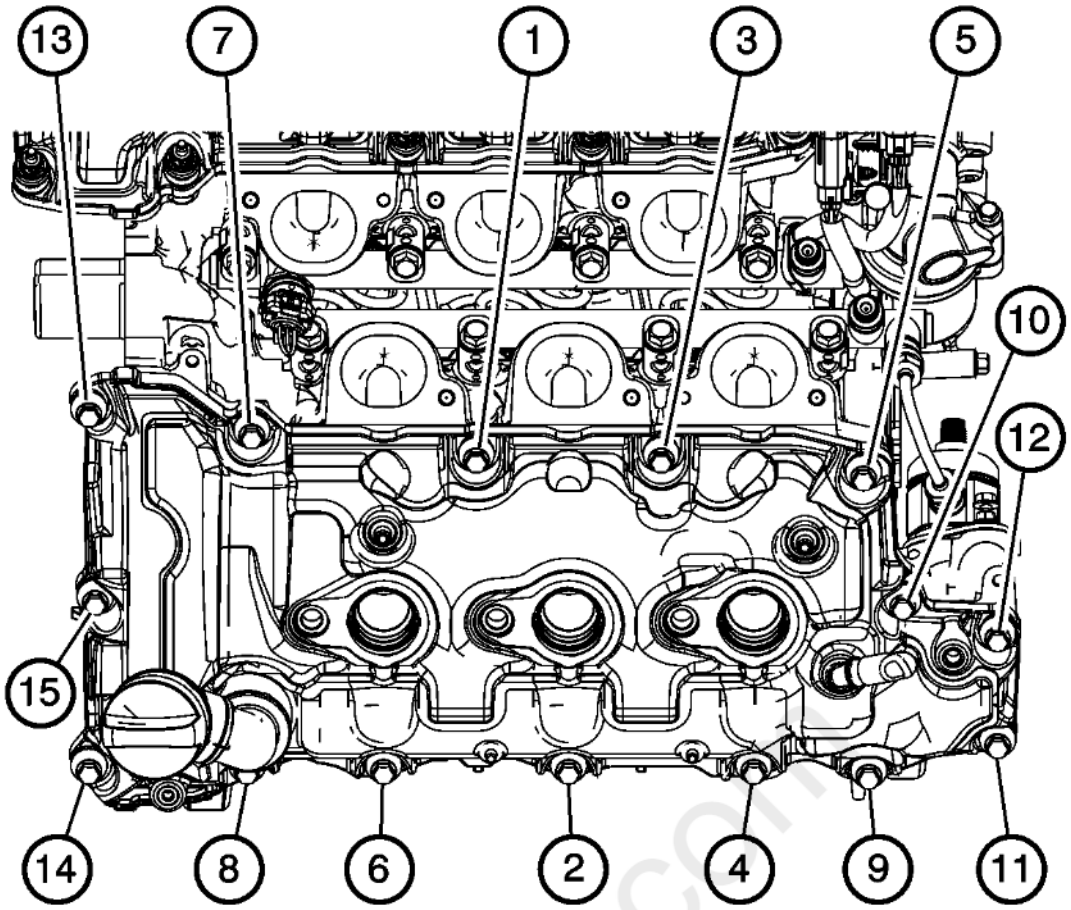

Fig. 536: Identifying Left Camshaft Cover Bolt Tightening Sequence
Courtesy of GENERAL MOTORS COMPANY

CAUTION: **Refer to Fastener Caution .**

9. Tighten the left camshaft cover bolts in the sequence shown.
    1. Tighten the left camshaft cover bolts in the sequence to 10 N.m (89 lb in).
    2. Tighten the left camshaft cover bolts a second pass in the sequence to 10 N.m (89 lb in).

cardiagn.com

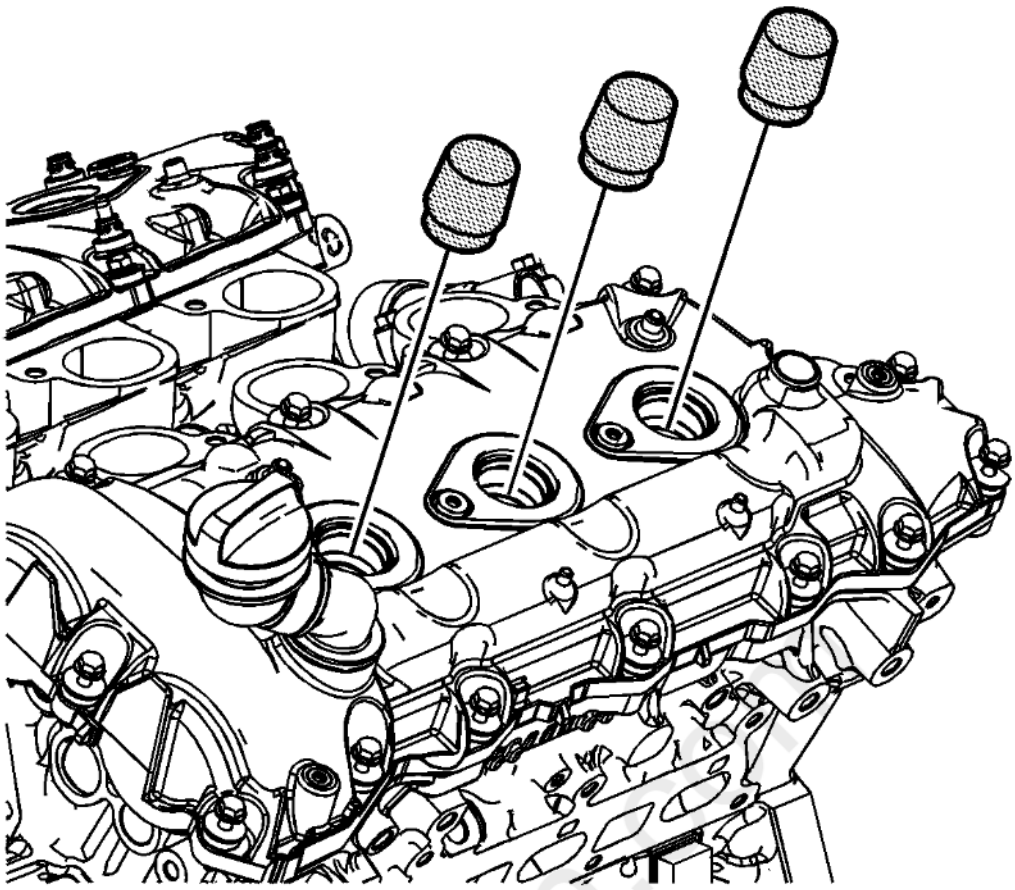

Fig. 537: View of Spark Plug Tubes & Cylinder Head
Courtesy of GENERAL MOTORS COMPANY

10. Remove the **EN-46101** guide from the spark plug tubes of the left cylinder head.

cardiagn

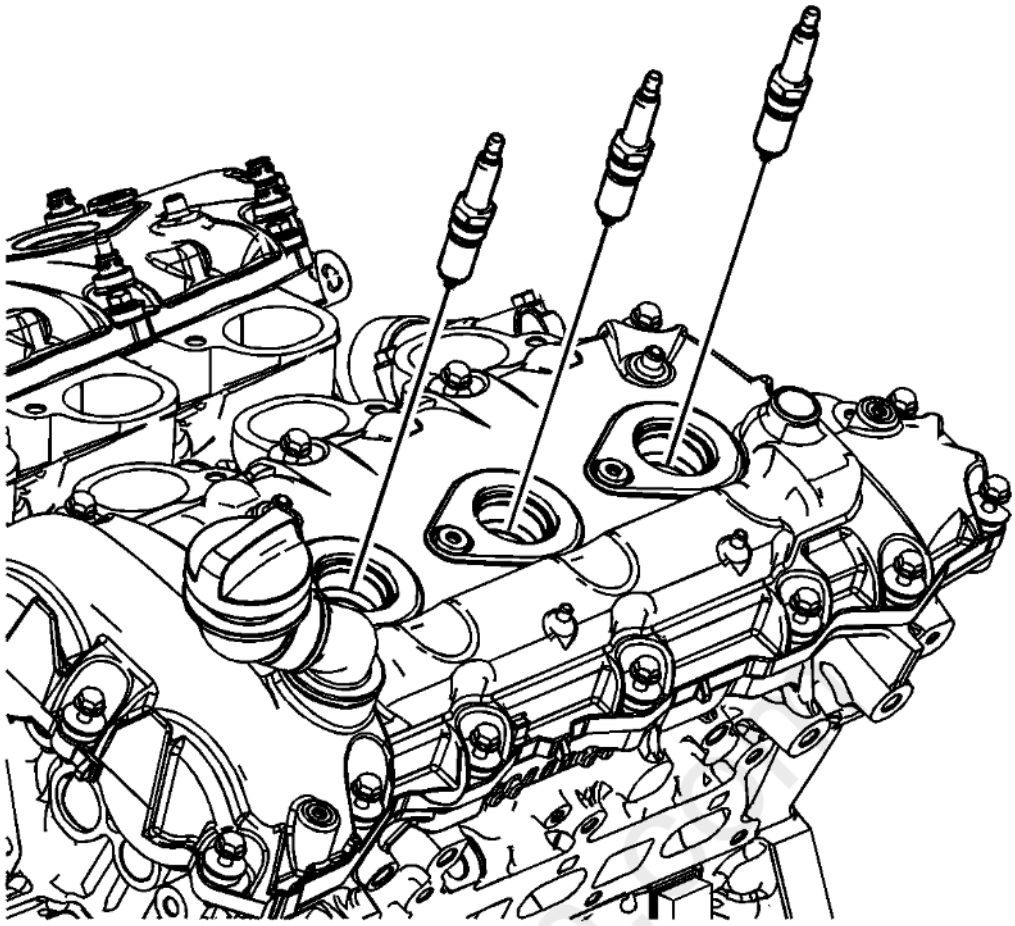

Fig. 538: Identifying Spark Plugs & Cylinder Head
Courtesy of GENERAL MOTORS COMPANY

11. Install the NEW spark plugs into the left cylinder head and tighten to 18 N.m (13 lb ft).

cardiagn

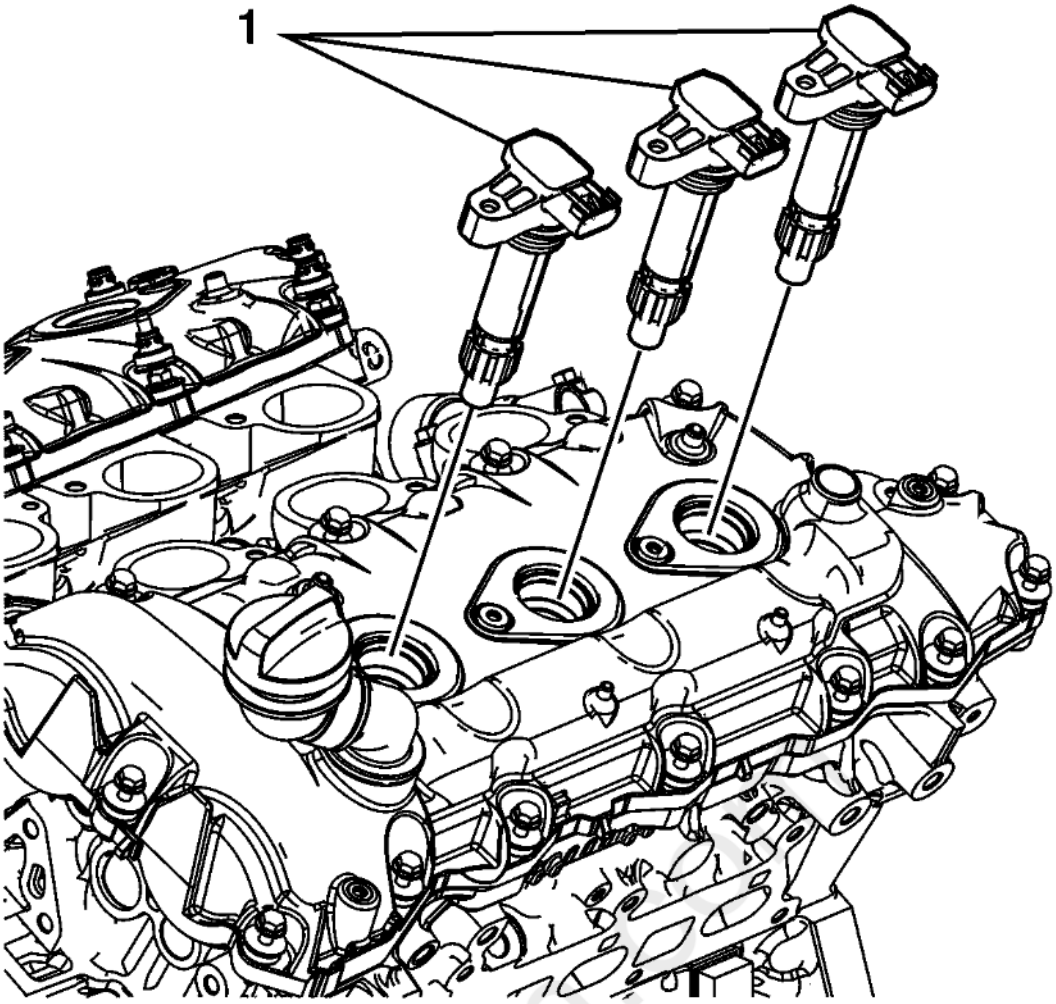

Fig. 539: View of Ignition Coils and Cylinder Head
Courtesy of GENERAL MOTORS COMPANY

12. Inspect the inside of the ignition coil rubber boot for a thin, even coat of grease. If there is no grease present or additional grease is necessary, complete the following procedure:
    1. Apply a thin coating of dielectric grease evenly to the inside of the ignition coil rubber boot, up to a depth of 15 mm from the end of the boot. Refer to **Adhesives, Fluids, Lubricants, and Sealers** .
    2. Remove any excess grease from around the end of the boot, and ensure there is not an excessive amount within the boot.
13. Install the ignition coils.

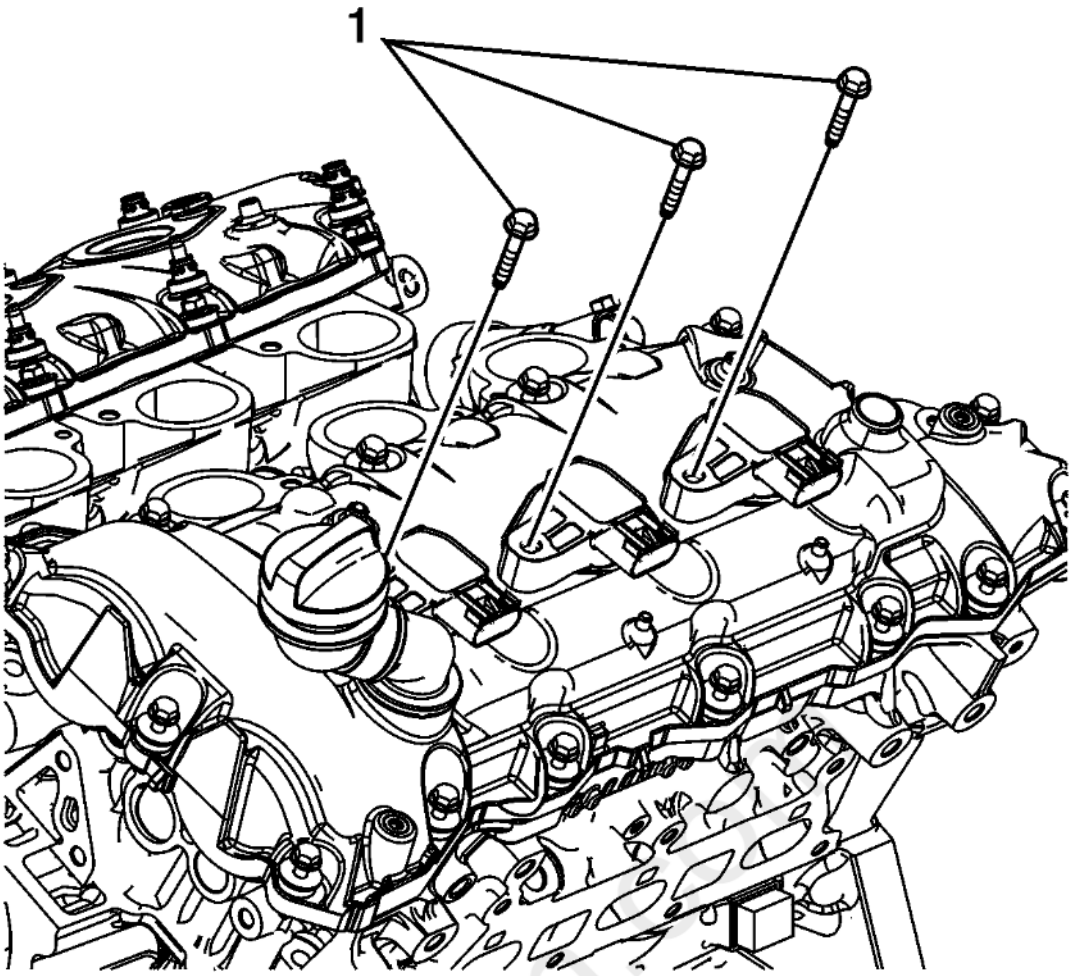

Fig. 540: View of Ignition Coil Bolts and Cylinder Heads
Courtesy of GENERAL MOTORS COMPANY

14. Install the ignition coil bolts and tighten to 10 N.m (89 lb in).

CAMSHAFT COVER INSTALLATION - RIGHT SIDE

Special Tools

EN-46101 Spark Plug Tube Seal Guide

For equivalent regional tools, refer to **Special Tools** .

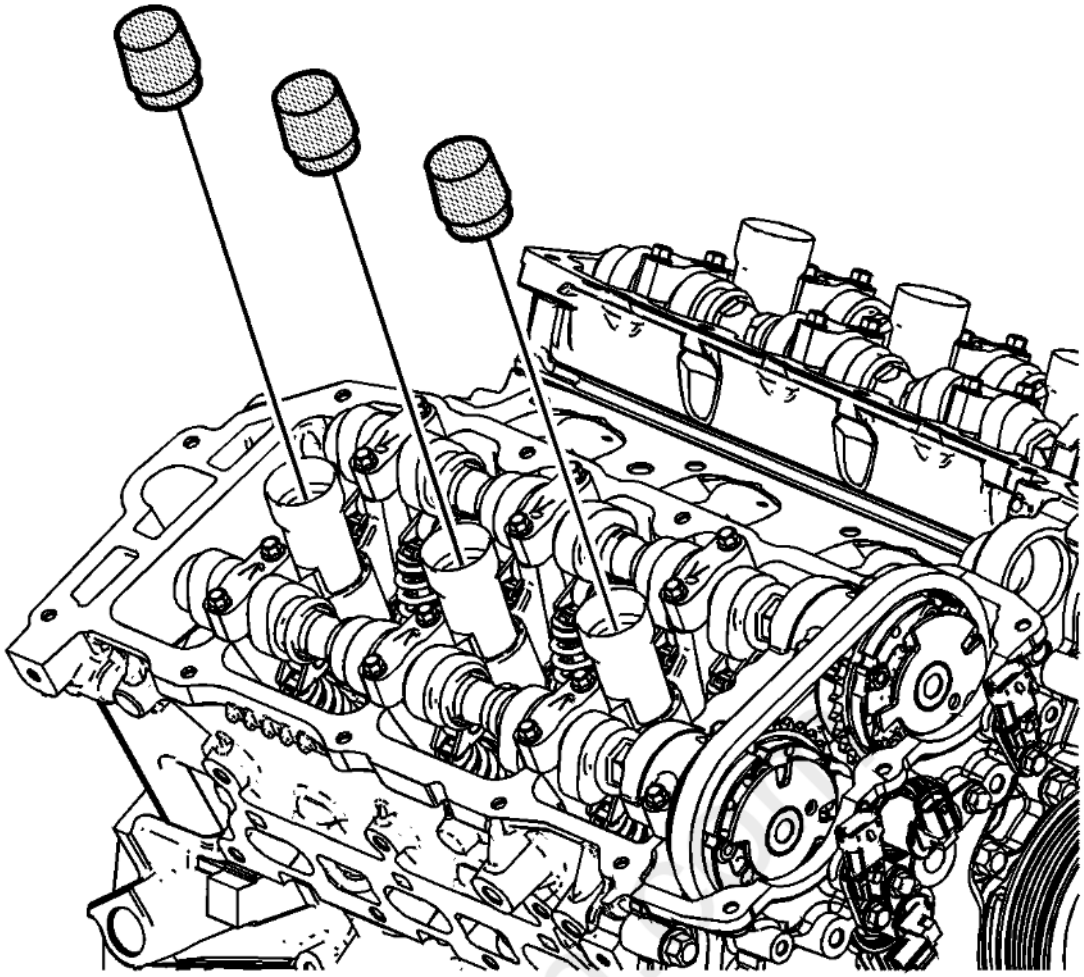

Fig. 541: Identifying Spark Plug Tubes
Courtesy of GENERAL MOTORS COMPANY

1. Install the **EN-46101** guide onto the spark plug tubes of the right cylinder head.

cardiagn

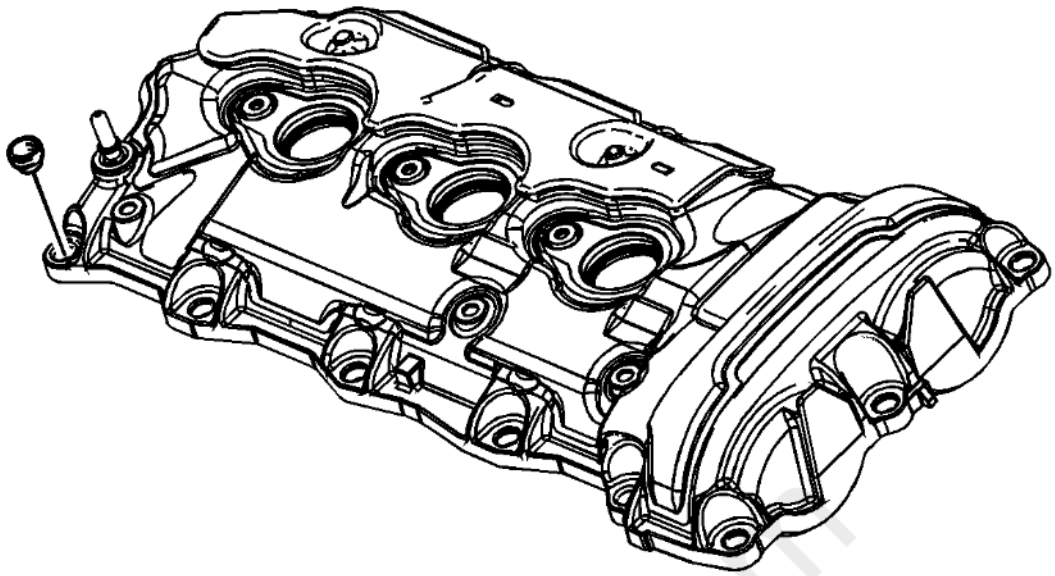

Fig. 542: View Of Right Camshaft Cover Bolt Grommets
Courtesy of GENERAL MOTORS COMPANY

2. Install the NEW camshaft cover bolt grommets prior to installing the camshaft cover bolts.
3. Wipe the camshaft cover sealing surface on the right cylinder head with a clean, lint-free cloth.

cardiagn.com

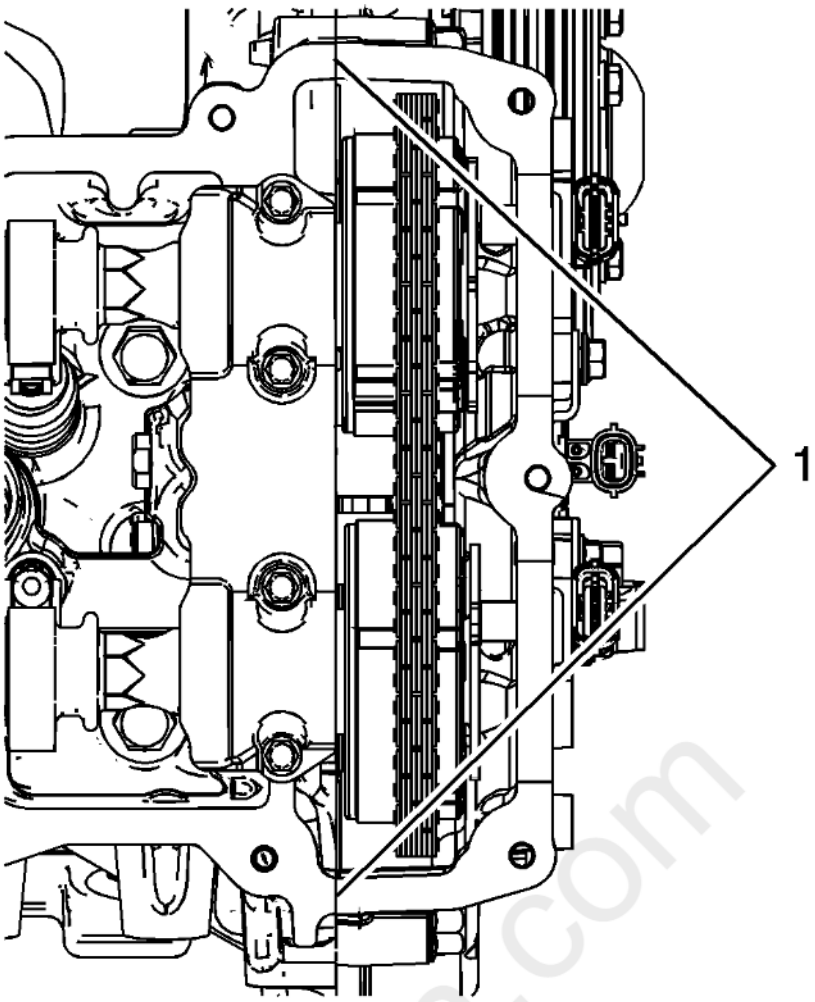

Fig. 543: Identifying Engine Front Cover Split Lines
Courtesy of GENERAL MOTORS COMPANY

4. Ensure proper use of room temperature vulcanizing (RTV) sealant. **Use of Room Temperature Vulcanizing (RTV) and Anaerobic Sealant**
5. Place a bead 8 mm (0.3150 in) in diameter by 4 mm (0.1575 in) in height of RTV sealant, on the engine front cover split lines (1). Refer to **Adhesives, Fluids, Lubricants, and Sealers** .

carmanual.com

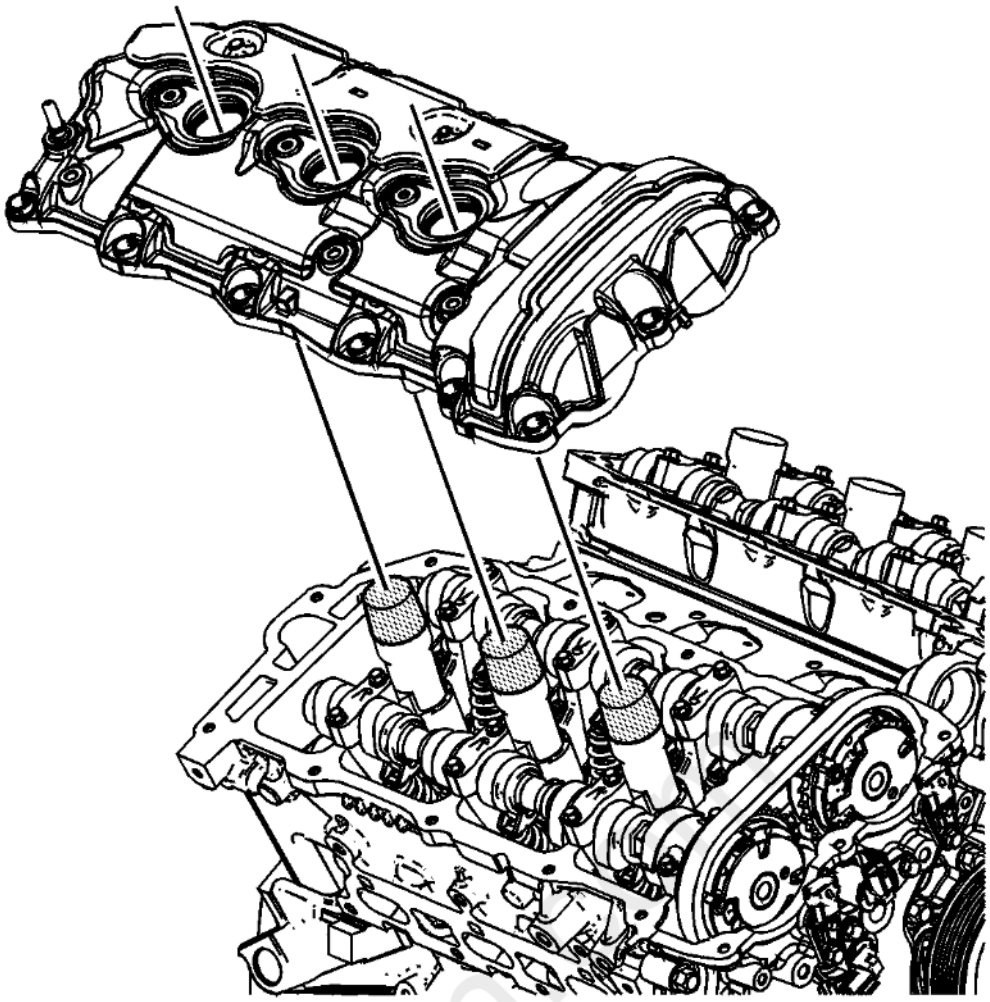

Fig. 544: View Of Right Camshaft Cover
Courtesy of GENERAL MOTORS COMPANY

6. Place the right camshaft cover into position onto the right cylinder head.

cardiagn

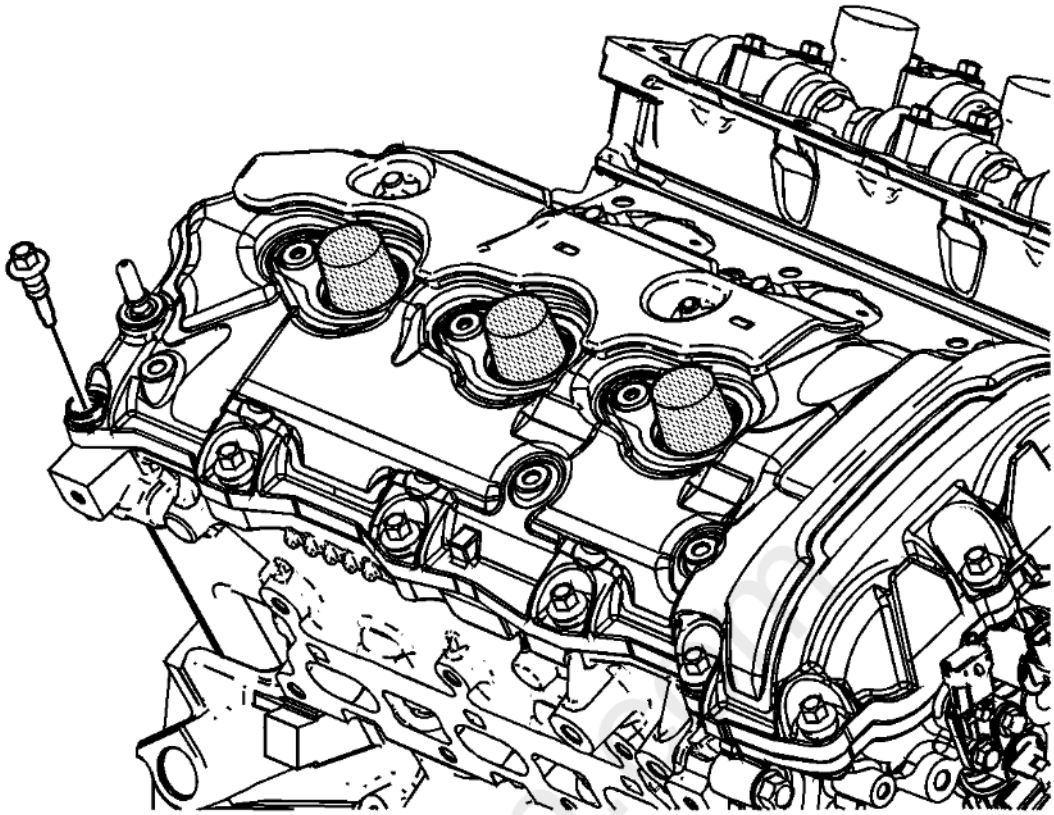

Fig. 545: Locating Right Camshaft Cover Bolts
Courtesy of GENERAL MOTORS COMPANY

7. Loosely install the right camshaft cover bolts.

cardiagn.com

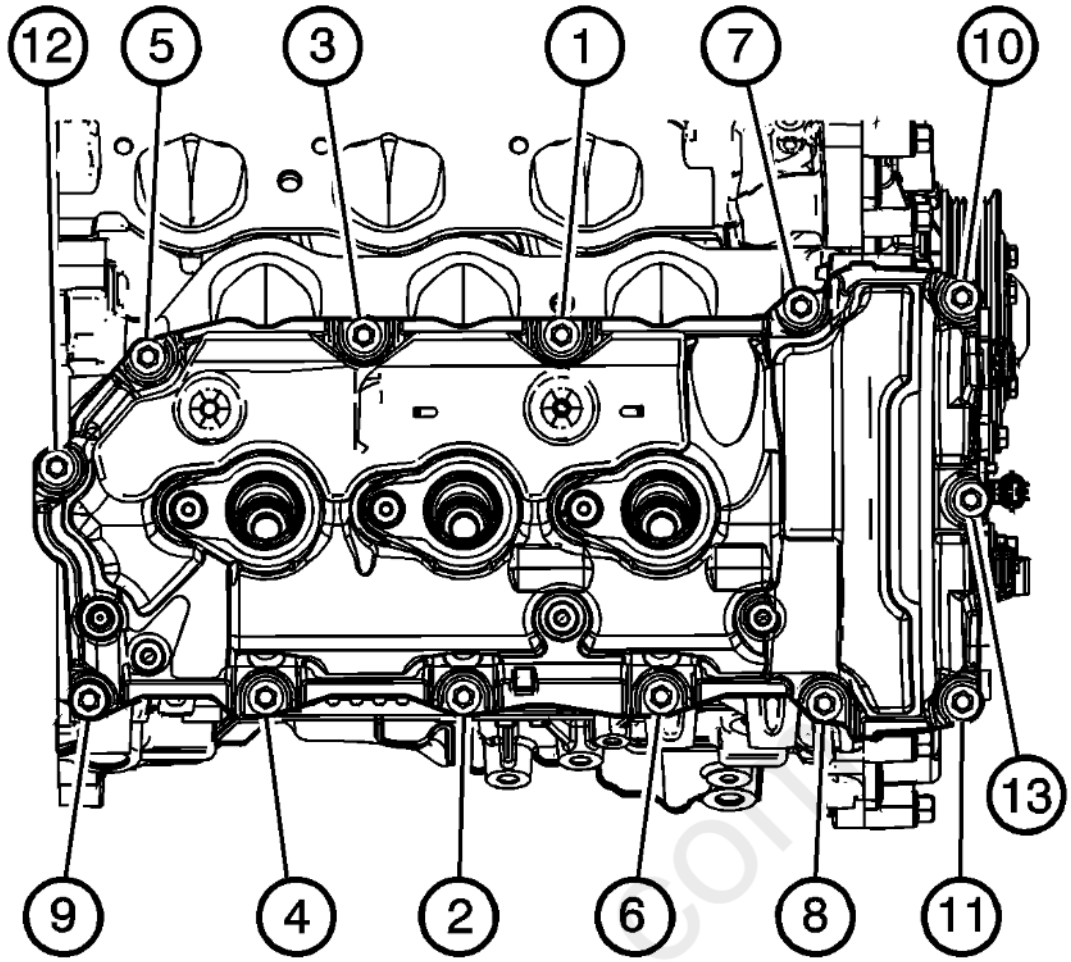

Fig. 546: Identifying Right Camshaft Cover Bolt Tightening Sequence
Courtesy of GENERAL MOTORS COMPANY

CAUTION: Refer to Fastener Caution .

8. Tighten the right camshaft cover bolts in the sequence shown.
    1. Tighten the right camshaft cover bolts to 10 N.m (89 lb in).
    2. Tighten the right camshaft cover bolts a second pass to 10 N.m (89 lb in).

Cardiagn.com

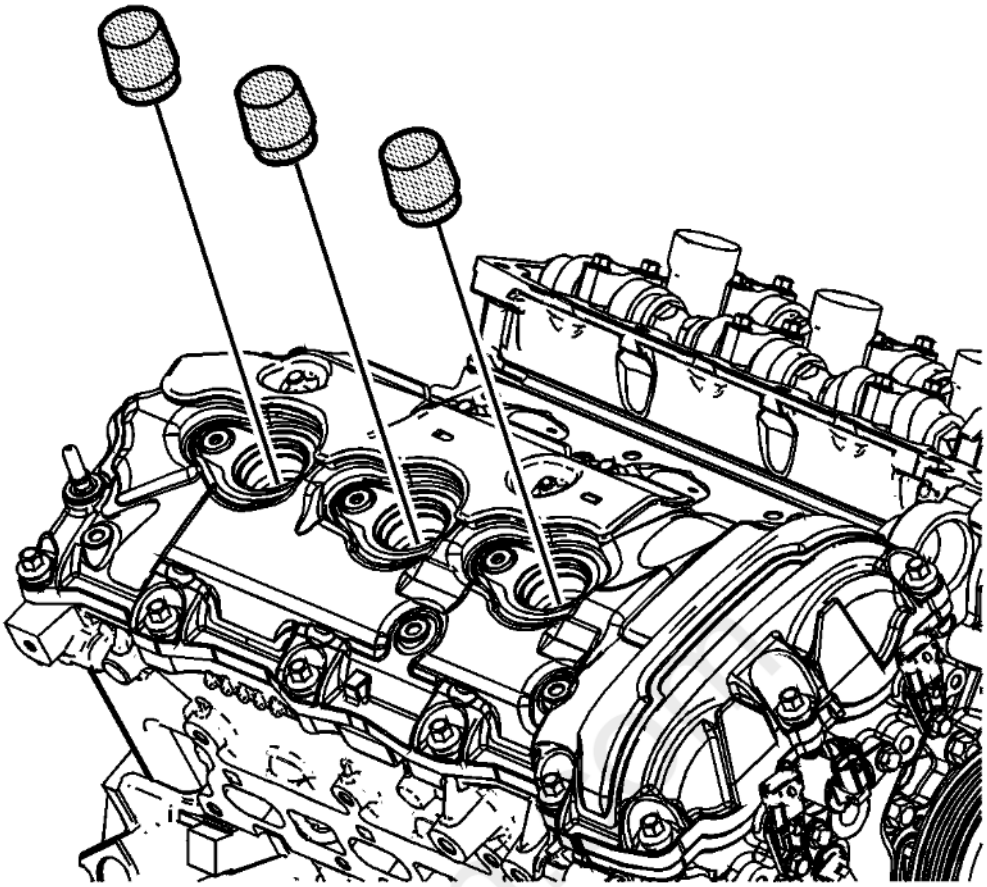

Fig. 547: View Of Spark Plug Tubes
Courtesy of GENERAL MOTORS COMPANY

9. Remove the **EN-46101** guide from the spark plug tubes of the right cylinder head.

cardiagn

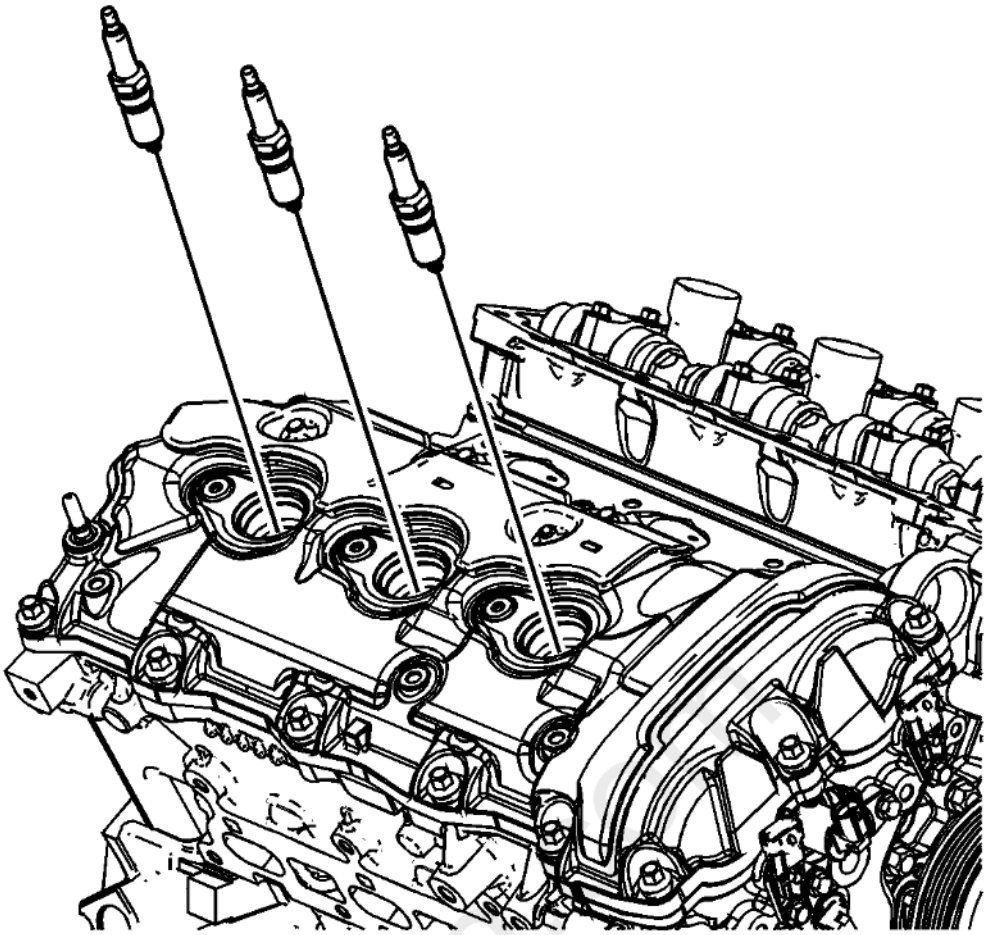

Fig. 548: View Of Spark Plugs
Courtesy of GENERAL MOTORS COMPANY

10. Install the NEW spark plugs into the right cylinder head and tighten to 18 N.m (13 lb ft).

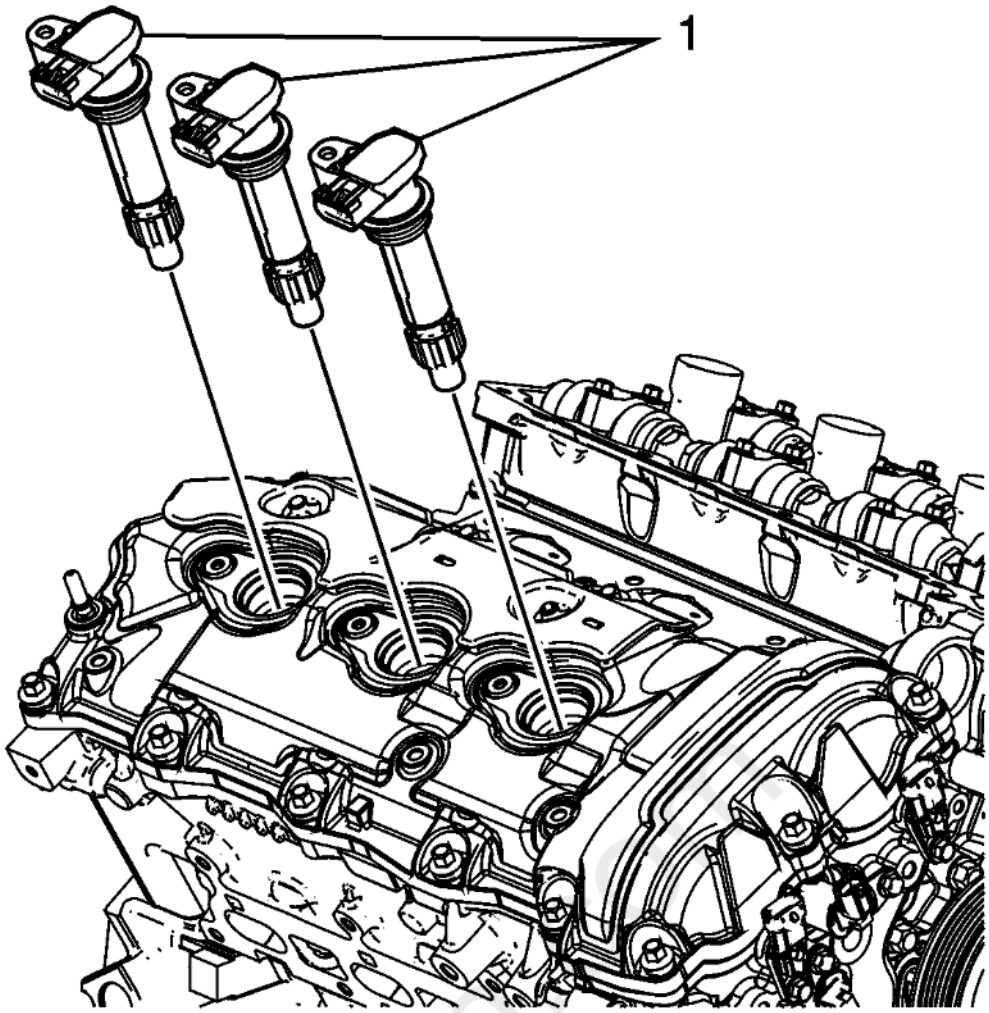

Fig. 549: View Of Ignition Coils
Courtesy of GENERAL MOTORS COMPANY

11. Inspect the inside of the ignition coil rubber boot for a thin, even coat of grease. If there is no grease present or additional grease is necessary, complete the following procedure:
    1. Apply a thin coating of dielectric grease evenly to the inside of the ignition coil rubber boot, up to a depth of 15 mm from the end of the boot. Refer to **Adhesives, Fluids, Lubricants, and Sealers** .
    2. Remove any excess grease from around the end of the boot, and ensure there is not an excessive amount within the boot.
12. Install the ignition coils.

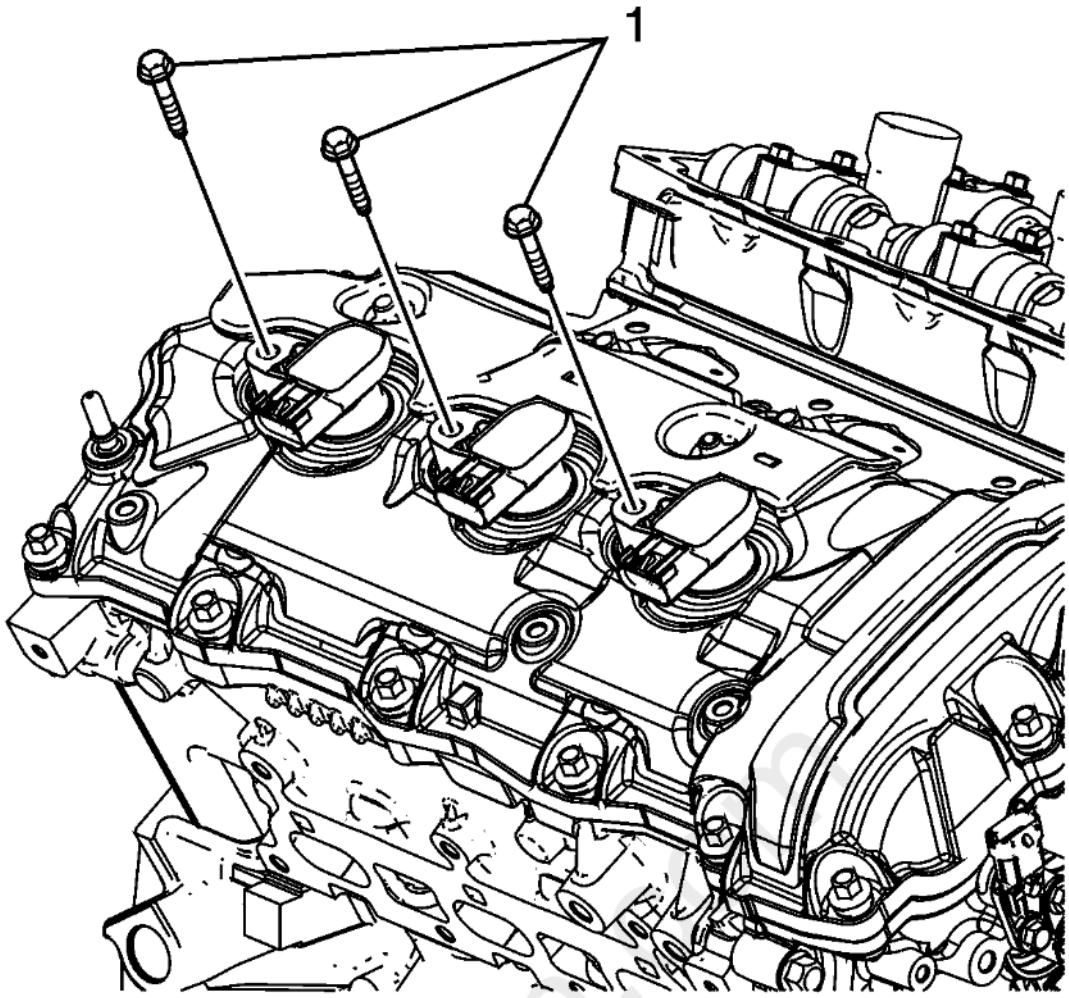

Fig. 550: Identifying Ignition Coil Bolts
Courtesy of GENERAL MOTORS COMPANY

13. Install the ignition coil bolts and tighten to 10 N.m (89 lb in).

INTAKE MANIFOLD INSTALLATION

cardiagn.com

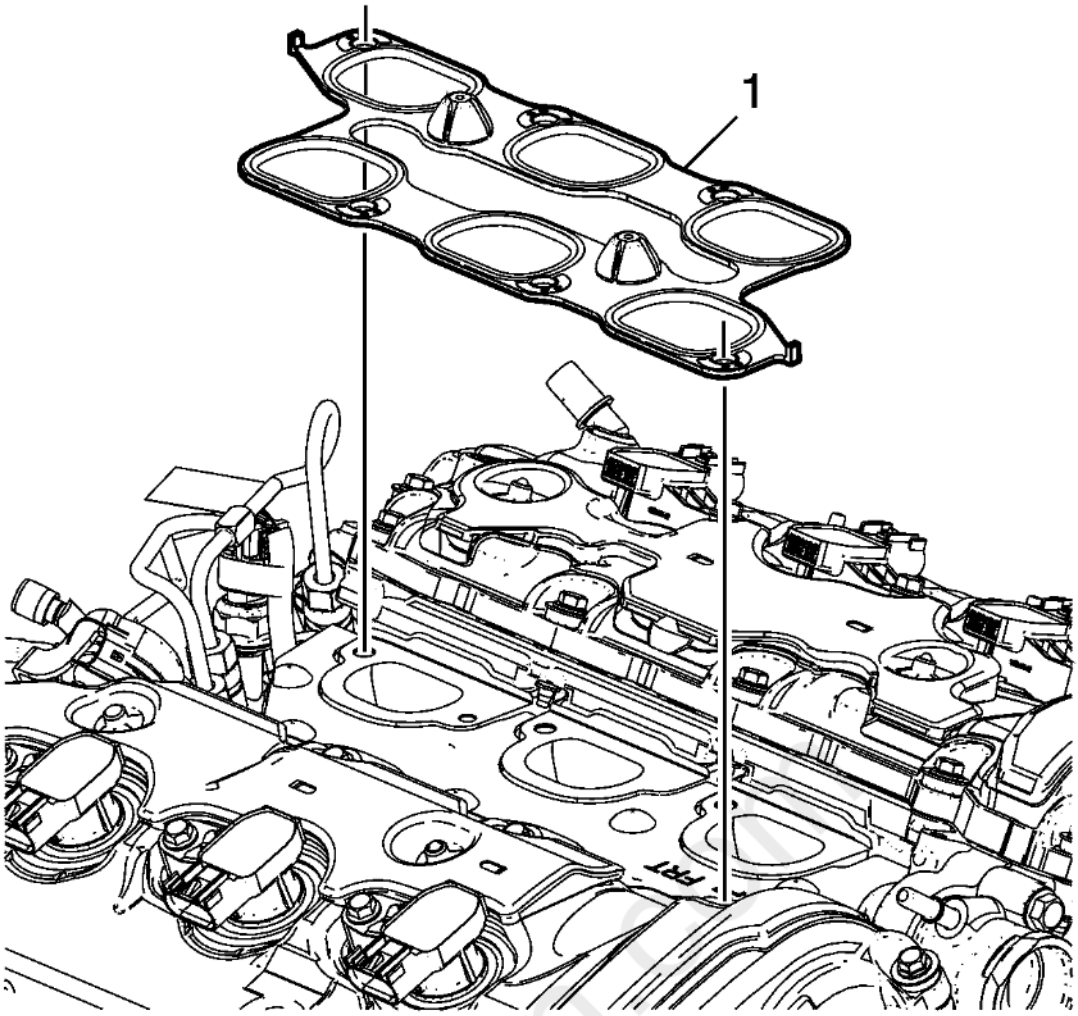

Fig. 551: Intake Manifold Gasket
Courtesy of GENERAL MOTORS COMPANY

1. Install the NEW intake manifold gasket (1).

cardiagn

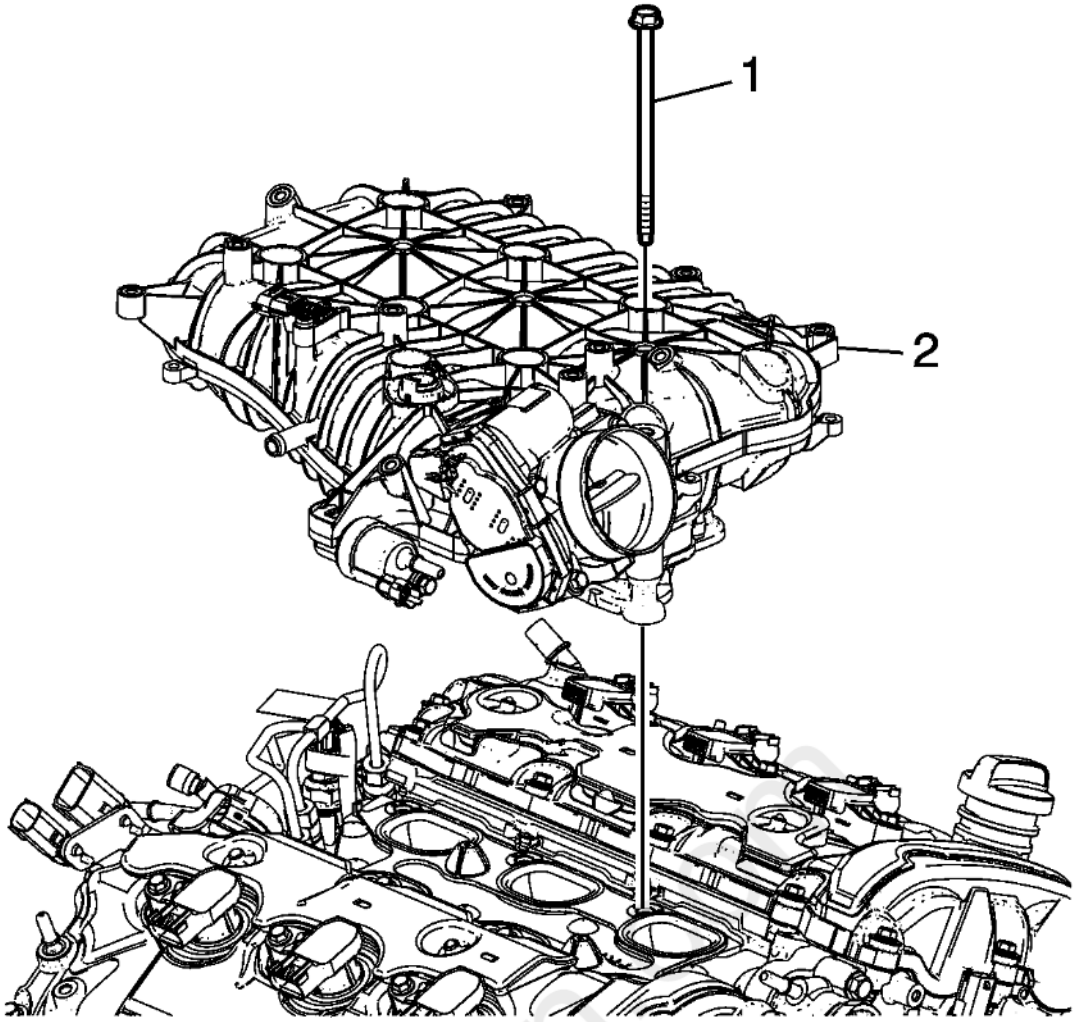

Fig. 552: Intake Manifold Assembly
Courtesy of GENERAL MOTORS COMPANY

2. Install the intake manifold assembly (2).
3. Install the intake manifold bolts (1).

cardiagn.com

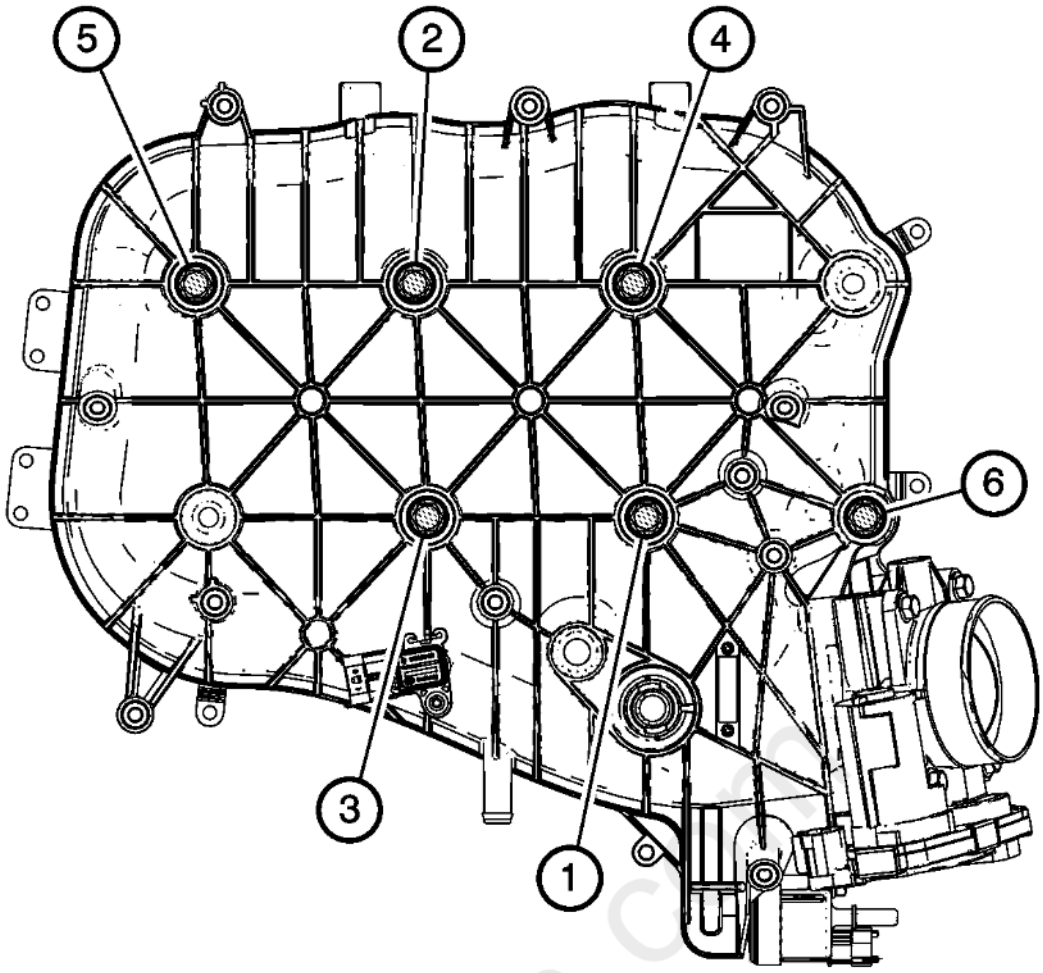

Fig. 553: Intake Manifold Bolt Tightening Sequence
Courtesy of GENERAL MOTORS COMPANY

CAUTION: **Refer to Fastener Caution .**

4. Tighten the intake manifold bolts in the sequence shown.
5. Tighten the intake manifold bolts in sequence to 25 N.m (18 lb ft).
6. Tighten the intake manifold bolts a second pass in sequence to 25 N.m (18 lb ft).

carqiagn.com

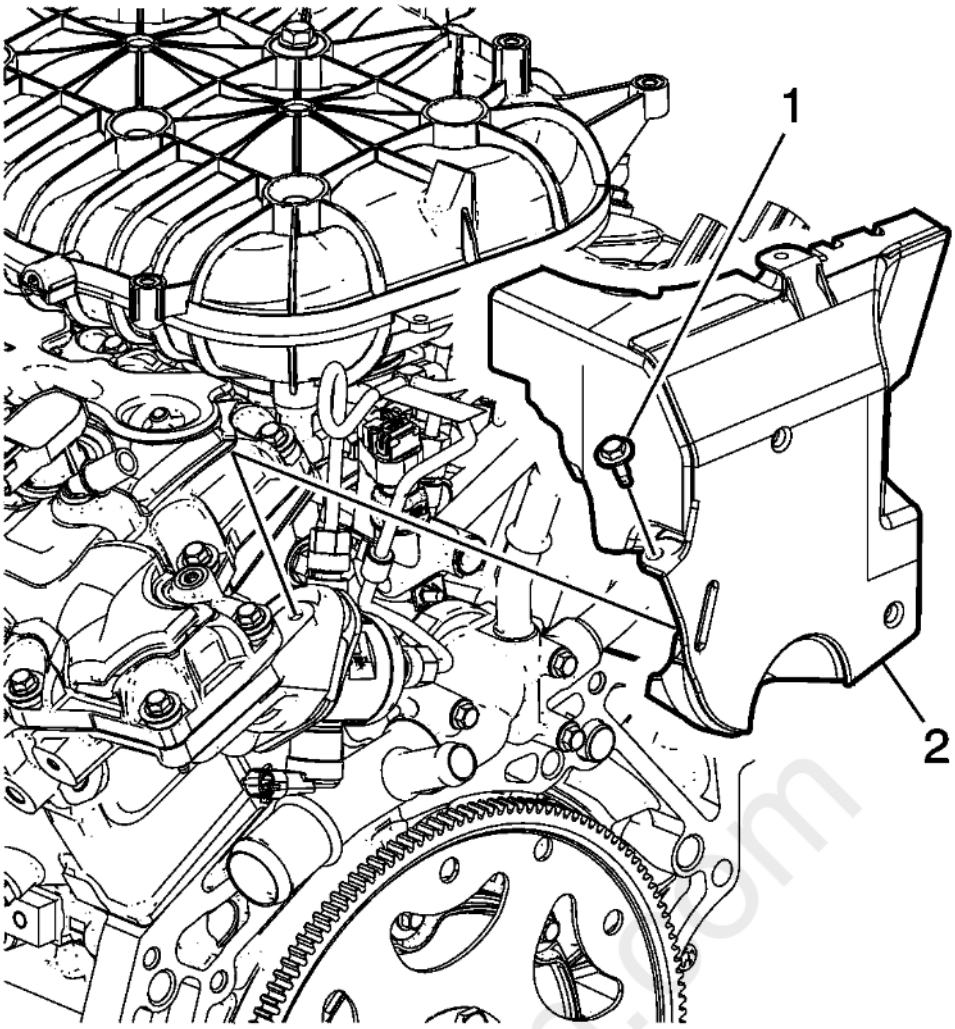

Fig. 554: View Of Fuel Pump Cover & Bolt
Courtesy of GENERAL MOTORS COMPANY

7. Install the engine rear noise shield (2).
8. Install the engine rear noise shield bolt (1) and tighten to 10 N.m (89 lb in).

cardiagn.com

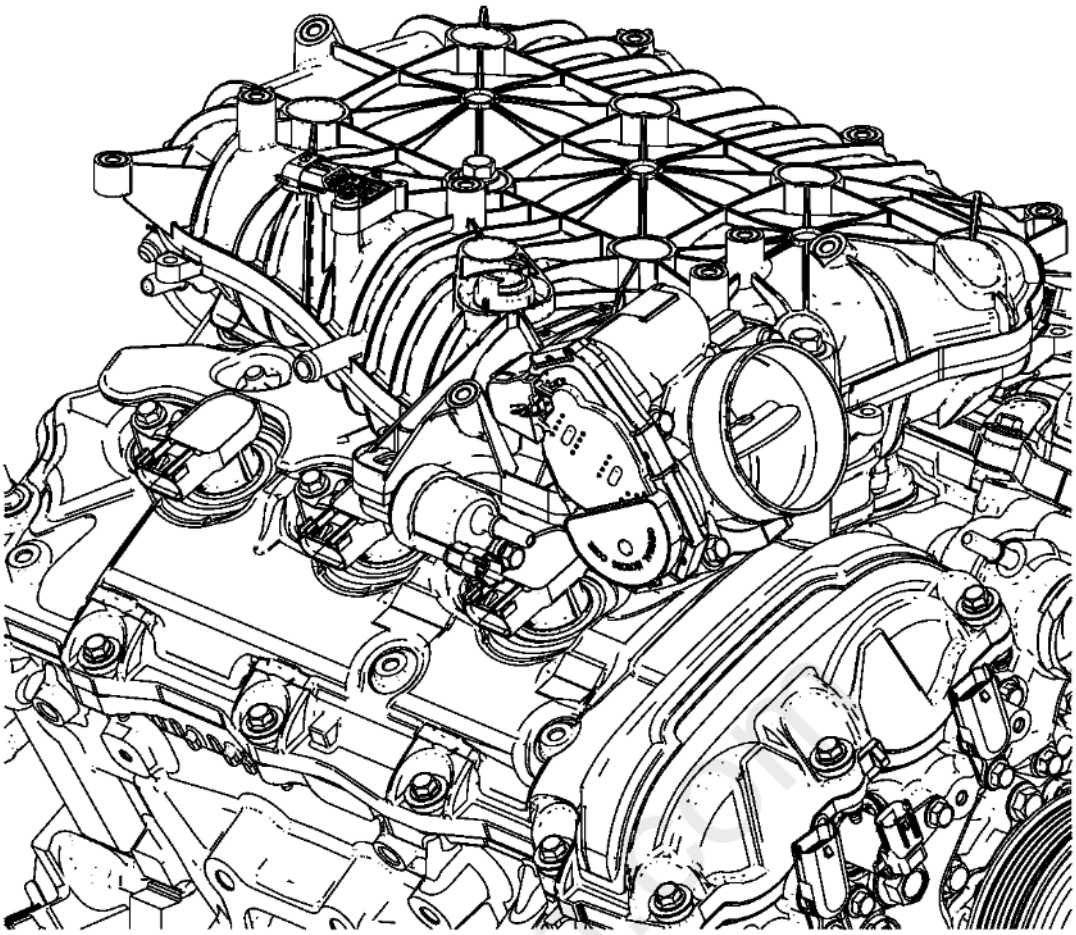

Fig. 555: Upper Intake Manifold And EVAP Solenoid
Courtesy of GENERAL MOTORS COMPANY

9. Connect the evaporative (EVAP) hose to the upper intake manifold and EVAP solenoid.

cardiagn.com

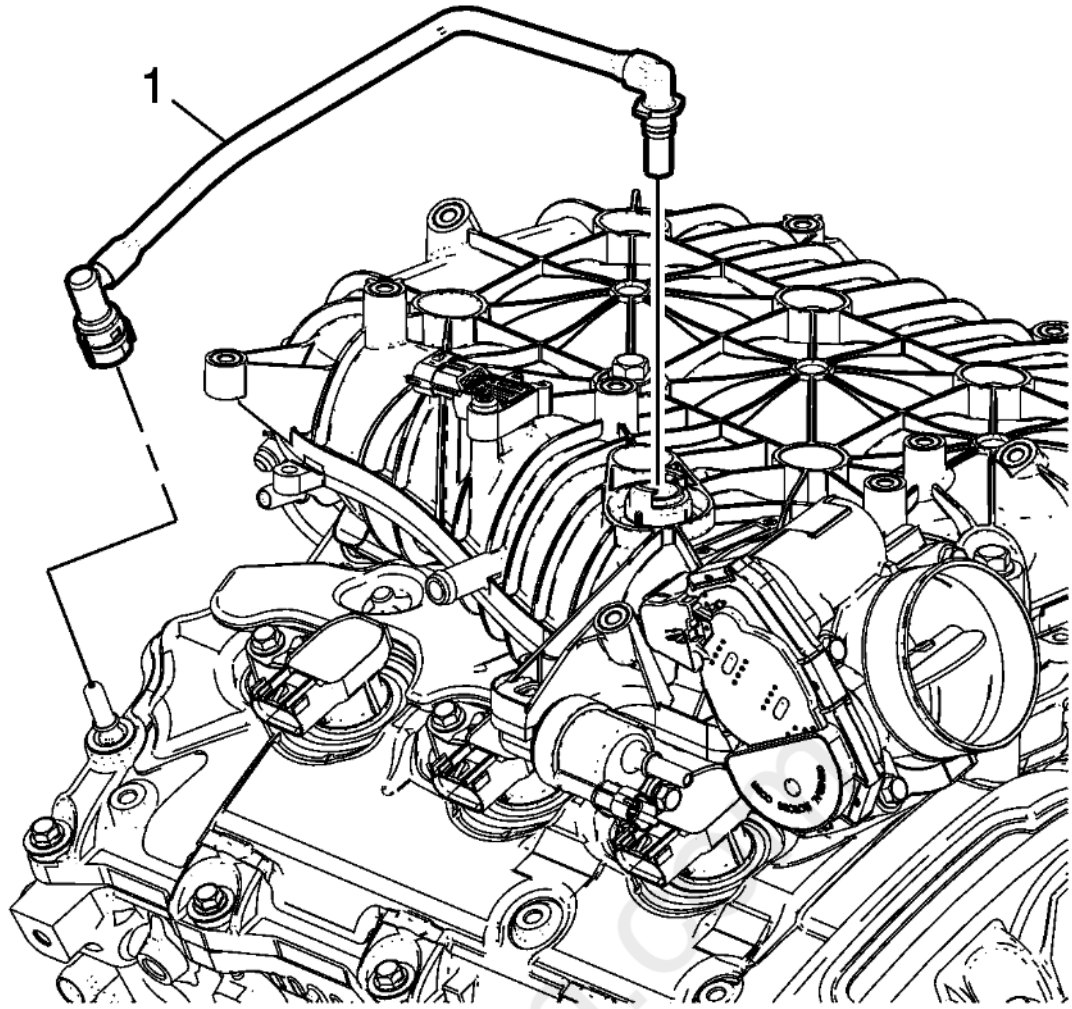

Fig. 556: View Of Positive Crankcase Ventilation (PCV) Tube Assembly
Courtesy of GENERAL MOTORS COMPANY

10. Connect the positive crankcase ventilation (PCV) tube assembly (1) to the upper intake manifold and the right camshaft cover.

AUTOMATIC TRANSMISSION FLEX PLATE INSTALLATION

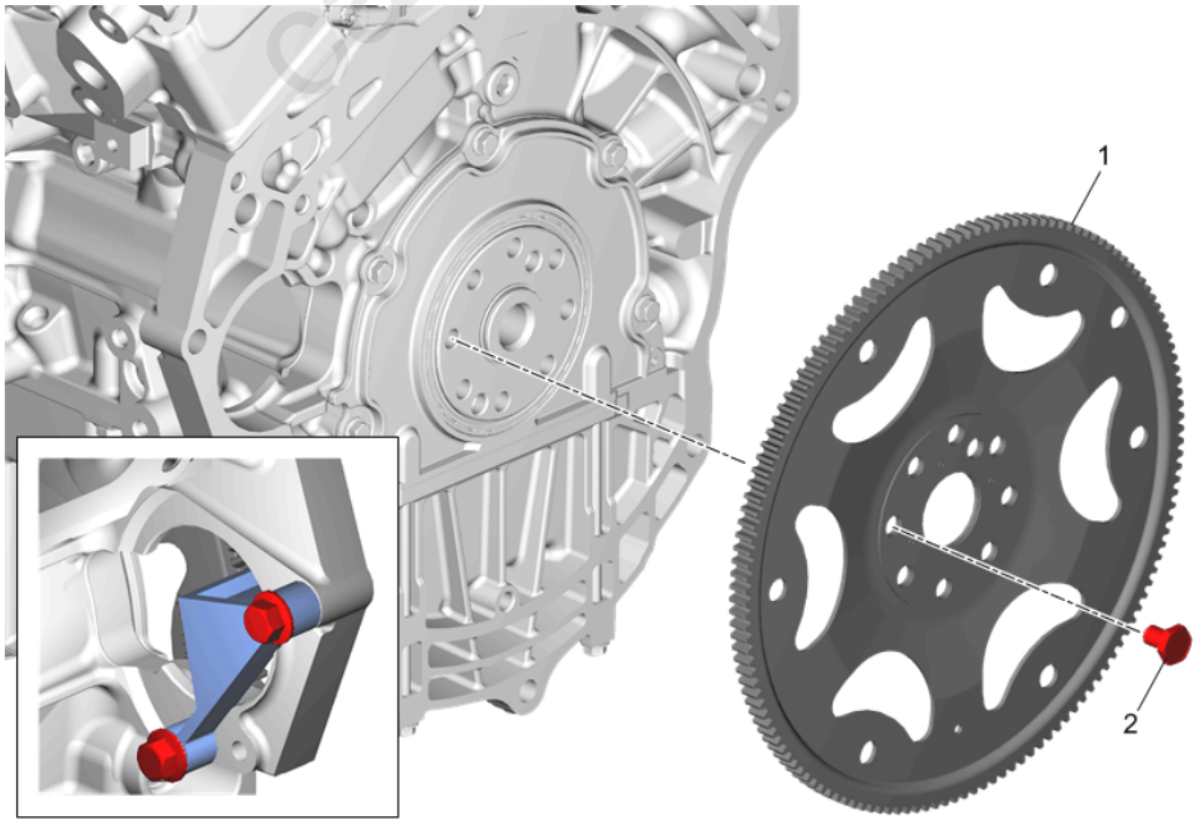

Fig. 557: Automatic Transmission Flex Plate
Courtesy of GENERAL MOTORS COMPANY

Callout	Component Name
1	Automatic Transmission Flex Plate
2	Automatic Transmission Flex Plate Bolt **CAUTION:** **This vehicle is equipped with torque-to-yield or single use fasteners. Install a NEW torque-to-yield or single use fastener when installing this component. Failure to replace the torque-to-yield or single use fastener could cause damage to the vehicle or component.** **CAUTION:** **Refer to Fastener Caution .** **Procedure** 1. Install 2 NEW bolts (2) in location at the top and bottom of the flex plate bolt pattern allowing the flex plate (2) to hang in position. 2. Install the **EN-46106** Flywheel Holding Tool through the starter mounting hole. 3. Install the remaining NEW flex plate bolts and tighten to specifications. 4. Remove the **EN-46106** Flywheel Holding Tool through the starter mounting hole. **Tighten** 1. First Pass: 30 N.m (22 lb ft) 2. Final Pass: 45 degree susing the **EN - 45059** Angle Meter **Special Tools** • **EN-46106** Flywheel Holding Tool • **EN-45059** Angle Meter Equivalent regional tools:**Special Tools**

CRANKSHAFT BALANCER INSTALLATION

Special Tools

- **EN 41998-B** Crankshaft Balancer Installer
- **EN 45059** Angle Meter
- **EN 46106** Engine Flywheel Holding Tool

For equivalent regional tools, refer to **Special Tools** .

cardiagn.com

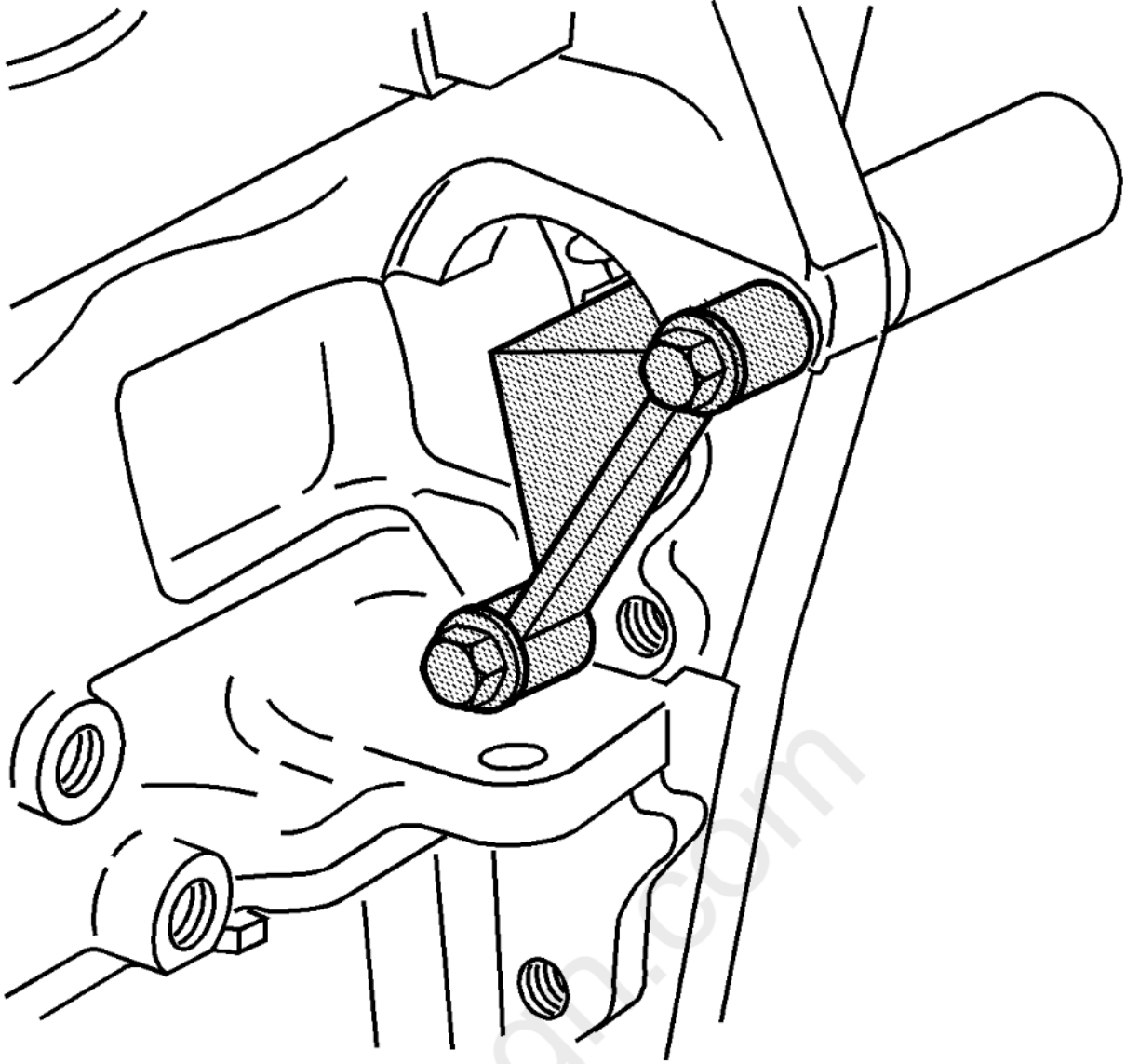

Fig. 558: Flywheel Holding Fixture
Courtesy of GENERAL MOTORS COMPANY

1. The **EN 46106** tool must be installed onto the flywheel.
2. Use the **EN 41998-B** installer, nut, bearing and washer to install the crankshaft balancer.

carmanuals.com

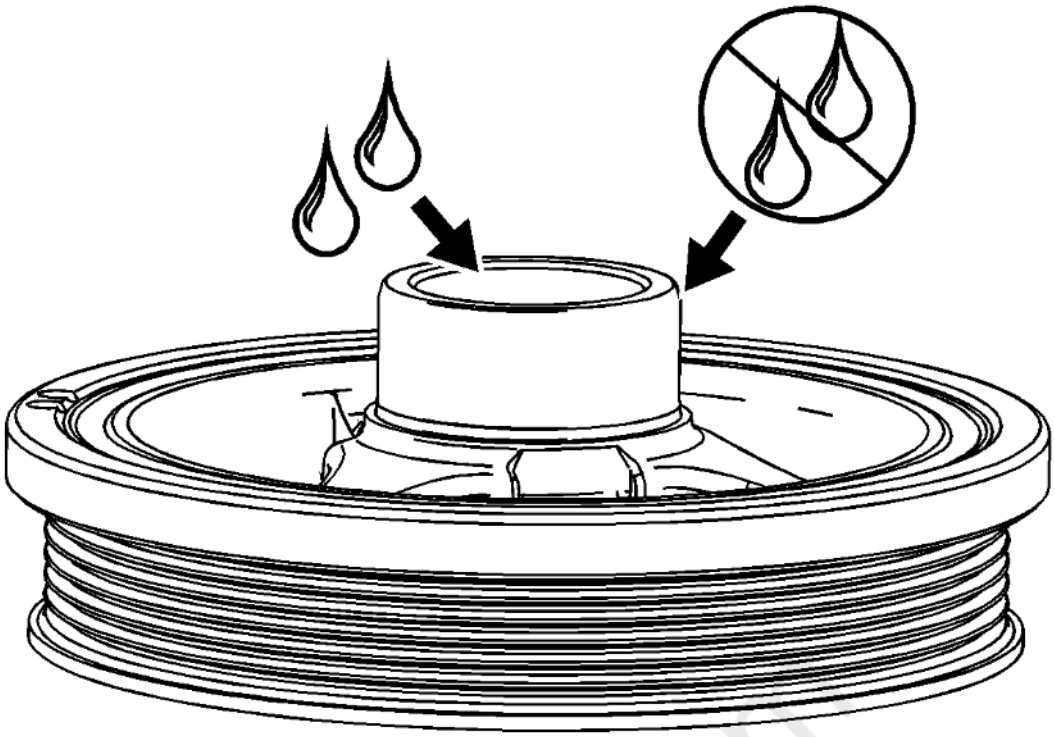

Fig. 559: Identifying Lubrication & Non-Lubrication Areas On Crankshaft Balancer
Courtesy of GENERAL MOTORS COMPANY

NOTE: **Do not lubricate the crankshaft front oil seal or crankshaft balancer sealing surfaces. The crankshaft balancer is installed into a dry seal.**

3. Apply lubricant to the inside of the crankshaft balancer hub bore.

carduagn.com

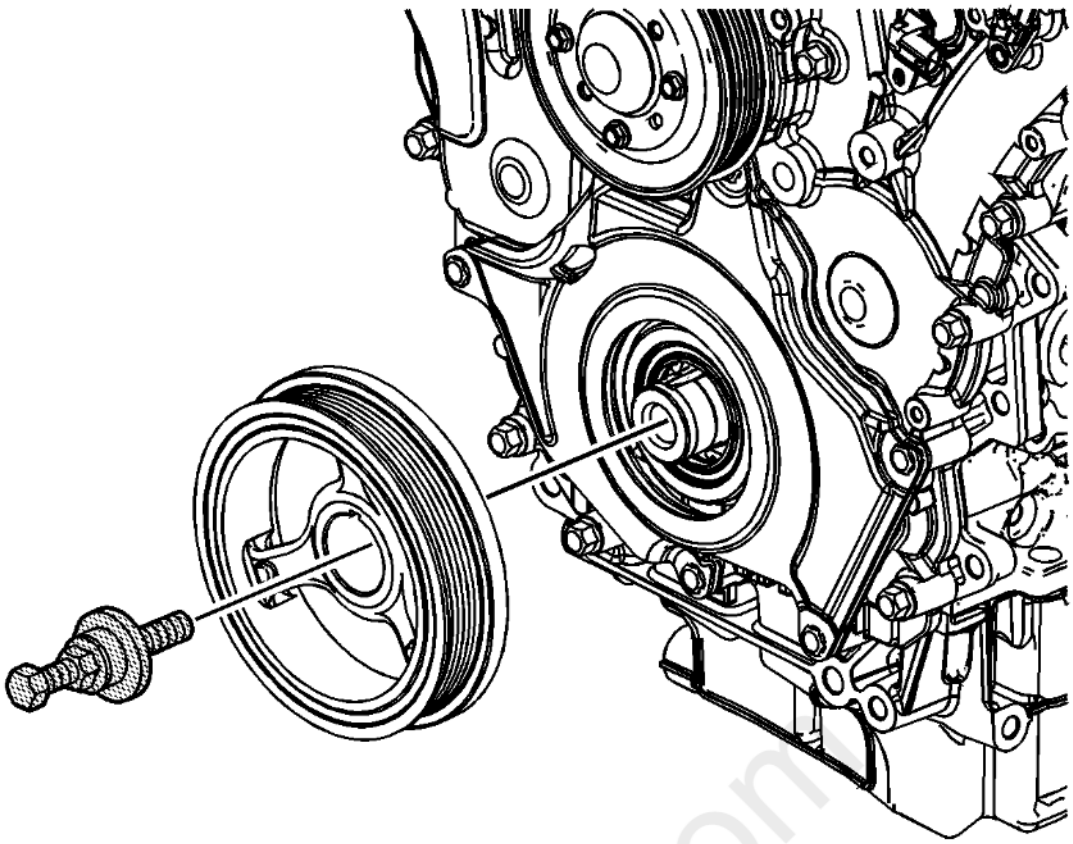

Fig. 560: View Of Crankshaft Balancer & Bolt
Courtesy of GENERAL MOTORS COMPANY

4. Place the crankshaft balancer in position on the crankshaft.
5. Thread the **EN 41998-B** installer in the crankshaft. Ensure you engage at least 10 threads of the **EN 41998-B** installer before pressing the crankshaft balancer in place.
6. Push the crankshaft balancer into position by tightening the nut on the **J 41998-B** installer until the large washer bottoms out on the crankshaft end.
7. Remove the **EN 41998-B** installer.

carmagn.com

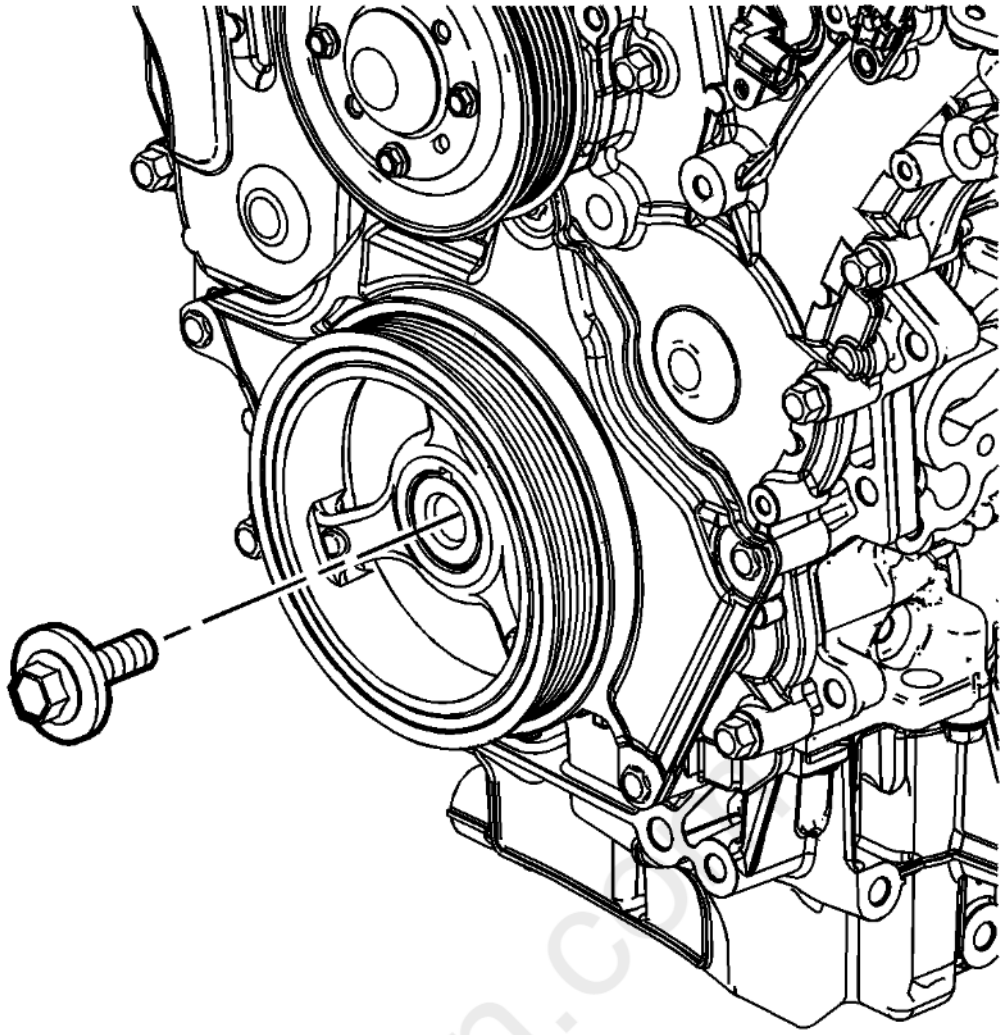

Fig. 561: View Of Crankshaft Balancer Bolt
Courtesy of GENERAL MOTORS COMPANY

CAUTION: **This vehicle is equipped with torque-to-yield or single use fasteners. Install a NEW torque-to-yield or single use fastener when installing this component. Failure to replace the torque-to-yield or single use fastener could cause damage to the vehicle or component.**

8. Install the NEW crankshaft balancer bolt.

CAUTION: **Refer to Fastener Caution .**

9. Tighten the crankshaft balancer bolt.
    1. Tighten the crankshaft balancer bolt to 100 N.m (74 lb ft).
    2. Tighten the crankshaft balancer bolt an additional 150 degreesusing the **EN 45059** meter.

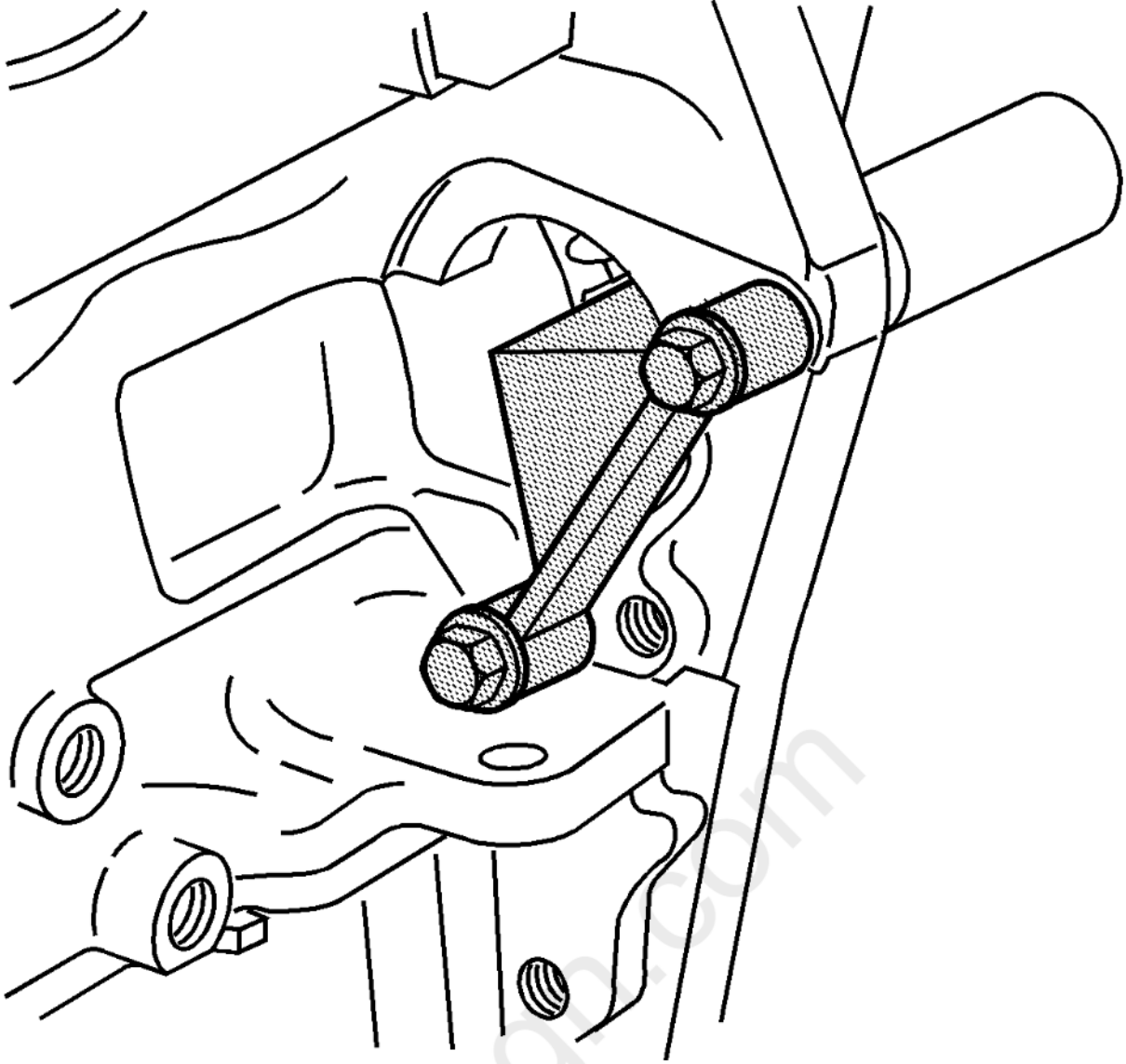

Fig. 562: Flywheel Holding Fixture
Courtesy of GENERAL MOTORS COMPANY

10. Remove the **EN 46106** tool.

OIL FILTER ADAPTER INSTALLATION

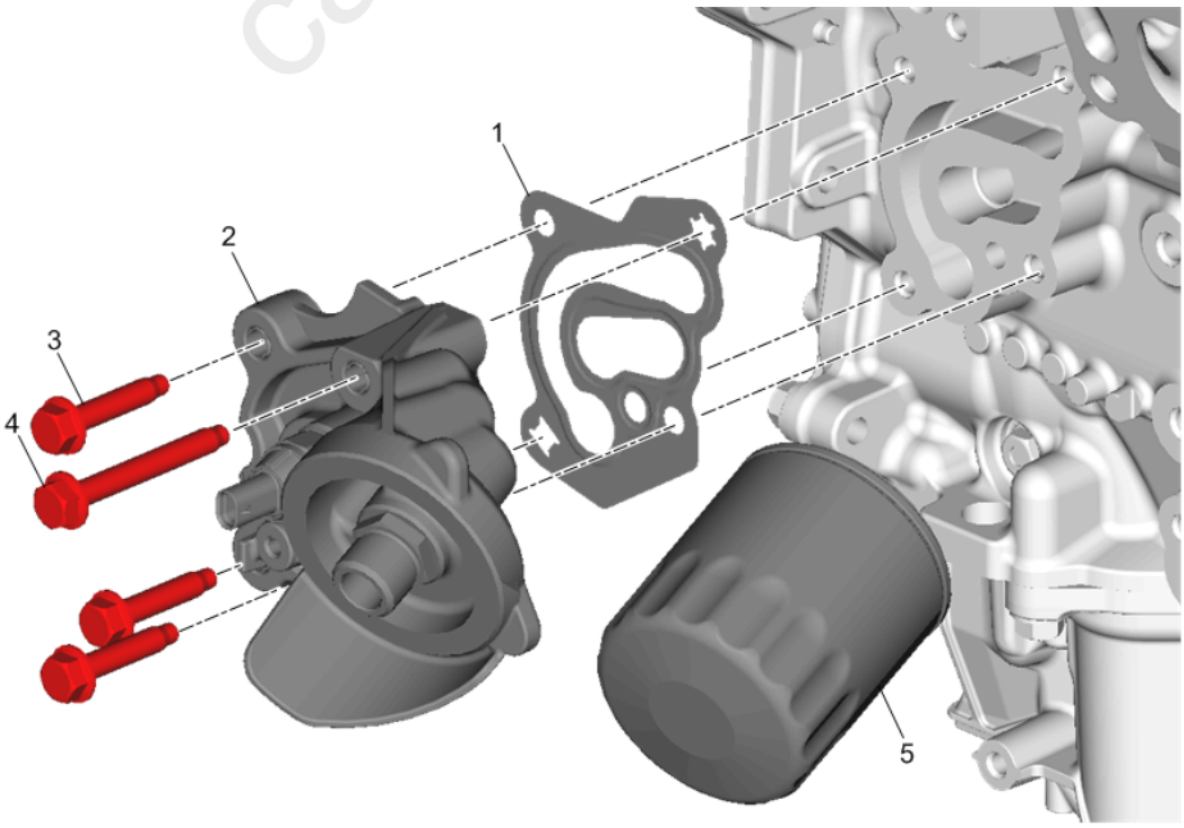

Fig. 563: Oil Filter Adapter Components
Courtesy of GENERAL MOTORS COMPANY

Callout	Component Name
1	Oil Filter Adapter Gasket **NOTE:** **Install a NEW gasket.**
2	Oil Filter Adapter
3	Oil Filter Adapter Bolt (Qty: 3) **CAUTION:** **Refer to Fastener Caution .** **Tighten** 23 N.m (17 lb ft)
4	Oil Filter Adapter Bolt **Tighten** 23 N.m (17 lb ft)
5	Oil Filter **NOTE:** **Install a NEW oil filter.** **Tighten** 3/4 to 1 full turn after gasket makes contact with the sealing surface on the filter mounting flange

OIL LEVEL INDICATOR AND TUBE INSTALLATION

cardiagn.com

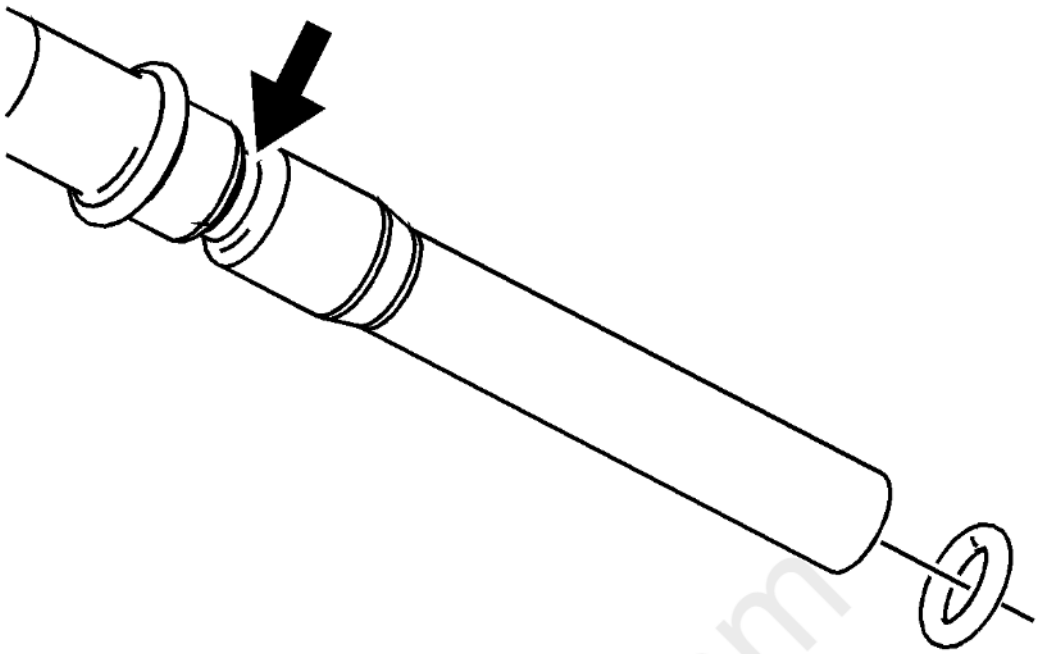

Fig. 564: View Of Oil Level Indicator Tube O-Ring
Courtesy of GENERAL MOTORS COMPANY

1. Install a NEW O-ring on the oil level indicator tube.

cardiagn.com

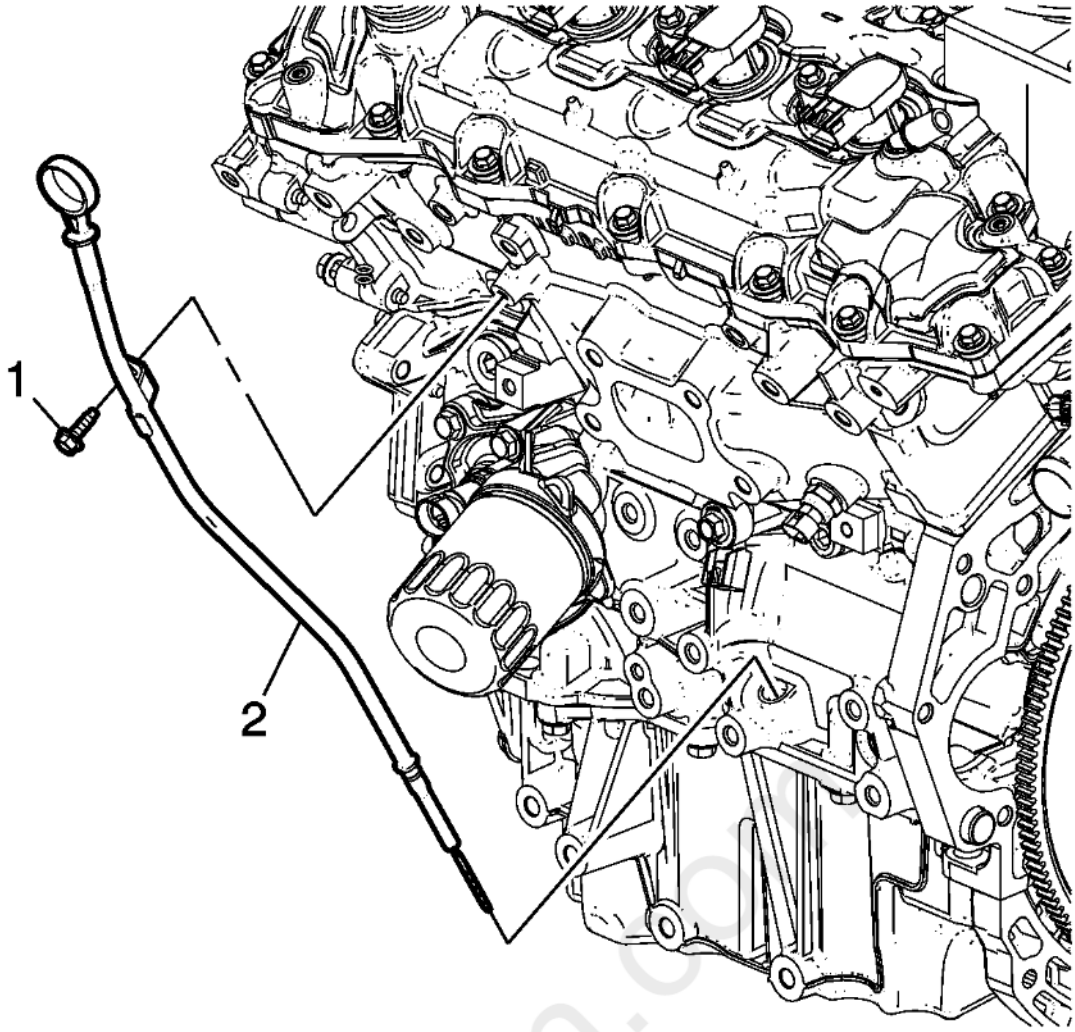

Fig. 565: Oil Level Indicator Tube Bracket Bolt
Courtesy of GENERAL MOTORS COMPANY

2. Install the oil level indicator and tube (2) by sliding the tube down through the lower crankcase hole.

CAUTION: Refer to Fastener Caution .

3. Install the oil level indicator tube bracket bolt (1) and tighten to 10 N.m (89 lb in).

ENGINE COOLANT THERMOSTAT HOUSING INSTALLATION

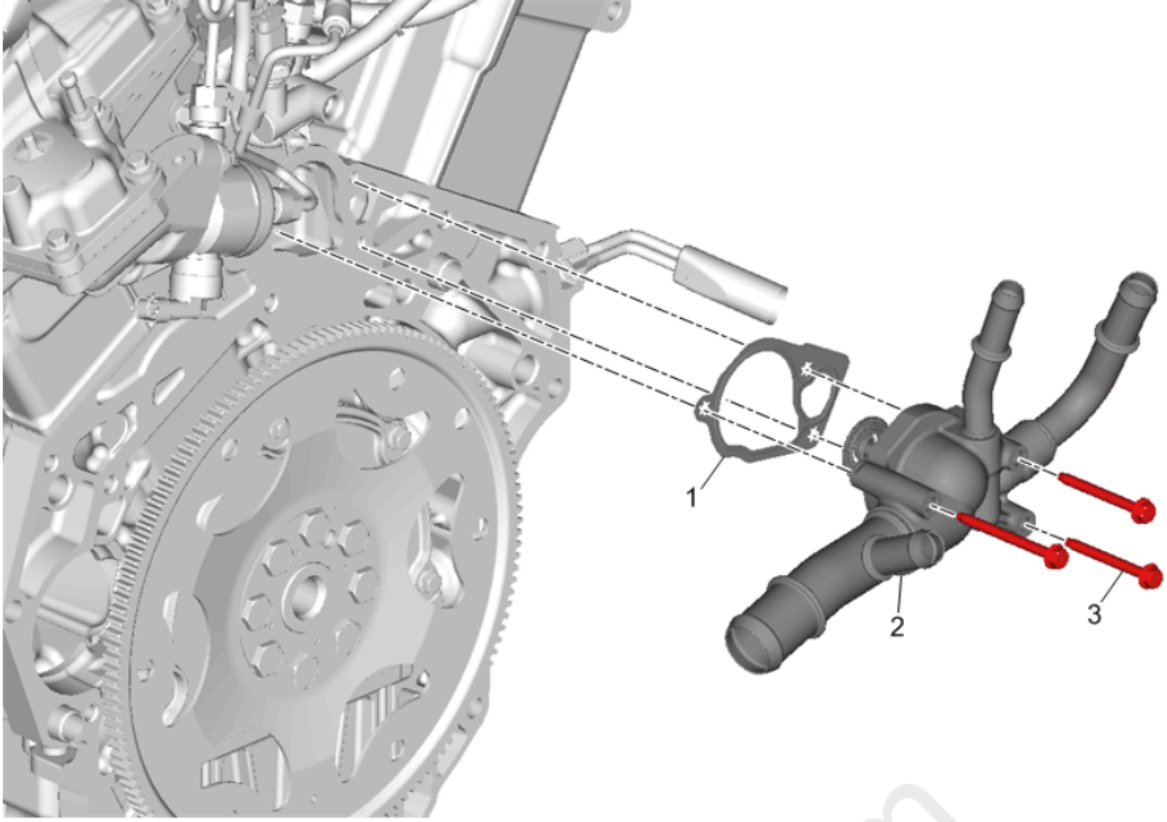

Fig. 566: Engine Coolant Thermostat Housing Components
Courtesy of GENERAL MOTORS COMPANY

Callout	Component Name
1	Engine Coolant Thermostat Housing Gasket **NOTE:** **Install a NEW gasket.**
2	Engine Coolant Thermostat Housing
3	Engine Coolant Thermostat Housing Bolt (Qty: 3) **CAUTION:** **Refer to Fastener Caution .** **Tighten** 10 N.m (89 lb in)

WATER OUTLET INSTALLATION

cardiagn.com

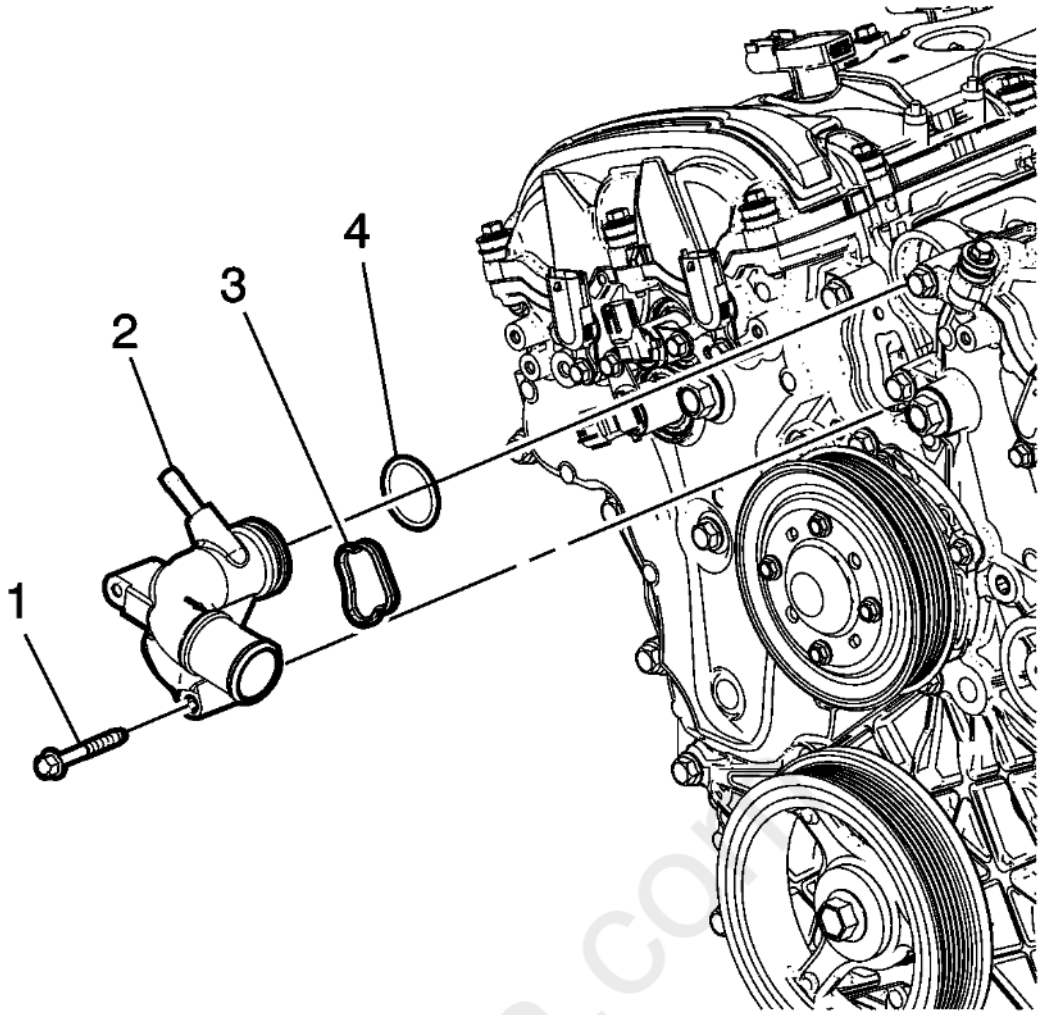

Fig. 567: Water Outlet, Seals And Bolts
Courtesy of GENERAL MOTORS COMPANY

1. Install the NEW water outlet seals (3) and (4).
2. Install the water outlet (2).

CAUTION: **Refer to Fastener Caution .**

3. Install the water outlet bolts (1) and tighten to 10 N.m (89 lb in).

DRIVE BELT TENSIONER INSTALLATION

cardiagn.com

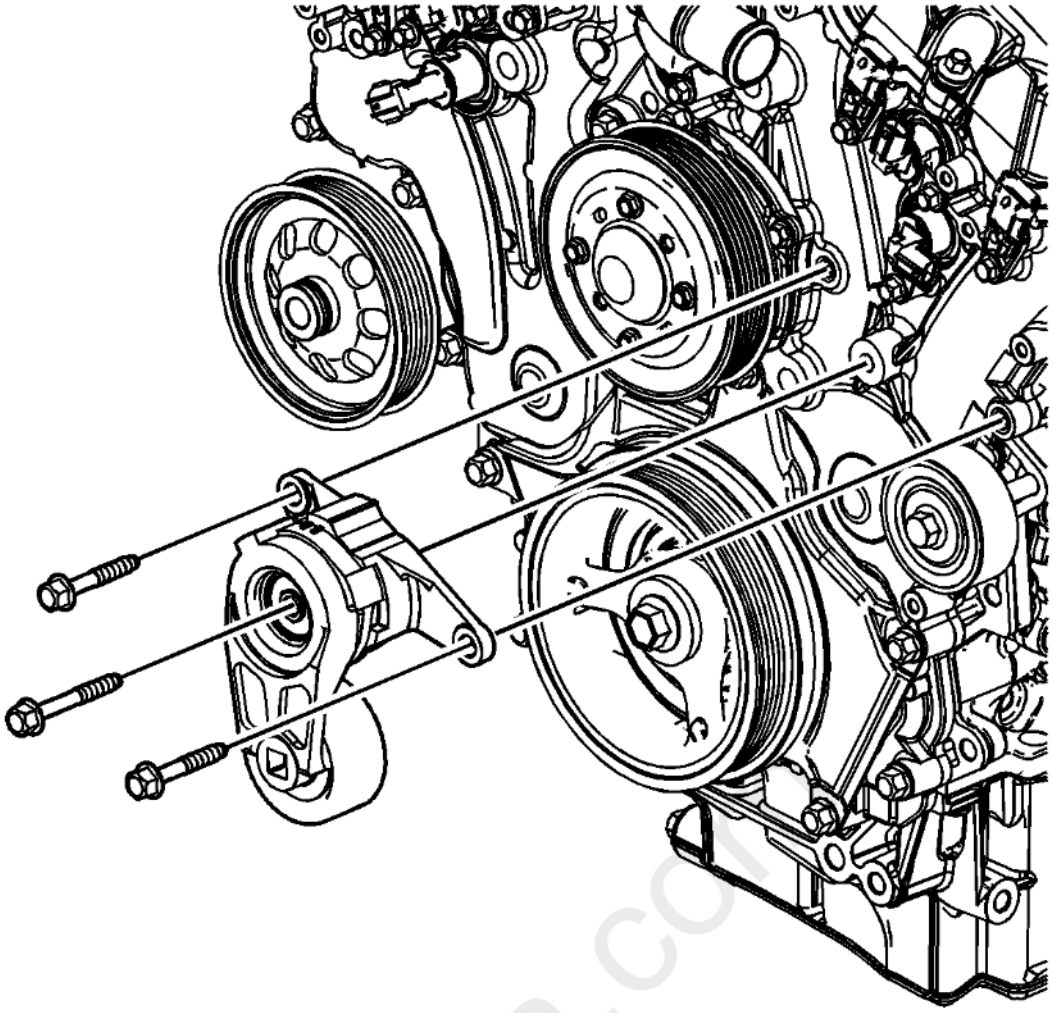

Fig. 568: Locating Drive Belt Tensioner Bracket Bolts
Courtesy of GENERAL MOTORS COMPANY

1. Place the left drive belt tensioner assembly in position to the engine front cover.

CAUTION: **Refer to Fastener Caution .**

2. Install the left drive belt tensioner bracket bolts and tighten to 25 N.m (18 lb ft).

ENGINE PRELUBING

NOTE: **This procedure is not used in Europe.**

Special Tools

- **EN 21867-6** Oil Pressure Adapter Fitting
- **EN 45299** Engine Preluber

For equivalent regional tools, refer to **Special Tools**

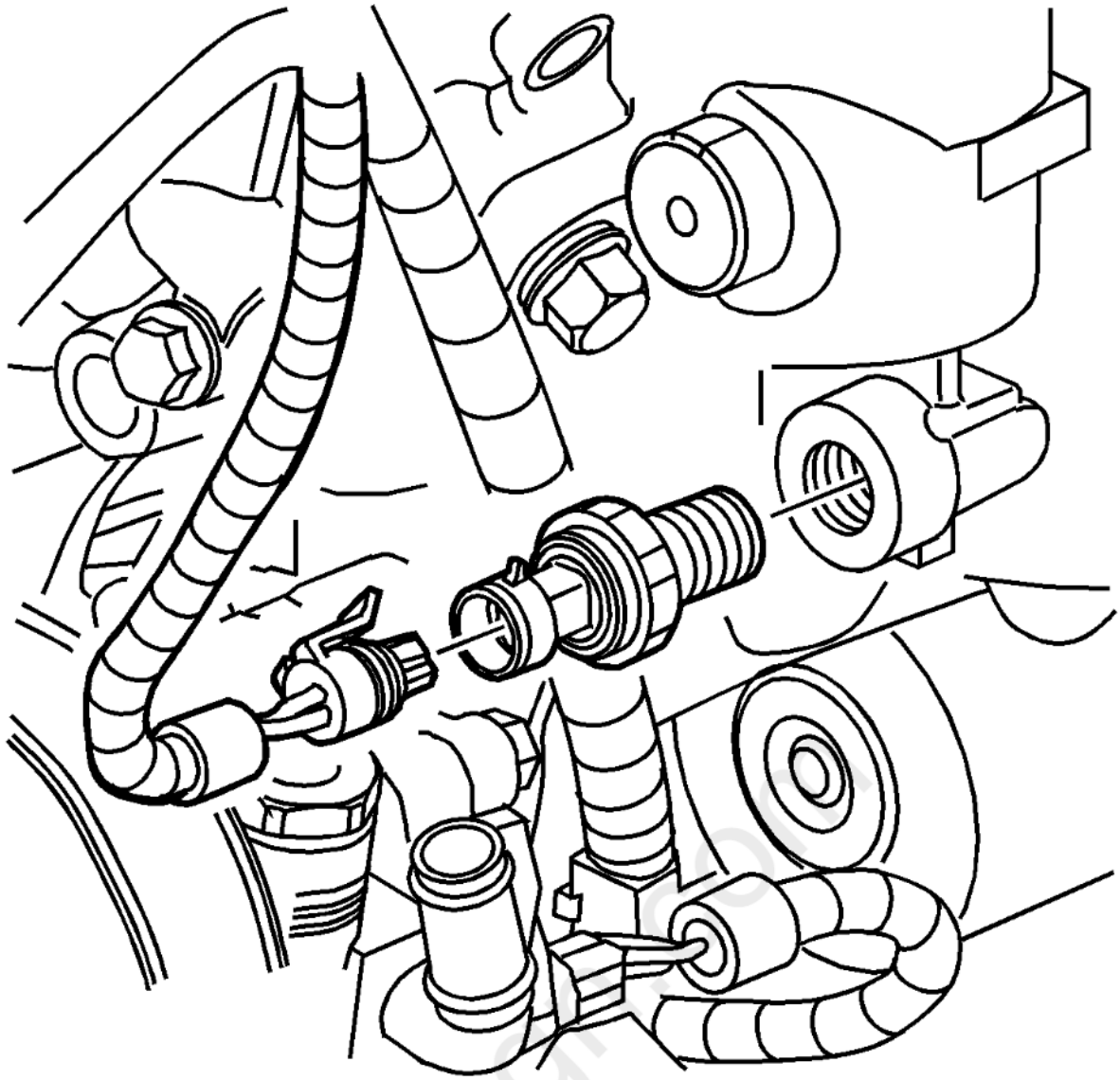

Fig. 569: View Of Oil Pressure Sending Unit
Courtesy of GENERAL MOTORS COMPANY

NOTE: **A constant and continuous flow of clean engine oil is required in order to properly prime the engine. Be sure to use an approved engine oil as specified in the owners manual.**

1. Remove the oil filter cap.
2. Install the NEW oil filter cartridge.
3. Lubricate the threads of the oil filter cap with clean engine oil.

CAUTION: **Refer to Fastener Caution .**

4. Install the oil filter cap and tighten to 25 N.m (18 lb ft).
5. Remove the oil pressure sending unit from the oil filter adapter.
6. Install the **EN 21867-6** fitting.

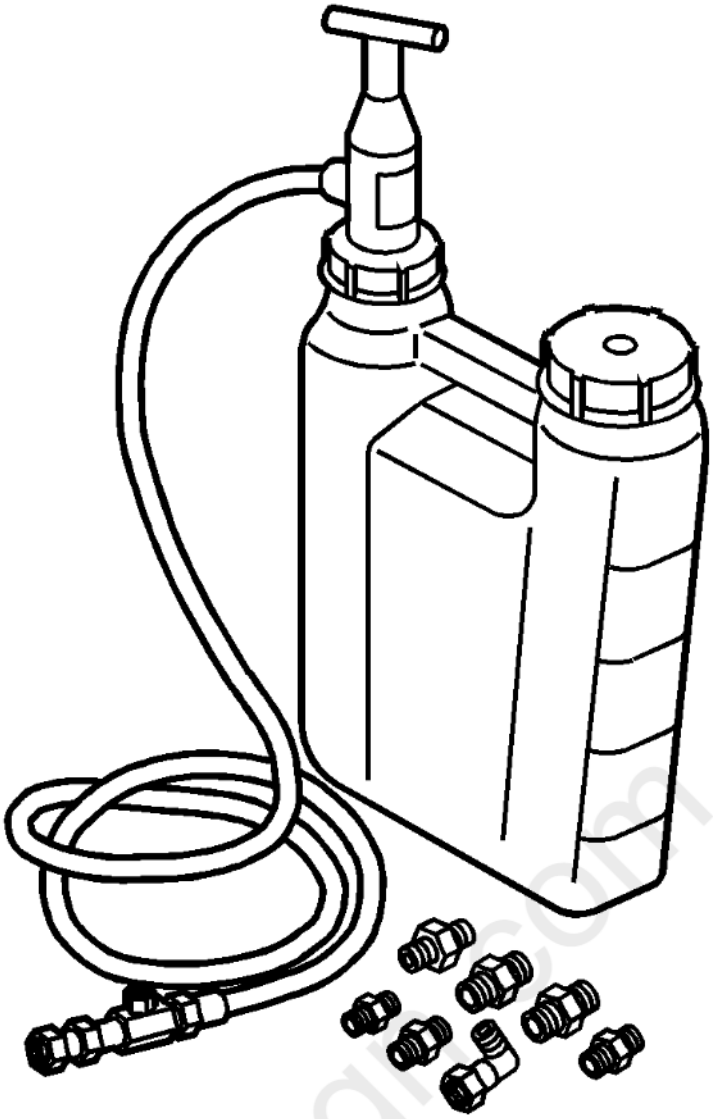

Fig. 570: Preluber Flexible Hose
Courtesy of GENERAL MOTORS COMPANY

7. Install the flexible hose to the adapter and open the valve.
8. Pump the handle on the **EN 45299** preluber in order to flow a minimum of 1 - 1.9 liters (1 - 2 quarts) of engine oil. Observe the flow of engine oil through the flexible hose and into the engine assembly.
9. Close the valve and remove the flexible hose and adapter from the engine.
10. Install the oil pressure sending unit and tighten to 20 N.m (15 lb ft).
11. Top-off the engine oil to the proper level.

REPAIR INSTRUCTIONS - ON VEHICLE

DRIVE BELT REPLACEMENT

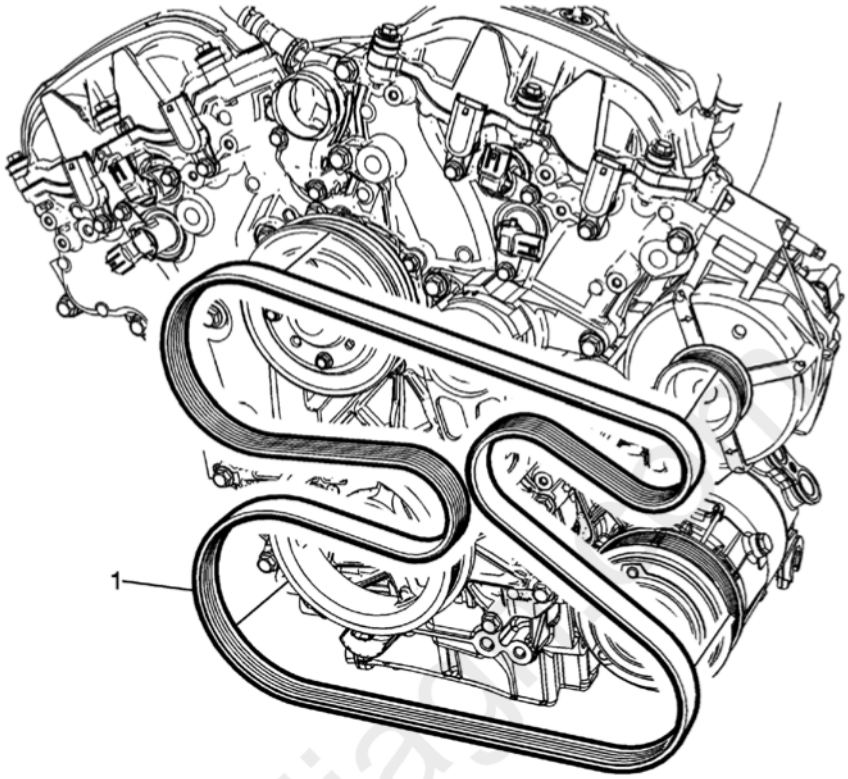

Fig. 1: Identifying Drive Belt Routing
Courtesy of GENERAL MOTORS COMPANY

Callout	Component Name
Preliminary Procedures Remove the engine mount bracket. Refer to **Engine Mount Bracket Replacement - Right Side**	
1	Drive Belt **Procedure** 1. Rotate the drive belt tensioner clockwise to release the drive belt tension. 2. Slide the drive belt off of the belt idler pulley. 3. Slowly release the drive belt tensioner.

DRIVE BELT TENSIONER REPLACEMENT

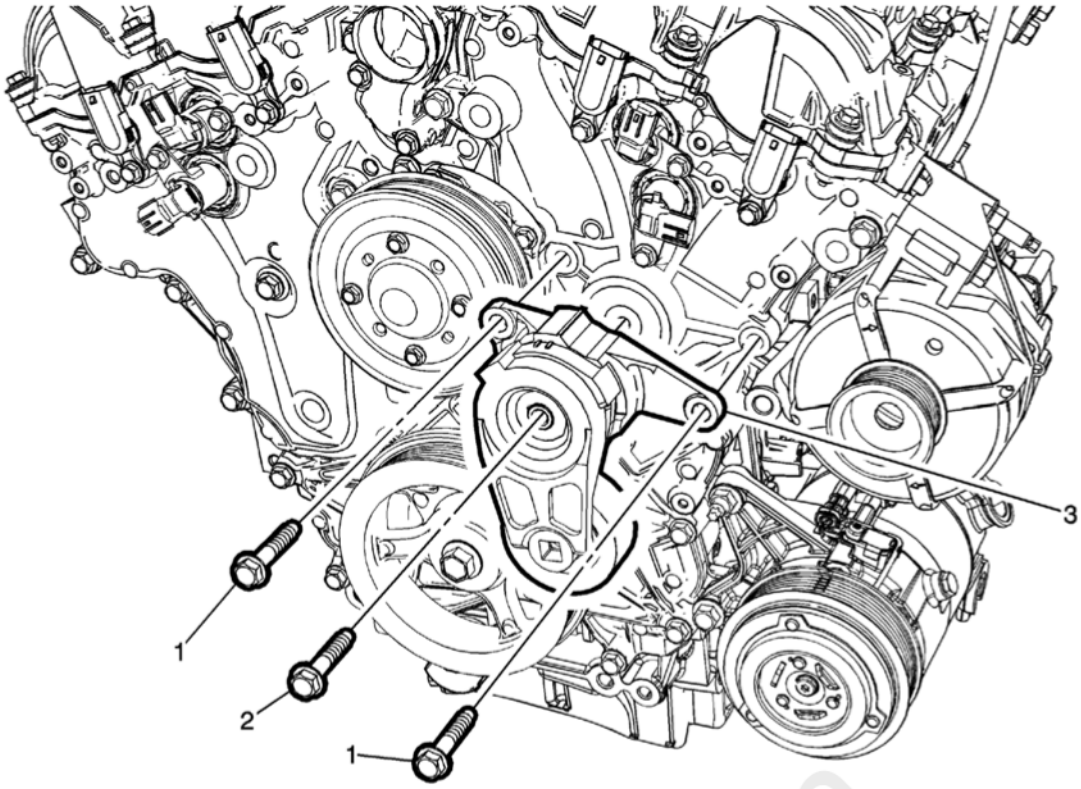

Fig. 2: Drive Belt Tensioner
Courtesy of GENERAL MOTORS COMPANY

Callout	Component Name
Preliminary Procedures Remove the drive belt idler pulley. Refer to **Drive Belt Idler Pulley Replacement**.	
1	Drive Belt Tensioner Fastener (Qty: 2) **CAUTION:** **Refer to Fastener Caution .** **Tighten** 20 N.m (15 lb ft)
2	Drive Belt Tensioner Fastener **Tighten** 25 N.m (18 lb ft)
3	Drive Belt Tensioner

DRIVE BELT IDLER PULLEY REPLACEMENT

cardiagn.com

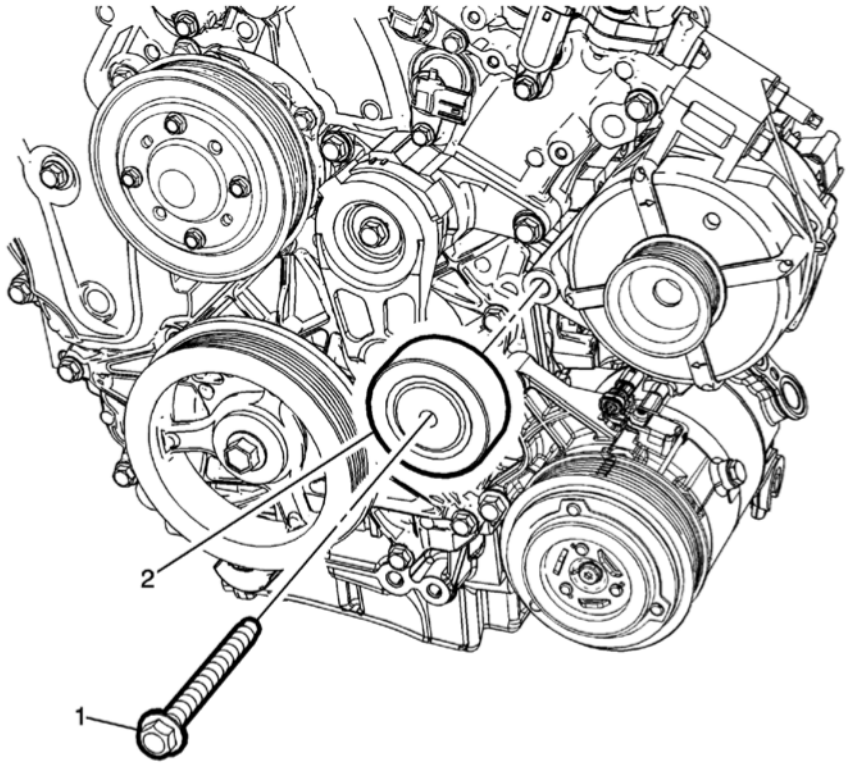

Fig. 3: Drive Belt Idler Pulley
Courtesy of GENERAL MOTORS COMPANY

Callout	Component Name
Preliminary Procedures Remove the drive belt. Refer to **Drive Belt Replacement**.	
1	Drive Belt Idler Pulley Fastener **CAUTION:** **Refer to Fastener Caution .** **Tighten** 58 N.m (43 lb ft)
2	Drive Belt Idler Pulley

ENGINE SUPPORT FIXTURE

cardiagn.com

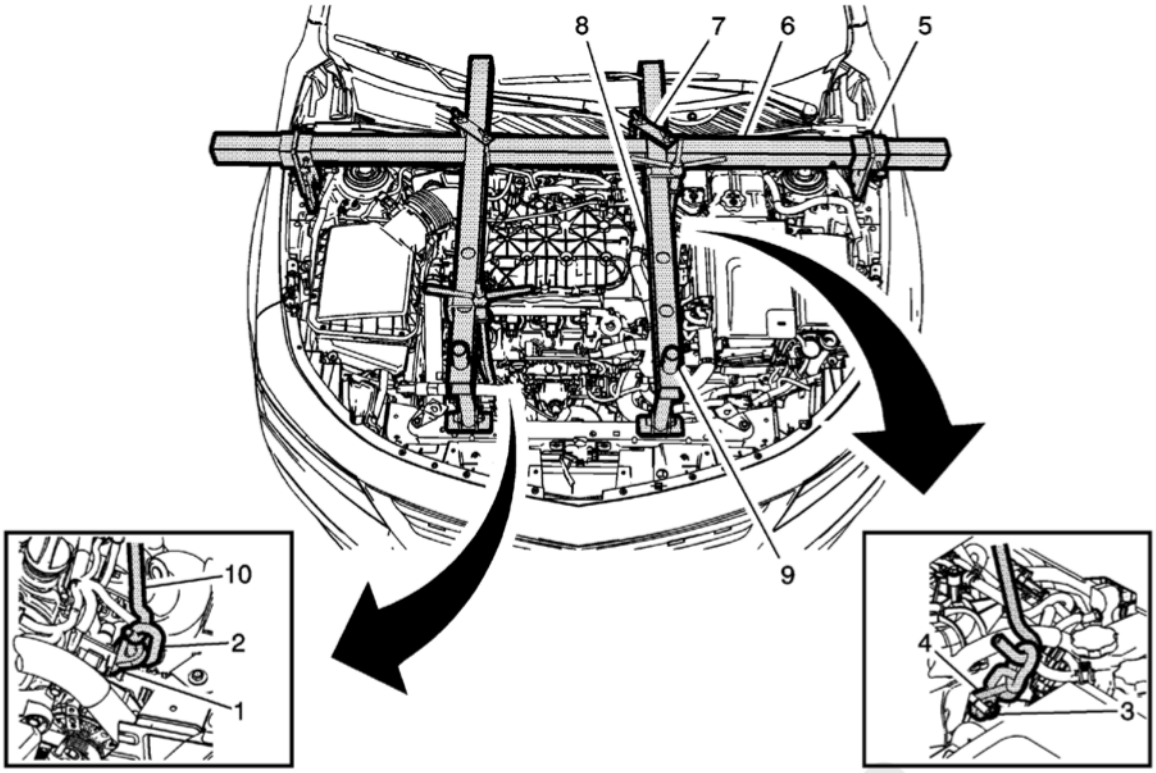

Fig. 4: Engine Support Fixture
Courtesy of GENERAL MOTORS COMPANY

Callout	Component Name
Preliminary Procedure 1. Remove the intake manifold cover. Refer to **Intake Manifold Cover Replacement** . 2. Remove the front compartment front sight shield. Refer to **Front Compartment Front Sight Shield Replacement** . **Special Tools** • **EN-51007** Engine Support Fixture • **EN-36857** Engine Lift Bracket For equivalent regional tools. Refer to **Special Tools** .	
1	Generator Mounting Nut **CAUTION:** **Refer to Fastener Caution .** **Tighten** 58 N.m (43 lb ft)
2	Engine Lift Bracket **Procedure** Remove generator nut and place engine lift bracket on stud and replace nut to retain lift bracket. **Special Tool** **EN-36857** Engine Lift Bracket
3	Fuel Injector Fuel Rail Bracket Bolt **Tighten** 50 N.m (37 lb ft)

cardiagn.com

Callout	Component Name
4	Engine Lift Bracket **Procedure** Remove fuel rail bracket bolt and place lift bracket in position and replace fuel rail bolt to retain. **Special Tool** **EN-36857** Engine Lift Bracket
5	Engine Support Fixture Adapter Leg (Qty: 2) **Procedure** Install the bracket to fender frame. Do not install on top of fender lip.
6	Main Support Beam
7	Cross Bracket (Qty: 2)
8	Strut Tower Support Assembly (Qty: 2) **Procedure** Adjust the length of the strut tower support assembly.
9	Radiator Tube Shelf Assembly (Qty: 2)
10	Hook Assembly (Qty: 2)

ENGINE MOUNT INSPECTION

NOTE: **Before replacing any engine mount due to suspected fluid loss, verify that the source of the fluid is the engine mount, not the engine or accessories.**

1. Install the engine support fixture. Refer to **Engine Support Fixture**.
2. Observe the engine mount while raising the engine. Raising the engine removes the weight from the engine mount and creates slight tension on the rubber.
3. Replace the engine mount if the engine mount exhibits any of the following conditions:
   - The hard rubber is covered with heat check cracks.
   - The rubber is separated from the metal plate of the engine mount.
   - The rubber is split through the center of the engine mount.
   - The engine mount itself is leaking fluid.
4. For engine mount replacement. Refer to **Engine Mount Replacement - Right Side**.

POWERTRAIN MOUNT BALANCING

NOTE: **Follow the balance procedure steps listed below. Powertrain mounts must be tightened in sequence.**

1. Remove the air cleaner assembly. Refer to **Air Cleaner Assembly Replacement**
2. Remove the battery tray. Refer to **Battery Tray Replacement**
3. Raise and support the vehicle Refer to **Lifting and Jacking the Vehicle**

cardiagn.com

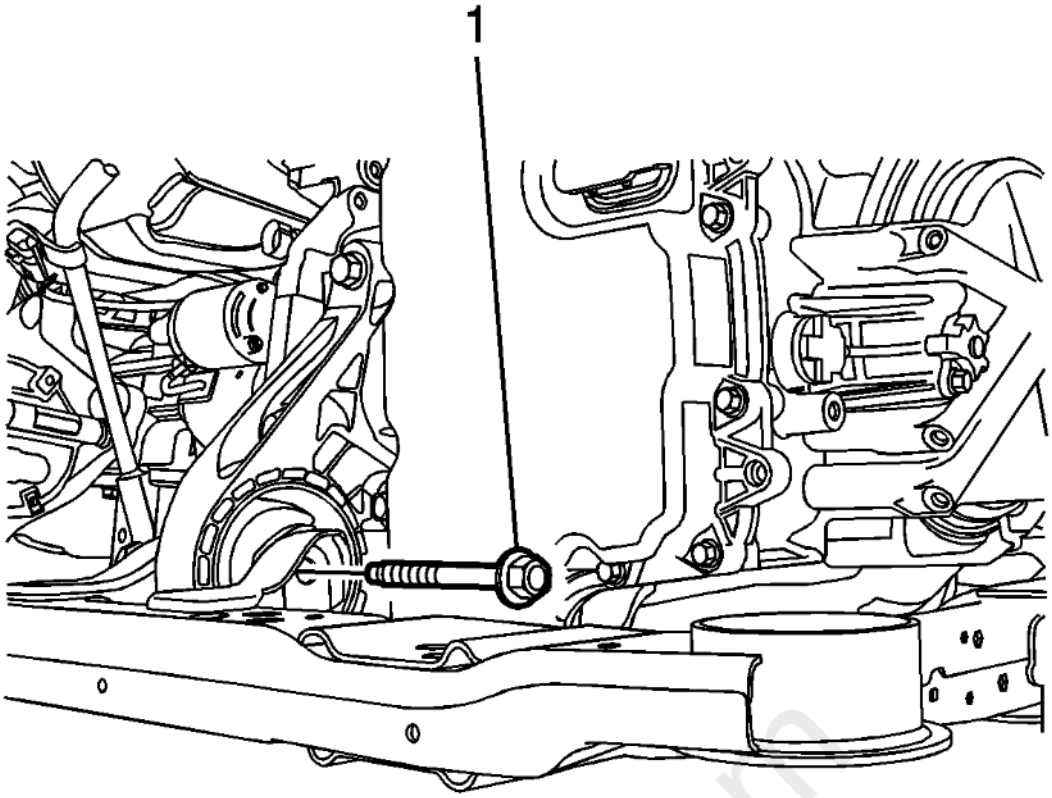

Fig. 5: Front Transmission Mount Through Bolt
Courtesy of GENERAL MOTORS COMPANY

4. Loosen the front transaxle mount through bolt (1).

cardiagn.com

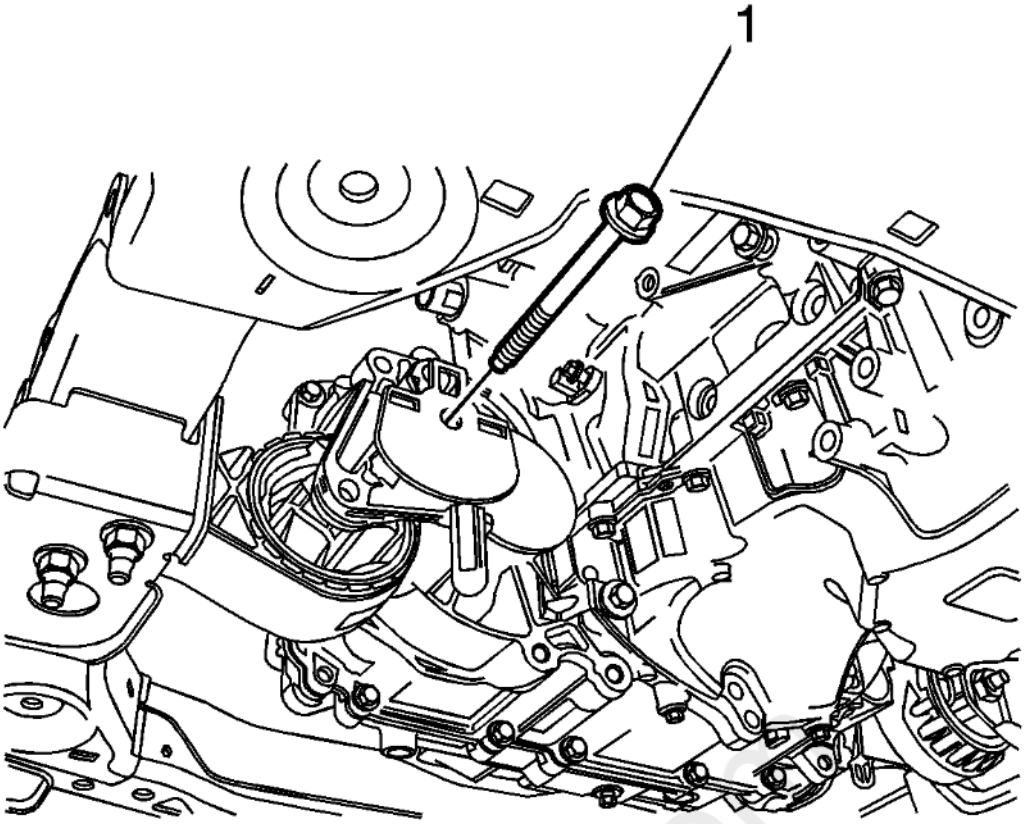

Fig. 6: Rear Transmission Mount Through Bolt
Courtesy of GENERAL MOTORS COMPANY

5. Loosen the rear transaxle mount through bolt (1).
6. Lower the vehicle.
7. Position two floor jacks with wood blocks under the engine and transaxle in order to support the powertrain assembly.

cardiagn.com

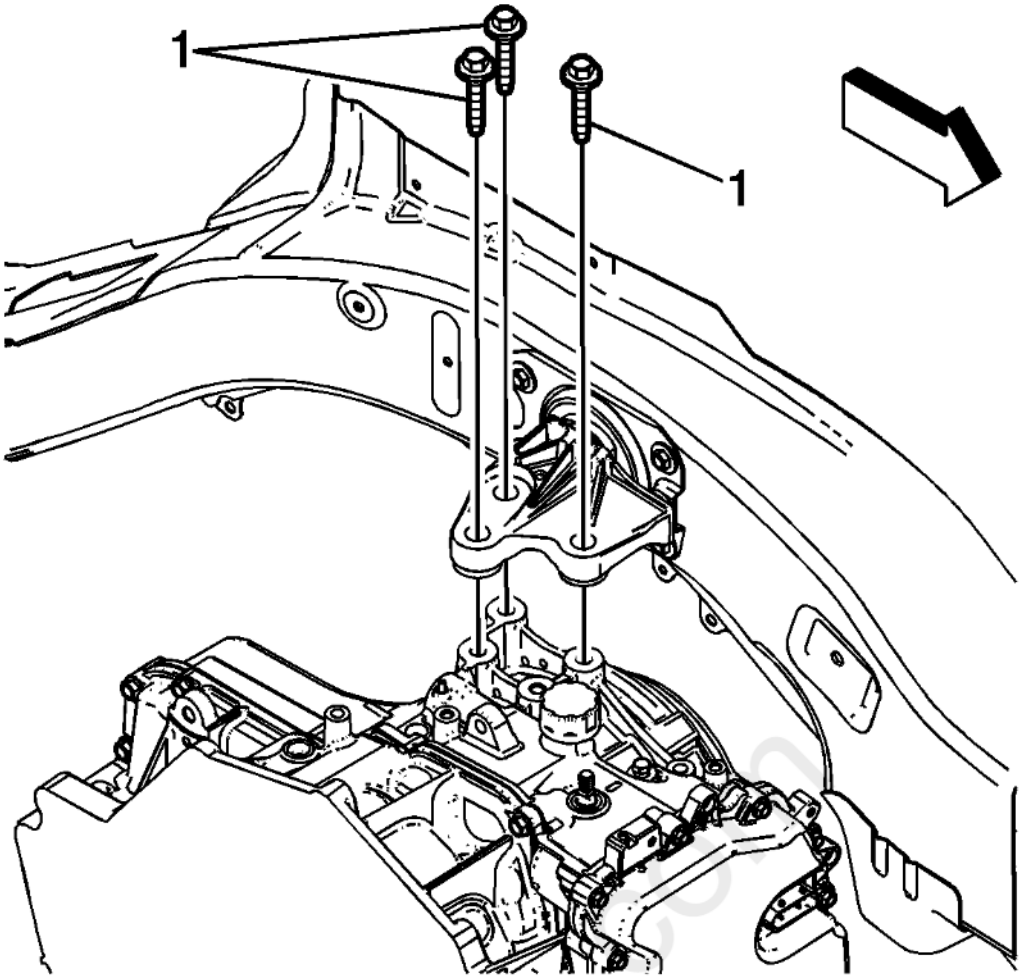

Fig. 7: Left Transmission Mount To Transmission Bolts
Courtesy of GENERAL MOTORS COMPANY

8. Loosen the transaxle mount bolts (1).

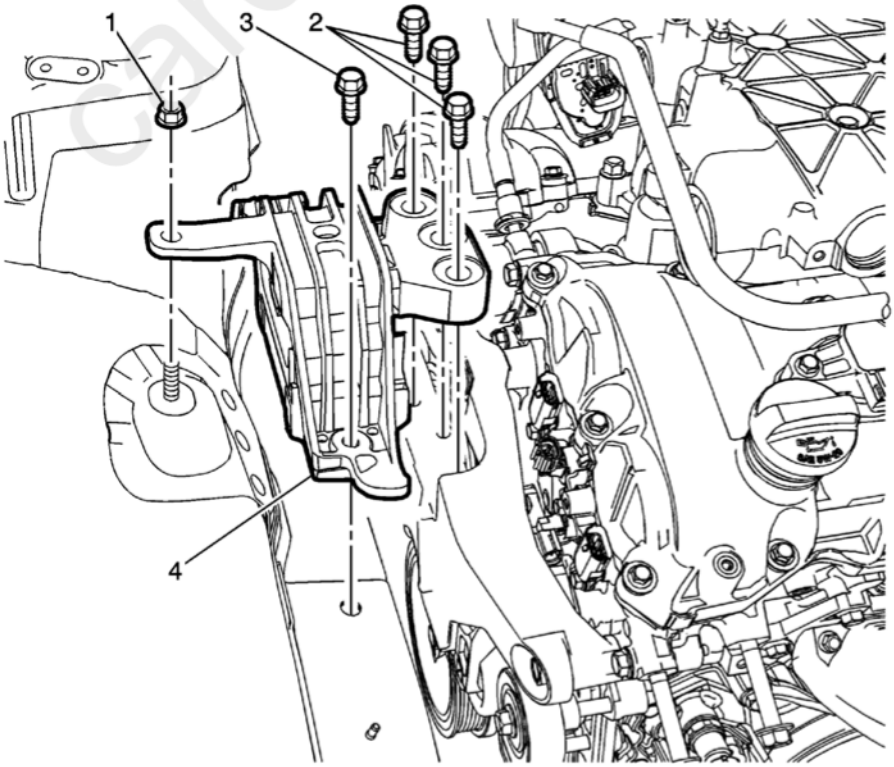

Fig. 8: Engine Mount And Bracket Bolts
Courtesy of GENERAL MOTORS COMPANY

9. Loosen the engine mount to bracket bolts (2).
10. Reposition both floor jacks in order to allow a 1/8 inch gap between the mount and bracket.

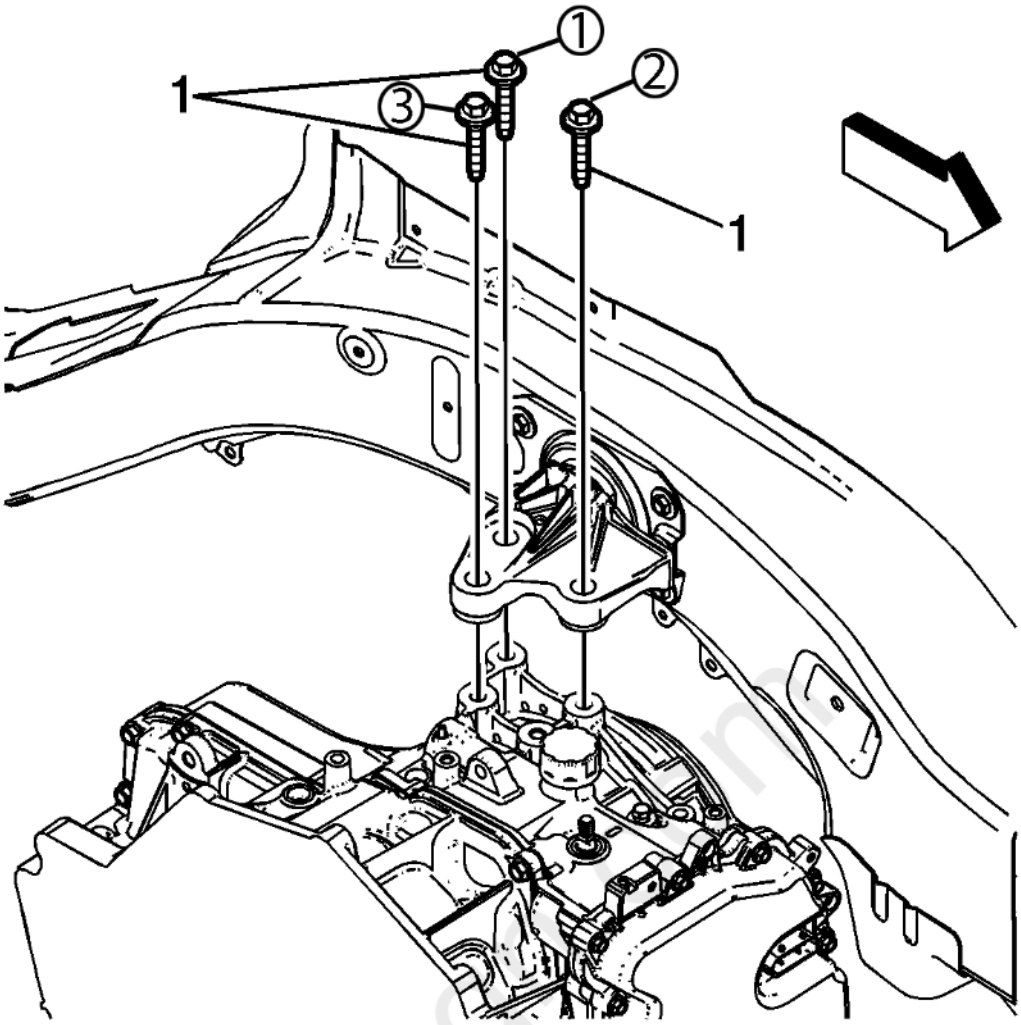

Fig. 9: Engine Mount And Bracket Bolts With Tightening Sequence
Courtesy of GENERAL MOTORS COMPANY

CAUTION: **Refer to Fastener Caution .**

11. Tighten the engine mount to bracket bolts (1) in the sequence shown to 50 N.m (37 lb ft) plus 60 - 75 degrees.

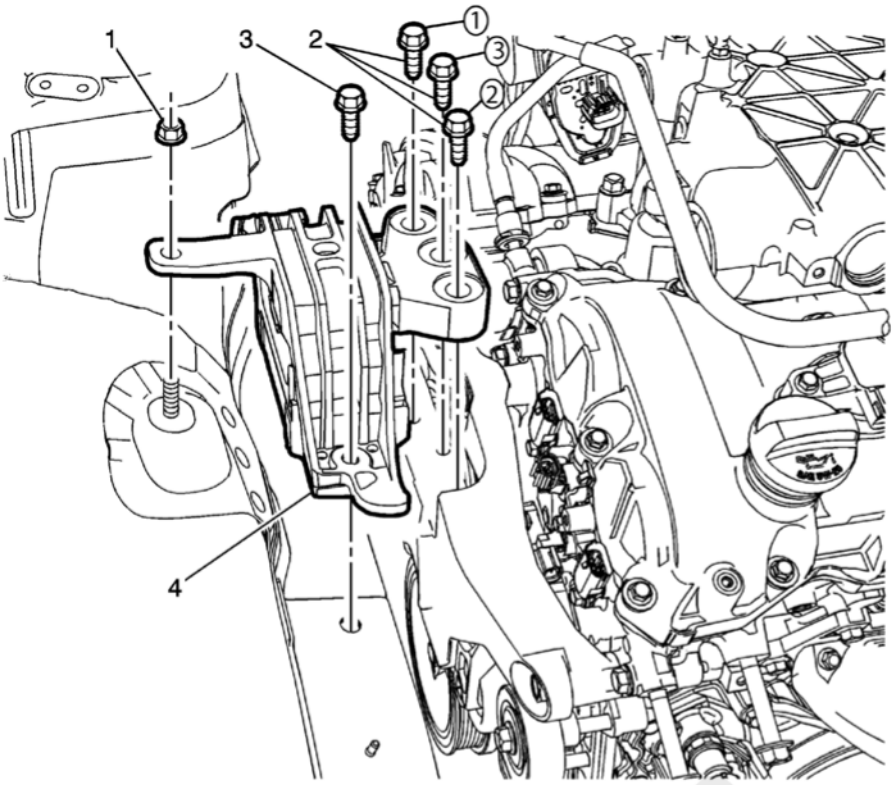

Fig. 10: Engine Mount And Bracket Bolts With Tightening Sequence
Courtesy of GENERAL MOTORS COMPANY

12. Tighten the engine mount to bracket bolts (2) in the sequence shown to 50 N.m (37 lb ft) plus 60 - 75 degrees.
13. Remove the floor jacks from under the oil pan.
14. Shake the powertrain vigorously from front to rear and allow the powertrain to settle.
15. Raise the vehicle.

cardiagn.com

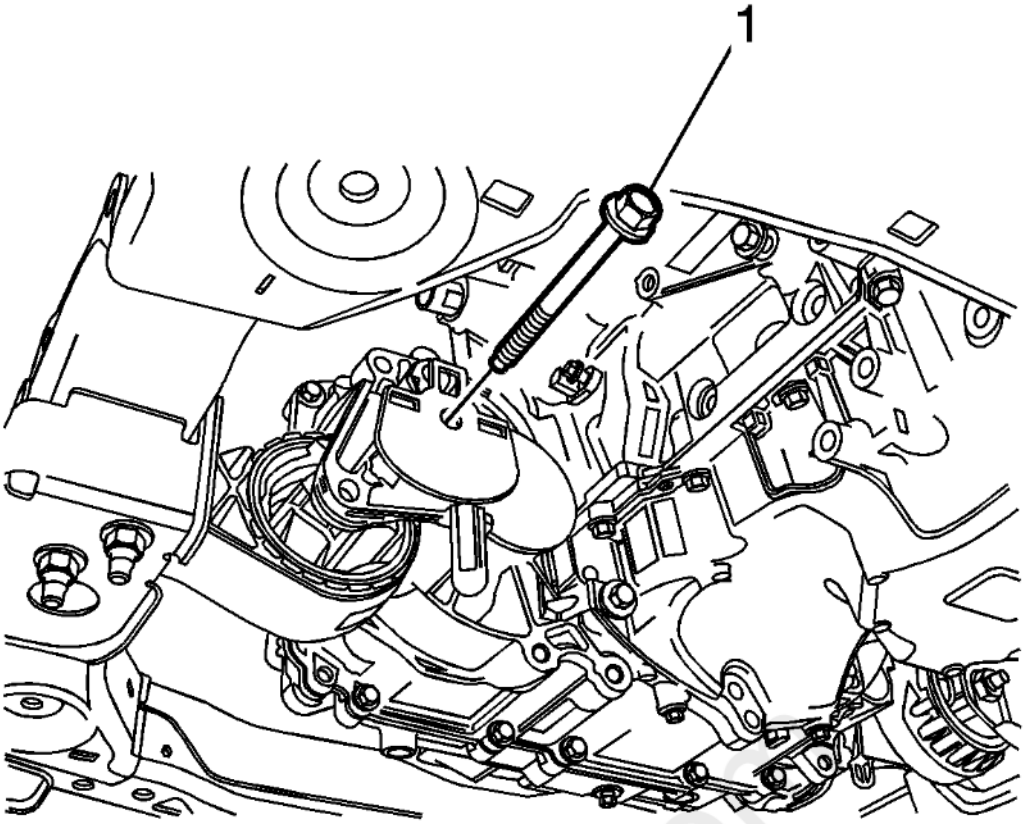

Fig. 11: Rear Transmission Mount Through Bolt
Courtesy of GENERAL MOTORS COMPANY

16. Tighten the rear transaxle mount through bolt (1).

Tighten

Tighten the bolt to 100 N.m (74 lb ft).

cardiagn.com

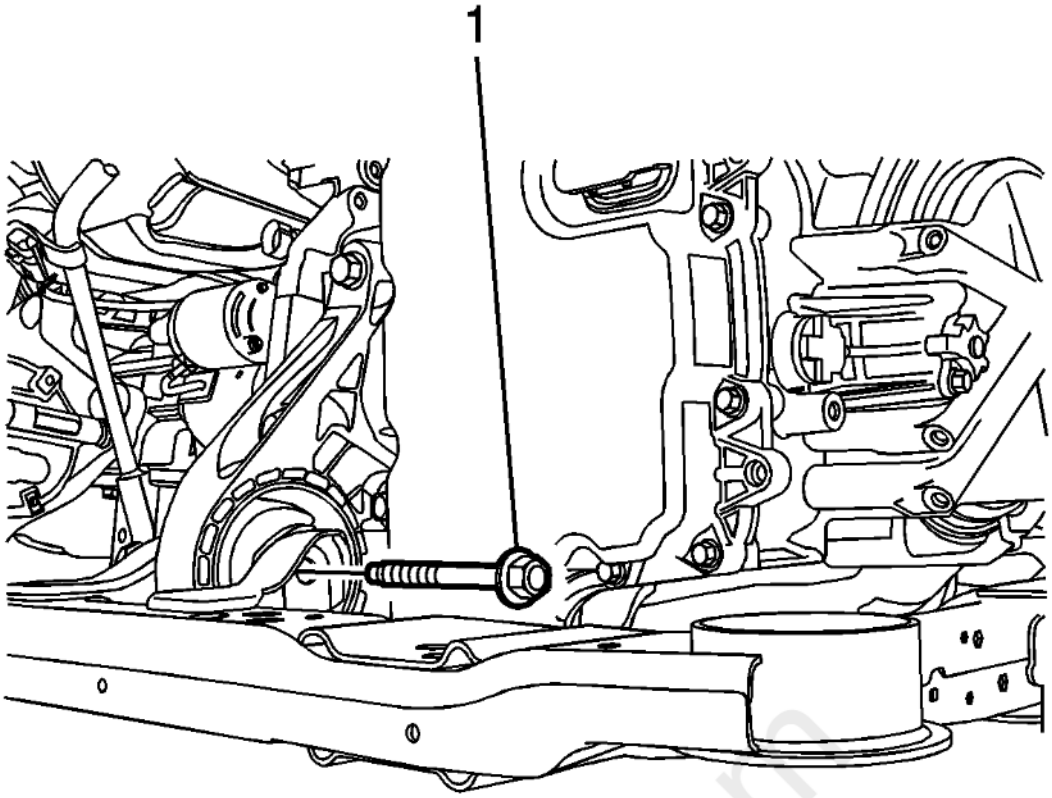

Fig. 12: Front Transmission Mount Through Bolt
Courtesy of GENERAL MOTORS COMPANY

17. Tighten the front transaxle mount through bolt (1).

    Tighten

    Tighten the bolt to 100 N.m (74 lb ft).

18. Lower the vehicle.
19. Install the battery tray. Refer to **Battery Tray Replacement**
20. Install the air cleaner assembly. Refer to **Air Cleaner Assembly Replacement**

ENGINE MOUNT REPLACEMENT - RIGHT SIDE

cardiagn.com

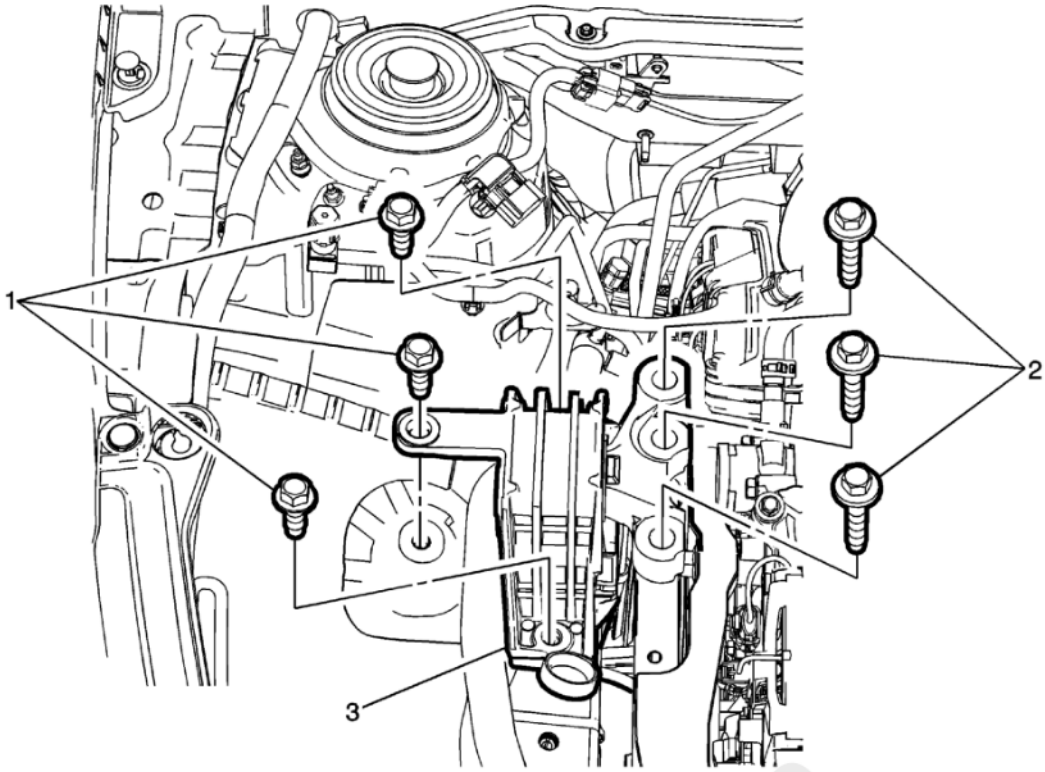

Fig. 13: Engine Mount - Right Side
Courtesy of GENERAL MOTORS COMPANY

Callout	Component Name
Preliminary Procedures 1. Remove the air cleaner assembly. Refer to **Air Cleaner Assembly Replacement** . 2. Remove the radiator inlet hose. Refer to **Radiator Inlet Hose Replacement (LFX)** . 3. Install engine support fixture. Refer to **Engine Support Fixture**. 4. Prior to removing the mount, mark the mount location using spray paint or a marker for correct positioning during installation.	
1	Engine Mount Fastener (Qty: 3) **CAUTION:** **Refer to Fastener Caution .** **Tighten** 62 N.m (46 lb ft)
2	Engine Mount Fastener (Qty: 3) **Tighten** 62 N.m (46 lb ft)
3	Engine Mount

ENGINE MOUNT BRACKET REPLACEMENT - RIGHT SIDE

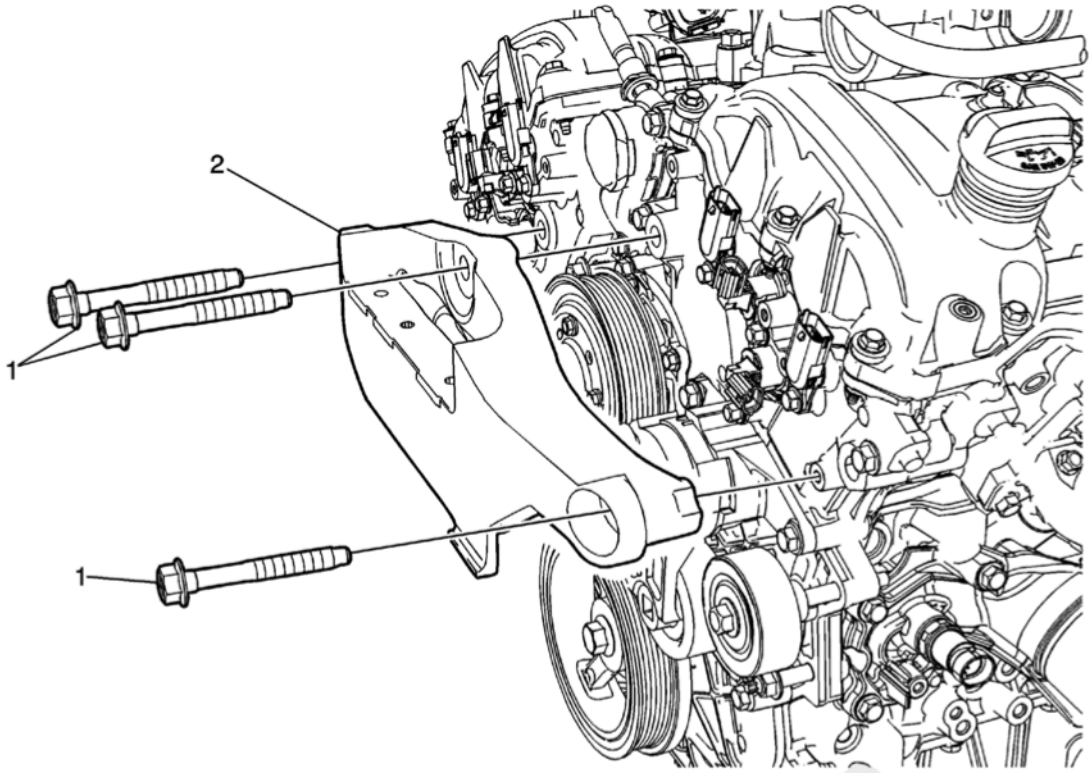

Fig. 14: Engine Mount Bracket - Right Side
Courtesy of GENERAL MOTORS COMPANY

Callout	Component Name
Preliminary Procedures 1. Remove the air cleaner assembly. Refer to **Air Cleaner Assembly Replacement** . 2. Remove engine mount. Refer to **Engine Mount Replacement - Right Side**.	
1	Engine Mount Bracket Fastener (Qty: 3) **CAUTION:** **Refer to Fastener Caution .** **Procedure** Remove the A/C pipe bracket nut and reposition pipe to access front mount bracket fastener. **Tighten** 100 N.m (74 lb ft)
2	Engine Mount Bracket **Procedure** Transfer components as necessary.

INTAKE MANIFOLD COVER REPLACEMENT (LFX)

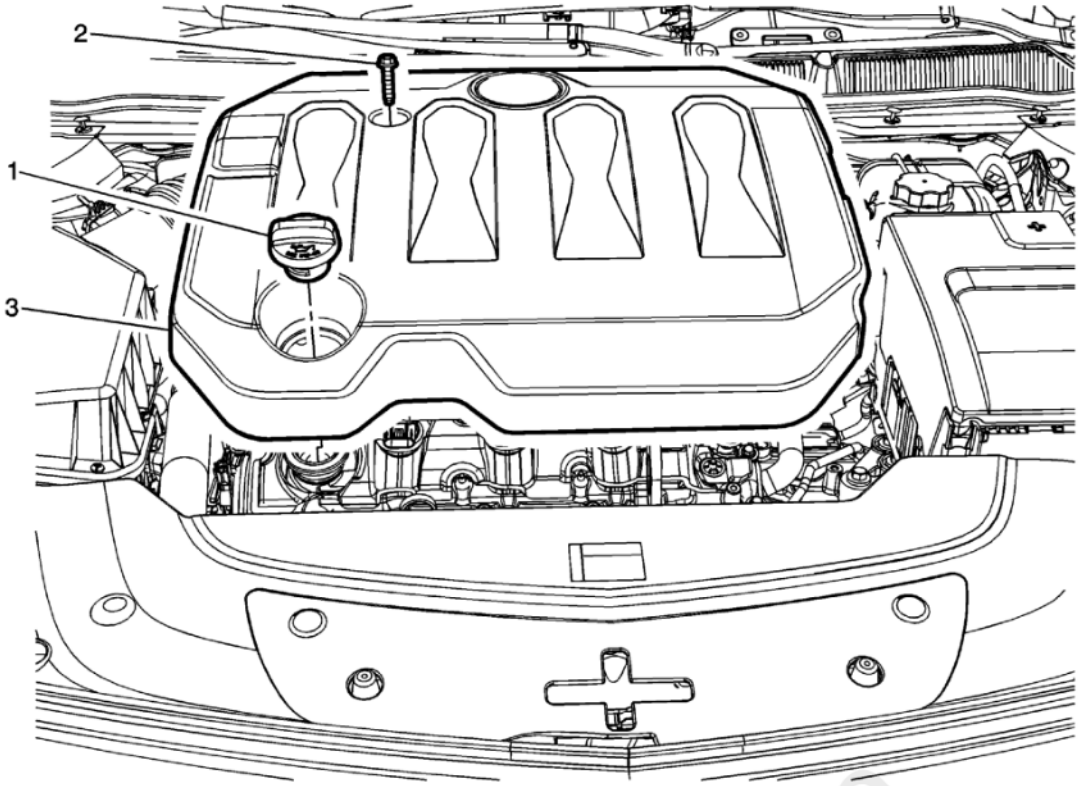

Fig. 15: Intake Manifold Cover & Fasteners (LFX)
Courtesy of GENERAL MOTORS COMPANY

Callout	Component Name
1	Oil Cap
2	Intake Manifold Cover Fastener **CAUTION:** **Refer to Fastener Caution .** **Tighten** 9 N.m (80 lb in)
3	Intake Manifold Cover **Procedure** 1. Pulled straight up on cover to disconnect from the ball studs. 2. Install cover straight down on ball studs and ensure the oil fill tube is properly centered in the opening in the cover.

POSITIVE CRANKCASE VENTILATION TUBE REPLACEMENT - FRONT

cardiagn.com

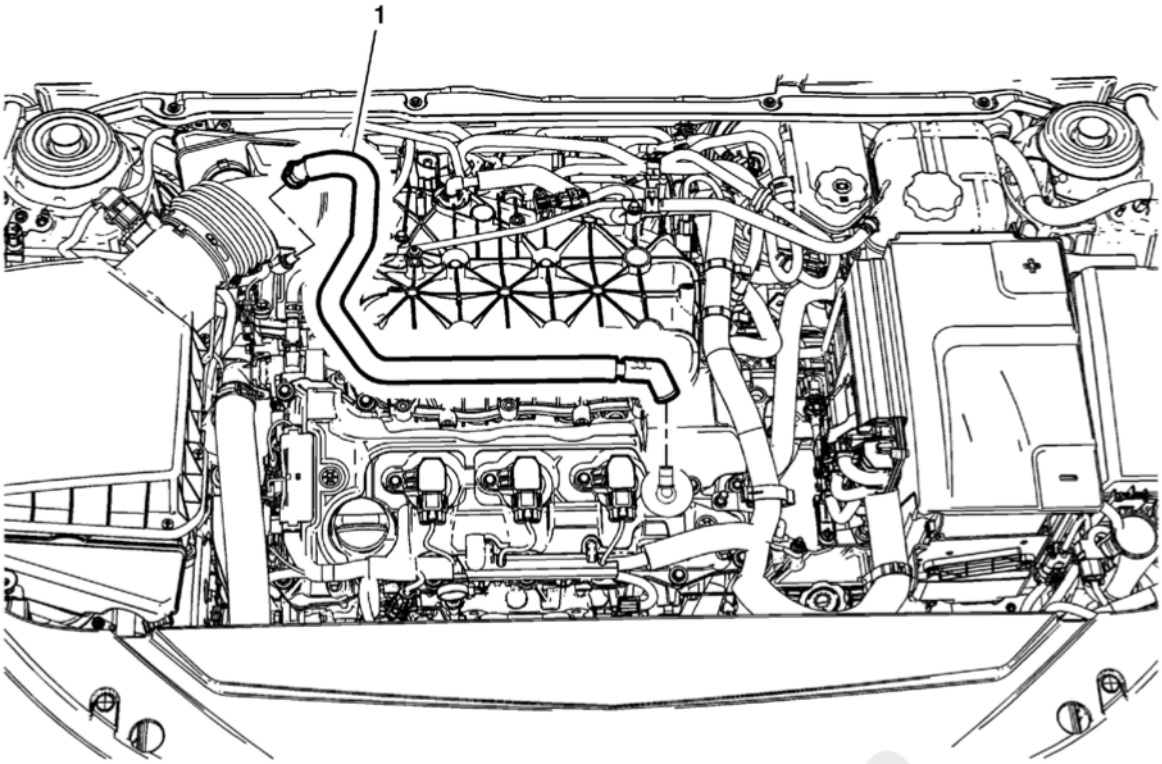

Fig. 16: Positive Crankcase Ventilation Tube - Front
Courtesy of GENERAL MOTORS COMPANY

Callout	Component Name
Preliminary Procedure Remove the intake manifold cover. Refer to **Intake Manifold Cover Replacement (LFX)**.	
1	PCV Pipe **Procedure** 1. Disconnect the positive crankcase ventilation (PCV) fresh air pipe from the air cleaner duct. 2. Disconnect the PCV air pipe from the valve cover and DISCARD. 3. Install a NEW PCV air pipe to the valve cover valve.

POSITIVE CRANKCASE VENTILATION TUBE REPLACEMENT - REAR

cardiagn.com

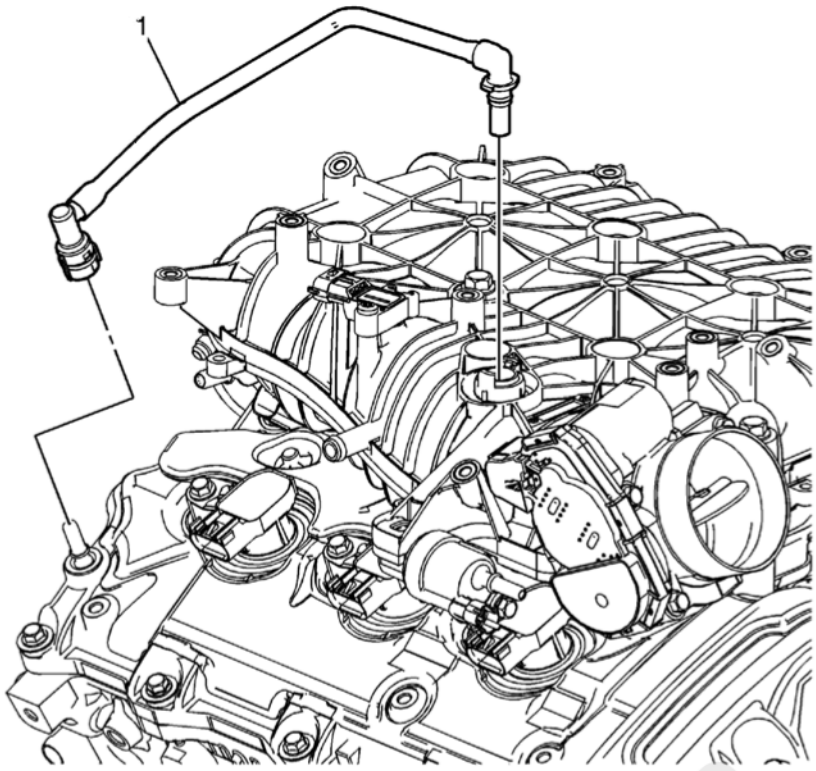

Fig. 17: Positive Crankcase Ventilation Tube - Rear
Courtesy of GENERAL MOTORS COMPANY

Callout	Component Name
Preliminary Procedure Remove the intake manifold cover. Refer to **Intake Manifold Cover Replacement (LFX)**.	
1	Positive Crankcase Ventilation Tube **Procedure** 1. Disconnect the electrical connectors, as needed. 2. Transfer components as necessary.

INTAKE MANIFOLD REPLACEMENT

Removal Procedure

1. Remove the intake manifold cover. Refer to **Intake Manifold Cover Replacement (LFX)**.
2. Remove the air cleaner outlet duct. Refer to **Air Cleaner Outlet Duct Replacement** .
3. Disconnect the power brake booster vacuum hose from the intake manifold.
4. Remove the fuel line and power brake booster vacuum pipe bracket from the intake manifold and reposition.
5. Remove the coolant air bleed pipe. Refer to **Engine Coolant Air Bleed Pipe Replacement (LFX)** .

carmagnet.com

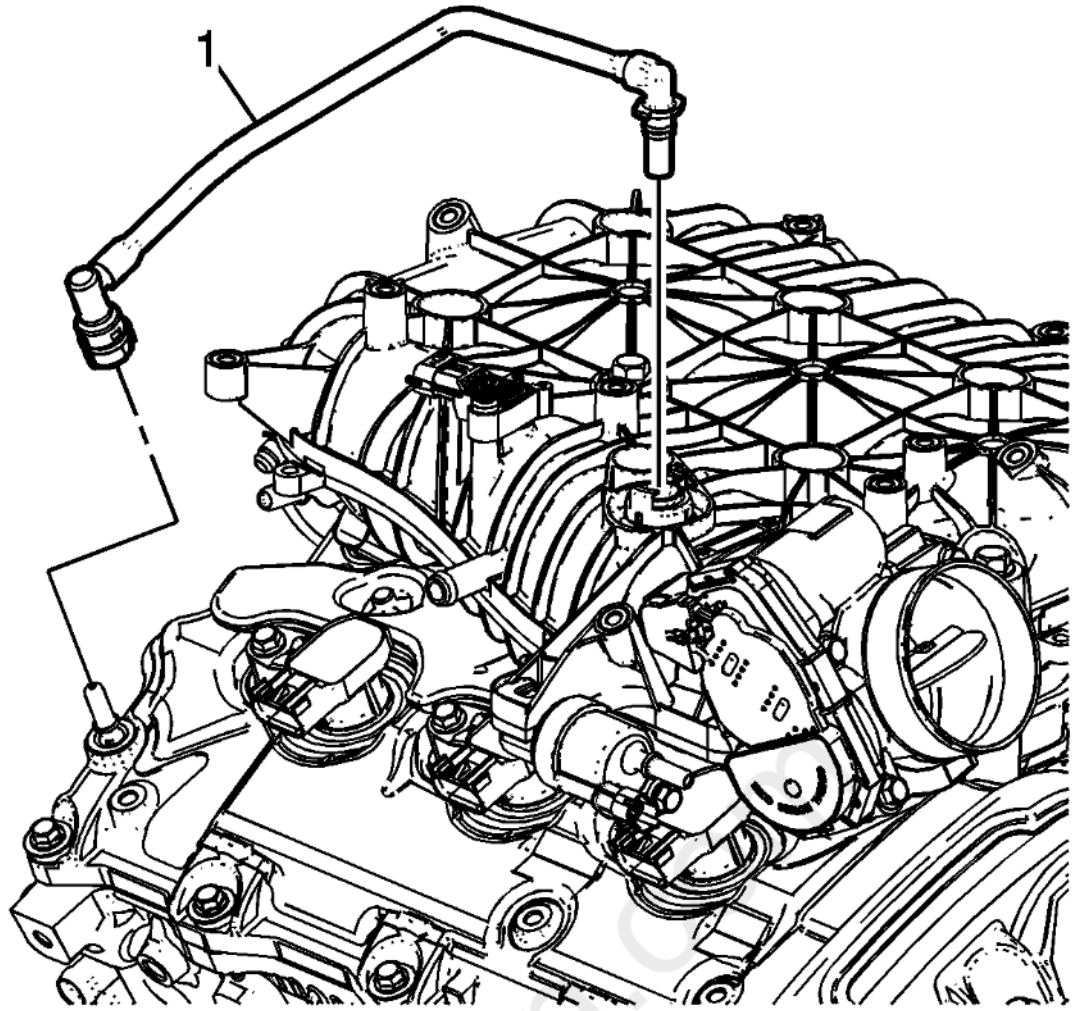

Fig. 18: Positive Crankcase Ventilation Tube
Courtesy of GENERAL MOTORS COMPANY

6. Disconnect and remove the positive crankcase ventilation (PCV) tube (1) from the intake manifold and right camshaft cover.

cardiagn.com

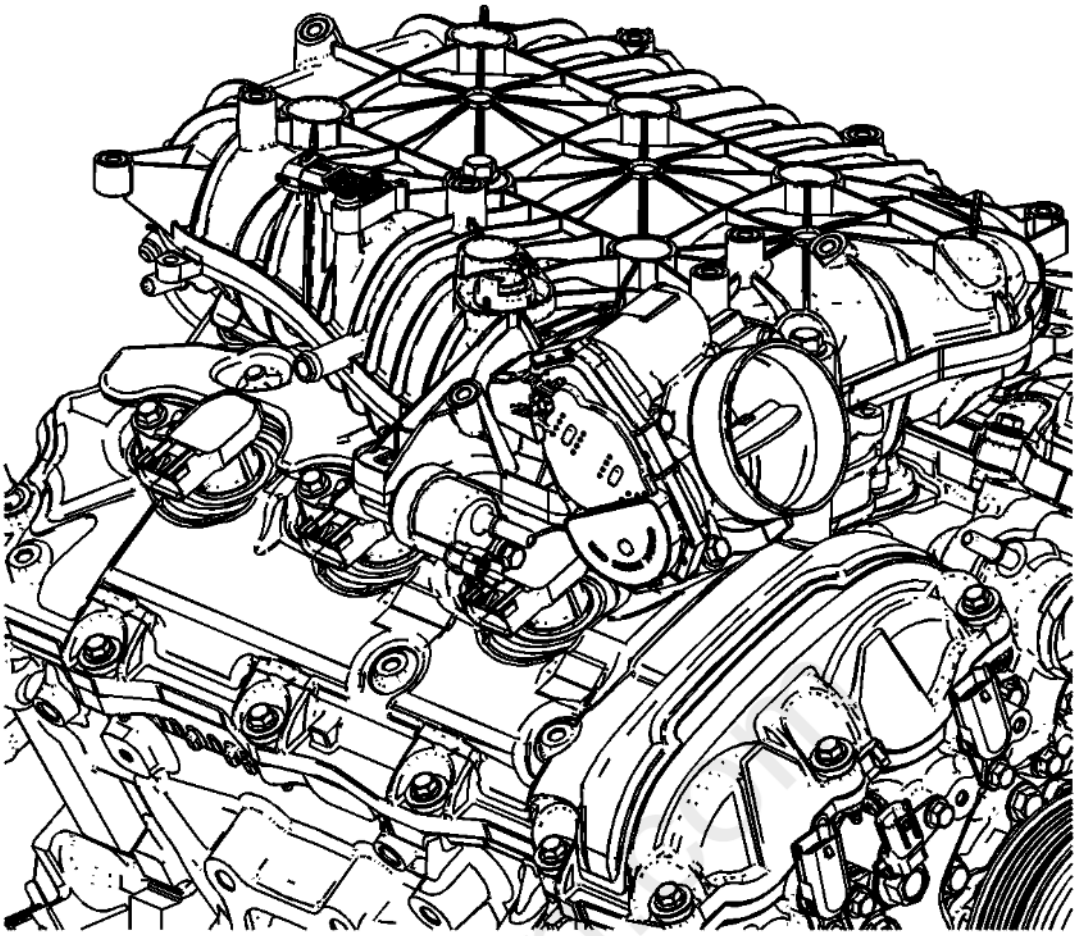

Fig. 19: Evaporative Emission Hose
Courtesy of GENERAL MOTORS COMPANY

7. Remove the evaporative emission (EVAP) hose from the intake manifold and EVAP solenoid.
8. Remove the fuel pipe shield. Refer to **Fuel Pipe Shield Replacement** .
9. Disconnect and reposition wire harnesses as necessary.

carmanuals.com

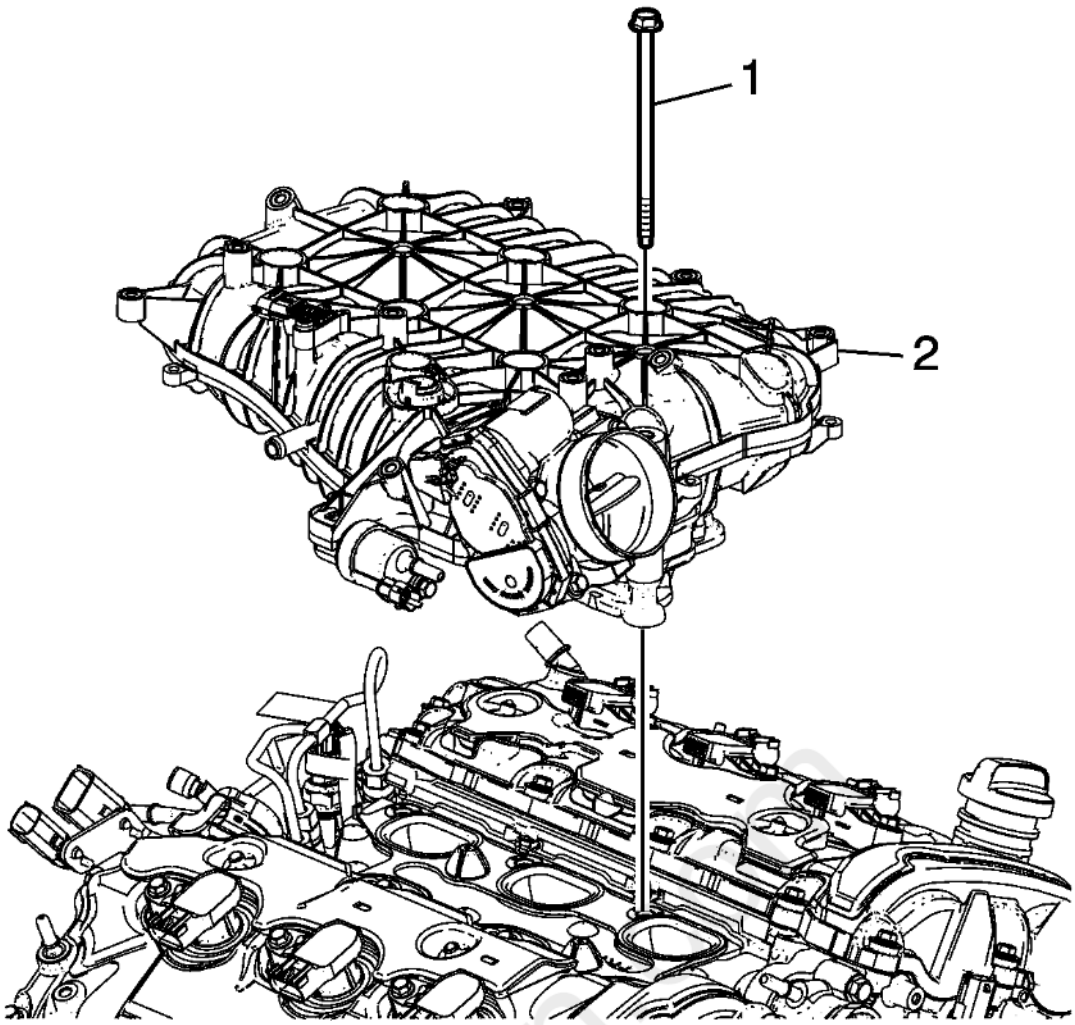

Fig. 20: Intake Manifold & Bolts
Courtesy of GENERAL MOTORS COMPANY

10. Remove the intake manifold bolts (1).
11. Remove the intake manifold assembly (2).

cardiagn.com

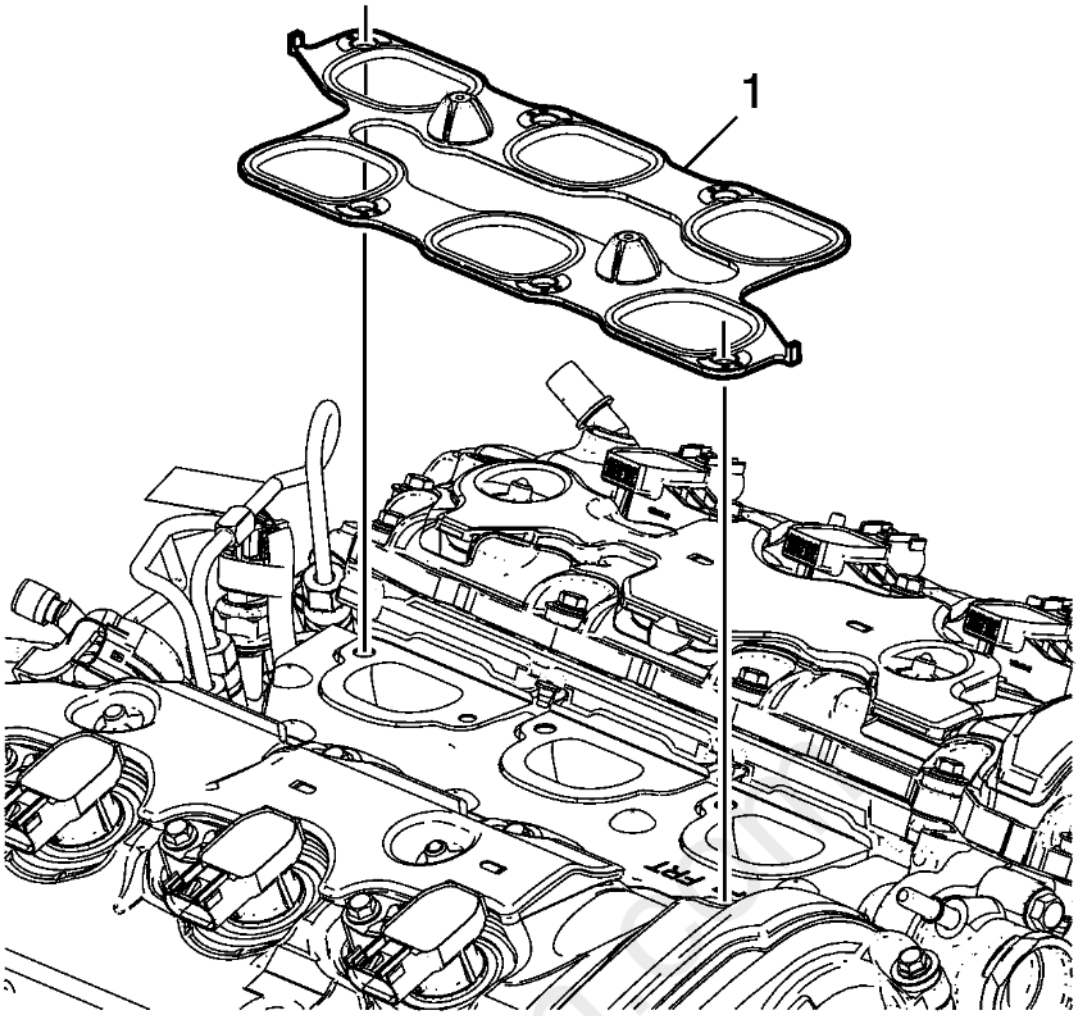

Fig. 21: Intake Manifold Gasket
Courtesy of GENERAL MOTORS COMPANY

12. Remove and discard the intake manifold gasket (1).
13. To clean the intake manifold, refer to **Intake Manifold Cleaning and Inspection** .
14. To disassemble the intake manifold, refer to **Intake Manifold Disassemble** .

Installation Procedure

1. Assemble the intake manifold if needed. Refer to **Intake Manifold Assemble** .

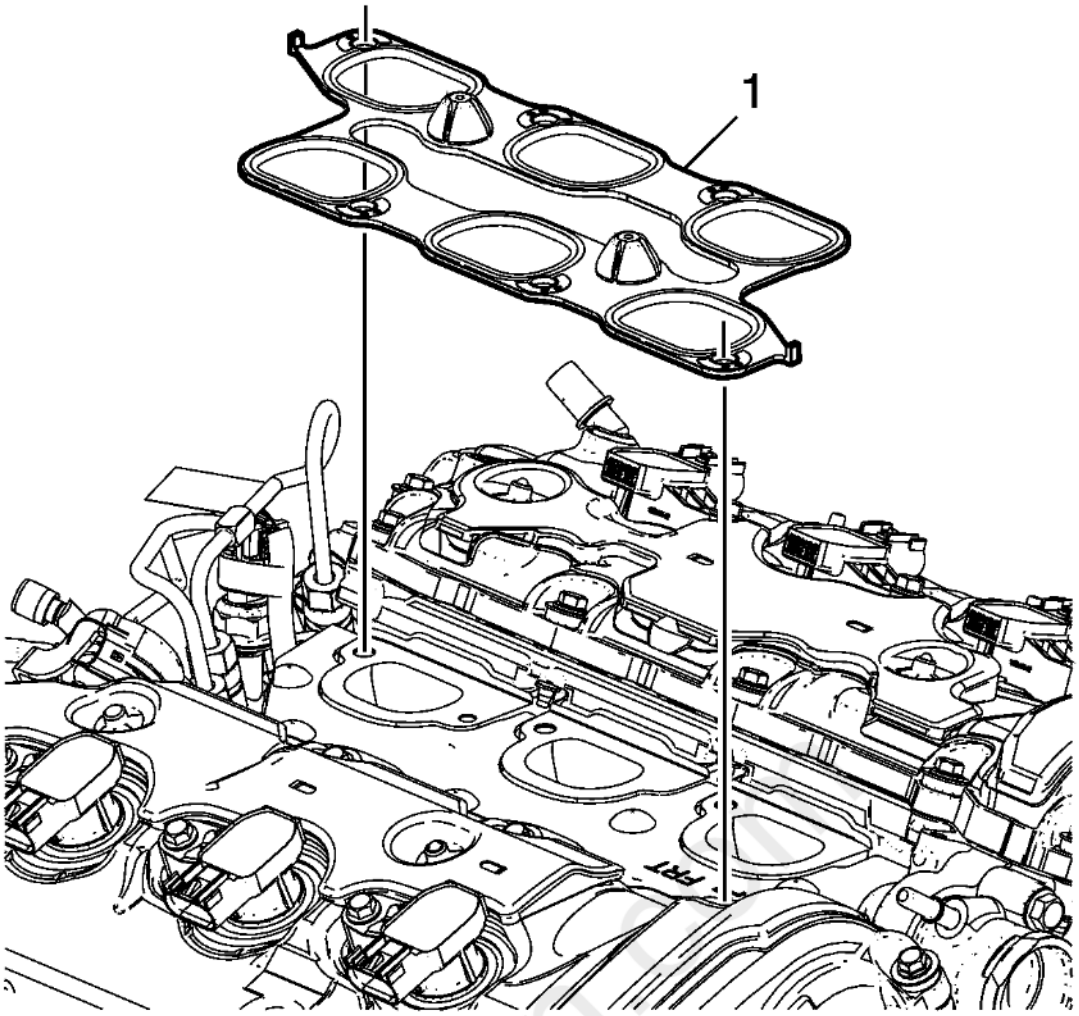

Fig. 22: Intake Manifold Gasket
Courtesy of GENERAL MOTORS COMPANY

2. Install the NEW intake manifold gasket (1).

cardiagn.com

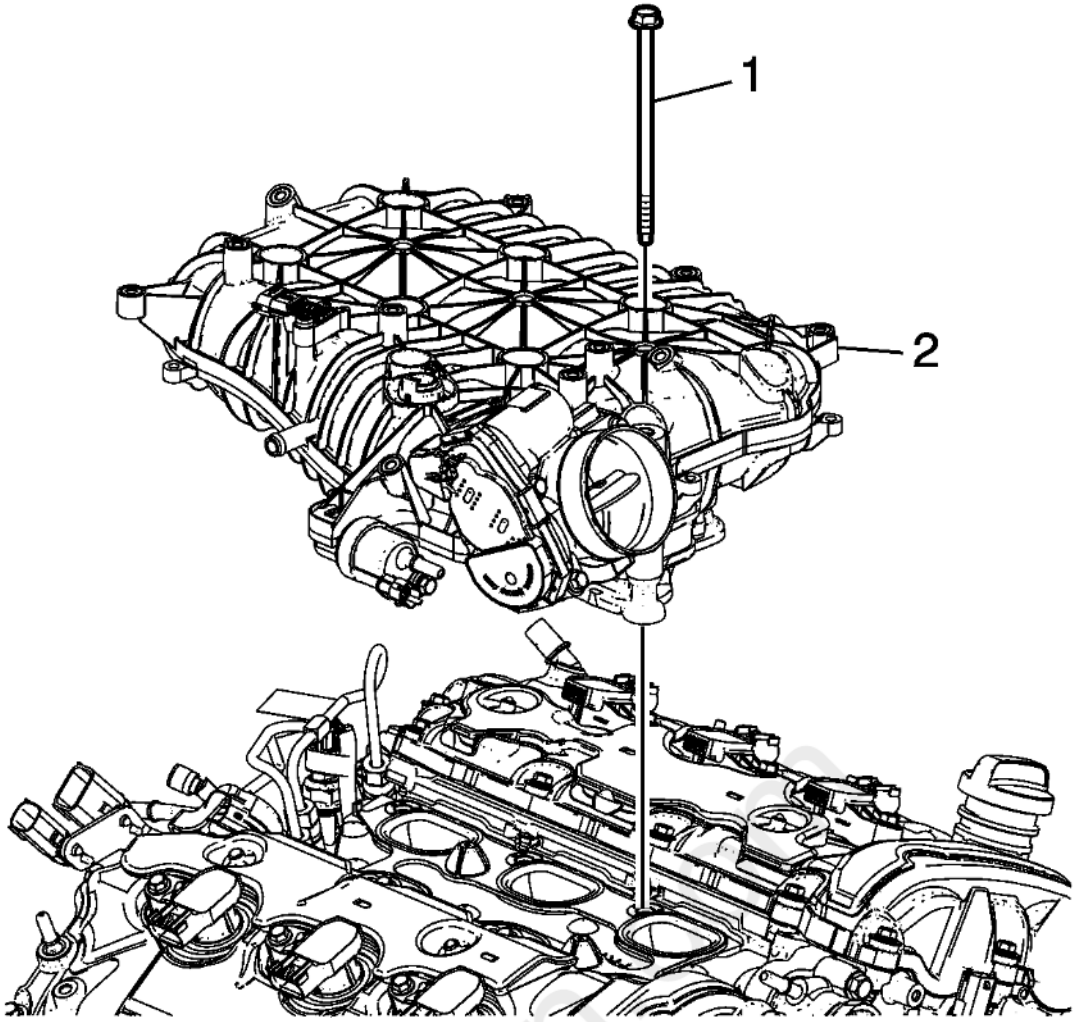

Fig. 23: Intake Manifold & Bolts
Courtesy of GENERAL MOTORS COMPANY

3. Install the intake manifold assembly (2).

CAUTION: **Refer to Fastener Caution .**

4. Install the intake manifold bolts (1).

carmanuals

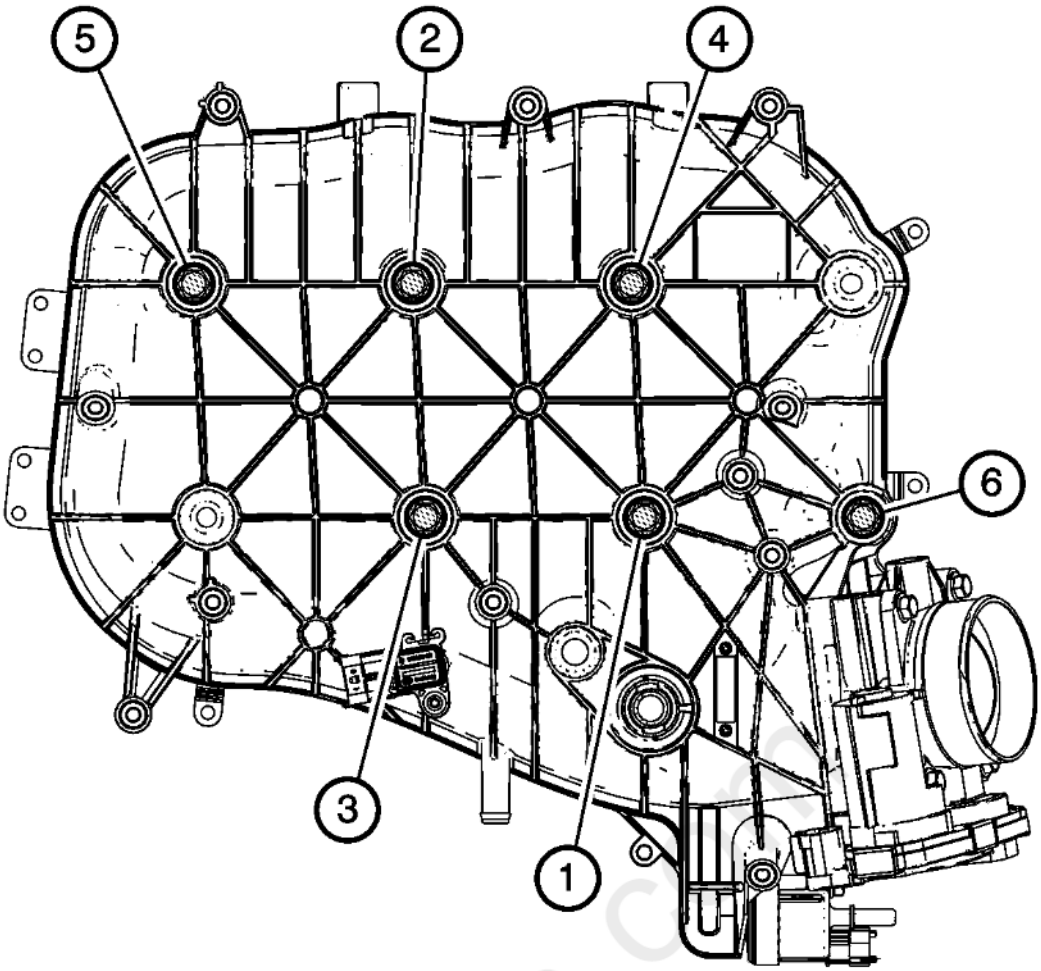

Fig. 24: Intake Manifold Bolt Tightening Sequence
Courtesy of GENERAL MOTORS COMPANY

5. Tighten the intake manifold bolts in the sequence shown.
6. Tighten the intake manifold bolts in sequence to 25 N.m (18 lb ft).
7. Tighten the intake manifold bolts a second pass in sequence to 25 N.m (18 lb ft).
8. Install the fuel pipe shield. Refer to **Fuel Pipe Shield Replacement** .
9. Position wire harnesses and connect as necessary.

carclan.com

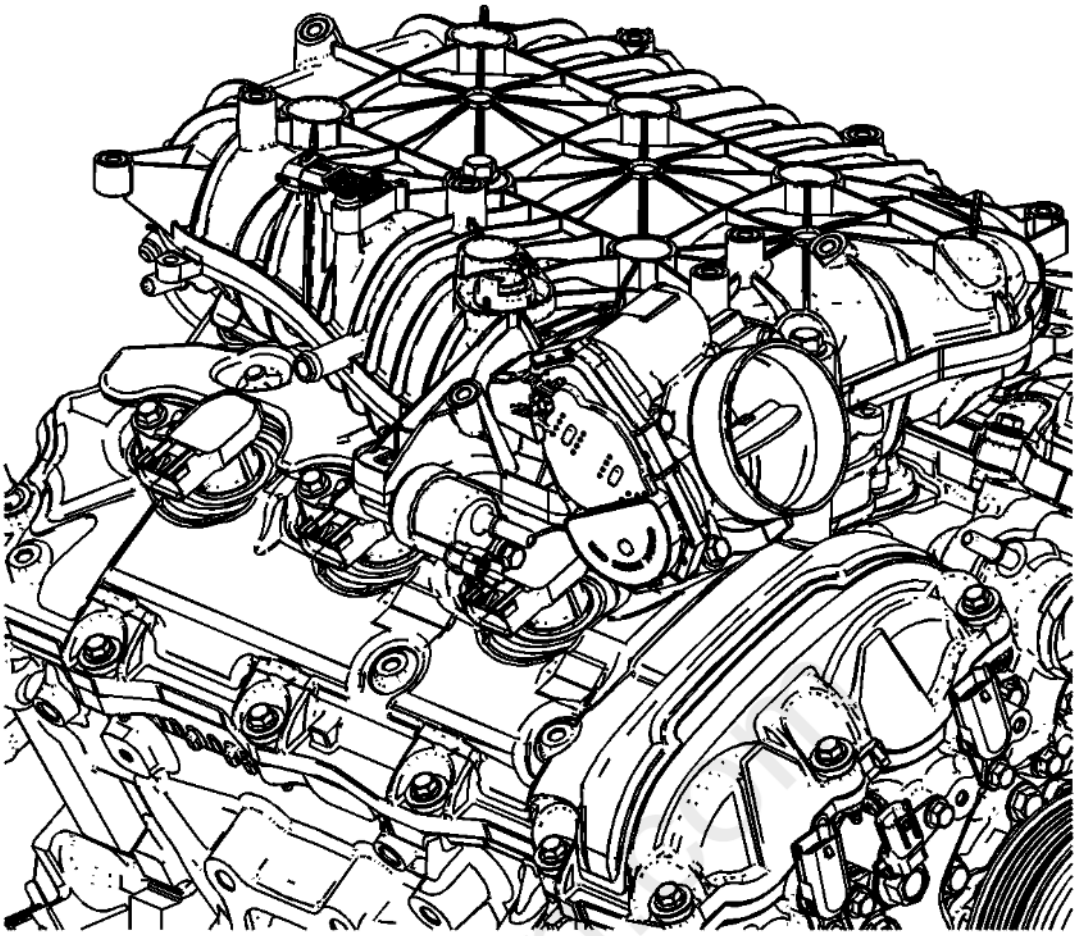

Fig. 25: Evaporative Emission Hose
Courtesy of GENERAL MOTORS COMPANY

10. Connect the EVAP hose to the upper intake manifold and EVAP solenoid.

cardiagn.com

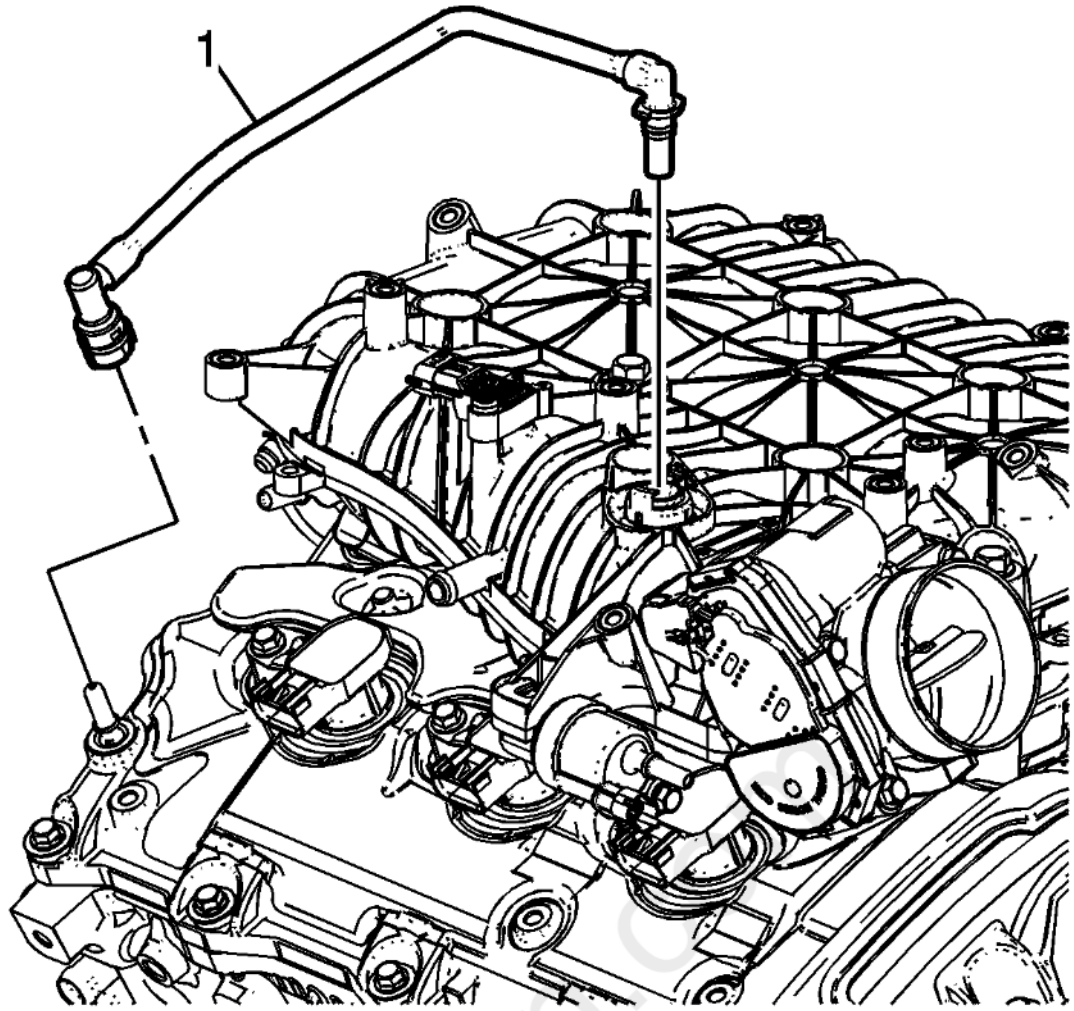

Fig. 26: Positive Crankcase Ventilation Tube
Courtesy of GENERAL MOTORS COMPANY

11. Connect the PCV tube assembly (1) to the upper intake manifold and the right camshaft cover.
12. Install coolant hose.
13. Install the coolant air bleed pipe. Refer to **Engine Coolant Air Bleed Pipe Replacement (LFX)** .
14. Install the fuel line and power brake booster vacuum pipe bracket to the intake manifold.
15. Connect the power brake booster vacuum hose to the intake manifold.
16. Install the air cleaner outlet duct. Refer to **Air Cleaner Outlet Duct Replacement** .
17. Install intake manifold cover. Refer to **Intake Manifold Cover Replacement (LFX)**.

OIL LEVEL INDICATOR TUBE REPLACEMENT

Removal Procedure

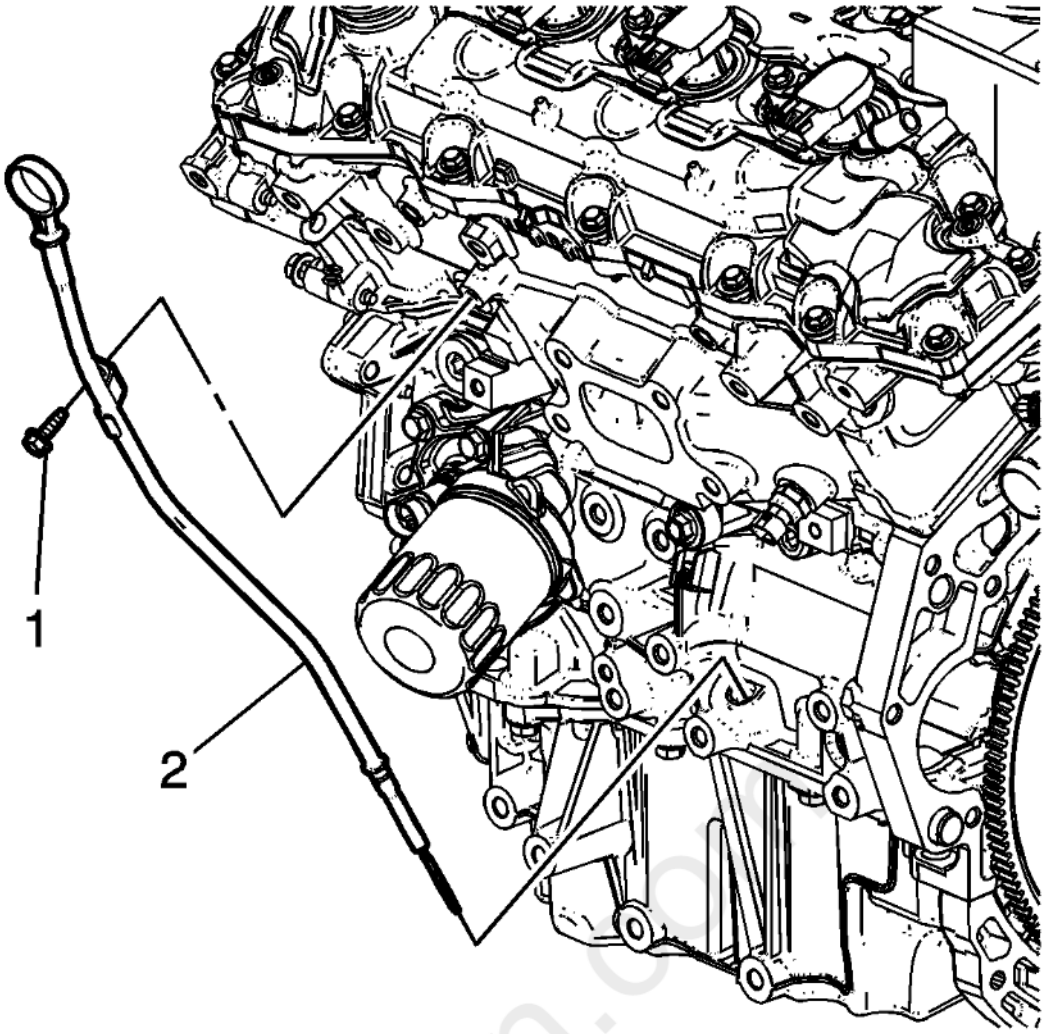

Fig. 27: Oil Level Indicator Tube Components
Courtesy of GENERAL MOTORS COMPANY

1. Remove the oil level indicator tube bracket bolt (1).
2. Remove the oil level indicator and tube (2) by sliding the tube out from the lower crankcase hole.

cardiagn.com

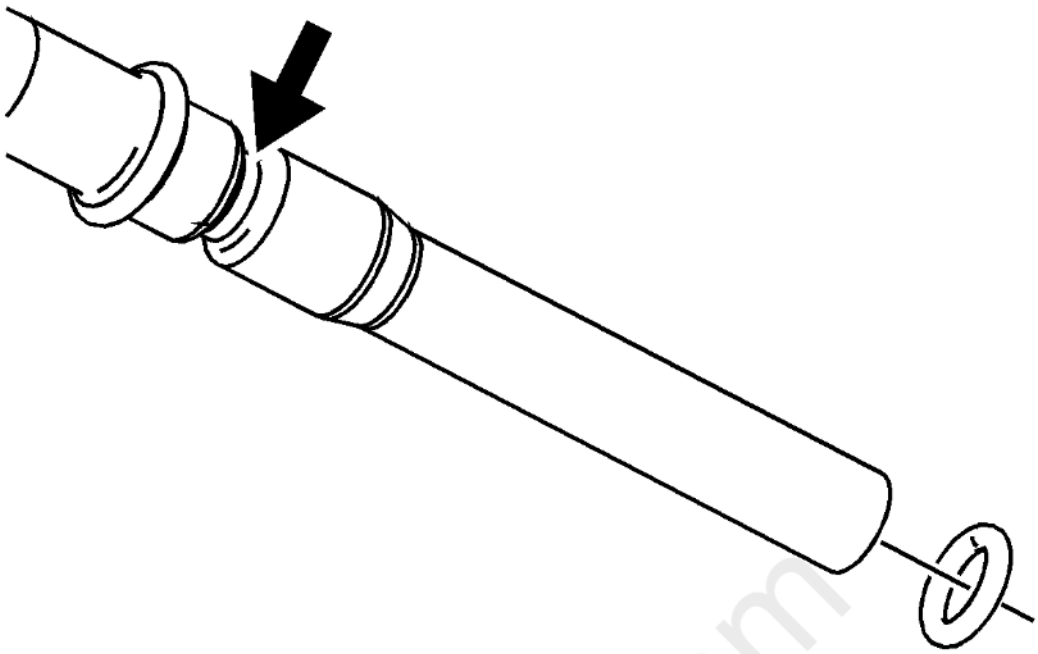

Fig. 28: Oil Level Indicator Tube O-Ring
Courtesy of GENERAL MOTORS COMPANY

3. Remove and discard the O-ring from the oil level indicator tube if damaged.

Installation Procedure

cardiagn.com

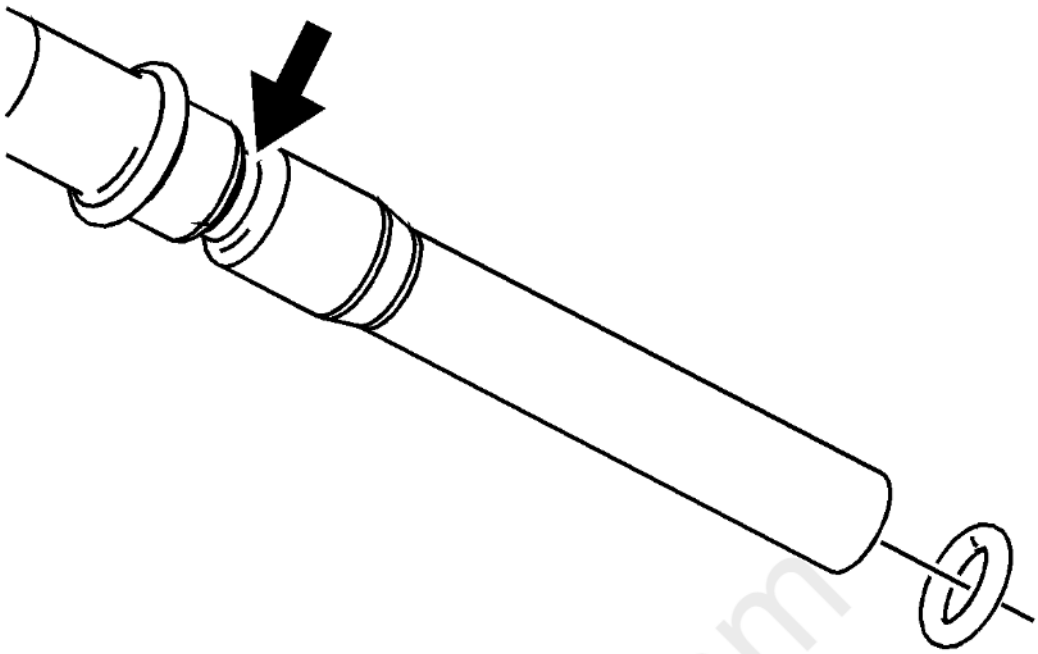

Fig. 29: Oil Level Indicator Tube O-Ring
Courtesy of GENERAL MOTORS COMPANY

1. Install a NEW O-ring on the oil level indicator tube.

cardiagn.com

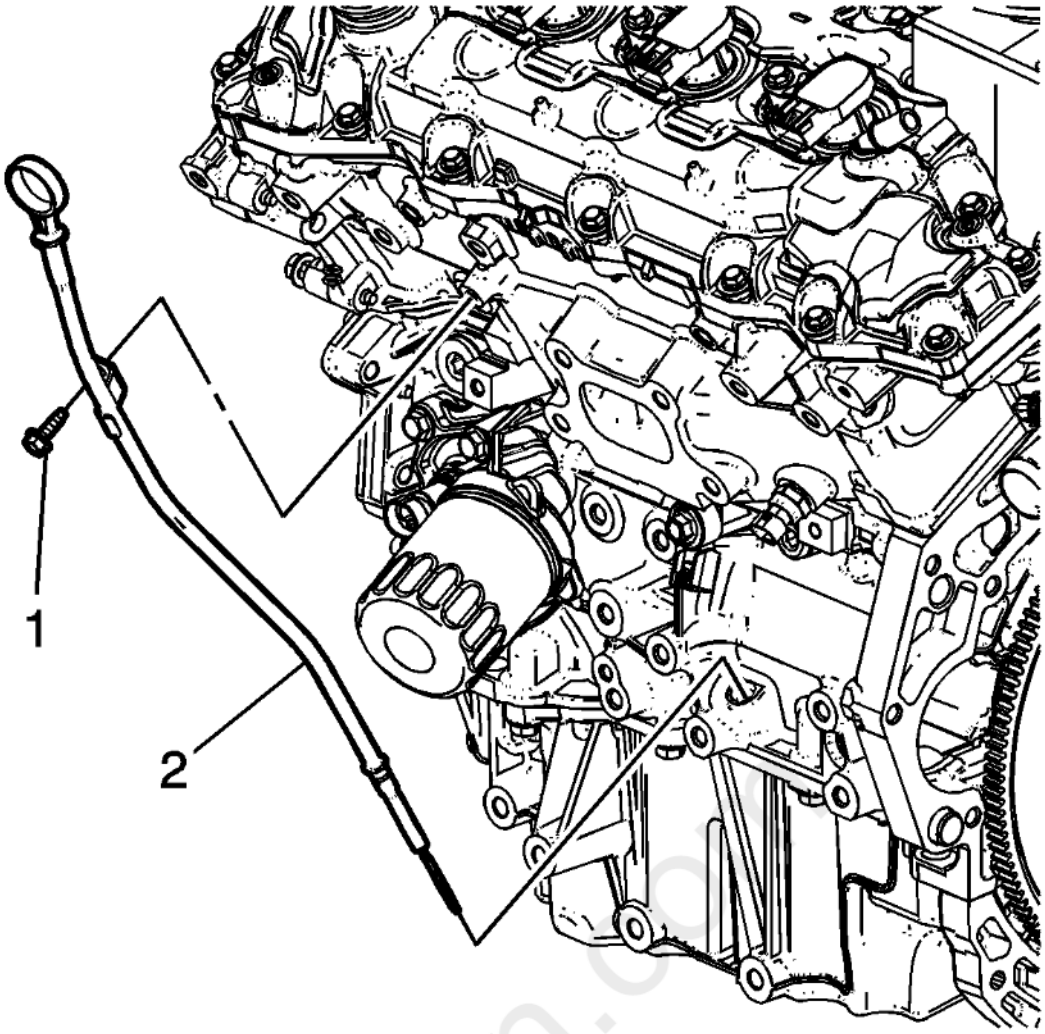

Fig. 30: Oil Level Indicator Tube Components
Courtesy of GENERAL MOTORS COMPANY

2. Install the oil level indicator and tube (2) by sliding the tube down through the lower crankcase hole.

CAUTION: Refer to Fastener Caution .

3. Install the oil level indicator tube bracket bolt (1) and tighten to 10 N.m (89 lb in).

OIL FILTER ADAPTER REPLACEMENT

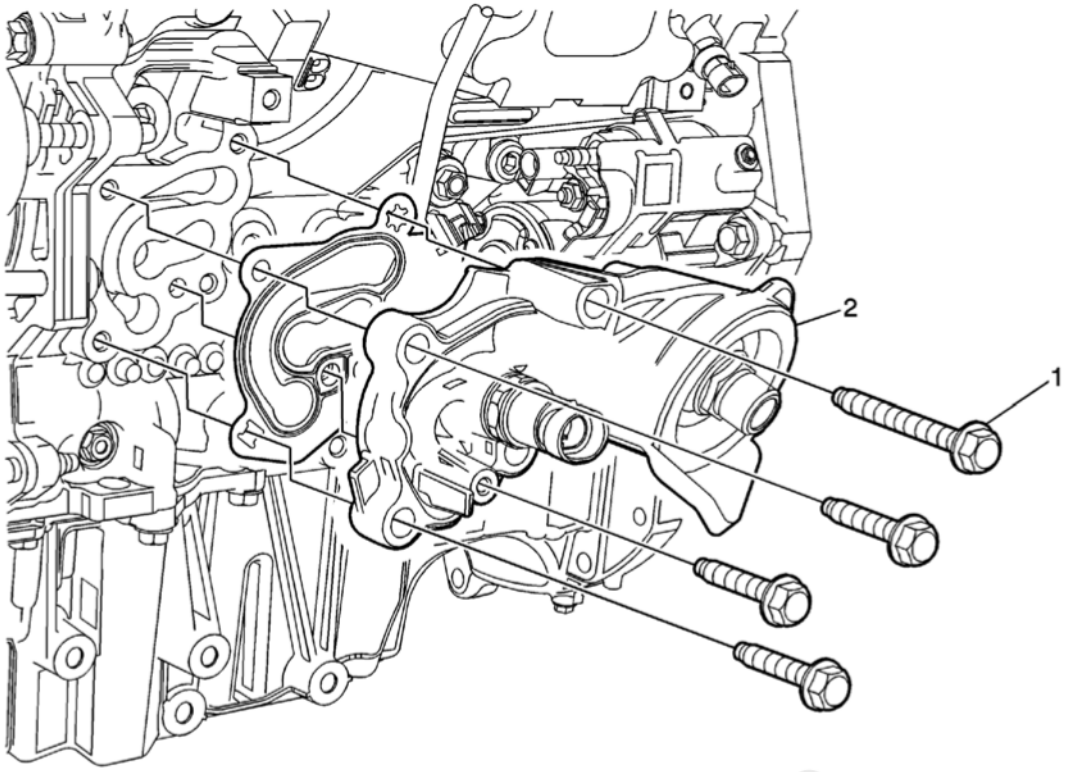

Fig. 31: Oil Filter Adapter & Fasteners
Courtesy of GENERAL MOTORS COMPANY

Callout	Component Name
Preliminary Procedures 1. Remove the generator. Refer to **Generator Replacement (LFX)** . 2. Remove the oil filter. Refer to **Engine Oil and Oil Filter Replacement**.	
1	Oil Filter Adapter Fastener (Qty: 4) **CAUTION:** **Refer to Fastener Caution .** **Tighten** 25 N.m (18 lb ft)
2	Oil Filter Adapter **Procedure** 1. Replace oil filter adapter gasket. 2. Disconnect electrical connector as needed. 3. Transfer components as necessary.

CRANKSHAFT BALANCER REPLACEMENT

Special Tools

- **EN-46106** Flywheel Holding Tool
- **J-38416-2** Crankshaft Button
- **J-41816** Crankshaft Balancer Remover
- **J-41998-B** Crankshaft Balancer Installer
- **J-45059** Angle Meter

For equivalent regional tools, refer to **Special Tools** .

cardiagn.com

Removal Procedure

1. Remove the right front wheelhouse liner. Refer to **Front Wheelhouse Liner Replacement** .
2. Remove the drive belt. Refer to **Drive Belt Replacement**.
3. Remove the power brake booster pump and bracket and reposition. Refer to **Power Brake Booster Pump Replacement** .
4. Remove the starter. Refer to **Starter Replacement (LFX)** .

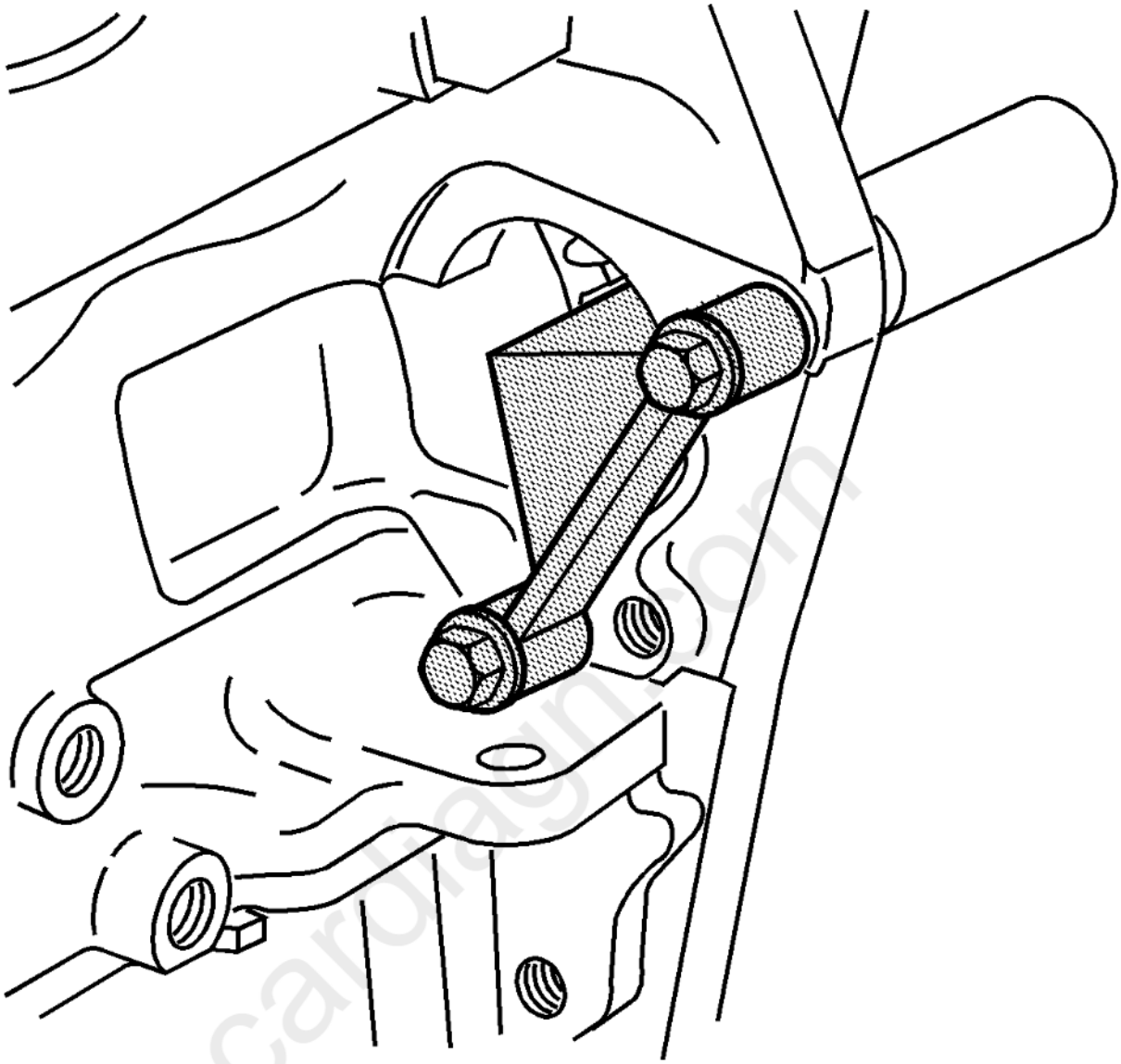

Fig. 32: Flywheel Holding Fixture
Courtesy of GENERAL MOTORS COMPANY

5. Install the **EN-46106** tool through the starter mounting hole.

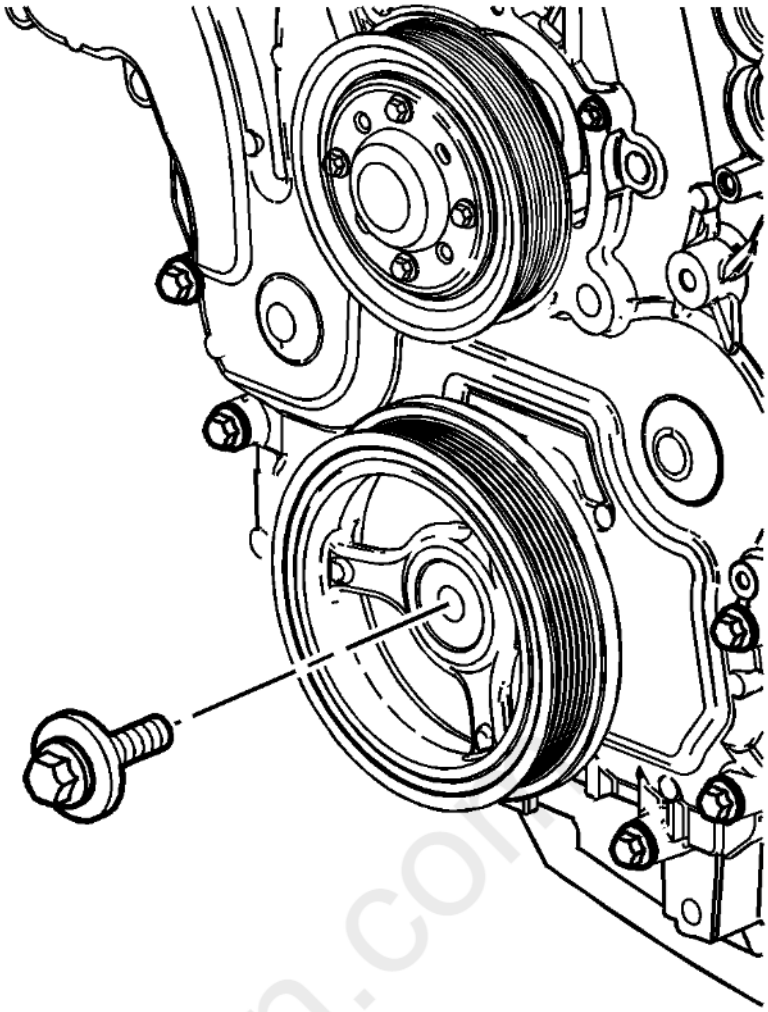

Fig. 33: Crankshaft Balancer Bolt
Courtesy of GENERAL MOTORS COMPANY

6. Remove the crankshaft balancer bolt. Discard the bolt.

cardiagn.com

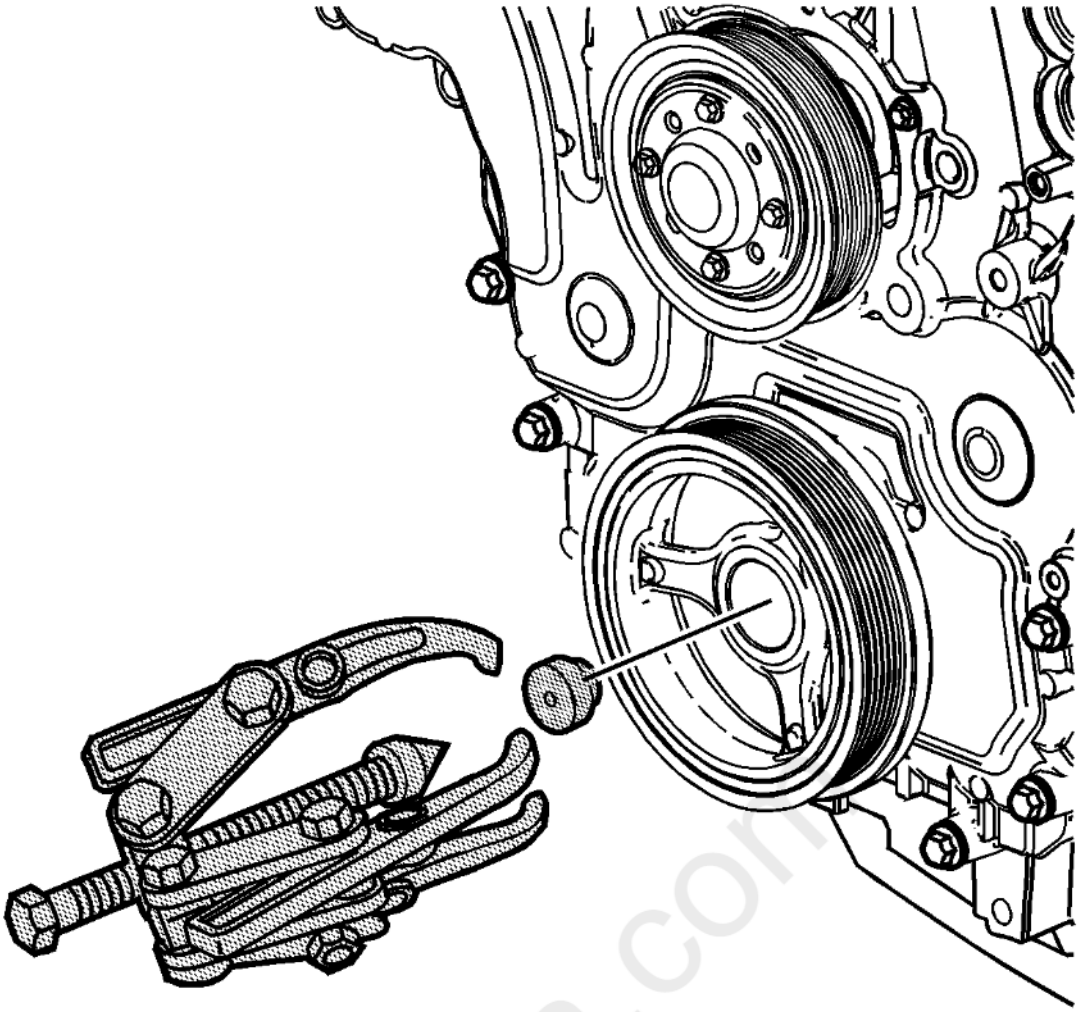

Fig. 34: Removing Crankshaft Balancer
Courtesy of GENERAL MOTORS COMPANY

7. Install the **J-38416-2** button in the nose of the crankshaft.
8. Install the **J-41816** remover in order to remove the crankshaft balancer.
9. Tighten the center bolt of the **J-41816** remover in order to pull the crankshaft balancer off of the crankshaft.
10. Remove the **J-41816** remover from the crankshaft balancer.

Installation Procedure

carmagn.com

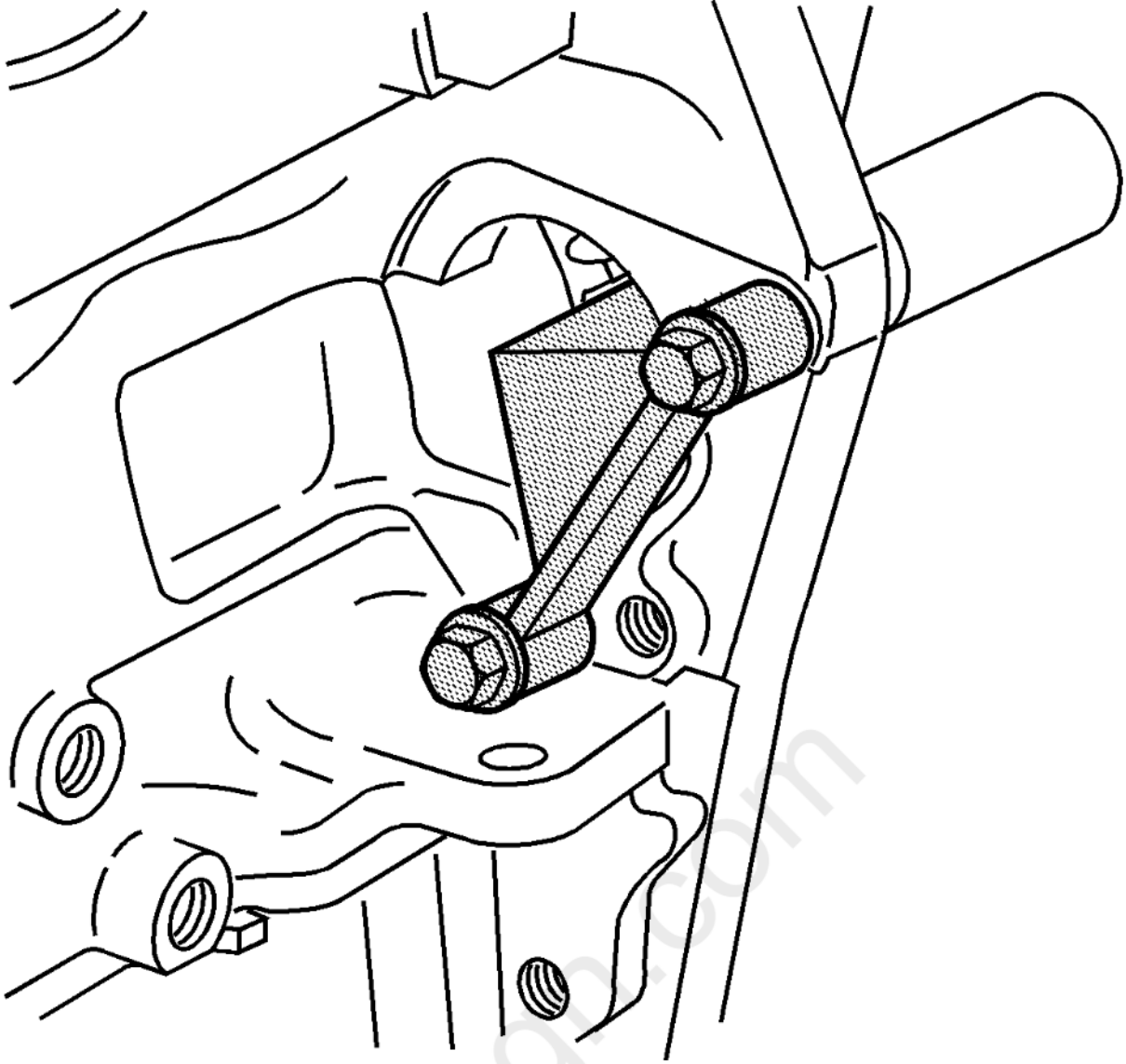

Fig. 35: Flywheel Holding Fixture
Courtesy of GENERAL MOTORS COMPANY

1. The **EN-46106** tool must be installed onto the flywheel.
2. Use the **J-41998-B** installer, nut, bearing and washer to install the crankshaft balancer.

carmanage.com

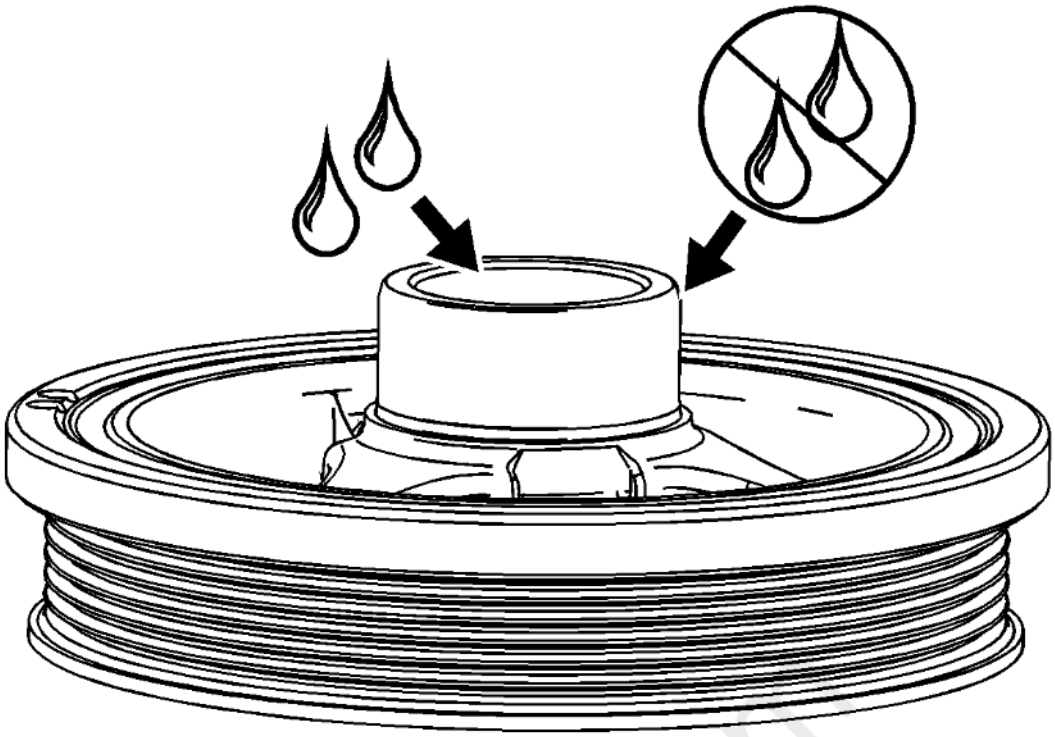

Fig. 36: Identifying Lubrication And Non-Lubrication Areas On Crankshaft Balancer
Courtesy of GENERAL MOTORS COMPANY

NOTE: **Do not lubricate the crankshaft front oil seal or crankshaft balancer sealing surfaces. The crankshaft balancer is installed into a dry seal.**

3. Apply lubricant to the inside of the crankshaft balancer hub bore.

carduagn.com

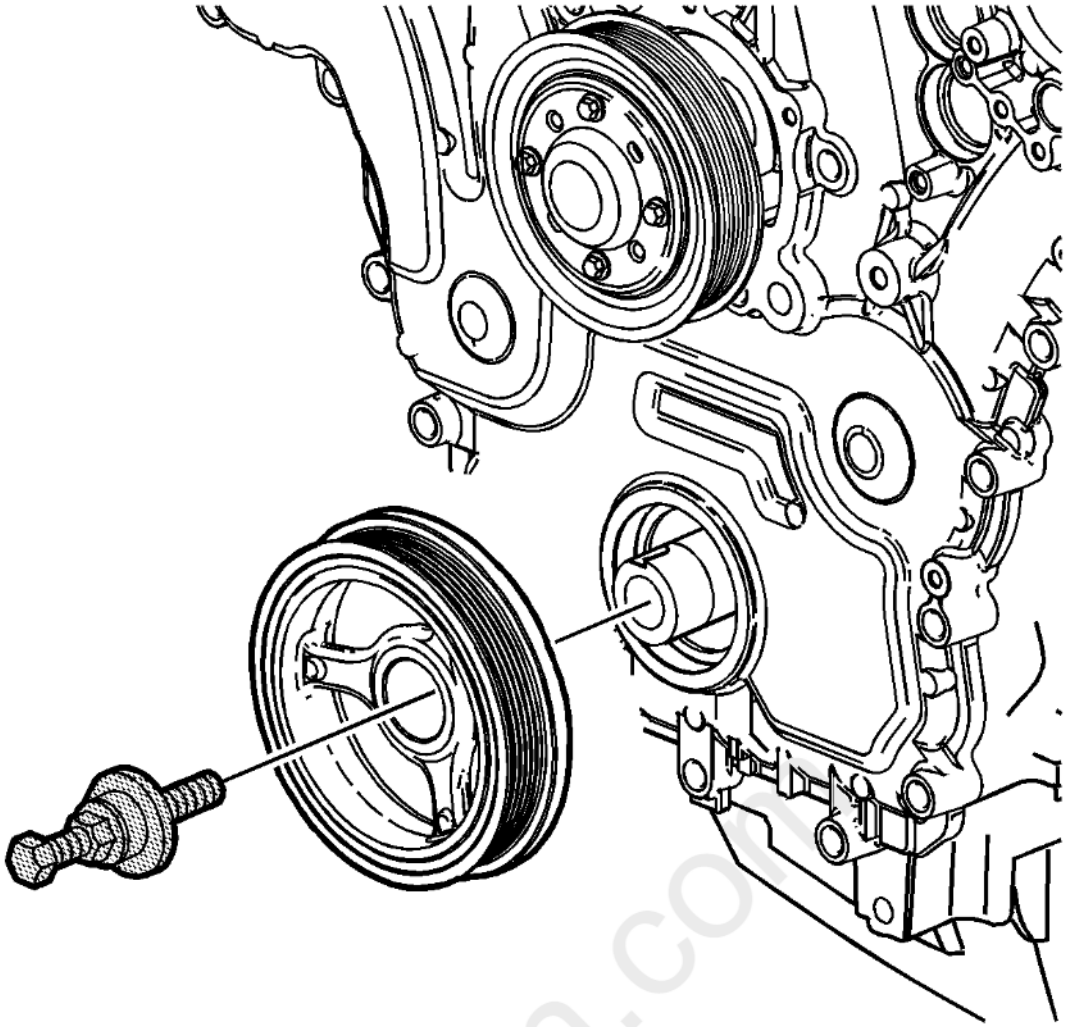

Fig. 37: Crankshaft Balancer And Installation Tool
Courtesy of GENERAL MOTORS COMPANY

4. Place the crankshaft balancer in position on the crankshaft.
5. Thread the **J-41998-B** installer in the crankshaft. Ensure you engage at least 10 threads of the **J-41998-B** installer before pressing the crankshaft balancer in place.
6. Push the crankshaft balancer into position by tightening the nut on the **J-41998-B** installer until the large washer bottoms out on the crankshaft end.
7. Remove the **J-41998-B** installer.

carbiagn.com

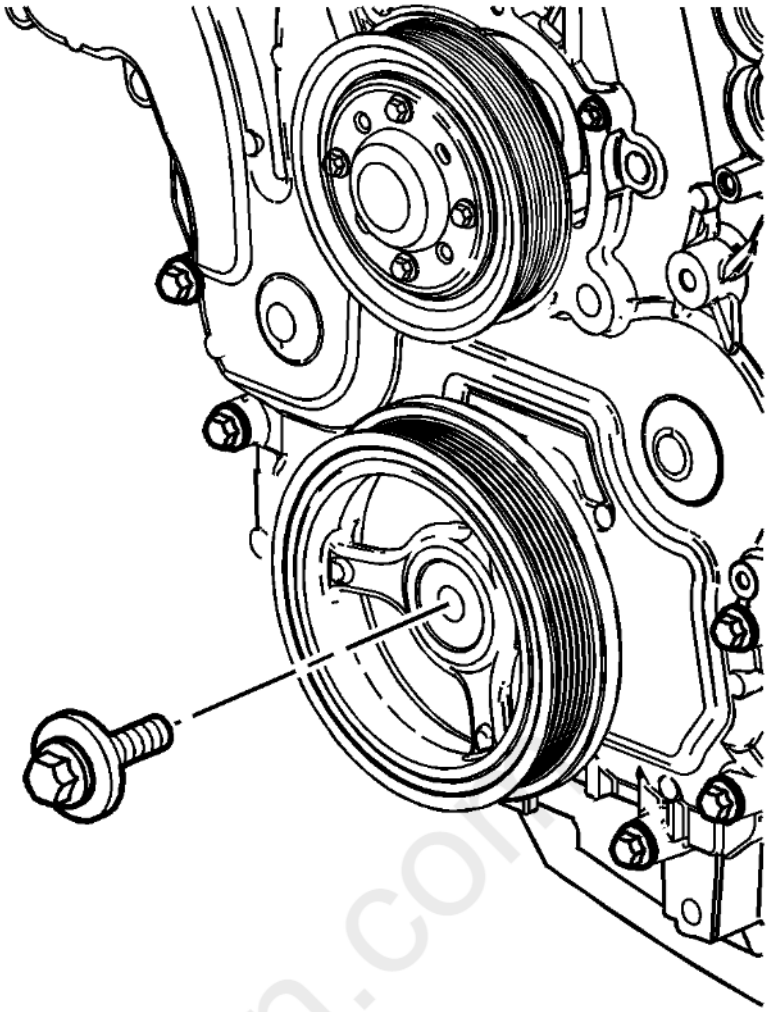

Fig. 38: Crankshaft Balancer Bolt
Courtesy of GENERAL MOTORS COMPANY

NOTE: **Always install a new crankshaft balancer retaining bolt and washer.**

8. Install the NEW crankshaft balancer bolt.

CAUTION: **Refer to Fastener Caution .**

9. Tighten the crankshaft balancer bolt to 100 N.m (74 lb ft) and an additional 150 degrees using the **J-45059** meter.

cardiagn.com

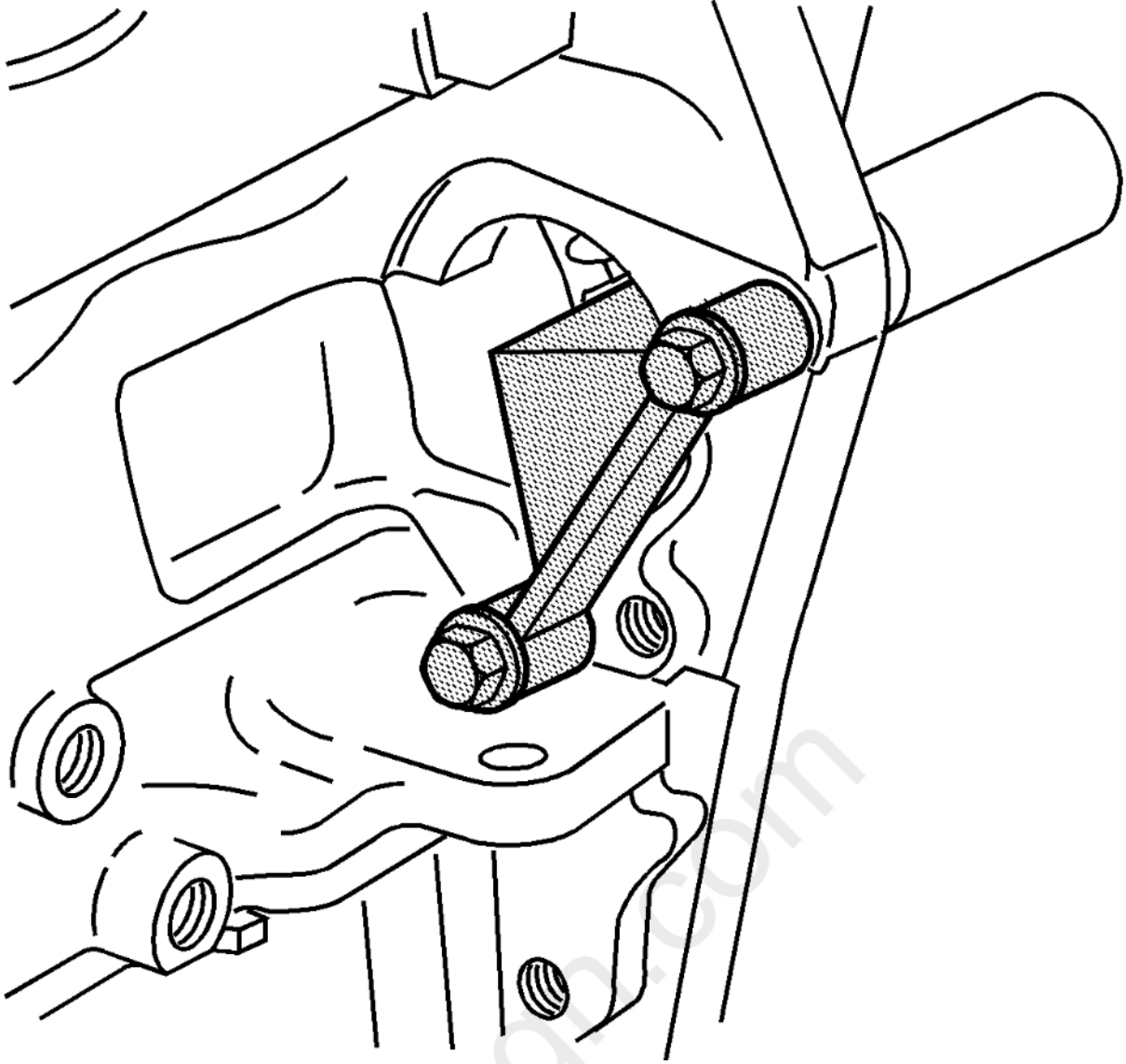

Fig. 39: Flywheel Holding Fixture
Courtesy of GENERAL MOTORS COMPANY

10. Remove the **EN-46106** tool.
11. Install the starter. Refer to **Starter Replacement (LFX)** .
12. Install the drive belt. Refer to **Drive Belt Replacement**.
13. Install the power brake booster pump and bracket. Refer to **Power Brake Booster Pump Replacement** .
14. Install the right front wheelhouse liner. Refer to **Front Wheelhouse Liner Replacement** .

CRANKSHAFT FRONT OIL SEAL REPLACEMENT

Special Tools

EN-29184 Oil Seal Installer

For equivalent regional tools, refer to **Special Tools** .

Removal Procedure

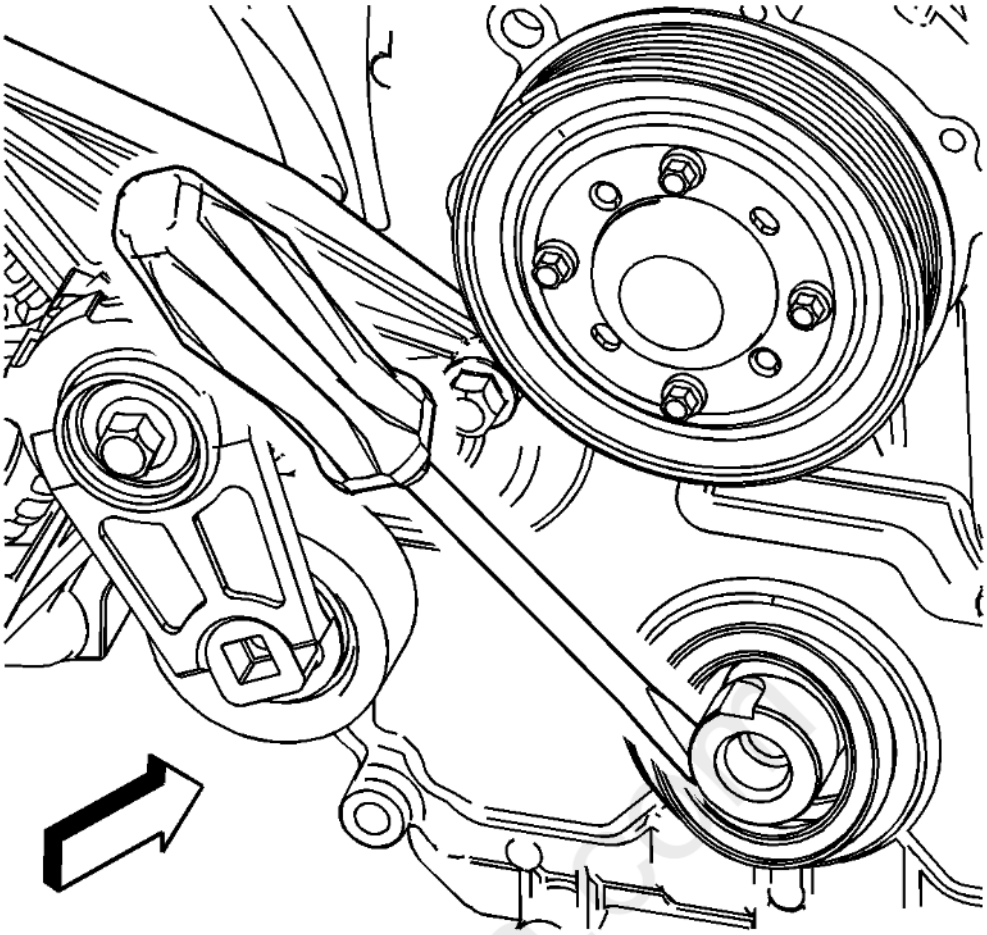

Fig. 40: Removing Crankshaft Front Oil Seal
Courtesy of GENERAL MOTORS COMPANY

1. Remove the crankshaft balancer. Refer to **Crankshaft Balancer Replacement**.
2. Remove the crankshaft front oil seal using a suitable flat blade tool.

Installation Procedure

cardiagn.com

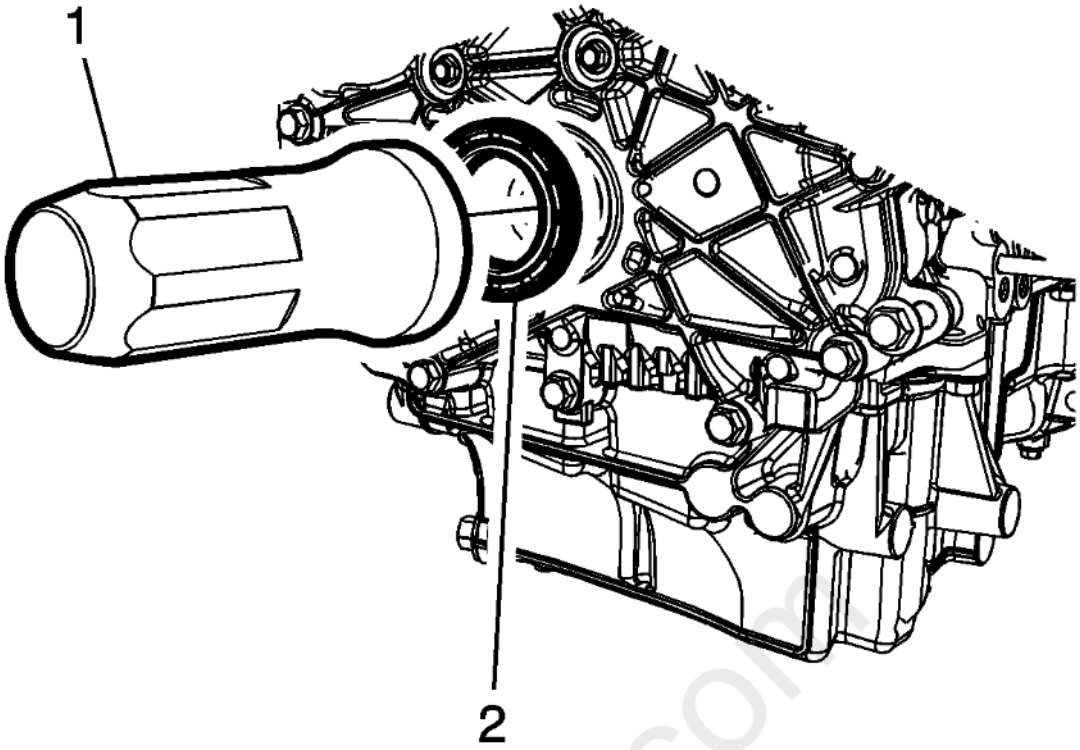

Fig. 41: Crankshaft Front Oil Seal And Installer
Courtesy of GENERAL MOTORS COMPANY

NOTE: **Do not lubricate the crankshaft front oil seal or the crankshaft balancer sealing surfaces.**

1. Use the **EN-29184** installer (1) or equivalent to install the crankshaft front oil seal (2).
2. Install the crankshaft balancer. Refer to **Crankshaft Balancer Replacement**.

CAMSHAFT COVER REPLACEMENT - LEFT SIDE

Special Tools

EN-46101 Spark Plug Tube Seal Guide

For equivalent regional tools, refer to **Special Tools** .

Removal Procedure

1. Remove the ignition coils. Refer to **Ignition Coil Replacement - Bank 2** .
2. Disconnect and remove the engine harness from the camshaft cover.
3. Remove the intake manifold. Refer to **Intake Manifold Replacement**.

cardiagn.com

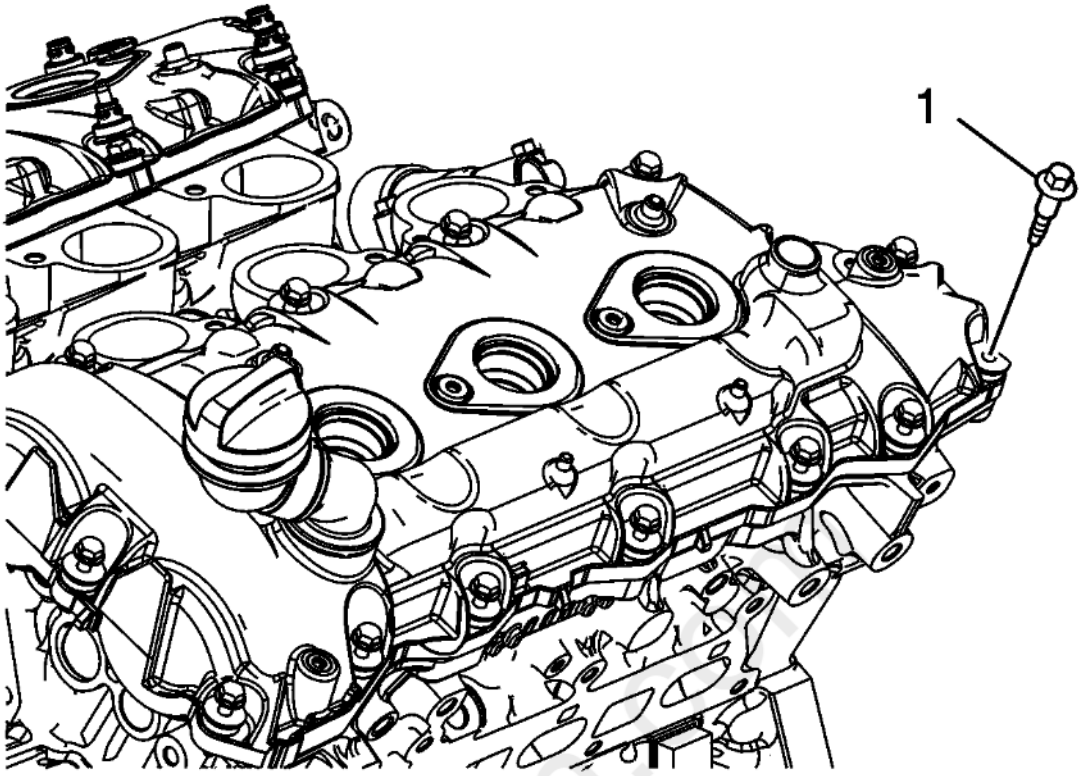

Fig. 42: Camshaft Cover and Bolts
Courtesy of GENERAL MOTORS COMPANY

4. Remove the left camshaft cover bolts.
5. Remove the left camshaft cover from the bank 2 cylinder head.
6. Disassemble the camshaft cover as needed. Refer to **Camshaft Cover Disassemble** .
7. Clean the mating surfaces of the cylinder head and the camshaft cover. Refer to **Camshaft Cover Cleaning and Inspection**

carmanuals.com

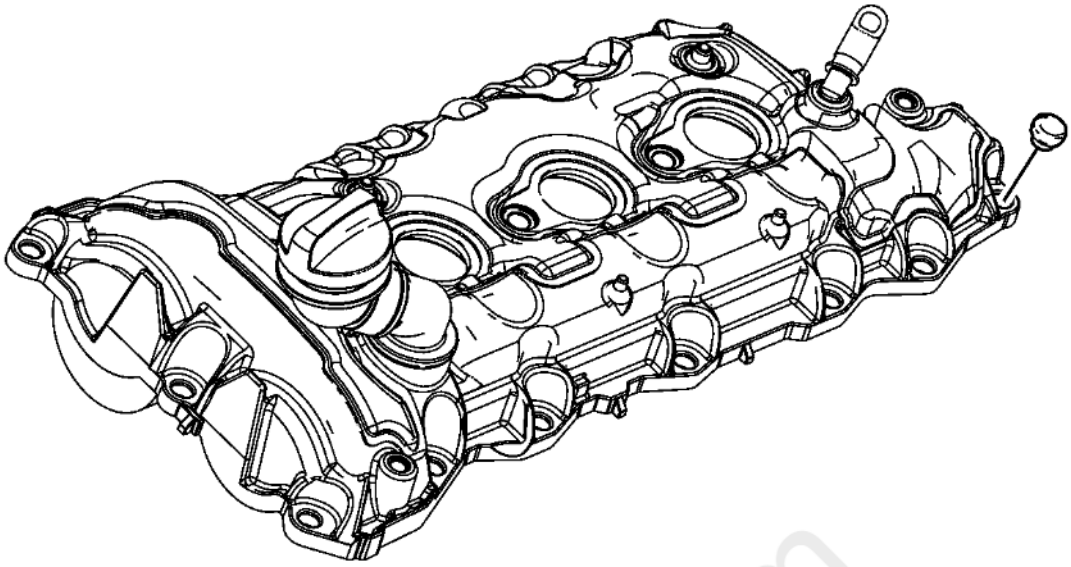

Fig. 43: Camshaft Cover
Courtesy of GENERAL MOTORS COMPANY

8. Install the **EN-46101** guide onto the spark plug tubes of the bank 2 cylinder head.

Installation Procedure

1. Assemble the camshaft cover as needed. Refer to **Camshaft Cover Assemble** .

cardiagn.com

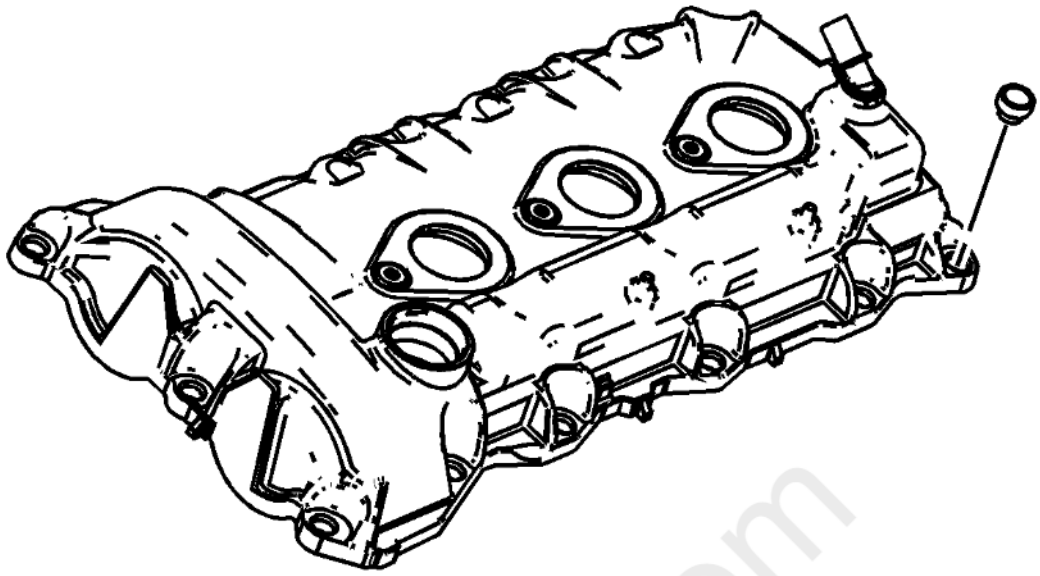

Fig. 44: Camshaft Cover Bolt Grommets
Courtesy of GENERAL MOTORS COMPANY

2. Install new camshaft cover bolt grommets prior to installing the camshaft cover bolts.

cardiagn.com

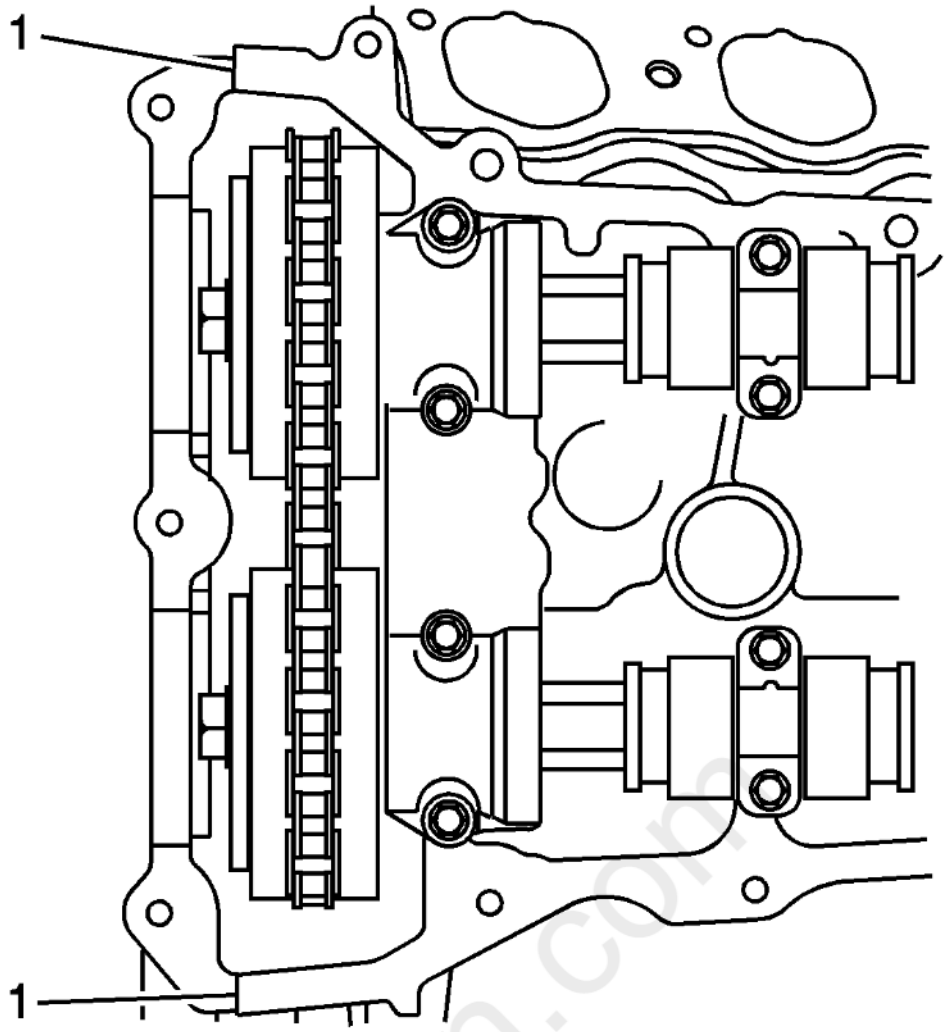

Fig. 45: Applying Sealant On Engine Front Cover Split Lines
Courtesy of GENERAL MOTORS COMPANY

3. Place a bead 8 mm (0.3150 in) in diameter by 4 mm (0.1575 in) in height of RTV sealant equivalent, on the engine front cover split lines (1).

carguign.com

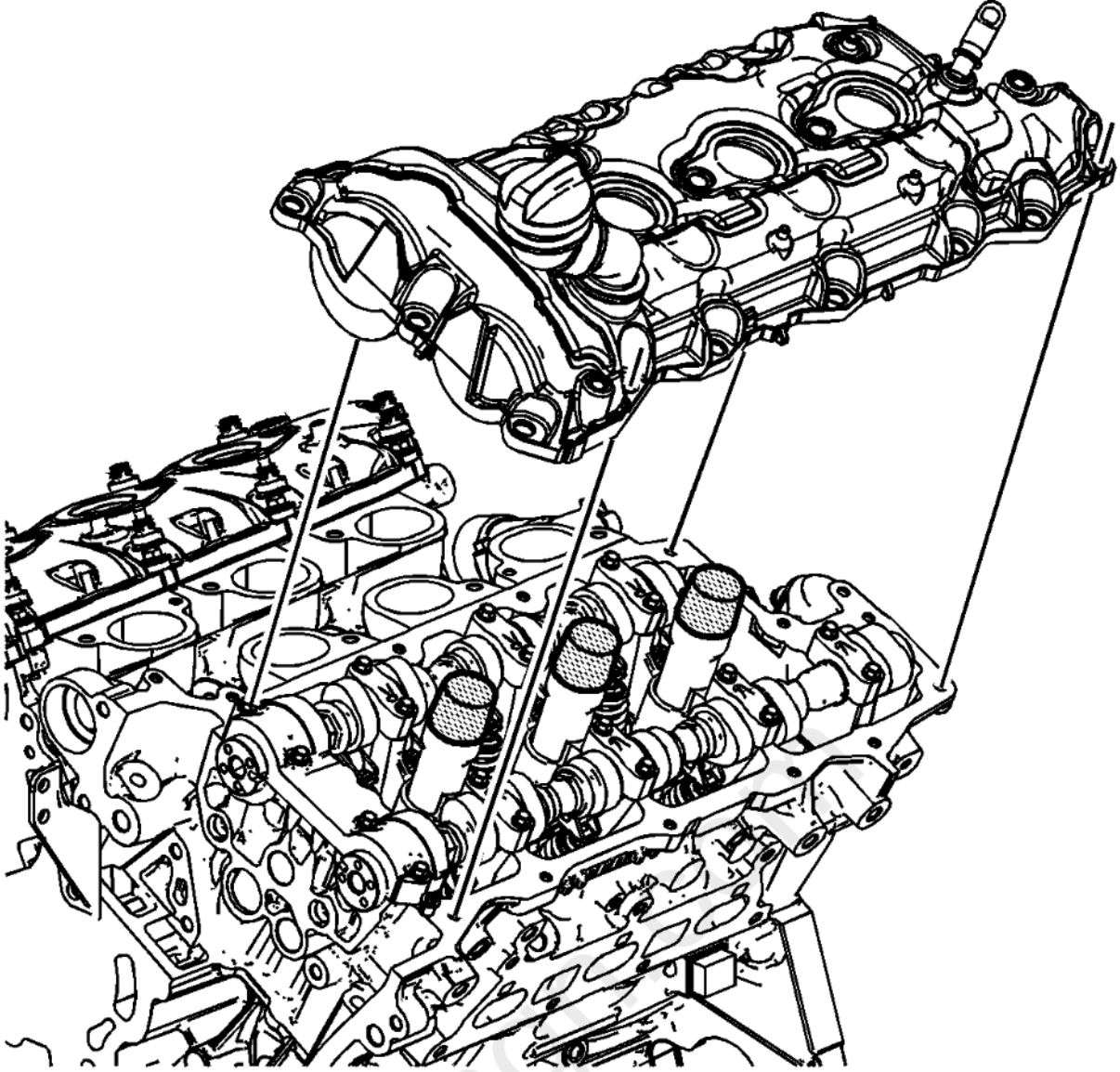

Fig. 46: Camshaft Cover And Cylinder Head
Courtesy of GENERAL MOTORS COMPANY

4. Place the left camshaft cover into position onto the bank 2 cylinder head.

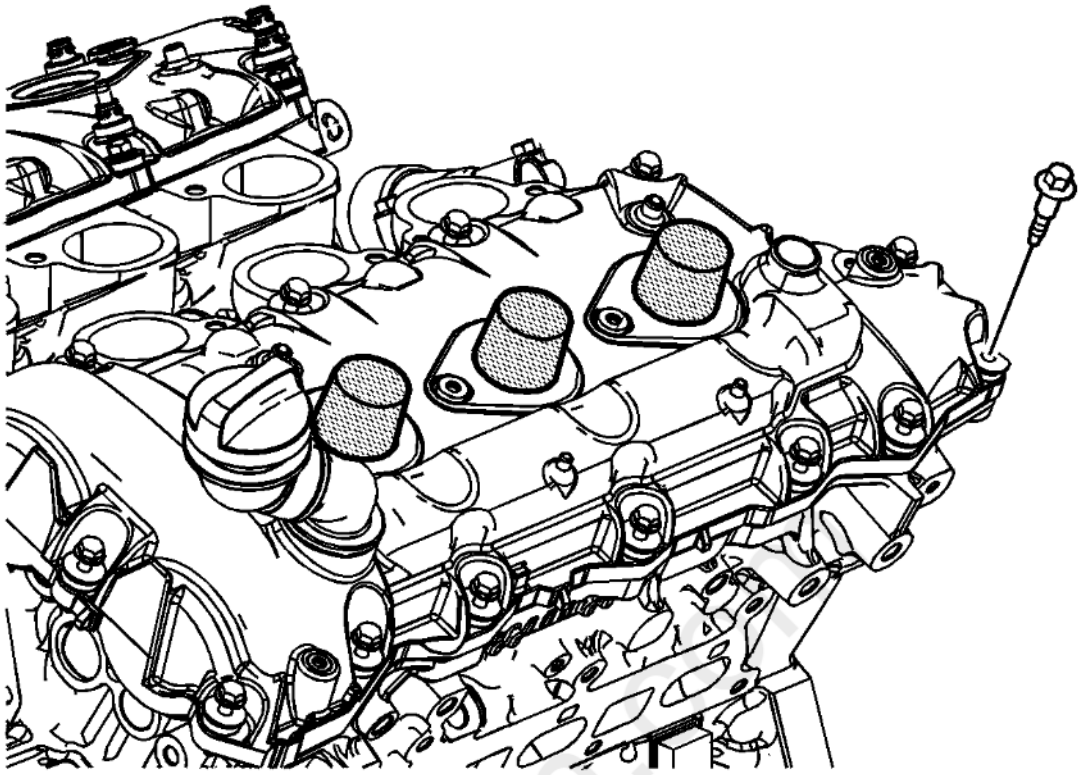

Fig. 47: Camshaft Cover And Bolts
Courtesy of GENERAL MOTORS COMPANY

CAUTION: **Refer to Fastener Caution .**

5. Loosely install the left camshaft cover bolts.

cardiagn

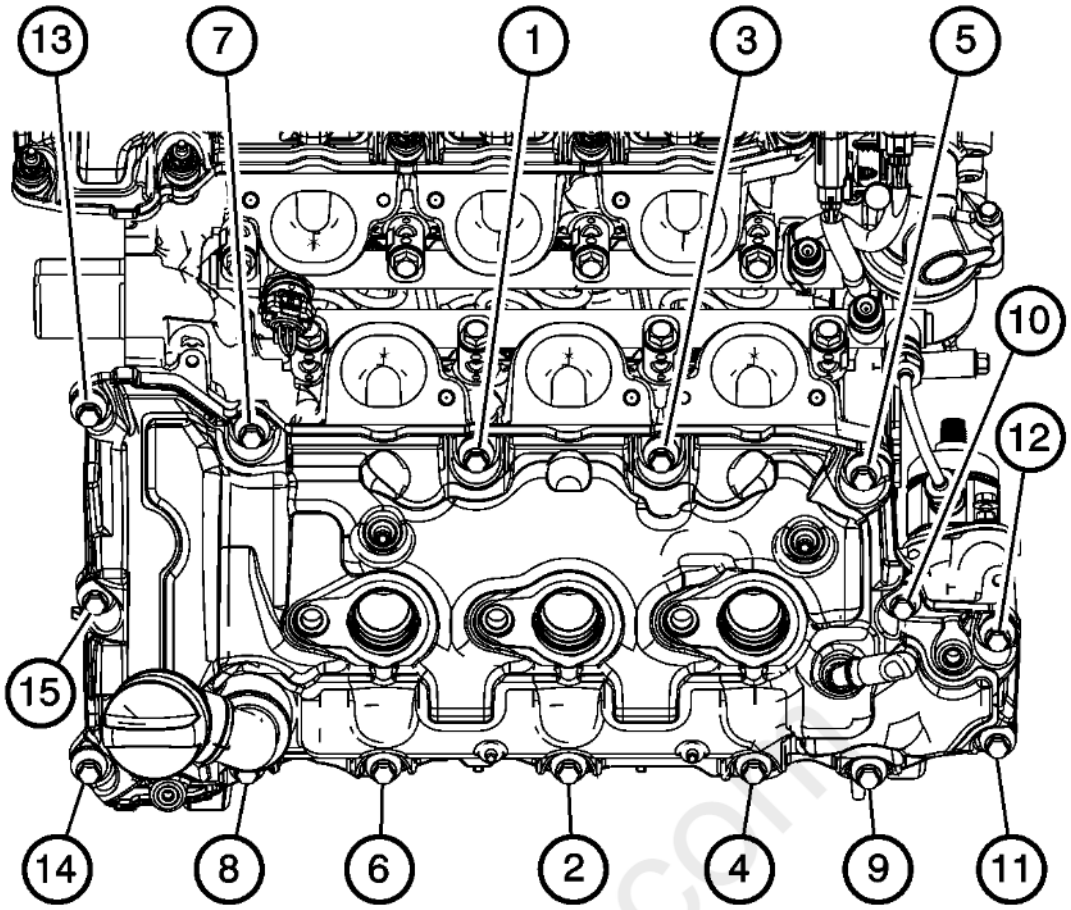

Fig. 48: Left Camshaft Cover Bolt Tightening Sequence
Courtesy of GENERAL MOTORS COMPANY

6. Tighten the left camshaft cover bolts in the sequence shown to 10 N.m (89 lb in).
7. Connect and install the engine harness to the camshaft cover.
8. Install the intake manifold. Refer to **Intake Manifold Replacement**.

cardiagn.com

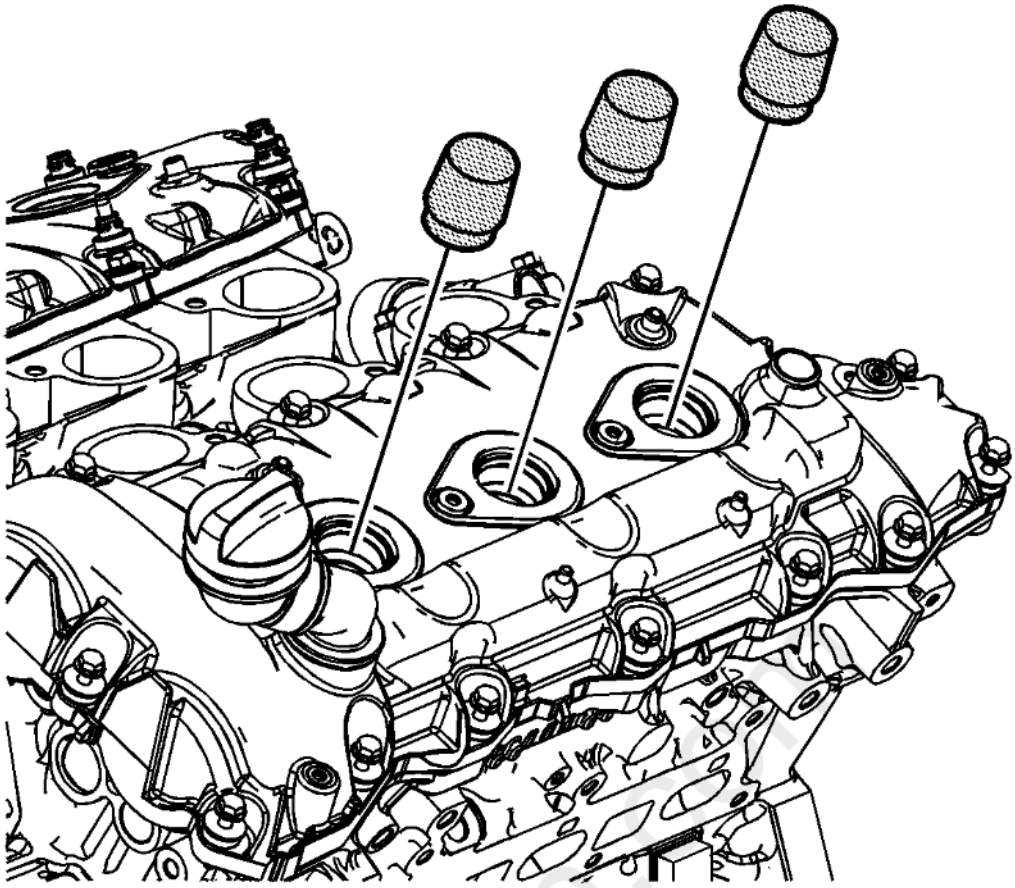

Fig. 49: Spark Plug Tubes And Cylinder Head
Courtesy of GENERAL MOTORS COMPANY

9. Remove the **EN-46101** guide from the spark plug tubes of the bank 2 cylinder head.
10. Install the ignition coils. Refer to **Ignition Coil Replacement - Bank 2** .

CAMSHAFT COVER REPLACEMENT - RIGHT SIDE

Special Tools

EN-46101 Spark Plug Tube Seal Guide

For equivalent regional tools, refer to **Special Tools**

Removal Procedure

1. Remove the ignition coils. Refer to **Ignition Coil Replacement - Bank 1**
2. Disconnect and remove the engine harness from the camshaft cover.

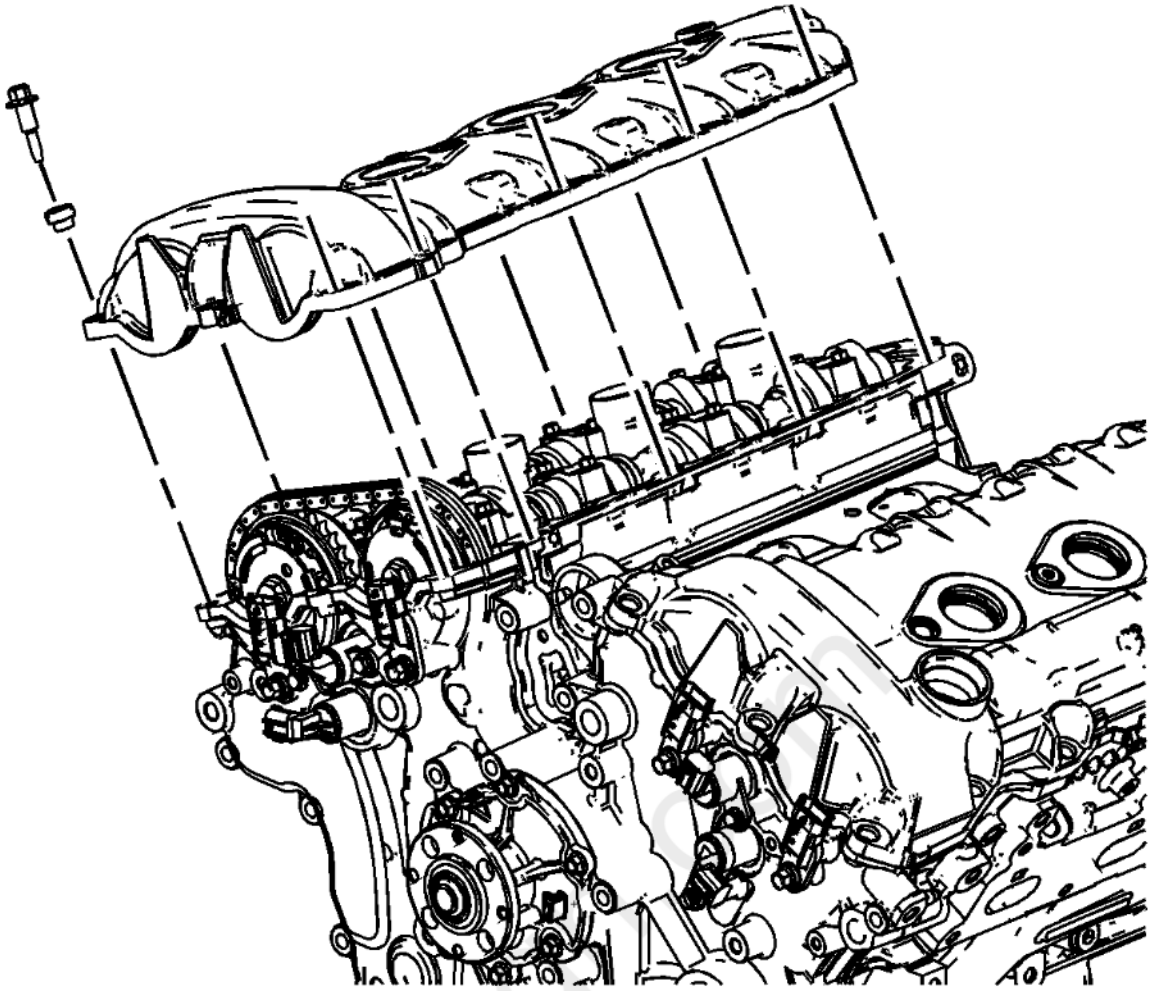

Fig. 50: Camshaft Cover & Bolts
Courtesy of GENERAL MOTORS COMPANY

3. Remove the right camshaft cover bolts.
4. Remove the right camshaft cover from the bank 1 cylinder head.
5. Disassemble the camshaft cover as needed. Refer to **Camshaft Cover Disassemble** .
6. Clean the mating surfaces of the cylinder head and the camshaft cover. Refer to **Camshaft Cover Cleaning and Inspection**

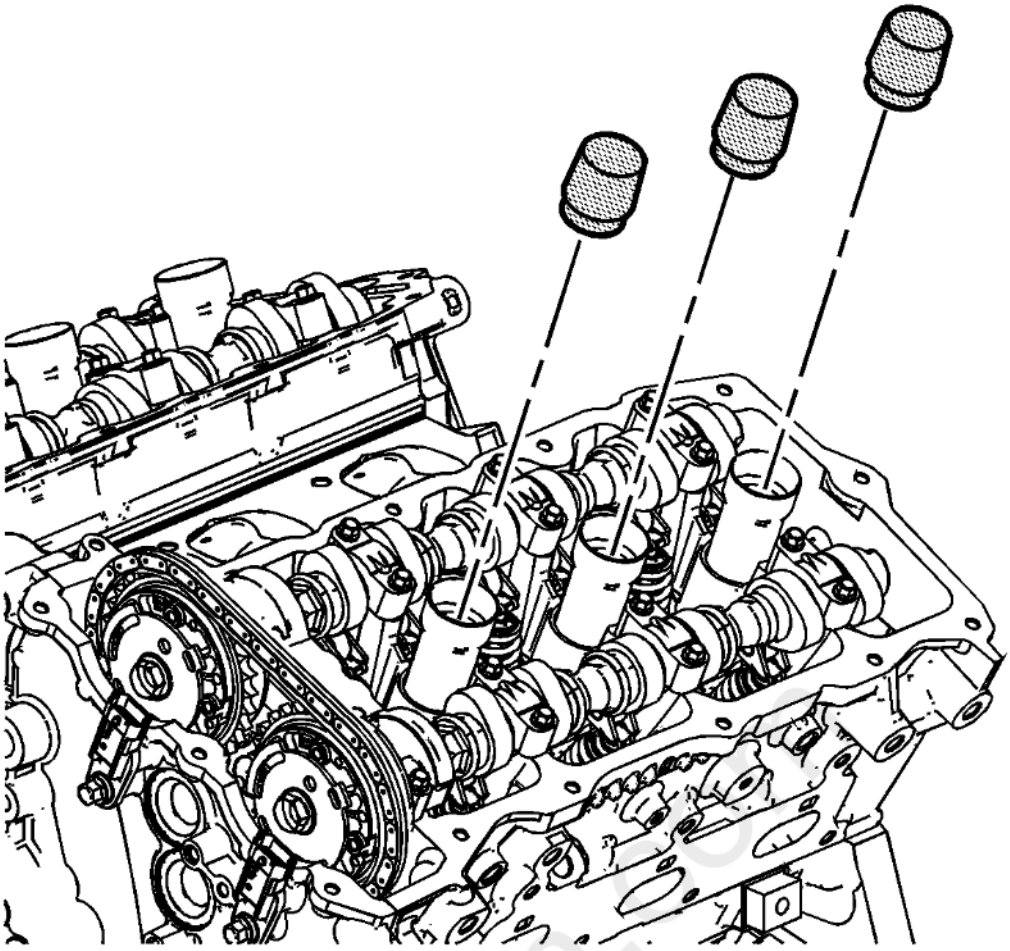

Fig. 51: Plugging Spark Plug Holes
Courtesy of GENERAL MOTORS COMPANY

7. Install the **EN-46101** guide onto the spark plug tubes of the bank 1 cylinder head.

Installation Procedure

1. Assemble the camshaft cover as needed. Refer to **Camshaft Cover Assemble** .

cardiagn.com

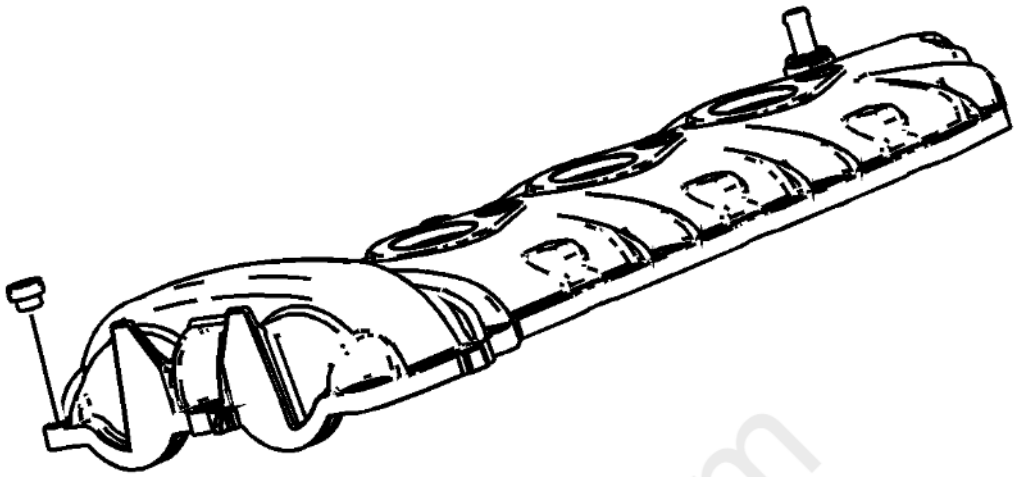

Fig. 52: Camshaft Cover Bolt Grommets
Courtesy of GENERAL MOTORS COMPANY

2. Install new camshaft cover bolt grommets prior to installing the camshaft cover bolts.

cardiagn.com

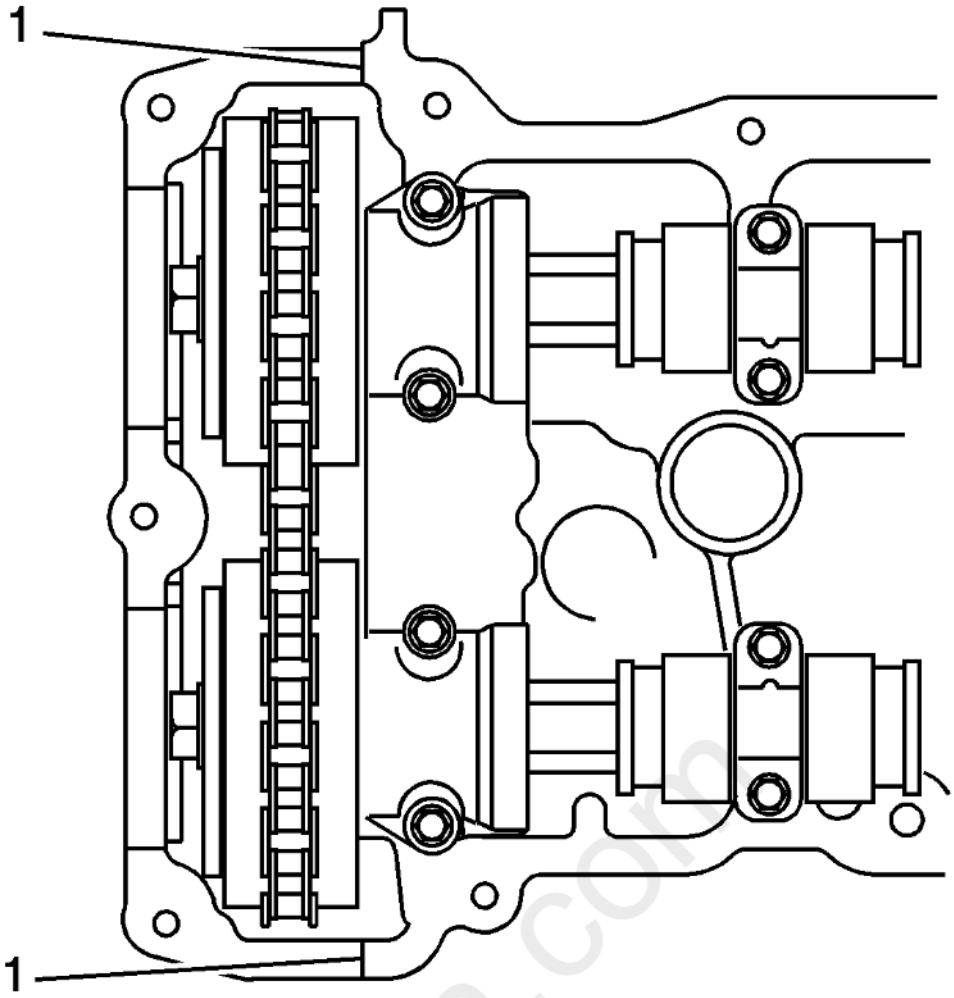

Fig. 53: Applying Sealant On Engine Front Cover Split Lines
Courtesy of GENERAL MOTORS COMPANY

3. Place a bead 8 mm (0.3150 in) in diameter by 4 mm (0.1575 in) in height of RTV sealant, on the engine front cover split lines (1).

cardiagn.com

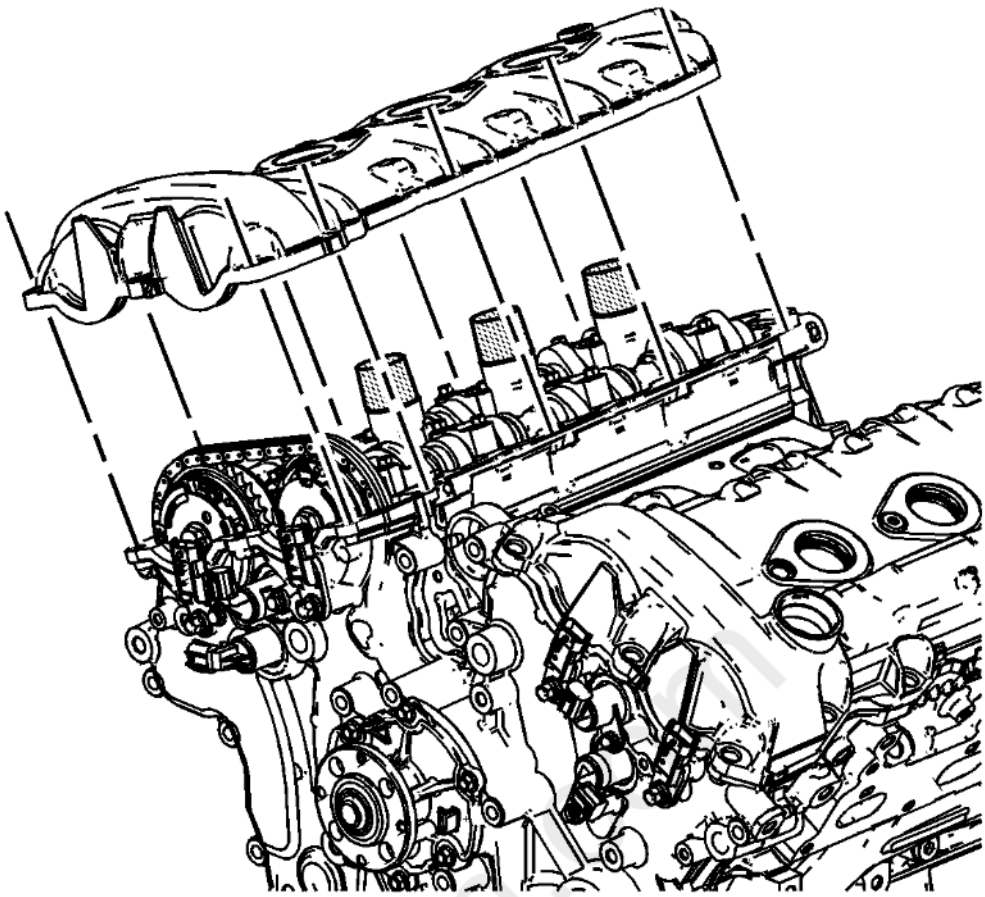

Fig. 54: Right Camshaft Cover
Courtesy of GENERAL MOTORS COMPANY

4. Place the right camshaft cover into position onto the bank 1 cylinder head.

cardiagn

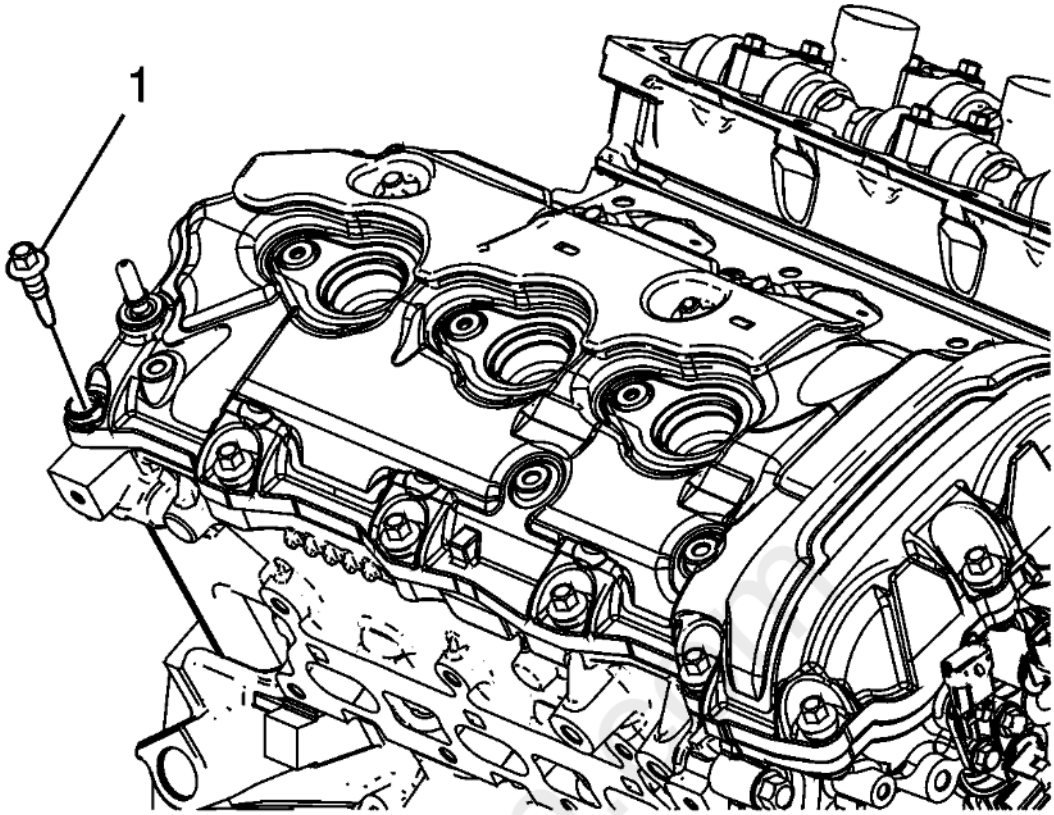

Fig. 55: Camshaft Cover Bolts
Courtesy of GENERAL MOTORS COMPANY

CAUTION: Refer to Fastener Caution

5. Loosely install the right camshaft cover bolts.

cardiagn.com

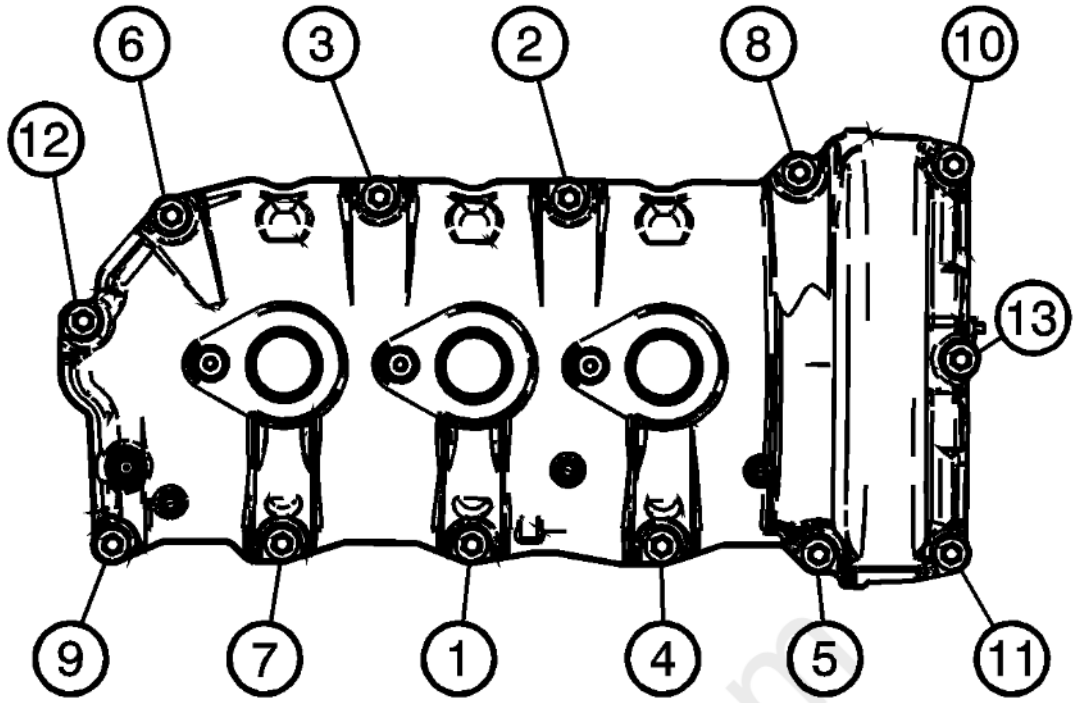

Fig. 56: Right Camshaft Cover Bolt Tightening Sequence
Courtesy of GENERAL MOTORS COMPANY

6. Tighten the right camshaft cover bolts in the sequence shown to 10 N.m (89 lb in).
7. Connect and install the engine harness to the camshaft cover.

cardiagn.com

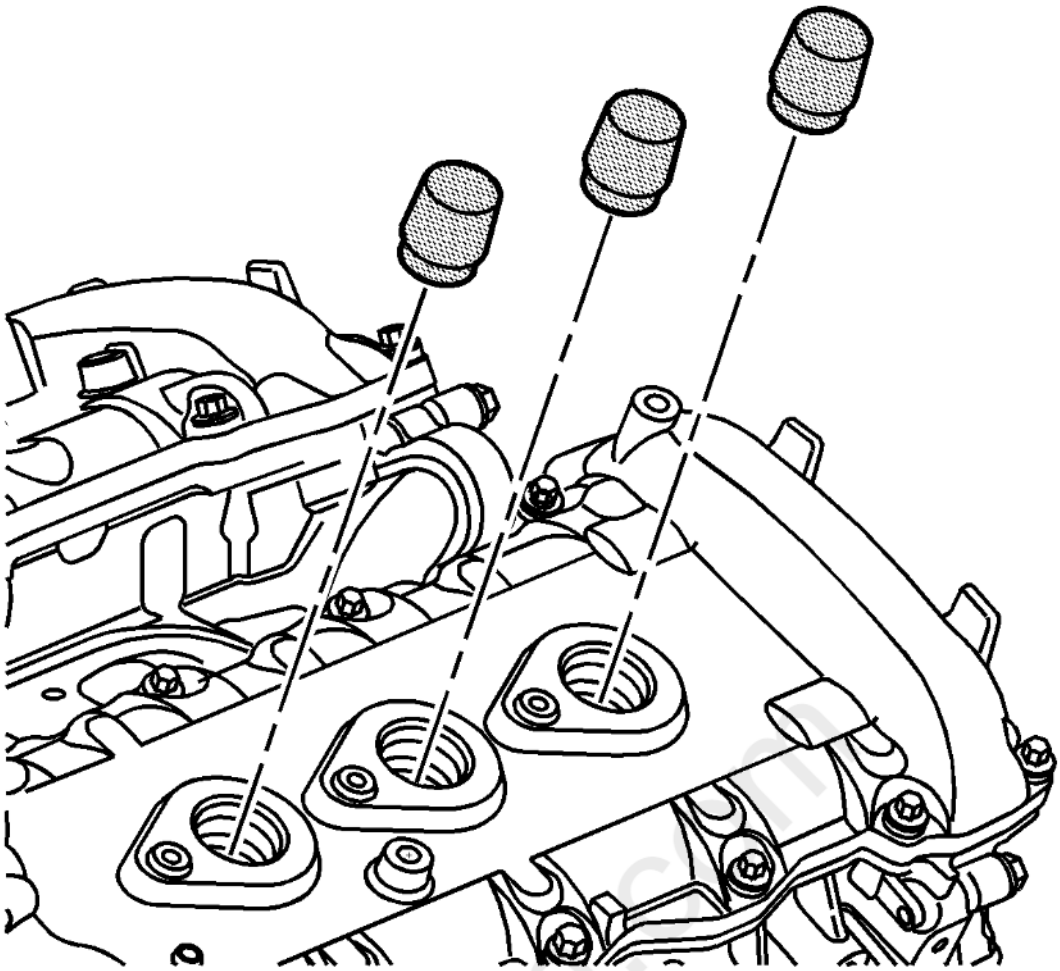

Fig. 57: Spark Plug Tube Seal Guides
Courtesy of GENERAL MOTORS COMPANY

8. Remove the **EN-46101** guide from the spark plug tubes of the bank 1 cylinder head.
9. Install the ignition coils. Refer to **Ignition Coil Replacement - Bank 1**

ENGINE FRONT COVER REPLACEMENT

Special Tools

EN-46109 Engine Front Cover Installation Guide Pins

For equivalent regional tools, refer to **Special Tools** .

Removal Procedure

1. Remove the intake manifold. Refer to **Intake Manifold Replacement**.
2. Remove the camshaft covers. Refer to **Camshaft Cover Replacement - Left Side**, and **Camshaft Cover Replacement - Right Side**.
3. Drain the engine coolant. Refer to **Cooling System Draining and Filling (Vacuum and Fill)** **Cooling System Draining and Filling (Static)** .
4. Remove the water outlet with the radiator hose and reposition aside. Refer to **Water Outlet Replacement (LFX)** .
5. Remove the generator. Refer to **Generator Replacement (LFX)** .
6. Remove the crankshaft balancer. Refer to **Crankshaft Balancer Replacement**.
7. Remove the camshaft position sensors. Refer to **Camshaft Position Sensor Replacement - Bank 2 (Left Side) Exhaust** , **Camshaft Position Sensor Replacement - Bank 2 (Left Side) Intake** , **Camshaft Position Sensor Replacement - Bank 1 (Right Side) Exhaust** , and **Camshaft Position Sensor Replacement - Bank 1 (Right Side) Intake** .
8. Remove the belt tensioner. Refer to **Drive Belt Tensioner Replacement**.

9. Remove the camshaft position actuator solenoid valves from the front cover. Refer to **Camshaft Position Actuator Solenoid Valve Solenoid Replacement - Bank 1 (Right Side) Intake** , **Camshaft Position Actuator Solenoid Valve Solenoid Replacement - Bank 1 (Right Side) Exhaust** , **Camshaft Position Actuator Solenoid Valve Solenoid Replacement - Bank 2 (Left Side) Intake** , and **Camshaft Position Actuator Solenoid Valve Solenoid Replacement - Bank 2 (Left Side) Exhaust** .

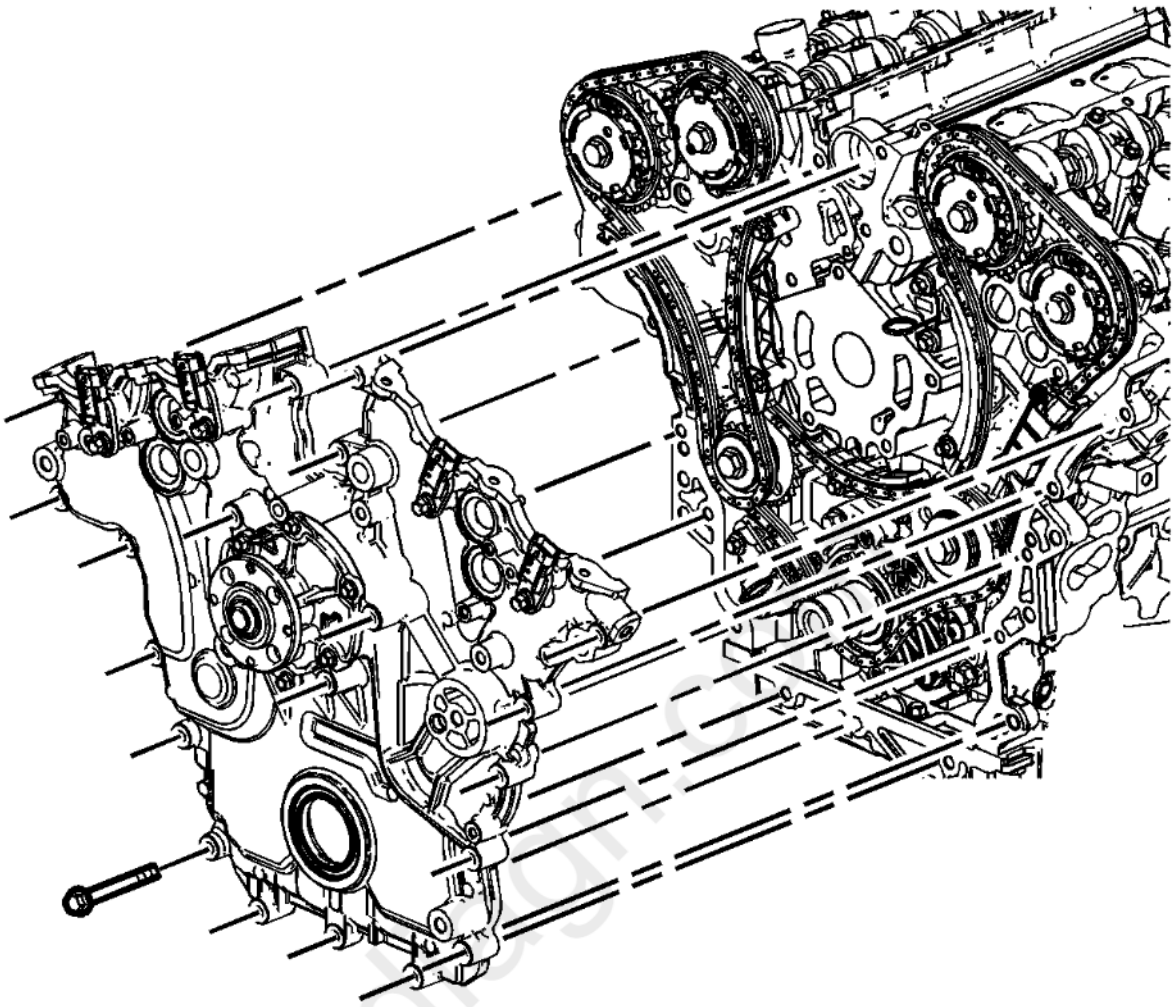

Fig. 58: Engine Front Cover
Courtesy of GENERAL MOTORS COMPANY

10. Remove the engine front cover with the water pump. Refer to **Engine Front Cover Removal** .
11. Disassemble the engine front cover. Refer to **Engine Front Cover Disassemble** .

NOTE: **Do NOT use sharp and/or metal gasket scrapers in order to clean the sealing surfaces.**

12. Carefully clean the engine front cover sealing surfaces. Refer to **Engine Front Cover Cleaning and Inspection** .
13. Use compressed air in order to remove any engine coolant from the engine cooling passages and from the top of the oil pan scraper (windage tray).

Installation Procedure

1. Assemble the engine front cover. Refer to **Engine Front Cover Assemble** .

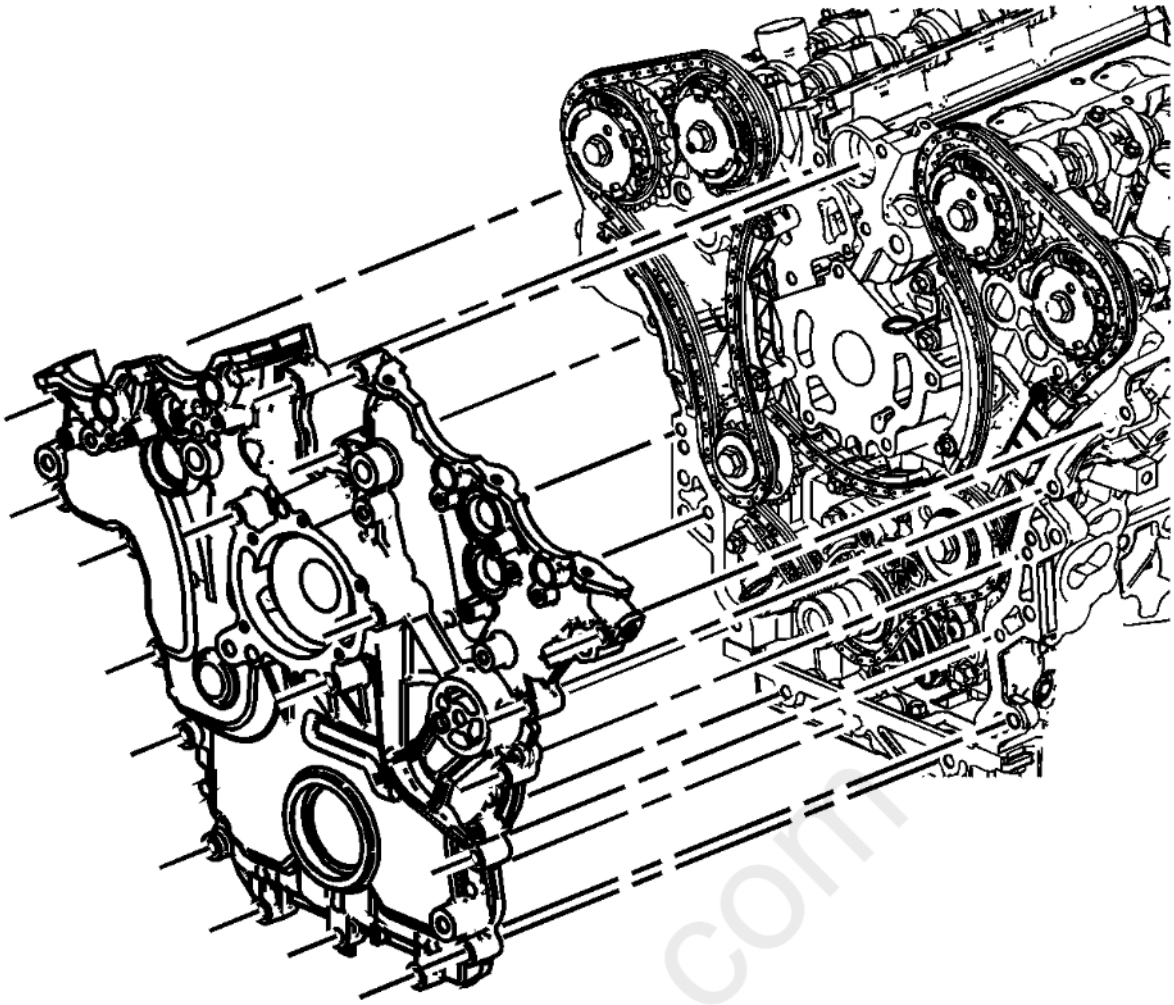

Fig. 59: Engine Front Cover
Courtesy of GENERAL MOTORS COMPANY

2. Use the **EN-46109** pins in order to install the engine front cover. Refer to **Engine Front Cover Installation** .
3. Install the camshaft position actuator solenoid valves to the front cover. Refer to **Camshaft Position Actuator Solenoid Valve Solenoid Replacement - Bank 1 (Right Side) Intake** , **Camshaft Position Actuator Solenoid Valve Solenoid Replacement - Bank 1 (Right Side) Exhaust** , **Camshaft Position Actuator Solenoid Valve Solenoid Replacement - Bank 2 (Left Side) Intake** , and **Camshaft Position Actuator Solenoid Valve Solenoid Replacement - Bank 2 (Left Side) Exhaust** .
4. Install the camshaft position sensors. Refer to **Camshaft Position Sensor Replacement - Bank 2 (Left Side) Exhaust** , **Camshaft Position Sensor Replacement - Bank 2 (Left Side) Intake** , **Camshaft Position Sensor Replacement - Bank 1 (Right Side) Exhaust** , and **Camshaft Position Sensor Replacement - Bank 1 (Right Side) Intake** .
5. Install the crankshaft balancer. Refer to **Crankshaft Balancer Replacement**.
6. Install the generator bracket with the generator and the belt tensioner. Refer to **Generator Replacement (LFX)** .
7. Install the water outlet. Refer to **Water Outlet Replacement (LFX)** .
8. Install the purge vent hose to the water outlet. Refer to **Engine Coolant Air Bleed Pipe Replacement (LFX)** .
9. Fill the cooling system. Refer to **Cooling System Draining and Filling (Vacuum and Fill) Cooling System Draining and Filling (Static)** .
10. Install the camshaft covers. Refer to **Camshaft Cover Replacement - Left Side**, and **Camshaft Cover Replacement - Right Side**.
11. Install the intake manifold. Refer to **Intake Manifold Replacement**.

cardiagn.com

12. Install the drive belt tensioner. Refer to **Drive Belt Tensioner Replacement**.
13. Fill the cooling system. Refer to **Cooling System Draining and Filling (Vacuum and Fill)** **Cooling System Draining and Filling (Static)** .

SECONDARY CAMSHAFT INTERMEDIATE DRIVE CHAIN REPLACEMENT - LEFT SIDE

Removal Procedure

1. Remove the engine front cover. Refer to **Engine Front Cover Replacement**.
2. Remove the camshaft timing chain components. Refer to **Camshaft Timing Chain Components Removal** .
3. Clean and inspect all of the camshaft timing drive components. Refer to **Camshaft Timing Drive Components Cleaning and Inspection** . Replace components as necessary.

Installation Procedure

1. Install the camshaft timing chain components. Refer to **Camshaft Timing Chain Components Installation** .
2. Install the engine front cover. Refer to **Engine Front Cover Replacement**.

SECONDARY CAMSHAFT INTERMEDIATE DRIVE CHAIN REPLACEMENT - RIGHT SIDE

Removal Procedure

1. Remove the engine front cover. Refer to **Engine Front Cover Replacement**.
2. Remove the right side secondary camshaft drive chain components. Refer to **Camshaft Timing Chain Components Removal** .
3. Clean and inspect all of the camshaft timing drive components. Refer to **Camshaft Timing Drive Components Cleaning and Inspection** . Replace components as necessary.

Installation Procedure

1. Ensure the stage 1 alignment position to the stage 2 alignment position is correct. Refer to **Camshaft Timing Chain Components Installation** .
2. Install the right side secondary camshaft intermediate drive chain. Refer to **Camshaft Timing Chain Components Installation** .

carmagn.com

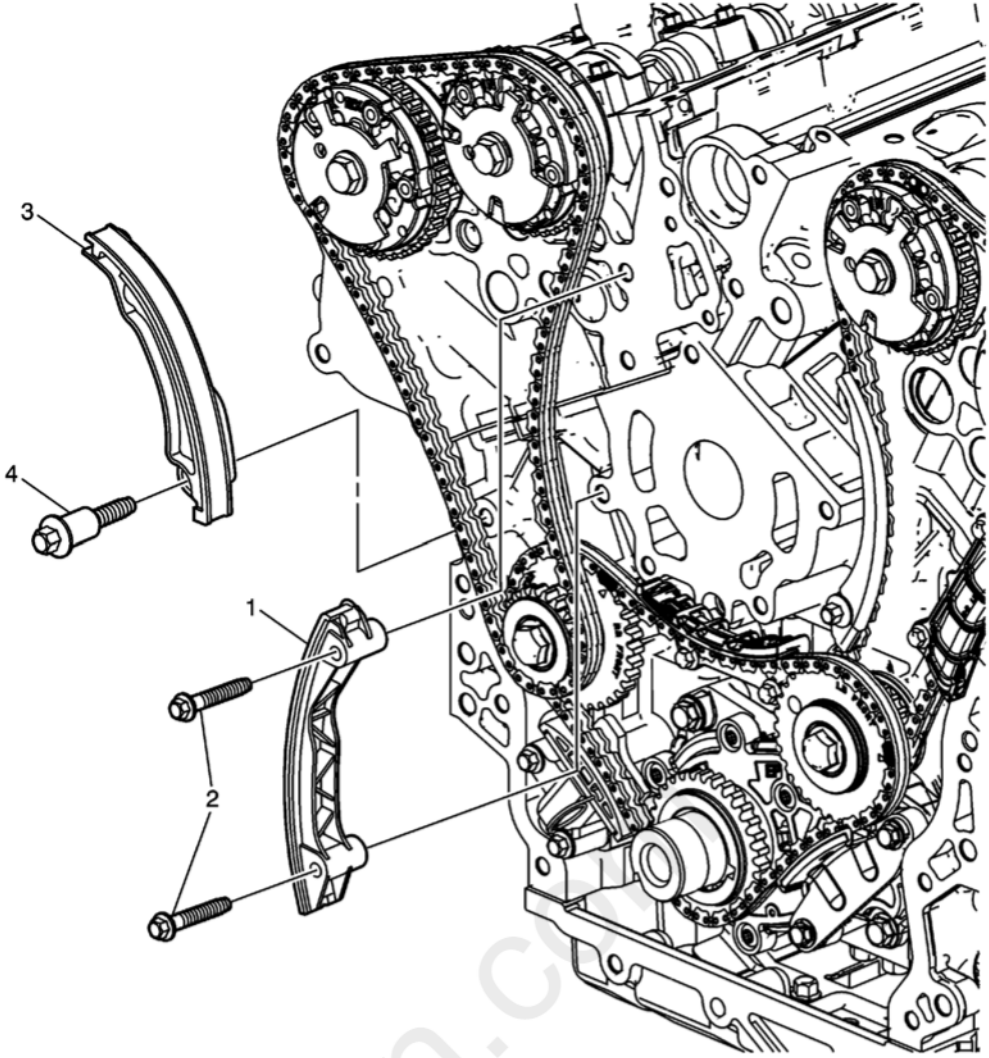

Fig. 60: Secondary Camshaft Drive Chain Guide And Shoe - Right Side
Courtesy of GENERAL MOTORS COMPANY

3. Install the right side secondary camshaft drive chain guide (1) and shoe (3). Tighten bolts (2 and 4) to 25 N.m (18 lb ft).
4. Install the right side secondary camshaft drive chain tensioner. Refer to **Camshaft Timing Chain Components Installation** .
5. Install the engine front cover. Refer to **Engine Front Cover Replacement**.

SECONDARY CAMSHAFT INTERMEDIATE DRIVE CHAIN TENSIONER REPLACEMENT - LEFT SIDE

Removal Procedure

1. Remove the engine front cover. Refer to **Engine Front Cover Replacement**.
2. Remove the left bank secondary camshaft drive chain tensioner. Refer to **Camshaft Timing Chain Components Removal** .
3. Clean and inspect all of the camshaft timing drive components. Refer to **Camshaft Timing Drive Components Cleaning and Inspection** .

Installation Procedure

1. Install the left bank secondary camshaft drive chain tensioner. Refer to **Camshaft Timing Chain Components Installation** .
2. Install the engine front cover. Refer to **Engine Front Cover Replacement**.

SECONDARY CAMSHAFT INTERMEDIATE DRIVE CHAIN TENSIONER REPLACEMENT - RIGHT SIDE

Removal Procedure

1. Remove the engine front cover. Refer to **Engine Front Cover Replacement**.

2. Remove the right side secondary camshaft drive chain tensioner. Refer to **Camshaft Timing Chain Components Removal** .
3. Clean and inspect all of the camshaft timing drive components. Refer to **Camshaft Timing Drive Components Cleaning and Inspection** . Replace components as necessary.

Installation Procedure

1. Install the right side secondary camshaft drive chain tensioner. Refer to **Camshaft Timing Chain Components Installation** .
2. Install the engine front cover. Refer to **Engine Front Cover Replacement**.

SECONDARY TIMING CHAIN TENSIONER SHOE REPLACEMENT - LEFT SIDE

Removal Procedure

1. Remove the engine front cover. Refer to **Engine Front Cover Replacement**.
2. Remove the left side secondary camshaft drive chain tensioner, shoe, and guide. Refer to **Camshaft Timing Chain Components Removal** .
3. Clean and inspect all of the camshaft timing drive components. Refer to **Camshaft Timing Drive Components Cleaning and Inspection** . Replace components as necessary.

Installation Procedure

1. Install the left side secondary camshaft drive chain shoe, guide and tensioner. Refer to **Camshaft Timing Chain Components Installation** .
2. Install the engine front cover. Refer to **Engine Front Cover Replacement**.

SECONDARY TIMING CHAIN TENSIONER SHOE REPLACEMENT - RIGHT SIDE

Removal Procedure

1. Remove the engine front cover. Refer to **Engine Front Cover Replacement**.
2. Remove the right side secondary camshaft drive chain tensioner, shoe, and guide. Refer to **Camshaft Timing Chain Components Removal** .
3. Clean and inspect all of the camshaft timing drive components. Refer to **Camshaft Timing Drive Components Cleaning and Inspection** . Replace components as necessary.

Installation Procedure

1. Install the right side secondary camshaft drive chain shoe, guide, and tensioner. Refer to **Camshaft Timing Chain Components Installation** .
2. Install the engine front cover. Refer to **Engine Front Cover Replacement**.

SECONDARY TIMING CHAIN GUIDE REPLACEMENT - LEFT SIDE

Removal Procedure

1. Remove the engine front cover. Refer to **Engine Front Cover Replacement**.
2. Remove the left side secondary camshaft drive chain tensioner, shoe, and guide. Refer to **Camshaft Timing Chain Components Removal** .
3. Clean and inspect all of the camshaft timing drive components. Refer to **Camshaft Timing Drive Components Cleaning and Inspection** . Replace components as necessary.

Installation Procedure

1. Install the left side secondary camshaft drive chain shoe, guide, and tensioner. Refer to **Camshaft Timing Chain Components Installation** .
2. Install the engine front cover. Refer to **Engine Front Cover Replacement**.

SECONDARY TIMING CHAIN GUIDE REPLACEMENT - RIGHT SIDE

Removal Procedure

cardiagn.com

1. Remove the engine front cover. Refer to **Engine Front Cover Replacement**.
2. Remove the right side secondary camshaft drive chain tensioner, shoe, and guide. Refer to **Camshaft Timing Chain Components Removal** .
3. Clean and inspect all of the camshaft timing drive components. Refer to **Camshaft Timing Drive Components Cleaning and Inspection** . Replace components as necessary.

Installation Procedure

1. Install the right side secondary camshaft drive chain shoe, guide, and tensioner. Refer to **Camshaft Timing Chain Components Installation** .
2. Install the engine front cover. Refer to **Engine Front Cover Replacement**.

PRIMARY CAMSHAFT DRIVE CHAIN AND SPROCKETS REPLACEMENT

Removal Procedure

1. Remove the engine front cover. Refer to **Engine Front Cover Replacement**.
2. Remove the right side camshaft timing chain components. Refer to **Camshaft Timing Chain Components Removal** .

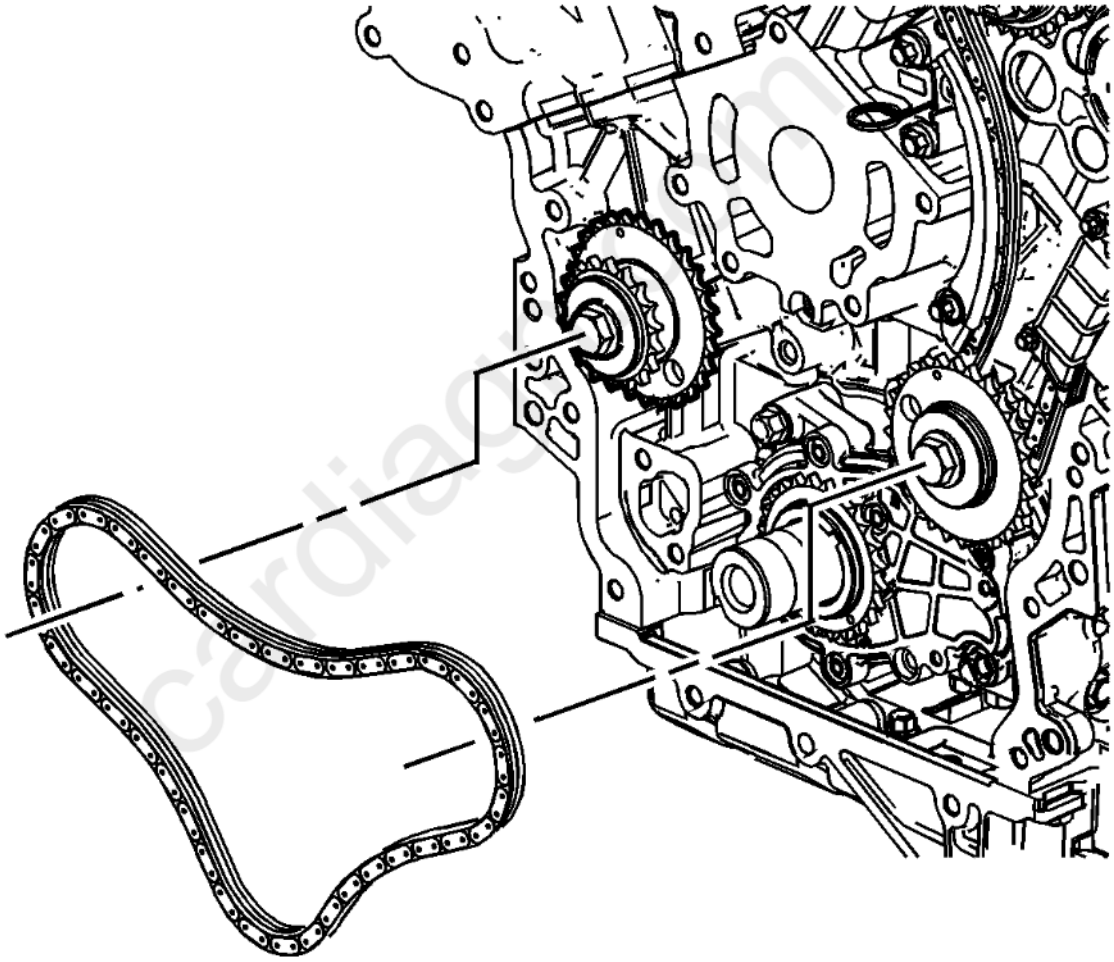

Fig. 61: Primary Camshaft Timing Chain
Courtesy of GENERAL MOTORS COMPANY

3. Remove the primary camshaft drive chain. Refer to **Camshaft Timing Chain Components Removal** .
4. Clean and inspect all of the camshaft timing drive components. Refer to **Camshaft Timing Drive Components Cleaning and Inspection**

Installation Procedure

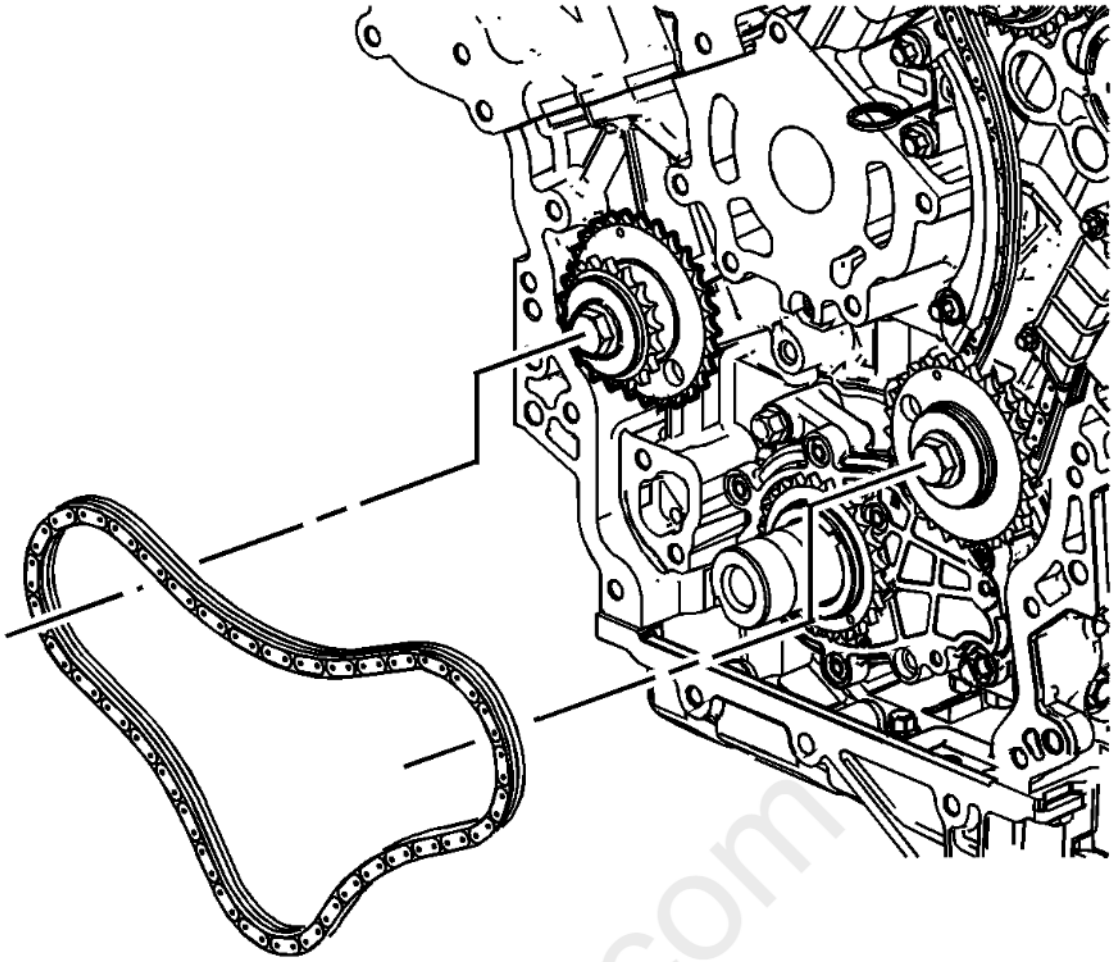

Fig. 62: Primary Camshaft Timing Chain
Courtesy of GENERAL MOTORS COMPANY

1. Install the primary camshaft timing chain. Refer to **Camshaft Timing Chain Components Installation** .
2. Install the camshaft timing chain components. Refer to **Camshaft Timing Chain Components Installation** .
3. Install the engine front cover. Refer to **Engine Front Cover Replacement**.

TIMING CHAIN IDLER SPROCKET REPLACEMENT - LEFT SIDE

Removal Procedure

1. Remove spark plugs. Refer to **Spark Plug Replacement** .
2. Remove the engine front cover. Refer to **Engine Front Cover Replacement**.
3. Remove the camshaft timing chain components. Refer to **Camshaft Timing Chain Components Removal** .

carmagn.com

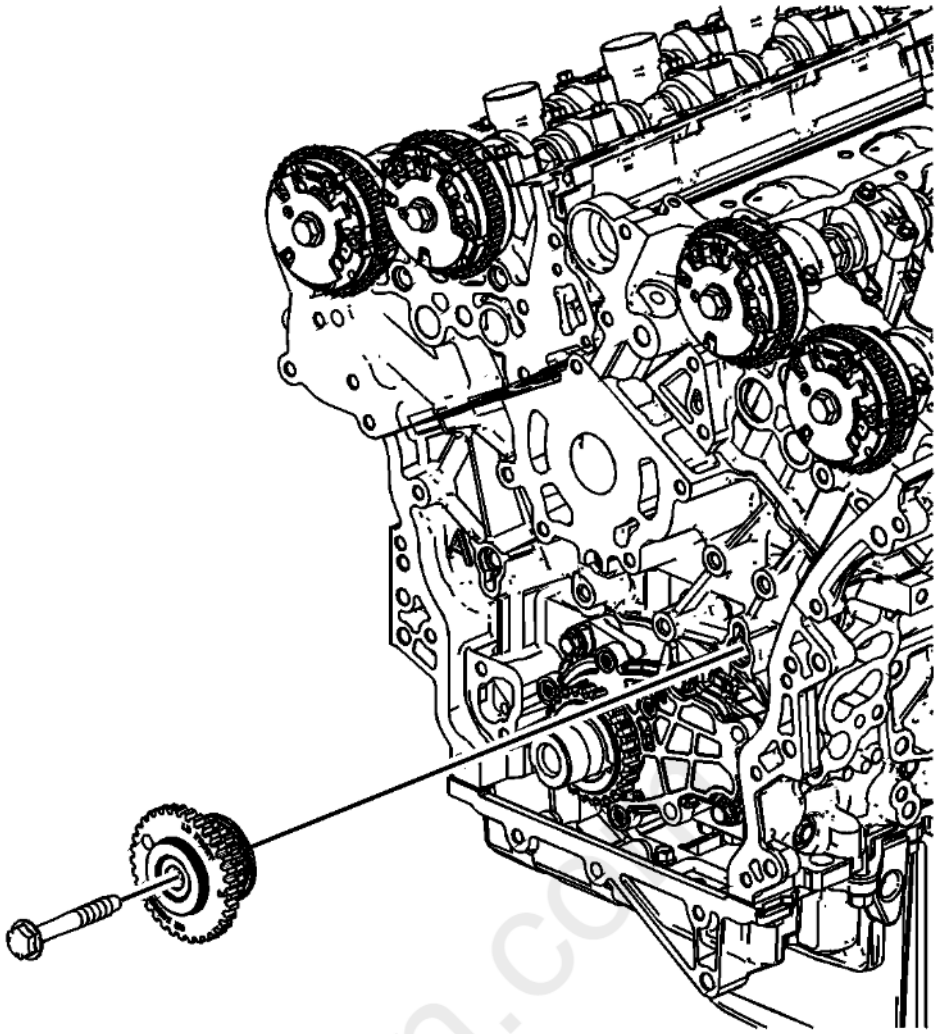

Fig. 63: Camshaft Intermediate Drive Chain Idler And Bolt
Courtesy of GENERAL MOTORS COMPANY

4. Remove the left intermediate drive chain idler sprocket. Refer to **Timing Chain Idler Sprocket Removal - Left Side** .

Installation Procedure

cardiagn.com

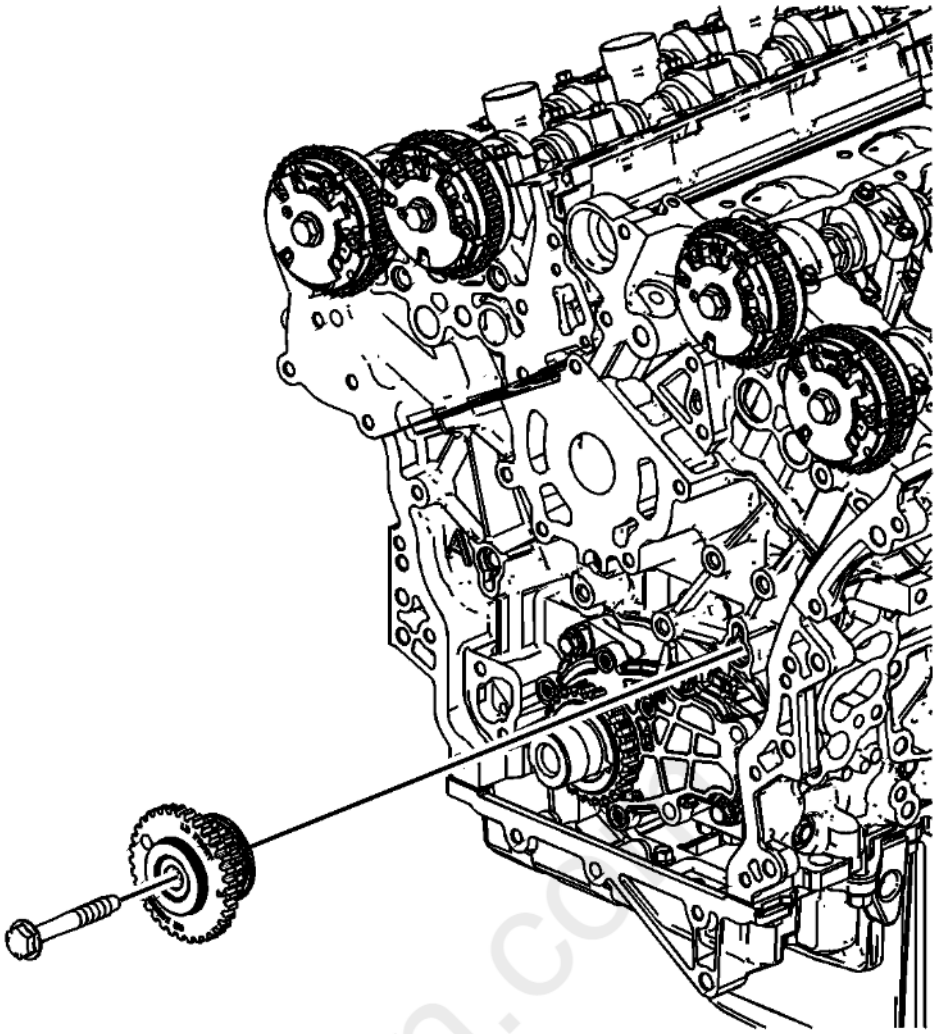

Fig. 64: Camshaft Intermediate Drive Chain Idler And Bolt
Courtesy of GENERAL MOTORS COMPANY

1. Install the left intermediate drive chain idler sprocket. Refer to **Timing Chain Idler Sprocket Installation - Left Side** .
2. Install the camshaft timing chain components. Refer to **Camshaft Timing Chain Components Installation** .
3. Install the engine front cover. Refer to **Engine Front Cover Replacement**.
4. Install spark plugs. Refer to **Spark Plug Replacement** .

TIMING CHAIN IDLER SPROCKET REPLACEMENT - RIGHT SIDE

Removal Procedure

1. Remove spark plugs. Refer to **Spark Plug Replacement** .
2. Remove the engine front cover. Refer to **Engine Front Cover Replacement**.
3. Remove the right side secondary camshaft drive chain components. Refer to **Camshaft Timing Chain Components Removal** .
4. Remove the primary camshaft drive chain components. Refer to **Camshaft Timing Chain Components Removal** .

cardiagn.com

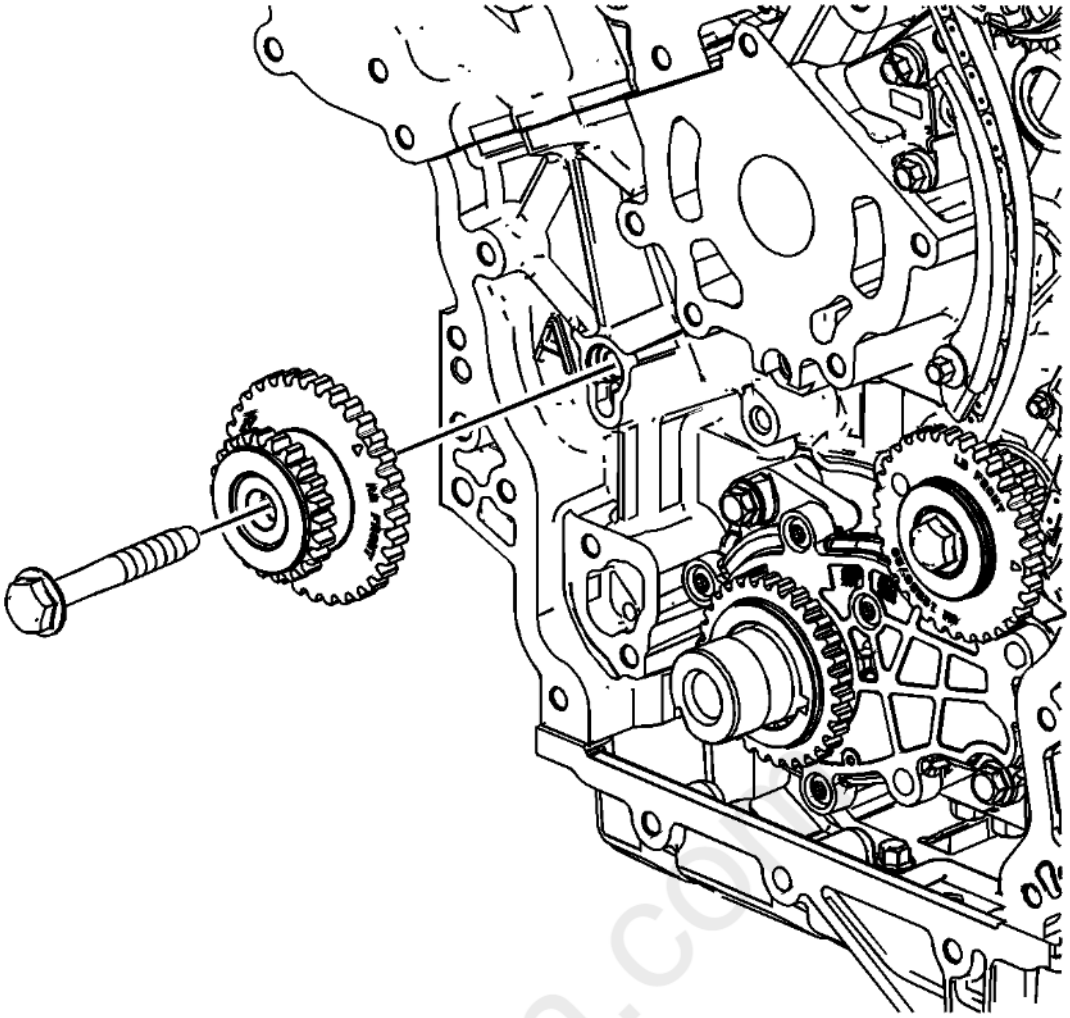

Fig. 65: Camshaft Intermediate Drive Chain Idler And Bolt
Courtesy of GENERAL MOTORS COMPANY

5. Remove the right intermediate drive chain idler sprocket. Refer to **Timing Chain Idler Sprocket Removal - Right Side** .

Installation Procedure

cardiagn.com

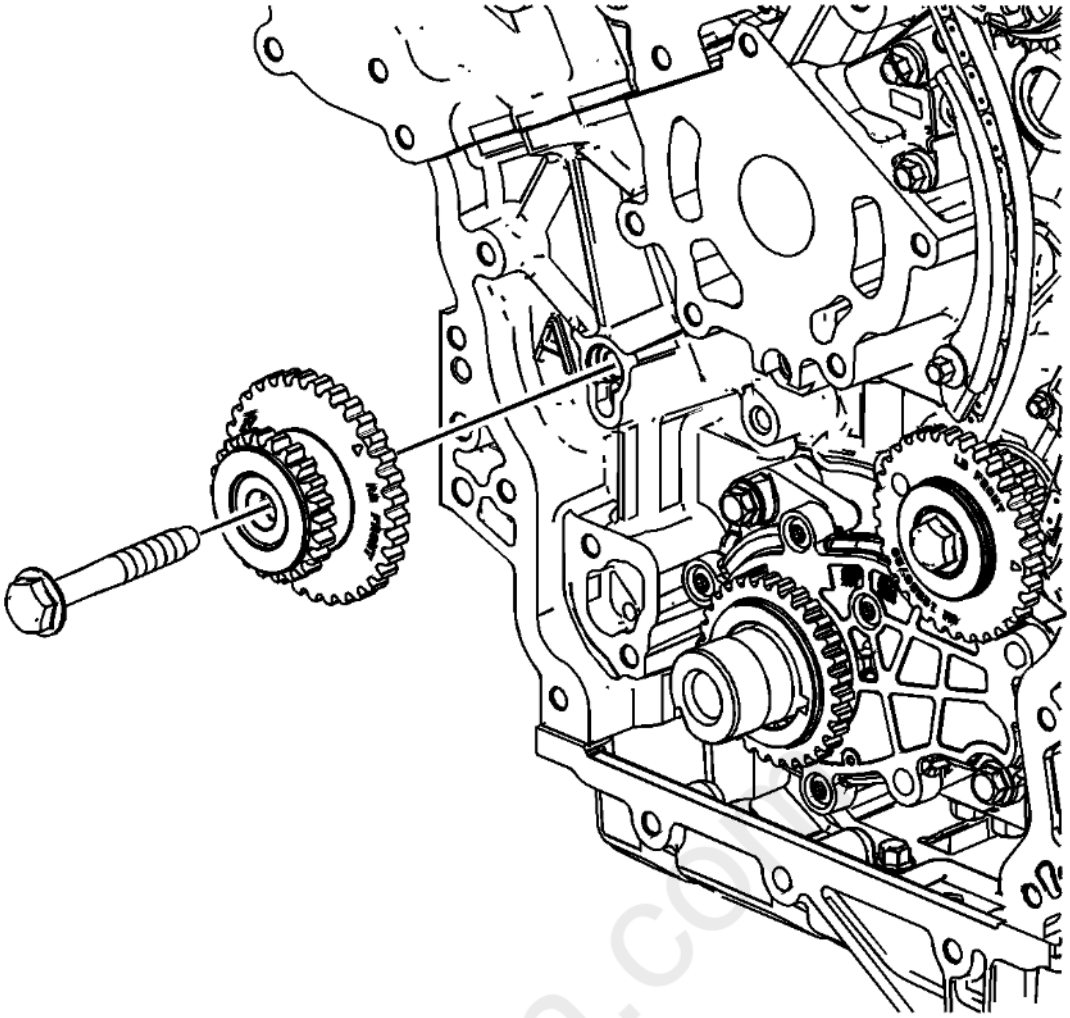

Fig. 66: Camshaft Intermediate Drive Chain Idler And Bolt
Courtesy of GENERAL MOTORS COMPANY

1. Install the left intermediate drive chain idler sprocket. Refer to **Timing Chain Idler Sprocket Installation - Right Side** .
2. Install the camshaft timing chain components. Refer to **Camshaft Timing Chain Components Installation** .
3. Install the engine front cover. Refer to **Engine Front Cover Replacement**.
4. Install spark plugs. Refer to **Spark Plug Replacement** .

PRIMARY CAMSHAFT INTERMEDIATE DRIVE CHAIN TENSIONER REPLACEMENT

Removal Procedure

1. Remove the engine front cover. Refer to **Engine Front Cover Replacement**.

cardiagn.com

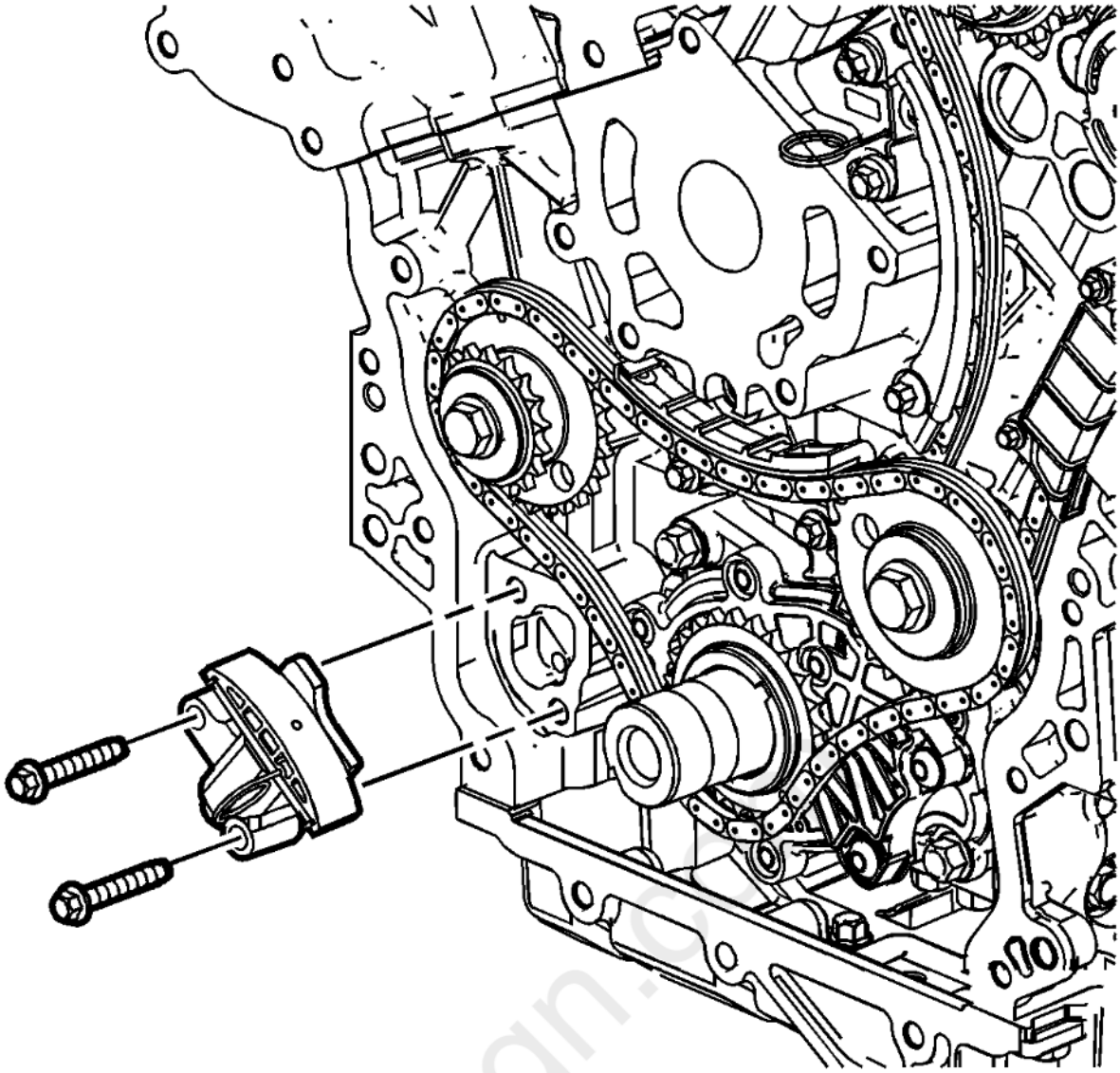

Fig. 67: Primary Camshaft Intermediate Drive Chain Tensioner
Courtesy of GENERAL MOTORS COMPANY

NOTE: **If the entire camshaft timing system is not in Stage 2, Timing Chain Alignment Diagram , mark the timing chain and sprockets in order to ensure proper reassembly.**

2. Remove the primary camshaft drive chain tensioner. Refer to **Camshaft Timing Chain Components Removal** .

Installation Procedure

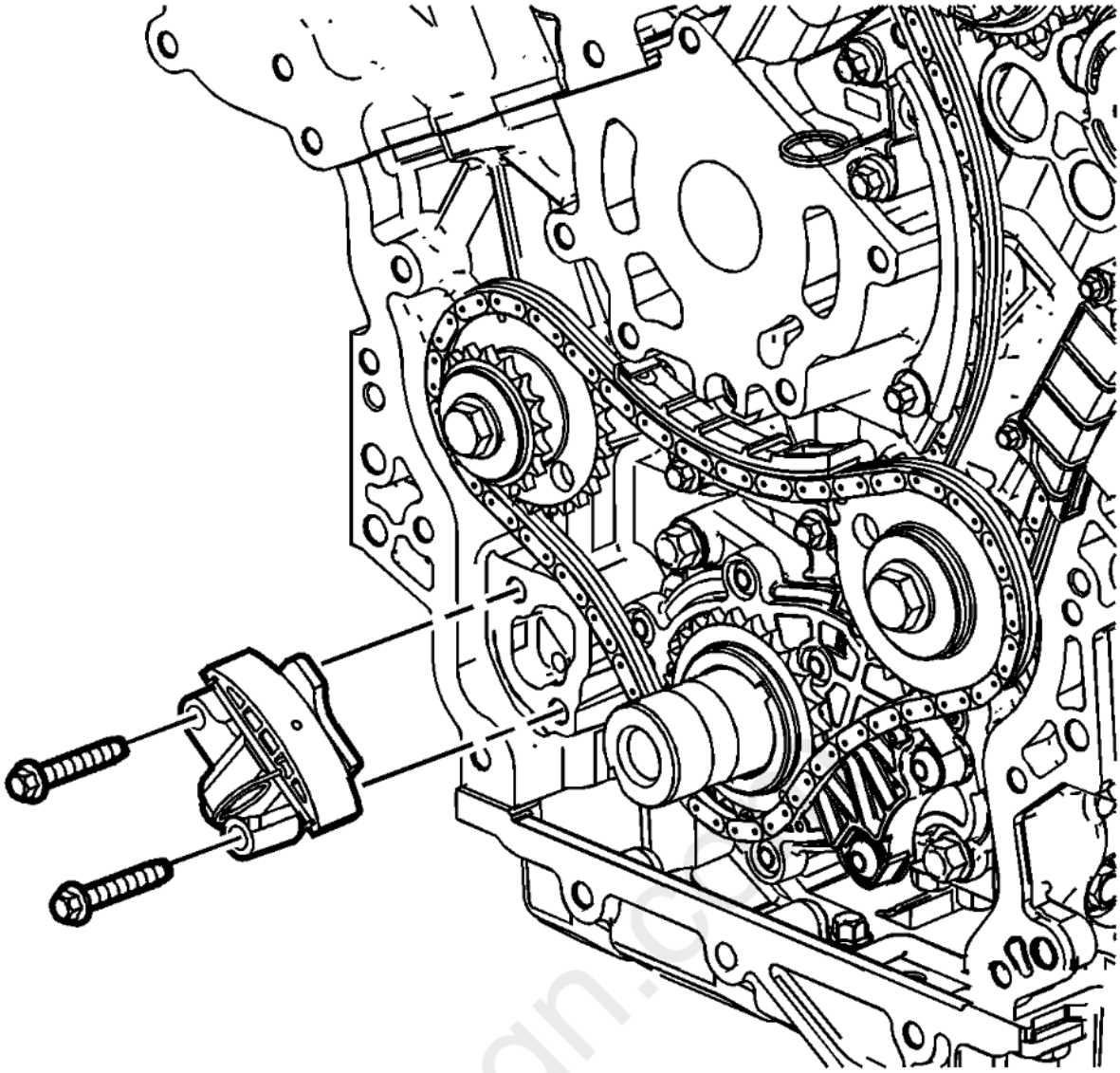

Fig. 68: Primary Camshaft Intermediate Drive Chain Tensioner
Courtesy of GENERAL MOTORS COMPANY

1. Install the primary camshaft drive chain tensioner. Refer to **Camshaft Timing Chain Components Installation** .
2. Install the engine front cover. Refer to **Engine Front Cover Replacement**.

PRIMARY TIMING CHAIN GUIDE REPLACEMENT - LOWER

Removal Procedure

1. Remove the primary camshaft drive chain tensioner. Refer to **Primary Camshaft Intermediate Drive Chain Tensioner Replacement**.

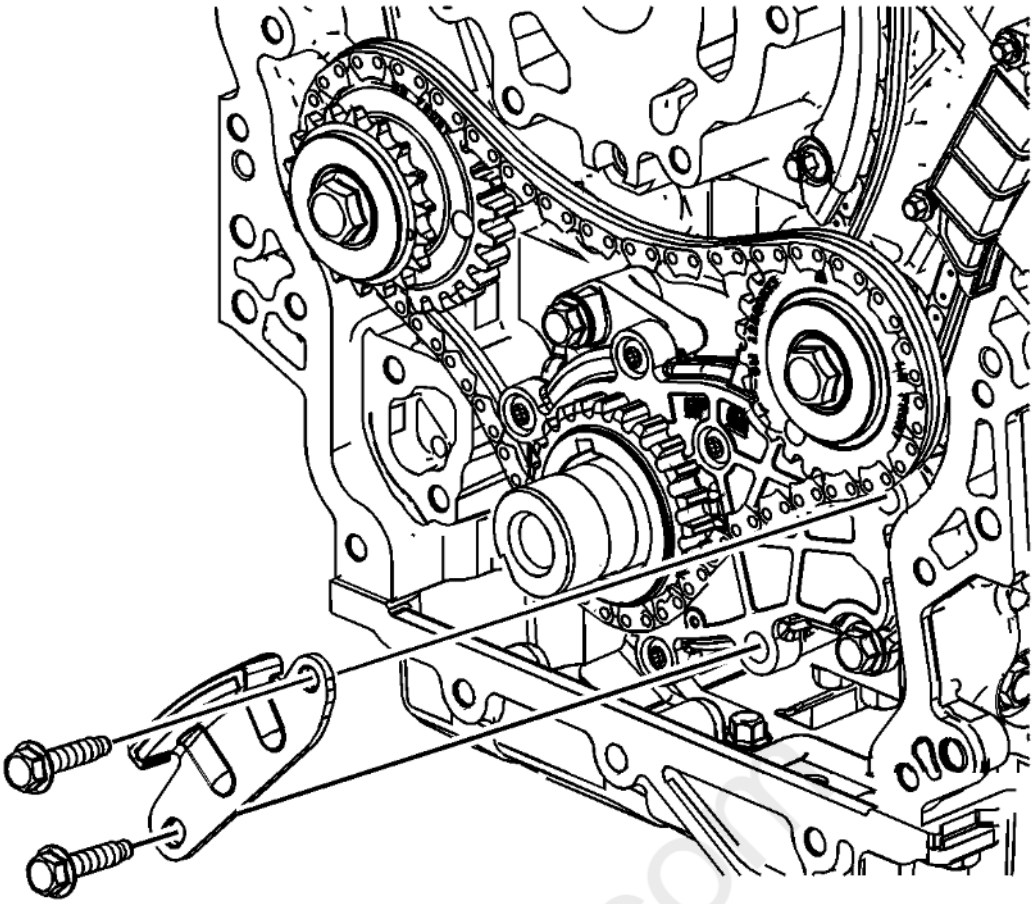

Fig. 69: Primary Camshaft Drive Chain Lower Guide & Bolts
Courtesy of GENERAL MOTORS COMPANY

2. Remove the primary camshaft drive chain lower guide bolts.
3. Remove the primary camshaft drive chain lower guide.

Installation Procedure

carmagn.com

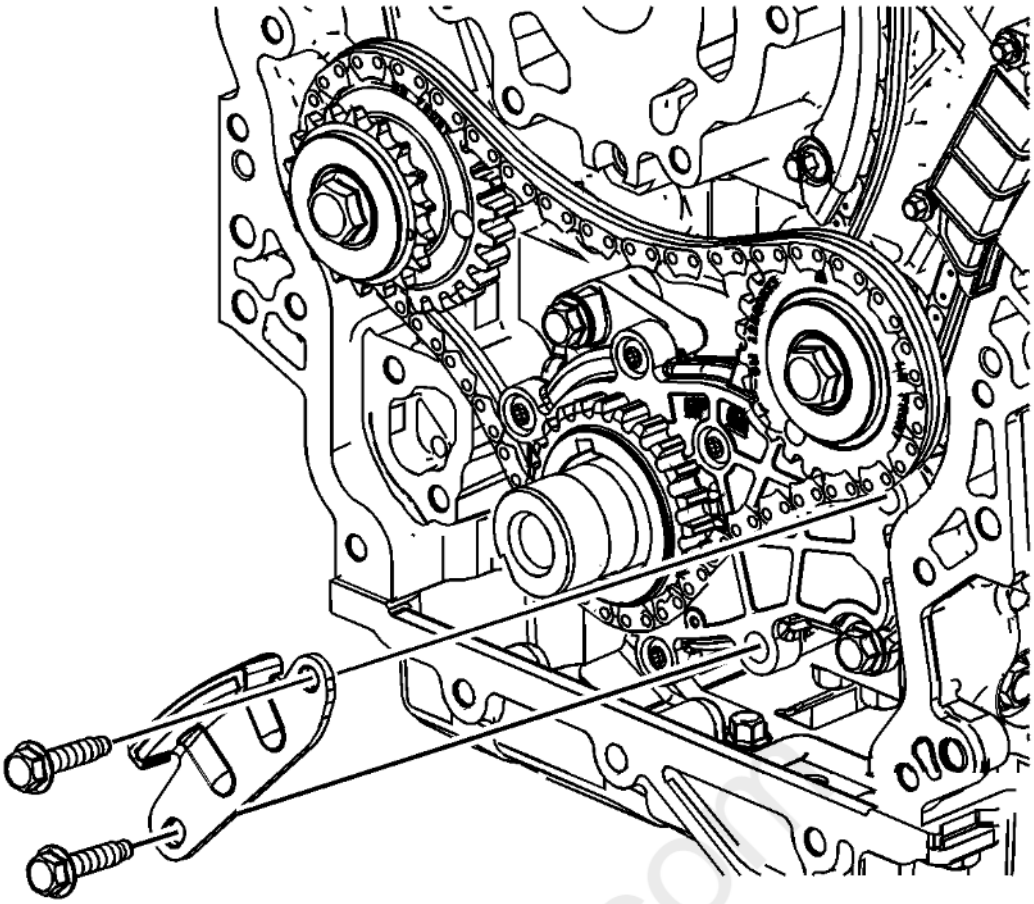

Fig. 70: Primary Camshaft Drive Chain Lower Guide & Bolts
Courtesy of GENERAL MOTORS COMPANY

1. Position the primary camshaft drive chain lower guide to the oil pump.

CAUTION: Refer to Fastener Caution .

2. Install the primary camshaft drive chain lower guide bolts and tighten to 25 N.m (18 lb ft).
3. Install the primary camshaft drive chain tensioner. Refer to **Primary Camshaft Intermediate Drive Chain Tensioner Replacement**.

CAMSHAFT POSITION ACTUATOR REPLACEMENT - BANK 1

Special Tools

- **EN49982-1** Timing Chain Retainer
- **EN49982-2** Timing Chain Retainer

For equivalent regional tools, refer to **Special Tools** .

Removal Procedure

1. Remove the camshaft cover. Refer to **Camshaft Cover Replacement - Right Side**.
2. Remove the camshaft position actuator solenoid valve solenoid - intake. Refer to **Camshaft Position Actuator Solenoid Valve Solenoid Replacement - Bank 1 (Right Side) Intake** .
3. Remove the intake camshaft position sensor. Refer to **Camshaft Position Sensor Replacement - Bank 1 (Right Side) Intake** .
4. Remove the exhaust camshaft position sensor. Refer to **Camshaft Position Sensor Replacement - Bank 1 (Right Side) Exhaust** .

5. Remove the camshaft position actuator solenoid valve solenoid - exhaust. Refer to **Camshaft Position Actuator Solenoid Valve Solenoid Replacement - Bank 1 (Right Side) Exhaust** .
6. Rotate engine clockwise using crankshaft dampener retaining bolt until the flats at the rear ends of the camshafts are pointing up. This puts the camshafts on "base circle" and will reduce their tendency to rotate from valve spring pressure when the camshaft position actuators/drive chains are removed.

NOTE: **Do NOT remove or back out the camshaft position actuator bolt(s) significantly, simply break them loose from their fully-torqued position. The position actuators must stay firmly attached until the retaining tools are in place, but they should be broken loose while the chain is still tight and in position.**

7. Loosen intake and/or exhaust camshaft position actuator retaining bolts, depending on which camshaft position actuator and/or camshaft you will be servicing. If servicing both camshaft position actuators and/or camshafts, loosen both bolts.

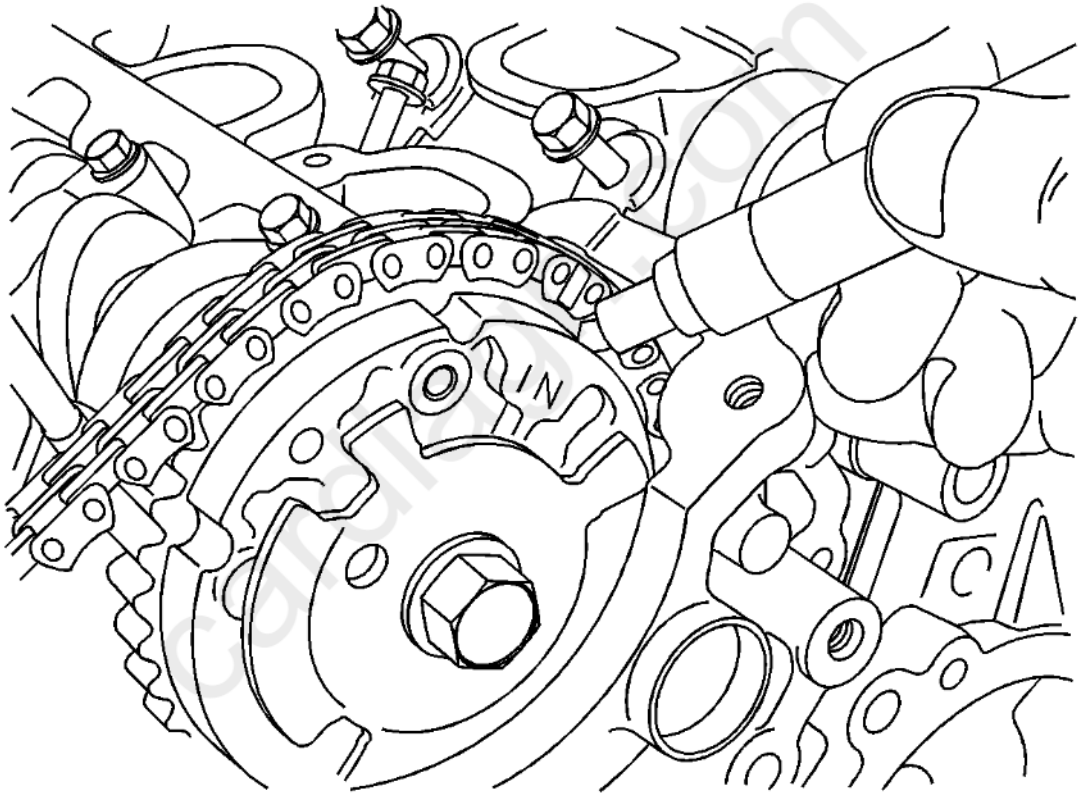

Fig. 71: Marking Position Of Chain To Camshaft Position Actuator - Intake
Courtesy of GENERAL MOTORS COMPANY

NOTE: **Be certain to clearly mark the position of the chain to the camshaft position actuator(s). Though the engine does not need to be set to a specific timing mark before starting the procedure, the relationship of the chain to the actuator(s) is critical and must be reestablished on assembly.**

8. Mark the position of the chain to the camshaft position actuator - intake.

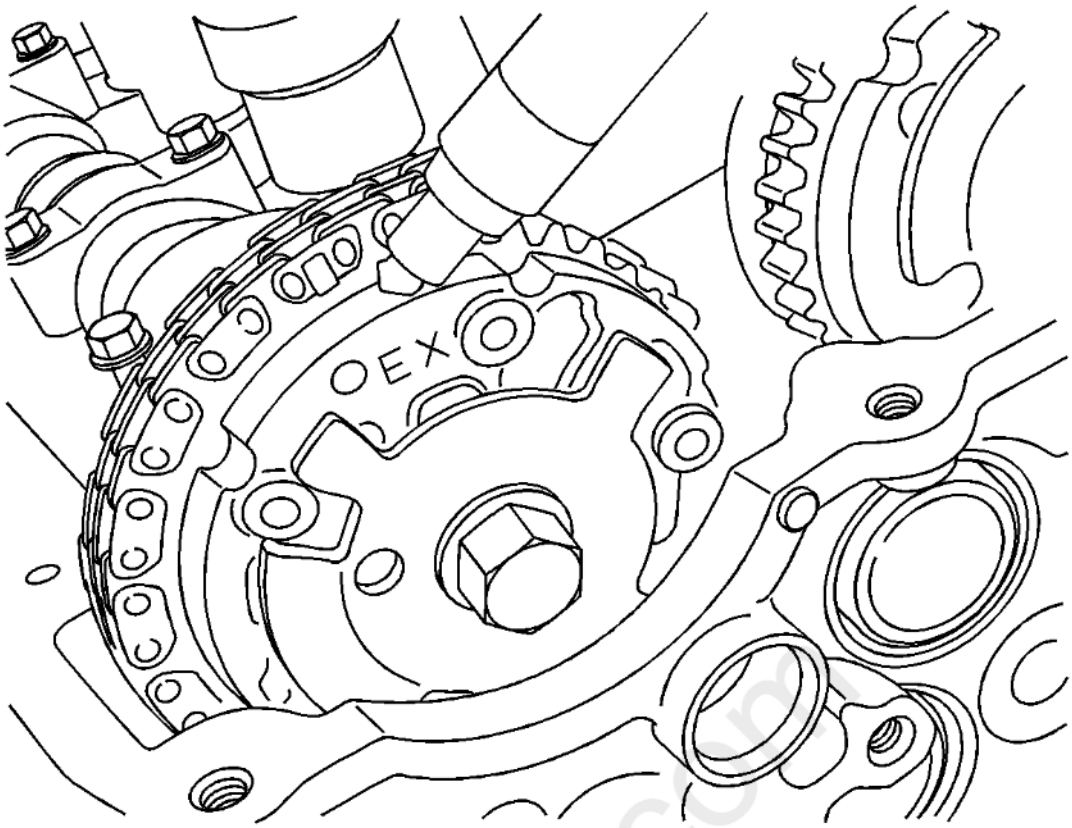

Fig. 72: Marking Position Of Chain To Camshaft Position Actuator - Exhaust
Courtesy of GENERAL MOTORS COMPANY

9. Mark the position of the chain to the camshaft position actuator - exhaust.

cardiagn.com

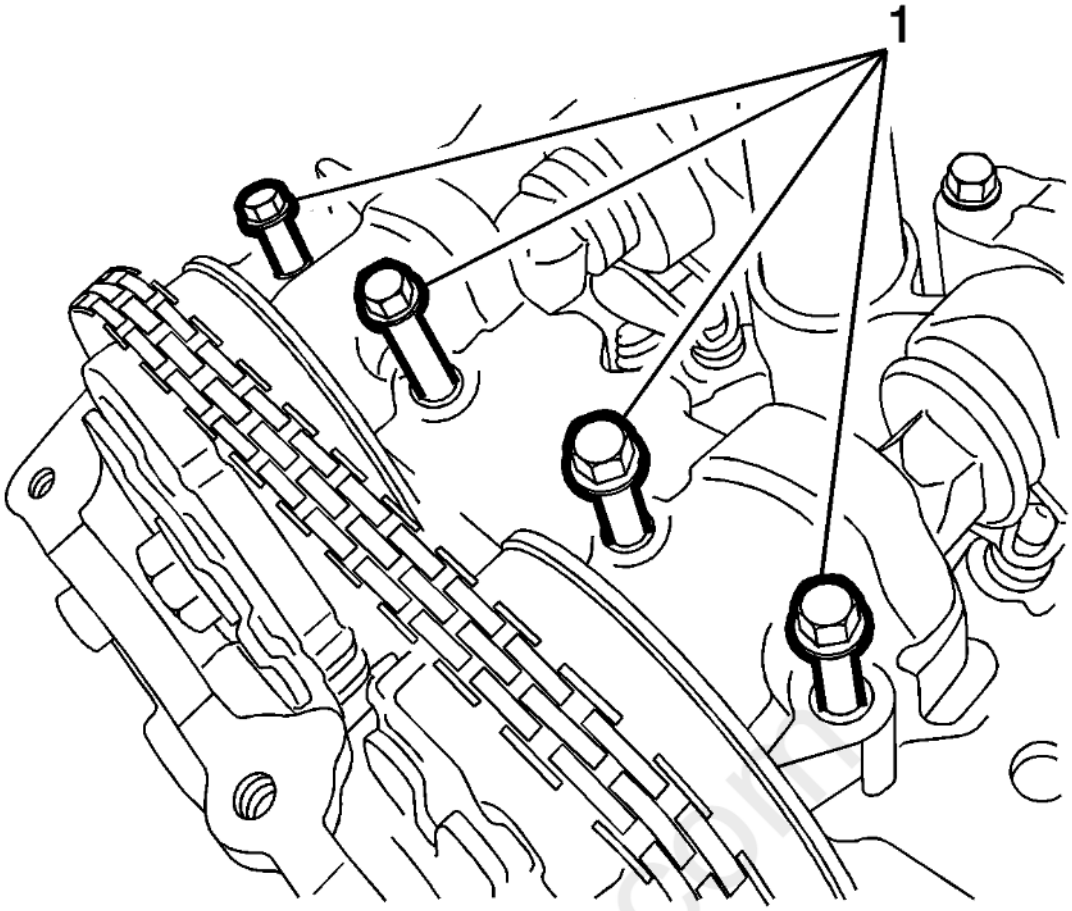

Fig. 73: Camshaft Front Cap And Bolts
Courtesy of GENERAL MOTORS COMPANY

10. Remove camshaft front cap bolts (1).

cardiagn.com

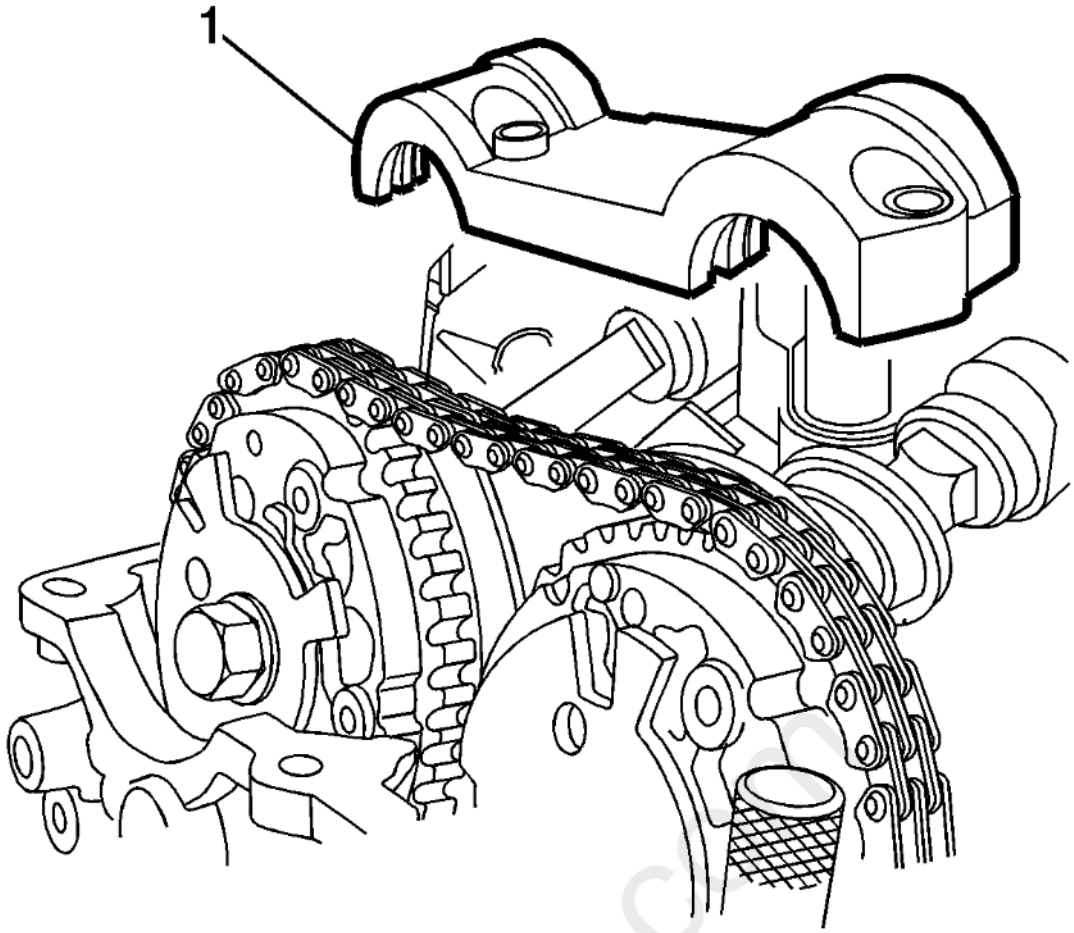

Fig. 74: Camshaft Front Cap
Courtesy of GENERAL MOTORS COMPANY

NOTE: **Do NOT remove or loosen any other camshaft bearing caps at this time, even if you intend to eventually remove the camshaft.**

11. Remove the camshaft front cap (1).

cardiagn.com

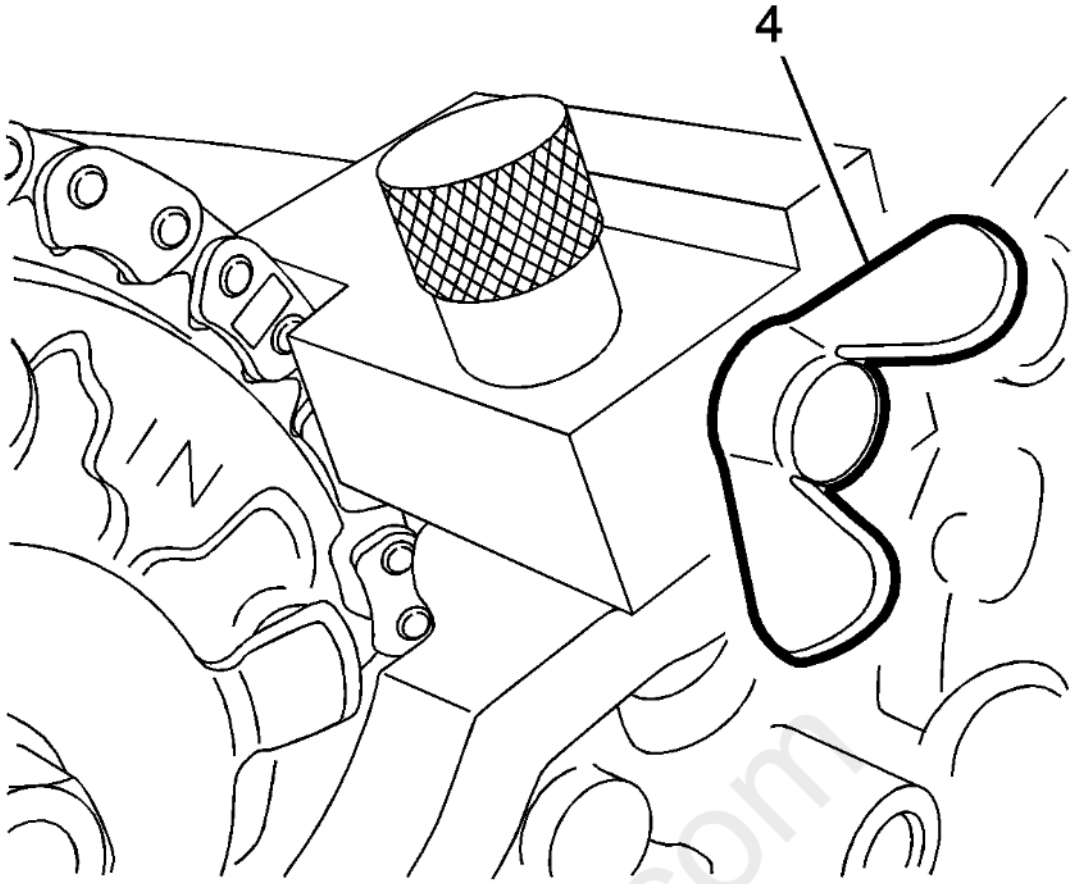

Fig. 75: Retainer Wingnut
Courtesy of GENERAL MOTORS COMPANY

12. Loosen wingnut (4) to open the clamping area of **EN49982-1** retainer.

cardiagn.com

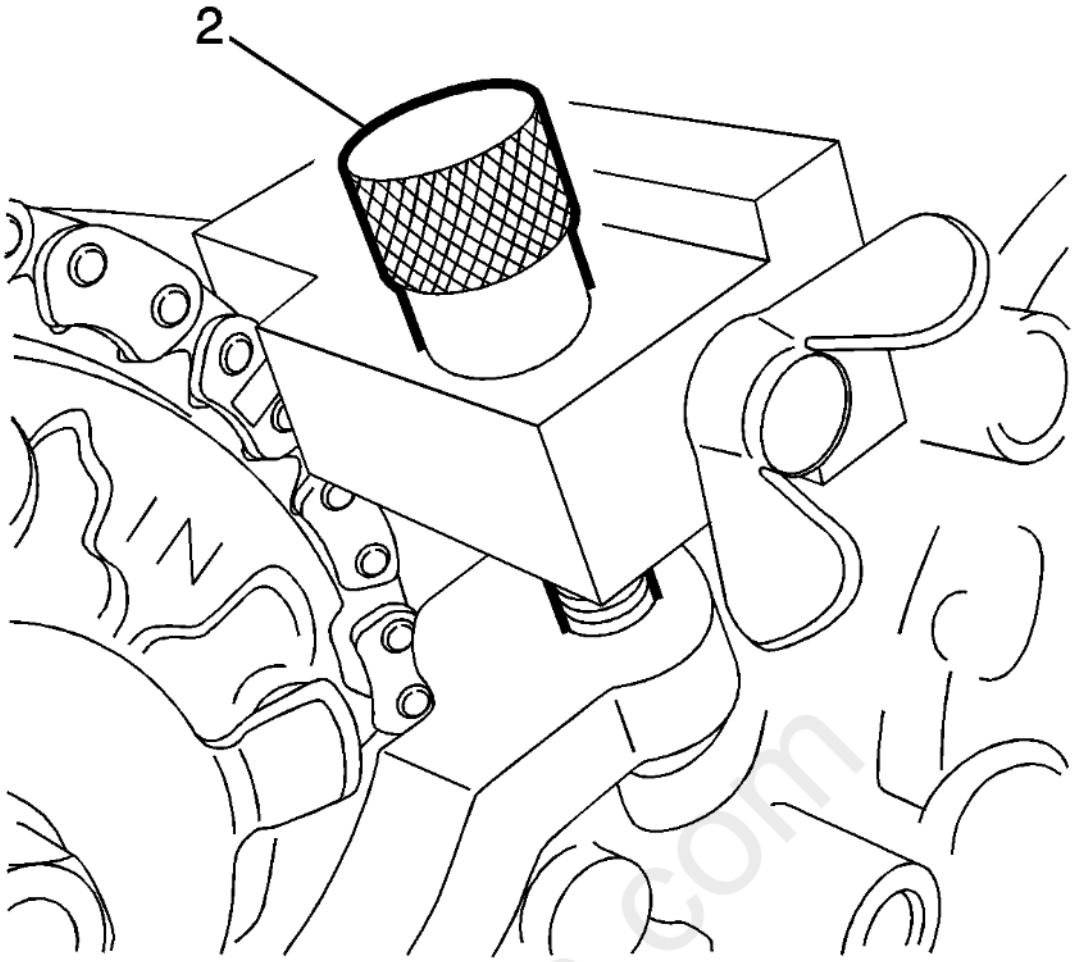

Fig. 76: Retainer Thumbscrew
Courtesy of GENERAL MOTORS COMPANY

NOTE: **Do NOT overtighten the thumbscrew. The EN49982-1 retainer should be able to slide slightly via the slot the screw goes through. This fore/aft movement will allow easier removal and installation of the chain later.**

13. Install **EN49982-1** retainer intake side chain holder onto front cover by screwing in the thumbscrew (2) on the **EN49982-1** retainer finger-tight.

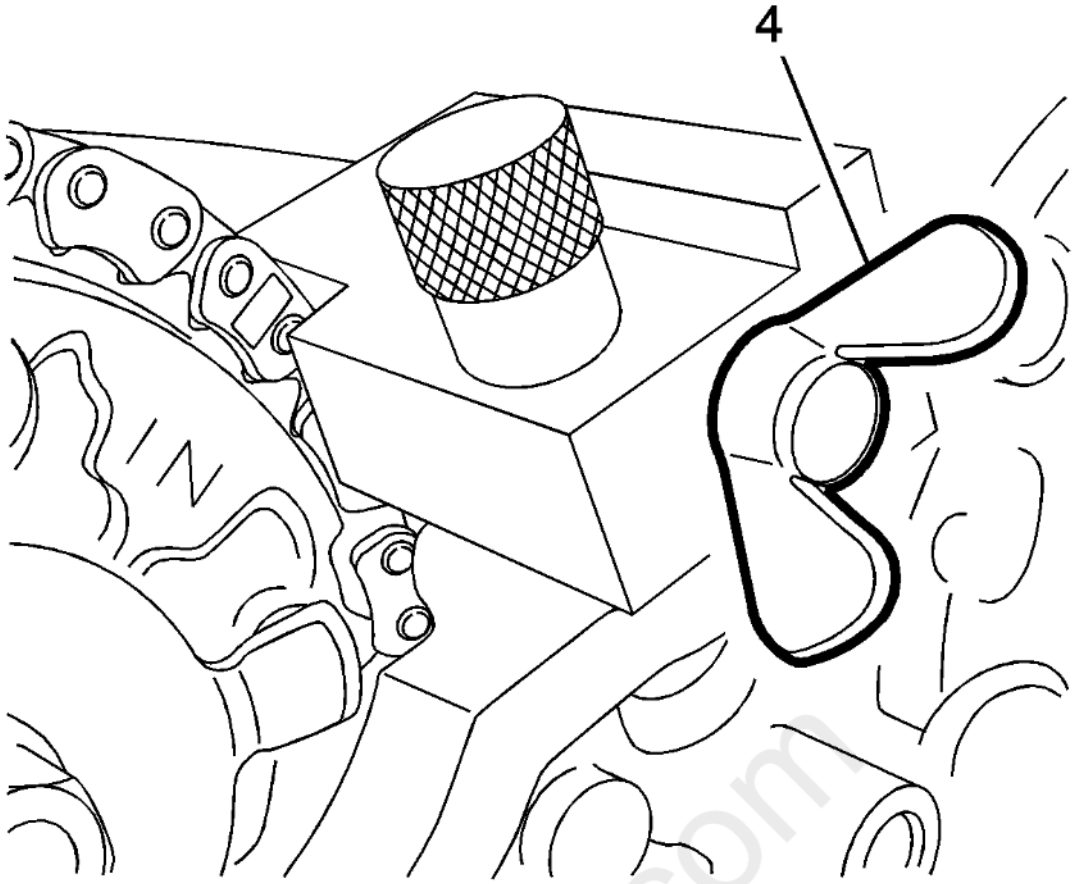

Fig. 77: Retainer Wingnut
Courtesy of GENERAL MOTORS COMPANY

NOTE: **Do NOT tighten the wingnut with a tool of any kind. Firm finger-tightening is sufficient.**

14. Tighten wingnut (4) so **EN49982-1** retainer closes over and firmly grasps timing chain.

cardiagn.com

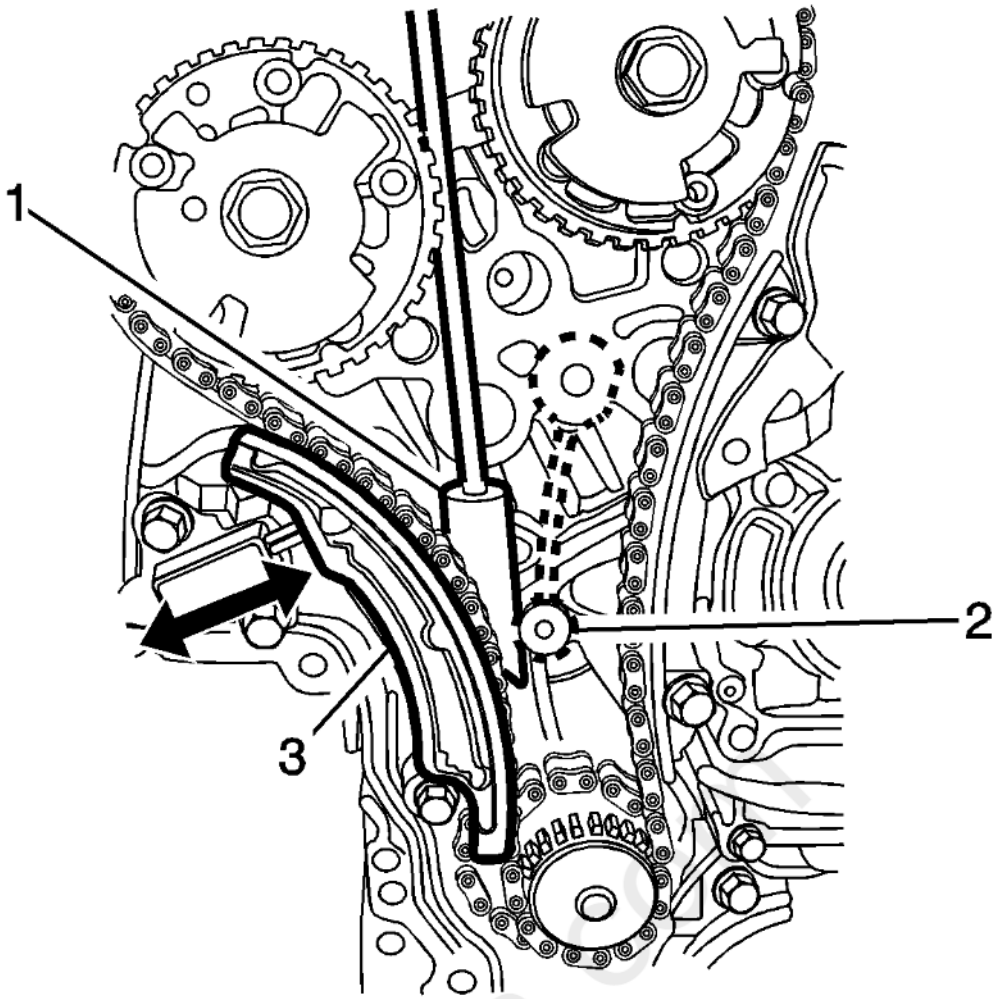

Fig. 78: Retainer Wedge
Courtesy of GENERAL MOTORS COMPANY

NOTE: **The engine front cover is removed for clarity in the following graphics, but is NOT required to be removed to perform the procedure.**

15. **EN49982-2** retainer (1) will be installed in the following steps such that it wedges between an internal rib (2) that is cast into the inside of the front cover (shown in dotted line above) and the timing chain and spring-loaded tensioner shoe (3), holding the chain in position. The wedge will be left in place during the cam position actuator and/or camshaft service.

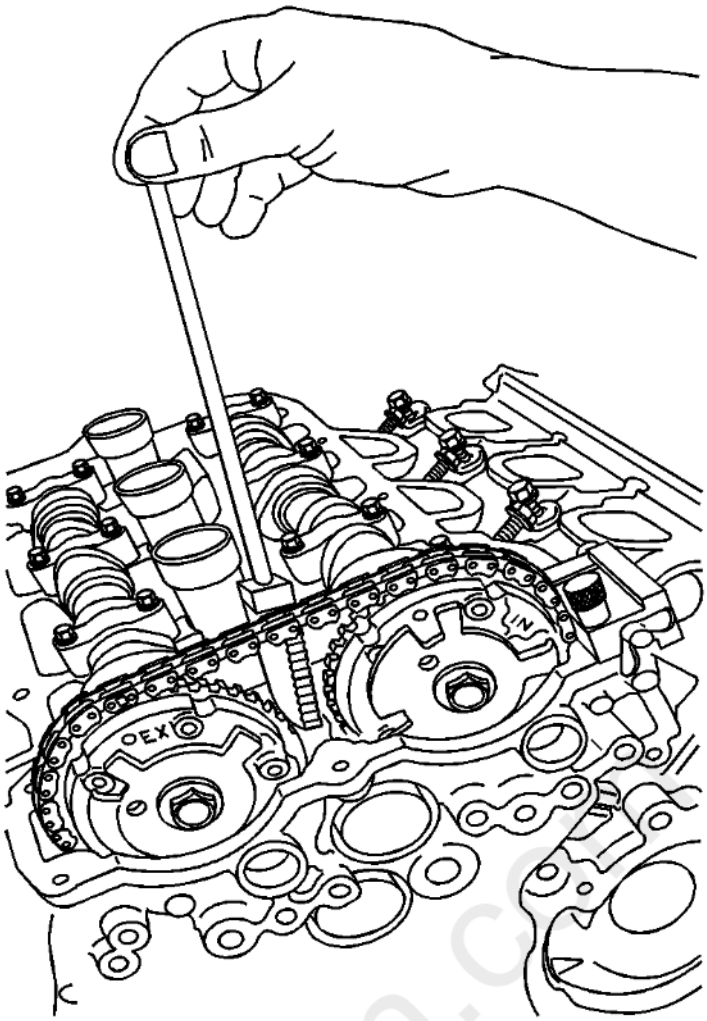

Fig. 79: Inserting Retainer
Courtesy of GENERAL MOTORS COMPANY

16. Insert the **EN49982-2** retainer between the two camshaft position actuators with the "teeth" on the **EN49982-2** retainer facing toward the front cover.

cardiagn.com

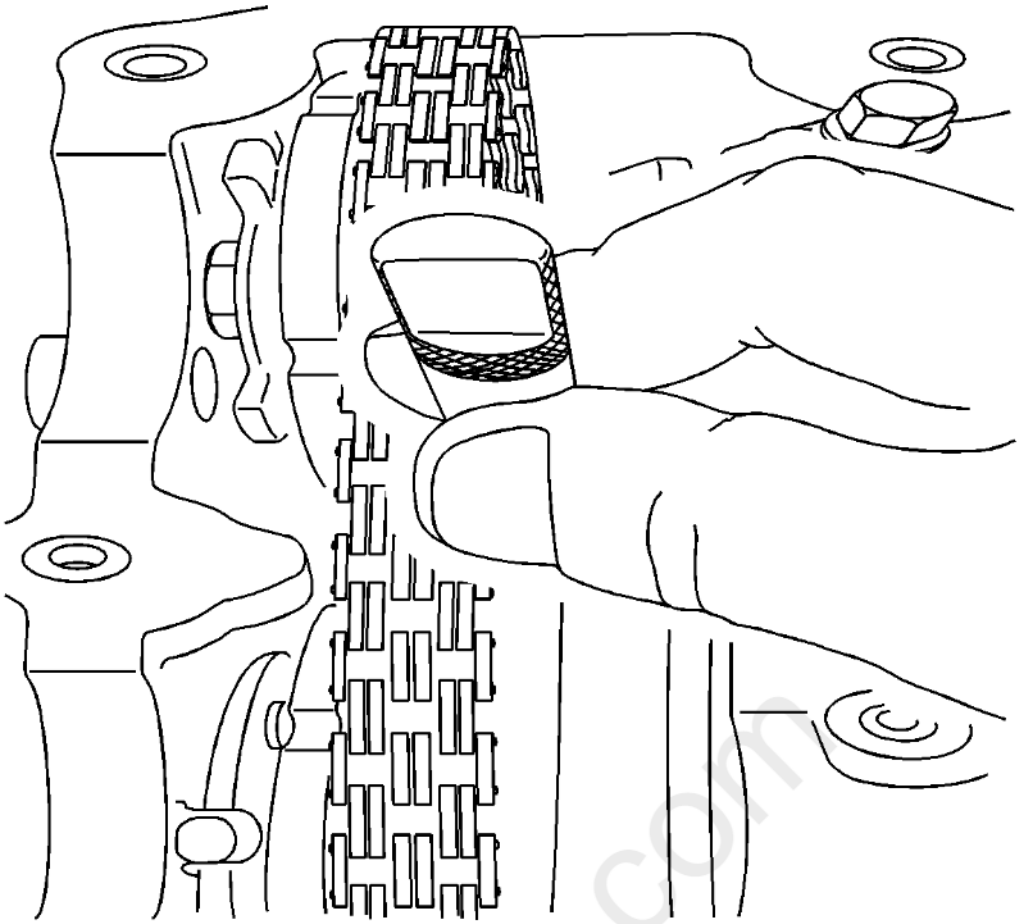

Fig. 80: Orienting Retainer Teeth
Courtesy of GENERAL MOTORS COMPANY

17. Once the wedge portion of **EN49982-2** retainer is below the camshaft position actuators, rotate the **EN49982-2** retainer until the flat in the handle faces toward the intake camshaft position actuator. This orients the "teeth" toward the chain.

carmagn.com

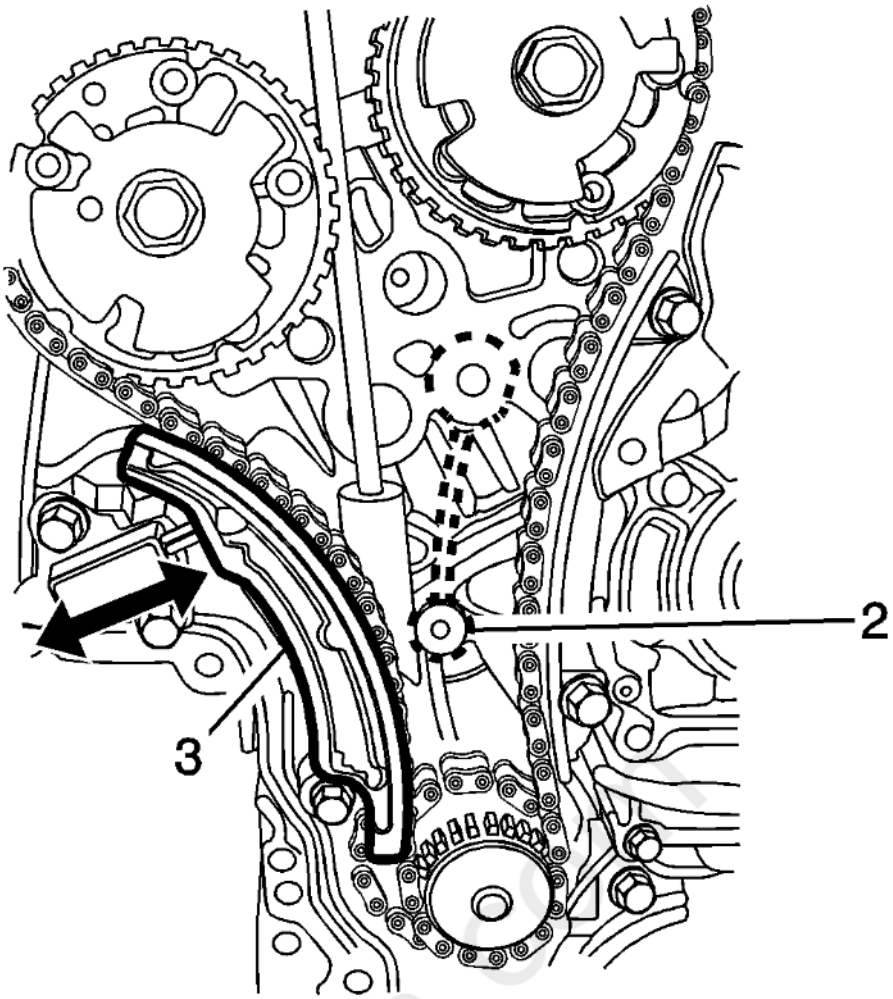

Fig. 81: Wedge, Timing Chain And Belt Casting
Courtesy of GENERAL MOTORS COMPANY

NOTE: **Do not try to force the wedge into position, simply ensure it is loosely engaged in the timing chain and in the correct overall position.**

18. Drop the wedge down until it begins to engage the timing chain and the belt casting (2).

carDiagn.com

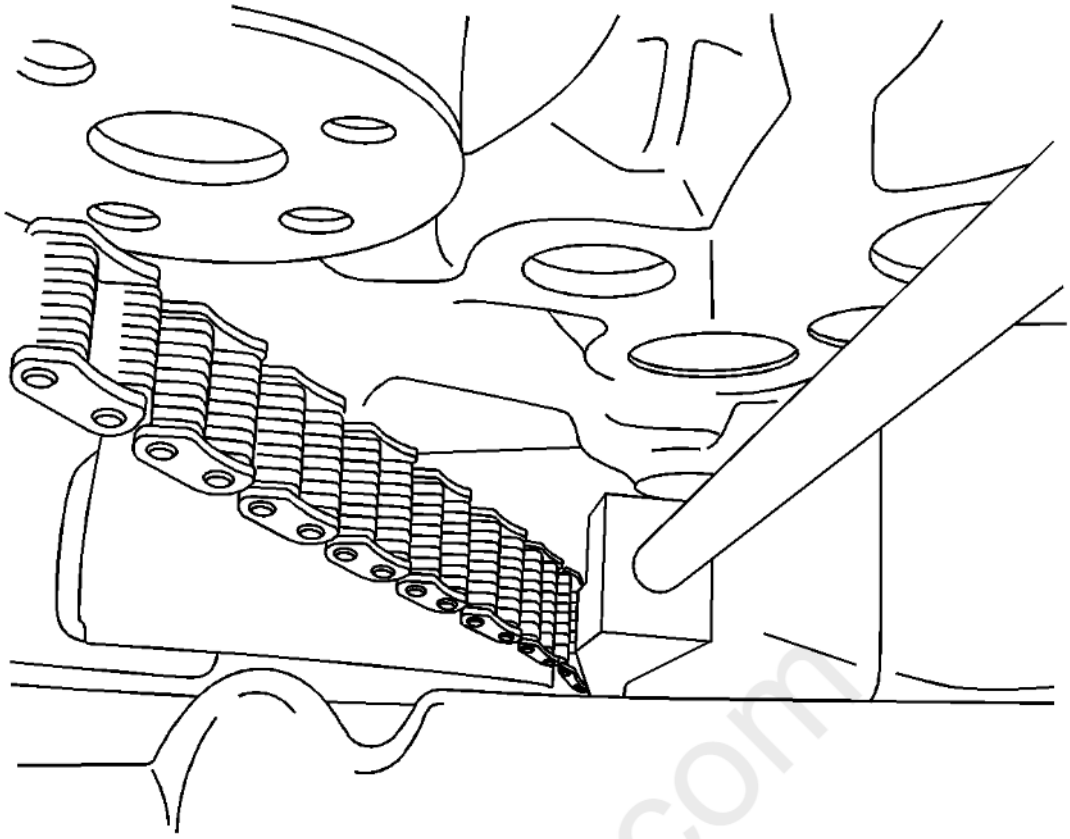

Fig. 82: Positioning Wedge
Courtesy of GENERAL MOTORS COMPANY

19. If possible shine a strong light down from above, between the camshaft position actuators, and see the wedge in overall position as shown in the above graphic.

carmagn.com

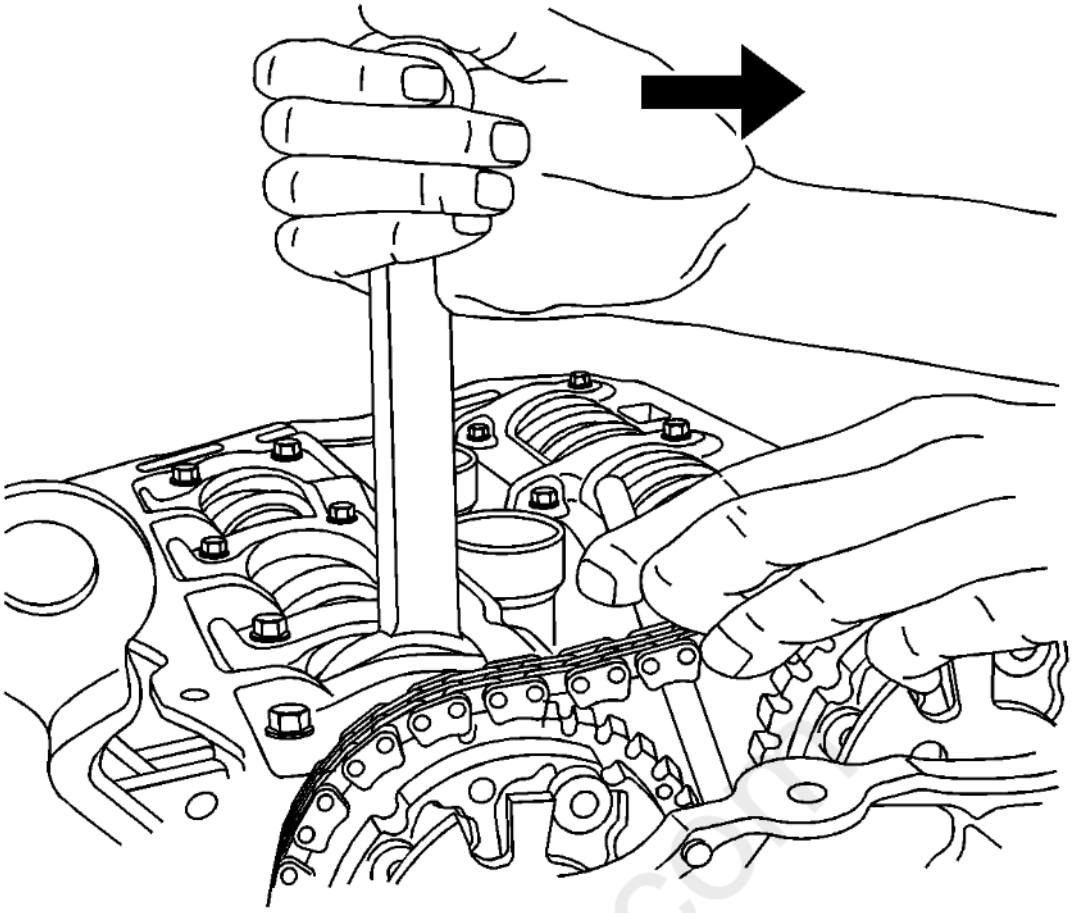

Fig. 83: Rotating Camshaft
Courtesy of GENERAL MOTORS COMPANY

20. Using a 20 mm wrench on the cast hexagonal portion of the exhaust camshaft, rotate the camshaft toward the intake camshaft while pushing down on the handle of the **EN49982-2** retainer.

cartiagn.com

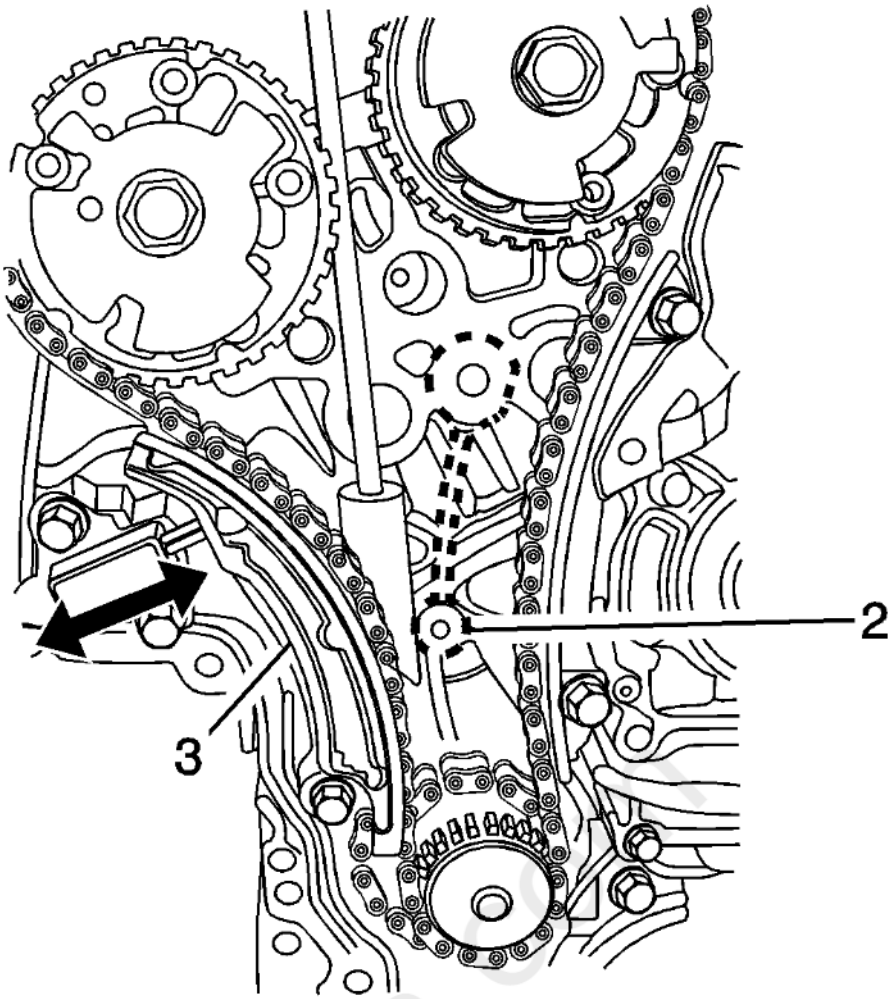

Fig. 84: Opening Gap Between Chain & Internal Rib In Front Cover
Courtesy of GENERAL MOTORS COMPANY

21. This rotation of the camshaft will compress the tensioner shoe (3) against the spring force of the tensioner, opening up a gap between the chain and the internal rib in the front cover. The wedge will then drop into this gap. You will feel a distinct click as the teeth engage the chain.

carmagn.com

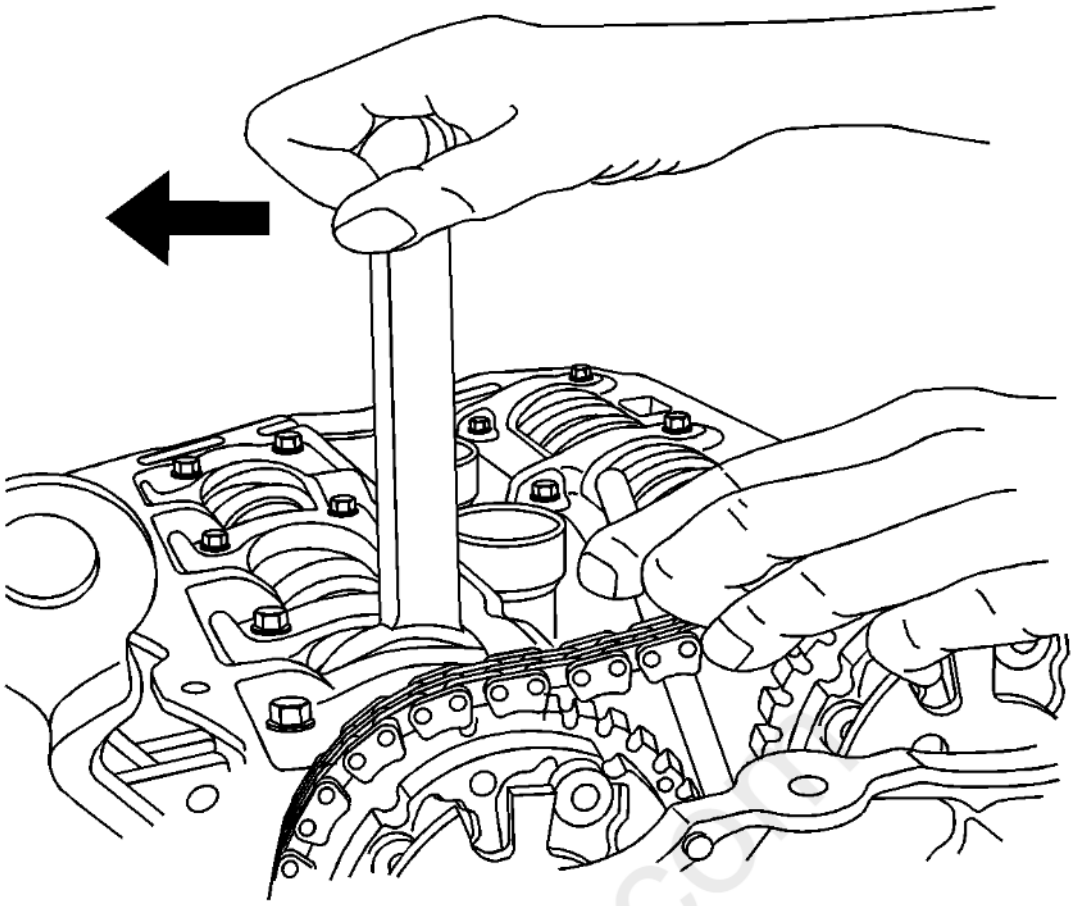

Fig. 85: Releasing Force On Wrench
Courtesy of GENERAL MOTORS COMPANY

CAUTION: **Be sure the EN49982-2 is captured firmly as described before continuing. This is critical to ensuring the camshaft drive chains stay properly timed.**

22. Release the force on the wrench, allowing the spring tension to close the tensioner shoe against the wedge portion of **EN49982-2** retainer. You should be able to lightly tug on the **EN49982-2** retainer and it should stay in position. Repeat Steps 20 and 21 if necessary to re-insert the **EN49982-2** retainer until you are certain it is in position and will stay in position.

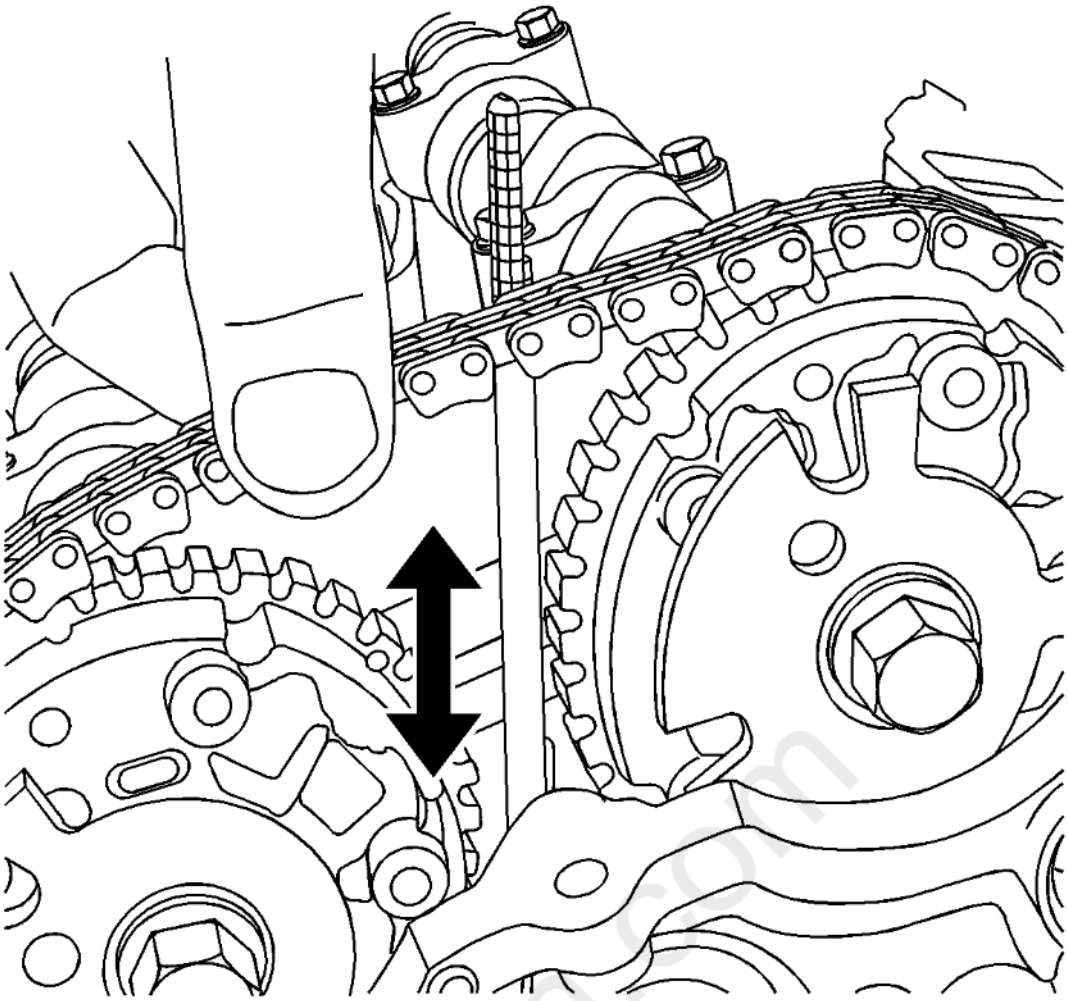

Fig. 86: Slack In Timing Drive Chain
Courtesy of GENERAL MOTORS COMPANY

23. With **EN49982-2** retainer in position and with the 20 mm wrench removed, there should now be some slack in the timing drive chain as indicated in the graphics shown.

carmanuals.com

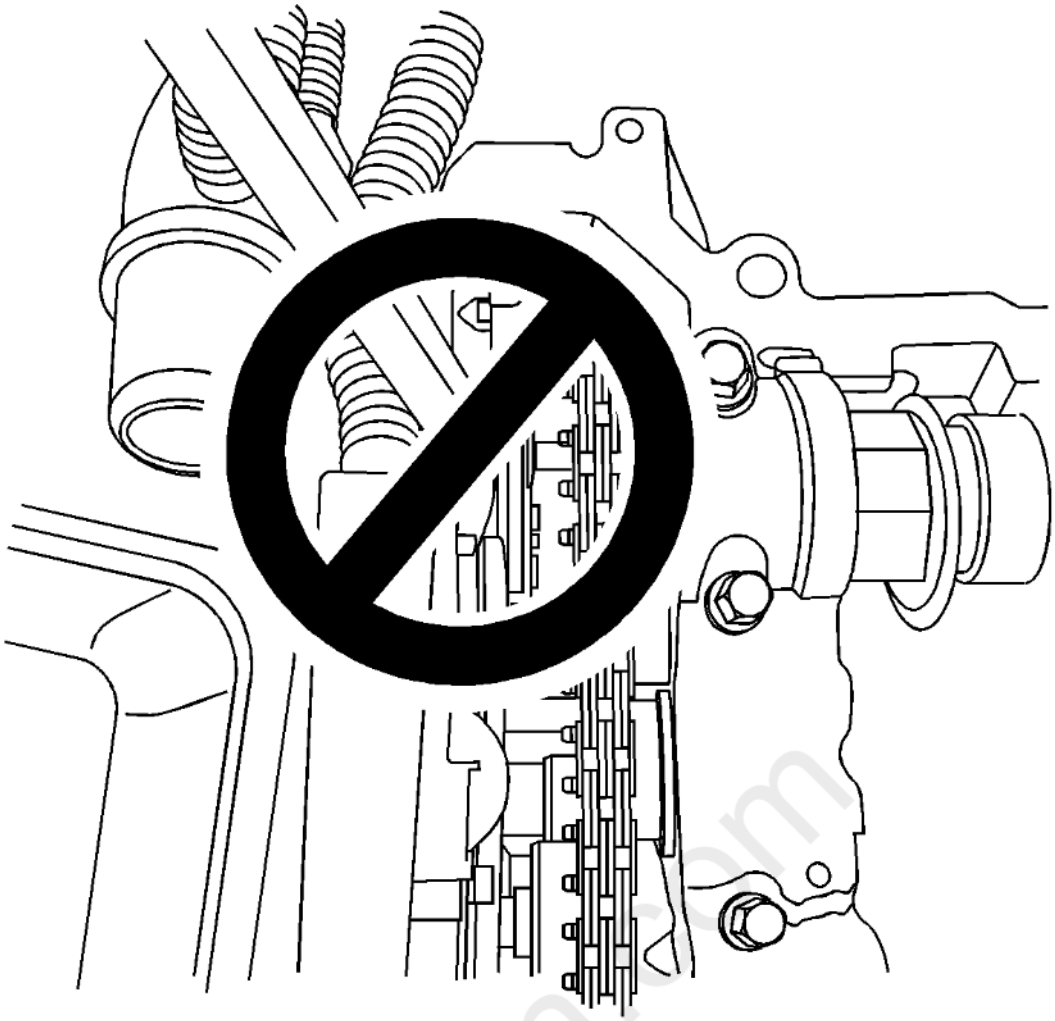

Fig. 87: Do Not Pry Warning
Courtesy of GENERAL MOTORS COMPANY

24. Do not pry against the face of the camshaft position actuators or the position actuator retaining bolt.

cardiagn.com

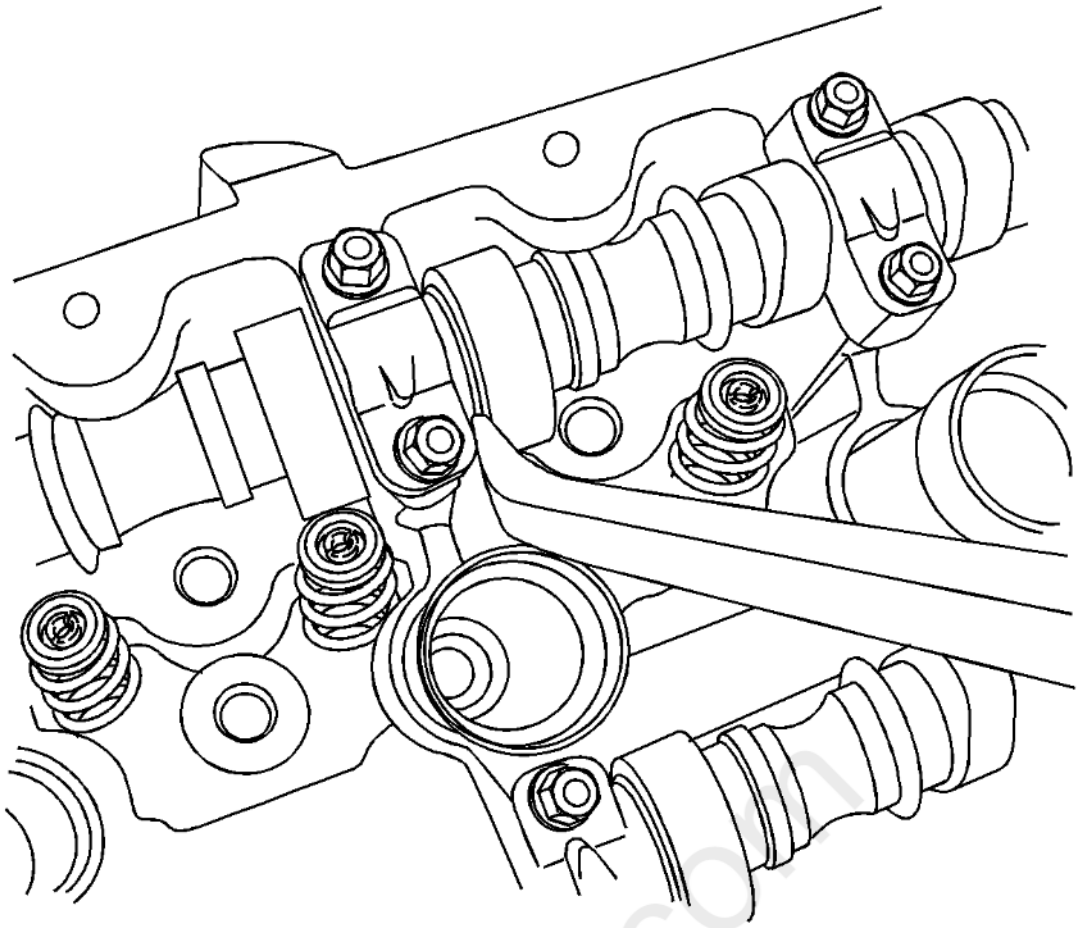

Fig. 88: Camshaft And Pry Bar
Courtesy of GENERAL MOTORS COMPANY

CAUTION: **Do not pry against the face of the camshaft position actuators or the position actuator retaining bolts as the position actuators will be damaged.**

25. Position a screwdriver or small pry bar between a camshaft cap and camshaft lobe. Carefully move/pry the camshafts as far as possible toward the rear/flywheel end of the engine.

carujagn.com

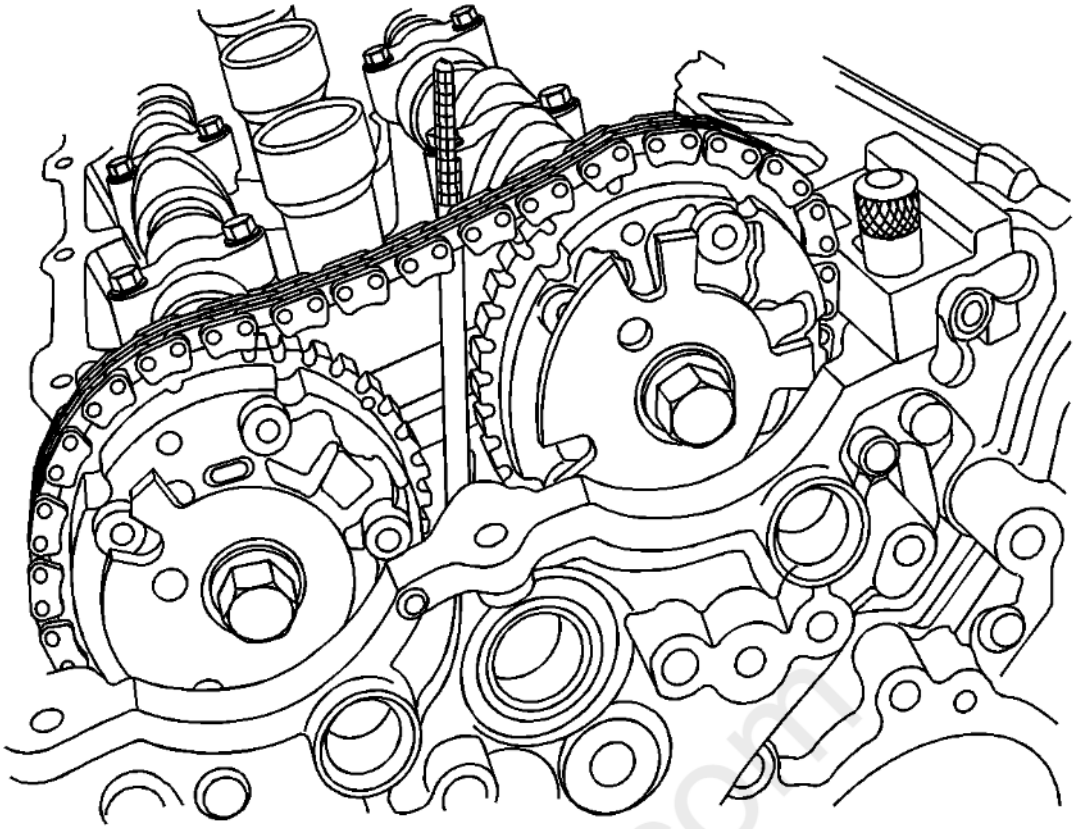

Fig. 89: Retainer Position
Courtesy of GENERAL MOTORS COMPANY

NOTE: **Do not move or disturb the EN49982 retainer components after their installation or the timing chains may be lost inside the front cover.**

26. The **EN49982-1** retainer and **EN49982-2** retainer should be in position as shown, they must be left in position during the servicing of the camshaft position actuator(s) and/or camshaft(s).

cardiagn.com

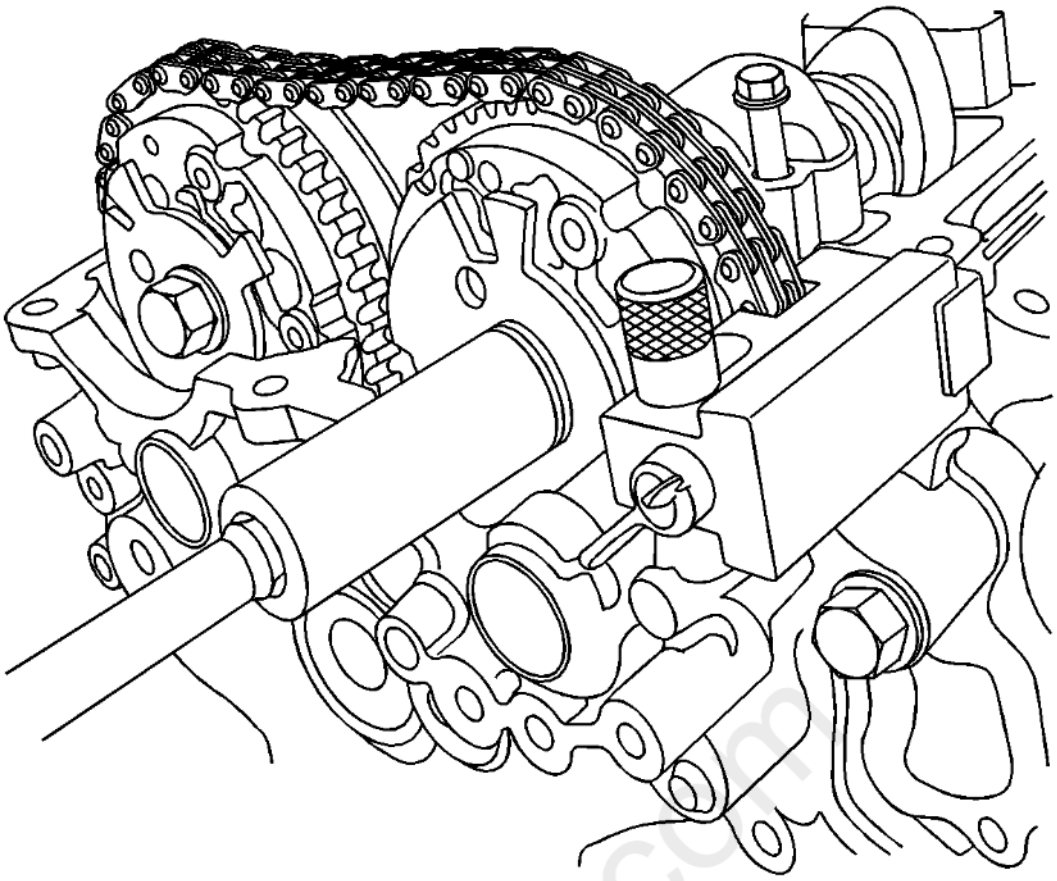

Fig. 90: Intake Camshaft Position Actuator
Courtesy of GENERAL MOTORS COMPANY

27. To remove the intake camshaft position actuator, remove the loosened retaining bolt. To remove only the exhaust camshaft position actuator, skip the steps for removing the intake camshaft position actuator. However, the **EN49982-1** retainer MUST be installed as discussed even if the intake side will not be serviced or the timing of the camshaft chains will be lost.

carmagn.com

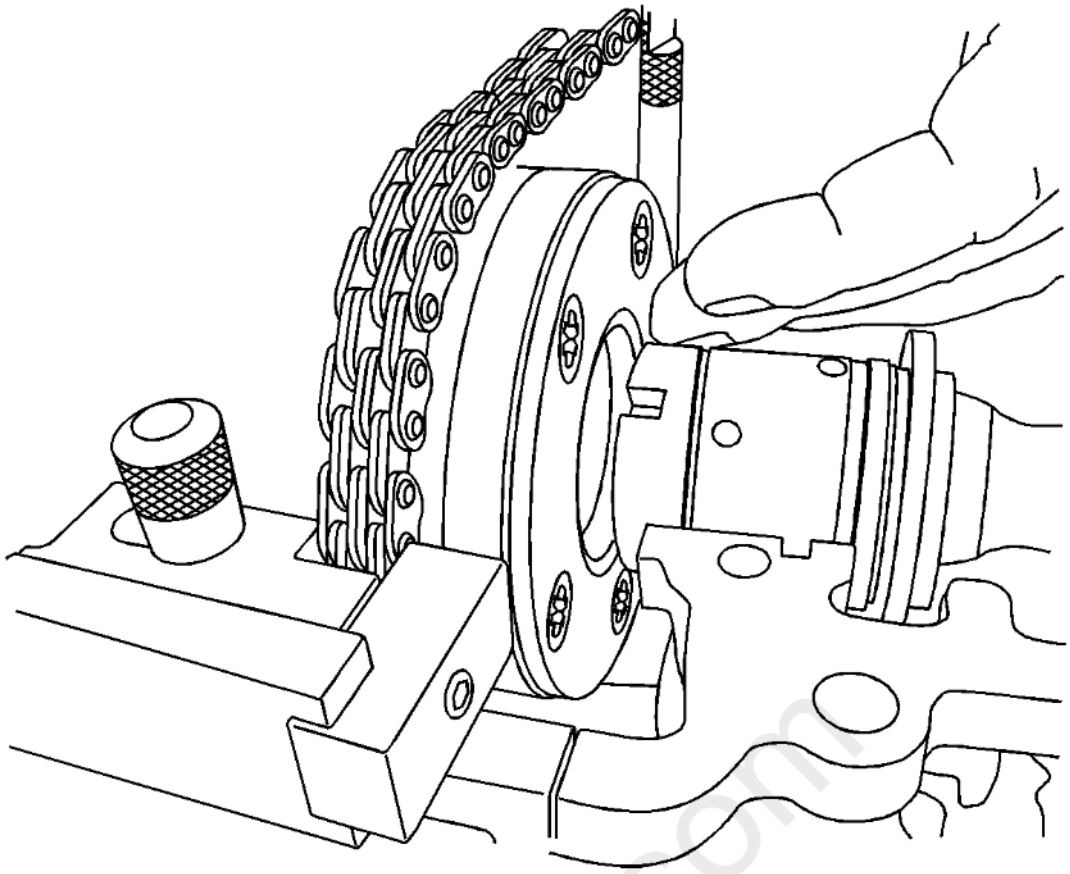

Fig. 91: Sliding Camshaft Position Actuator Off End Of Intake Camshaft
Courtesy of GENERAL MOTORS COMPANY

28. Slide the camshaft position actuator forward and off the end of the intake camshaft. The slot in the **EN49982-1** retainer will allow the tool to move forward enough to disengage the camshaft position actuator from the front of the camshaft. Remove the plastic thrust washer when removing the camshaft position actuator from the end of the camshaft.

carmagn.com

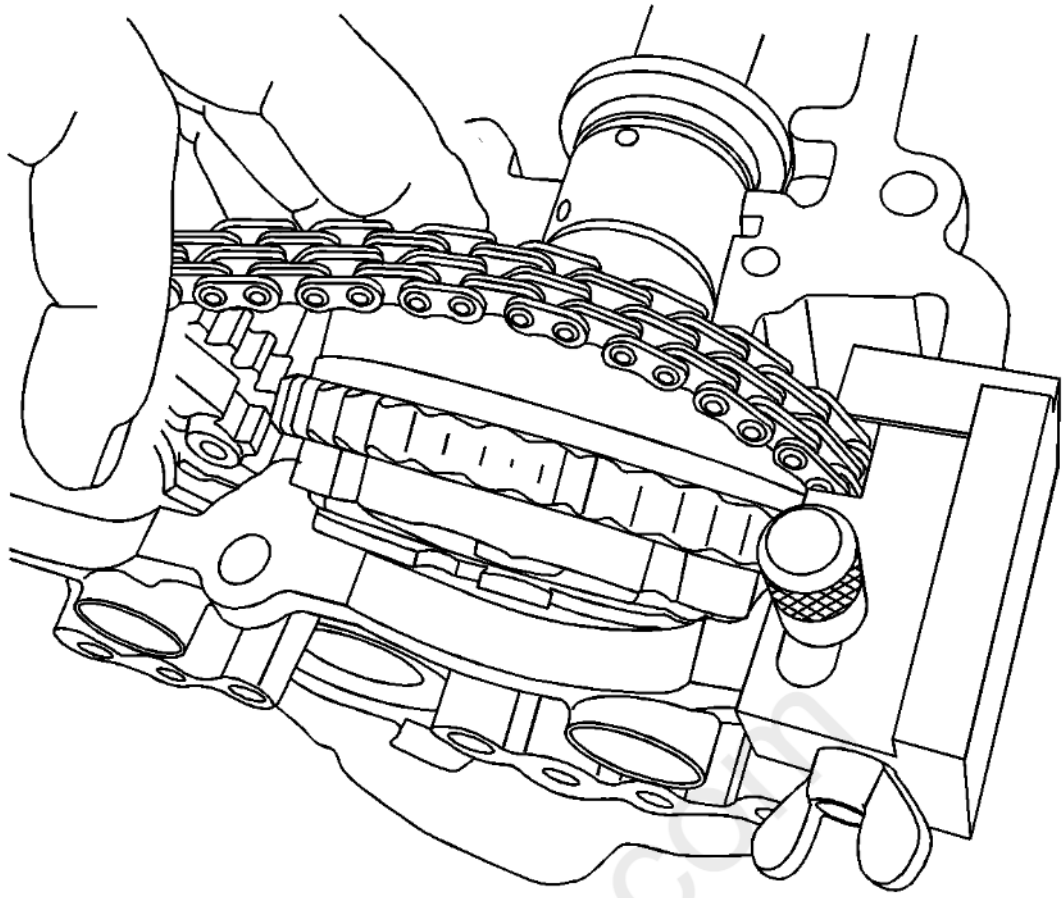

Fig. 92: Tilting Camshaft Position Actuator Forward
Courtesy of GENERAL MOTORS COMPANY

29. Tilt the camshaft position actuator forward and out/away from the engine.

NOTE: **DO NOT remove the EN49982 retainers. They are holding the cam chains to maintain their properly-timed positions.**

30. Allow the chain to rest on the **EN49982-1** retainer and **EN49982-2** retainer in position during service.

Installation Procedure

cardiagn.com

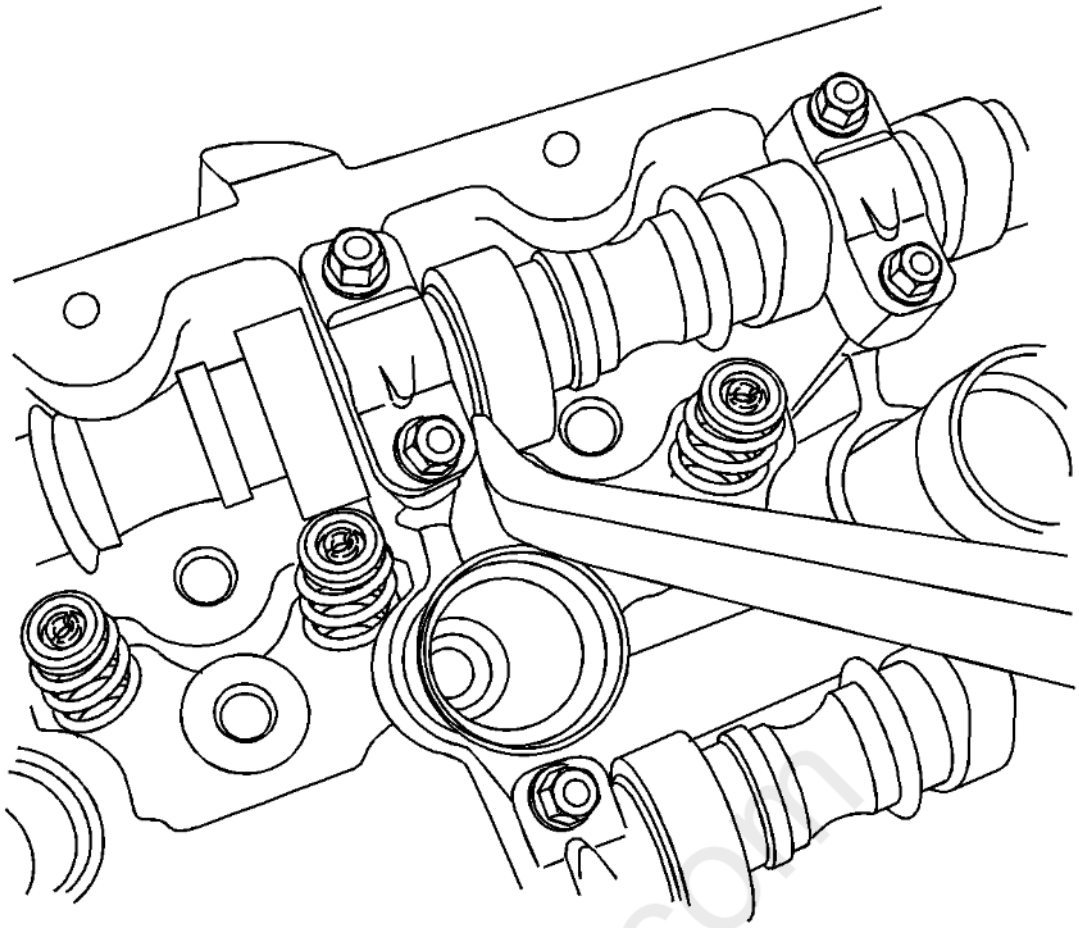

Fig. 93: Camshaft And Pry Bar
Courtesy of GENERAL MOTORS COMPANY

1. It may help to carefully pry the camshaft forward and to move the **EN49982-1** retainer backward via the slot to reengage the position actuator to the camshaft. The dowel pin on the camshaft position actuator must be aligned with the slot in the camshaft nose for reassembly.

carmagn.com

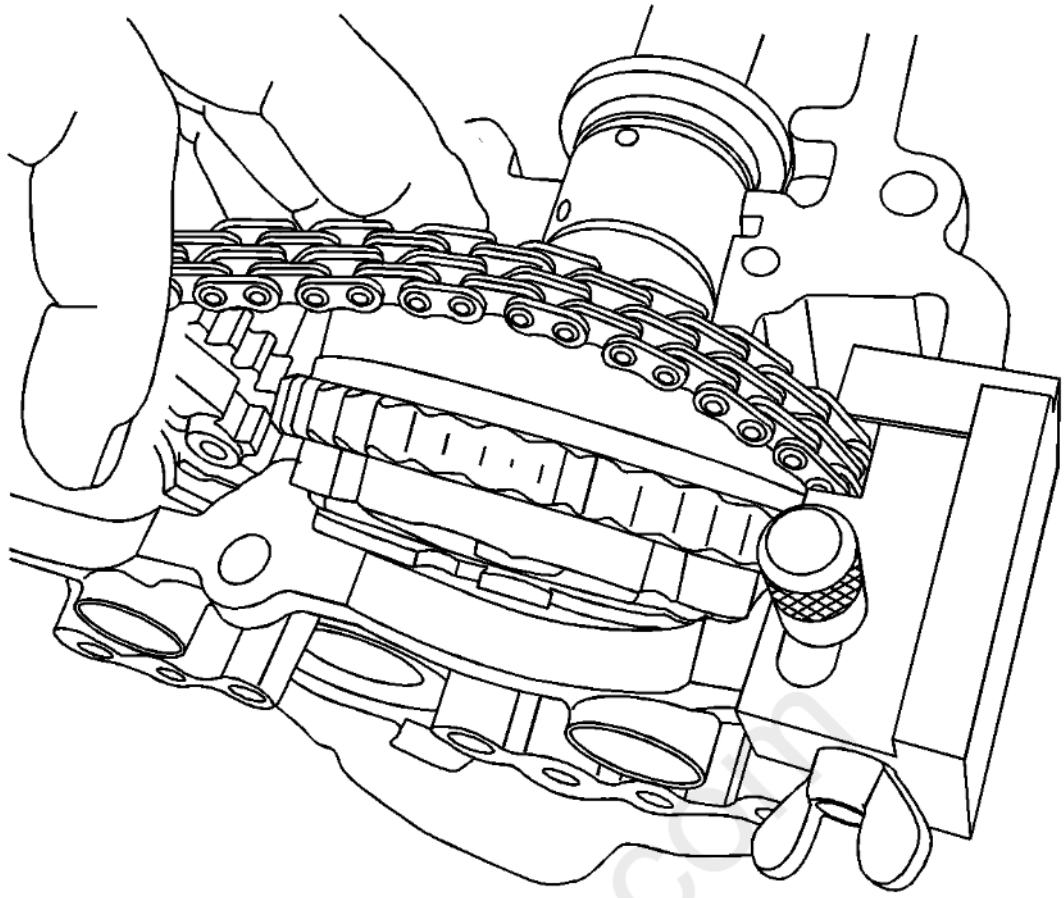

Fig. 94: Tilting Camshaft Position Actuator Forward
Courtesy of GENERAL MOTORS COMPANY

2. Install the intake camshaft position actuator first by inserting the actuator between the timing chain and front cover. Tilt the actuator in and engage the chain while aligning the marks you made on the chain and position actuator.

carquest.com

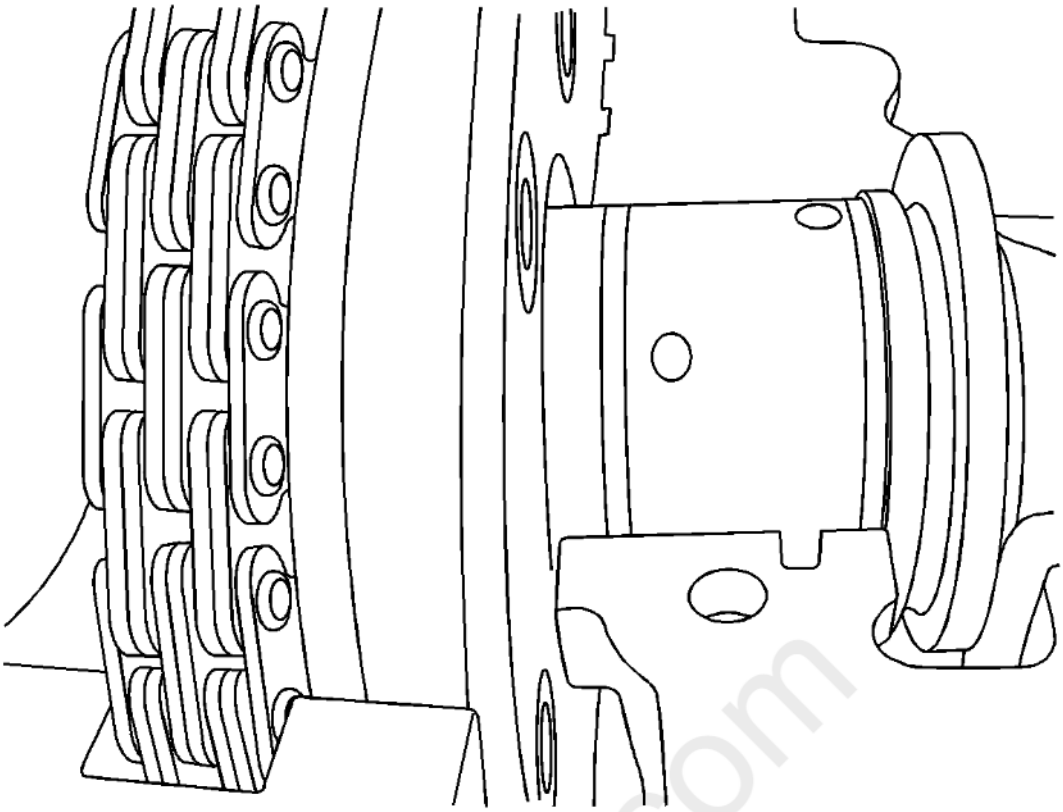

Fig. 95: Fitting Camshaft Position Actuator
Courtesy of GENERAL MOTORS COMPANY

3. Ensure the camshaft position actuator fits snugly to the end of the camshaft.

CAUTION: **Refer to Fastener Caution .**

4. Install the intake camshaft position actuator retaining bolt, and lightly tighten the bolt to hold the camshaft actuator in place. DO NOT torque at this time.
5. Install the exhaust camshaft position actuator retaining bolt, and lightly tighten the bolt to hold the camshaft actuator in place. DO NOT torque at this time.
6. Double-check that the marks on both the intake and exhaust camshaft position actuators to ensure that they are aligned with their respective paint marks on the chain.

cardiagn.com

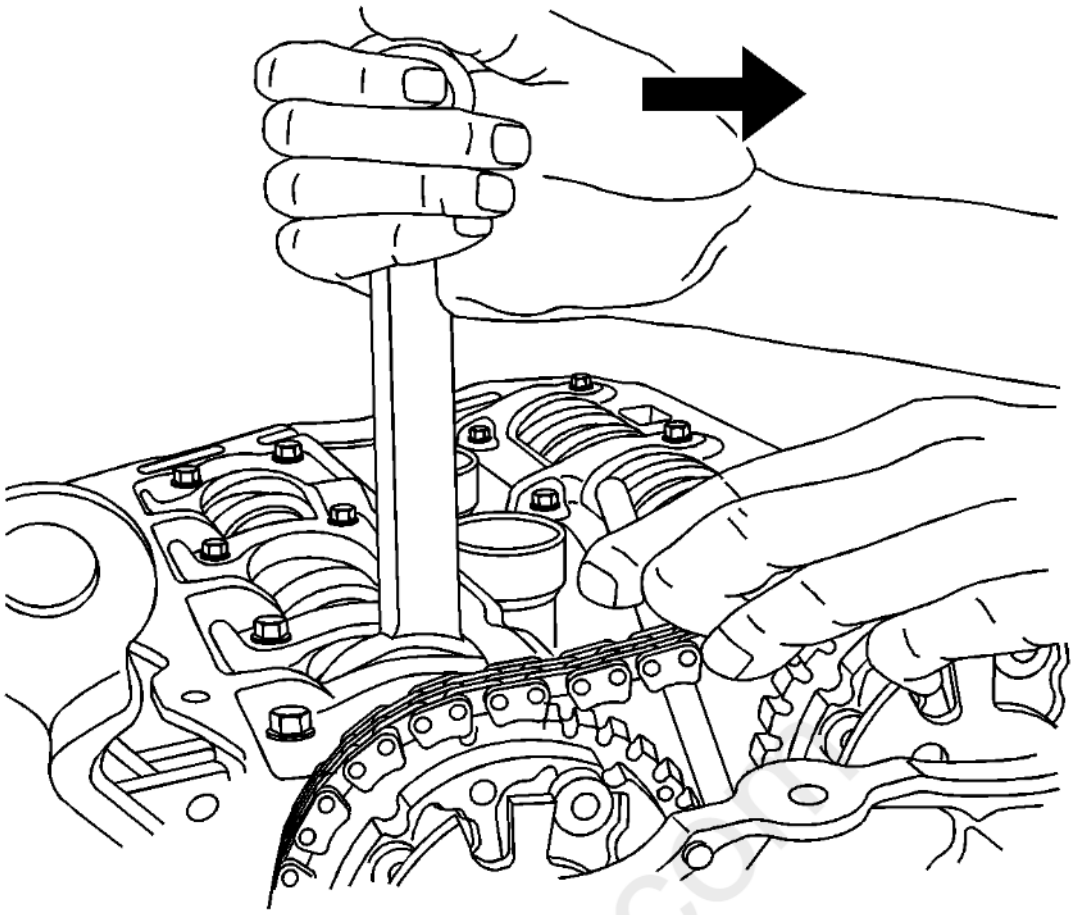

Fig. 96: Rotating Camshaft
Courtesy of GENERAL MOTORS COMPANY

7. Using a 20 mm wrench on the cast hexagonal portion of the exhaust camshaft, rotate the camshaft clockwise while pulling up on the handle of the **EN49982-2** retainer.
8. Remove EN49982-2 retainer.
9. Release the pressure on the wrench. The timing chain should now be tight and should lose the slack the wedge was providing.

NOTE: **Double-check the marks on the camshaft position actuators and chains to ensure they are correct.**

10. Torque one or both camshaft position actuator retaining bolts to 58 N.m (43 lb ft).

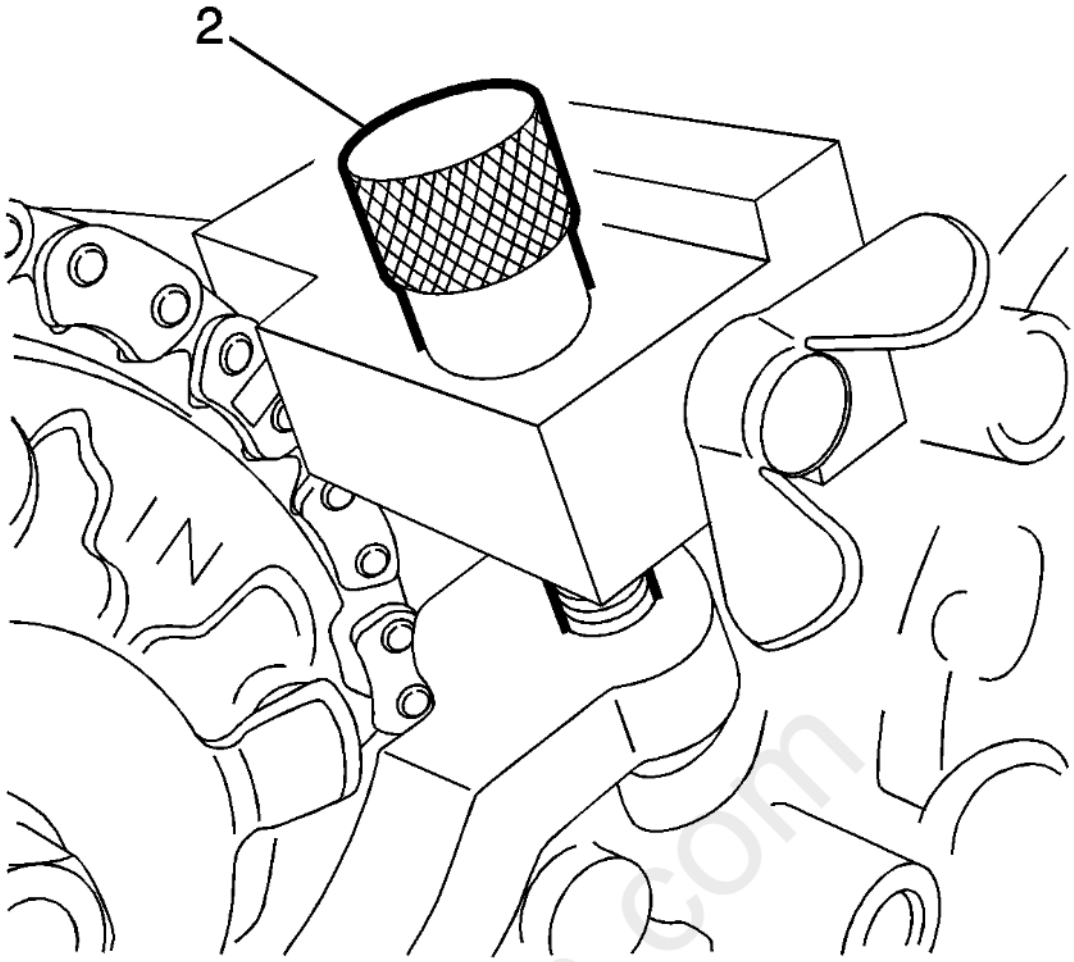

Fig. 97: Retainer Thumbscrew
Courtesy of GENERAL MOTORS COMPANY

11. Unscrew the wingnut on **EN49982-1** retainer to release timing chain, and then remove **EN49982-1** retainer from the front cover by unscrewing the thumbscrew (2).

cardiagn.com

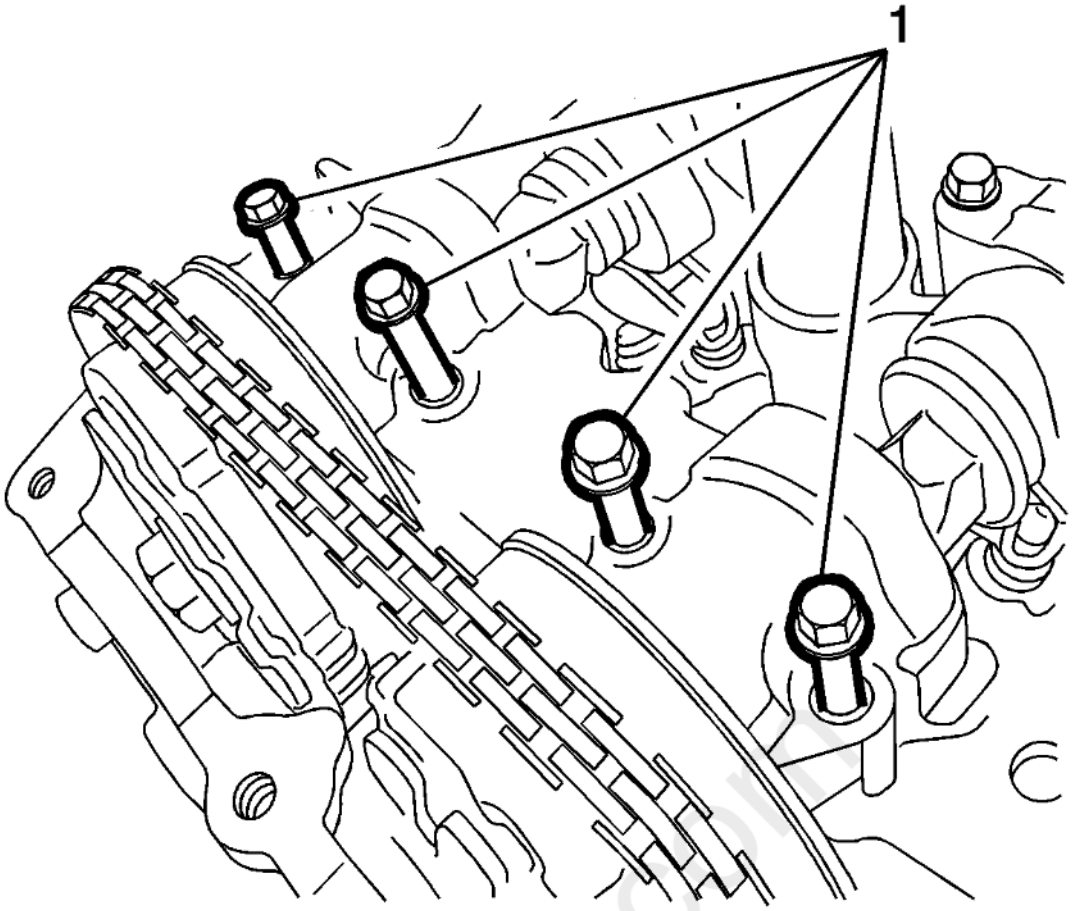

Fig. 98: Camshaft Front Cap And Bolts
Courtesy of GENERAL MOTORS COMPANY

12. Install camshaft front cap and bolts (1).
13. Tighten the camshaft front cap outer bolts to 10 N.m (89 lb in).
14. Tighten the camshaft front cap inner bolts to 10 N.m (89 lb in).
15. Install the camshaft position actuator solenoid valve solenoid - exhaust. Refer to **Camshaft Position Actuator Solenoid Valve Solenoid Replacement - Bank 1 (Right Side) Exhaust** .
16. Install the camshaft position actuator solenoid valve solenoid-intake. Refer to **Camshaft Position Actuator Solenoid Valve Solenoid Replacement - Bank 1 (Right Side) Intake** .
17. Install the intake camshaft position sensors. Refer to **Camshaft Position Sensor Replacement - Bank 1 (Right Side) Intake** .
18. Install the exhaust camshaft position sensor. Refer to **Camshaft Position Sensor Replacement - Bank 1 (Right Side) Exhaust** .
19. Install the camshaft cover. Refer to **Camshaft Cover Replacement - Right Side**.

CAMSHAFT POSITION ACTUATOR REPLACEMENT - BANK 2

Special Tool

EN-48313 Timing Chain Retention Tool

For equivalent regional tools, refer to **Special Tools** .

Removal Procedure

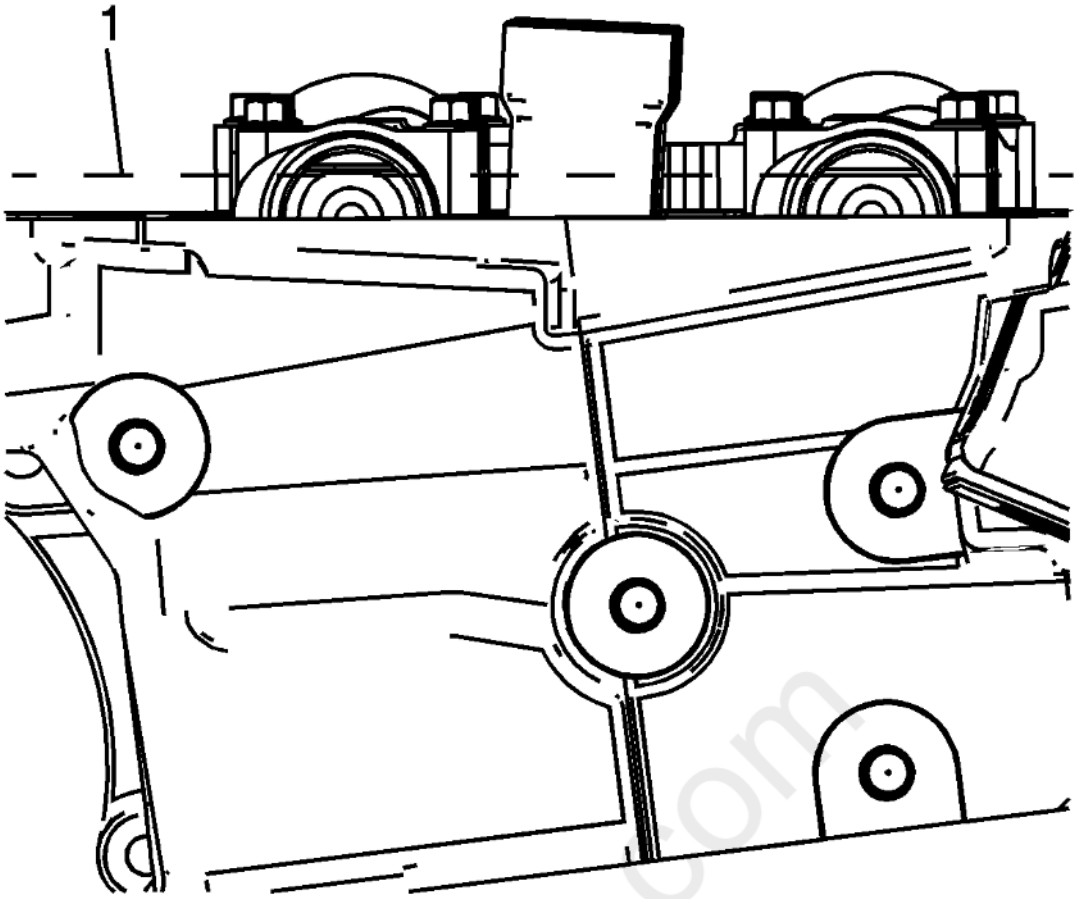

Fig. 99: Camshaft Flats Parallel With Camshaft Cover Rail
Courtesy of GENERAL MOTORS COMPANY

1. Remove the left camshaft cover. Refer to **Camshaft Cover Replacement - Left Side**.
2. Remove the left intake and exhaust camshaft position sensors. Refer to **Camshaft Position Sensor Replacement - Bank 2 (Left Side) Intake** , and **Camshaft Position Sensor Replacement - Bank 2 (Left Side) Exhaust** .
3. Remove the left intake and exhaust camshaft position actuator solenoids. Refer to **Camshaft Position Actuator Solenoid Valve Solenoid Replacement - Bank 2 (Left Side) Intake** , and **Camshaft Position Actuator Solenoid Valve Solenoid Replacement - Bank 2 (Left Side) Exhaust** .

NOTE: **Rotate the crankshaft balancer bolt in a clockwise direction ONLY.**

4. Rotate the crankshaft balancer using the balancer bolt until the camshafts are in a neutral (low tension) position. The camshafts will be parallel with the camshaft cover rail (1).

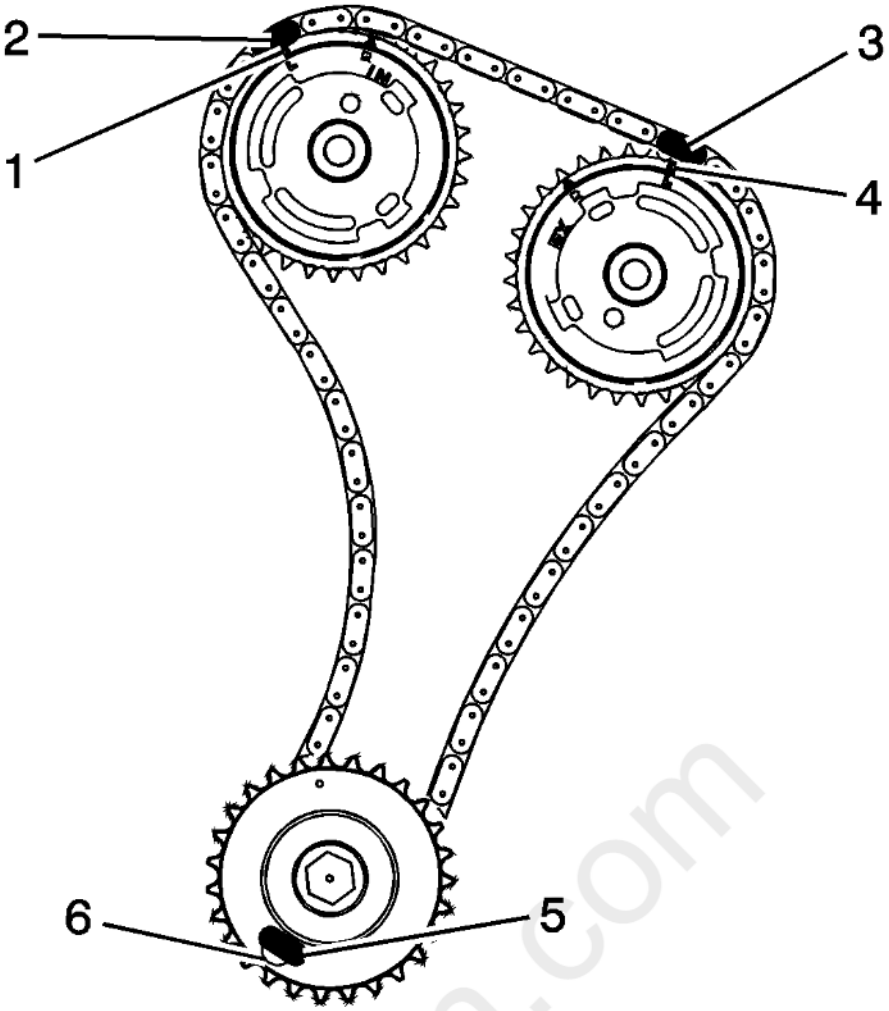

Fig. 100: Timing Chain & Camshaft Position Actuators Marking Locations
Courtesy of GENERAL MOTORS COMPANY

NOTE: **Ensure that the camshaft timing chain and the camshaft position actuators are marked for proper assembly.**

5. Use a paint stick to create an alignment mark on one of the timing chain links (2) and the adjacent tooth on the exhaust camshaft position actuator (1).
6. Use a paint stick to create an alignment mark on one of the timing chain links (3) and the adjacent tooth on the intake camshaft position actuator (4).

CAUTION: **Refer to Torque Reaction Against Timing Drive Chain Caution .**

7. Use an open end wrench on the hex cast into the left intake and exhaust camshafts and rotate the camshafts toward each other in order to create slack in the chain between the actuators.

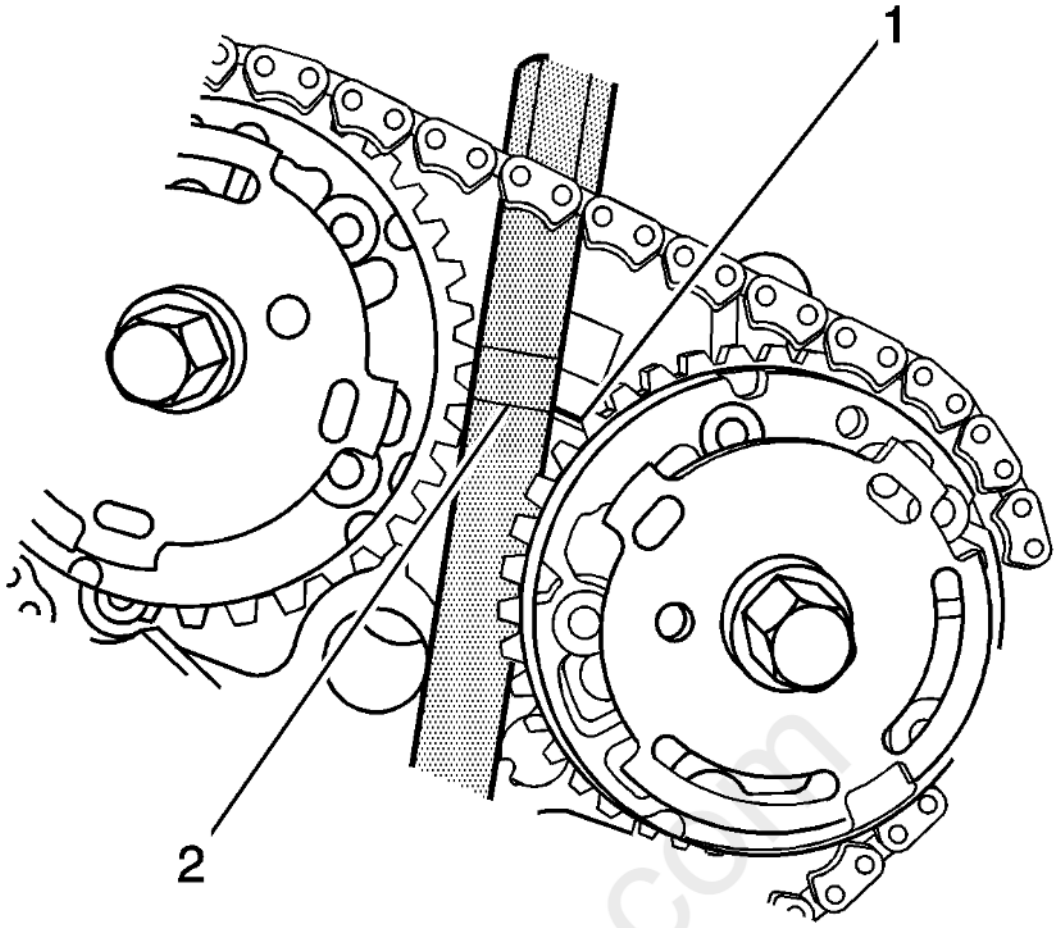

Fig. 101: Inserting Timing Chain Retention Tool
Courtesy of GENERAL MOTORS COMPANY

8. Unscrew the **EN-48313** tool so that the legs of the tool are retracted.
9. Insert the **EN-48313** tool between the camshaft actuators, rearward of the timing chain until the bottom line that is scribed in the body of the tool (2) is adjacent to the top surface of the cylinder head (1). This is the approximate installed position.

cardiagn.com

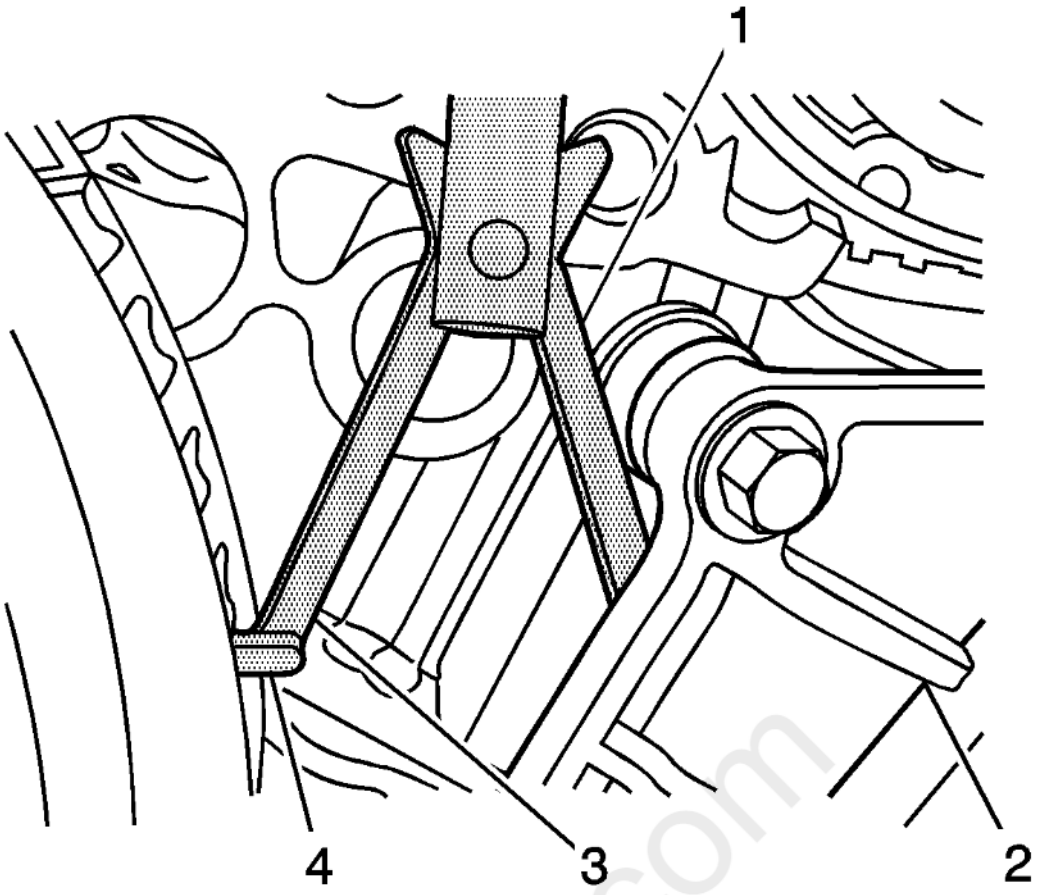

Fig. 102: Identifying Feet & Legs Of Timing Chain Retention Tool
Courtesy of GENERAL MOTORS COMPANY

NOTE: **The engine front cover is removed for clarity in the following graphics, but NOT required to perform the procedure.**

10. Ensure that the feet (4) on the legs of the tool are facing the front of the engine.
11. Partially expand the legs (1, 3) of the **EN-48313** tool by turning the T-shaped handle clockwise.
12. Insert the leg of the tool (1) behind the timing chain guide (2).
13. Continue expanding the **EN-48313** tool until the legs (1, 3) contact the timing chain. Do not tighten at this time.

carujan.com

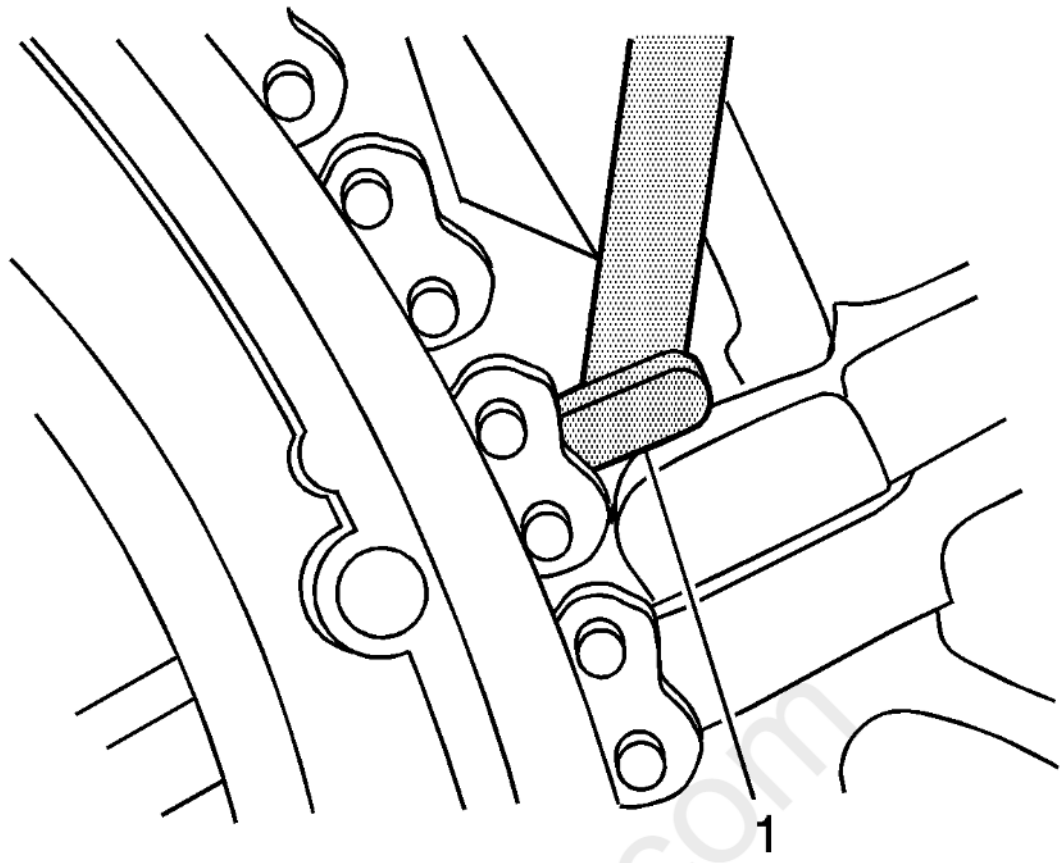

Fig. 103: Foot of Timing Chain Retention Tool
Courtesy of GENERAL MOTORS COMPANY

NOTE: **Ensure that the foot (1) of the EN-48313 tool is engaged into one of the link pockets to prevent tool slippage during tightening of the EN-48313 tool.**

14. Hand tighten the **EN-48313** tool.
15. Use an open end wrench on the hex cast into the left intake and exhaust camshafts and rotate the camshafts toward each other in order to create slack in the chain between the actuators.

carujagn.com

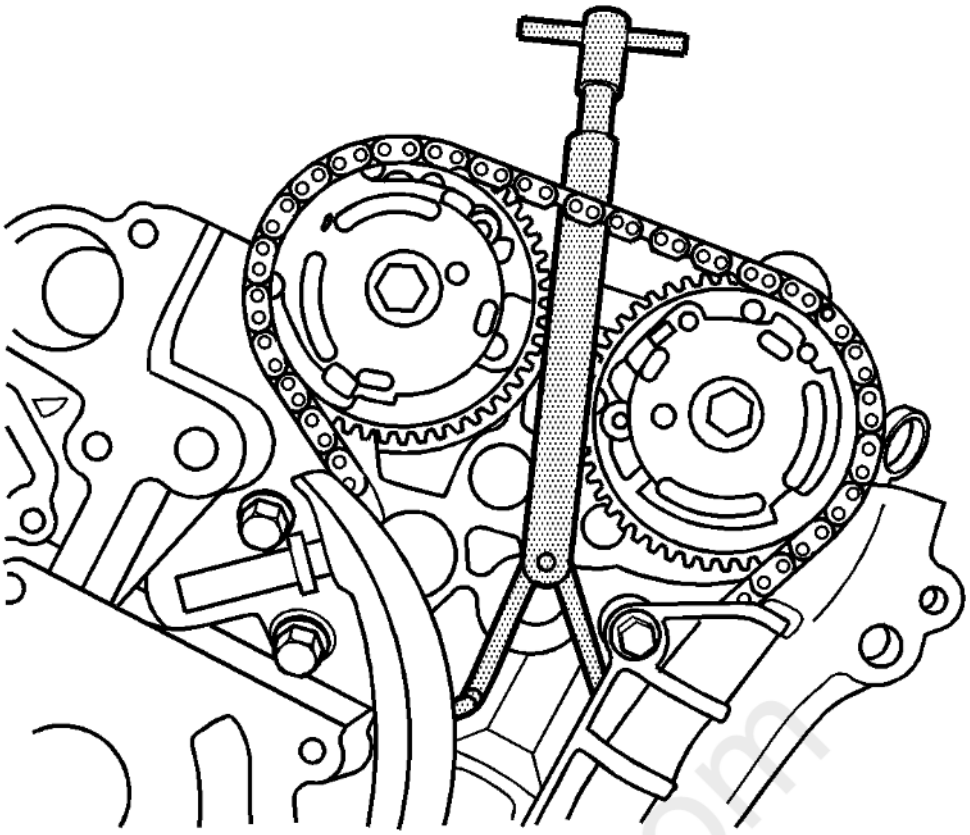

Fig. 104: Timing Chain Retention Tool
Courtesy of GENERAL MOTORS COMPANY

16. The **EN-48313** tool is now properly installed to hold the timing chain in position.

cardiagn.com

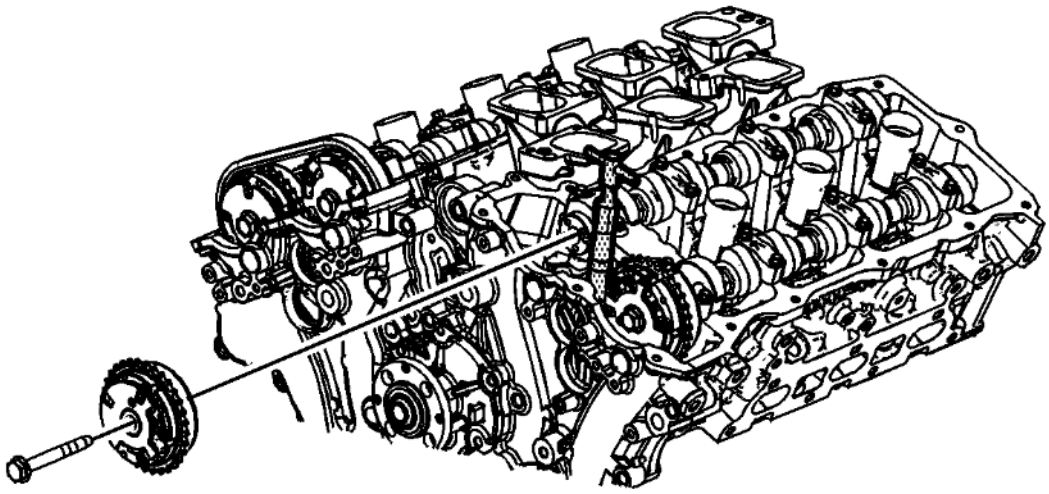

Fig. 105: Exhaust Camshaft Position Actuator & Bolt
Courtesy of GENERAL MOTORS COMPANY

17. Use an open end wrench on the hex cast into the camshaft in order to prevent engine rotation when loosening the camshaft position actuator bolt.
18. If replacing the exhaust camshaft position actuator, then remove the bolt and the actuator.
19. If replacing the intake camshaft position actuator, then remove the bolt and the actuator.
20. If removing both the exhaust and intake camshaft actuators, the timing chain can be draped over the **EN-48313** tool once the actuators have been removed.
21. Rotate the actuator in order to align the opening in the actuator reluctor wheel with the cam sensor boss in the front cover, to allow actuator removal.
22. Remove the camshaft thrust washer.

Installation Procedure

carmagn.com

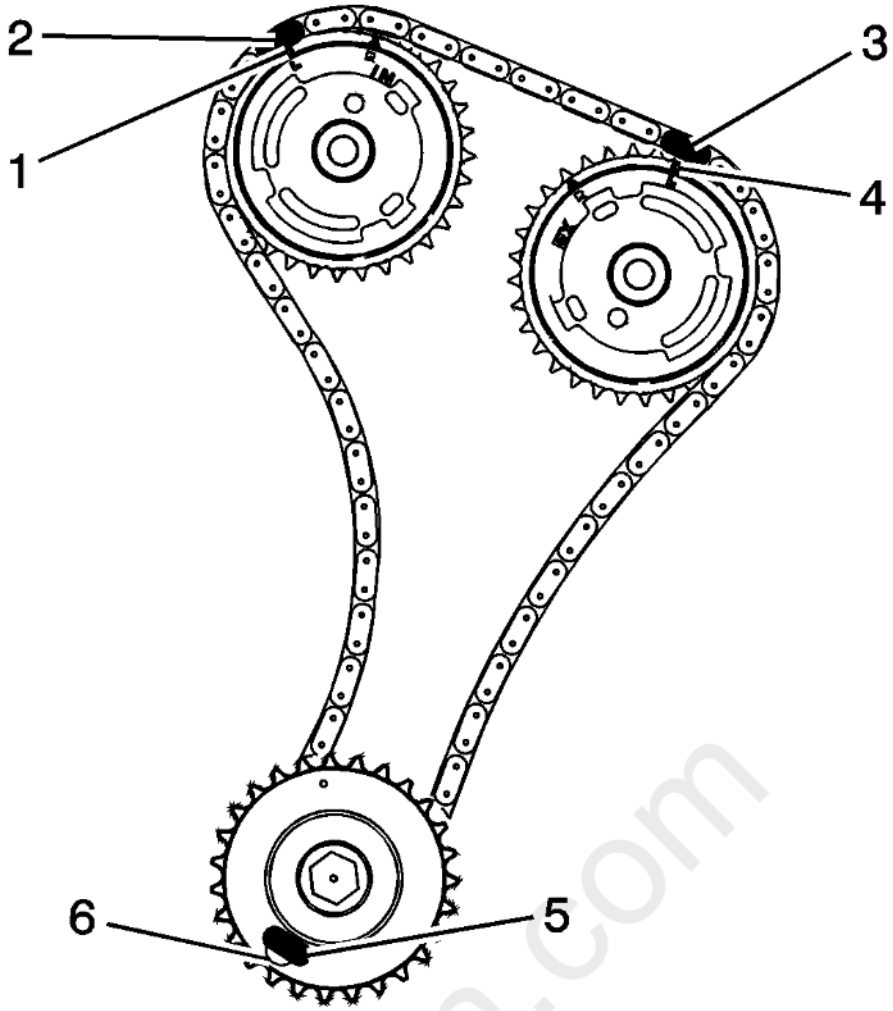

Fig. 106: Timing Chain & Camshaft Position Actuators Marking Locations
Courtesy of GENERAL MOTORS COMPANY

NOTE: **Ensure that the camshaft timing chain and the camshaft position actuators are marked for proper assembly.**

1. Align the exhaust camshaft actuator alignment mark (1) to the timing chain alignment mark (2) made during disassembly.
2. Ensure that the intake camshaft actuator alignment mark (4) and the timing chain alignment mark (3) are also aligned.
3. Position the exhaust camshaft actuator to the camshaft and install the actuator bolt hand tight.
4. Remove the **EN-48313** tool.

Cardiagn.com

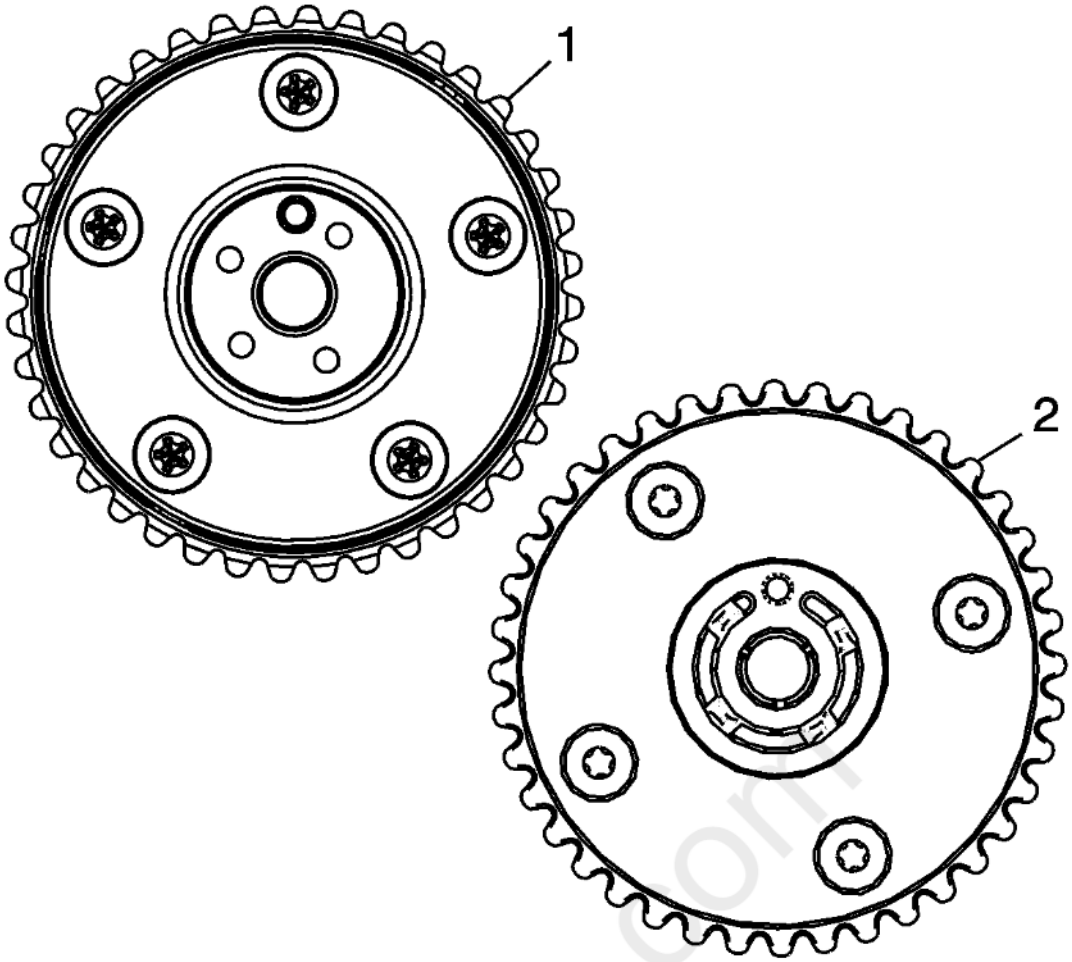

Fig. 107: Identifying Different Camshaft Position Actuators
Courtesy of GENERAL MOTORS COMPANY

NOTE:

- **The camshaft position actuator will vary depending on application.**
- **Camshaft thrust washers must only be installed on applications that had thrust washers present during removal of the camshaft position actuators. Do not install washers on applications if they are not already present.**

5. If equipped, ensure the proper camshaft thrust washer is used. Use a 1.6 mm (0.063 in) thrust washer on applications that have 5 attaching screws on the back side of the camshaft position actuator (1). Use a 1.1 mm (0.043 in) thick thrust washer with yellow speckles on applications that have 4 attaching screws on the back side of the camshaft position actuator (2).
6. Install the thrust washer, if applicable.

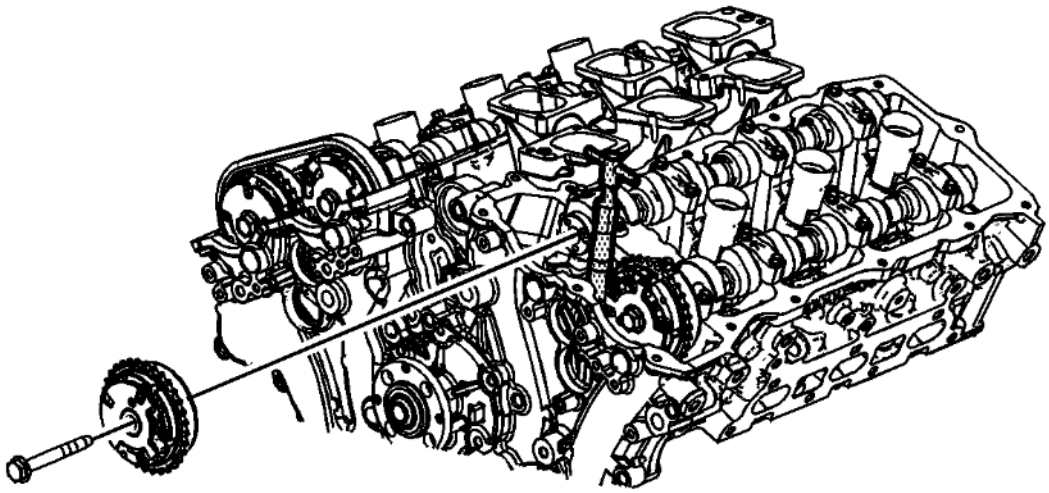

Fig. 108: Exhaust Camshaft Position Actuator & Bolt
Courtesy of GENERAL MOTORS COMPANY

CAUTION: Refer to Fastener Caution .

7. If the exhaust camshaft position actuator has been replaced, then tighten the bolt to 58 N.m (43 lb ft).
8. If the intake camshaft position actuator has been replaced, then tighten the bolt to 58 N.m (43 lb ft).
9. If both the exhaust and intake has been replaced, then tighten bolt to 58 N.m (43 lb ft).
10. Install the left intake and exhaust camshaft position actuator solenoids. Refer to **Camshaft Position Actuator Solenoid Valve Solenoid Replacement - Bank 2 (Left Side) Intake** , and **Camshaft Position Actuator Solenoid Valve Solenoid Replacement - Bank 2 (Left Side) Exhaust** .
11. Install the left intake and exhaust camshaft position sensors. Refer to **Camshaft Position Sensor Replacement - Bank 2 (Left Side) Intake** , and **Camshaft Position Sensor Replacement - Bank 2 (Left Side) Exhaust** .
12. Install the left camshaft cover. Refer to **Camshaft Cover Replacement - Left Side**.
13. Install the intake manifold. Refer to **Intake Manifold Replacement**.

SETTING CAMSHAFT TIMING

NOTE: **Setting the camshaft timing is necessary whenever the camshaft drive system has been disturbed such that the relationship between any chain and sprocket has been lost. Even when only one sprocket is involved, multiple crankshaft rotations will not produce conditions where correct timing can be confirmed.**

cardiagn.com

Follow the left bank secondary camshaft drive chain replacement procedures to reset the camshaft timing. Refer to **Secondary Camshaft Intermediate Drive Chain Replacement - Left Side**.

CAMSHAFT REPLACEMENT - LEFT SIDE

Removal Procedure

1. Remove the fuel pump. Refer to **Fuel Pump Replacement (LFX)** .
2. Remove the camshaft position actuators. Refer to **Camshaft Position Actuator Replacement - Bank 2**.

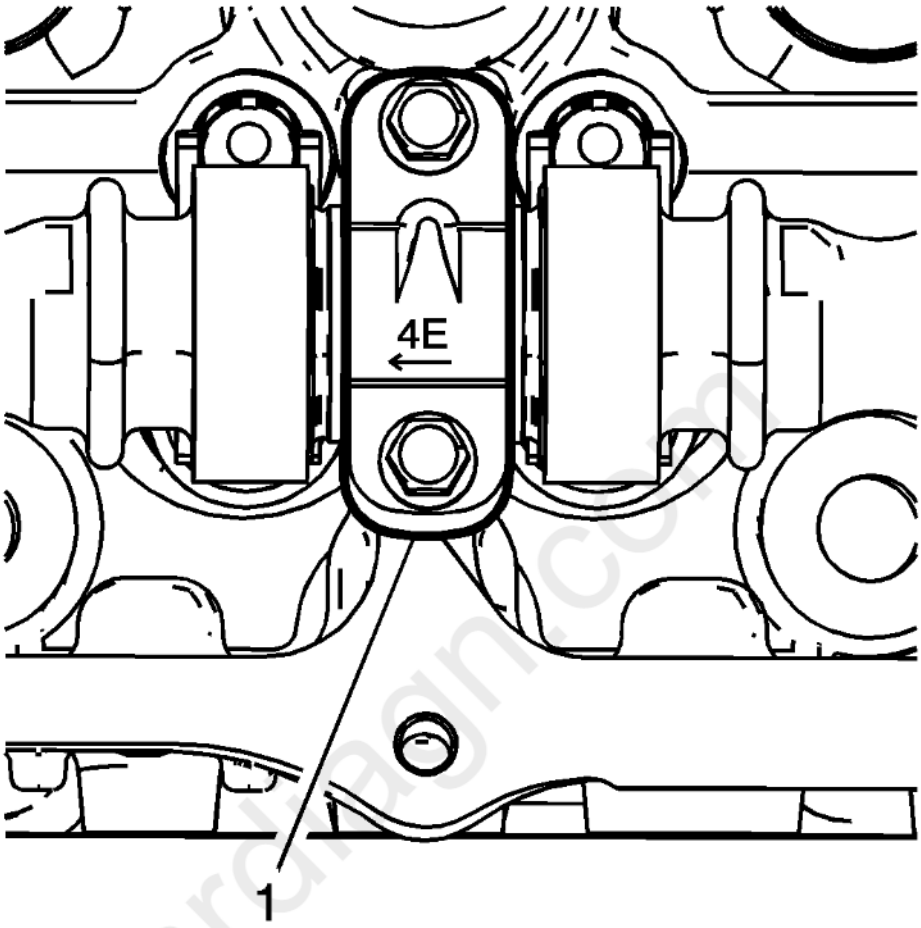

Fig. 109: Bearing Caps
Courtesy of GENERAL MOTORS COMPANY

3. Observe the markings on the bearing caps (1). Each bearing cap is marked in order to identify its location. The markings have the following meanings:
   - The raised feature must always be oriented toward the center of the cylinder head.
   - The I indicates the intake camshaft.
   - The E indicates the exhaust camshaft.
   - The number indicates the journal position from the front of the engine.

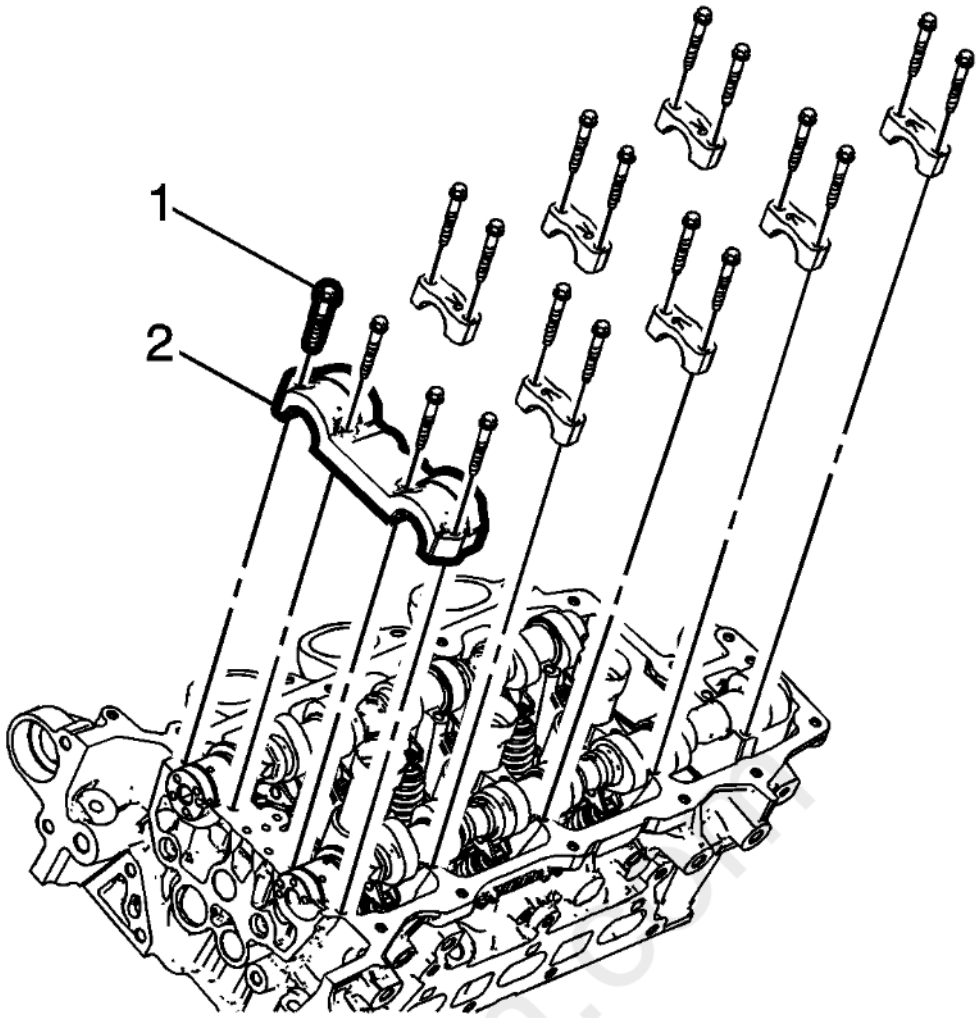

Fig. 110: Bearing Cap And Bolts
Courtesy of GENERAL MOTORS COMPANY

4. Remove the camshaft bearing cap bolts (1).
5. Remove the camshaft bearing caps (2).

cardiagn.com

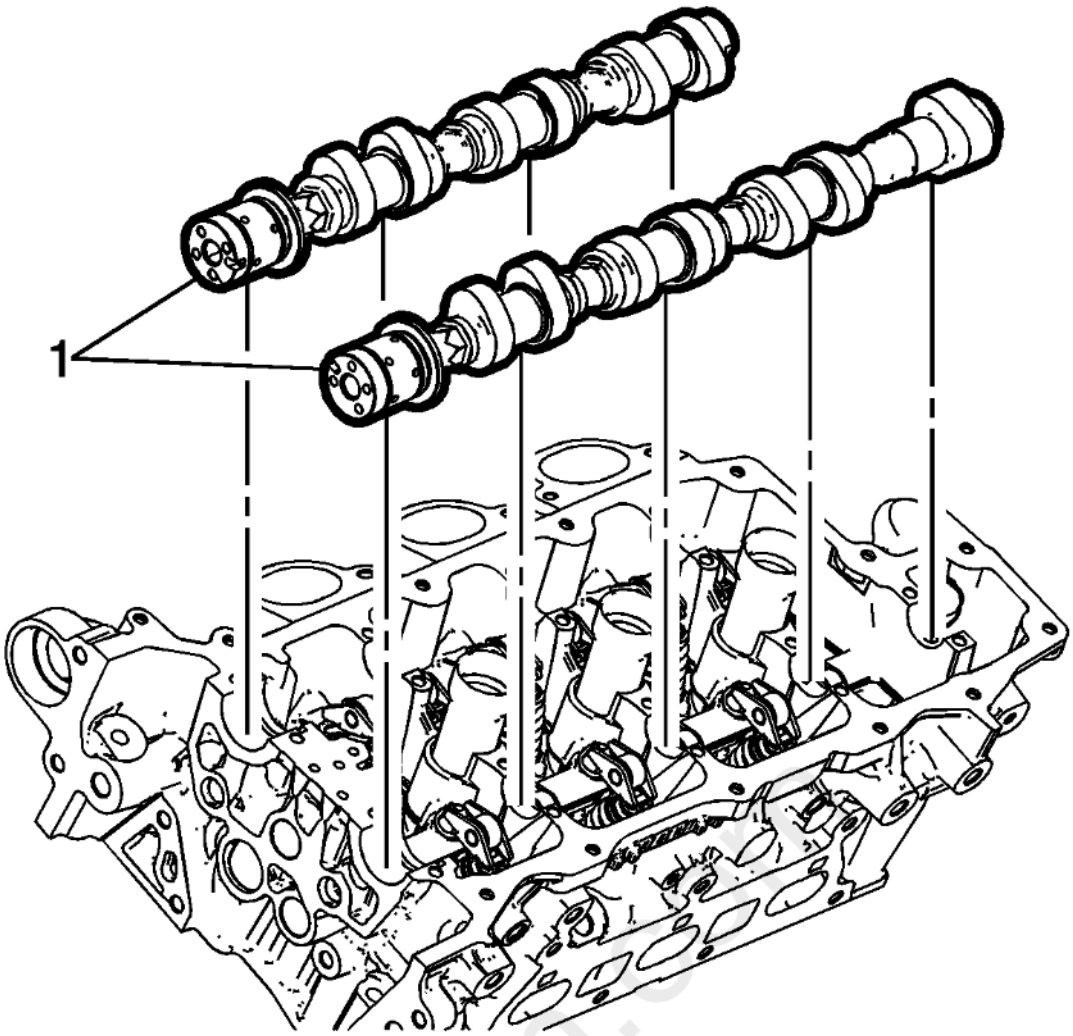

Fig. 111: Camshafts
Courtesy of GENERAL MOTORS COMPANY

NOTE: **Mark the camshafts upon removal to ensure installation is in the correct position.**

6. Remove the camshafts (1).

Installation Procedure

cardiagn.com

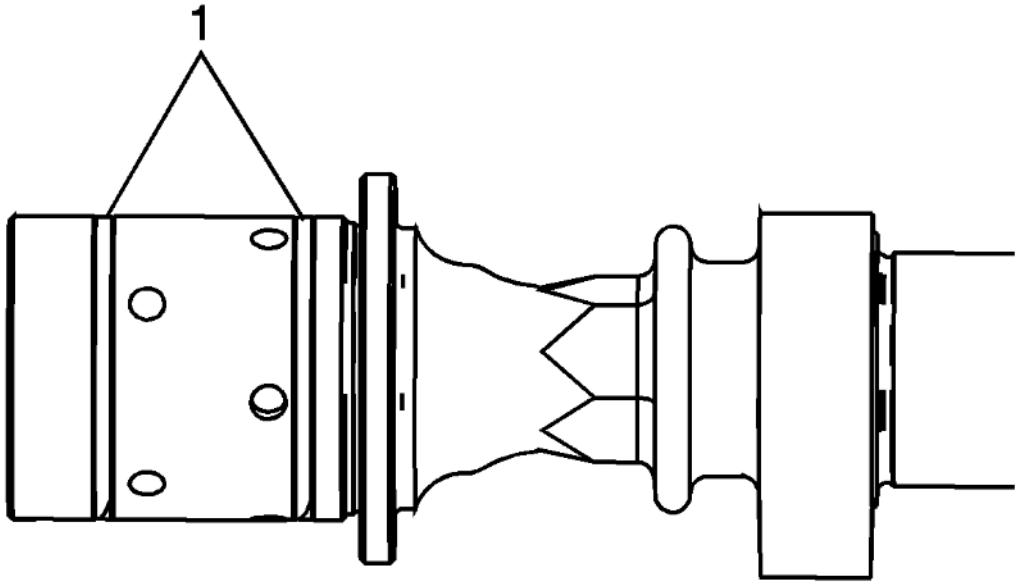

Fig. 112: Camshaft Sealing Rings In Camshaft Grooves
Courtesy of GENERAL MOTORS COMPANY

1. Ensure that the camshaft sealing rings (1) are in place in the camshaft grooves. Camshaft sealing rings must be in place below the surface of the camshaft journal in order to avoid being pinched between the cylinder head and the camshaft caps.

carmagn.com

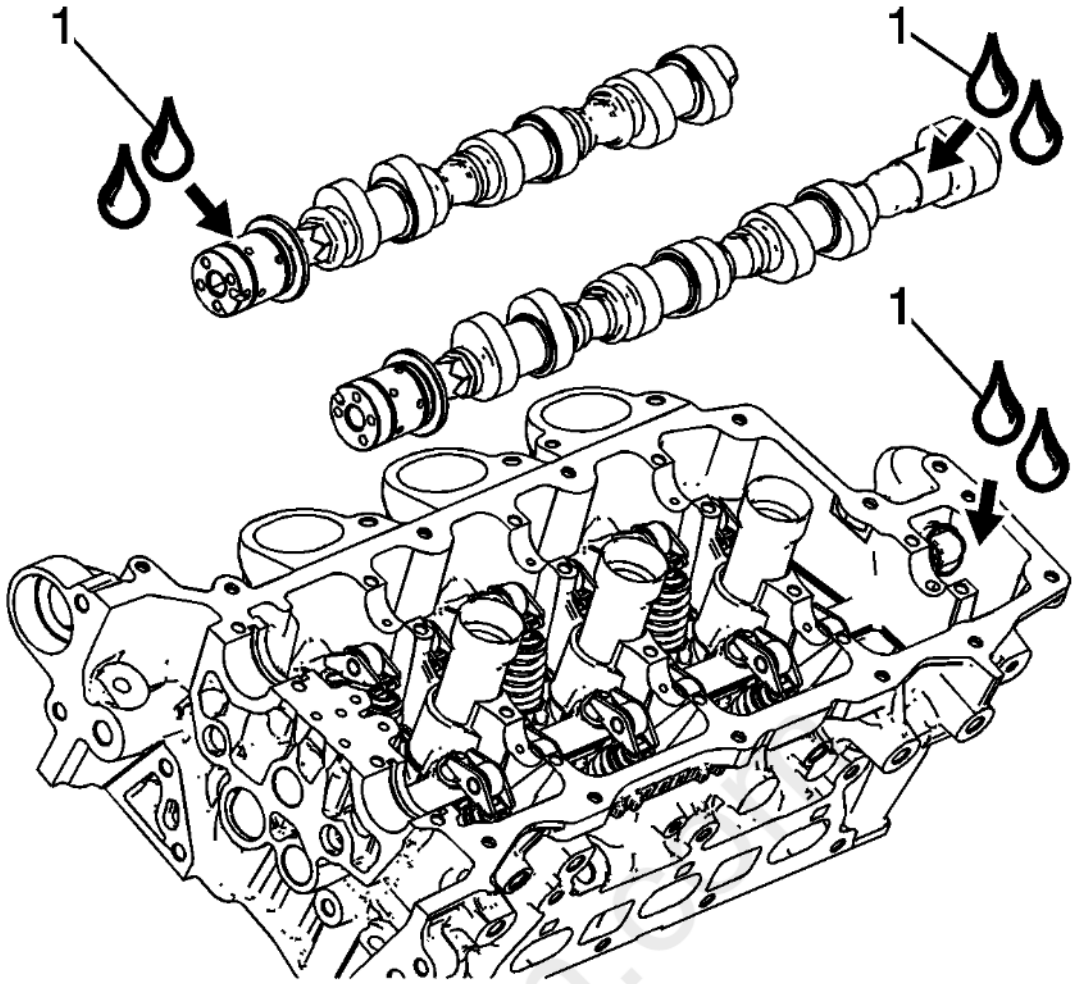

Fig. 113: Camshaft Journal Lubrication Points
Courtesy of GENERAL MOTORS COMPANY

2. Apply a liberal amount of lubricant (1) to the camshaft journals and the left cylinder head camshaft carriers. Refer to **Adhesives, Fluids, Lubricants, and Sealers** for recommended lubricant.

carmagn.com

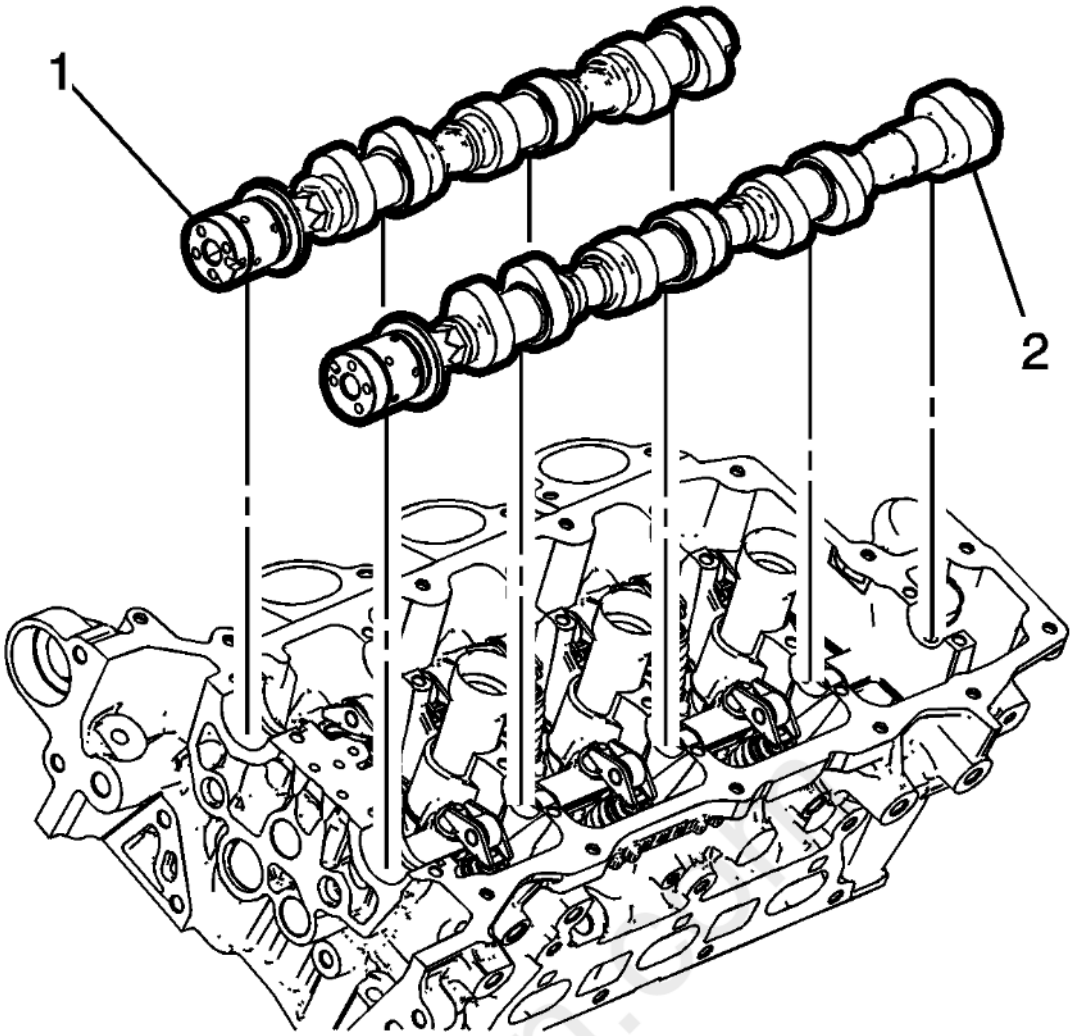

Fig. 114: Positioning Left Intake And Left Exhaust Camshafts In Left Cylinder Head
Courtesy of GENERAL MOTORS COMPANY

3. Place the left intake (1) and left exhaust (2) camshafts in position in the left cylinder head.

cardiagn.com

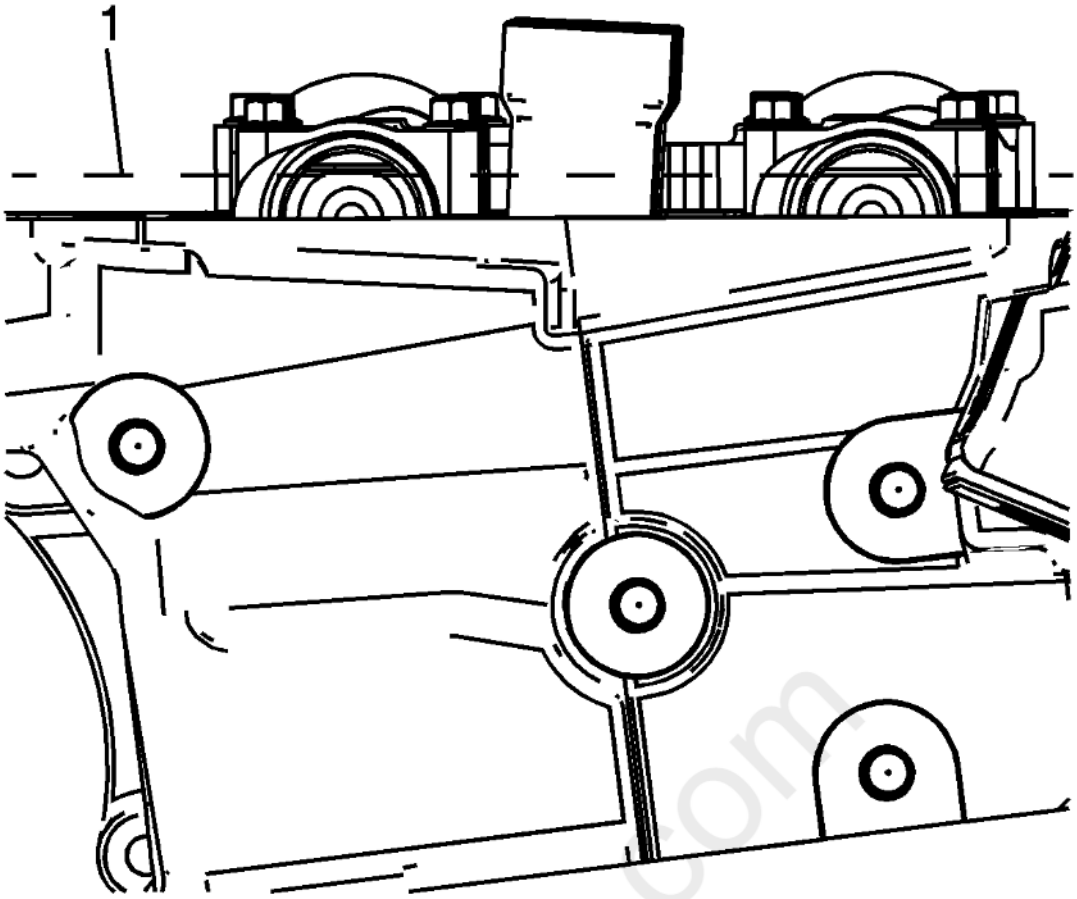

Fig. 115: Camshaft Flats Parallel With Camshaft Cover Rail
Courtesy of GENERAL MOTORS COMPANY

4. Position the camshaft lobes in a neutral position with the flats on the back of the camshafts up and parallel (1) with the left cylinder head camshaft cover rail.

cardiagn.com

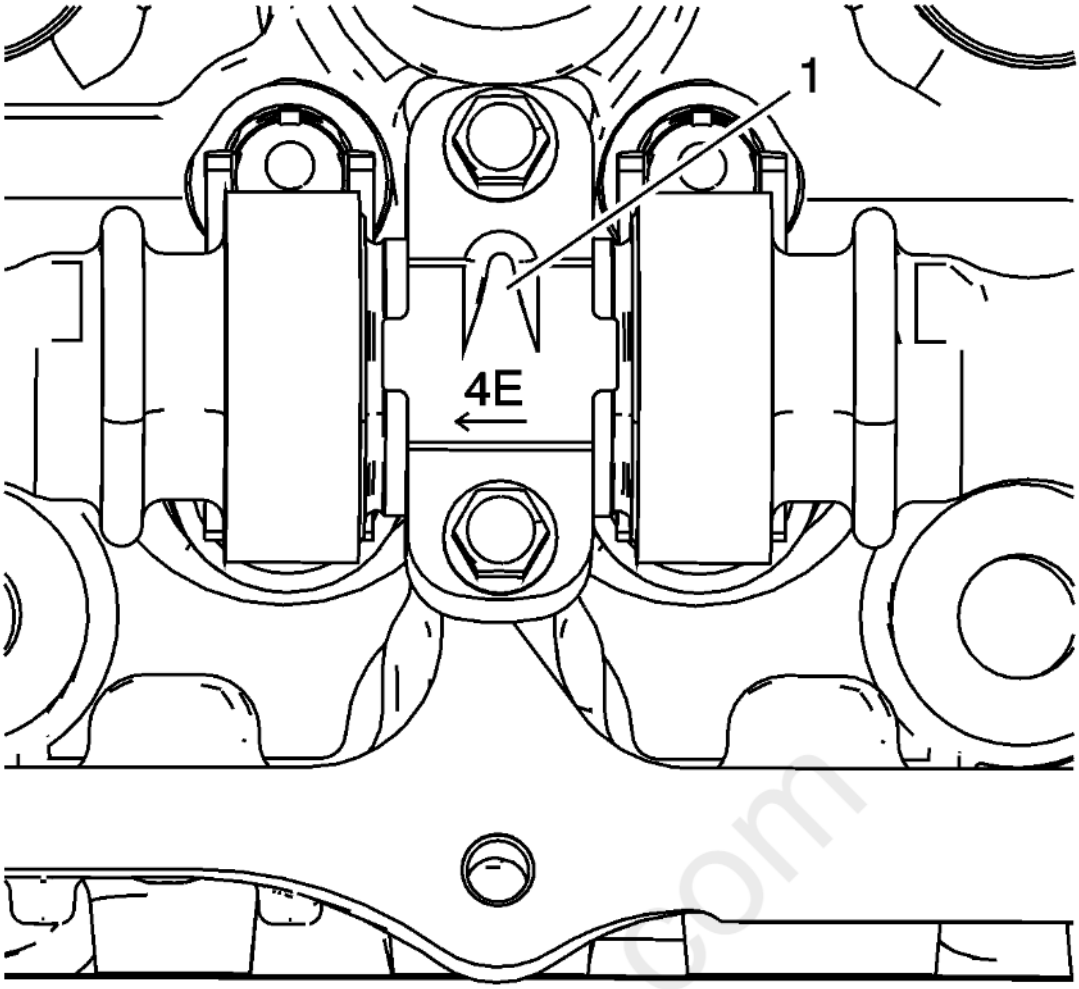

Fig. 116: Left Cylinder Head Camshaft Bearing Cap Markings
Courtesy of GENERAL MOTORS COMPANY

5. Observe the markings on the left cylinder head camshaft bearing caps. Each bearing cap is marked in order to identify its location. The markings have the following meanings:
   - The raised feature (1) must always be oriented toward the center of the cylinder head.
   - The I indicates the intake camshaft.
   - The E indicates the exhaust camshaft.
   - The number 2, 4, 6 indicates the cylinder position from the front of the engine.
6. Apply a liberal amount of lubricant to the camshaft bearing caps. Refer to **Adhesives, Fluids, Lubricants, and Sealers** for recommended lubricant.

cardiagn.com

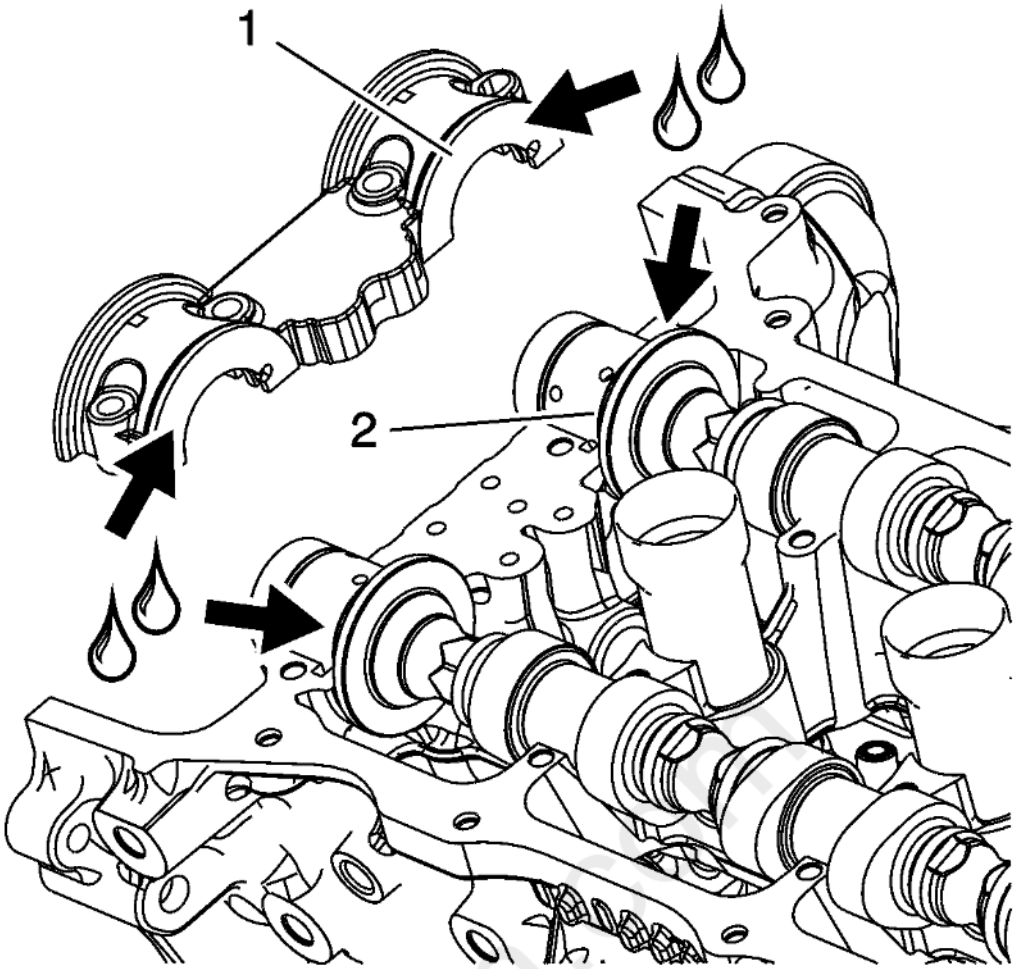

Fig. 117: Camshaft Bearing Cap And Camshaft Thrust Surface
Courtesy of GENERAL MOTORS COMPANY

7. Apply a liberal amount of lubricant to the camshaft bearing cap (1) and camshaft thrust surface (2). Refer to **Adhesives, Fluids, Lubricants, and Sealers** for recommended lubricant.

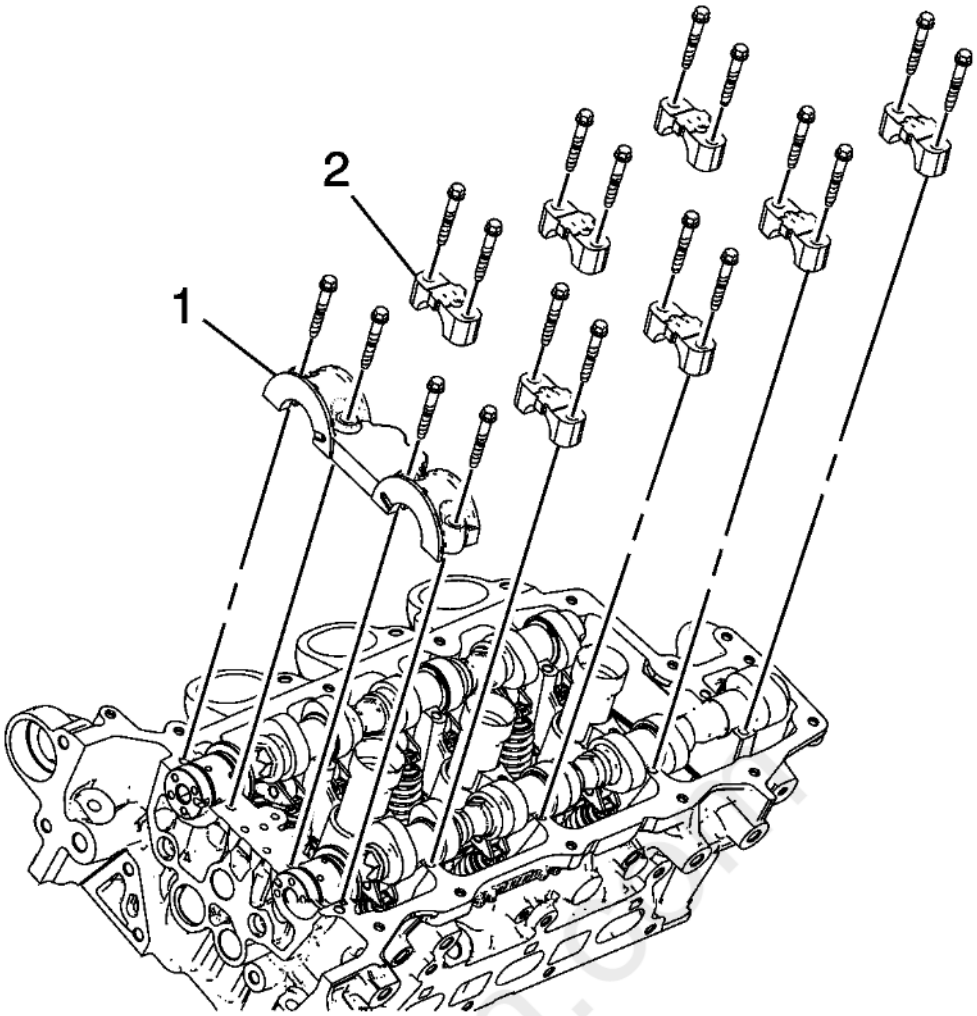

Fig. 118: Camshaft Bearing Caps And Bolts
Courtesy of GENERAL MOTORS COMPANY

8. Install the camshaft bearing thrust cap (1) in the first journal of the left cylinder head.
9. Install the remaining bearing caps (2) with their orientation mark toward the center of the cylinder head.
10. Hand start all the camshaft bearing cap bolts.

carDiagn.com

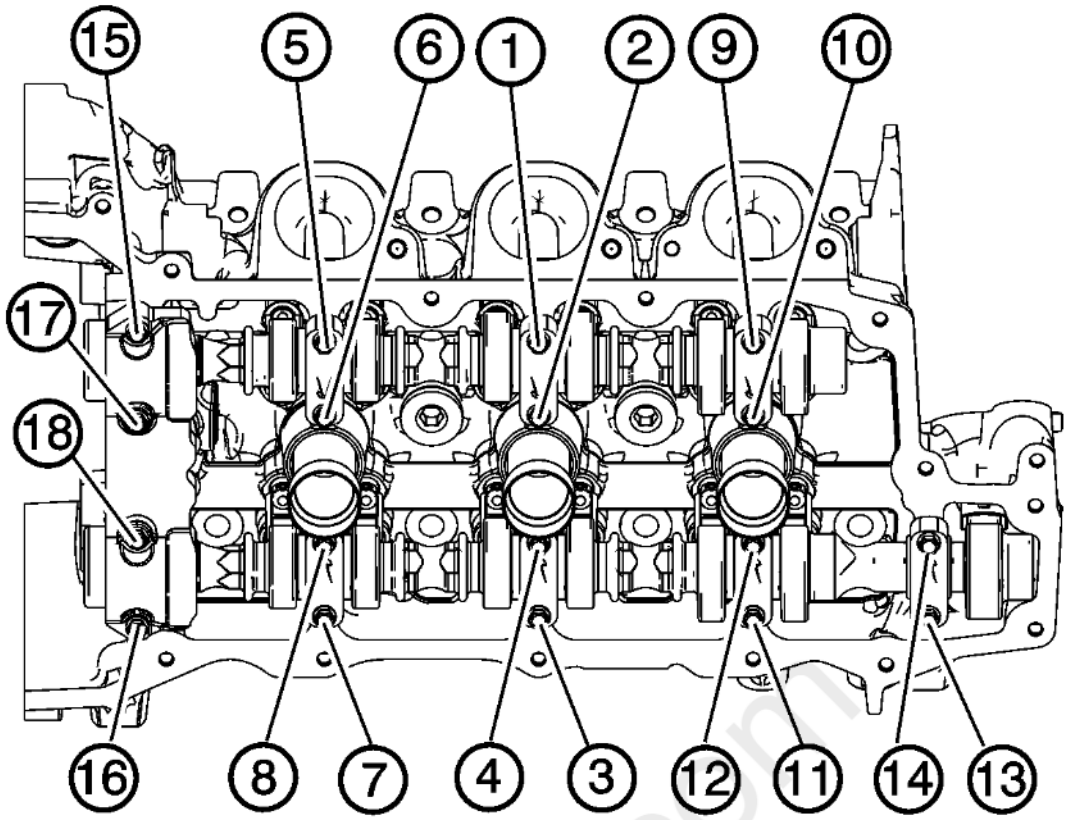

Fig. 119: Camshaft Bearing Cap Bolt Tightening Sequence
Courtesy of GENERAL MOTORS COMPANY

CAUTION: **Refer to Fastener Caution .**

11. Tighten the camshaft bearing cap bolts in the sequence shown and tighten to 10 N.m (89 lb in).
12. Loosen the center intake camshaft bearing cap bolts 1, 2 and the center exhaust camshaft bearing cap bolts 3, 4.
13. Retighten the center camshaft bearing cap bolts 1, 2, 3, 4 and retighten the camshaft bearing cap bolts to 10 N.m (89 lb in).
14. Install the camshaft position actuators. Refer to **Camshaft Position Actuator Replacement - Bank 2**.
15. Install the fuel pump. Refer to **Fuel Pump Replacement (LFX)** .

CAMSHAFT REPLACEMENT - RIGHT SIDE

Removal Procedure

1. Remove the camshaft position actuators. Refer to **Camshaft Position Actuator Replacement - Bank 1**.

Cardiagn.com

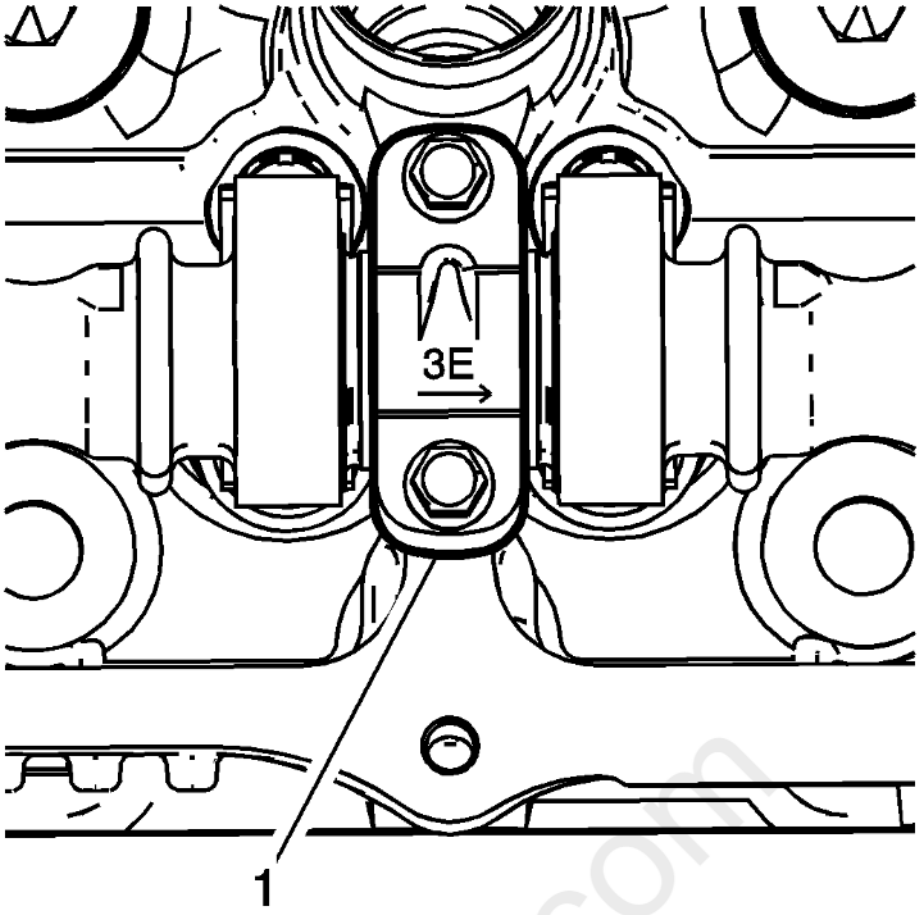

Fig. 120: Bearing Cap Markings
Courtesy of GENERAL MOTORS COMPANY

2. Observe the markings on the bearing caps (1). Each bearing cap is marked in order to identify its location. The markings have the following meanings:
    - The raised feature must always be oriented toward the center of the cylinder head.
    - The I indicates the intake camshaft.
    - The E indicates the exhaust camshaft.
    - The number indicates the journal position from the front of the engine.

carmagn.com

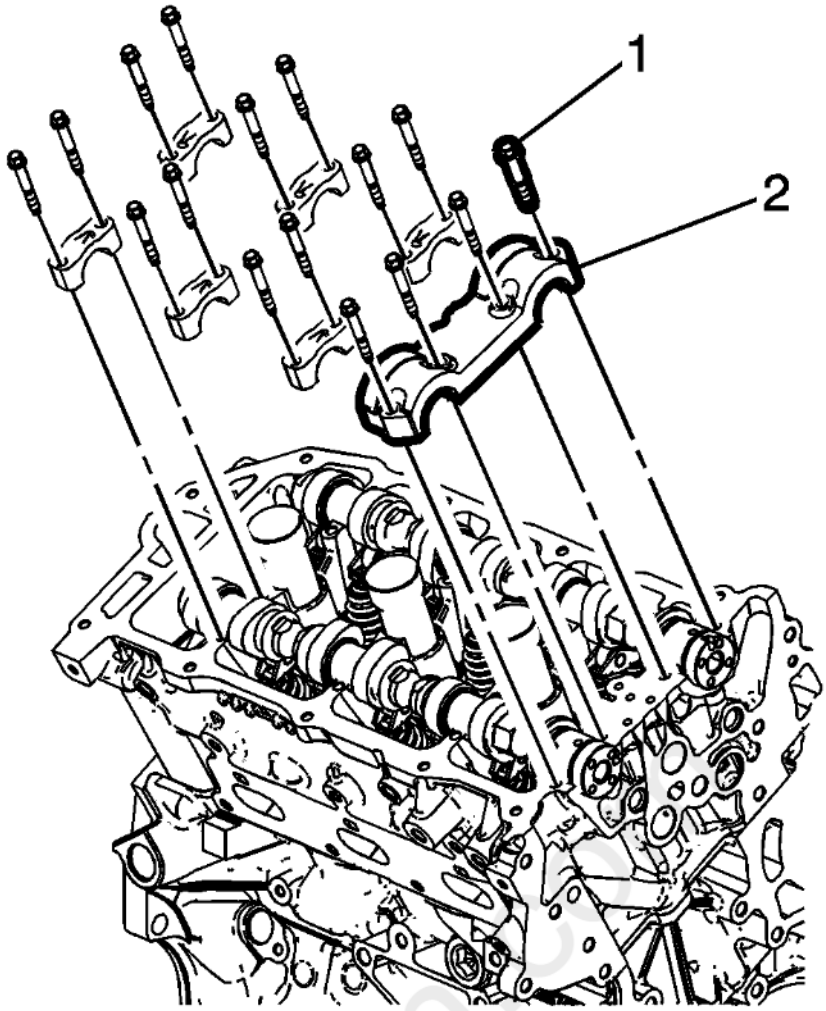

Fig. 121: Camshaft Bearing Caps And Bolts
Courtesy of GENERAL MOTORS COMPANY

3. Remove the camshaft bearing cap bolts (1).
4. Remove the camshaft bearing caps (2).

cardiagn.com

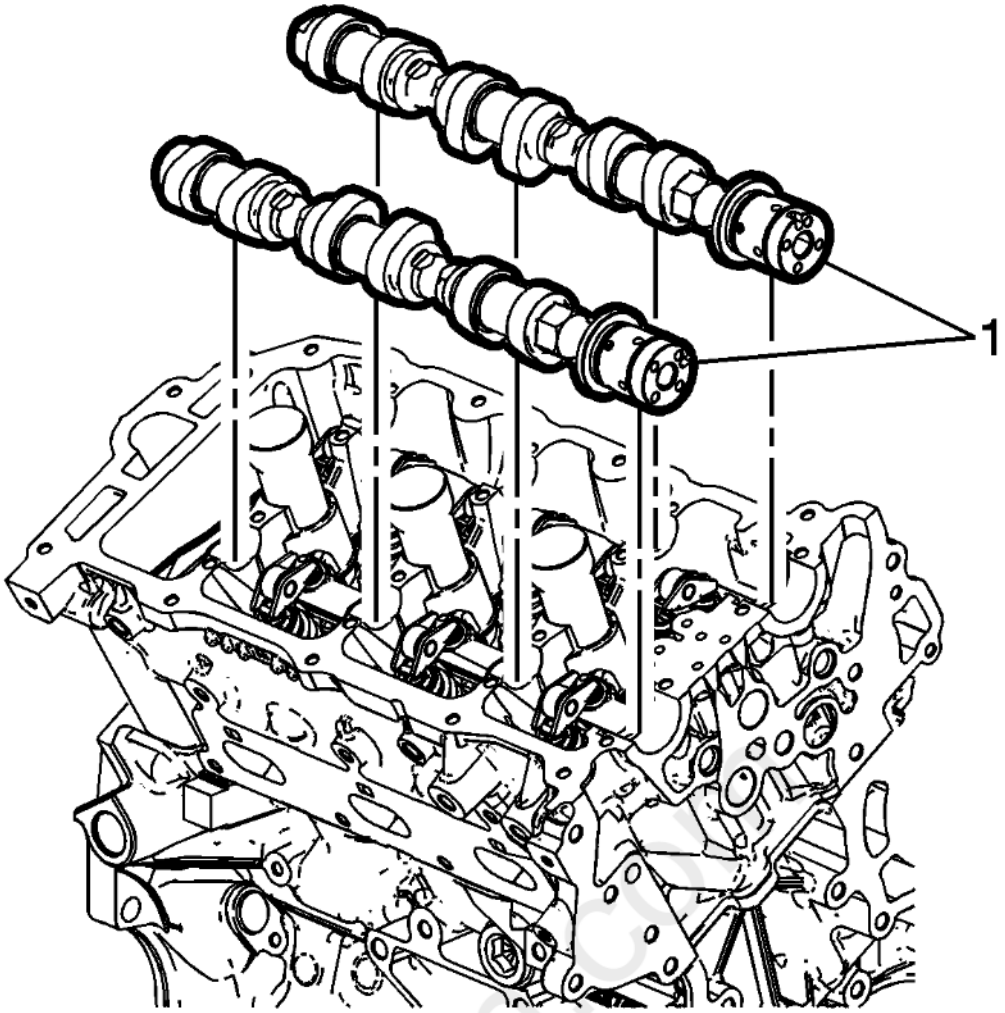

Fig. 122: Camshafts
Courtesy of GENERAL MOTORS COMPANY

IMPORTANT: Mark the camshafts upon removal to ensure installation is in the correct position.

5. Remove the camshafts (1).

Installation Procedure

cardiagn

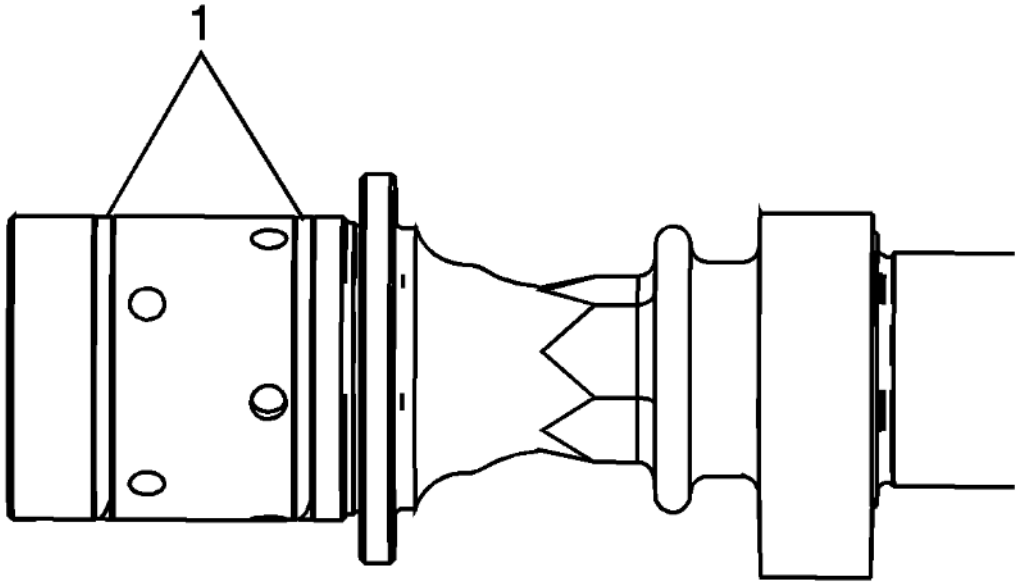

Fig. 123: Camshaft Sealing Rings In Camshaft Grooves
Courtesy of GENERAL MOTORS COMPANY

1. Ensure that the camshaft sealing rings (1) are in place in the camshaft grooves. Camshaft sealing rings must be in place below the surface of the camshaft journal in order to avoid being pinched between the cylinder head and the camshaft caps.

carmagn.com

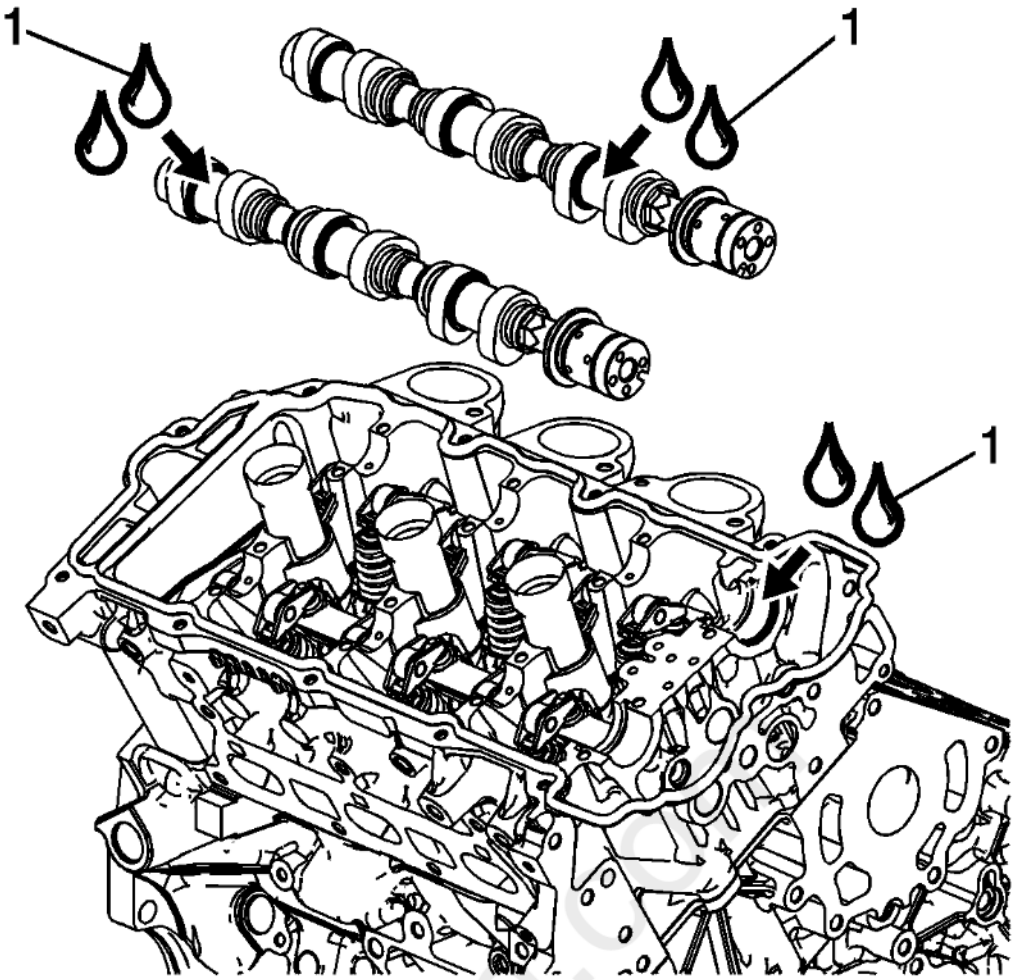

Fig. 124: Right Cylinder Head Camshaft Lubrication Points
Courtesy of GENERAL MOTORS COMPANY

2. Apply a liberal amount of lubricant (1) to the camshaft journals and the right cylinder head camshaft carriers. Refer to **Adhesives, Fluids, Lubricants, and Sealers** for recommended lubricant.

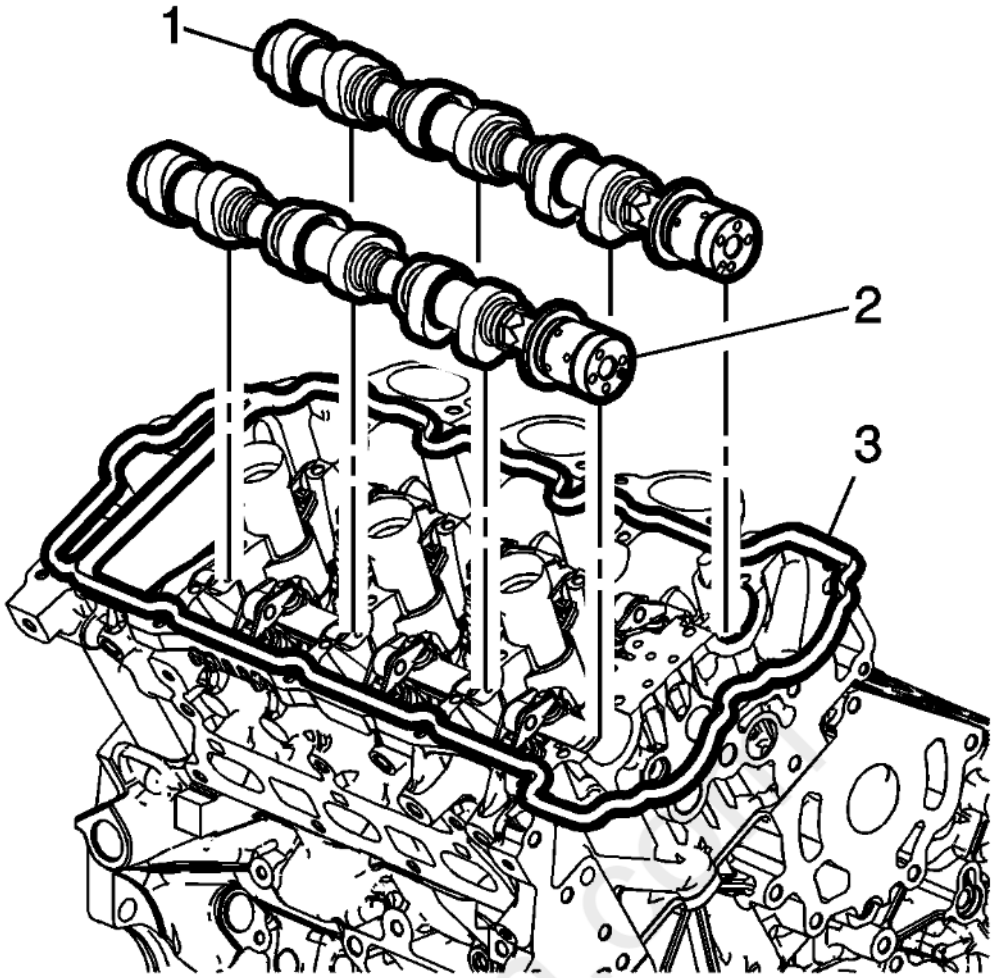

Fig. 125: Positioning Right Intake And Right Exhaust Camshafts In Right Cylinder Head
Courtesy of GENERAL MOTORS COMPANY

3. Place the right intake (1) and right exhaust (2) camshafts in position in the right cylinder head (3).

cardiagn.com

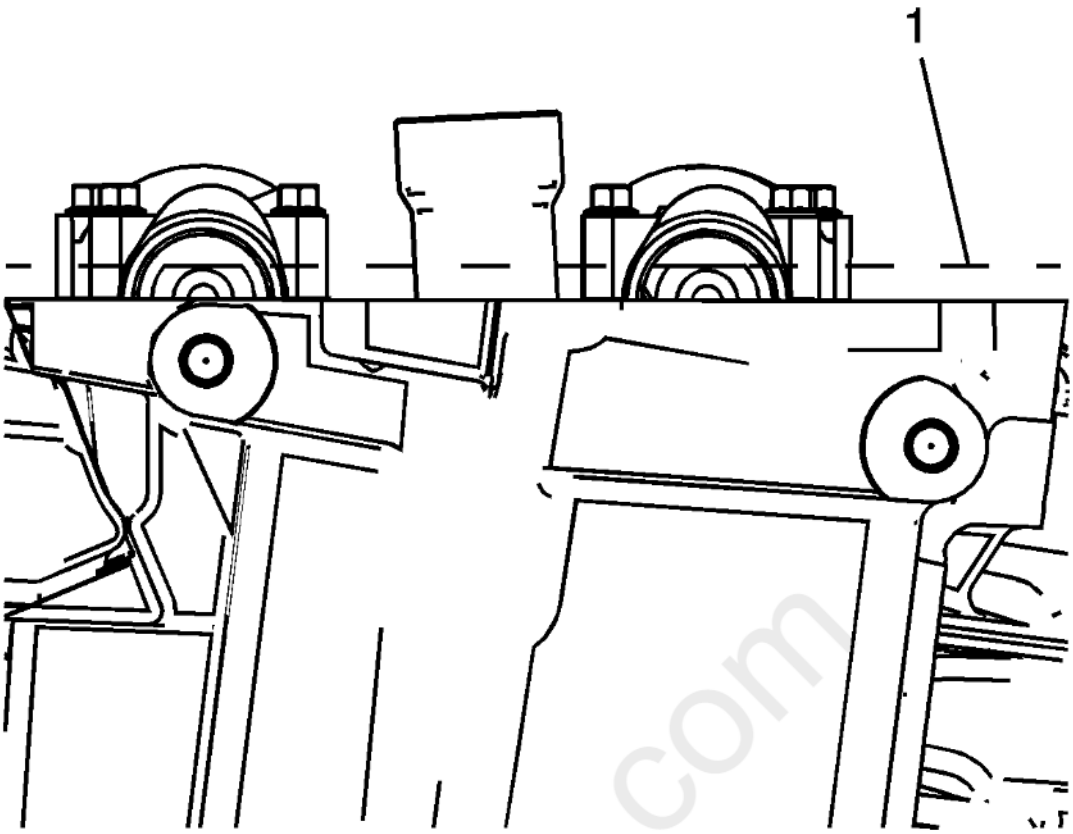

Fig. 126: Positioning Camshaft Flats Parallel With Camshaft Cover Rail
Courtesy of GENERAL MOTORS COMPANY

4. Position the camshaft lobes in a neutral position with the flats on the back of the camshafts up and parallel (1) with the right cylinder head camshaft cover rail.

cardiagn.com

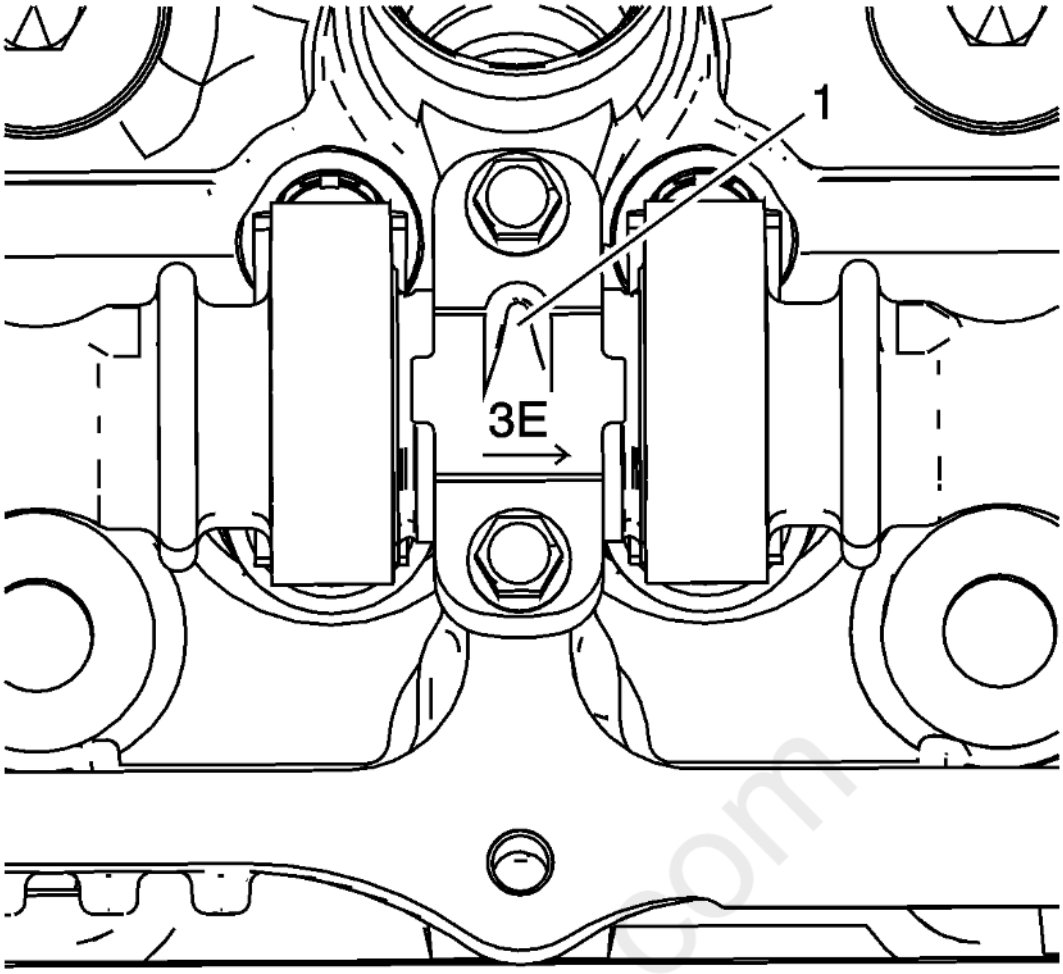

Fig. 127: Right Cylinder Head Camshaft Bearing Cap Markings
Courtesy of GENERAL MOTORS COMPANY

5. Observe the markings on the right cylinder head camshaft bearing caps. Each bearing cap is marked in order to identify its location. The markings have the following meanings:
    - The raised feature (1) must always be oriented toward the center of the cylinder head.
    - The I indicates the intake camshaft.
    - The E indicates the exhaust camshaft.
    - The number 1, 3, 5 indicates the cylinder position from the front of the engine.
6. Apply a liberal amount of lubricant to the camshaft bearing caps. Refer to **Adhesives, Fluids, Lubricants, and Sealers** for recommended lubricant.

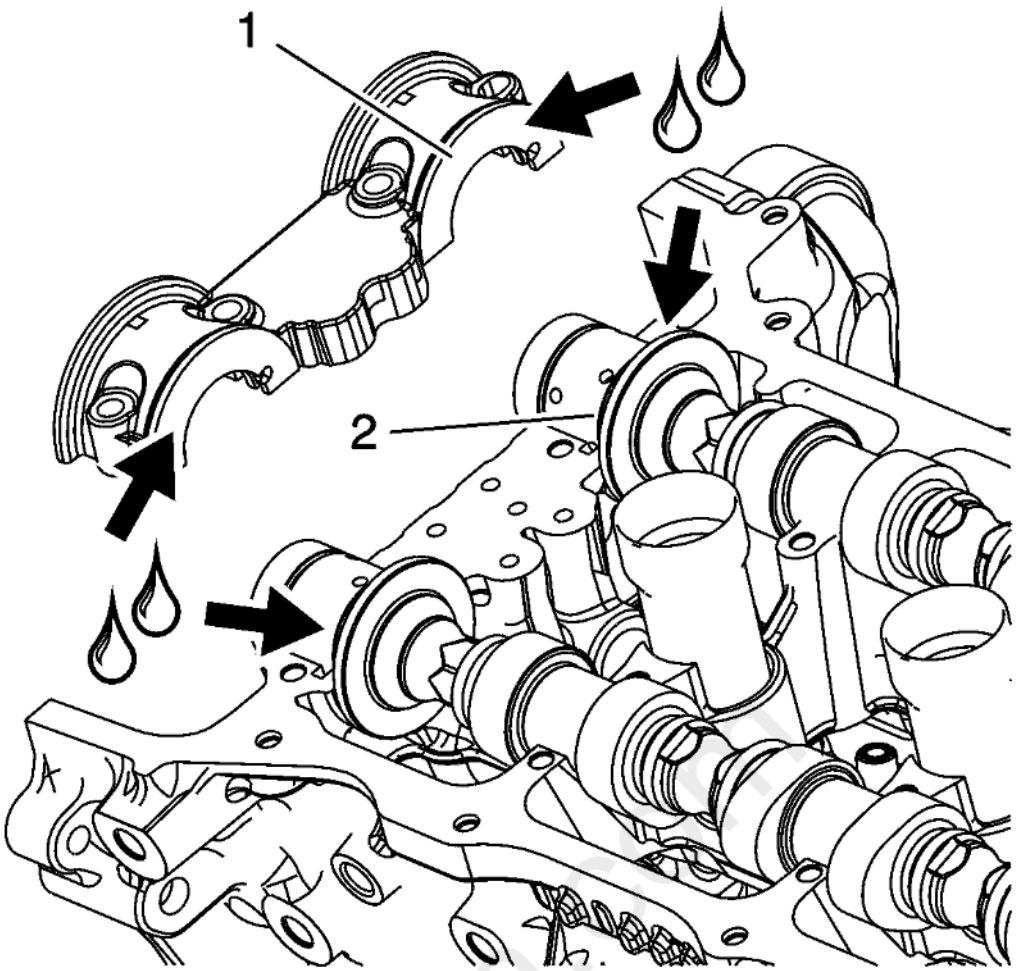

Fig. 128: Camshaft Bearing Cap And Camshaft Thrust Surface
Courtesy of GENERAL MOTORS COMPANY

7. Apply a liberal amount of lubricant to the camshaft bearing cap (1) and camshaft thrust surface (2). Refer to **Adhesives, Fluids, Lubricants, and Sealers** for recommended lubricant.

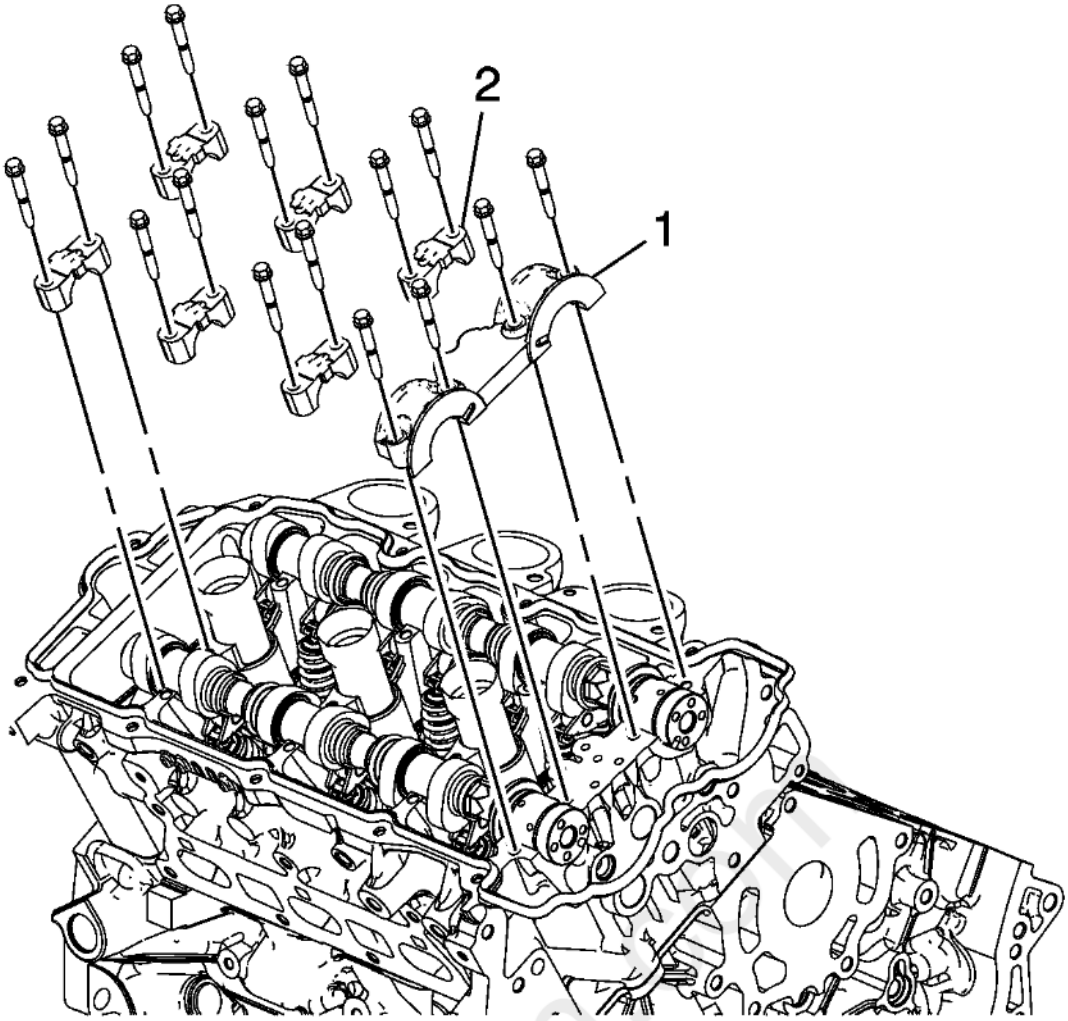

Fig. 129: Camshaft Bearing Caps And Bolts
Courtesy of GENERAL MOTORS COMPANY

8. Install the camshaft bearing thrust caps (1) in the first journal of the right cylinder head.
9. Install the remaining bearing caps (2) with their orientation mark toward the center of the cylinder head.
10. Hand start all the camshaft bearing cap bolts.

carDiagn.com

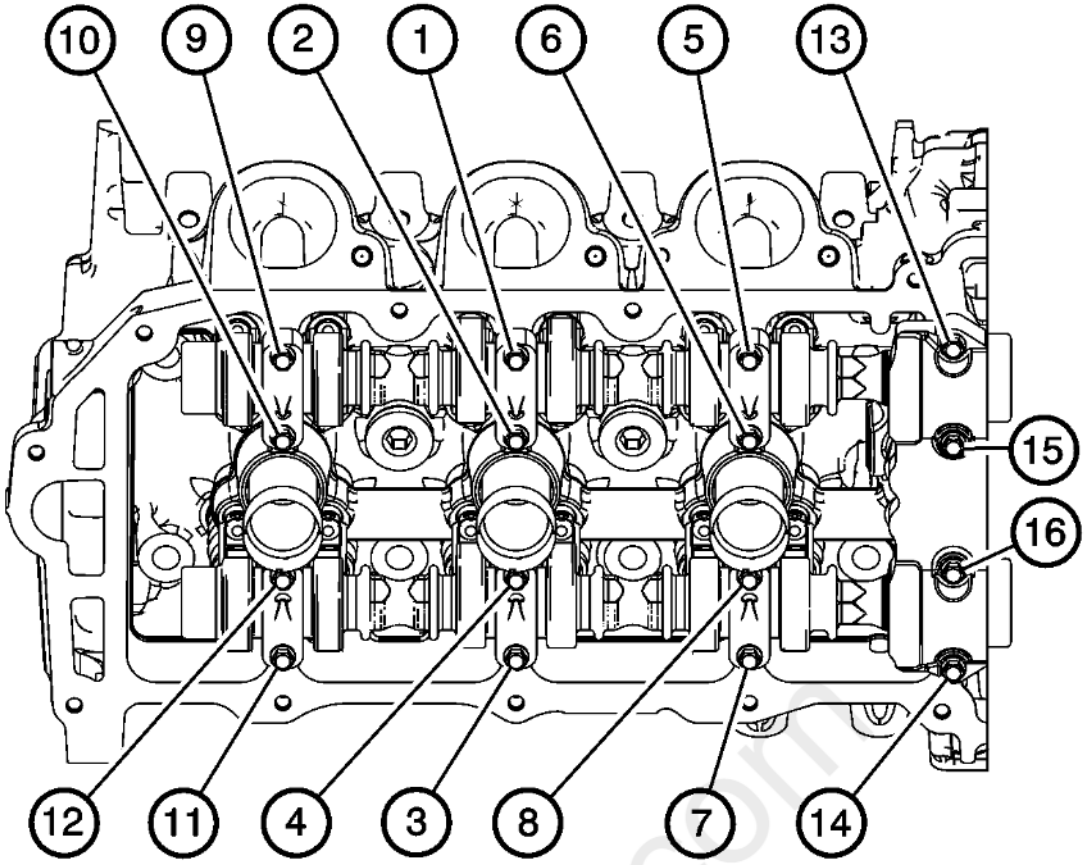

Fig. 130: Camshaft Bearing Cap Bolt Tightening Sequence
Courtesy of GENERAL MOTORS COMPANY

CAUTION: Refer to Fastener Caution .

CAUTION: This vehicle is equipped with torque-to-yield or single use fasteners. Install a NEW torque-to-yield or single use fastener when installing this component. Failure to replace the torque-to-yield or single use fastener could cause damage to the vehicle or component.

11. Tighten the camshaft bearing cap bolts in the sequence shown and tighten to 10 N.m (89 lb in).
12. Loosen the center intake camshaft bearing cap bolts (1, 2) and the center exhaust camshaft bearing cap bolts (3, 4).
13. Retighten the center camshaft bearing cap bolts (1, 2, 3, 4) and retighten the camshaft bearing cap bolts to 10 N.m (89 lb in).
14. Install the camshaft position actuators. Refer to Camshaft Position Actuator Replacement - Bank 1.

VALVE ROCKER ARM REPLACEMENT - LEFT SIDE

Removal Procedure

1. Remove the applicable camshaft(s). Refer to Camshaft Replacement - Left Side.

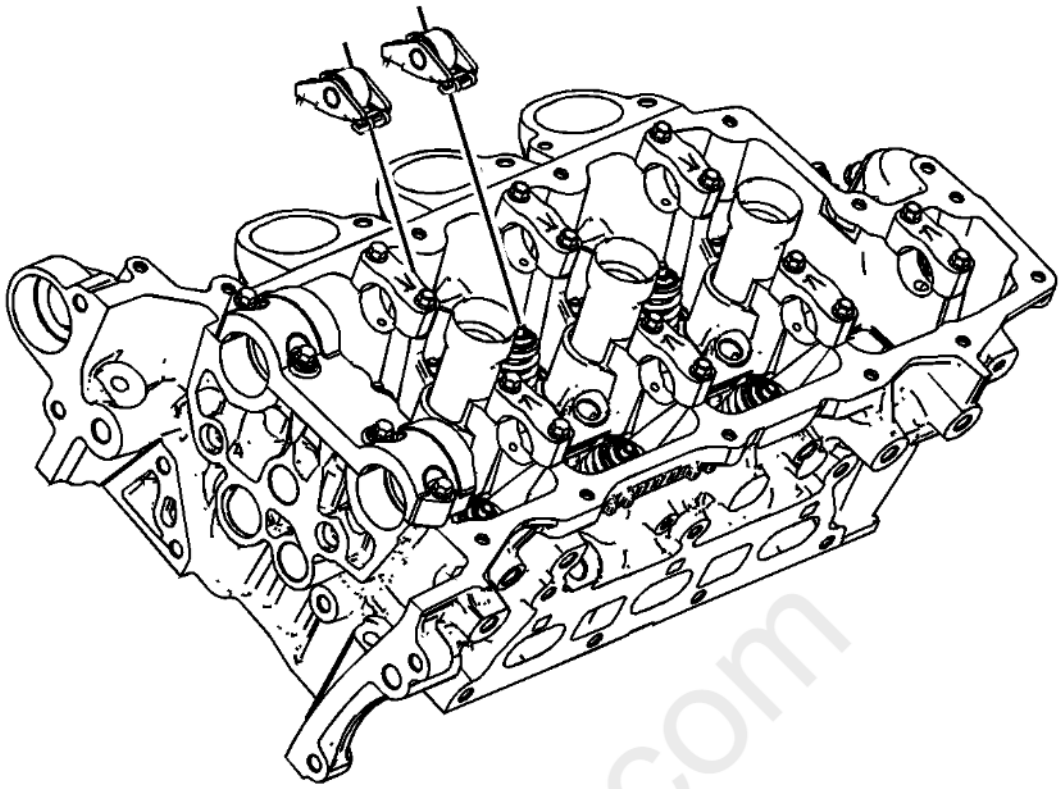

Fig. 131: Valve Rocker Arm - Left Side
Courtesy of GENERAL MOTORS COMPANY

2. Remove the rocker arms.
3. Clean and inspect the camshaft(s) and the rocker arm(s). Replace as necessary. Refer to **Camshaft Cleaning and Inspection** , and **Valve Rocker Arm Cleaning and Inspection** .
4. Clean and inspect the valve lifters and replace as necessary. Refer to **Valve Lifter Cleaning and Inspection**

Installation Procedure

cardiagn.com

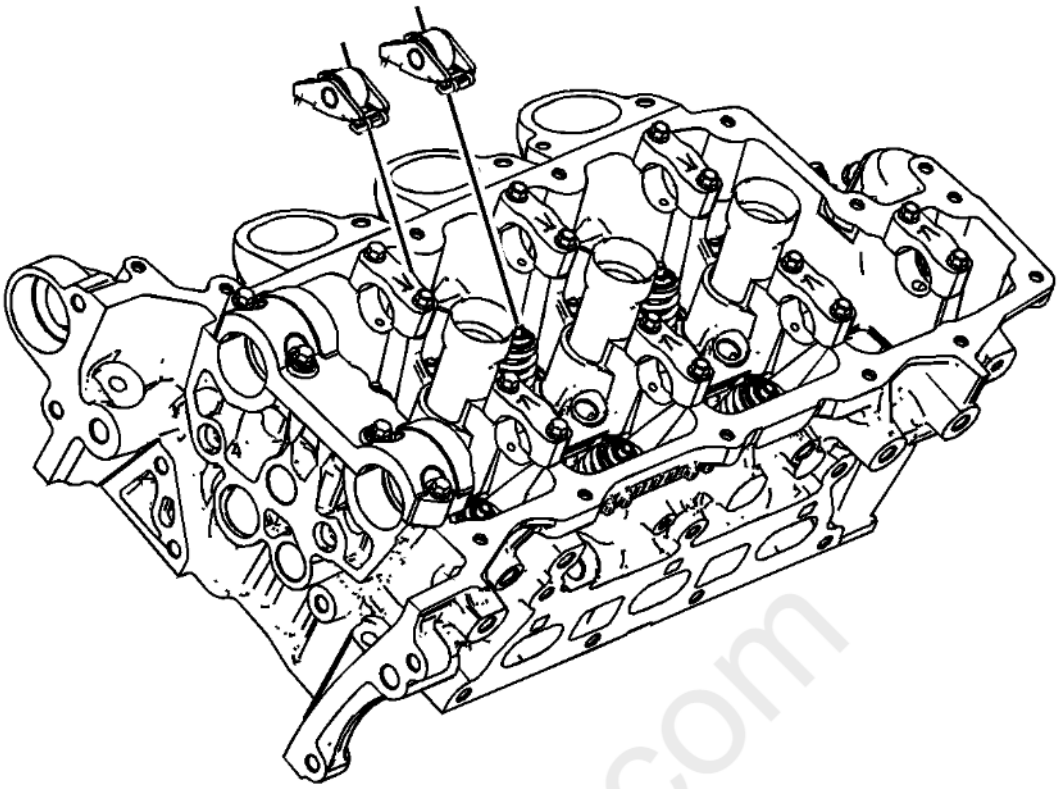

Fig. 132: Valve Rocker Arm - Left Side
Courtesy of GENERAL MOTORS COMPANY

1. Install the rocker arms. Refer to **Valve Rocker Arm Installation - Left Side** .
2. Install the camshaft(s). Refer to **Camshaft Replacement - Left Side**.

VALVE ROCKER ARM REPLACEMENT - RIGHT SIDE

Removal Procedure

1. Remove the applicable camshaft(s). Refer to **Camshaft Replacement - Right Side**.

cardiagn.com

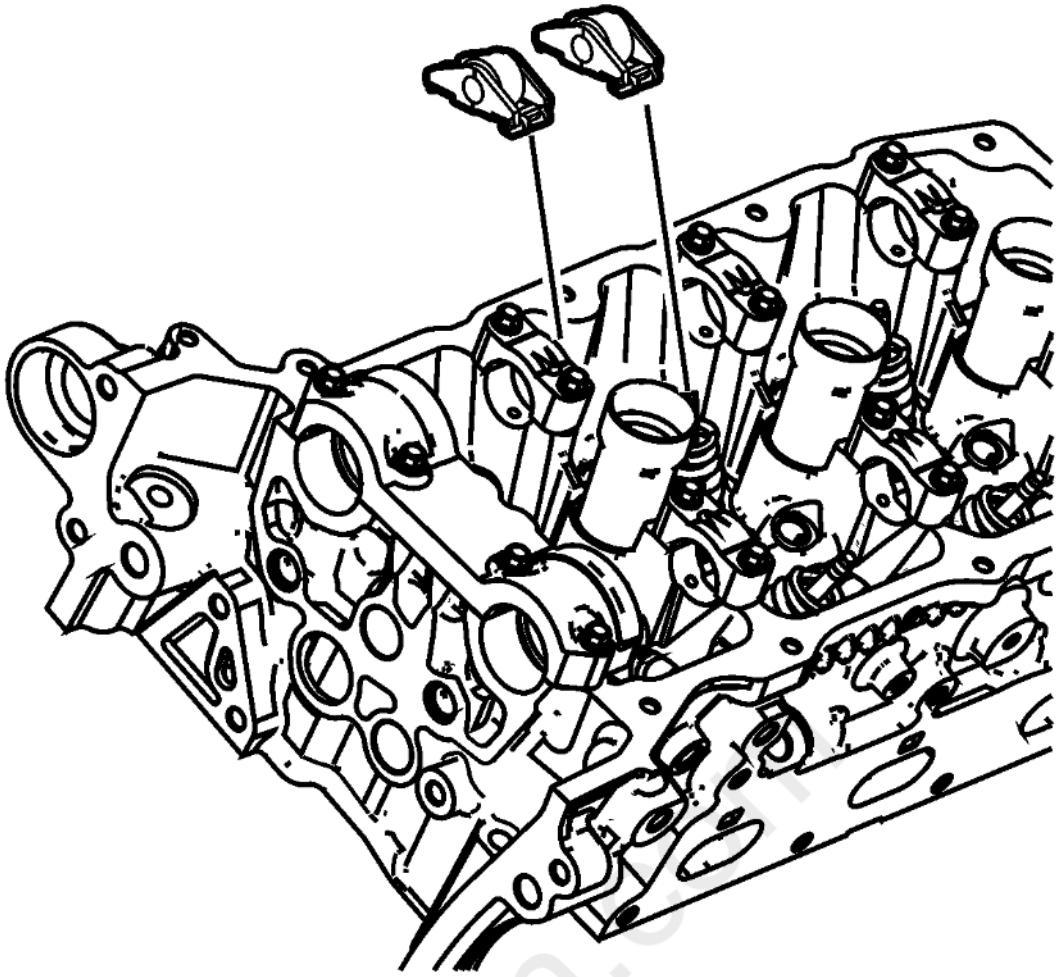

Fig. 133: Valve Rocker Arm - Right Side
Courtesy of GENERAL MOTORS COMPANY

2. Remove the rocker arms.
3. Clean and inspect the camshaft(s) and the rocker arm(s). Replace as necessary. Refer to **Camshaft Cleaning and Inspection** , and **Valve Rocker Arm Cleaning and Inspection** .
4. Clean and inspect the valve lifters and replace as necessary. Refer to **Valve Lifter Cleaning and Inspection**

Installation Procedure

Cardiagn.com

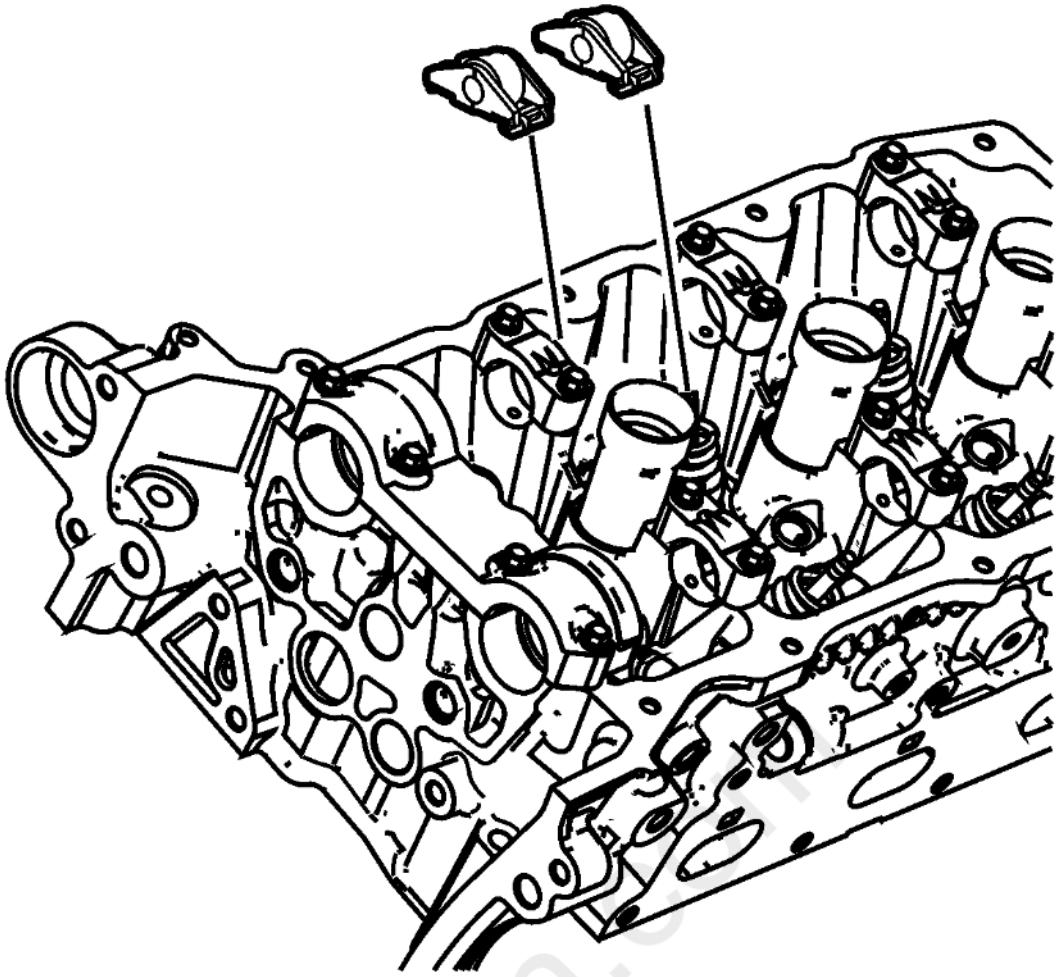

Fig. 134: Valve Rocker Arm - Right Side
Courtesy of GENERAL MOTORS COMPANY

1. Install the rocker arms. Refer to **Valve Rocker Arm Installation - Right Side** .
2. Install the camshaft(s). Refer to **Camshaft Replacement - Right Side**.

VALVE LIFTER REPLACEMENT - LEFT SIDE

Removal Procedure

cardiagn.com

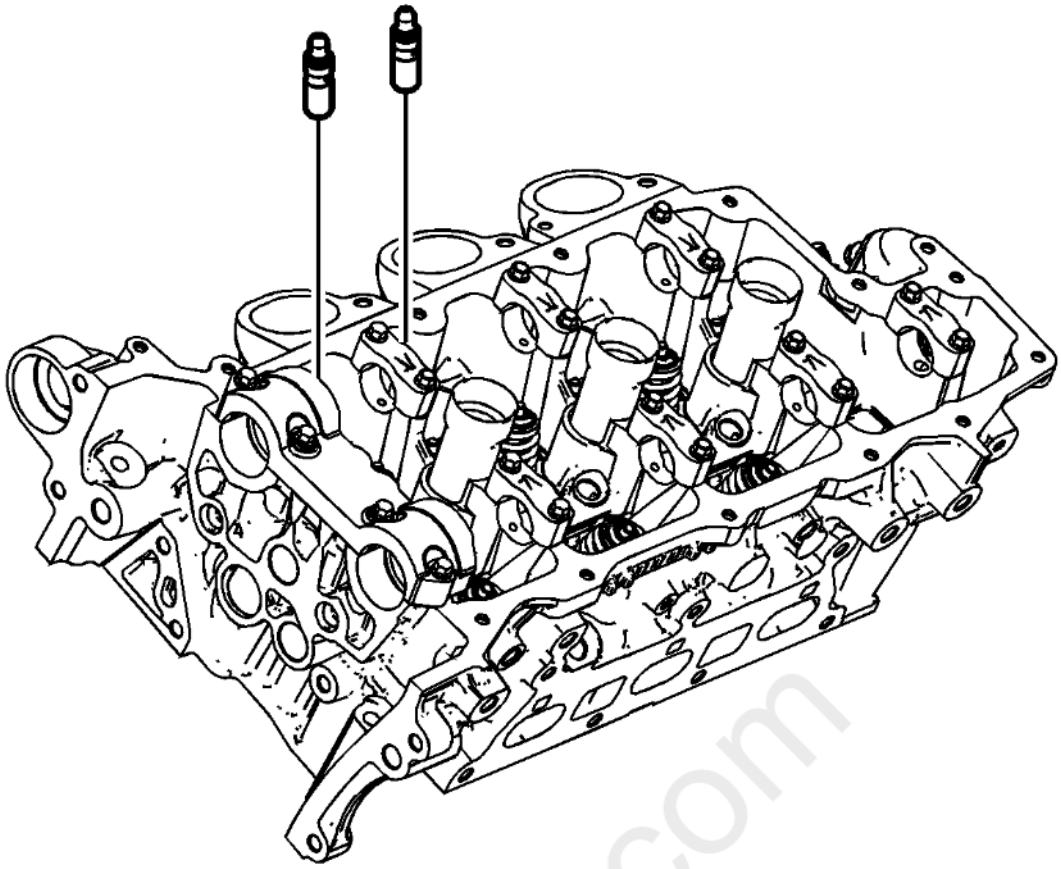

Fig. 135: Valve Lifter - Left Side
Courtesy of GENERAL MOTORS COMPANY

1. Remove the applicable camshafts. Refer to **Camshaft Replacement - Left Side**.
2. Remove the rocker arms. Refer to **Valve Rocker Arm Replacement - Left Side**.
3. Remove the lifters. Refer to **Valve Lifter Removal - Left Side**
4. Clean and inspect the camshafts, rocker arms and lifters. Repair or replace as necessary. Refer to **Camshaft Cleaning and Inspection** , and **Valve Lifter Cleaning and Inspection** .
5. Clean and inspect the rocker arm. Refer to **Valve Rocker Arm Cleaning and Inspection**

Installation Procedure

cardiagn.com

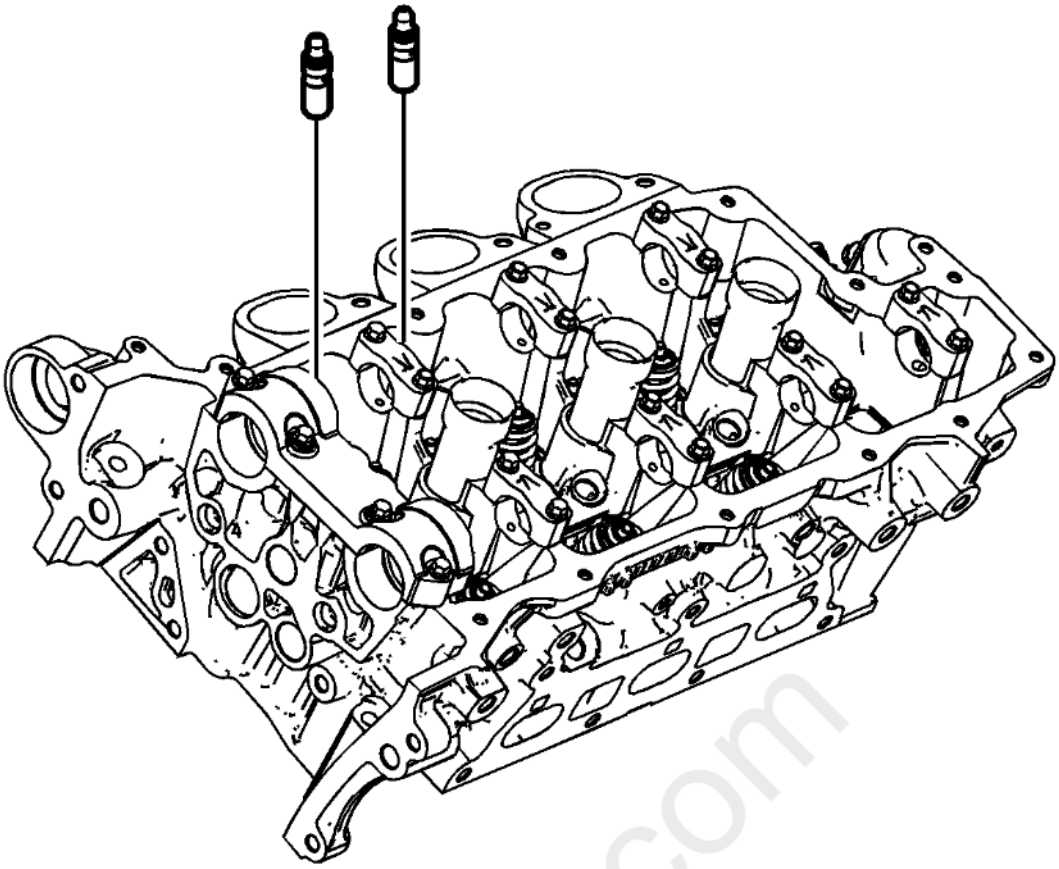

Fig. 136: Valve Lifter - Left Side
Courtesy of GENERAL MOTORS COMPANY

1. Install the lifters.
2. Install the rocker arms. Refer to **Valve Rocker Arm Replacement - Left Side**.
3. Install the camshafts. Refer to **Camshaft Replacement - Left Side**.

VALVE LIFTER REPLACEMENT - RIGHT SIDE

Removal Procedure

1. Remove the applicable camshaft(s). Refer to **Camshaft Replacement - Right Side**.
2. Remove the rocker arms. Refer to **Valve Rocker Arm Removal - Right Side** .

cardiagn.com

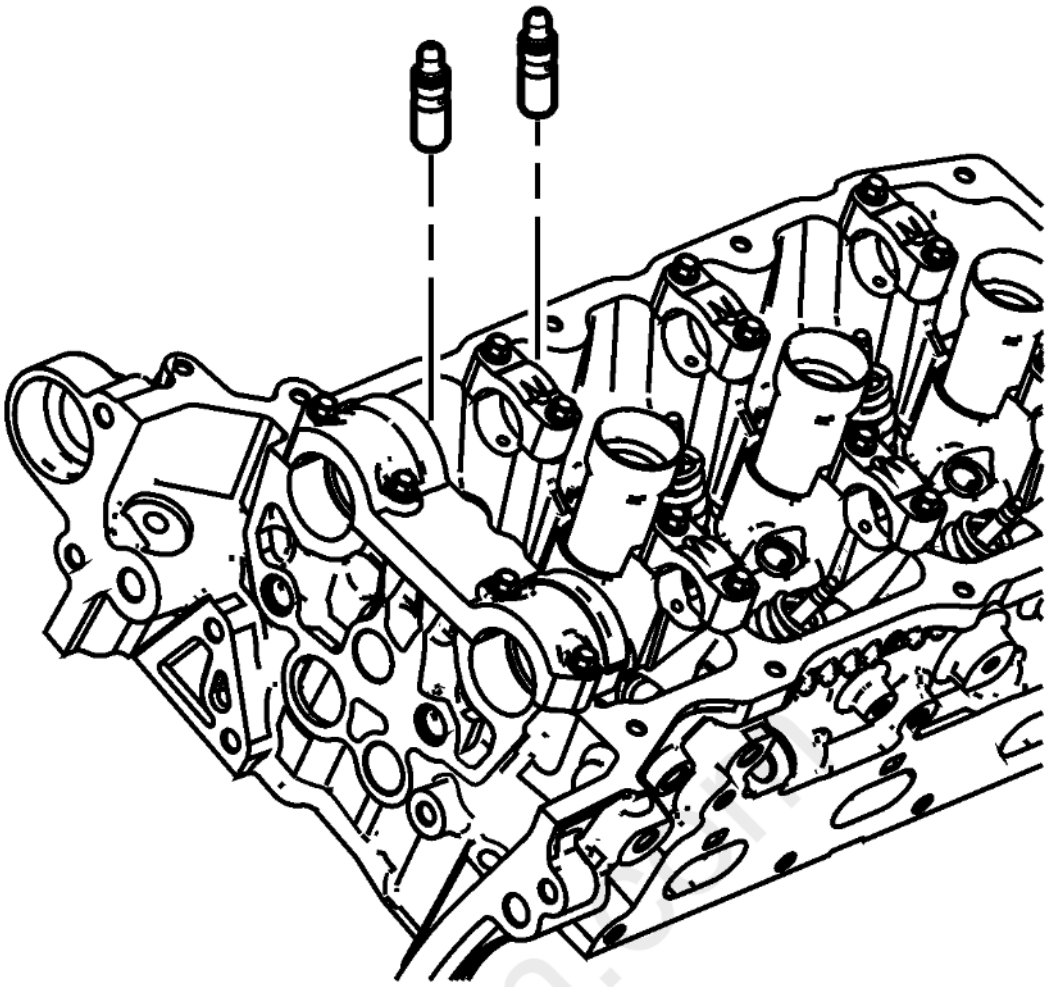

Fig. 137: Valve Lifter - Right Side
Courtesy of GENERAL MOTORS COMPANY

3. Remove the lifters. Refer to **Valve Lifter Removal - Right Side** .
4. Clean and inspect the camshaft(s) and the rocker arm(s) and lifter. Repair or replace as necessary. Refer to **Camshaft Cleaning and Inspection** , **Valve Lifter Cleaning and Inspection** , and **Valve Rocker Arm Cleaning and Inspection** .

Installation Procedure

cardiagn.com

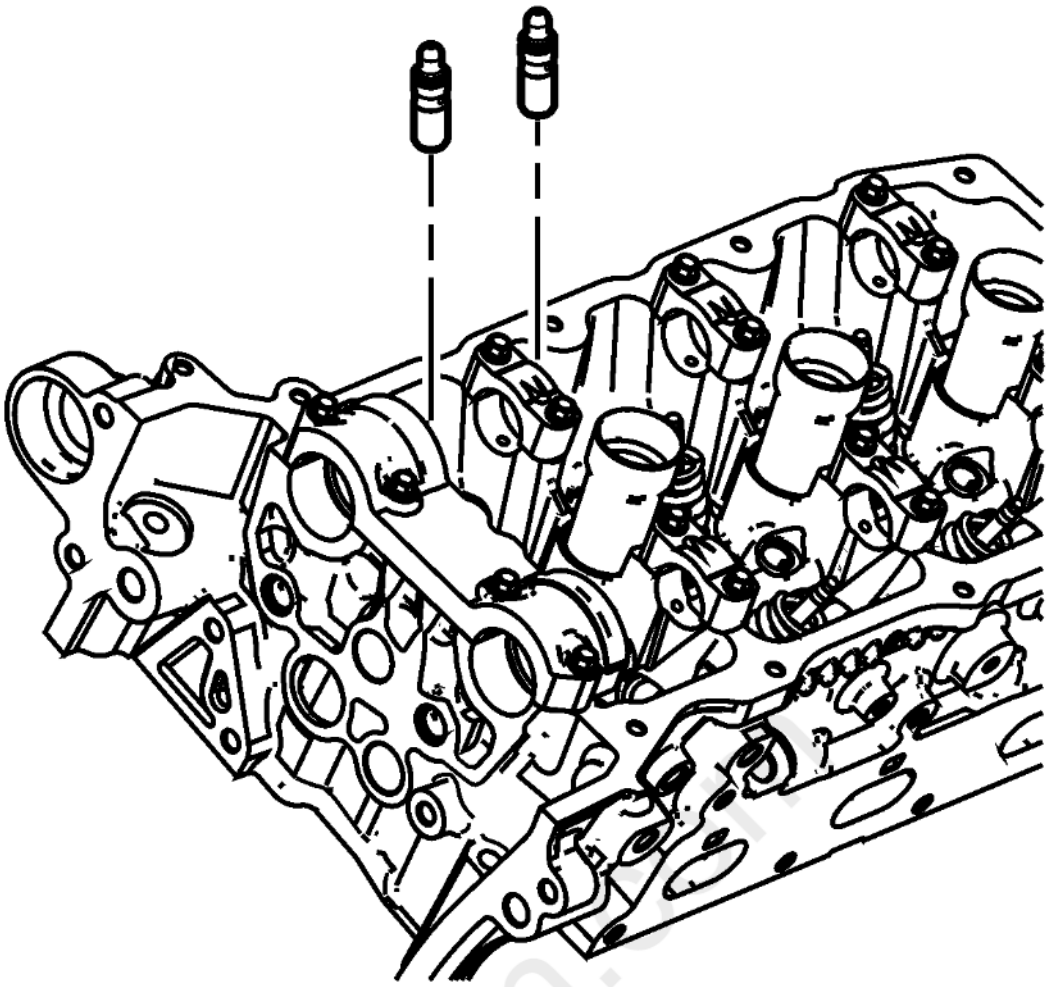

Fig. 138: Valve Lifter - Right Side
Courtesy of GENERAL MOTORS COMPANY

1. Install the lifters. Refer to **Valve Lifter Installation - Right Side** .
2. Install the rocker arms. Refer to **Valve Rocker Arm Installation - Right Side** .
3. Install the applicable camshaft(s). Refer to **Camshaft Replacement - Right Side**.

VALVE STEM OIL SEAL AND VALVE SPRING REPLACEMENT - LEFT SIDE

Special Tools

- **EN-39313** Spark Plug Port Adapter
- **EN-46106** Flywheel Holding Tool
- **EN-46110** On-Vehicle Valve Spring Compressor
- **EN-46116** Valve Stem Seal Remover/Installer

For equivalent regional tools, refer to **Special Tools** .

Removal Procedure

NOTE: **This procedure is not used in Brazil.**

1. Remove the rocker arms. Refer to **Valve Rocker Arm Replacement - Left Side**.
2. Remove the starter motor. Refer to **Starter Replacement (LFX)** .

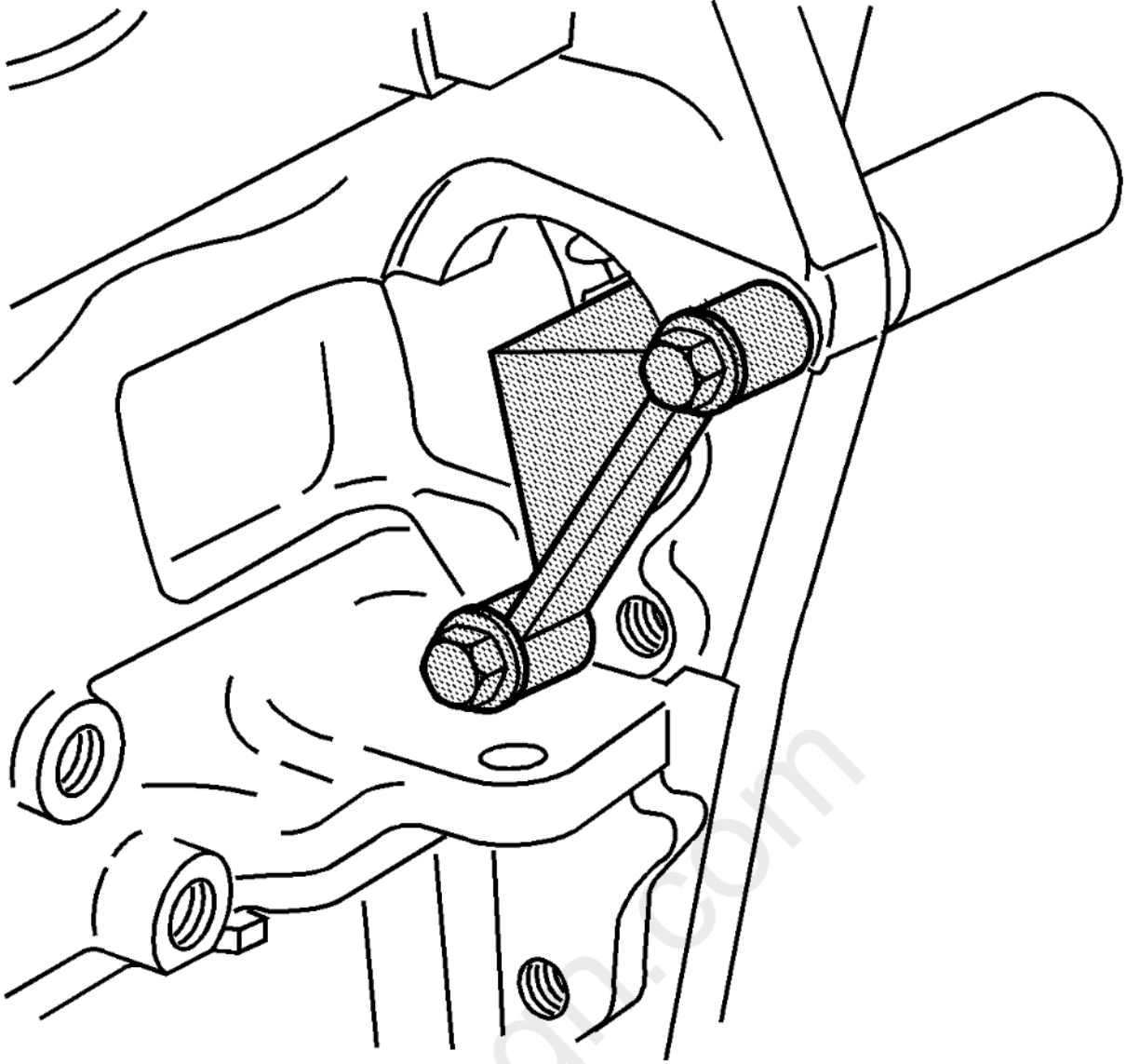

Fig. 139: Flywheel Holding Fixture
Courtesy of GENERAL MOTORS COMPANY

NOTE: **If the EN-46106 tool is not installed, the crankshaft may rotate. If the crankshaft rotates, disassembly and reassembly of the entire camshaft timing system may be required.**

3. Install the **EN-46106** tool in order to prevent crankshaft rotation.
4. Remove the spark plug from the applicable cylinder. Refer to **Spark Plug Replacement** .
5. Install the **EN-39313** adapter to the applicable cylinder.
6. Connect the **EN-39313** adapter to a compressed air source.

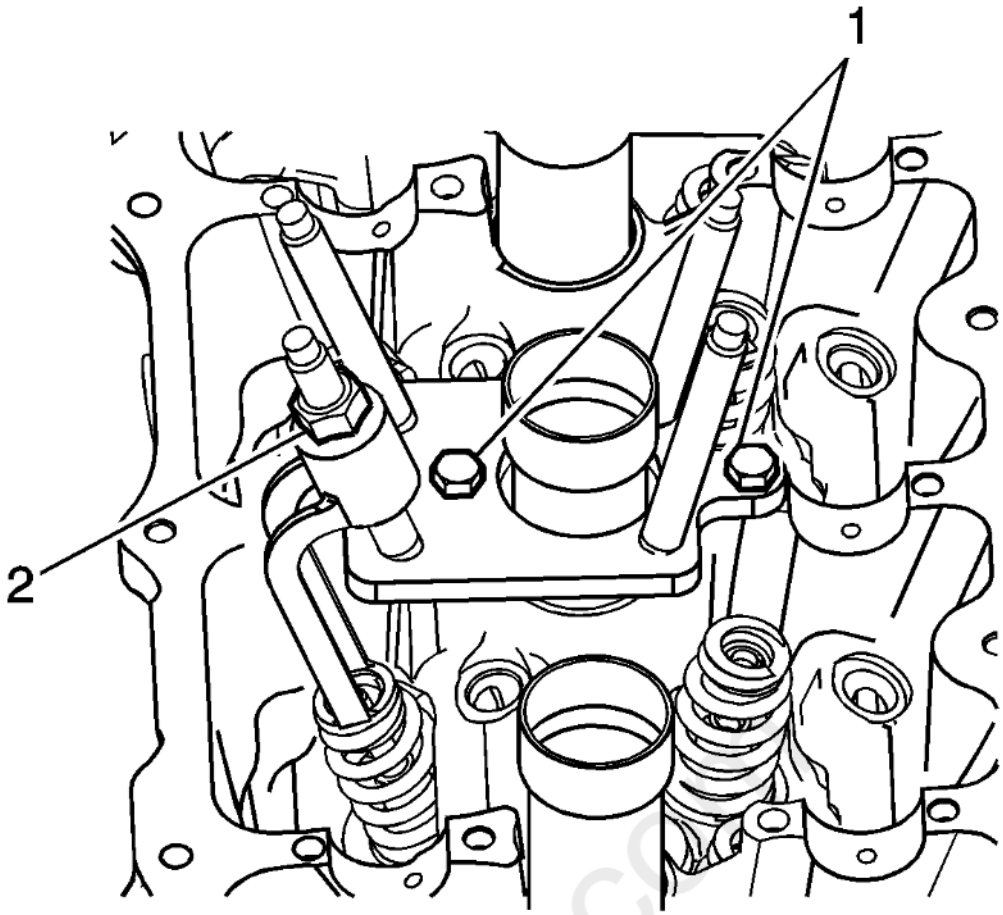

Fig. 140: Valve Spring Compressor Tool
Courtesy of GENERAL MOTORS COMPANY

7. Install the **EN-46110** compressor above the applicable cylinder as shown.
8. Tighten the **EN-46110** compressor nut (2).

cardiagn.com

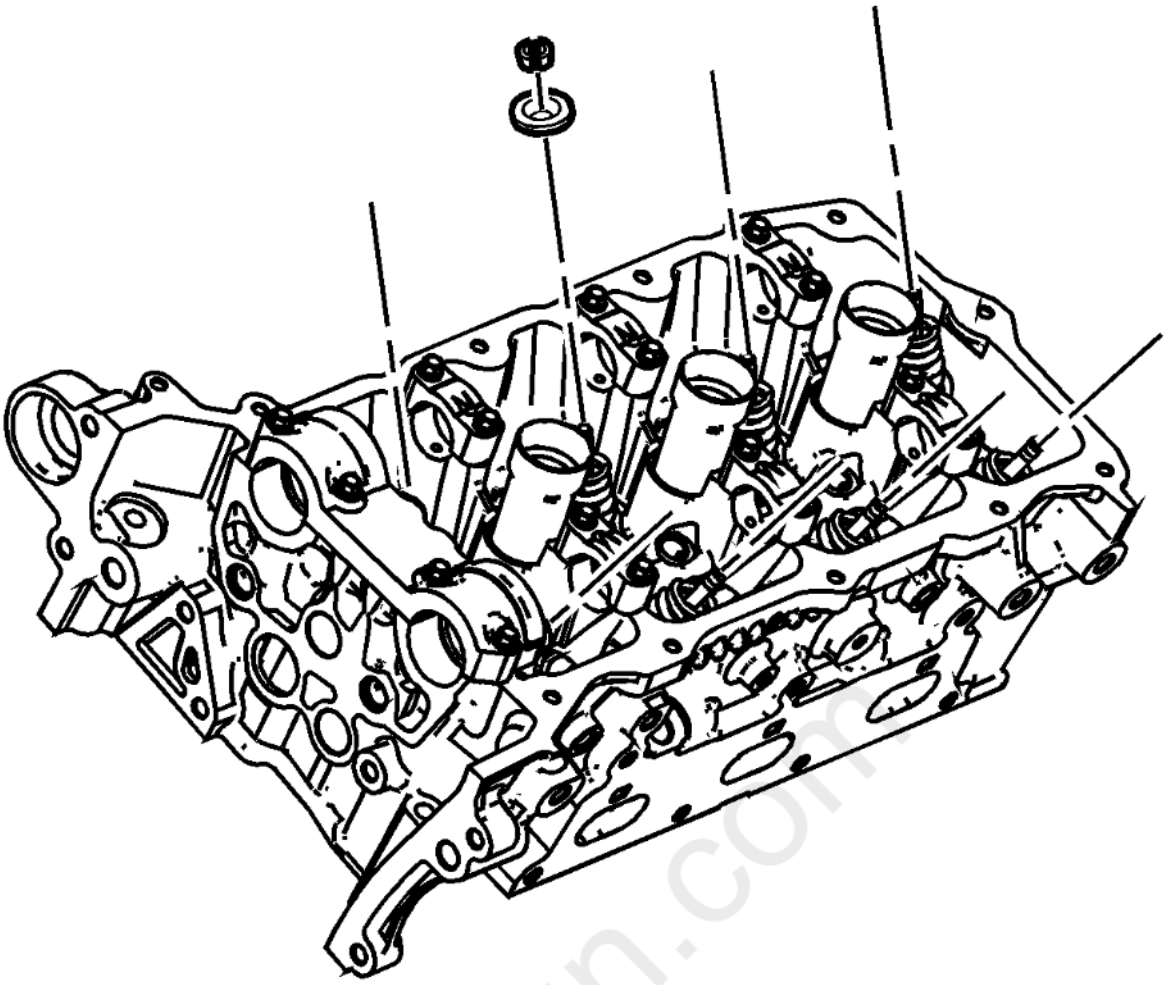

Fig. 141: Valve Spring Keepers And Valve Spring Retainers
Courtesy of GENERAL MOTORS COMPANY

9. Remove the valve keepers.
10. Loosen the **EN-46110** compressor nut.
11. Remove the valve spring retainer.

carmagn.com

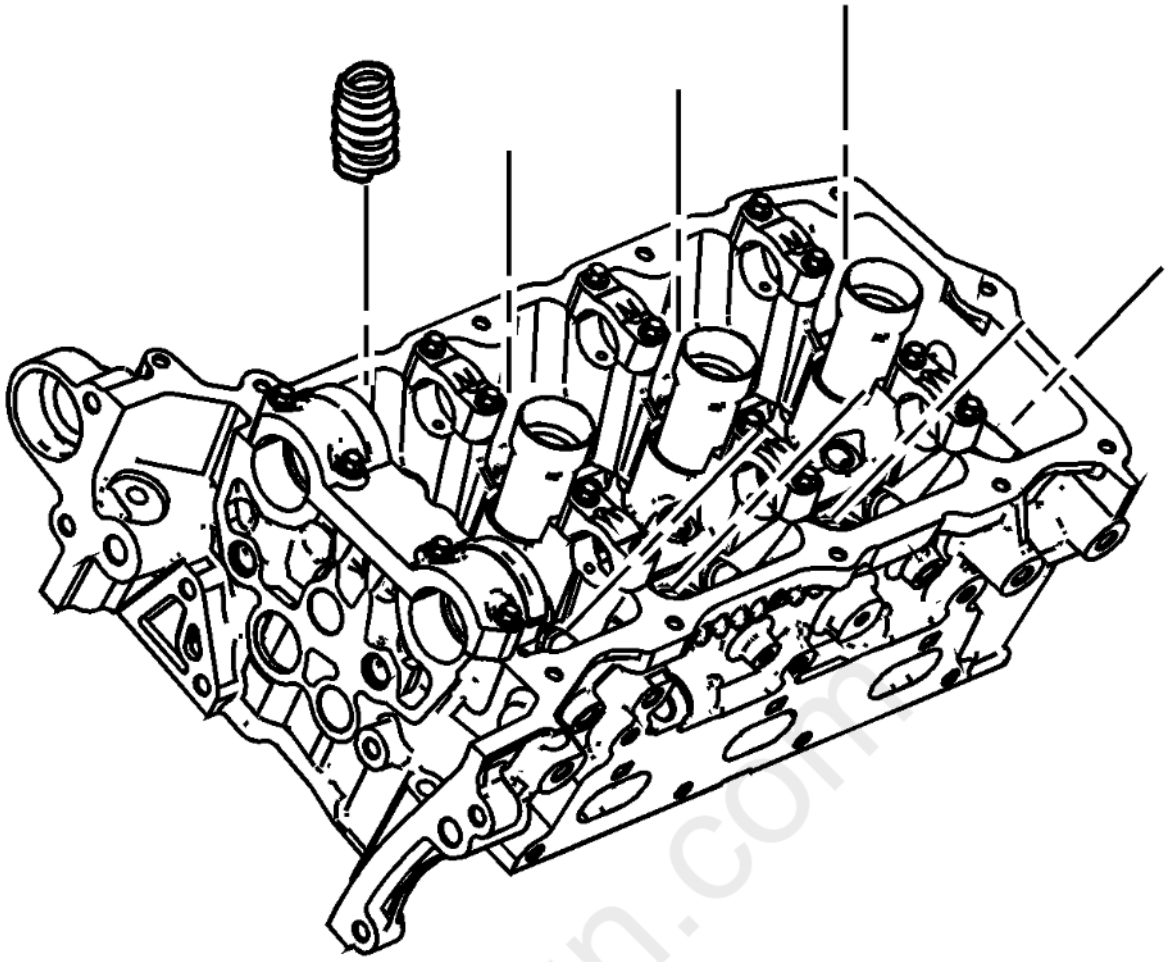

Fig. 142: Valve Spring
Courtesy of GENERAL MOTORS COMPANY

12. Remove the valve spring.

cardiagn.com

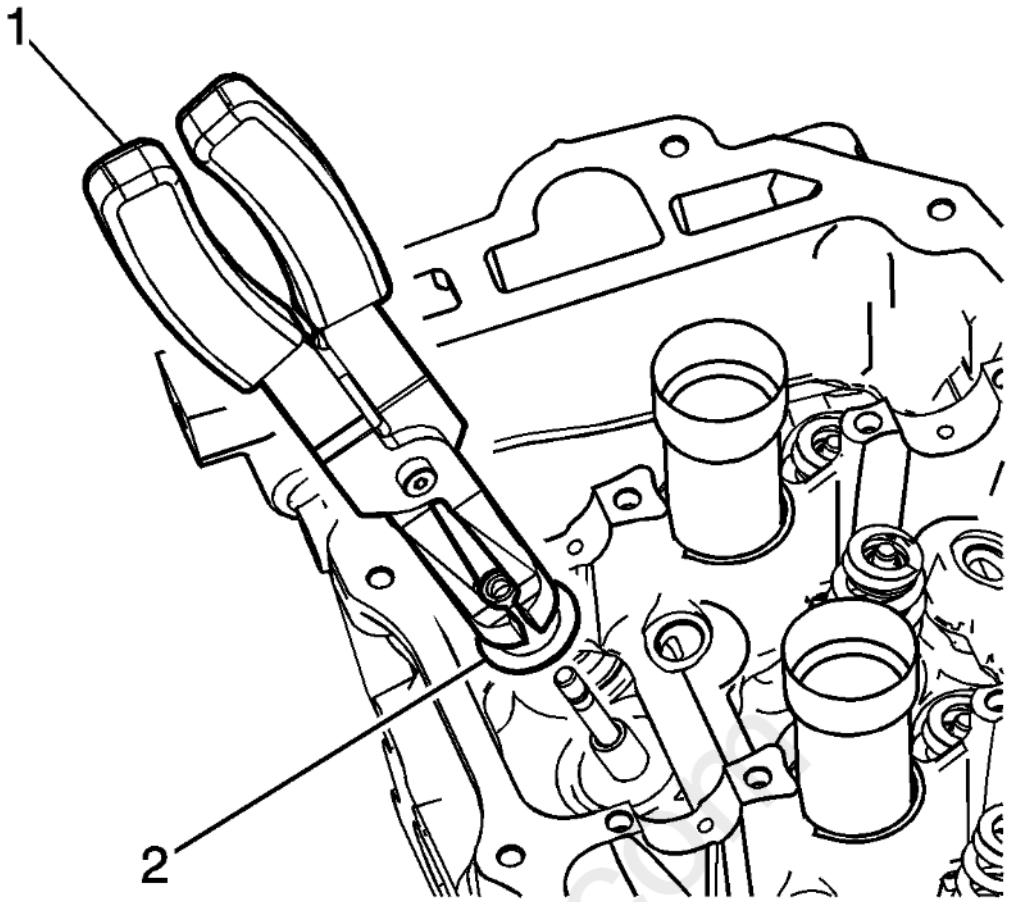

Fig. 143: Special Tool And Valve Stem Seal
Courtesy of GENERAL MOTORS COMPANY

13. Use the **EN-46116** remover/installer (1) in order to remove the valve stem seal (2).

Installation Procedure

cardiagn.com

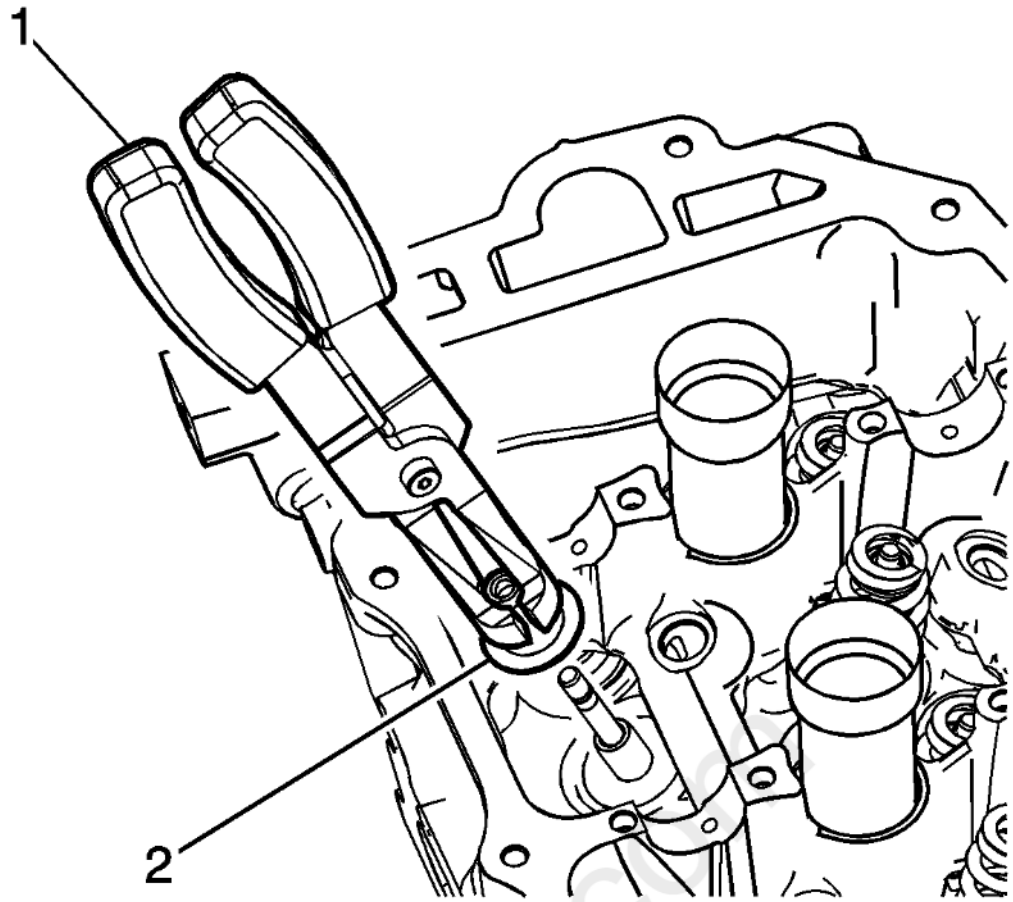

Fig. 144: Special Tool And Valve Stem Seal
Courtesy of GENERAL MOTORS COMPANY

1. Use the **EN-46116** remover/installer (1) in order to install the valve stem seal (2).

cardiagn.com

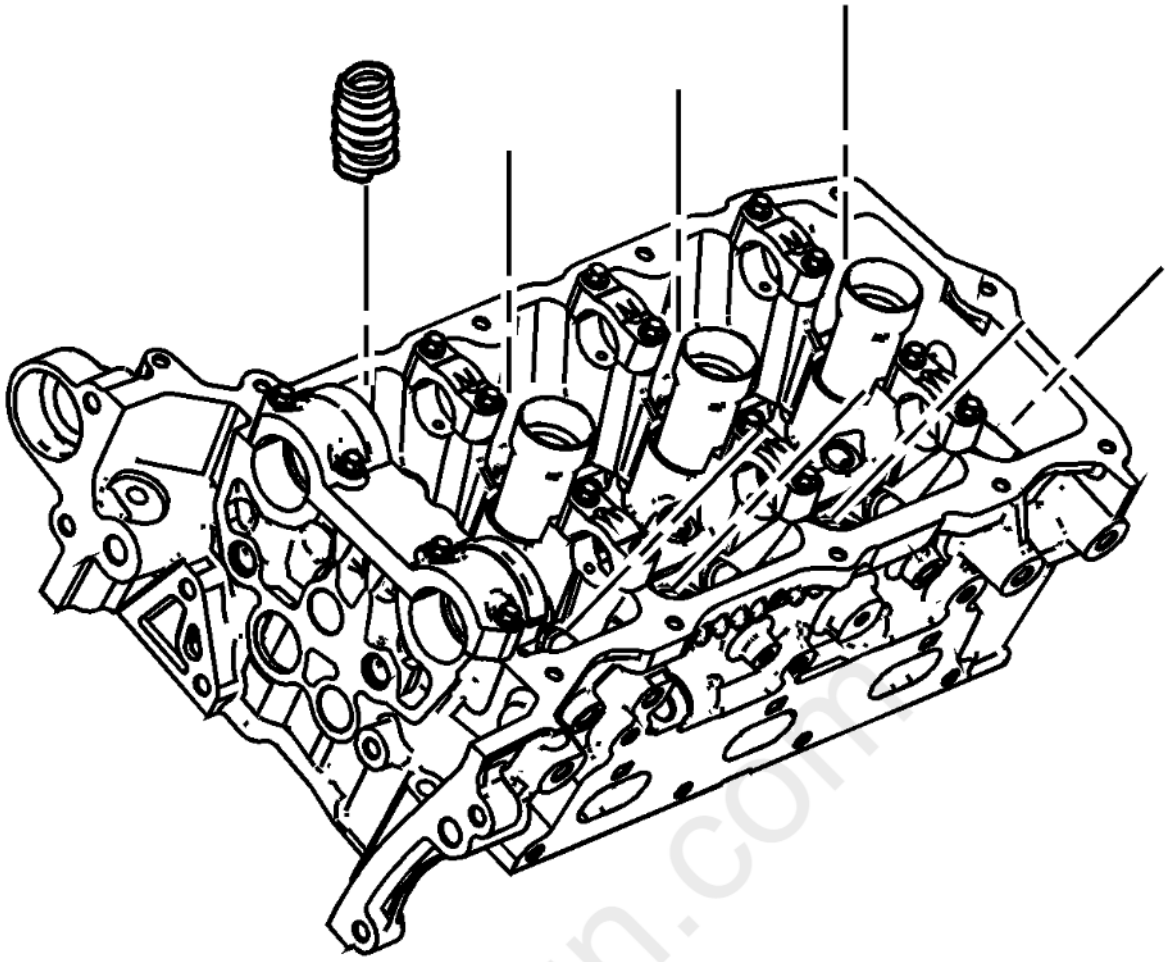

Fig. 145: Valve Spring
Courtesy of GENERAL MOTORS COMPANY

2. Install the valve spring.
3. Install the valve spring retainer.

cardiagn.com

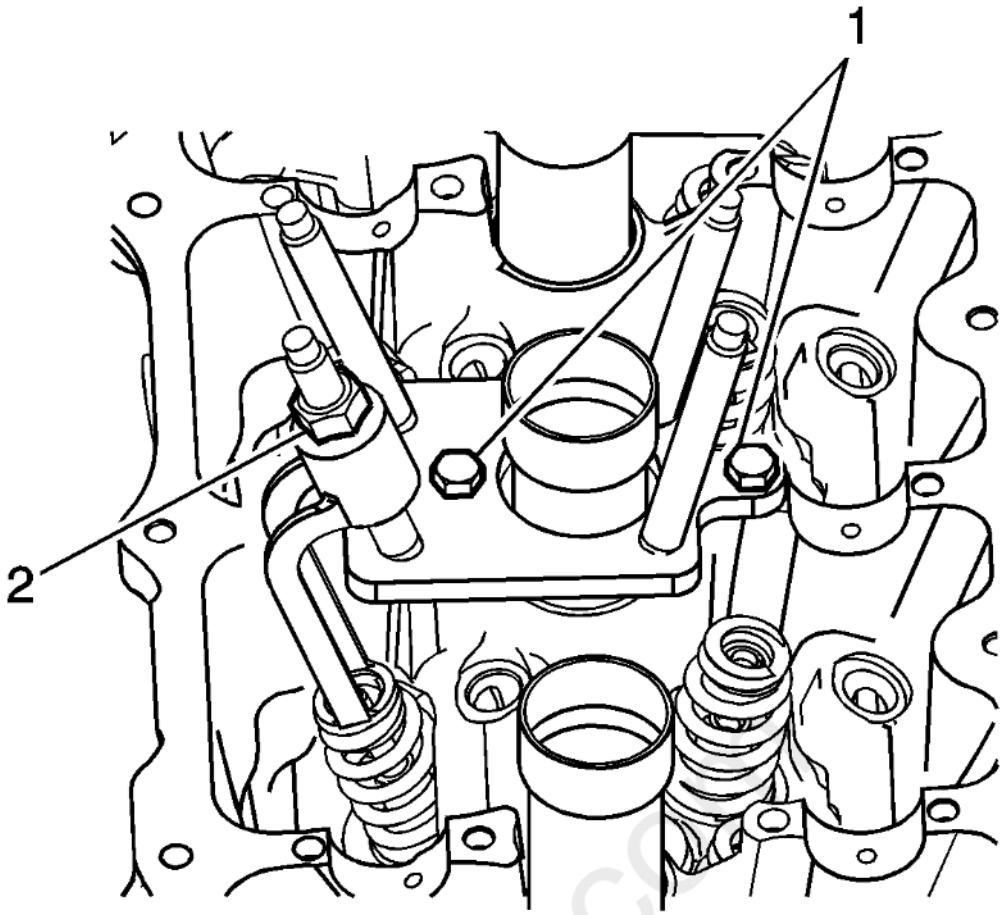

Fig. 146: Valve Spring Compressor Tool
Courtesy of GENERAL MOTORS COMPANY

4. Install the **EN-46110** compressor above the applicable valve spring as shown.

   Tighten the **EN-46110** compressor nut (2).

cardiagn.com

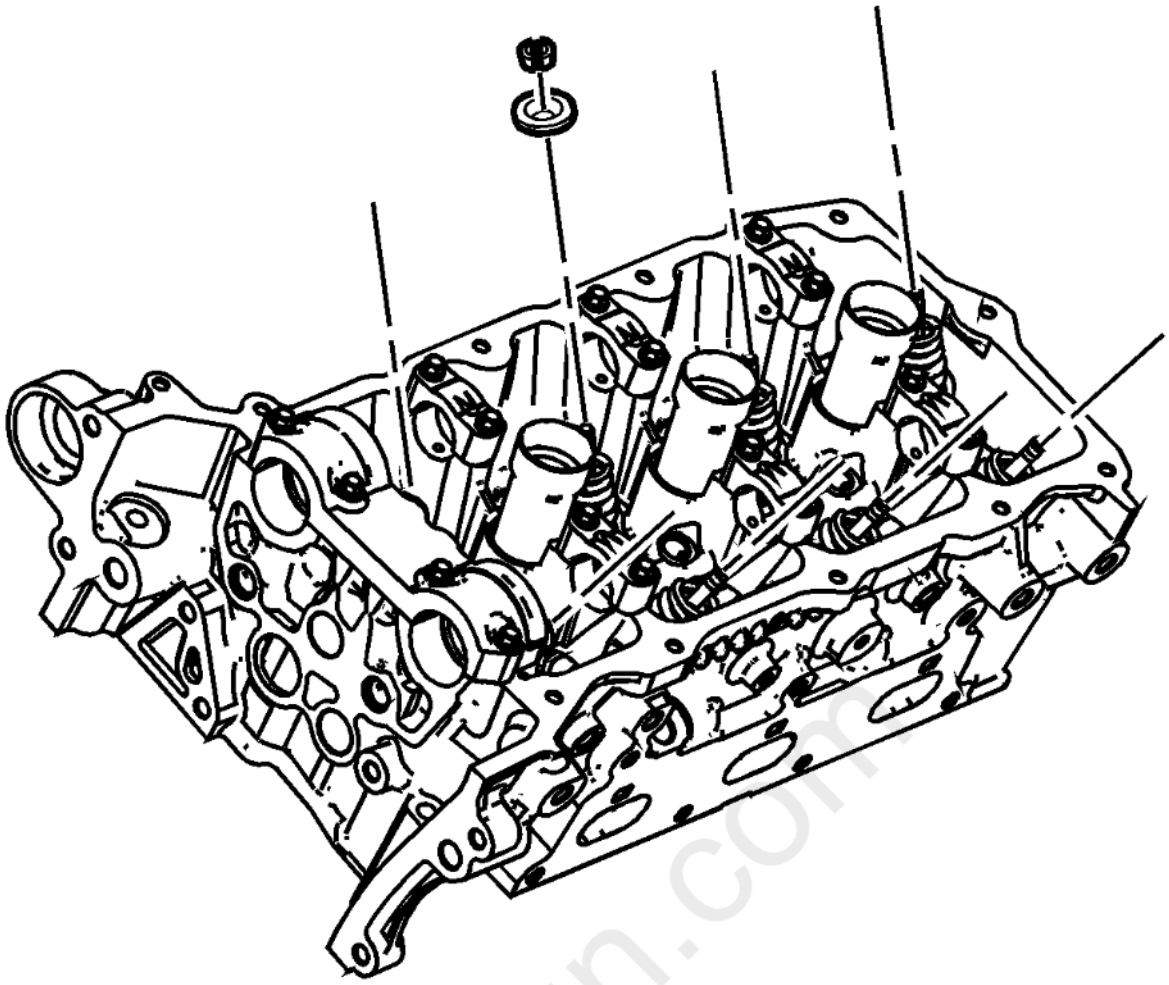

Fig. 147: Valve Spring Keepers And Valve Spring Retainers
Courtesy of GENERAL MOTORS COMPANY

5. Install the valve spring keepers.
6. Remove the **EN-46110** compressor.
7. Disconnect the **EN-39313** adapter from the compressed air source.
8. Remove the **EN-39313** adapter.
9. Install the spark plugs. Refer to **Spark Plug Replacement** .
10. Install the rocker arms. Refer to **Valve Rocker Arm Replacement - Left Side**.
11. Remove the **EN-46106** tool in order to prevent crankshaft rotation.
12. Install the starter motor. Refer to **Starter Replacement (LFX)** .

VALVE STEM OIL SEAL AND VALVE SPRING REPLACEMENT - RIGHT SIDE

Special Tools

- **EN-39313** Spark Plug Port Adapter
- **EN-46106** Flywheel Holding Tool
- **EN-46110** On-Vehicle Valve Spring Compressor
- **EN-46116** Valve Stem Seal Remover/Installer

For equivalent regional tools, refer to **Special Tools** .

Removal Procedure

NOTE: **This procedure is not used in Brazil.**

1. Remove the rocker arms. Refer to **Valve Rocker Arm Replacement - Right Side**.
2. Remove the starter motor. Refer to **Starter Replacement (LFX)** .

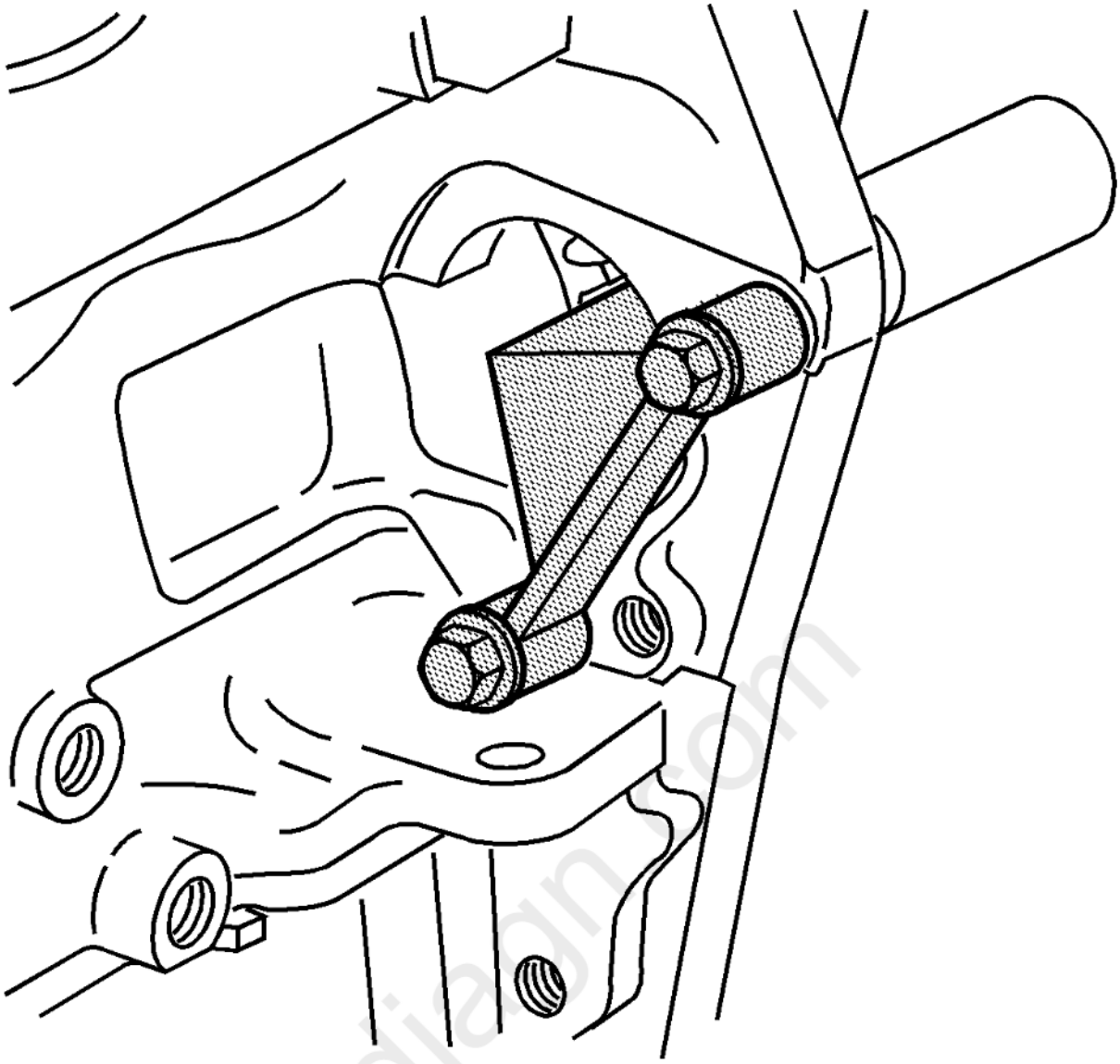

Fig. 148: Flywheel Holding Fixture
Courtesy of GENERAL MOTORS COMPANY

NOTE: **If the EN-46106 tool is not installed, the crankshaft may rotate. If the crankshaft rotates, disassembly and reassembly of the entire camshaft timing system may be required.**

3. Install the **EN-46106** tool in order to prevent crankshaft rotation.
4. Remove the spark plug from the applicable cylinder. Refer to **Spark Plug Replacement** .
5. Install the **EN-39313** adapter to the applicable cylinder.
6. Connect the **EN-39313** adapter to a compressed air source.

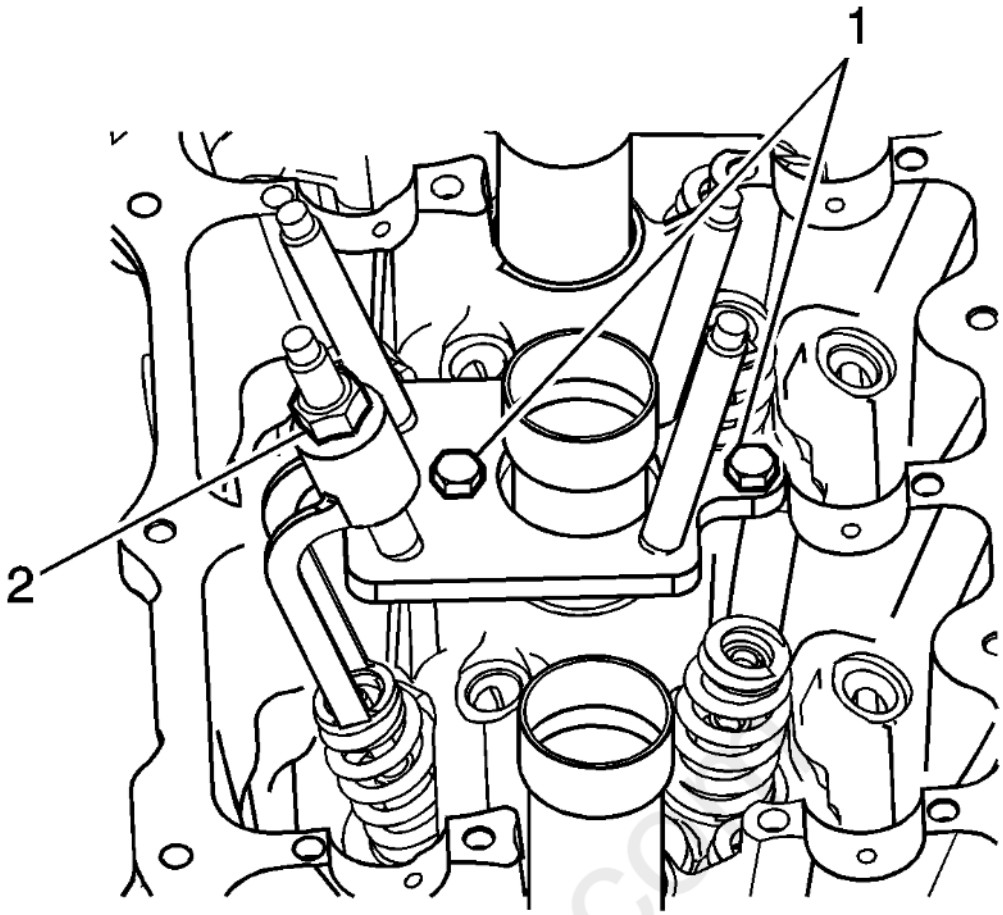

Fig. 149: Valve Spring Compressor Tool
Courtesy of GENERAL MOTORS COMPANY

7. Install the **EN-46110** compressor above the applicable cylinder as shown.
8. Tighten the **EN-46110** compressor nut (2).

cardiagn.com

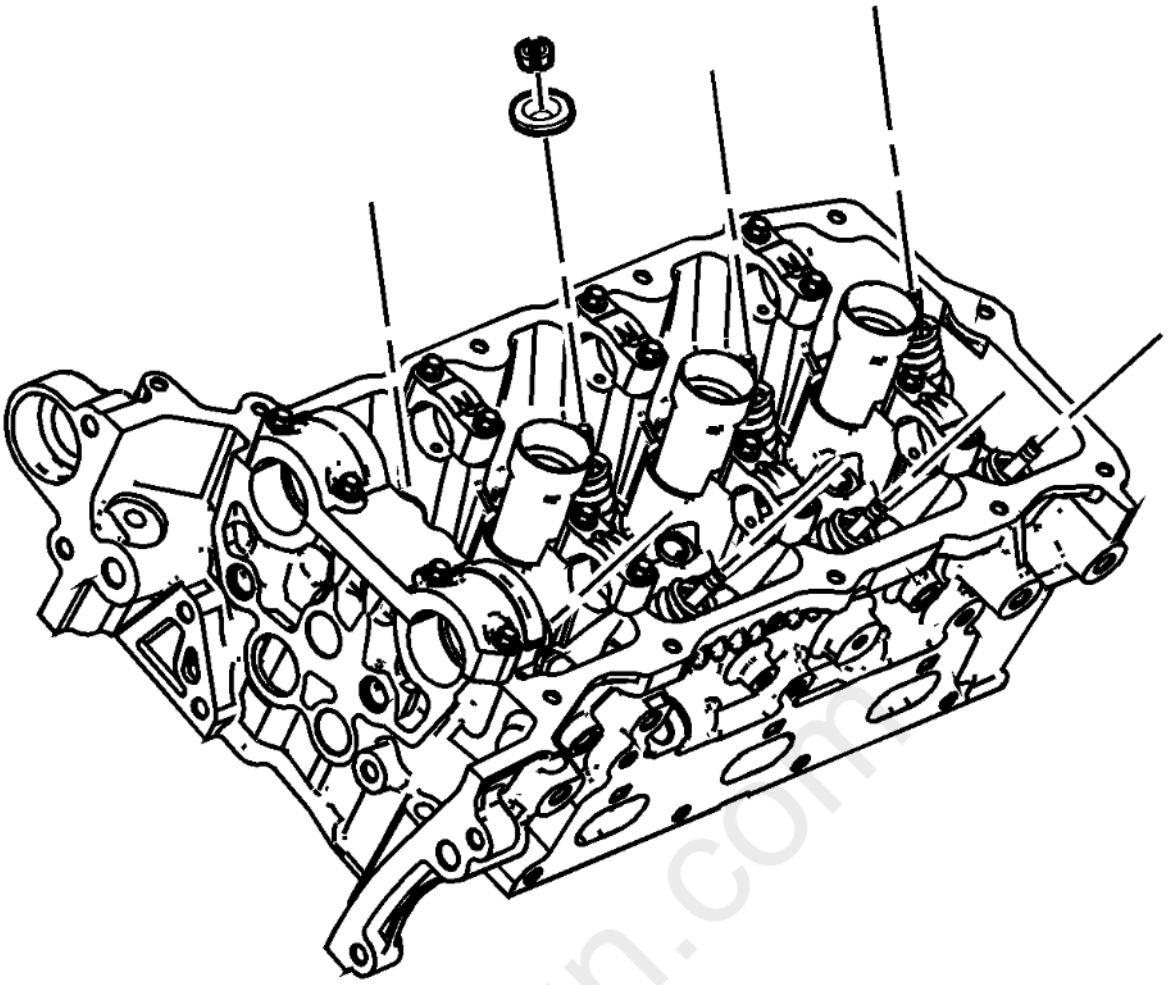

Fig. 150: Valve Spring Keepers And Valve Spring Retainers
Courtesy of GENERAL MOTORS COMPANY

9. Remove the valve keepers.
10. Loosen the **EN-46110** compressor nut.
11. Remove the valve spring retainer.

carmagn.com

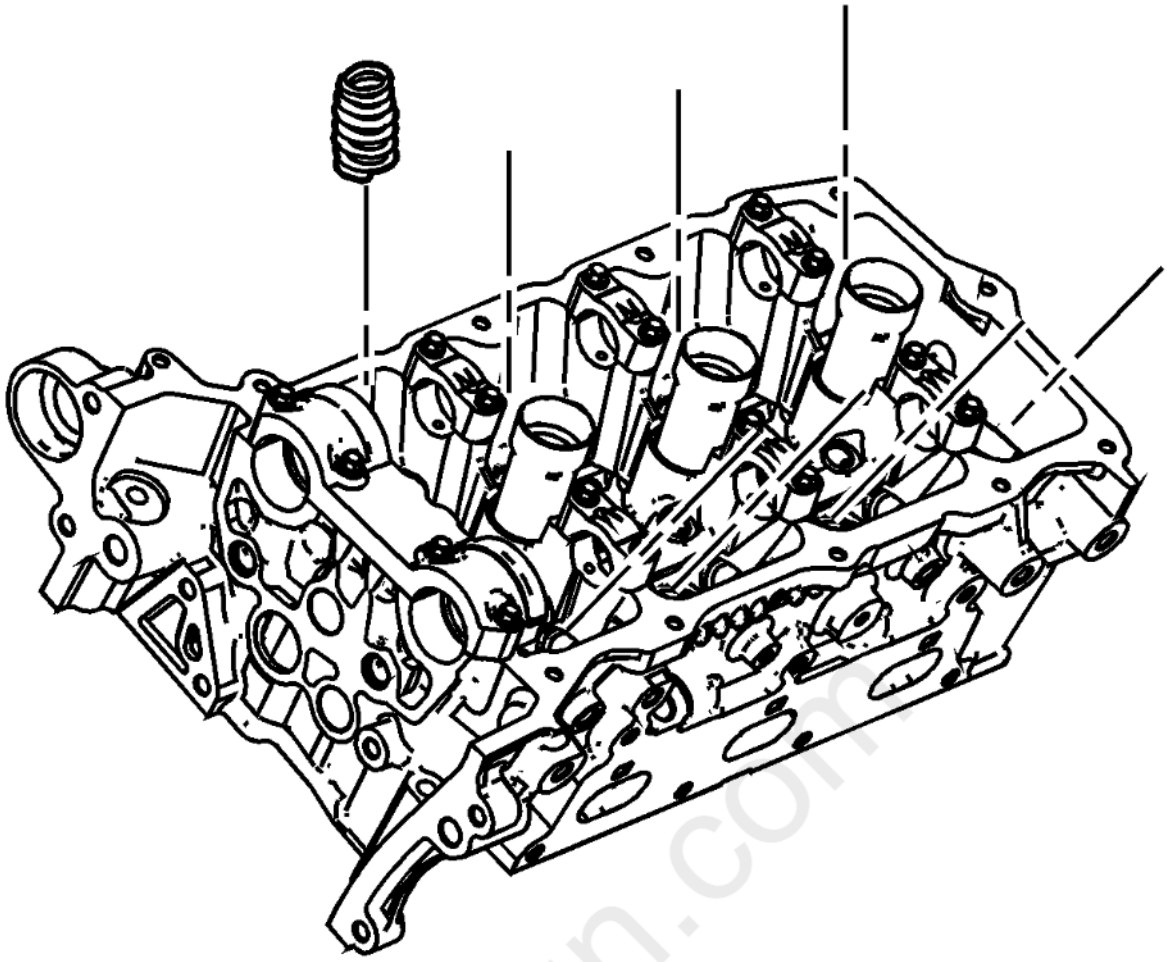

Fig. 151: Valve Spring
Courtesy of GENERAL MOTORS COMPANY

12. Remove the valve spring.

cardiagn.com

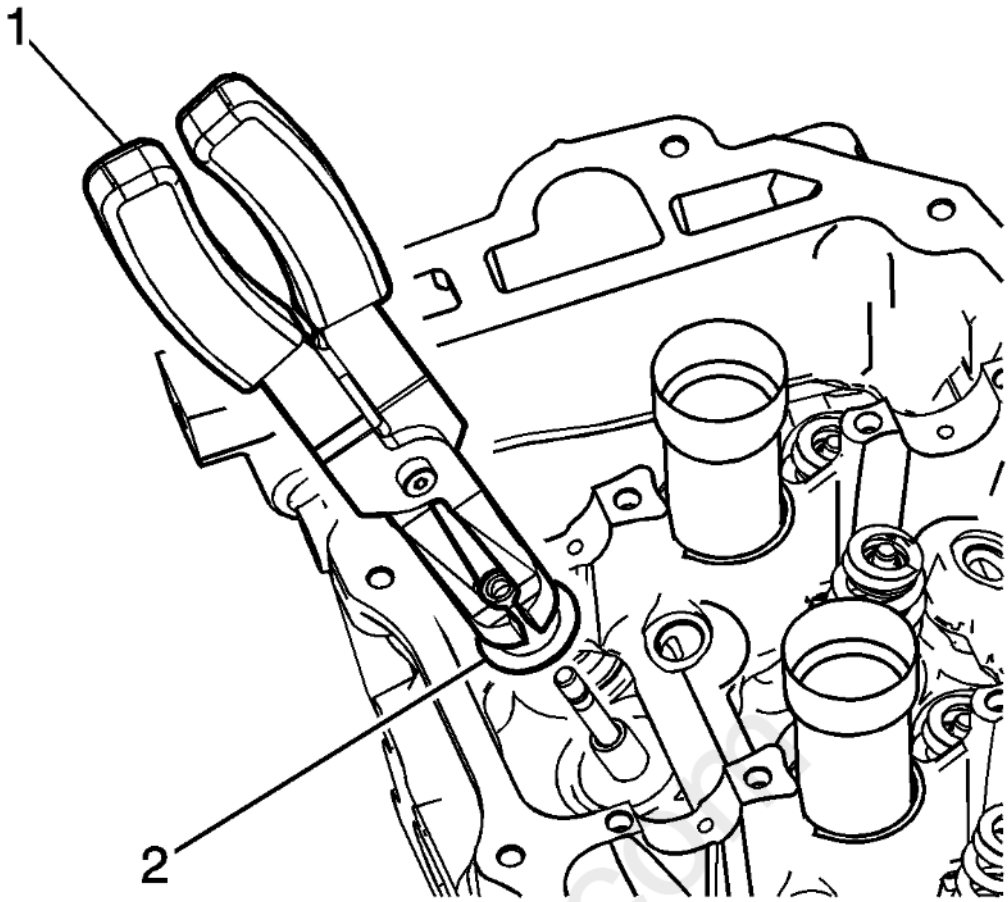

Fig. 152: Special Tool And Valve Stem Seal
Courtesy of GENERAL MOTORS COMPANY

13. Use the **EN-46116** remover/installer (1) in order to remove the valve stem seal (2).

Installation Procedure

cardiagn.com

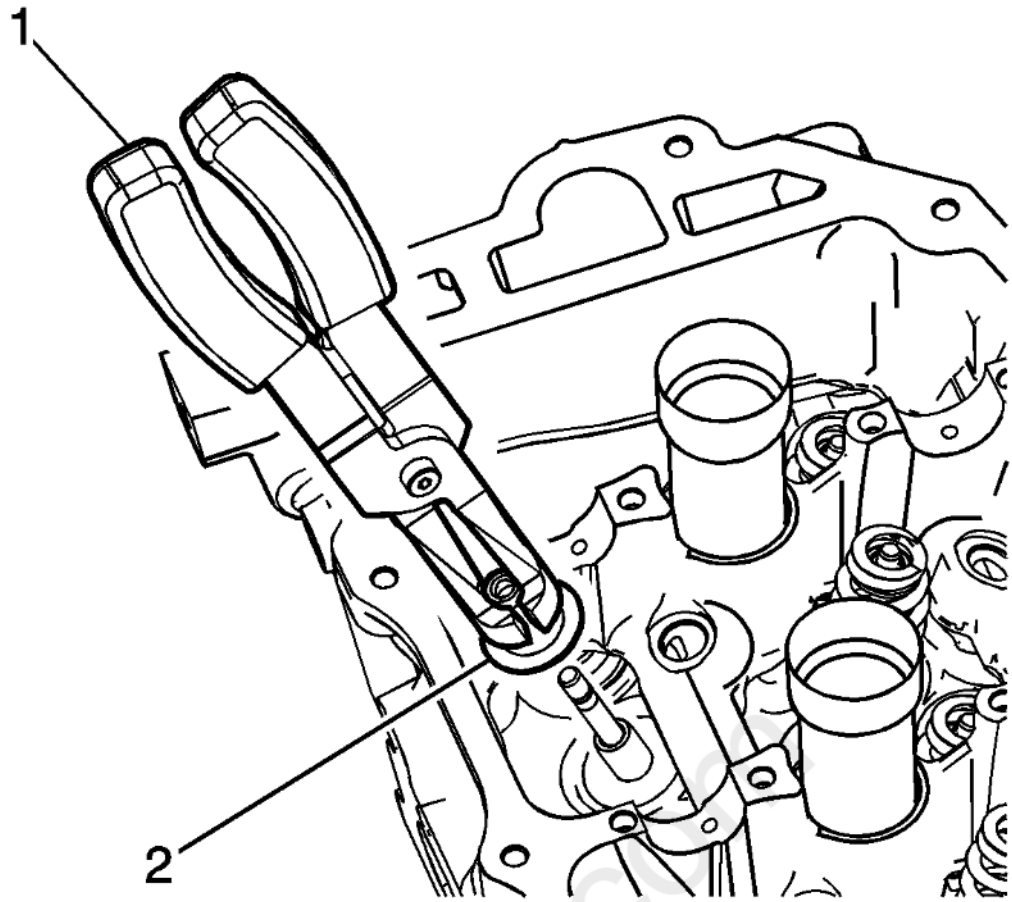

Fig. 153: Special Tool And Valve Stem Seal
Courtesy of GENERAL MOTORS COMPANY

1. Use the **EN-46116** remover/installer (1) in order to install the valve stem seals (2).

cardiagn.com

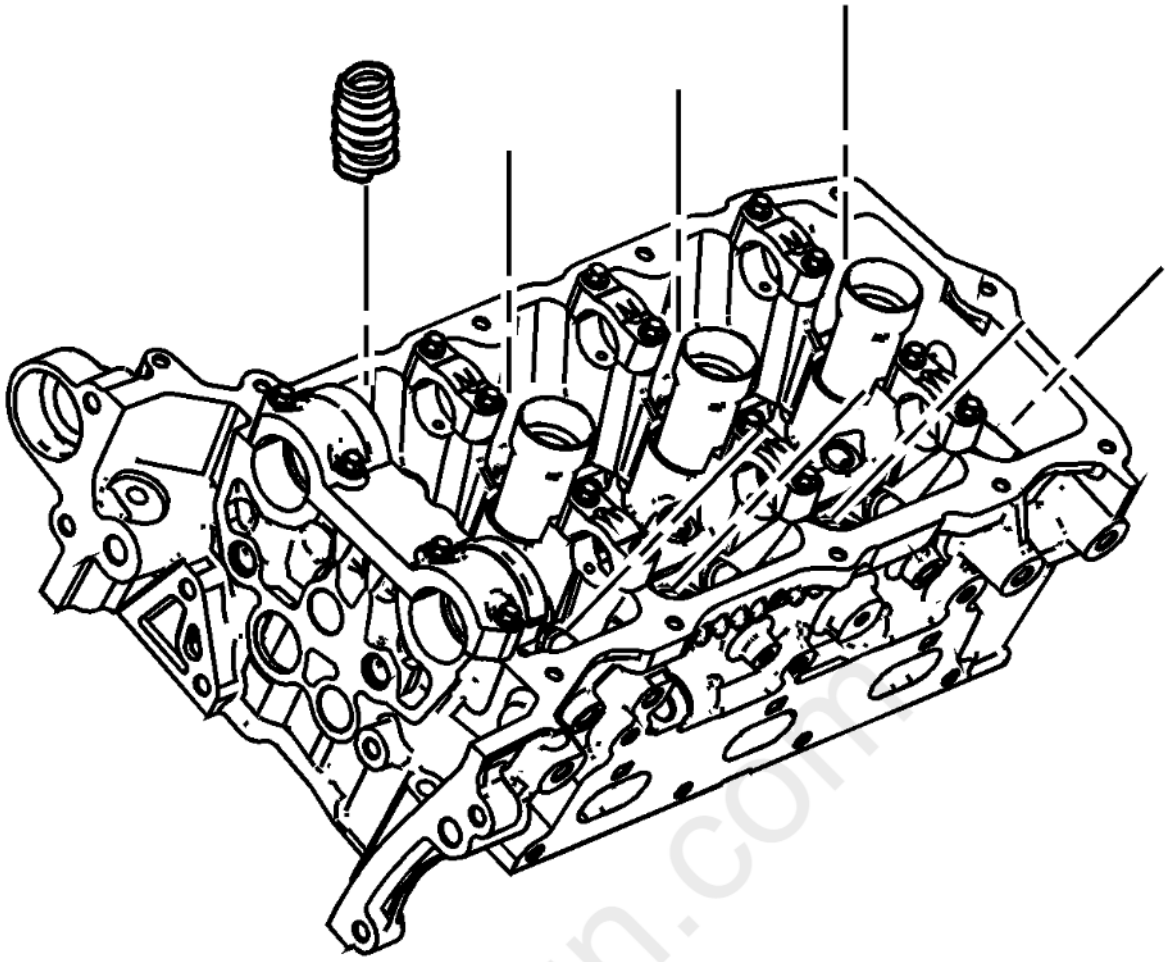

Fig. 154: Valve Spring
Courtesy of GENERAL MOTORS COMPANY

2. Install the valve spring.
3. Install the valve spring retainer.

cardiagn.com

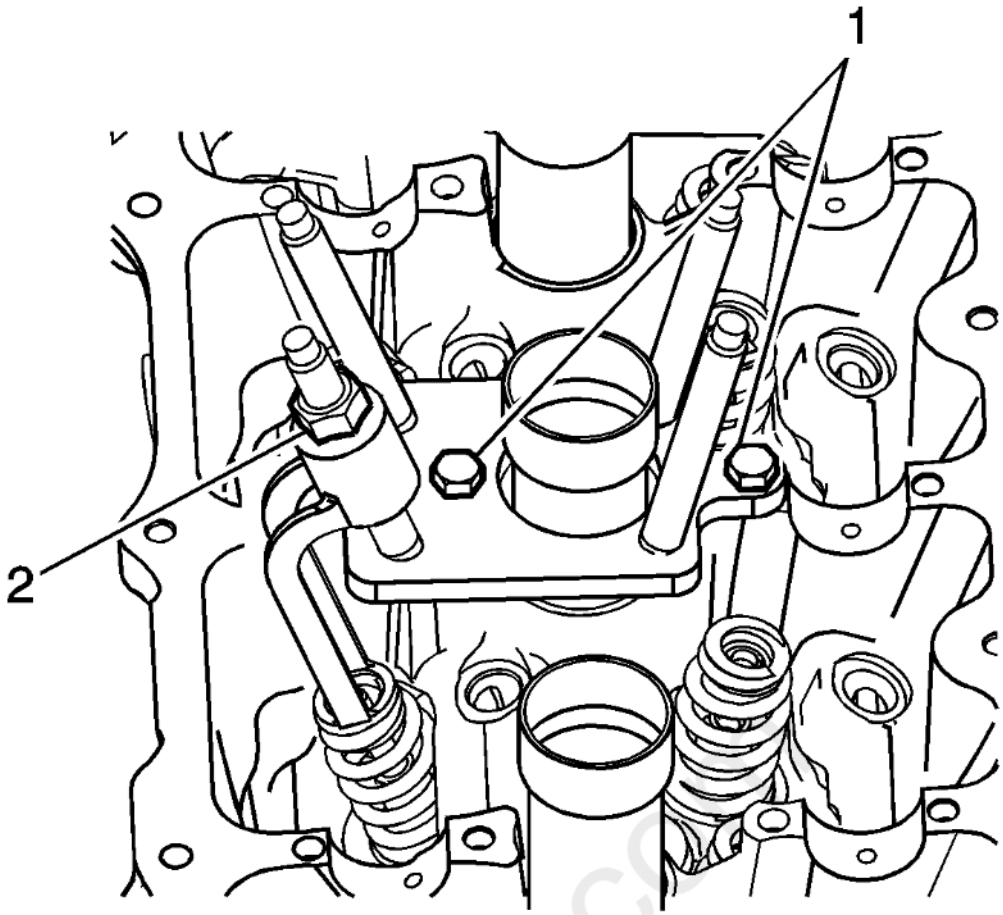

Fig. 155: Valve Spring Compressor Tool
Courtesy of GENERAL MOTORS COMPANY

4. Install the **EN-46110** compressor above the applicable valve spring as shown.

   Tighten the **EN-46110** compressor nut (2).

cardiagn.com

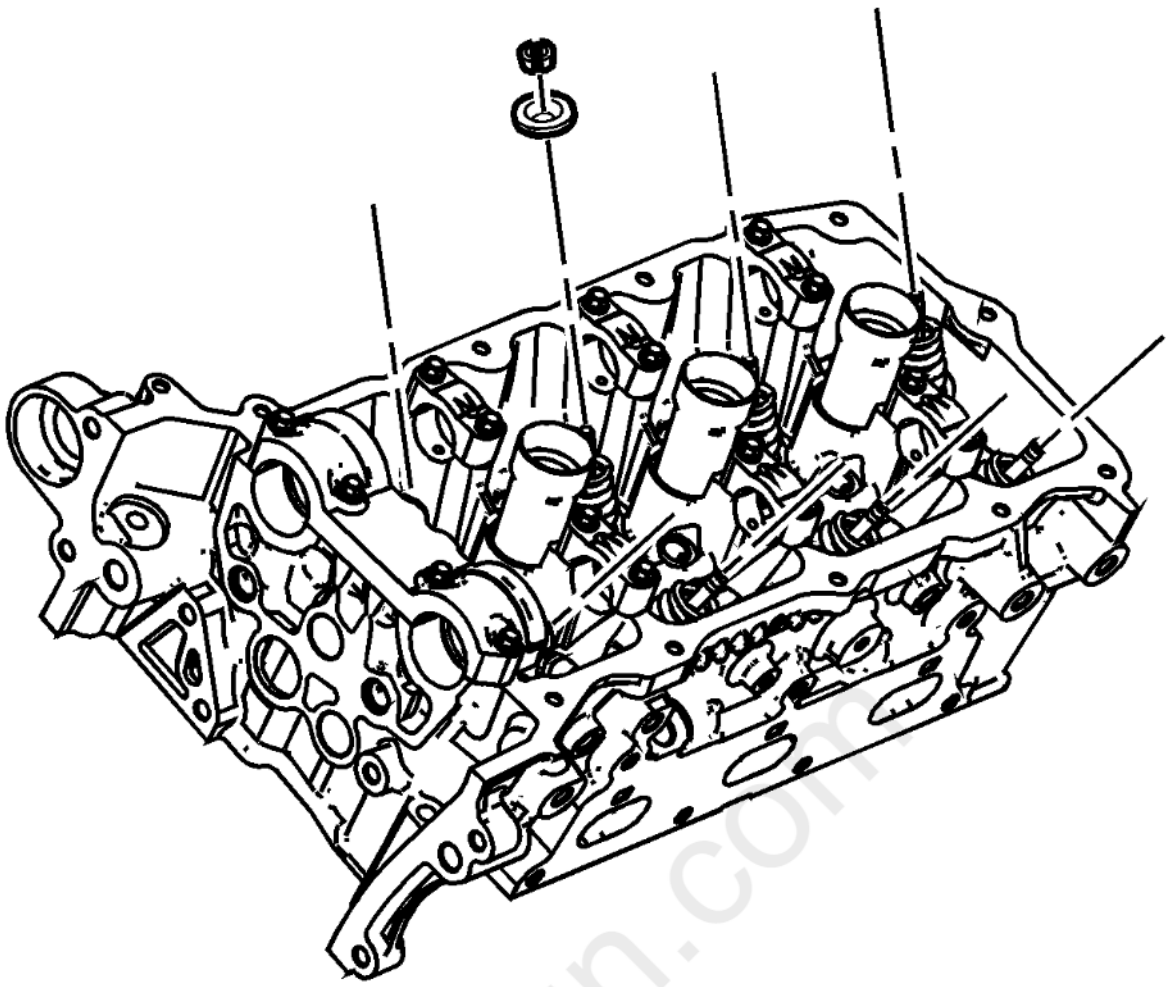

Fig. 156: Valve Spring Keepers And Valve Spring Retainers
Courtesy of GENERAL MOTORS COMPANY

5. Install the valve spring keepers.
6. Remove the **EN-46110** compressor.
7. Disconnect the **EN-39313** adapter from the compressed air source.
8. Remove the **EN-39313** adapter.
9. Install the spark plugs. Refer to **Spark Plug Replacement** .
10. Install the rocker arms. Refer to **Valve Rocker Arm Replacement - Right Side**.
11. Remove the **EN-46106** tool.
12. Install the starter motor. Refer to **Starter Replacement (LFX)** .

CYLINDER HEAD REPLACEMENT - LEFT SIDE

Special Tools

EN-45059 Angle Meter

For equivalent regional tools, refer to **Special Tools** .

Removal Procedure

1. Remove the left bank secondary timing chain. Refer to **Secondary Camshaft Intermediate Drive Chain Replacement - Left Side**.
2. Remove the fuel pump. Refer to **Fuel Pump Replacement (LFX)** .
3. Remove the catalytic converter. Refer to **Three-Way Catalytic Converter Replacement (LFX - Bank 2)** **Three-Way Catalytic Converter Replacement (LFX - Bank 1)** .

4. Remove the oil level indicator tube. Refer to **Oil Level Indicator Tube Replacement**.
5. Remove the ground wire bolt and wire from the cylinder head.
6. Disconnect the engine coolant temperature sensor.

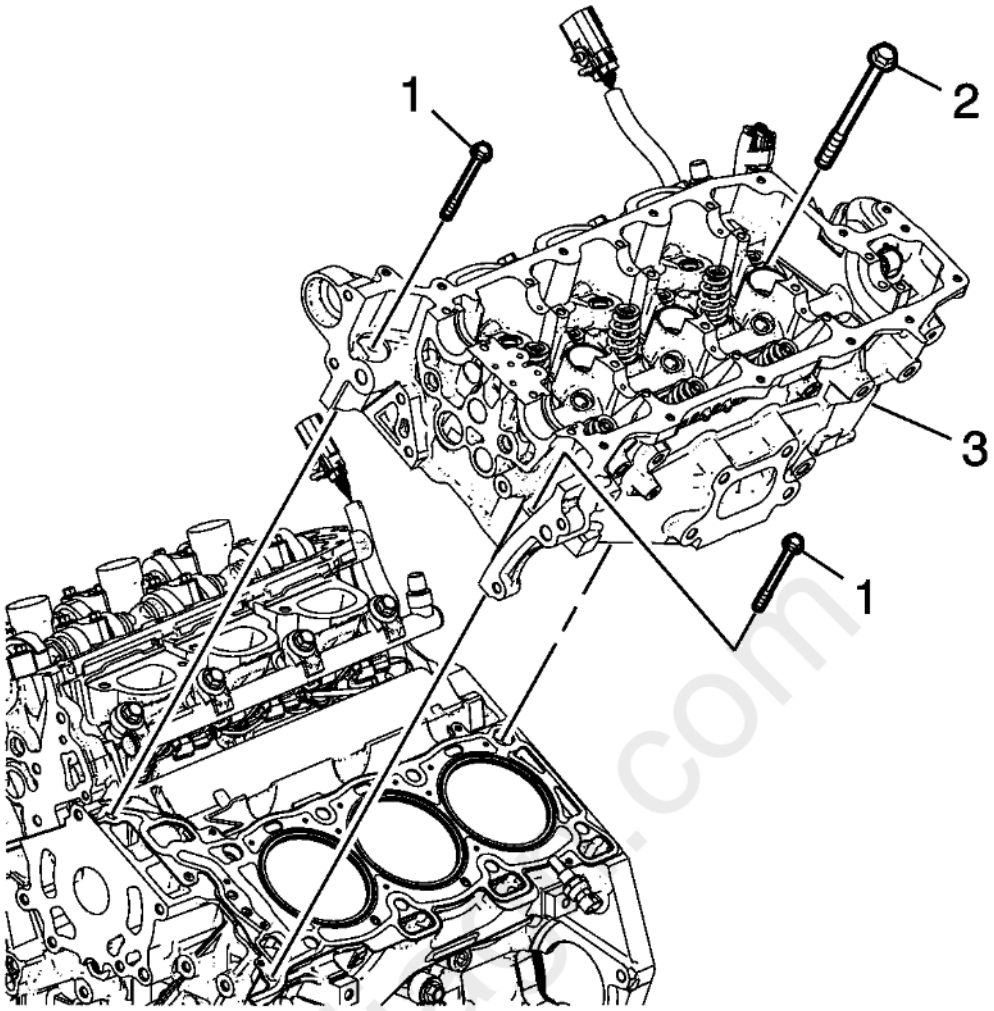

Fig. 157: Left Cylinder Head And Bolts
Courtesy of GENERAL MOTORS COMPANY

7. Remove the 2 front M8 left cylinder head bolts (1).
8. Remove the left cylinder head bolts (2).
9. Remove the left cylinder head (3).

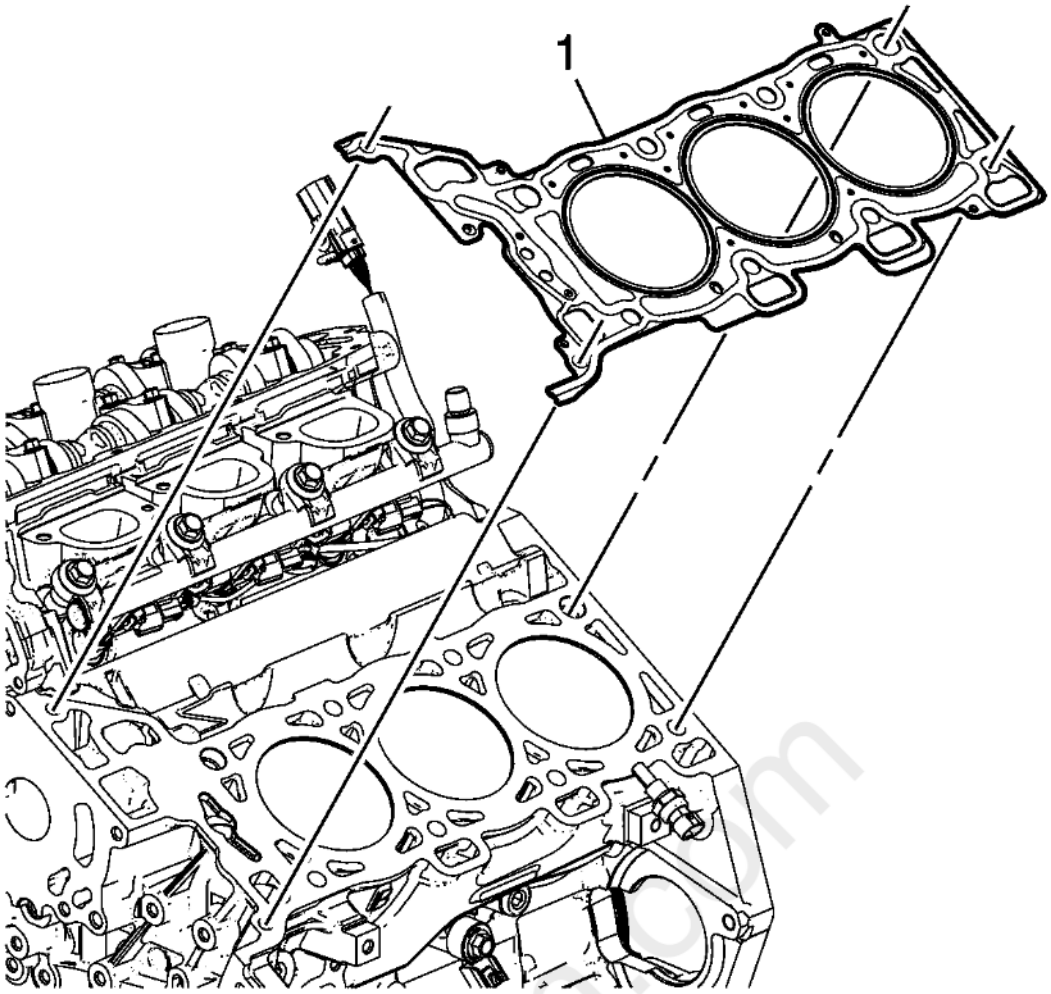

Fig. 158: Left Cylinder Head Gasket
Courtesy of GENERAL MOTORS COMPANY

10. Remove and discard the left cylinder head gasket (1).
11. Clean and inspect the cylinder head and the engine block sealing surfaces. Refer to **Cylinder Head Cleaning and Inspection** , and **Engine Block Cleaning and Inspection** .
12. Disassemble the cylinder head if needed and transfer parts as necessary. Refer to **Cylinder Head Disassemble** .

Installation Procedure

carmanuals.com

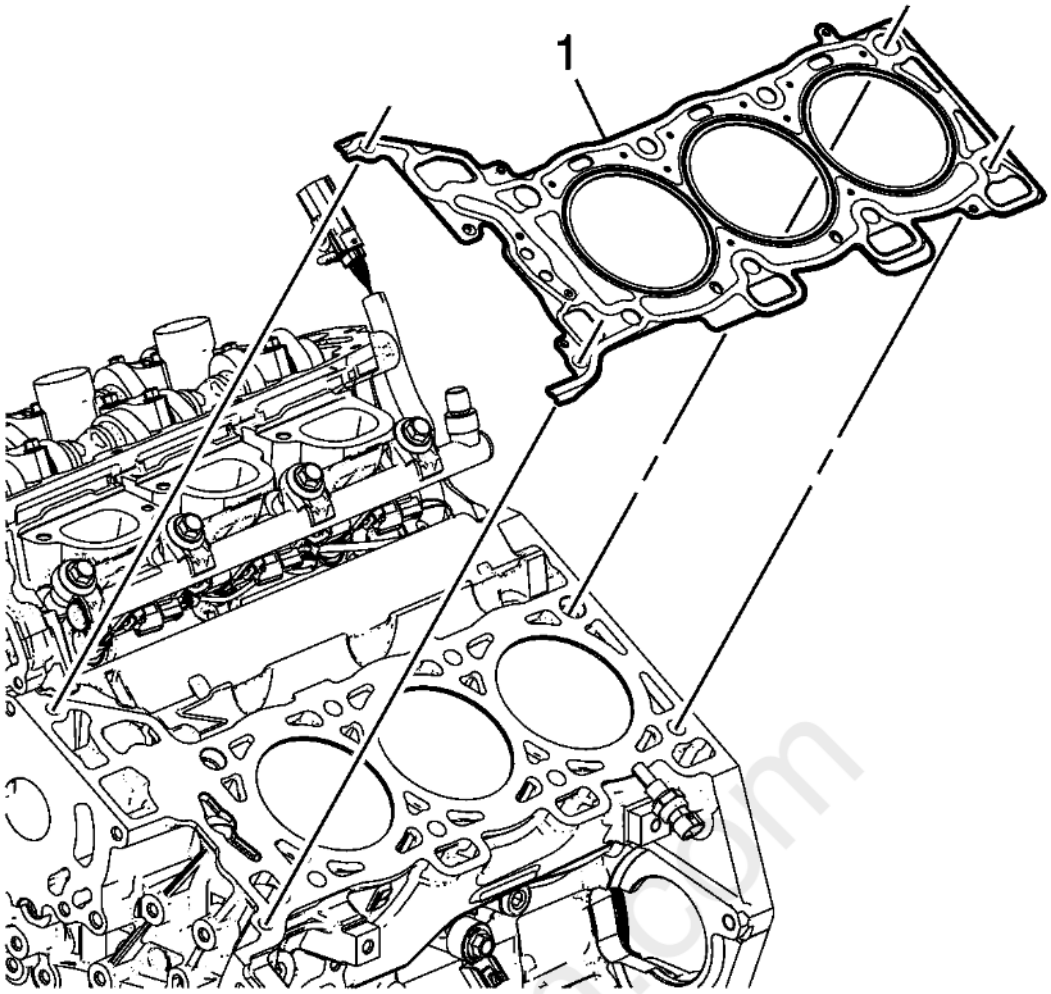

Fig. 159: Left Cylinder Head Gasket
Courtesy of GENERAL MOTORS COMPANY

1. Ensure the cylinder head locating pins are securely mounted in the cylinder block deck face.
2. Install a NEW left cylinder head gasket (1) using the deck face locating pins for retention.

cardiagn.com

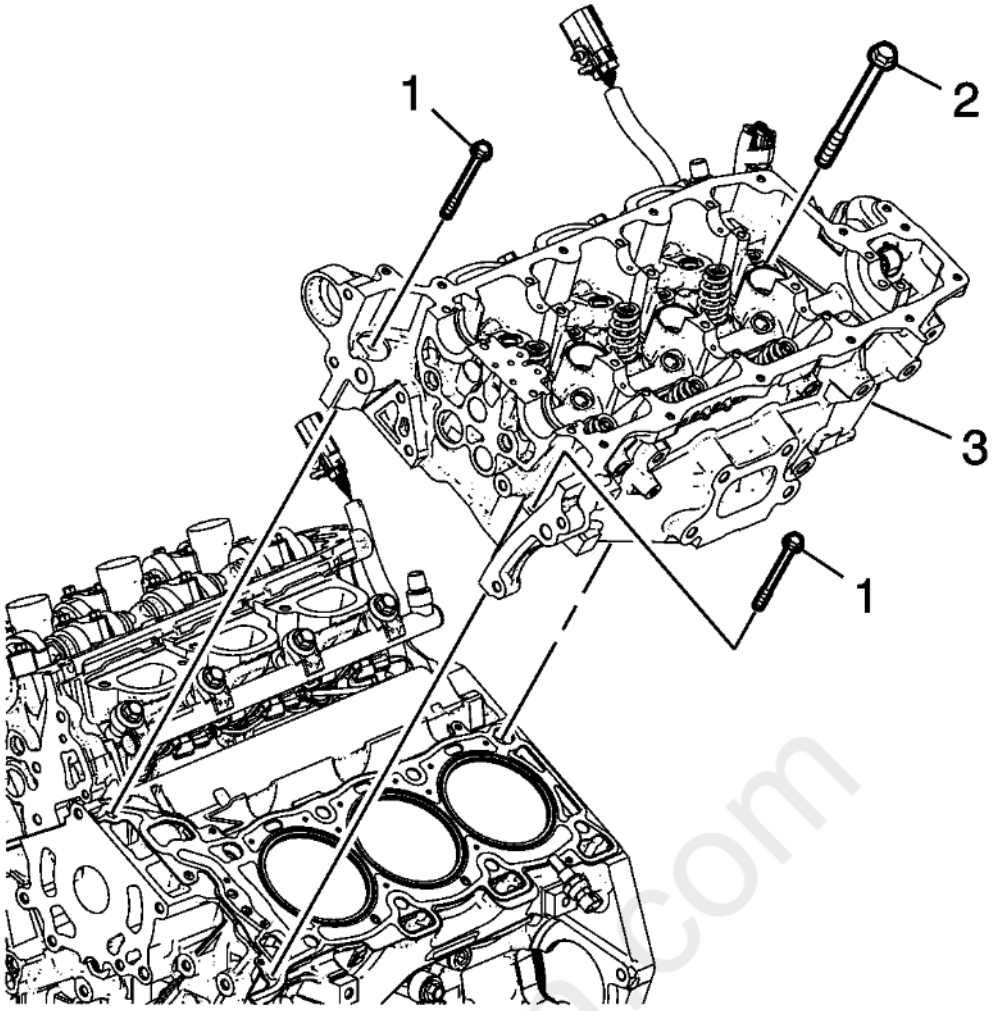

Fig. 160: Left Cylinder Head And Bolts
Courtesy of GENERAL MOTORS COMPANY

3. Align the left cylinder head (3) with the deck face locating pins.
4. Place the left cylinder head in position on the deck face.

cardiagn.com

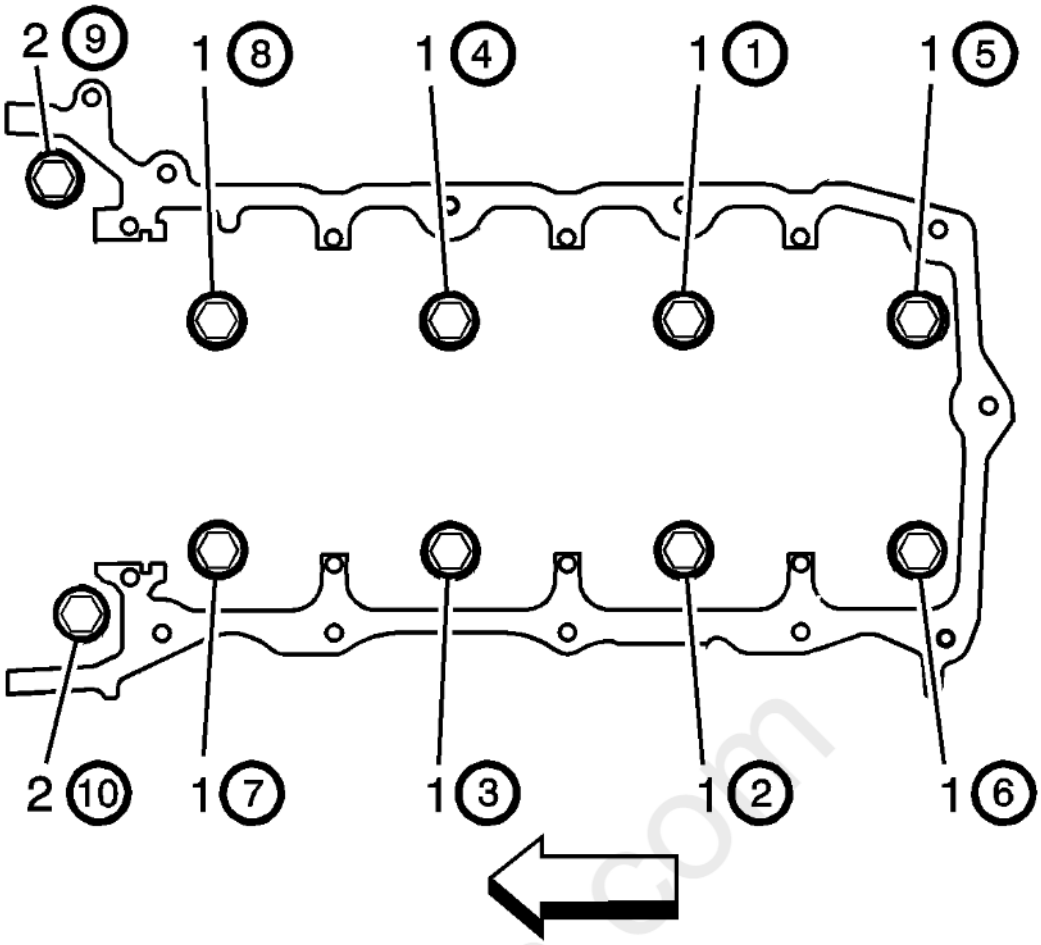

Fig. 161: Cylinder Head Bolt Tightening Sequence
Courtesy of GENERAL MOTORS COMPANY

CAUTION: Refer to Fastener Caution .

NOTE:

- **DO NOT allow oil on the cylinder head bolt bosses.**
- **DO NOT reuse the old cylinder head bolts.**

5. Install the NEW M11 cylinder head bolts (1).
    1. Tighten the M11 cylinder head bolts a first pass in sequence to 30 N.m (22 lb ft).
    2. Tighten the M11 cylinder head bolts a second pass in sequence an additional 150 degrees using the **EN-45059** meter.
6. Install the 2 NEW front M8 left cylinder head bolts (2).
    1. Tighten the M8 cylinder head bolts a first pass to 15 N.m (11 lb ft).
    2. Tighten the M8 cylinder head bolts a second pass in sequence an additional 75 degrees using the **EN-45059** meter.
7. Install the left bank secondary timing chain. Refer to **Secondary Camshaft Intermediate Drive Chain Replacement - Left Side**.
8. Install the fuel pump. Refer to **Fuel Pump Replacement (LFX)** .
9. Install the ground wire bolt and wire from the cylinder head.
10. Connect the engine coolant temperature sensor.
11. Install the catalytic converter. Refer to **Three-Way Catalytic Converter Replacement (LFX - Bank 2)** **Three-Way Catalytic Converter Replacement (LFX - Bank 1)** .
12. Install the oil level indicator tube. Refer to **Oil Level Indicator Tube Replacement**.

CYLINDER HEAD REPLACEMENT - RIGHT SIDE

Special Tools

EN-45059 Angle Meter

For equivalent regional tools, refer to **Special Tools** .

Removal Procedure

1. Remove the right bank secondary timing chain. Refer to **Secondary Camshaft Intermediate Drive Chain Replacement - Right Side**.
2. Remove the fuel feed pipe. Refer to **Fuel Feed Pipe Replacement (LFX)** .
3. Remove the fuel feed intermediate pipe. Refer to **Fuel Feed Intermediate Pipe Replacement** .
4. Remove the catalytic converter. Refer to **Three-Way Catalytic Converter Replacement (LFX - Bank 2)** **Three-Way Catalytic Converter Replacement (LFX - Bank 1)** .
5. Remove the ground wire from rear of the right cylinder head.

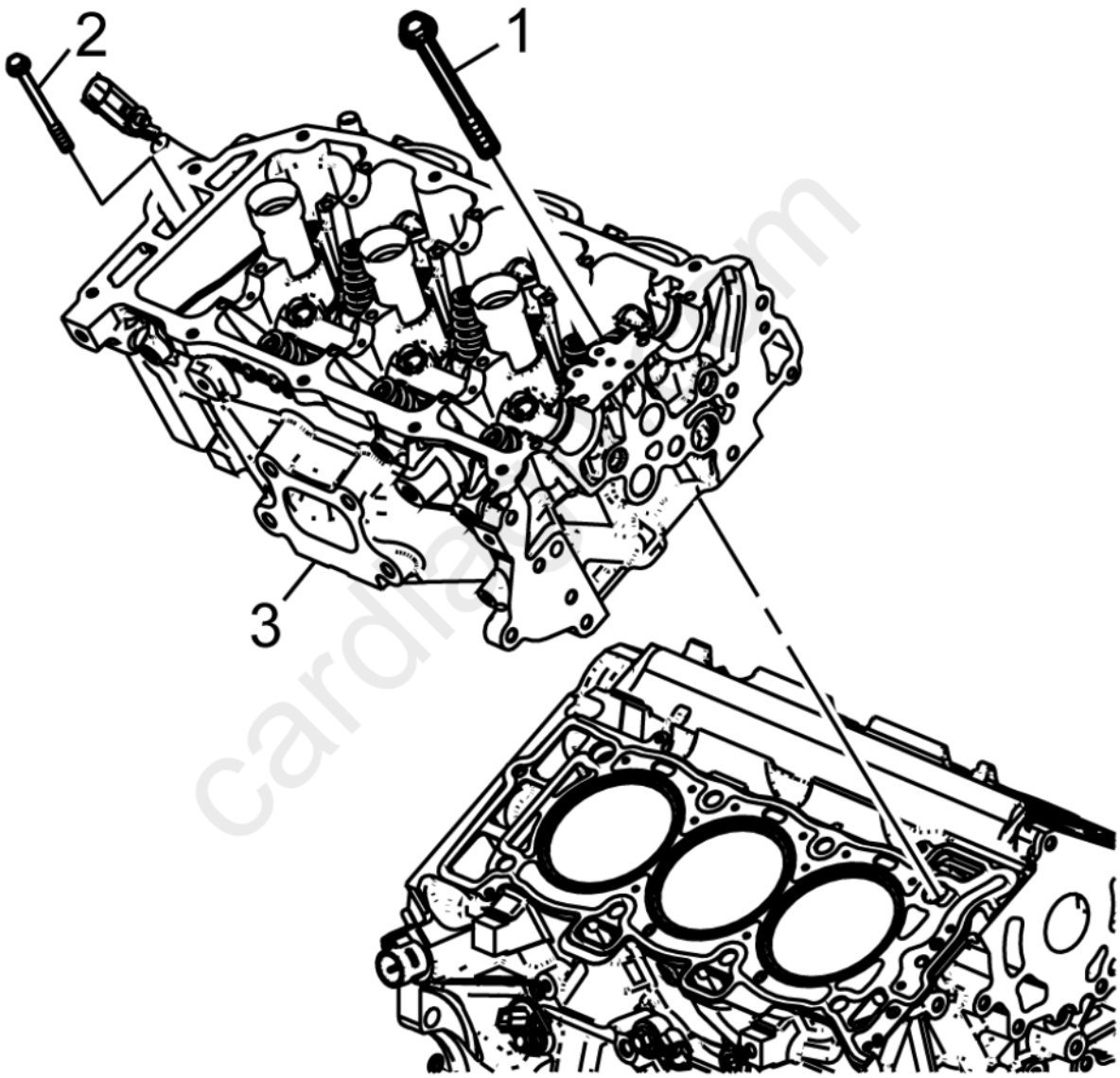

Fig. 162: Right Cylinder Head And Bolts
Courtesy of GENERAL MOTORS COMPANY

6. Remove the right cylinder head bolts (1).
7. Remove the right cylinder head (2).

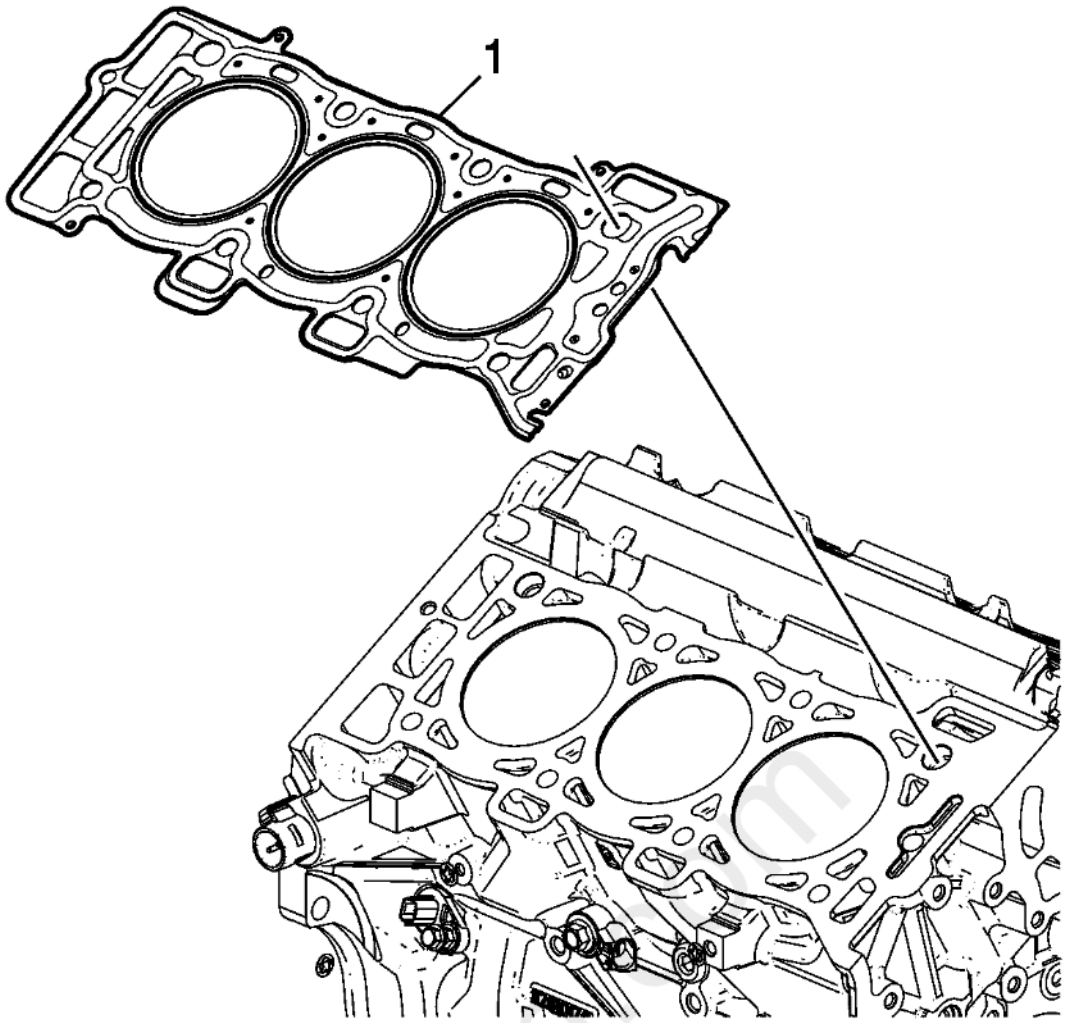

Fig. 163: Right Cylinder Head Gasket
Courtesy of GENERAL MOTORS COMPANY

8. Remove and discard the cylinder head gasket (1).
9. Clean and inspect the cylinder head and the engine block sealing surfaces. Refer to **Cylinder Head Cleaning and Inspection** , and **Engine Block Cleaning and Inspection** .
10. Disassemble the cylinder head if needed. Refer to **Cylinder Head Disassemble** .

Installation Procedure

carmanuals.com

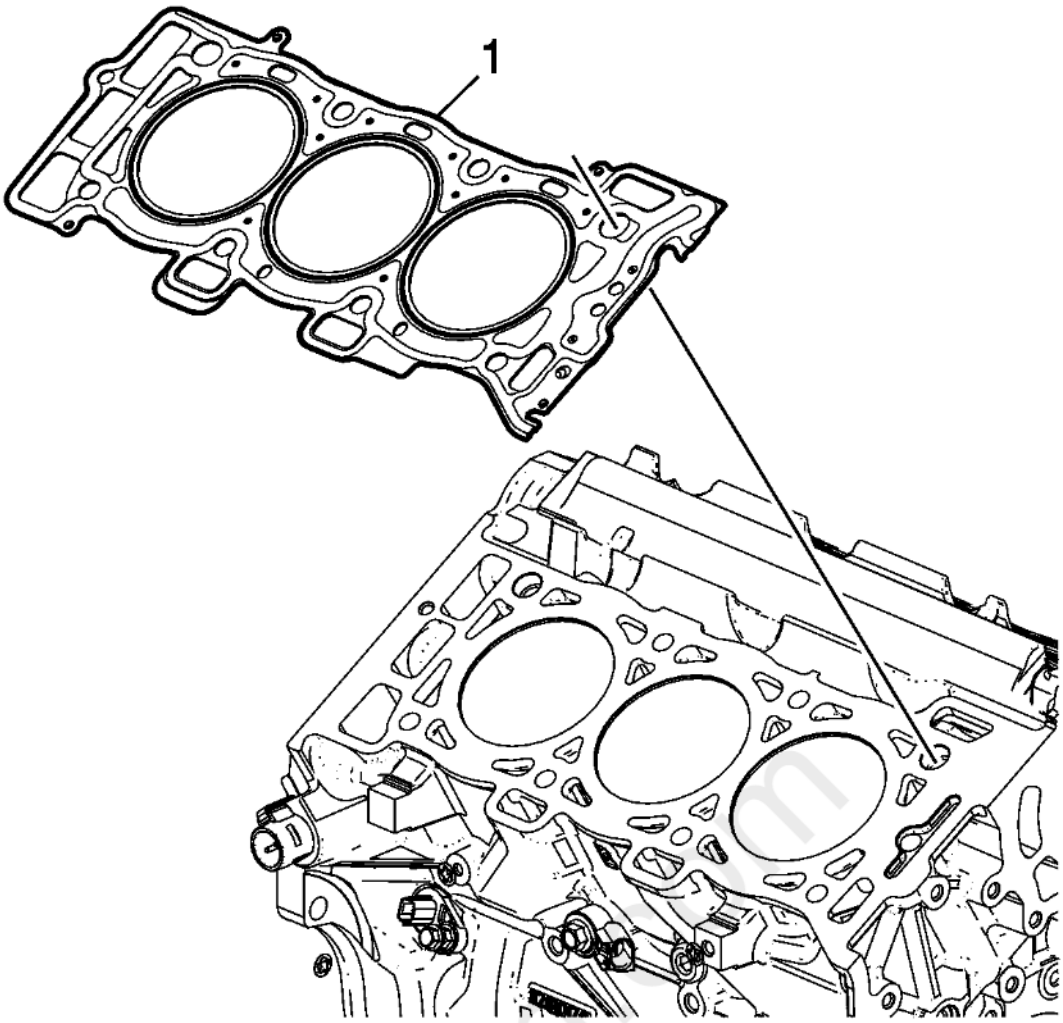

Fig. 164: Right Cylinder Head Gasket
Courtesy of GENERAL MOTORS COMPANY

1. Ensure the cylinder head locating pins are securely mounted in the cylinder block deck face.
2. Install a NEW right cylinder head gasket (1) using the deck face locating pins for retention.

cardiagn.com

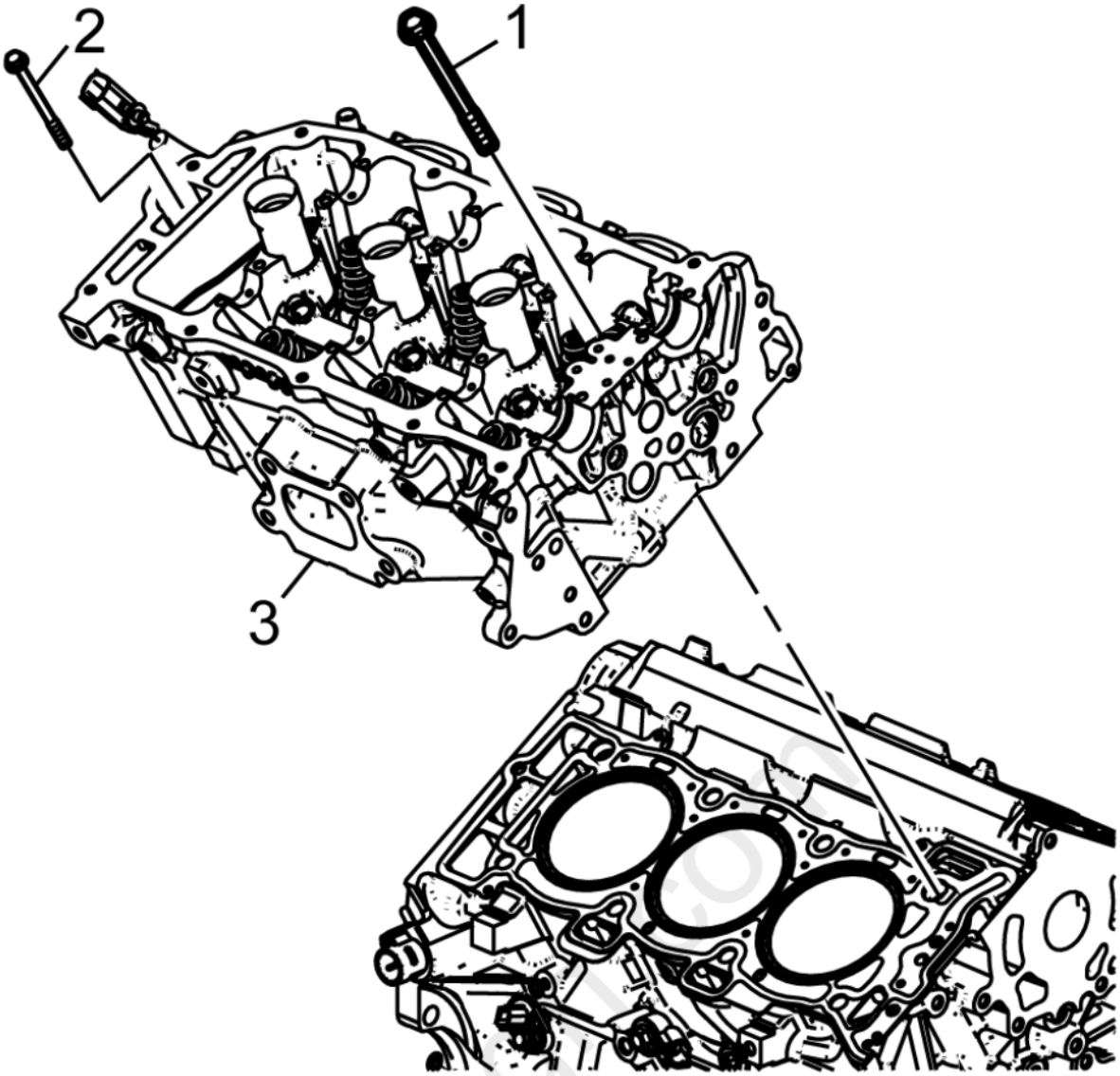

Fig. 165: Right Cylinder Head And Bolts
Courtesy of GENERAL MOTORS COMPANY

3. Align the right cylinder head (2) with the deck face locating pins.
4. Place the right cylinder head in position on the deck face.

carmanuals.com

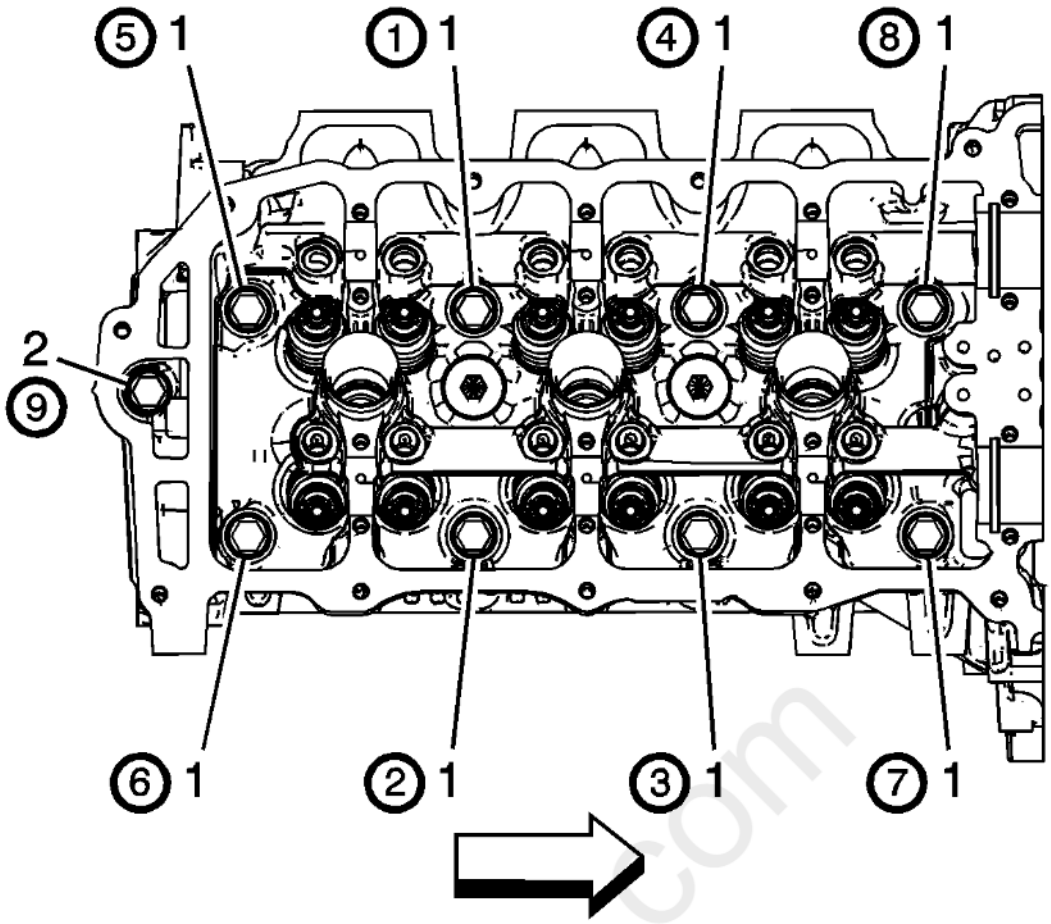

Fig. 166: Cylinder Head Bolt Tightening Sequence
Courtesy of GENERAL MOTORS COMPANY

CAUTION: Refer to Fastener Caution .

NOTE:

- **DO NOT allow oil on the cylinder head bolt bosses.**
- **DO NOT reuse the old cylinder head bolts.**

5. Install the NEW M11 cylinder head bolts (1).
    1. Tighten the M11 cylinder head bolts a first pass in sequence to 30 N.m (22 lb ft).
    2. Tighten the M11 cylinder head bolts a second pass in sequence an additional 150 degrees using the **EN-45059** meter.
6. Install the NEW M8 cylinder head bolt (2).
    1. Tighten the M8 cylinder head bolt a first pass to 15 N.m (11 lb ft).
    2. Tighten the M8 cylinder head bolt a second pass an additional 75 degrees using the **EN-45059** meter.
7. Install the ground wire to the rear of the right cylinder head.
8. Install the catalytic converter. Refer to Three-Way Catalytic Converter Replacement (LFX - Bank 2) Three-Way Catalytic Converter Replacement (LFX - Bank 1) .
9. Install the fuel feed intermediate pipe. Refer to Fuel Feed Intermediate Pipe Replacement .
10. Install the fuel feed pipe. Refer to Fuel Feed Pipe Replacement (LFX) .
11. Install the right bank secondary timing chain. Refer to Secondary Camshaft Intermediate Drive Chain Replacement - Right Side.

AUTOMATIC TRANSMISSION FLEX PLATE REPLACEMENT

Special Tools

EN-46106 Holding Tool

For equivalent regional tools, refer to **Special Tools** .

Removal Procedure

1. Remove the transmission. Refer to **Transmission Replacement** .

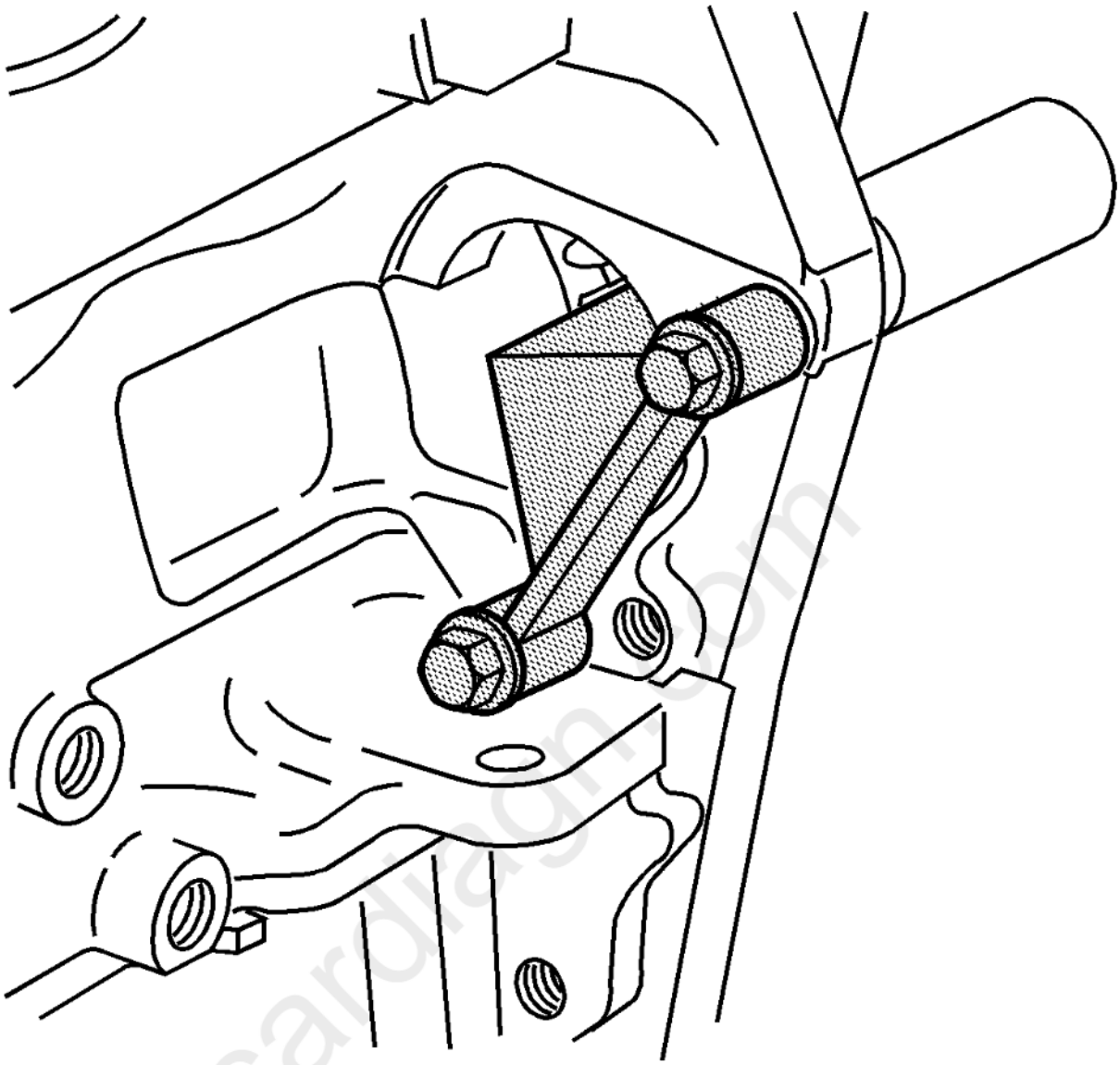

Fig. 167: Flywheel Holding Fixture
Courtesy of GENERAL MOTORS COMPANY

2. Remove the starter. Refer to **Starter Replacement (LFX)**
3. Install the **EN 46106** Holding Tool through the starter mounting hole.

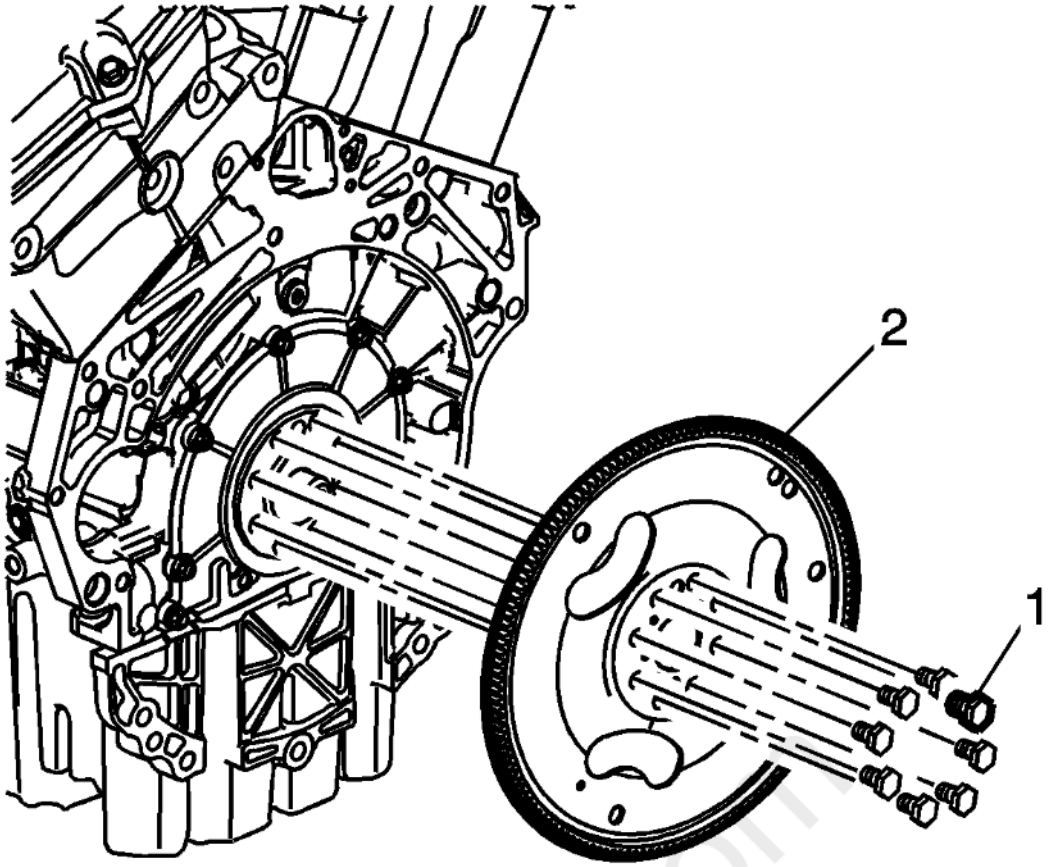

Fig. 168: Flex Plate And Bolts
Courtesy of GENERAL MOTORS COMPANY

4. Remove the flex plate bolts (1) and discard.
5. Remove the flex plate (2).
6. Clean and inspect the flex plate. Refer to **Automatic Transmission Flex Plate Cleaning and Inspection** . If the flex plate teeth are damaged, inspect the starter for proper operation. Replace the starter if you find excessive wear or damage to the starter drive. Refer to **Starter Replacement (LFX)** .

Installation Procedure

Cardiagn.com

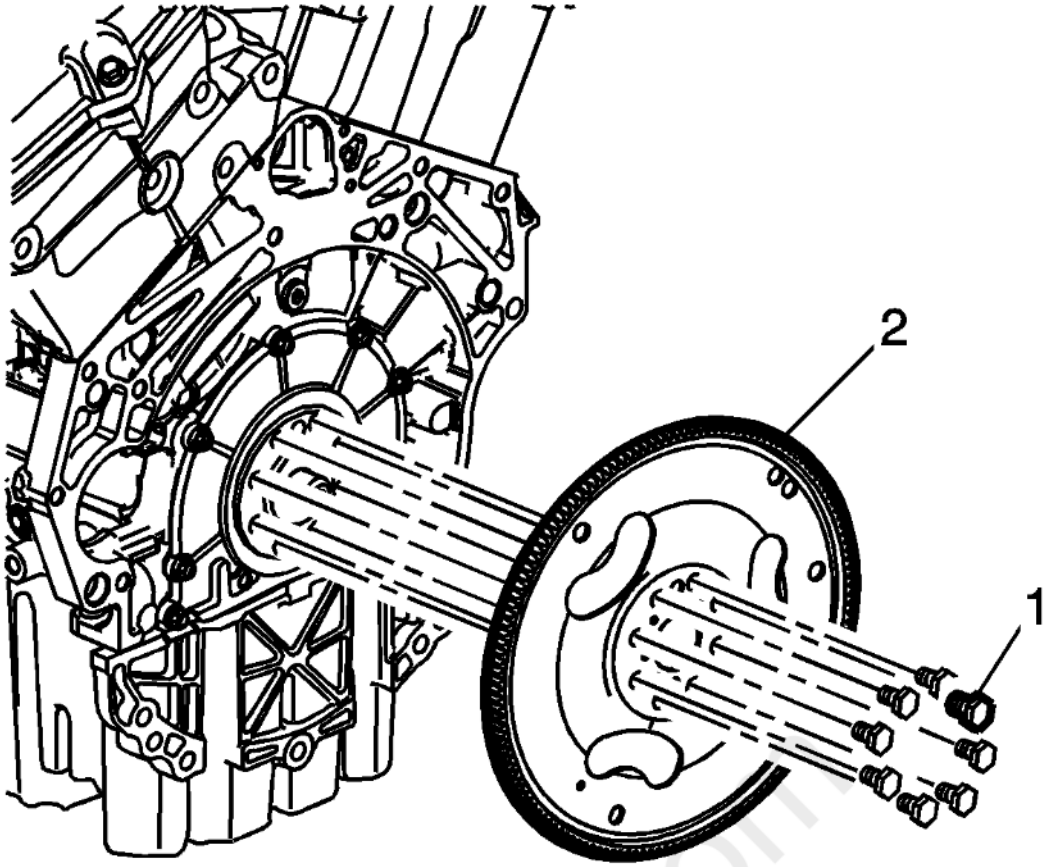

Fig. 169: Flex Plate And Bolts
Courtesy of GENERAL MOTORS COMPANY

1. Position the flex plate (2) to the crankshaft.

CAUTION: **Refer to Fastener Caution .**

2. Install NEW flex plate bolts (1) and tighten to 30 N.m (22 lb ft) plus and additional 45 degrees.

cardiagn.com

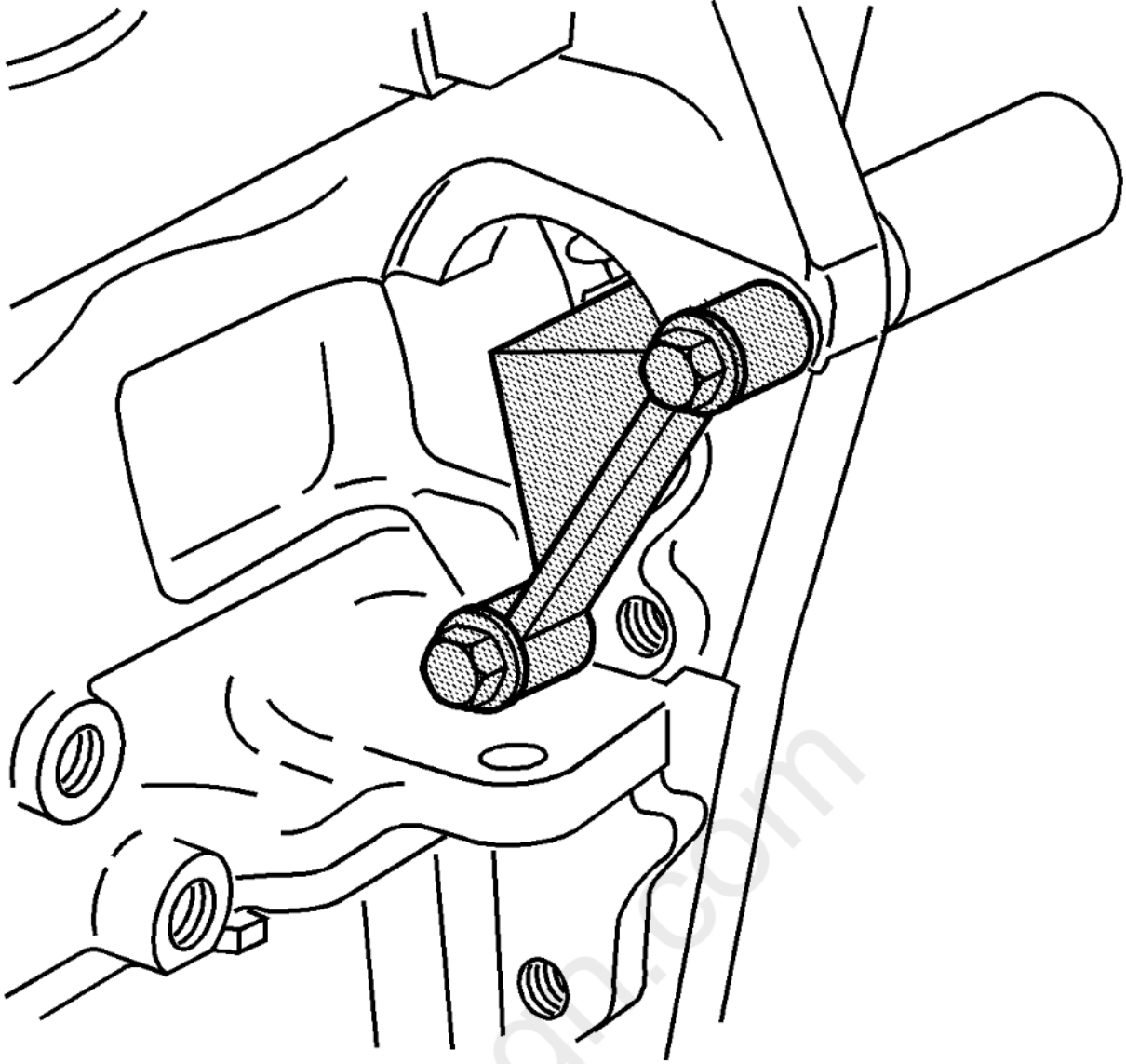

Fig. 170: Flywheel Holding Fixture
Courtesy of GENERAL MOTORS COMPANY

3. Remove the **EN 46106** Holding Tool.
4. Install the starter. Refer to **Starter Replacement (LFX)**
5. Install the transmission. Refer to **Transmission Replacement** .

CRANKSHAFT REAR OIL SEAL AND HOUSING REPLACEMENT

Special Tools

- **EN-42183** Handle
- **EN-46109** Guide Pin Set
- **EN-47839** Crankshaft Rear Oil Seal Installation Tool

For equivalent regional tools, refer to **Special Tools** .

Removal Procedure

1. Remove the flex plate. Refer to **Automatic Transmission Flex Plate Replacement**.
2. Remove the oil pan. Refer to **Oil Pan Replacement**.

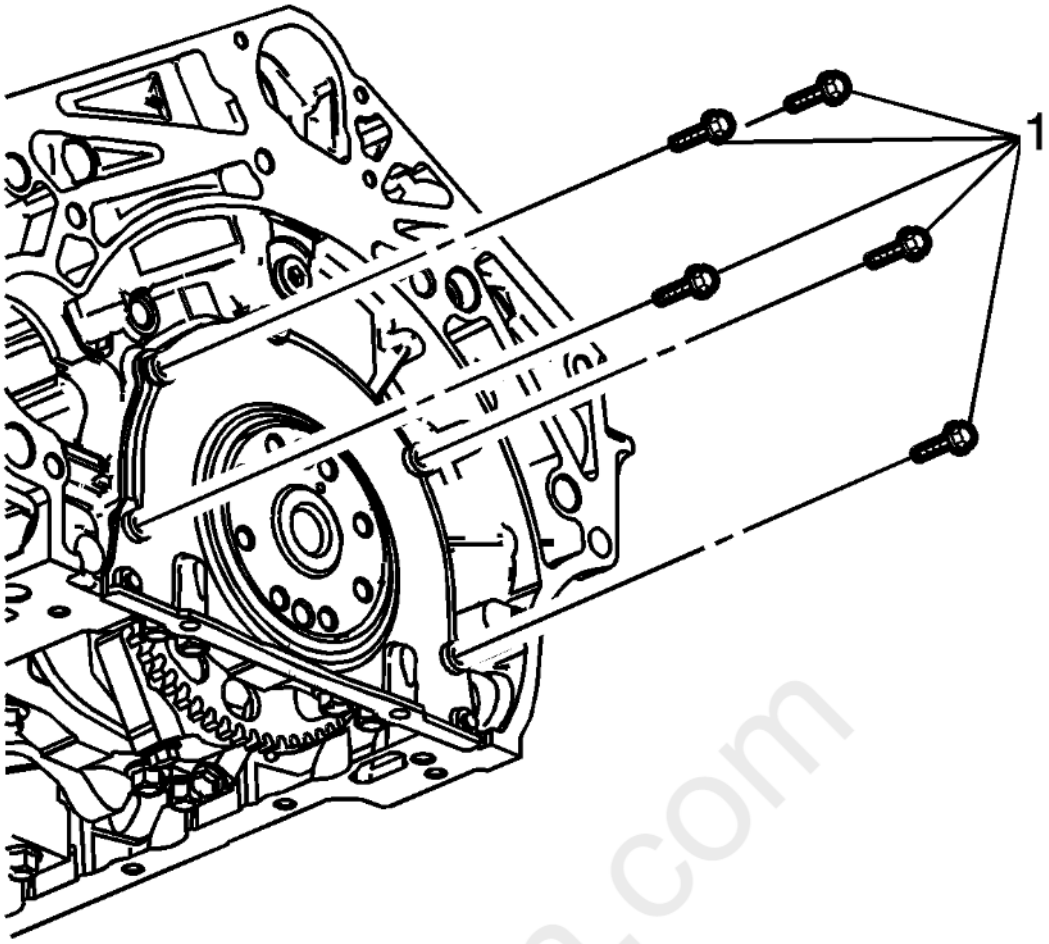

Fig. 171: Crankshaft Rear Oil Seal & Housing Bolts
Courtesy of GENERAL MOTORS COMPANY

3. Remove the crankshaft rear oil seal and housing bolts (1).

cardiagn.com

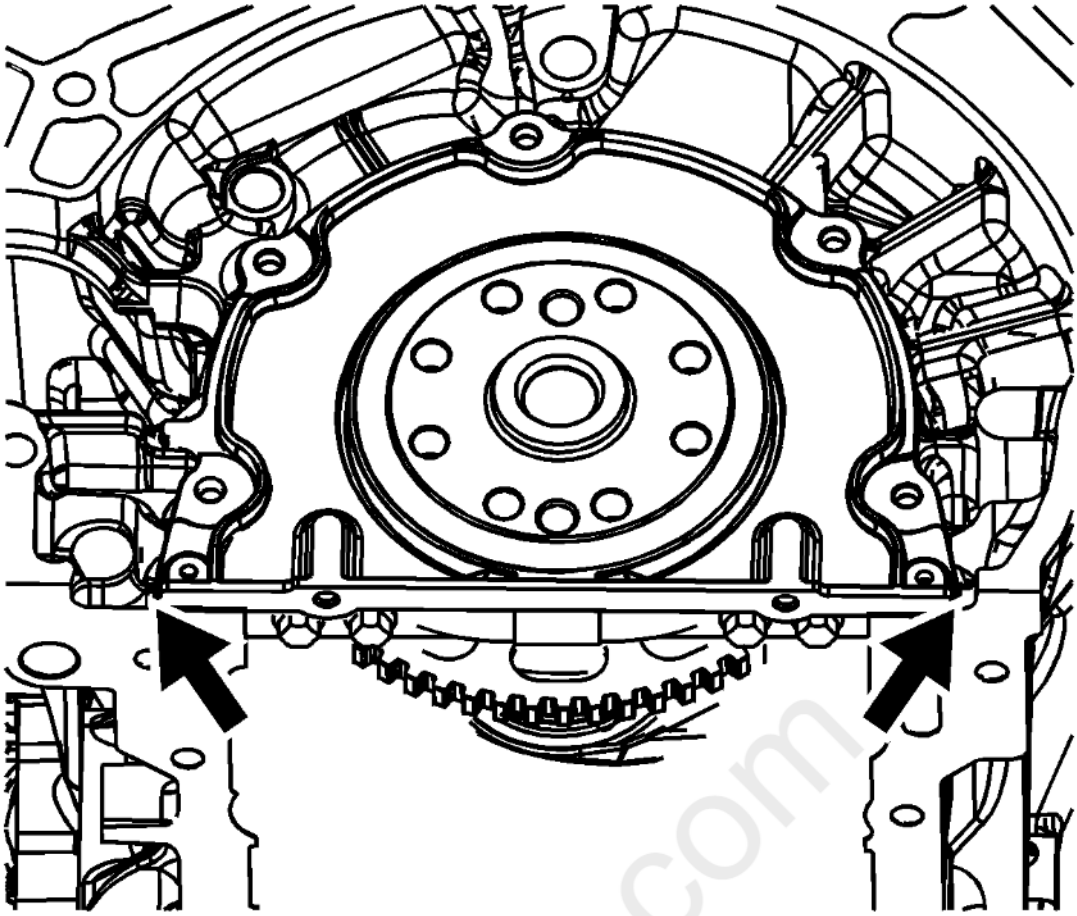

Fig. 172: Crankshaft Rear Oil Seal Housing Pry Points
Courtesy of GENERAL MOTORS COMPANY

4. Use the pry points located at the edge of the crankshaft rear oil seal housing to separate the RTV sealant.

cardiagn.com

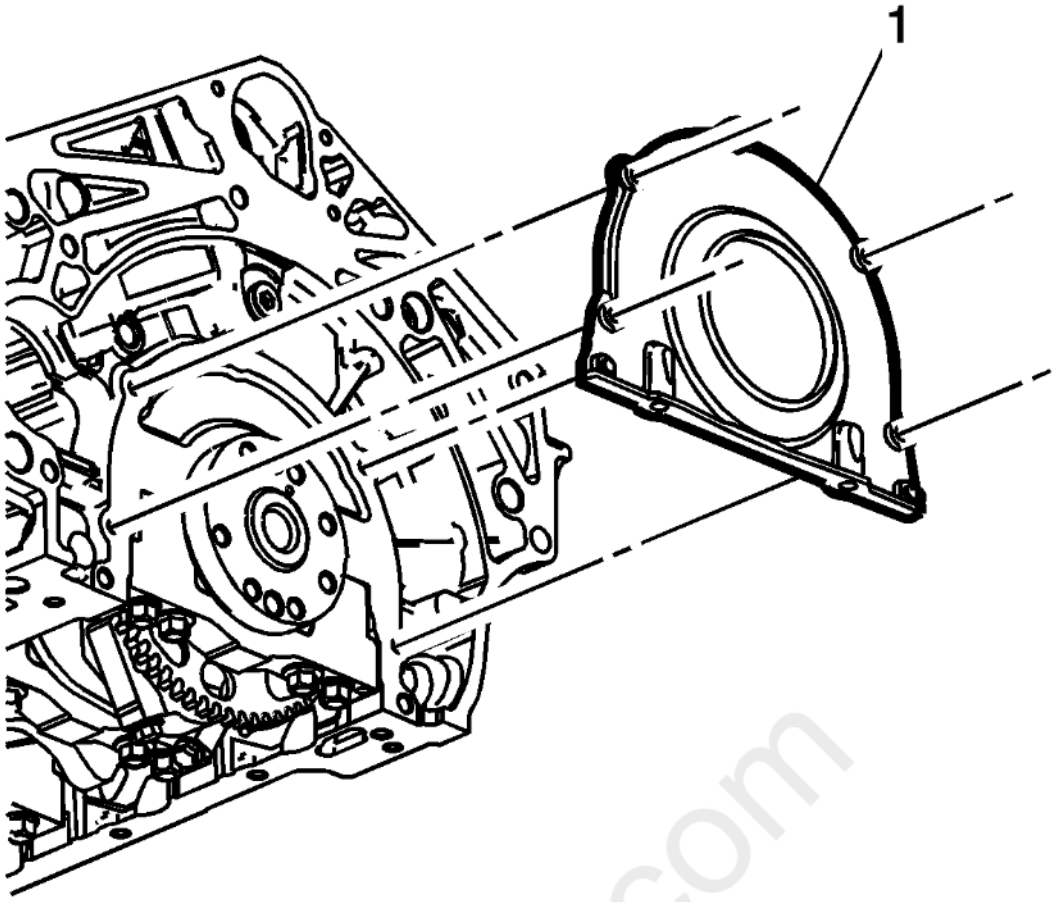

Fig. 173: Crankshaft Rear Oil Seal Housing
Courtesy of GENERAL MOTORS COMPANY

5. Remove and discard the crankshaft rear oil seal and housing (1). Refer to **Crankshaft Rear Oil Seal and Housing Removal** .

Installation Procedure

cardiagn.com

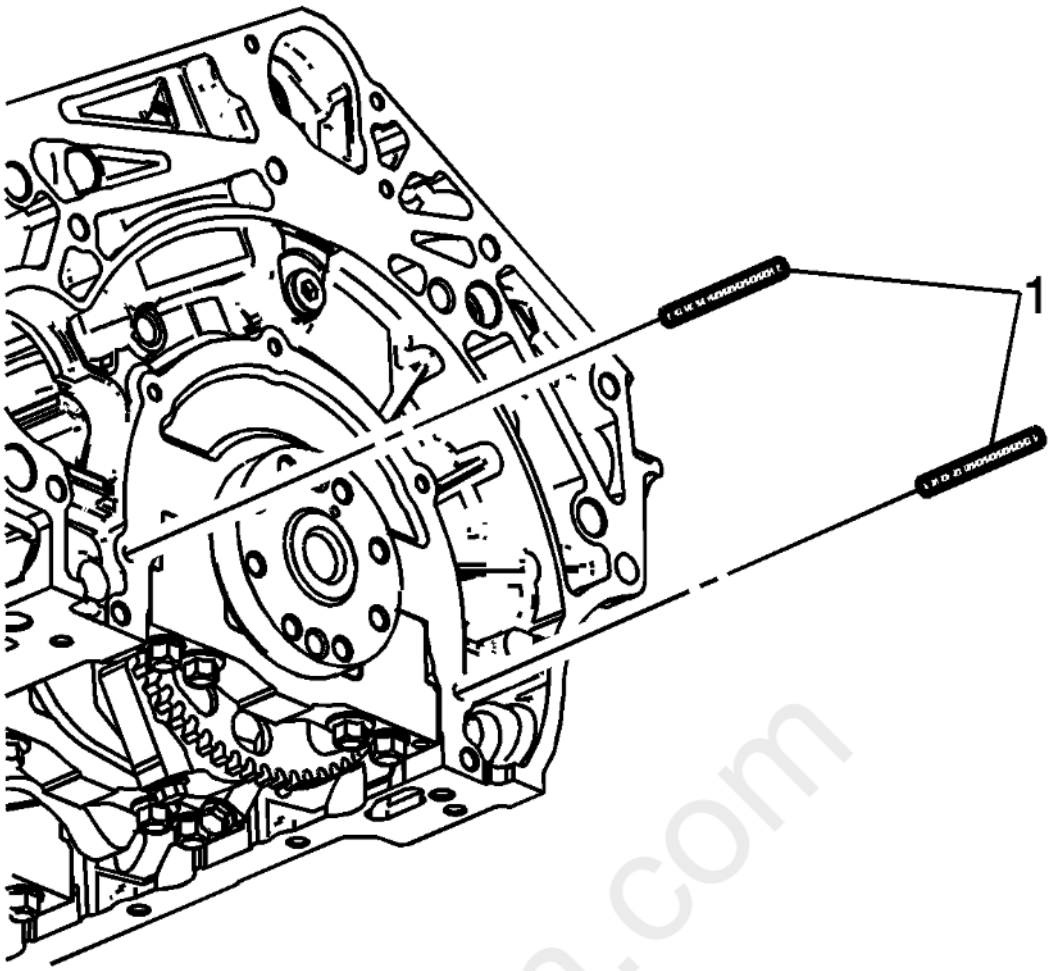

Fig. 174: Guide Pin Set
Courtesy of GENERAL MOTORS COMPANY

1. Install the 6 mm (0.236 in) guides from the EN-46109 pin set into the 2 crankshaft rear oil seal housing corner bolt holes of the engine block

carmagn.com

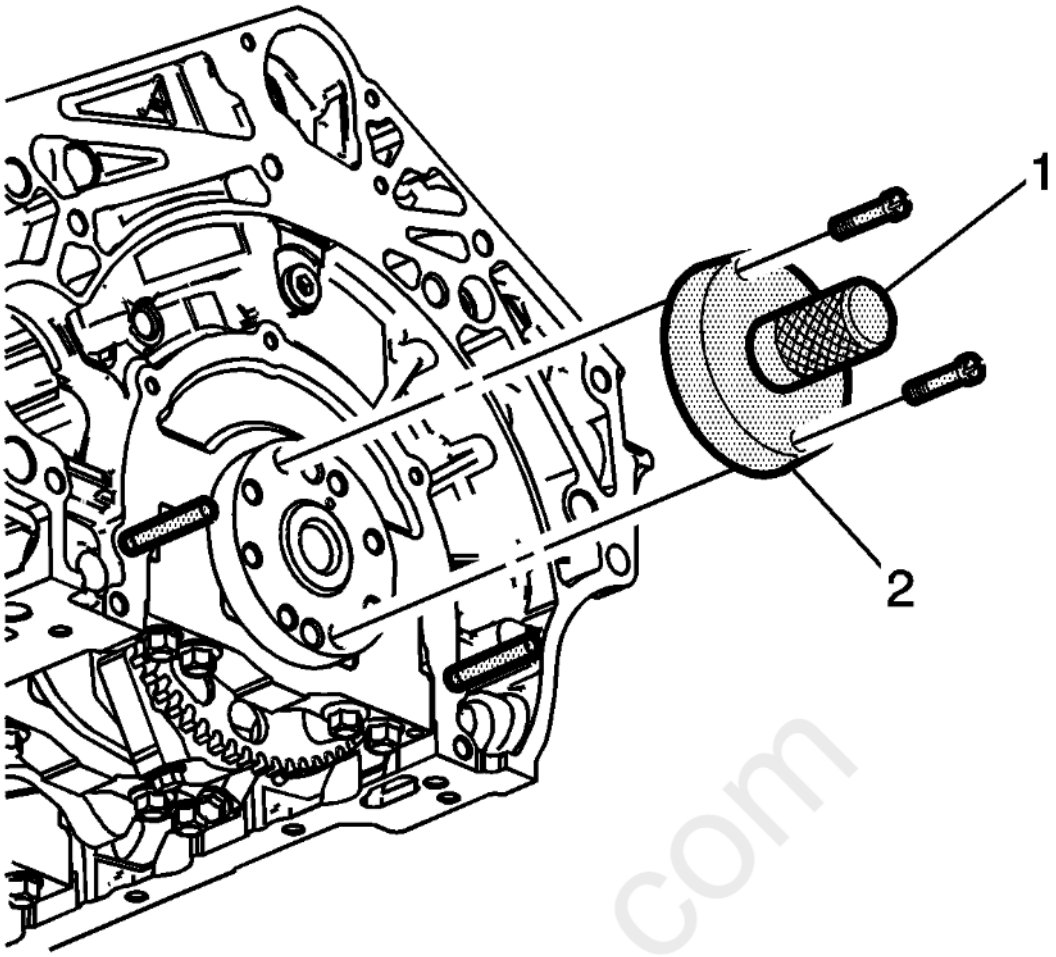

Fig. 175: Crankshaft Rear Oil Seal Installation Tool & Handle
Courtesy of GENERAL MOTORS COMPANY

2. Install the EN-47839 tool with the EN-42183 handle (1, 2) onto the rear of the crankshaft flange.

cardiagn.com

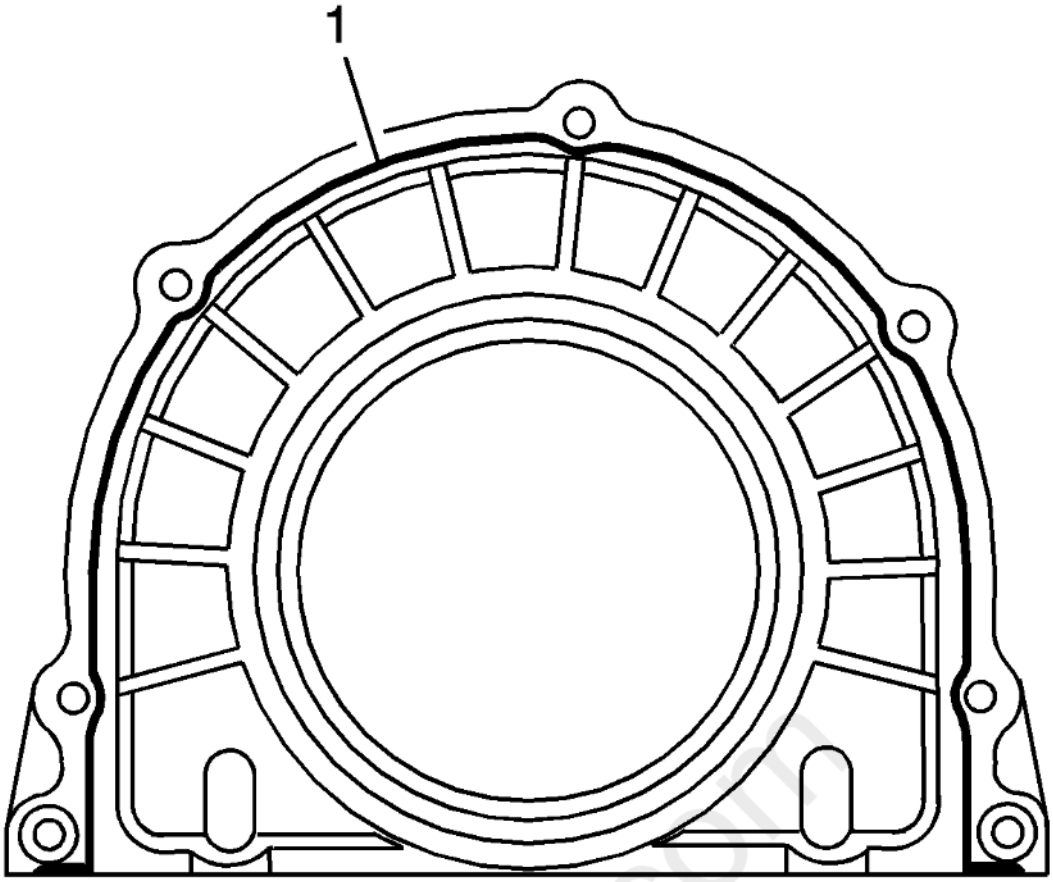

Fig. 176: RTV Sealant On Crankshaft Rear Oil Seal Housing
Courtesy of GENERAL MOTORS COMPANY

3. Place a 3 mm (0.118 in) bead of RTV sealant (1) to the NEW crankshaft rear oil seal housing as shown (1). Refer to **Adhesives, Fluids, Lubricants, and Sealers** , for recommended sealant.

cardiagn.com

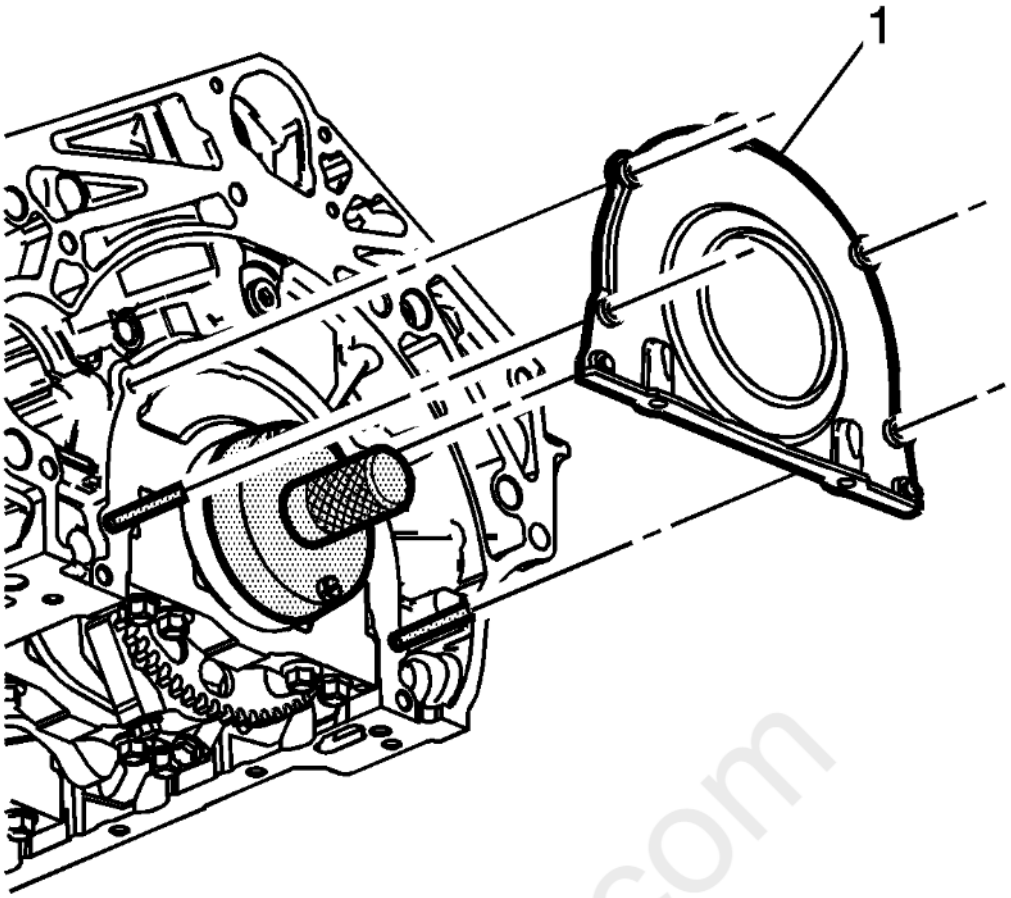

Fig. 177: Crankshaft Rear Oil Seal Housing
Courtesy of GENERAL MOTORS COMPANY

NOTE: **DO NOT allow any engine oil on the area where the crankshaft rear oil seal housing is to be installed.**

4. Install the crankshaft rear oil seal housing (1) to the engine block.

cardiagn.com

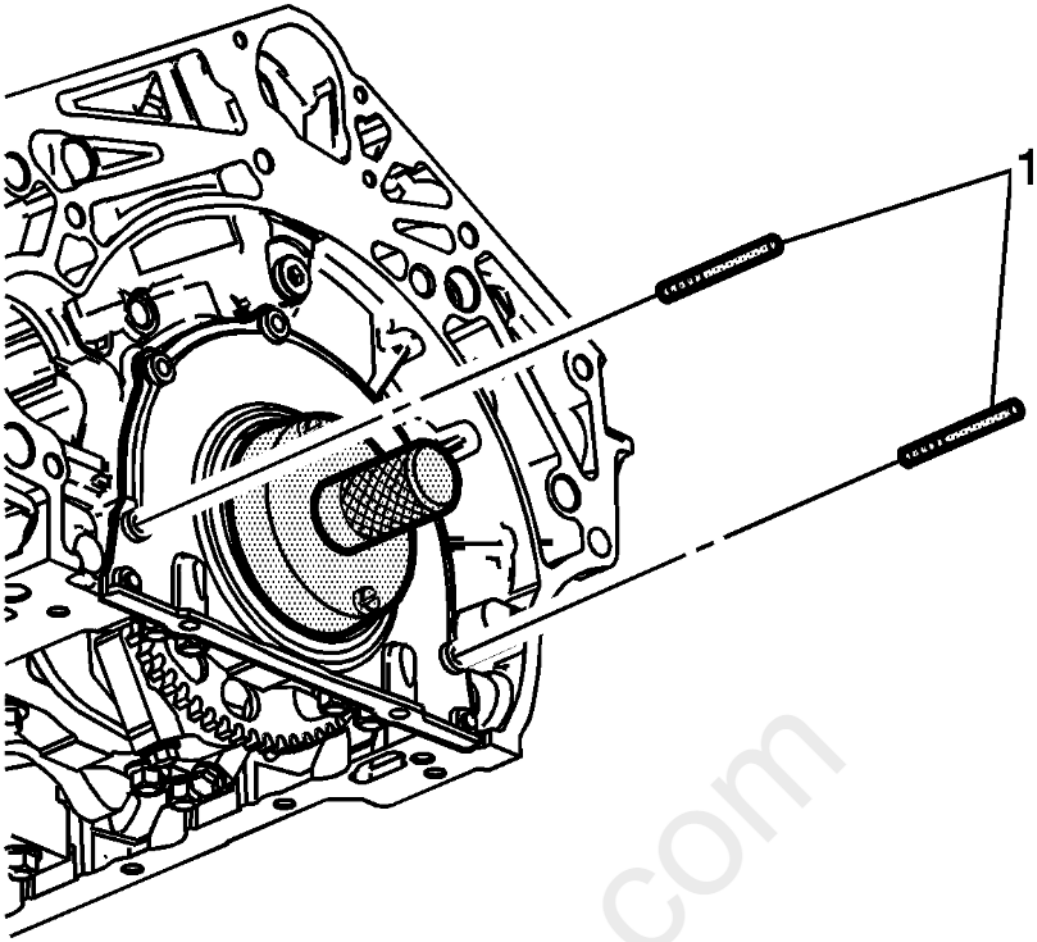

Fig. 178: Guide Pin Set
Courtesy of GENERAL MOTORS COMPANY

5. Remove the EN-46109 pin set 6 mm (0.236 in) guides (1) from the engine block.

cardiagn.com

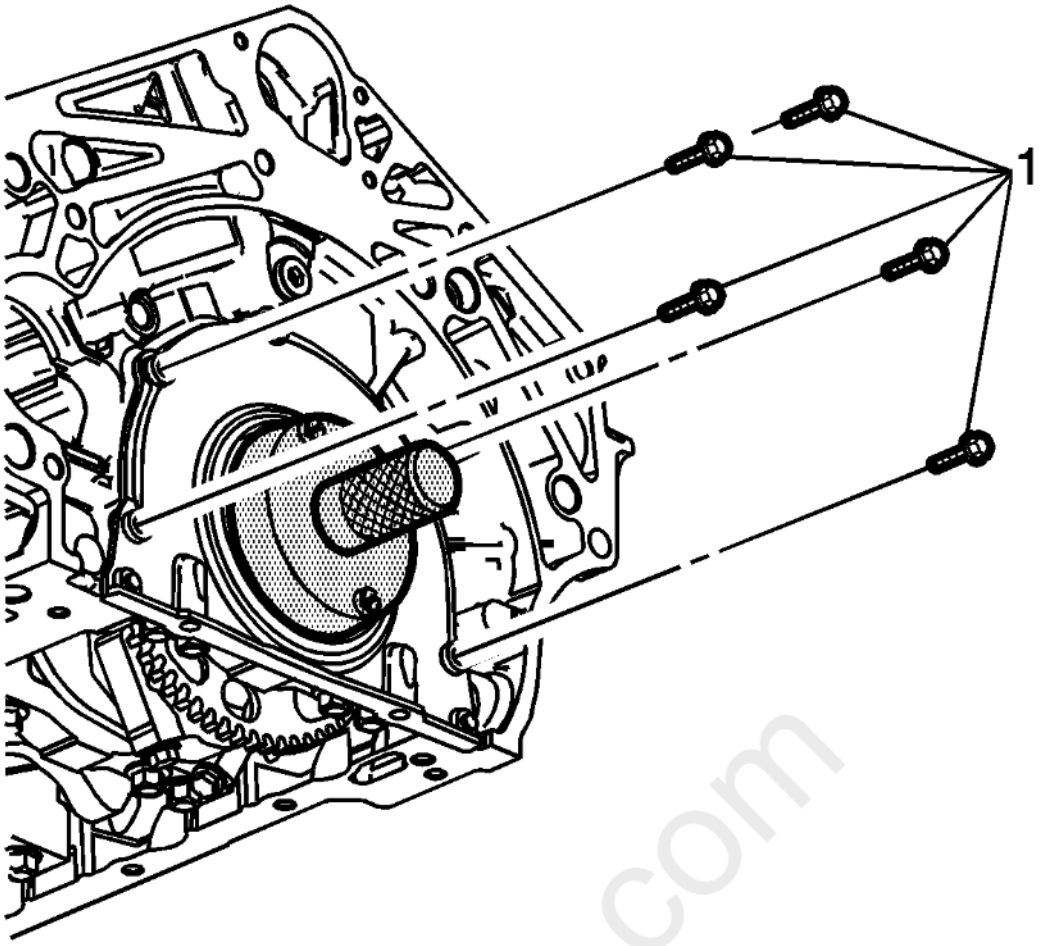

Fig. 179: Crankshaft Rear Oil Seal Housing Bolts
Courtesy of GENERAL MOTORS COMPANY

6. Install the crankshaft rear oil seal housing bolts (1).

cardiagn.com

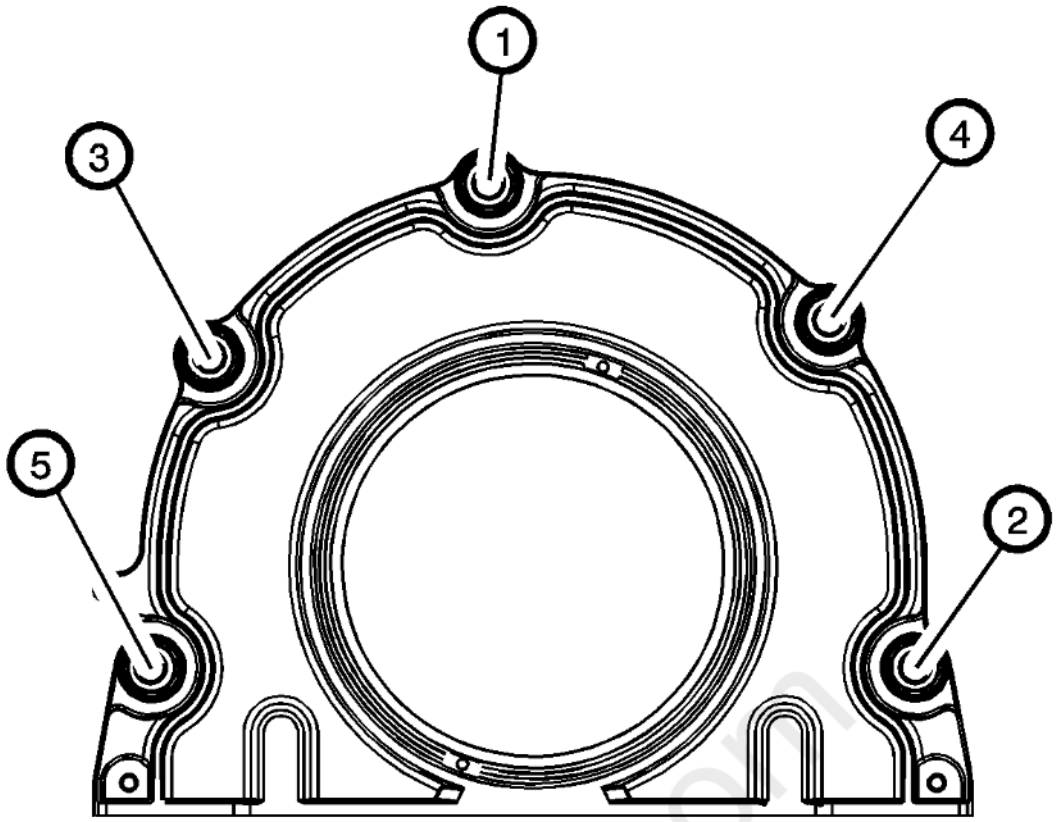

Fig. 180: Crankshaft Rear Oil Seal Housing Bolt Tightening Sequence
Courtesy of GENERAL MOTORS COMPANY

CAUTION: **Refer to Fastener Caution .**

7. Tighten the crankshaft rear oil seal housing bolts in sequence and tighten to 10 N.m (89 lb in).

cardiagn.com

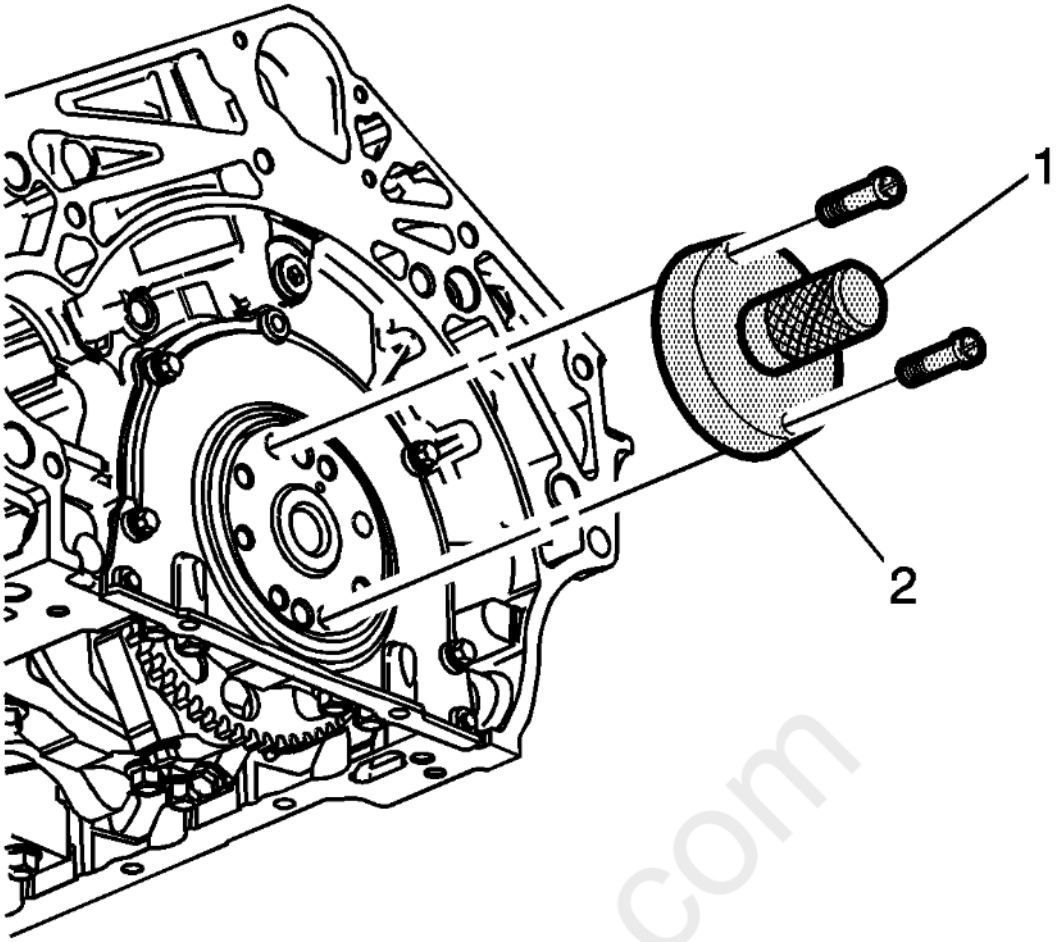

Fig. 181: Crankshaft Rear Oil Seal Installation Tool & Handle
Courtesy of GENERAL MOTORS COMPANY

8. Remove the EN-47839 tool and EN-42183 handle (1, 2) from the crankshaft flange.
9. Install the oil pan. Refer to **Oil Pan Replacement**.
10. Install the flex plate. Refer to **Automatic Transmission Flex Plate Replacement**.

OIL PUMP REPLACEMENT

Removal Procedure

carmagn.com

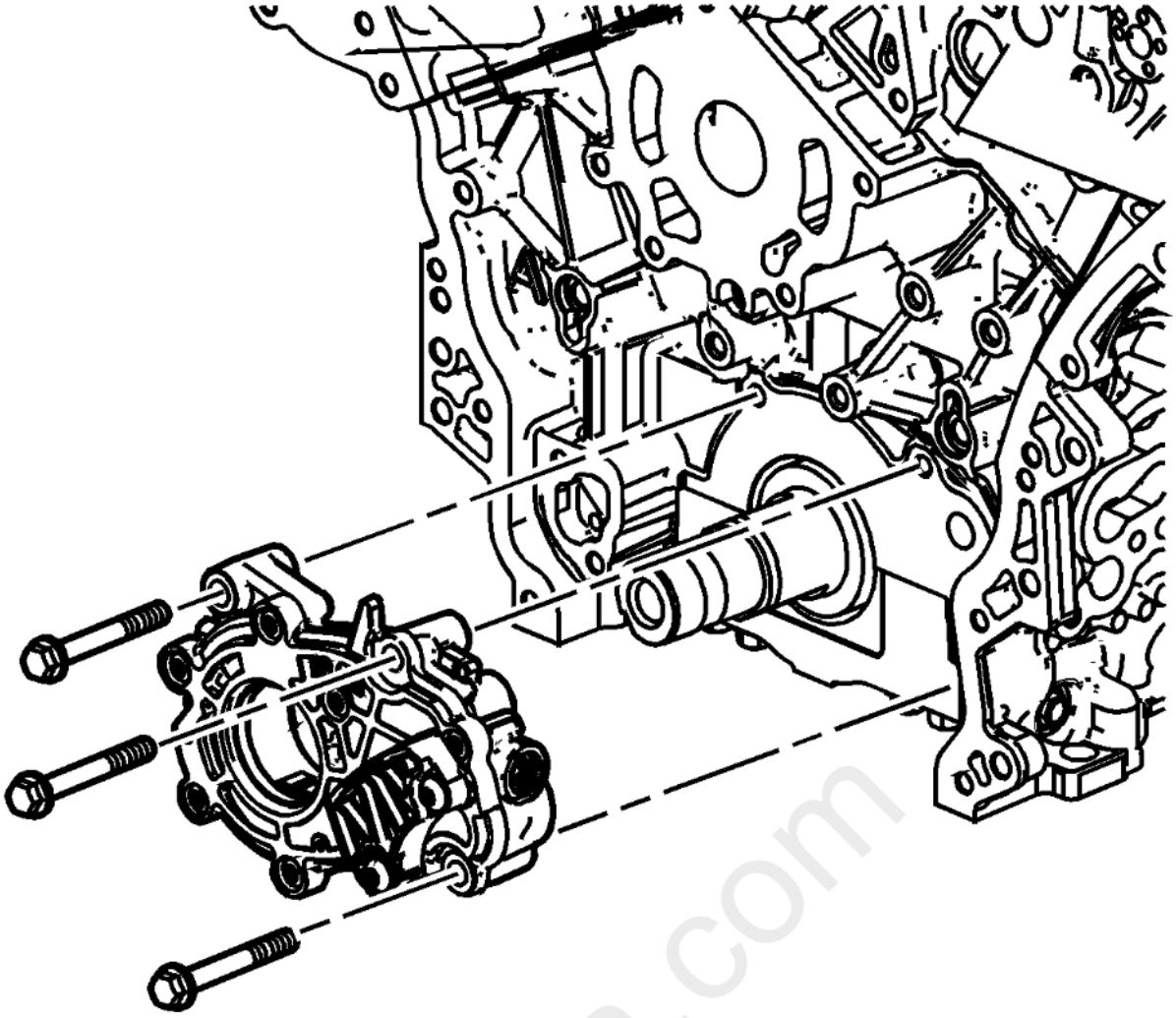

Fig. 182: Oil Pump And Mounting Bolts
Courtesy of GENERAL MOTORS COMPANY

NOTE: **Do not remove the left bank idler sprocket.**

1. Remove the primary timing chain. Refer to **Primary Camshaft Drive Chain and Sprockets Replacement**.
2. Remove the crankshaft sprocket. Refer to **Crankshaft Sprocket Removal** .
3. Remove the oil pump bolts and the oil pump.

Installation Procedure

carmagn.com

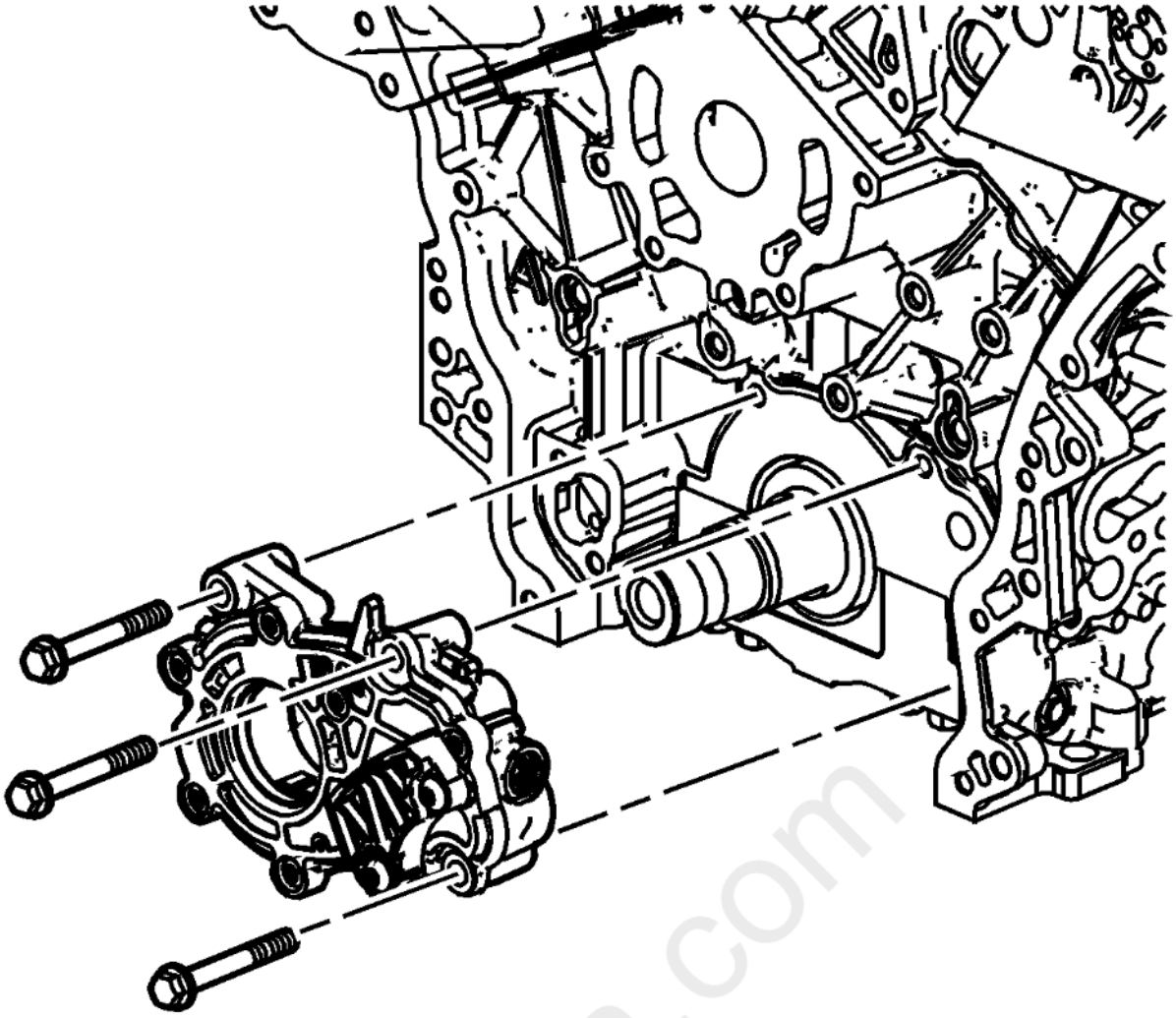

Fig. 183: Oil Pump And Mounting Bolts
Courtesy of GENERAL MOTORS COMPANY

1. Install the oil pump and bolts. Refer to **Oil Pump Installation**
2. Install the crankshaft sprocket. Refer to **Crankshaft Sprocket Installation** .
3. Install the primary timing chain. Refer to **Primary Camshaft Drive Chain and Sprockets Replacement**.

OIL PAN REPLACEMENT

Special Tools

EN-46109 Guide Pin Set

For equivalent regional tools, refer to **Special Tools** .

Removal Procedure

1. Drain the engine oil and remove the oil filter. Refer to **Engine Oil and Oil Filter Replacement**.
2. Remove the front wheel drive intermediate shaft bracket. Refer to **Front Wheel Drive Intermediate Shaft Bracket Replacement (LFX with M7W)** .
3. Remove the front cover. Refer to **Engine Front Cover Replacement**.

carmagn.com

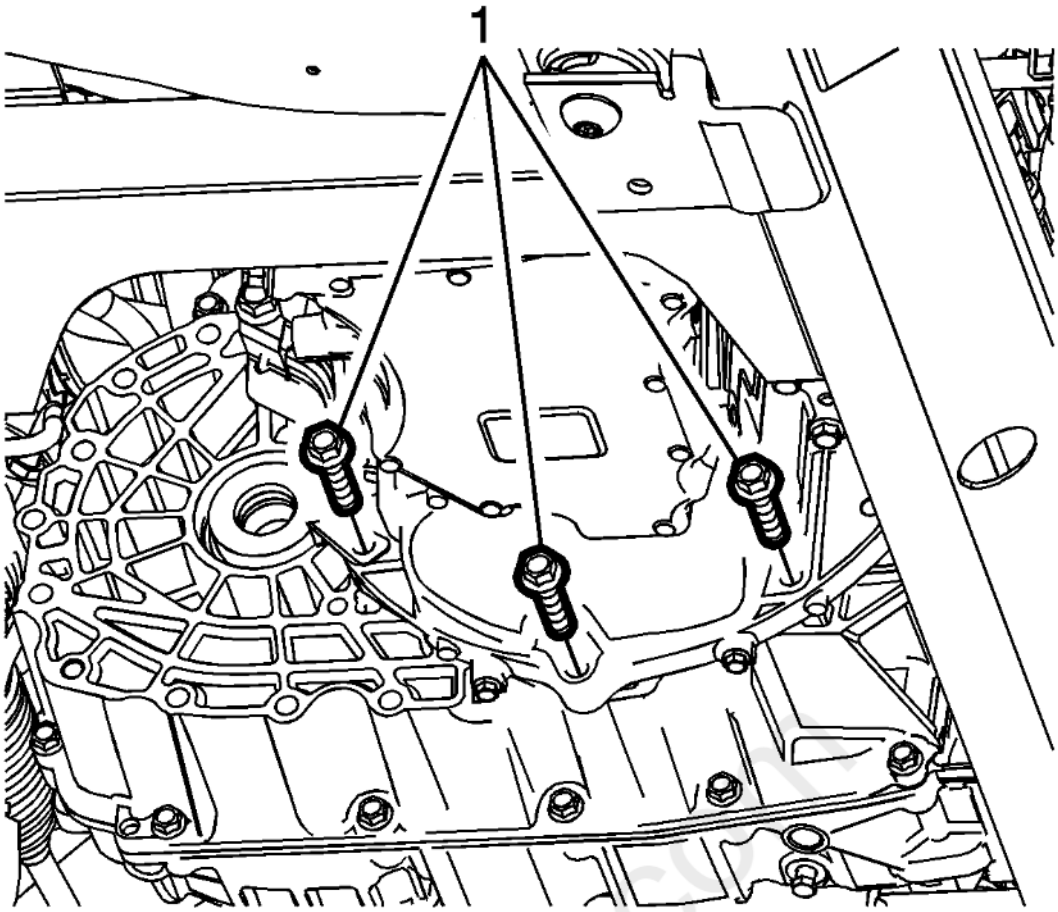

Fig. 184: Engine Oil Pan To Transmission Bolts
Courtesy of GENERAL MOTORS COMPANY

4. Remove the oil pan to transmission bolts (1).

cardiagn.com

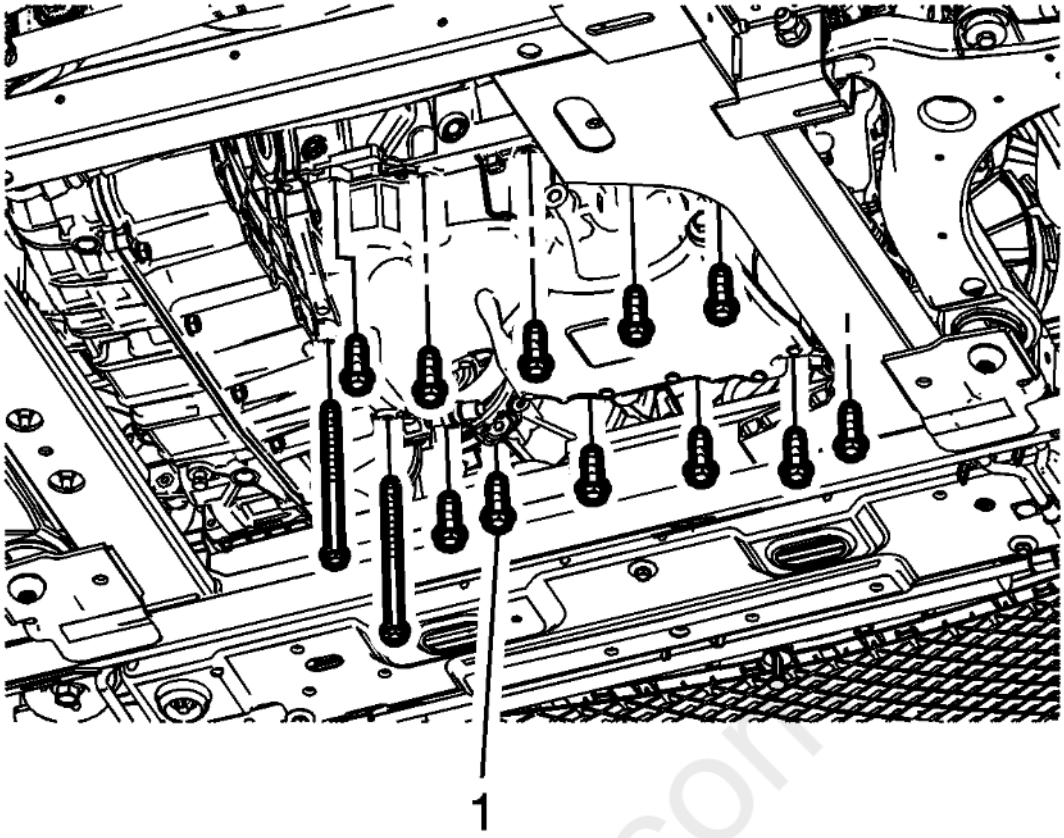

Fig. 185: Engine Oil Pan Bolts
Courtesy of GENERAL MOTORS COMPANY

5. Remove the oil pan bolts (1).

cardiagn.com

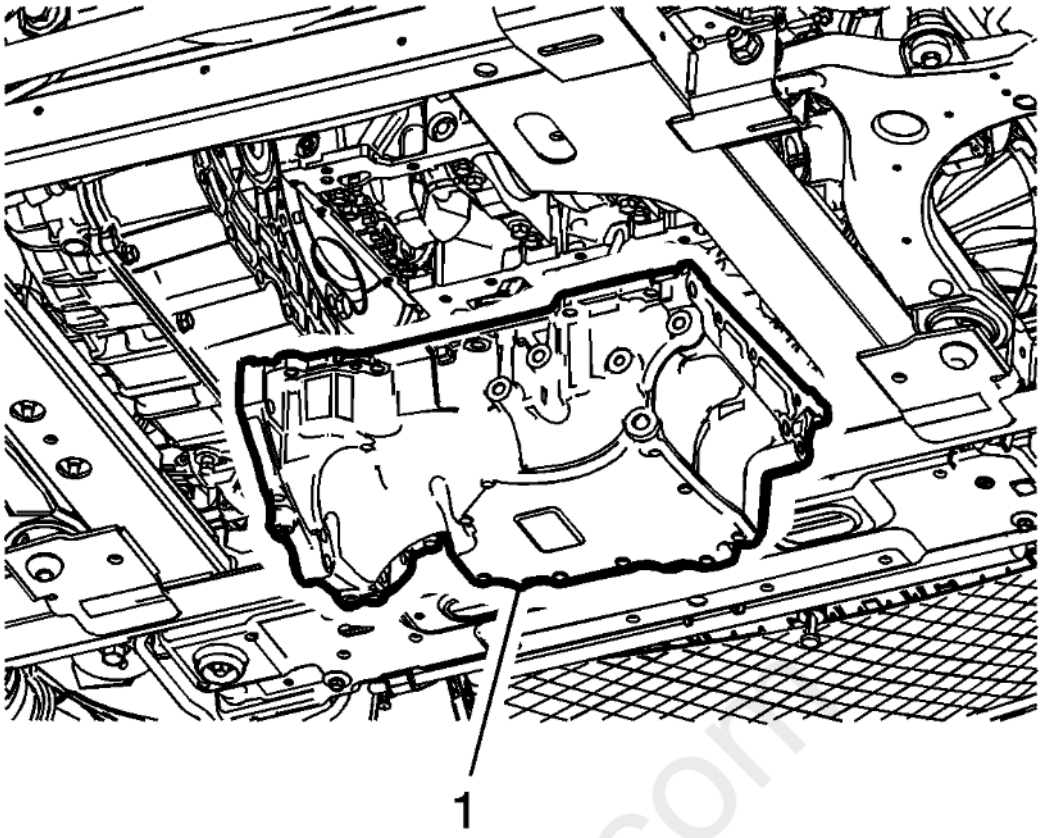

Fig. 186: Engine Oil Pan
Courtesy of GENERAL MOTORS COMPANY

6. Remove the oil pan (1).
7. Disassemble the oil pan. Refer to **Oil Pan Disassemble** .
8. Clean the oil pan and the engine block gasket surface. Refer to **Oil Pan Cleaning and Inspection** .

Installation Procedure

1. Assemble the oil pan. Refer to **Oil Pan Assemble** .

cardiagn.com

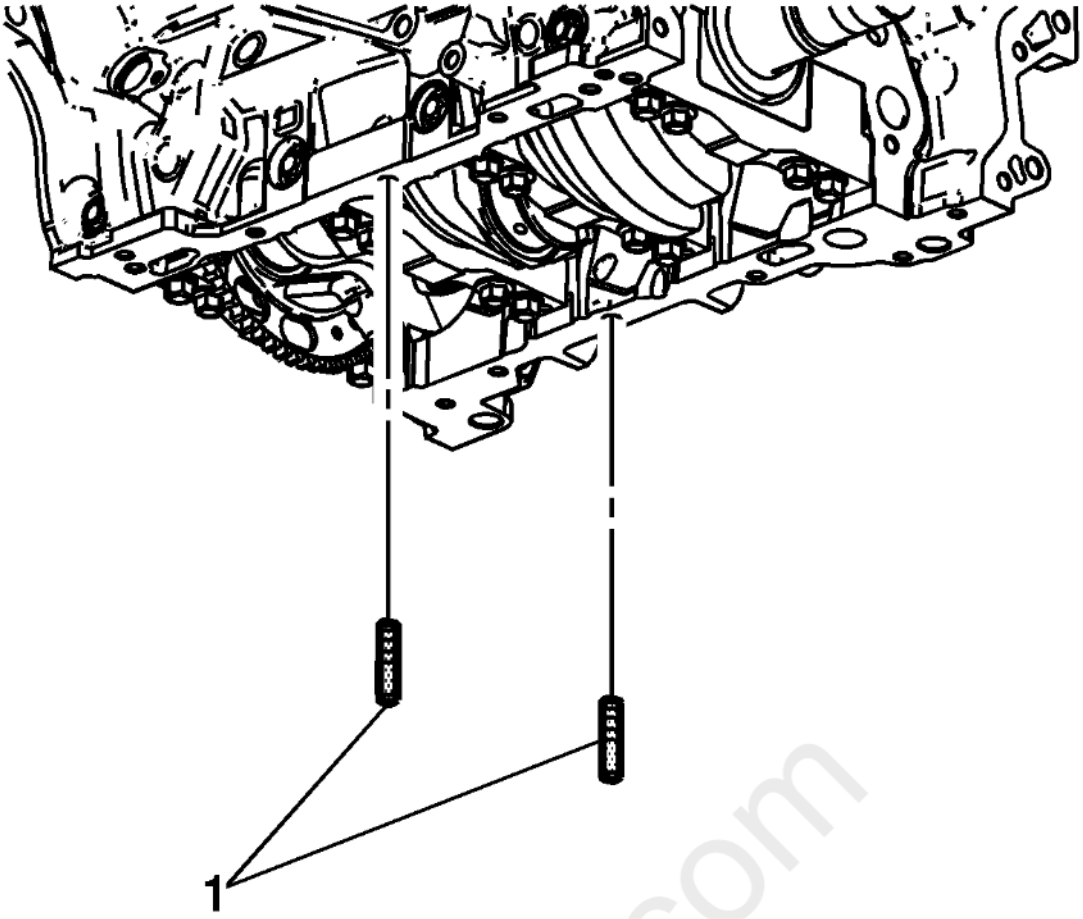

Fig. 187: Guide Pin Set
Courtesy of GENERAL MOTORS COMPANY

2. Install the 8 mm (0.315 in) guides (1) from the **EN-46109** set into the center oil pan rail bolt hole on each side of the engine block.

cardiagn.com

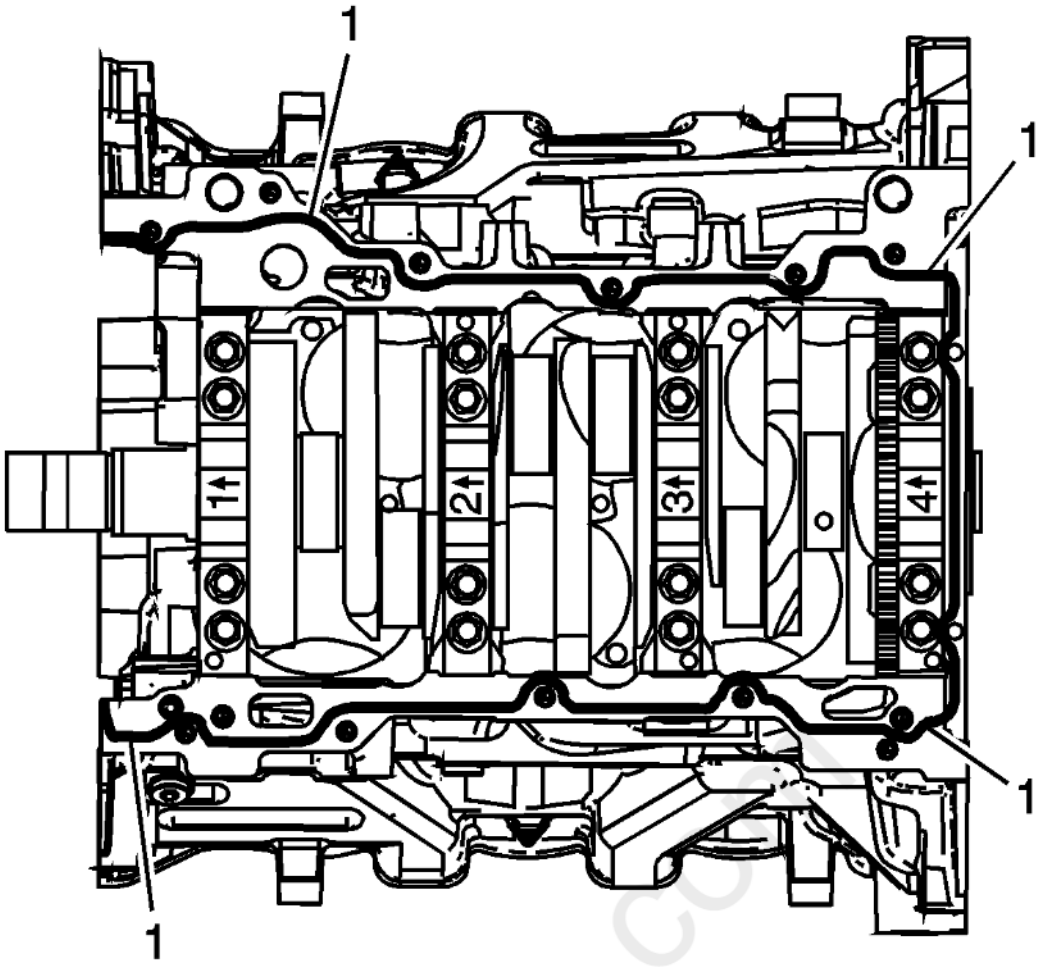

Fig. 188: Sealant Application Locations On Block Pan Rail And Crankshaft Rear Oil Seal Housing
Courtesy of GENERAL MOTORS COMPANY

3. Place a 3 mm (0.118 in) bead (1) of RTV sealant, on the block pan rail and the crankshaft rear oil seal housing.

cardiagn.com

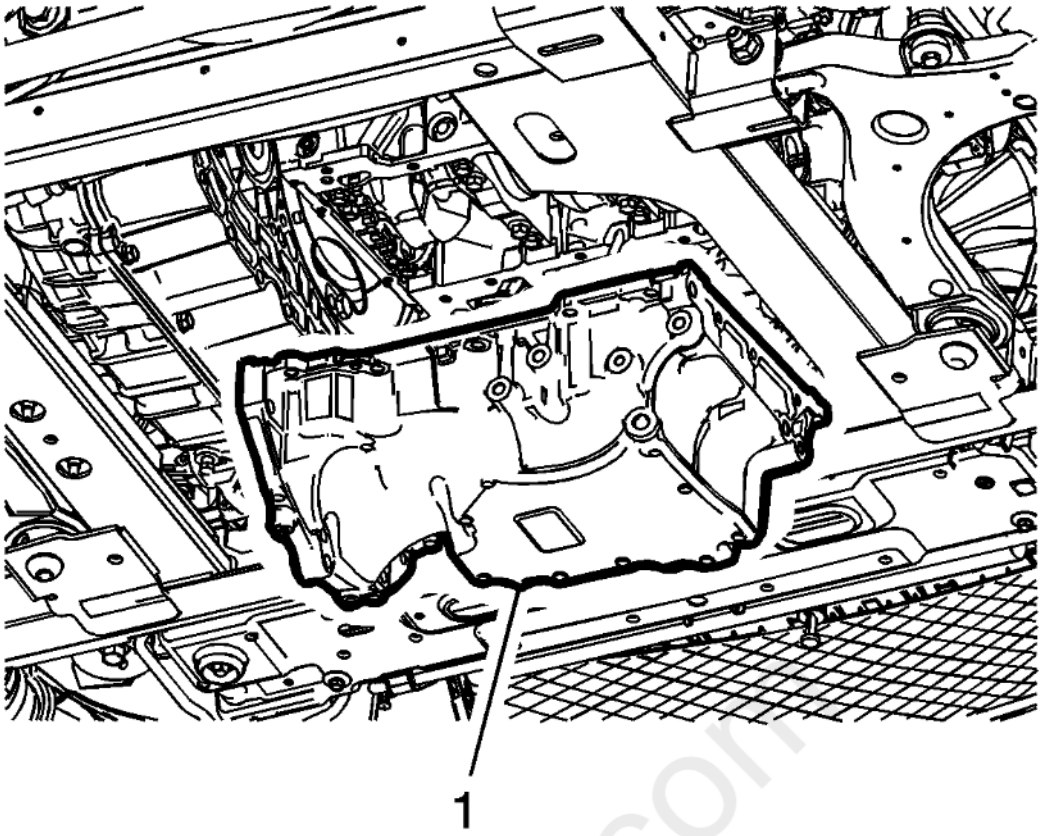

Fig. 189: Engine Oil Pan
Courtesy of GENERAL MOTORS COMPANY

4. Position the oil pan (1) onto the engine block.

cardiagn.com

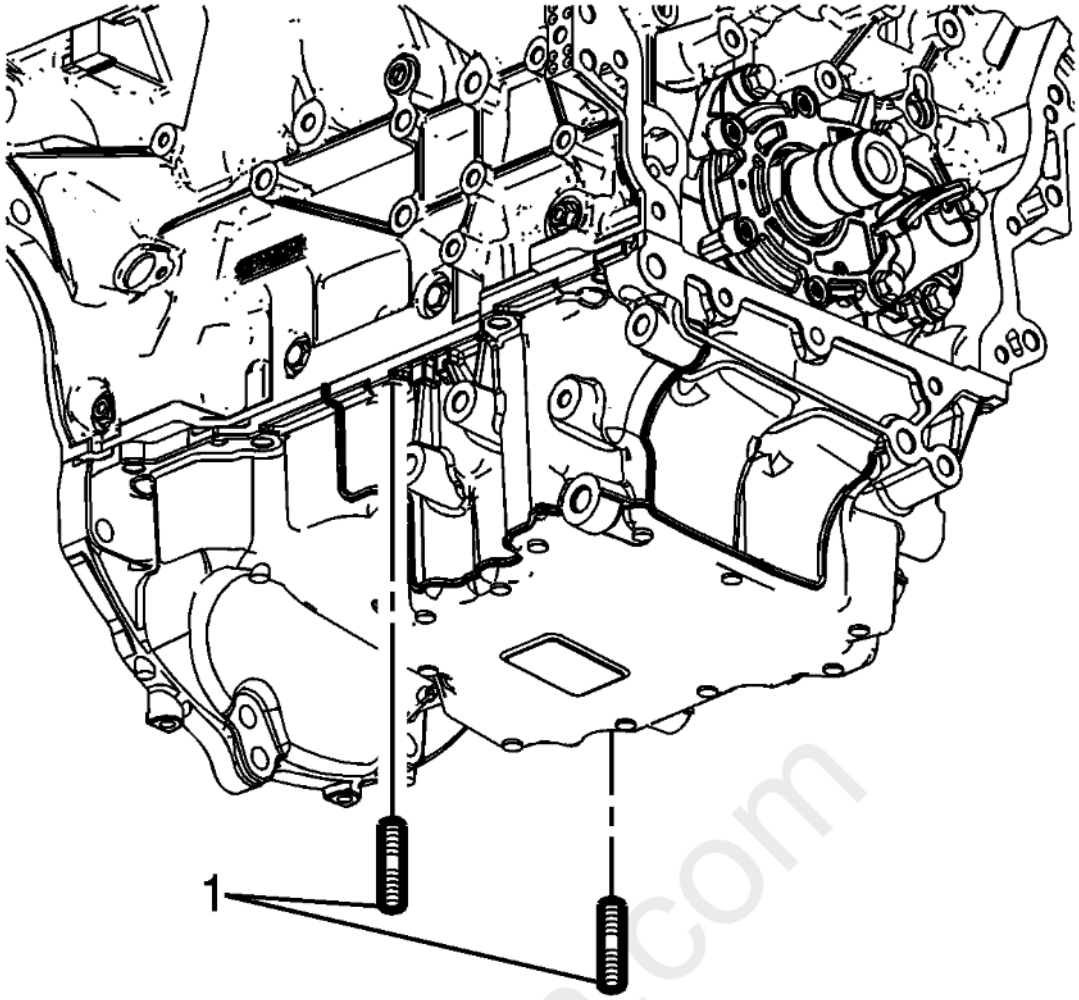

Fig. 190: Guide Pin Set
Courtesy of GENERAL MOTORS COMPANY

5. Remove the **EN-46109** set 8 mm (0.315 in) guides (1) from the engine block.

cardiagn.com

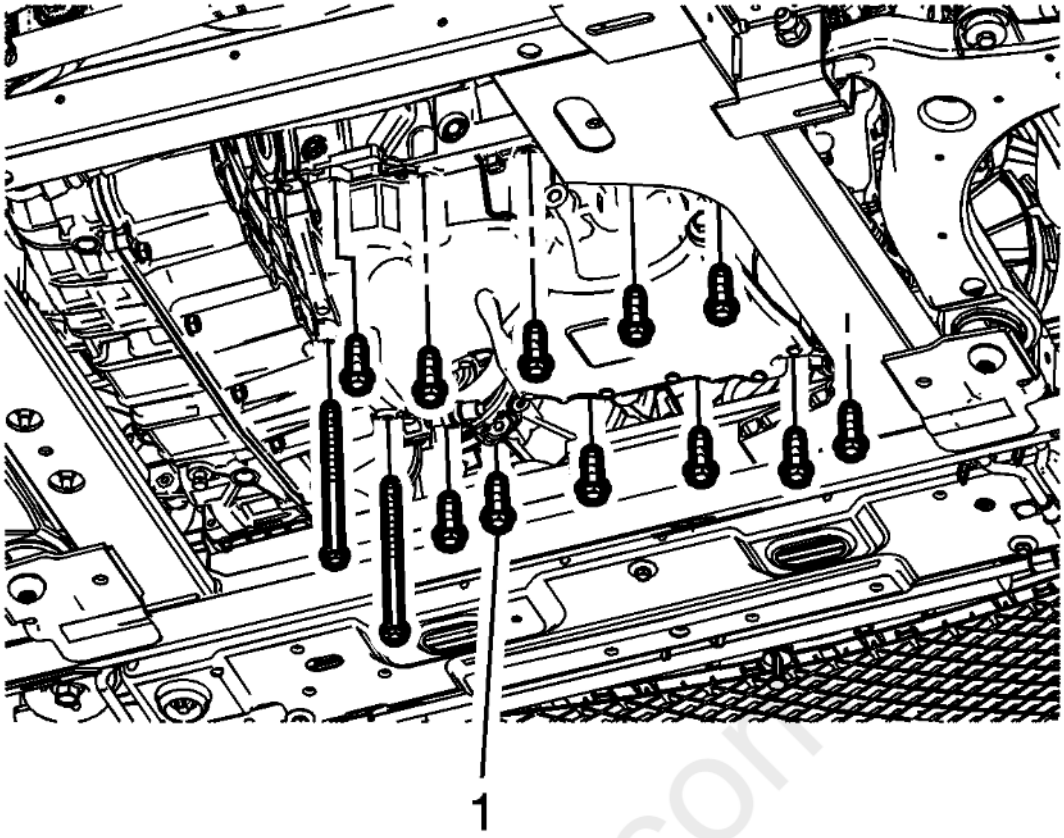

Fig. 191: Engine Oil Pan Bolts
Courtesy of GENERAL MOTORS COMPANY

6. Loosely install the oil pan bolts (1).

cardiagn.com

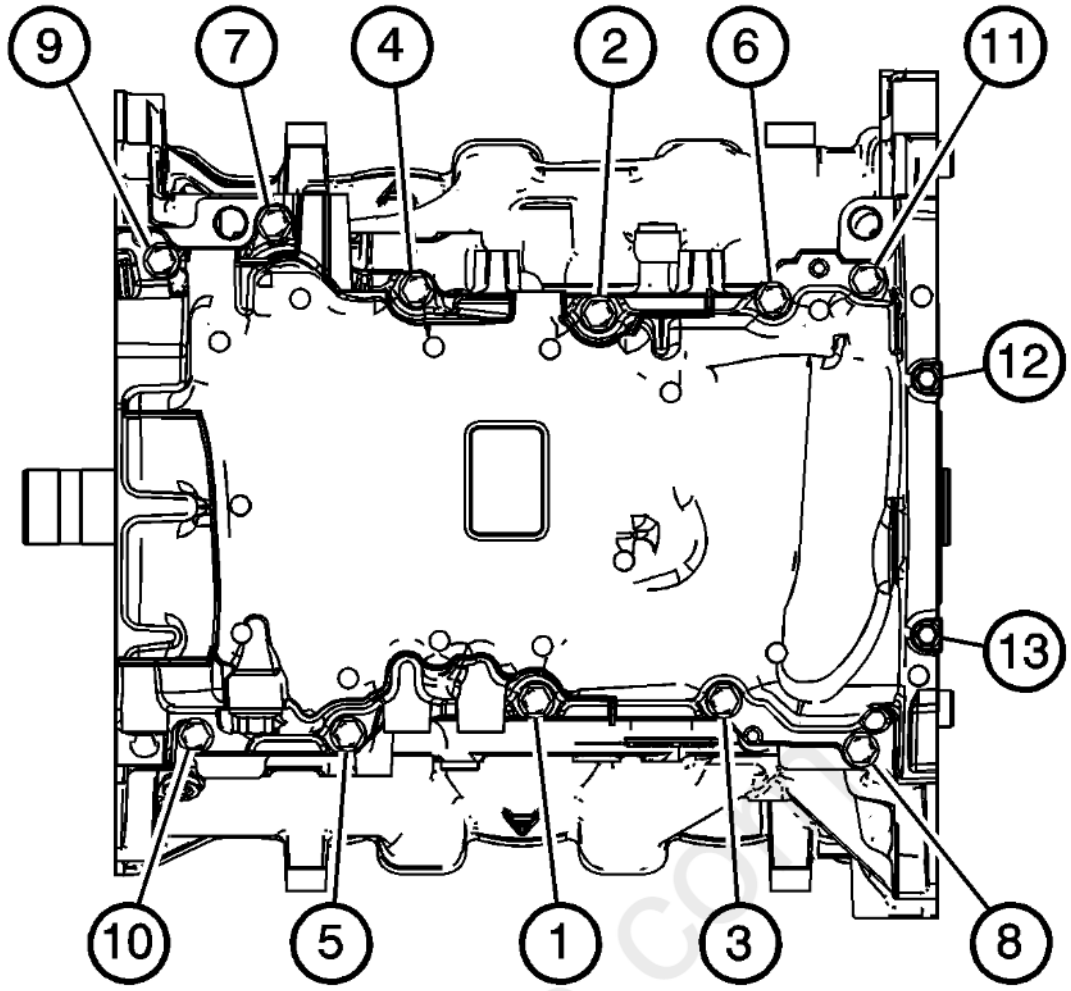

Fig. 192: Oil Pan Bolt Tightening Sequence
Courtesy of GENERAL MOTORS COMPANY

CAUTION: **Refer to Fastener Caution .**

7. Tighten the oil pan bolts in sequence.
    1. The 8 mm bolts (1 - 11) to 23 N.m (17 lb ft).
    2. The 6 mm bolts (12, 13) to 10 N.m (89 lb in).

cardiagn.com

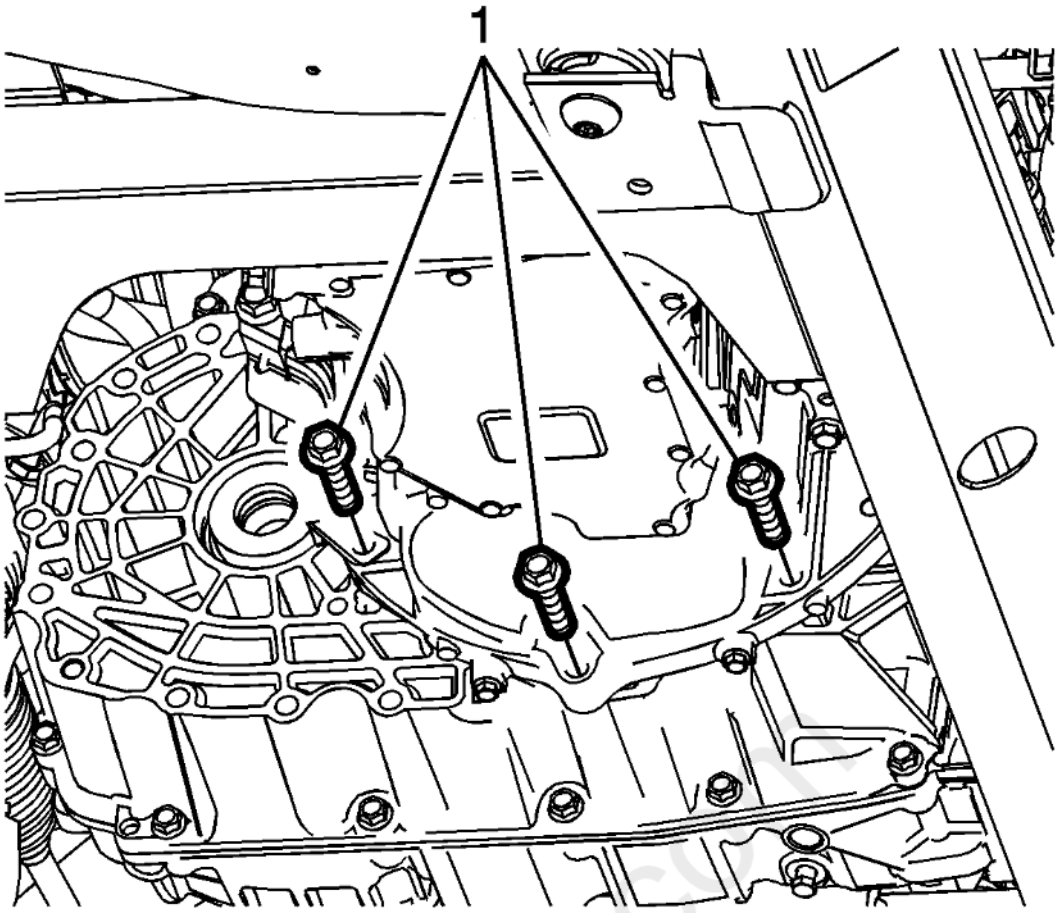

Fig. 193: Engine Oil Pan To Transmission Bolts
Courtesy of GENERAL MOTORS COMPANY

8. Install the oil pan to transmission bolts (1) and tighten to 23 N.m (17 lb ft).
9. Install engine front cover. Refer to **Engine Front Cover Replacement**.
10. Install the front wheel drive intermediate shaft bracket. Refer to **Front Wheel Drive Intermediate Shaft Bracket Replacement (LFX with M7W)** .
11. Refill the engine oil. Refer to **Engine Oil and Oil Filter Replacement**.

ENGINE OIL PRESSURE SENSOR AND/OR SWITCH REPLACEMENT

carDiagn.com

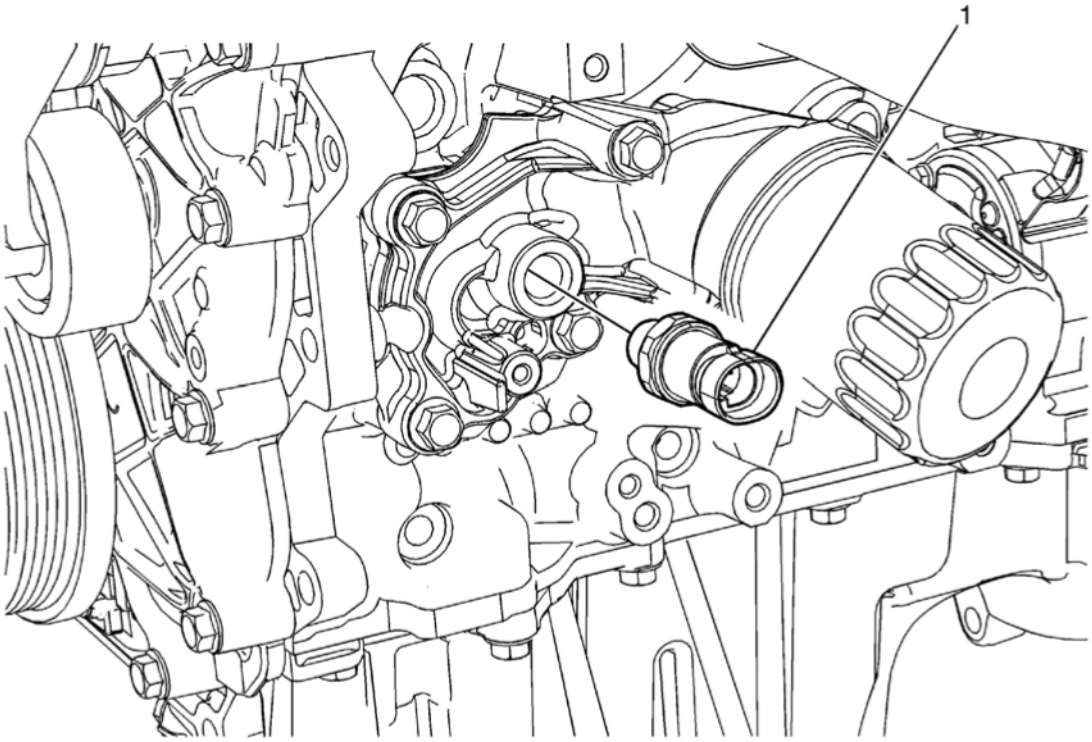

Fig. 194: Engine Oil Pressure Sensor And/Or Switch
Courtesy of GENERAL MOTORS COMPANY

Callout	Component Name
Preliminary Procedure **Remove the generator. Refer to Generator Replacement (LFX) .**	
1	Engine Oil Pressure Sensor and/or Switch **CAUTION:** **Refer to Component Fastener Tightening Caution .** **Procedure** 1. Disconnect the oil pressure sensor electrical connector. 2. Transfer components as necessary. **Tighten** 20 N.m (15 lb ft) **Special Tools** **EN-41712** Oil Pressure Switch Socket For equivalent regional tools, refer to **Special Tools** .

ENGINE OIL LEVEL INDICATOR SWITCH REPLACEMENT

Removal Procedure

1. Remove the oil pan. Refer to **Oil Pan Replacement**.

cardiagn.com

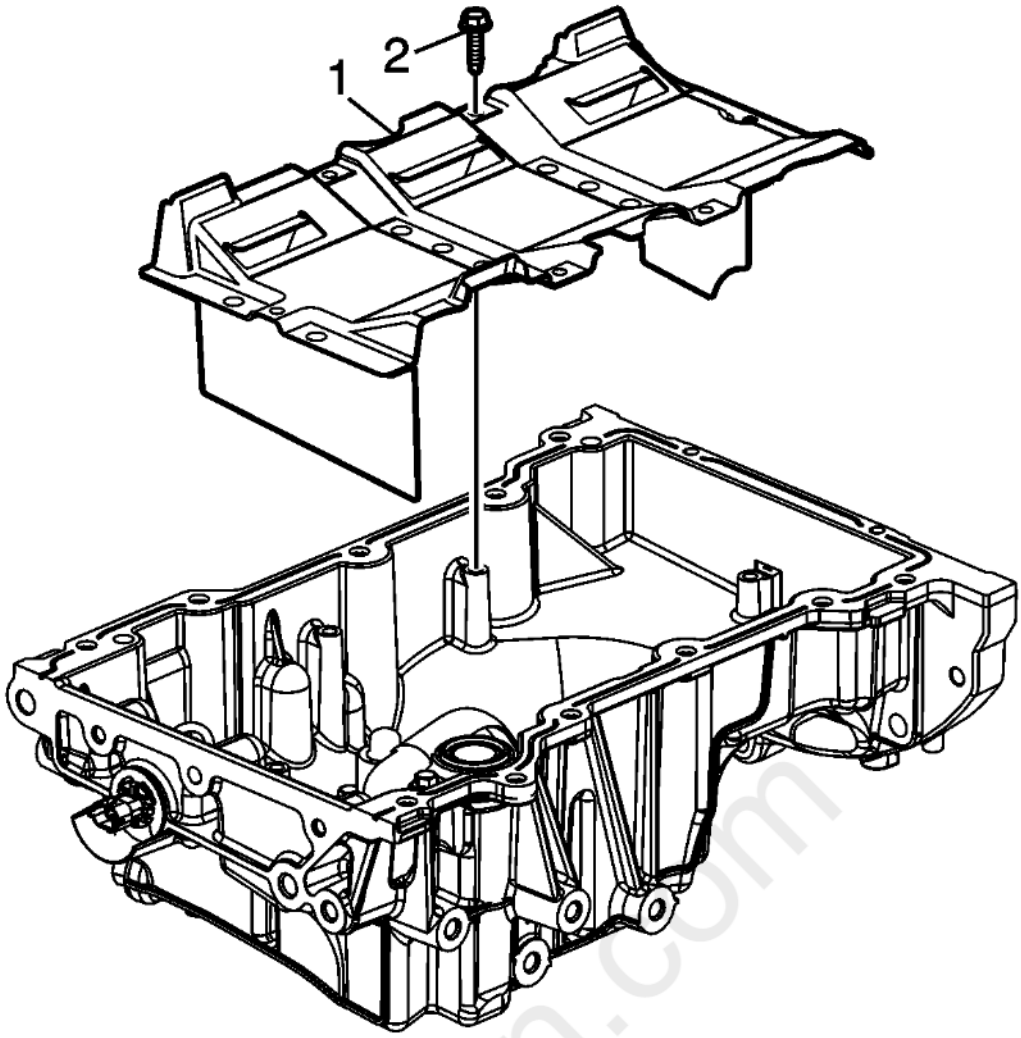

Fig. 195: Oil Pan Scraper And Bolts
Courtesy of GENERAL MOTORS COMPANY

2. Remove the oil pan scraper bolts (2).
3. Remove the oil pan scraper (1).

cardiagn.com

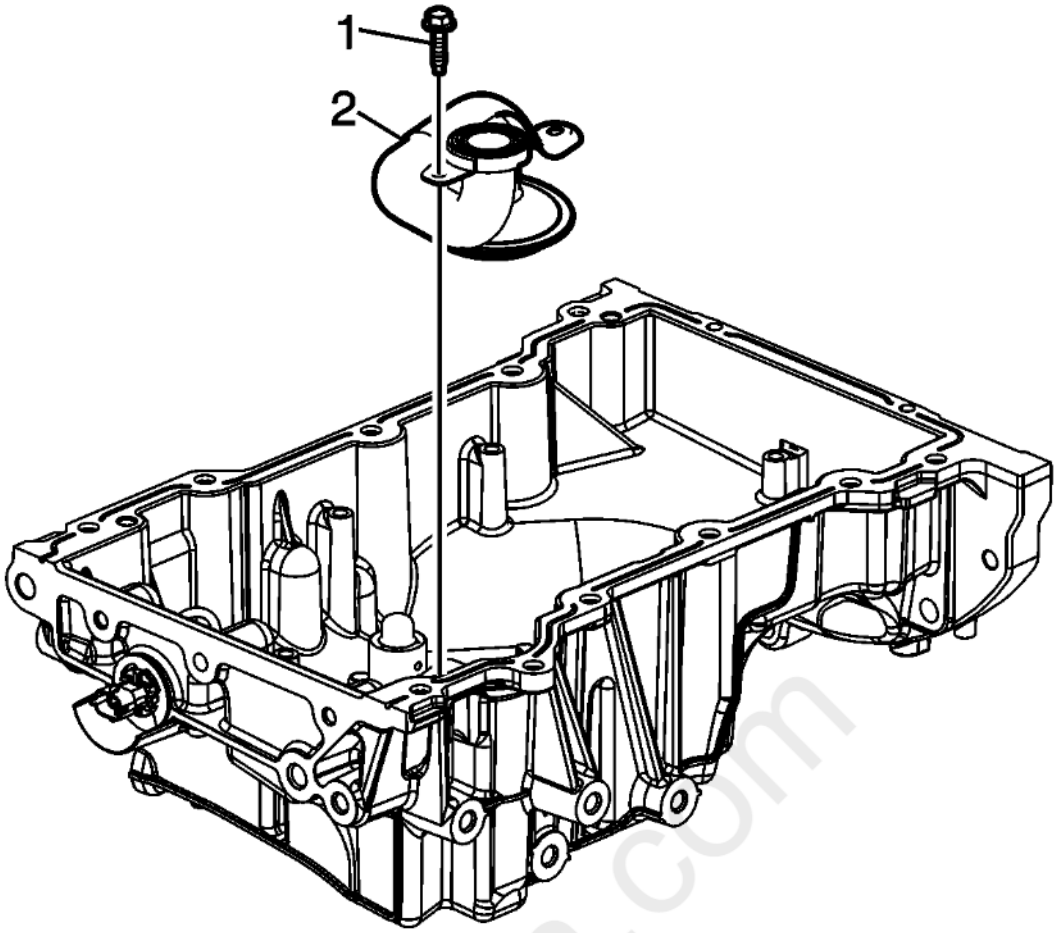

Fig. 196: Oil Suction Pipe And Bolts
Courtesy of GENERAL MOTORS COMPANY

4. Remove the oil suction pipe bolts (1).
5. Remove the oil suction pipe (2).

cardiagn.com

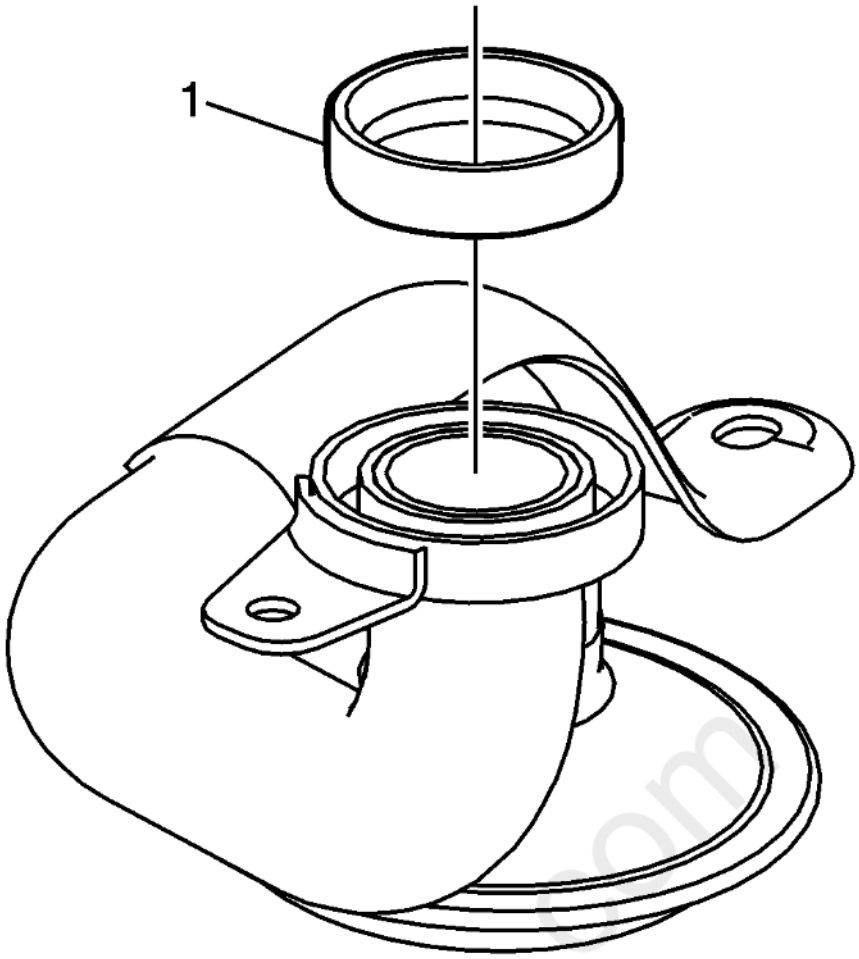

Fig. 197: Oil Suction Pipe Seal
Courtesy of GENERAL MOTORS COMPANY

6. Remove the oil suction pipe seal (1) and discard.

cardiagn.com

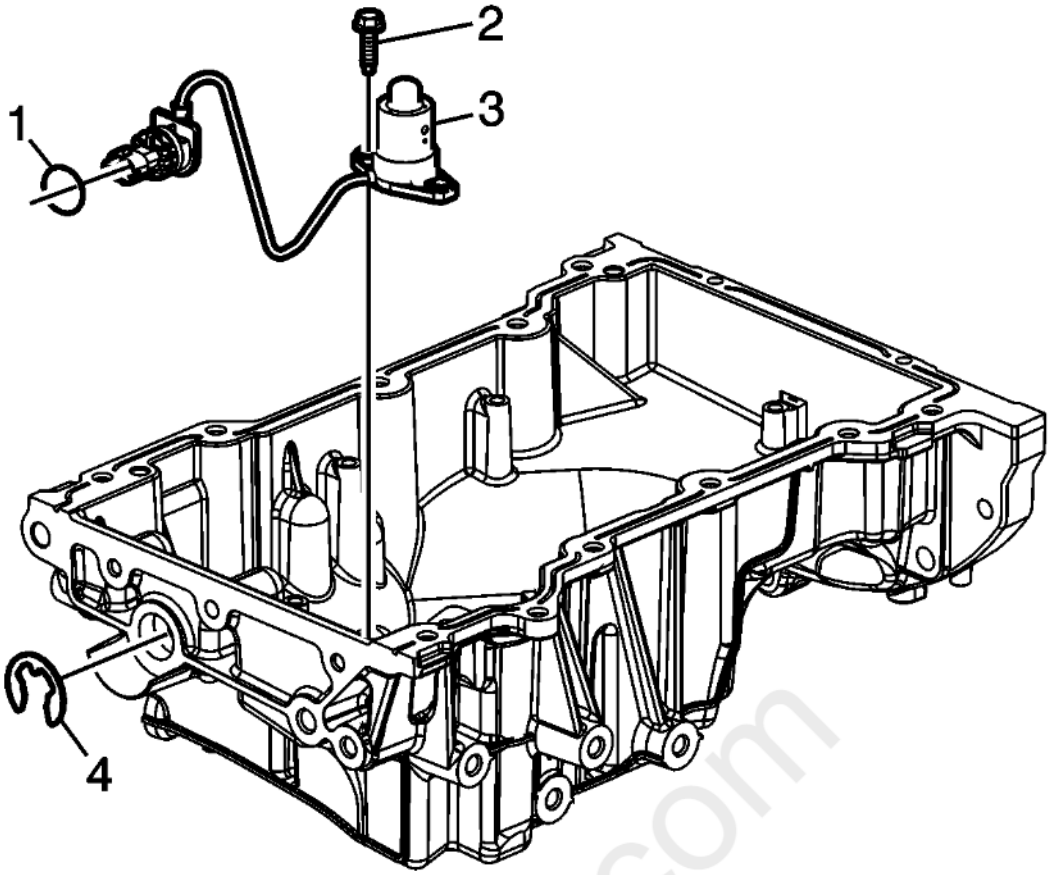

Fig. 198: Engine Oil Level Switch, Clip, Bolt And Seal
Courtesy of GENERAL MOTORS COMPANY

7. Remove the engine oil level switch clip (4)
8. Remove the engine oil level switch bolts (2).
9. Remove the engine oil level switch (3).
10. Remove the engine oil level switch seal (1).

Installation Procedure

cardiagn.com

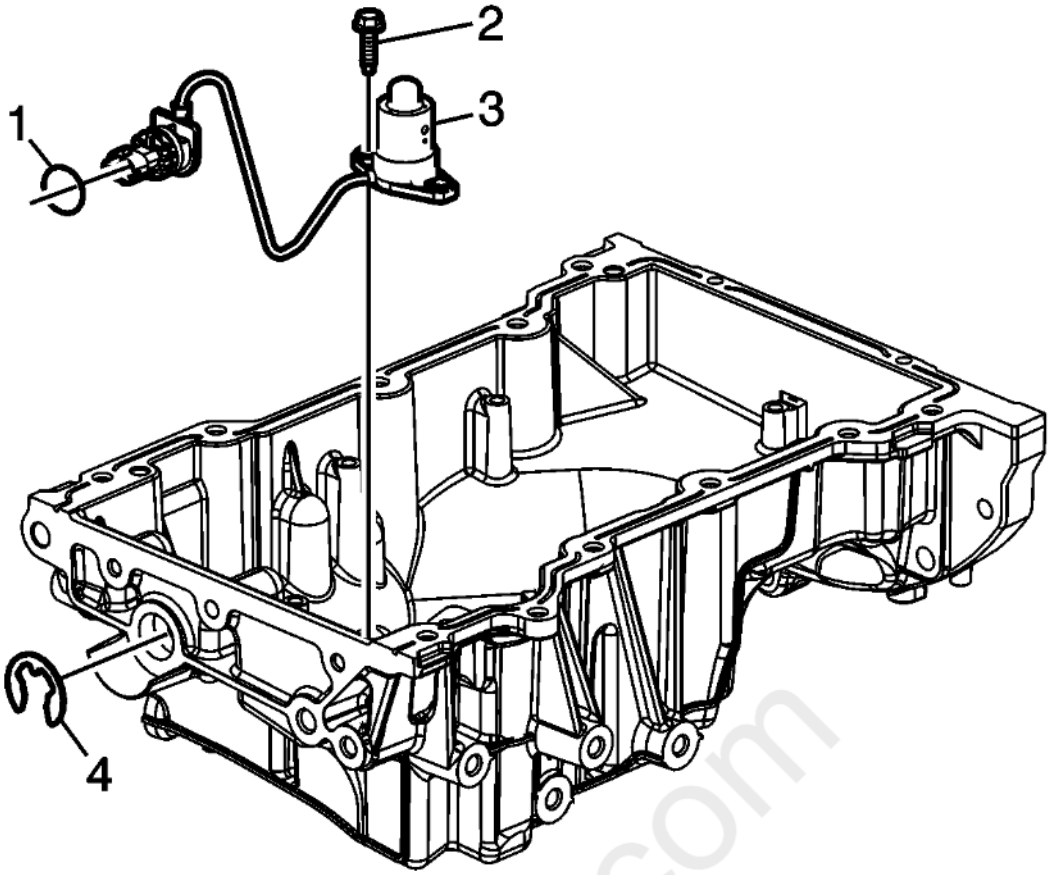

Fig. 199: Engine Oil Level Switch, Clip, Bolt And Seal
Courtesy of GENERAL MOTORS COMPANY

CAUTION: **Refer to Fastener Caution .**

1. Install the NEW engine oil level switch seal (1).
2. Install the engine oil level switch (3).
3. Install the engine oil level switch bolts (2) and tighten to 10 N.m (89 lb in).
4. Install NEW engine oil level switch clip (4).

cardiagn.com

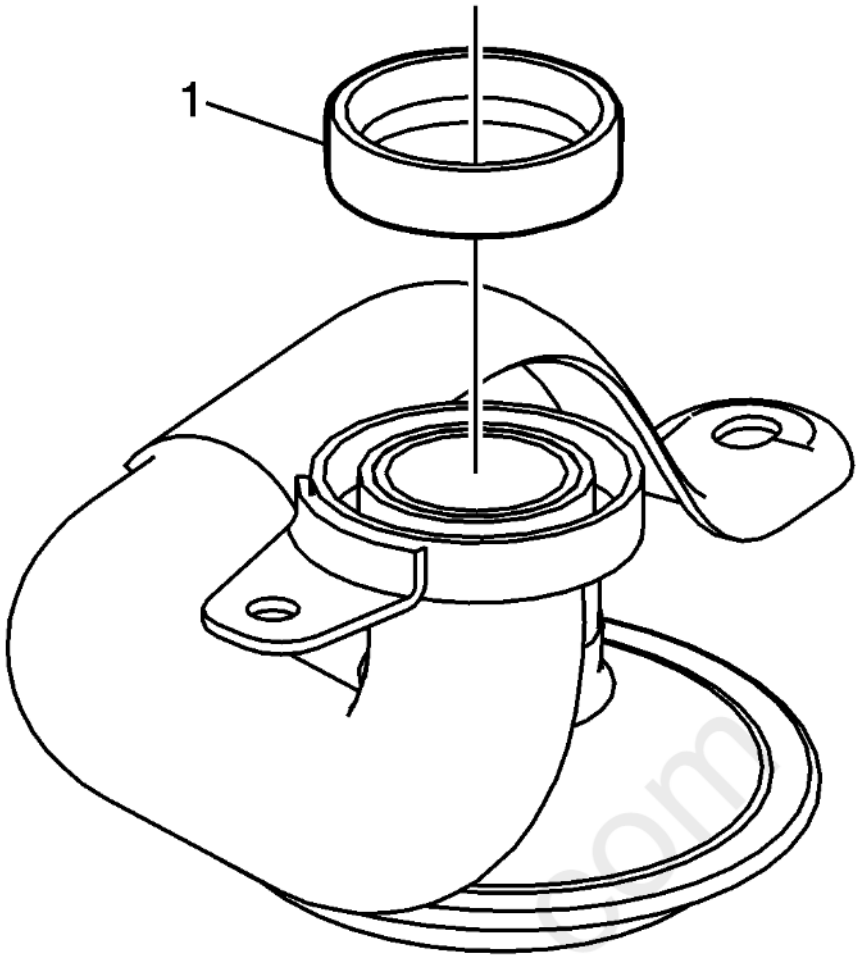

Fig. 200: Oil Suction Pipe Seal
Courtesy of GENERAL MOTORS COMPANY

5. Install NEW oil suction pipe seal (1).

cardiagn.com

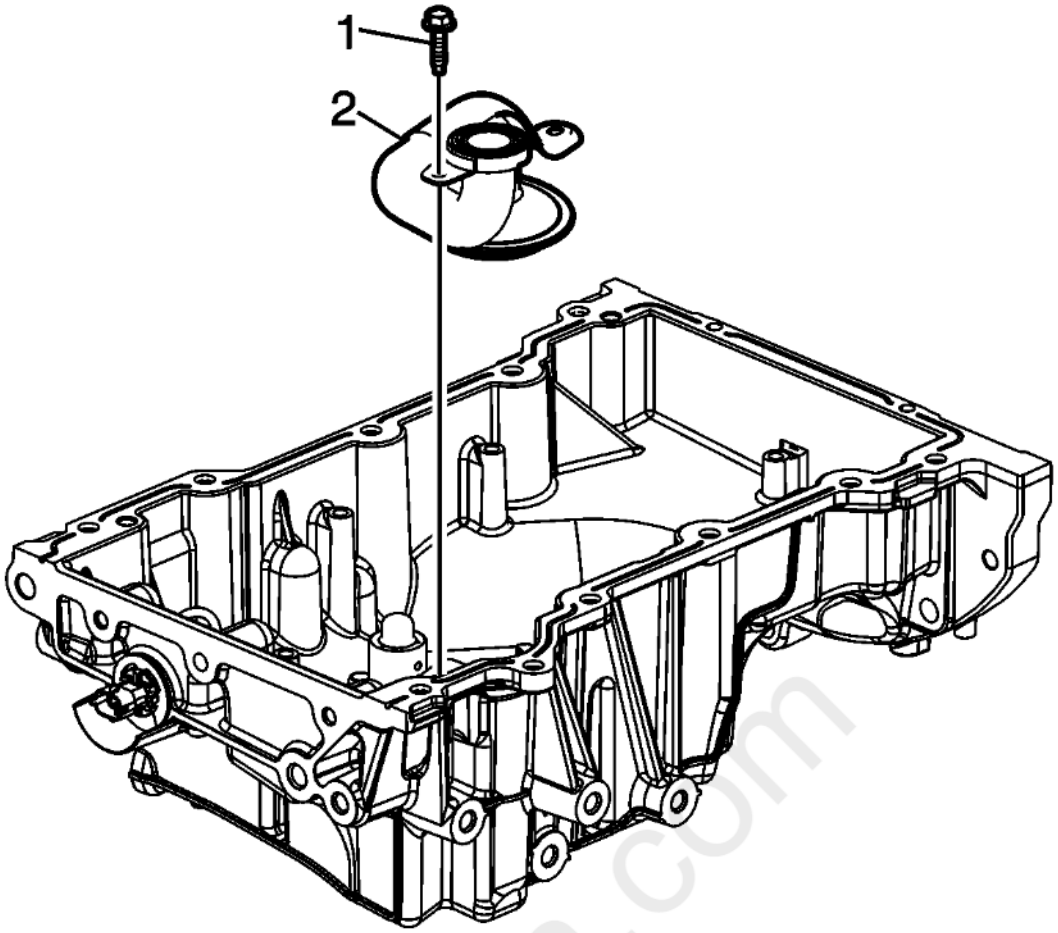

Fig. 201: Oil Suction Pipe And Bolts
Courtesy of GENERAL MOTORS COMPANY

6. Install the oil suction pipe (2).
7. Install the oil suction pipe bolts (1) and tighten to 10 N.m (89 lb in).

cardiagn.com

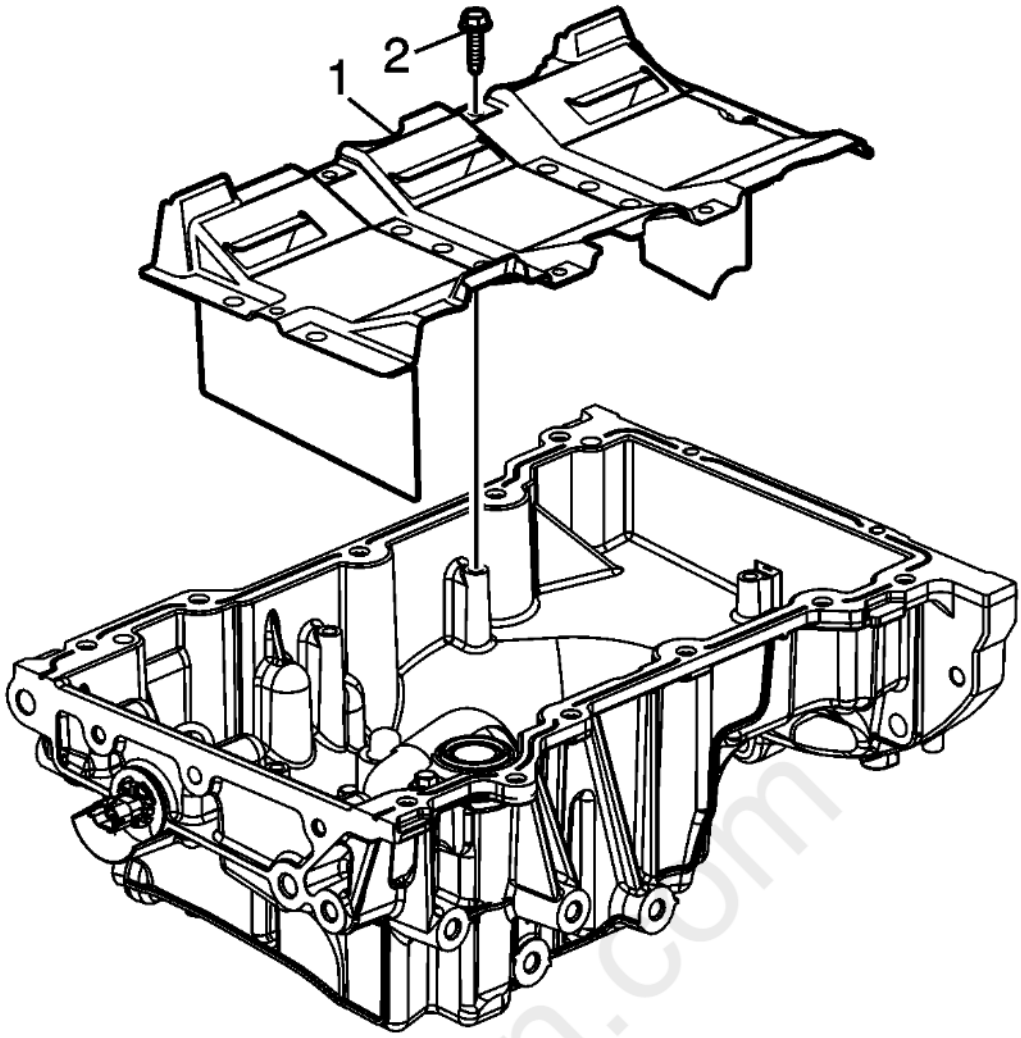

Fig. 202: Oil Pan Scraper And Bolts
Courtesy of GENERAL MOTORS COMPANY

8. Install the oil pan scraper (1).
9. Install the oil pan scraper bolts (2) and tighten to 10 N.m (89 lb in).
10. Install the oil pan. Refer to **Oil Pan Replacement**.

OIL PUMP SUCTION PIPE AND SCREEN ASSEMBLY REPLACEMENT

Removal Procedure

1. Remove the oil pan. Refer to **Oil Pan Replacement**.

cardiagn.com

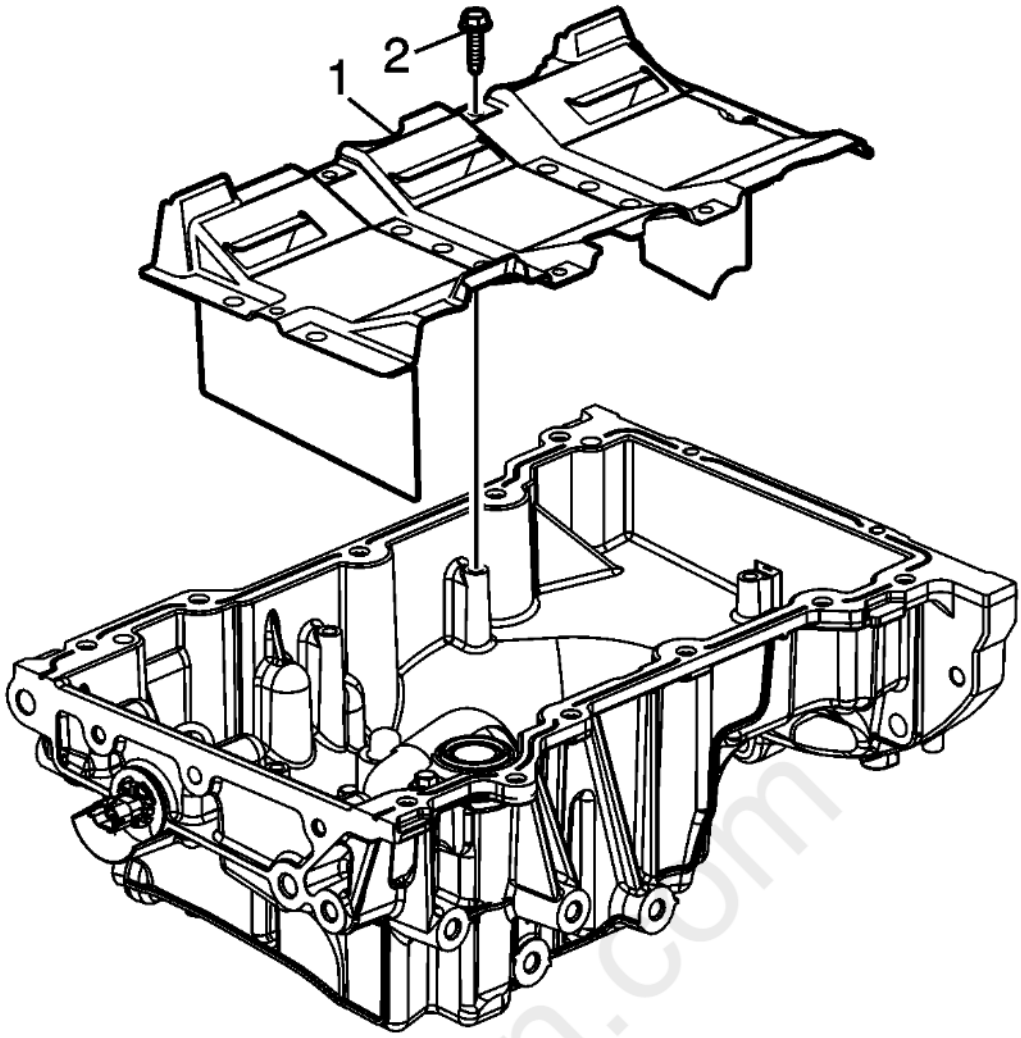

Fig. 203: Oil Pan Scraper And Bolts
Courtesy of GENERAL MOTORS COMPANY

2. Remove the oil pan scraper bolts (2).
3. Remove the oil pan scraper (1).

cardiagn.com

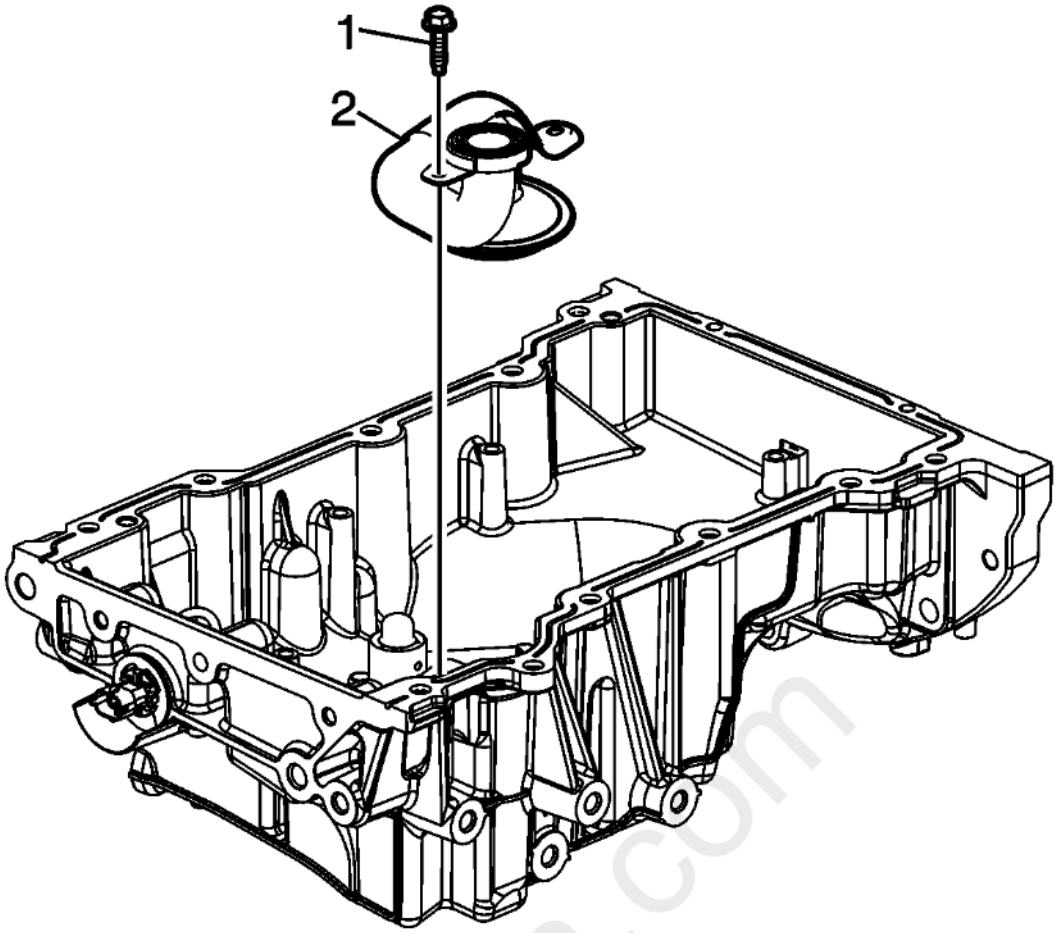

Fig. 204: Oil Suction Pipe And Bolts
Courtesy of GENERAL MOTORS COMPANY

4. Remove the oil suction pipe bolts (1).
5. Remove the oil suction pipe (2).

cardiagn.com

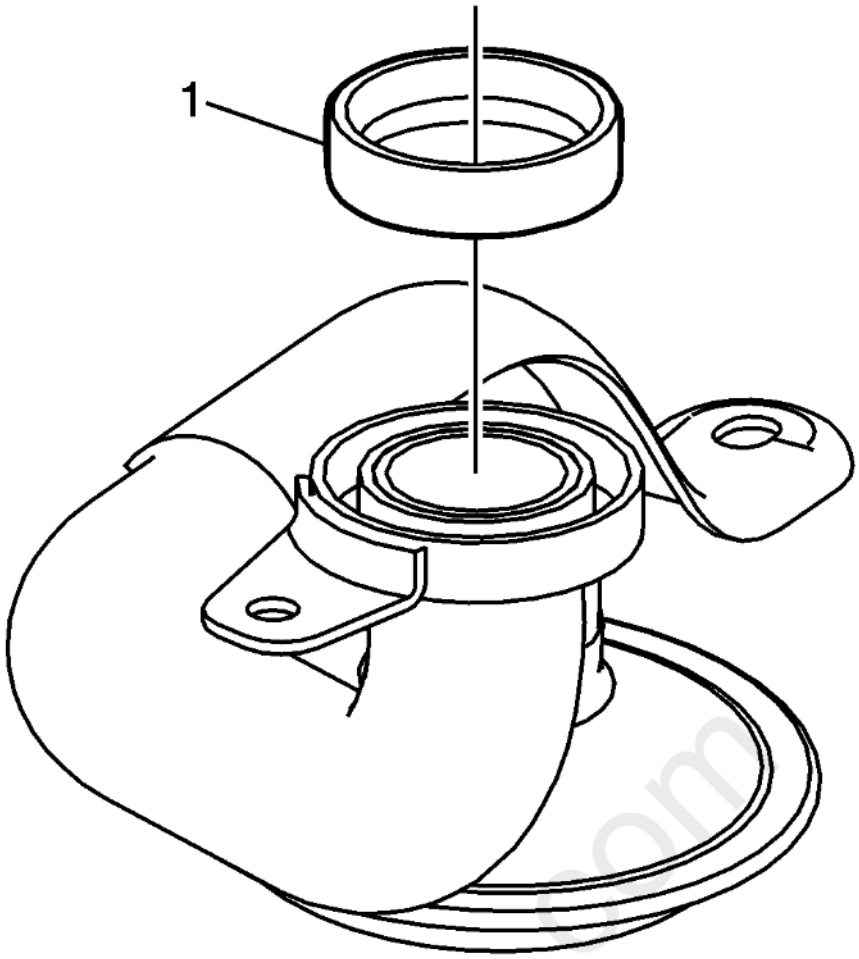

Fig. 205: Oil Suction Pipe Seal
Courtesy of GENERAL MOTORS COMPANY

6. Remove the oil suction pipe seal (1).

Installation Procedure

cardiagn.com

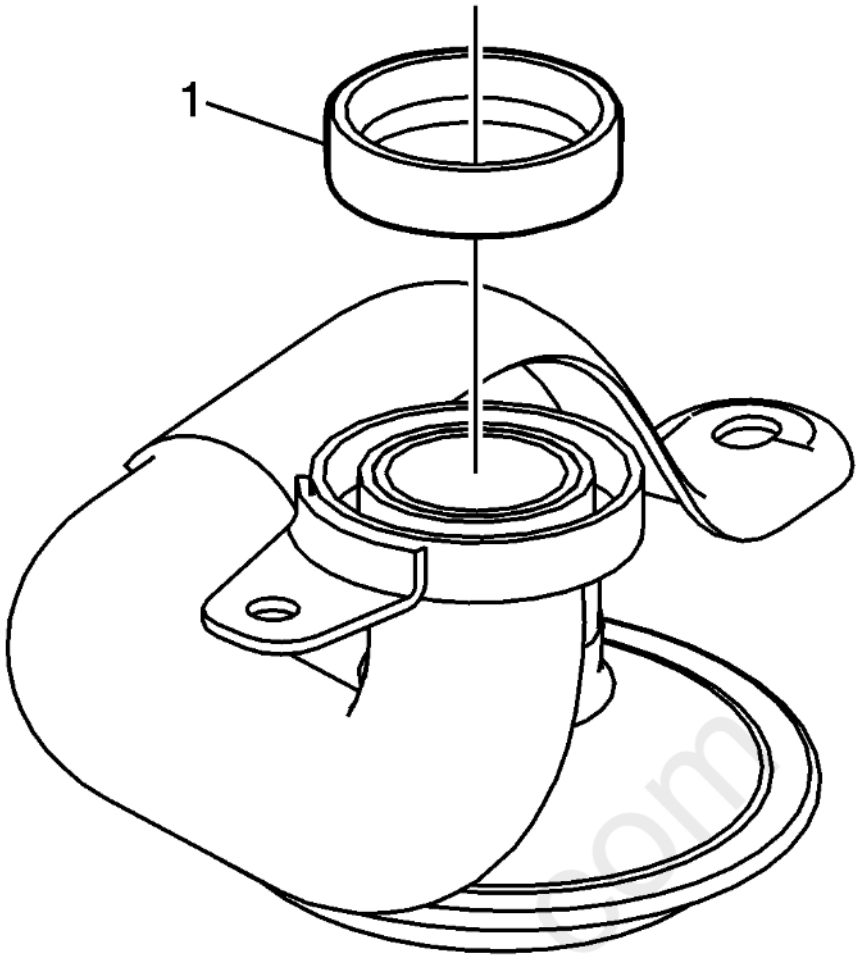

Fig. 206: Oil Suction Pipe Seal
Courtesy of GENERAL MOTORS COMPANY

1. Install the NEW oil suction pipe seal (1).

cardiagn.com

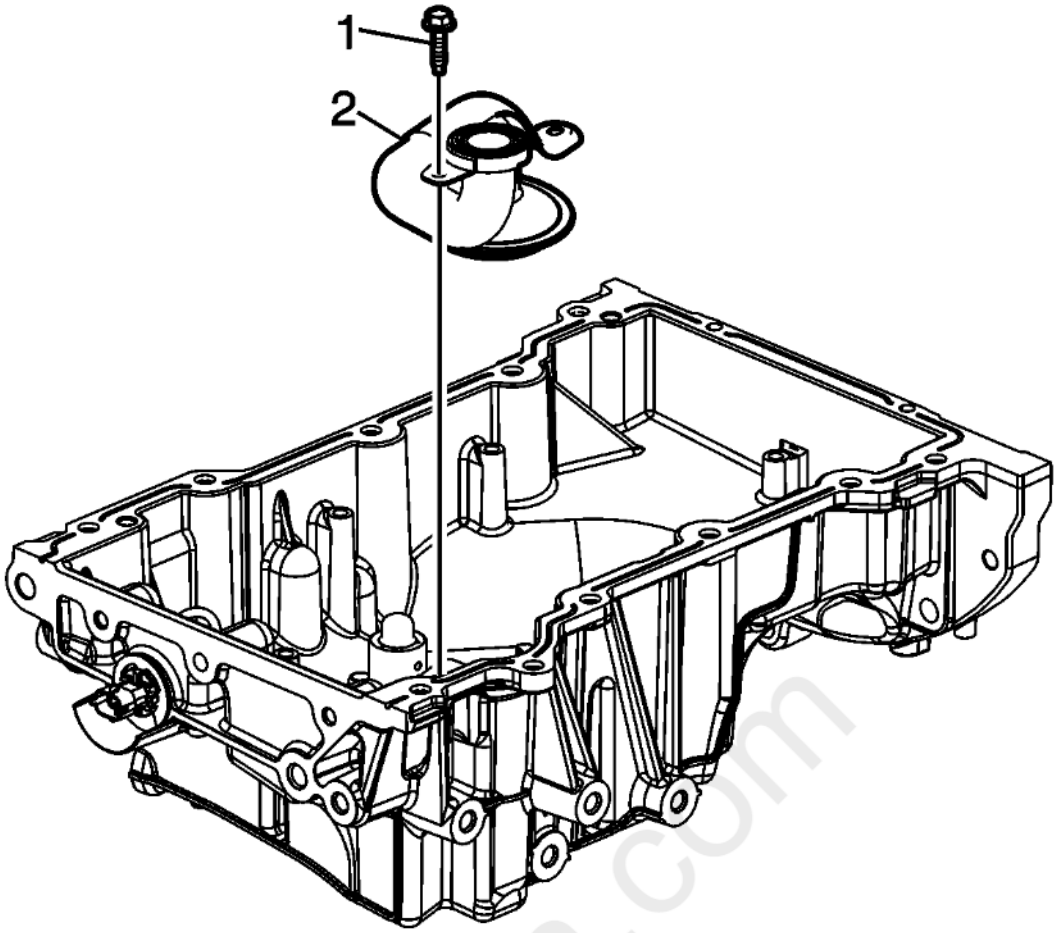

Fig. 207: Oil Suction Pipe And Bolts
Courtesy of GENERAL MOTORS COMPANY

CAUTION: **Refer to Fastener Caution .**

2. Install the oil suction pipe (2).
3. Install the oil suction pipe bolts (1) and tighten to 10 N.m (89 lb in).

cardiagn.com

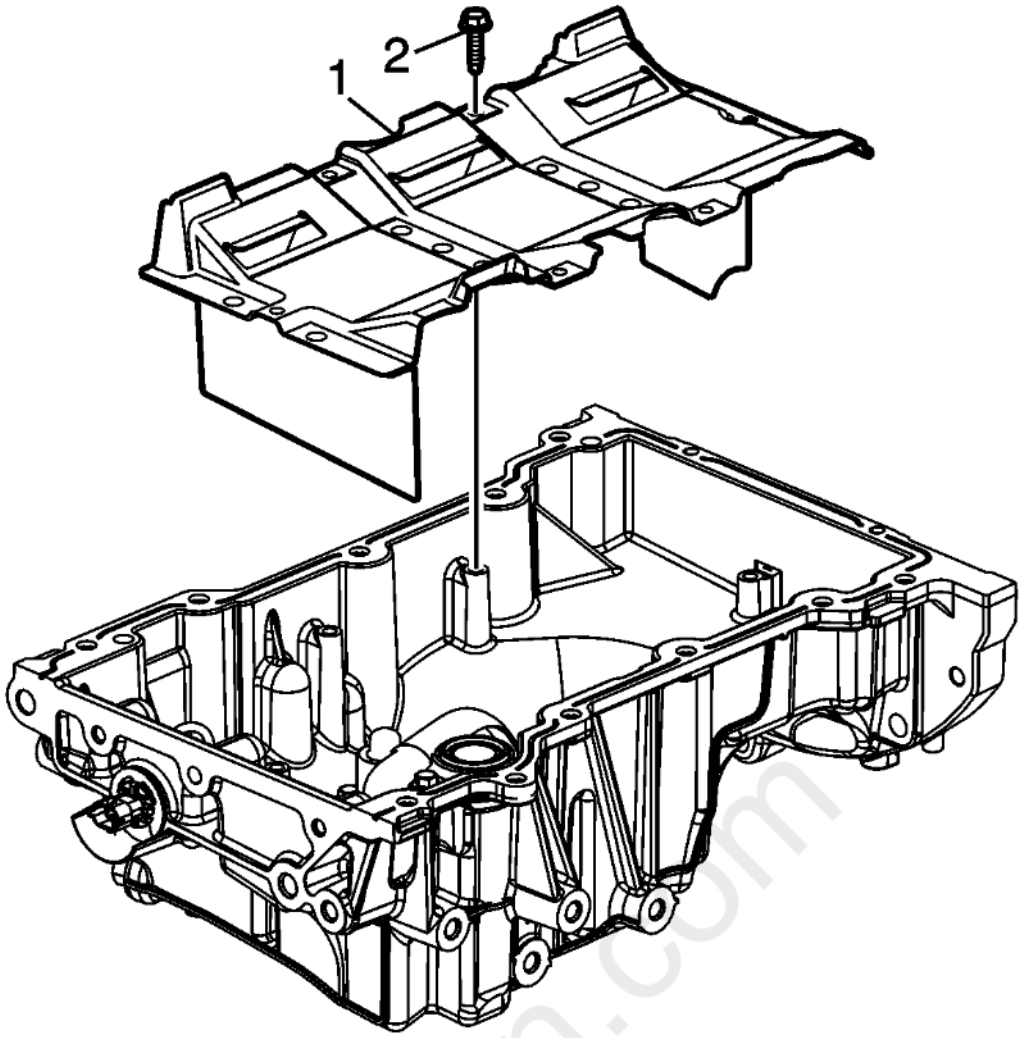

Fig. 208: Oil Pan Scraper And Bolts
Courtesy of GENERAL MOTORS COMPANY

4. Install the oil pan scraper (1).
5. Install the oil pan scraper bolts (2) and tighten to 10 N.m (89 lb in).
6. Install the oil pan. Refer to **Oil Pan Replacement**.

ENGINE REPLACEMENT

Removal Procedure

1. Disconnect the negative battery cable. Refer to **Battery Negative Cable Disconnection and Connection** .
2. Support the vehicle. Refer to **Lifting and Jacking the Vehicle** .

cardiagn.com

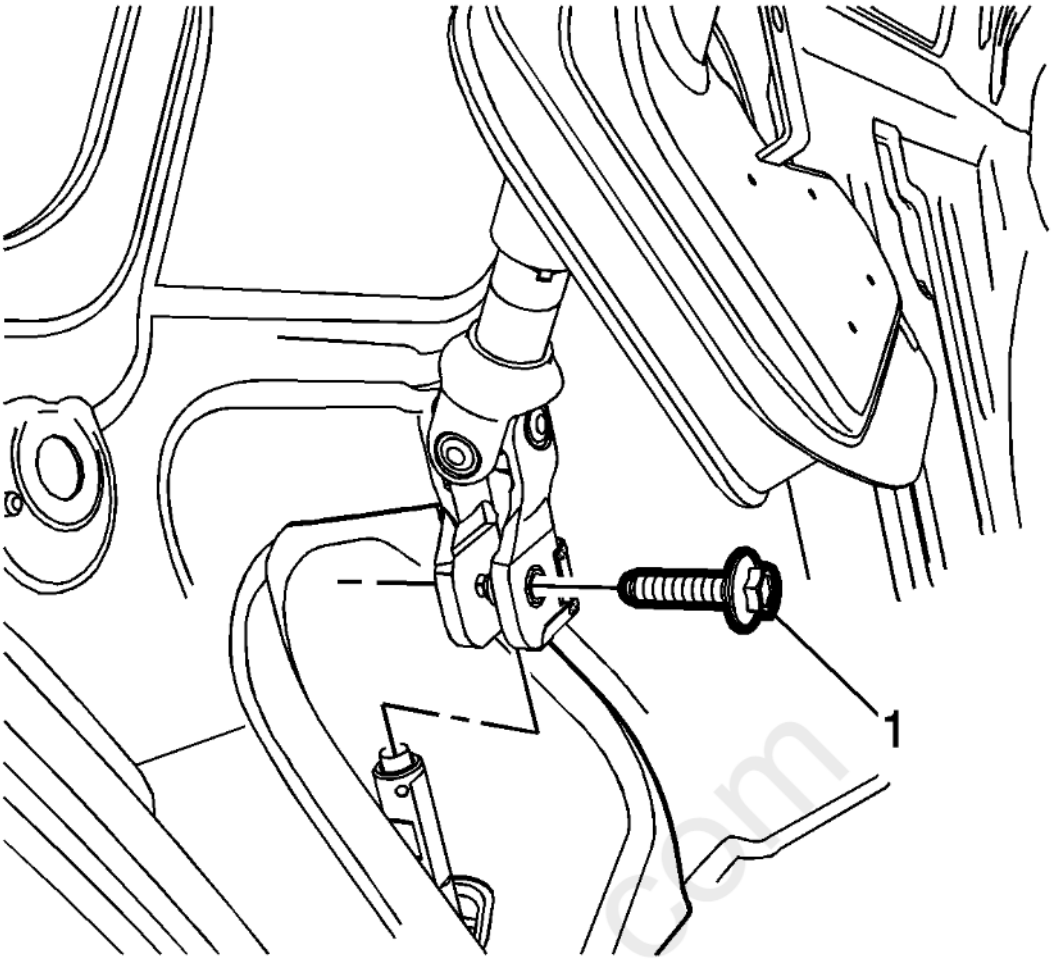

Fig. 209: Steering Shaft Coupling Bolt
Courtesy of GENERAL MOTORS COMPANY

3. Remove the bolt (1) from the coupler and disconnect the steering shaft coupling from the steering gear. Refer to **Intermediate Steering Shaft Replacement** .

cardiagn.com

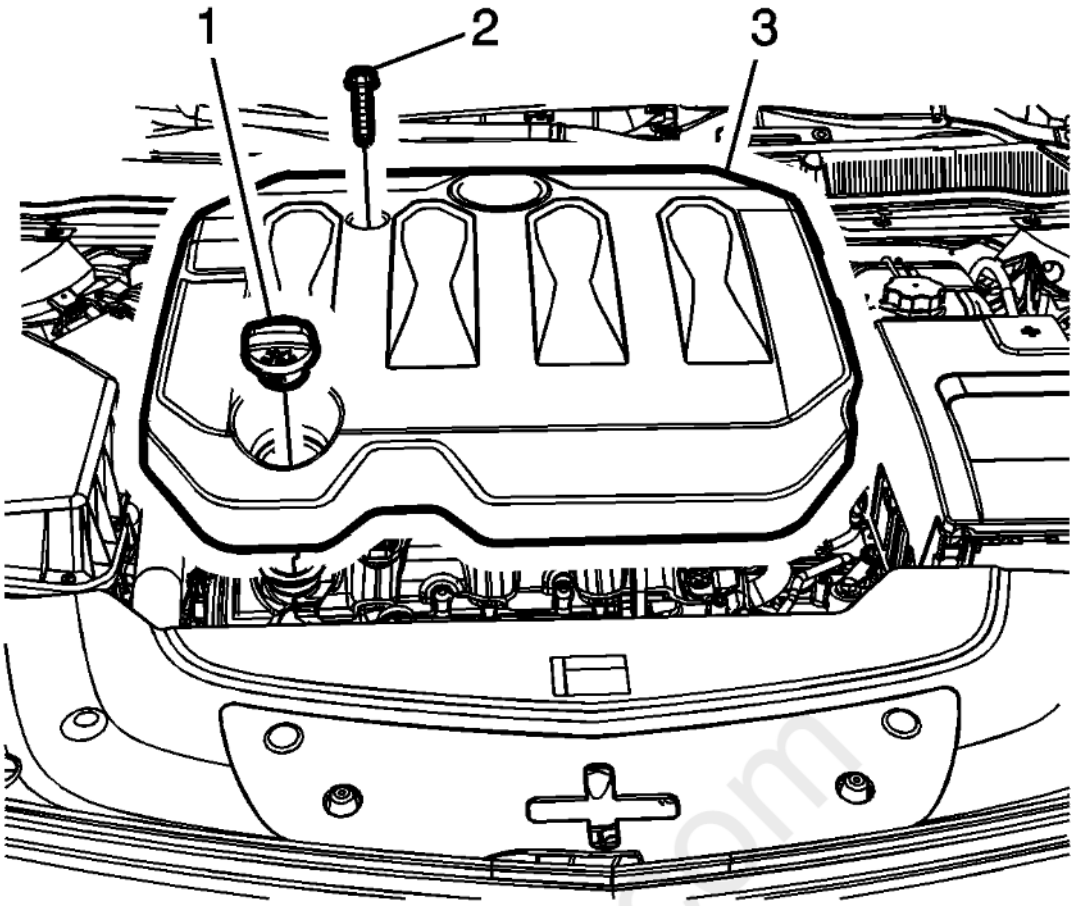

Fig. 210: Intake Manifold Cover
Courtesy of GENERAL MOTORS COMPANY

4. Remove the intake manifold cover (3). Refer to **Intake Manifold Cover Replacement (LFX)**.

cardiagn.com

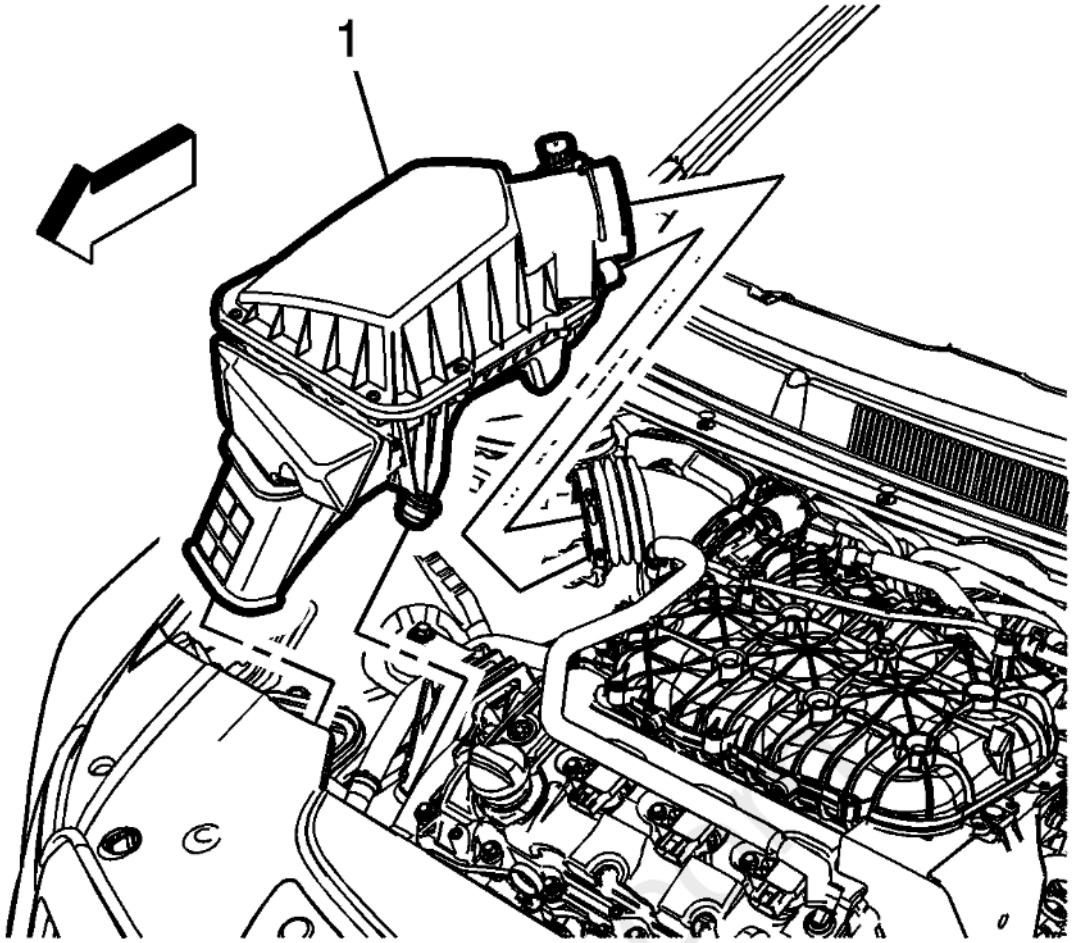

Fig. 211: Air Cleaner Assembly
Courtesy of GENERAL MOTORS COMPANY

5. Remove the air cleaner assembly (1). Refer to **Air Cleaner Assembly Replacement** .
6. Recover the refrigerant. Refer to **Refrigerant Recovery and Recharging** .
7. Drain the cooling system. Refer to **Cooling System Draining and Filling (Vacuum and Fill)** **Cooling System Draining and Filling (Static)** .
8. Remove the front compartment fuse block cover.

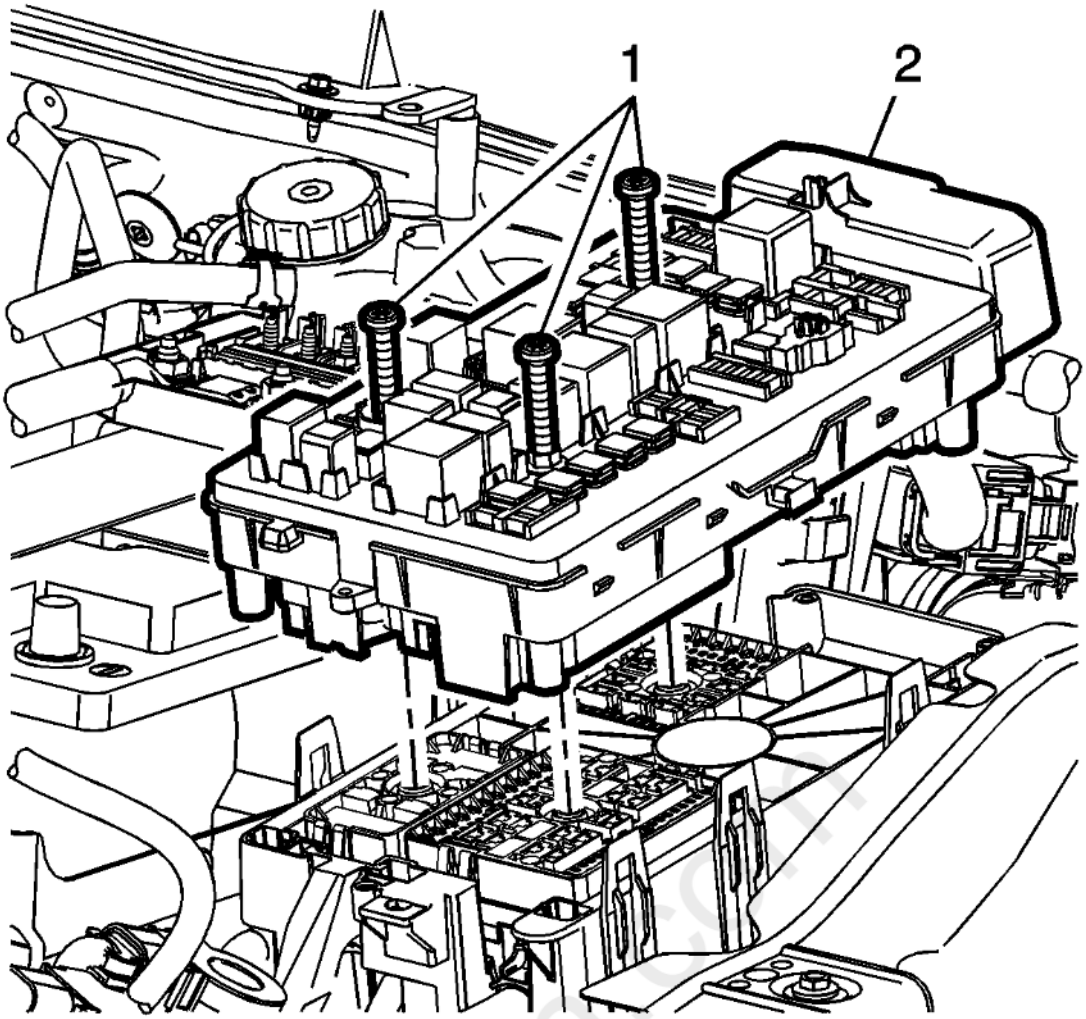

Fig. 212: Junction Block & Bolts
Courtesy of GENERAL MOTORS COMPANY

9. Remove the front compartment fuse block (2).

cardiagn.com

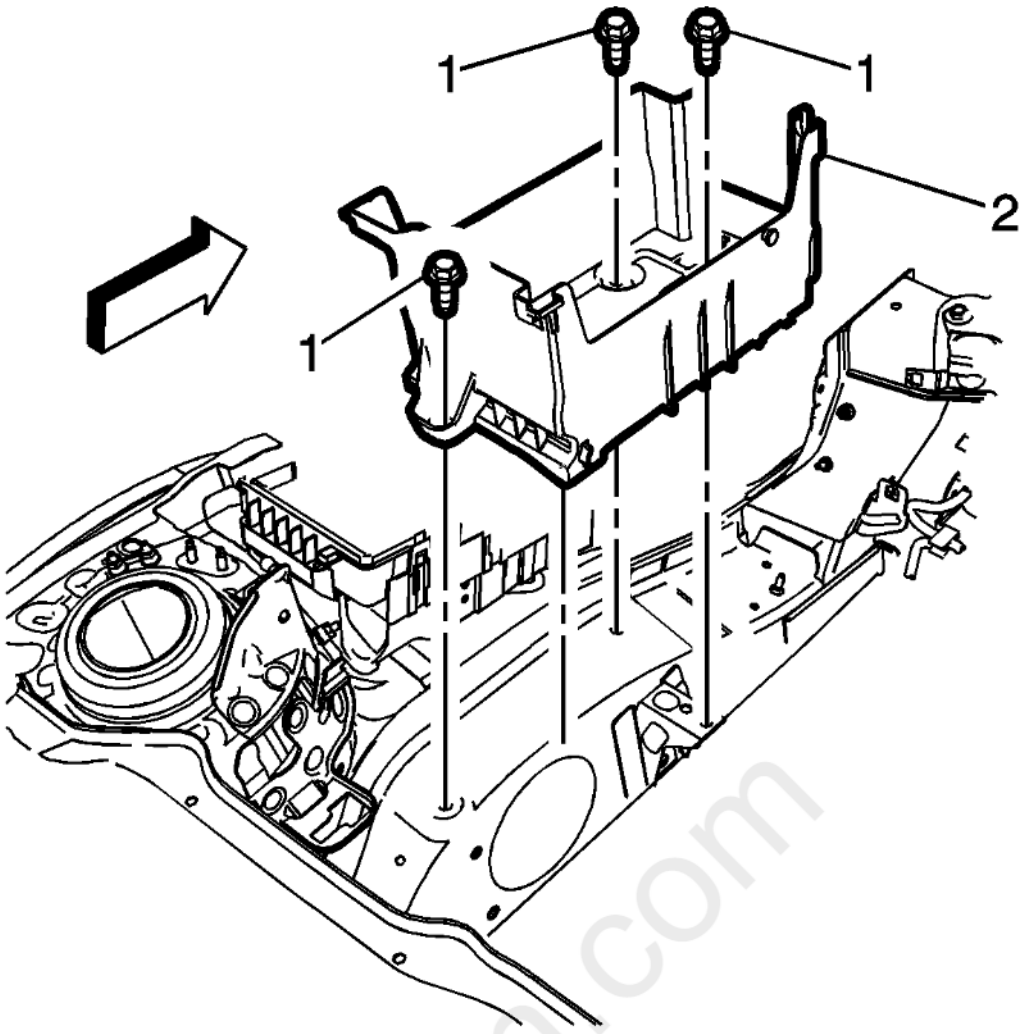

Fig. 213: Battery Tray & Bolts
Courtesy of GENERAL MOTORS COMPANY

10. Remove the battery tray (2). Refer to **Battery Tray Replacement** .

cardiagn.com

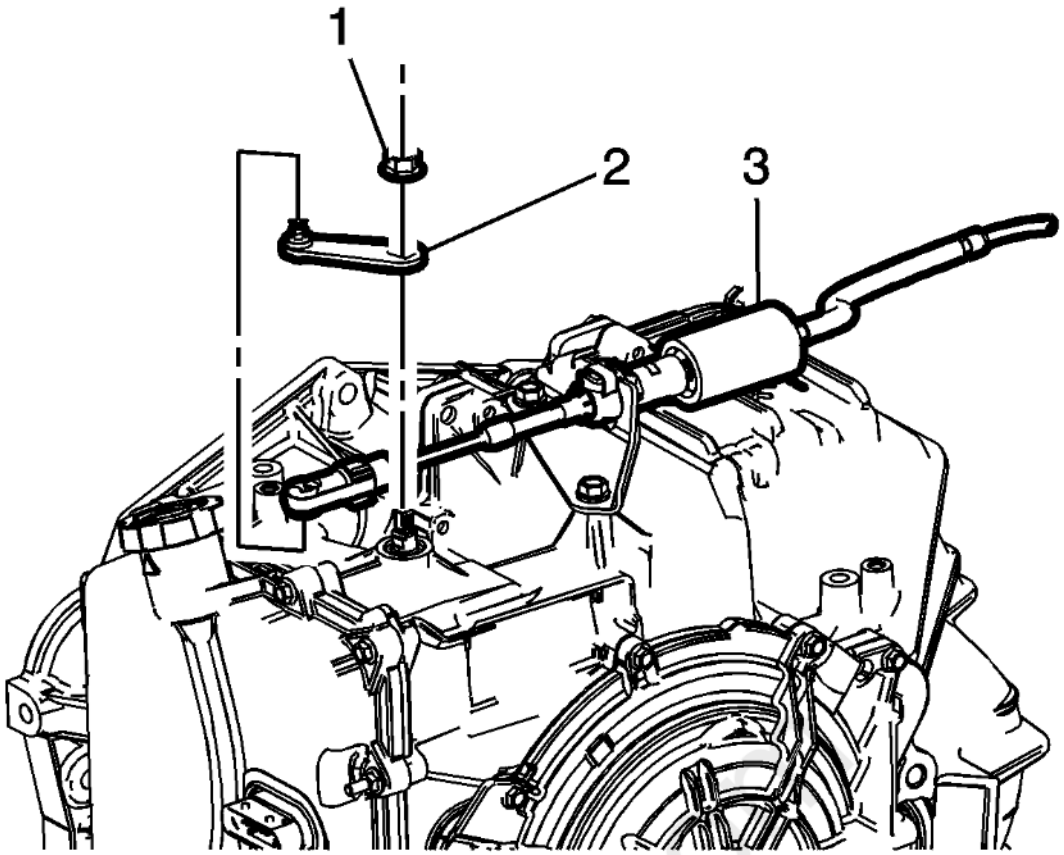

Fig. 214: Transmission Shifter Cable
Courtesy of GENERAL MOTORS COMPANY

11. Disconnect the transmission shift cable (3).

cardiagn.com

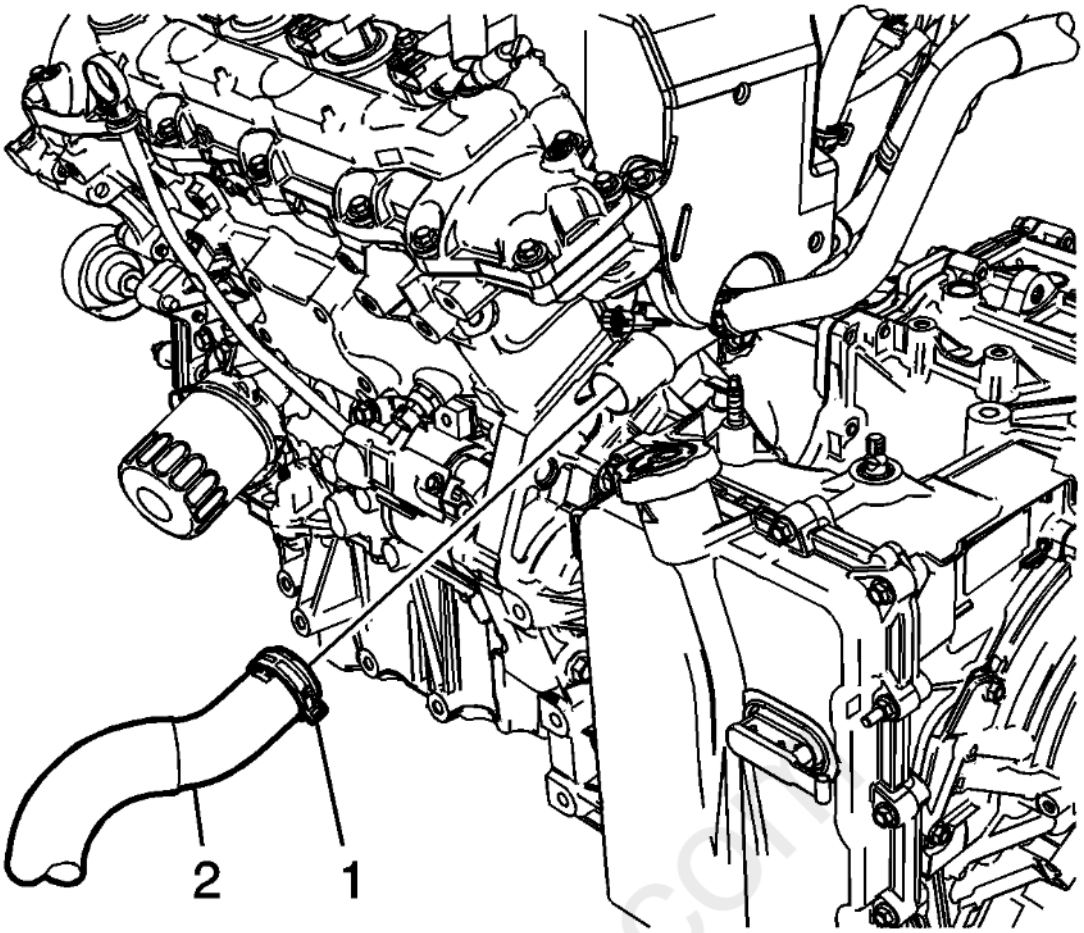

Fig. 215: Radiator Outlet Hose & Clamp
Courtesy of GENERAL MOTORS COMPANY

12. Disconnect the radiator outlet hose (2) from the engine. Refer to **Radiator Outlet Hose Replacement (LFX)** .
13. Disconnect the radiator inlet hose from the engine. Refer to **Radiator Inlet Hose Replacement (LFX)** .

cardiagn.com

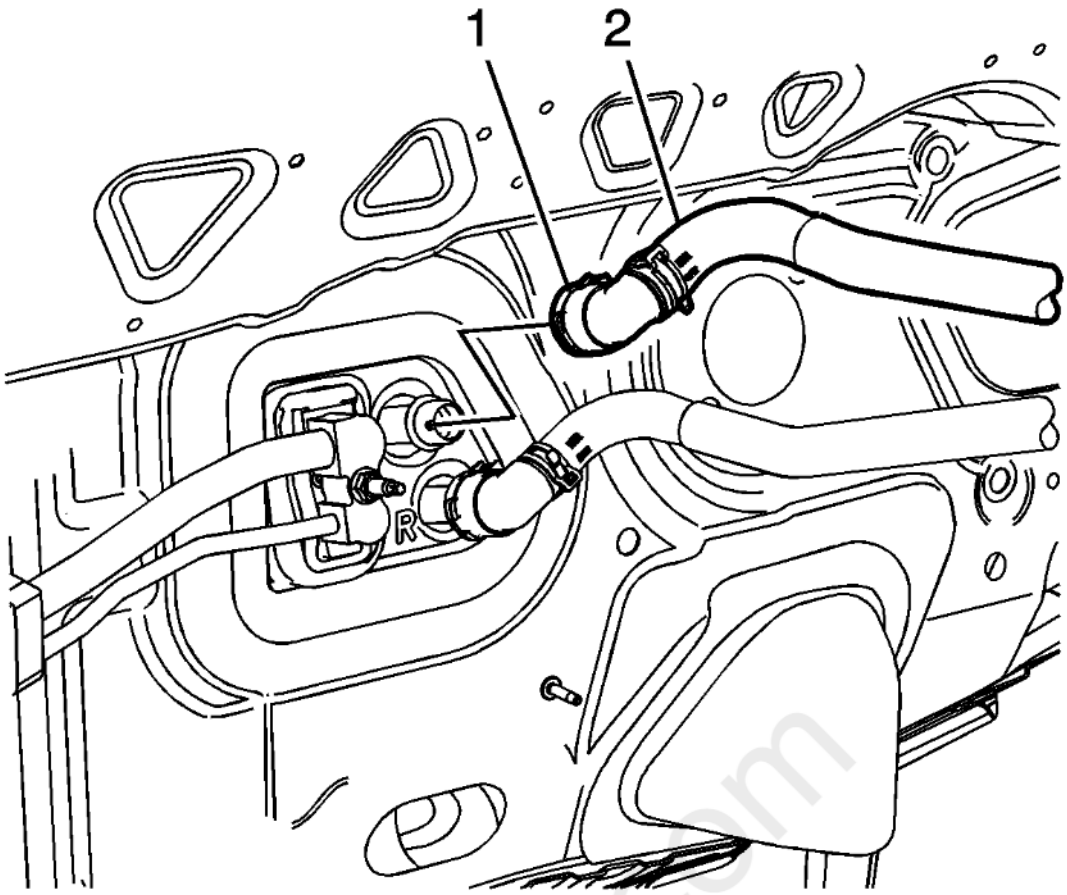

Fig. 216: Heater Inlet Hose Quick Disconnect Fitting
Courtesy of GENERAL MOTORS COMPANY

14. Release the clip from the quick disconnect (1) and remove the heater inlet hose (2) from the heater core tube.

cardiagn.com

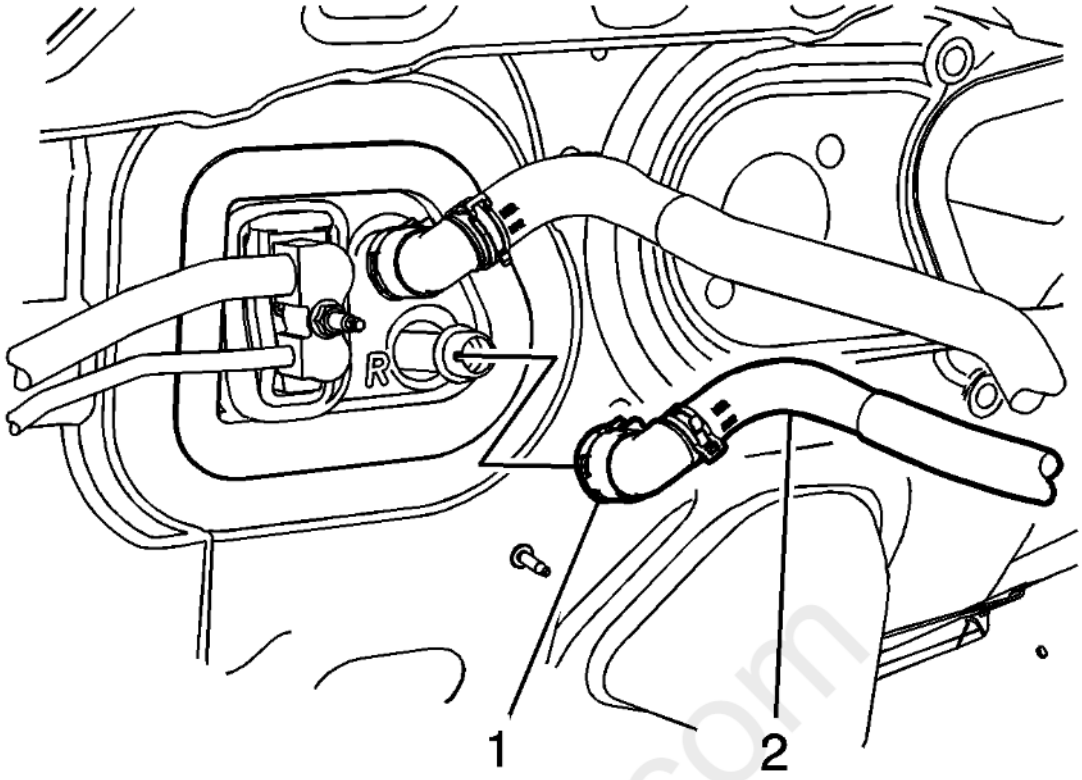

Fig. 217: Heater Outlet Hose At Heater Core
Courtesy of GENERAL MOTORS COMPANY

15. Release the clip from the quick disconnect (1) and remove the heater outlet hose (2) from the heater core tube.
16. Remove the A/C connectors from the service ports.
17. Remove both front wheels. Refer to **Tire and Wheel Removal and Installation** .
18. Remove right side front wheelhouse liner. Refer to **Front Wheelhouse Liner Replacement** .
19. Remove the exhaust front pipe. Refer to **Front Pipe Replacement (LFX)** .

carqiagn.com

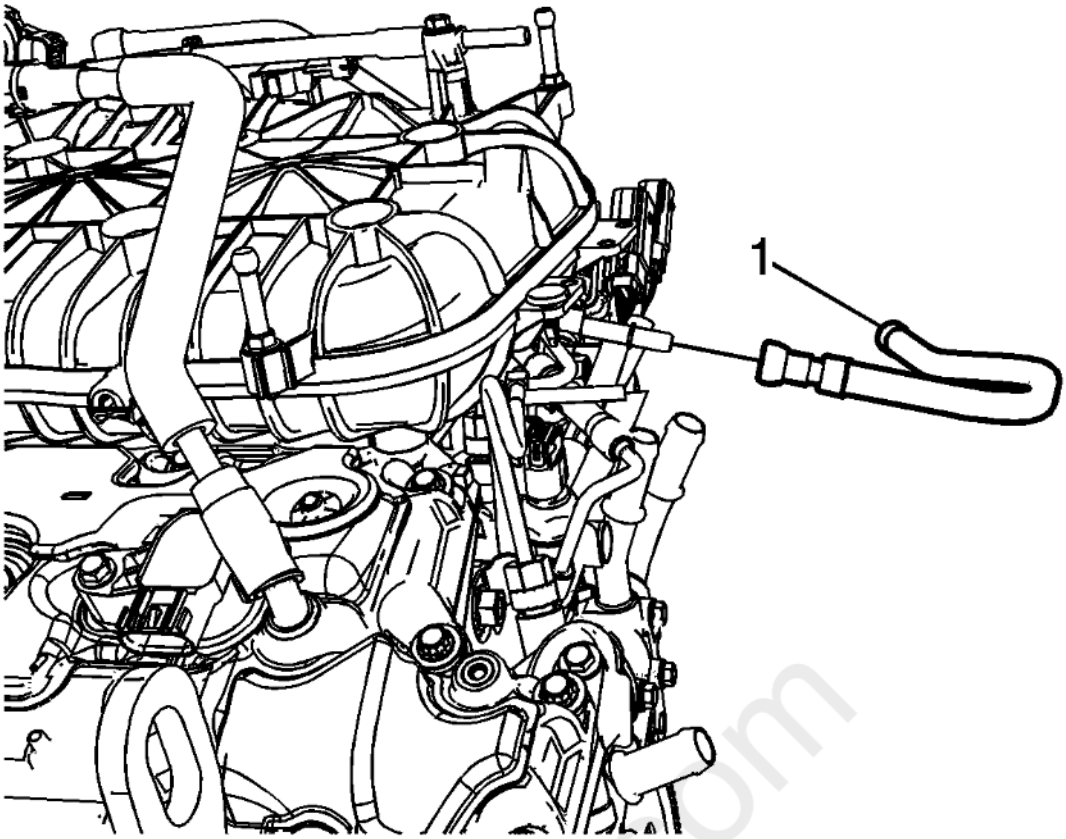

Fig. 218: Fuel Feed Line
Courtesy of GENERAL MOTORS COMPANY

20. Disconnect the fuel feed line (1). Refer to **Metal Collar Quick Connect Fitting Service** .
21. Disconnect the fuel feed line from the engine bracket retainer.

cardiagn.com

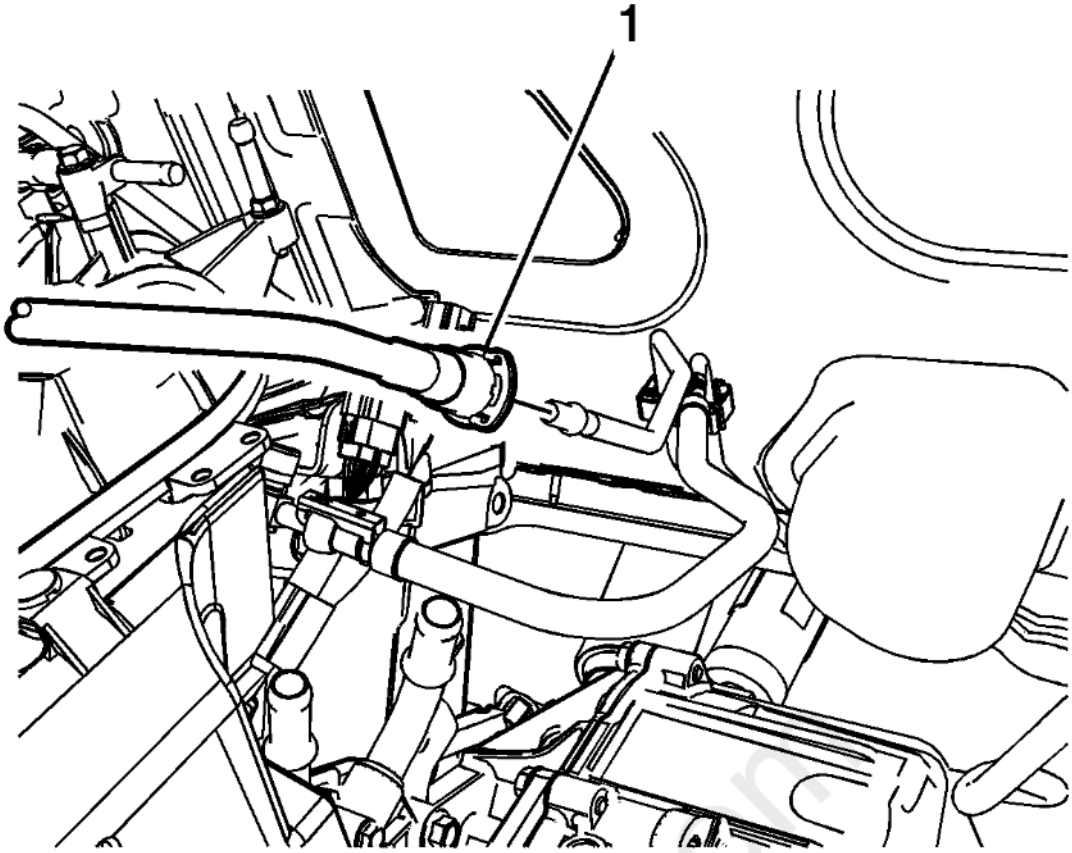

Fig. 219: Evaporative Emission Line
Courtesy of GENERAL MOTORS COMPANY

22. Disconnect the evaporative emission line (1). Refer to **Plastic Collar Quick Connect Fitting Service** .

cardiagn.com

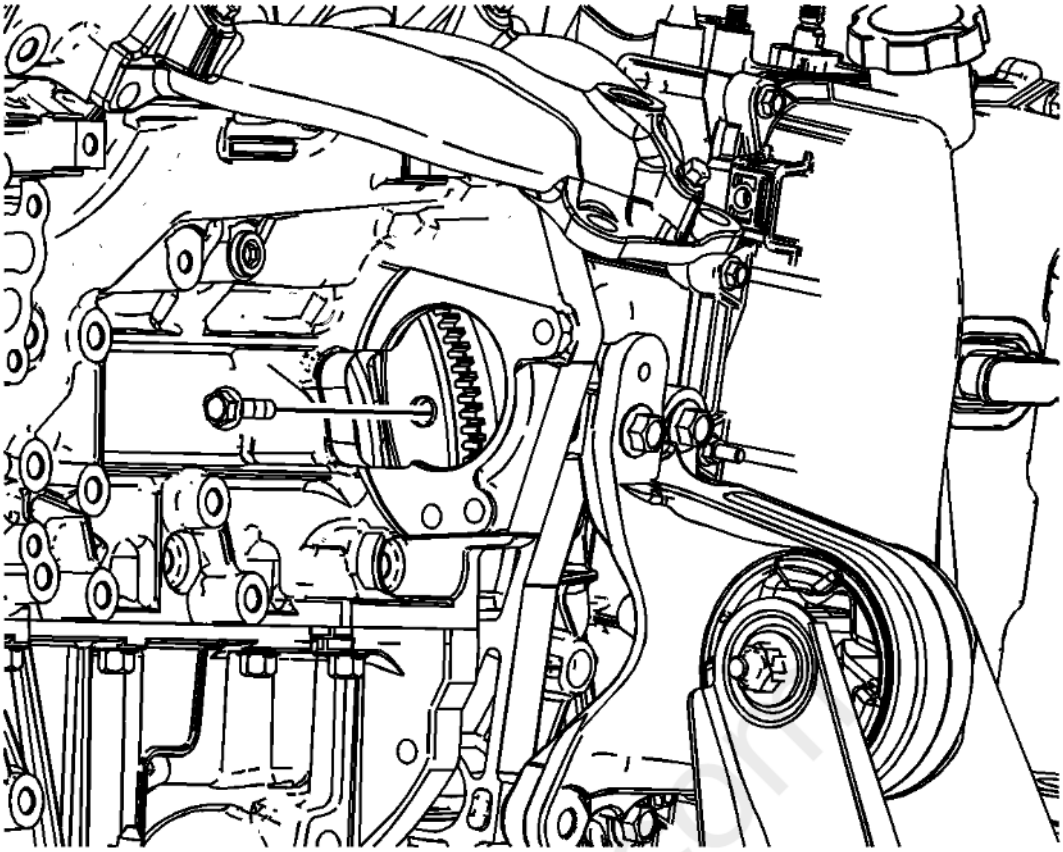

Fig. 220: Torque Converter To Flywheel Bolts
Courtesy of GENERAL MOTORS COMPANY

23. Remove the starter. Refer to **Starter Replacement (LFX)** .
24. Mark the torque converter to flexplate relationship.

NOTE: **Rotate engine clockwise using the crankshaft balancer bolt to gain access to each bolt.**

25. Remove the torque converter bolts.
26. Remove the wheel drive shafts from the hub/bearing assemblies. Refer to **Front Wheel Drive Shaft Replacement - Left Side** , and **Front Wheel Drive Shaft Replacement - Right Side** .
27. Remove the front fascia. Refer to **Front Bumper Fascia Replacement** .
28. Disconnect and reposition harnesses as required.
29. Disconnect the power steering cooler lines from the cooler.
30. Disconnect the steering pump hydraulic lines.
31. Lower the vehicle and powertrain onto a suitable support table. Using wood blocks support the oil pan and front frame on the table.
32. Disconnect the coolant hoses from the radiator surge tank.
33. Disconnect the air conditioning hoses from the air compressor.

NOTE: **Mechanics wire can be used.**

34. Support the radiator assembly to the core support.

cardiagn.com

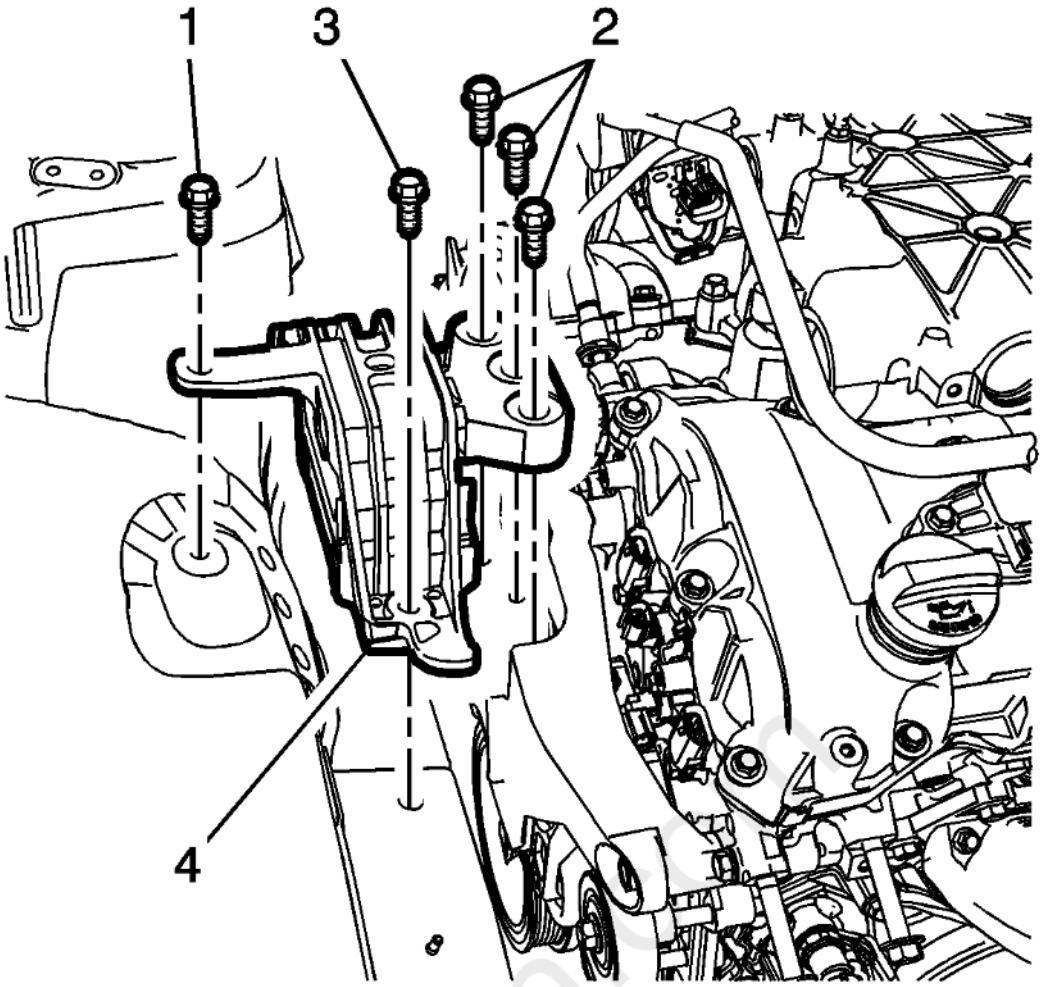

Fig. 221: Right Side Engine Mount & Bolts
Courtesy of GENERAL MOTORS COMPANY

35. Remove the right side engine mount to engine bolts (2). Refer to **Engine Mount Replacement - Right Side**.
36. Remove the left side transmission mount to transmission bolts. Refer to **Transmission Mount Replacement - Left Side** .
37. Remove the front and rear frame to the body bolts. Refer to **Drivetrain and Front Suspension Frame Replacement** .
38. Raise the vehicle off the powertrain.
39. Remove the front and rear engine mount through bolts. Refer to **Transmission Front Mount Replacement** , and **Transmission Rear Mount Replacement** .
40. Lift the powertrain assembly off the frame and place on the floor.
41. Separate the engine from the transmission.
42. Disconnect electrical connectors as necessary.

Installation Procedure

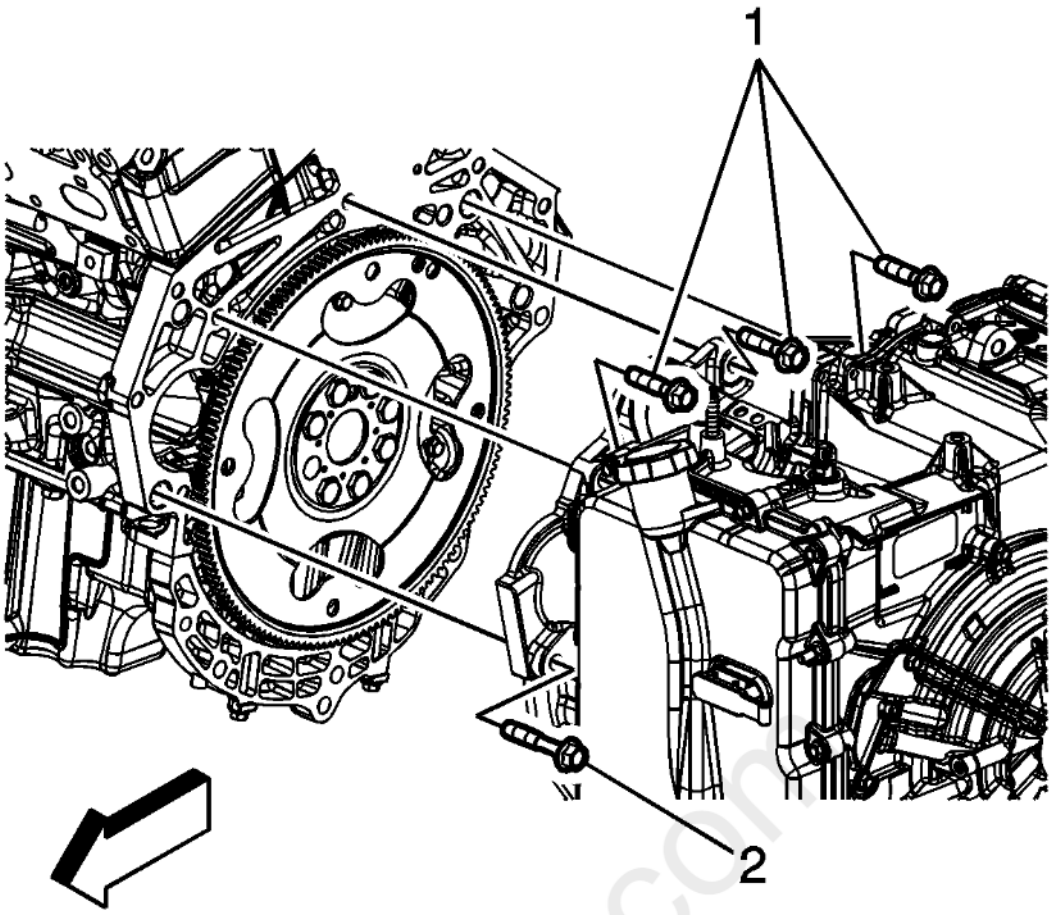

Fig. 222: Upper Transmission To Engine Bolts
Courtesy of GENERAL MOTORS COMPANY

1. Install the upper transmission to engine bolt (1, 2) and tighten to 75 N.m (55 lb ft).
2. Place the powertrain assembly on the frame.
3. Place the powertrain and frame assembly on the engine support table.
4. Align the powertrain assembly to the vehicle.
5. Lower the vehicle onto the powertrain assembly.
6. Install the front and rear frame bolts. Refer to **Drivetrain and Front Suspension Frame Replacement** .
7. Install the left side transmission mount to transmission bolts. Refer to **Transmission Mount Replacement - Left Side** .

cardiagn.com

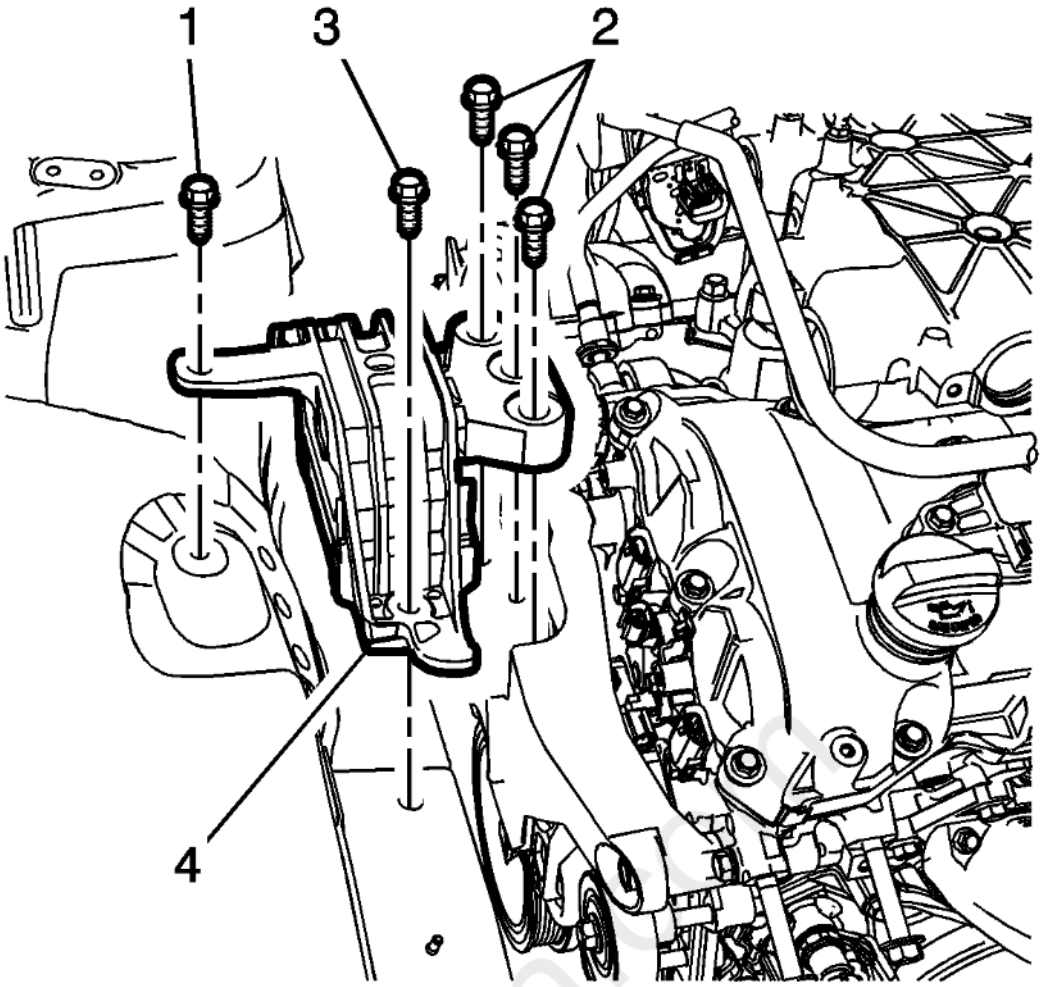

Fig. 223: Right Side Engine Mount & Bolts
Courtesy of GENERAL MOTORS COMPANY

8. Install the right side engine mount to engine bolts (2). Refer to **Engine Mount Replacement - Right Side**.
9. Release the radiator from the core support.
10. Connect the air conditioning hoses to the air compressor and tighten the fasteners to 22 N.m (16 lb ft).
11. Connect the coolant hoses to the radiator surge tank.
12. Retain the harness in it original position.
13. Remove the engine support table.
14. Connect the steering pump hydraulic lines.
15. Install the front fascia. Refer to **Front Bumper Fascia Replacement** .

cardiagn.com

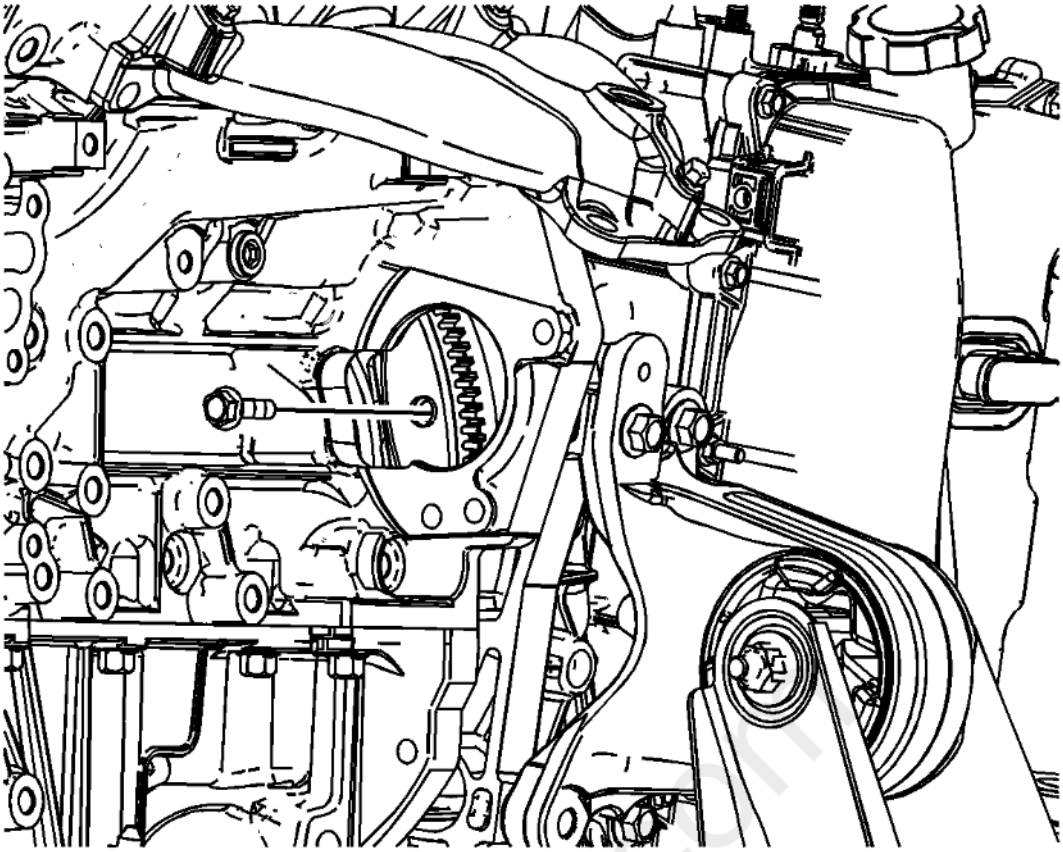

Fig. 224: Torque Converter To Flywheel Bolts
Courtesy of GENERAL MOTORS COMPANY

16. Align the torque converter and flexplate marks and install the torque convertor-to-flexplate bolts and tighten to 62 N.m (46 lb ft).
17. Install the exhaust front pipe. Refer to **Front Pipe Replacement (LFX)** .
18. Install the wheel drive shafts from the hub/bearing assemblies. Refer to **Front Wheel Drive Shaft Replacement - Left Side** , and **Front Wheel Drive Shaft Replacement - Right Side** .

cardiagn.com

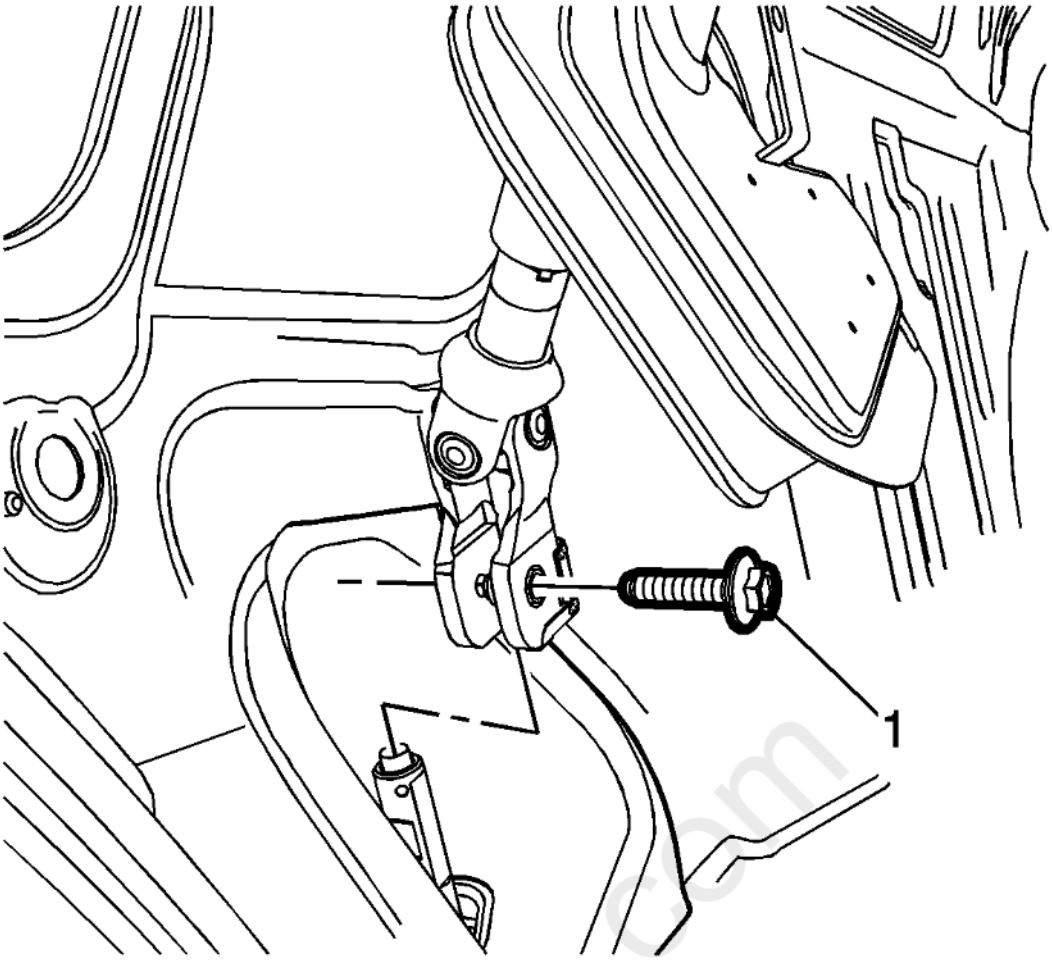

Fig. 225: Steering Shaft Coupling Bolt
Courtesy of GENERAL MOTORS COMPANY

19. Connect the steering shaft coupling to the steering gear and install the bolt (1). Refer to **Intermediate Steering Shaft Replacement** .

cardiagn.com

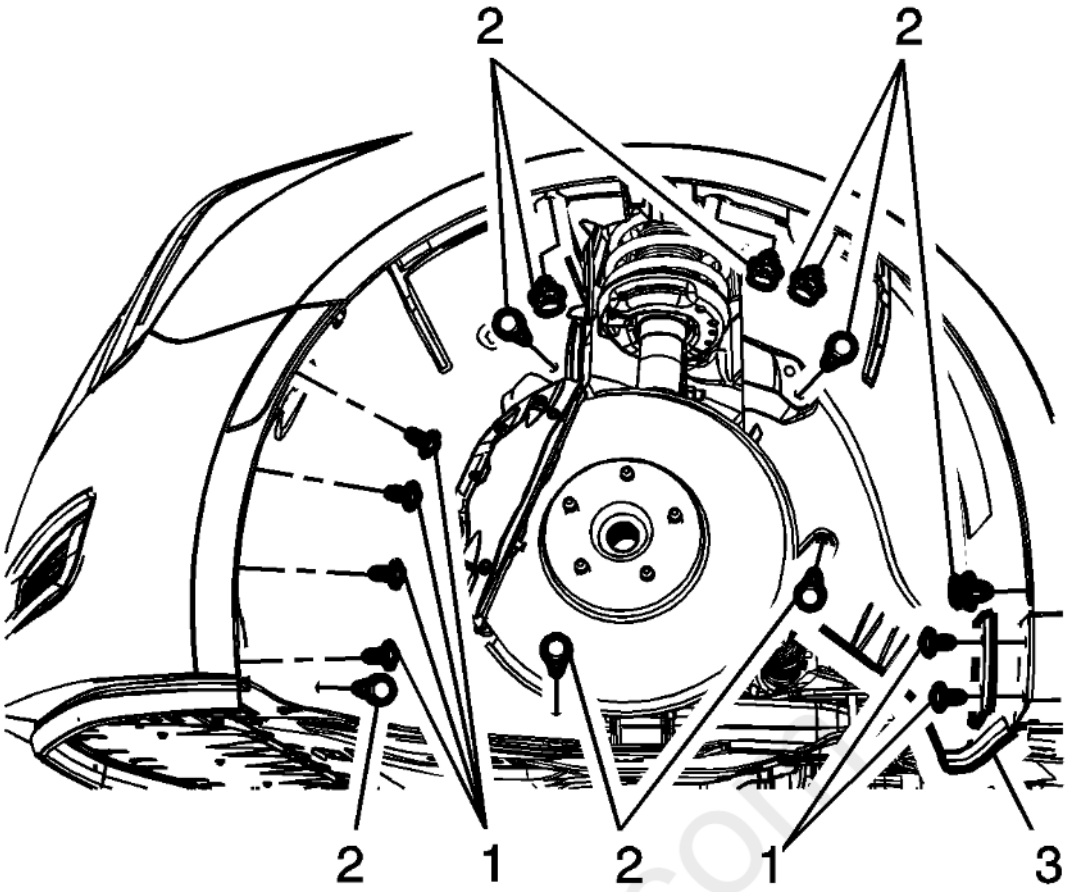

Fig. 226: Front Wheelhouse Liner & Mounting Components
Courtesy of GENERAL MOTORS COMPANY

20. Install the right side front wheelhouse liner (4). Refer to **Front Wheelhouse Liner Replacement** .
21. Install the front wheels. Refer to **Tire and Wheel Removal and Installation** .

carmagn.com

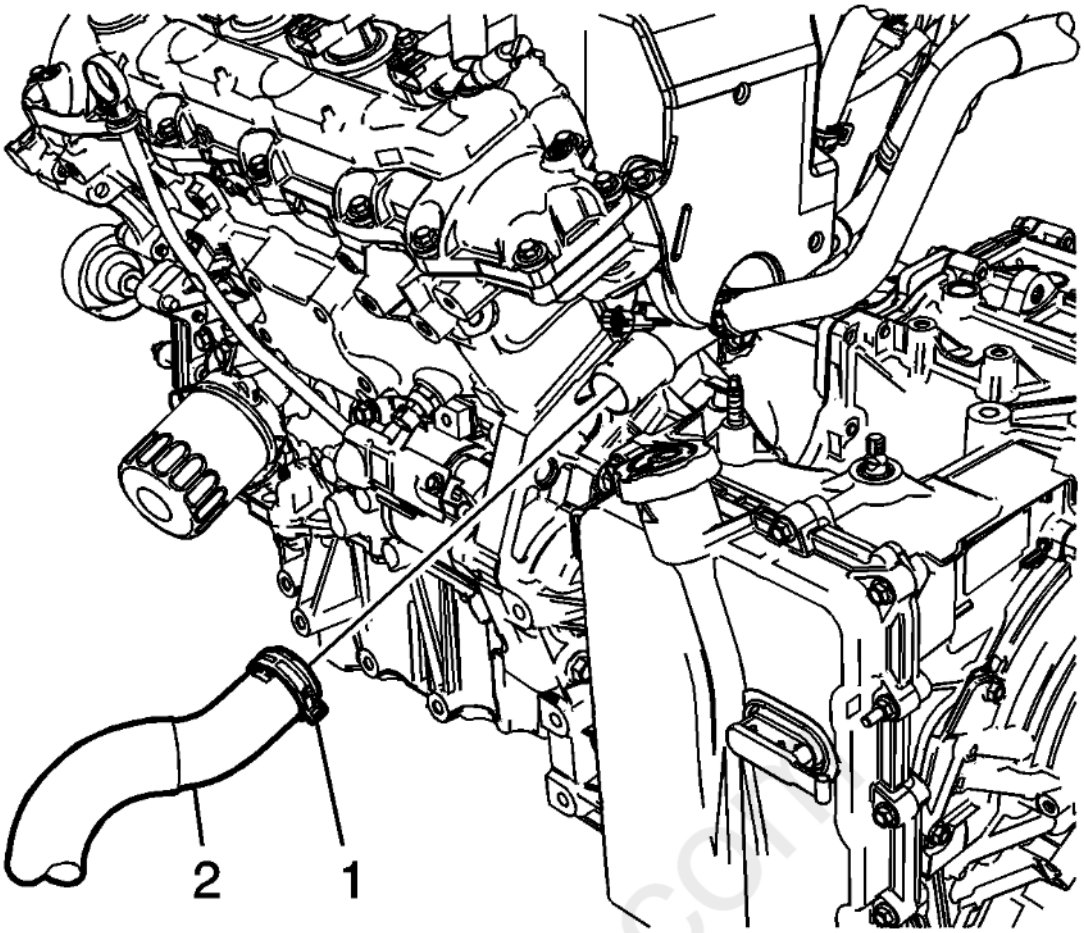

Fig. 227: Radiator Outlet Hose & Clamp
Courtesy of GENERAL MOTORS COMPANY

22. Install the radiator outlet hose (2). Refer to **Radiator Outlet Hose Replacement (LFX)** .
23. Install the radiator inlet hose. Refer to **Radiator Inlet Hose Replacement (LFX)** .

cardiagn.com

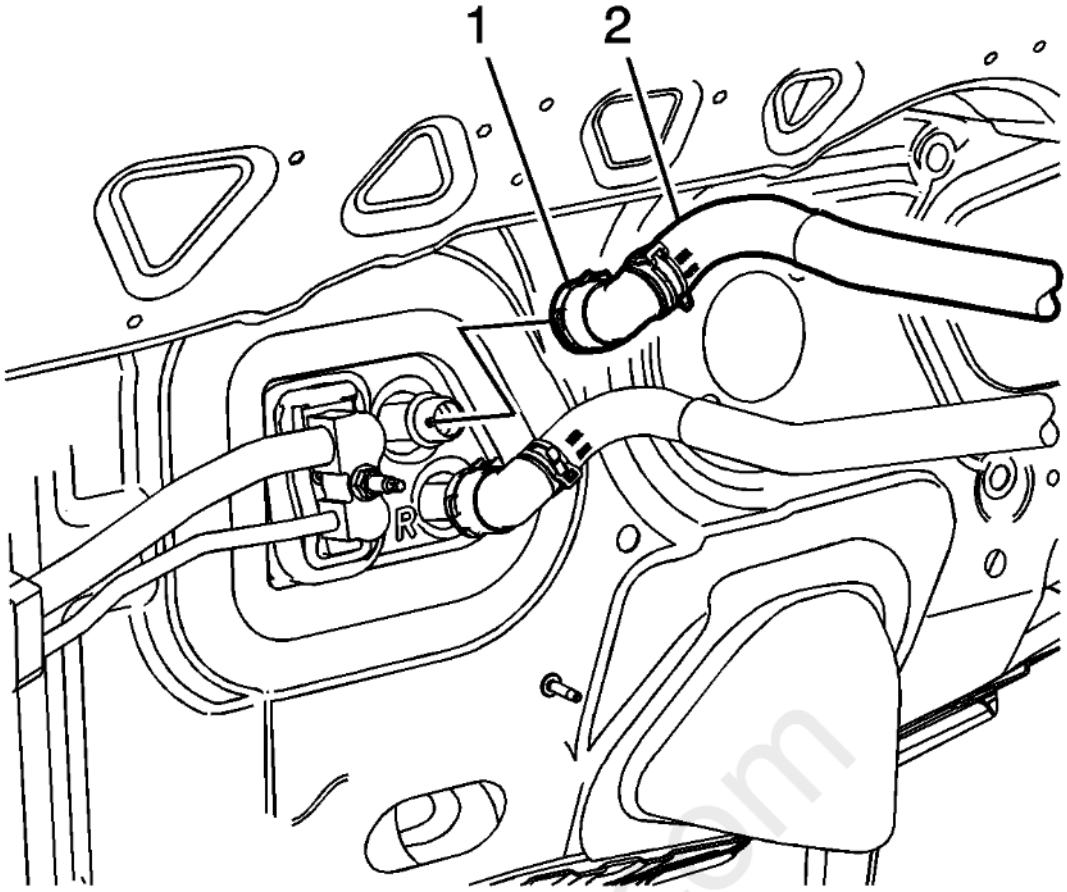

Fig. 228: Heater Inlet Hose Quick Disconnect Fitting
Courtesy of GENERAL MOTORS COMPANY

24. Install the heater inlet hose (2) to the heater core tube and clip the quick disconnect (1).

cardiagn.com

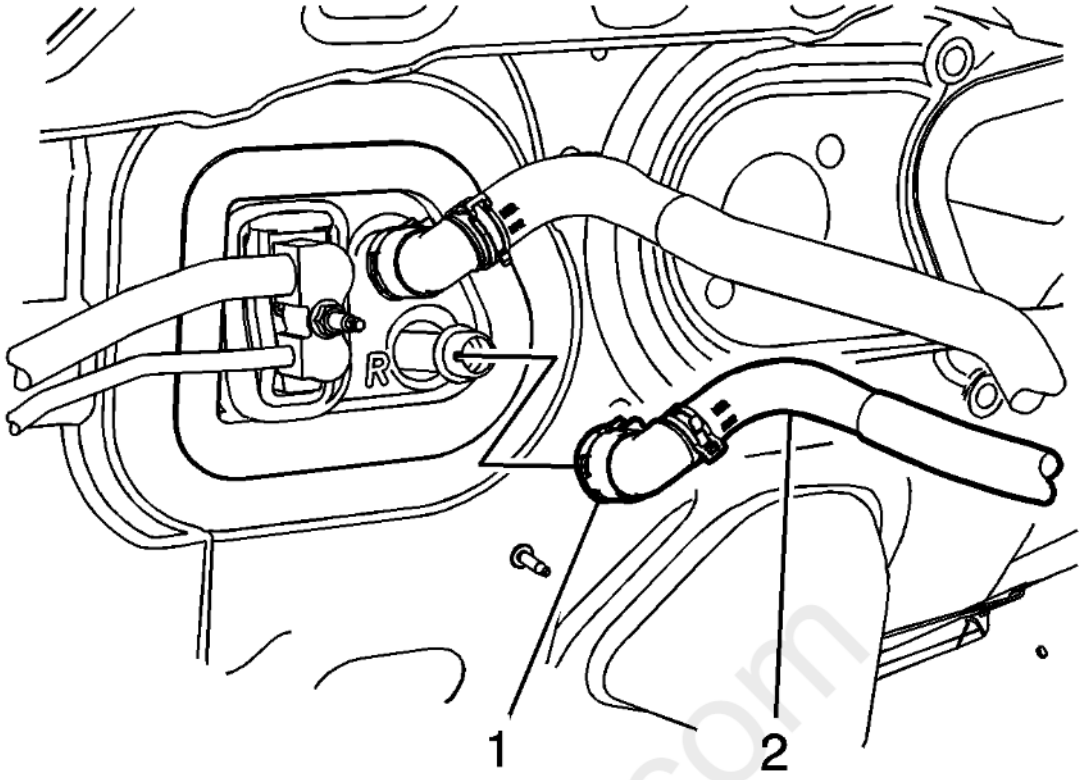

Fig. 229: Heater Outlet Hose At Heater Core
Courtesy of GENERAL MOTORS COMPANY

25. Install the heater outlet hose (2) to the heater core tube and clip the quick disconnect (1).

cardiagn.com

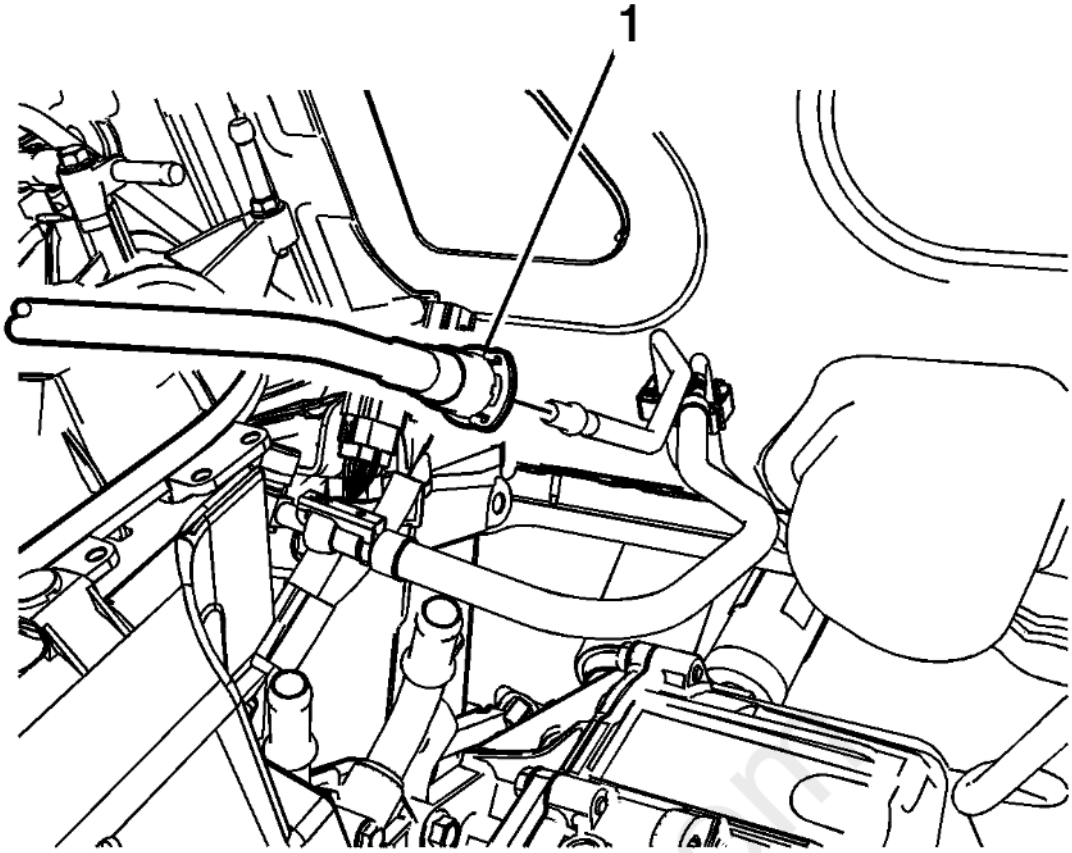

Fig. 230: Evaporative Emission Line
Courtesy of GENERAL MOTORS COMPANY

26. Install the fuel EVAP line (1).
27. Connect the fuel feel line to the engine bracket retainer.

cardiagn.com

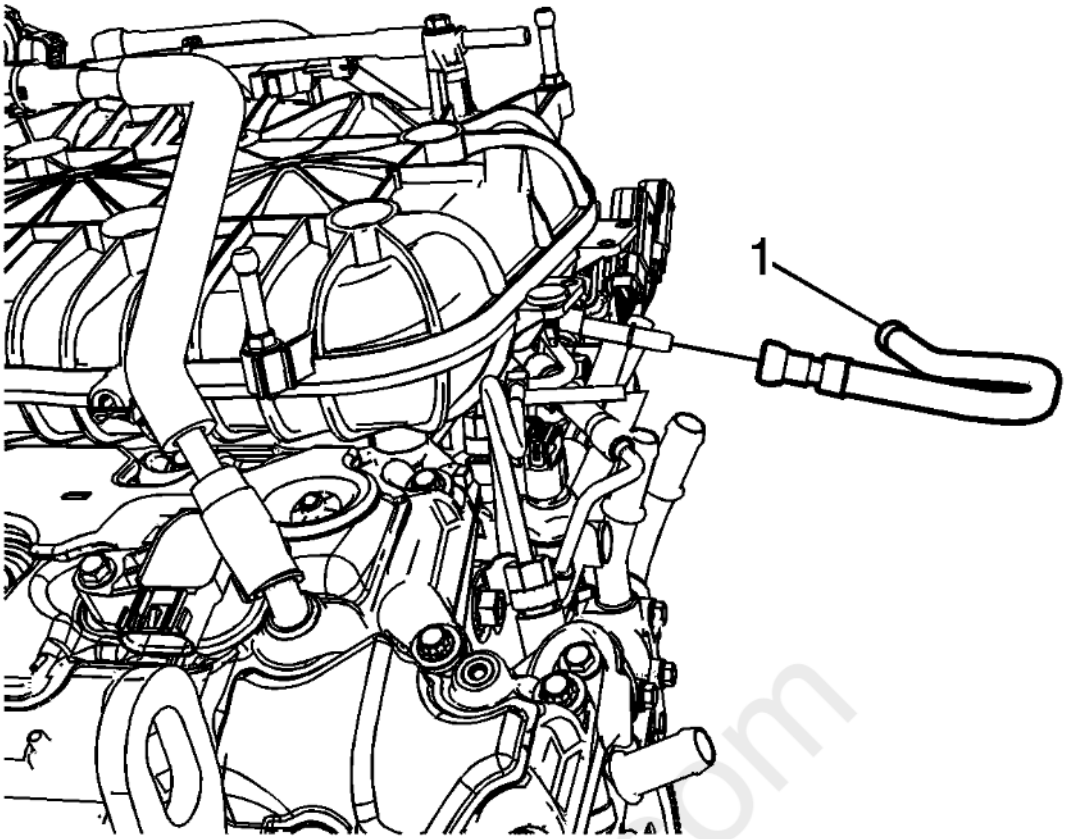

Fig. 231: Fuel Feed Line
Courtesy of GENERAL MOTORS COMPANY

28. Connect the fuel feed line (1). Refer to **Fuel Feed Pipe Replacement (LFX)** .

cardiagn.com

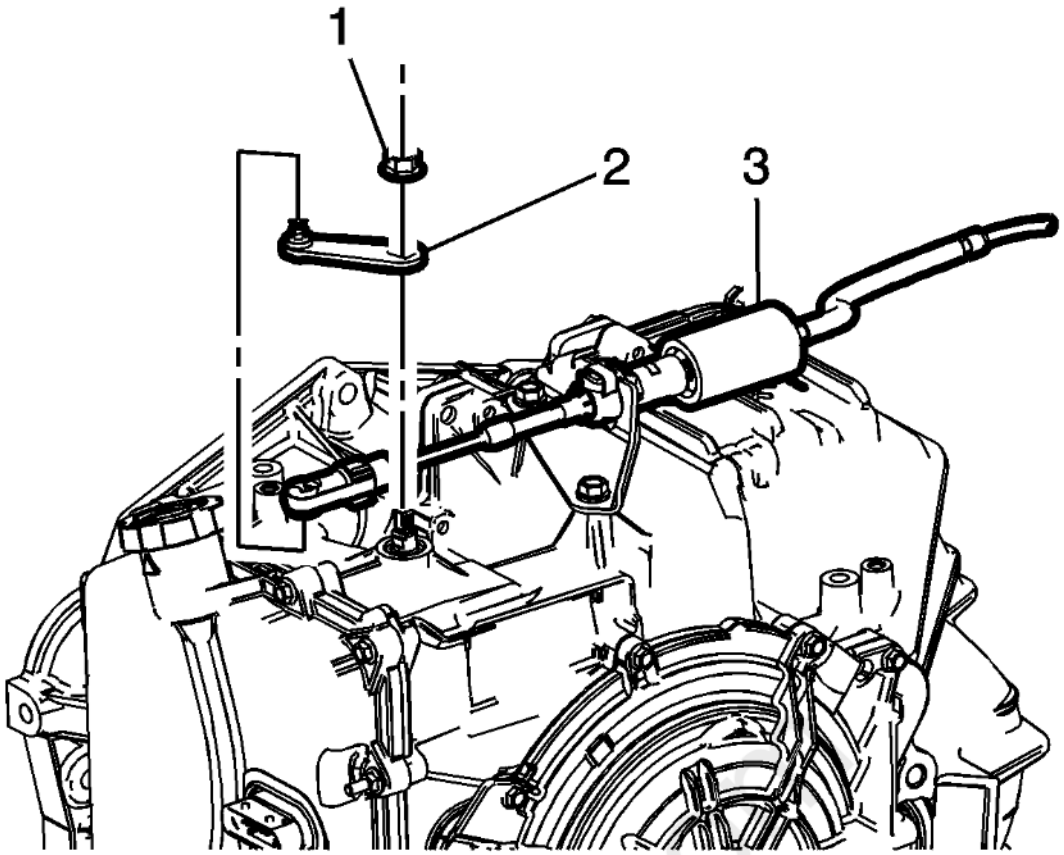

Fig. 232: Transmission Shifter Cable
Courtesy of GENERAL MOTORS COMPANY

29. Connect the transmission shifter cable (3).

cardiagn.com

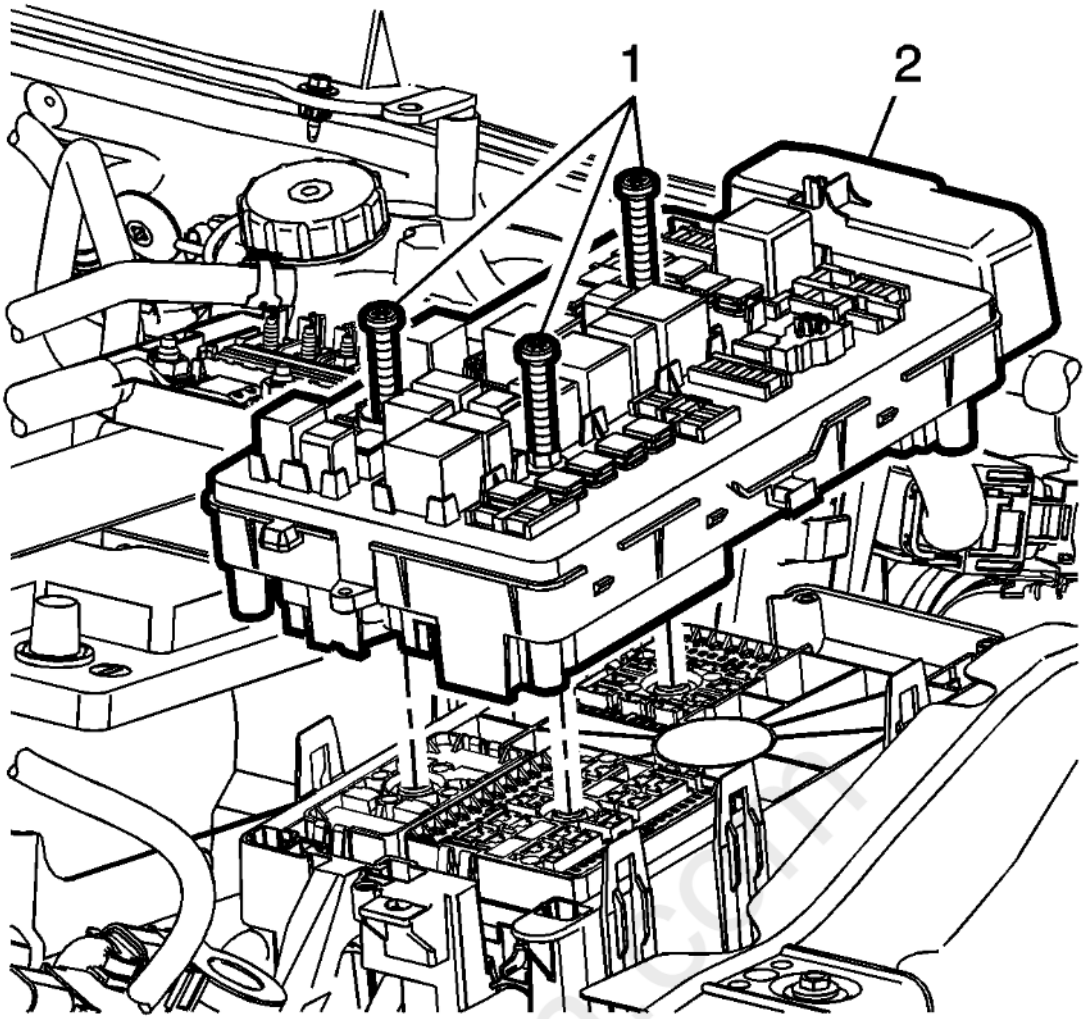

Fig. 233: Junction Block & Bolts
Courtesy of GENERAL MOTORS COMPANY

30. Install the front compartment fuse block (2).
31. Install the front compartment fuse block cover.

cardiagn.com

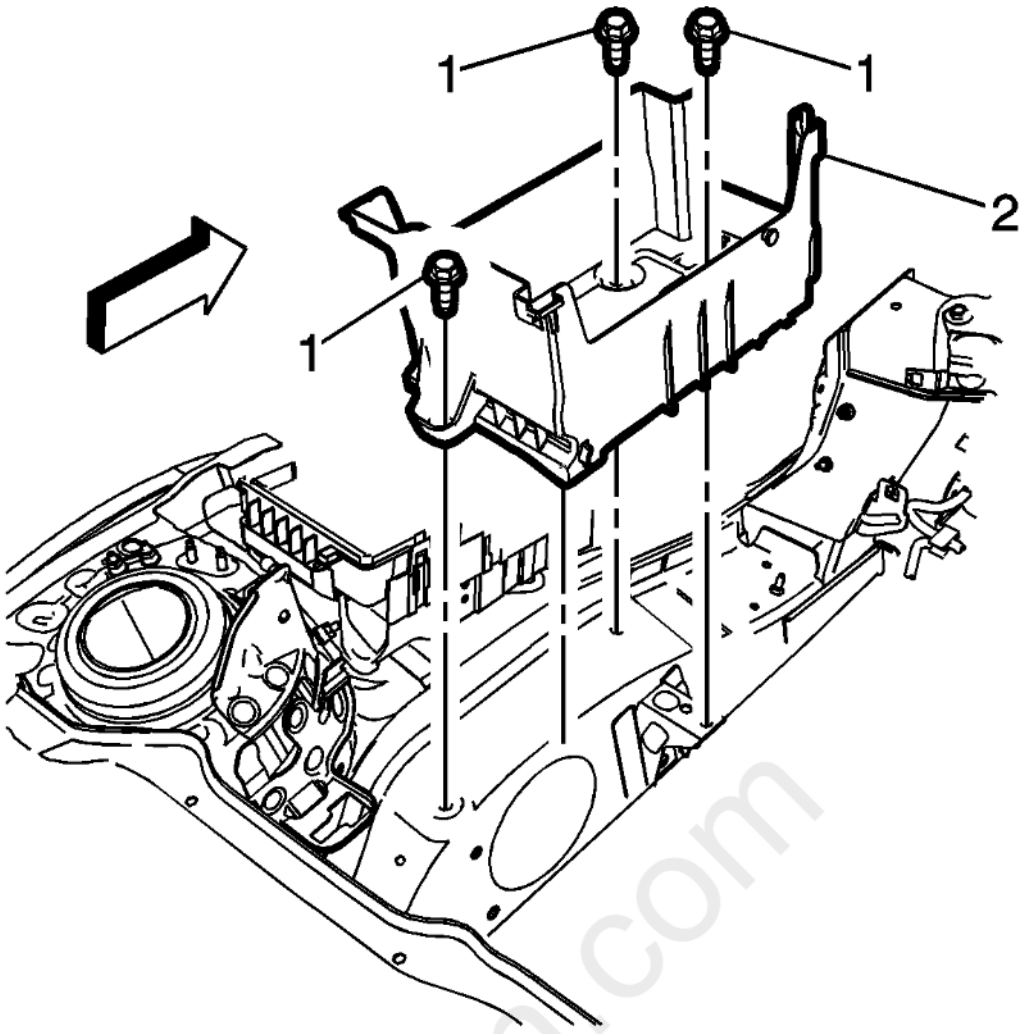

Fig. 234: Battery Tray & Bolts
Courtesy of GENERAL MOTORS COMPANY

32. Install the battery tray (2). Refer to **Battery Tray Replacement** .
33. Connect the negative battery cable. Refer to **Battery Negative Cable Disconnection and Connection** .
34. Fill the vehicle with coolant. Refer to **Cooling System Draining and Filling (Vacuum and Fill)** **Cooling System Draining and Filling (Static)** .
35. Recharge the air conditioning system. Refer to **Refrigerant Recovery and Recharging** .

Carmagnet.com

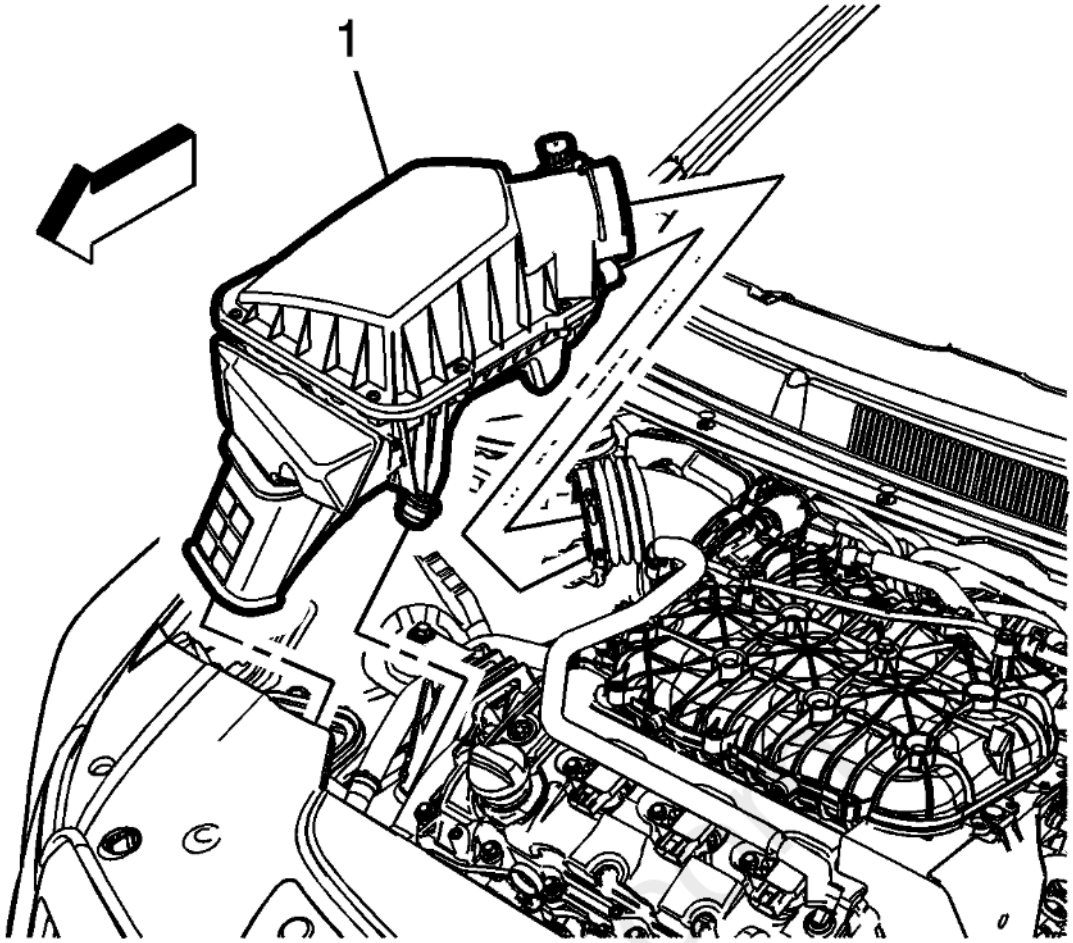

Fig. 235: Air Cleaner Assembly
Courtesy of GENERAL MOTORS COMPANY

36. Install the air cleaner assembly (1). Refer to **Air Cleaner Assembly Replacement** .

NOTE: **Prelube is necessary if the engine is replaced or overhauled.**

37. If the engine is replaced with a new engine or has been overhauled, perform the Engine Prelubing procedure. Refer to **Engine Prelubing** .
38. If prelubing has not been performed, fill the engine oil. Refer to **Engine Oil and Oil Filter Replacement**.

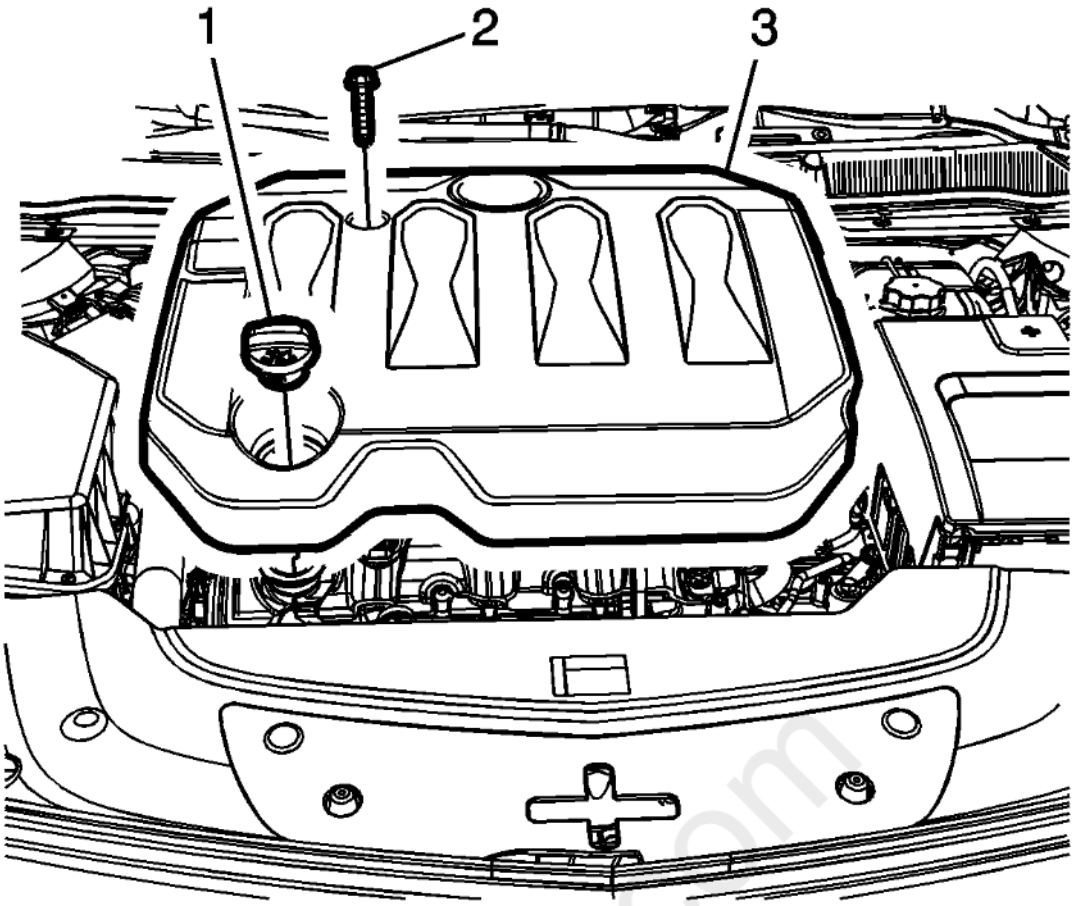

Fig. 236: Intake Manifold Cover
Courtesy of GENERAL MOTORS COMPANY

39. Install the intake manifold cover (3). Refer to **Intake Manifold Cover Replacement (LFX)**.

cardiagn.com

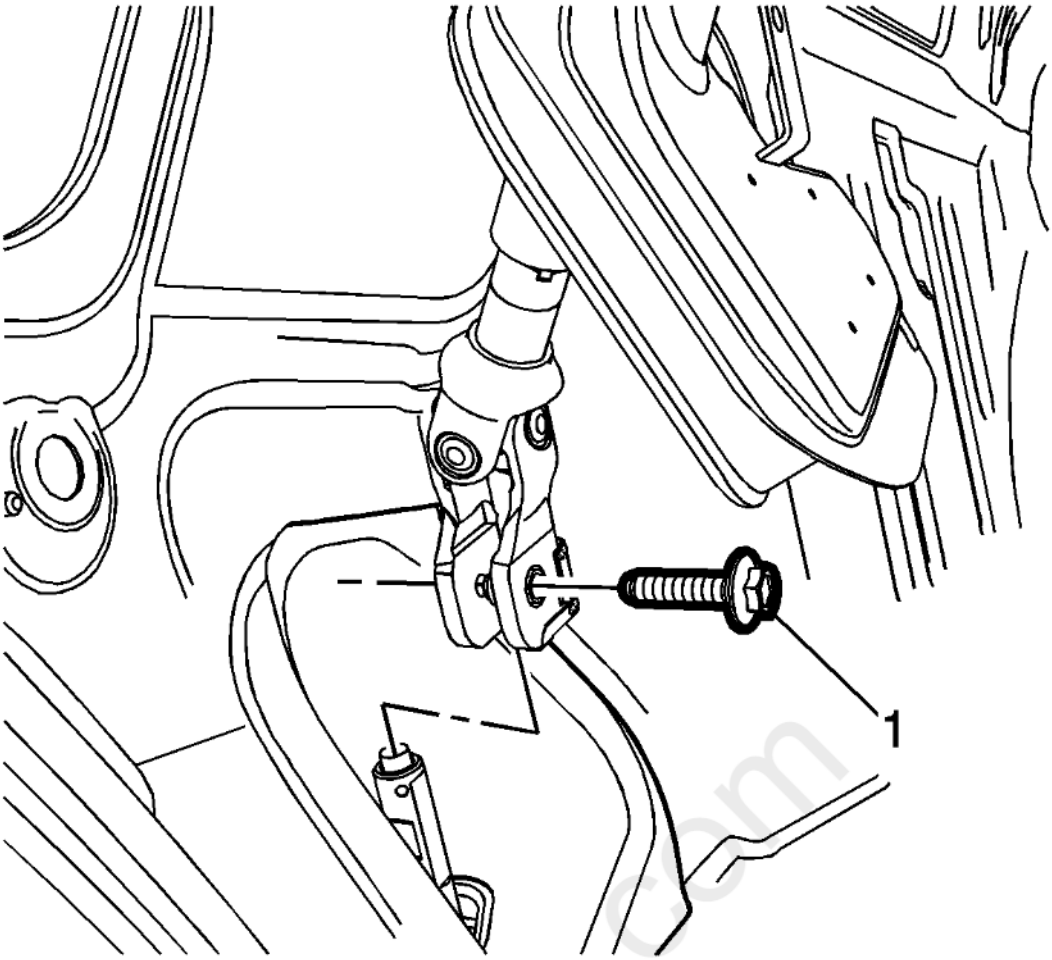

Fig. 237: Steering Shaft Coupling Bolt
Courtesy of GENERAL MOTORS COMPANY

40. Install the bolt (1) from the coupler and connect the steering shaft coupling to the steering gear. Refer to **Intermediate Steering Shaft Replacement** .
41. Connect the negative battery cable. Refer to **Battery Negative Cable Disconnection and Connection** .
42. Perform the throttle learn procedure. Refer to **Throttle or Idle Learn** .
43. Perform the crankshaft position variation learn procedure. Refer to **Crankshaft Position Variation Learn** .

ENGINE OIL AND OIL FILTER REPLACEMENT

Removal Procedure

1. Raise and support the vehicle. Refer to **Lifting and Jacking the Vehicle** .
2. Place a drain pan under the oil pan drain plug.
3. Remove the oil pan drain plug. Allow the oil to drain completely.

CAUTION: **Refer to Fastener Caution .**

NOTE: **Clean and inspect the oil pan drain plug seal, replace parts as necessary.**

4. Install the oil pan drain plug and tighten to 25 N.m (18 lb ft).

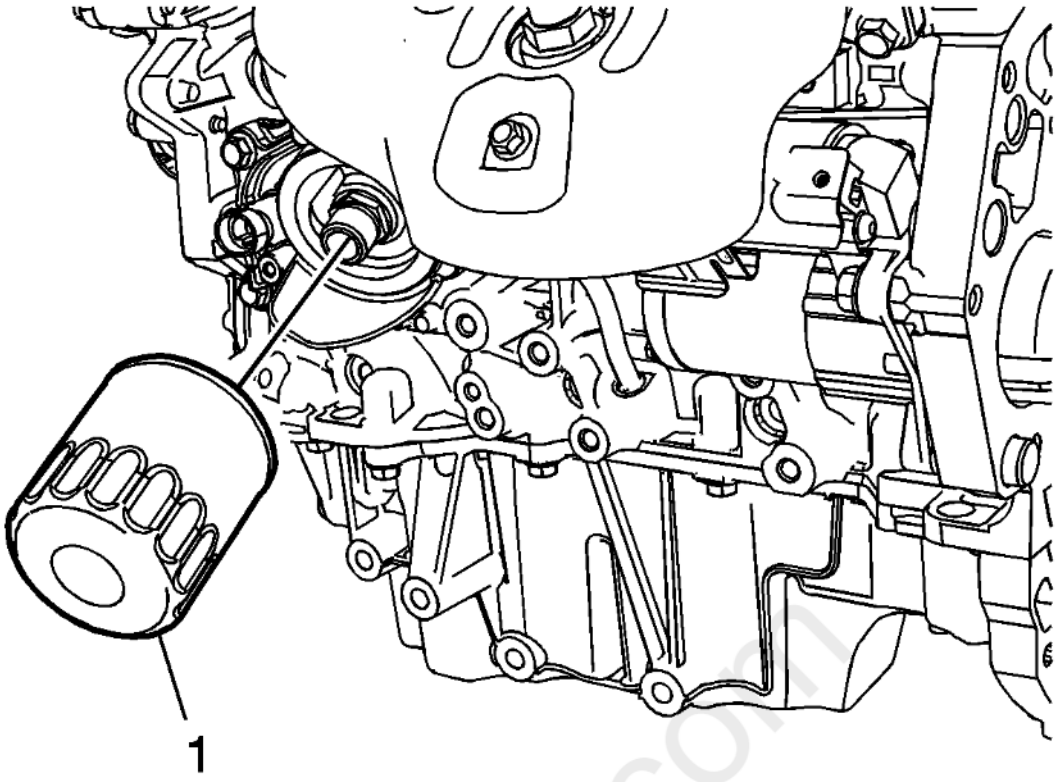

Fig. 238: Engine Oil Filter
Courtesy of GENERAL MOTORS COMPANY

WARNING: Refer to **Hot Exhaust System Warning** .

5. Place the drain pan under the oil filter (1).
6. Remove the oil filter. Allow the oil to drain completely.

Installation Procedure

cardiagn.com

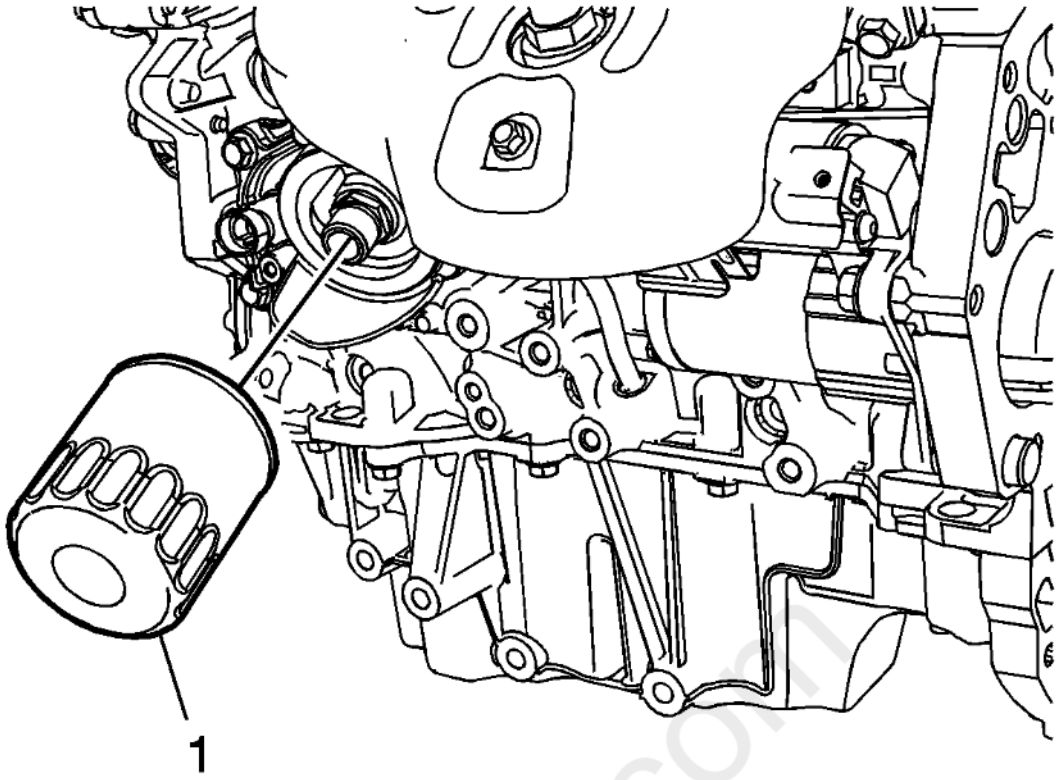

Fig. 239: Engine Oil Filter
Courtesy of GENERAL MOTORS COMPANY

1. Lubricate the NEW oil filter gasket with clean engine oil.
2. Install a NEW oil filter and tighten 3/4 to 1 full turn after the gasket makes contact with the sealing surface on the filter mounting flange.
3. Lower the vehicle.
4. Refill the engine oil. Refer to **Approximate Fluid Capacities** .
5. Start the engine and inspect for leaks.

cardiagn.com

2017 ENGINE

Engine Mechanical - 3.6L (LFX) - Schematic and Routing Diagrams - Timing Chain Alignment Diagram - Impala

TIMING DIAGRAMS

TIMING CHAIN ALIGNMENT DIAGRAM

Camshaft Position Actuator Timing Marks

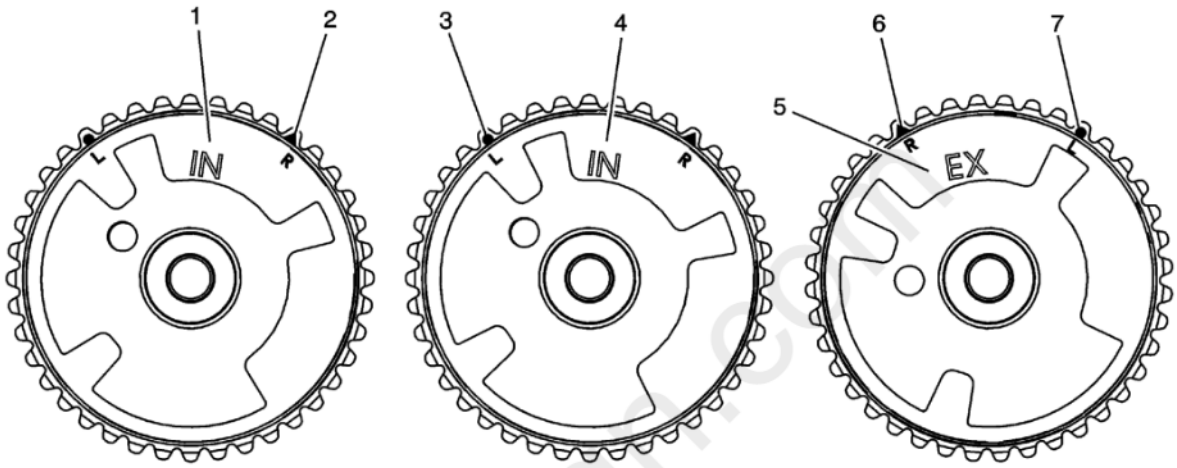

Fig. 1: Identifying Camshaft Position Actuator Timing Marks
Courtesy of GENERAL MOTORS COMPANY

Stage One

cardiagn.com

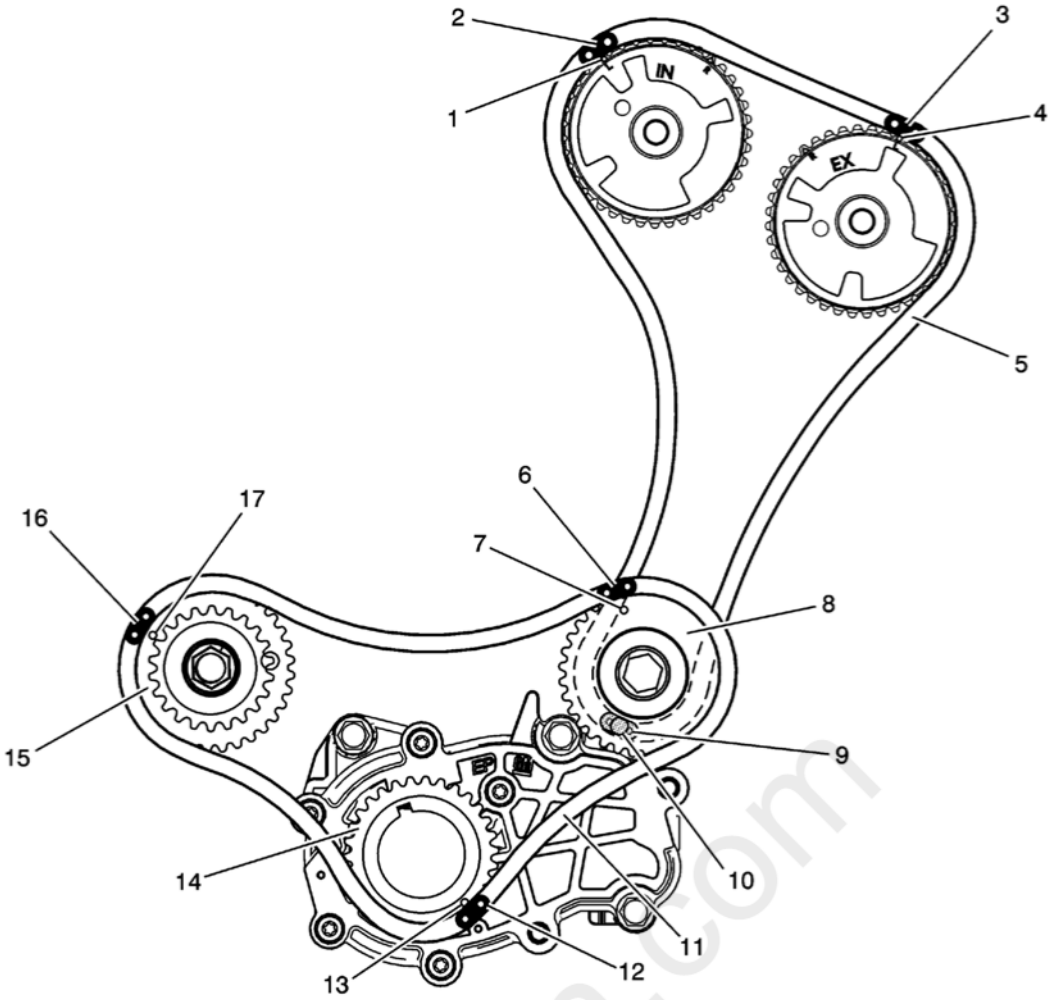

Fig. 2: Locating Stage One Timing Marks
Courtesy of GENERAL MOTORS COMPANY

Stage Two

cardiagn.com

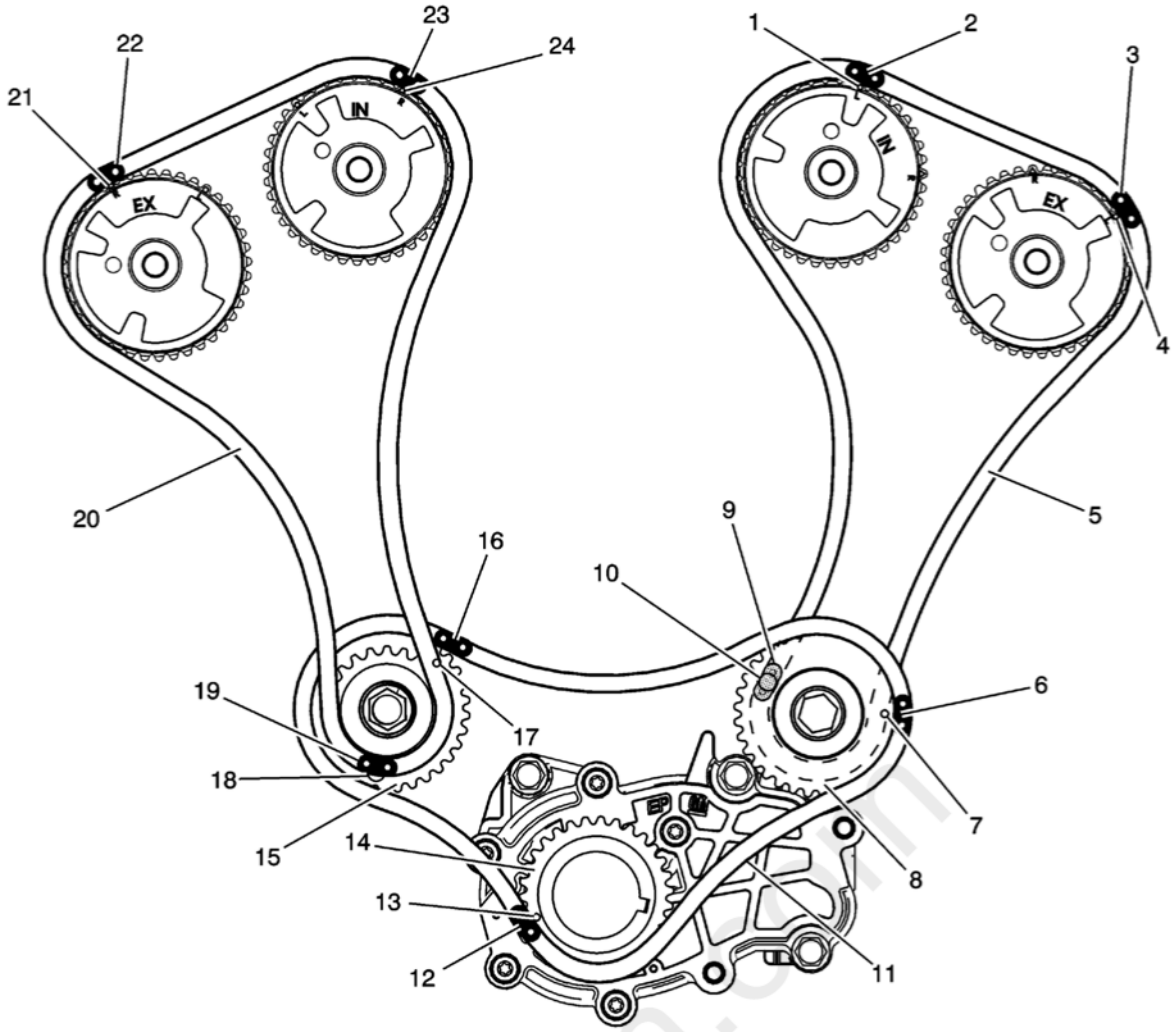

Fig. 3: Locating Stage Two Timing Marks
Courtesy of GENERAL MOTORS COMPANY

cardiagn.com

SPECIAL TOOLS AND EQUIPMENT

SPECIAL TOOLS

Illustration	Tool Number/Description
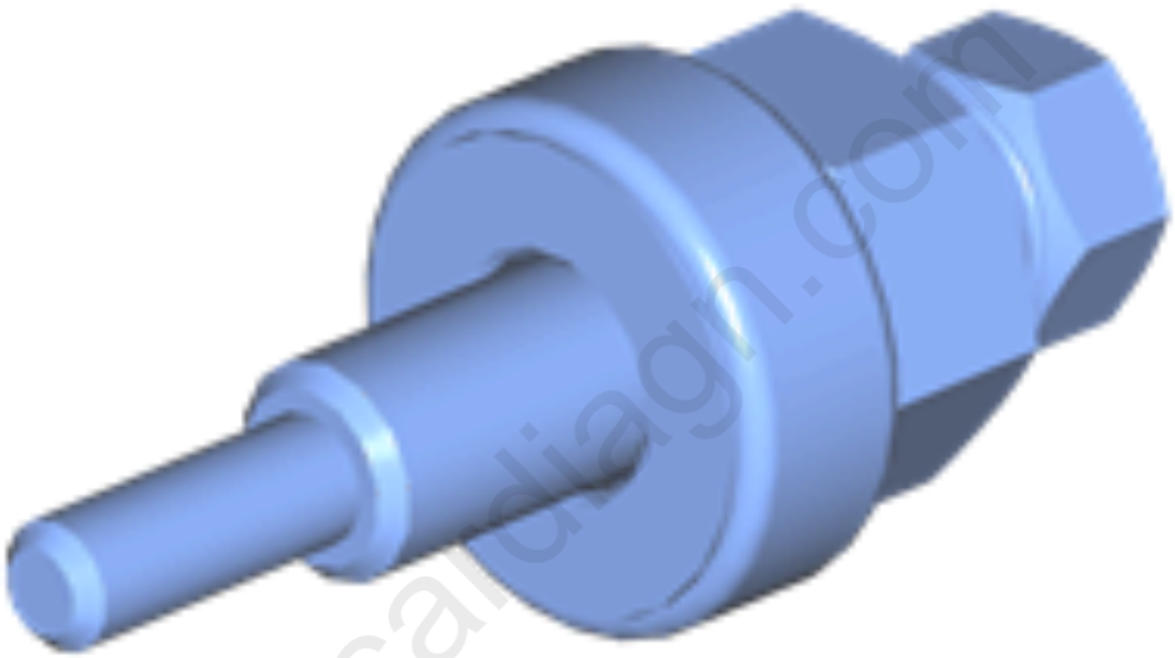	CH-25033-C J-25033-C Pulley Installer

cardiagn.com

Illustration	Tool Number/Description
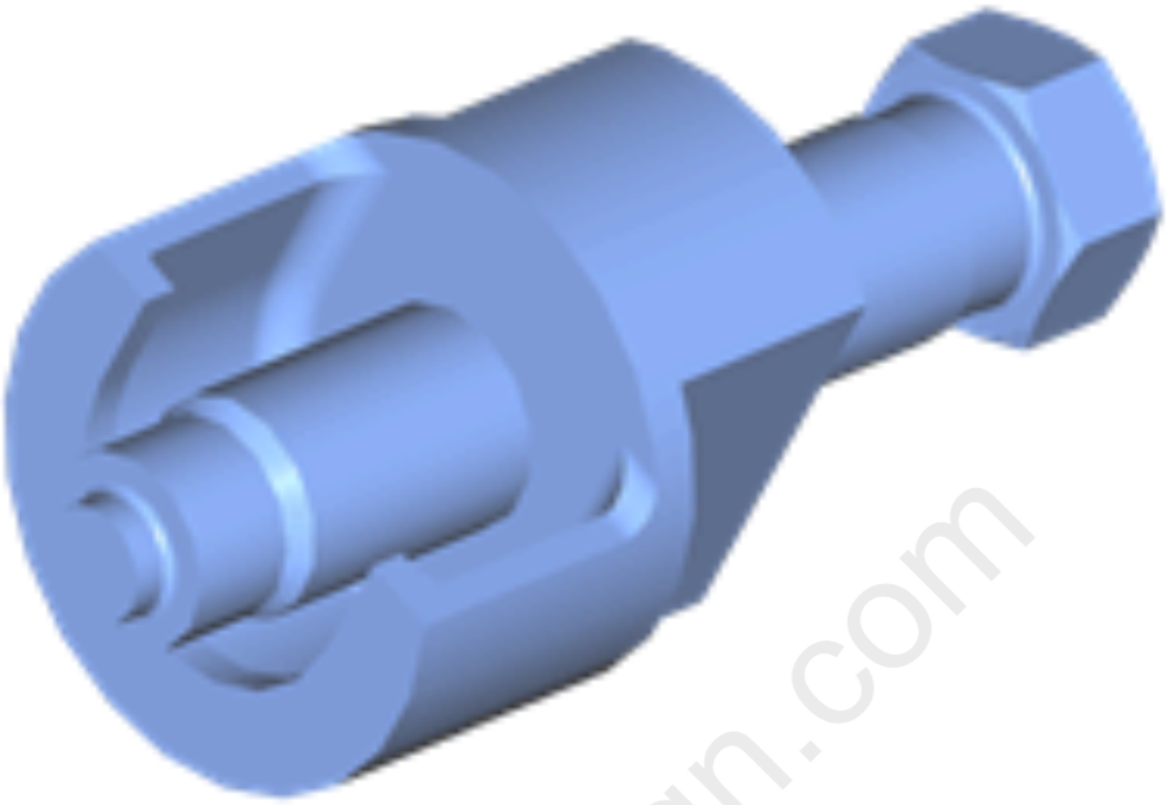	CH-25034-C J-25034-C Pulley Remover

cardiagn.com

Illustration	Tool Number/Description
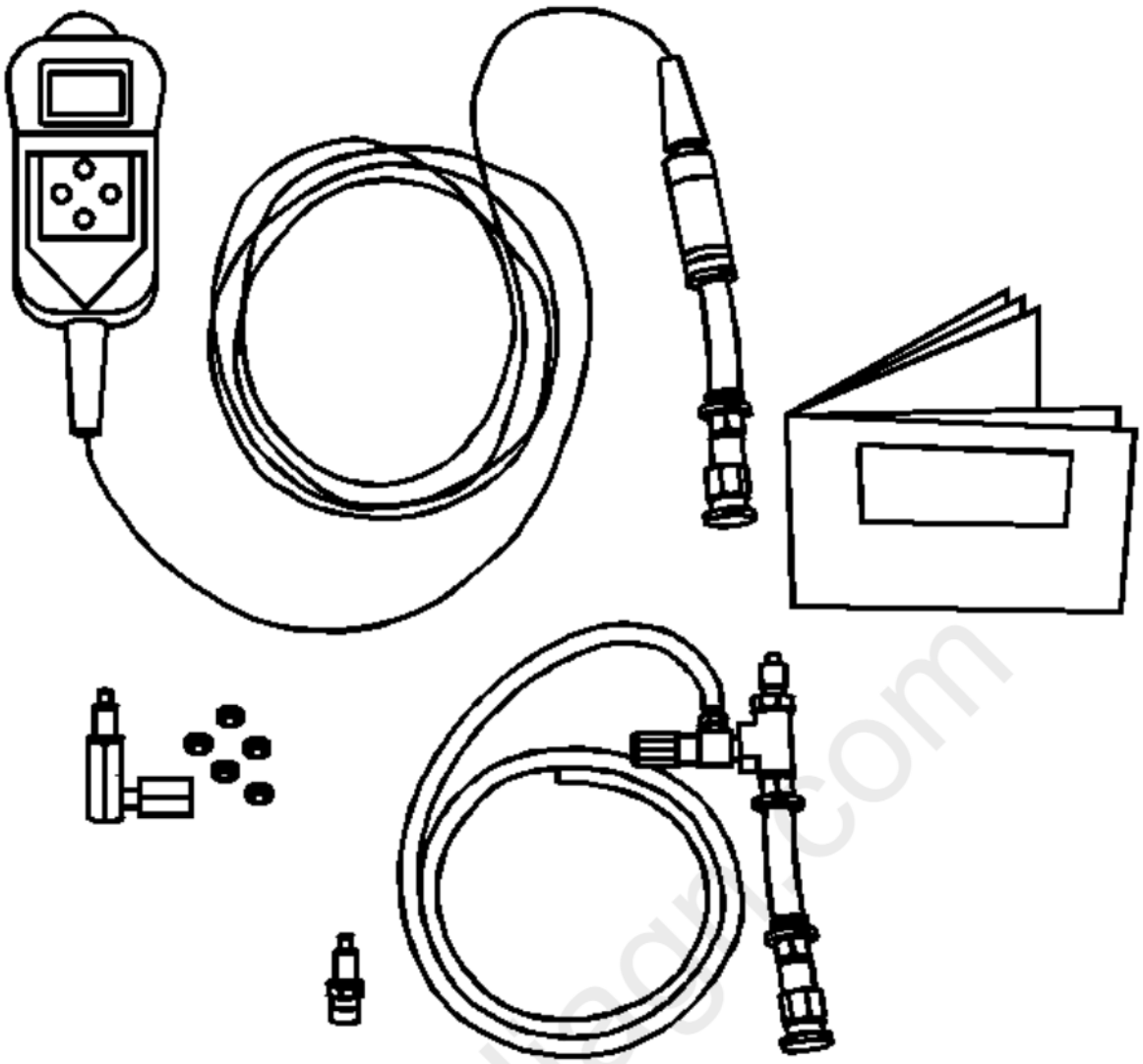	CH-48027 DW-100-010 EN-49495 J-21867 Digital Pressure Gauge South America Use Local Equivalent

cardiagn.com

Illustration	Tool Number/Description
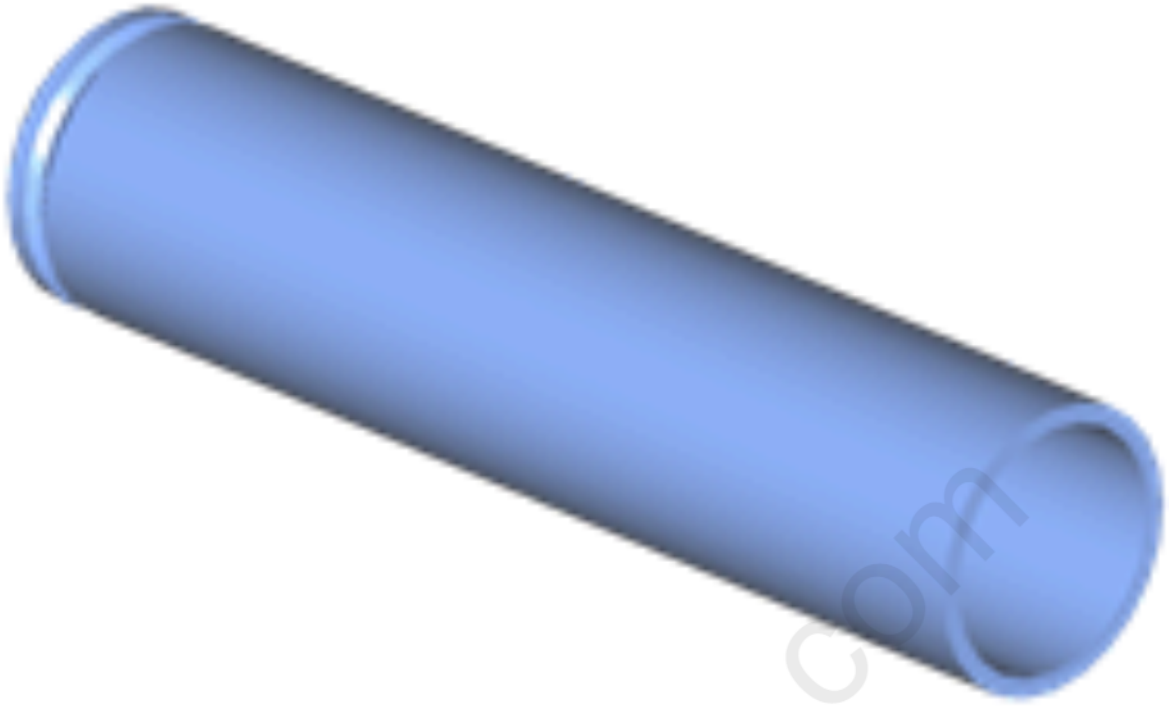	DT-5590 J-5590 J-24254 Bearing and Seal Driver

cardiagn.com

Illustration	Tool Number/Description
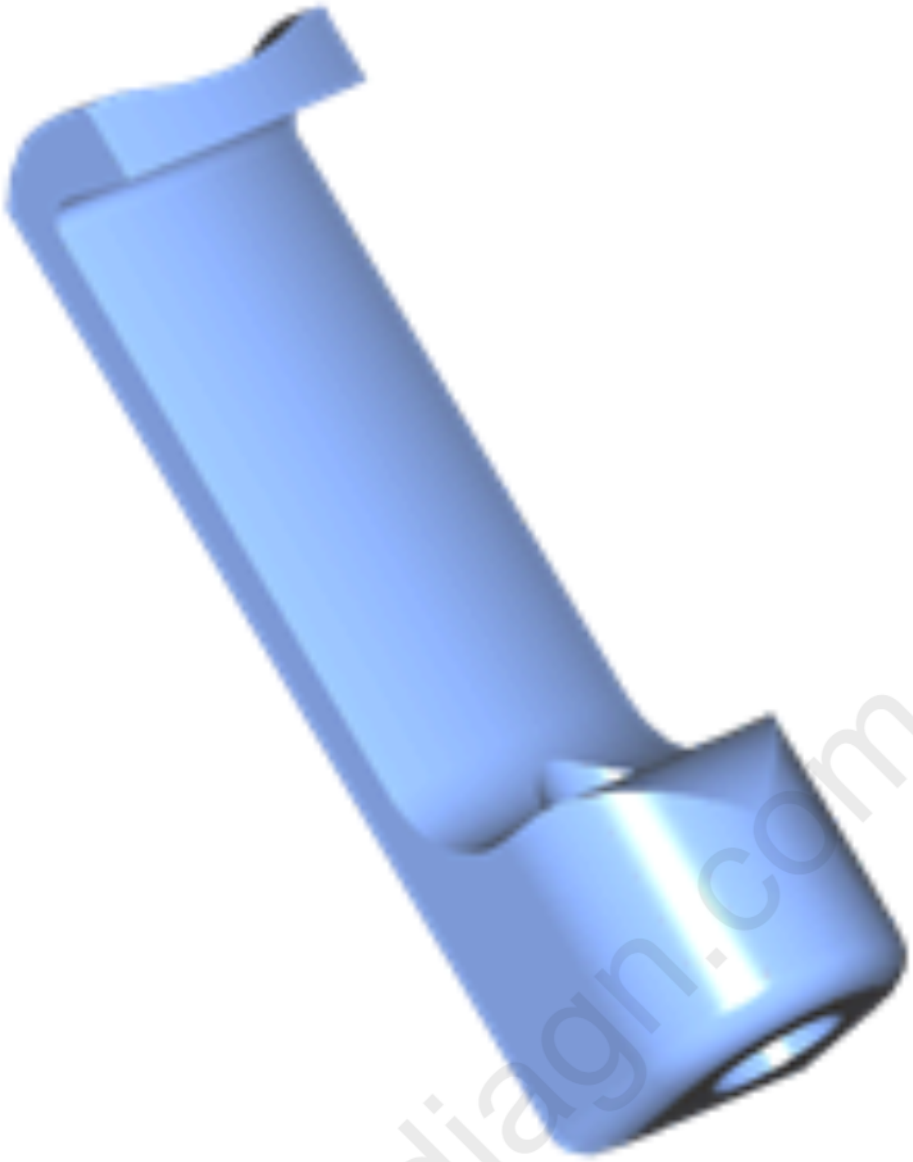	DT-23129 J-23129 Universal Seal Remover

cardiagn.com

Illustration	Tool Number/Description
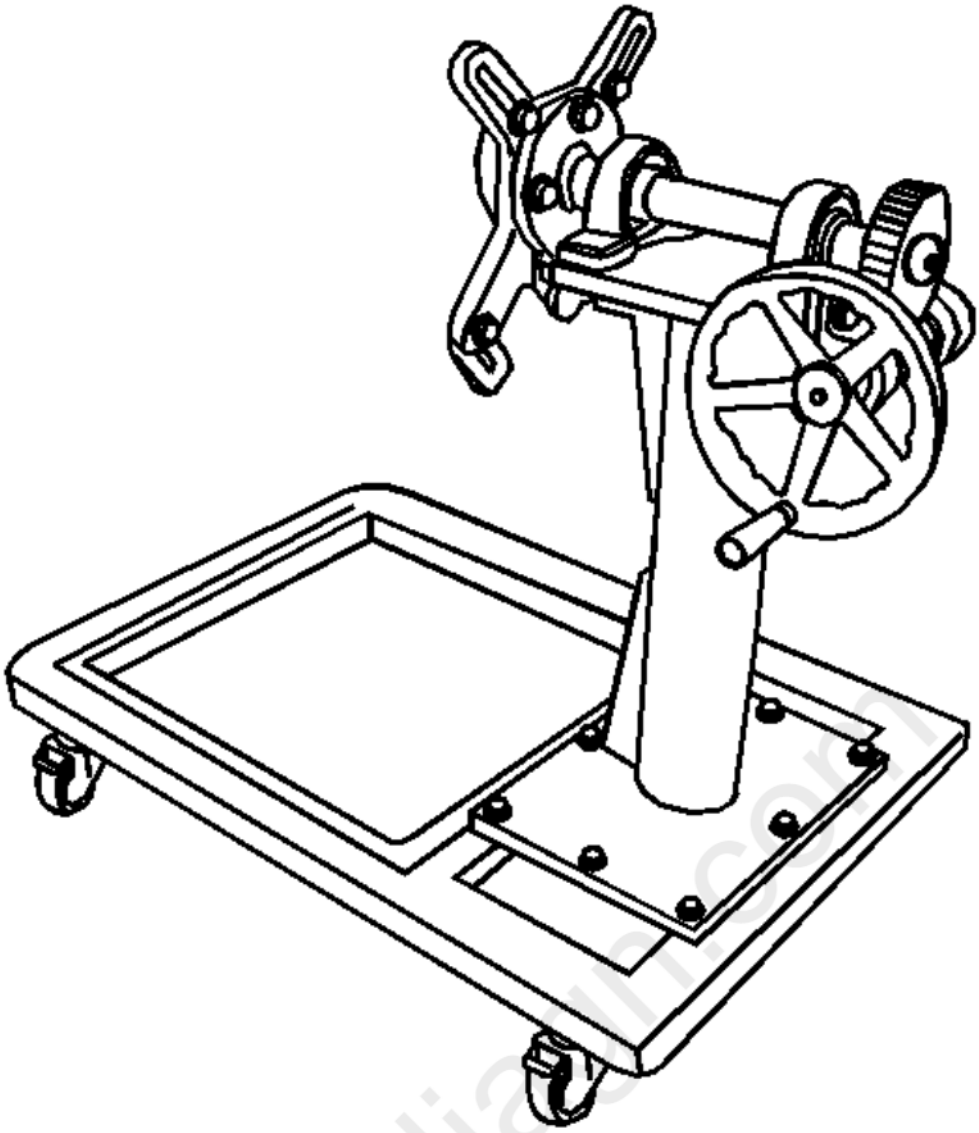	DW-110-030 Engine Overhaul Stand
	EN-8062 J-8062 Valve Spring Compressor - Head Off

cardiaum.com

Illustration	Tool Number/Description
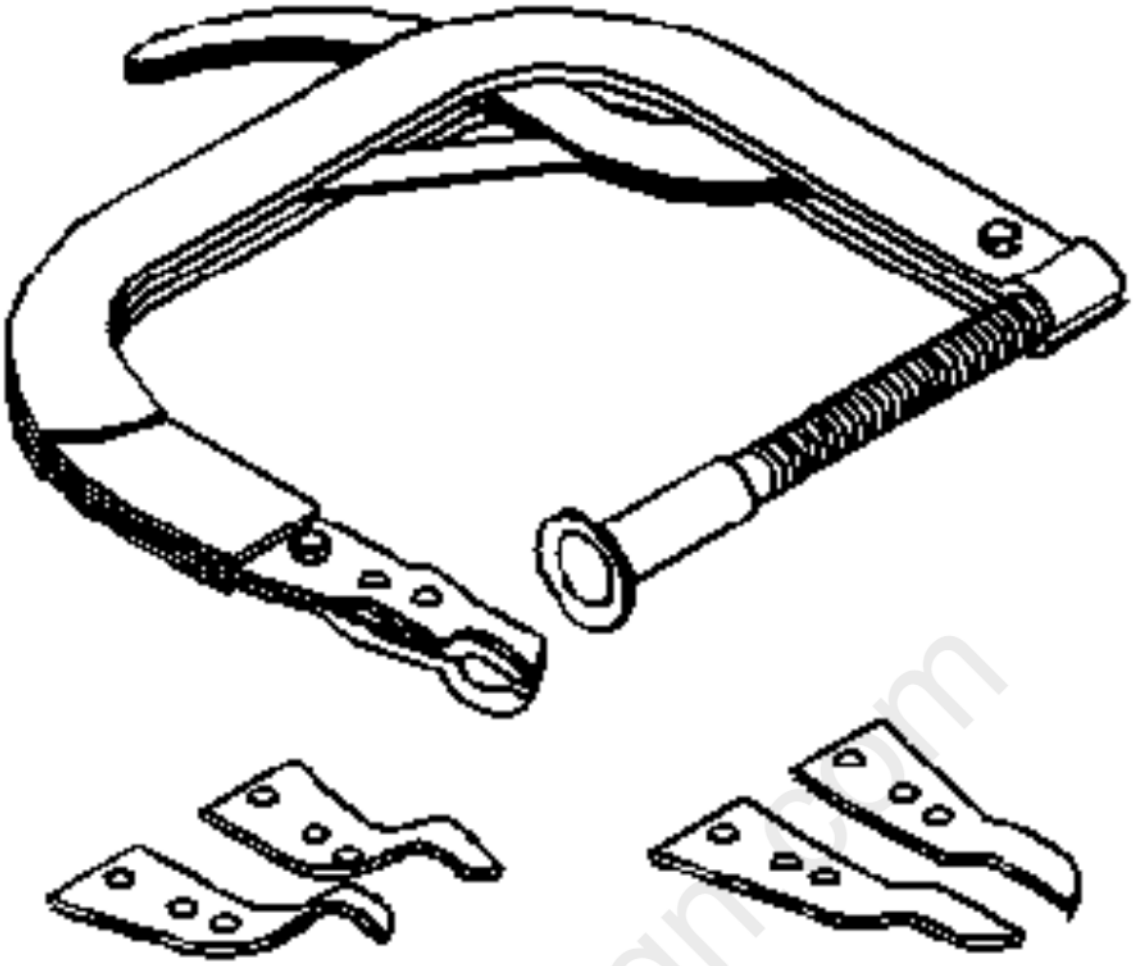	

cardiagn.com

Illustration	Tool Number/Description
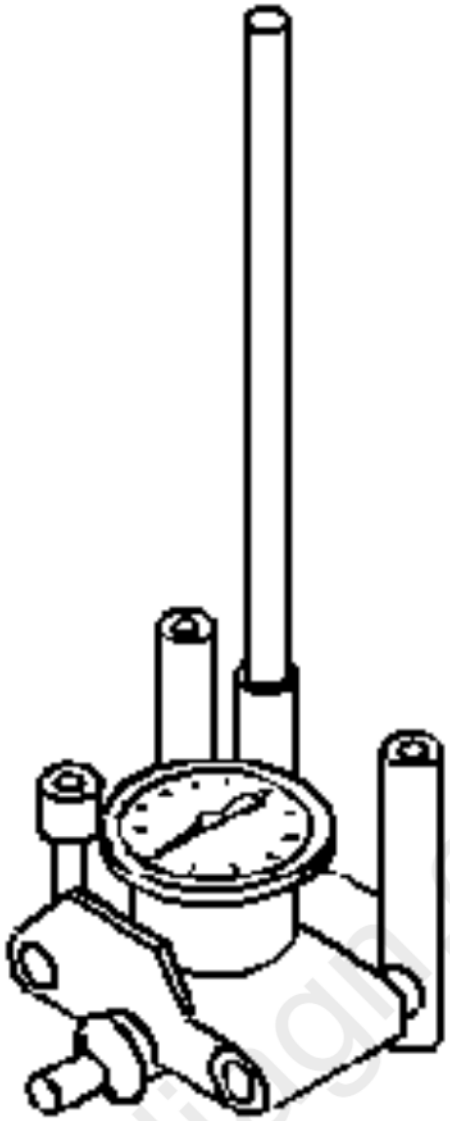	EN-8087 J-8087 Cylinder Bore Gauge South America Use Local Equivalent

cardiagn.com

Illustration	Tool Number/Description
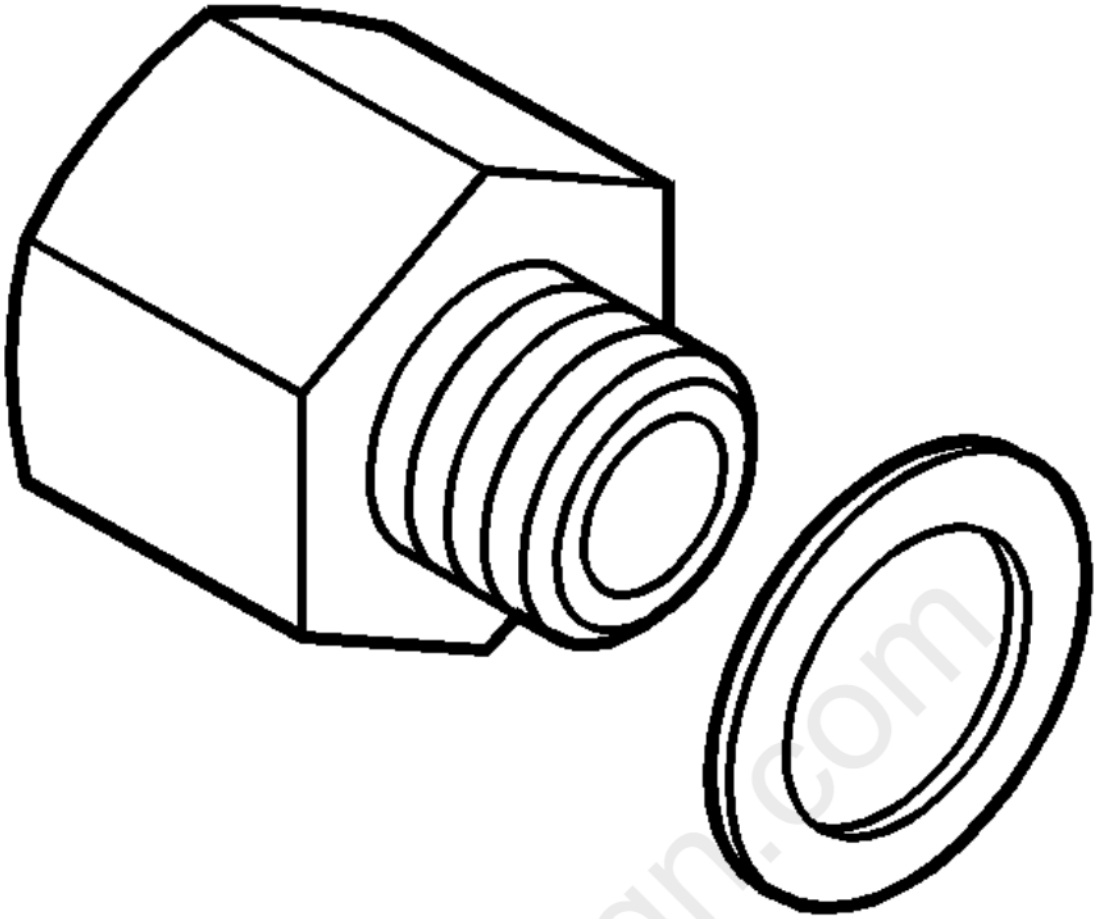	EN-21867-6 J-21867-6 83 93 852 Oil Pressure Adapter Fitting South America Use Local Equivalent
	EN-22738-B J-22738-B Valve Spring Tester South America Use Local Equivalent

cardiagn.com

Illustration	Tool Number/Description
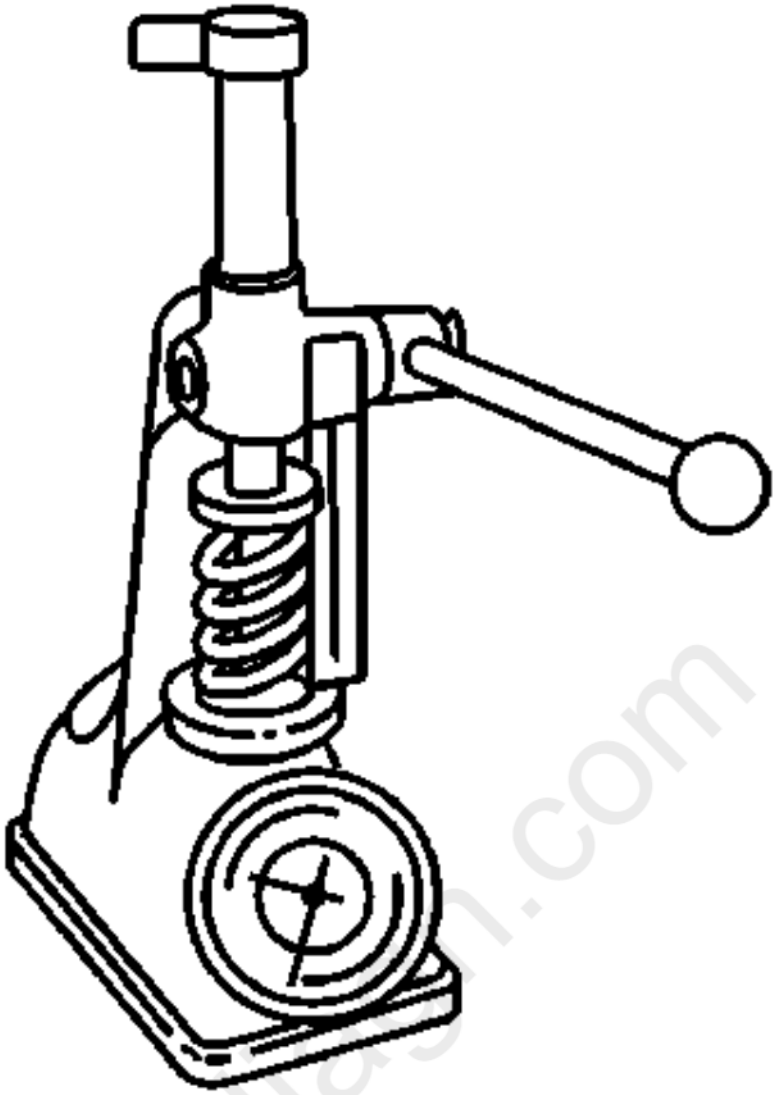	

cardiagn.com

Illustration	Tool Number/Description
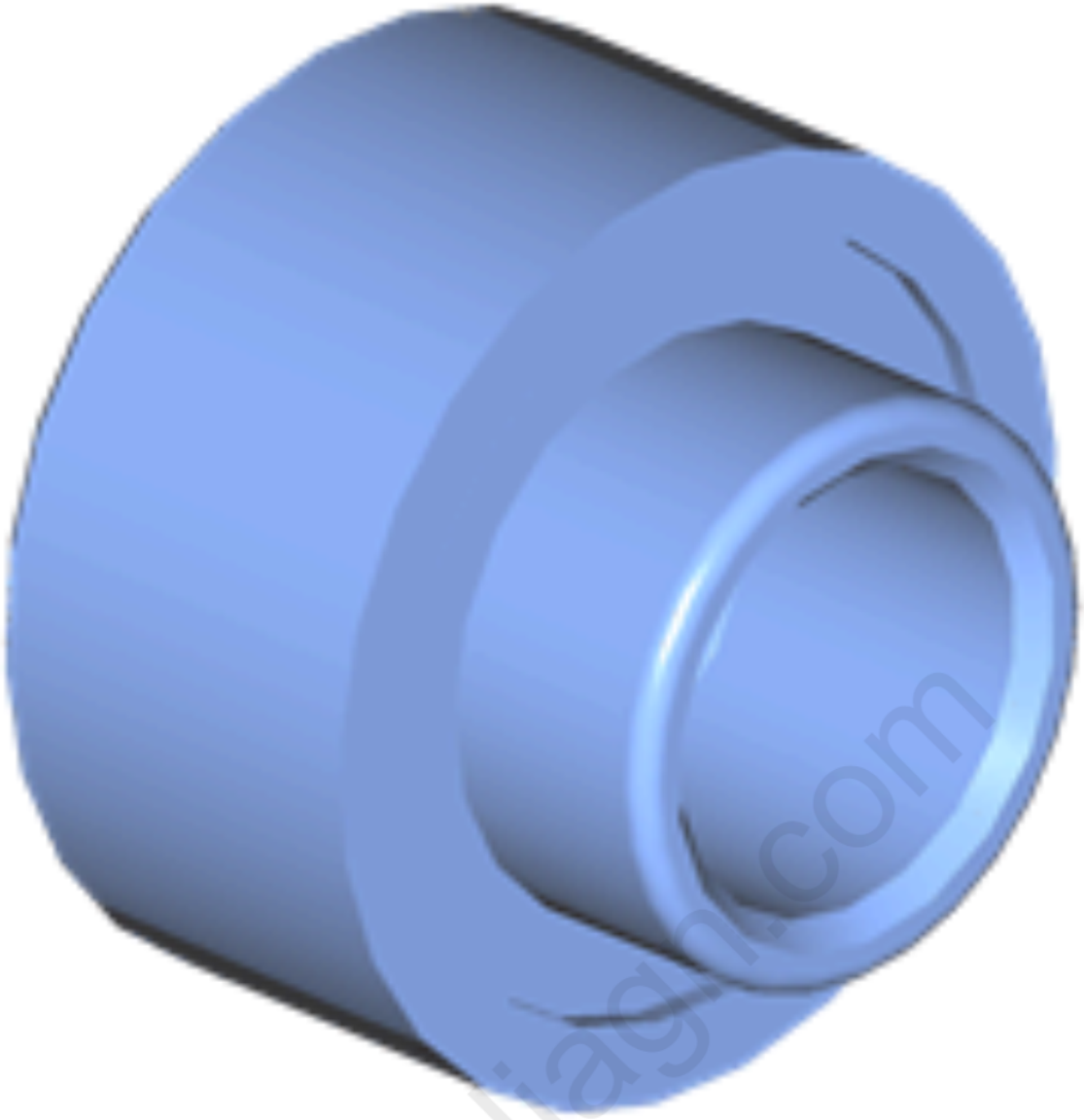	EN-24254-A J-24254-A J-24254 Oil Seal Installer

cardiagn.com

Illustration	Tool Number/Description
	EN-28410 J-28410 Gasket Remover South America Use Local Equivalent

cardiagn.com

Illustration	Tool Number/Description
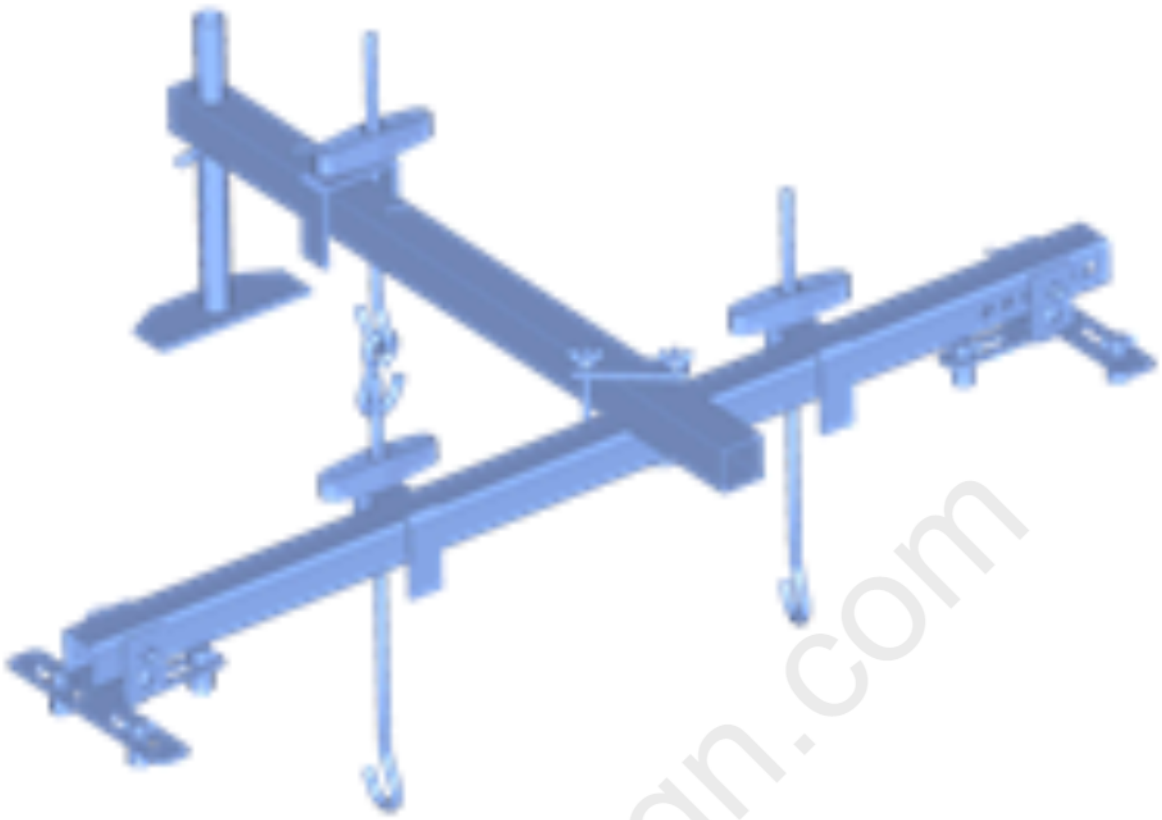	EN-28467-B DW-110-060 J-28467-B X-0206951 L-0906004 Universal Engine Support Fixture

cardiagn.com

Illustration	Tool Number/Description
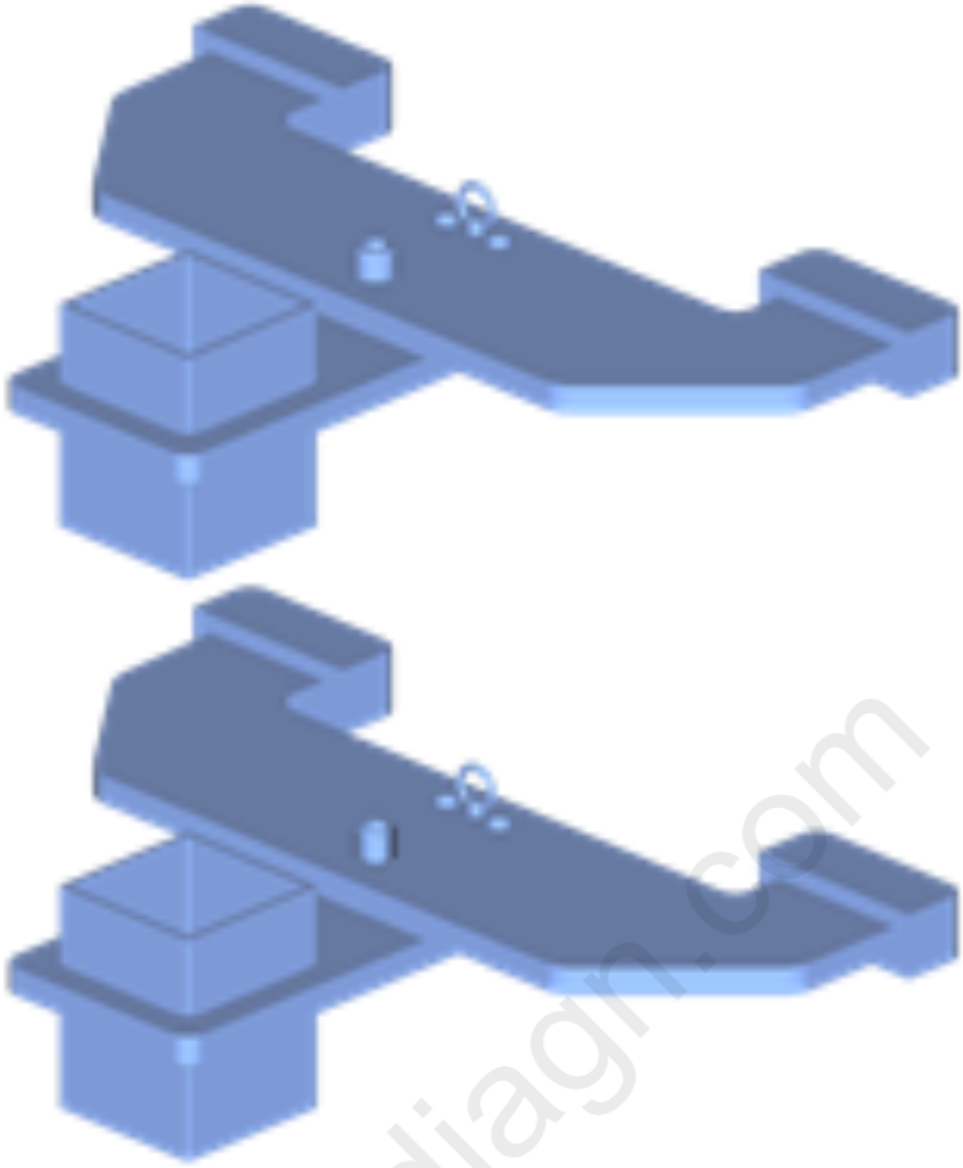	EN-28467-501 J-28467-501 Engine Support Fixture Adapters

cardiagn.com

Illustration	Tool Number/Description
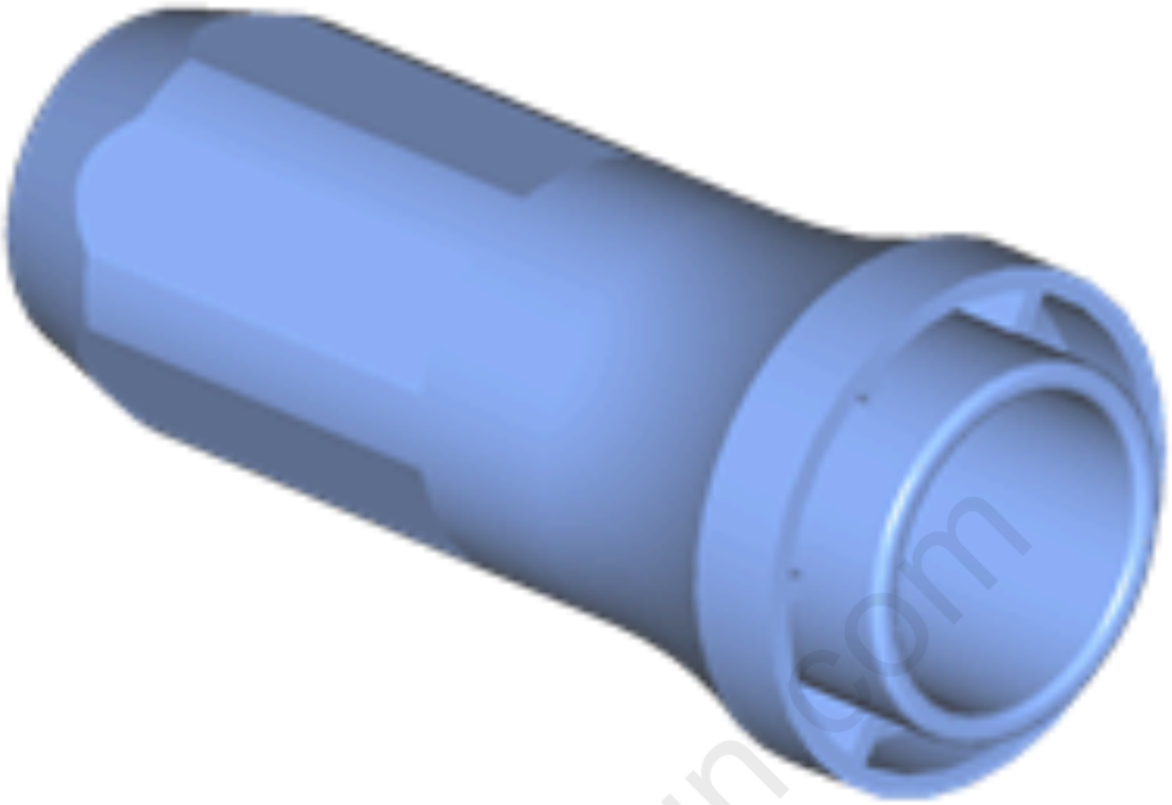	EN-29184 EN-47635 & J-41998 - B EN-47635 J-29184 V-0506019 Oil Seal Installer
	EN-35667-A J-35667-A Cylinder Head Leakdown Tester South America Use Local Equivalent

cardiagn.com

Illustration	Tool Number/Description
	

cardiac.com

Illustration	Tool Number/Description
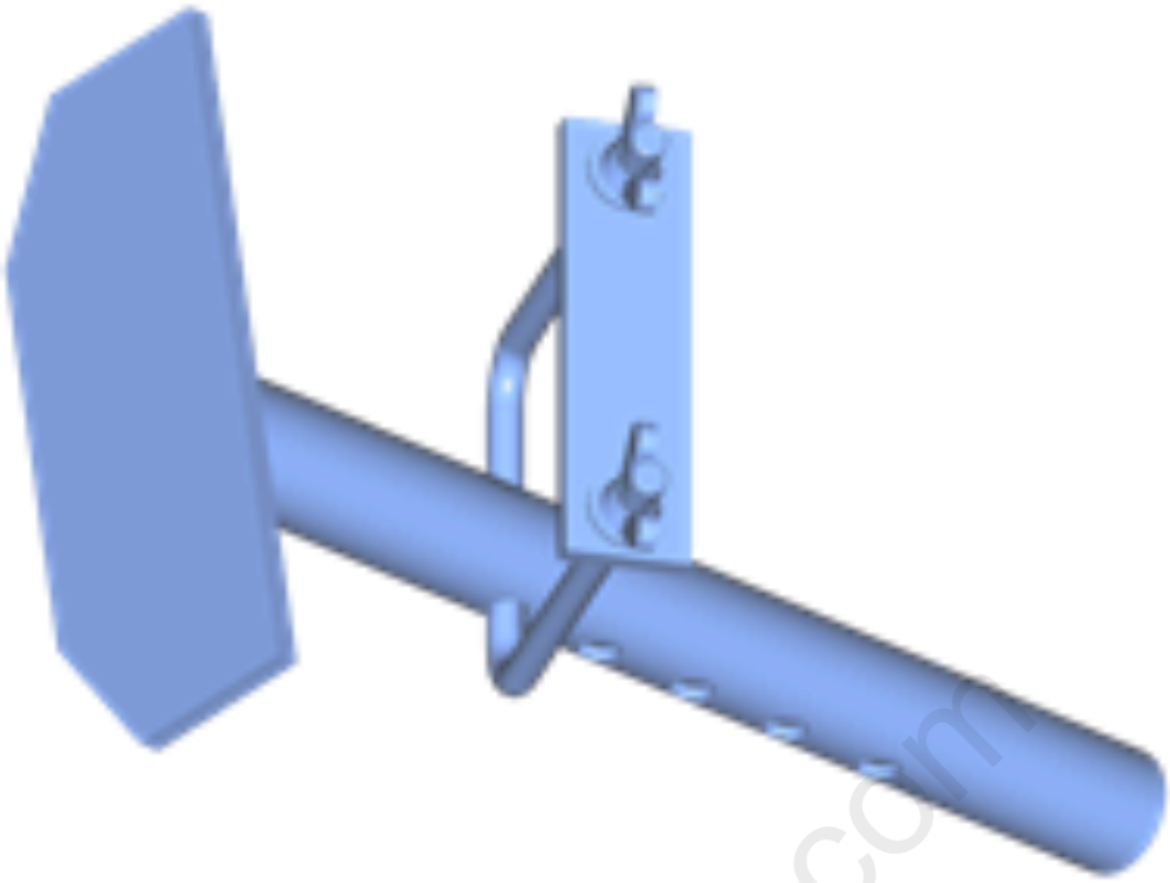	EN-36462-A J-36462-A X-0206951 L-0906004 Engine Support Adapter Leg

cardiagn.com

Illustration	Tool Number/Description
	EN-36857 J-36857 Engine Lift Bracket

cardiagn.com

Illustration	Tool Number/Description
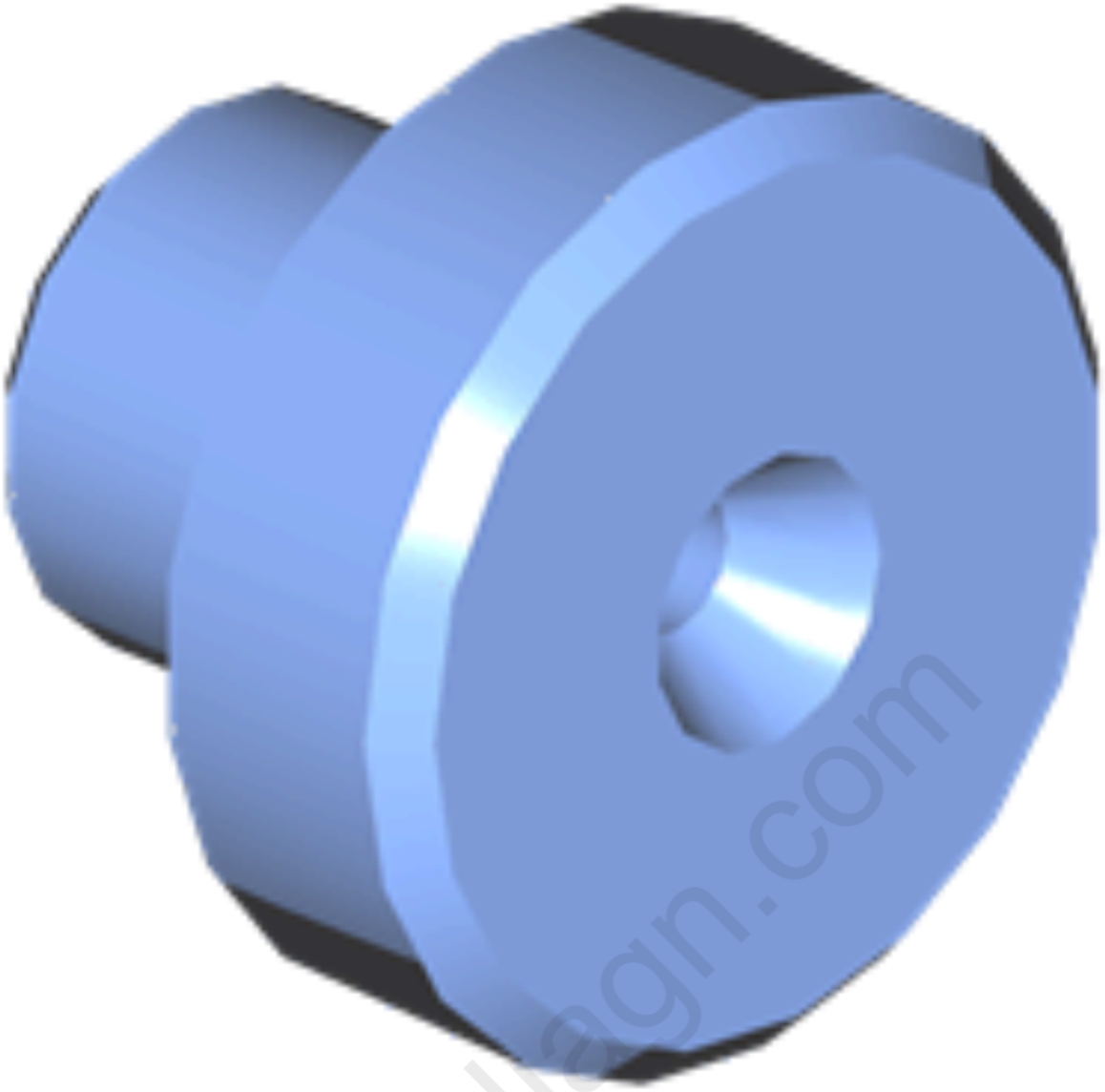	EN-38416-2 J-38416-2 6-9806636 Crankshaft Button

cardiagn.com

Illustration	Tool Number/Description
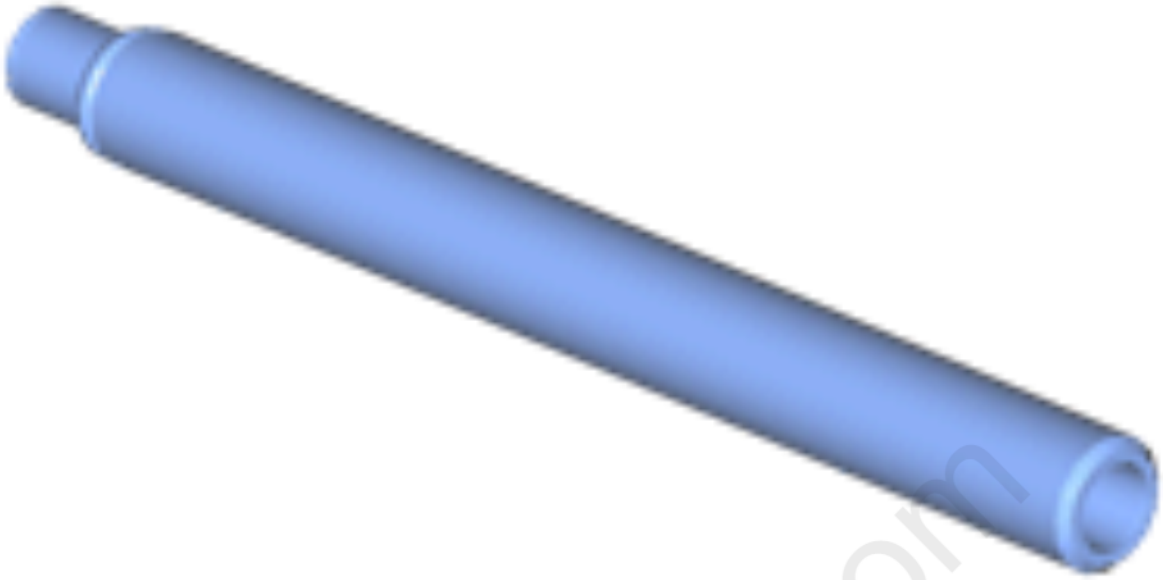	EN-39313 J-39313 V-0506023 Spark Plug Port Adapter

cardiagn.com

Illustration	Tool Number/Description
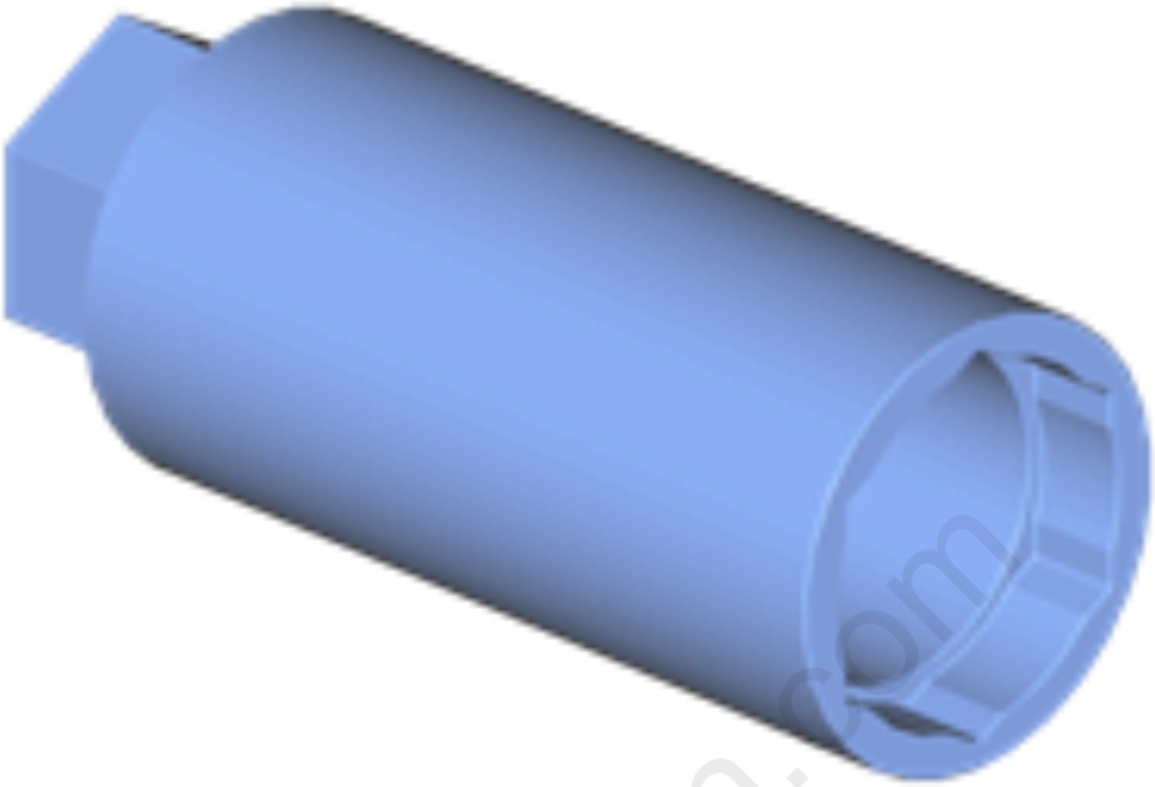	EN-41712 J-41712 Oil Pressure Switch Socket South America Use Local Equivalent

cardiagn.com

Illustration	Tool Number/Description
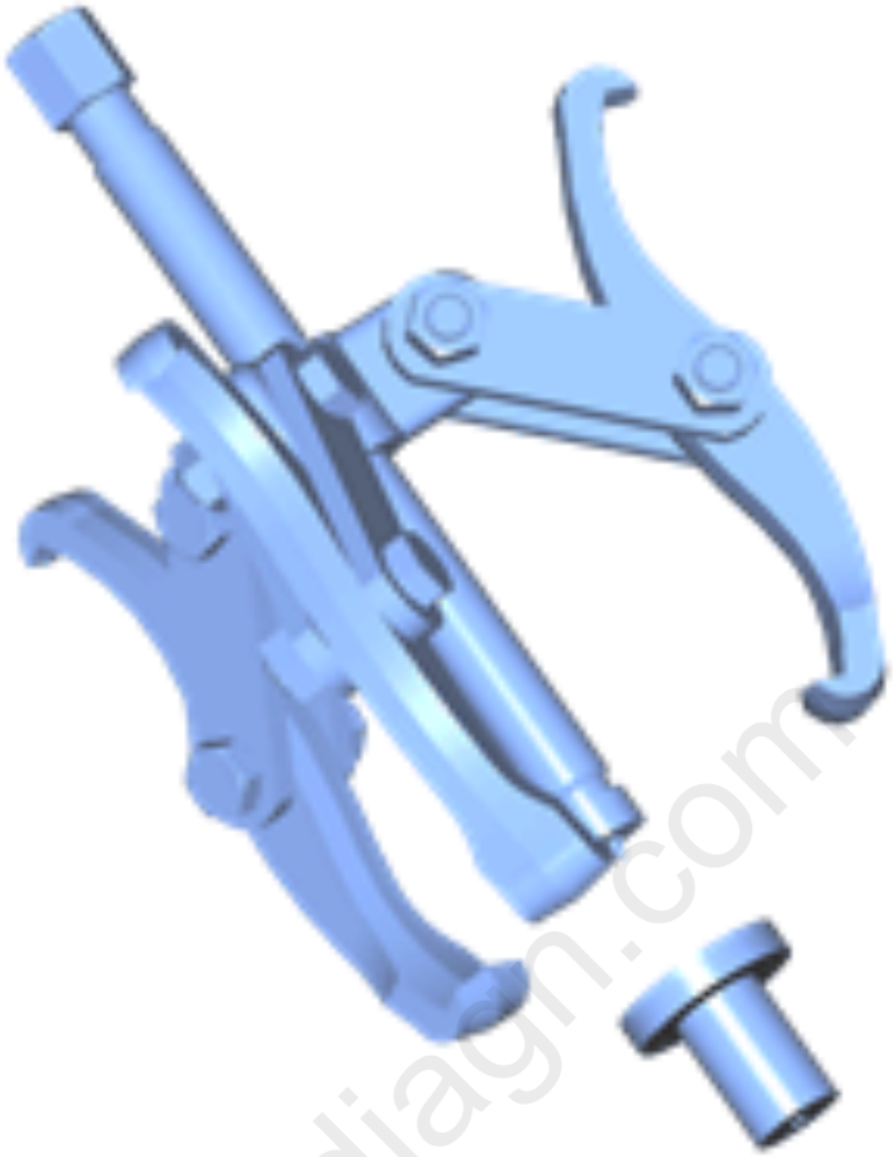	EN-41816 J-41816 6-9806636 Crankshaft Balancer Remover

cardiagn.com

Illustration	Tool Number/Description
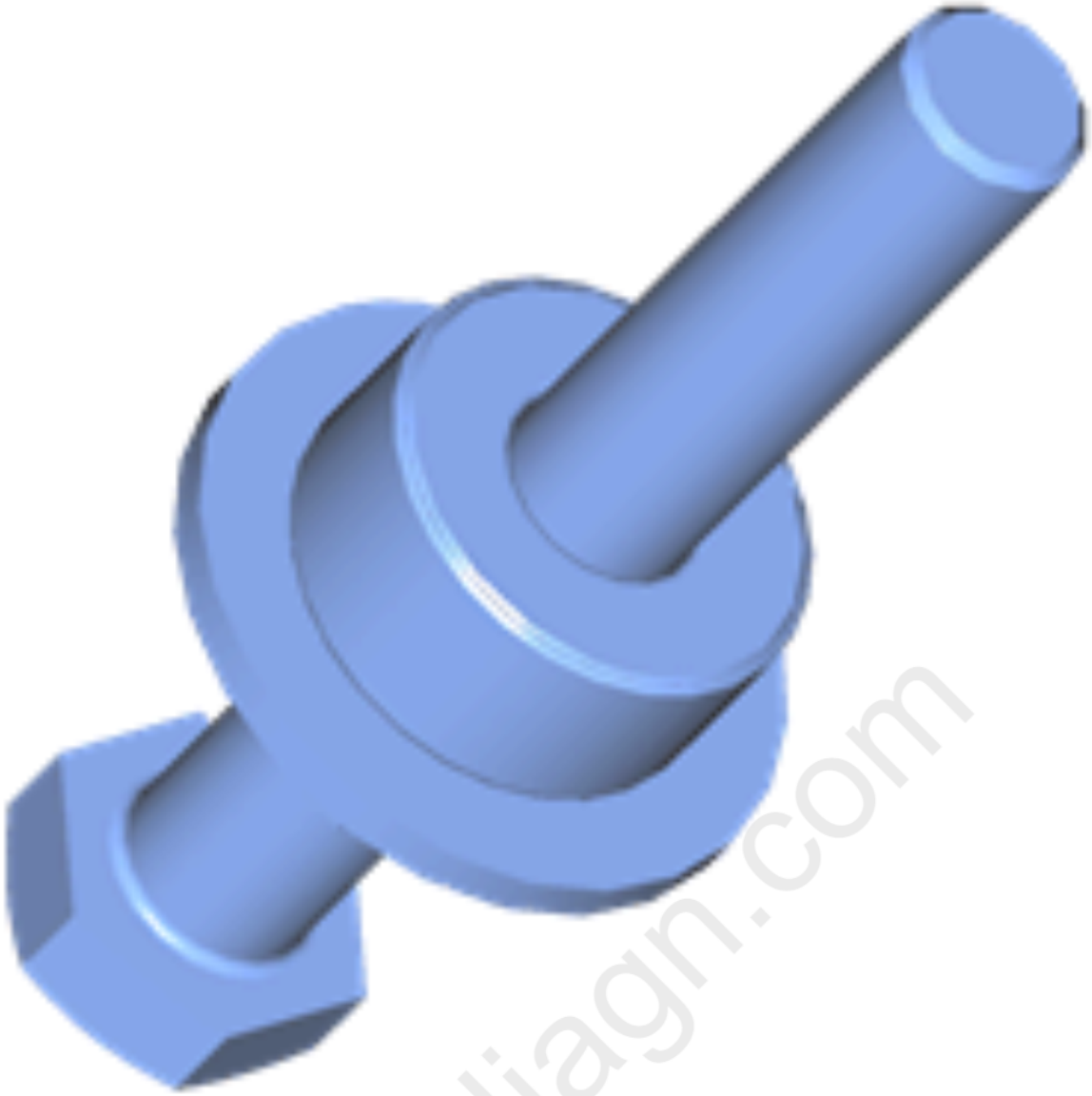	EN-41998-B J-41998-B J-41998 Crankshaft Balancer Installer South America Use Local Equivalent

cardiagn.com

Illustration	Tool Number/Description
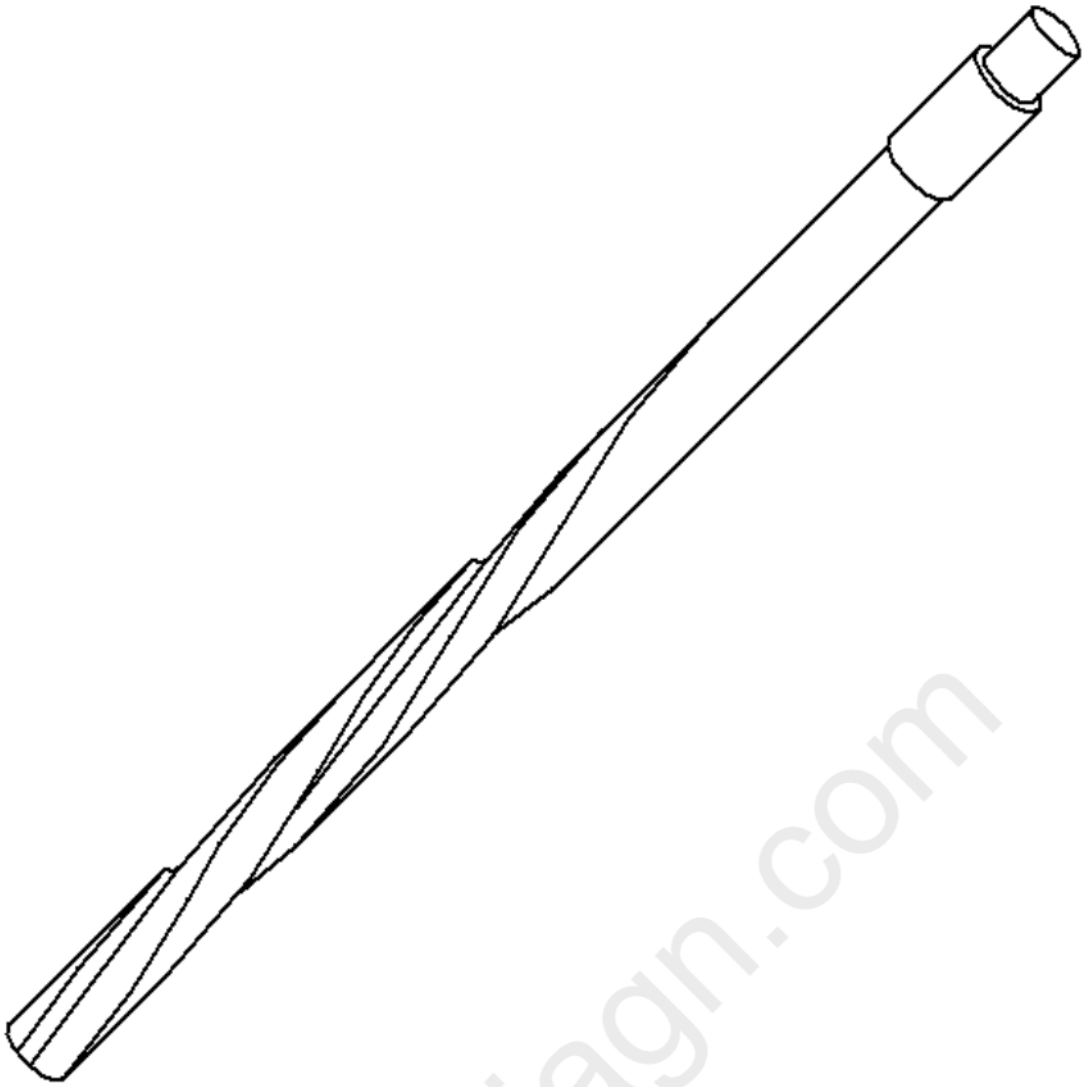	EN-42096 Valve Guide Reamer

cardiagn.com

Illustration	Tool Number/Description
	EN-42183 J-42183 M-840911-A Driver Handle
	EN-42385-700 J-42385-700 High Feature Thread Repair Kit South America Use Local Equivalent

cardiagn.com

Illustration	Tool Number/Description
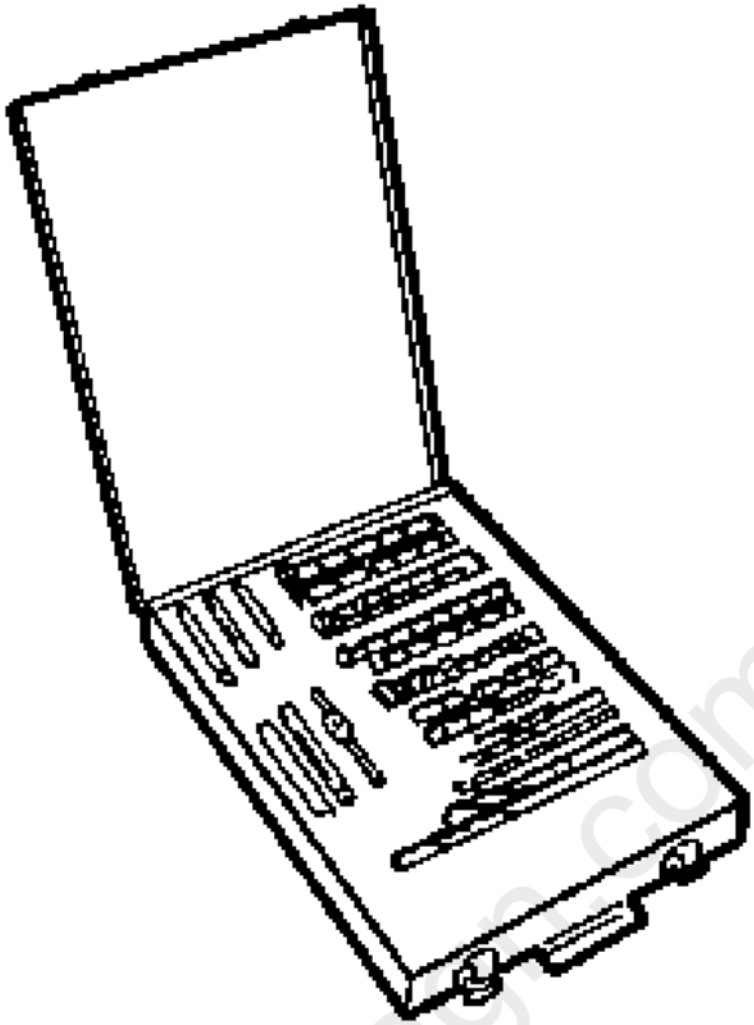	EN-42385-2000 J-42385-2000 Thread Insert Kit South America Use Local Equivalent

cardiagn.com

Illustration	Tool Number/Description
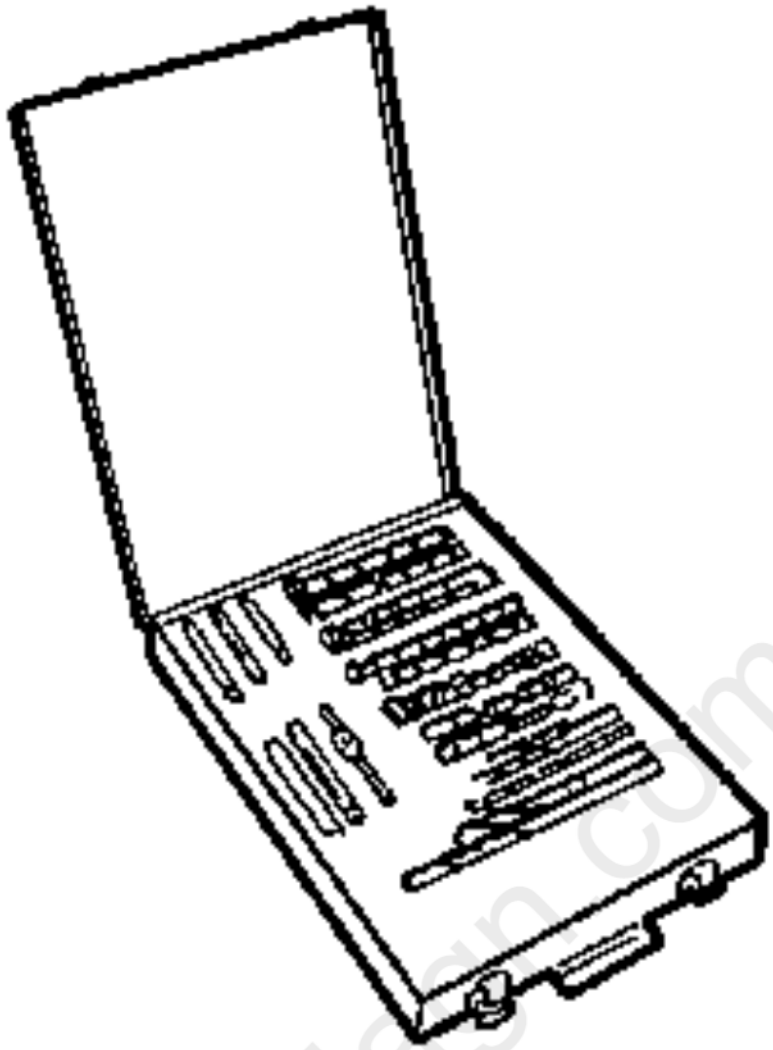	

cardiagn.com

Illustration	Tool Number/Description
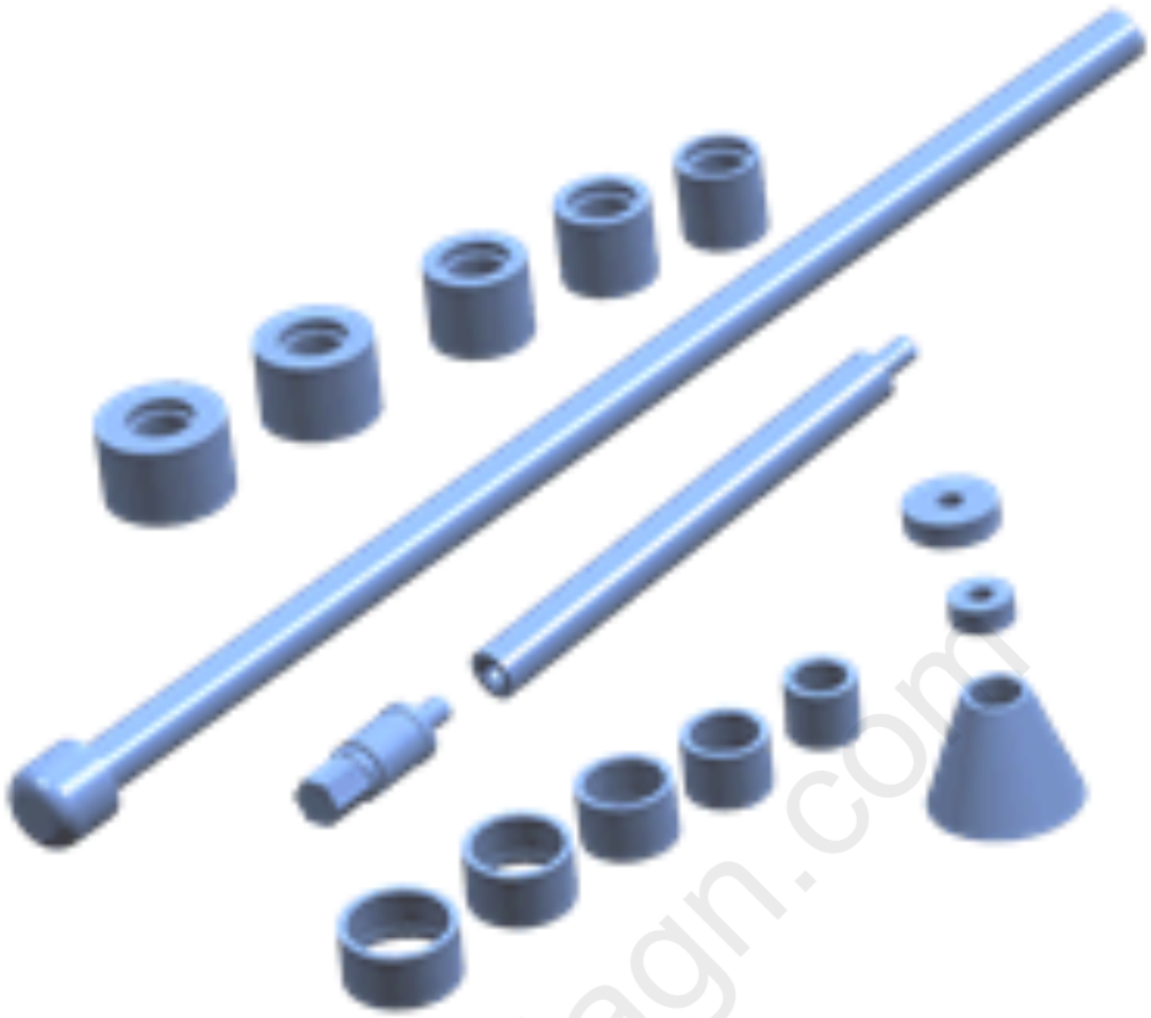	EN-43690-A J-43690-A Rod Bearing Clearance Checking Tool South America Use Local Equivalent
	EN-43965 J-43965 Thread Repair Extension Kit South America Use Local Equivalent

cardiagn.com

Illustration	Tool Number/Description
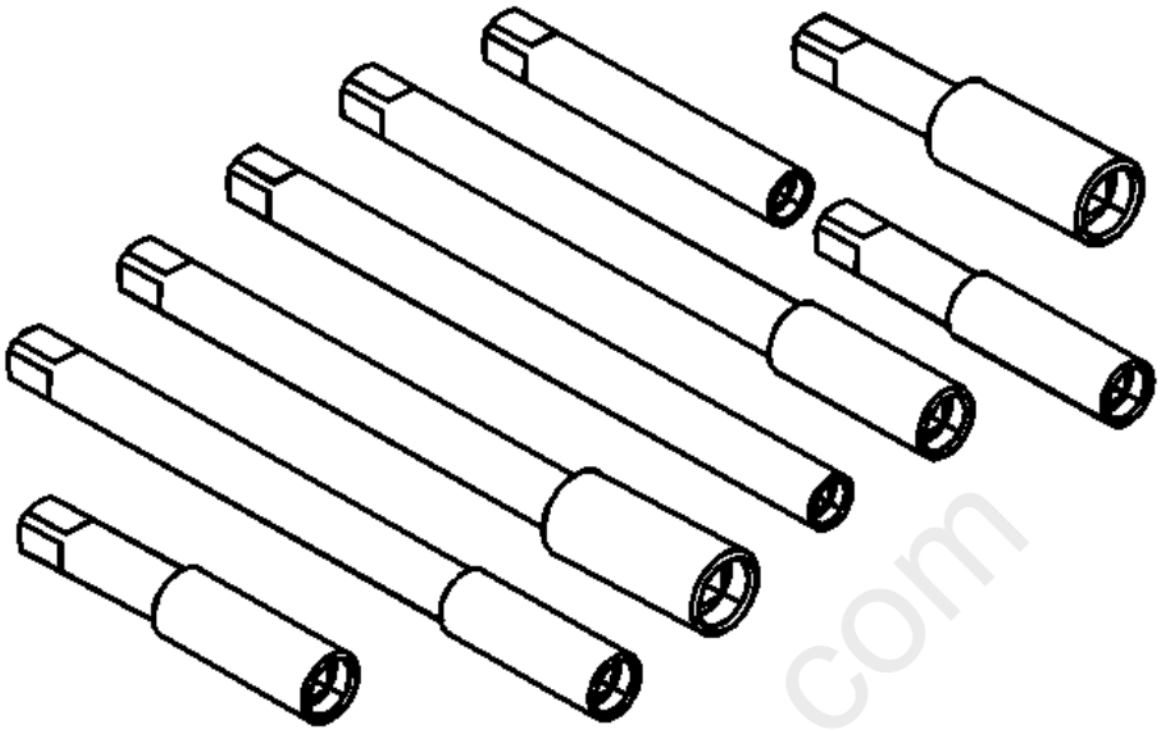	

cardiagn.com

Illustration	Tool Number/Description
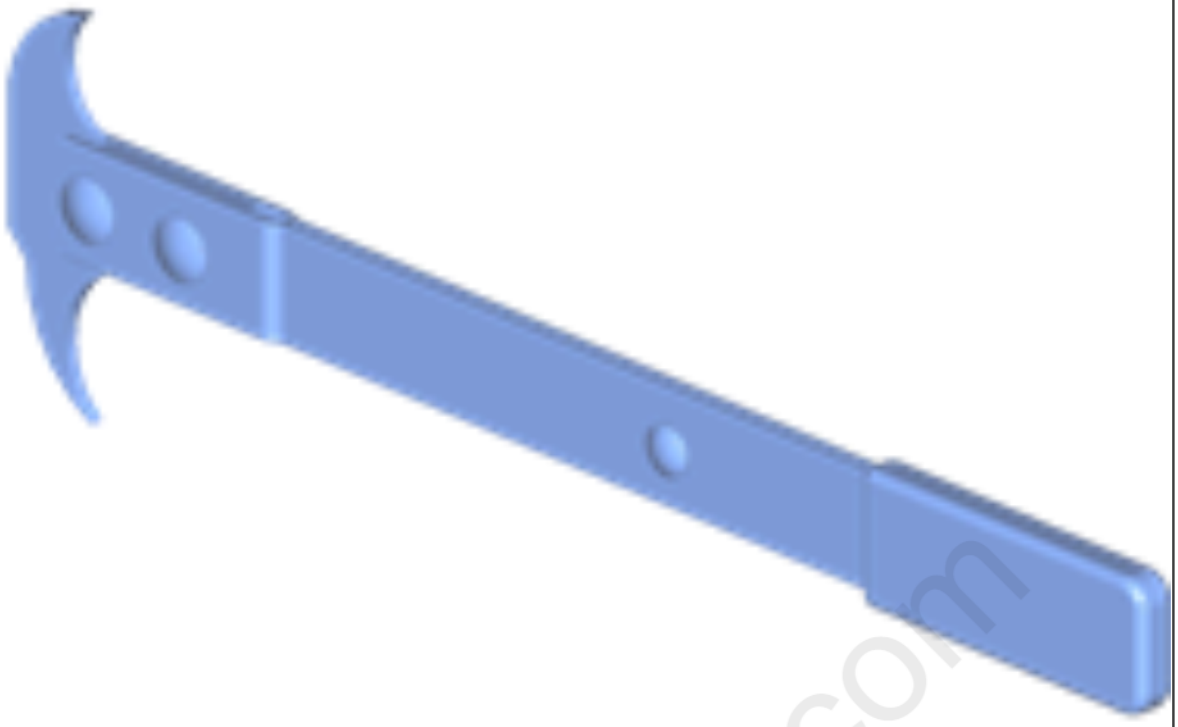	EN-45000 J-45000 KM-45000 87 91 360 Seal Remover South America Use Local Equivalent

cardiagn.com

Illustration	Tool Number/Description
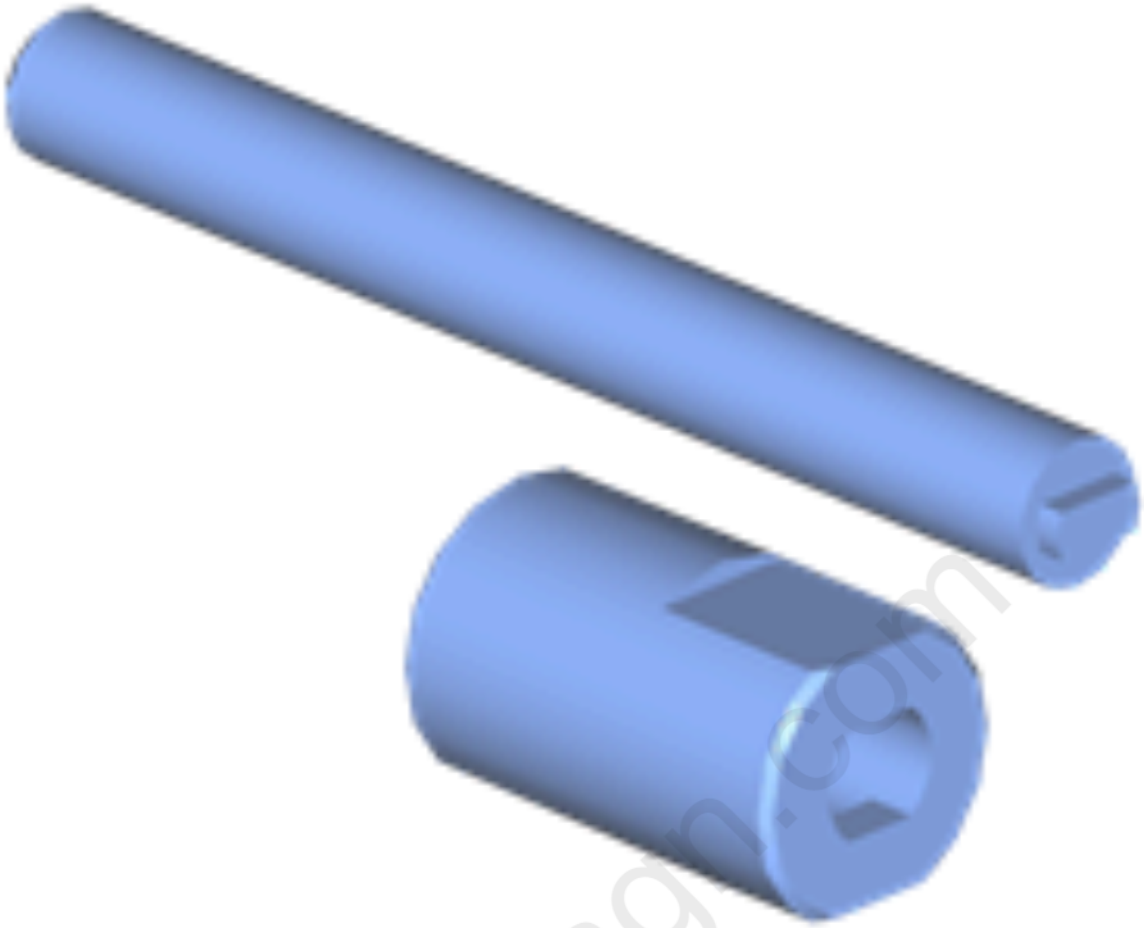	EN-45027 J-45027 Tensioner Tool South America Use Local Equivalent

cardiagn.com

Illustration	Tool Number/Description
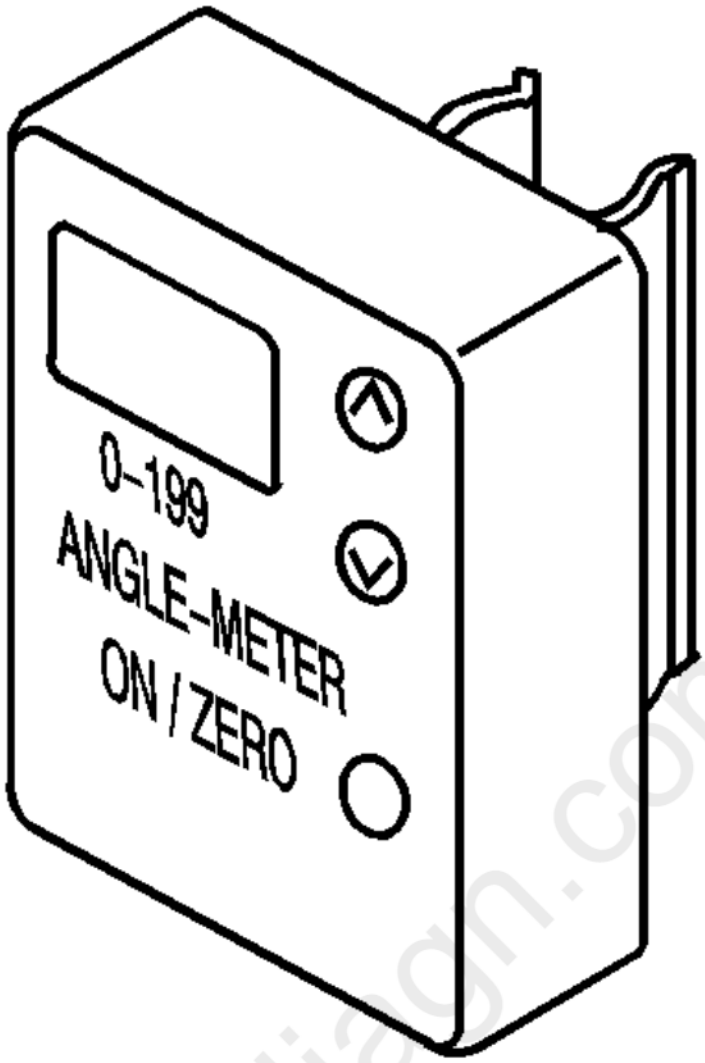	EN-45059 J-45059 KM-470-B Angle Meter South America Use Local Equivalent

cardiagn.com

Illustration	Tool Number/Description
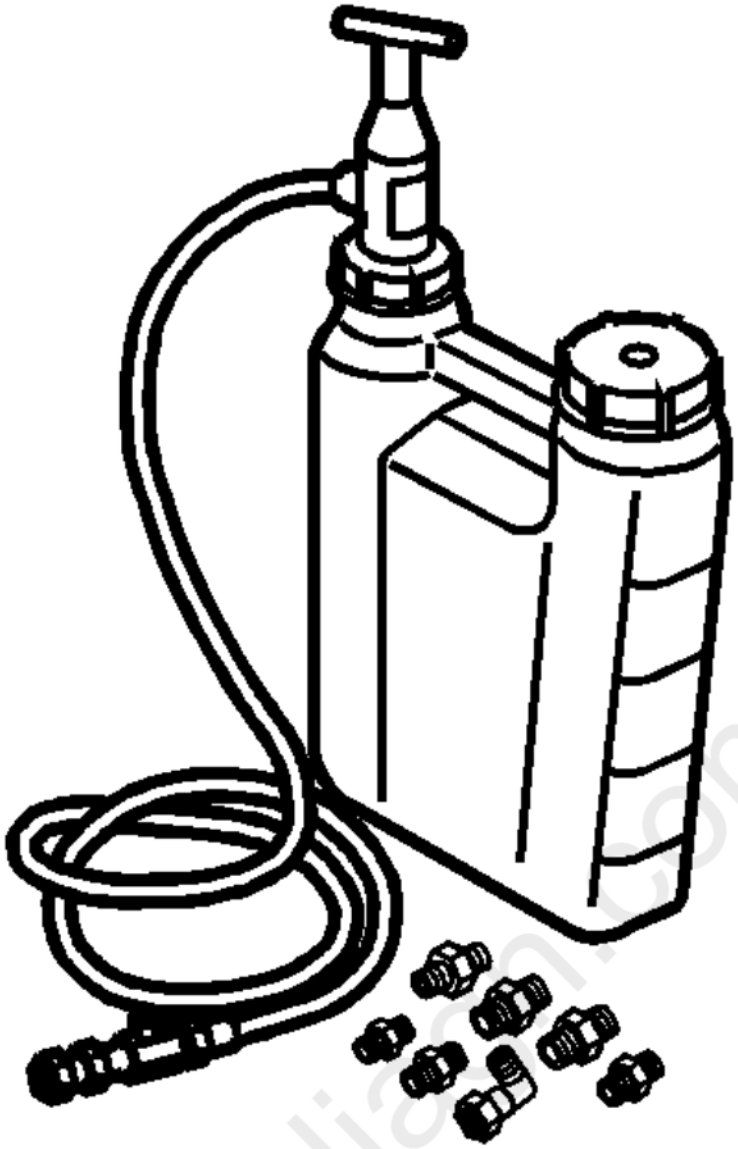	EN-45299 J-45299 Engine Preluber South America Use Local Equivalent

cardiagn.com

Illustration	Tool Number/Description
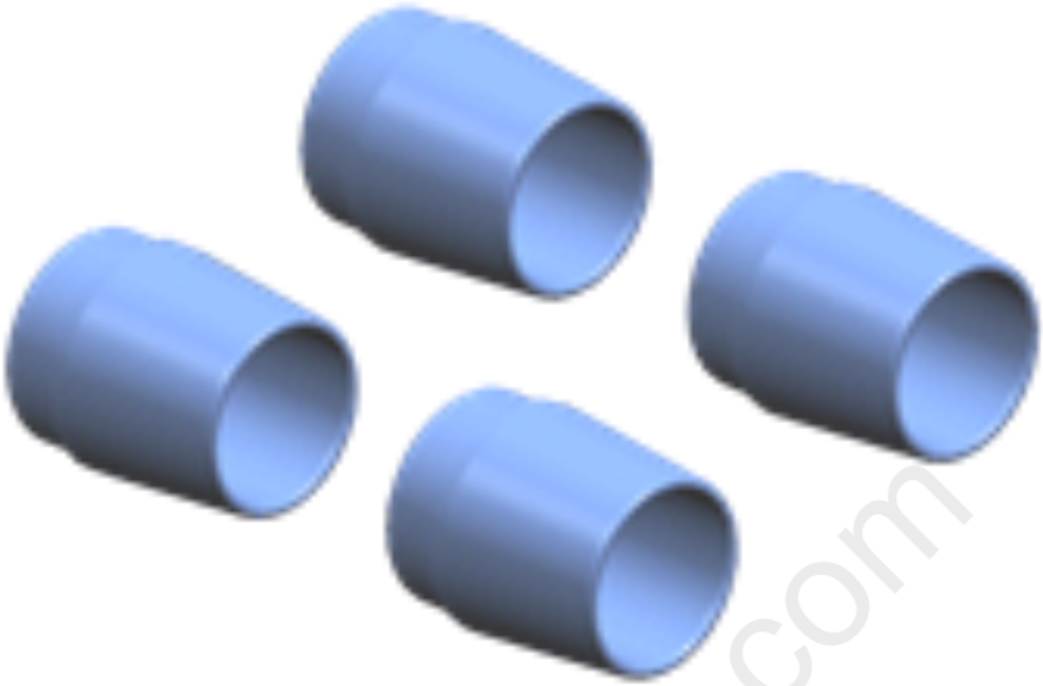	EN-46101 J-46101 Spark Plug Tube Seal Guide

cardiagn.com

Illustration	Tool Number/Description
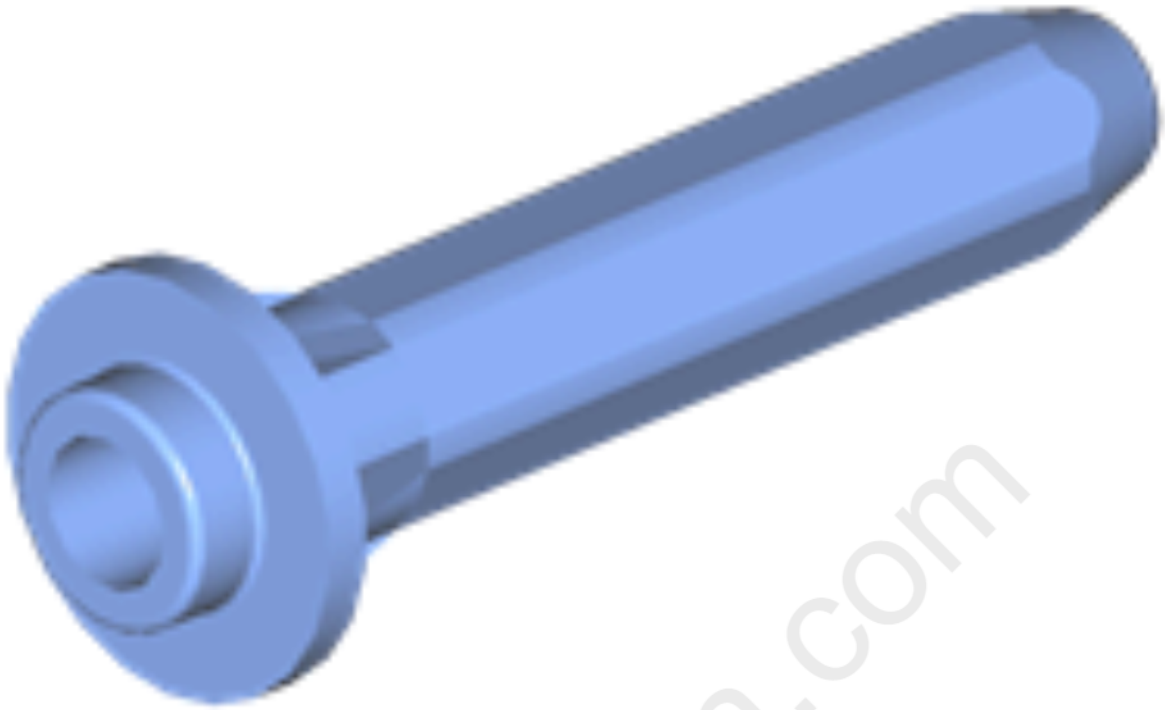	EN-46103 J-46103 Camshaft Actuator Valve Seal Installer

cardiagn.com

Illustration	Tool Number/Description
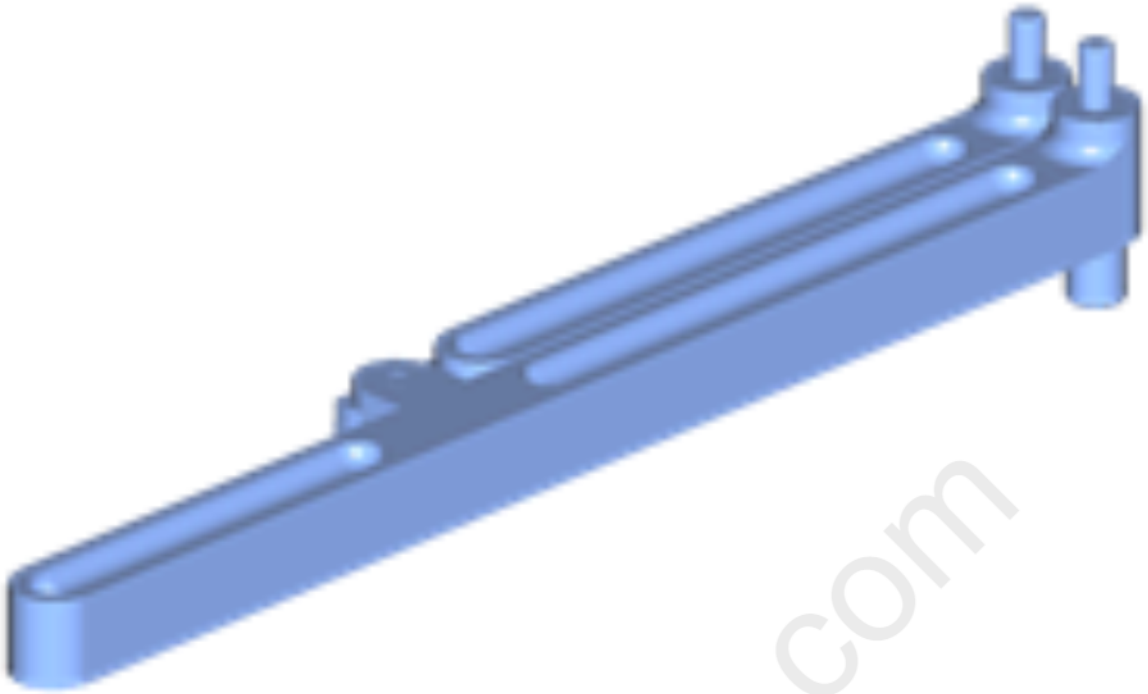	EN-46104 J-46104 V-0506022 Water Pump Pulley Holding Tool

cardiagn.com

Illustration	Tool Number/Description
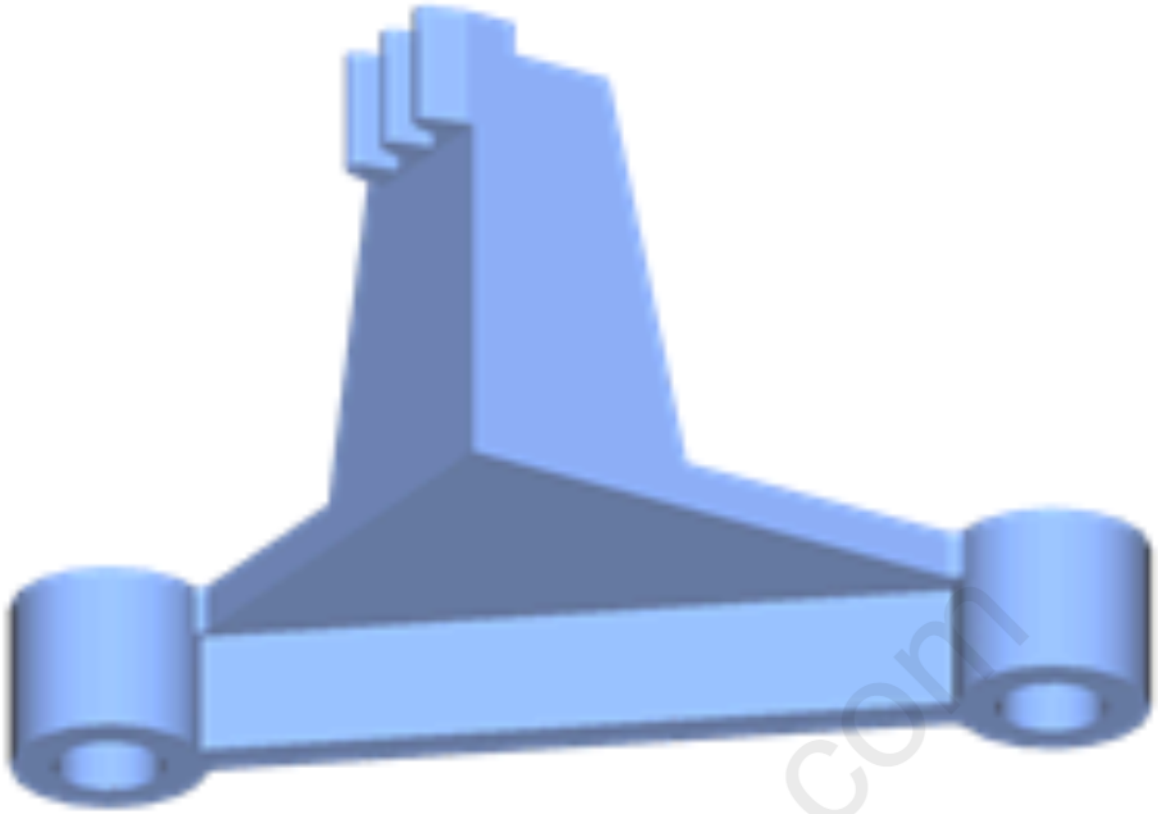	EN-46106 EN-50638 J-46106 KM-652 Flywheel Holding Tool

cardiagn.com

Illustration	Tool Number/Description
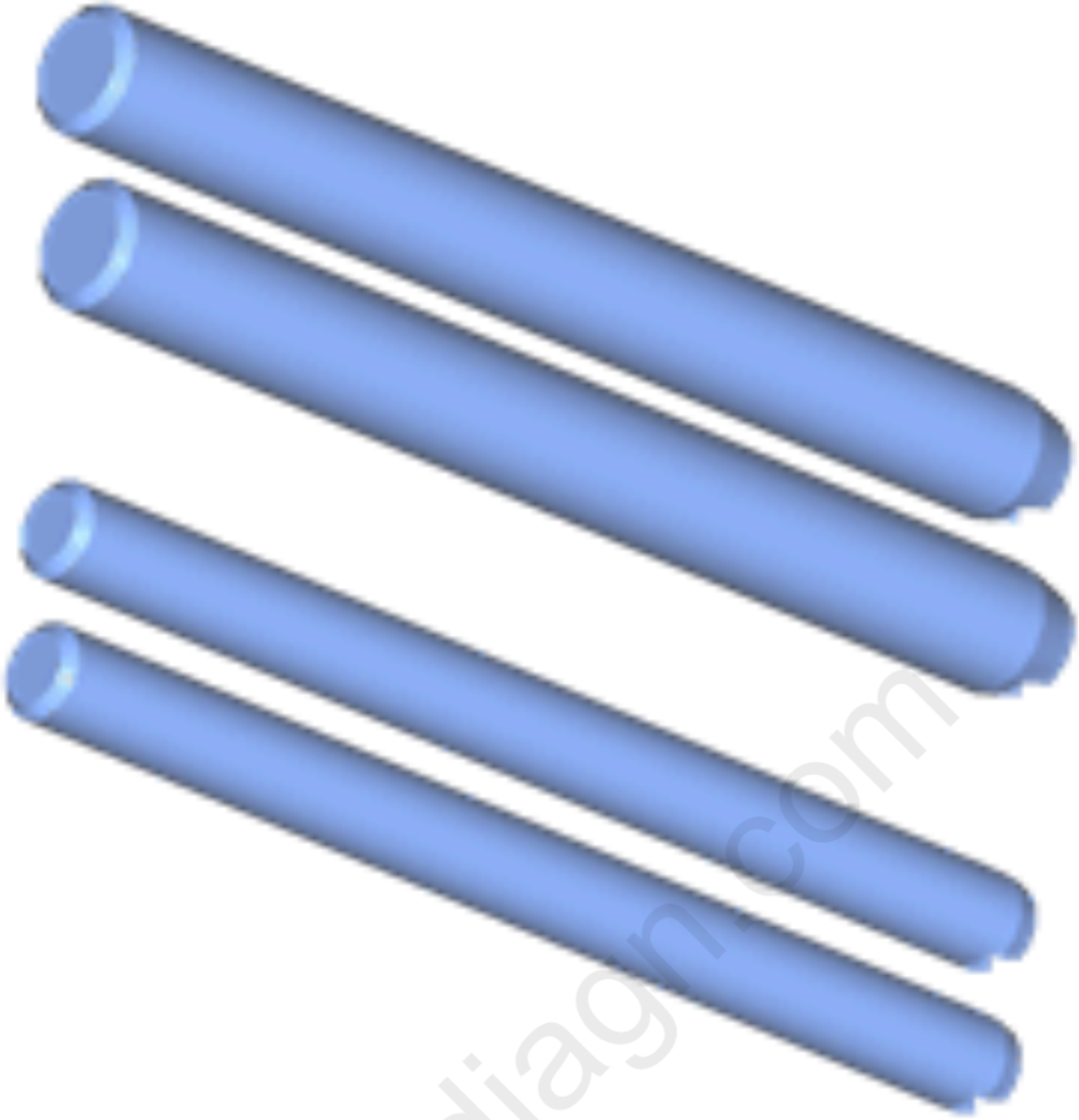	EN-46109 J-46109 V-0506033 Guide Pins

cardiagn.com

Illustration	Tool Number/Description
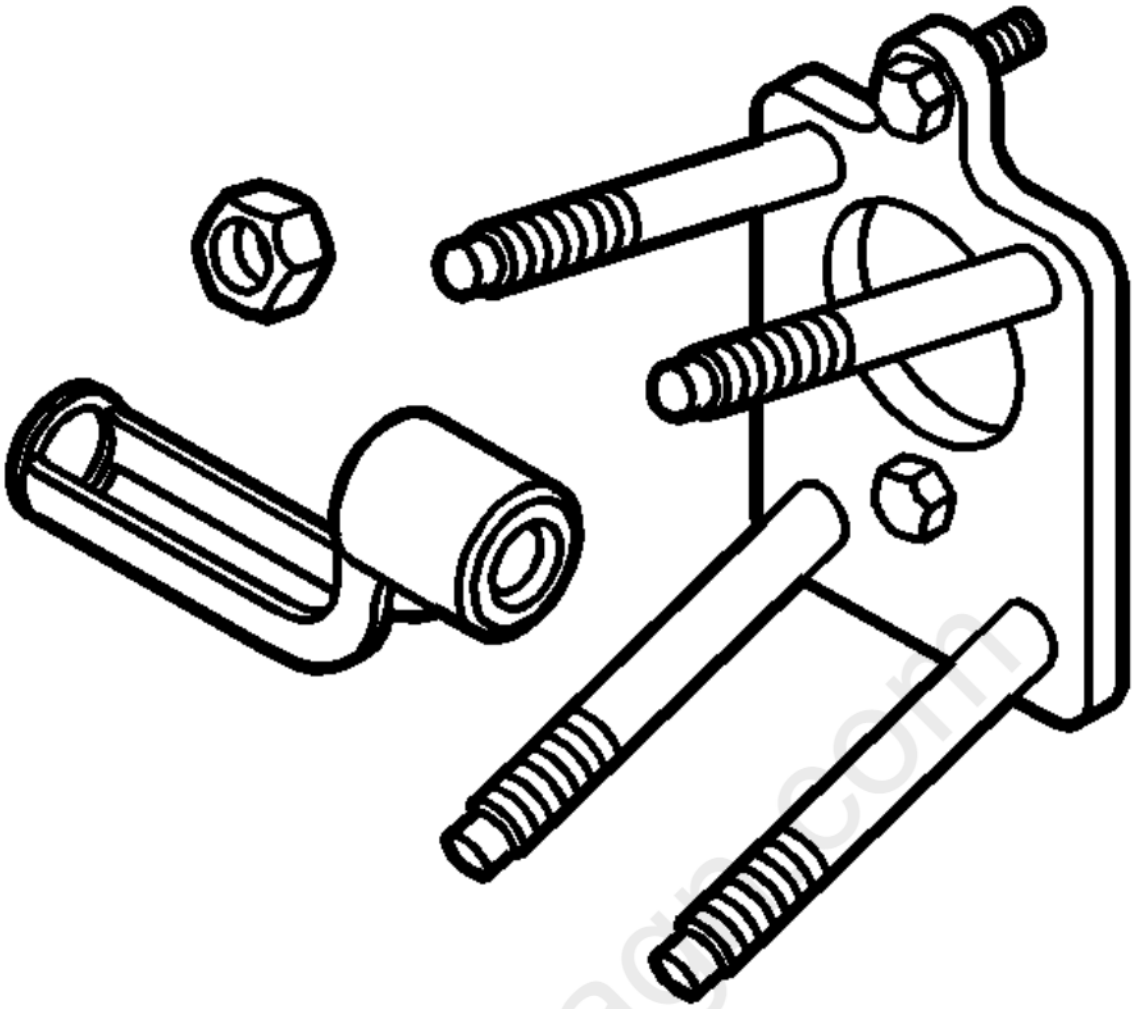	EN-46110 EN-46110-EU J-46110-EU On-Vehicle Valve Spring Compressor South America Use Local Equivalent

cardiagn.com

Illustration	Tool Number/Description
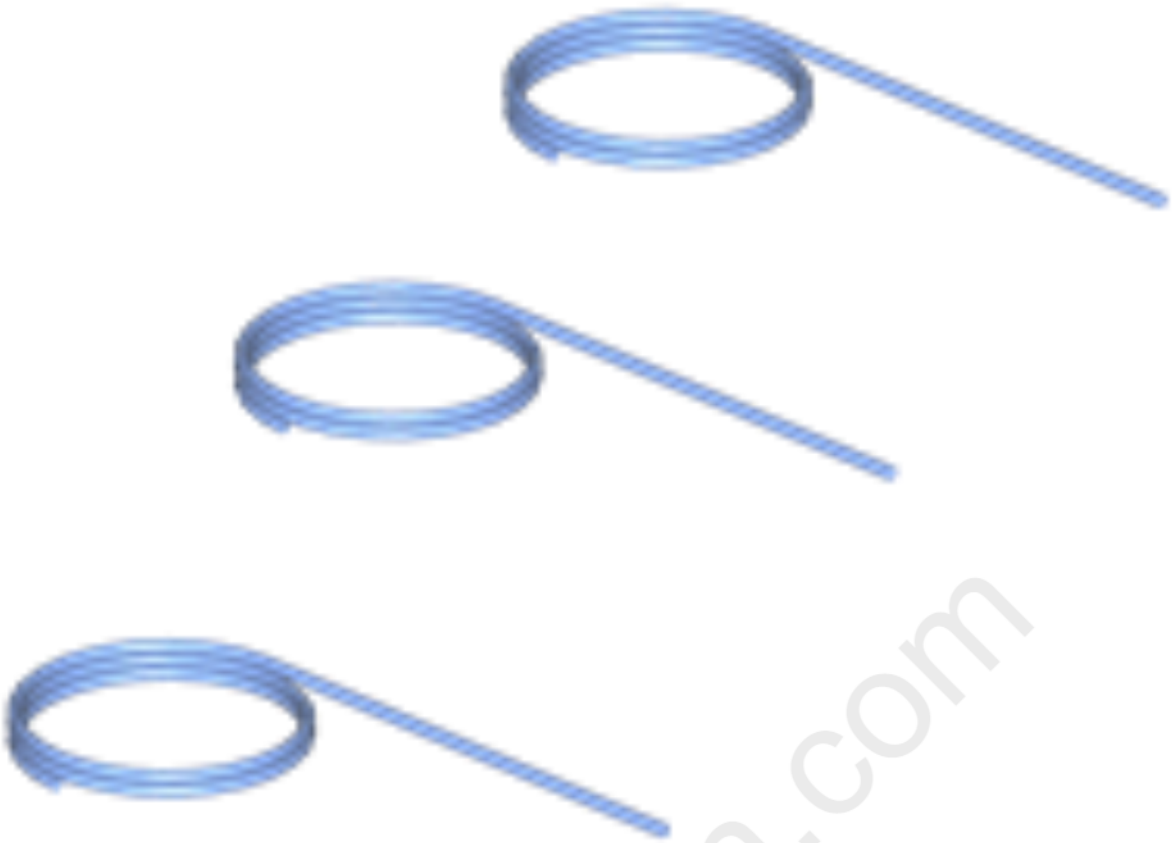	EN-46112 Tensioner Retraction Pins South America Use Local Equivalent

cardiagn.com

Illustration	Tool Number/Description
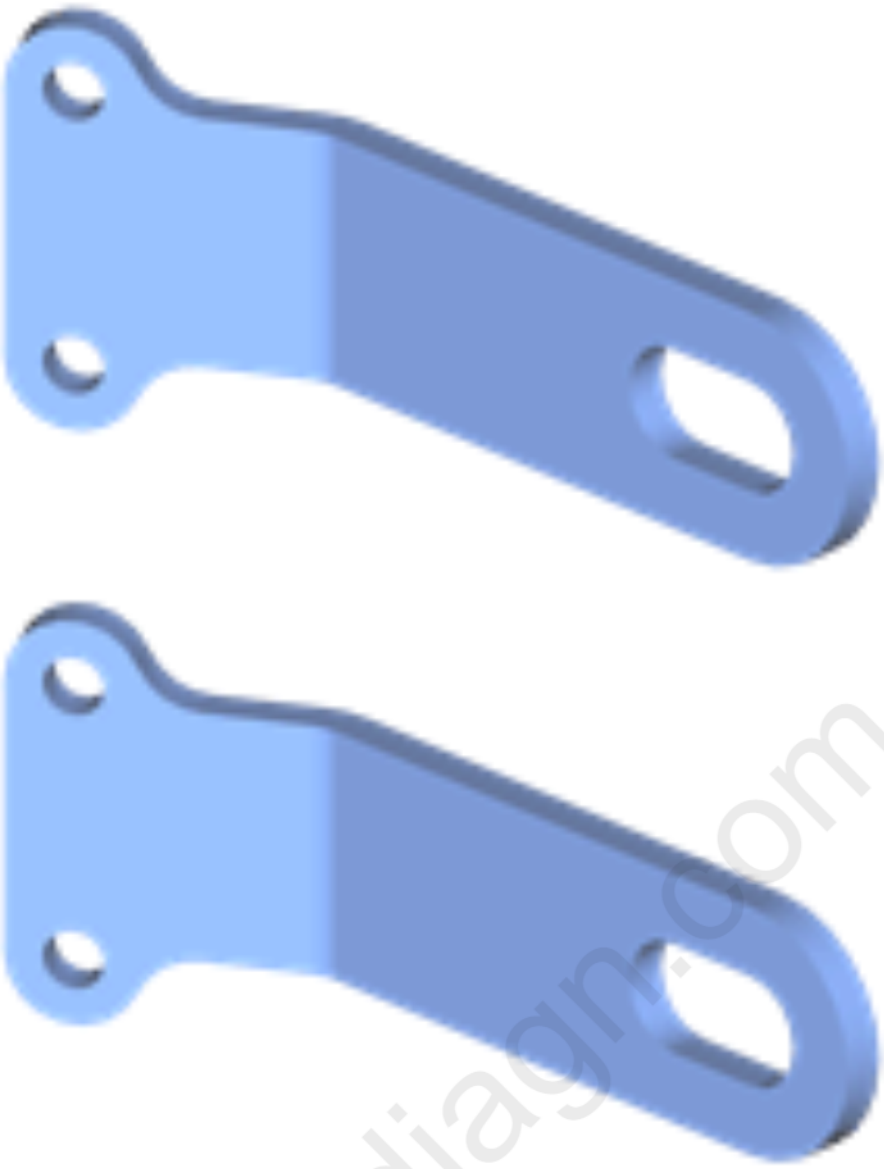	EN-46114 Engine Lift Brackets

cardiagn.com

Illustration	Tool Number/Description
	EN-46116 KM-840 (Remover) /EN-47986 (Installer) 83 94 157 V-0506032 Valve Stem Seal Remover/Installer

cardiagn.com

Illustration	Tool Number/Description
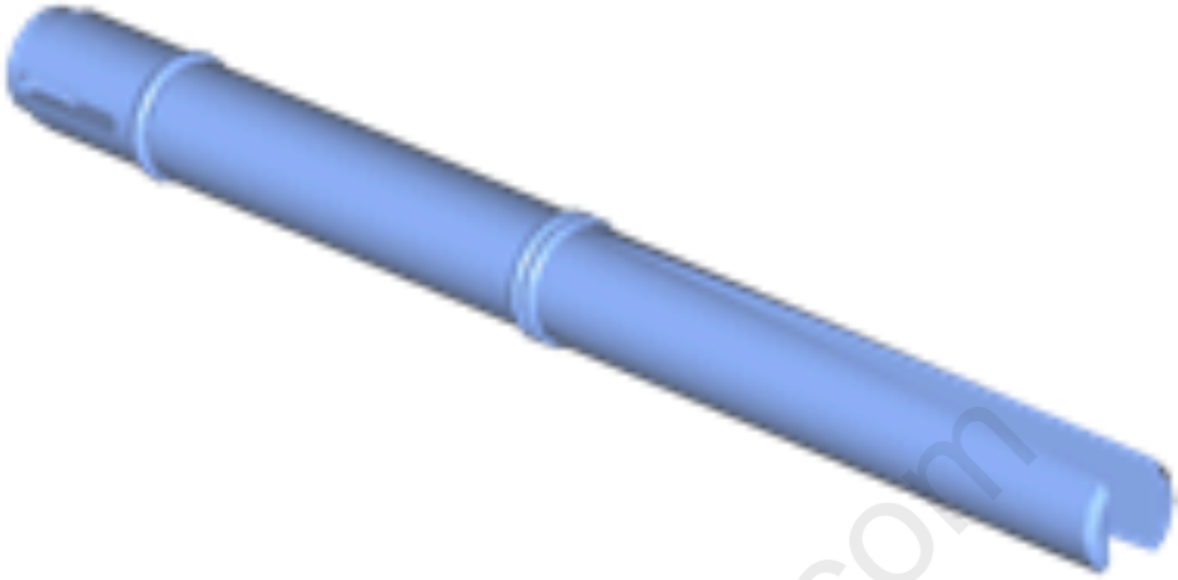	EN-46117 Valve Stem Key Remover/Installer South America Use Local Equivalent

cardiagn.com

Illustration	Tool Number/Description
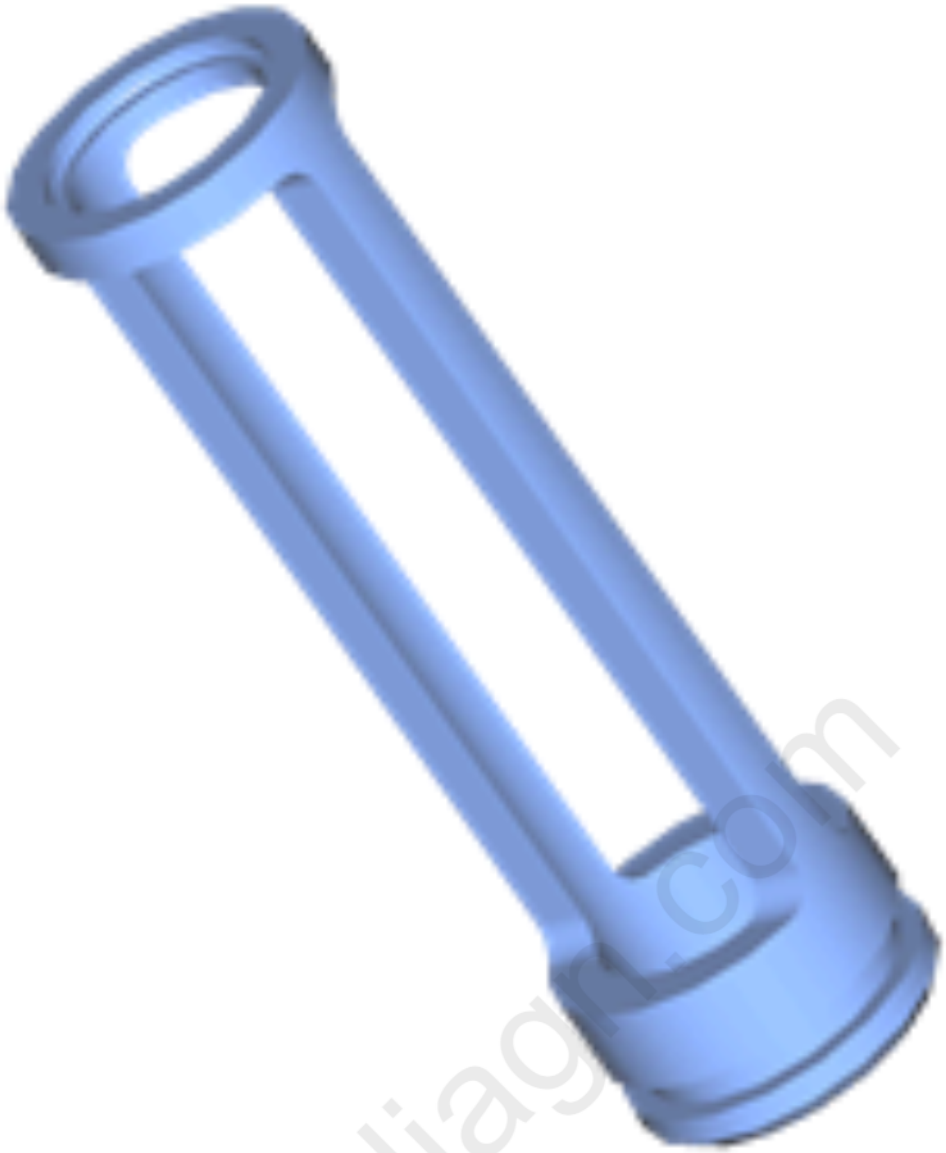	EN-46119 V-0506034 Off-Vehicle Valve Spring Compressor Adapter

cardiagn.com

Illustration	Tool Number/Description
	EN-46121 V-0506030 Connecting Rod Guide Pin Set

cardiagn.com

Illustration	Tool Number/Description
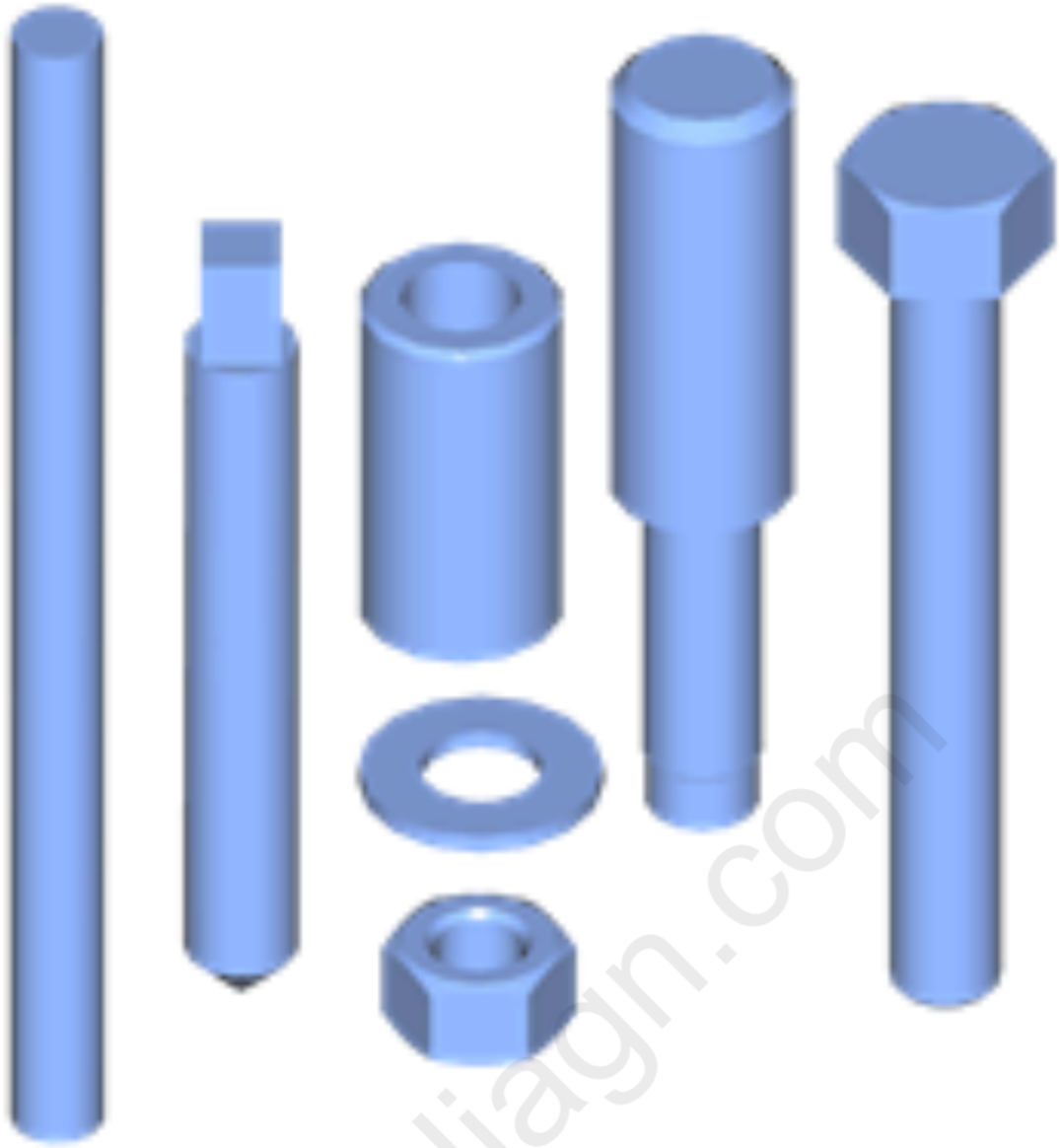	EN-46122 Camshaft Position Actuator Check-Ball Valve Remover/Installer South America Use Local Equivalent

cardiagn.com

Illustration	Tool Number/Description
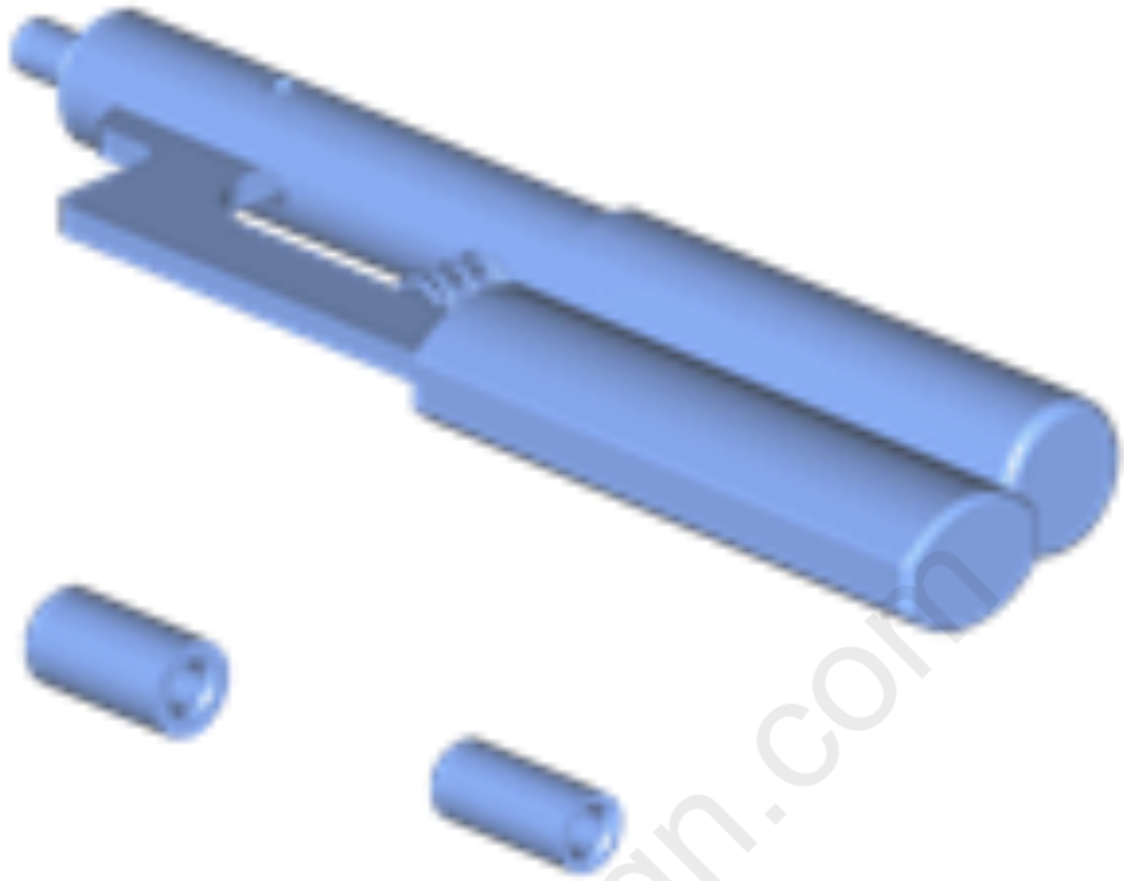	EN-46745 J-43654 Piston Pin Clip Remover/Installer South America Use Local Equivalent

cardiagn.com

Illustration	Tool Number/Description
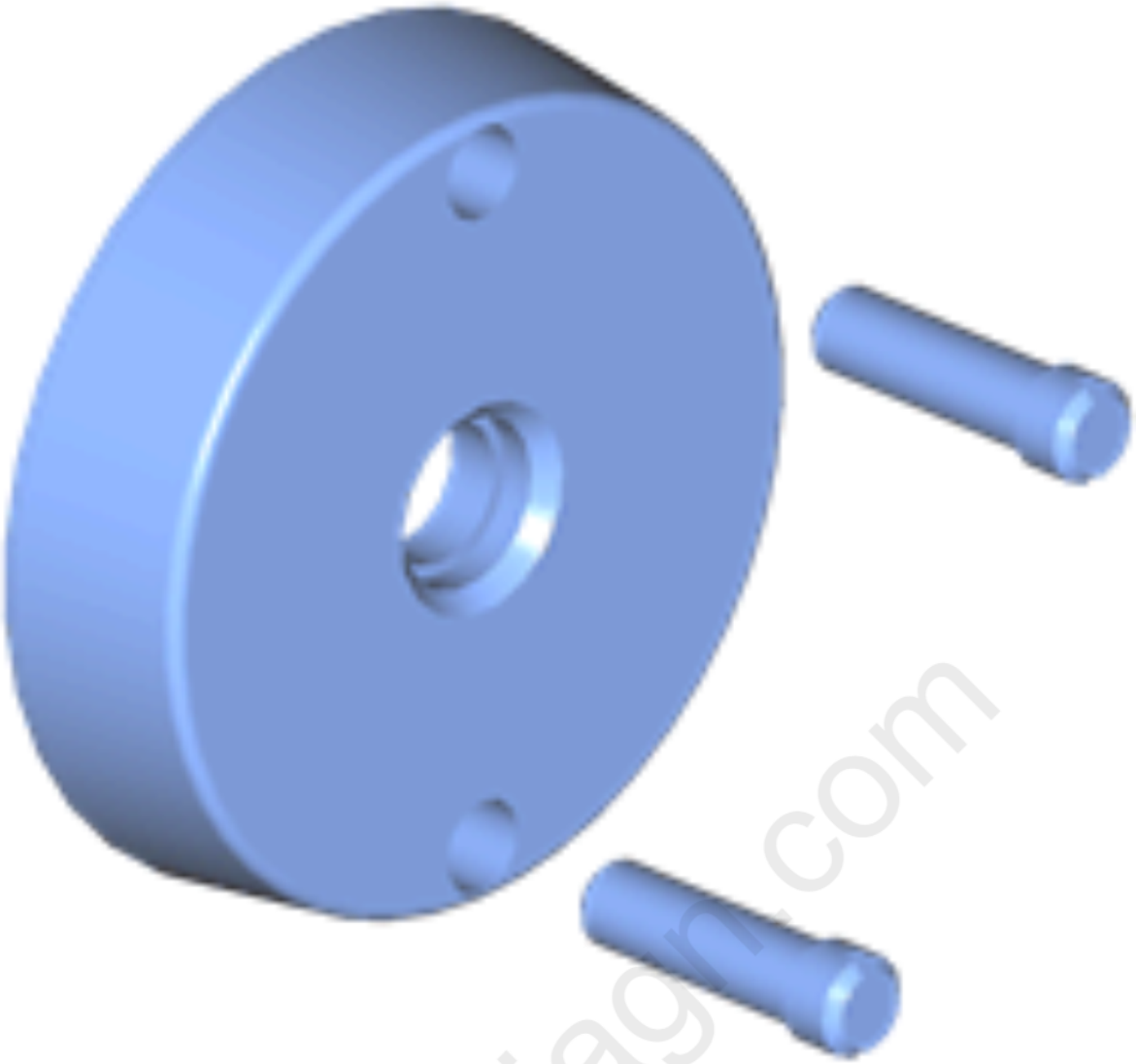	EN-47839 V-0506024 Crankshaft Rear Oil Seal Installation Tool

cardiagn.com

Illustration	Tool Number/Description
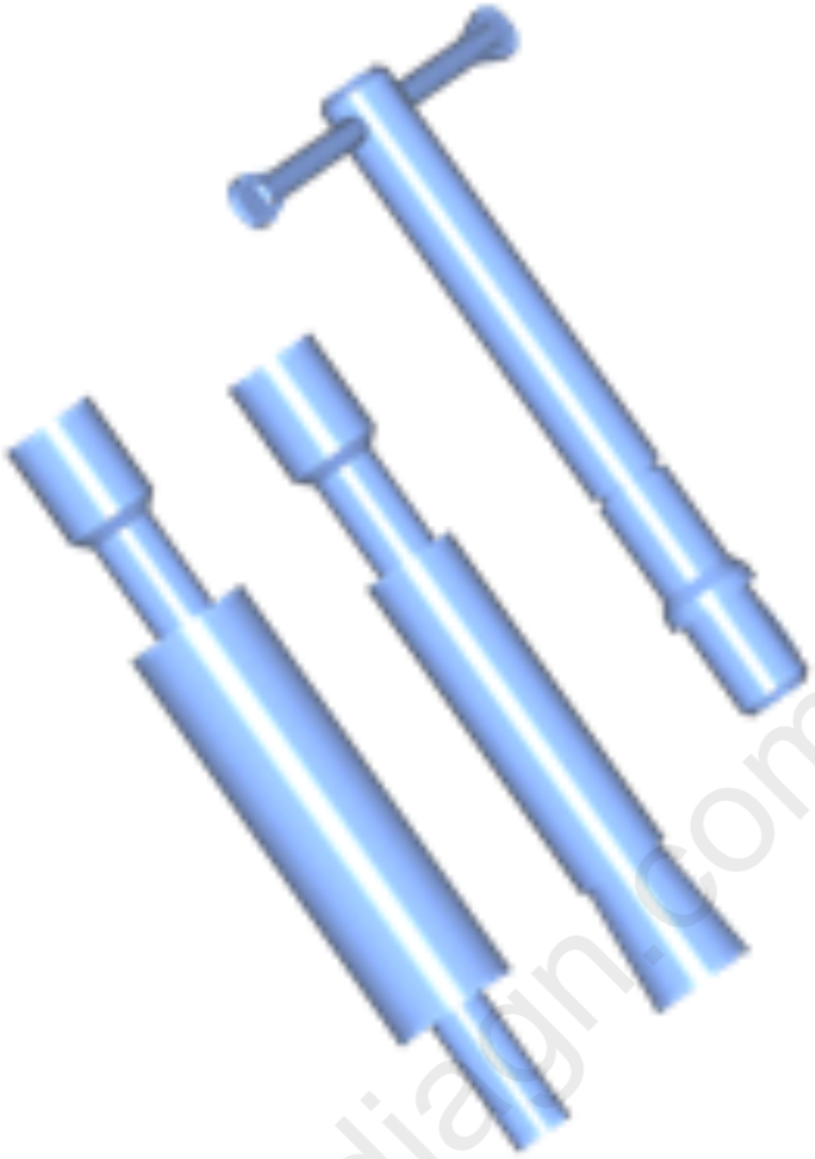	EN-47909 Injector Bore and Sleeve Cleaning Kit

cardiagn.com

Illustration	Tool Number/Description
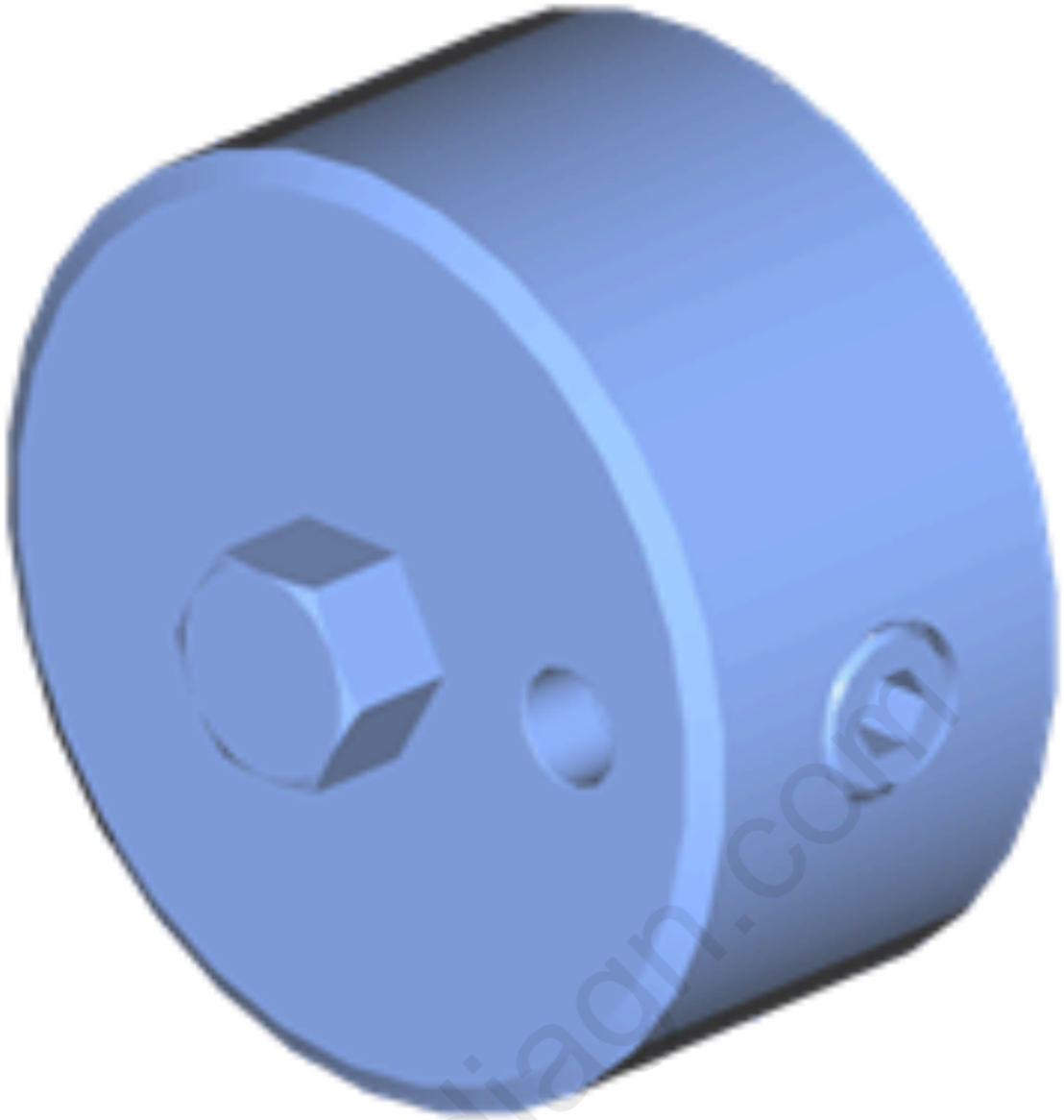	EN-47971 J-42907 Oil Pressure Gauge Adapter

cardiagn.com

Illustration	Tool Number/Description
	EN-48313 Timing Chain Retention Tool

cardiagn.com

Illustration	Tool Number/Description
	EN-48383 Camshaft Retaining Tool

cardiagn.com

Illustration	Tool Number/Description
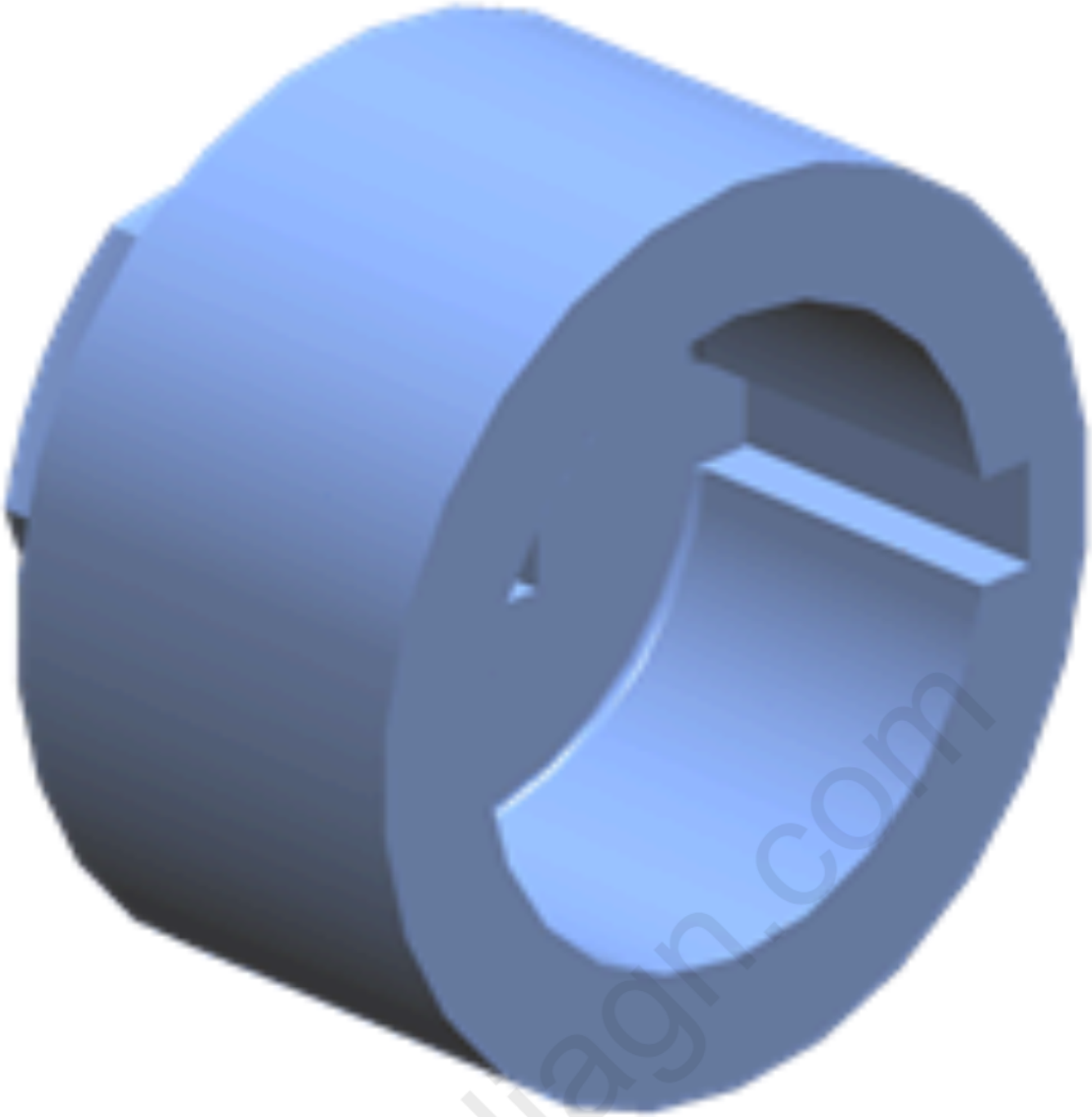	EN-48589-A EN-48589 Crankshaft Rotation Socket

cardiagn.com

Illustration	Tool Number/Description
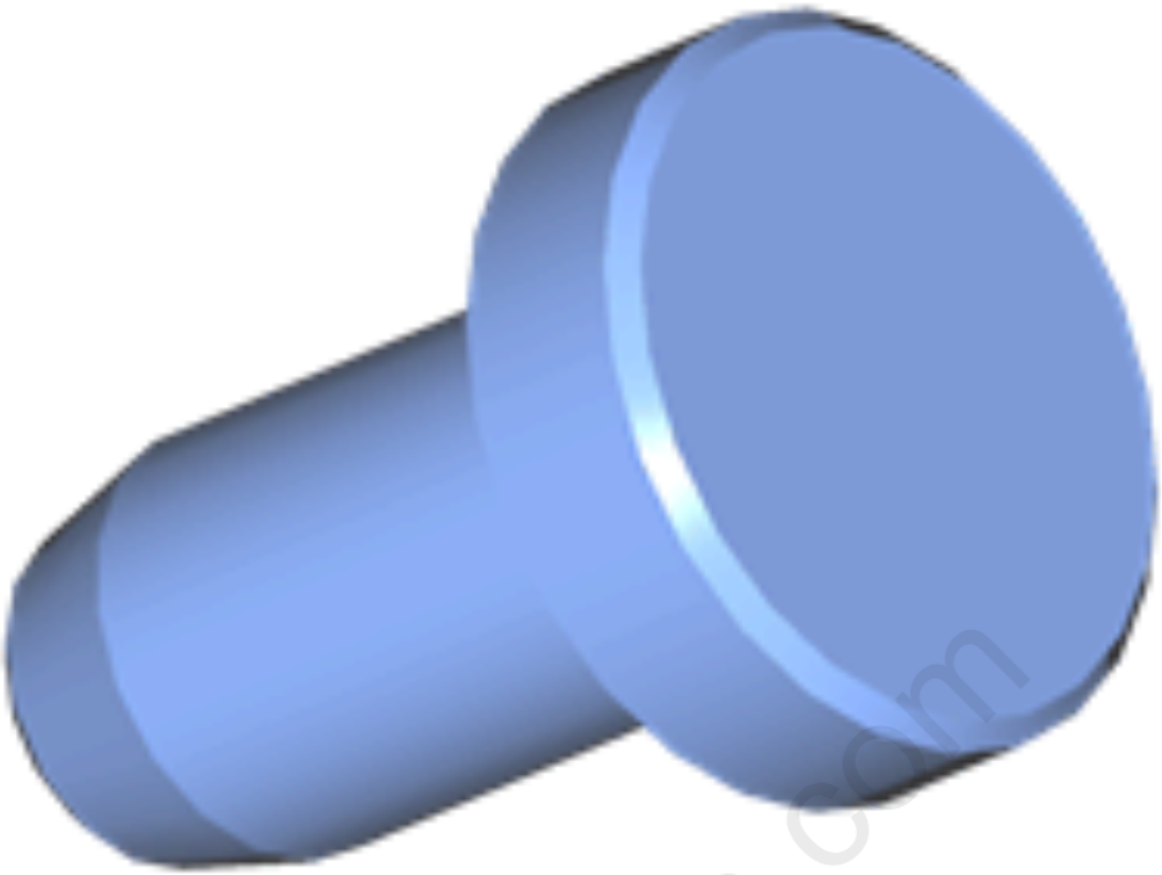	EN-48896 HP Fuel Pump Installation Alignment Gauge

cardiagn.com

Illustration	Tool Number/Description
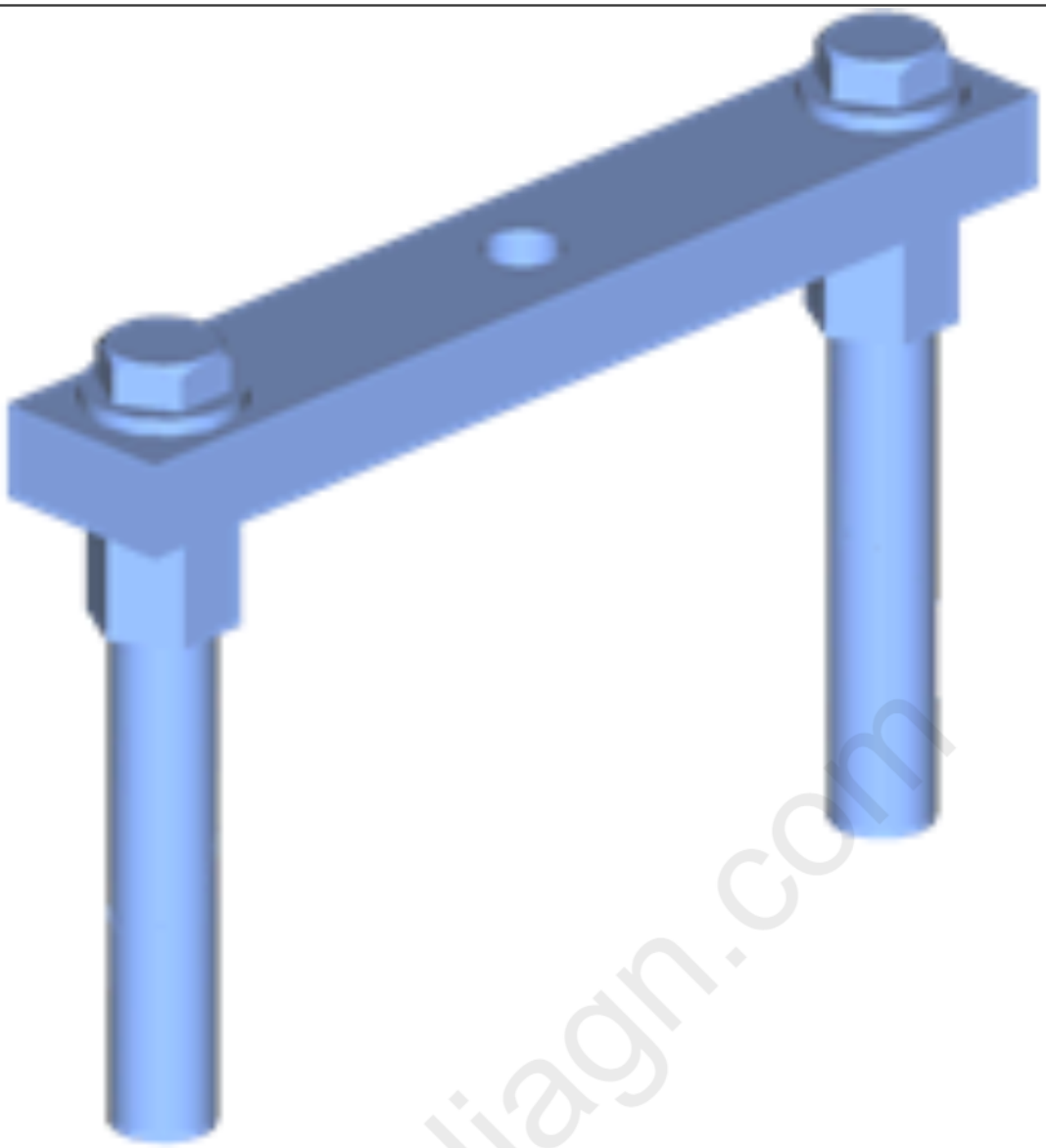	EN-49102 J-41818 & EN-47985 V-0506025 Crankshaft Bearing Cap Remover

cardiagn.com

Illustration	Tool Number/Description
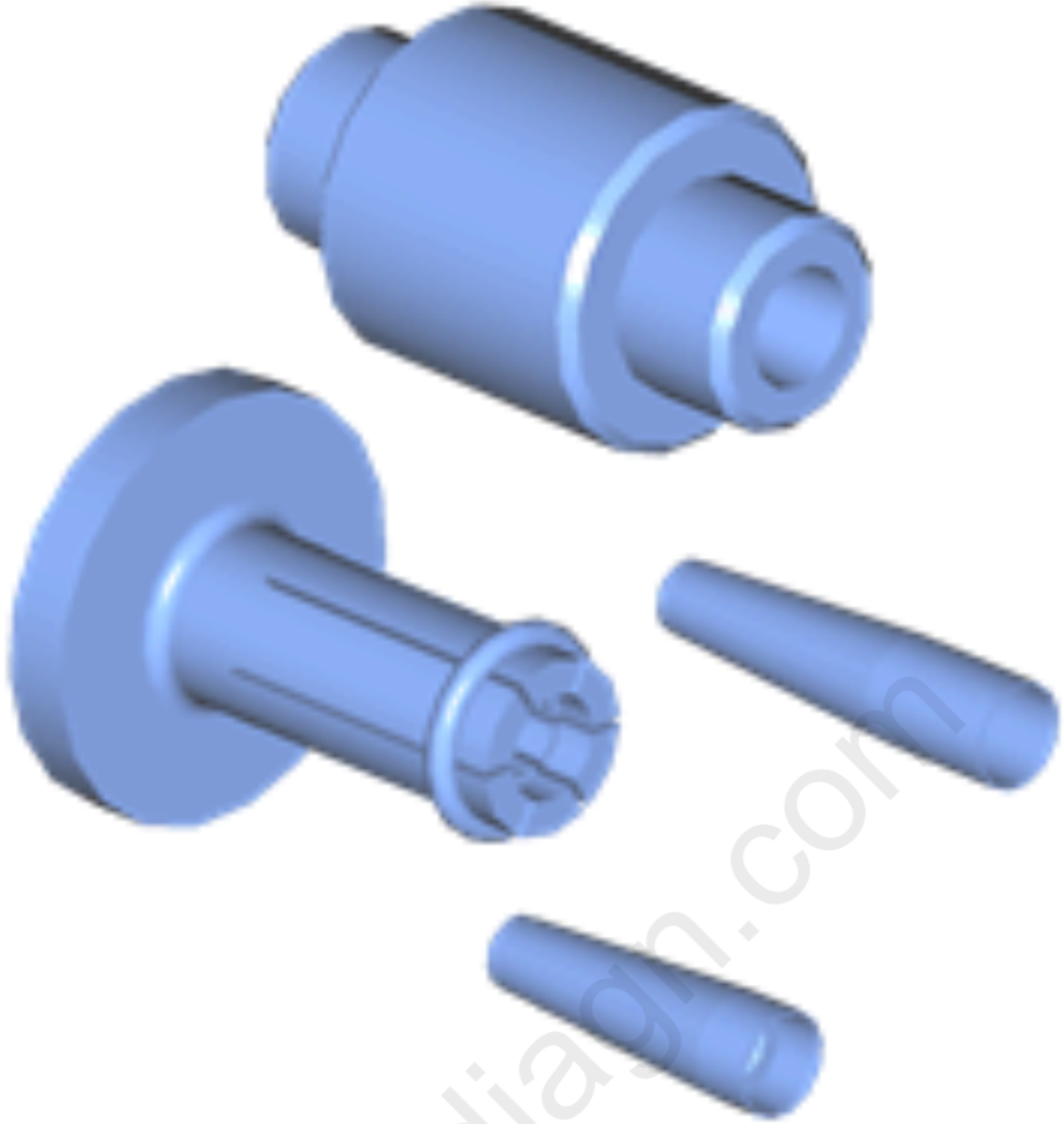	EN - 49245 EN-48266 and EN-49245-1 Injector Seal Installer Kit

cardiagn.com

Illustration	Tool Number/Description
	EN-49247 Injector Retaining Clip Installer

cardiagn.com

Illustration	Tool Number/Description
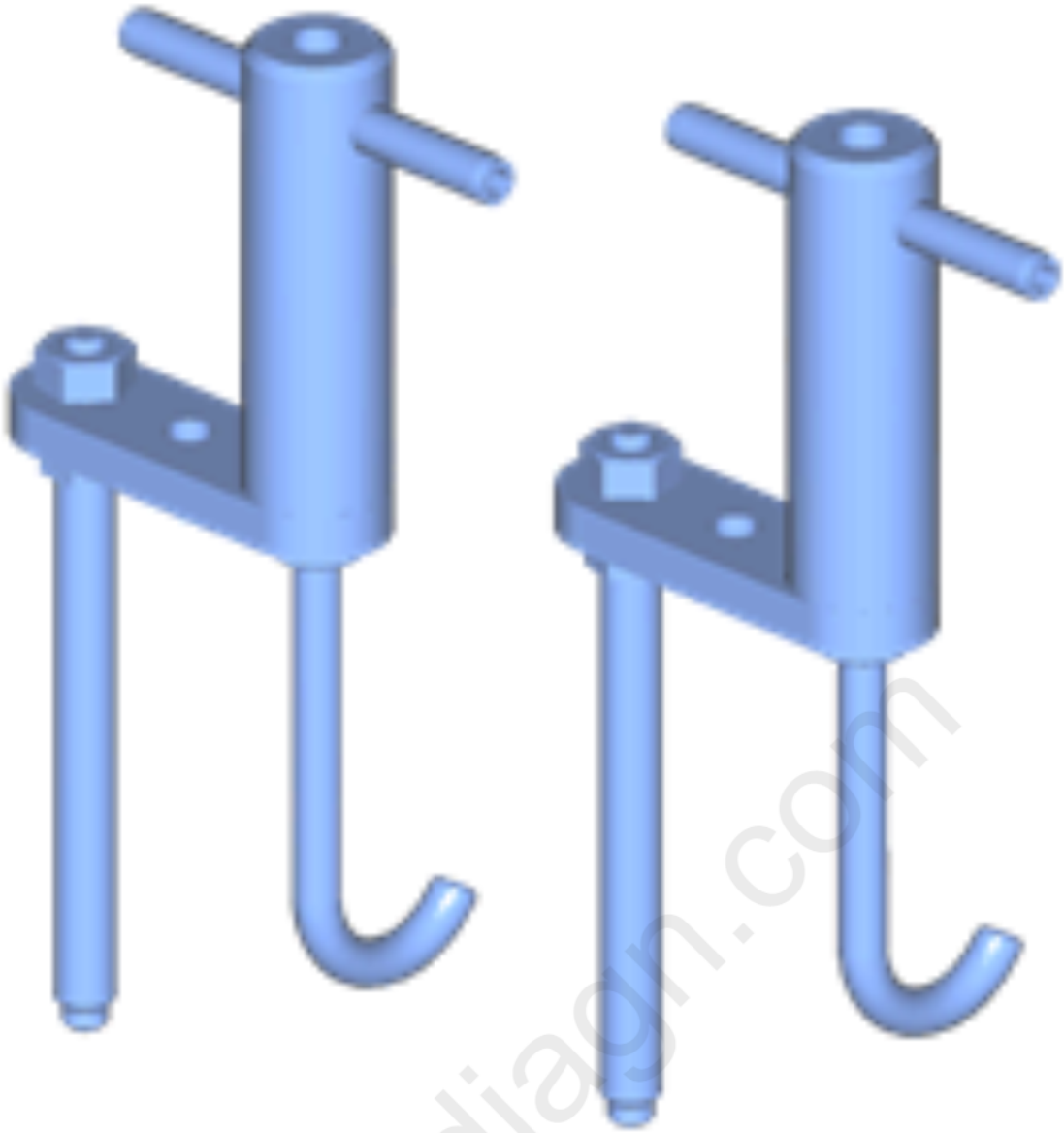	EN-49248 Injector Rail Assembly Remover

cardiagn.com

Illustration	Tool Number/Description
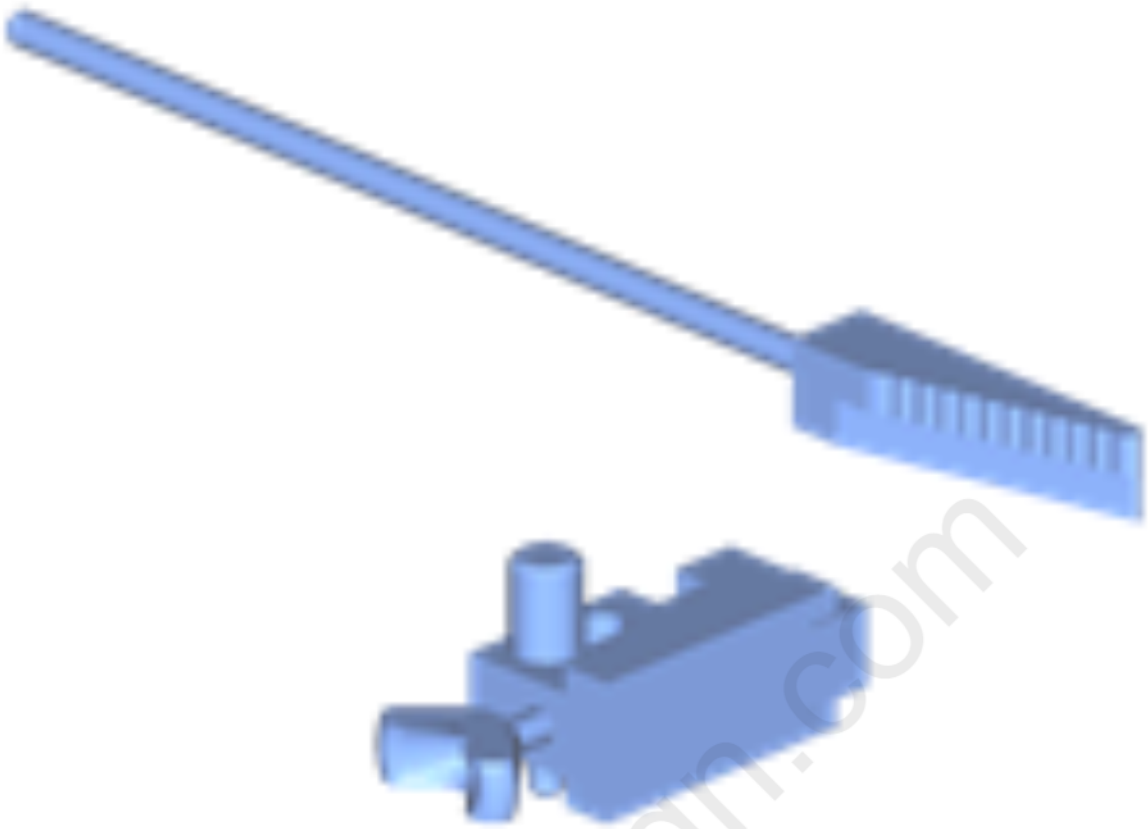	EN-49982 Timing Chain Retainer

cardiagn.com

Illustration	Tool Number/Description
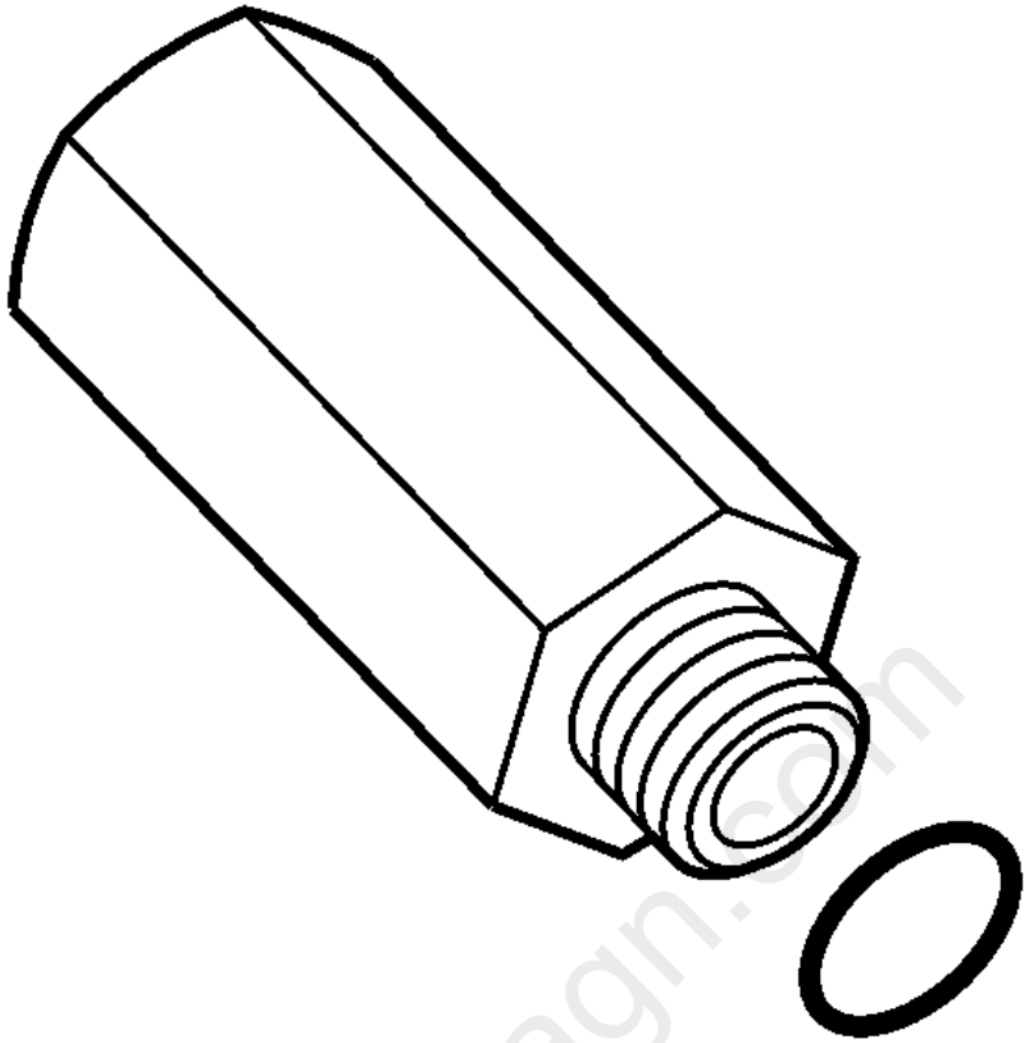	EN-50789 Oil Pressure Adapter Fitting

cardiagn.com

Illustration	Tool Number/Description
	GE-6125-1B J-6125-1B KM-7004 M-680770 Slide Hammer Adapter
	GE-7872 J-7872 Magnetic Base Dial Indicator South America Use Local Equivalent

cardiagn.com

Illustration	Tool Number/Description
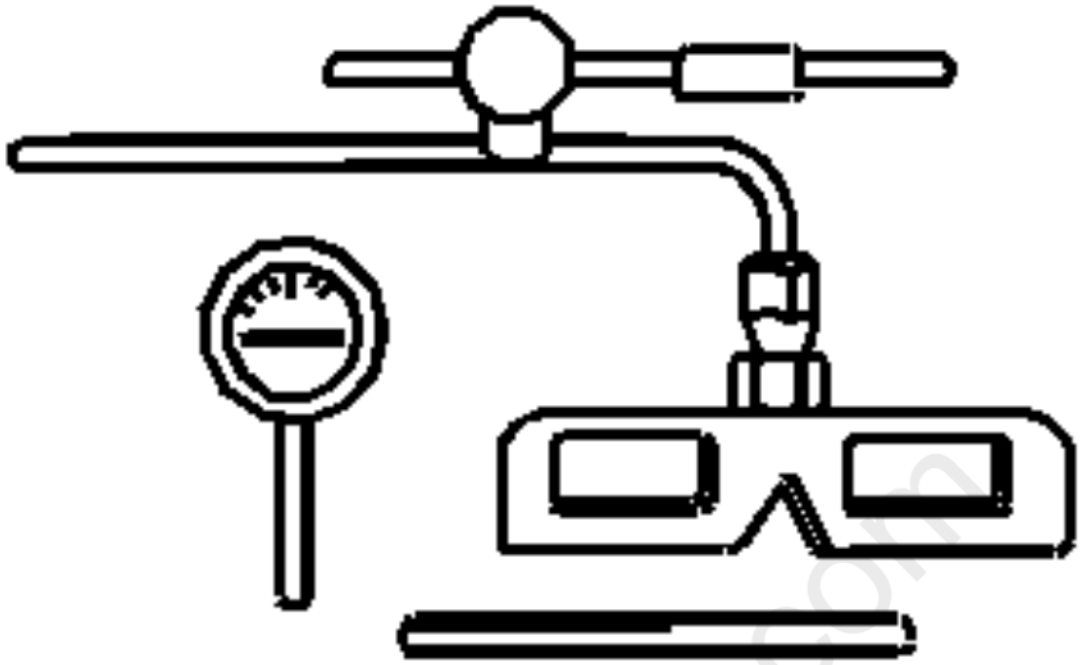	

cardiagn.com

Illustration	Tool Number/Description
	GE-8001 J-8001 Dial Indicator Set South America Use Local Equivalent
	GE-8358 J-8358 Carbon Removal Brush South America Use Local Equivalent

cardiagn.com

Illustration	Tool Number/Description
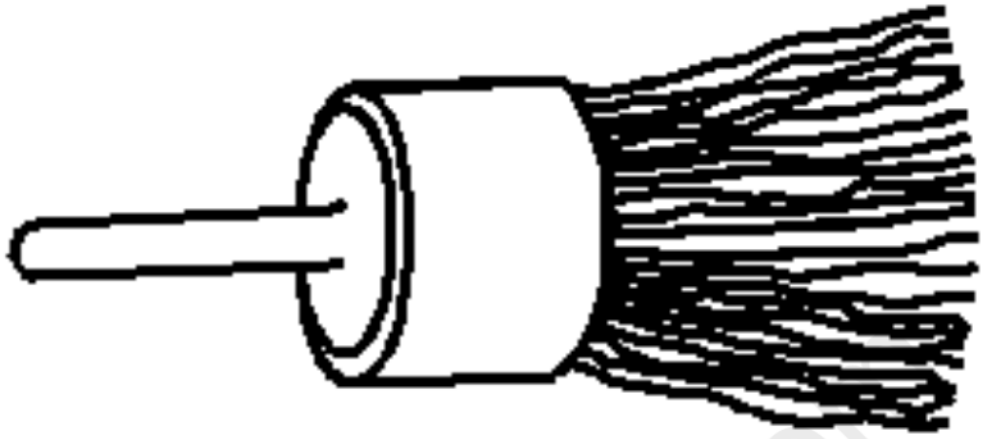	
	GE-28428-E J-28428-E High Intensity Black Light Kit South America Use Local Equivalent

cardiagn.com

Illustration	Tool Number/Description
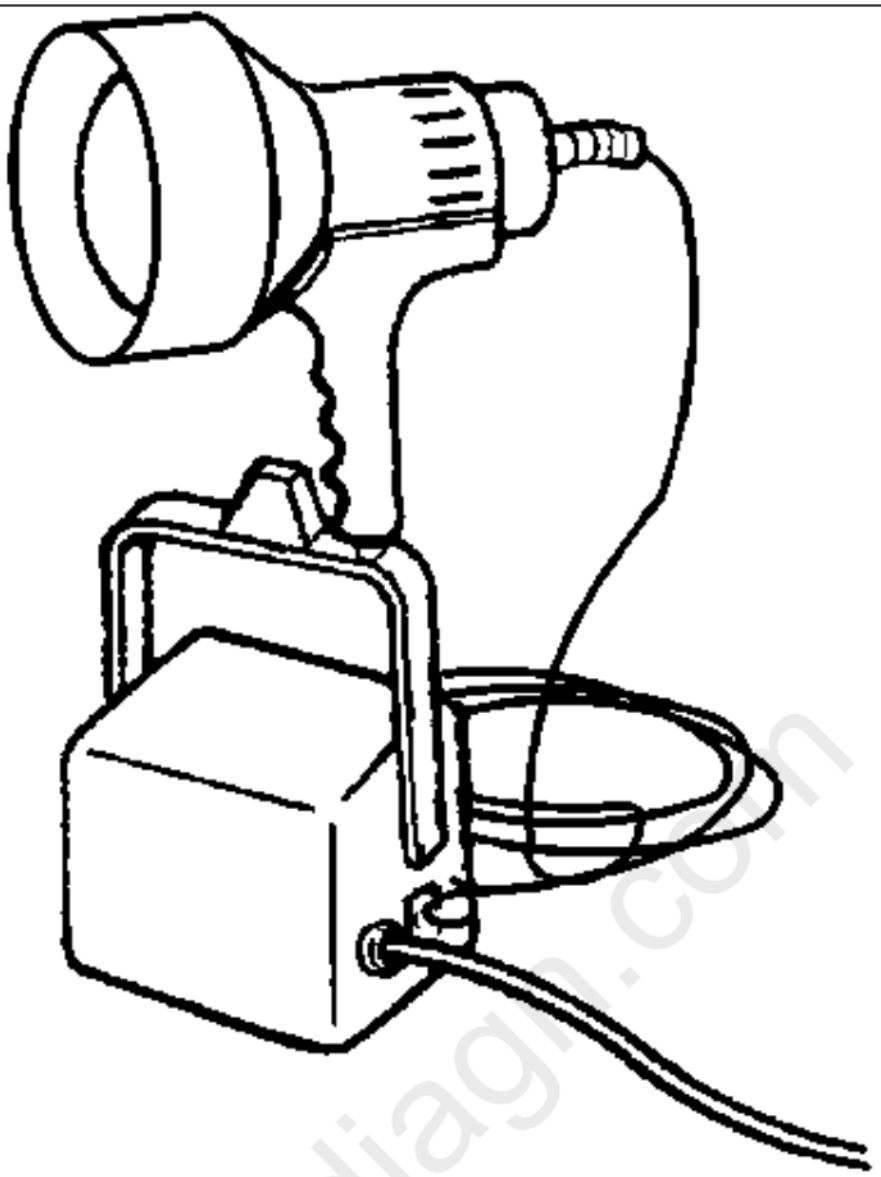	

cardiagn.com

Illustration	Tool Number/Description
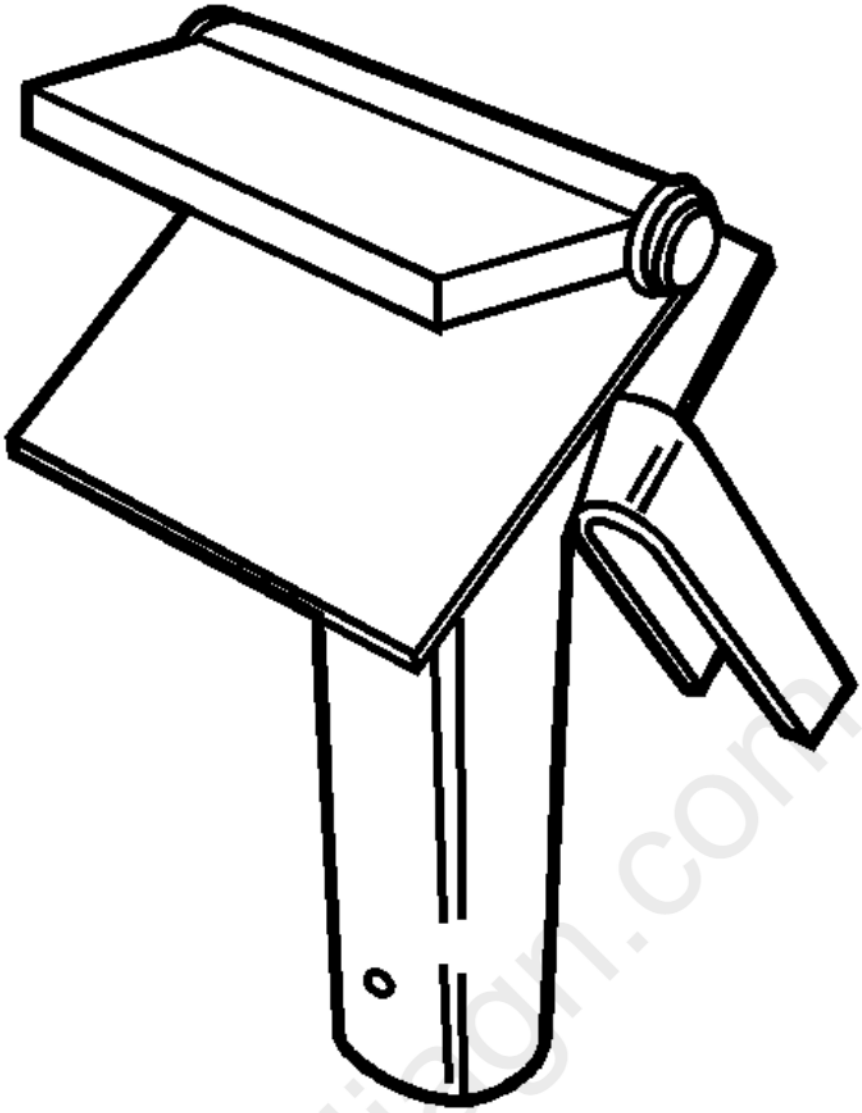	GE-48326 Sealant Dispenser

cardiagn.com

Illustration	Tool Number/Description
	GE-52200 Propulsion Component Lift

cardiagn.com

Illustration	Tool Number/Description
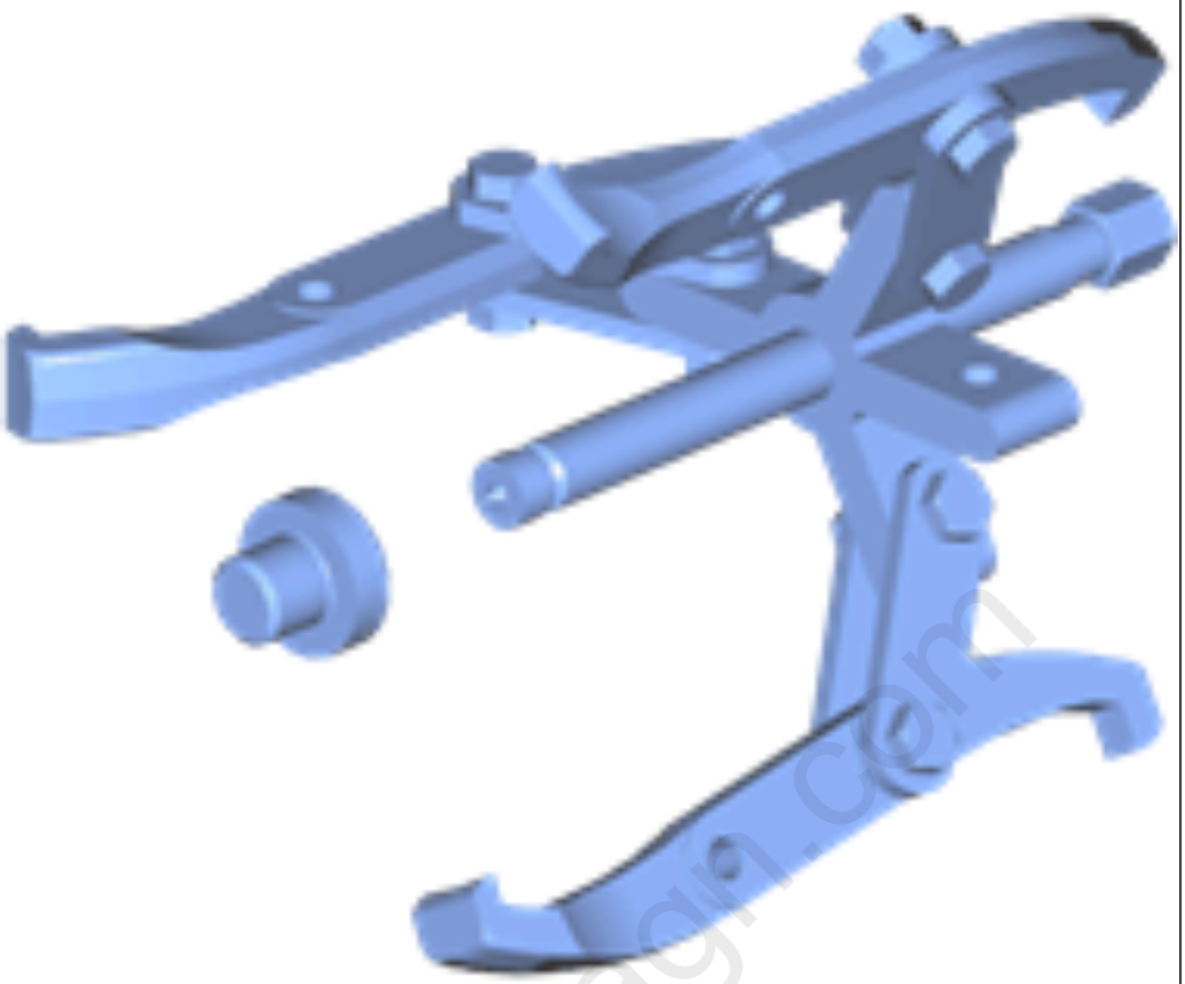	J-38416-B Crankshaft Balancer Remover

cardiagn.com

SPECIFICATIONS

FASTENER SPECIFICATIONS

Single Use Non-Threaded Fasteners/Components

NOTE:
All fasteners/components listed in this table MUST BE DISCARDED and replaced with NEW after removal.

Application
Camshaft Cover Gasket
Camshaft Cover Grommet
Camshaft Position Actuator Seal
Connecting Rod Bearing
Crankshaft Lower Bearing
Crankshaft Thrust Upper Bearing
Crankshaft Upper Bearing
Crankshaft Front Oil Seal
Crankshaft Rear Oil Seal Housing
Cylinder Head Gasket
Fuel Feed Intermediate Pipe
Fuel Injector Nozzle Housing Seal
Fuel Injector Retainer
Fuel Injector Spacer
Fuel Pump Bracket Gasket
Fuel Pump O-Ring
Intake Manifold Gasket
Lower Intake Manifold Gasket
Oil Filter Adapter Gasket
Oil Level Indicator Tube Seal
Piston Pin Retainer
Plastic Compression Limiter
Spark Plug Shield Seal
Timing Chain Tensioner Gasket
Thermostat Housing Gasket
Throttle Body Gasket
Water Pump Gasket
Water Pump Seal

Single Use Threaded Fastener/Component Tightening Specifications

NOTE:
All fasteners/components listed in this table MUST BE DISCARDED and replaced with NEW after removal.

Application	Specification Metric (English)
Automatic Transmission Flex Plate Bolt	

cardiagn.com

NOTE:

All fasteners/components listed in this table MUST BE DISCARDED and replaced with NEW after removal.

Application	Specification Metric (English)
• First Pass:	30 N.m (22 lb ft)
• Final Pass:	45 Degrees
Connecting Rod Bolt	
• First Pass:	25 N.m (18 lb ft)
• Final Pass:	110 Degrees
Crankshaft Balancer Bolt	
• First Pass:	100 N.m (74 lb ft)
• Final Pass:	150 Degrees
Crankshaft Bearing Cap Bolt - Inner	
• First Pass:	20 N.m (15 lb ft)
• Final Pass:	80 degrees
Crankshaft Bearing Cap Bolt - Outer	
• First Pass:	15 N.m (11 lb ft)
• Final Pass:	110 Degrees
Crankshaft Bearing Cap Bolt - Side	
• First Pass:	30 N.m (22 lb ft)
• Final Pass:	60 Degrees
Cylinder Head Bolt	
• First Pass:	15 N.m (11 lb ft)
• Final Pass:	75 Degrees
Cylinder Head Bolt	
• First Pass:	30 N.m (22 lb ft)
• Final Pass:	150 degrees

cardiagn.com

NOTE:
All fasteners/components listed in this table MUST BE DISCARDED and replaced with NEW after removal.

Application	Specification Metric (English)
Fuel Pump Bolt	
• First Pass:	15 N.m (11 lb ft)
• Final Pass:	60 Degrees
Oil Filter • 3/4 to 1 full turn after gasket makes contact with the sealing surface on the filter mounting flange	
Water Pump Bolt	
• First Pass:	10 N.m (89 lb in)
• Second Pass:	10 N.m (89 lb in)
• Final Pass:	45 Degrees

Reusable Threaded Fastener Tightening Specifications

NOTE:
All fasteners listed in this table can be reused after removal.

Application	Specification Metric (English)
Barometric Pressure Sensor	10 N.m (89 lb in)
Camshaft Bearing Cap Bolt	10 N.m (89 lb in)
Camshaft Cover Bolt	10 N.m (89 lb in)
Camshaft Intermediate Drive Sprocket Bolt - Idler Sprocket	58 N.m (43 lb ft)
Camshaft Position Actuator Bolt	58 N.m (43 lb ft)
Camshaft Position Actuator Solenoid Valve Bolt	10 N.m (89 lb in)
Camshaft Position Sensor Bolt	10 N.m (89 lb in)
Coolant Drain Plug	50 N.m (37 lb ft)
Coolant Drain Plug	75 N.m (55 lb ft)
Crankshaft Position Sensor Bolt	10 N.m (89 lb in)
Crankshaft Rear Oil Seal Housing Bolt	10 N.m (89 lb in)
Cylinder Head Core Hole Plug	15 N.m (11 lb ft)
Drive Belt Tensioner Bolt	25 N.m (18 lb ft)
Engine Block Oil Gallery Plug	75 N.m (55 lb ft)
Engine Coolant Temperature Sensor	22 N.m (16 lb ft)
Engine Front Cover Bolt	15 N.m (11 lb ft)
Engine Front Cover Bolt	
• First Pass:	20 N.m (15 lb ft)

cardiagn.com

NOTE:

All fasteners listed in this table can be reused after removal.

Application	Specification Metric (English)
• Final Pass:	60 Degrees
Engine Front Cover Bolt	65 N.m (48 lb ft)
Engine Front Cover Stud	15 N.m (11 lb ft)
Engine Lift Bracket	58 N.m (43 lb ft)
Engine Mount	
Bracket Bolt to Engine Block - M8	22 N.m (16 lb ft)
Engine Mount Strut Bolt	58 N.m (43 lb ft)
Engine Mount Strut Bracket Bolts - to Engine	90 N.m (66 lb ft)
Front Lower Engine Mount Nut - to Frame	75 N.m (55 lb ft)
Front Upper Engine Mount Nut - to Engine Mount	90 N.m (66 lb ft)
Rear Upper Engine Mount Nut - to Engine Mount	60 N.m (44 lb ft)
Engine Oil Level Indicator Switch Bolt	10 N.m (89 lb in)
Engine Oil Pressure Sensor	10 N.m (89 lb in)
Evaporative Emission Canister Purge Solenoid Valve Bolt	10 N.m (89 lb in)
Exhaust Crossover Pipe Nuts	34 N.m (25 lb ft)
Exhaust Manifold Bolt	20 N.m (15 lb ft)
Exhaust Manifold Heat Shield Bolt	10 N.m (89 lb in)
Exhaust Manifold Stud	6 N.m (53 lb in)
Fuel Feed Intermediate Pipe Bolt	28 N.m (21 lb ft)
Fuel Feed Pipe Bolt	50 N.m (37 lb ft)
Fuel Injection Fuel Rail Bolt	25 N.m (18 lb ft)
Fuel Rail Support Bracket	10 N.m (89 lb in)
Heater Inlet and Outlet Pipe Bolt	10 N.m (89 lb in)
Idler Pulley Bolt	58 N.m (43 lb ft)
Ignition Coil Bolt	10 N.m (89 lb in)
Lower Intake Manifold Bolt	25 N.m (18 lb ft)
Upper Intake Manifold Bolt	25 N.m (18 lb ft)
Knock Sensor Bolt	25 N.m (18 lb ft)
Manifold Absolute Pressure Sensor Bolt	4 N.m (35 lb in)
Oil Filter Housing Bolt	23 N.m (17 lb ft)
Oil Gallery Plug	50 N.m (37 lb ft)
Oil Gallery Plug	75 N.m (55 lb ft)
Oil Level Indicator Tube Bolt	10 N.m (89 lb in)
Oil Pan Bolt	10 N.m (89 lb in)
Oil Pan Bolt	25 N.m (18 lb ft)
Oil Pan Drain Plug	25 N.m (18 lb ft)
Oil Pan Baffle Bolt	10 N.m (89 lb in)
Oil Pressure Sender	20 N.m (15 lb ft)
Oil Pump Bolt	25 N.m (18 lb ft)
Oil Pump Suction Pipe Bracket Bolt	10 N.m (89 lb in)
Oxygen Sensor Pump Converter Pipe	42 N.m (31 lb ft)
PCV Tube Bracket Bolt/Ball Stud	10 N.m (89 lb in)
Piston Oil Cooling Nozzle Bolt	10 N.m (89 lb in)
Primary Camshaft Drive Chain	

cardiagn.com

NOTE:
All fasteners listed in this table can be reused after removal.

Application	Specification Metric (English)
• Left Lower Guide Bolt - Oil Pump - Second Design	25 N.m (18 lb ft)
• Tensioner Bolt	
• First Pass:	5 N.m (44 lb in)
• Final Pass:	25 N.m (18 lb ft)
• Upper Guide Bolt	25 N.m (18 lb ft)
Secondary Camshaft Drive Chain	
• Guide Bolt	25 N.m (18 lb ft)
• Shoe Bolt	25 N.m (18 lb ft)
• Tensioner Bolt	
• First Pass:	5 N.m (44 lb in)
• Final Pass:	25 N.m (18 lb ft)
Spark Plug	18 N.m (13 lb ft)
Starter Motor Bolt	58 N.m (43 lb ft)
Starter Motor Cable Nut	12 N.m (106 lb in)
Suction Screen Bolt	10 N.m (89 lb in)
Suction Tube Bolt	10 N.m (89 lb in)
Thermostat Housing Bolt	10 N.m (89 lb in)
Throttle Body Bolt	10 N.m (89 lb in)
Torque Converter Bolt	60 N.m (44 lb ft)
Transmission Mount Bolt to Transmission - RPO	60 N.m (44 lb ft)
Transmission to Engine Bolt	50 N.m (37 lb ft)
Transmission to Range Selector Lever Nut	9.5 N.m (84 lb in)
Water Pump Pulley Bolt	10 N.m (89 lb in)

APPROXIMATE FLUID CAPACITIES

Application	Specification	
	Metric	English
3.0L (LFW) and 3.6L (LFX, LFR, LFY and LLT)		
• Oil Capacity - with Filter	5.7 Liters	6.0 Quarts

cardiagn.com

Application	Specification	
	Metric	English
• Oil Capacity - without Filter	5.2 Liters	5.5 Quarts

ENGINE MECHANICAL SPECIFICATIONS

Application	Specification	
	Metric	English
General		
• Engine Type	V-6	
• Displacement	3.6 Liter	220 cu in
• RPO	LFX	
• VIN	3	
• Bore	94 mm	3.7008 in
• Stroke	85.6 mm	3.37 in
• Compression Ratio	11.5:1	
• Firing Order	1-2-3-4-5-6	
• Spark Plug Gap	0.95 - 1.10 mm	0.0375 - 0.0433 in
Block		
• Crankshaft Main Bearing Bore Diameter	72.867 - 72.881 mm	2.8688 - 2.8693 in
• Cylinder Bore Diameter	93.992 - 94.008 mm	3.7005 - 3.7011 in
• Cylinder Bore Out-of-Round - Production Max.	0.026 mm	0.001 in
• Cylinder Bore Taper	0.020 mm	0.0008 in
Camshaft		
• Camshaft Bearing Inside Diameter - Front Number 1	35.000 - 35.020 mm	1.3779 - 1.3787 in
• Camshaft Bearing Inside Diameter - Middle and Rear Number 2 - 4	27.000 - 27.020 mm	1.0630 - 1.0638 in

cardiagn.com

Application	Specification	
	Metric	English
• Camshaft End Play	0.072 - 0.490 mm	0.0028 - 0.0190 in
• Camshaft Journal Diameter - Front Number 1	34.936 - 34.960 mm	1.3754 - 1.3764 in
• Camshaft Journal Diameter - Middle and Rear Number 2 - 4	26.936 - 26.960 mm	1.0605 - 1.0614 in
• Camshaft Journal Out-of-Round	0.006 mm	0.0002 in
• Camshaft Journal to Bore Clearance	0.040 - 0.084 mm	0.0016 - 0.0033 in
• Camshaft Lobe Lift - Exhaust	42.425 - 42.725 mm	1.6703 - 1.6821 in
• Camshaft Lobe Lift - Intake	42.385 - 42.685 mm	1.6687 - 1.6805 in
• Camshaft Runout - Front and Rear Number 1 and 4	0.025 mm	0.0010 in
• Camshaft Runout - Middle 2 and 3	0.050 mm	0.0020 in
• Valve Lift - Exhaust	10.8 mm	0.4252 in
• Valve Lift - Intake	10.8 mm	0.4252 in
Connecting Rod		
• Connecting Rod Bearing Clearance	0.010 - 0.070 mm	0.0004 - 0.0026 in
• Connecting Rod Bore Diameter - Bearing End	59.620 - 59.636 mm	2.3472 - 2.3479 in
• Connecting Rod Bore Diameter - Pin End - Production	24.009 - 24.019 mm	0.9452 - 0.9456 in
• Connecting Rod Bore Diameter - Pin End - Service Maximum	24.021 mm	0.9457 in
• Connecting Rod Length - Center to Center	152.400 mm	6.0000 in
• Connecting Rod Side Clearance	0.095 - 0.355 mm	0.00037 - 0.0140 in
• Connecting Rod Width - Bearing End		

cardiagn.com

Application	Specification	
	Metric	English
• Production	21.775 mm	0.8573 in
• Service	21.725 - 21.825 mm	0.8553 - 0.8593 in
• Connecting Rod Width - Pin End		
• Production	21.775 mm	0.8573 in
• Service	21.725 - 21.825 mm	0.8553 - 0.8593 in
Crankshaft		
• Connecting Rod Journal Diameter	55.992 - 56.008 mm	2.2044 - 2.2050 in
• Connecting Rod Journal Out-of-Round	0.005 mm	0.0002 in
• Connecting Rod Journal Taper	0.005 mm	0.0002 in
• Connecting Rod Journal Width		
• Production	22.000 mm	0.8661 in
• Service	21.920 - 22.080 mm	0.8630 - 0.8693 in
• Crankshaft End Play	0.100 - 0.330 mm	0.0039 - 0.0130 in
• Crankshaft Main Bearing Clearance	0.031 - 0.069 mm	0.0012 - 0.0027 in
• Crankshaft Main Journal Diameter	67.992 - 68.008 mm	2.6768 - 2.6775 in
• Crankshaft Main Journal Out-of-Round	0.005 mm	0.0002 in
• Crankshaft Main Journal Taper	0.005 mm	0.0002 in
• Crankshaft Main Journal Thrust Wall		
• Runout	0.000 - 0.040 mm	0.0000 - 0.0016 in
• Square	0.000 - 0.010 mm	0.0000 - 0.0004 in

cardiagn.com

Application	Specification	
	Metric	English
• Crankshaft Main Journal Width, #2, 4		
• Production	24.000 mm	0.9449 in
• Service	23.900 - 24.100 mm	0.9409 - 0.9488 in
• Crankshaft Main Journal Width, #3		
• Production	24.400 mm	0.9606 in
• Service	24.360 - 24.440 mm	0.9591 - 0.9622 in
• Crankshaft Pilot Bearing Bore Diameter	20.965 - 20.995 mm	0.8254 - 0.8266 in
• Crankshaft Rear Flange Runout	0.025 mm	0.0010 in
• Crankshaft Reluctor Ring Runout - Maximum	1.500 mm	0.0591 in
• Crankshaft Runout	0.030 mm	0.0012 in
• Crankshaft Thrust Bearing Clearance	0.076 - 0.305 mm	0.0030 - 0.0120 in
• Crankshaft Thrust Surface - Height Diameter	95.000 mm	3.7401 in
• Crankshaft Thrust Surface Runout	0.040 mm	0.0016 in
Cylinder Head		
• Valve Guide Bore - Exhaust	6.000 - 6.020 mm	0.2362 - 0.2370 in
• Valve Guide Bore - Intake	6.000 - 6.020 mm	0.2362 - 0.2370 in
• Valve Guide Installed Height	14.050 - 14.550 mm	0.5531 - 0.5728 in
• Valve Lifter Bore Diameter	12.008 - 12.030 mm	0.4728 - 0.4736 in
Lubrication System		
• Oil Pressure - Minimum @ Idle	69 kPa	10 psi
• Oil Pressure - Minimum @ 2, 000 RPM	138 kPa	20 psi

cardiagn.com

Application	Specification	
	Metric	English
• Piston Cooling Jet Valve Opening Pressure	1.7 - 2.3 bar	25 - 33 psi
Piston Rings		
• Piston Ring End Gap		
• First Compression Ring - Nominal	0.150 - 0.250 mm	0.0059 - 0.0098 in
• First Compression Ring - Maximum, Ring in Bore	0.290 mm	0.0114 in
• Second Compression Ring - Nominal	0.300 - 0.450 mm	0.0118 - 0.0177 in
• Second Compression Ring - Maximum, Ring in Bore	0.490 mm	0.0193 in
• Oil Control Ring	0.150 - 0.350 mm	0.0059 - 0.0138 in
• Piston Ring to Groove Clearance		
• First Compression Ring	0.030 - 0.075 mm	0.0012 - 0.0030 in
• Second Compression Ring	0.015 - 0.060 mm	0.0006 - 0.0024 in
• Oil Control Ring	0.030 - 0.170 mm	0.0012 - 0.0067 in
• Piston Ring Thickness		
• First Compression Ring	0.975 - 0.990 mm	0.0384 - 0.0390 in
• Second Compression Ring	1.170 - 1.195 mm	0.0461 - 0.0470 in
• Oil Control Ring	1.360 - 1.480 mm	0.0535 - 0.0583 in
Pistons and Pins		
• Piston		
• Piston Diameter - Measured Over Skirt Coating	93.976 - 94.014 mm	3.6998 - 3.7013 in
• Piston Diameter - Service Limit Minimum w/more than 10K miles	93.926 mm	3.6979 in

cardiagn.com

Application	Specification	
	Metric	English
• Piston Pin Bore Diameter	24.004 - 24.009 mm	0.9450 - 0.9452 in
• Piston Ring Groove Width - First Compression Ring	1.020 - 1.050 mm	0.0402 - 0.0413 in
• Piston Ring Groove Width - Second Compression Ring	1.210 - 1.230 mm	0.0476 - 0.0484 in
• Piston Ring Groove Width - Oil Control Ring	1.510 - 1.530 mm	0.0594 - 0.0602 in
• Piston to Bore Clearance - Production; Measured at Skirt Coating	0.022 - 0.032 mm	0.0009 - 0.0013 in
• Piston to Bore Clearance - Service Limit Maximum, w/more than 10k miles	0.050 mm	0.0020 in
• Pin		
• Piston Pin Clearance to Connecting Rod Bore - Production	0.009 - 0.022 mm	0.0004 - 0.0009 in
• Piston Pin Clearance to Connecting Rod Bore - Service Maximum	0.030 mm	0.0012 in
• Piston Pin Clearance to Piston Pin Bore - Production	0.004 - 0.012 mm	0.0002 - 0.0005 in
• Piston Pin Clearance to Piston Pin Bore - Service Maximum	0.015 mm	0.0006 in
• Piston Pin Diameter	23.997 - 24.000 mm	0.9448 - 0.9449 in
• Piston Pin Length	52.600 - 53.100 mm	2.0709 - 2.0906 in
Valve System		
• Valves		
• Valve Face Angle	44.25 degrees	
• Valve Face Runout	0.0500 mm	0.0020 in
• Valve Face Width - Exhaust	DO NOT GRIND, REPLACE VALVE	DO NOT GRIND, REPLACE VALVE

cardiagn.com

Application	Specification	
	Metric	English
• Valve Face Width - Intake	DO NOT GRIND, REPLACE VALVE	DO NOT GRIND, REPLACE VALVE
• Valve Head Diameter - Exhaust	30.470 - 30.730 mm	1.1996 - 1.2098 in
• Valve Head Diameter - Intake	38.170 - 38.430 mm	1.5028 - 1.5130 in
• Valve Installed Height	35.23 - 36.69 mm	1.3870 - 1.4445 in
• Valve Length - Exhaust	95.11 mm	3.74 in
• Valve Length - Intake	100.630 mm	3.9618 in
• Valve Seat Angle - Seating Surface	45 degrees	
• Valve Seat Angle - Relief Surface	30 degrees	
• Valve Seat Angle - Undercut Surface	60 degrees	
• Valve Seat Roundness - Maximum	0.025 mm	0.0010 in
• Valve Seat Runout - Maximum	0.080 mm	0.0031 in
• Valve Seat Width - Exhaust Seating Surface	1.400 - 1.800 mm	0.0551 - 0.0709 in
• Valve Seat Width - Exhaust Relief Surface	0.700 - 0.900 mm	0.0276 - 0.0354 in
• Valve Seat Width - Intake Seating Surface	1.000 - 1.400 mm	0.0394 - 0.0551 in
• Valve Seat Width - Intake Relief Surface	0.500 - 0.700 mm	0.0197 - 0.0276 in
• Valve Stem Diameter - Exhaust	5.945 - 5.965 mm	0.2341 - 0.2348 in
• Valve Stem Diameter - Intake	5.945 - 5.965 mm	0.2341 - 0.2348 in
• Valve Stem-to-Guide Clearance - Exhaust	0.035 - 0.075 mm	0.0014 - 0.0030 in
• Valve Stem-to-Guide Clearance - Intake	0.035 - 0.075 mm	0.0014 - 0.0030 in
• Valve Lifters - Stationary Hydraulic Lash Adjuster (SHLA)		

cardiagn.com

Application	Specification	
	Metric	English
• Valve Lifter (SHLA) Diameter	11.989 - 12.000 mm	0.4720 - 0.4724 in
• Valve Lifter (SHLA)-to-Bore Clearance	0.008 - 0.041 mm	0.0003 - 0.0016 in
• Rocker Arms		
• Valve Rocker Arm Ratio	1.68 to 1	
• Valve Rocker Arm Roller Diameter	17.750 - 17.800 mm	0.6988 - 0.7008 in
• Valve Springs		
• Valve Spring Coil Thickness	3.250 x 3.900 mm	0.1280 x 0.1535 in
• Valve Spring Diameter - Inside Top	12.200 - 12.700 mm	0.4803 - 0.5000 in
• Valve Spring Diameter - Outside Top	20.250 mm	0.7972 in
• Valve Spring Diameter - Inside Bottom	17.950 - 18.450 mm	0.7067 - 0.7264 in
• Valve Spring Diameter - Outside Bottom	26.000 mm	1.0236 in
• Valve Spring Free Length	42.500 - 45.500 mm	1.6732 - 1.7913 in
• Valve Spring Installed Height - Closed	35.000 mm	1.3779 in
• Valve Spring Installed Height - Open	24.000 mm	0.9449 in
• Valve Spring Load - Closed	247 - 273 N	56 - 61 lb
• Valve Spring Load - Open	598 - 662 N	134 - 149 lb

ADHESIVES, FLUIDS, LUBRICANTS, AND SEALERS

Application	Type of Material	GM Part Number	
		United States	Canada
Block Pan Rail *	Sealant	12378521	88901148
Camshaft Prelube	Lubricant	88862586	88862827
Coolant Drain Threaded Plug	Sealant	12346004	10953480
Coolant Expansion Plugs	Threadlocker	12345382	10953489
Coolant and Oil Plug Threads	Sealant	12346004	10953480
Crankshaft Bearing Surfaces	5W-30	19293000	19286321

cardiagn.com

Application	Type of Material	GM Part Number	
		United States	Canada
Crankshaft Connecting Rod Bearing Journal	5W-30	19293000	19286321
Crankshaft Prelube	5W-30	19293000	19286321
Crankshaft Rear Oil Seal Housing *	Sealant	12378521	88901148
Engine Front Cover/Split Lines *	Sealant	12378521	88901148
Engine Oil	5W-30	19293000	19386321
Fuel Injection Fuel Rail Fuel Pressure Sensor Sealing Cone/Threads	5W-30	19293000	19286321
Fuel Rail Sealing Cone/Threads	5W-30	19293000	19286321
Ignition Coils	Lubricant	19260901	19260902
Oil Gallery Threaded Plug	Sealant	12346004	10953480
Oil Pan, Engine Front Cover, Crankshaft Rear Oil Seal Housing *	Sealant	12378521 (150g cartridge)	88901148
		88861417 (75 gram squeeze tube)	88861418
Piston Pin Bores	5W-30	19293000	19286321
Positive Crankcase Ventilation (PCV) Orifice	Sealant	12378521	88901148
Stationary Hydraulic Lash Adjuster (SHLA)	5W-30	19293000	19286321
SHLA Bores in Cylinder Head	5W-30	19293000	19286321
SHLA Pivot Spheres	5W-30	19293000	19286321
Thread Repair	Cleaner	88862650	88901247
	Threadlocker	89021297	10953488
Thread Repair Cutting Oil	Lubricant	1052864	992881
Valve Stem/Guide ID	5W-30	19293000	19286321
* Ensure proper use of room temperature vulcanizing (RTV) sealant. **Use of Room Temperature Vulcanizing (RTV) and Anaerobic Sealant**			

THREAD REPAIR SPECIFICATIONS

Left Cylinder Head Camshaft Cover Face

carlan.com

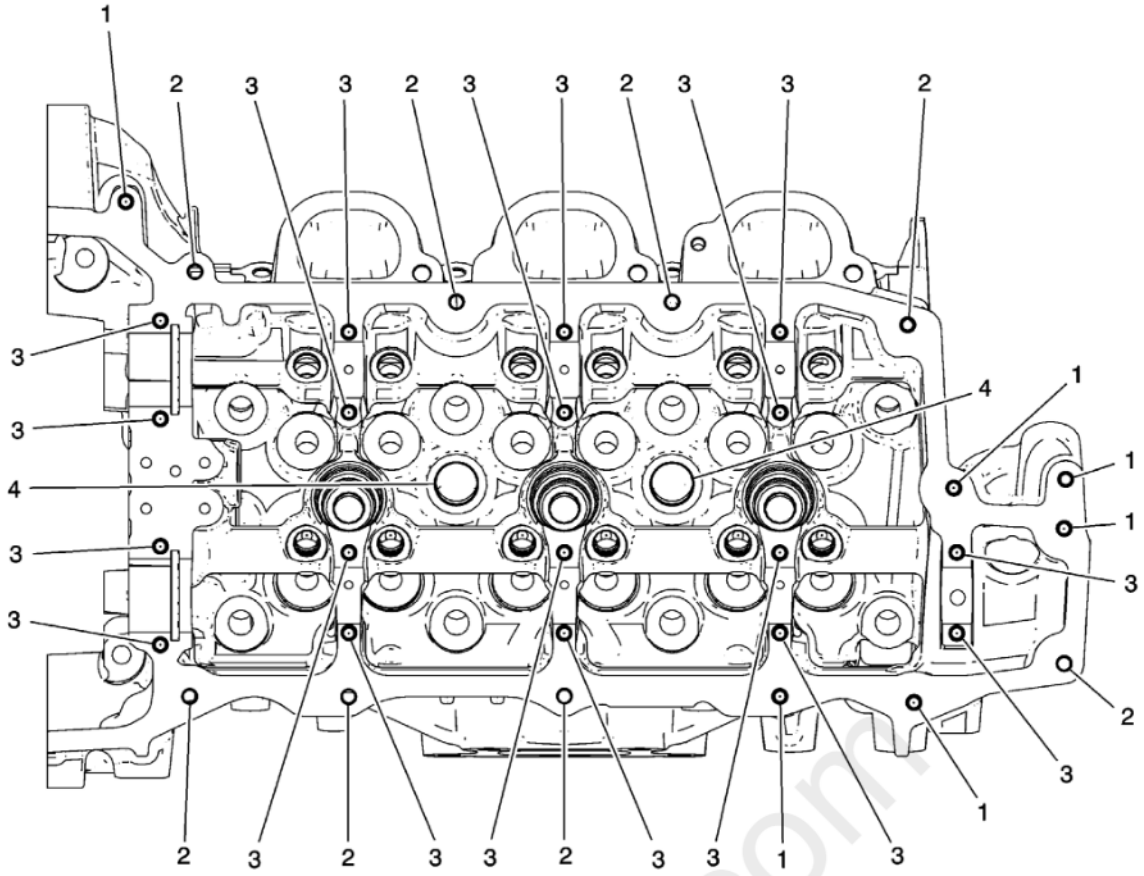

Fig. 1: Left Cylinder Head Camshaft Cover Face
Courtesy of GENERAL MOTORS COMPANY

Left Cylinder Head Camshaft Cover Face

Hole Location	Thread Size	Drill	Counter Bore Tool	Stop Collar	Tap	Driver	Insert	Drill Depth (Maximum)		Tap Depth (Minimum)	
-	-	J 42385 -						MM	(IN)	MM	(IN)
1	M6 x 1.0	201	202	N/A	203	204	205	22.5	0.8858	18.0	0.7087
2	M6 x 1.0	201	202	N/A	203	204	205	THRU		THRU	
3	M6 x 1.0	701	N/A	N/A	203	204	205	28.5	1.1220	24.0	0.9449
4	M20 x 1.5	715	716	N/A	717	718	719	25.0	0.9842	17.0	0.6693

Left Cylinder Head Front Face

carmagn.com

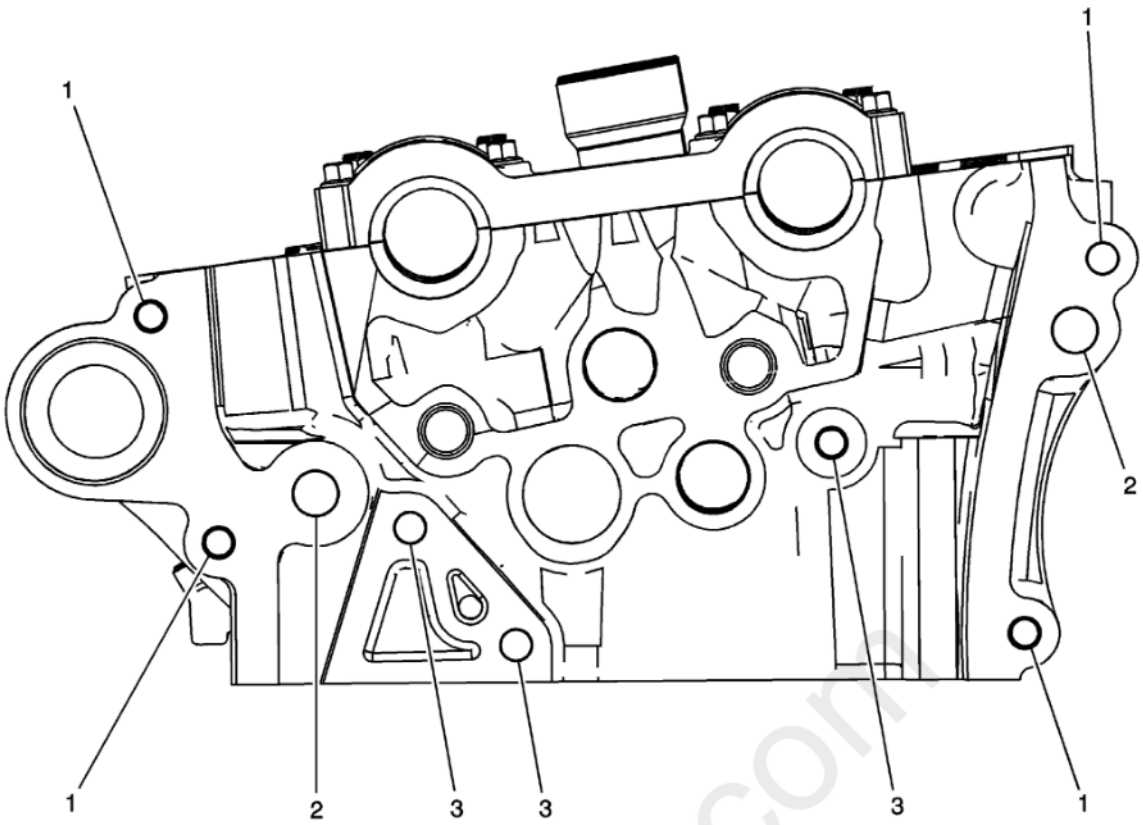

Fig. 2: Left Cylinder Head Front Face
Courtesy of GENERAL MOTORS COMPANY

Left Cylinder Head Front Face

Hole Location	Thread Size	Drill	Counter Bore Tool	Stop Collar	Tap	Driver	Insert	Drill Depth (Maximum)		Tap Depth (Minimum)	
-	-	J 42385 -						MM	(IN)	MM	(IN)
1	M8 x 1.25	206	207	N/A	208	209	210	THRU		THRU	
2	M12 x 1.75	856	857	N/A	858	859	416	40.0	1.5748	32.5	1.2795
3	M8 x 1.25	206	207	N/A	208	209	210	18.0	0.7087	22.5	0.8858

Left Cylinder Head Intake Face (LLT)

cardiagn.com

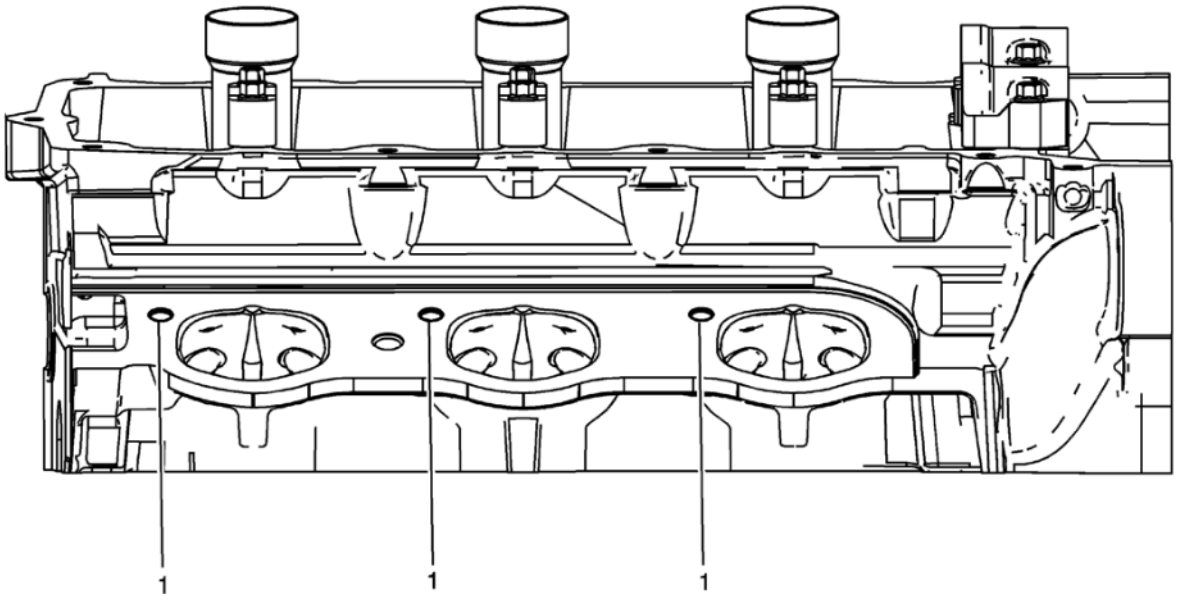

Fig. 3: Left Cylinder Head Intake Face
Courtesy of GENERAL MOTORS COMPANY

Left Cylinder Head Intake Face (LLT)

Hole Location	Thread Size	Drill	Counter Bore Tool	Stop Collar	Tap	Driver	Insert	Drill Depth (Maximum)		Tap Depth (Minimum)	
-	-	J 42385 -						MM	(IN)	MM	(IN)
1	M8 x 1.25	206	207	N/A	208	209	210	28.5	1.1220	23.0	0.9055

Left Cylinder Head Intake Face (LF1)

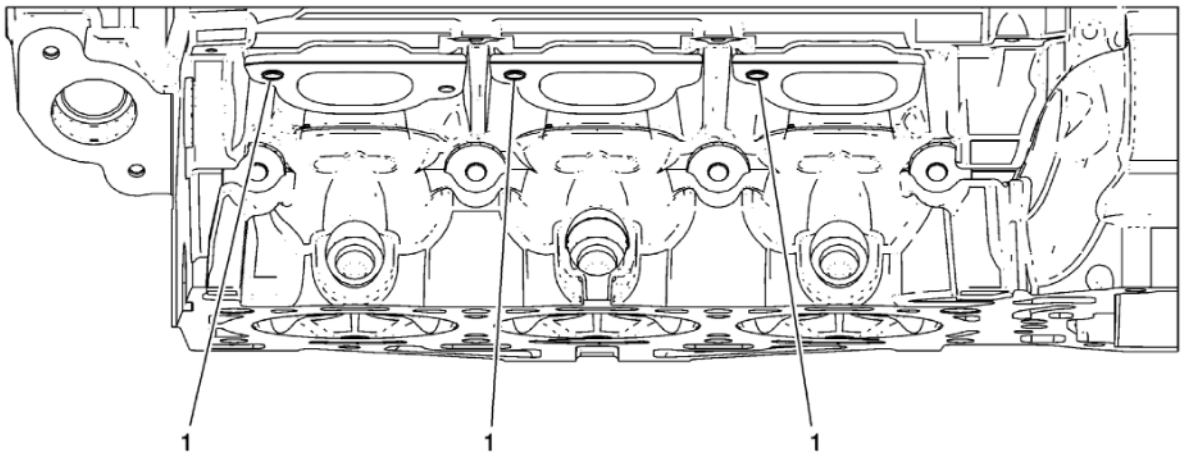

Fig. 4: View Of Left Cylinder Head Intake Face
Courtesy of GENERAL MOTORS COMPANY

cardiagn.com

Left Cylinder Head Intake Face (LF1)

Hole Location	Thread Size	Drill	Counter Bore Tool	Stop Collar	Tap	Driver	Insert	Drill Depth (Maximum)		Tap Depth (Minimum)	
Ã‚Â	Ã‚Â	J 42385 -						MM	(IN)	MM	(IN)
1	M8 x 1.25	206	207	N/A	208	209	210	28.5	1.1220	23.0	0.9055

Left Cylinder Head Exhaust Face (LLT)

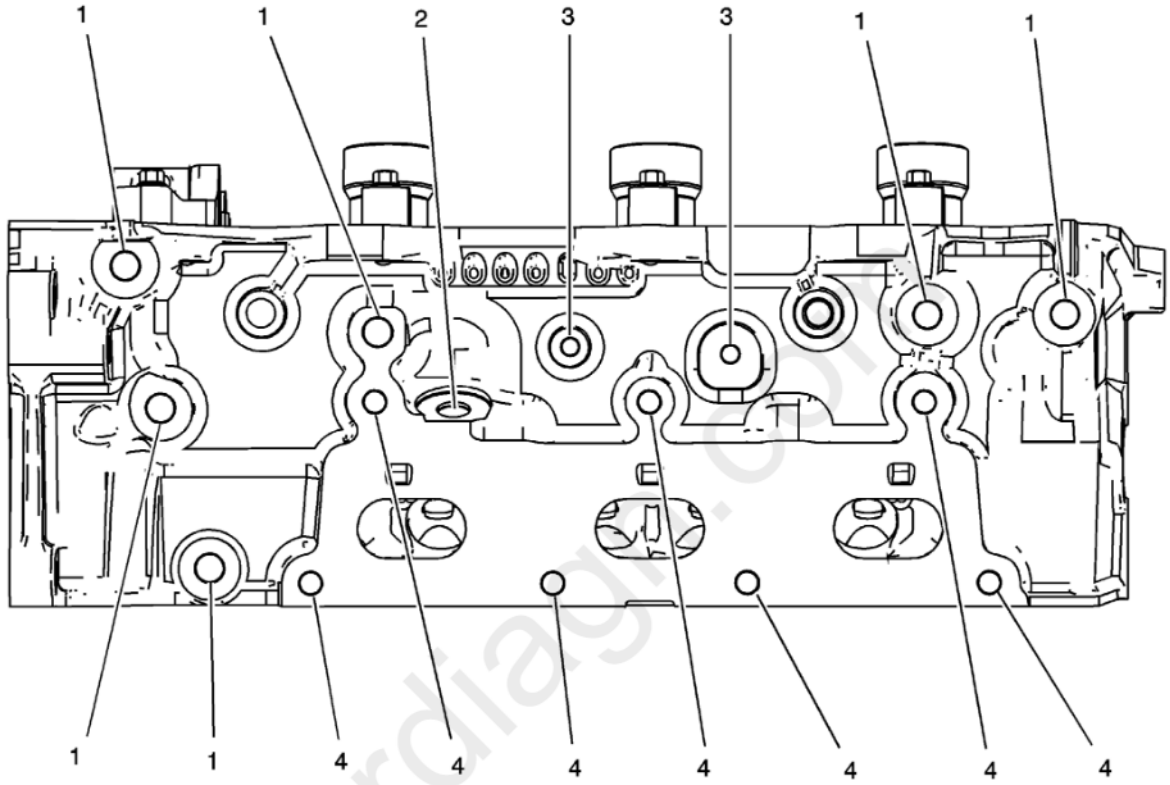

Fig. 5: Left Cylinder Head Exhaust Face
Courtesy of GENERAL MOTORS COMPANY

Left Cylinder Head Exhaust Face (LLT)

Hole Location	Thread Size	Drill	Counter Bore Tool	Stop Collar	Tap	Driver	Insert	Drill Depth (Maximum)		Tap Depth (Minimum)	
-	-	J 42385 -						MM	(IN)	MM	(IN)
1	M10 x 1.5	211	212	N/A	213	214	215	33.5	1.3189	27.0	1.0630
2	M12 x 1.5	705	706	N/A	707	708	709	27.5	1.0827	13.0	0.5118
3	M6 x 1.0	201	202	N/A	203	204	205	22.5	0.8858	18.0	0.0000
4	M8 x 1.25	206	207	N/A	208	209	210	28.5	1.1220	23.0	0.9055

Left Cylinder Head Exhaust Face (LF1)

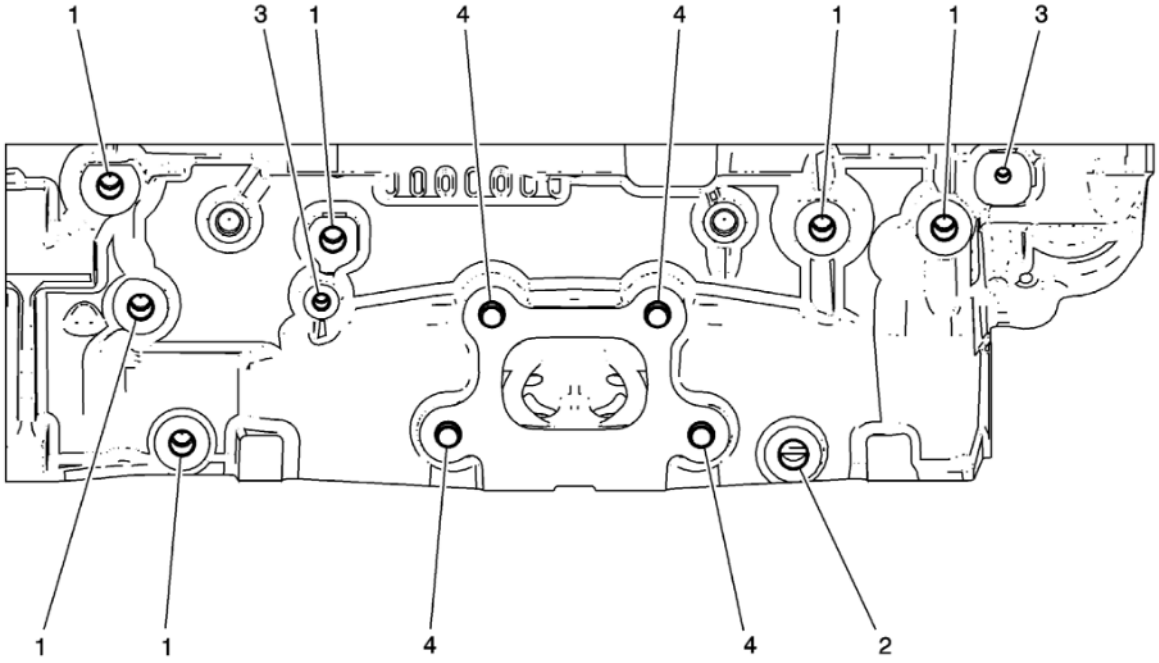

Fig. 6: View Of Left Cylinder Head Exhaust Face
Courtesy of GENERAL MOTORS COMPANY

Left Cylinder Head Exhaust Face (LF1)

Hole Location	Thread Size	Drill	Counter Bore Tool	Stop Collar	Tap	Driver	Insert	Drill Depth (Maximum)		Tap Depth (Minimum)	
Ã‚Â	Ã‚Â	J 42385 -						MM	(IN)	MM	(IN)
1	M10 x 1.5	211	212	N/A	213	214	215	33.5	1.3189	27.0	1.0630
2	M12 x 1.5	705	706	N/A	707	708	709	27.5	1.0827	13.0	0.5118
3	M6 x 1.0	201	202	N/A	203	204	205	22.5	0.8858	18.0	0.0000
4	M10 x 1.5	211	212	N/A	213	214	215	26.5	1.0433	20.0	0.7874

Left Cylinder Head Rear Face (LLT)

cardiagn.com

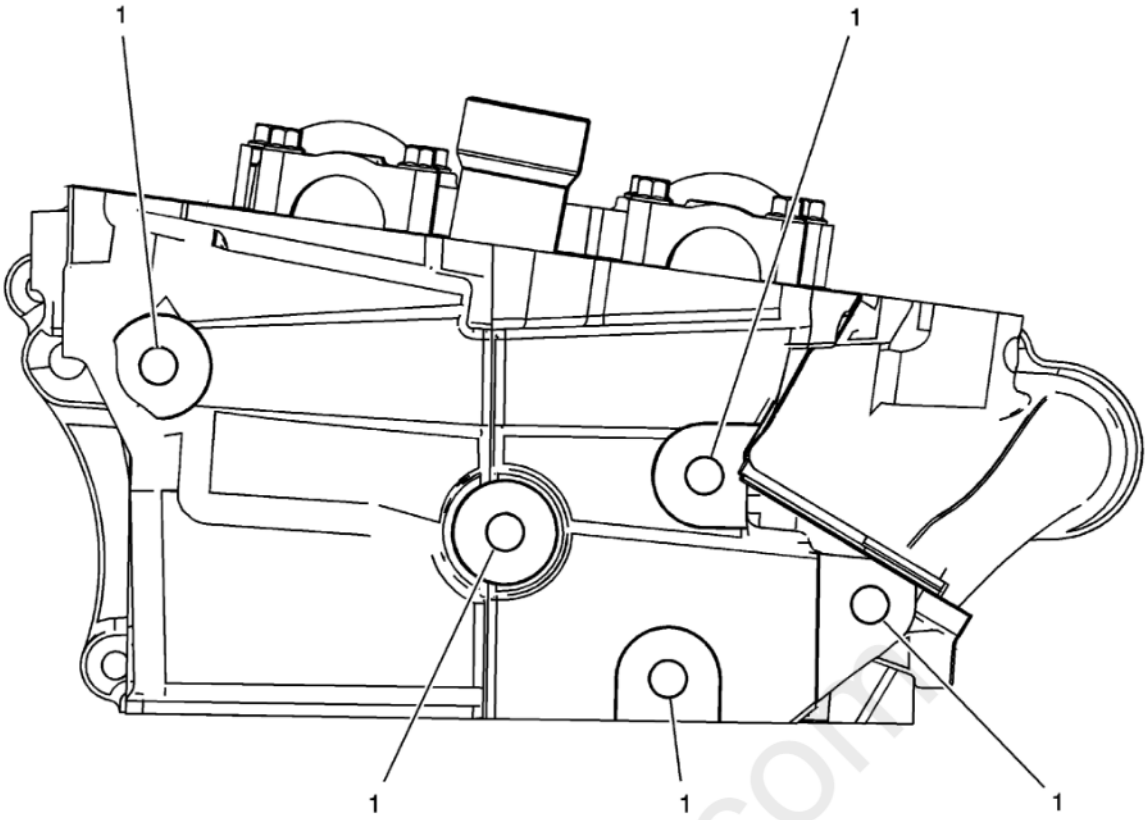

Fig. 7: Left Cylinder Head Rear Face
Courtesy of GENERAL MOTORS COMPANY

Left Cylinder Head Rear Face (LLT)

Hole Location	Thread Size	Drill	Counter Bore Tool	Stop Collar	Tap	Driver	Insert	Drill Depth (Maximum)		Tap Depth (Minimum)	
-	-	J 42385 -						MM	(IN)	MM	(IN)
1	M10 x 1.5	211	212	N/A	213	214	215	33.5	1.3189	27.0	1.0630

Left Cylinder Head Rear Face (LF1)

cardiagn.com

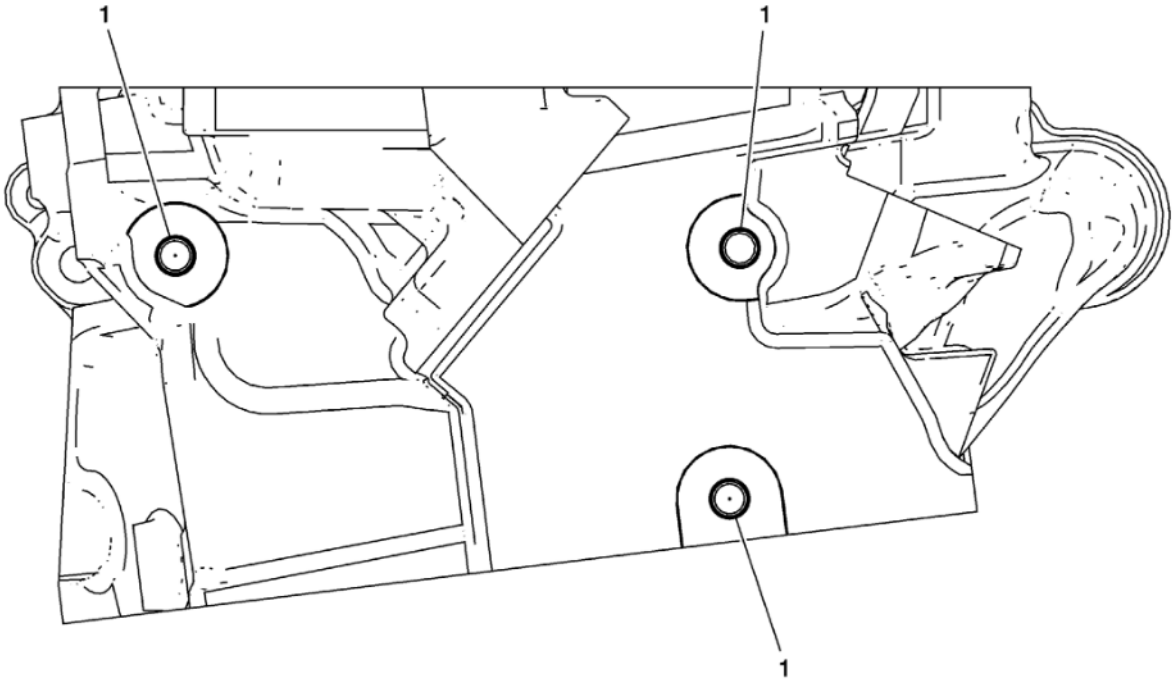

Fig. 8: View Of Left Cylinder Head Rear Face
Courtesy of GENERAL MOTORS COMPANY

Left Cylinder Head Rear Face (LF1)

Hole Location	Thread Size	Drill	Counter Bore Tool	Stop Collar	Tap	Driver	Insert	Drill Depth (Maximum)		Tap Depth (Minimum)	
Ã‚Â	Ã‚Â	J 42385 -						MM	(IN)	MM	(IN)
1	M10 x 1.5	211	212	N/A	213	214	215	33.5	1.3189	27.0	1.0630

Right Cylinder Head Camshaft Cover Face

cardiagn.com

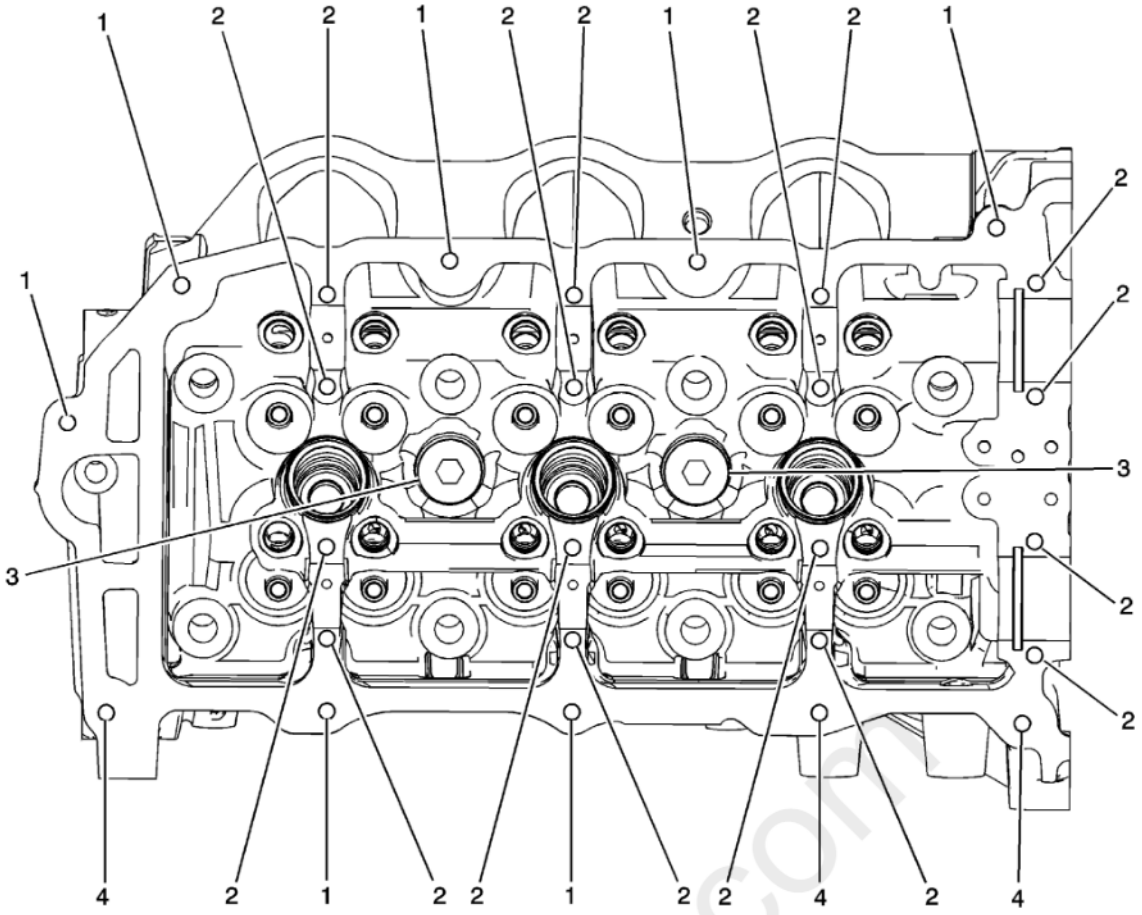

Fig. 9: Right Cylinder Head Camshaft Cover Face
Courtesy of GENERAL MOTORS COMPANY

Right Cylinder Head Camshaft Cover Face

Hole Location	Thread Size	Drill	Counter Bore Tool	Stop Collar	Tap	Driver	Insert	Drill Depth (Maximum)		Tap Depth (Minimum)	
-	-	J 42385 -						MM	(IN)	MM	(IN)
1	M6 x 1.0	201	202	N/A	203	204	205	THRU		THRU	
2	M6 x 1.0	701	N/A	N/A	203	204	205	28.5	1.1220	24.0	0.9449
3	M20 x 1.5	715	716	N/A	717	718	719	25.0	0.9842	17.0	0.6693
4	M6 x 1.0	201	202	N/A	203	204	205	22.5	0.8858	18.0	0.7087

Right Cylinder Head Front Face

carmagn.com

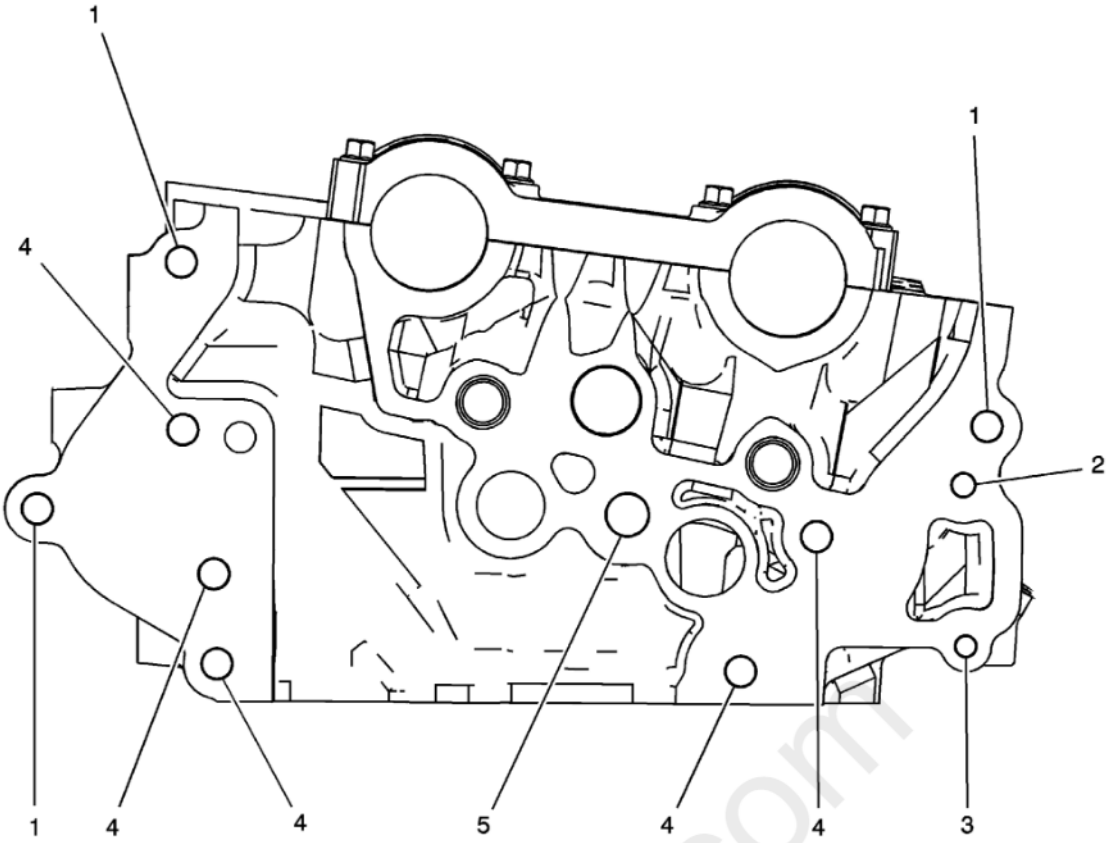

Fig. 10: Right Cylinder Head Front Face
Courtesy of GENERAL MOTORS COMPANY

Right Cylinder Head Front Face

Hole Location	Thread Size	Drill	Counter Bore Tool	Stop Collar	Tap	Driver	Insert	Drill Depth (Maximum)		Tap Depth (Minimum)	
-	-	J 42385 -						MM	(IN)	MM	(IN)
1	M8 x 1.25	206	207	N/A	208	209	210	THRU		THRU	
2	M6 x 1.0	201	202	N/A	203	204	205	22.5	0.8880	18.0	0.7087
3	M6 x 1.0	201	202	N/A	203	204	205	THRU		THRU	
4	M8 x 1.25	206	207	N/A	208	209	210	28.5	1.1220	23.0	0.9055
5	M12 x 1.75	856	857	N/A	858	859	416	40.0	1.5748	32.5	1.2795

Right Cylinder Head Intake Face (LLT)

cardiagn.com

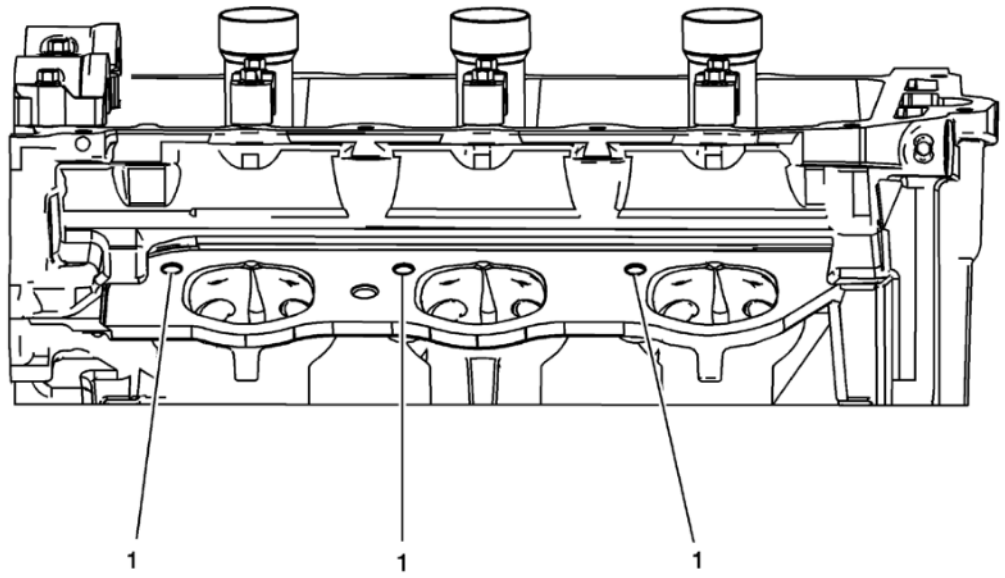

Fig. 11: Right Cylinder Head Intake Face
Courtesy of GENERAL MOTORS COMPANY

Right Cylinder Head Intake Face (LLT)

Hole Location	Thread Size	Drill	Counter Bore Tool	Stop Collar	Tap	Driver	Insert	Drill Depth (Maximum)		Tap Depth (Minimum)	
-	-	J 42385 -						MM	(IN)	MM	(IN)
1	M8 x 1.25	206	207	N/A	208	209	210	28.5	1.1220	23.0	0.9055

Right Cylinder Head Intake Face (LF1)

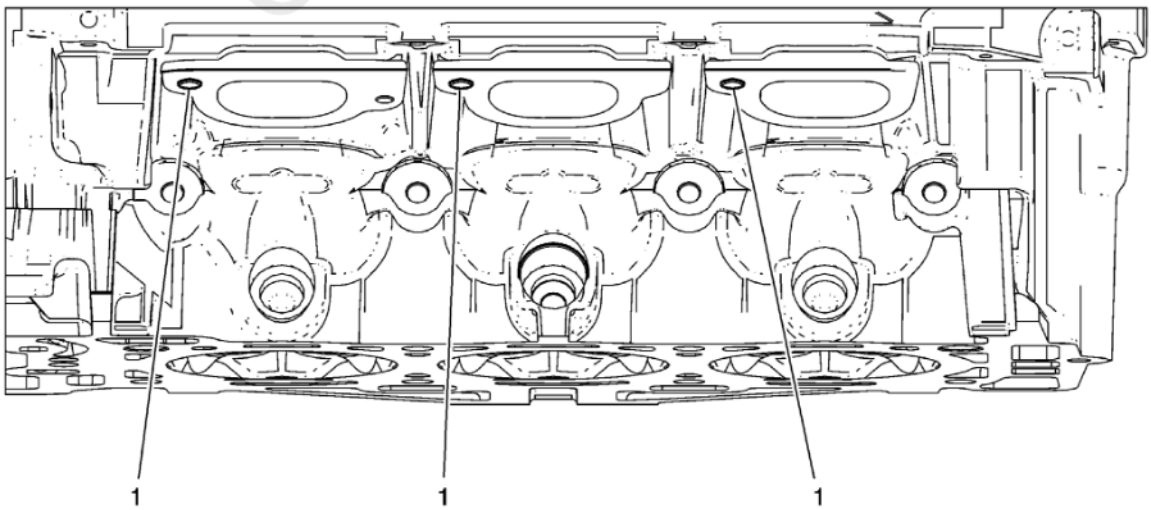

Fig. 12: View Of Right Cylinder Head Intake Face
Courtesy of GENERAL MOTORS COMPANY

Right Cylinder Head Intake Face (LF1)

Hole Location	Thread Size	Drill	Counter Bore Tool	Stop Collar	Tap	Driver	Insert	Drill Depth (Maximum)		Tap Depth (Minimum)	
Ã‚Â	Ã‚Â	J 42385 -						MM	(IN)	MM	(IN)
1	M8 x 1.25	206	207	N/A	208	209	210	28.5	1.1220	23.0	0.9055

Right Cylinder Head Exhaust Face (LLT)

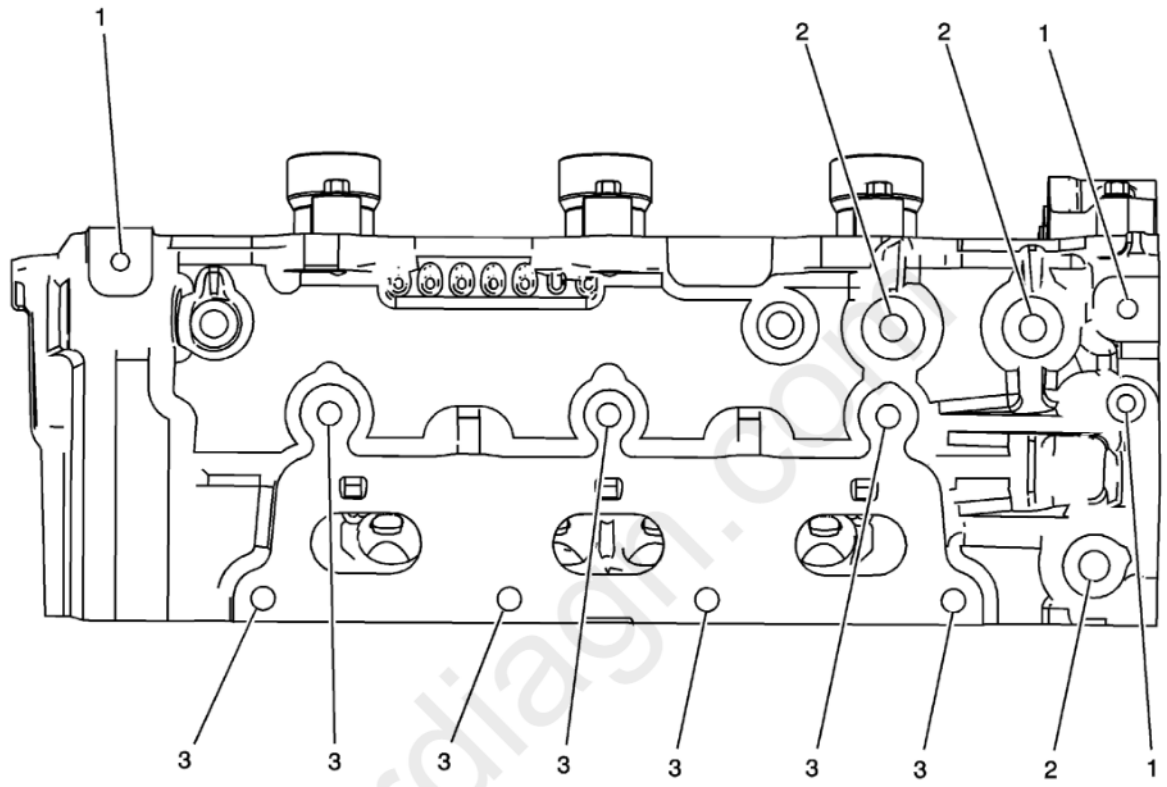

Fig. 13: Right Cylinder Head Exhaust Face
Courtesy of GENERAL MOTORS COMPANY

Right Cylinder Head Exhaust Face (LLT)

Hole Location	Thread Size	Drill	Counter Bore Tool	Stop Collar	Tap	Driver	Insert	Drill Depth (Maximum)		Tap Depth (Minimum)	
-	-	J 42385 -						MM	(IN)	MM	(IN)
1	M6 x 1.0	201	202	N/A	203	204	205	22.5	0.8858	18.0	0.0000
2	M10 x 1.5	211	212	N/A	213	214	215	33.5	1.3189	27.0	1.0630
3	M8 x 1.25	206	207	N/A	208	209	210	28.5	1.1220	23.0	0.9055

Right Cylinder Head Exhaust Face (LF1)

cardiagn.com

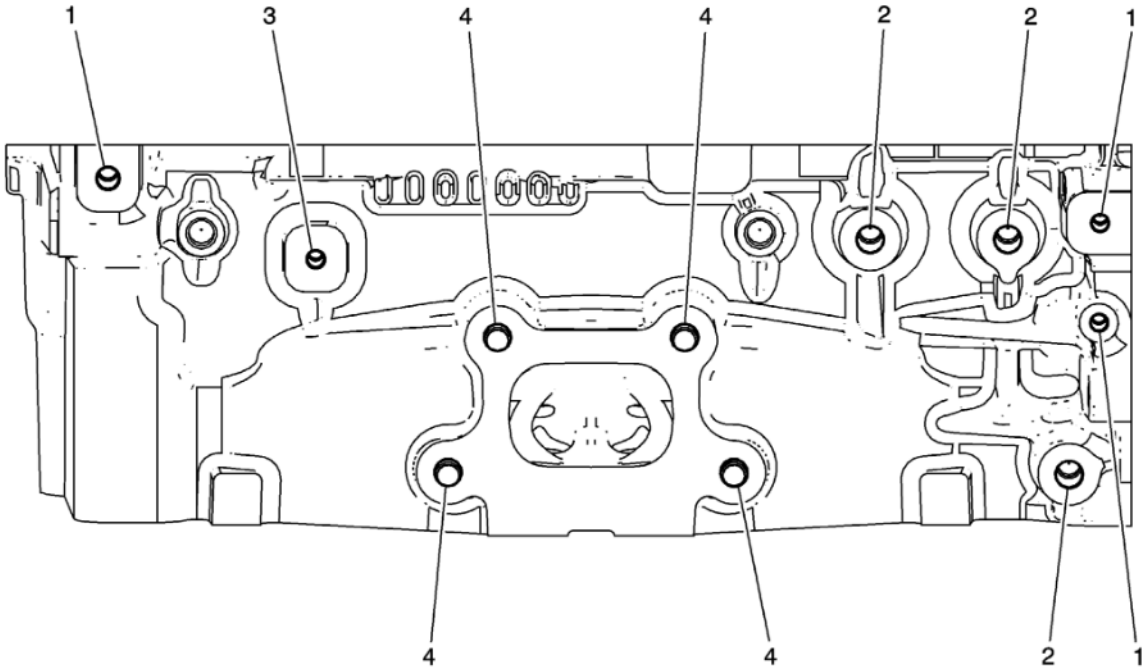

Fig. 14: View Of Right Cylinder Head Exhaust Face
Courtesy of GENERAL MOTORS COMPANY

Right Cylinder Head Exhaust Face (LF1)

Hole Location	Thread Size	Drill	Counter Bore Tool	Stop Collar	Tap	Driver	Insert	Drill Depth (Maximum)		Tap Depth (Minimum)	
Ã‚Â	Ã‚Â	J 42385 -						MM	(IN)	MM	(IN)
1	M6 x 1.0	201	202	N/A	203	204	205	22.5	0.8858	18.0	0.0000
2	M10 x 1.5	211	212	N/A	213	214	215	33.5	1.3189	27.0	1.0630
3	M8 x 1.25	206	207	N/A	208	209	210	28.5	1.1220	23.0	0.9055
4	M10 x 1.5	211	212	N/A	213	214	215	26.5	1.0433	20.0	0.7874

Right Cylinder Head Rear Face

cardiagn.com

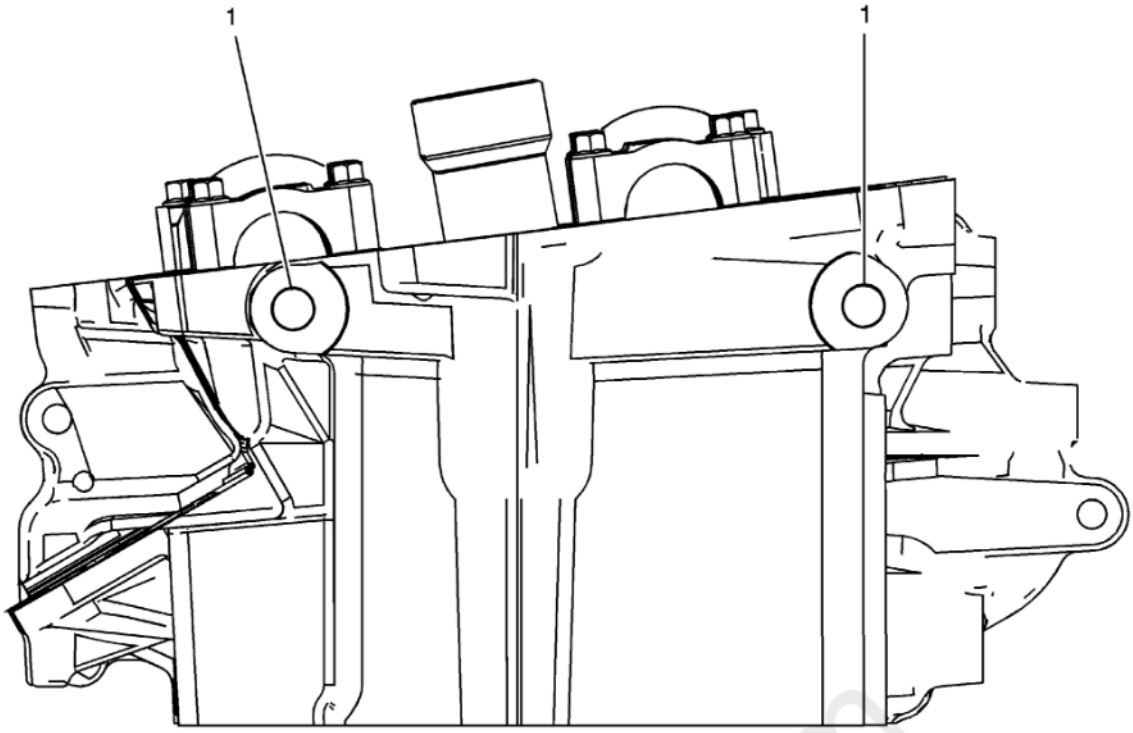

Fig. 15: Right Cylinder Head Rear Face
Courtesy of GENERAL MOTORS COMPANY

Right Cylinder Head Rear Face

Hole Location	Thread Size	Drill	Counter Bore Tool	Stop Collar	Tap	Driver	Insert	Drill Depth (Maximum)		Tap Depth (Minimum)	
-	-	J 42385 -						MM	(IN)	MM	(IN)
1	M10 x 1.5	211	212	N/A	213	214	215	33.5	1.3189	27.0	1.0630

Engine Block Front

cardiagn.com

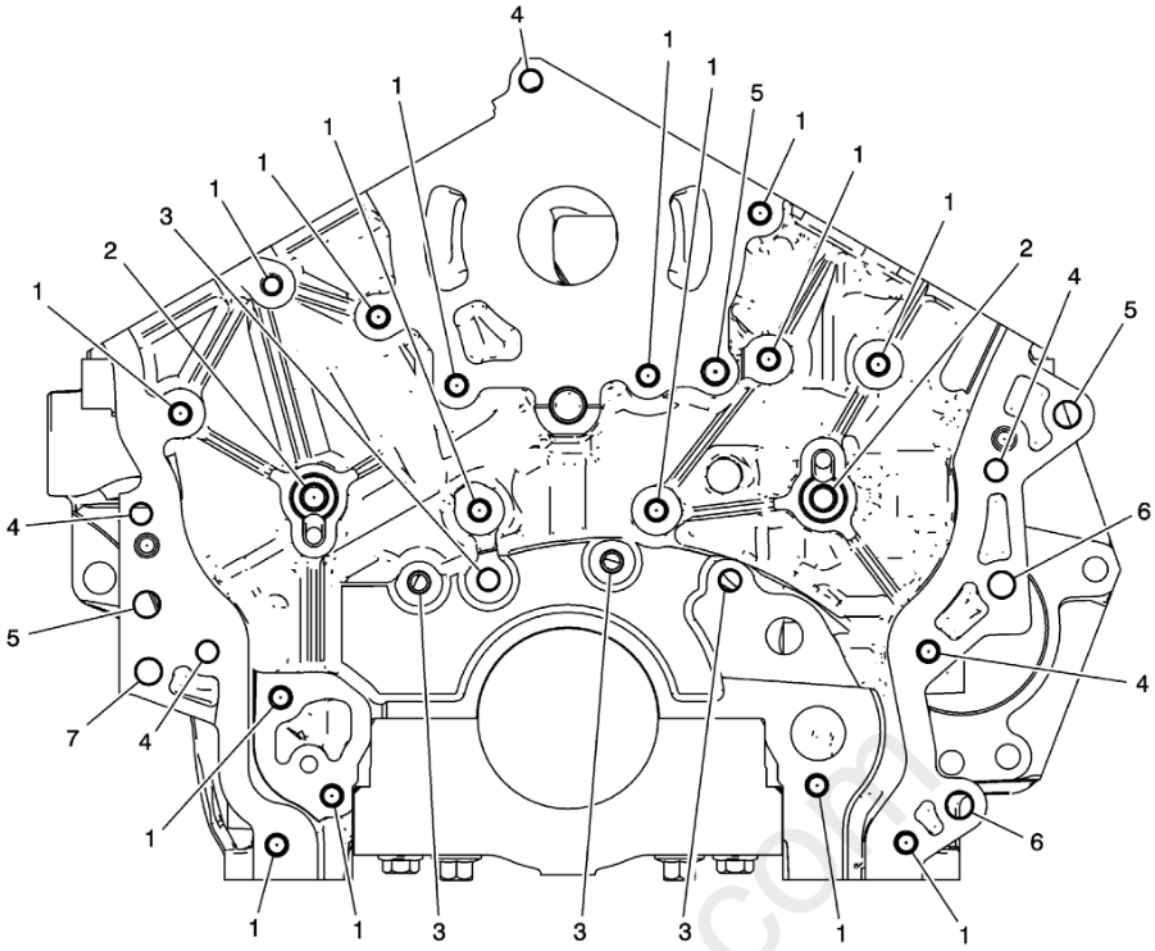

Fig. 16: Engine Block Front Thread Repair Points
Courtesy of GENERAL MOTORS COMPANY

Engine Block Front

Hole Location	Thread Size	Drill	Counter Bore Tool	Stop Collar	Tap	Driver	Insert	Drill Depth (Maximum)		Tap Depth (Minimum)	
-	-	J 42385 -						MM	(IN)	MM	(IN)
1	M8 x 1.25	206	207	N/A	208	209	210	28.5	1.1220	23.0	0.9055
2	M10 x 1.5	211	212	N/A	213	214	215	33.5	1.3189	27.0	1.0630
3	M8 x 1.25	206	207	N/A	208	209	210	THRU		23.0	0.9055
4	M8 x 1.25	206	207	N/A	208	209	210	THRU		THRU	
5	M10 x 1.5	211	212	N/A	213	214	215	28.0	1.1024	28.0	1.1024
6	M10 x 1.5	211	212	N/A	213	214	215	THRU		20.0	0.7874
7	M10 x 1.5	211	212	N/A	213	214	215	THRU		28.0	1.1024

Engine Block Left Side

cardiagn.com

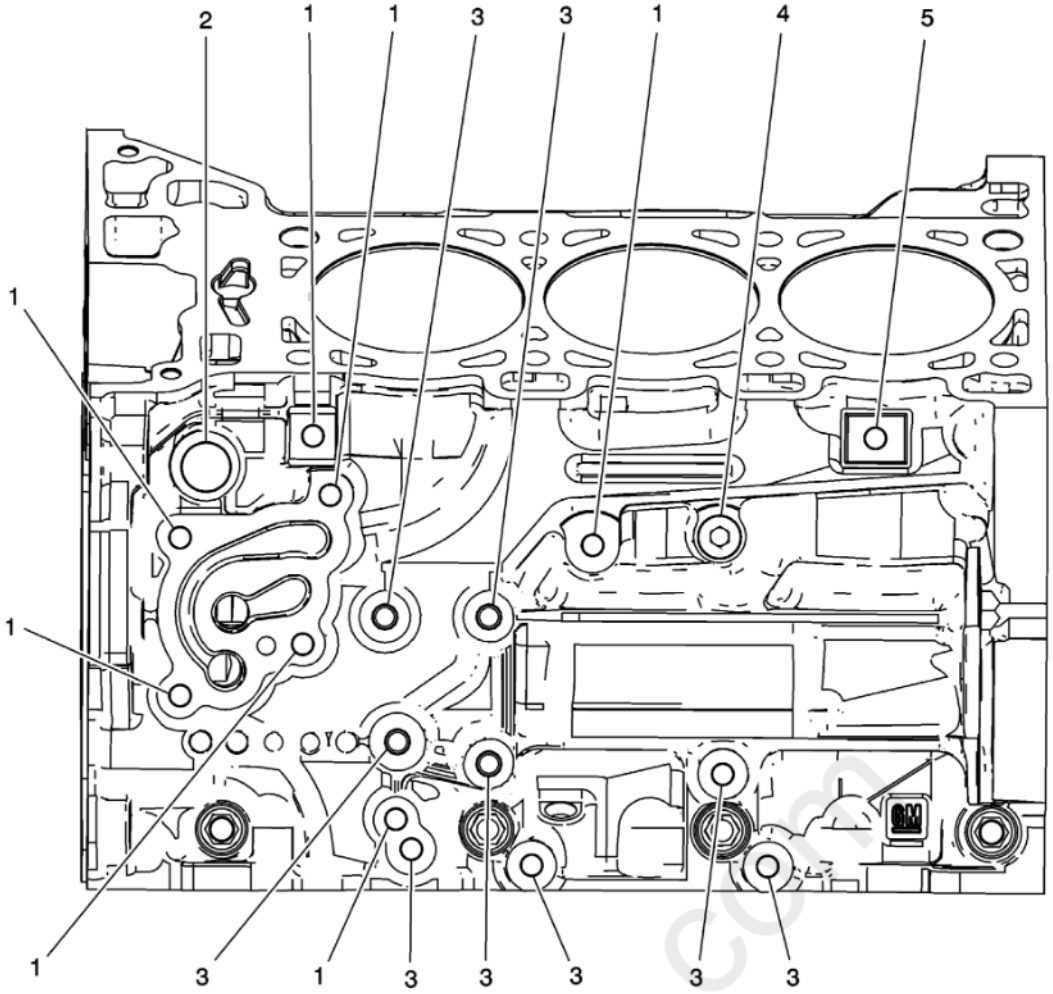

Fig. 17: Engine Block Left Side
Courtesy of GENERAL MOTORS COMPANY

Engine Block Left Side

Hole Location	Thread Size	Drill	Counter Bore Tool	Stop Collar	Tap	Driver	Insert	Drill Depth (Maximum)		Tap Depth (Minimum)	
-	-	J 42385 -						MM	(IN)	MM	(IN)
1	M8 x 1.25	206	207	N/A	208	209	210	28.5	1.1220	23.0	0.9055
2	M20 x 1.5	715	716	N/A	717	718	719	30.0	1.1810	20.0	0.7874
3	M10 x 1.5	211	212	N/A	213	214	215	33.5	1.3190	27.0	1.0630
4	M14 x 1.5	409	410	N/A	411	412	735	THRU		15.0	0.5905
5	M8 x 1.25	206	207	N/A	208	209	415	16.5	0.6496	11.0	0.4331

Engine Block Right Side

cardiagn.com

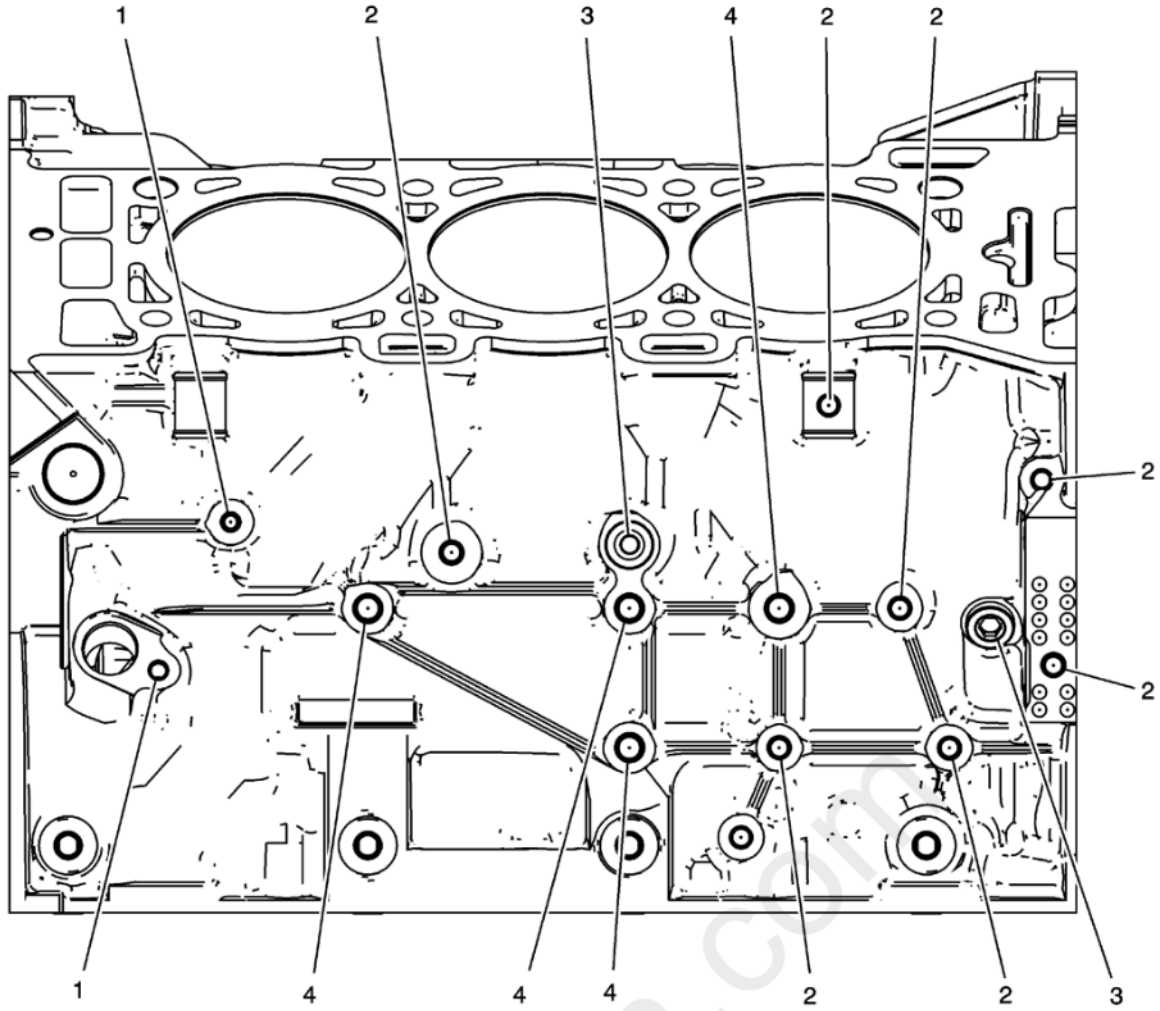

Fig. 18: Engine Block Right Side
Courtesy of GENERAL MOTORS COMPANY

Engine Block Right Side

Hole Location	Thread Size	Drill	Counter Bore Tool	Stop Collar	Tap	Driver	Insert	Drill Depth (Maximum)		Tap Depth (Minimum)	
-	-	J 42385 -						MM	(IN)	MM	(IN)
1	M6 x 1.0	201	202	N/A	203	204	205	22.5	0.8858	18.0	0.7087
2	M8 x 1.25	206	207	N/A	208	209	210	28.5	1.1220	23.0	0.9055
3	M14 x 1.5	409	410	N/A	411	412	735	THRU		15.0	0.5905
4	M10 x 1.5	211	212	N/A	213	214	215	33.5	1.3190	27.0	1.0630

Engine Block Rear

cardiagn.com

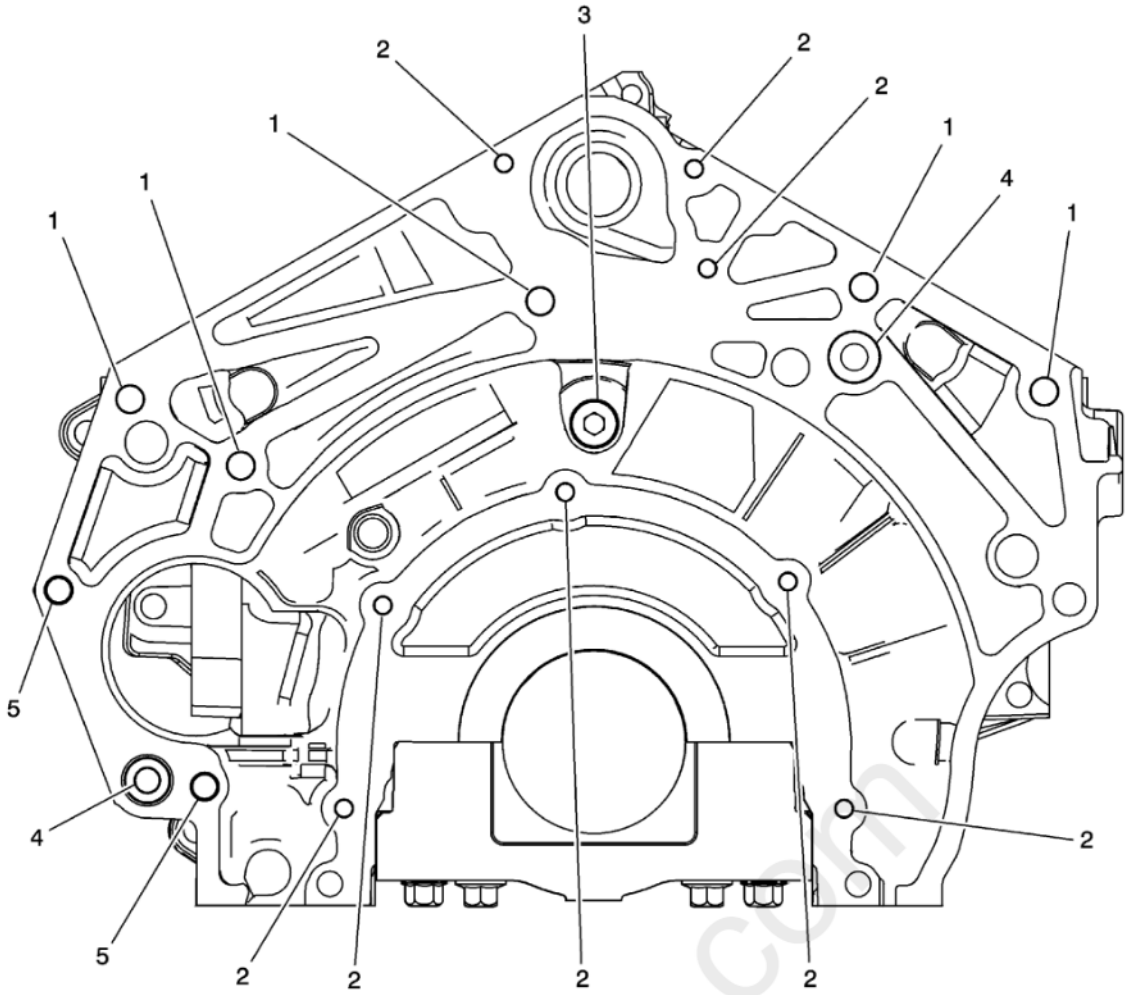

Fig. 19: Engine Block Rear
Courtesy of GENERAL MOTORS COMPANY

Engine Block Rear

Hole Location	Thread Size	Drill	Counter Bore Tool	Stop Collar	Tap	Driver	Insert	Drill Depth (Maximum)		Tap Depth (Minimum)	
-	-	J 42385 -						MM	(IN)	MM	(IN)
1	M10 x 1.5	211	212	N/A	213	214	420	33.5	1.3190	27.0	1.0630
2	M6 x 1.0	201	202	N/A	203	204	205	22.5	0.8858	18.0	0.7087
3	M14 x 1.5	409	410	N/A	411	412	735	THRU		15.0	0.5905
4	M10 x 1.5	211	212	N/A	213	214	216	39.5	1.5551	33.0	1.2992
5	M10 x 1.5	211	212	N/A	213	214	420	THRU		THRU	

Engine Block Bottom

cardiagn.com

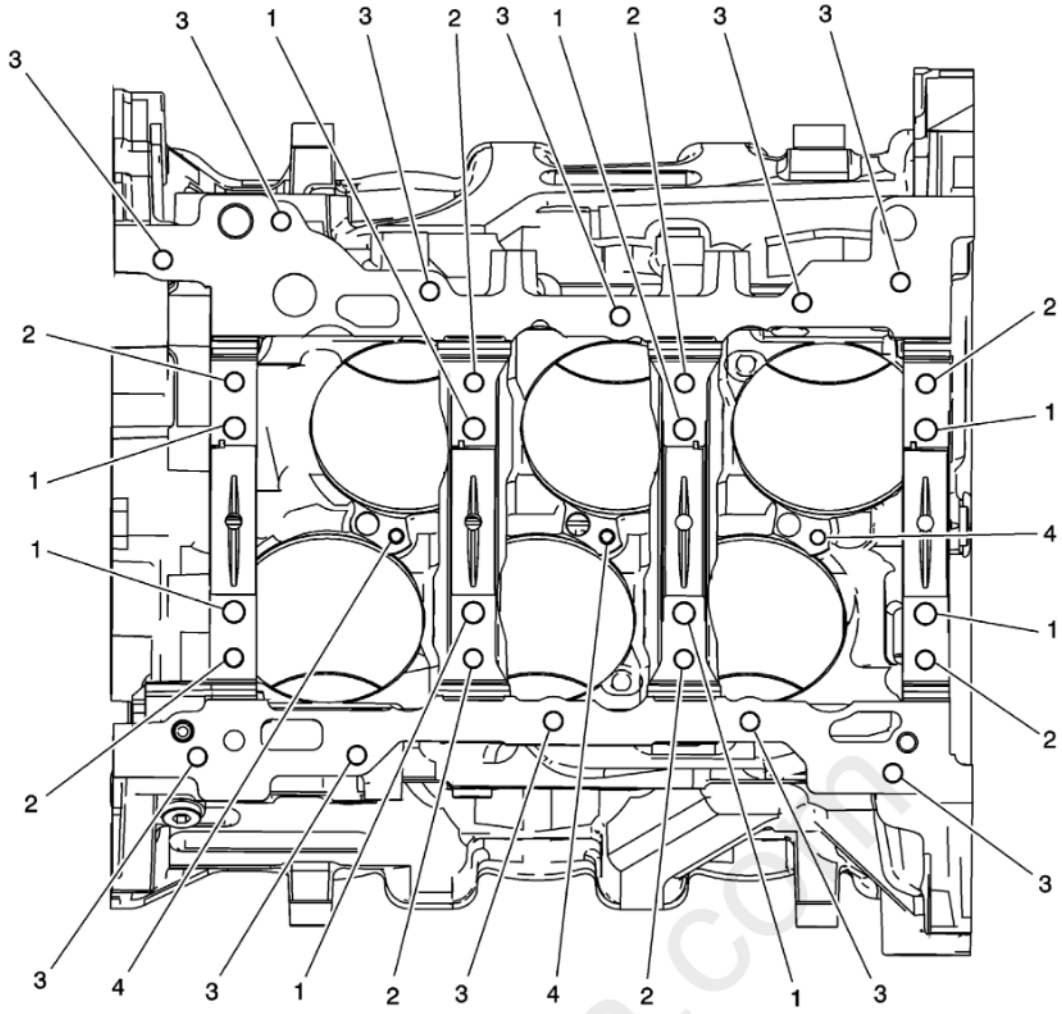

Fig. 20: Engine Block Bottom
Courtesy of GENERAL MOTORS COMPANY

Engine Block Bottom

Hole Location	Thread Size	Drill	Counter Bore Tool	Stop Collar	Tap	Driver	Insert	Drill Depth (Maximum)		Tap Depth (Minimum)	
-	-	J 42385 -						MM	(IN)	MM	(IN)
1	M10 x 2.0	720	N/A	N/A	721	722	104	56.0	2.2047	49.0	1.9291
2	M8 x 1.25	702	N/A	N/A	703	704	620	46.0	1.8110	40.5	1.5945
3	M8 x 1.25	206	207	N/A	208	209	210	28.5	1.1220	23.0	0.9055
4	M6 x 1.0	201	202	N/A	203	204	205	THRU		THRU	

Engine Block Left Deck Face

cardiagn.com

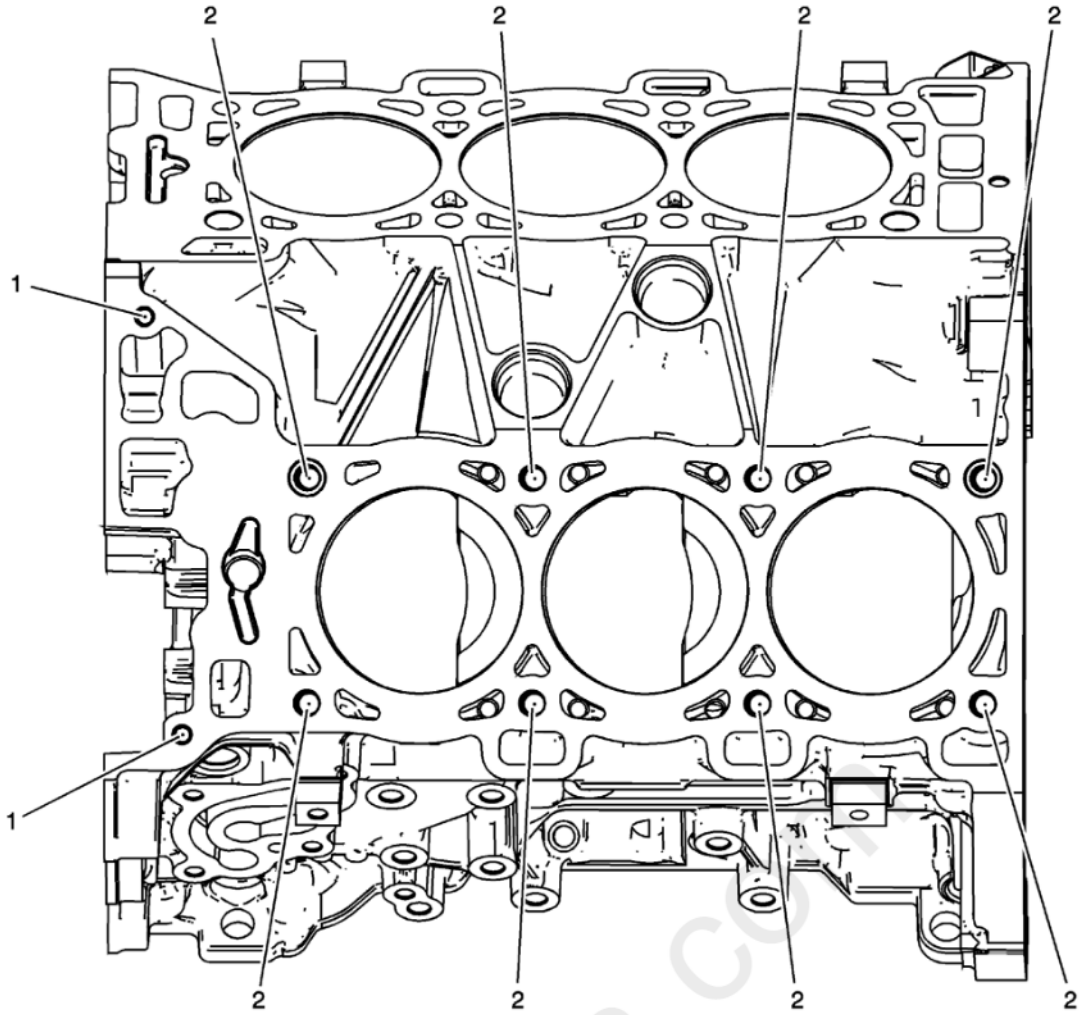

Fig. 21: Engine Block Left Deck Face Component View
Courtesy of GENERAL MOTORS COMPANY

Engine Block Left Deck Face

Hole Location	Thread Size	Drill	Counter Bore Tool	Stop Collar	Tap	Driver	Insert	Drill Depth (Maximum)		Tap Depth (Minimum)	
-	-	J 42385 -						MM	(IN)	MM	(IN)
1	M8 x 1.25	206	207	N/A	208	209	210	28.5	1.1220	23.0	0.9055
2	M11 x 2.0	723	N/A	N/A	724	725	108	102.5	4.0354	94.0	3.7008

Engine Block Right Deck Face

cardiagn.com

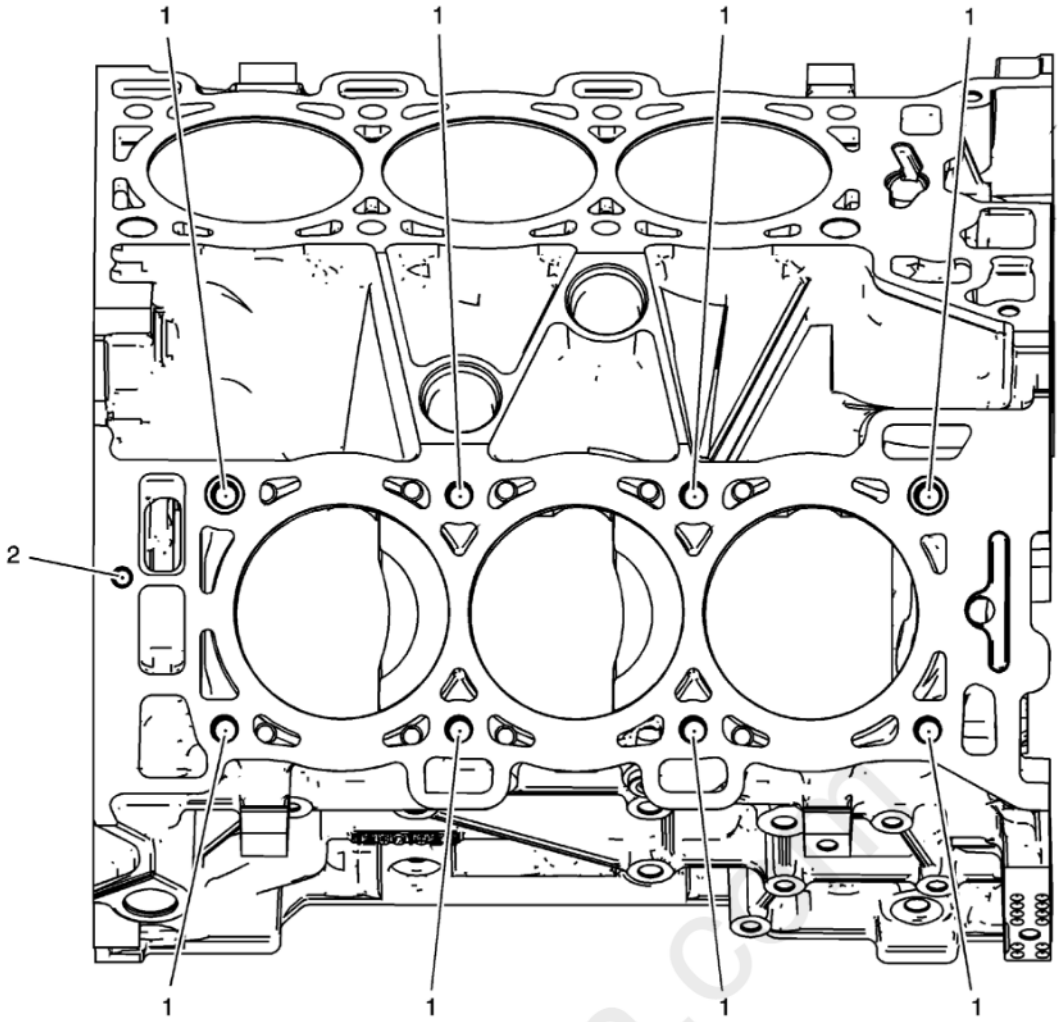

Fig. 22: Engine Block Right Deck Face Component View
Courtesy of GENERAL MOTORS COMPANY

Engine Block Right Deck Face

Hole Location	Thread Size	Drill	Counter Bore Tool	Stop Collar	Tap	Driver	Insert	Drill Depth (Maximum)		Tap Depth (Minimum)	
-	-	J 42385 -						MM	(IN)	MM	(IN)
1	M11 x 2.0	723	N/A	N/A	724	725	108	102.5	4.0354	94.0	3.7008
2	M8 x 1.25	206	207	N/A	208	209	210	28.5	1.1220	23.0	0.9055

Engine Front Cover

cardiagn.com

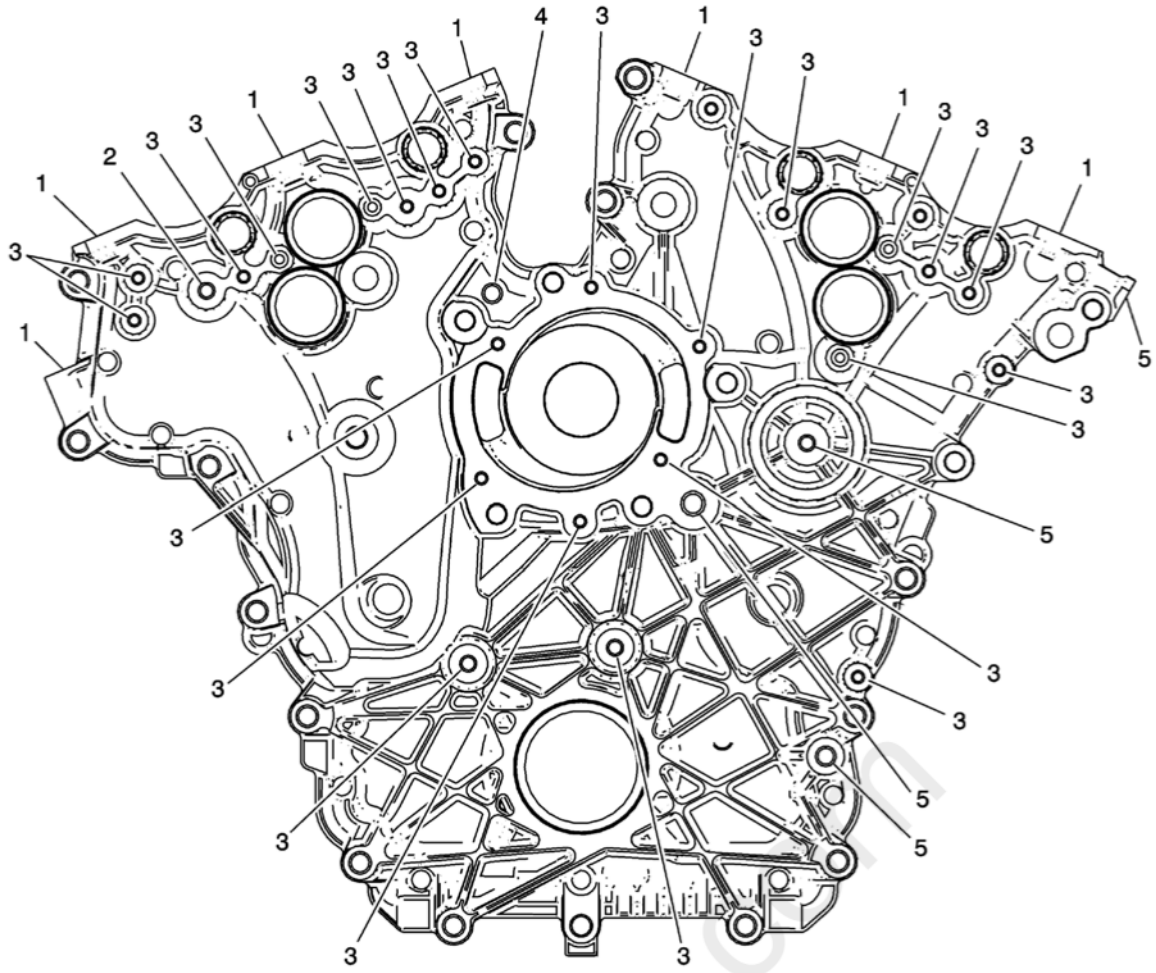

Fig. 23: Engine Front Cover
Courtesy of GENERAL MOTORS COMPANY

Engine Front Cover

Hole Location	Thread Size	Drill	Counter Bore Tool	Stop Collar	Tap	Driver	Insert	Drill Depth (Maximum)		Tap Depth (Minimum)	
-	-	J 42385 -						MM	(IN)	MM	(IN)
1	M6 x 1.0	201	202	N/A	203	204	205	THRU		THRU	
2	M8 x 1.25	206	207	N/A	208	209	210	28.5	1.1220	23.0	0.9055
3	M6 x 1.0	201	202	N/A	203	204	205	21.5	0.8465	18.0	0.7087
4	M10 x 1.5	211	212	N/A	213	214	215	THRU		THRU	
5	M10 x 1.5	211	212	N/A	213	214	420	32.5	1.2795	27.0	1.0630

Intake Manifold - Top (LLT)

cardiagn.com

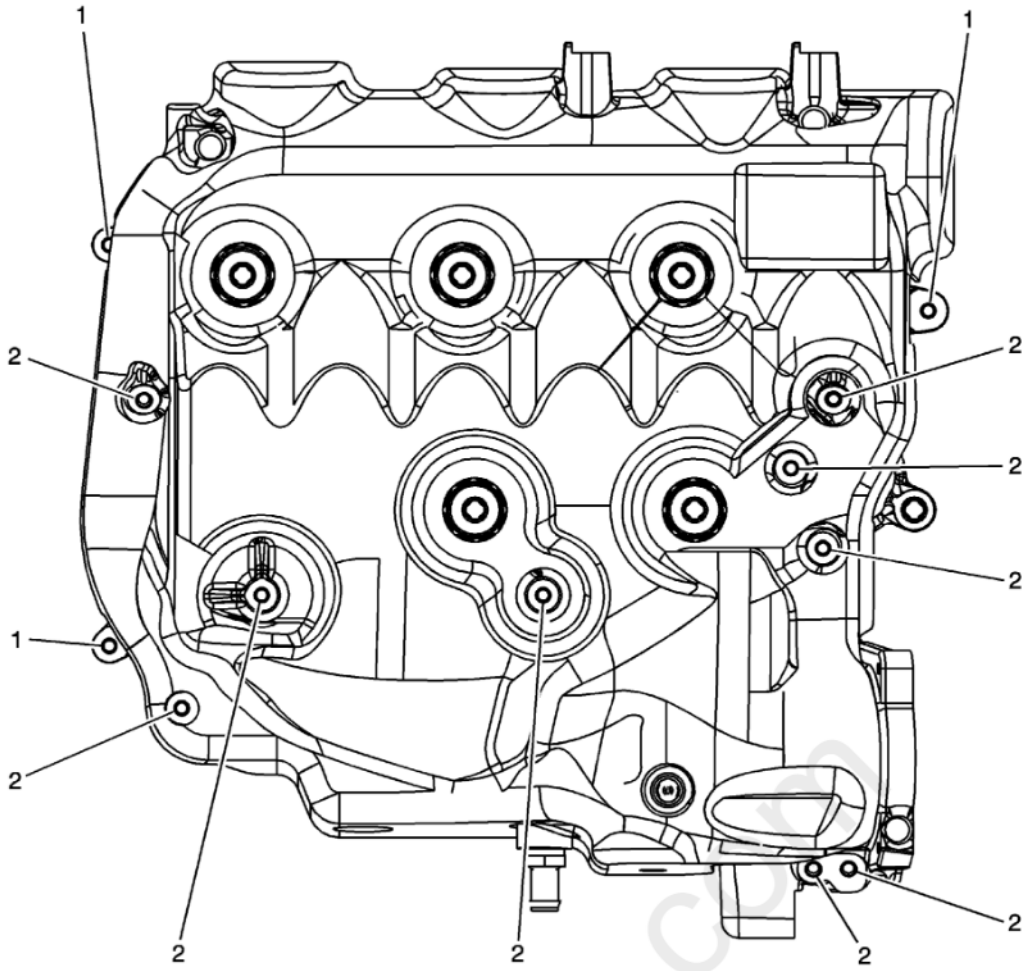

Fig. 24: View Of Intake Manifold - Top
Courtesy of GENERAL MOTORS COMPANY

Intake Manifold - Top (LLT)

Hole Location	Thread Size	Drill	Counter Bore Tool	Stop Collar	Tap	Driver	Insert	Drill Depth (Maximum)		Tap Depth (Minimum)	
-	-	J 42385 -						MM	(IN)	MM	(IN)
1	M6 x 1.0	201	202	N/A	203	204	205	21.5	0.8465	18.0	0.7087
2	M6 x 1.0	201	202	N/A	203	204	205	THRU		THRU	

Intake Manifold - Front (LLT)

cardiagn.com

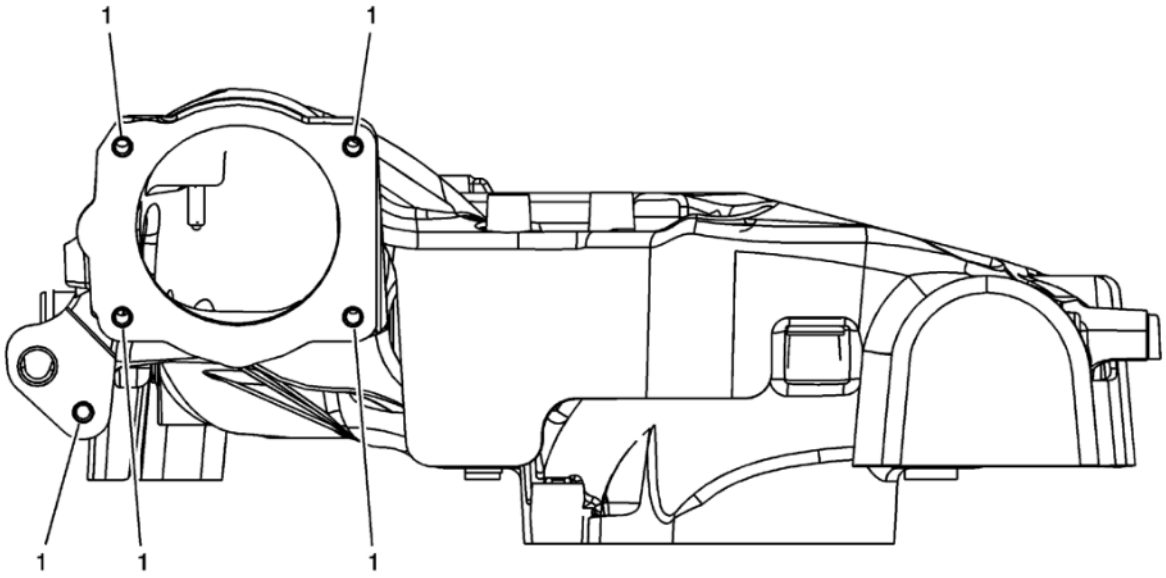

Fig. 25: View Of Intake Manifold - Front
Courtesy of GENERAL MOTORS COMPANY

Intake Manifold - Front (LLT)

Hole Location	Thread Size	Drill	Counter Bore Tool	Stop Collar	Tap	Driver	Insert	Drill Depth (Maximum)		Tap Depth (Minimum)	
-	-	J 42385 -						MM	(IN)	MM	(IN)
1	M6 x 1.0	201	202	N/A	203	204	205	THRU		THRU	

Intake Manifold - Left (LLT)

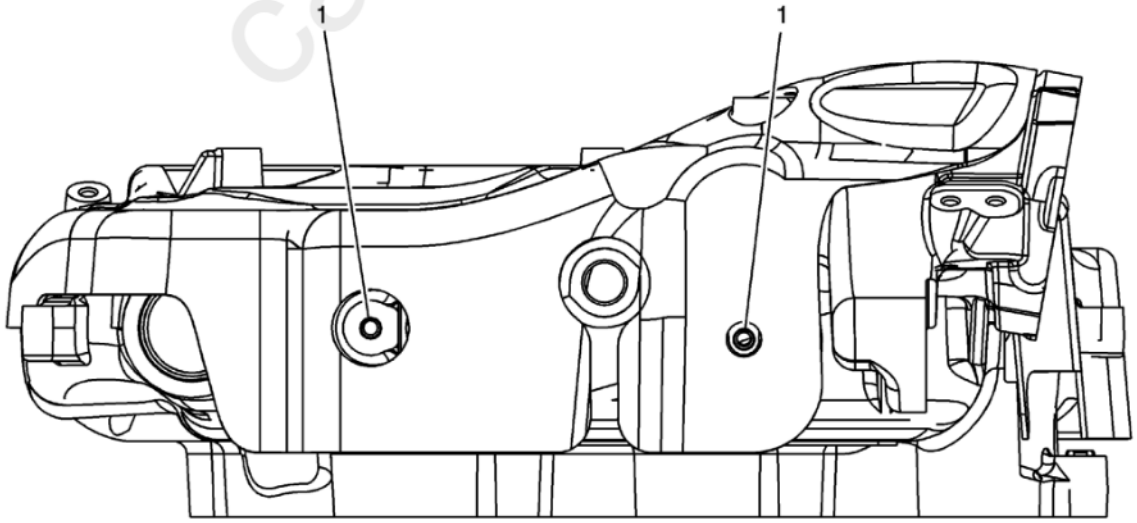

Fig. 26: View Of Intake Manifold - Left
Courtesy of GENERAL MOTORS COMPANY

Intake Manifold - Left (LLT)

cardiagn.com

Hole Location	Thread Size	Drill	Counter Bore Tool	Stop Collar	Tap	Driver	Insert	Drill Depth (Maximum)		Tap Depth (Minimum)	
-	-	J 42385 -						MM	(IN)	MM	(IN)
1	M6 x 1.0	201	202	N/A	203	204	205	21.5	0.8465	18.0	0.7087

Intake Manifold - Right (LLT)

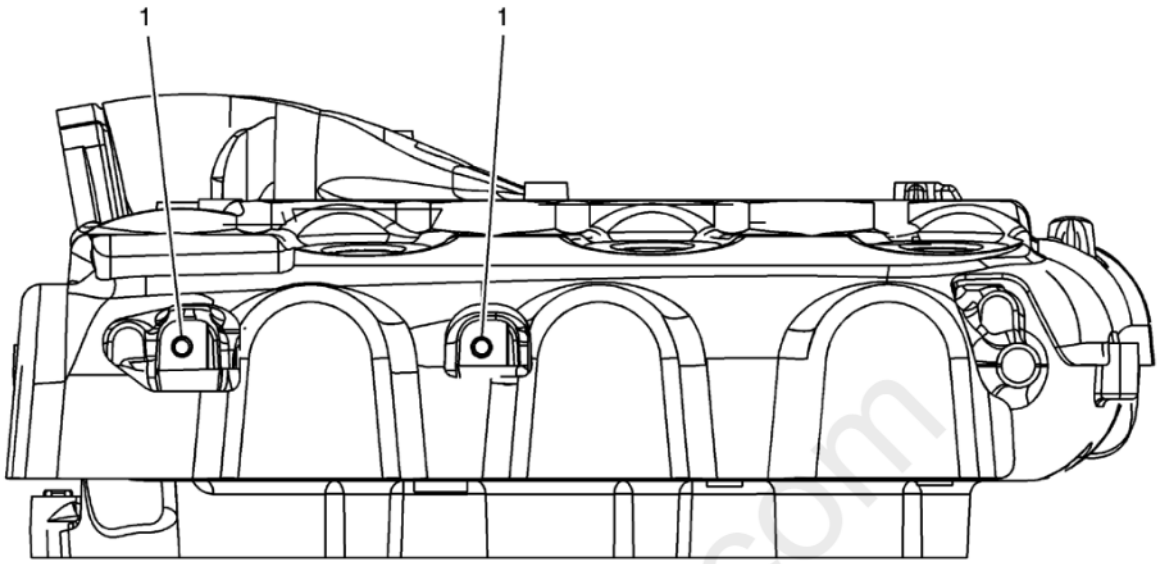

Fig. 27: View Of Intake Manifold - Right
Courtesy of GENERAL MOTORS COMPANY

Intake Manifold - Right (LLT)

Hole Location	Thread Size	Drill	Counter Bore Tool	Stop Collar	Tap	Driver	Insert	Drill Depth (Maximum)		Tap Depth (Minimum)	
-	-	J 42385 -						MM	(IN)	MM	(IN)
1	M6 x 1.0	201	202	N/A	203	204	205	21.5	0.8465	18.0	0.7087

Oil Pan Front

cardiagn.com

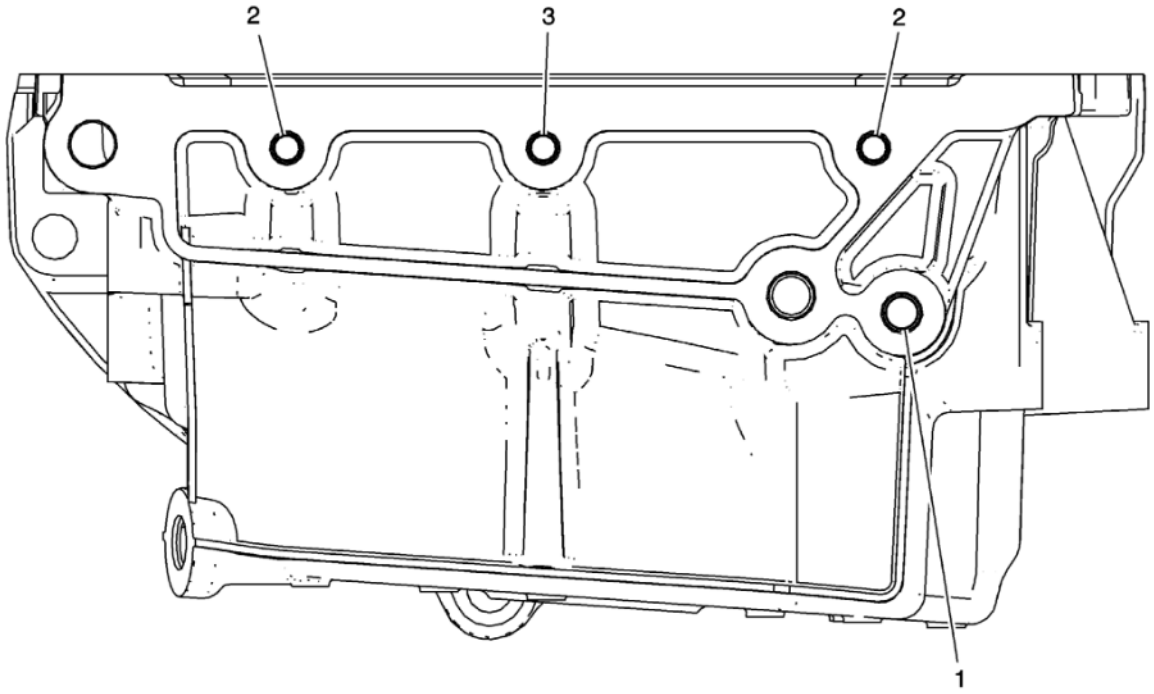

Fig. 28: View Of Oil Pan Front
Courtesy of GENERAL MOTORS COMPANY

Oil Pan Front

Hole Location	Thread Size	Drill	Counter Bore Tool	Stop Collar	Tap	Driver	Insert	Drill Depth (Maximum)		Tap Depth (Minimum)	
-	-	J 42385 -						MM	(IN)	MM	(IN)
1	M8 x 1.25	206	207	N/A	208	209	210	28.5	1.1220	23.0	0.9055
2	M10 x 1.5	211	212	N/A	213	214	215	33.5	1.3189	27.0	1.0630
3	M8 x 1.25	610	N/A	N/A	208	209	620	37.5	1.4764	32.0	1.2598

Oil Pan Left Side

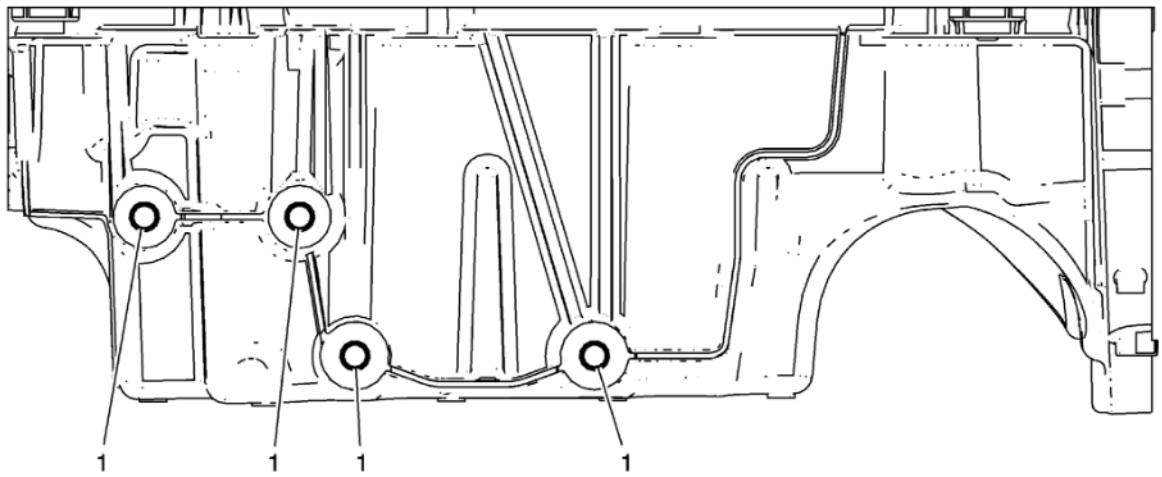

cardiagn.com

Fig. 29: View Of Oil Pan Left Side
Courtesy of GENERAL MOTORS COMPANY

Oil Pan Left Side

Hole Location	Thread Size	Drill	Counter Bore Tool	Stop Collar	Tap	Driver	Insert	Drill Depth (Maximum)		Tap Depth (Minimum)	
-	-	J 42385 -						MM	(IN)	MM	(IN)
1	M10 x 1.5	211	212	N/A	213	214	420	33.5	1.3189	27.0	1.0630

Oil Pan Right Side

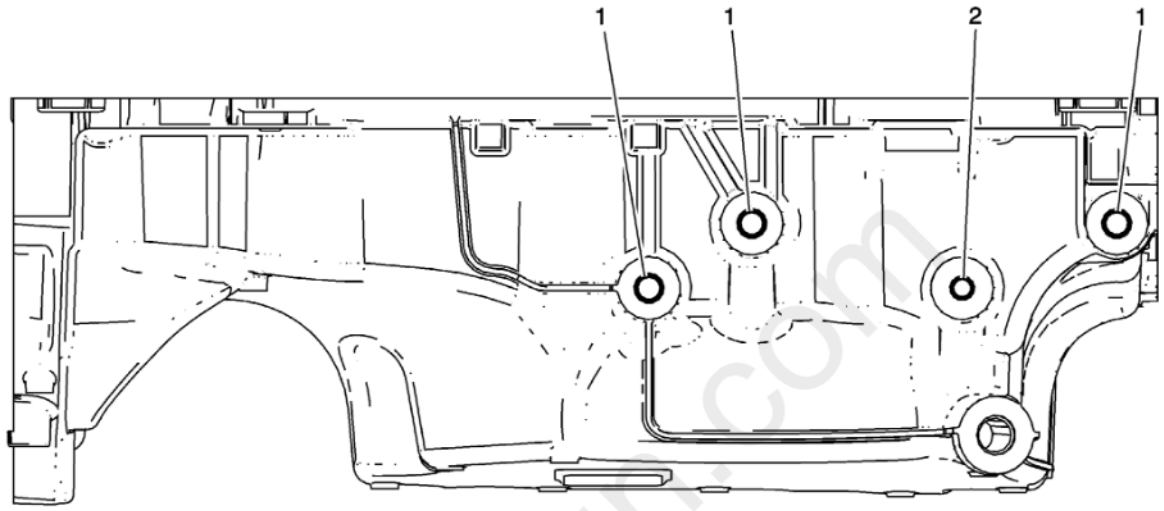

Fig. 30: View Of Oil Pan Right Side
Courtesy of GENERAL MOTORS COMPANY

Oil Pan Right Side

Hole Location	Thread Size	Drill	Counter Bore Tool	Stop Collar	Tap	Driver	Insert	Drill Depth (Maximum)		Tap Depth (Minimum)	
-	-	J 42385 -						MM	(IN)	MM	(IN)
1	M12 x 1.75	856	857	N/A	858	859	855	39.5	1.5551	32.0	1.2598
2	M12 x 1.75	856	N/A	N/A	858	859	855	39.5	1.5551	32.0	1.2598

Oil Pan Rear

cardiagn.com

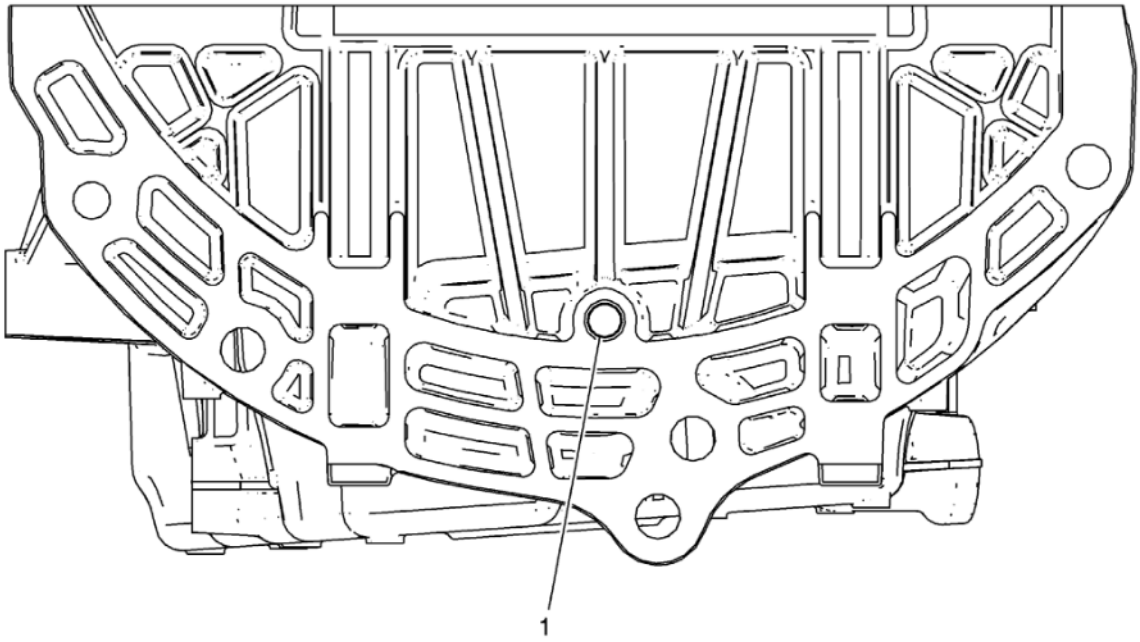

Fig. 31: View Of Oil Pan Rear
Courtesy of GENERAL MOTORS COMPANY

Oil Pan Rear

Hole Location	Thread Size	Drill	Counter Bore Tool	Stop Collar	Tap	Driver	Insert	Drill Depth (Maximum)		Tap Depth (Minimum)	
-	-	J 42385 -						MM	(IN)	MM	(IN)
1	M10 x 1.5	211	212	N/A	213	214	420	33.5	1.3189	27.0	1.0630

Oil Pan Top

cardiagn.com

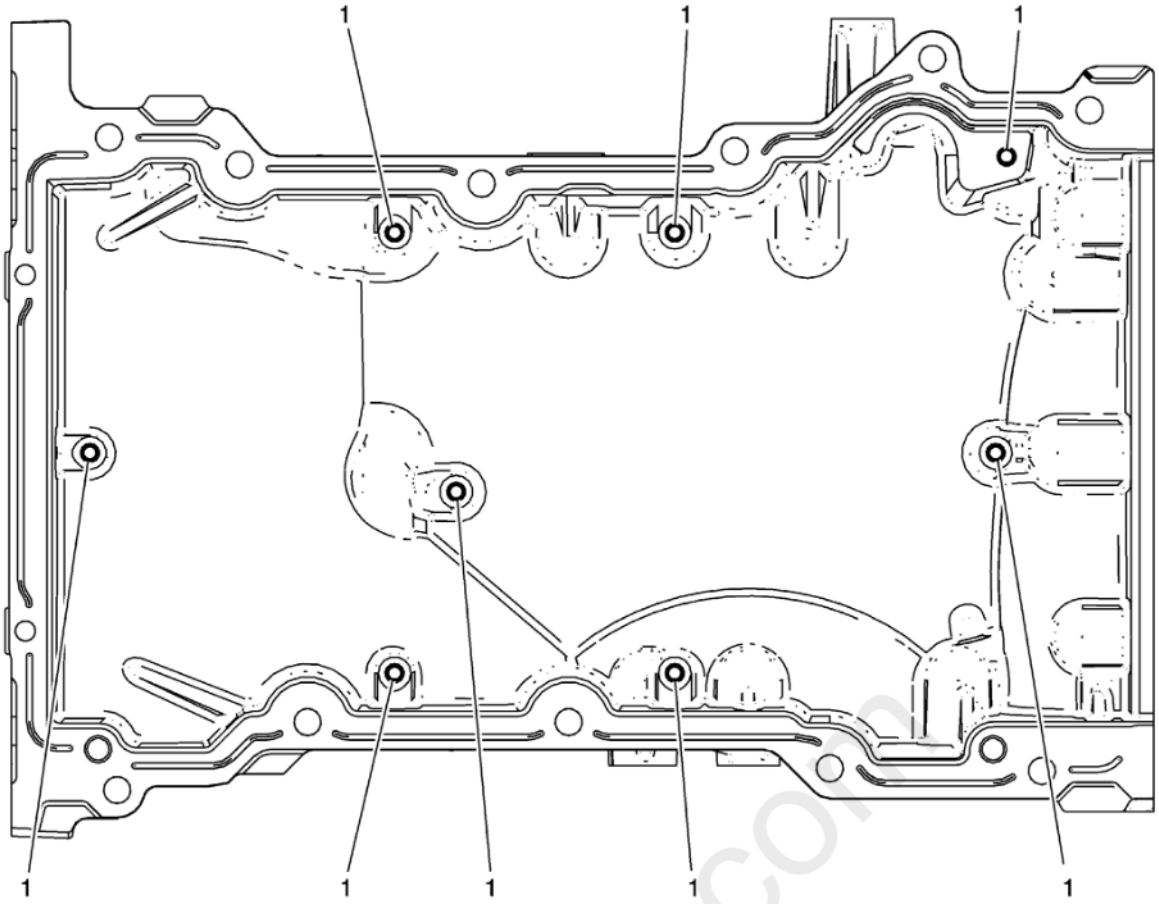

Fig. 32: View Of Oil Pan Top
Courtesy of GENERAL MOTORS COMPANY

Oil Pan Top

Hole Location	Thread Size	Drill	Counter Bore Tool	Stop Collar	Tap	Driver	Insert	Drill Depth (Maximum)		Tap Depth (Minimum)	
-	-	J 42385 -						MM	(IN)	MM	(IN)
1	M6 x 1.0	701	N/A	N/A	203	204	205	28.0	1.1024	23.5	0.9252

cardiagn.com