Protected by copyright. Copying for private or commercial purposes, in part or in whole, is not permitted unless authorised by AUDI AG. AUDI AG does not guarantee or accept any liability with respect to the correctness of information in this document. Copyright by AUDI AG.

Workshop Manual

Audi A3 2013 ➤ ,
Audi A3 Limousine 2014 ➤ ,
Audi A3 Limousine China 2014 ➤ ,
Audi A3 Sportback 2013 ➤ ,
Audi A3 Sportback China 2014 ➤

General body repairs, exterior

Edition 04.2019

List of Workshop Manual Repair Groups

Protected by copyright. Copying for private or commercial purposes, in part or in whole, is not permitted unless authorised by AUDI AG. AUDI AG does not guarantee or accept any liability with respect to the correctness of information in this document. Copyright by AUDI AG.

Repair Group

00 - Technical data
50 - Body - front
55 - Bonnet, rear lid
57 - Front doors, door components, central locking
58 - Rear doors, door components
60 - Sunroof
63 - Bumpers
64 - Glazing
66 - Exterior equipment

Technical information should always be available to the foremen and mechanics, because their careful and constant adherence to the instructions is essential to ensure vehicle road-worthiness and safety. In addition, the normal basic safety precautions for working on motor vehicles must, as a matter of course, be observed.

All rights reserved.
No reproduction without prior agreement from publisher.

Copyright © 2019 Audi AG, Ingolstadt

Contents

00 - Technical data . . . 1

1 Safety precautions . . . 1
1.1 Safety precautions when working on the high-voltage system . . . 1
1.2 Safety precautions when working in the vicinity of high-voltage components . . . 2
1.3 Safety precautions when working on vehicles with natural gas systems . . . 2
1.4 Safety precautions when working on vehicles with start/stop system . . . 3
1.5 Safety precautions when using testers and measuring instruments during a road test . . . 4
1.6 Safety precautions when working on the cooling system . . . 4

2 Repair notes . . . 5
2.1 Routing and attaching lines and wiring . . . 5
2.2 Contact corrosion . . . 5
2.3 Bonding surfaces for adhesive strips . . . 5
2.4 Self-locking bolts . . . 5
2.5 Identification plates . . . 5

50 - Body - front . . . 7

1 Lock carrier . . . 7
1.1 Exploded view - lock carrier . . . 7
1.2 Removing and installing lock carrier . . . 9
1.3 Removing and installing cover for arrester . . . 21
1.4 Removing and installing air duct for radiator . . . 22
1.5 Removing and installing air duct - vehicles with manual gearbox . . . 22

2 Wing . . . 24
2.1 Exploded view - wing . . . 24
2.2 Exploded view - brackets on wing (right-side) . . . 27
2.3 Exploded view - repair set for wing . . . 28
2.4 Removing and installing wing . . . 28
2.5 Removing and installing wing panel brace . . . 31
2.6 Removing and installing closure plate . . . 32

3 Bulkhead . . . 33
3.1 Exploded view - plenum chamber partition panel . . . 33
3.2 Exploded view - plenum chamber cover . . . 34
3.3 Removing and installing plenum chamber cover . . . 34
3.4 Removing and installing plenum chamber partition panel . . . 35
3.5 Removing and installing sealing element . . . 36

55 - Bonnet, rear lid . . . 37

1 Bonnet . . . 37
1.1 Exploded view - bonnet . . . 37
1.2 Exploded view - Bowden cable . . . 39
1.3 Removing and installing bonnet . . . 39
1.4 Adjusting bonnet . . . 40
1.5 Removing and installing hinges . . . 42
1.6 Resetting hinge . . . 44
1.7 Removing and installing striker . . . 45
1.8 Removing and installing gas strut . . . 46
1.9 Releasing gas from gas strut . . . 47
1.10 Removing and installing insulation . . . 47
1.11 Removing and installing impact guard . . . 49
1.12 Removing and installing Bowden cable . . . 50
1.13 Removing and installing arrester . . . 52
1.14 Removing and installing bonnet lock . . . 52
1.15 Removing and installing operating lever for bonnet lock . . . 54

Protected by copyright. Copying or distribution to third parties, in part or in whole, is not permitted unless authorised by AUDI AG. AUDI AG does not guarantee or accept any liability with respect to the correctness of information in this document. Copyright by AUDI AG.

2 Rear lid . . . 57
2.1 Exploded view - rear lid . . . 57
2.2 Removing and installing rear lid . . . 59
2.3 Adjusting rear lid . . . 60
2.4 Removing and installing hinges . . . 66
2.5 Removing and installing rear lid seal . . . 69
2.6 Removing and installing stop and adjusting buffer . . . 72
2.7 Removing and installing gas strut . . . 74
2.8 Releasing gas from gas strut . . . 76
2.9 Removing and installing extension spring . . . 77
2.10 Removing and installing rear lid lock . . . 78
2.11 Removing and installing actuator . . . 79
3 Tank flap unit . . . 80
3.1 Exploded view - tank flap unit . . . 80
3.2 Removing and installing tank flap unit . . . 80
3.3 Removing and installing trim panel for tank flap . . . 82
3.4 Removing and installing drain hose for tank flap unit . . . 83
3.5 Removing and installing manual release cable . . . 85

57 - Front doors, door components, central locking . . . 86
1 Door . . . 86
1.1 Exploded view - door . . . 86
1.2 Exploded view - door seals . . . 87
1.3 Removing and installing door . . . 87
1.4 Adjusting door . . . 88
1.5 Removing and installing door arrester . . . 95
1.6 Removing and installing inner door seal . . . 96
1.7 Removing and installing outer door seal . . . 97
2 Door components . . . 101
2.1 Exploded view - window regulator . . . 101
2.2 Exploded view - door handle and door lock . . . 102
2.3 Exploded view - window guides and window slot trim strips . . . 105
2.4 Removing and installing window regulator . . . 105
2.5 Removing and installing window regulator motor . . . 106
2.6 Removing and installing door handle . . . 107
2.7 Removing and installing door handle trim . . . 108
2.8 Removing and installing mounting bracket . . . 108
2.9 Removing and installing operating cable for exterior door handle . . . 109
2.10 Removing and installing lock cylinder . . . 111
2.11 Removing and installing cap for lock cylinder . . . 111
2.12 Removing and installing housing . . . 112
2.13 Removing and installing door lock . . . 113
2.14 Removing and installing cover for door lock . . . 113
2.15 Removing and installing striker . . . 114
2.16 Removing and installing operating cable for interior door handle . . . 114
2.17 Removing and installing inner door cover . . . 115
2.18 Removing and installing window guide . . . 115
2.19 Removing and installing inner window slot trim strip . . . 117
2.20 Removing and installing outer window slot trim strip . . . 118
3 Central locking system . . . 120
3.1 Overview of fitting locations - central locking system . . . 120
3.2 Removing and installing driver door control unit J386 and front passenger door control unit J387 . . . 124
3.3 Removing and installing rear driver side door control unit J926 and rear passenger side door control unit J927 . . . 124

Protected by copyright. Copying for private or commercial purposes, in part or in whole, is not permitted unless authorised by AUDI AG. AUDI AG does not guarantee or accept any liability with respect to the correctness of information in this document. Copyright by AUDI AG.

3.4 Removing and installing control unit with rear driver side window regulator motor J1016 and control unit with rear passenger side window regulator motor J1017 . . . 125
3.5 Removing and installing interface control unit for vehicle location system J843 . . . 126
3.6 Removing and installing bonnet contact switch F266 . . . 127
3.7 Removing and installing tank filler flap locking motor V155 . . . 128

58 - Rear doors, door components . . . 129
1 Door . . . 129
1.1 Exploded view - door . . . 129
1.2 Exploded view - door seals . . . 131
1.3 Removing and installing door . . . 131
1.4 Adjusting door . . . 132
1.5 Removing and installing door arrester . . . 137
1.6 Removing and installing inner door seal . . . 138
1.7 Removing and installing outer door seal . . . 139
2 Door components . . . 143
2.1 Exploded view - window regulator . . . 143
2.2 Exploded view - door handle and door lock . . . 144
2.3 Exploded view - window guides and window slot trim strips . . . 147
2.4 Removing and installing window regulator . . . 148
2.5 Removing and installing window regulator motor . . . 149
2.6 Removing and installing door handle . . . 150
2.7 Removing and installing door handle trim . . . 151
2.8 Removing and installing housing . . . 151
2.9 Removing and installing mounting bracket . . . 152
2.10 Removing and installing operating cable for exterior door handle . . . 154
2.11 Removing and installing door lock . . . 155
2.12 Removing and installing striker . . . 156
2.13 Removing and installing operating cable for interior door handle . . . 156
2.14 Removing and installing inner door cover . . . 157
2.15 Removing and installing window guide . . . 158
2.16 Removing and installing guide rail for door window . . . 161
2.17 Removing and installing inner window slot trim strip . . . 161
2.18 Removing and installing outer window slot trim strip . . . 162

60 - Sunroof . . . 164
1 Sliding sunroof . . . 164
1.1 Exploded view - sliding sunroof . . . 164
1.2 Exploded view - sunroof sun blind . . . 166
1.3 Removing and installing sunroof frame . . . 166
1.4 Removing and installing glass panel . . . 170
1.5 Adjusting glass panel . . . 173
1.6 Removing and installing slotted guide . . . 175
1.7 Removing and installing sliding sunroof adjustment control unit J245 . . . 177
1.8 Adapting sliding sunroof adjustment control unit J245 . . . 178
1.9 Removing and installing front trim panel for sliding sunroof . . . 179
1.10 Removing and installing sunroof seals . . . 184
1.11 Removing and installing sunroof sun blind . . . 186
1.12 Removing and installing wind deflector . . . 192
2 Water drain hoses . . . 196
2.1 Overview - water drain hoses . . . 196
2.2 Cleaning water drain hoses . . . 198
2.3 Removing and installing water drain hoses . . . 199

63 - Bumpers . . . 201
1 Bumper (front) . . . 201

Protected by copyright. Copying for private or commercial purposes, in part or in whole, is not permitted unless authorised by AUDI AG. AUDI AG does not guarantee or accept any liability with respect to the correctness of information in this document. Copyright by AUDI AG.

1.1 Exploded view - bumper cover . . . 201
1.2 Exploded view - impact bar . . . 211
1.3 Removing and installing bumper cover . . . 214
1.4 Adjusting bumper cover . . . 218
1.5 Removing and installing bumper cover mounting . . . 221
1.6 Removing and installing impact bar . . . 223
1.7 Removing and installing attachments . . . 227

2 Bumper (rear) . . . 249
2.1 Exploded view - bumper cover . . . 249
2.2 Exploded view - impact bar . . . 262
2.3 Removing and installing bumper cover . . . 264
2.4 Removing and installing impact bar . . . 267
2.5 Removing and installing attachments . . . 271

64 - Glazing . . . 280

1 Repair notes . . . 280
1.1 Minimum drying times for bonded windows . . . 280
1.2 Repairing windows . . . 280
1.3 Notes on installing flush-bonded windows . . . 281
1.4 Preparing undamaged windows for installation . . . 284
1.5 Preparing new windows for installation . . . 284
1.6 Preparing body flange for installation . . . 286
1.7 Cleaning off adhesive sealant . . . 286

2 Windscreen . . . 287
2.1 Exploded view - windscreen . . . 287
2.2 Removing and installing windscreen . . . 288

3 Side windows . . . 293
3.1 Exploded view - rear side window . . . 293
3.2 Removing and installing rear side window . . . 295

4 Rear window . . . 299
4.1 Exploded view - rear window . . . 299
4.2 Removing and installing rear window . . . 300

5 Door windows . . . 310
5.1 Exploded view - front door window . . . 310
5.2 Exploded view - rear door window . . . 311
5.3 Removing and installing front door window . . . 312
5.4 Removing and installing rear door window . . . 313

Protected by copyright. Copying for private or commercial purposes, in part or in whole, is not permitted unless authorised by AUDI AG. AUDI AG does not guarantee or accept any liability with respect to the correctness of information in this document. Copyright by AUDI AG.

66 - Exterior equipment . . . 315

1 Radiator grille/front trim panel . . . 315
1.1 Exploded view - radiator grille . . . 315
1.2 Removing and installing radiator grille . . . 323

2 Spoiler . . . 335
2.1 Exploded view - spoiler . . . 335
2.2 Removing and installing spoiler . . . 336

3 Strips / trim panels / extensions . . . 341
3.1 Exploded view - trim strip and covers . . . 341
3.2 Exploded view - trim panels for A-pillar and B-pillar . . . 343
3.3 Exploded view - trim panel for B/C-pillar . . . 344
3.4 Exploded view - sill panel trim . . . 346
3.5 Exploded view - side member trim . . . 348
3.6 Exploded view - heat shield . . . 349
3.7 Removing and installing water deflector strip . . . 352
3.8 Removing and installing trim strip . . . 352
3.9 Removing and installing cover . . . 358

3.10 Removing and installing trim panel for A-pillar . . . 360
3.11 Removing and installing trim panel for B-pillar on door . . . 361
3.12 Removing and installing trim panel for C-pillar on door . . . 362
3.13 Removing and installing sill panel trim . . . 363
3.14 Removing and installing side member trim . . . 365
3.15 Removing and installing heat shield for floor . . . 370

4 Noise insulation . . . 375
4.1 Exploded view - noise insulation . . . 375
4.2 Removing and installing noise insulation . . . 377

5 Underbody trim . . . 379
5.1 Exploded view - underbody trim . . . 379
5.2 Removing and installing underbody trim . . . 382
5.3 Removing and installing tunnel cross-piece . . . 387

6 Roof strips / roof rails . . . 389
6.1 Exploded view - roof rail . . . 389
6.2 Exploded view - roof trim strip . . . 390
6.3 Removing and installing roof rail . . . 391
6.4 Removing and installing roof trim strip . . . 392

7 Exterior mirrors . . . 398
7.1 Exploded view - exterior mirror . . . 398
7.2 Removing and installing mirror glass . . . 399
7.3 Removing and installing mirror adjustment unit . . . 400
7.4 Removing and installing mirror trim . . . 400
7.5 Removing and installing cover for mirror . . . 401
7.6 Removing and installing exterior mirror . . . 401

8 Wheel housing liners . . . 403
8.1 Exploded view - wheel housing liner (front) . . . 403
8.2 Exploded view - wheel housing liner (rear) . . . 406
8.3 Removing and installing wheel housing liner (front) . . . 408
8.4 Removing and installing wheel housing liner (rear) . . . 412

9 Model badges and brand emblems . . . 415
9.1 Exploded view - model badges and brand emblems . . . 415
9.2 Dimensions - model badges and brand emblems on rear . . . 416
9.3 Renewing model badges and brand emblems on side . . . 417
9.4 General notes on renewing model badges and brand emblems . . . 417
9.5 Removing and installing model badges and emblems for radiator grille . . . 418

10 Towing bracket . . . 422
10.1 Exploded view - towing bracket . . . 422
10.2 Removing and installing trailer detector control unit J345 . . . 424

Protected by copyright. Copying for private or commercial purposes, in part or in whole, is not permitted unless authorised by AUDI AG. AUDI AG does not guarantee or accept any liability with respect to the correctness of information in this document. Copyright by AUDI AG.

Protected by copyright. Copying for private or commercial purposes, in part or in whole, is not permitted unless authorised by AUDI AG. AUDI AG does not guarantee or accept any liability with respect to the correctness of information in this document. Copyright by AUDI AG.

00 – Technical data

1 Safety precautions

(ARL006338; Edition 04.2019)

⇒ “1.1 Safety precautions when working on the high-voltage system”, page 1

⇒ “1.2 Safety precautions when working in the vicinity of high-voltage components”, page 2

⇒ “1.3 Safety precautions when working on vehicles with natural gas systems”, page 2

⇒ “1.4 Safety precautions when working on vehicles with start/stop system”, page 3

⇒ “1.5 Safety precautions when using testers and measuring instruments during a road test”, page 4

⇒ “1.6 Safety precautions when working on the cooling system”, page 4

1.1 Safety precautions when working on the high-voltage system

Protected by copyright. Copying for private or commercial purposes, in part or in whole, is not permitted unless authorised by AUDI AG. AUDI AG does not guarantee or accept any liability with respect to the correctness of information in this document. Copyright by AUDI AG.

High voltage can cause fatal injury.

The voltage levels in the high-voltage system constitute a safety hazard. Danger of severe or fatal injuries from electric shock or electric arcs.

– The high-voltage system must be de-energised before any work is performed on the high-voltage system.

– For work that does not affect the high-voltage system directly, the high-voltage system must also be de-energised in some cases.

– Please note the work for which the high-voltage system must be de-energised ⇒ Rep. gr. 00 ; Assessing high-voltage system risk level .

– Have an Audi high-voltage technician (HVT) or an Audi high-voltage expert (HVE) de-energise the high-voltage system.

Electric and magnetic fields can cause fatal injury.

The high-voltage system generates electric and magnetic fields. Danger of severe or fatal injuries caused by malfunctioning of active implants (e.g. pacemakers, insulin pumps).

– Persons with active implants must not perform work on the high-voltage system.

Risk of damage to high-voltage wiring

Incorrect handling may result in damage to the insulation of high-voltage wires or high-voltage connectors.

– Do not support yourself on high-voltage cables or connectors.

– Never support tools or equipment on high-voltage wires and high-voltage connectors.
– High-voltage cables must not be excessively bent or kinked.
– Observe the coding of the high-voltage connectors when joining them up.

Risk of injury - engine may start unexpectedly

It is difficult to determine whether the drive system of an electric vehicle or hybrid vehicle is active. Moving parts can trap or draw in parts of the body.

– Switch off ignition.
– Deposit the ignition key outside of the vehicle.

Risk of injury if auxiliary air conditioner is activated

On electric and hybrid vehicles, the auxiliary air conditioner can switch itself on if it has been activated. The radiator fans can start up automatically and trap or draw in parts of the body.

– Deactivate auxiliary air conditioner.

1.2 Safety precautions when working in the vicinity of high-voltage components

High voltage can cause fatal injury.

The voltage levels in the high-voltage system constitute a safety hazard. Danger of severe or fatal injuries from electric shock or electric arcs if high-voltage components or high-voltage wiring are damaged.

– Carry out a visual check of high-voltage components and high-voltage wiring.
– Never use cutting/forming tools or other sharp-edged implements in the vicinity of high-voltage components and high-voltage wires.
– Never perform work using welding, brazing, thermal bonding or hot air in the vicinity of high-voltage components or high-voltage wires.

Protected by copyright. Copying for private or commercial purposes, in part or in whole, is not permitted unless authorised by AUDI AG. AUDI AG does not guarantee or accept any liability with respect to the correctness of information in this document. Copyright by AUDI AG.

1.3 Safety precautions when working on vehicles with natural gas systems

Risk of explosion due to uncontrolled gas escape in connection with ignition sources and electrostatic discharge - risk of death!

Danger of severe or fatal injuries due to explosion.

– Never drive a vehicle with a natural gas system into the workshop if you can clearly hear gas escaping. Instead, park the vehicle outside and set up a protected area ⇒ Natural gas

engines - General information; Rep. gr. 20 ; Fuel tanks; Setting up and marking a protected area .

– Work on natural gas systems may only be performed by specially trained persons ⇒ Natural gas engines - General information; Rep. gr. 00 ; Safety briefing/employee qualification .

– Gas tank must be closed manually on vehicles with natural gas systems if gas can be head escaping and smelt ⇒ Fuel supply system - g-tron; Rep. gr. 20 ; Fuel tanks; Closing fuel tank shut-off valves mechanically .

Danger to life and risk of explosion due to ignition sources

Risk of explosion due to ignition sources near natural gas systems - risk of death! Escaping natural gas may ignite and cause an explosion. Danger of severe or fatal injuries due to explosion.

– Keep any ignition sources away from the vicinity of natural gas systems.

Risk of explosion due to flammable natural gas - risk of death!

Risk of explosion due to static discharge near natural gas systems - risk of death! Escaping natural gas may ignite and cause an explosion. Danger of severe or fatal injuries due to explosion.

– Wear protective clothing consisting of at least 35% cotton.

– Wear protective gloves consisting of at least 35% cotton.

– Wear safety shoes with ESD protection.

Risk of injury due to high pressure

Uncontrolled gas escape may occur under high pressure. Danger of frostbite to hands and other parts of the body.

– Dissipate high pressure in natural gas system before performing work on natural gas system ⇒ Fuel supply system - g-tron; Rep. gr. 20 ; Fuel tanks; Dissipating pressure in natural gas high-pressure pipe .

– Check for leaks after performing work on the natural gas system.

1.4 Safety precautions when working on vehicles with start/stop system

Risk of injury - engine may start unexpectedly

The engine can start unexpectedly if the vehicle's start/stop system is activated. A message in the instrument cluster indicates whether the start/stop system is activated.

– To deactivate the start/stop system, switch off the ignition.

Protected by copyright. Copying for private or commercial purposes, in part or in whole, is not permitted unless authorised by AUDI AG. AUDI AG does not guarantee or accept any liability with respect to the correctness of information in this document. Copyright by AUDI AG.

1.5 Safety precautions when using testers and measuring instruments during a road test

Risk of injury if test equipment is not secured

If an accident occurs and the front passenger's airbag is triggered, test equipment which is not secured adequately may be catapulted through the vehicle with potentially serious consequences.

– Secure test equipment on the rear seat.

Or:

– Have a second mechanic operate test equipment on the rear seat.

1.6 Safety precautions when working on the cooling system

Risk of scalding as hot coolant can escape

The cooling system is under pressure when the power unit is hot.
Risk of scalding due to hot steam and hot coolant.

– Put on protective gloves.

– Put on safety goggles.

– Cover filler cap on expansion tank with a cloth and open carefully to release pressure.

Protected by copyright. Copying for private or commercial purposes, in part or in whole, is not permitted unless authorised by AUDI AG. AUDI AG does not guarantee or accept any liability with respect to the correctness of information in this document. Copyright by AUDI AG.

2 Repair notes

⇒ “2.1 Routing and attaching lines and wiring”, page 5

⇒ “2.2 Contact corrosion”, page 5

⇒ “2.3 Bonding surfaces for adhesive strips ”, page 5

⇒ “2.4 Self-locking bolts”, page 5

⇒ “2.5 Identification plates”, page 5

2.1 Routing and attaching lines and wiring

Make sketches or take photographs when unfastening or removing and installing hydraulic and pneumatic lines or electrical wires. This ensures that you can re-install them at the original location.

2.2 Contact corrosion

Contact corrosion can occur if unsuitable fasteners are used (e.g. bolts, nuts, washers, etc.).

For this reason, only fasteners with a special surface coating are fitted.

In addition, all rubber or plastic parts and all adhesives are made of non-conductive materials.

Always install new parts as listed in the Electronic parts catalogue if you are not sure whether used parts can be refitted.

Protected by copyright. Copying for private or commercial purposes, in part or in whole, is not permitted unless authorised by AUDI AG. AUDI AG does not guarantee or accept any liability with respect to the correctness and completeness of this document. Copyright by AUDI AG.

Please note:

- We recommend using only genuine replacement parts: these have been fully tested and are compatible with aluminium.
- We recommend using Audi Genuine Accessories.
- Damage caused by contact corrosion is not covered by the warranty.

2.3 Bonding surfaces for adhesive strips

- The vehicle must be at room temperature before fitting e.g. self-adhesive covers or door seals with adhesive strips etc.
- Bonding surfaces on the body must be free of dust and grease.
- Clean bonding surfaces with cleaning solution - D 009 401 04- .
- Apply primer - D 355 205 A2- to bonding surfaces using applicator - D 009 500 25- and allow to flash off.
- Heat bonding surfaces with a hot air blower to approx. 40°C.
- After installation, press covers attached with adhesive strips on again using a roller.
- Subsequently, check that components are attached securely by pulling them with your hand.

2.4 Self-locking bolts

If bolts secured with microencapsulation have been removed, they must be renewed, and the threaded holes must be cleaned with a suitable tap.

2.5 Identification plates

When renewing vehicle components, the identification plates on the old parts that have a replacement part number (see ⇒ Elec-

tronic parts catalogue) must be attached to the new parts due to approval regulations.

Protected by copyright. Copying for private or commercial purposes, in part or in whole, is not permitted unless authorised by AUDI AG. AUDI AG does not guarantee or accept any liability with respect to the correctness of information in this document. Copyright by AUDI AG.

50 – Body - front

1 Lock carrier

⇒ "1.1 Exploded view - lock carrier", page 7

⇒ "1.2 Removing and installing lock carrier", page 9

⇒ "1.3 Removing and installing cover for arrester", page 21

⇒ "1.4 Removing and installing air duct for radiator", page 22

⇒ "1.5 Removing and installing air duct - vehicles with manual gearbox", page 22

1.1 Exploded view - lock carrier

Exploded view - lock carrier ⇒ page 7

Exploded view - cowl for manual gearbox, equipment version ⇒ page 8

Protected by copyright. Copying for private or commercial purposes, in part or in whole, is not permitted unless authorised by AUDI AG. AUDI AG does not guarantee or accept any liability with respect to the correctness of information in this document. Copyright by AUDI AG.

Exploded view - lock carrier

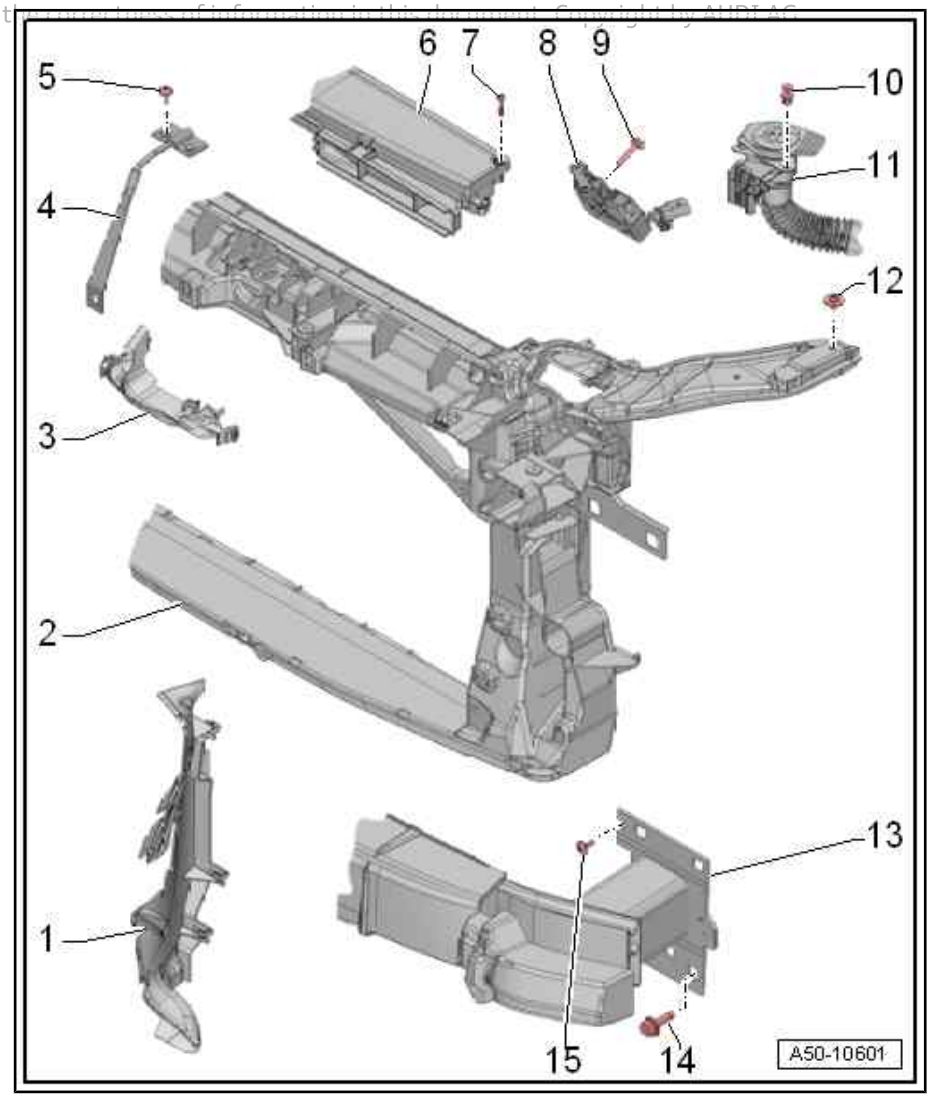

1 - Cowl
- ❑ For radiator
- ❑ Removing and installing ⇒ page 22

2 - Lock carrier
- ❑ Removing and installing ⇒ page 9

3 - Cover
- ❑ For arrester
- ❑ Removing and installing ⇒ page 21

4 - Retaining bracket
- ❑ For bonnet release lever

5 - Bolt
- ❑ 3x
- ❑ Tightening torque ⇒ page 52

6 - Cowl
- ❑ For air cleaner housing

7 - Bolt
- ❑ Tightening torque ⇒ Rep. gr. 23 ; Air cleaner; Exploded view - air cleaner housing or ⇒ Rep. gr. 24 ; Air cleaner; Exploded view - air cleaner housing

8 - Bonnet lock

9 - Bolt
- ❑ Bolt, 2x
- ❑ Tightening torque ⇒ page 52

10 - Fastener

11 - Filler neck

- ❑ For washer fluid reservoir
- ❑ Different versions

12 - Bolt

- ❑ 10 Nm

13 - Impact bar

- ❑ Exploded view ⇒ page 211

14 - Bolt

- ❑ 4x
- ❑ Tightening torque ⇒ page 211

15 - Bolt

- ❑ Tightening torque ⇒ page 211

Protected by copyright. Copying for private or commercial purposes, in part or in whole, is not permitted unless authorised by AUDI AG. AUDI AG does not guarantee or accept any liability with respect to the correctness of information in this document. Copyright by AUDI AG.

Exploded view - cowl for manual gearbox, equipment version

1 - Bolt

- ❑ 4 Nm

2 - Cowl

- ❑ For manual gearbox
- ❑ Removing and installing ⇒ page 22

3 - Lock carrier

4 - Nut

- ❑ 16 Nm

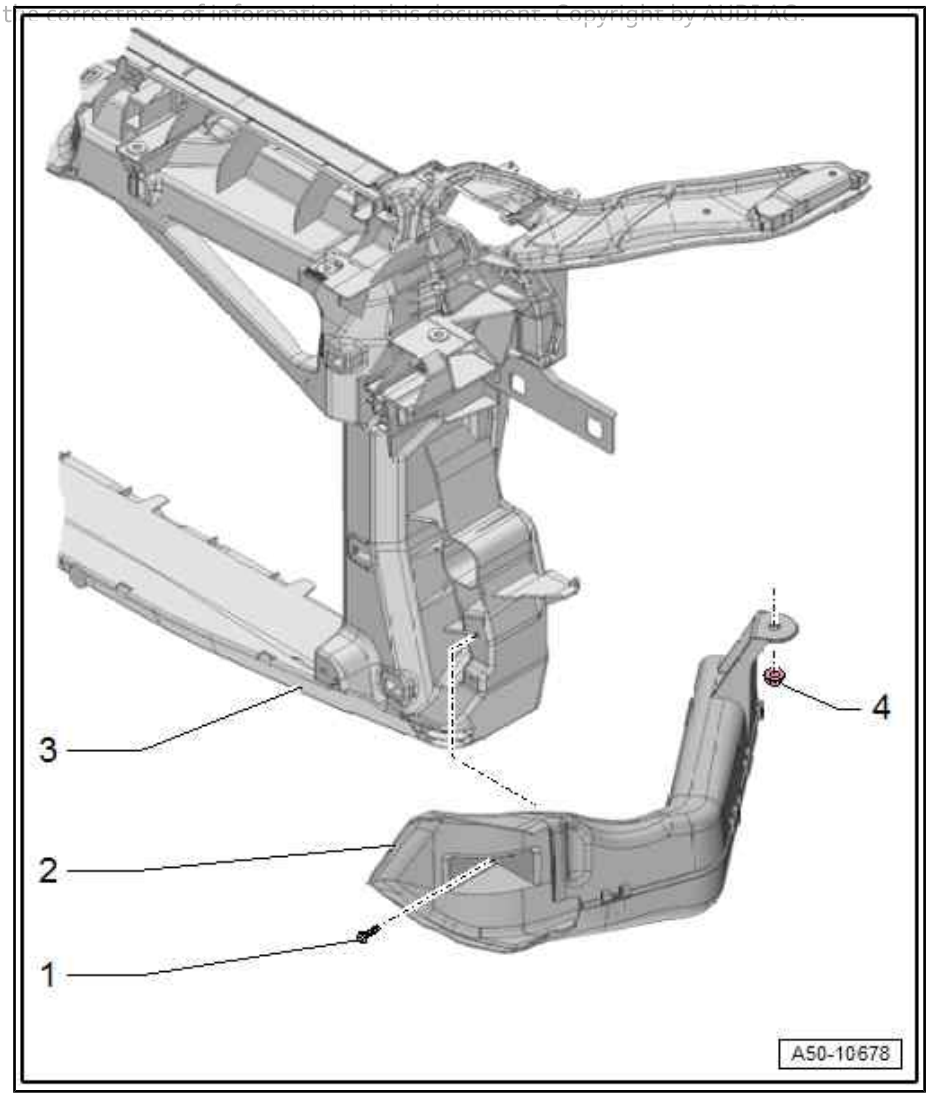

1.2 Removing and installing lock carrier

⇒ "1.2.1 Removing and installing lock carrier - vehicles without high-voltage system", page 9

⇒ "1.2.2 Removing and installing lock carrier - vehicles with high-voltage system", page 15

⇒ "1.2.3 Removing and installing lock carrier - RS 3", page 19

1.2.1 Removing and installing lock carrier - vehicles without high-voltage system

- A second mechanic is required to perform this step (as described on ⇒ page 15).

Special tools and workshop equipment required

♦ Engine bung set - VAS 6122-

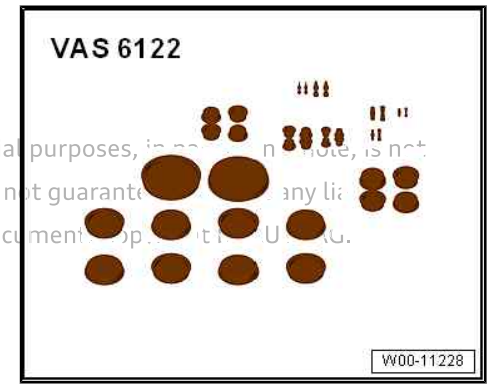

Protected by copyright. Copying for private or commercial purposes, in part or in whole, is not permitted unless authorised by AUDI AG. AUDI AG does not guarantee or assume any liability with respect to the correctness of information in this document. Copyright by AUDI AG.

♦ Hose clip pliers - VAS 6362-

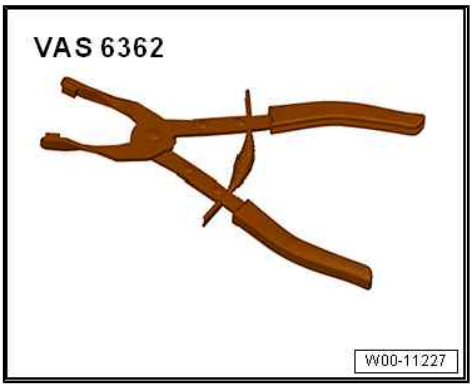

Removing

– Discharge refrigerant circuit ⇒ Air conditioner with refrigerant R134a .

– Detach refrigerant lines from condenser ⇒ Heating, air conditioning; Rep. gr. 87 ; Refrigerant circuit; Detaching and attaching refrigerant lines at condenser .

– Drain coolant ⇒ Rep. gr. 19 ; Cooling system/coolant; Draining and filling cooling system .

– Remove headlight ⇒ Electrical system; Rep. gr. 94 ; Headlights; Removing and installing headlights .

– Unplug electrical connector -arrow-.

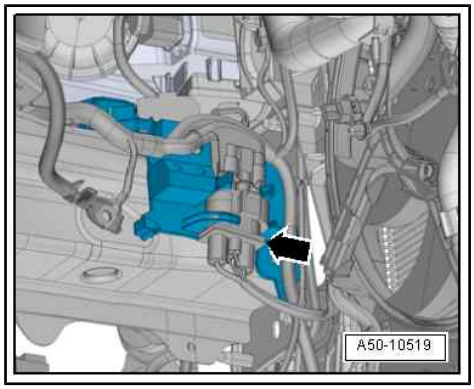

Vehicles with 1.4 ltr. TFSI engine:

– Lift retaining clip -arrow- and disconnect coolant hose (top right) from water radiator for charge air cooling circuit.

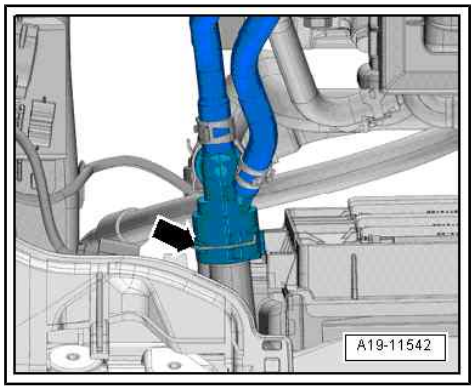

– Unfasten hose clip -1- and detach air hose.
– Unscrew bolt -2- (left and right).
– Unclip cowl at lock carrier and detach.

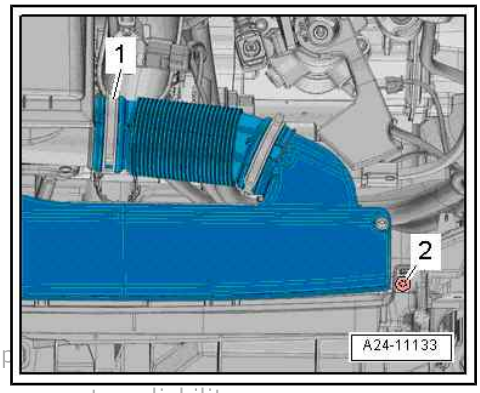

Protected by copyright. Copying for private or commercial purposes, in p
permitted unless authorised by AUDI AG. AUDI AG does not guarantee or accept any liability
with respect to the correctness of information in this document. Copyrig

Vehicles with 1.8 ltr./2.0 ltr. TFSI engine:

– Unfasten hose clip -2- and detach air hose (left-side) from charge air cooler.
– Seal open lines and connections with clean plugs from engine bung set - VAS 6122- .

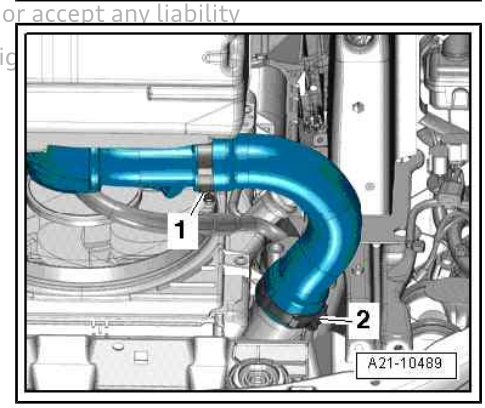

– Unfasten hose clip -1- and detach air hose (right-side) from charge air cooler.
– Seal open lines and connections with clean plugs from engine bung set - VAS 6122- .

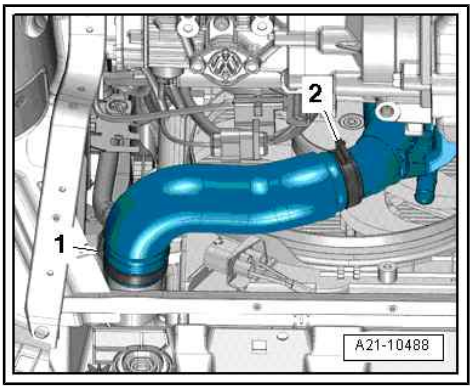

Vehicles with 1.6 ltr./2.0 ltr. TDI engine:

– Version 1: Lift retaining clip -arrow- and disconnect coolant hose (top right) from water radiator for charge air cooling circuit.

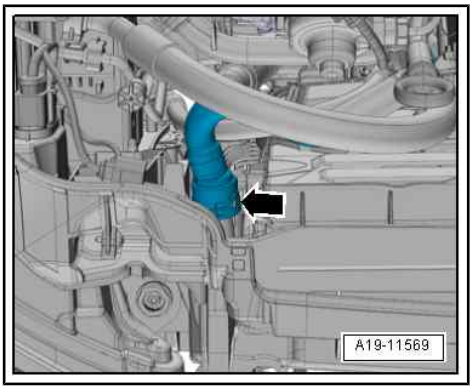

– Version 2: Lift retaining clip -2- and disconnect coolant hose (bottom right) from water radiator for charge air cooling circuit.
– Move coolant hose -1- clear at retainer.

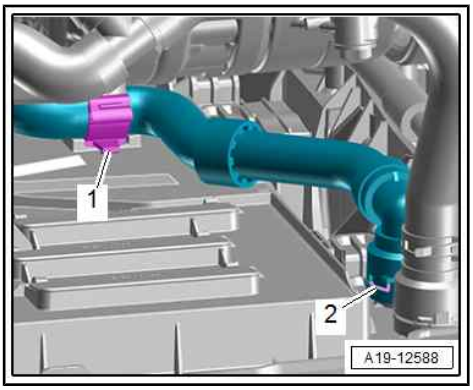

Vehicles with 1.8 ltr./2.0 ltr. TFSI engine or 1.6 ltr./2.0 ltr. TDI engine:

– Remove bolts -1, 3-.
– Release catches -arrow- and detach cover -2-.

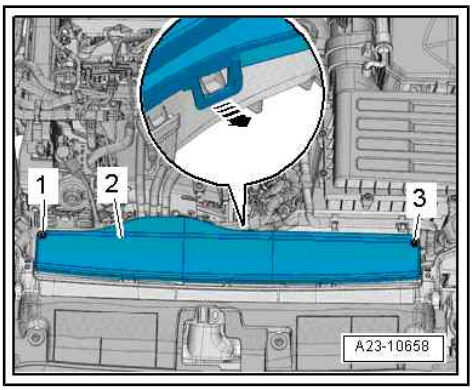

Protected by copyright. Copying for private or commercial purposes, in part or in whole, is not permitted unless authorised by AUDI AG. AUDI AG does not guarantee or accept any liability with respect to the correctness of information in this document. Copyright by AUDI AG.

– Move coolant hose -2- clear.
– Release catches -arrows- and detach cowl (top section) -1-.

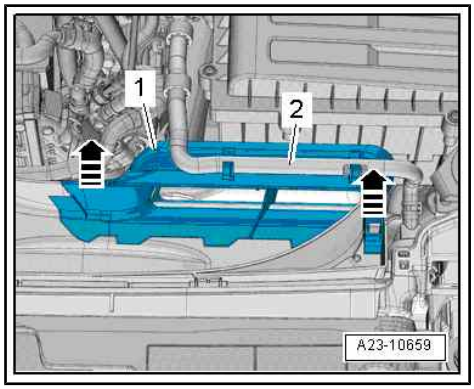

– Unscrew bolt -arrow- (left and right).
– Unclip and detach cowl (bottom section) -1-.

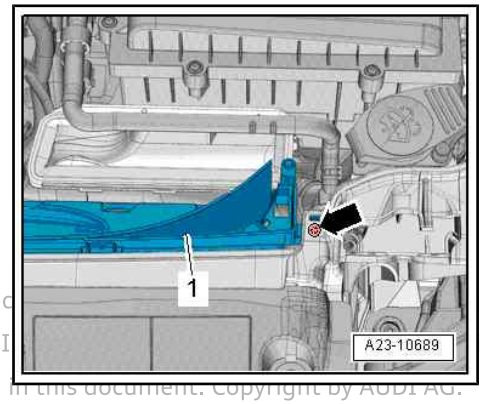

Protected by copyright. Copying for private or c s not
permitted unless authorised by AUDI AG. AUDI lity
with respect to the correctness of information in this document. Copyright by AUDI AG.

Vehicles with 2.5 ltr. TFSI engine:

– Unfasten hose clip -1- and detach air hose.

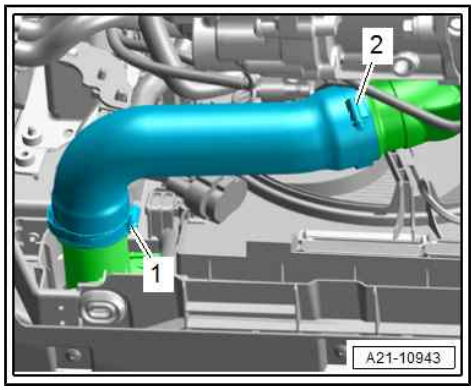

– Release hose clip -arrow- and disconnect air hose.

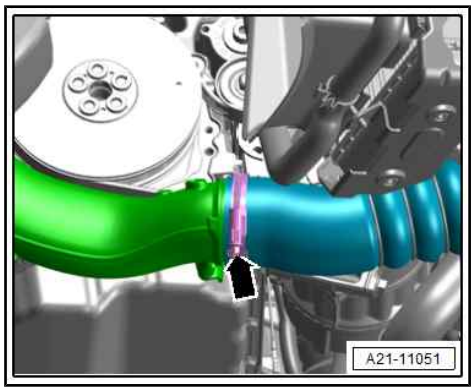

– Release hose clips -1, 2, 3- and disconnect coolant hoses.

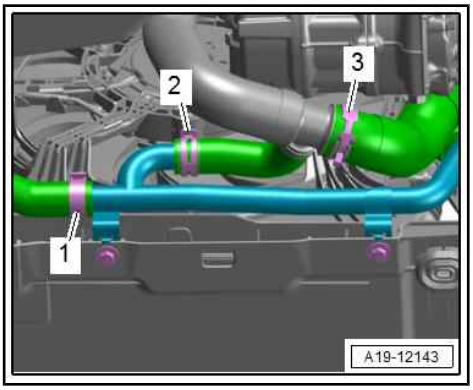

– Remove bolts -arrows- and detach air duct -1-.

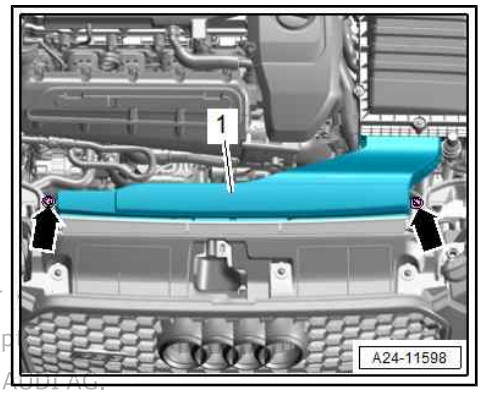

Protected by copyright. Copying for private or commercial purposes, in part or
permitted unless authorised by AUDI AG. AUDI AG does not guarantee or accep
with respect to the correctness of information in this document. Copyright by AUDI AG.

– Remove bolts -2-.
– Release hose clips -arrows- and disconnect coolant hoses.
– Detach coolant pipes -1- from radiator cowl.

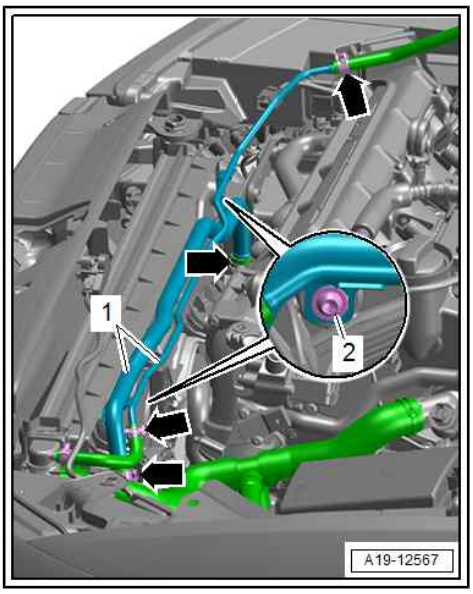

– Remove bolt -arrow- and push coolant hose towards rear.

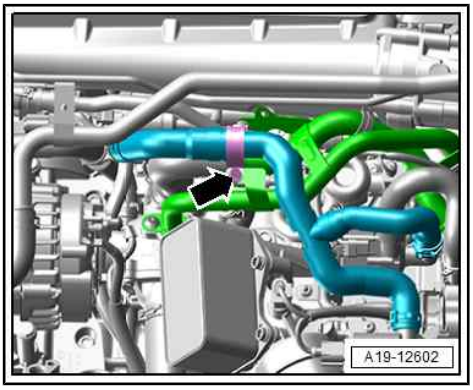

All vehicles (continued):

– Lift retaining clip -arrow- and disconnect coolant hose (top left) from radiator.

– Unplug electrical connectors at bonnet locks (left and right) and move clear.

– Detach bonnet lock cable at coupling unit and move clear at lock carrier ⇒ page 39 .

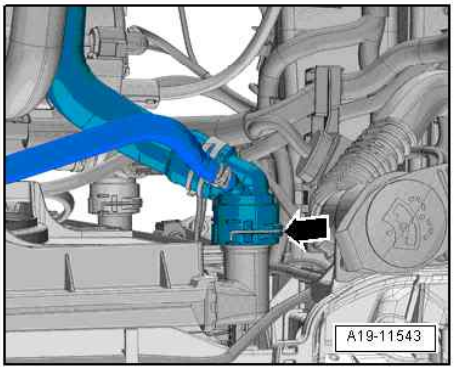

> ⚠ **WARNING**
>
> ***It is possible to trigger pyrotechnic components unintentionally.***
>
> ***Risk of injury***
>
> - ***Discharge static electricity by briefly touching door striker plate.***

– Unplug electrical connector -1- at crash sensor -3-.

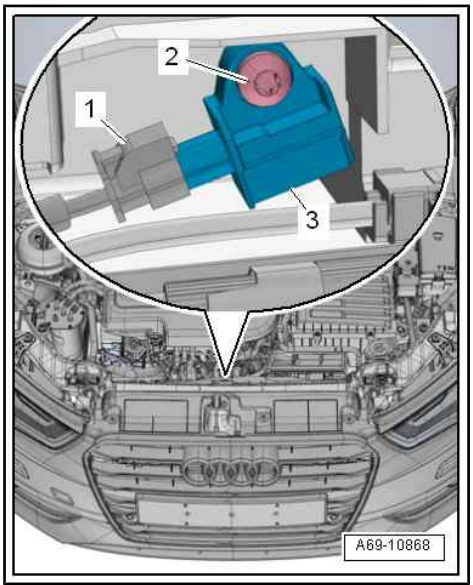

– To do so, pull out and press down connector locking element -2- -arrow- and unplug electrical connector -1- at crash sensor.

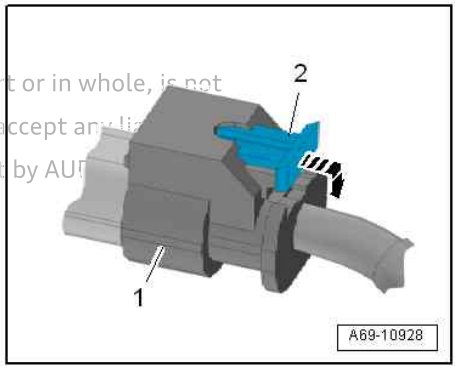

Protected by copyright. Copying for private or commercial purposes, in part or in whole, is not permitted unless authorised by AUDI AG. AUDI AG does not guarantee or accept any liability with respect to the correctness of information in this document. Copyright by AUDI AG.

– Unplug electrical connector -1- at ambient temperature sensor - G17- -item 3-.
– If fitted, unplug electrical connector for adaptive cruise control unit.
– Move electrical wiring harness clear.

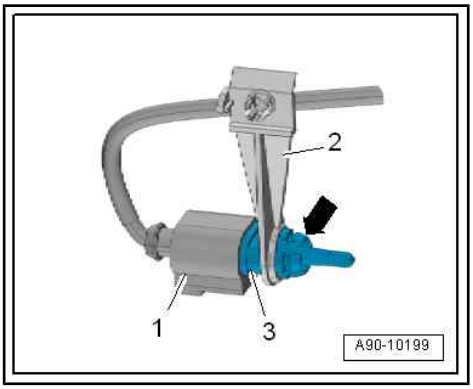

– Unscrew bolt -arrow- (left and right).

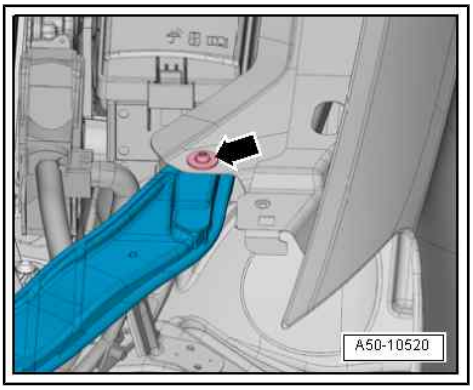

– Unscrew bolt -2- and detach horn with bracket.
– Have a second mechanic hold lock carrier in position and unscrew bolts
-arrows-.
– Detach lock carrier with the help of a second mechanic.
– If lock carrier is to be renewed, also remove the following components:

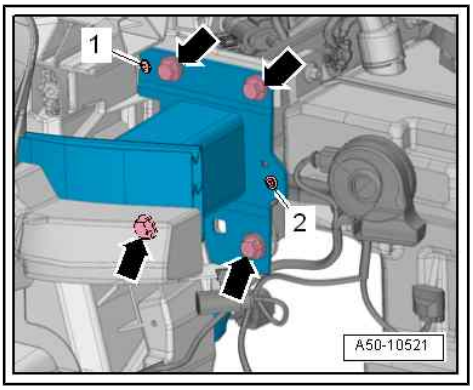

♦ Condenser ⇒ Rep. gr. 87 ; Refrigerant circuit; Removing and installing condenser
♦ Impact bar ⇒ page 223
♦ Bonnet lock ⇒ page 52

Protected by copyright. Copying for private or commercial purposes, in part or in whole, is not permitted unless authorised by AUDI AG. AUDI AG does not guarantee or accept any liability with respect to the correctness of information. Copyright by AUDI AG.

Installing

Installation is carried out in reverse order, note the following:

– Fill with coolant ⇒ Rep. gr. 19 ; Cooling system/coolant; Draining and filling cooling system .

Tightening torques

♦ ⇒ “1.1 Exploded view - lock carrier”, page 7
♦ ⇒ “1.2.1 Exploded view - impact bar, A3 without high-voltage system”, page 211
♦ ⇒ Rep. gr. 21 ; Charge air system; Exploded view - hose connections for charge air system
♦ ⇒ Electrical system; Rep. gr. 90 ; Horn; Exploded view - horn
♦ ⇒ Heating, air conditioning; Rep. gr. 87 ; Refrigerant circuit

1.2.2 Removing and installing lock carrier - vehicles with high-voltage system

• Observe safety precautions ⇒ page 1 .

- A second mechanic is required to perform this step (as described on ⇒ page 18).

Removing

– De-energise high-voltage system ⇒ 4-cylinder direct injection engine (1.2 ltr., 1.4 ltr. 4-valve TFSI EA 211); Rep. gr. 93 ; De-energising high-voltage system .

– Remove charging socket ⇒ Rep. gr. 93 ; Charging socket; Exploded view - charging socket .

– Discharge refrigerant circuit ⇒ Air conditioner with refrigerant R134a .

– Detach refrigerant lines from condenser ⇒ Heating, air conditioning; Rep. gr. 87 ; Refrigerant circuit; Detaching and attaching refrigerant lines at condenser .

– Drain coolant ⇒ Rep. gr. 19 ; Cooling system/coolant; Draining and filling cooling system .

– Remove headlight ⇒ Electrical system; Rep. gr. 94 ; Headlights; Removing and installing headlights .

– Unplug electrical connector -arrow-.

Protected by copyright. Copying for private or commercial purposes, in
permitted unless authorised by AUDI AG. AUDI AG does not guarantee
with respect to the correctness of information in this document. Copyr

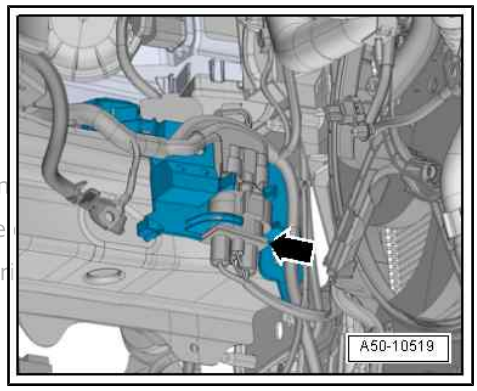

– Lift retaining clip -arrow- and disconnect coolant hose (top right) from water radiator for charge air cooling circuit.

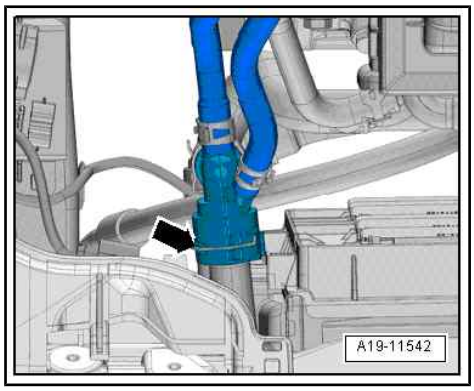

– Unfasten hose clip -1- and detach air hose.

– Unscrew bolt -2- (left and right).

– Unclip cowl at lock carrier and detach.

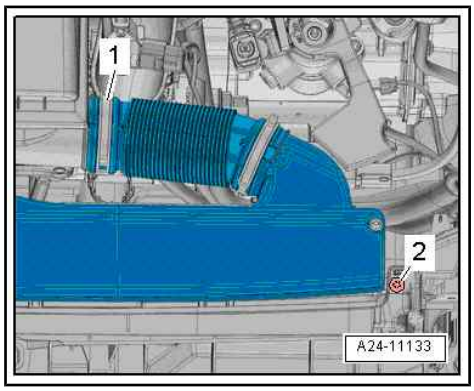

– Lift retaining clip -arrow- and disconnect coolant hose (top left) from radiator.
– Unplug electrical connectors at bonnet locks (left and right) and move clear.
– Detach bonnet lock cable at coupling unit and move clear at lock carrier ⇒ page 39 .

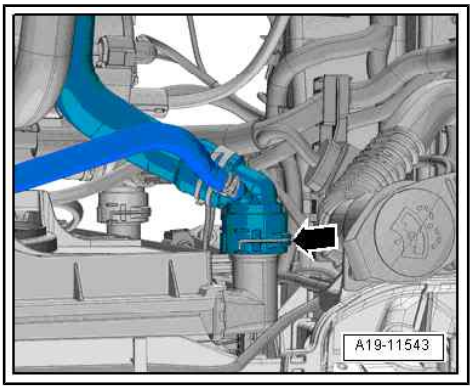

WARNING

It is possible to trigger pyrotechnic components unintentionally.

Risk of injury

- *Discharge static electricity by briefly touching door striker plate.*

– Unplug electrical connector -1- at crash sensor -3-.

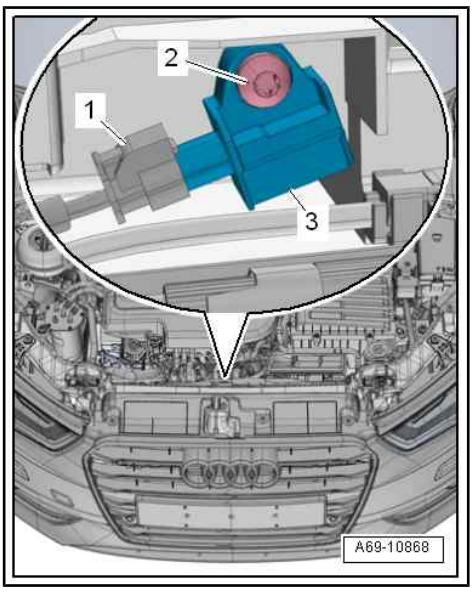

– To do so, pull out and press down connector locking element -2- -arrow- and unplug electrical connector -1- at crash sensor.

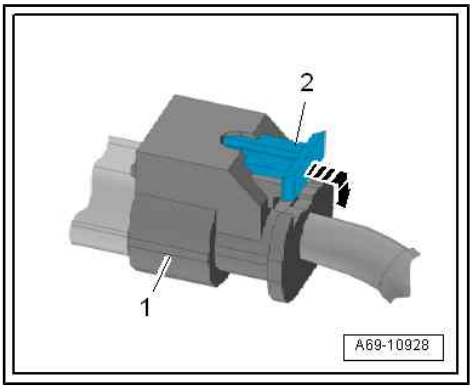

Protected by copyright. Copying for private or commercial purposes, in part or in whole, is not permitted unless authorised by AUDI AG. AUDI AG does not guarantee or accept any liability with respect to the correctness of information in this document. Copyright by AUDI AG.

– Unplug electrical connector -1- at ambient temperature sensor - G17- -item 3-.

– Move electrical wiring harness clear at lock carrier.

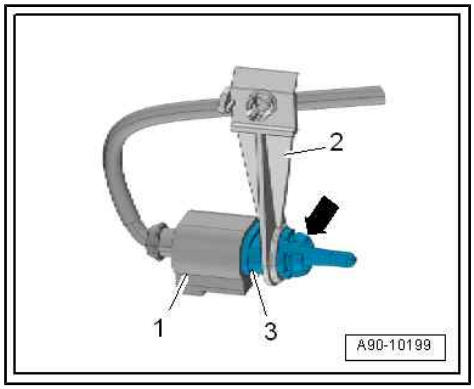

Protected by copyright. Copying for private or commer
permitted unless authorised by AUDI AG. AUDI AG doe
with respect to the correctness of information in this c

– Unscrew bolt -arrow- (left and right).

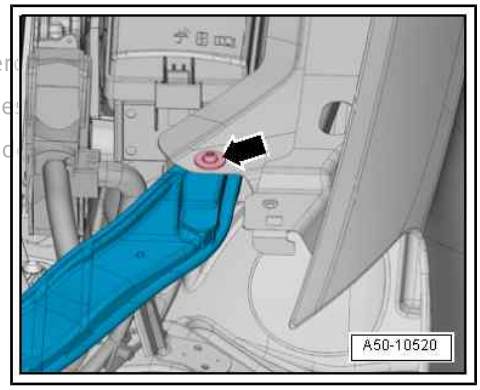

– Unscrew bolt -2- and detach horn with bracket.

– Have a second mechanic hold lock carrier in position and unscrew bolts -arrows-.

– Detach lock carrier with the help of a second mechanic.

– If lock carrier is to be renewed, also remove the following components:

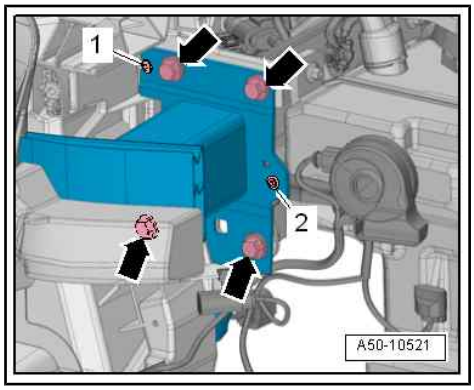

♦ Condenser ⇒ Rep. gr. 87 ; Refrigerant circuit; Removing and installing condenser

♦ Impact bar ⇒ page 224

♦ Bonnet lock ⇒ page 52

Installing

Installation is carried out in reverse order; note the following:

– Fill with coolant ⇒ Rep. gr. 19 ; Cooling system/coolant; Draining and filling cooling system .

– Re-energise high-voltage system ⇒ Rep. gr. 93 ; Re-energising high-voltage system .

Tightening torques

♦ ⇒ “1.1 Exploded view - lock carrier”, page 7

♦ ⇒ “1.2.2 Exploded view - impact bar, vehicles with high-voltage system”, page 212

♦ ⇒ Electrical system; Rep. gr. 90 ; Horn; Exploded view - horn

♦ ⇒ Heating, air conditioning; Rep. gr. 87 ; Refrigerant circuit

♦ ⇒ Rep. gr. 21 ; Charge air system; Exploded view - hose connections for charge air system

1.2.3 Removing and installing lock carrier - RS 3

- A second mechanic is required to perform this step (as described on ⇒ page 21).

Special tools and workshop equipment required

♦ Engine bung set - VAS 6122-

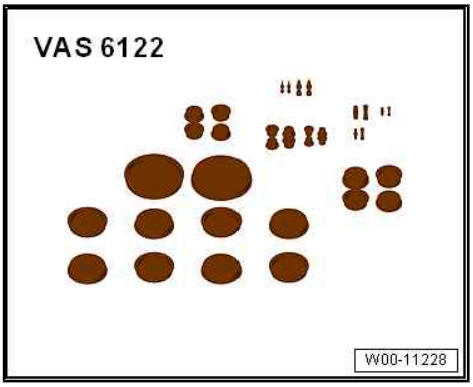

Removing

– Remove radiator ⇒ Rep. gr. 19 ; Radiator/radiator fans; Removing and installing radiator .

– Remove headlight ⇒ Electrical system; Rep. gr. 94 ; Headlights; Removing and installing headlights .

– Unfasten hose clip -2- and detach air hose (left-side) from charge air cooler.

– Seal open lines and connections with clean plugs from engine bung set - VAS 6122- .

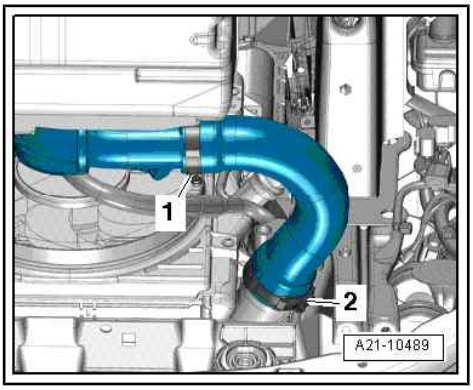

– Unfasten hose clip -1- and detach air hose (right-side) from charge air cooler.

– Seal open lines and connections with clean plugs from engine bung set - VAS 6122- .

– Unplug electrical connectors at bonnet locks (left and right) and move clear.

– Detach bonnet lock cable at coupling unit and move clear at lock carrier ⇒ page 39 .

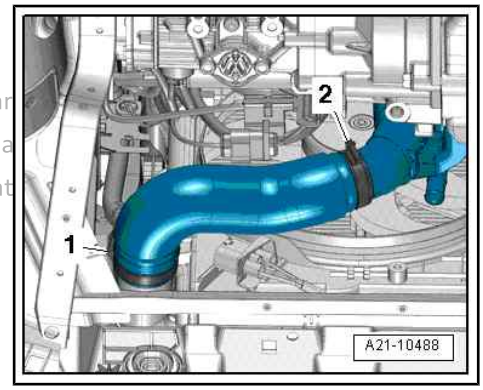

Protected by copyright. Copying for private or commercial purposes, in part or in whole, is not permitted unless authorised by AUDI AG. AUDI AG does not guarantee or assume any liability with regard to the correctness of information in this document. Copyright by AUDI AG.

> ⚠ **WARNING**
>
> *It is possible to trigger pyrotechnic components unintentionally.*
>
> *Risk of injury*
>
> - *Discharge static electricity by briefly touching door striker plate.*

– Unplug electrical connector -1- at crash sensor -3-.

Protected by copyright. Copying for private or commercial purposes, permitted unless authorised by AUDI AG. AUDI AG does not guarante with respect to the correctness of information in this document. Cop

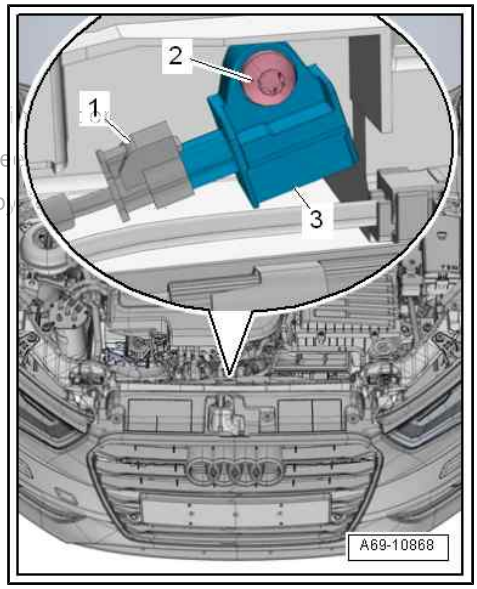

– To do so, pull out and press down connector locking element -2- -arrow- and unplug electrical connector -1- at crash sensor.

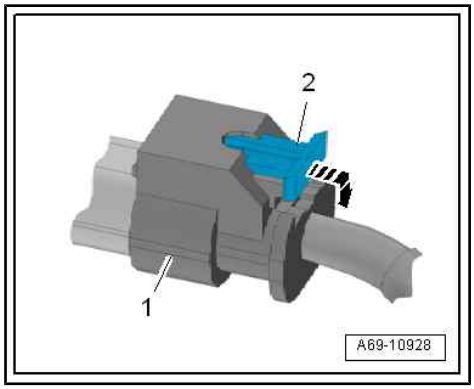

– Unplug electrical connector -1- at ambient temperature sensor - G17- -item 3-.
– Move electrical wiring harness clear.
– Vehicles with adaptive cruise control: Unplug electrical connector and move wiring harness clear.

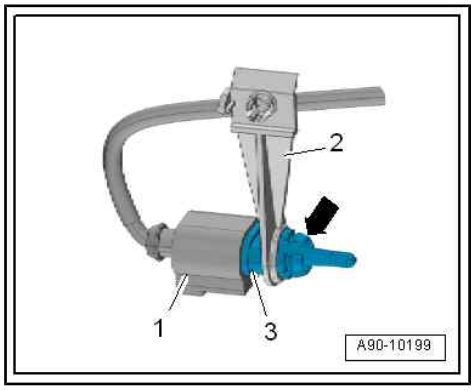

– Unscrew bolt -arrow- (left and right).

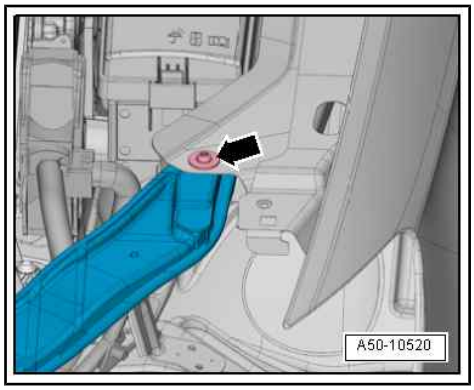

– Unscrew bolt -2- and detach horn with bracket.

– Have a second mechanic hold lock carrier in position and unscrew bolts
-arrows-.

– Detach lock carrier with the help of a second mechanic.

– If lock carrier is to be renewed, also remove the following components:

♦ Impact bar ⇒ page 223

♦ Bonnet lock ⇒ page 52

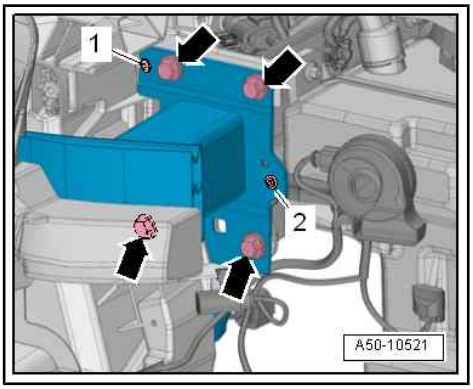

Installing

Installation is carried out in reverse sequence.

Tightening torques

♦ ⇒ “1.1 Exploded view - lock carrier”, page 7

♦ ⇒ “1.2.1 Exploded view - impact bar, A3 without high-voltage system”, page 211

♦ ⇒ Rep. gr. 21 ; Charge air system; Exploded view - hose connections for charge air system

♦ ⇒ Electrical system; Rep. gr. 90 ; Horn; Exploded view - horn

1.3 Removing and installing cover for arrester

⇒ “1.3.1 Removing and installing cover for arrester - vehicles without high-voltage system”, page 21

⇒ “1.3.2 Removing and installing cover for arrester - vehicles with high-voltage system”, page 21

1.3.1 Removing and installing cover for arrester - vehicles without high-voltage system

Protected by copyright. Copying for private or commercial purposes, in part or in whole, is not permitted unless authorised by AUDI AG. AUDI AG does not guarantee or accept any liability with respect to the correctness of information in this document. Copyright by AUDI AG.

Removing

– Remove bumper cover (front) ⇒ page 214 .

– Release retaining tabs -arrows-.

– Detach cover -1-.

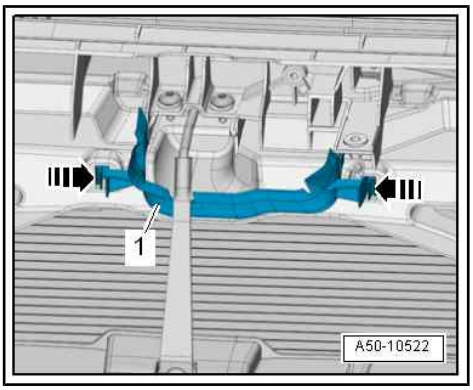

Installing

Installation is carried out in reverse sequence.

1.3.2 Removing and installing cover for arrester - vehicles with high-voltage system

• Observe safety precautions ⇒ page 1 .

Removing

– Remove bumper cover (front) ⇒ page 214 .

– Release retaining tabs -arrows-.

– Detach cover -1-.

Installing

Installation is carried out in reverse sequence.

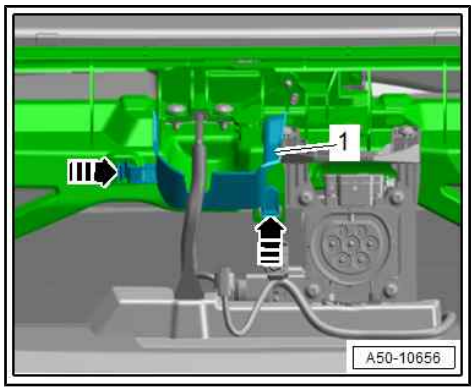

1.4 Removing and installing air duct for radiator

• Observe safety precautions ⇒ page 1 .

Removing

– Remove bumper cover (front) ⇒ page 214 .

– Move electrical wiring harness -1- clear.

– Release retaining tabs -arrow-.

– Swivel cowl -2- towards centre of vehicle and detach.

Protected by copyright. Copying for private or commercial purposes, in part or in whole, is not permitted unless authorised by AUDI AG. AUDI AG [illegible] y with respect to the correctness of information in t

Installing

Installation is carried out in reverse sequence.

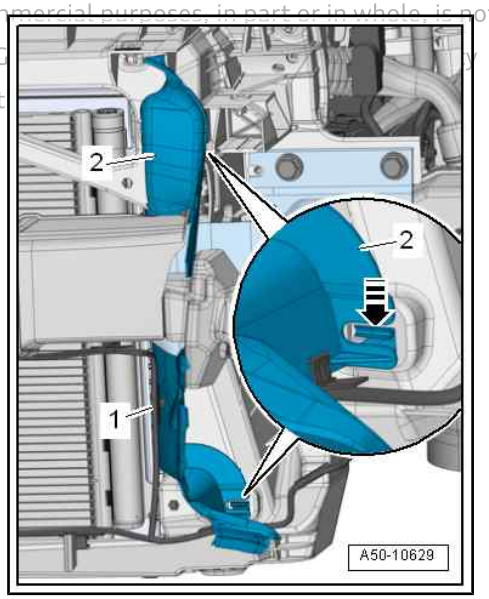

1.5 Removing and installing air duct - vehicles with manual gearbox

Removing

– Remove air intake grille ⇒ page 227 .

– Remove bolt -3-.
– Remove noise insulation ⇒ page 377 .
– Unscrew nut -1-.
– Take out air duct -2- towards rear.

Installing

Installation is carried out in reverse sequence.

Tightening torques

♦ ⇒ “1.1 Exploded view - lock carrier”, page 7 .

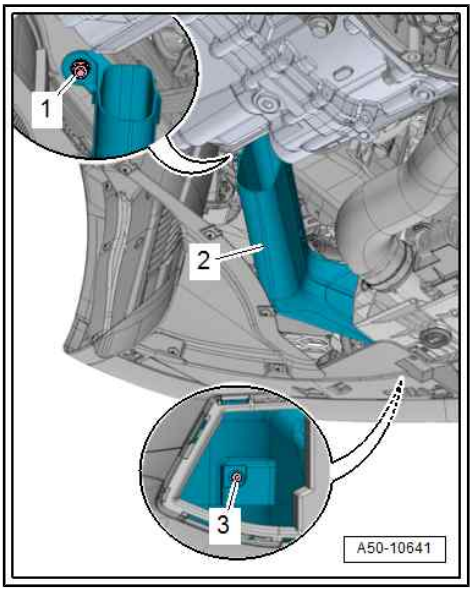

Protected by copyright. Copying for private or commercial purposes, in part or in whole, is not permitted unless authorised by AUDI AG. AUDI AG does not guarantee or accept any liability with respect to the correctness of information in this document. Copyright by AUDI AG.

2 Wing

⇒ “2.1 Exploded view - wing”, page 24
⇒ “2.2 Exploded view - brackets on wing (right-side)”, page 27
⇒ “2.3 Exploded view - repair set for wing”, page 28
⇒ “2.4 Removing and installing wing”, page 28
⇒ “2.5 Removing and installing wing panel brace”, page 31
⇒ “2.6 Removing and installing closure plate”, page 32

2.1 Exploded view - wing

⇒ “2.1.1 Exploded view - wing”, page 24
⇒ “2.1.2 Exploded view - wing, RS 3”, page 25

2.1.1 Exploded view - wing

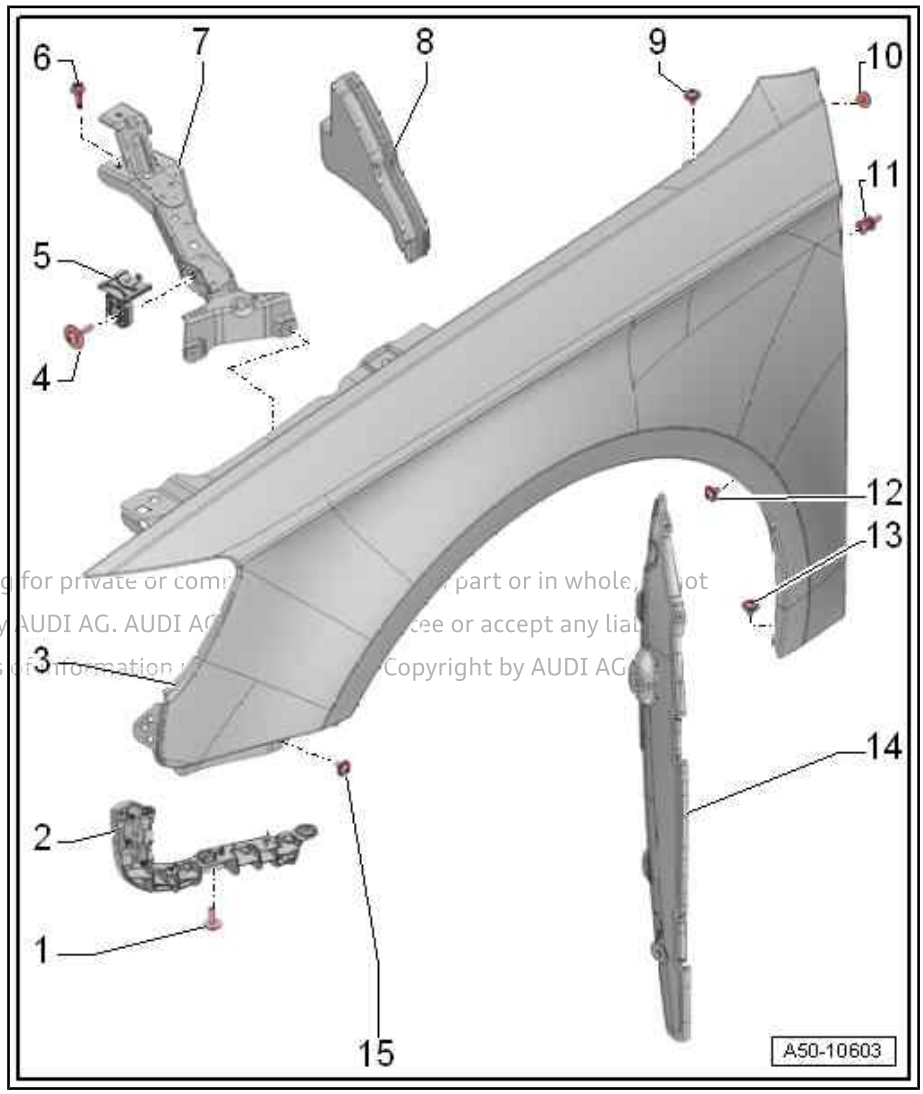

1 - Bolt
- ❑ Bolt, 2x
- ❑ 4.5 Nm

2 - Mounting
- ❑ For bumper cover
- ❑ For securing headlight
- ❑ Removing and installing ⇒ page 221

3 - Wing
- ❑ Removing and installing ⇒ page 28
- ❑ Exploded view - brackets on wing (right-side) ⇒ page 27
- ❑ Repair set ⇒ page 28

4 - Bolt
- ❑ Tightening torque ⇒ Electrical system; Rep. gr. 94 ; Headlights

Protected by copyright. Copying for private or com part or in whole, not permitted unless authorised by AUDI AG. AUDI AG cee or accept any liab with respect to the correctness of information Copyright by AUDI AG

5 - Mounting
- ❑ For headlight

6 - Bolt
- ❑ Bolt, 2x
- ❑ 8 Nm

7 - Bracket
- ❑ For wing
- ❑ Removing and installing ⇒ page 31

8 - Sealing piece
- ❑ Self-adhesive

9 - Bolt
- ❑ 3x
- ❑ 8 Nm

10 - Bolt
- ❑ 8 Nm

11 - Spreader rivet
- ❑ Bolt, 2x

12 - Bolt
- ❑ Bolt, 2x
- ❑ 8 Nm

13 - Bolt
- ❑ Bolt, 2x
- ❑ 8 Nm

14 - Closure plate
- ❑ Removing and installing ⇒ page 32

15 - Bolt
- ❑ Bolt, 2x
- ❑ 8 Nm

2.1.2 Exploded view - wing, RS 3

Protected by copyright. Copying for private or commercial purposes, in part or in whole, is not permitted unless authorised by AUDI AG. AUDI AG does not guarantee or accept any liability with respect to the correctness of information in this document. Copyright by AUDI AG

1 - Bolt
- ❑ 2 Nm

2 - Bolt
- ❑ Bolt, 2x
- ❑ 4.5 Nm

3 - Mounting
- ❑ For bumper cover
- ❑ For securing headlight
- ❑ Removing and installing ⇒ page 222

4 - Bolt
- ❑ Tightening torque ⇒ Electrical system; Rep. gr. 94 ; Headlights

5 - Mounting
- ❑ For headlight

6 - Bracket
- ❑ For wing
- ❑ Removing and installing ⇒ page 31

7 - Bolt
- ❑ Bolt, 2x
- ❑ 8 Nm

8 - Wing
- ❑ Removing and installing ⇒ page 28
- ❑ Exploded view - brackets on wing (right-side) ⇒ page 27

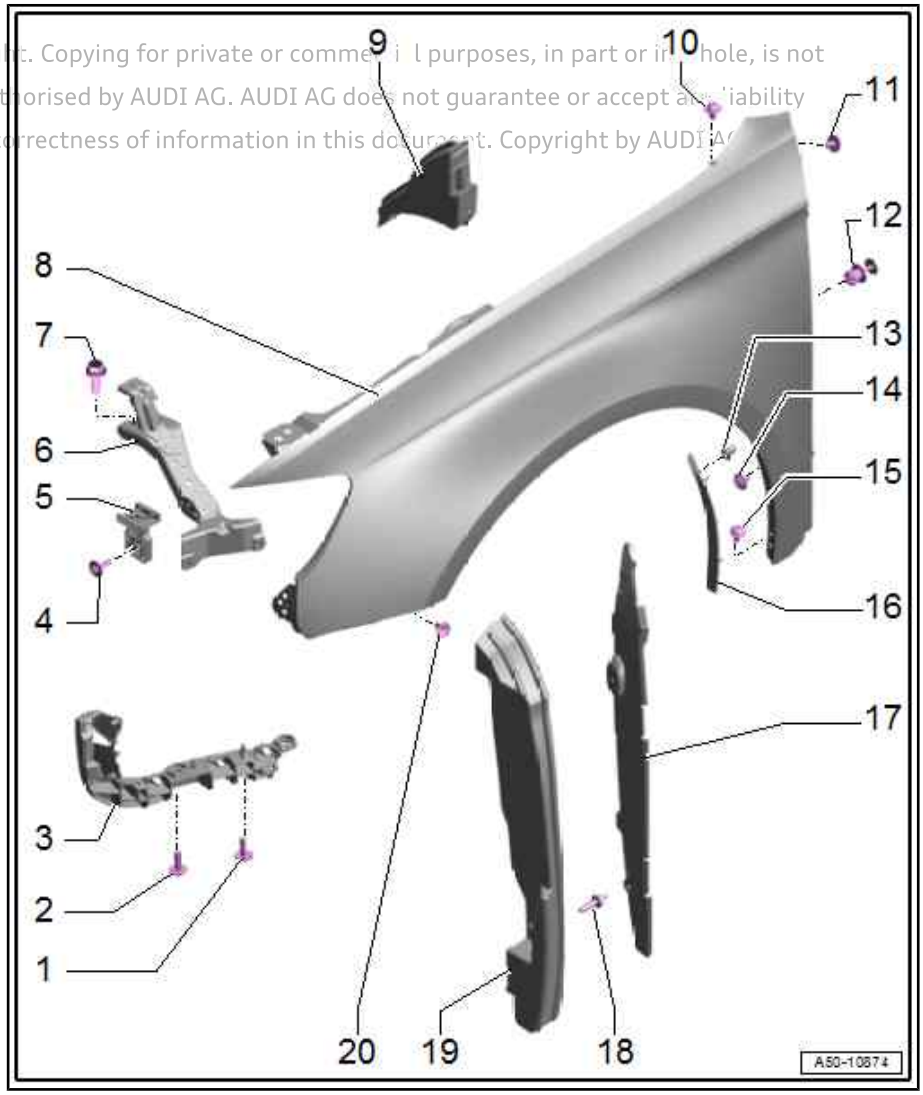

- ❑ Repair set
  ⇒ “2.3 Exploded view - repair set for wing”, page 28

9 - Sealing piece

- ❑ Self-adhesive
- ❑ Right side of vehicle only

10 - Bolt

- ❑ 3x
- ❑ 8 Nm

11 - Bolt

- ❑ 8 Nm

12 - Spreader rivet

- ❑ Bolt, 2x

13 - Grommet

- ❑ 3x

14 - Bolt

- ❑ 8 Nm

Protected by copyright. Copying for private or commercial purposes, in part or in whole, is not permitted unless authorised by AUDI AG. AUDI AG does not guarantee or accept any liability with respect to the correctness of information in this document. Copyright by AUDI AG.

15 - Bolt

- ❑ Bolt, 2x
- ❑ 8 Nm

16 - Cover

- ❑ For wheel housing liner
- ❑ Removing and installing ⇒ page 358

17 - Closure plate

- ❑ Removing and installing ⇒ page 32

18 - Centre hex stud

- ❑ 8 Nm

19 - Insulation

- ❑ For wing

20 - Bolt

- ❑ Bolt, 2x
- ❑ 8 Nm

2.2 Exploded view - brackets on wing (right-side)

Protected by copyright. Copying for private or commercial purposes, in part or in whole, is not permitted unless authorised by AUDI AG. AUDI AG does not guarantee or assume any liability with respect to the correctness of information in this document. ©AUDI AG.

1 - Bracket
- ❑ For wing
- ❑ Bottom
- ❑ Removing and installing ⇒ page 31

2 - Headlight retainer
- ❑ Depending on model version; refer to ⇒ Electronic parts catalogue

3 - Bolt
- ❑ Bolt, 2x
- ❑ Tightening sequence ⇒ page 27

4 - Bolt
- ❑ Bolt, 2x
- ❑ 8 Nm

5 - Wing
- ❑ Removing and installing ⇒ page 28

6 - Bolt
- ❑ Bolt, 2x
- ❑ 8 Nm

7 - Longitudinal member
- ❑ Right-side

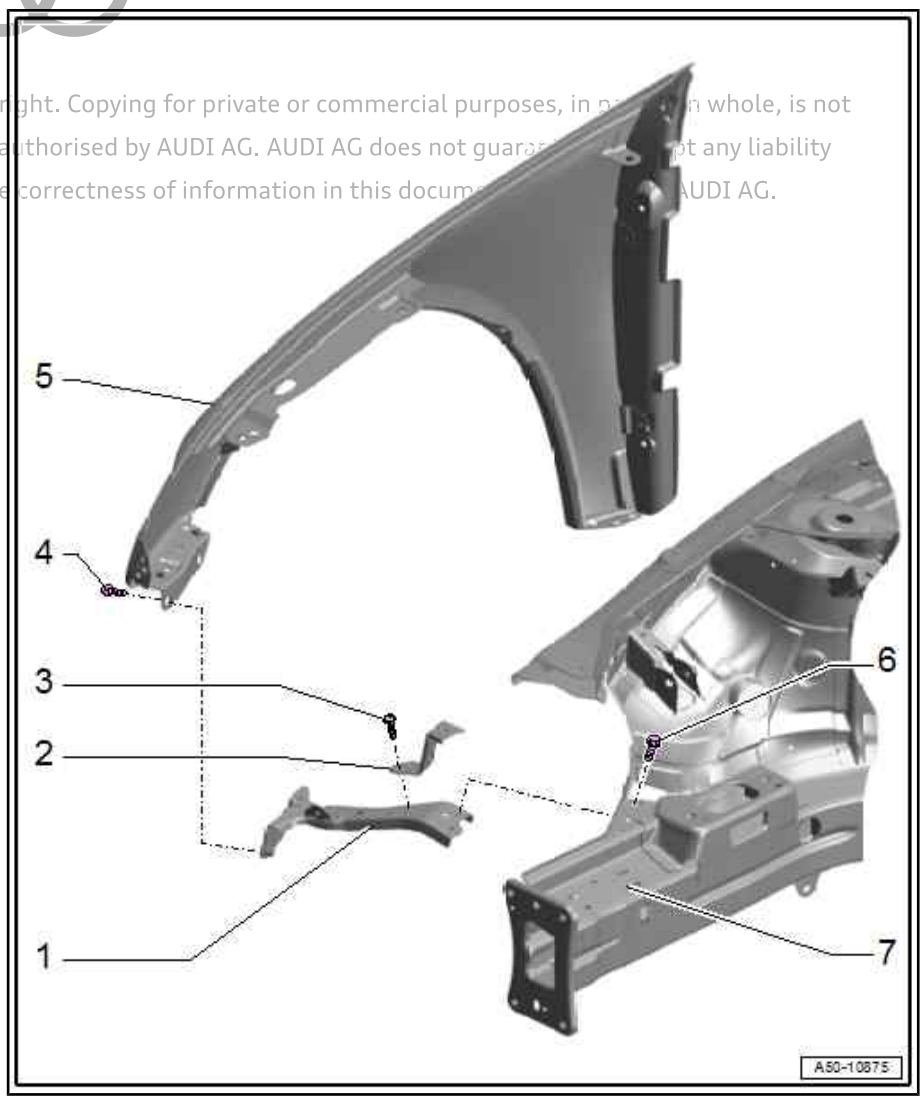

Headlight retainer - tightening torque and sequence

– Tighten bolts in stages in the sequence shown:

Stage	Bolts	Tightening torque
1.	-1-	Screw in by hand as far as stop
2.	-2-	8 Nm
3.	-1-	8 Nm

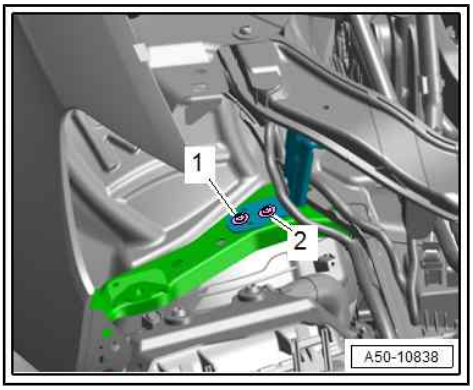

2.3 Exploded view - repair set for wing

1 - Bracket
- ❑ Front
- ❑ Preparing for installation ⇒ page 30

2 - Pop rivet
- ❑ 4x

3 - Wing
- ❑ Preparing for installation ⇒ page 30

4 - Bracket
- ❑ Rear
- ❑ Preparing for installation ⇒ page 30

5 - Pop rivet
- ❑ Bolt, 2x

6 - Reinforcement
- ❑ For wing
- ❑ Not on Saloon models

7 - Pop rivet
- ❑ 3x
- ❑ Not on Saloon models

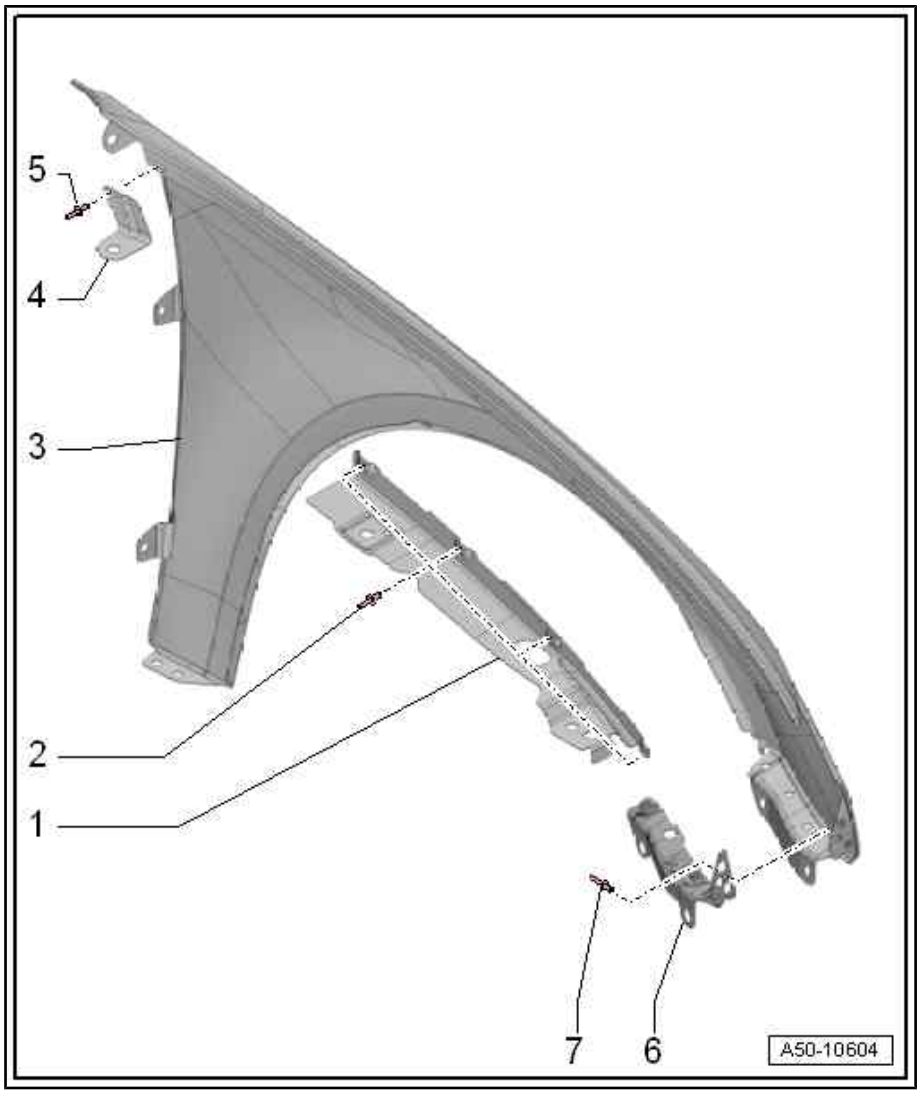

2.4 Removing and installing wing

Special tools and workshop equipment required

♦ Removal wedge - 3409-

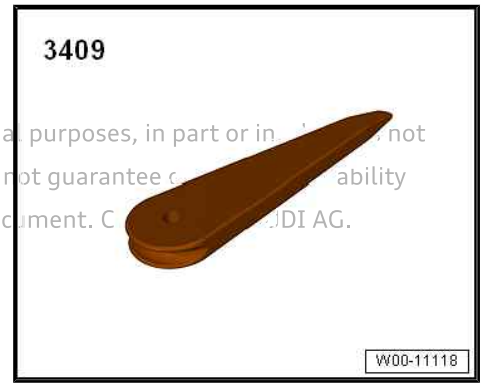

Protected by copyright. Copying for private or commercial purposes, in part or in ... not permitted unless authorised by AUDI AG. AUDI AG does not guarantee ... ability with respect to the correctness of information in this document. C... AUDI AG.

Removing

– Open front door.

– Press top section of closure plate -1- to side using removal wedge - 3409- .
– Remove bolt -arrow-.
– RS 3: Remove washer fluid reservoir ⇒ Electrical system; Rep. gr. 92 ; Windscreen washer system; Removing and installing washer fluid reservoir .
– Remove bumper cover mounting ⇒ page 221 .
– If fitted, remove insulation for wing.

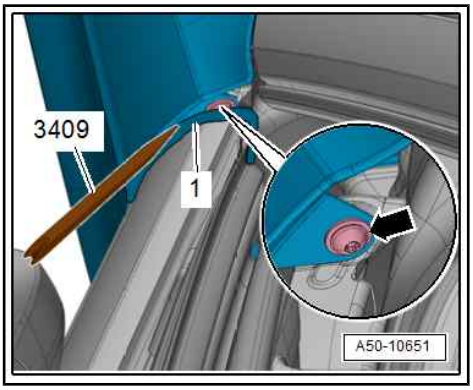

– Remove bolts -2, 3-.
– Remove sealing element ⇒ page 36 .

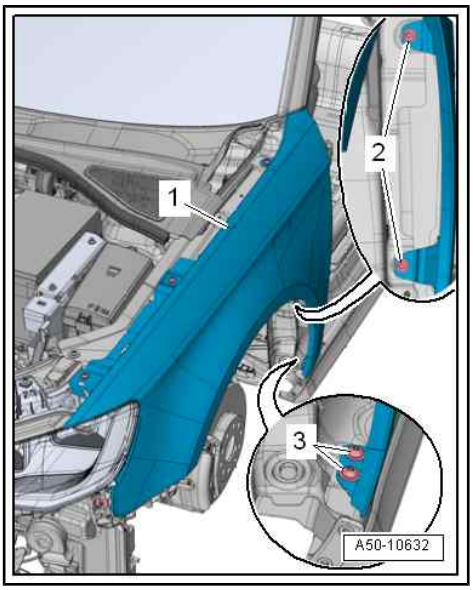

– Remove bolts -1, 2-.

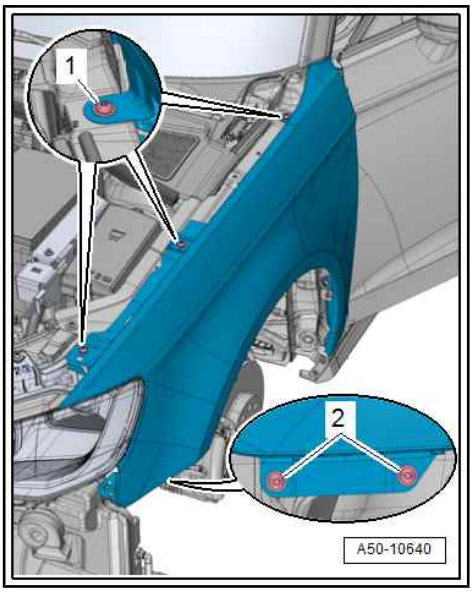

Protected by copyright. Copying for private or commercial purposes, in part or in whole, is not permitted unless authorised by AUDI AG. AUDI AG does not guarantee or accept any liability with respect to the correctness of information in this document. Copyright by AUDI AG.

Protected by copyright. Copying for private or commercial pur
permitted unless authorised by AUDI AG. AUDI AG does not g
with respect to the correctness of information in this docume

– RS 3: Push wing -1- towards A-pillar -arrow- and release it upwards from retaining tab -2-.
– Detach wing.

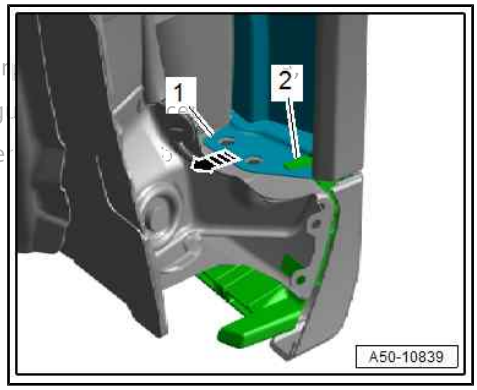

Preparing wing for installation

Note

The wing panel can only be ordered in individual parts and must be prepared for installation as follows.

Special tools and workshop equipment required

♦ Pop rivet pliers - VAS 5072-

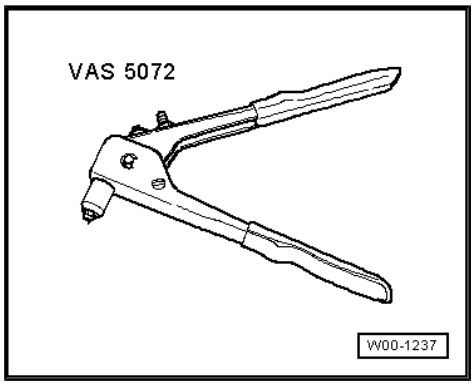

♦ Drill

♦ Pop rivets ⇒ Electronic parts catalogue

– Rivet brackets -2 and 4- and reinforcement -5- (not on Saloon models) to wing -1- with pop rivets -3-.

• The brackets must be positioned behind the edge of the wing.

Installing

Installation is carried out in reverse order; note the following:

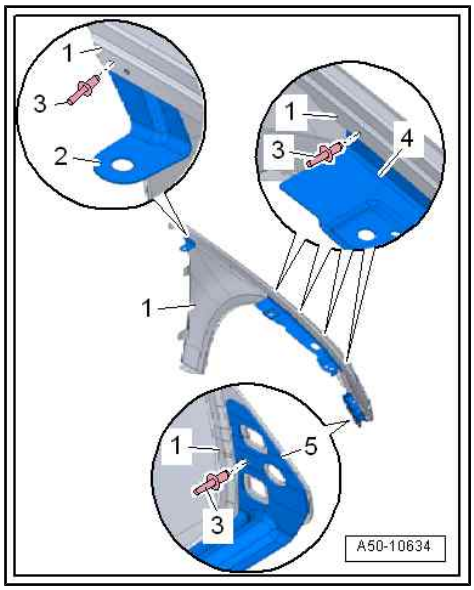

– Fit sealing piece -2- in wing panel -1- close to centre securing bolt.

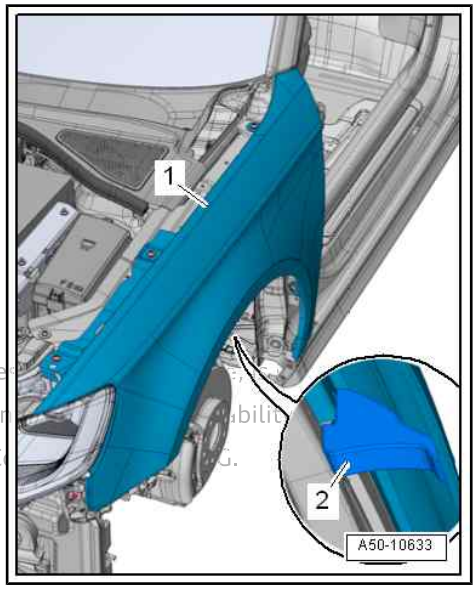

Tightening torques

♦ ⇒ “2.1.1 Exploded view - wing”, page 24 .

Protected by copyright. Copying for private or commercial purpose
permitted unless authorised by AUDI AG. AUDI AG does not guaran
with respect to the correctness of information in this document. C

2.5 Removing and installing wing panel brace

Removing

– Remove front wheel housing liner ⇒ page 408 .

– Remove headlight ⇒ Electrical system; Rep. gr. 94 ; Headlights; Removing and installing headlights .

– On vehicles with TDI engine, unfasten fuel filter and place to one side ⇒ Fuel supply system, diesel engines; Rep. gr. 20 ; Fuel filter; Removing and installing fuel filter .

– Move electrical wiring harness -4- clear at wing panel brace -5-.

– Lift duct -3- slightly -arrow- and loosen bolt -1-.

– Remove bolts -2, 6-.

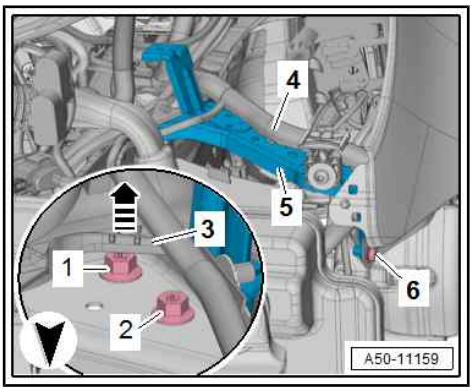

– Working from underneath, unscrew bolt -1- in clockwise direction using Torx spanner E5.
– Remove wing panel brace -2-.

Installing

Installation is carried out in reverse order; note the following:

– Working from underneath, tighten bolts ⇒ Item 6 (page 24) in anti-clockwise direction to specified torque.

Tightening torques

♦ ⇒ “2.1 Exploded view - wing”, page 24

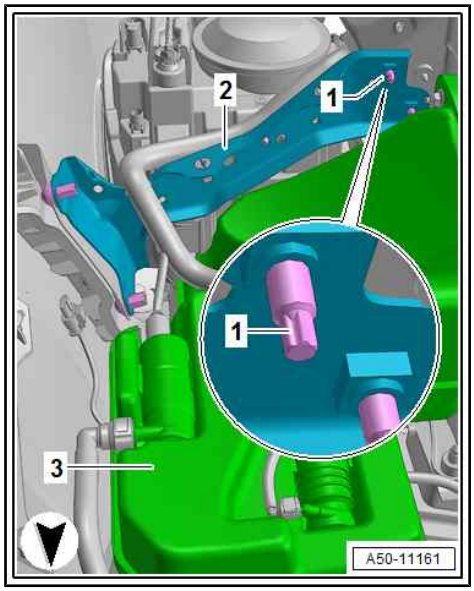

2.6 Removing and installing closure plate

Removing

– Remove front door ⇒ page 87 .
– Remove spreader rivets -arrows-.
– Take out closure plate -1- towards rear.

Installing

Installation is carried out in reverse sequence.

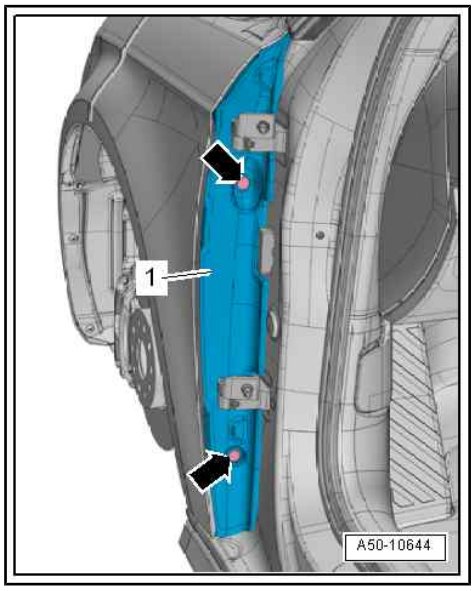

Protected by copyright. Copying for private or commercial purposes, in part or in whole, is not permitted unless authorised by AUDI AG. AUDI AG does not guarantee or accept any liability with respect to the correctness of information in this document. Copyright by AUDI AG.

3 Bulkhead

⇒ “3.1 Exploded view - plenum chamber partition panel”, page 33

⇒ “3.2 Exploded view - plenum chamber cover”, page 34

⇒ “3.4 Removing and installing plenum chamber partition panel”, page 35

⇒ “3.3 Removing and installing plenum chamber cover”, page 34

⇒ “3.5 Removing and installing sealing element”, page 36

3.1 Exploded view - plenum chamber partition panel

1 - Plenum chamber partition panel

- ❑ Removing and installing ⇒ page 35

2 - Nut

- ❑ 2 Nm

3 - Sealing element

4 - Cover

- ❑ For plenum chamber partition panel
- ❑ Removing and installing ⇒ page 35

5 - Nut

- ❑ 8 Nm

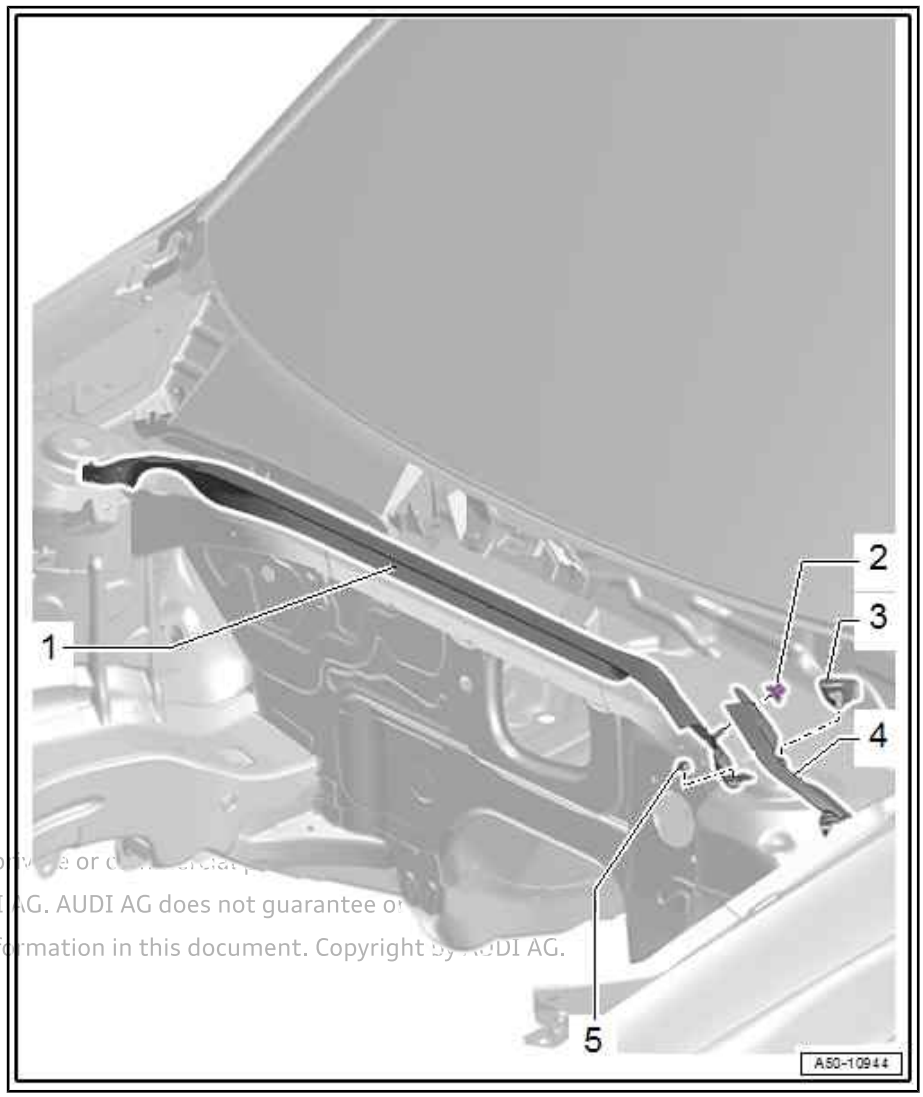

Protected by copyright. Copying for private or commercial purposes, in part or in whole, is not permitted unless authorised by AUDI AG. AUDI AG does not guarantee or assume any liability with respect to the correctness of information in this document. Copyright by AUDI AG.

3.2 Exploded view - plenum chamber cover

1 - Plenum chamber partition panel

- ❑ Exploded view ⇒ page 33

2 - Seal

- ❑ Renew if damaged

3 - Plenum chamber cover

- ❑ Removing and installing ⇒ page 34

4 - Sealing element

- ❑ Removing and installing ⇒ page 36

5 - Nut

- ❑ Tightening torque ⇒ page 33

6 - Cover

- ❑ For plenum chamber partition panel
- ❑ Exploded view ⇒ page 33

7 - Nut

- ❑ Tightening torque ⇒ page 33

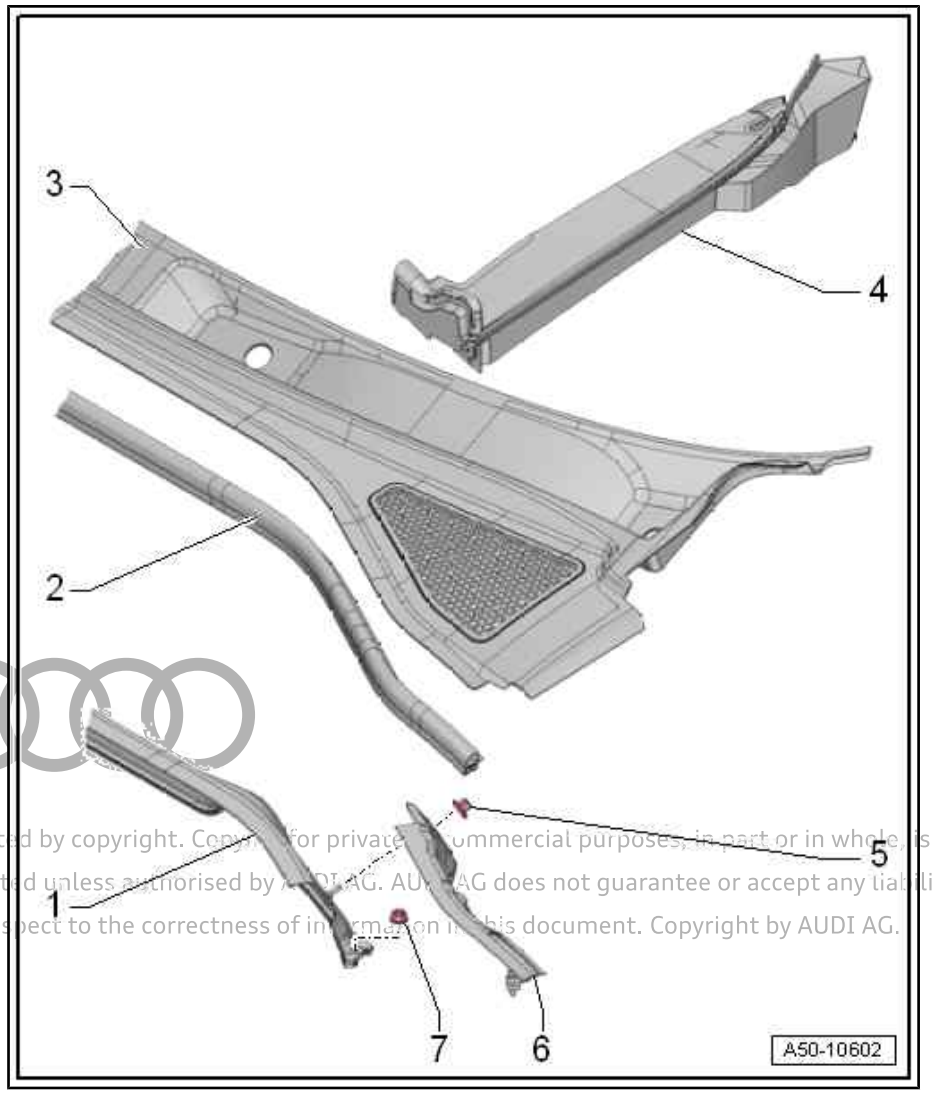

Protected by copyright. Copying for private or commercial purposes, in part or in whole, is not permitted unless authorised by AUDI AG. AUDI AG does not guarantee or accept any liability with respect to the correctness of information in this document. Copyright by AUDI AG.

3.3 Removing and installing plenum chamber cover

Removing

– Remove wiper arms ⇒ Electrical system; Rep. gr. 92 ; Windscreen wiper system; Removing and installing wiper arms .

– Pull off seal -1-.

– RS 3: Open filler cap for filler neck.

– Coat transition between windscreen -2- and plenum chamber cover -5- with a small amount of soap solution and, starting at edge of windscreen, carefully pull plenum chamber cover vertically upwards out of retainer at windscreen.

– Detach plenum chamber cover -5-; to do so, carefully pull retaining catch -3- for plenum chamber cover out of windscreen mounting -4- in direction of -arrow-.

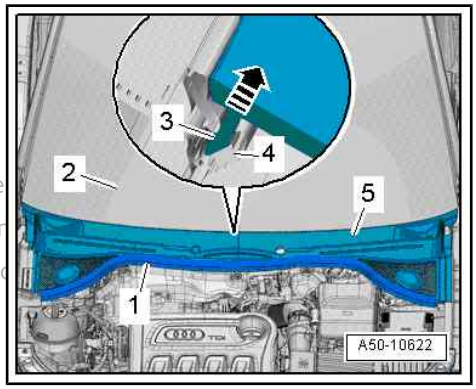

Protected by copyright. Copying permitted only for commercial purposes
permitted unless authorised by AUDI AG. AUDI AG does not guarantee
with respect to the correctness of information in this document. Copy

Installing

Installation is carried out in reverse order; note the following:

- The cowl panel trim at the plenum chamber cover must be engaged completely in the windscreen frame.

3.4 Removing and installing plenum chamber partition panel

- Observe safety precautions ⇒ page 1 .

Removing

Vehicles with high-voltage system:

– De-energise high-voltage system ⇒ 4-cylinder direct injection engine (1.2 ltr., 1.4 ltr. 4-valve TFSI EA 211); Rep. gr. 93 ; De-energising high-voltage system .

All versions (continued):

– Remove plenum chamber cover ⇒ page 34 .

– Lever off sealing element -1- -arrow-.

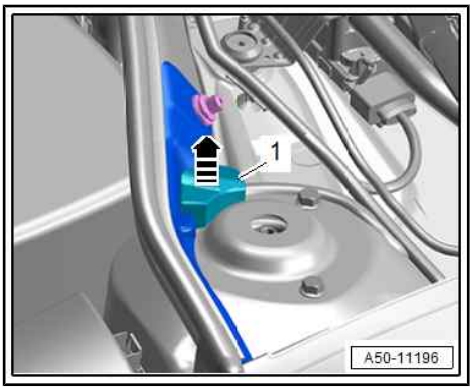

– Unscrew nut -1-.

– Release fastener -4- from wheel housing side using 6 mm socket -item 3-.

– Lift off cover -2-.

– RS 3: Remove filler neck for washer fluid reservoir ⇒ Electrical system; Rep. gr. 92 ; Windscreen washer system; Removing and installing washer fluid reservoir .

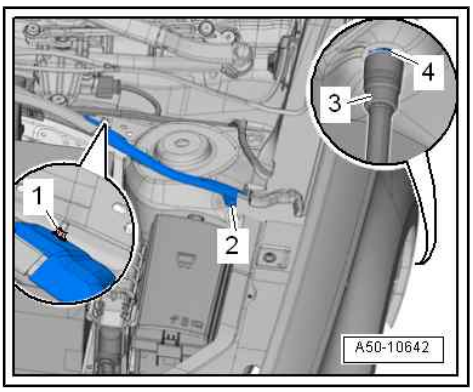

– Unscrew speed nuts -1- and move heat shield -2- clear.

– Unscrew nuts -arrow- and lift off plenum chamber partition panel -3-.

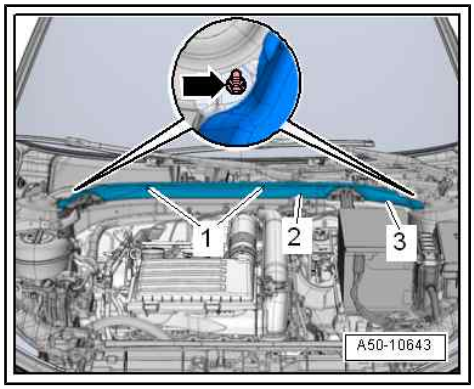

Installing

Installation is carried out in reverse order; note the following:

Vehicles with high-voltage system:

– Re-energise high-voltage system ⇒ Rep. gr. 93 ; Re-energising high-voltage system .

Tightening torques

♦ ⇒ “3.1 Exploded view - plenum chamber partition panel”, page 33

3.5 Removing and installing sealing element

Special tools and workshop equipment required

♦ Removal lever - 80-200-

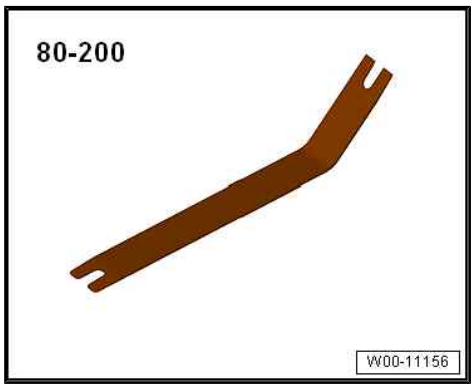

♦ Protective gloves

Removing

– Remove front wheel housing liner ⇒ page 408 .

– Pull off seal -1- and lift plenum chamber cover -2- in vicinity of sealing element.

– Using removal lever - 80-200- , carefully press fasteners -3- off body.

– Detach sealing element -4- towards front; sealing element must be guided out of recess in wing -arrow-.

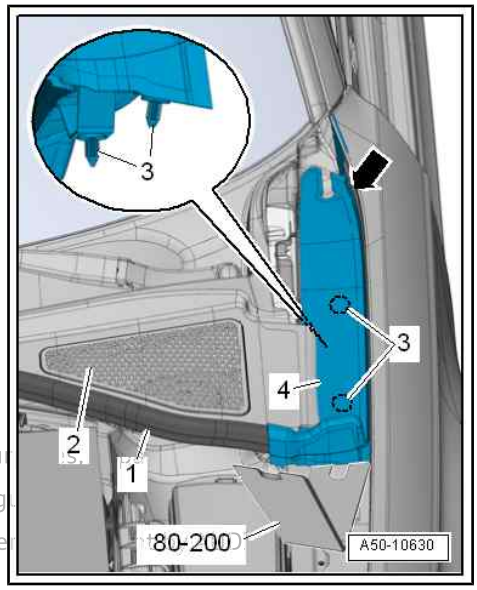

Installing

Installation is carried out in reverse order; note the following:

• Sealing element must be renewed if fastener is damaged.

Protected by copyright. Copying for private or commercial pu
permitted unless authorised by AUDI AG. AUDI AG does not g
with respect to the correctness of information in this docume

55 – Bonnet, rear lid

1 Bonnet

⇒ “1.1 Exploded view - bonnet”, page 37
⇒ “1.2 Exploded view - Bowden cable”, page 39
⇒ “1.3 Removing and installing bonnet”, page 39
⇒ “1.4 Adjusting bonnet”, page 40
⇒ “1.5 Removing and installing hinges”, page 42
⇒ “1.6 Resetting hinge”, page 44
⇒ “1.7 Removing and installing striker”, page 45
⇒ “1.8 Removing and installing gas strut”, page 46
⇒ “1.9 Releasing gas from gas strut”, page 47
⇒ “1.10 Removing and installing insulation”, page 47
⇒ “1.11 Removing and installing impact guard”, page 49
⇒ “1.12 Removing and installing Bowden cable”, page 50
⇒ “1.13 Removing and installing arrester”, page 52
⇒ “1.14 Removing and installing bonnet lock”, page 52
⇒ “1.15 Removing and installing operating lever for bonnet lock”, page 54

Protected by copyright. Copying for private or commercial purposes, in part or in whole, is not permitted unless authorised by AUDI AG. AUDI AG does not guarantee or accept any liability with respect to the correctness of information in this document. Copyright by AUDI AG.

1.1 Exploded view - bonnet

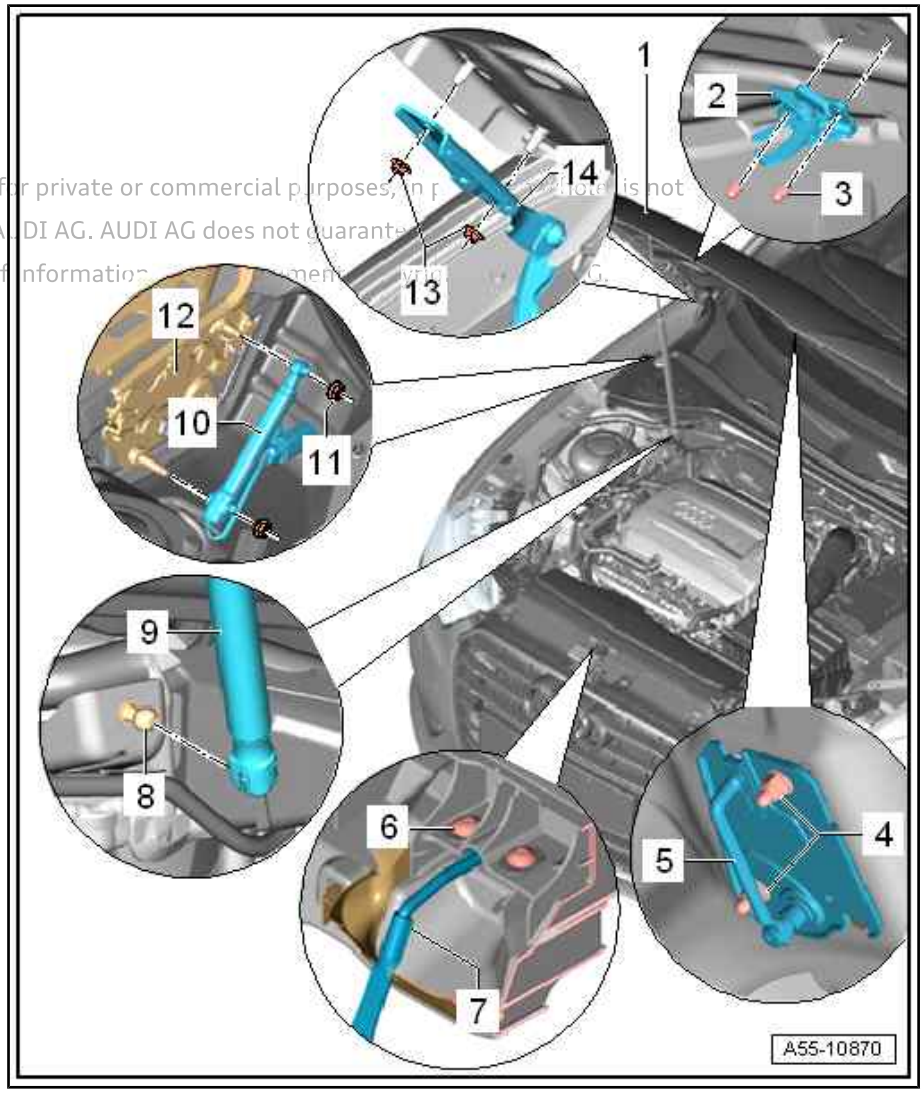

1 - Bonnet

- ❑ Resetting hinge after pedestrian protection system has been triggered ⇒ page 44
- ❑ Removing and installing ⇒ page 39

Protected by copyright. Copying for private or commercial purposes, in part or in whole, is not permitted unless authorised by AUDI AG. AUDI AG does not guarantee or assume any liability with respect to the correctness of information in this document.

2 - Arrester

- ❑ Removing and installing ⇒ page 52

3 - Cap nut

- ❑ 8 Nm

4 - Cap nut

- ❑ 8 Nm

5 - Striker

- ❑ Removing and installing ⇒ page 45

6 - Bolts

- ❑ 11 Nm

7 - Retainer for arrester

- ❑ Removing and installing ⇒ page 52

8 - Ball stud

9 - Gas strut

- ❑ Removing and installing ⇒ page 46
- ❑ Cylinder end of gas strut is installed on body side

10 - Trigger 1 for pedestrian protection - G598-

- ❑ Removing and installing ⇒ page 42

11 - Nut

- ❑ 8 Nm

12 - Hinge (active)

- ❑ Removing and installing ⇒ page 42

13 - Nut

- ❑ 25 Nm

14 - Hinge (passive)

- ❑ Removing and installing ⇒ page 42

1.2 Exploded view - Bowden cable

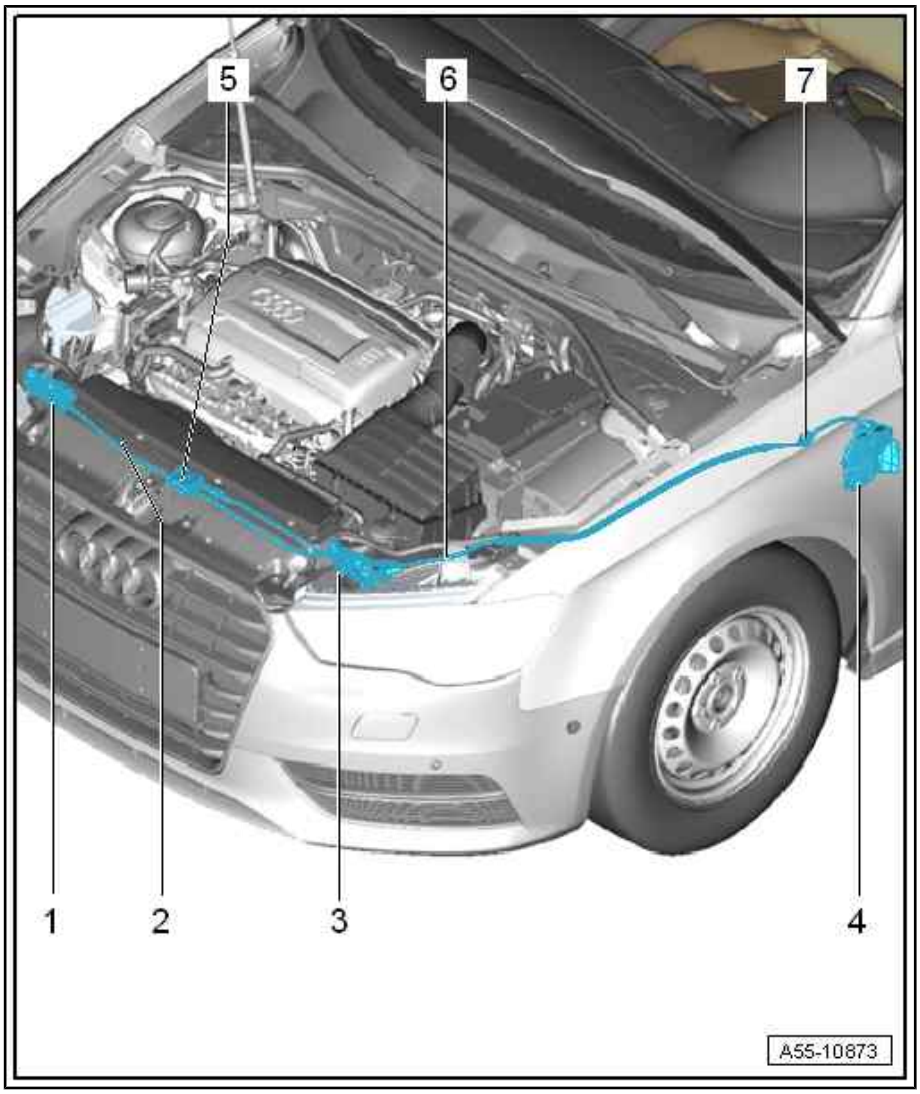

1 - Bonnet lock (right-side)

- ❑ Removing and installing ⇒ page 52

2 - Bowden cable for bonnet lock

- ❑ Removing:
  - – Disconnect Bowden cable from coupling unit ⇒ page 51 .
  - – Disengage Bowden cable from operating lever.
  - – Pull Bowden cable towards engine compartment.
- ❑ Installing: in reverse order of removal
- ❑ Adjusting trigger point for bonnet locks ⇒ page 51

3 - Bonnet lock (left-side)

- ❑ Removing and installing ⇒ page 52

4 - Operating lever

- ❑ Removing and installing ⇒ page 54

5 - Coupling unit for Bowden cable

- ❑ Removing and installing ⇒ page 51
  - – Disengage Bowden cable to vehicle interior at this point before removing lock carrier and when removing operating lever.

6 - Bowden cable for operating lever

- ❑ Routing to vehicle interior ⇒ page 50

7 - Grommet

- ❑ When installing, make sure it is seated correctly

1.3 Removing and installing bonnet

- A second mechanic is required to perform this step (as described on ⇒ page 40).

Protected by copyright. Copying for private or commercial purposes, in part or in whole, is not permitted unless authorised by AUDI AG. AUDI AG does not guarantee or accept any liability with respect to the correctness of information in this document. Copyright by AUDI AG.

⚠ **Caution**

The bonnet can be damaged if it is opened while the pedestrian protection system is triggered.

- ◆ *If the pedestrian protection system has been triggered, reset it before opening the bonnet.*

- Hinge reset (if pedestrian protection system has been triggered) ⇒ page 44

– Remove washer jets ⇒ Electrical system; Rep. gr. 92 ; Windscreen washer system; Removing and installing washer jets and pull wiring harness out of bonnet.

– Unfasten cable duct from hinge.

– Detach gas strut from bonnet ⇒ page 46 .

– Remove nuts at hinge.

– Detach bonnet.

Installing: in reverse order of removal

Adjusting:

- Adjustment dimensions ⇒ page 40

– Align bonnet between wings.

– Adjust height of bonnet via bonnet lock/striker.

– Adjust position of bonnet to wings via adjusting buffers ⇒ page 40 .

1.4 Adjusting bonnet

⇒ "1.4.1 Adjustment dimensions", page 40

⇒ "1.4.2 Height adjustment using adjusting buffer", page 40

1.4.1 Adjustment dimensions

◆ Dimension -A- = 5 mm ± 0.5 mm

◆ Dimension -B- = 4.5 mm ± 0.5 mm

◆ Dimension -C- = 5 mm ± 0.5 mm

◆ Dimension -D- = 3 mm ± 0.5 mm

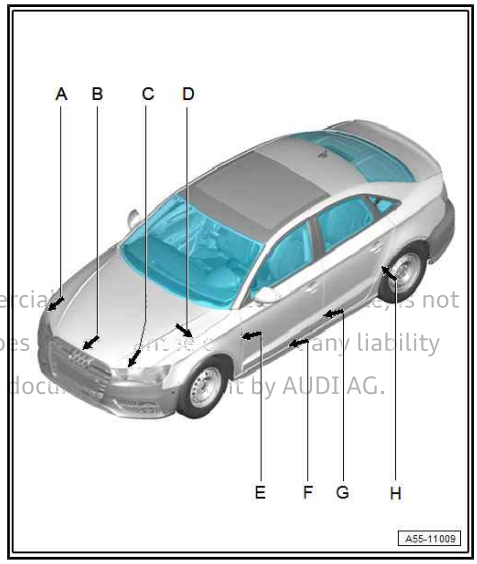

Protected by copyright. Copying for private or commercial purposes, in part or in whole, is not permitted unless authorised by AUDI AG. AUDI AG does not make any liability with respect to the correctness of information in this document by AUDI AG.

1.4.2 Height adjustment using adjusting buffer

- Adjustment dimensions ⇒ page 40

Special tools and workshop equipment required

♦ Setting gauge - 3371-

1 - Adjusting buffer

❑ Screw into inner section of bonnet

– Adjust position of bonnet via adjusting buffers according to wing panels and body contour.

– When bonnet is closed, adjusting buffer must rest on lock carrier.

2 - Bonnet

3 - Cap

– Clip into bonnet

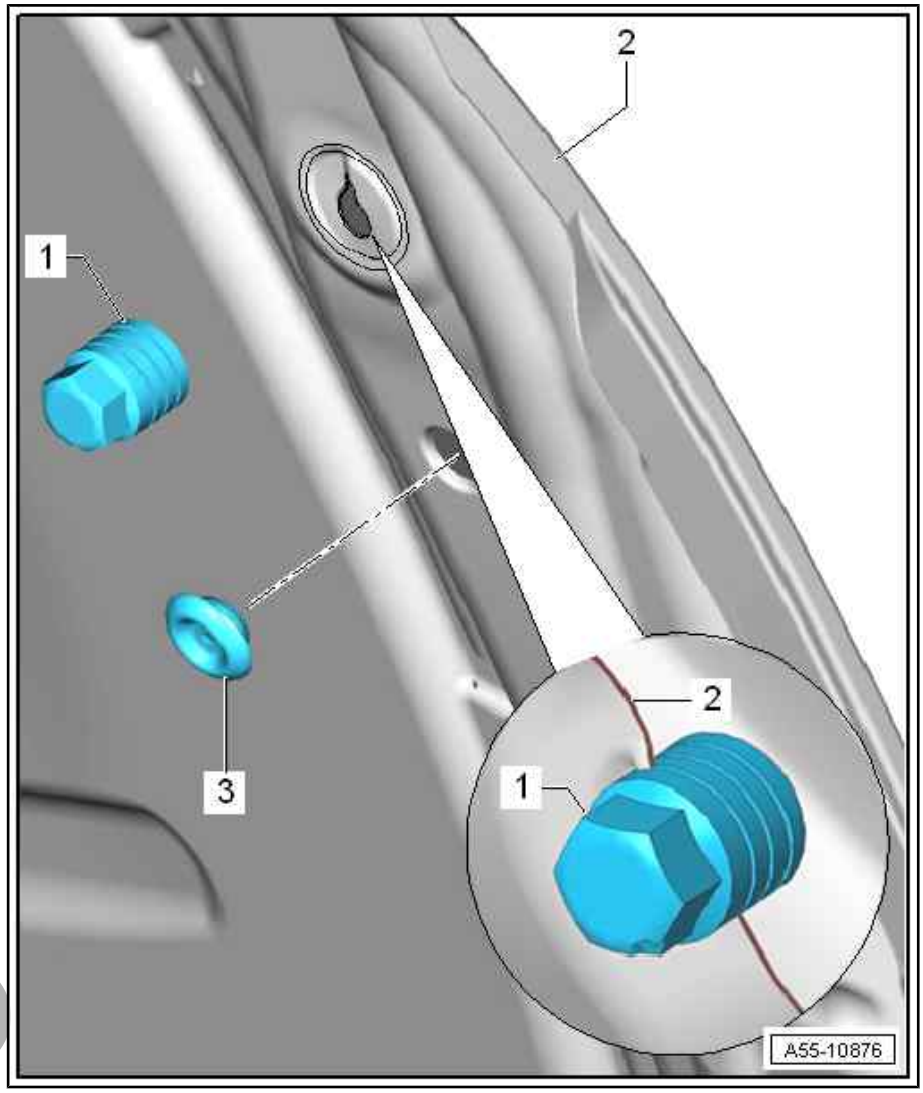

Protected by copyright. Copying for private or commercial purposes, in part or in whole, is not permitted unless authorised by AUDI AG. AUDI AG does not guarantee or accept any liability with respect to the correctness of information in this document. Copyright by AUDI AG.

1.5 Removing and installing hinges

⇒ "1.5.1 Removing and installing hinges - vehicles without pedestrian protection", page 42

⇒ "1.5.2 Removing and installing hinges - vehicles with pedestrian protection", page 42

1.5.1 Removing and installing hinges - vehicles without pedestrian protection

1 - Bonnet hinge

- ❑ Removing plenum chamber cover ⇒ page 34
- – Before removing, mark position of hinge on bonnet and on body.
- – Before removing hinge, support bonnet or secure it in position.
- – Remove nuts on bonnet and bolts on body and lift out hinge.
- ❑ Installing: in reverse order of removal
- – Insert hinge according to marks and secure.

2 - Nut

- ❑ 25 Nm

3 - Bonnet

4 - Wing mounting flange

5 - Bolt

- ❑ 25 Nm

Protected by copyright. Copying fo
permitted unless authorised by AUD
with respect to the correctness of infor

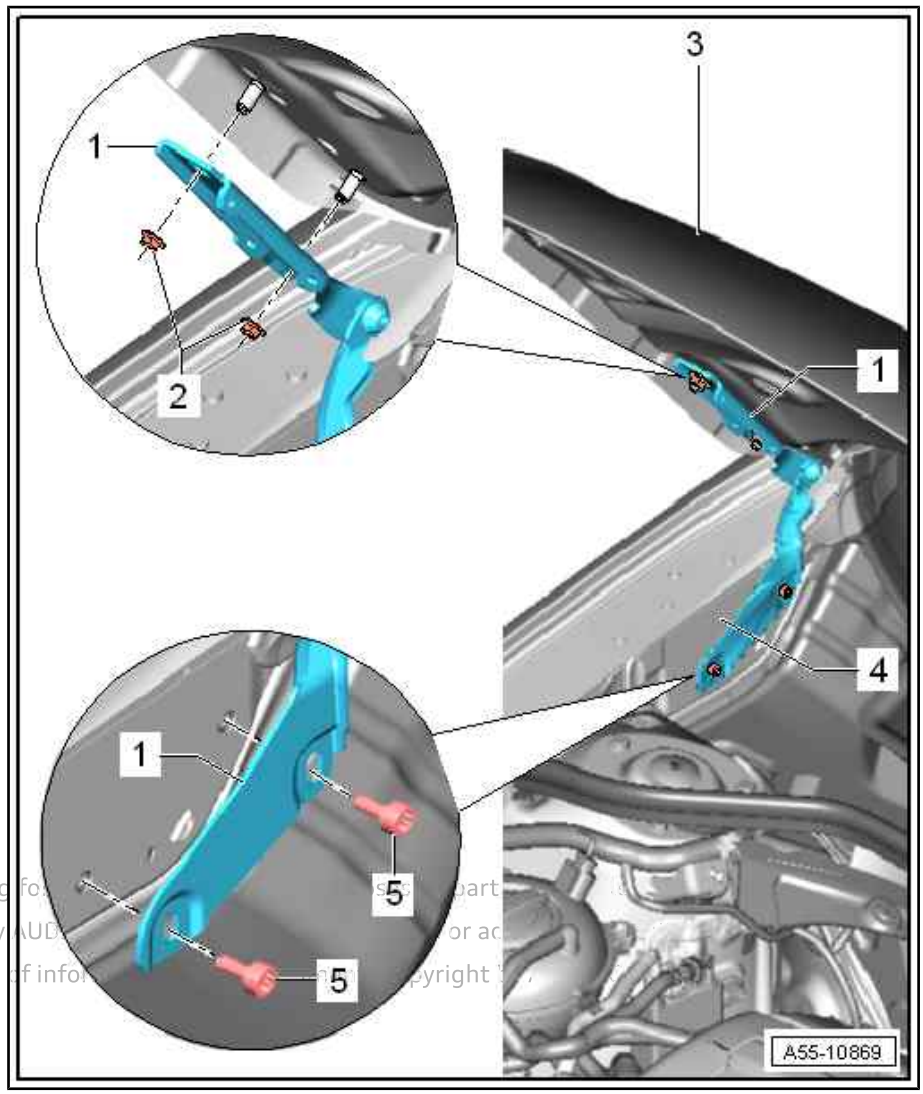

1.5.2 Removing and installing hinges - vehicles with pedestrian protection

- Observe safety precautions ⇒ General body repairs, interior; Rep. gr. 00 ; Safety precautions; Safety precautions when working on pyrotechnic components .

1 - Hinge

- ❑ Removal procedure is the same as on vehicles without pedestrian protection ⇒ page 42 .

2 - Trigger 1 for pedestrian protection - G598-

- ❑ Removing

– Switch on ignition.

Protected by copyright. Copying for private or comm
permitted unless authorised by AUDI AG. AUDI
with respect to the correctness of inform

– With ignition switched on, disconnect battery earth wire ⇒ Electrical system; Rep. gr. 27 ; Battery; Disconnecting and connecting battery .

> ⚠ **WARNING**
>
> ***It is possible to trigger pyrotechnic components unintentionally.***
>
> ***Risk of injury***
>
> ***Discharge static electricity by briefly touching door striker plate.***

– Unplug electrical connector and unclip connector from side of hinge.

– Remove nuts -3- and detach trigger 1 for pedestrian protection - G598- from mounting pins.

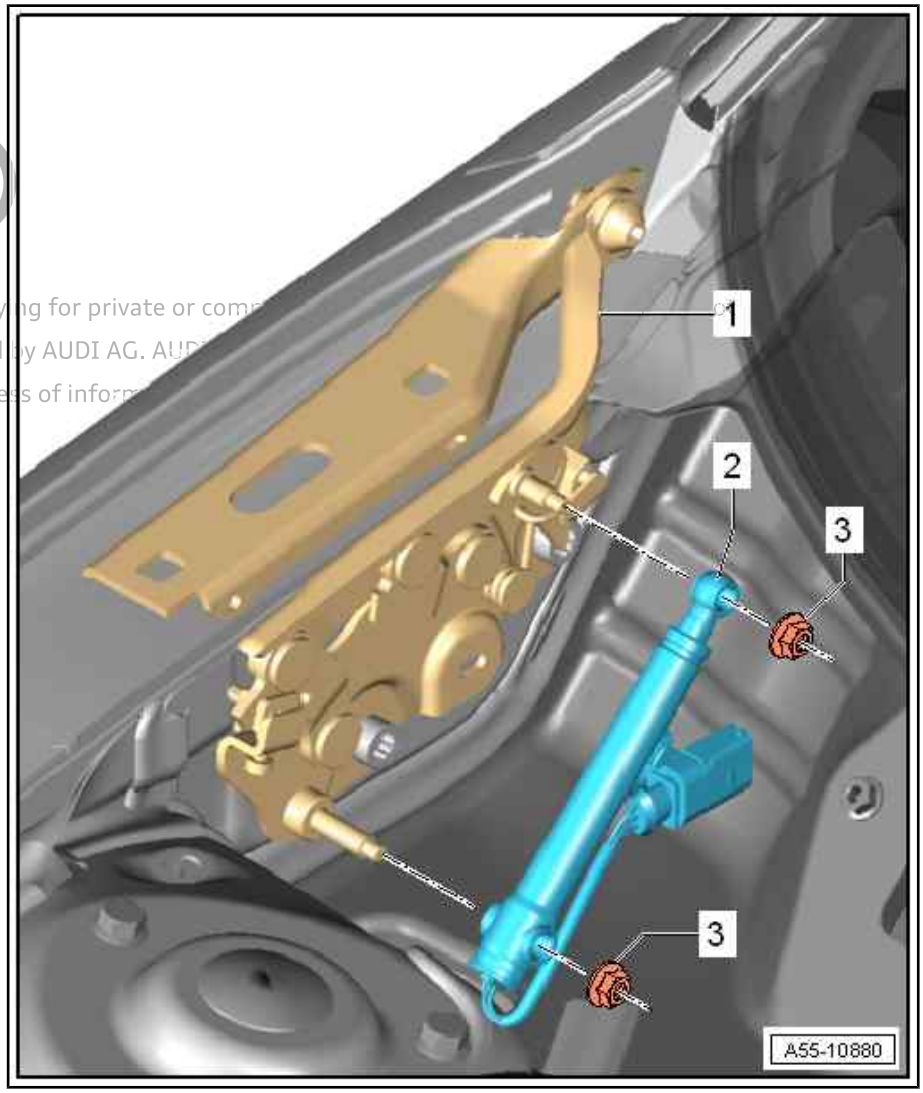

- ❑ Installing

> ⚠ **WARNING**
>
> ***It is possible to trigger pyrotechnic components unintentionally.***
>
> ***Risk of injury***
>
> ***Discharge static electricity by briefly touching door striker plate.***

– When installing, first slide trigger 1 for pedestrian protection - G598- onto mounting pin on hinge and then fit nut without tightening.

– Tighten nut to specified torque.

Protected by copyright. Copying for private or commercial purposes, in part or in whole, is not permitted unless authorised by AUDI AG. AUDI AG does not guarantee or accept any liability with respect to the correctness of information in this document. Copyright by AUDI AG.

WARNING

It is possible to trigger pyrotechnic components unintentionally.

Risk of injury

The battery must be connected with the ignition switched on.

There must not be anyone in the vehicle while you are connecting the battery.

– With ignition switched on, connect battery earth wire ⇒ Electrical system; Rep. gr. 27 ; Battery; Disconnecting and connecting battery .

Note

If the airbag warning lamp - K75- indicates a fault following installation, you must interrogate, erase and then re-interrogate the event memory ⇒ Vehicle diagnostic tester.

3 - Nut

❑ 8 Nm

1.6 Resetting hinge

- A second mechanic is required to perform this step (as described on ⇒ page 44).
- If pedestrian protection system has been triggered, triggers for pedestrian protection must be renewed ⇒ General body repairs, interior; Rep. gr. 69 ; Pedestrian protection; Overview - pedestrian protection .

Caution

The bonnet can be damaged if it is opened while the pedestrian protection system is triggered.

♦ *If the pedestrian protection system has been triggered, reset it before opening the bonnet.*

– Protect edges at bonnet and wing from damage with adhesive tape at transition areas.

– With the help of a second mechanic , press bonnet hinges ⇒ Item 12 (page 38) back into initial position simultaneously on both sides until they lock.

1.7 Removing and installing striker

1 - Cap nut

- ❑ Tightening torque
  ⇒ Item 4 (page 38)

2 - Striker

- Before removing, mark position of strikers on bonnet.
- Unscrew cap nuts and pull striker off studs.
- When installing, align at sides according to marks -arrow-

3 - Bonnet

4 - Stud

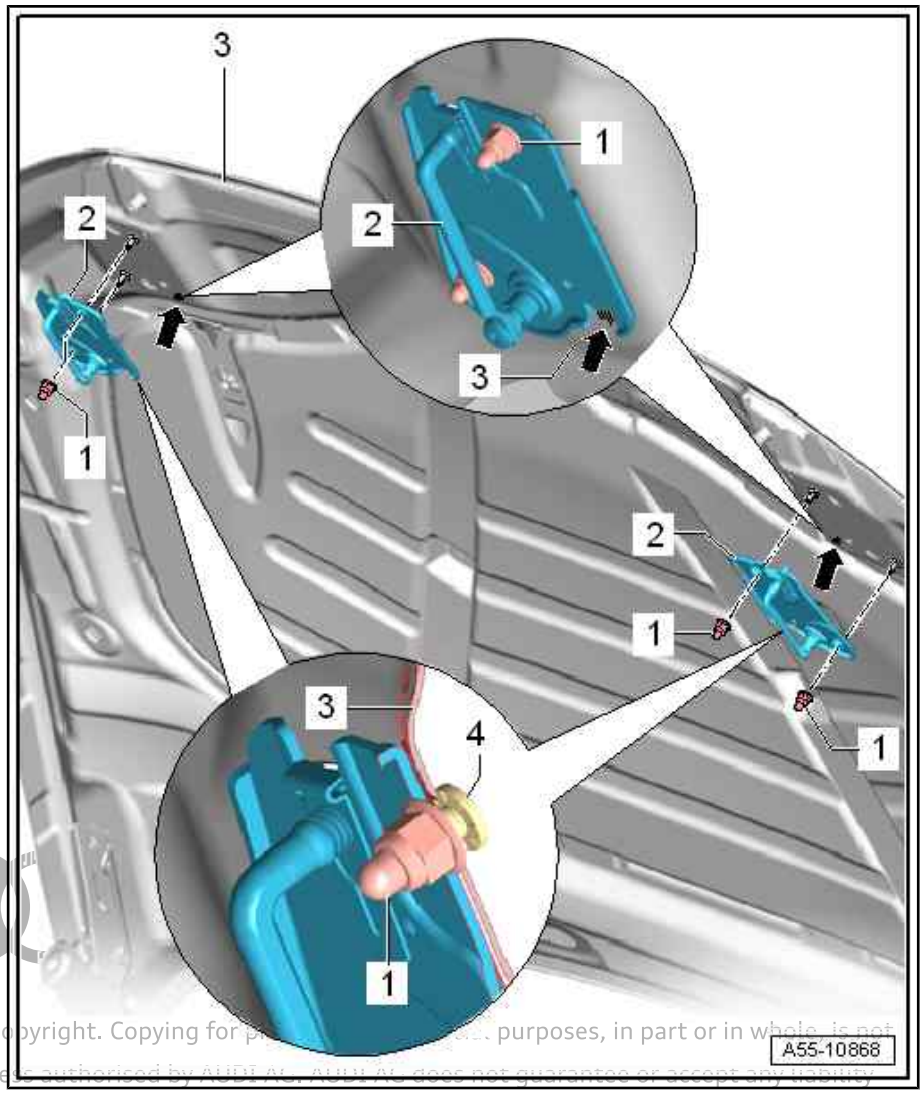

Protected by copyright. Copying for private or commercial purposes, in part or in whole, is not permitted unless authorised by AUDI AG. AUDI AG does not guarantee or accept any liability with respect to the correctness of information in this document. Copyright by AUDI AG.

1.8 Removing and installing gas strut

1 - Bonnet

2 - Gas strut

❑ To remove, lift retaining clip slightly and detach gas strut from ball stud.

- Note correct position when installing: cylinder end of gas strut must be engaged on body end.

3 - Ball stud

4 - Ball stud

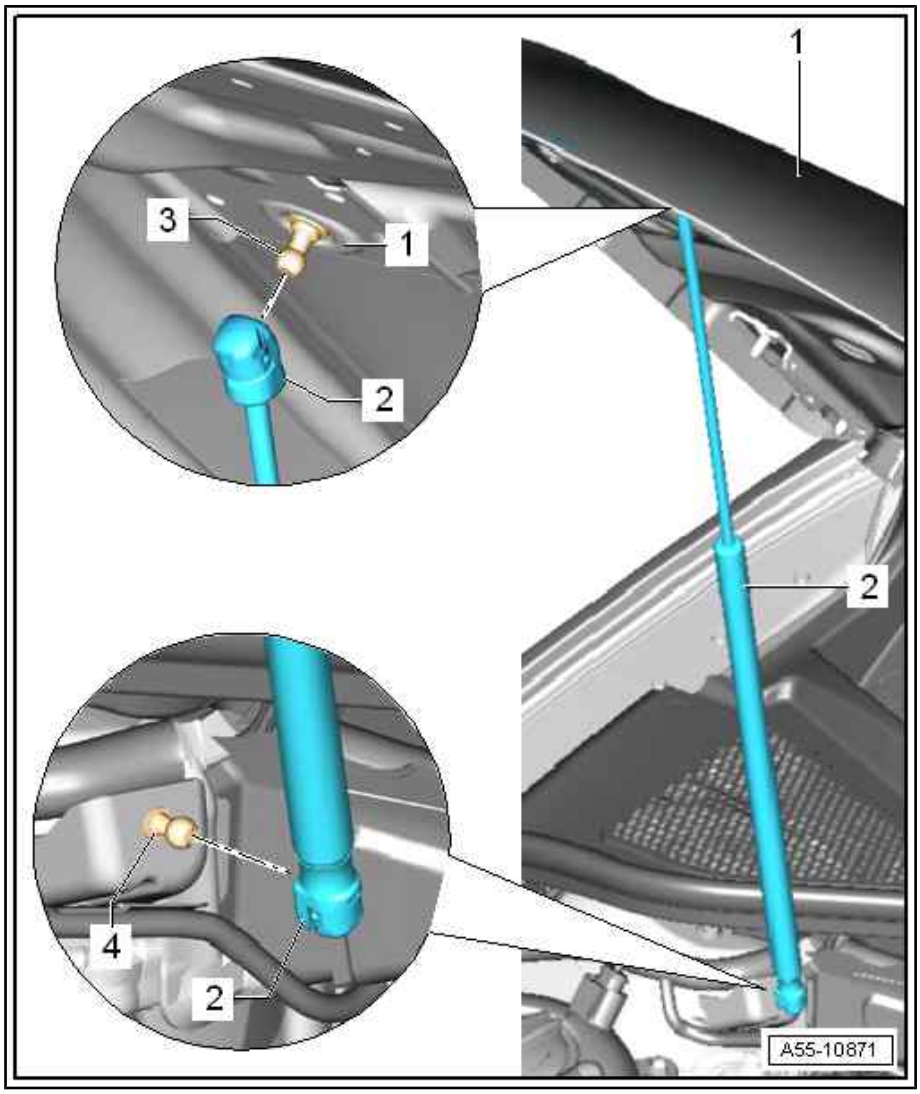

Removing

– Support bonnet or secure it in position.

Protected by copyright. Copying for private or commercial purposes, in part or in whole, is not permitted unless authorised by AUDI AG. AUDI AG does not guarantee or accept any liability with respect to the correctness of information in this document. Copyright by AUDI AG.

– Lift retaining clip -1- slightly using a small screwdriver, and pull gas strut -2- off ball stud (top).
– Repeat procedure at lower ball stud.

Installing

• If gas strut has been completely removed make sure it is re-installed in the correct position. The cylinder end of the gas strut must be engaged on the body side.
– Press gas strut onto ball stud and engage.

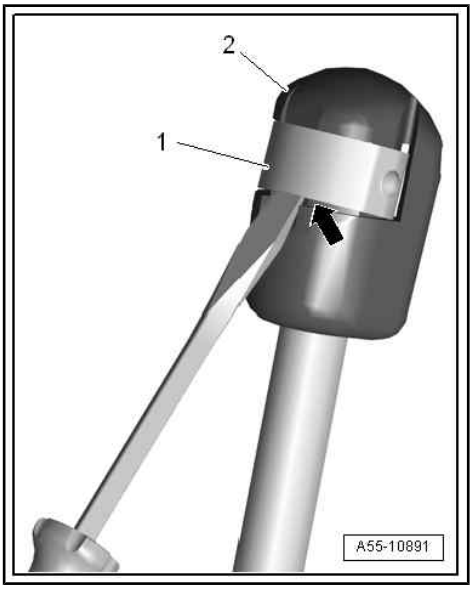

1.9 Releasing gas from gas strut

– Clamp section -x = 50 mm- of gas strut in a vice.

> ⚠ WARNING
>
> *Risk of eye injuries due to metal swarf.*
>
> *Eye irritation and injury possible.*
>
> • *Put on safety goggles.*

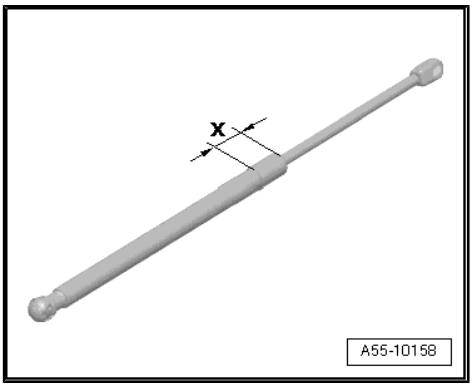

– Cover area around saw cut with a cloth to catch any fluid which may escape.
– Saw open cylinder of gas strut in first third of overall cylinder length, based on reference edge at piston-rod end.

1.10 Removing and installing insulation

Protected by copyright. Copying for private or commercial purposes, in part or in whole, is not permitted unless authorised by AUDI AG. AUDI AG does not guarantee or accept any liability with respect to the correctness of information in this document. Copyright by AUDI AG.

1 - Clip

2 - Lining for bonnet

- ❑ Installing
- – First push lugs on rear edge of lining into holes provided on inner panel.
- – Push in lugs on front edge and side.
- – Retaining clips must engage audibly when pressing in.
- – Press in clip.

3 - Bonnet

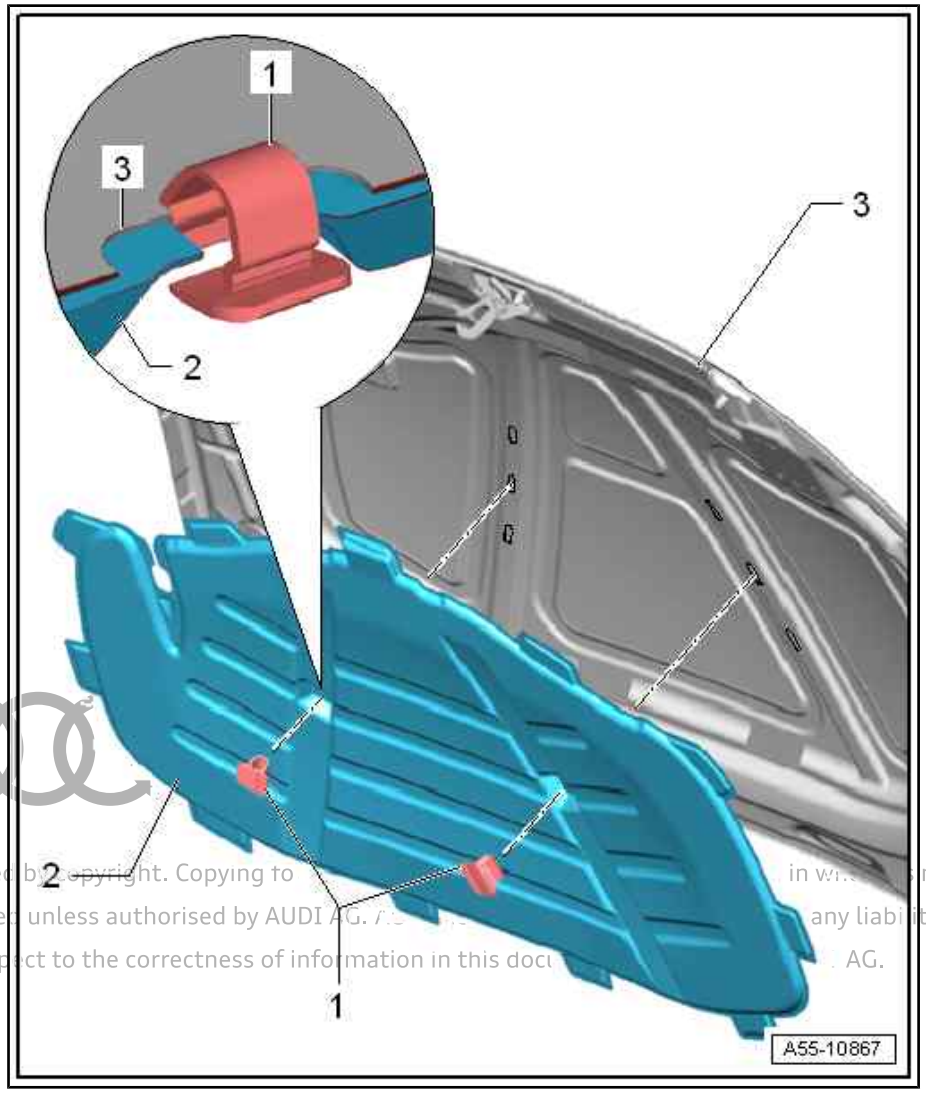

Protected by copyright. Copying to in w not permitted unless authorised by AUDI AG. any liability with respect to the correctness of information in this doc AG.

1.11 Removing and installing impact guard

1 - Impact guard

- To remove, unclip step by step and pull off impact guard.

2 - Bonnet

3 - Buffer

Protected by copyright. Copying for private or in
permitted unless authorised by AUDI AG. AUDI accept
with respect to the correctness of information in this document. Copyright by AUDI

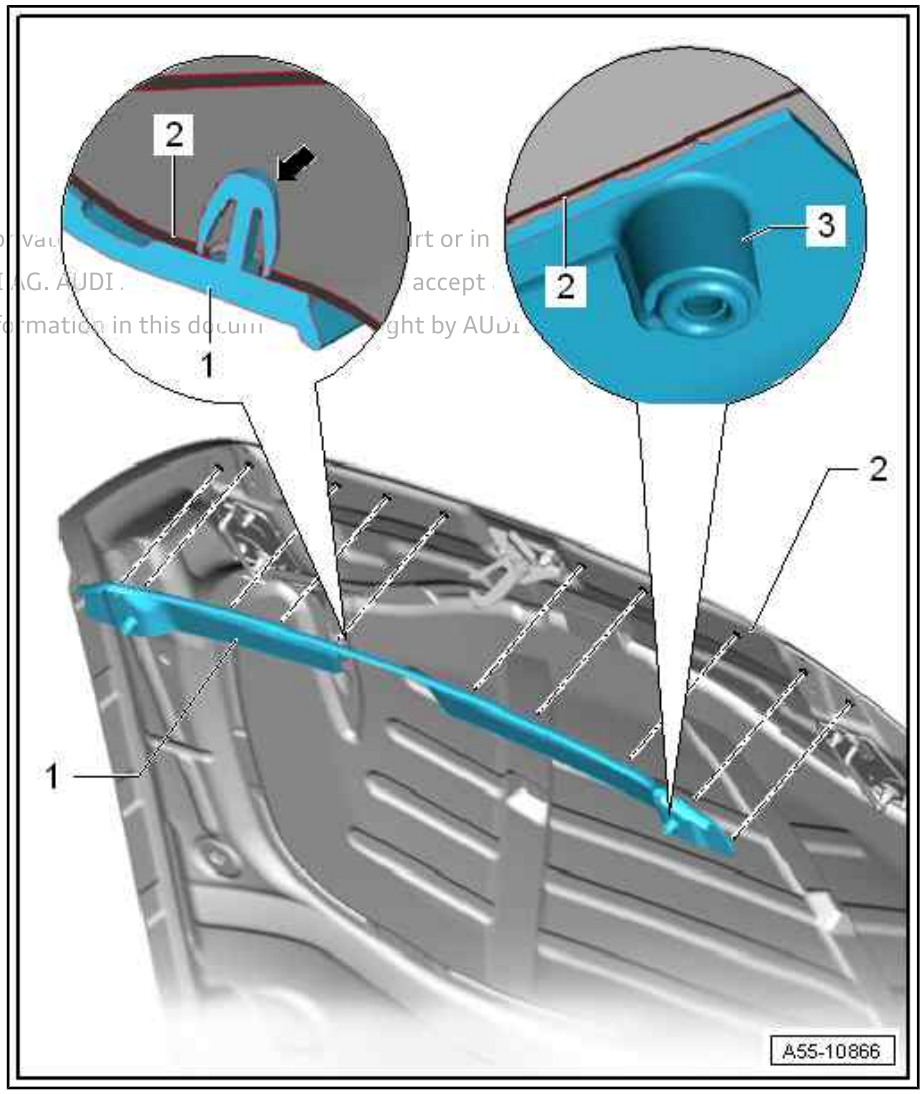

1.12 Removing and installing Bowden cable

Routing of Bowden cable in vehicle interior

– Route Bowden cable -2- at A-pillar as shown.

– Grommet -1- must be pressed into side of A-pillar from interior.

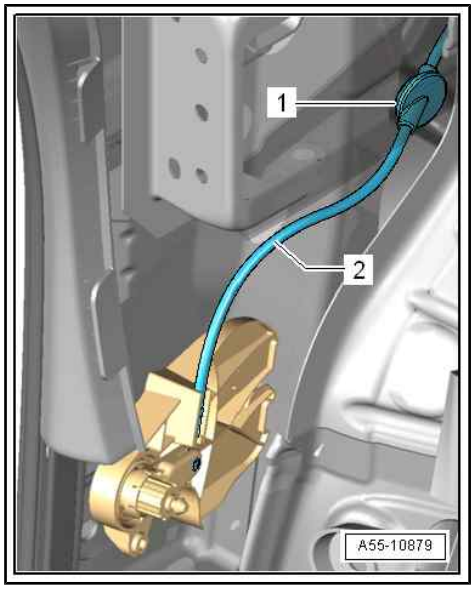

Routing of Bowden cable in engine compartment

1 - Grommet

2 - Wing mounting flange

3 - Bowden cable

– Starting from interior, route Bowden cable -3- in engine compartment along inside of wing mounting flange towards front (as shown).

– Press Bowden cables completely into clips.

– Push coupling unit into lock carrier ⇒ page 51 .

4 - Bonnet lock

❑ Removing and installing ⇒ page 52

5 - Coupling unit for Bowden cable

6 - Collar

❑ For setting bonnet locks so they are released simultaneously

7 - Clip

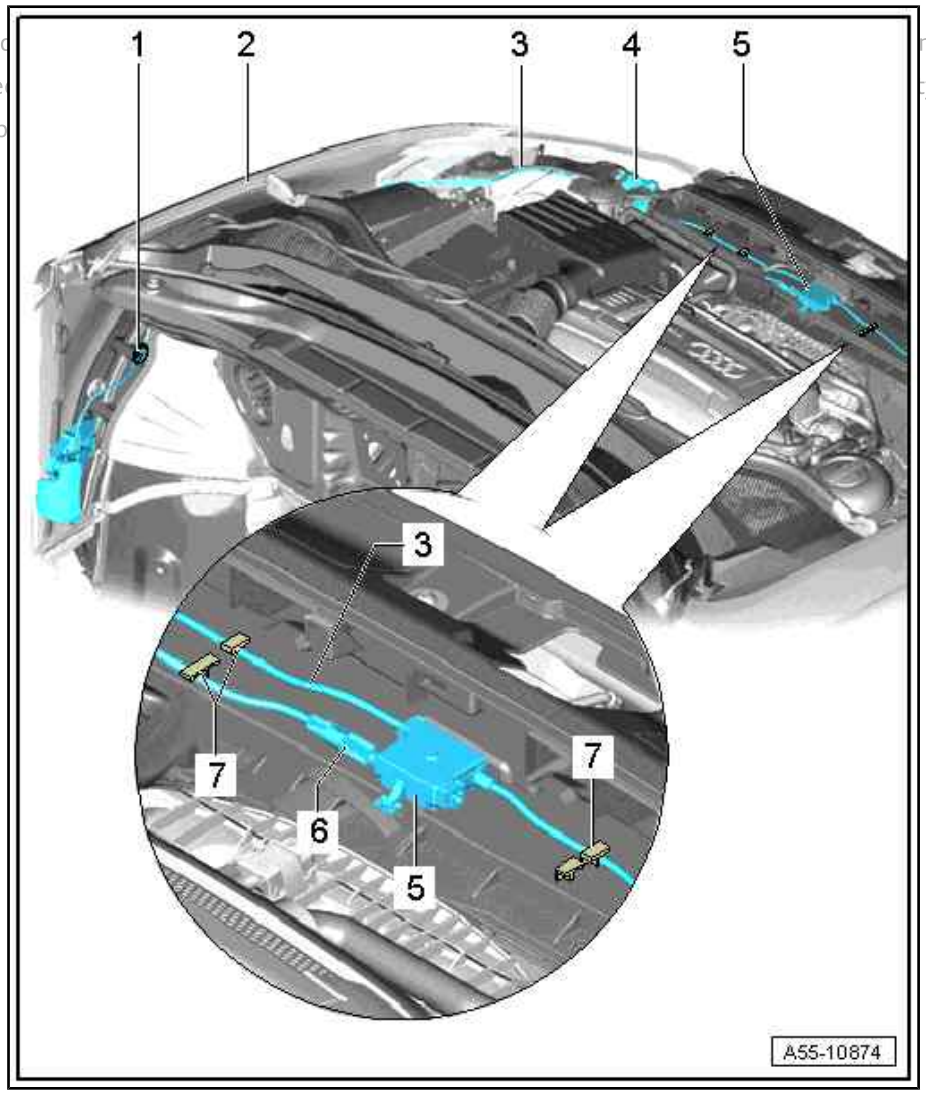

Protected
permitte
with resp
not
ty

Removing and installing coupling unit for Bowden cable

– Pull off retaining clip -2-.

– Release catches -arrow- at front of lock carrier -3- and pull coupling unit -1- off towards rear.

– When installing, catches must engage audibly in lock carrier.

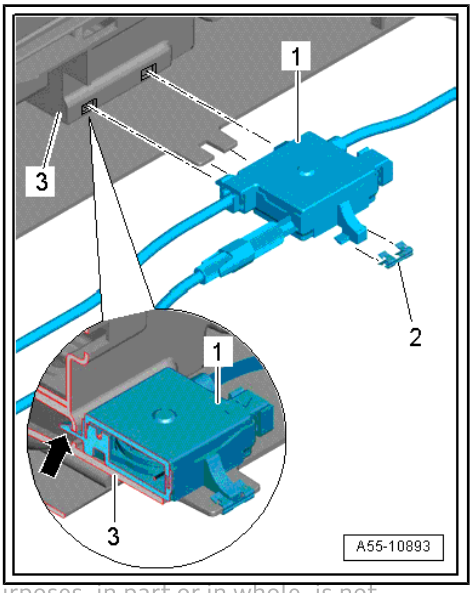

Protected by copyright. Copying for private or commercial purposes, in part or in whole, is not permitted unless authorised by AUDI AG. AUDI AG does not guarantee or accept any liability with respect to the correctness of information in this document. Copyright

Engaging Bowden cable in coupling unit

– Engage Bowden cable -3- to vehicle interior in roller -2- of coupling unit, as shown.

– Press Bowden cable into mounting on housing.

– Press housing cover -1- on so that arrow points in direction of free connection -1- on coupling unit.

– Adjust Bowden cable via collar so that bonnet locks are released simultaneously.

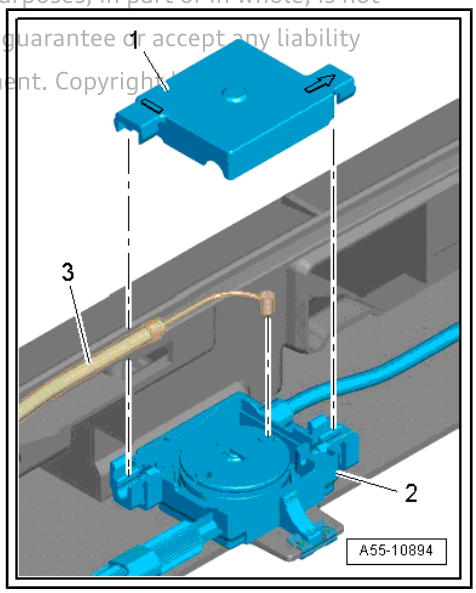

Engaging Bowden cable in bonnet lock

– Insert nipple of Bowden cable -2- into operating lever -right arrow- of bonnet lock -1-.

– Slide Bowden cable with guide into bonnet lock from below; catch -left arrow- should engage.

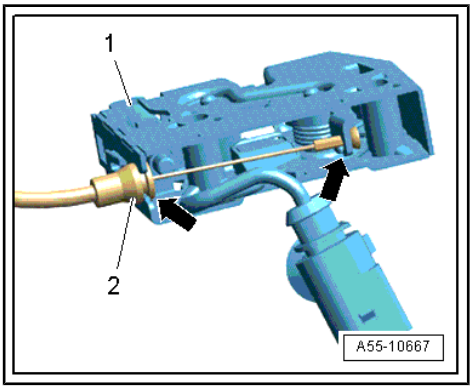

Removing and installing retainer for arrester

– Bumper cover (front) removed ⇒ page 214
– Remove bolts -1- and detach retainer -2- towards front.
– Tightening torque ⇒ Item 6 (page 38)

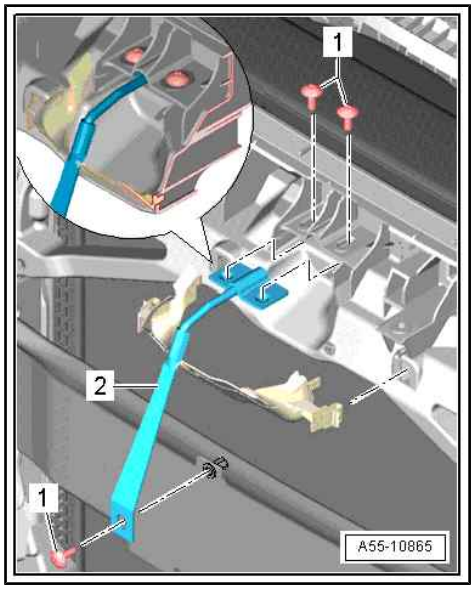

1.13 Removing and installing arrester

– Unscrew nuts -1- and detach arrester -2-.
– Tightening torque ⇒ Item 3 (page 38)

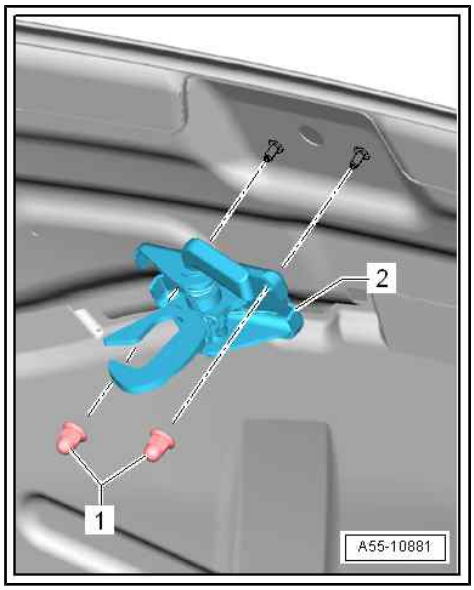

1.14 Removing and installing bonnet lock

Protected by copyright. Copying for private or commercial purposes, in part or in whole, is not permitted unless authorised by AUDI AG. AUDI AG does not guarantee or accept any liability with respect to the correctness of information in this document. Copyright by AUDI AG.

1 - Bonnet lock

– Left-side: Remove filler neck for washer fluid reservoir ⇒ Electrical system; Rep. gr. 92 ; Windscreen washer system; Exploded view - windscreen washer system .

– Unscrew bolts and pull bonnet lock upwards out of lock carrier.

❑ Engaging Bowden cable ⇒ page 51

Note

Adjust the height of the moving the bonnet lock

2 - Lock carrier

3 - Bolt

❑ 11 Nm

4 - Electrical connector

❑ When installing bonnet lock, slide connector into lock carrier and engage.

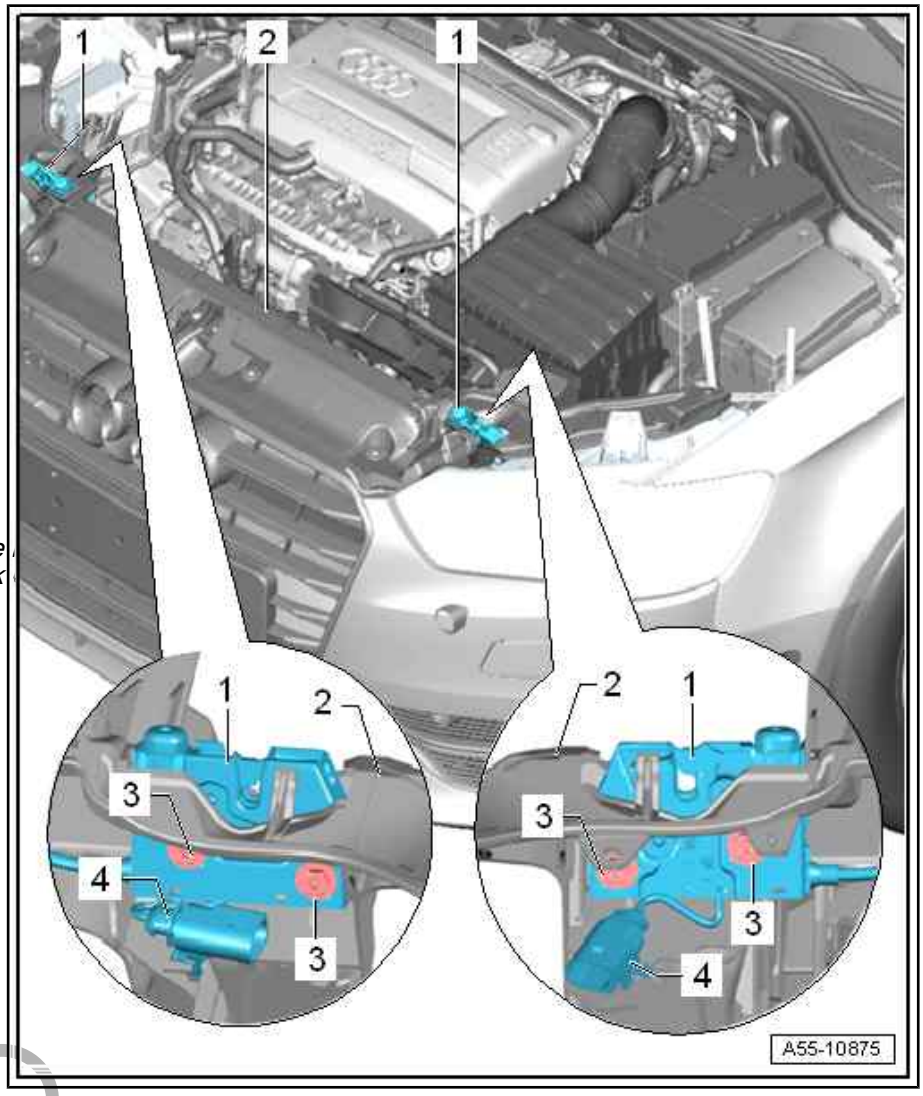

Cover for bonnet lock

- On a new bonnet lock, cover -1- must be inserted and engaged.

Protected by copyright. Copying for private or commercial purposes, in part or in whole, is not permitted unless authorised by AUDI AG. AUDI AG does not guarantee or accept any liability with respect to the correctness of information in this document. Copyright by AUDI AG.

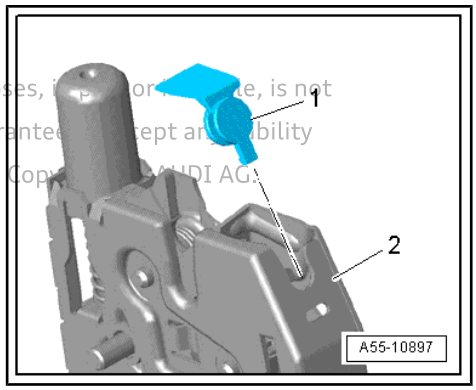

1.15 Removing and installing operating lever for bonnet lock

Removing handle for operating lever

1 - Operating lever

2 - A-pillar trim (bottom)

3 - Retaining clip

- ❑ Press in fully; make sure that it engages

4 - Handle for operating lever

- ❑ Before removing, disengage cable in coupling unit in engine compartment ⇒ page 51 .
- ❑ Lever retaining clip out of operating lever.
- ❑ Pull handle sideways off operating lever.

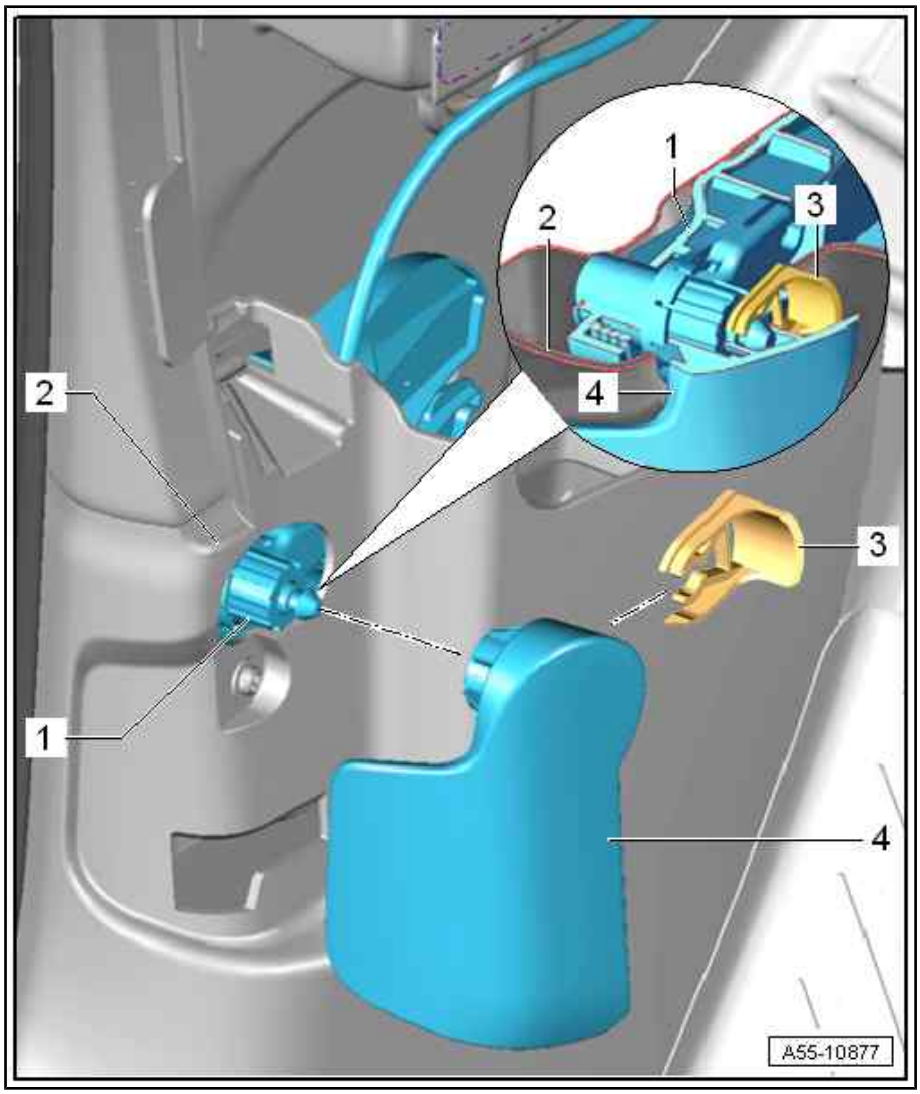

Removing operating lever

Protected by copyright. Copying for private or commercial purposes, in part or in whole, is not permitted unless authorised by AUDI AG. AUDI AG does not guarantee or accept any liability with respect to the correctness of information in this document. Copyright by AUDI AG.

1 - Operating lever

Removing

- Handle for operating lever removed ⇒ page 54 .
- A-pillar trim (bottom) removed ⇒ General body repairs, interior; Rep. gr. 70 ; Passenger compartment trim panels; Removing and installing A-pillar trim .
- Disengage cable -3-.
- Unscrew bolts -4-, release mounting bracket -arrow- and pull it towards rear out of A-pillar.

❑ Installing

- When installing, slide mounting bracket in at A-pillar until catch -arrow- engages.
- Tighten bolts to specified torque, engage cable and clip it in at cable support bracket.

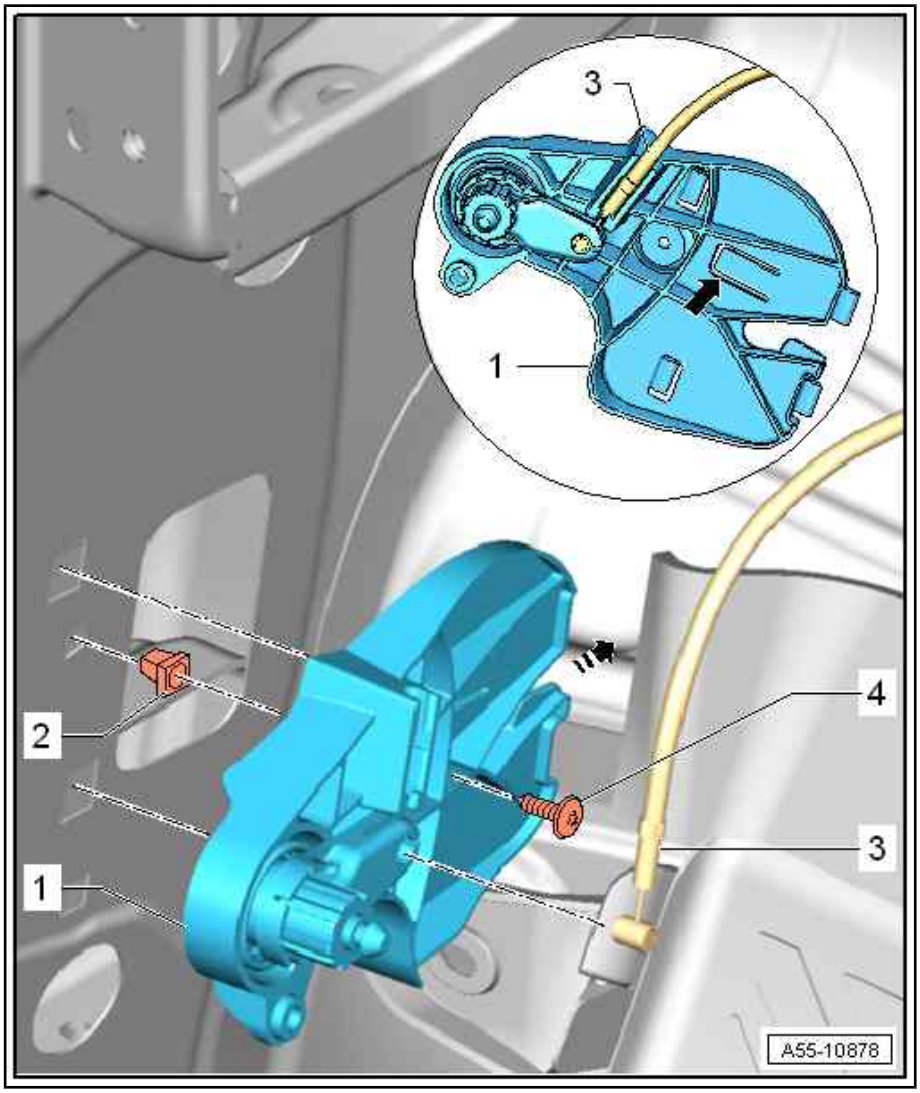

2 - Clip

3 - Bowden cable

❑ Clip support bracket for Bowden cable into mounting bracket, as shown in detail view.

4 - Bolt

❑ 2 Nm

Engaging Bowden cable in operating lever

- Insert Bowden cable -2- in operating lever -1- from side in direction of -arrow-.

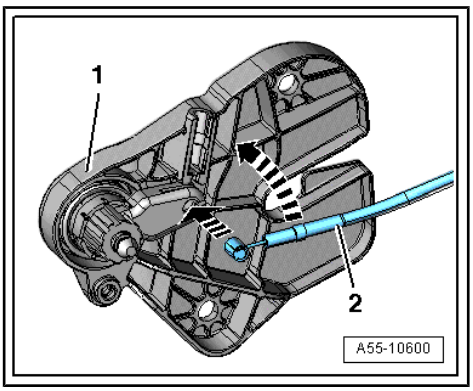

Protected by copyright. Copying for private or commercial purposes, in part or in whole, is not permitted unless authorised by AUDI AG. AUDI AG does not guarantee or accept any liability with respect to the correctness of information in this document. Copyright by AUDI AG.

– Swivel Bowden cable -2- upwards as shown and clip it into support bracket of operating lever -1-.

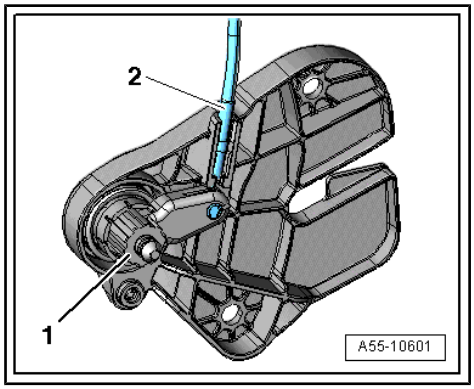

Protected by copyright. Copying for private or commercial purposes, in part or in whole, is not permitted unless authorised by AUDI AG. AUDI AG does not guarantee or accept any liability with respect to the correctness of information in this document. Copyright by AUDI AG.

2 Rear lid

⇒ “2.1 Exploded view - rear lid”, page 57

⇒ “2.2 Removing and installing rear lid”, page 59

⇒ “2.3 Adjusting rear lid”, page 60

⇒ “2.4 Removing and installing hinges”, page 66

⇒ “2.5 Removing and installing rear lid seal”, page 69

⇒ “2.6 Removing and installing stop and adjusting buffer”, page 72

⇒ “2.7 Removing and installing gas strut”, page 74

⇒ “2.8 Releasing gas from gas strut”, page 76

⇒ “2.9 Removing and installing extension spring”, page 77

⇒ “2.10 Removing and installing rear lid lock”, page 78

⇒ “2.11 Removing and installing actuator”, page 79

2.1 Exploded view - rear lid

⇒ “2.1.1 Exploded view - rear lid, A3 and A3 Sportback”, page 57

⇒ “2.1.2 Exploded view - rear lid, Saloon”, page 59

2.1.1 Exploded view - rear lid, A3 and A3 Sportback

WARNING

Damaged natural gas fuel tanks constitute an explosion risk - risk of death!

- *If components at the rear and/or rear side of the vehicle (e.g. bumper cover, rear lid, underbody trim, longitudinal member, rear cross panel, etc.) are removed due to accident damage, the natural gas fuel tanks must be checked for damage.*
- *Carry out assessment of damage to fuel tanks ⇒ Natural gas engines - General information; Rep. gr. 20 ; Assessing damage to fuel tanks .*

Protected by copyright. Copying for private or commercial purposes, in part or in whole, is not permitted unless authorised by AUDI AG. AUDI AG does not guarantee or accept any liability with respect to the correctness of information in this document. Copyright by AUDI AG.

Protected by copyright. Copying for private or commercial purposes, in part or in whole, is not permitted unless authorized by AUDI AG. AUDI AG does not guarantee or assume any liability with respect to the correctness of information in this document. Copyright by AUDI AG.

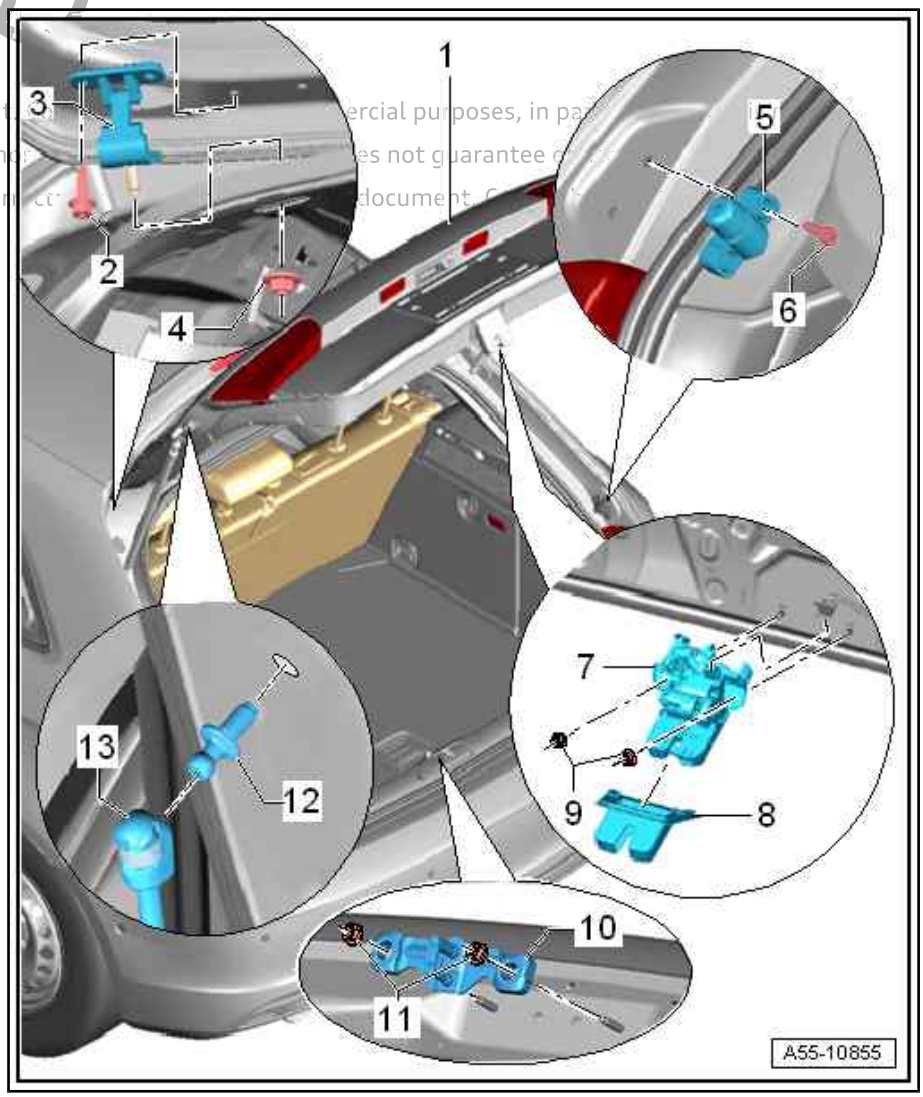

1 - Rear lid

- ❑ Removing and installing ⇒ page 59

2 - Bolt

- ❑ 23 Nm

3 - Hinge

- ❑ Removing and installing ⇒ page 66

4 - Nut

- ❑ 21 Nm

5 - Adjusting buffer

- ❑ Adjusting ⇒ page 65

6 - Bolt

- ❑ 8 Nm

7 - Rear lid lock

- ❑ Removing and installing ⇒ page 78

8 - Cap for rear lid lock

- ❑ Detach before removing rear lid trim
- ❑ Cap should engage audibly in rear lid lock on installation

9 - Nuts

- ❑ 21 Nm

10 - Striker

- ❑ Adjusting ⇒ page 65

11 - Nut

- ❑ 21 Nm

12 - Ball stud

- ❑ 21 Nm

13 - Gas strut

- ❑ Removing and installing ⇒ page 74
- ❑ Releasing gas ⇒ page 76

2.1.2 Exploded view - rear lid, Saloon

1 - Rear lid
- ❑ Removing and installing ⇒ page 59

2 - Nut
- ❑ 21 Nm

3 - Hinge

4 - Bolt
- ❑ 21 Nm

5 - Nut
- ❑ 21 Nm

6 - Rear lid lock
- ❑ Removing and installing ⇒ page 78

7 - Cap for rear lid lock

8 - Nut
- ❑ 21 Nm

9 - Striker
- ❑ Adjusting ⇒ page 65

10 - Gas strut
- ❑ Removing and installing ⇒ page 67

11 - Ball stud
- ❑ Riveted to body

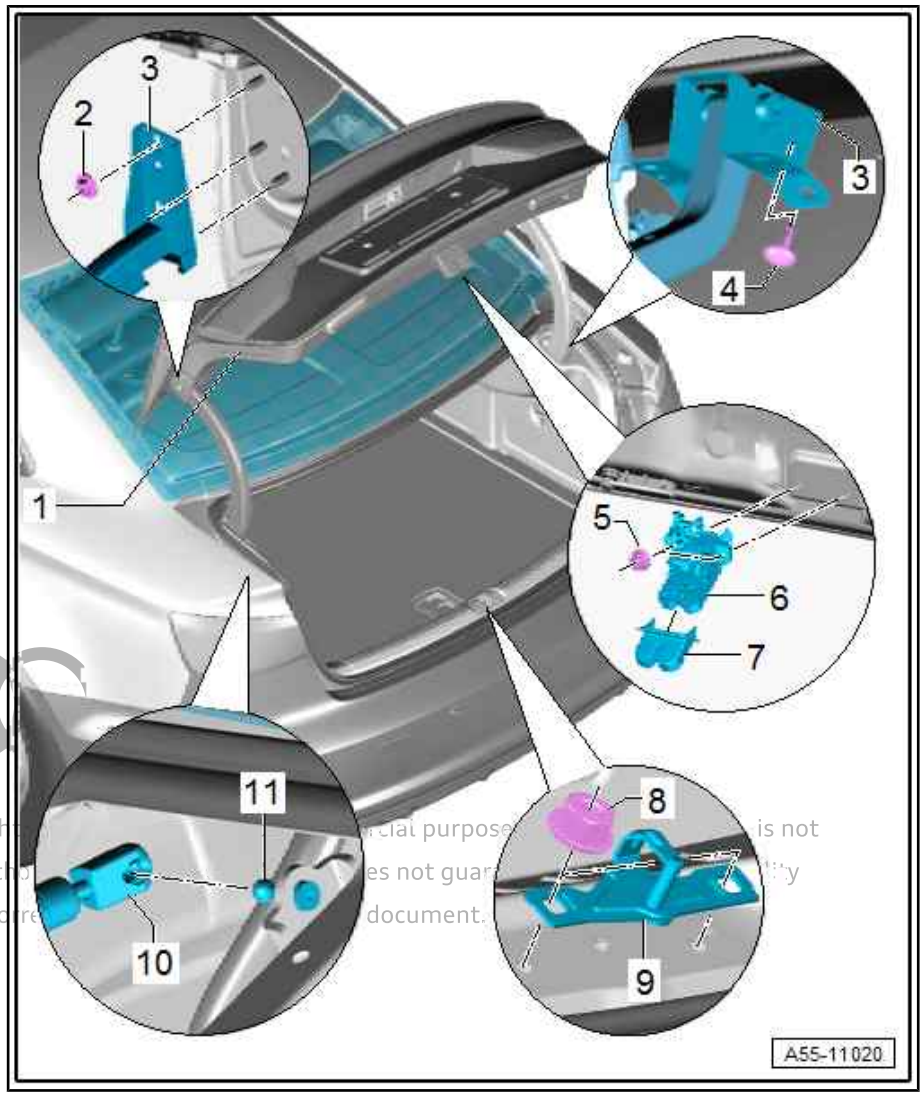

Protected by copyright. Commercial purposes is not permitted unless authorized. Audi does not guarantee the accuracy with respect to the correctness of this document.

2.2 Removing and installing rear lid

WARNING

Damaged natural gas fuel tanks constitute an explosion risk - risk of death!

- *If components at the rear and/or rear side of the vehicle (e.g. bumper cover, rear lid, underbody trim, longitudinal member, rear cross panel, etc.) are removed due to accident damage, the natural gas fuel tanks must be checked for damage.*
- *Carry out assessment of damage to fuel tanks ⇒ Natural gas engines - General information; Rep. gr. 20 ; Assessing damage to fuel tanks .*

- A second mechanic is required to perform this step (as described on ⇒ page 60).

- Depending on equipment version, the following additional work may be necessary ⇒ page 60 .

Removing

– Remove lining for rear lid ⇒ General body repairs, interior; Rep. gr. 70 ; Luggage compartment trim panels .

– Disconnect wiring and pull out of rear lid.

– Remove gas struts ⇒ page 74 .

– On A3 and A3 Sportback , unscrew both bolts on hinge (on lid) ⇒ page 66 and lift off rear lid.

– For Saloon, unscrew nuts on rear lid ⇒ page 63 and lift off rear lid.

Installing

Installation is carried out in reverse order; note the following:

– When inserting grommet in rear lid, make sure it is seated correctly.

– Adjust rear lid ⇒ page 60 .

Depending on equipment version, the following additional work may be necessary:

– Calibrate reversing camera - R189- ⇒ Communication; Rep. gr. 91 ; Reversing camera system .

2.3 Adjusting rear lid

⇒ “2.3.1 Adjustment dimensions”, page 60

⇒ “2.3.2 Lateral, longitudinal and height adjustment at hinge”, page 62

⇒ “2.3.3 Adjusting height at front of lid”, page 64

⇒ “2.3.4 Height adjustment at striker”, page 64

⇒ “2.3.5 Height adjustment using adjusting buffer”, page 65

2.3.1 Adjustment dimensions

Adjustment dimensions - A3 and A3 Sportback ⇒ page 60

Adjustment dimensions - Saloon ⇒ page 61

Adjustment dimensions - A3 and A3 Sportback

Protected by copyright. Copying for private or commercial purposes, in part or in whole, is not permitted unless authorised by AUDI AG. AUDI AG does not guarantee or accept any liability with respect to the accuracy of the information in this document. Copyright by AUDI AG.

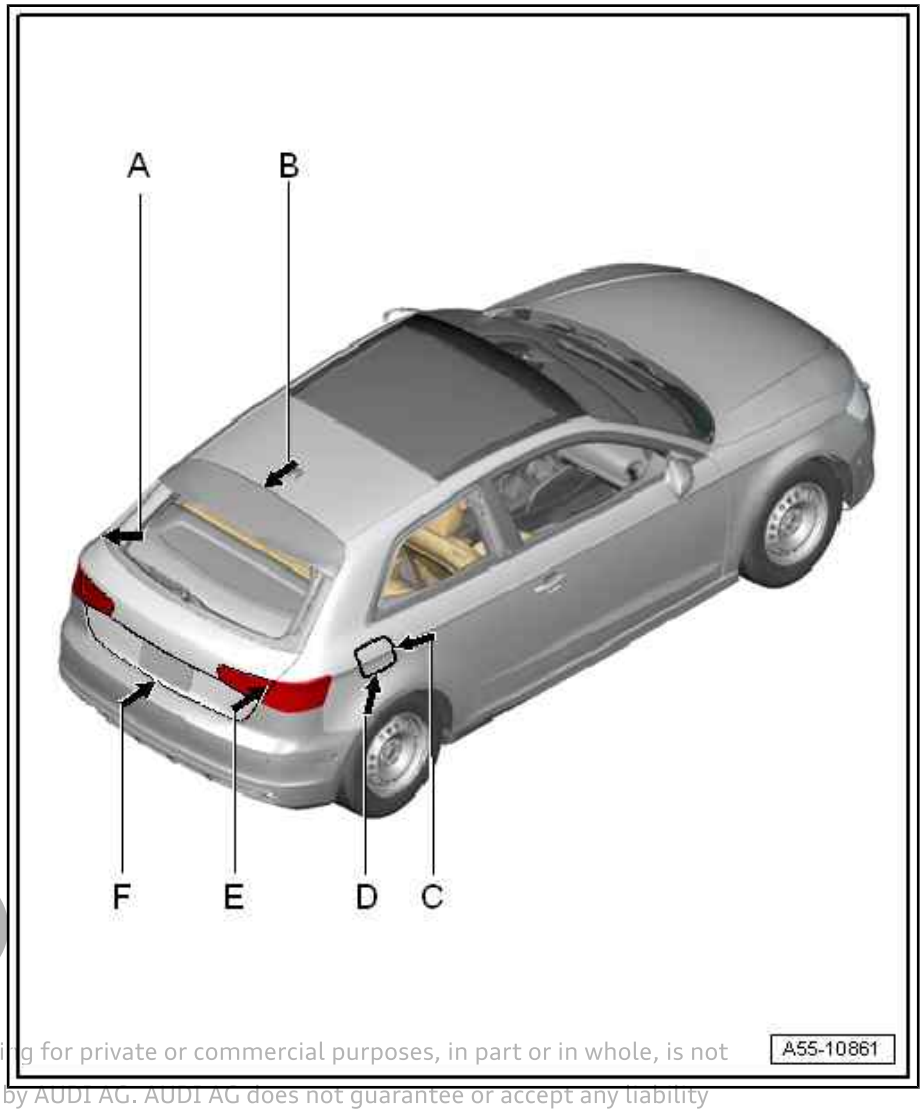

Protected by copyright. Copying for private or commercial purposes, in part or in whole, is not permitted unless authorised by AUDI AG. AUDI AG does not guarantee or accept any liability with respect to the correctness of information in this document. Copyright by AUDI AG.

- In area -A- = 3.5 mm ± 0.5 mm
- In area -B- = 5 mm ± 0.5 mm
- In area -C- = 2.5 mm ± 0.5 mm
- In area -D- = 2.5 mm ± 0.5 mm
- In area -E- = 4 mm ± 0.5 mm
- In area -F- = 5.5 mm ± 0.5 mm

Adjustment dimensions - Saloon

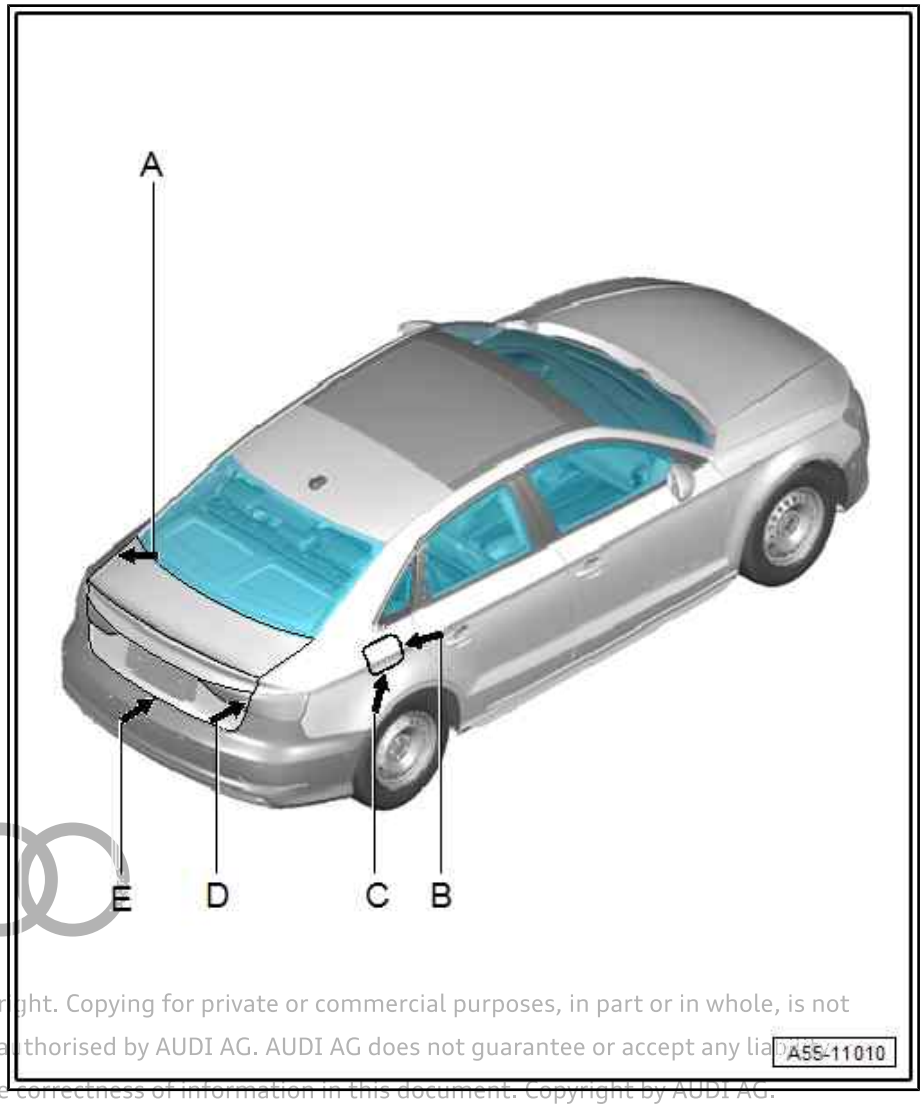

Protected by copyright. Copying for private or commercial purposes, in part or in whole, is not permitted unless authorised by AUDI AG. AUDI AG does not guarantee or accept any liability with respect to the correctness of information in this document. Copyright by AUDI AG.

- In area -A- = 3.5 mm ± 0.5 mm
- In area -B- = 2.5 mm ± 0.5 mm
- In area -C- = 2.5 mm ± 0.5 mm
- In area -D- = 3.5 mm ± 0.5 mm
- In area -E- = 5 mm ± 0.5 mm

2.3.2 Lateral, longitudinal and height adjustment at hinge

Lateral, longitudinal and height adjustment at hinge - A3 and A3 Sportback ⇒ page 63

Longitudinal adjustment at hinge - Saloon ⇒ page 63

- Adjustment dimensions ⇒ page 60

Special tools and workshop equipment required

♦ Setting gauge - 3371-

Lateral, longitudinal and height adjustment at hinge - A3 and A3 Sportback:

– Roof spoiler removed ⇒ page 336

– Prise out seal -1-.

• To ensure that seal is waterproof, it must be coated completely with adhesive/sealing compound - D 511 500 A2- after installation.

– Loosen bolts -2- on rear lid (at hexagon flats of bolts).

– Close rear lid and align with body contour.

– Tighten bolts -2- with insert for Torx spanner E5 (anti-clockwise) to max. 7 Nm to secure rear lid.

– Open rear lid and tighten bolts (at hexagon flats of bolts) to specified torque ⇒ Item 2 (page 58) .

– Install rear spoiler.

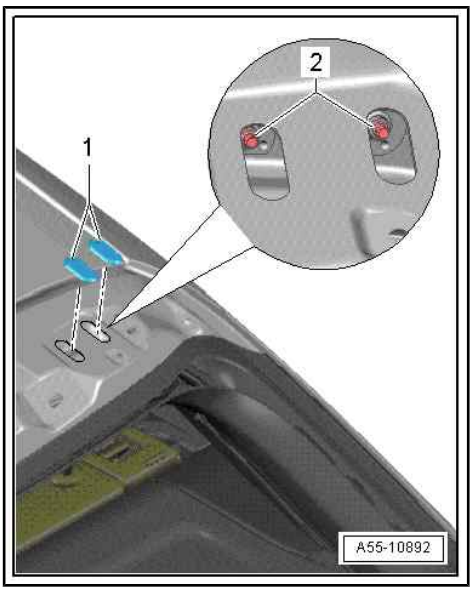

Longitudinal adjustment at hinge - Saloon:

Protected by copyright. Copying for private or commercial purposes, in part or in whole, is not permitted unless authorised by AUDI AG. AUDI AG does not guarantee or accept any liability with respect to the correctness of information in this document. Copyright by AUDI AG.

1 - Hinge

- ❑ Removing ⇒ page 67

2 - Nut

- ❑ Tightening torque ⇒ Item 2 (page 59)

3 - Rear lid

- ❑ Adjusting
  - – Determine how far rear lid needs to be adjusted longitudinally.
  - – Loosen nuts -2- on studs -4-.
  - – Move rear lid by appropriate distance at hinges.
  - – Tighten nuts to specified torque ⇒ Item 2 (page 59) .

4 - Stud

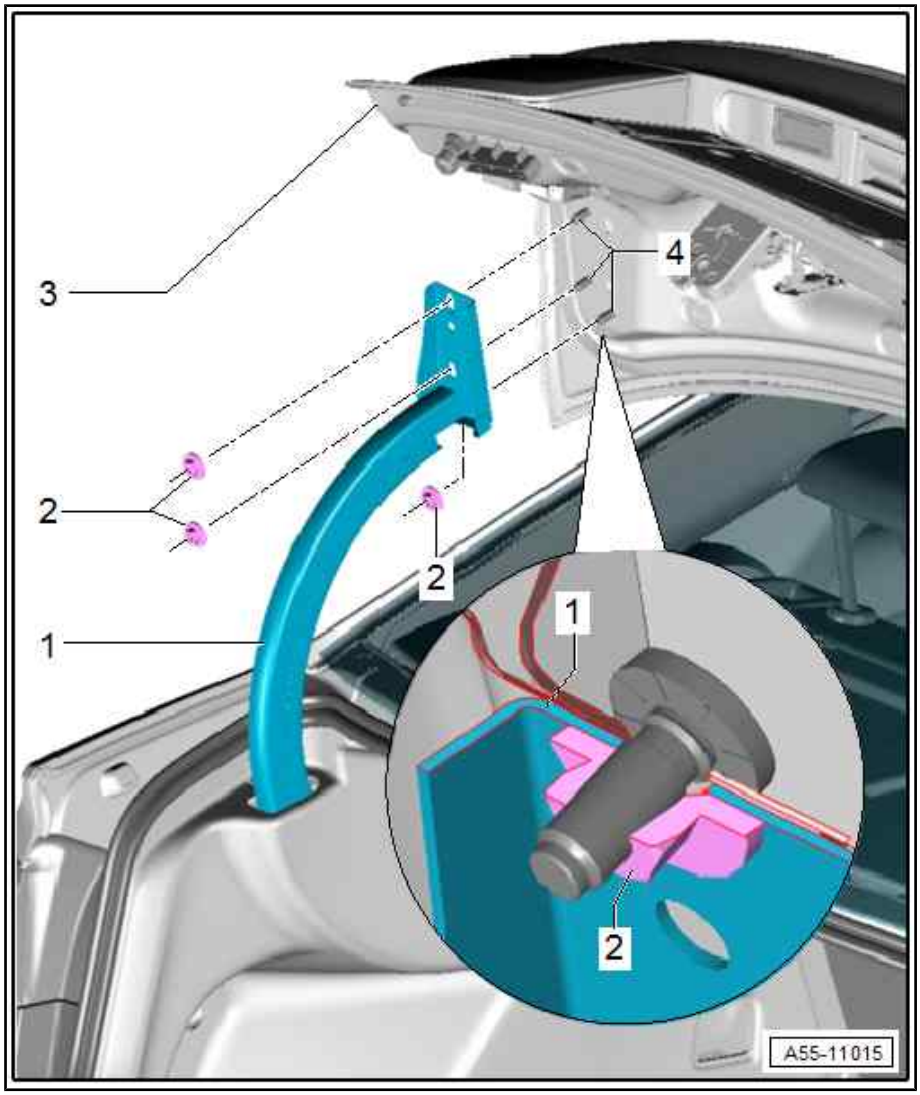

2.3.3 Adjusting height at front of lid

- Adjustment dimensions ⇒ page 60

– Height of rear lid can be adjusted by slackening nut and adjusting it in direction of -arrow-.

– To do so, rear shelf and D-pillar trim must be removed if hinge is installed.

– After adjusting, tighten nut on hinge to 20 Nm.

Protected by copyright. Copying for private or commercial purposes, in part
permitted unless authorised by AUDI AG. AUDI AG does not guarantee or
with respect to the correctness of information in this document. Copyright by AUDI AG.

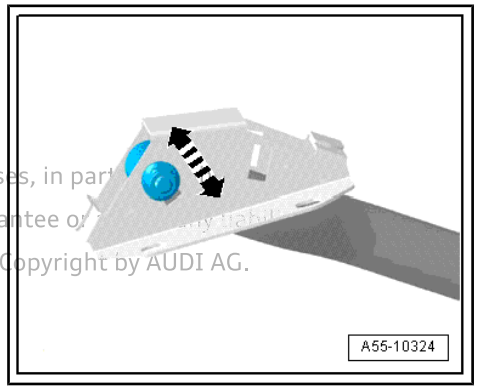

2.3.4 Height adjustment at striker

Height adjustment at striker - A3 and A3 Sportback ⇒ page 65

Height adjustment at striker - Saloon ⇒ page 65

- Adjustment dimensions ⇒ page 60

Special tools and workshop equipment required

- Setting gauge - 3371-

Height adjustment at striker - A3 and A3 Sportback:

– Tighten nut -2- slightly; it should still be possible to move striker -1-.

– Close rear lid until it is flush with side panels.

– Open rear lid and tighten nuts -2- to specified torque ⇒ Item 11 (page 58) .

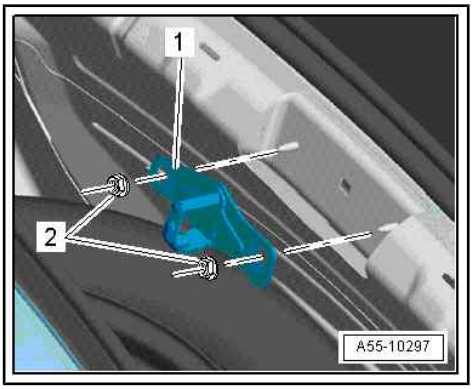

Height adjustment at striker - Saloon:

– The height can be adjusted by moving the striker -1-.

– Loosen nuts -2-, move striker -1- as appropriate until rear lid is aligned and tighten nuts to specified torque ⇒ Item 8 (page 59) .

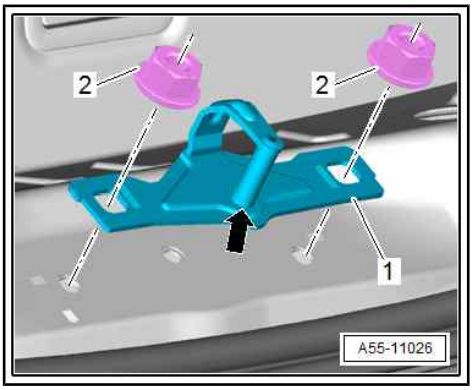

2.3.5 Height adjustment using adjusting buffer

- Adjustment dimensions ⇒ page 60

Special tools and workshop equipment required

- Setting gauge - 3371-

Protected by copyright. Copying for private or commercial purposes, in part or in whole, is not permitted unless authorised by AUDI AG. AUDI AG does not guarantee or accept any liability with respect to the correctness of information in this document. Copyright by AUDI AG.

– Before adjusting rear lid, screw adjuster screw -2- with protective cap -1- completely into adjusting buffer -3-.
– Unscrew adjuster screw until protective cap is slightly compressed when it comes into contact with stop on rear lid with rear lid closed.
– Make sure that rear lid has no play and closes in line with body contour by pressing or pulling on side edges of rear lid beneath rear window.
– Repeat adjustment if necessary.

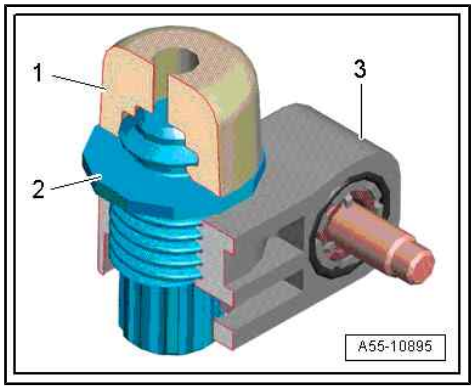

2.4 Removing and installing hinges

⇒ "2.4.1 Removing and installing hinges - A3 and A3 Sportback", page 66

⇒ "2.4.2 Removing and installing hinges - Saloon", page 67

2.4.1 Removing and installing hinges - A3 and A3 Sportback

1 - Bolt

❑ 23 Nm

2 - Hinge

Note

Before removing, mark hinge on body and rear

Protected by copyright. C
permitted unless authori
with respect to the corre

❑ Removing:

– Unscrew bolts from rear lid.
– Lower headliner around hinge, unscrew nut and take out hinge.

❑ Installing

– Insert hinge according to marks and secure with nut.
– Position rear lid on hinge and secure with bolts.
– Engage gas strut.
– Carefully close rear lid.
– Align rear lid at sides and adjust its height ⇒ page 60 .
– Tighten nuts and bolts to specified torque.

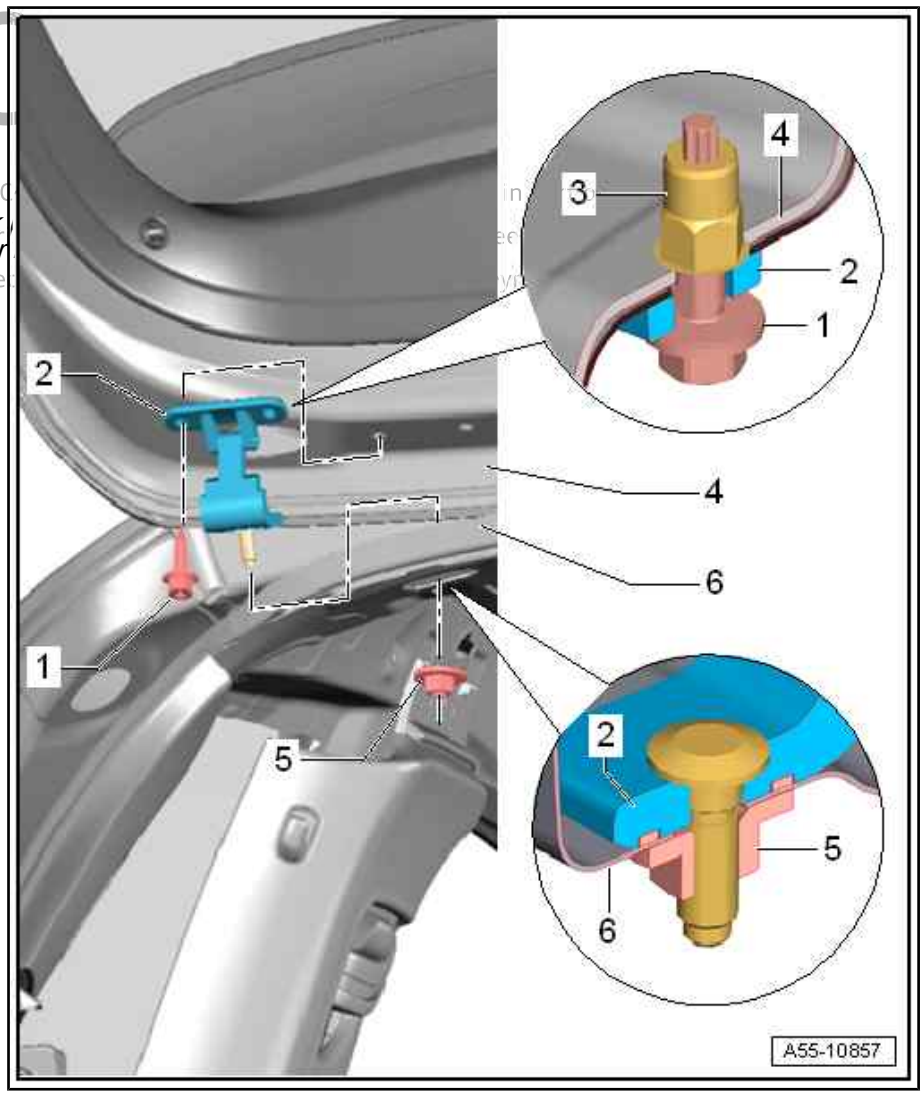

3 - Pop rivet nut

4 - Rear lid

5 - Nut

- ❑ 21 Nm

6 - Roof flange

2.4.2 Removing and installing hinges - Saloon

1 - Hinge

Note

Before removing, mark positi body and rear lid.

- ❑ Removing:
- – Luggage compartment side trim must be removed.
- – Unscrew nuts on rear lid ⇒ page 63 .
- – Unscrew bolts -3-.
- ❑ Installing
- – To install, first secure hinge with bolts -3-.
- – Tighten nuts on rear lid slightly at first.
- – Close rear lid, align with rear lid opening and tighten nuts to specified torque ⇒ Item 2 (page 59) .

Protected by copyright. Copying for private or co se permitted unless authorized by AUDI AG. AUDI with respect to the correctness of information

2 - Buffer

- ❑ Pressed into hinge as shown.

3 - Bolt

- ❑ Tightening torque ⇒ Item 4 (page 59)

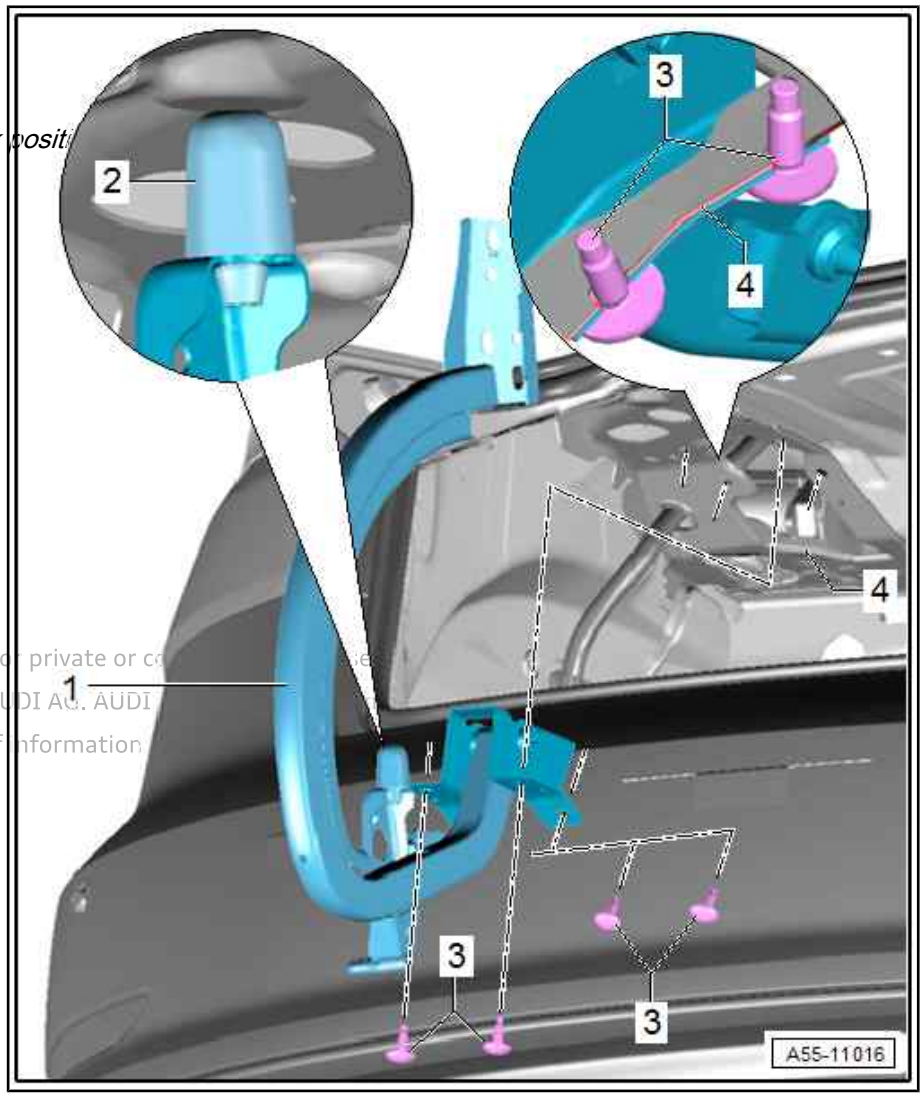

Removing and installing cable guide for hinge

1 - Cable guide

❑ Removing

– Prise cover to side out of cable guide.

– Pull spreader pin out of clip and detach cable guide with clip from hinge.

❑ Installing

– Press cable guide with clip into hinge.

– Press spreader pin into clip.

– Press cable guide into retaining tabs.

– Clip cover into cable guide along its entire length and press on as far as stop (until it engages).

2 - Cover

❑ Must be engaged in cable guide along entire length ⇒ page 68

3 - Rear lid

4 - Hinge

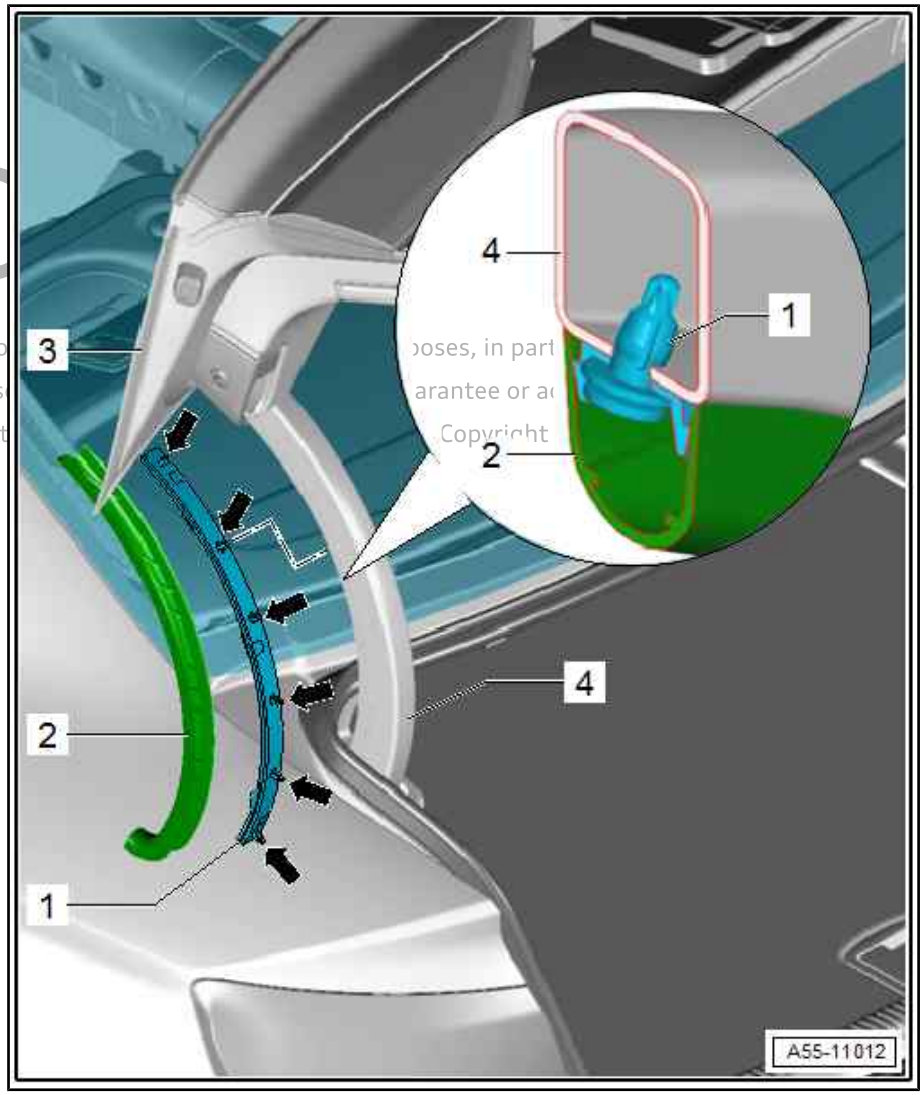

Pressing on cover for rear lid hinge

– When pressing on, cover -2- must engage in cable guide on hinge -1- -arrows- along its entire length.

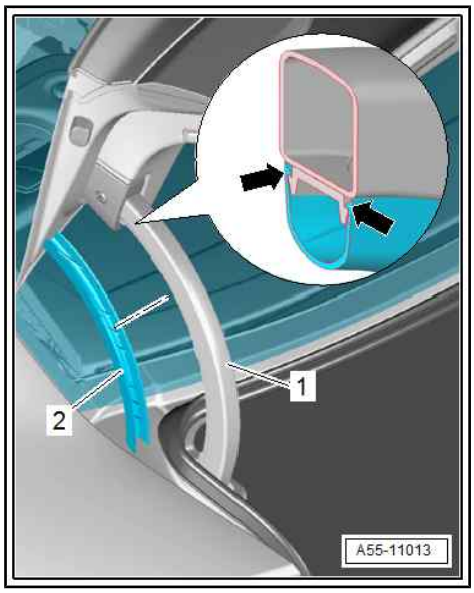

Locking element for rear lid hinge

– Insert retaining tabs of locking element -1- under rear lid trim.
– Secure locking element by inserting clip -2- through mounting holes in hinge -3- and press in spreader pin.

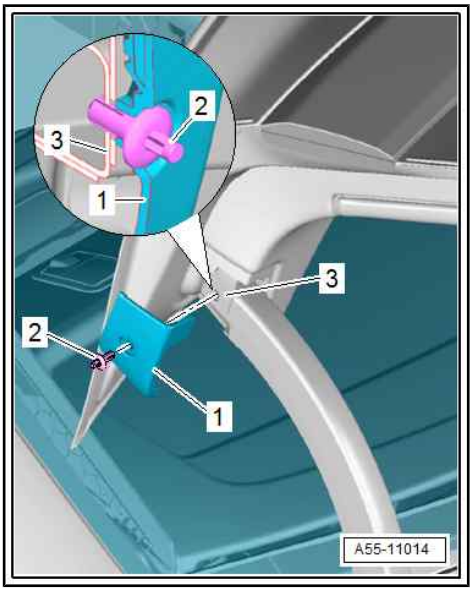

2.5 Removing and installing rear lid seal

Protected by copyright. Copying for private or commercial purposes, in part or in whole, is not permitted unless authorised by AUDI AG. AUDI AG does not guarantee or accept any liability with respect to the correctness of information in this document. Copyright by AUDI AG.

⇒ “2.5.1 Removing and installing rear lid seal - A3 and A3 Sportback”, page 69
⇒ “2.5.2 Removing and installing rear lid seal - Saloon”, page 71

2.5.1 Removing and installing rear lid seal - A3 and A3 Sportback

1 - Rear lid

2 - Rear lid seal

- To remove seal, detach it from body flange.
- Release bumper cover and pull it slightly towards rear for installation ⇒ page 264 .
- Align seal so that butt joint -arrow- is at top centre of vehicle.
- Starting from butt joint, press seal onto body flange all around.
- Install bumper cover ⇒ page 264 .

3 - Body flange

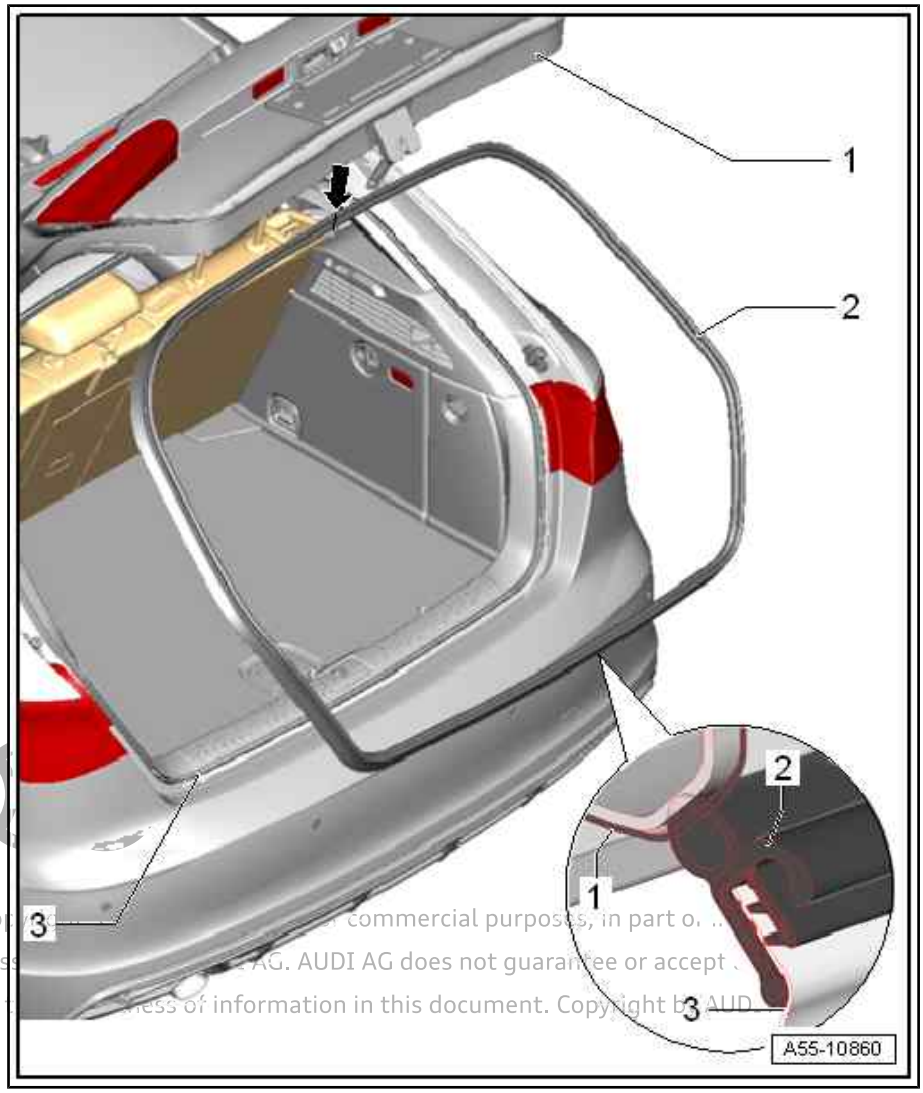

Protected by co commercial purposes, in part o
permitted unles AG. AUDI AG does not guarantee or accept
with respect to ness of information in this document. Copyright by AUD

2.5.2 Removing and installing rear lid seal - Saloon

1 - Rear lid

2 - Rear lid seal

- To remove seal, detach it from body flange.
- When installing, place seal over rear lid onto body.
- Align seal at bottom so that butt joint -arrow- is in centre of vehicle.
- Starting from butt joint, press seal onto body flange all around.
- Install bumper cover ⇒ page 264 .

3 - Body flange

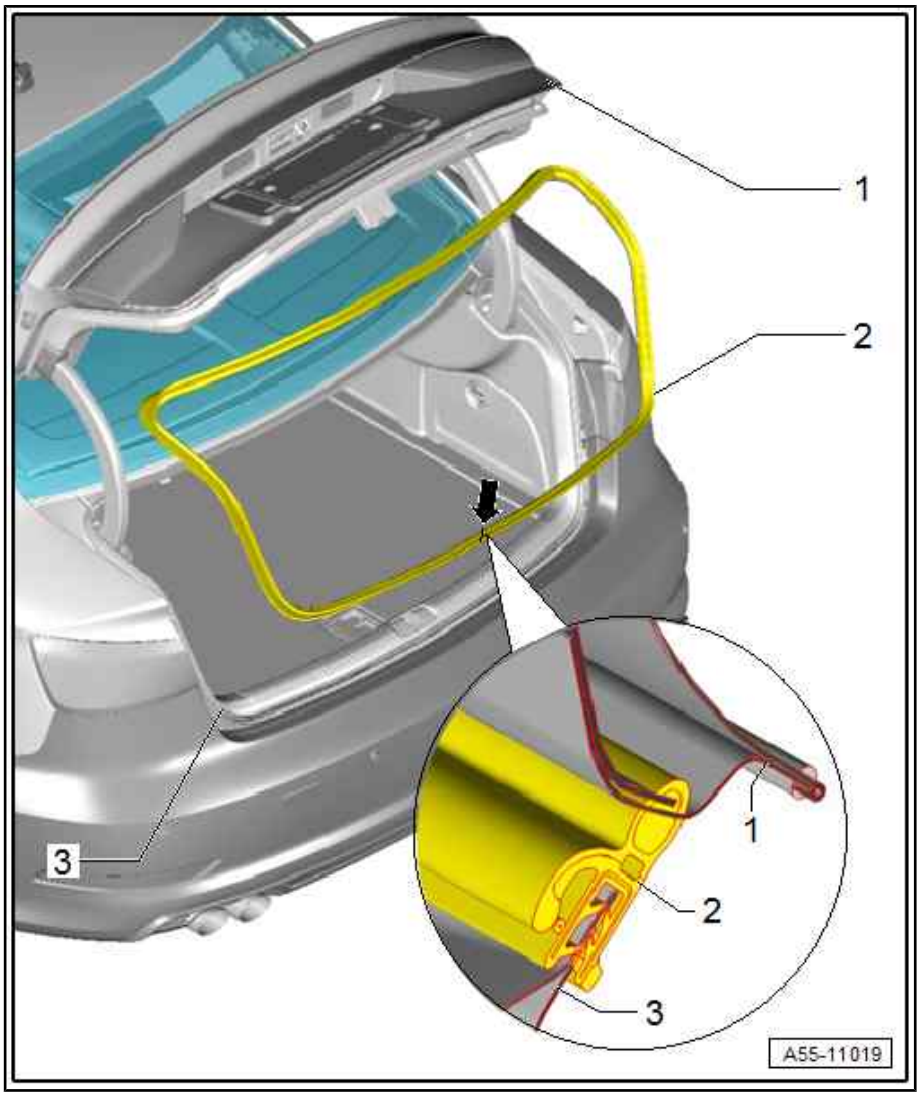

Protected by copyright. Copying for private or commercial purposes, in part or in whole, is not permitted unless authorised by AUDI AG. AUDI AG does not guarantee or accept any liability with respect to the correctness of information in this document. Copyright by AUDI AG.

2.6 Removing and installing stop and adjusting buffer

⇒ "2.6.1 Removing and installing stop and adjusting buffer - A3 and A3 Sportback", page 72

⇒ "2.6.2 Removing and installing stop and adjusting buffer - Saloon", page 72

2.6.1 Removing and installing stop and adjusting buffer - A3 and A3 Sportback

1 - Stop

- ❑ Pressed into rear lid

2 - Bolt

- ❑ 8 Nm

3 - Stop

- – Insert stop and tighten bolt to specified torque.

4 - Adjusting buffer

- ❑ Adjusting ⇒ page 65

5 - Bolt

- ❑ 8 Nm

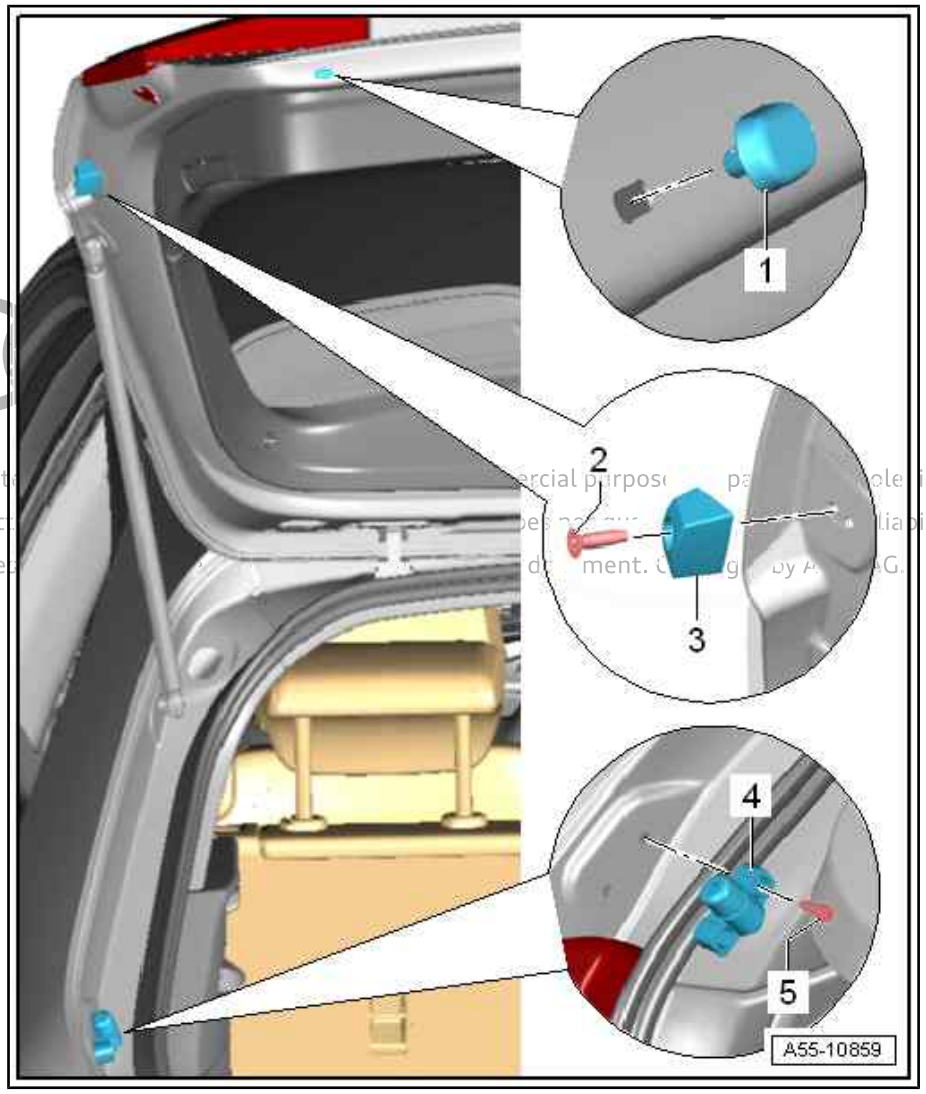

Protect[illegible]ercial purpos[illegible] pa[illegible]ole is not permit[illegible] liability with re[illegible] ment. [illegible] by A[illegible]G.

2.6.2 Removing and installing stop and adjusting buffer - Saloon

Removing and installing stop and adjusting buffer ⇒ page 72

Removing and installing lateral stops ⇒ page 73

Removing and installing stop and adjusting buffer:

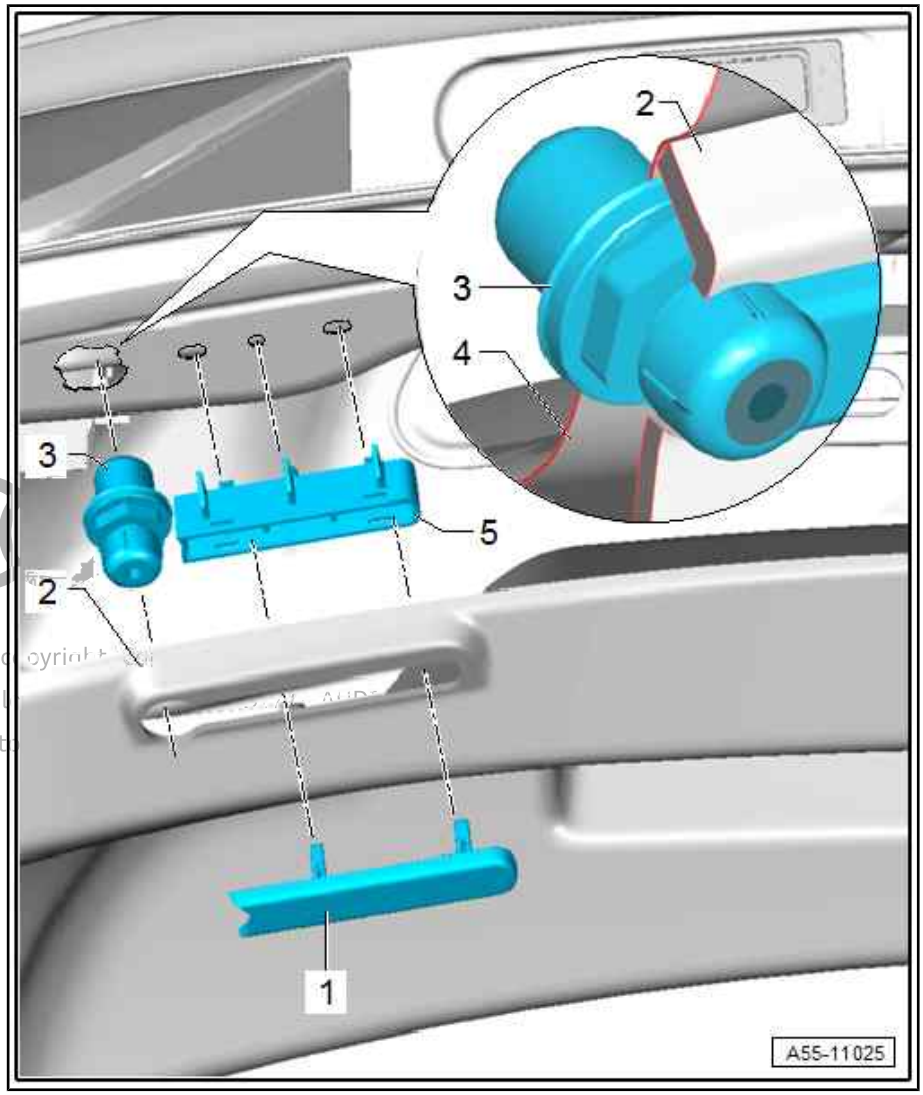

1 - Stop (outer part)

– Press into stop (inner part) after fitting rear lid trim.

2 - Rear lid trim

– Stop (inner part) must be fitted before installing rear lid trim.

– After fitting rear lid trim, press in stop (outer part) until it engages.

3 - Adjusting buffer

❑ Only make adjustments after using striker to adjust rear lid ⇒ page 65 .

– Use 5 mm hexagon key to turn adjusting buffer.

– When rear lid is closed, it must just be possible to slide a slip of paper between adjusting buffer and body flange.

4 - Rear lid

– Use rear lid hinge to adjust front of lid to align with body contour ⇒ page 62 .

– Use striker to adjust rear of lid to align with body contour.

5 - Stop (inner part)

– Press into rear lid before fitting rear lid trim.

Removing and installing lateral stops:

1 - Side panel

2 - Rear lid

3 - Stop on rear lid

- ❑ Removing
- – Pull fastener out of stop.
- – Unclip stop from rear lid.
- ❑ Installing
- – Press stop into rear lid so that it engages.
- – Insert fastener so it is flush with stop.

4 - Fastener

5 - Stop (top)

6 - Stop on body

- ❑ Removing
- – Pull fastener out of stop.
- – Unclip stop from side panel.
- ❑ Installing
- – Press stop into side panel so that it engages.
- – Insert fastener so it is flush with stop.

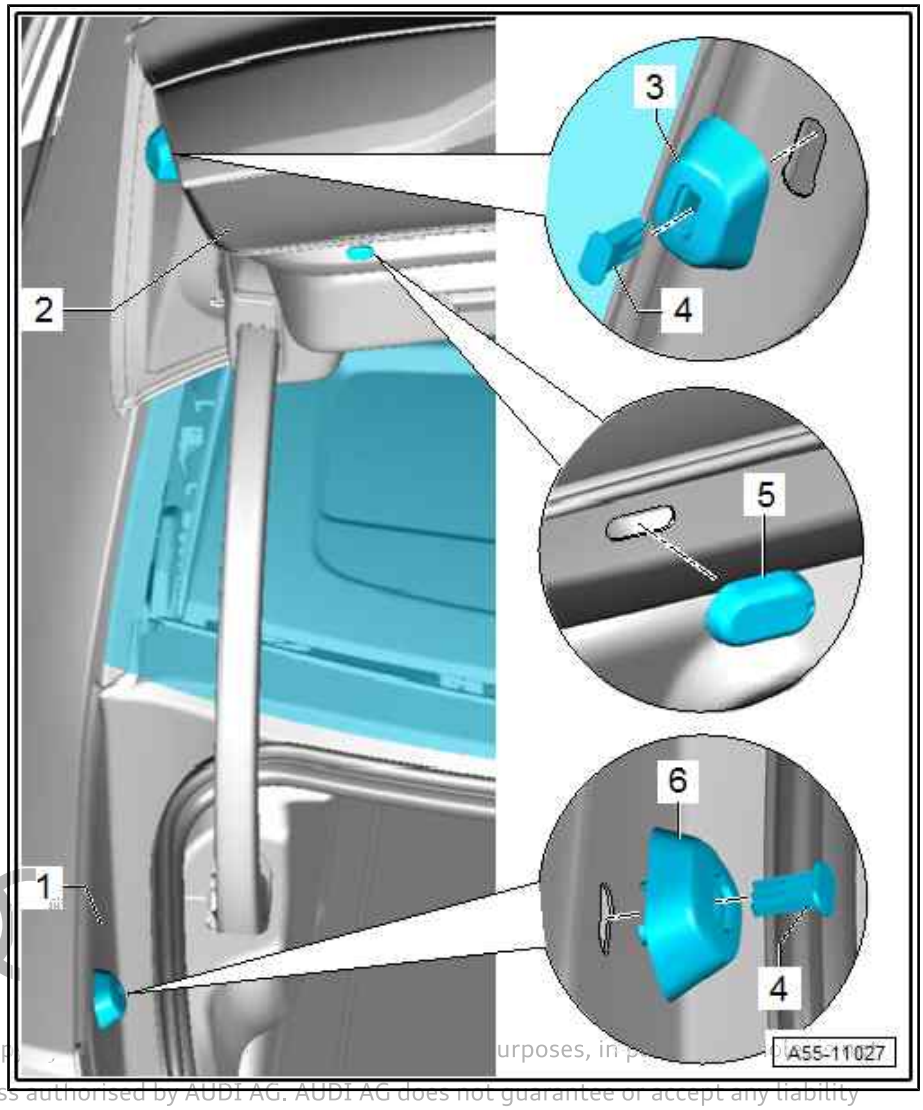

Protected by copyright. Copying for private or commercial purposes, in part or in whole, is not permitted unless authorised by AUDI AG. AUDI AG does not guarantee or accept any liability with respect to the correctness of information in this document. Copyright by AUDI AG.

2.7 Removing and installing gas strut

⇒ “2.7.1 Disengaging gas strut”, page 74

⇒ “2.7.2 Removing and installing gas strut - A3 and A3 Sportback”, page 75

⇒ “2.7.3 Removing and installing gas strut - Saloon”, page 76

2.7.1 Disengaging gas strut

Procedure

– Support rear lid or secure it in position.

– Lift retaining clip -1- slightly using a small screwdriver, and pull gas strut -2- off ball stud (top).
– Repeat procedure at lower ball stud.

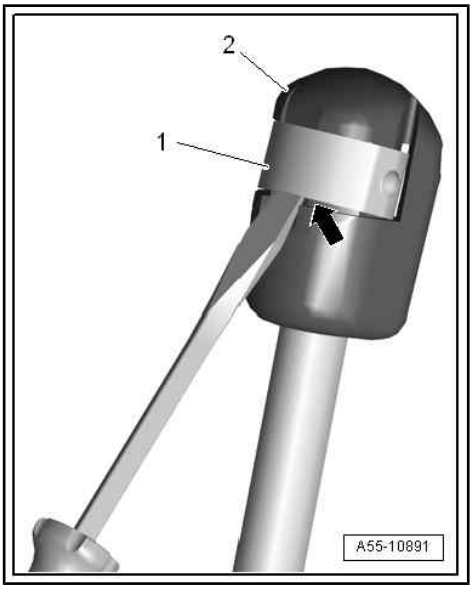

2.7.2 Removing and installing gas strut - A3 and A3 Sportback

1 - Gas strut

- ❑ When removing, open and prop up rear lid.
- ❑ To remove, slightly raise retaining clip -arrow- with screwdriver and detach gas strut from ball stud.

Protected by copyright. Copying for private or commercial purposes, in part or in whole, is not permitted unless authorised by AUDI AG. AUDI AG does not guarantee or accept any liability with respect to the correctness of information in this document. Copyright by AUDI AG.

Note

- ♦ *If gas strut has been compressed or removed make sure it is re-stalled in the correct position.*
- ♦ *Damping element must be engaged on body.*

- ❑ To install, press gas strut ball sockets onto ball stud (turn ball sockets while pressing them on).

2 - Rear lid

3 - Ball stud

Note

If ball stud has been removed or adjusted, it must be renewed.

- ❑ 21 Nm

4 - Retaining clip

- ❑ Releasing ⇒ page 74

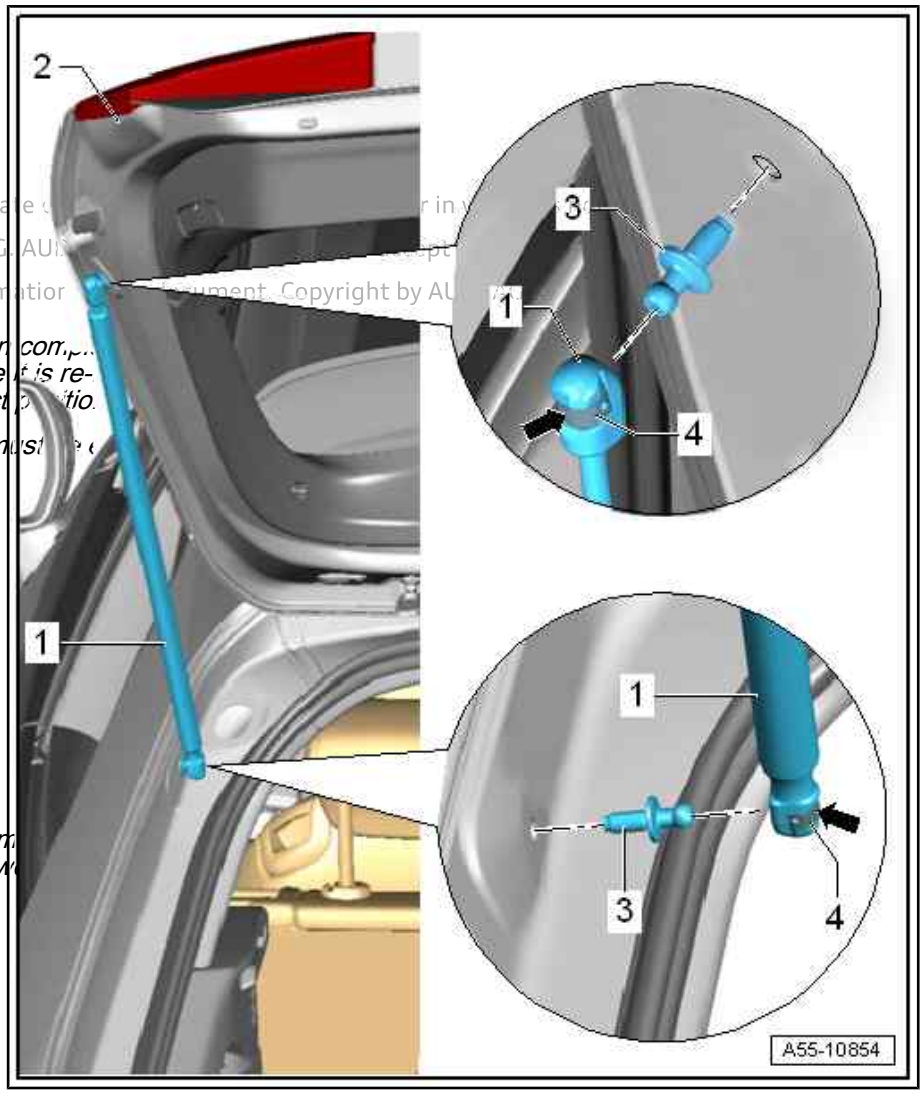

2.7.3 Removing and installing gas strut - Saloon

1 - Gas strut

- ❑ Installed on left side of vehicle only.
- ❑ Removing
- – Side trim must be removed.
- – Lift retaining springs -arrows- and disengage gas strut from ball stud ⇒ page 74 .
- ❑ Installing
- – Install in correct position: damping element with marking »Body« must be pressed onto ball stud on body.

2 - Rear lid

3 - Ball stud

- ❑ Riveted to rear lid hinge/ body

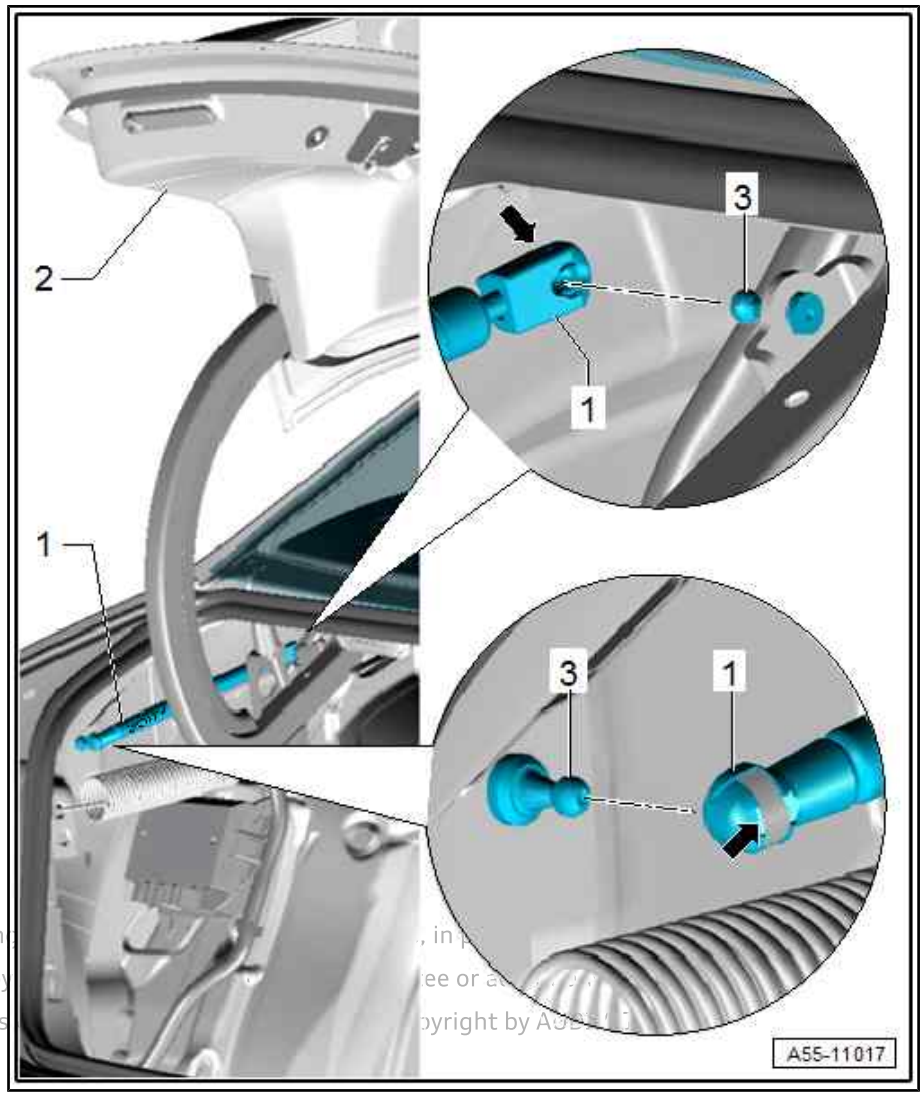

Protected by copyright. Copyin , in p
permitted unless authorised by ee or a
with respect to the correctness opyright by AU

2.8 Releasing gas from gas strut

Procedure

– Clamp section -x = 50 mm- of gas strut in a vice.

> ⚠ **WARNING**
>
> ***Risk of eye injuries due to metal swarf.***
>
> ***Eye irritation and injury possible.***
>
> - ***Put on safety goggles.***

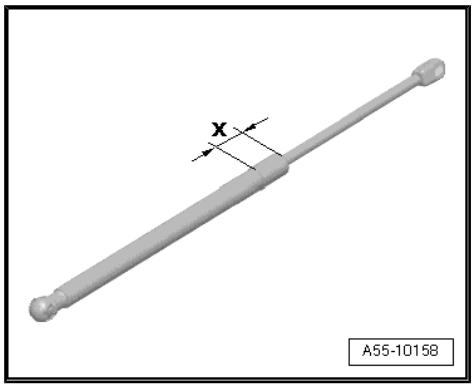

– Cover area around saw notch with a cloth to catch any escaping fluid.

– Saw open cylinder of gas strut in first third of overall cylinder length, based on reference edge at piston-rod end.

2.9 Removing and installing extension spring

Copyright. Copying for private or commercial purposes, in part or in whole, is not permitted unless authorised by AUDI AG. ... guarantee or ... ent. Copy...

1 - Extension spring

- ❑ Removing
  - – Luggage compartment side trim must be removed.
  - – First disengage from bracket, then detach eye from hinge.
- ❑ Installing
  - – First slide eye onto hinge, then engage in bracket.

2 - Hinge

3 - Rear lid

4 - Eye

5 - Bracket

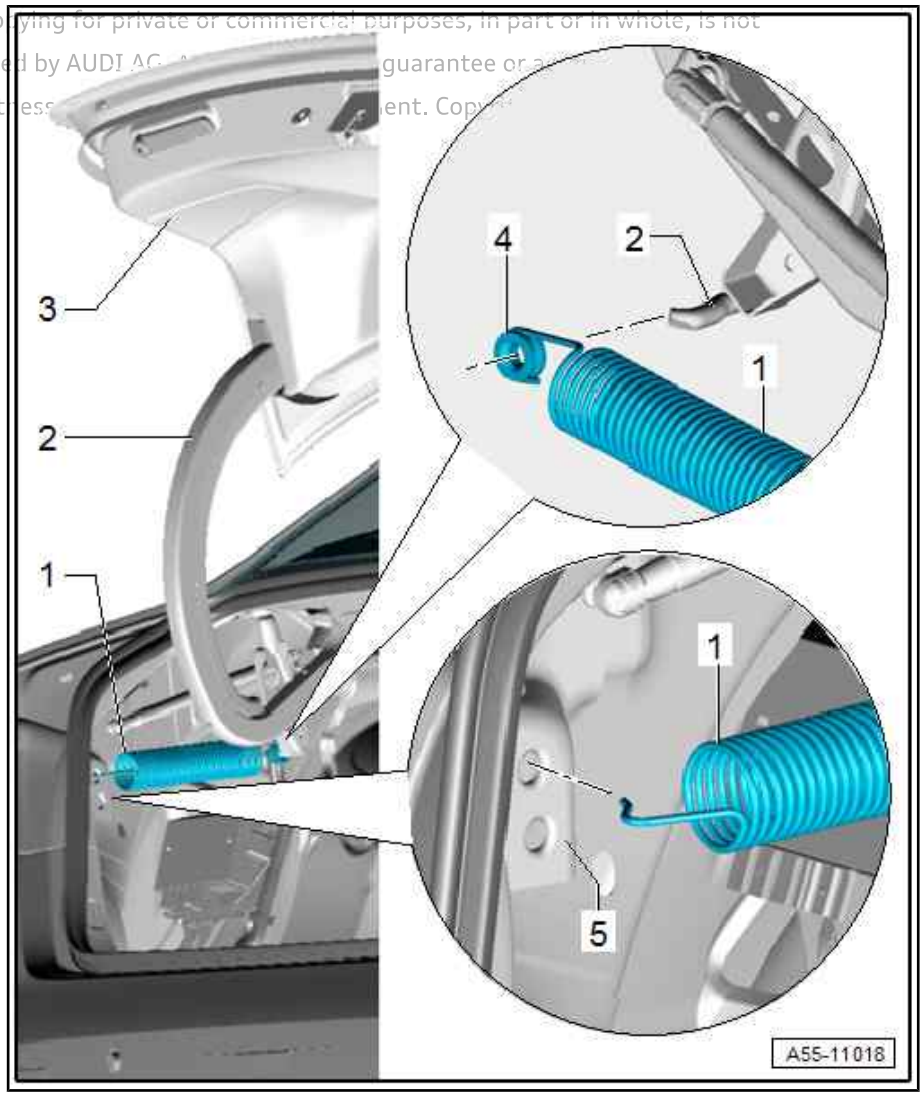

2.10 Removing and installing rear lid lock

1 - Cap for rear lid lock

- ❑ With rear lid trim removed

2 - Nut

- ❑ 21 Nm

3 - Rear lid lock

- ❑ Removing
- – Remove rear lid trim ⇒ General body repairs, interior; Rep. gr. 70 ; Luggage compartment trim panels .
- – Unplug electrical connector.
- – Unscrew nuts and detach rear lid lock.
- – Pull rear lid lock with clip out of centring hole.
- ❑ Installing
- ❑ Secure rear lid lock with centre guide to rear lid and tighten nuts to specified torque.

4 - Wiring harness

5 - Rear lid

6 - Clip

- ❑ For centring rear lid lock

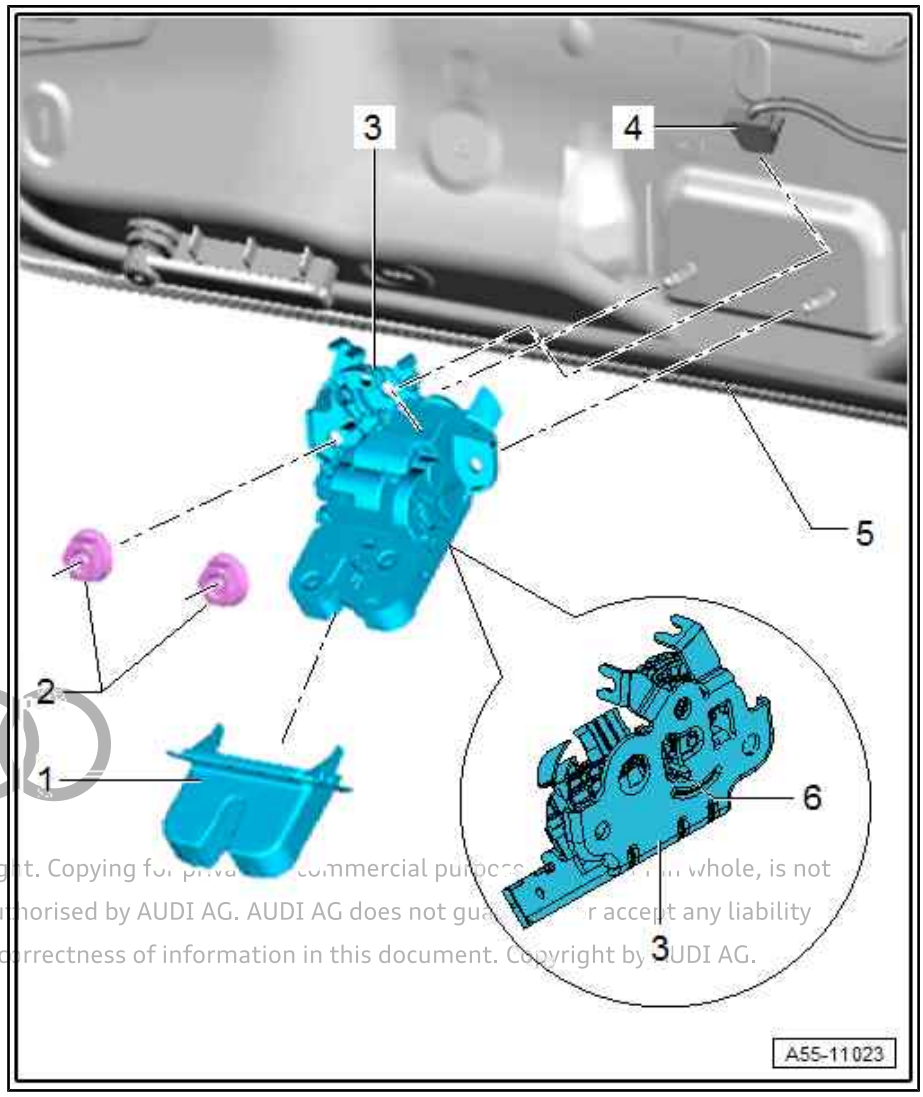

Protected by copyright. Copying for private or commercial purposes, in whole, is not permitted unless authorised by AUDI AG. AUDI AG does not guarantee or accept any liability with respect to the correctness of information in this document. Copyright by AUDI AG.

2.11 Removing and installing actuator

1 - Number plate light

- ❑ Removing and installing ⇒ Electrical system; Rep. gr. 94 ; Number plate light

2 - Actuator

- ❑ Rear lid handle release button - E234-
- ❑ Removing and installing ⇒ Electrical system; Rep. gr. 96 ; Controls; Overview of fitting locations - controls in luggage compartment

3 - Lock cover

- – Before detaching, remove cover from rear lid ⇒ page 79 .

Protected by copyright. Copying for private or comm
permitted unless authorised by AUDI AG. AUDI
with respect to the correctness of informa AG.

4 - Nut

- ❑ 4 Nm

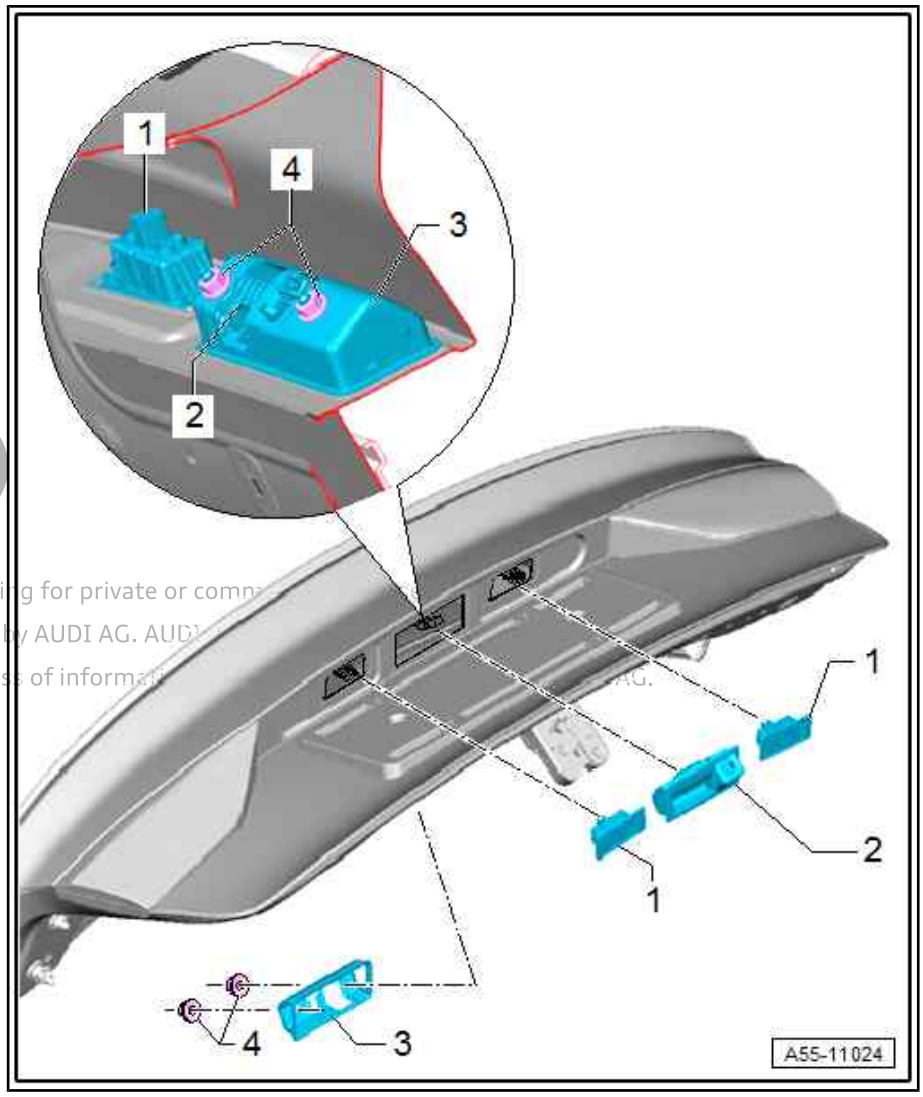

Removing cover

- – Press catches -arrows- to release and pull cover -1- out of rear lid.
- – If necessary, unplug electrical connector -2-.
- – When installing, first engage bottom of cover, ensuring that wiring harness for rear lid handle release button is routed correctly as shown.
- – Pivot top of cover into rear lid so that it engages audibly.
- – Check that wiring harness is not obstructed (adjust if necessary).

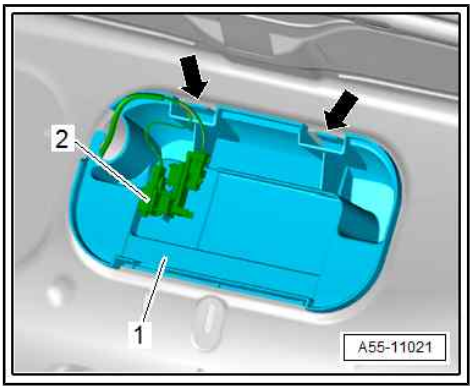

3 Tank flap unit

⇒ “3.1 Exploded view - tank flap unit”, page 80

⇒ “3.2 Removing and installing tank flap unit”, page 80

⇒ “3.3 Removing and installing trim panel for tank flap”, page 82

⇒ “3.4 Removing and installing drain hose for tank flap unit”, page 83

⇒ “3.5 Removing and installing manual release cable”, page 85

3.1 Exploded view - tank flap unit

Protected by copyright. Copying for private or commercial purposes, in part or in whole, is not permitted unless authorised by AUDI AG. AUDI AG does not guarantee or assume any liability with respect to the correctness of information in this document.

1 - Drain hose

- ❑ e-tron: Renew after removing tank flap unit ⇒ Item 6 (page 80)

2 - Cable for manual release

3 - Bolts

- ❑ 1.5 Nm

4 - Tank filler flap locking motor - V 155-

- ❑ Removing
  - – Detach cable in luggage compartment.
  - – Remove tank flap and pull cable through towards front.
  - – Unscrew bolts from tank filler flap locking motor - V 155- and detach motor.
- ❑ Installing
  - – Fit tank filler flap locking motor - V 155- on tank flap unit and tighten bolts -3- to torque.

5 - Lid for tank flap unit

6 - Tank flap unit

- ❑ Renew after removing
- ❑ Removing and installing ⇒ page 80

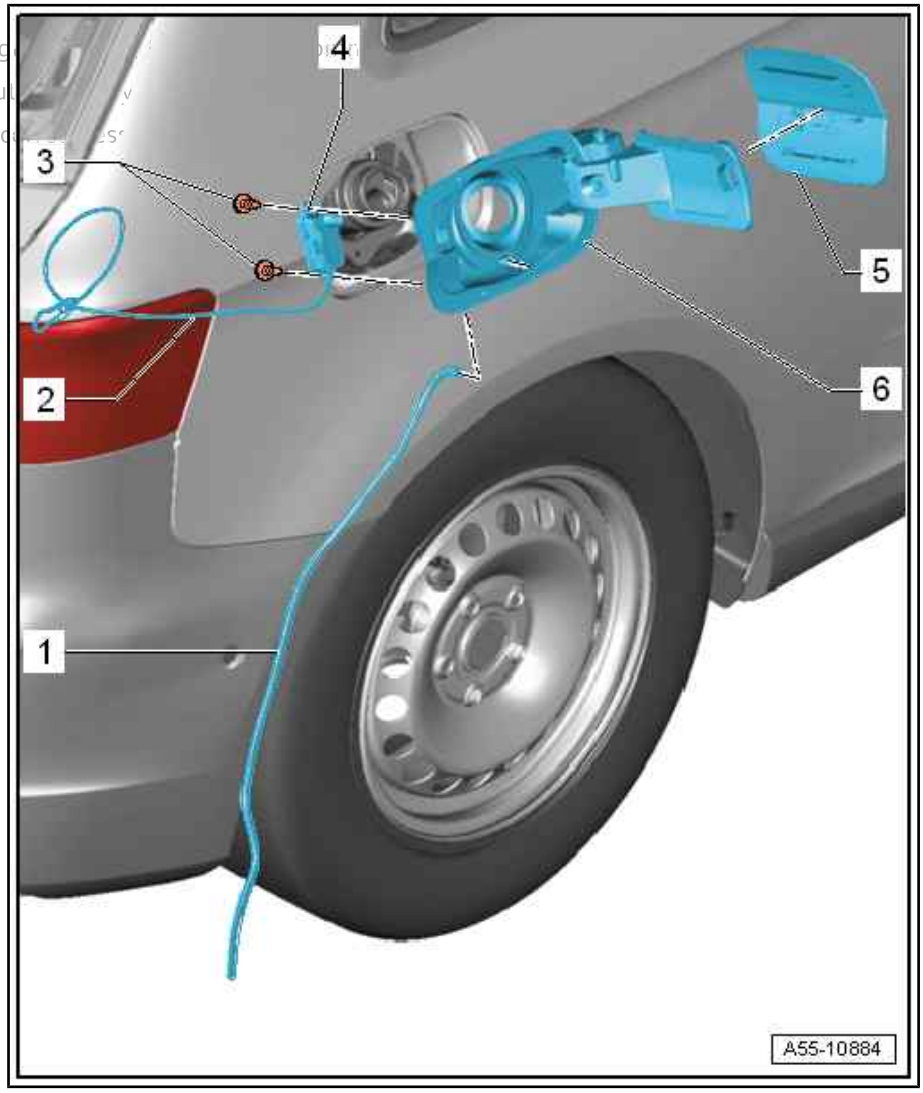

3.2 Removing and installing tank flap unit

- The following components have to be renewed after removal ⇒ page 80 .

Removing

– Unclip drain hose from guide (bottom) ⇒ page 83 .

– First release tank flap at marked locations -arrows-.

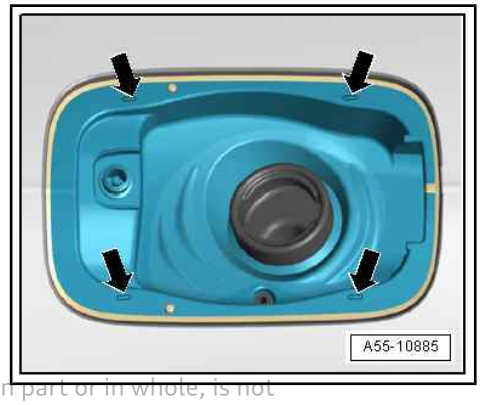

Protected by copyright. Copying for private or commercial purposes, in part or in whole, is not permitted unless authorised by AUDI AG. AUDI AG does not guarantee or accept any liability with respect to the correctness of information in this document. Copyright by AUDI AG.

– Push a small screwdriver at top of tank flap unit through marked locations into tank flap from below at an angle and over catches (in direction of -arrows-).

– Pull screwdriver upwards slightly to release catches behind.

– Insert screwdriver on underside of tank flap unit from above at an angle and push it in through marked locations.

– Press screwdriver down slightly to release catches behind.

– Pull tank flap unit with drain hose out of opening (one catch at a time).

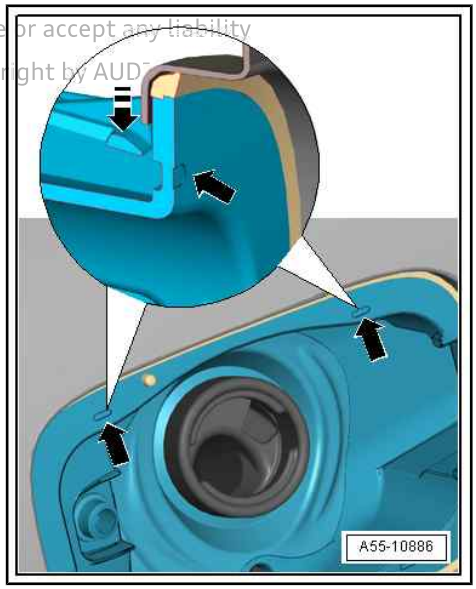

Installing

– When installing tank flap unit, insert it in opening for tank flap on hinge side first and then press it in at rear.

• Observe correct installation position ⇒ page 81 .

• Catches must engage audibly.

Installation position of tank flap unit

1 - Side panel

2 - Lid for tank flap unit

- ❑ Adjust distance -A- = 2.2 mm (even distance from side panel).

3 - Tank flap unit

- ❑ Fit onto body flange all around (as shown).

4 - Drain hose

- ❑ Route without kinking

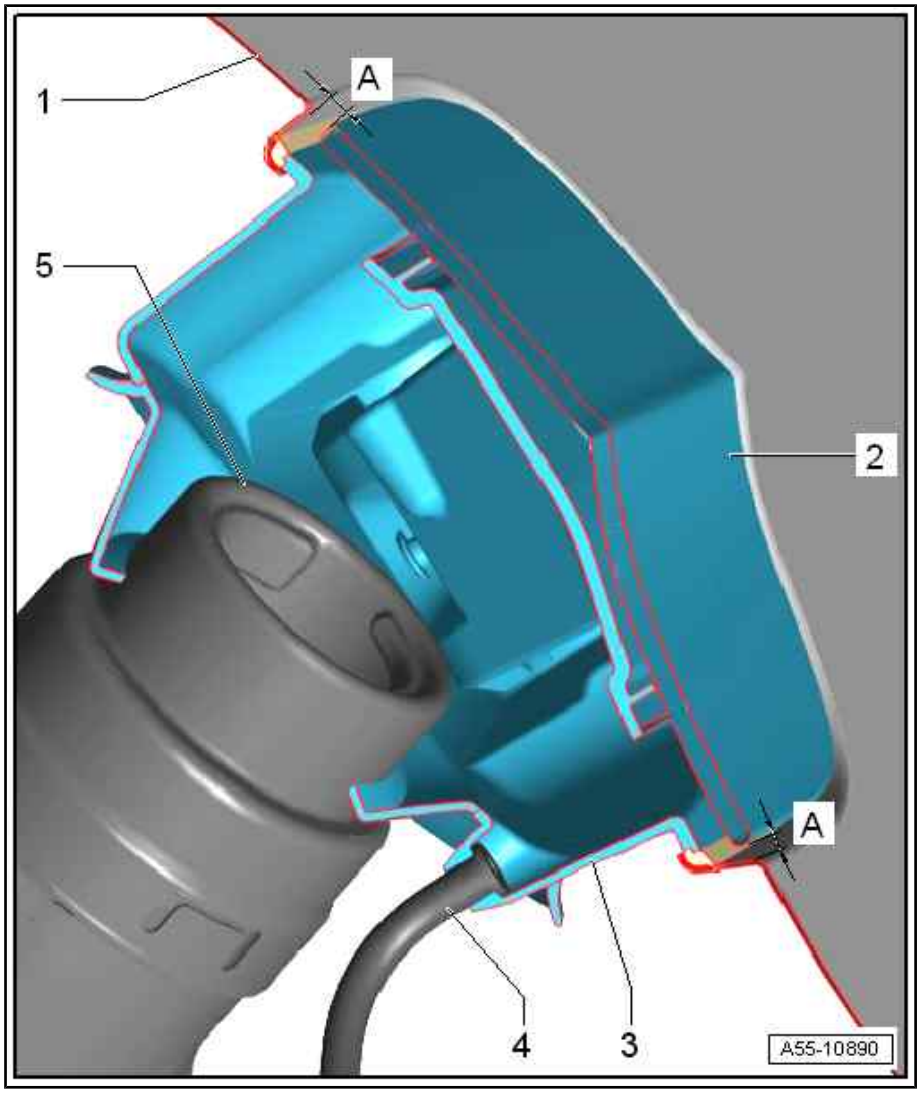

3.3 Removing and installing trim panel for tank flap

Removing

– Open tank flap unit.

Protected by copyright. Copying for private or commercial purposes, in part or in whole, is not permitted unless authorised by AUDI AG. AUDI AG does not guarantee or accept any liability with respect to the correctness of information in this document. Copyright by AUDI AG.

– Using a screwdriver, release retaining clip in recess between lid -2- and tank flap unit -1-.
– Pull lid slightly off tank flap unit towards rear and detach.

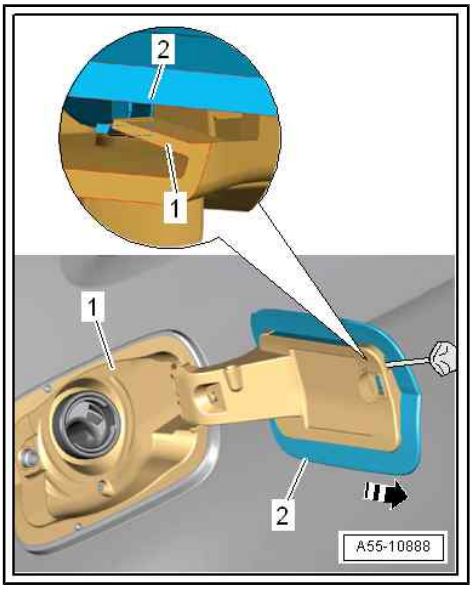

Installing

Installation is carried out in reverse order; note the following:

– When fitting lid onto tank flap unit -1-, guides on lid -2- must be applied in front of mounting points -arrows-.
– Insert lid until retaining clip engages audibly.

Protected by copyright. Copying for private or commercial
permitted unless authorised by AUDI AG. AUDI AG does n
with respect to the correctness of information in this doc

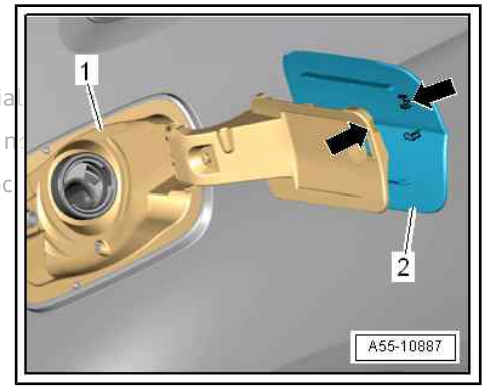

3.4 Removing and installing drain hose for tank flap unit

1 - Tank flap unit

2 - Drain hose

- For removal, first unclip at guide (bottom) and then pull out upwards through tank flap unit
- When installing, route drain hose under wheel housing liner, as shown, and insert into clip on guide (bottom).

3 - Clip on guide (bottom)

- ❑ Release wheel housing liner in area of drain hose and push to side.
- ❑ Clip drain hose onto guide (bottom) as shown.

Protected by copyright. Copying
permitted unless authorised by A
with respect to the correctness o

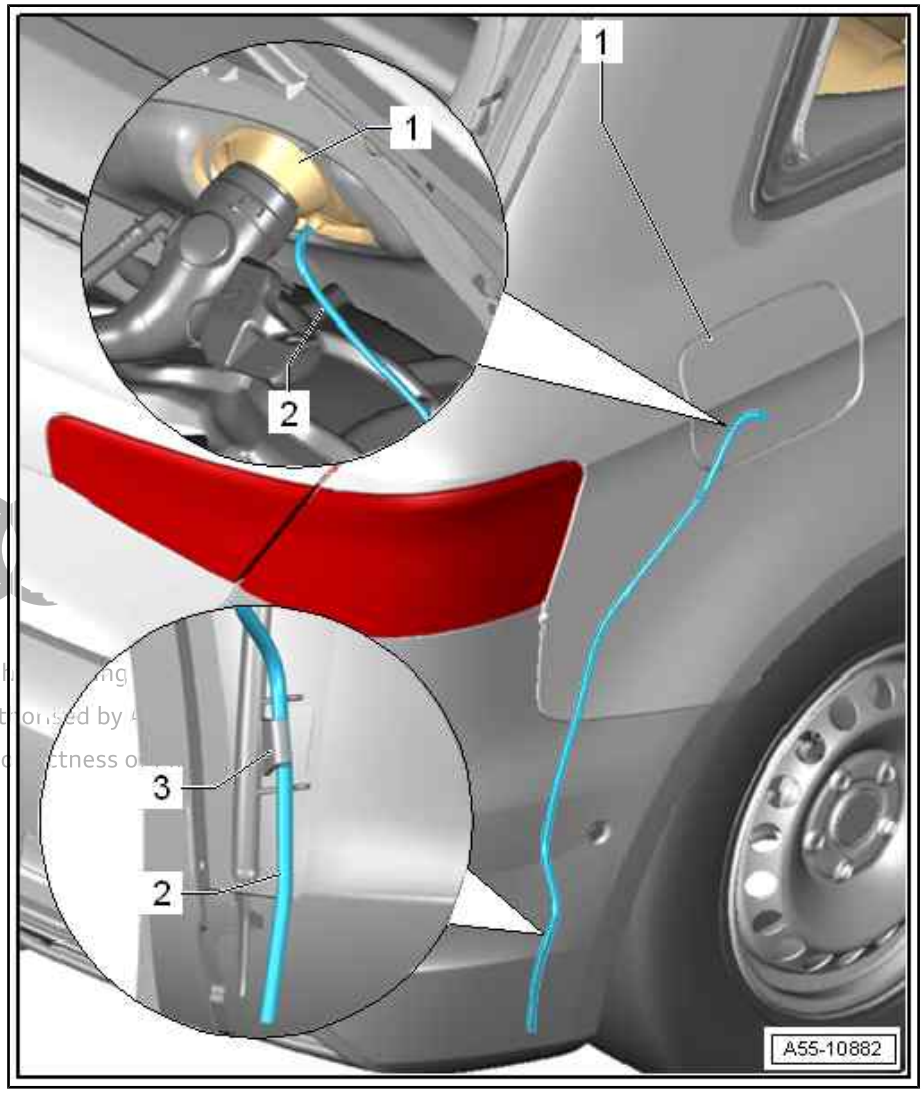

3.5 Removing and installing manual release cable

1 - Tank filler flap locking motor - V 155-

- ❑ Bolted to tank flap unit

2 - Side panel

3 - Cable for manual release

- ❑ Insert tank flap unit with tank filler flap locking motor - V 155- and cable through tank flap opening, as shown.
- ❑ Pull cable through towards rear into interior and attach lug of cable to flange on side panel.

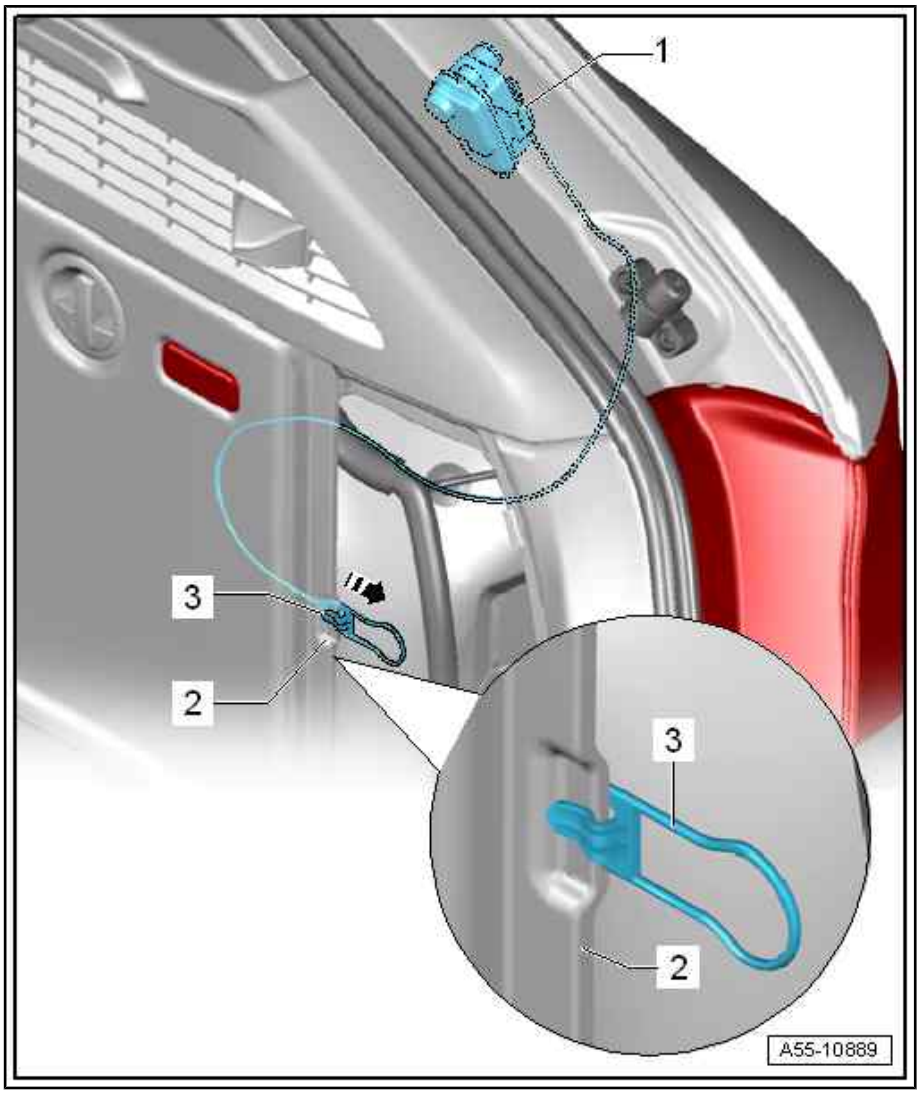

Protected by copyright. Copying for private or commercial purposes, in part or in whole, is not permitted unless authorised by AUDI AG. AUDI AG does not guarantee or accept any liability with respect to the correctness of information in this document. Copyright by AUDI AG.

57 – Front doors, door components, central locking

1 Door

⇒ “1.1 Exploded view - door”, page 86
⇒ “1.2 Exploded view - door seals”, page 87
⇒ “1.3 Removing and installing door”, page 87
⇒ “1.4 Adjusting door”, page 88
⇒ “1.5 Removing and installing door arrester”, page 95
⇒ “1.6 Removing and installing inner door seal”, page 96
⇒ “1.7 Removing and installing outer door seal”, page 97

1.1 Exploded view - door

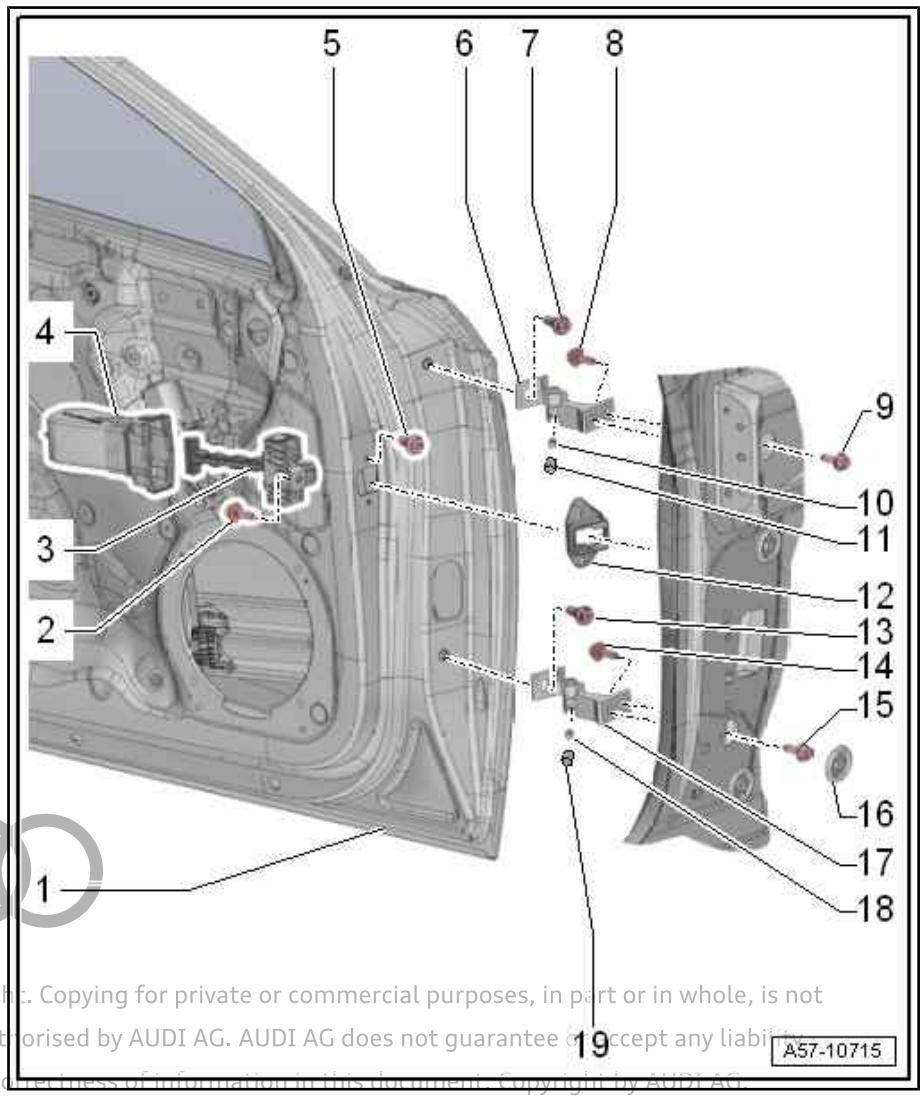

1 - Door
- ❑ Removing and installing ⇒ page 87

2 - Bolt
- ❑ 33 Nm

3 - Door arrester
- ❑ Removing and installing ⇒ page 95

4 - Cap
- ❑ For door arrester
- ❑ Note direction of installation

5 - Bolt
- ❑ Bolt, 2x
- ❑ 8 Nm

6 - Door hinge

7 - Bolt
- ❑ 45 Nm

8 - Bolt
- ❑ 32 Nm

9 - Bolt
- ❑ 32 Nm

10 - Stud
- ❑ 23 Nm

11 - Cap
- ❑ Fit onto stud

12 - Sealing grommet
- ❑ For door arrester
- ❑ Different versions

13 - Bolt
- ❑ 45 Nm

Protected by copyright. Copying for private or commercial purposes, in part or in whole, is not permitted unless authorised by AUDI AG. AUDI AG does not guarantee or accept any liability with respect to the correctness of information in this document. Copyright by AUDI AG.

14 - Bolt
- ❑ 32 Nm

15 - Bolt
- ❑ 32 Nm

16 - Cover

17 - Door hinge

18 - Stud
- ❑ 23 Nm

19 - Cap
- ❑ Fit onto stud

Protected by copyright. Copying for private or commercial purposes, in part or in whole, is not permitted unless authorised by AUDI AG. AUDI AG does not guarantee or accept any liability with respect to the correctness of information in this document. Copyright by AUDI AG.

1.2 Exploded view - door seals

1 - Outer door seal
- ❑ Renew after removing
- ❑ Removing and installing ⇒ page 97

2 - Body

3 - Inner door seal
- ❑ Removing and installing ⇒ page 96

4 - Door

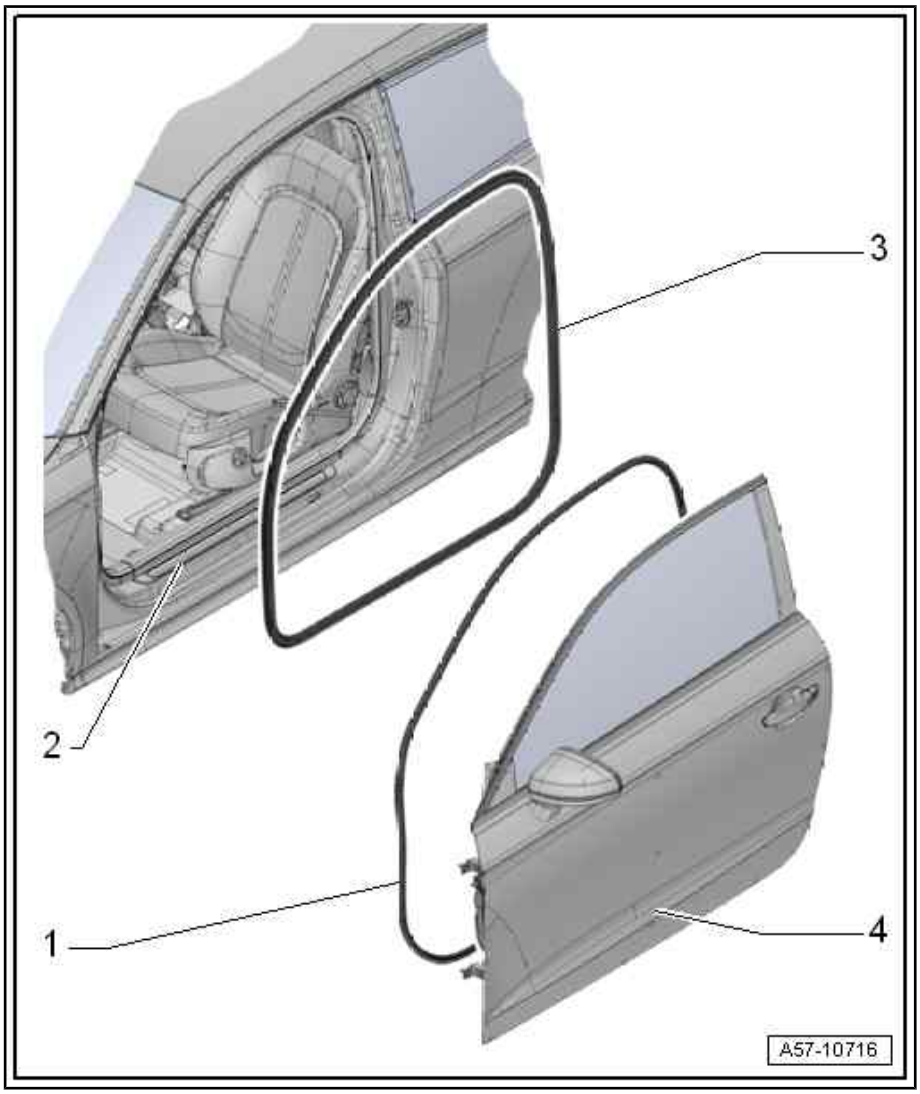

1.3 Removing and installing door

- A second mechanic is required to perform this step (as described on ⇒ page 88).

Removing

– Unplug door disconnector at A-pillar ⇒ Electrical system; Rep. gr. 97 ; Connectors .

– Mask A-pillar in vicinity of door arrester with adhesive tape to avoid damaging paintwork.

Protected by copyright. Copying for private or commercial purposes, in part or in whole, is not permitted unless authorised by AUDI AG. AUDI lity with respect to the correctness of information i

– Unscrew bolt -2- for door arrester.

– Detach caps -1- and -3- from studs.

– Unscrew studs -4- from door hinge (top and bottom).

– Carefully lift door off hinges.

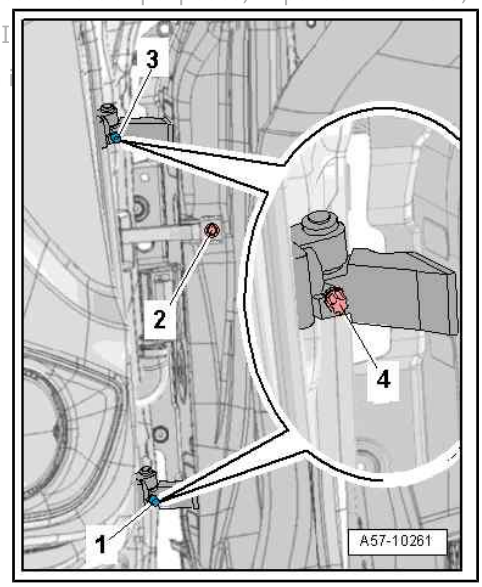

Installing

Installation is carried out in reverse order; note the following:

- No adjustment has to be performed after the front door has been installed.

Tightening torques

◆ ⇒ “1.1 Exploded view - door”, page 86 .

1.4 Adjusting door

⇒ “1.4.1 Adjustment dimensions”, page 88

⇒ “1.4.2 Checking door adjustment”, page 90

⇒ “1.4.3 Lateral and longitudinal adjustment at hinge”, page 92

⇒ “1.4.4 Lateral adjustment at striker”, page 94

1.4.1 Adjustment dimensions

Adjustment dimensions - A3 ⇒ page 88

Adjustment dimensions - Sportback and Saloon ⇒ page 89

Adjustment dimensions - A3

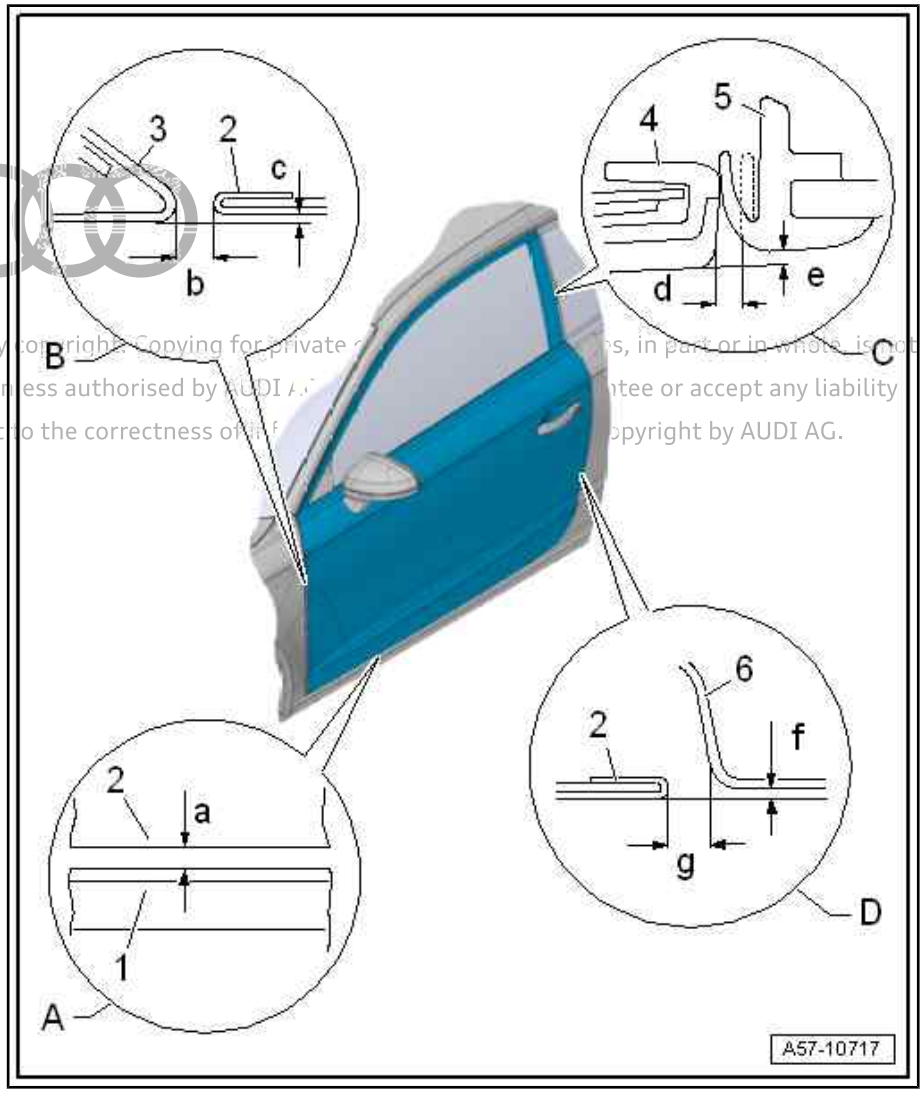

A - Front door to body

- Gap width -a- (with paint-work): 4.0 ... 6.0 mm
- Gap width -a- (shell): 4.3 ... 6.3 mm

-1- Body

-2- Front door

B - Front door to wing

- Gap width -b- (with paint-work): 2.9 ... 3.9 mm
- Gap width -b- (shell): 3.2 ... 4.2 mm
- Flush alignment -c- 0 ... 1.0 mm
- Parallel adjustment = 0.5 mm

-2- Front door

-3- Wing panel

❑ Adjusting ⇒ page 88

C - Front door to side window (rear)

- Gap width -d-: 2.8 ... 4.8 mm
- Flush alignment -e- 1.0 ± 1.5 mm
- Parallel adjustment = 0.9 mm

-4- Trim panel for B-pillar

-5- Side window (rear)

D - Door (front) to side panel

- Gap width -g- (with paintwork): 2.9 ... 3.9 mm
- Gap width -g- (shell): 3.2 ... 4.2 mm
- Flush alignment -f- ± 0.5 mm
- Parallel adjustment = 0.9 mm

-2- Door

-6- Side panel

❑ Adjusting ⇒ page 88

Adjustment dimensions - Sportback and Saloon

E - Front door to wing

- Gap width (with paintwork): 2.9 ... 3.9 mm
- Gap width (shell): 3.2 ... 4.2 mm
- Flush alignment 0 ... -1.0 mm
- Parallel adjustment = 0.5 mm

Adjusting ⇒ page 88

F - Front door to body

- Gap width (with paintwork): 4.0 ... 6.0 mm
- Gap width (shell): 4.3 ... 6.3 mm

G - Front door to rear door

- Gap width (with paintwork): 3.5 ... 4.5 mm
- Gap width (shell): 3.8 ... 4.8 mm
- Flush alignment 0 ... 1.0 mm
- Parallel adjustment = 0.5 mm

Adjusting ⇒ page 88

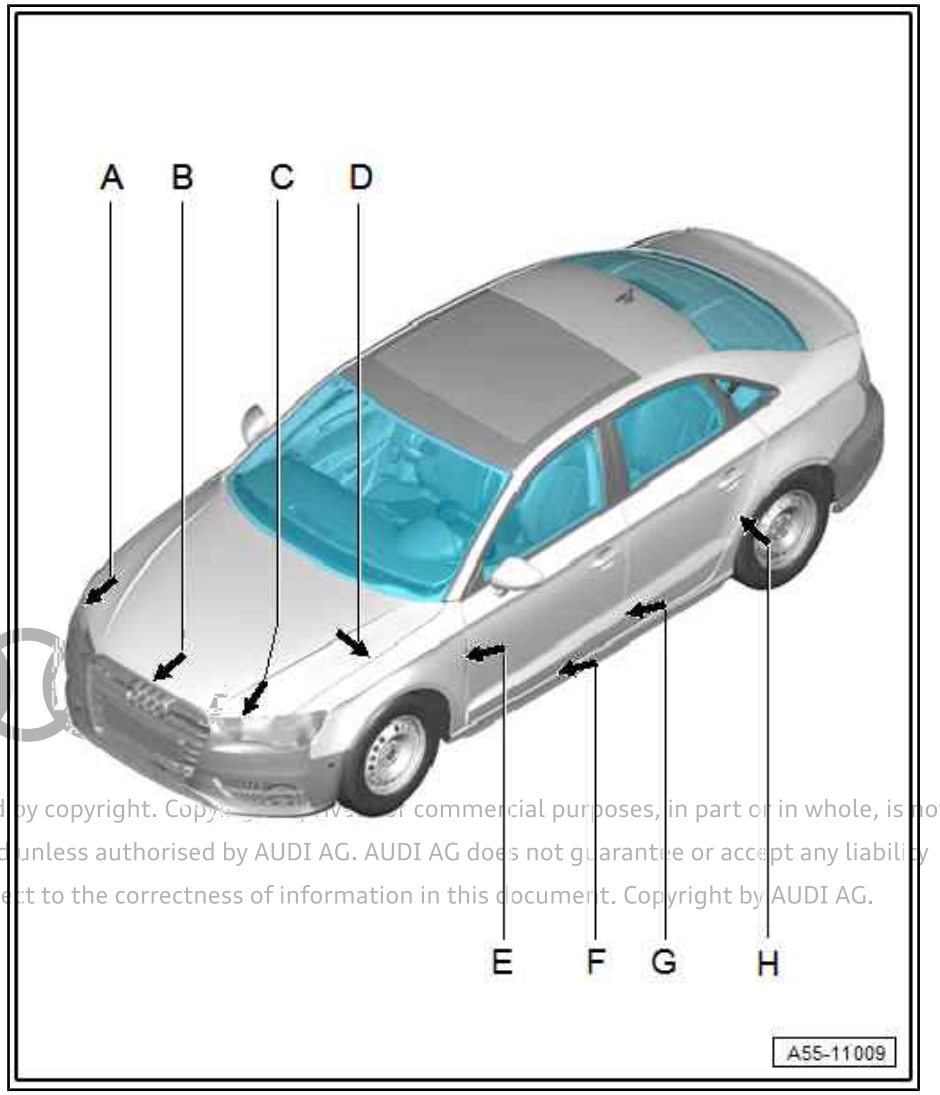

Protected by copyright. Copy[illegible] commercial purposes, in part or in whole, is not permitted unless authorised by AUDI AG. AUDI AG does not guarantee or accept any liability with respect to the correctness of information in this document. Copyright by AUDI AG.

1.4.2 Checking door adjustment

Measuring points for checking door adjustment with template - T40038 /17- ⇒ page 91

Checking lateral adjustment with template - T40038 /17- ⇒ page 91

Checking height adjustment with template - T40038 /17- ⇒ page 92

- Adjustment dimensions ⇒ page 88

Special tools and workshop equipment required

♦ Setting gauge - 3371-

♦ Template - T40038 /17-

Measuring points for checking door adjustment with template - T40038 /17- :

– Lateral and height adjustment must be checked over entire length -a- of door frame.

– With door closed, position template - T40038 /17- on door frame -1- with distance -b- from B-pillar trim -2-.

• Dimension -b- = 100 mm

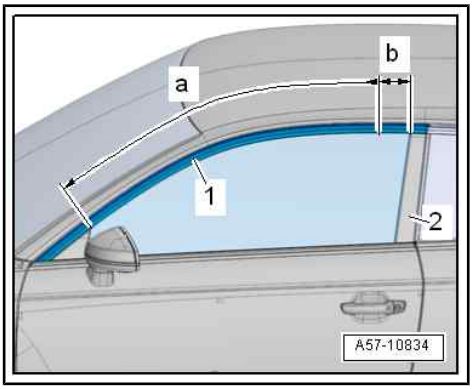

Checking lateral adjustment with template - T40038 /17- :

Checking minimum position for door frame:

Protected by copyright. Copying for private or commercia
permitted unless authorised by AUDI AG. AUDI AG does n
with respect to the correctness of information in this doc

– Apply side of template with “min. u. Z” marking at door window -5- and at top at roof trim strip -3-.

– All contact points of the template make contact:

• Minimum position OK

– Contact point -4- does not make contact:

• Adjustment not OK (door frame to far towards inside)

– Contact points -1 and 4- make contact.

– Distance -a- is permissible at contact point -2-; if distance is greater than 1 mm, turn template and check “max” position.

• Dimension -a- = up to 1 mm

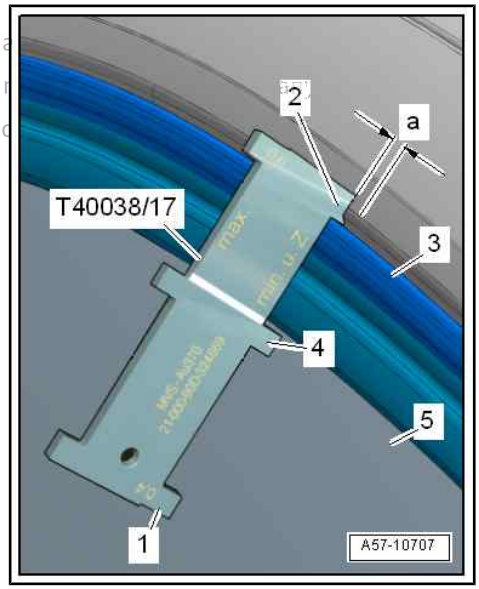

Checking maximum position for door frame:

– Apply side of template with “max.” marking at door window -4- and at bottom at window guide -3-, as shown.

– All contact points of the template make contact:

• Maximum position OK

– Contact point -2- does not make contact:

• Adjustment not OK (door frame to far towards outside)

– Distance -a- is permissible at contact point -1-.

• Dimension -a- = up to 2 mm

• Minimum position OK

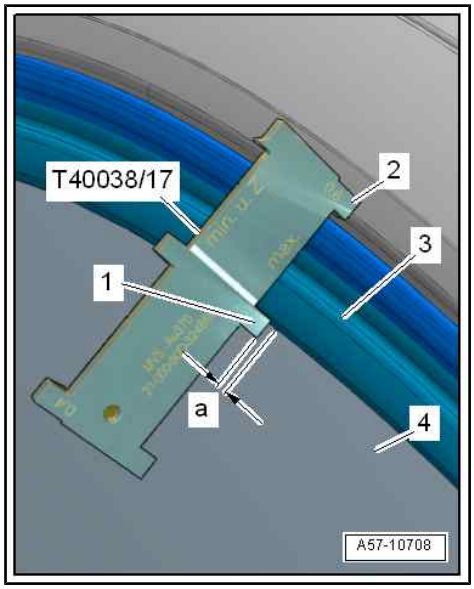

Checking height adjustment with template - T40038 /17- :

– Apply side of template with “min. u. Z” marking at door window -5- and at top at roof trim strip -3-.

– Contact point -2- must rest on roof trim strip at top.

– Contact point -6- may make contact with window guide (bottom) -4-.

• Door frame in lowest permissible position

– Distance -a- is permissible at contact point -6-; check at groove -1-.

• Distance -a- = max. 2 mm

• Door frame in highest permissible position

Adjusting ⇒ page 88

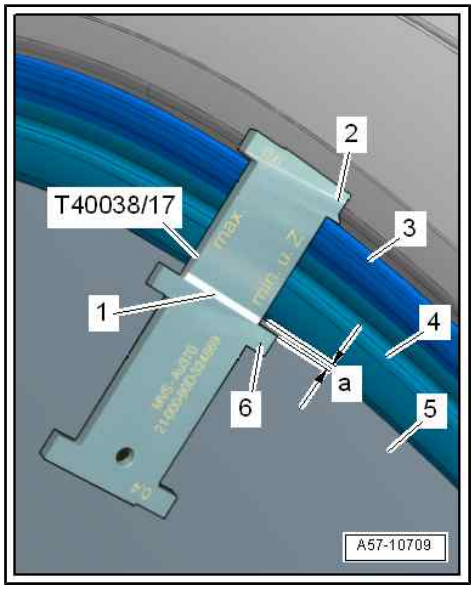

1.4.3 Lateral and longitudinal adjustment at hinge

Preparatory work for longitudinal and lateral adjustment at hinge ⇒ page 93

Lateral adjustment at hinge ⇒ page 93

Longitudinal adjustment at hinge ⇒ page 93

Special tools and workshop equipment required

Protected by copyright. Copying for private or commercial purposes, in part or in whole, is not permitted unless authorised by AUDI AG. AUDI AG does not guarantee or accept any liability with respect to the correctness of information in this document. Copyright by AUDI AG.

♦ Setting gauge - 3371-

♦ Template - T40038 /17-

Preparatory work for longitudinal and lateral adjustment at hinge:

Driver side:

– Remove bracket for onboard supply control unit ⇒ Electrical system; Rep. gr. 97 ; Relay carriers, fuse carriers, electronics boxes; Overview of fitting locations - relay carriers, fuse carriers, electronics boxes .

– Remove connector point at A-pillar (left-side) ⇒ Electrical system; Rep. gr. 97 ; Connectors .

Passenger side:

– Remove glove box ⇒ General body repairs, interior; Rep. gr. 68 ; Storage compartments/covers/trim panels; Removing and installing glove box .

– Remove connector point at A-pillar (right-side) ⇒ Electrical system; Rep. gr. 97 ; Connectors .

Protected by copyright. Copying for private or commercial purposes, in part or in whole, is not permitted unless authorised by AUDI AG. AUDI AG does not guarantee or accept any liability with respect to the correctness of information in this document. Copyright by AUDI AG.

Lateral adjustment at hinge:

• Adjustment dimensions ⇒ page 88

– Perform preparatory work for lateral adjustment ⇒ page 93 .

– Loosen bolts (top and bottom) -arrows A- at hinge.

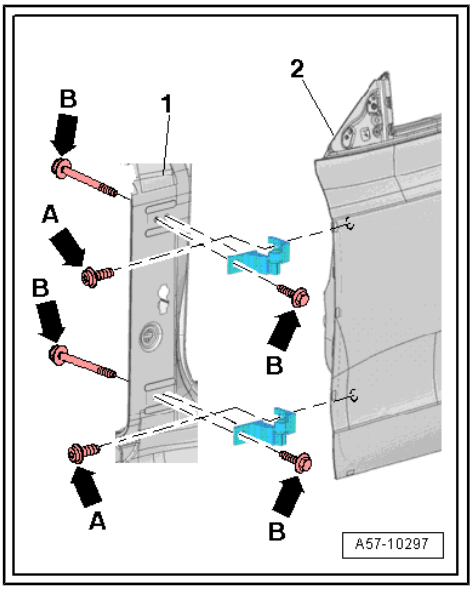

Note

♦ *Bolt -A- is a fitted bolt; therefore it is usually not necessary to adjust the door via this bolt.*

♦ *If it does become necessary to make an adjustment via this bolt, the bolt can be replaced with a bolt of the same length and property class.*

– Adjust door -2- lengthwise.

– Tighten bolts -arrows A-.

Tightening torques

♦ ⇒ “1.1 Exploded view - door”, page 86 .

Longitudinal adjustment at hinge:

• Adjustment dimensions ⇒ page 88

– Perform preparatory work for longitudinal adjustment ⇒ page 93 .

– Pull off cover -arrow-.

Protected by copyright. Copying for private or commercial purposes, in
permitted unless authorised by AUDI AG. AUDI AG does not gua antee
with respect to the correctness of information in this document. Copyri

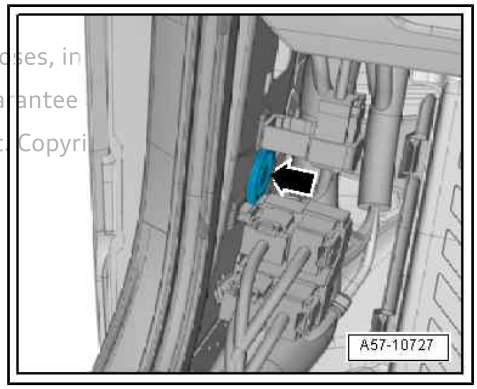

– Unscrew bolts -arrows B- at top and bottom of hinge and on A-pillar -item 1-.
– Adjust door -2- lengthwise.
– Tighten bolts -arrows B-.

Tightening torques

◆ ⇒ “1.1 Exploded view - door”, page 86 .

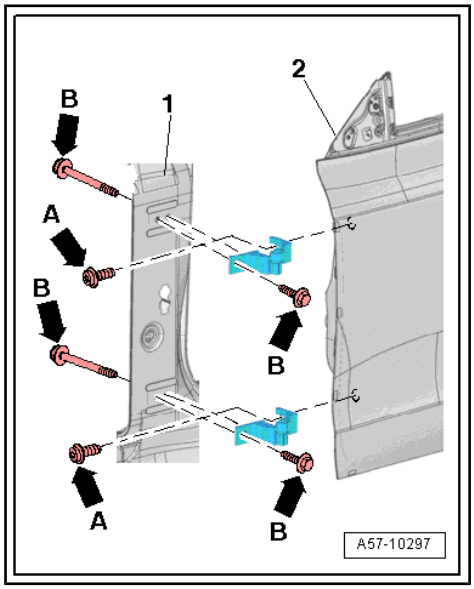

1.4.4 Lateral adjustment at striker

- Adjustment dimensions ⇒ page 88

Special tools and workshop equipment required

◆ Setting gauge - 3371-

– Loosen bolts -arrows-.

– Move striker -1- until door is flush with body contour.

- The striker is only to be used for adjustment towards the centre of the vehicle.
- Do not adjust the height of the door via the striker; otherwise the door lock will be damaged.
- If adjustment is correct, striker should engage centrally in door lock.

– Tighten bolts -arrows-.

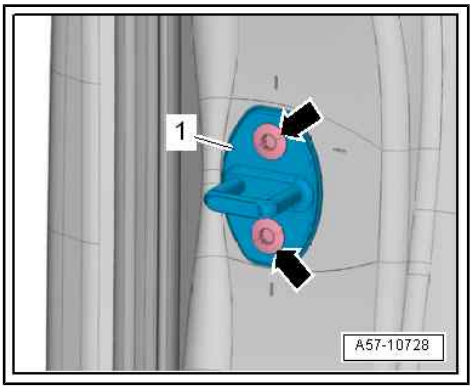

Tightening torques

◆ ⇒ “2.2 Exploded view - door handle and door lock”, page 102

1.5 Removing and installing door arrester

Removing

– Move door window to “closed” position.

– Remove door trim ⇒ General body repairs, interior; Rep. gr. 70 ; Door trim (front); Removing and installing door trim (front) .

– Remove lower loudspeaker ⇒ Communication; Rep. gr. 91 ; Sound system .

– Mask A-pillar in vicinity of door arrester with adhesive tape to avoid damaging paintwork.

– Unscrew bolt -arrow- for door arrester.

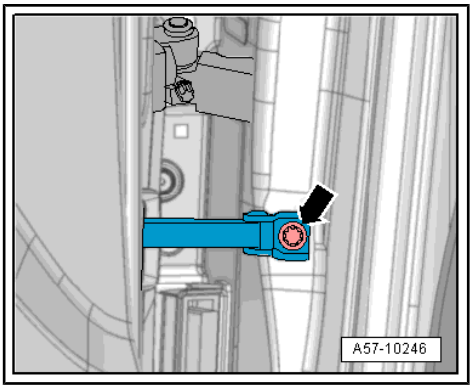

– If fitted, pull sealing grommet -2- off door arrester.

– Unscrew bolts -arrows- and take out door arrester -1- inwards.

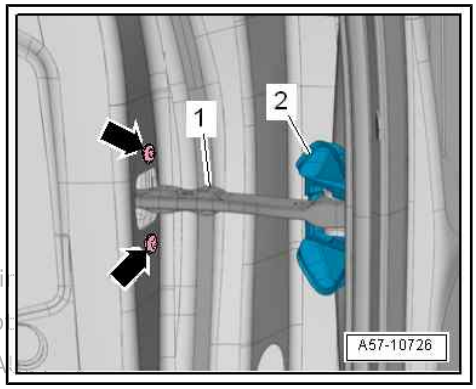

Protected by copyright. Copying for private or commercial purposes, in part or i
permitted unless authorised by AUDI AG. AUDI AG does not guarantee or accep
with respect to the correctness of information in this document. Copyright by A

Protected by copyright. Copying for private or commercial purposes, in part or in whole, is not permitted unless authorised by AUDI AG. AUDI AG does not guarantee or assume any liability with respect to the correctness of information in this document. Copyright by AUDI AG.

– Pull rubber sleeve -1- on door arrester to the side slightly -arrows A-.

– Detach rubber sleeve from door arrester -2- -arrow B-.

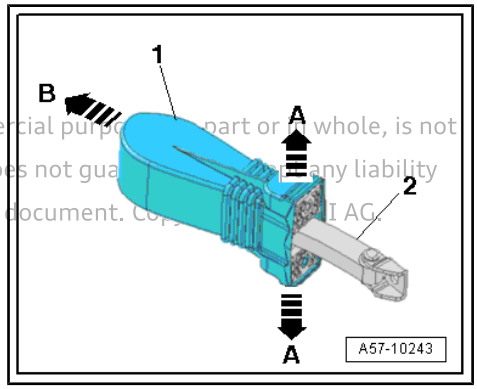

Installing

Installation is carried out in reverse order; note the following:

– Slide rubber sleeve onto door arrester (make sure rubber sleeve is fitted on correct side).

• Lettering for left or right side must be legible from top.

Tightening torques

♦ ⇒ “1.1 Exploded view - door”, page 86 .

1.6 Removing and installing inner door seal

⇒ “1.6.1 Removing and installing inner door seal - A3”, page 96

⇒ “1.6.2 Removing and installing inner door seal - Sportback and Saloon”, page 97

1.6.1 Removing and installing inner door seal - A3

Removing

– Remove side trim ⇒ General body repairs, interior; Rep. gr. 70 ; Passenger compartment trim panels; Removing and installing side trim .

– Remove A-pillar trim (top and bottom) ⇒ General body repairs, interior; Rep. gr. 70 ; Passenger compartment trim panels .

– Remove roof grab handle ⇒ General body repairs, interior; Rep. gr. 68 ; Equipment; Removing and installing roof grab handle .

– Pull inner door seal off body flange.

Installing

Installation is carried out in reverse order; note the following:

– Position inner door seal moulding -3- on body flange so that vulcanised point -2- is between door hinge (top) and door arrester -1-.

– Position inner door seal moulding on body flange -4- in area of B-pillar (top) -arrow-.

– Position inner door seal moulding all along body flange and press on.

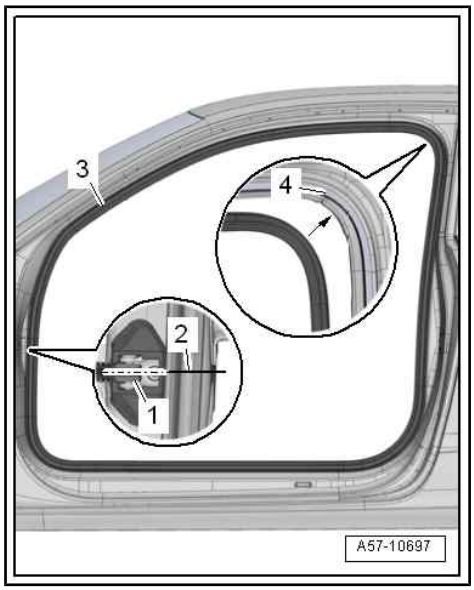

1.6.2 Removing and installing inner door seal - Sportback and Saloon

Removing

– Remove A-pillar trim (top) ⇒ General body repairs, interior; Rep. gr. 70 ; Passenger compartment trim panels .

– Remove sill panel trim (front) ⇒ General body repairs, interior; Rep. gr. 70 ; Passenger compartment trim panels .

– Remove B-pillar trim (bottom) ⇒ General body repairs, interior; Rep. gr. 70 ; Passenger compartment trim panels .

– Remove roof grab handle ⇒ General body repairs, interior; Rep. gr. 68 ; Equipment; Removing and installing roof grab handle .

– Pull inner door seal off body flange.

Protected by copyright. Copying for private or commercial purposes, in part or in whole, is not permitted unless authorised by AUDI AG. AUDI AG does not guarantee or accept any liability with respect to the correctness of information in this document. Copyright by AUDI AG.

Installing

Installation is carried out in reverse order; note the following:

– Position inner door seal moulding -3- on body flange so that vulcanised point -2- is between door hinge (top) and door arrester -1-.

– Position inner door seal moulding on body flange -4- in area of B-pillar (top) -arrow-.

– Position inner door seal moulding all along body flange and press on.

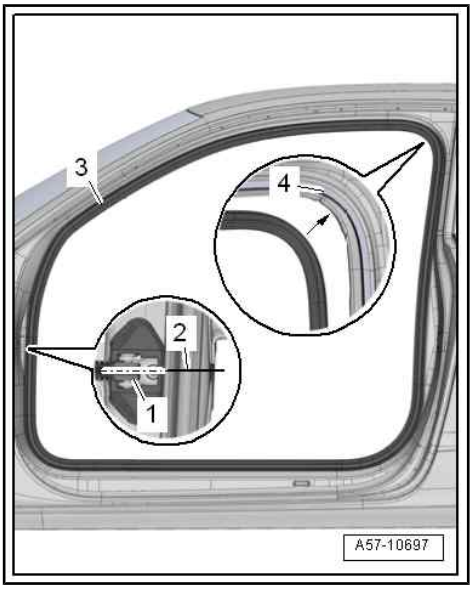

1.7 Removing and installing outer door seal

• The following components have to be renewed after removal ⇒ page 87 .

Special tools and workshop equipment required

♦ Roller - 3356-

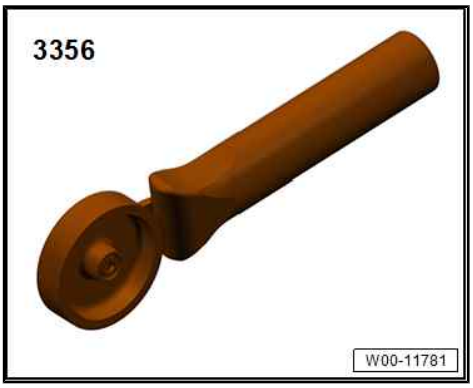

- Adhesive strip remover - VAS 6349-

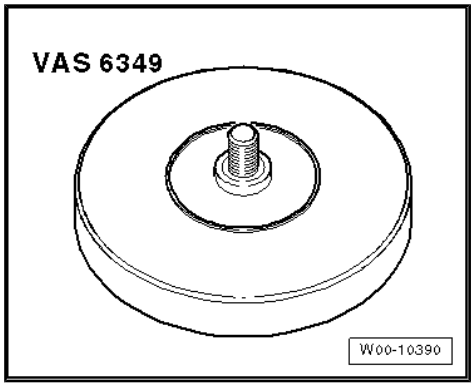

- Cleaning solution - D 009 401 04-
- Applicator - D 009 500 25-
- Primer - D 355 205 A2-

Removing

– Remove window frame trim ⇒ General body repairs, interior; Rep. gr. 70 ; Door trim (front) .

– Mark position of outer door seal -1- at window frame with adhesive tape -2-.

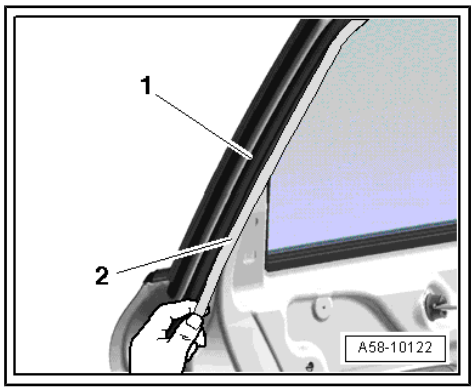

– Mark position of outer door seal -1- in area of door lock with adhesive tape -2-.

– Mask A-pillar in vicinity of door arrester with adhesive tape to avoid damaging paintwork.

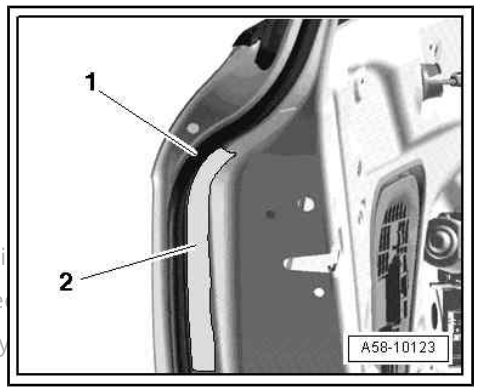

Protected by copyright. Copying for private or commercial purposes, i
permitted unless authorised by AUDI AG. AUDI AG does not guarante
with respect to the correctness of information in this document. Copy

– Unscrew bolt -arrow- for door arrester.

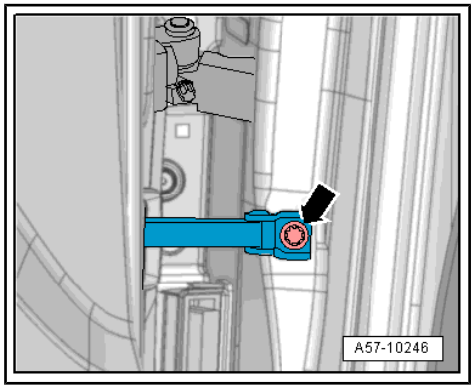

– Pull outer door seal -1- slightly off top of door frame and cut through with scissors (commercially available).

– Gradually stretch outer door seal lengthwise -arrow- and detach.

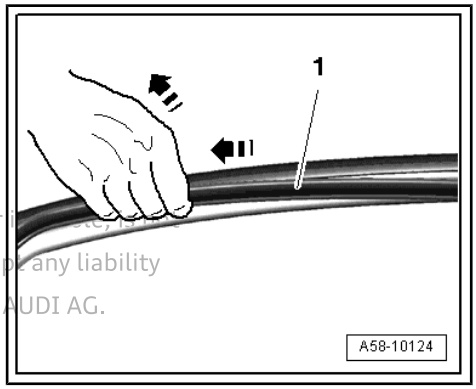

Note

By stretching the outer door seal lengthwise, the adhesive is separated from the door and the seal can be detached from the door without leaving any adhesive.

Protected by copyright. Copying for private or commercial purposes, in part or in whole, is not permitted unless authorised by AUDI AG. AUDI AG does not guarantee or accept any liability with respect to the correctness of information in this document. Copyright by AUDI AG.

– Detach outer door seal completely.

Installing

Installation is carried out in reverse order; note the following:

- The vehicle and the seal must be at room temperature.
- The bonding surfaces must be free of dirt and grease.
- If the primer - D 355 205 A2- has been allowed to flash off for more than 3 hours, primer must be re-applied.
- When installing, do not stretch seal.
- To prevent the outer door seal from becoming detached or misaligned, it is important that the door is not closed for at least two hours.
- If the door has been renewed, use the routing of the outer door seal on the opposite side as a guide when positioning the outer door seal.

– Remove any residual adhesive with adhesive strip remover - VAS 6349- .

– Clean bonding surface on door with cleaning solution - D 009 401 04- .

– Apply primer - D 355 205 A2- -item 1- to bonding area using applicator - D 009 500 25- -3- and allow to flash off.

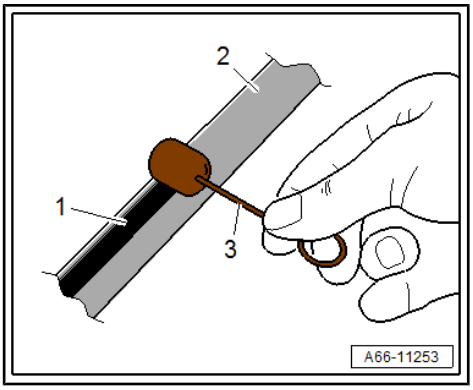

– Mark -4- (coloured dot) on outer door seal -1- must be applied at top of door B-pillar -2-.

• When positioned correctly, the drain holes in the outer door seal are located at the bottom on the underside of the seal.

– Peel protective film off adhesive strip -3-.

– Bond on new seal and press on using roller - 3356- .

• Leave vehicle standing at room temperature for at least 2 hours with doors open.

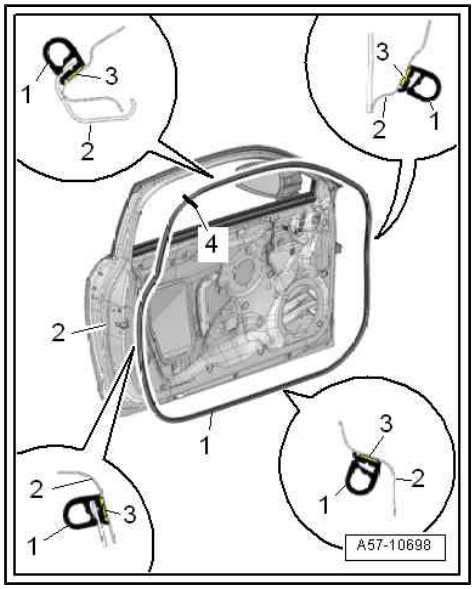

Protected by copyright. Copying for private or commercial purposes, in part or in whole, is not permitted unless authorised by AUDI AG. AUDI AG does not guarantee or accept any liability with respect to the correctness of information in this document. Copyright by AUDI AG.

2 Door components

⇒ “2.1 Exploded view - window regulator”, page 101

⇒ “2.2 Exploded view - door handle and door lock”, page 102

⇒ “2.3 Exploded view - window guides and window slot trim strips”, page 105

⇒ “2.4 Removing and installing window regulator”, page 105

⇒ “2.5 Removing and installing window regulator motor”, page 106

⇒ “2.6 Removing and installing door handle”, page 107

⇒ “2.7 Removing and installing door handle trim”, page 108

⇒ “2.8 Removing and installing mounting bracket”, page 108

⇒ “2.9 Removing and installing operating cable for exterior door handle”, page 109

⇒ “2.10 Removing and installing lock cylinder”, page 111

⇒ “2.11 Removing and installing cap for lock cylinder”, page 111

⇒ “2.12 Removing and installing housing”, page 112

⇒ “2.13 Removing and installing door lock”, page 113

⇒ “2.14 Removing and installing cover for door lock”, page 113

⇒ “2.15 Removing and installing striker”, page 114

⇒ “2.16 Removing and installing operating cable for interior door handle”, page 114

⇒ “2.17 Removing and installing inner door cover”, page 115

⇒ “2.18 Removing and installing window guide”, page 115

⇒ “2.19 Removing and installing inner window slot trim strip”, page 117

⇒ “2.20 Removing and installing outer window slot trim strip”, page 118

2.1 Exploded view - window regulator

Protected by copyright. Copying for private or commercial purposes, in part or in whole, is not permitted unless authorised by AUDI AG. AUDI AG does not guarantee or accept any liability with respect to the correctness of information in this document. Copyright by AUDI AG.

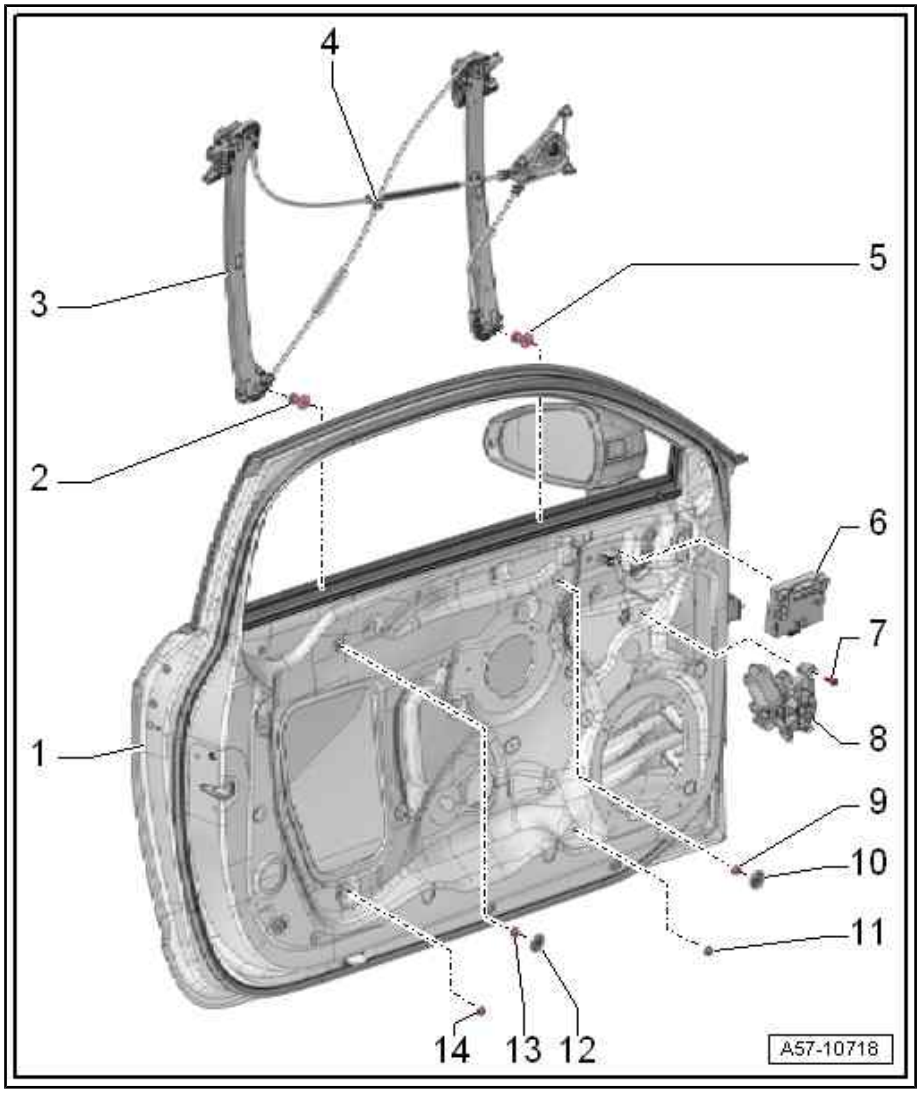

1 - Door

2 - Centre hex stud

3 - Window regulator
- ❑ Removing and installing ⇒ page 105

4 - Retaining clip
- ❑ For cable for window regulator

5 - Centre hex stud

6 - Door control unit
- ❑ Overview of fitting locations ⇒ page 120

7 - Bolt
- ❑ 3x
- ❑ 3.5 Nm

8 - Window regulator motor
- ❑ Driver side window regulator motor - V147- , front passenger side window regulator motor - V148-
- ❑ Removing and installing ⇒ page 106

9 - Nut
- ❑ 6 Nm

10 - Cap

11 - Nut
- ❑ 6 Nm

12 - Cap

13 - Nut
- ❑ 6 Nm

14 - Nut
- ❑ 6 Nm

2.2 Exploded view - door handle and door lock

Protected by copyright. Copying for private or commercial purposes, in part or in whole, is not permitted unless authorised by AUDI AG. AUDI AG does not guarantee or accept any liability with respect to the correctness of information in this document. Copyright by AUDI AG.

Exploded view - door handle and mounting bracket ⇒ page 102

Exploded view - door lock and striker ⇒ page 104

Exploded view - door handle and mounting bracket

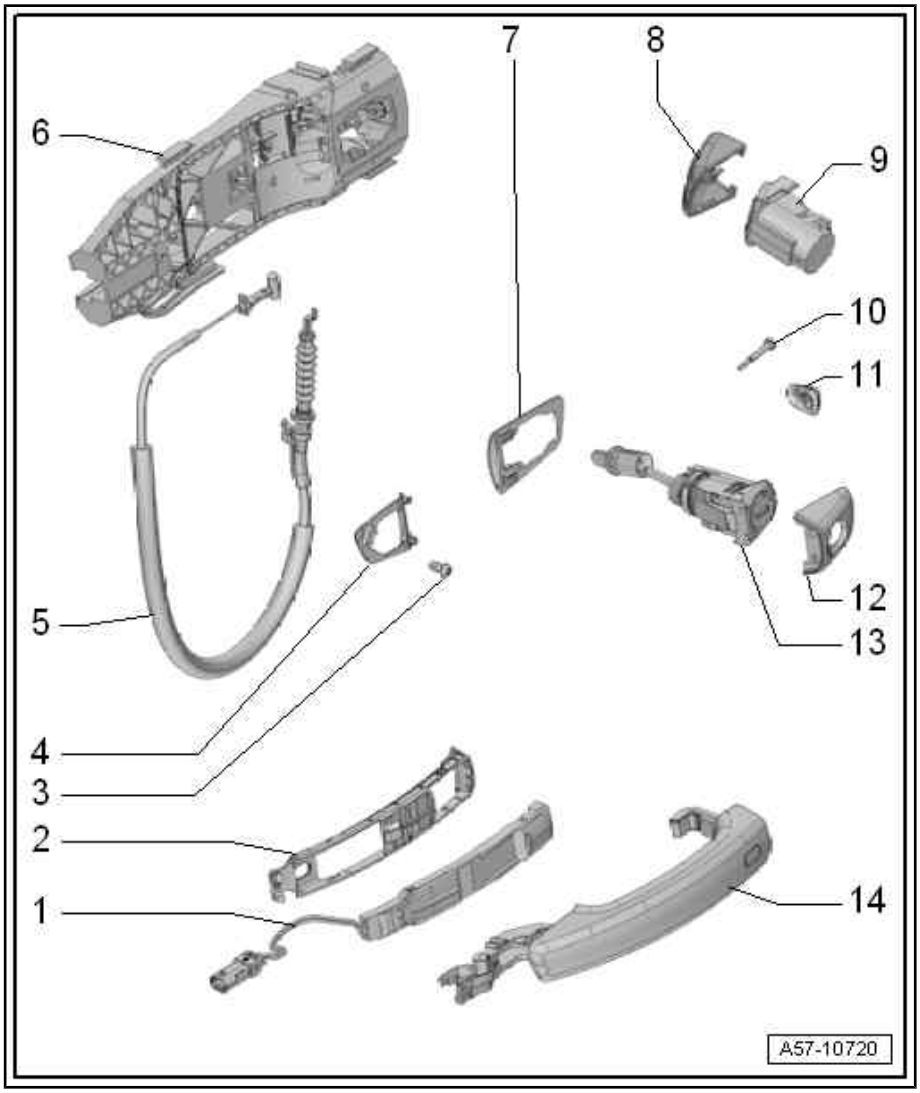

1 - Contact sensor for exterior door handle

- ❑ In door handle
- ❑ Equipment version
- ❑ Driver exterior door handle contact sensor - G415- , front passenger exterior door handle contact sensor - G416-
- ❑ Overview ⇒ Electrical system; Rep. gr. 94 ; Entry and start authorisation; Overview of fitting locations - keyless entry system

2 - Door handle trim

- ❑ Equipment version for vehicles without convenience key
- ❑ Removing and installing ⇒ page 108

3 - Bolt

- ❑ 1.5 Nm

4 - Support

- ❑ Front
- ❑ Removing and installing ⇒ page 107

5 - Operating cable

- ❑ For exterior door handle
- ❑ Removing and installing ⇒ page 109

6 - Mounting bracket

- ❑ Removing and installing ⇒ page 108

7 - Support

- ❑ Rear
- ❑ Removing and installing ⇒ page 107

8 - Cap (passenger side)

- ❑ Closed design
- ❑ Removing and installing ⇒ page 111

Protected by copyright. Copying for private or commercial purposes, in part or in whole, is not permitted unless authorised by AUDI AG. AUDI AG does not guarantee or accept any liability with respect to the correctness of information in this document. Copyright by AUDI AG.

9 - Housing

- ❑ For front passenger's door
- ❑ Removing and installing ⇒ page 112

10 - Securing bolt

- ❑ For lock cylinder
- ❑ 3.5 Nm

11 - Cap

- ❑ For securing bolt

12 - Cap (driver side)

- ❑ For lock cylinder
- ❑ Removing and installing ⇒ page 111

13 - Lock cylinder

- ❑ For driver's door
- ❑ Removing and installing ⇒ page 111

14 - Door handle

- ❑ Removing and installing ⇒ page 107

Exploded view - door lock and striker

1 - Inner door cover

- ❑ Removing and installing ⇒ page 115

2 - Operating cable

- ❑ For interior door handle
- ❑ Removing and installing ⇒ page 114

3 - Grommet

- ❑ Can only be renewed together with operating cable ⇒ Item 2 (page 104)

4 - Door lock

- ❑ Removing and installing ⇒ page 113

5 - Bolt

- ❑ Bolt, 2x
- ❑ 19 Nm

6 - Bolt

- ❑ Bolt, 2x
- ❑ 25 Nm

7 - Striker

- ❑ Removing and installing ⇒ page 114

8 - Bolt

- ❑ 1.5 Nm

9 - Cover

- ❑ For door lock
- ❑ Removing and installing ⇒ page 113

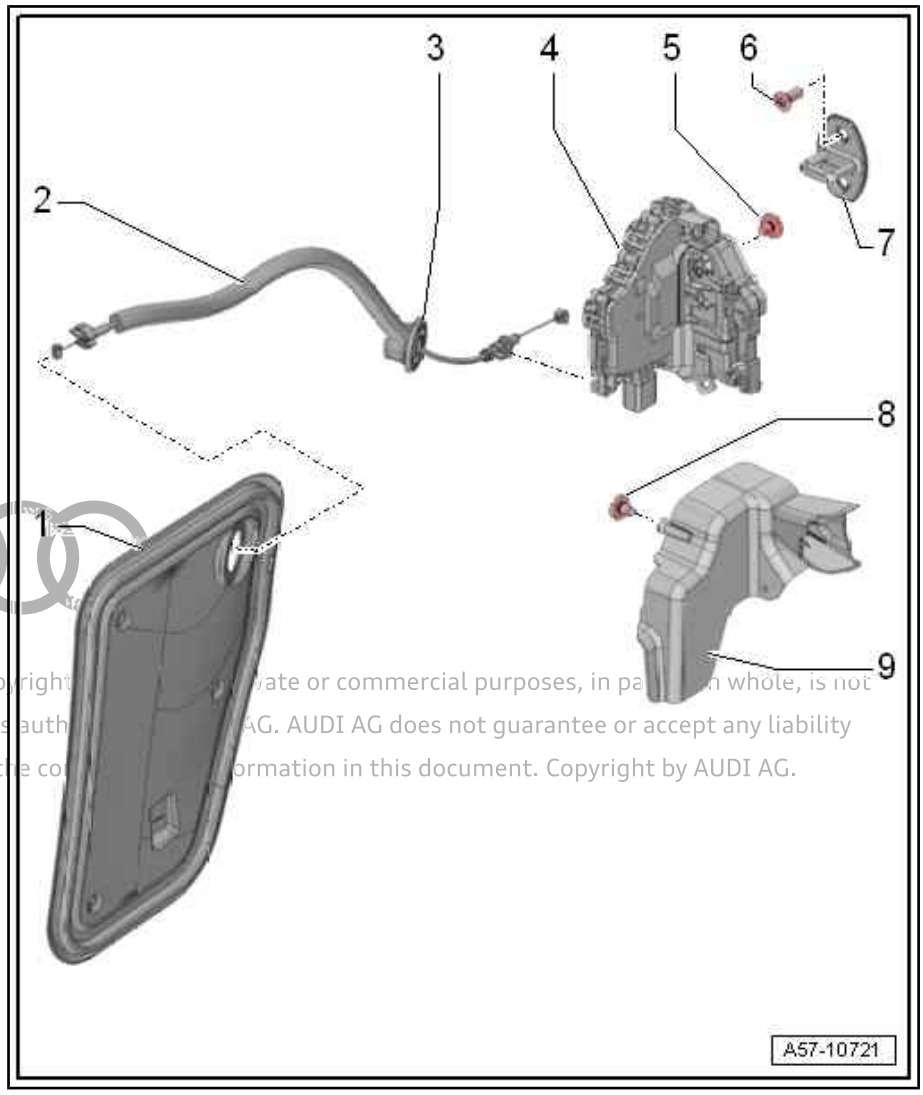

Protected by copyright. Copying for private or commercial purposes, in part or in whole, is not permitted unless authorised by AUDI AG. AUDI AG does not guarantee or accept any liability with respect to the correctness of information in this document. Copyright by AUDI AG.

2.3 Exploded view - window guides and window slot trim strips

1 - Door

2 - Inner window slot trim strip
- ❑ Removing and installing ⇒ page 117

3 - Window guide
- ❑ Removing and installing ⇒ page 115

4 - Seal
- ❑ For cover for B-pillar

5 - Outer window slot trim strip
- ❑ Removing and installing ⇒ page 118

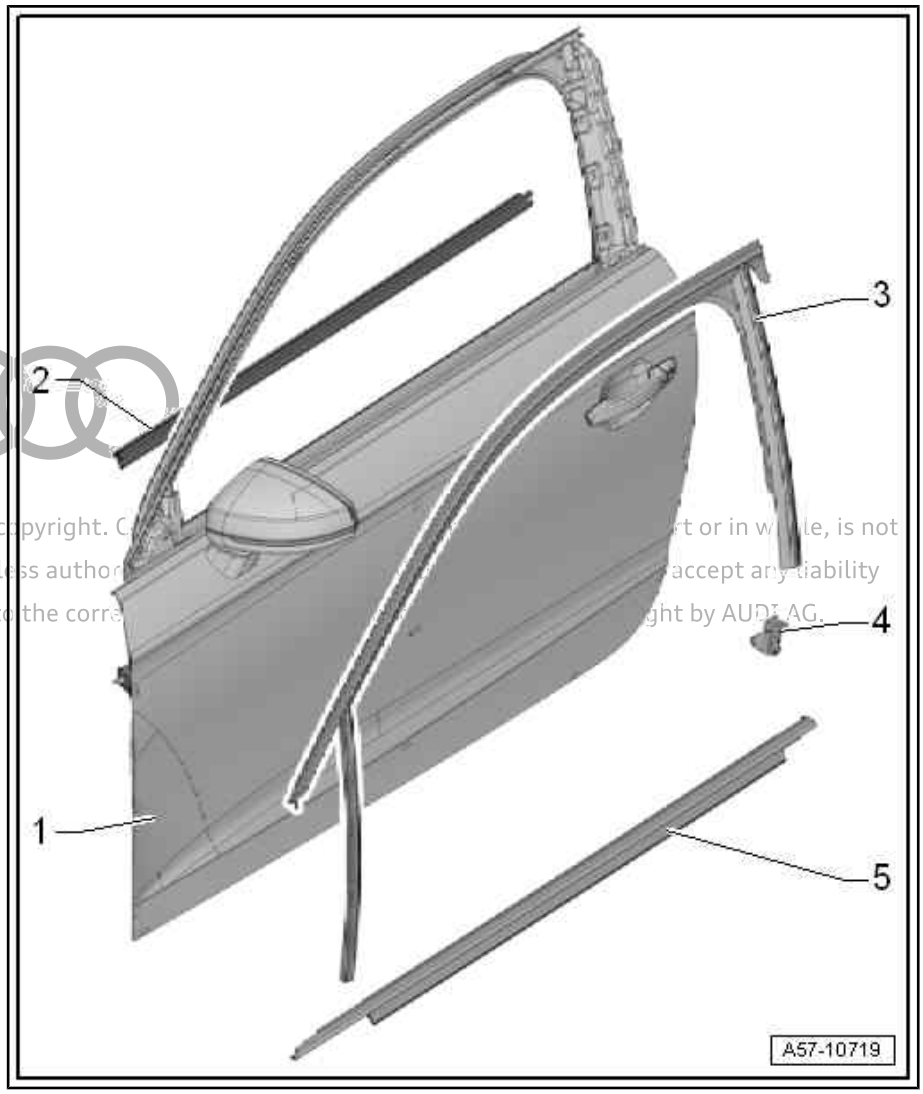

Protected by copyright. Copying for private or commercial purposes, in part or in whole, is not permitted unless authorized by AUDI AG. AUDI AG does not guarantee or accept any liability with respect to the correctness of information in this document. Copyright by AUDI AG.

2.4 Removing and installing window regulator

Removing

– Remove window regulator motor ⇒ page 106 .

– Remove door window ⇒ page 312 .

– Use an 11 mm socket to release retaining clips -2- of threaded pins -3- for window regulators (slide socket onto threaded pins).

– Unfasten retaining clip -1- for guide for window regulator cable.

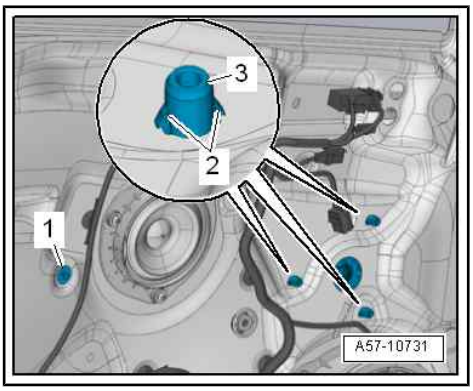

– Take out plugs -arrows-.
– Loosen nuts -3- three turns.
– Remove nuts -1-.
– Disengage window regulator -2- at guides (top) and take out of opening towards rear.

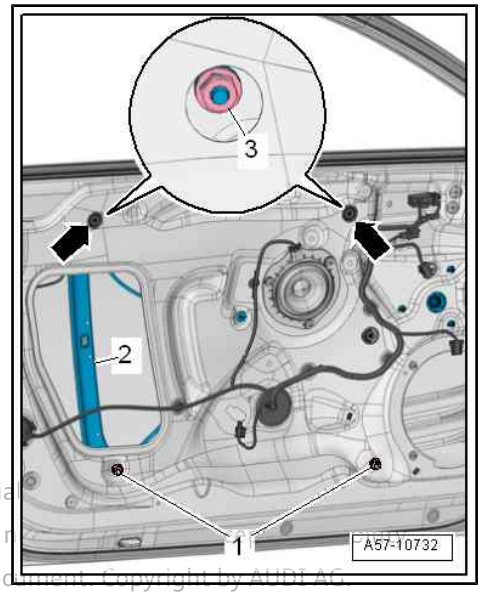

Installing

Installation is carried out in reverse order; note the following:

- Retaining clips of threaded pins for window regulator must be engaged in inner door panel.
- Retaining clip for guide for window regulator cable must be clipped into inner door panel.

Tightening torques

◆ ⇒ “2.1 Exploded view - window regulator”, page 101 .

Protected by copyright. Copying for private or commercial purposes, in part, is not permitted unless authorised by AUDI AG. AUDI AG does not guarantee or assume liability with respect to the correctness of information in this document. Copyright by AUDI AG.

2.5 Removing and installing window regulator motor

Removing

Note

The window regulator motor can be removed or installed with the motor or door window in any position.

– Remove door trim (front) ⇒ General body repairs, interior; Rep. gr. 70 ; Door trim (front); Removing and installing door trim (front) .
– Unplug electrical connector -2-.
– Unscrew bolts -arrows- and detach window regulator motor -1- from window regulator.

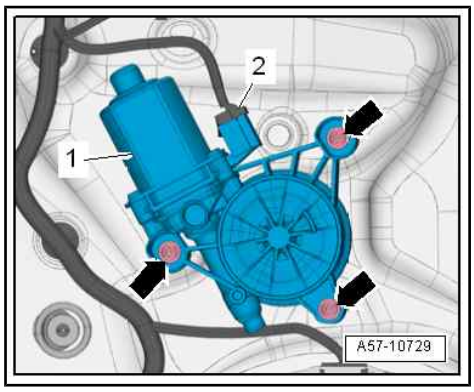

Installing

Installation is carried out in reverse order; note the following:

- Retaining clips -1- of threaded pins -2- for window regulator must be engaged in inner door panel.
– Slide window regulator motor -3- onto threaded pins and tighten bolts -4-.

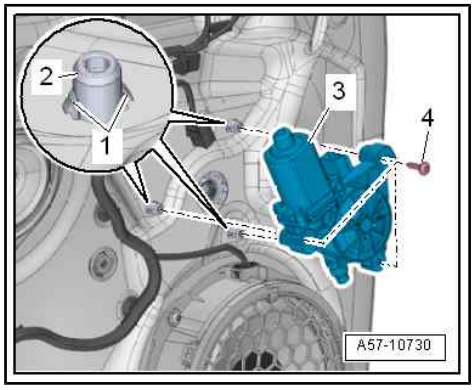

Tightening torques

◆ ⇒ “2.1 Exploded view - window regulator”, page 101 .

2.6 Removing and installing door handle

Removing

– Driver side: Remove lock cylinder ⇒ page 111 .

– Passenger side: Remove housing for front passenger's door ⇒ page 112 .

– Pull door handle -1- in direction of -arrow-, thereby detaching door handle from operating lever in mounting bracket.

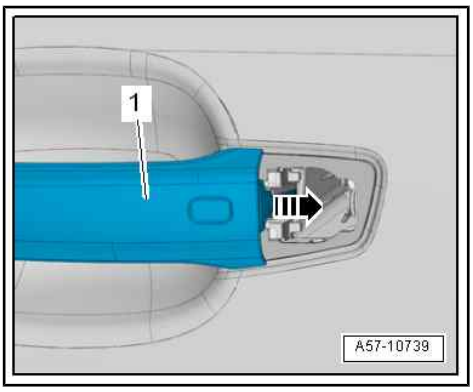

– Swivel door handle -1- outwards -arrow- and take out of mounting on mounting bracket.

– On vehicles with “Keyless Entry system”, unplug electrical connector -2- at door handle.

– If renewing door handle, also remove the following components:

♦ Door handle trim ⇒ page 108

♦ Contact sensor for exterior door handle ⇒ Electrical system; Rep. gr. 94 ; Entry and start authorisation; Overview - keyless entry system

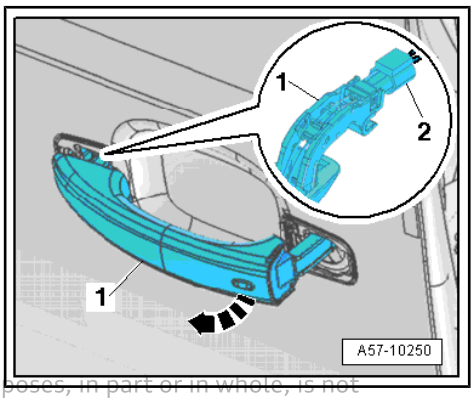

Installing

Protected by copyright. Copying for private or commercial purposes, in part or in whole, is not permitted unless authorised by AUDI AG. AUDI AG does not guarantee or accept any liability with respect to the correctness of information in this document. Copyright by AUDI AG.

Installation is carried out in reverse order; note the following:

– Renew sealing piece for door handle -1- and -2- if damaged or brittle.

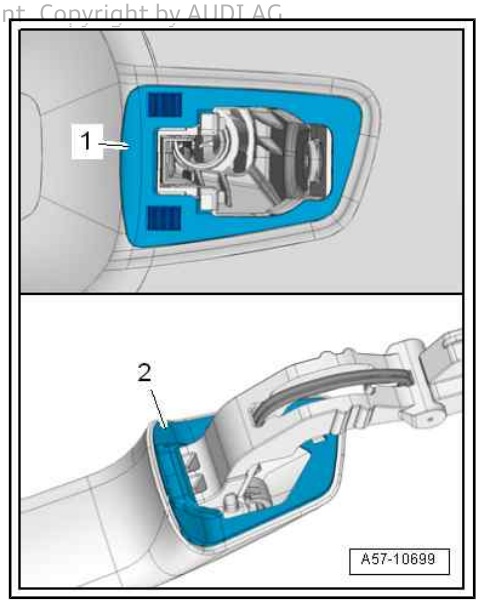

– Fit door handle -1- -arrow A-, making sure that door handle engages in mounting on mounting bracket -2-.

– Swivel door handle in direction of -arrow B- and engage it at front until it engages audibly -arrow C-.

• This will position actuator -3- in front of operating lever.

Protected by copyright. Copying for private or com
permitted unless authorised by AUDI AG. AUDI AG
with respect to the correctness of information in th s doc
Copyrigh

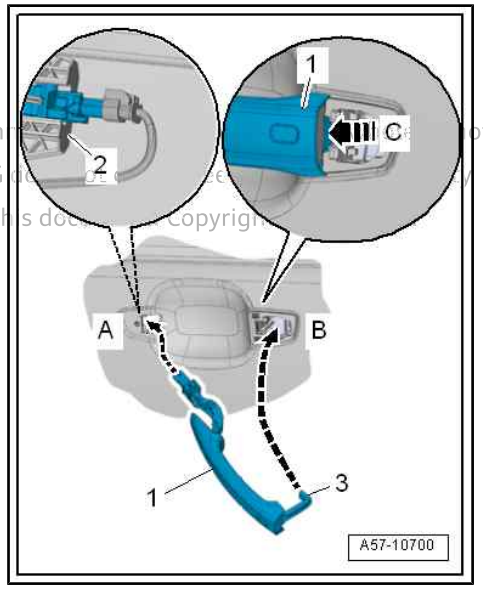

2.7 Removing and installing door handle trim

On vehicles without Keyless Entry system, a trim is fitted instead of the contact sensor for exterior door handle.

Removing

– Remove door handle ⇒ page 107 .

– Position a large, robust screwdriver -1- at door handle -2- as shown in illustration.

• Screwdriver must be applied at recess -3-.

– Using a lot of force, press door handle trim -4- forwards out of fastener on door handle -arrow-.

– Pull door handle trim out of door handle.

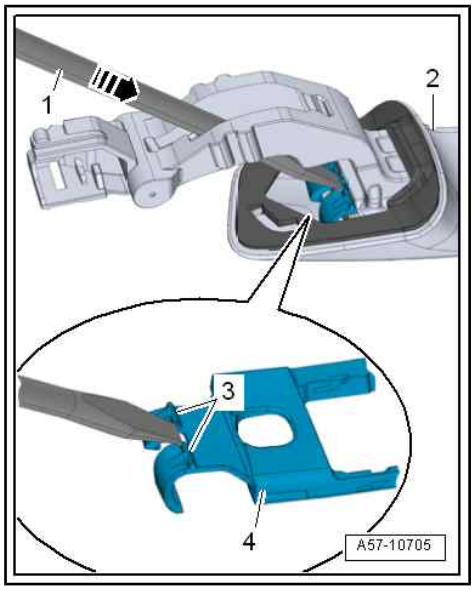

Installing

Installation is carried out in reverse order; note the following:

– Door handle trim must be inserted in door handle until it engages audibly.

2.8 Removing and installing mounting bracket

Removing

– Move door window to “closed” position.

– Remove door handle ⇒ page 107 .

– Remove inner door cover ⇒ page 115 .

Caution

Risk of damage to operating cable if it is bent.

- *Operating cable must never be bent or kinked excessively.*

– If fitted, move electrical wiring -2- clear at mounting bracket -3-.
– Detach sealing piece (rear) -4-.
– Remove bolt -1-.
– Press mounting bracket slightly in direction of -arrow- from inside of door and detach.

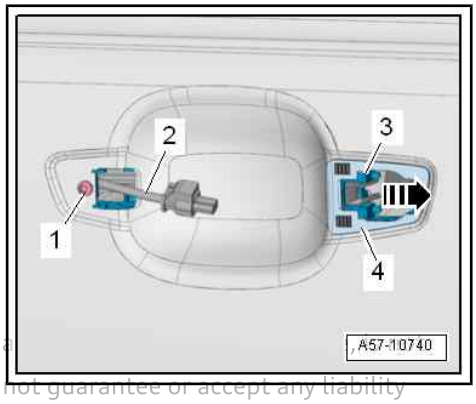

Protected by copyright. Copying for private or commercial purposes, in part or in whole, is not permitted unless authorised by AUDI AG. AUDI AG does not guarantee or accept any liability with respect to the correctness of information in this document.

– Remove bolts -arrows-.
– Unplug electrical connector and move wiring harness clear.
– Slide mounting bracket with door lock -1- downwards and take both components out of door.

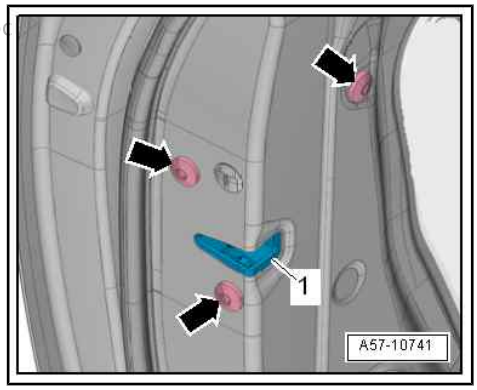

Installing

Installation is carried out in reverse order; note the following:

Note

- *On vehicles with convenience key, the wiring harness for the contact sensor for exterior door handle must be routed at the mounting bracket so that it faces the outer door panel.*
- *If the wiring harness is not routed correctly, this could cause noise when opening and closing the door window as the window would come into contact with the wiring harness.*

2.9 Removing and installing operating cable for exterior door handle

Special tools and workshop equipment required

- Hook - T40207-

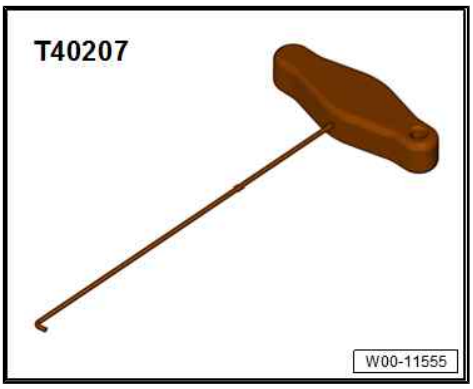

Removing

Caution

Risk of damage to operating cable if it is bent.

- *Operating cable must never be bent or kinked excessively.*

– Remove mounting bracket and door lock ⇒ page 113 .

– Turn operating cable on lever -2- 90° in direction of -arrow A- and take it out of cable support bracket -1-.

– Turn operating cable on operating lever -3- for door lock in direction of -arrow B-.

• The operating cable must be aligned with the opening on the operating lever.

– Disengage operating cable from operating lever.

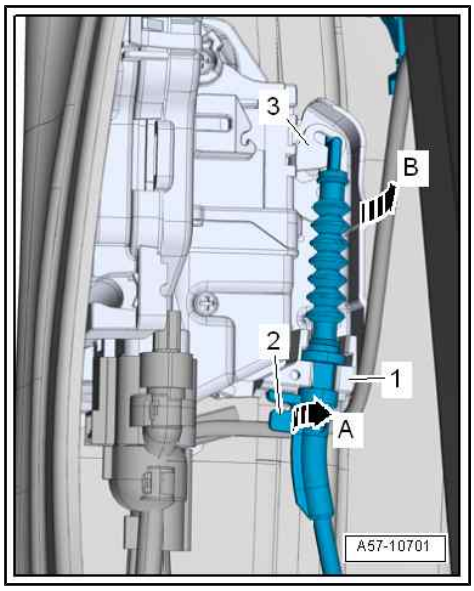

– Move operating cable -3- clear at retainer -4-.

– Move operating lever to “open” position and hold in this position.

– Using hook - T40207- , pull housing -2- with operating cable out of mounting bracket in direction of -arrow- (this will release securing tabs -1-).

– Move operating lever to “closed” position.

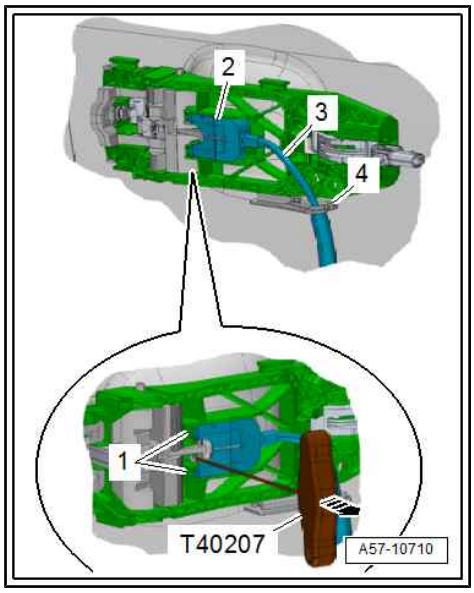

Protected by copyright. Copying for private or commercial purposes, in part or in whole, is not permitted unless authorised by AUDI AG. AUDI AG does not guarantee or accept any liability with respect to the correctness of information in this document. Copyright by AUDI AG.

– Disengage operating cable -2- on operating lever -1- in direction of -arrow-.

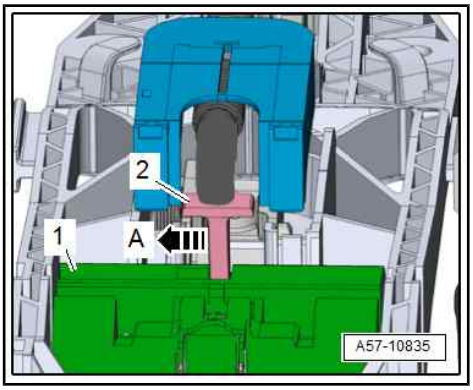

Installing

Installation is carried out in reverse sequence.

2.10 Removing and installing lock cylinder

Removing

– Pull off cap -arrow-.

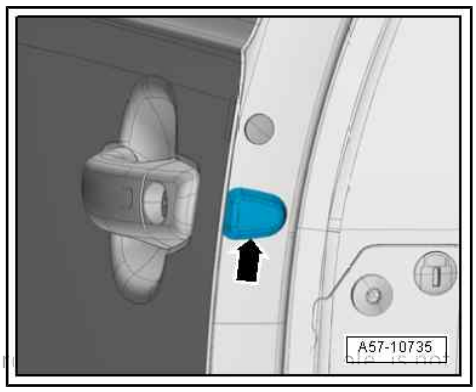

Protected by copyright. Copying for private or commer
permitted unless authorised by AUDI AG. AUDI AG does not guarantee or accept any liability
with respect to the correctness of information in this d

– Remove securing bolt -4-.
– Unscrew clamping bolt -3- as far as possible using a screwdriver -5-.
– Push retainer for lock cylinder inwards -arrow B-.
– Pull door handle -1- outwards slightly -arrow A- and pull lock cylinder -2- out of mounting bracket.

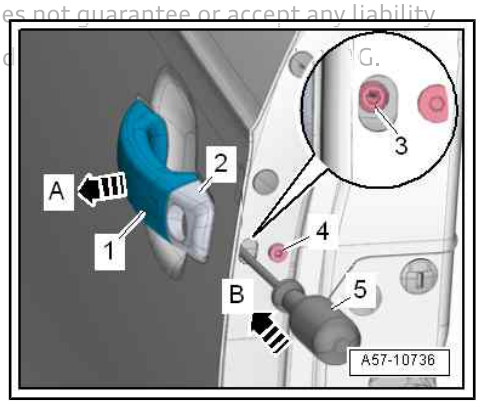

Note

If the lock cylinder cannot be pulled out, insert the ignition key in the lock cylinder and pull out the lock cylinder with the key turned slightly.

Installing

Installation is carried out in reverse order; note the following:

– Push lock cylinder into mounting bracket and then check whether the closing and opening positions for the door lock are actuated.

Tightening torques

♦ ⇒ “2.2 Exploded view - door handle and door lock”, page 102

2.11 Removing and installing cap for lock cylinder

Removing

– Remove lock cylinder ⇒ page 111 .

– Release catches -arrows- and detach cap -2- from lock cylinder -1-, using an awl if necessary.

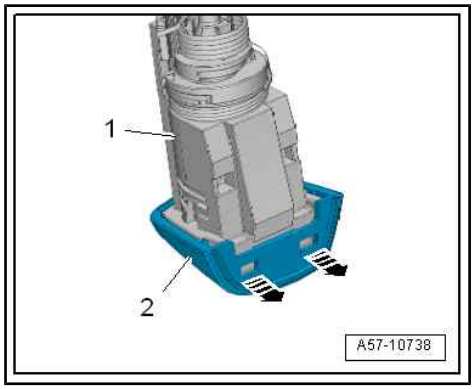

Installing

Installation is carried out in reverse order; note the following:

– Press on cap for lock cylinder until it engages audibly.

2.12 Removing and installing housing

Special tools and workshop equipment required

♦ Hook - T40207-

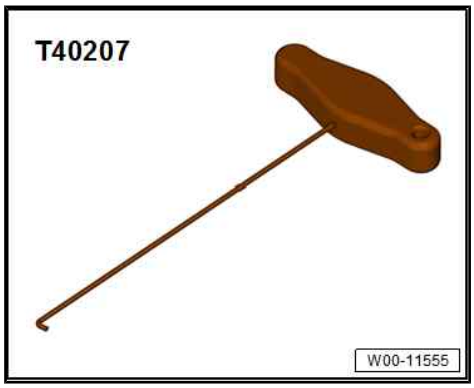

Removing

– Pull off cap -arrow-.

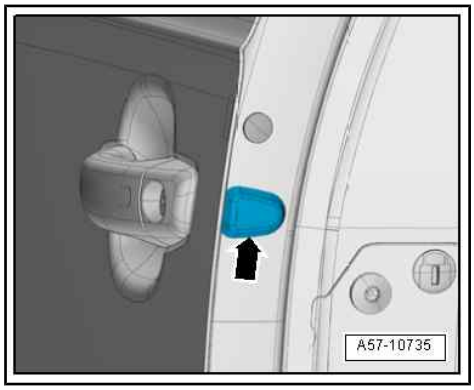

– Pull retainer -1- outwards -arrow A- with hook - T40207- .

– Pull door handle -3- outwards slightly -arrow B- and pull housing -2- out of mounting bracket.

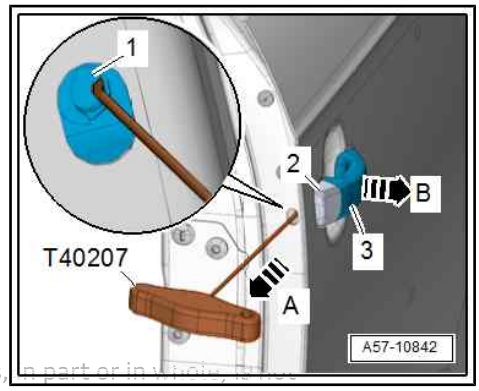

Installing

Installation is carried out in reverse sequence.

Protected by copyright. Copying for private or commercial purposes, in part or in whole, is not permitted unless authorised by AUDI AG. AUDI AG does not guarantee or accept any liability with respect to the correctness of information in this document. Copyright by AUDI AG.

2.13 Removing and installing door lock

Removing

– Move door window to “closed” position.

– Remove door handle ⇒ page 107 .

– Remove inner door cover ⇒ page 115 .

> **Caution**
>
> *Risk of damage to operating cable if it is bent.*
>
> ♦ *Operating cable must never be bent or kinked excessively.*

– If fitted, move electrical wiring -2- clear at mounting bracket -3-.

– Detach sealing piece (rear) -4-.

– Remove bolt -1-.

– Press mounting bracket slightly in direction of -arrow- from inside of door and detach.

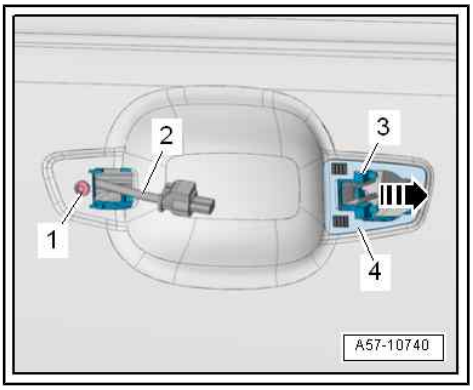

– Remove bolts -arrows-.

– Unplug electrical connector and move wiring harness clear.

– Slide mounting bracket with door lock -1- downwards and take both components out of door.

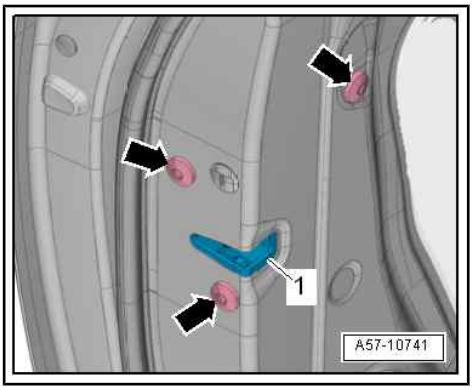

Installing

Installation is carried out in reverse order; note the following:

– Observe notes on installing mounting bracket ⇒ page 109 .

Tightening torques

♦ ⇒ “2.2 Exploded view - door handle and door lock”, page 102

2.14 Removing and installing cover for door lock

Removing

– Remove mounting bracket and door lock ⇒ page 113 .

Protected by copyright. Copying for private or commercial purposes, in part or in whole, is not permitted unless authorised by AUDI AG. AUDI AG does not guarantee or accept any liability with respect to the correctness of information in this document. Copyright by AUDI AG.

– Release fasteners -arrows-.
– Detach guide -1- for lock cylinder at door lock -2-.

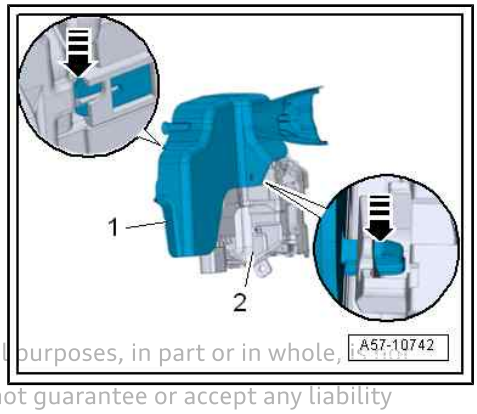

Installing

Installation is carried out in reverse sequence.

Protected by copyright. Copying for private or commercial purposes, in part or in whole, is not permitted unless authorised by AUDI AG. AUDI AG does not guarantee or accept any liability with respect to the correctness of information in this document. Copyright by AUDI AG.

2.15 Removing and installing striker

Removing

– Unscrew bolts -arrows- and detach striker -1-.

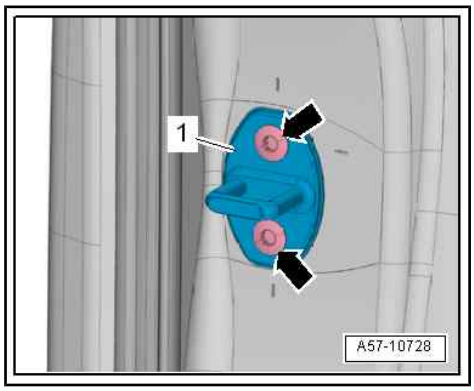

Installing

Installation is carried out in reverse order; note the following:

– Adjust striker ⇒ page 94 .

Tightening torques

♦ ⇒ “2.2 Exploded view - door handle and door lock”, page 102

2.16 Removing and installing operating cable for interior door handle

Removing

– Driver side: Remove lock cylinder ⇒ page 111 .
– Remove inner door cover ⇒ page 115 .

> ⚠ **Caution**
>
> *Risk of damage to operating cable if it is bent.*
>
> ♦ *Operating cable must never be bent or kinked excessively.*

– Remove bolts -arrows-.
– Press door lock -1- slightly to the side.

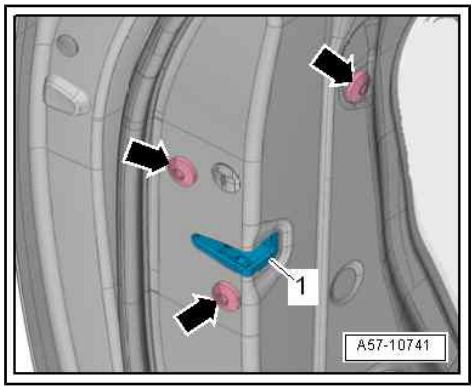

– If necessary, unplug electrical connector -5-.
– Turn operating cable on lever -4- 90° in direction of -arrow B- and take it out of cable support bracket -3-.
– Disengage nipple -1- from release lever -2- at door lock -arrow A-.

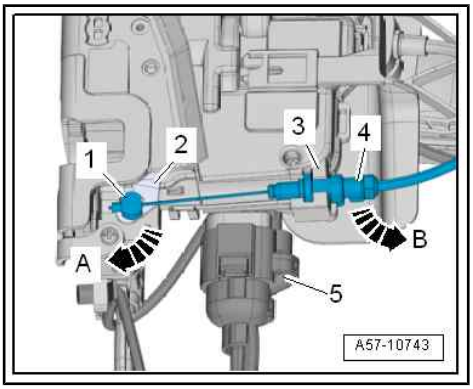

Installing

Installation is carried out in reverse sequence.

2.17 Removing and installing inner door cover

Special tools and workshop equipment required

♦ Wedges - T10383-

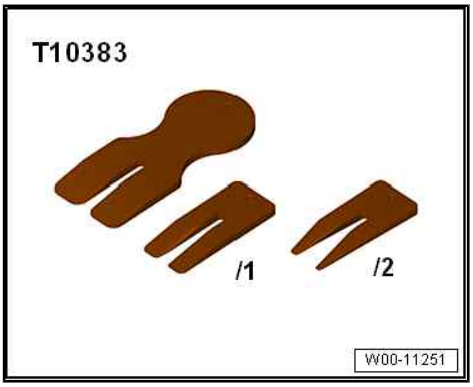

Removing

– Remove door trim (front) ⇒ General body repairs, interior; Rep. gr. 70 ; Door trim (front); Removing and installing door trim (front) .
– A3: Move electrical wiring harness -1- clear.
– Prise inner door cover -2- off inner door panel using wedge -T10383/1- .
– Disengage grommet -3- for cable -4- for interior door handle from inner door cover.

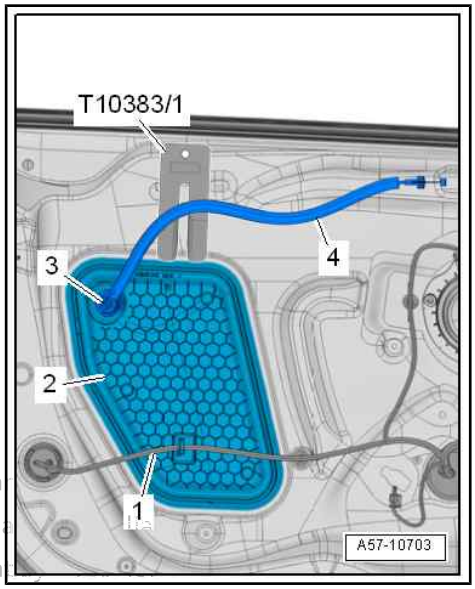

Installing

Installation is carried out in reverse order; note the following:

– Press on inner door cover until it engages audibly.
• Inner door cover must be flush.

Protected by copyright. Copying for private or commercial purposes, in pa
permitted unless authorised by AUDI AG. AUDI AG does not guarantee or
with respect to the correctness of information in this document. Copyrigh

2.18 Removing and installing window guide

Removing

– Remove door window ⇒ page 312 .

– Remove trim panel for B-pillar ⇒ page 361 .
– Remove trim panel for A-pillar ⇒ page 360 .
– Saloon: Remove trim strip ⇒ page 355 .
– Pull window guide -1- outwards off door frame -arrows-.

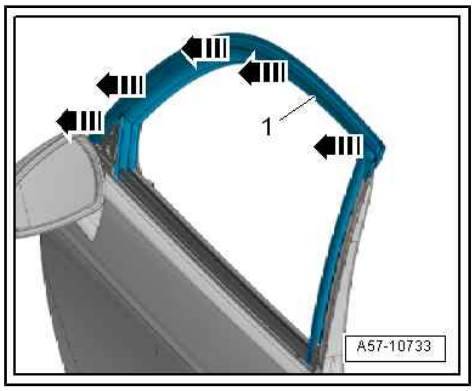

Installing

Installation is carried out in reverse order; note the following:

– Fit sections of window guide -A- on door flange in the sequence -1 ... 5-.
– 1. Apply corner of window guide on top of door flange at B-pillar and slide on towards front (as seen in direction of travel).
• Guide pin -B- must engage in mounting on window guide.
– 2. Insert window guide in door flange.
– 3. Align window guide with guide rail at A-pillar.
– 4. Insert seal -C- in guide rail.
– 5. Fit trim panel for B-pillar ⇒ page 361 and insert seal -D- in guide rail.

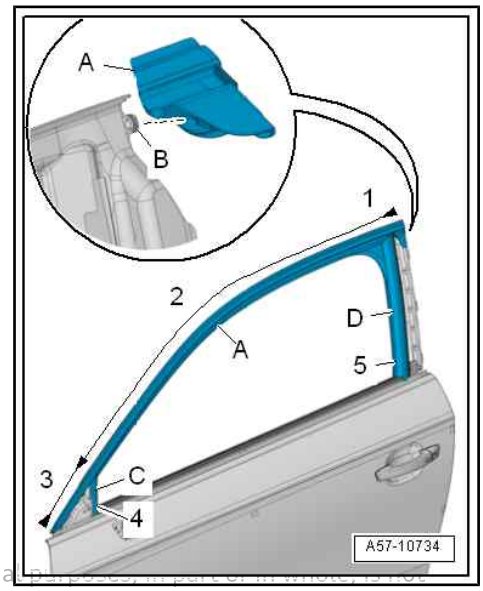

Protected by copyright. Copying for private or commercial purposes, in part or in whole, is not permitted unless authorised by AUDI AG. AUDI AG does not guarantee or assume any liability with respect to the correctness of information in this document. Copyright by AUDI AG.

Saloon models with high-gloss package:

– Press retaining clip -2- into mounting on window guide -3-.
• Arrow -1- must face upwards.
• “VT” = front door

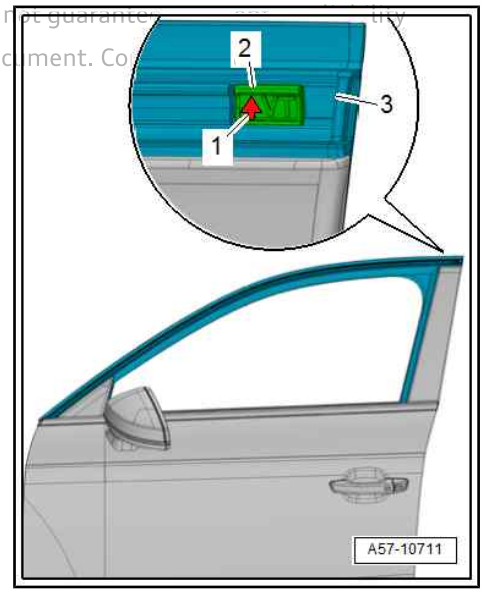

– Align trim strip -1- on door flange at B-pillar, insert into clip -3- and window guide -2- from below and press on along entire length.

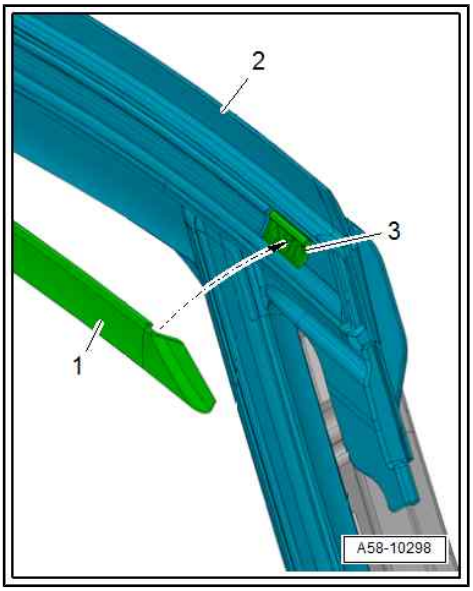

2.19 Removing and installing inner window slot trim strip

Removing

– Remove window frame trim (front) ⇒ General body repairs, interior; Rep. gr. 70 ; Door trim (front) .

– Lift off window slot trim strip -1- arrows-.

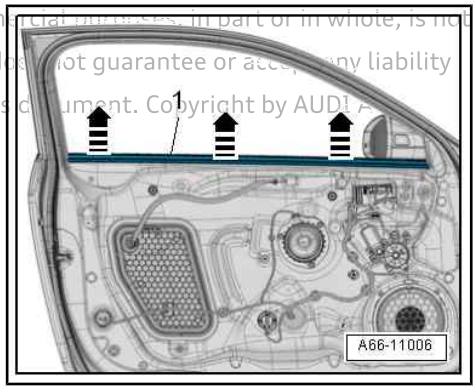

Installing

Installation is carried out in reverse order, note the following:

Protected by copyright. Copying for private or commercial purposes, in part or in whole, is not permitted unless authorised by AUDI AG. AUDI AG does not guarantee or accept any liability with respect to the correctness of information in this document. Copyright by AUDI AG.

– Position window slot trim strip -1- so it is flush with window guide -2- at both ends -arrow- and press onto door seam, working towards centre.

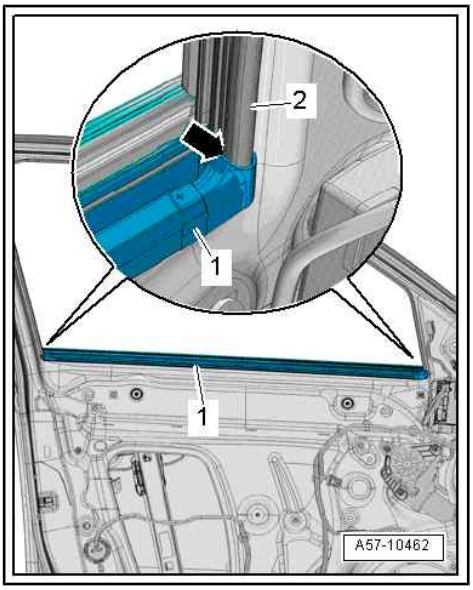

2.20 Removing and installing outer window slot trim strip

Special tools and workshop equipment required

♦ Removal tool - T40219-

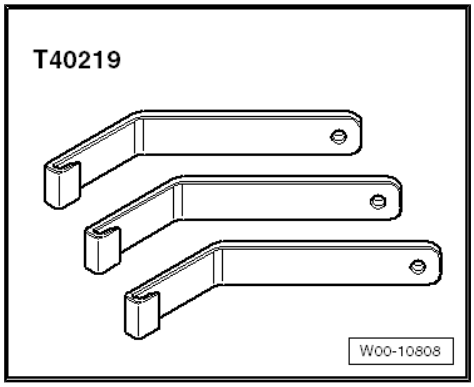

Preparing removal tool - T40219- :

- Before removing window slot trim strip, carefully bend removal tool - T40219- at the point indicated -arrow- so that removal tool can be applied behind retaining strip.

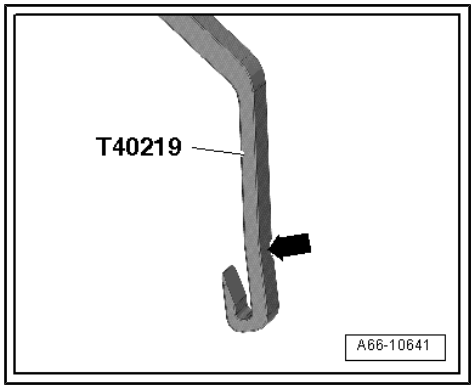

– Shorten removal tool - T40219- at position shown by dimension -a-.

- Dimension -a- = 5 mm

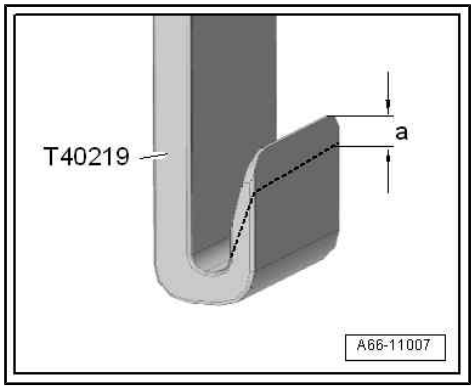

Removing

– Lower door window.

– Remove door trim (front) ⇒ General body repairs, interior; Rep. gr. 70 ; Door trim (front); Removing and installing door trim (front) .

– Remove trim panel for A-pillar ⇒ page 360 .

– Remove inner window slot trim strip ⇒ page 343 .

Protected by copyright. Copying for private or commercial purposes, in part or in whole, is not permitted unless authorised by AUDI AG. AUDI AG does not guarantee or accept any liability with respect to the correctness of information in this document. Copyright by AUDI AG.

– Insert removal tool - T40219- next to guide -4- for window slot trim strip -3- and apply at retaining strip -2-.

• Front section -1- of removal tool -T40219- must be positioned as shown in illustration.

– Press removal tool - T40219- lightly in direction of -arrow- to release component.

• You should hear the retaining strip disengage.

– Carefully pull window slot trim strip upwards off door flange using removal tool - T40219- .

– Detach window slot trim strip.

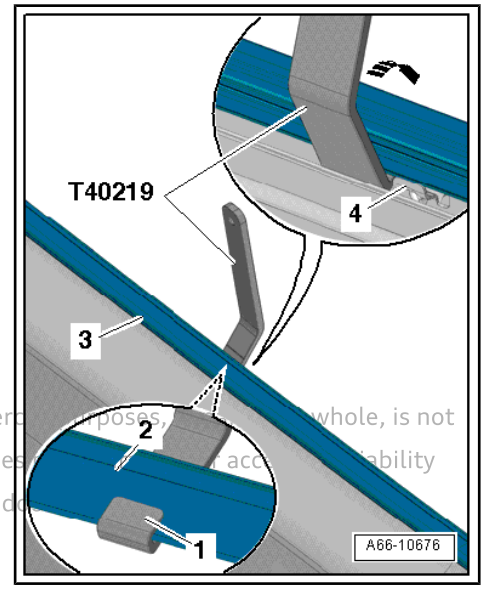

Installing

Installation is carried out in reverse order; note the following:

Protected by copyright. Copying for private or commer[illegible]poses, [illegible] whole, is not permitted unless authorised by AUDI AG. AUDI AG does [illegible] acc[illegible]ability with respect to the correctness of information in this d[illegible]

Note

For installing, you can coat the bottom edge of the window slot trim strip with tyre assembly paste.

– Position window slot trim strip -1- at trim panel for B-pillar on door seam and press on evenly -arrows-; retaining strip must be guided along guides -3- and must engage audibly at retaining plate -2-.

• When fixing retaining strip in position, it should engage underneath retaining plate.

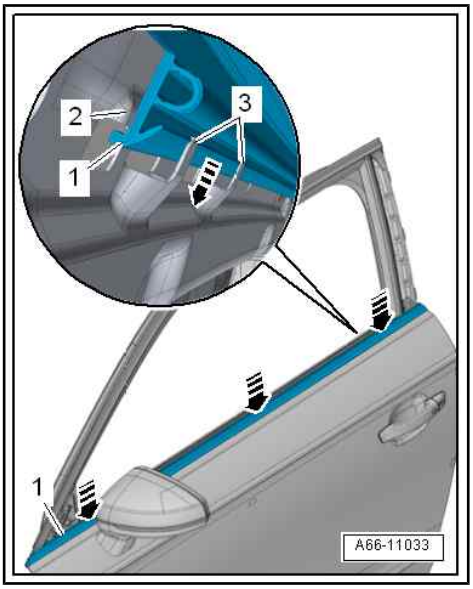

3 Central locking system

⇒ “3.1 Overview of fitting locations - central locking system”, page 120

⇒ “3.2 Removing and installing driver door control unit J386 and front passenger door control unit J387 ”, page 124

⇒ “3.3 Removing and installing rear driver side door control unit J926 and rear passenger side door control unit J927 ”, page 124

⇒ “3.4 Removing and installing control unit with rear driver side window regulator motor J1016 and control unit with rear passenger side window regulator motor J1017 ”, page 125

⇒ “3.5 Removing and installing interface control unit for vehicle location system J843 ”, page 126

⇒ “3.6 Removing and installing bonnet contact switch F266 ”, page 127

⇒ “3.7 Removing and installing tank filler flap locking motor V155 ”, page 128

Protected by Copyright. Copying for private or commercial purposes, in part or in whole, is not permitted unless authorised by AUDI AG. AUDI AG does not guarantee or accept any liability with respect to the correctness of information in this document. Copyright by AUDI AG.

3.1 Overview of fitting locations - central locking system

⇒ “3.1.1 Overview of fitting locations - A3”, page 120

⇒ “3.1.2 Overview of fitting locations - Sportback ”, page 122

⇒ “3.1.3 Overview of fitting locations - Saloon”, page 123

3.1.1 Overview of fitting locations - A3

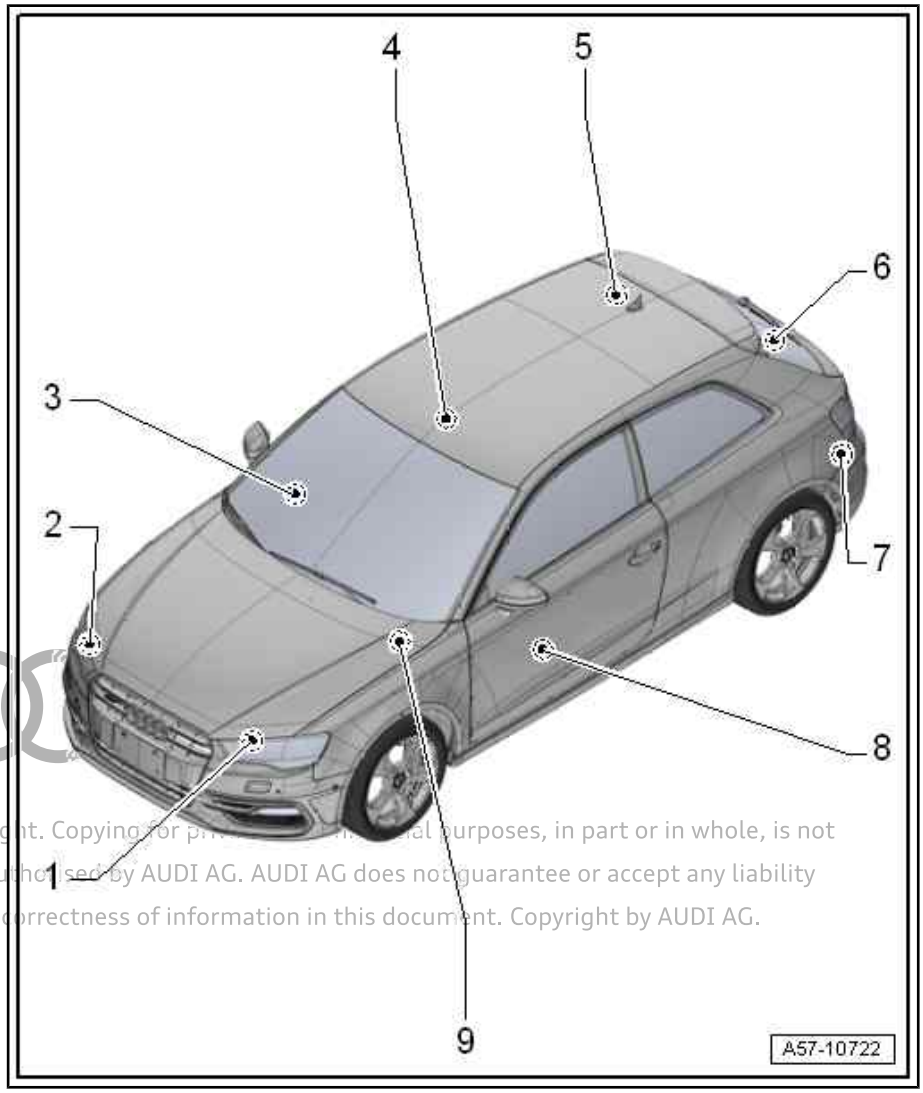

1 - Bonnet contact switch - F266-

- ❑ In bonnet lock
- ❑ Removing and installing ⇒ page 127

2 - Bonnet contact switch 2 - F329-

- ❑ In bonnet lock
- ❑ Removing and installing ⇒ page 127

3 - Front passenger door control unit - J387-

- ❑ Removing and installing ⇒ page 124

4 - Anti-theft alarm sensor - G578-

- ❑ Exploded view ⇒ Electrical system; Rep. gr. 96 ; Anti-theft alarm system; Overview - interior monitoring

5 - Tank filler flap locking motor - V155-

- ❑ Removing and installing ⇒ page 128

6 - Rear lid lock

- ❑ With rear lid central locking motor - V53- / rear lid contact switch for anti-theft alarm - F123- ; cannot be renewed separately
- ❑ Exploded view ⇒ page 57

Protected by copyright. Copying for private or commercial purposes, in part or in whole, is not permitted unless authorised by AUDI AG. AUDI AG does not guarantee or accept any liability with respect to the correctness of information in this document. Copyright by AUDI AG.

7 - Interface control unit for vehicle location system - J843-

- ❑ Removing and installing ⇒ page 126

8 - Driver door control unit - J386-

- ❑ Removing and installing ⇒ page 124

9 - Onboard supply control unit - J519-

- ❑ Overview of fitting locations ⇒ Electrical system; Rep. gr. 97 ; Control units; Overview of fitting locations - control units

3.1.2 Overview of fitting locations - Sportback

Protected by copyright. Copying for private or commercial purposes, in part or in whole, is not permitted unless authorised by AUDI AG. AUDI AG does not guarantee or accept any liability with respect to the correctness of information in this document. Copyright by AUDI AG.

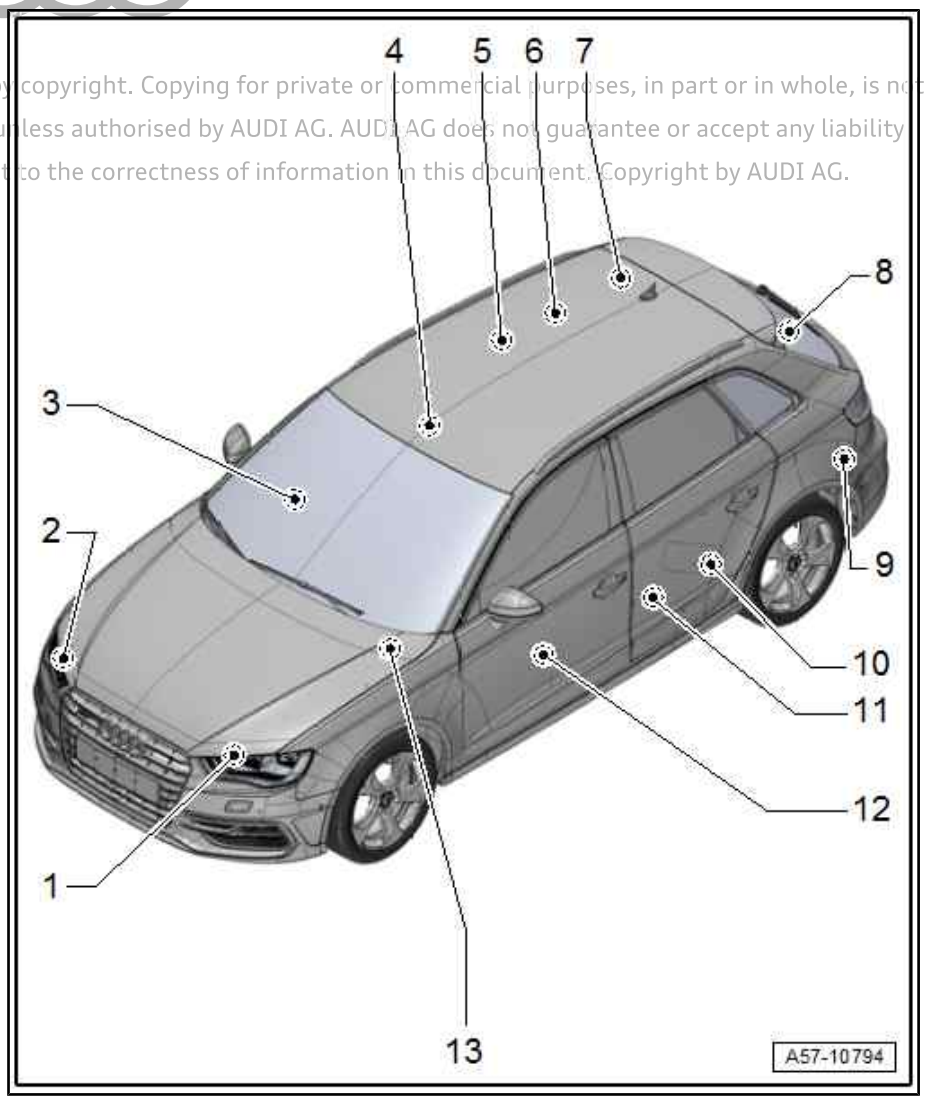

1 - Bonnet contact switch - F266-

- ❑ In bonnet lock
- ❑ Removing and installing ⇒ page 127

2 - Bonnet contact switch 2 - F329-

- ❑ In bonnet lock
- ❑ Removing and installing ⇒ page 127

3 - Front passenger door control unit - J387-

- ❑ Removing and installing ⇒ page 124

4 - Anti-theft alarm sensor - G578-

- ❑ Exploded view ⇒ Electrical system; Rep. gr. 96 ; Anti-theft alarm system; Overview - interior monitoring

5 - Control unit with rear passenger side window regulator motor - J1017-

- ❑ Equipment version ⇒ Electronic parts catalogue
- ❑ Removing and installing ⇒ page 125

6 - Rear passenger side door control unit - J927-

- ❑ Equipment version
- ❑ Removing and installing ⇒ page 124

7 - Tank filler flap locking motor - V155-

- ❑ Removing and installing ⇒ page 128

8 - Rear lid lock

- ❑ With rear lid central locking motor - V53- / rear lid contact switch for anti-theft alarm - F123- ; cannot be renewed separately

9 - Interface control unit for vehicle location system - J843-

- ❑ Removing and installing ⇒ page 126

10 - Rear driver side door control unit - J926-

- ❑ Equipment version
- ❑ Removing and installing ⇒ page 124

11 - Control unit with rear driver side window regulator motor - J1016-

- ❑ Equipment version
- ❑ Removing and installing ⇒ page 125

12 - Driver door control unit - J386-

- ❑ Removing and installing ⇒ page 124

13 - Onboard supply control unit - J519-

- ❑ Overview of fitting locations ⇒ Electrical system; Rep. gr. 97 ; Control units; Overview of fitting locations - control units

3.1.3 Overview of fitting locations - Saloon

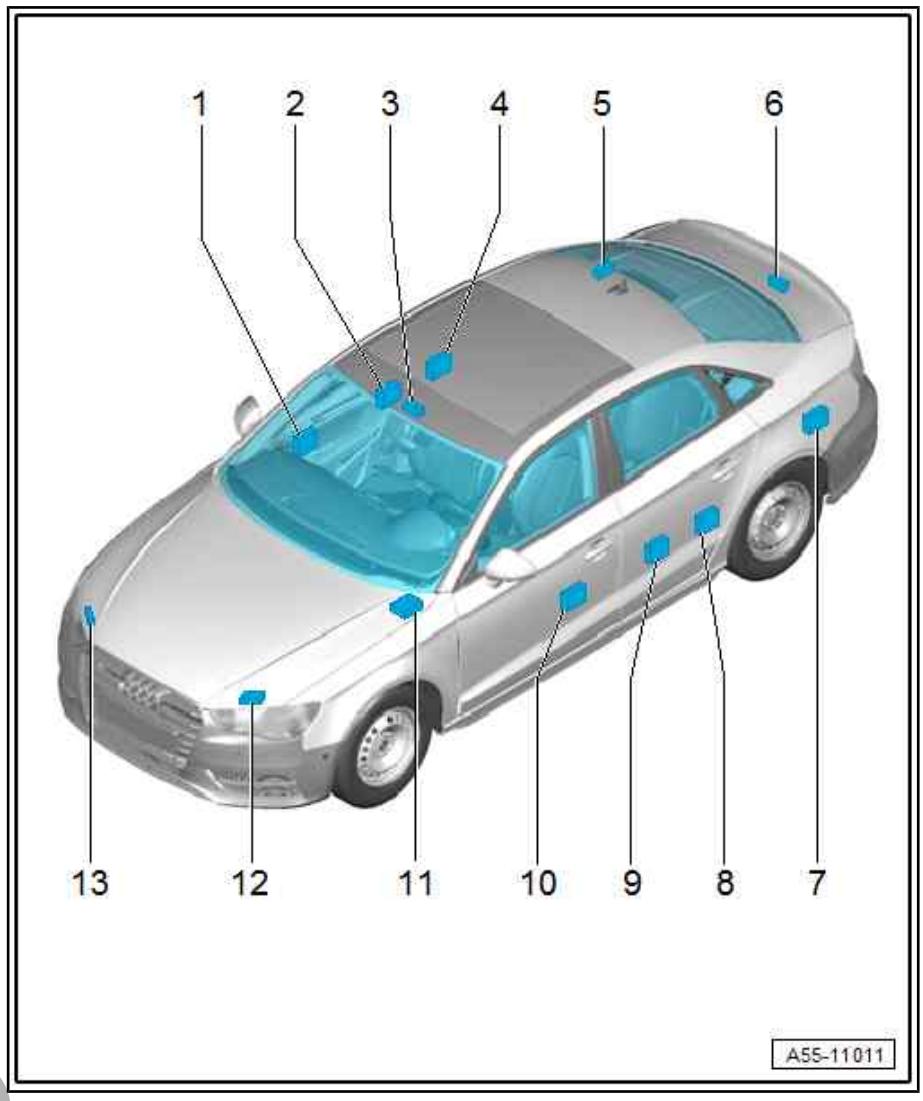

1 - Front passenger door control unit - J387-

- ❑ Removing and installing ⇒ page 124

2 - Control unit with rear passenger side window regulator motor - J1017-

- ❑ Equipment version
- ❑ Removing and installing ⇒ page 125

3 - Anti-theft alarm sensor - G578-

- ❑ Exploded view ⇒ Electrical system; Rep. gr. 96 ; Anti-theft alarm system; Overview - interior monitoring

4 - Rear passenger side door control unit - J927-

- ❑ Equipment version
- ❑ Removing and installing ⇒ page 124

5 - Tank filler flap locking motor - V155-

- ❑ Removing and installing ⇒ page 128

6 - Rear lid lock

- ❑ With rear lid central locking motor - V53- / rear lid contact switch for anti-theft alarm - F123- ; cannot be renewed separately

7 - Interface control unit for vehicle location system - J843-

- ❑ Removing and installing ⇒ page 126

8 - Rear driver side door control unit - J926-

- ❑ Equipment version
- ❑ Removing and installing ⇒ page 124

Protected by copyright. Copying for private or commercial purposes, in part or in whole, is not permitted unless authorised by AUDI AG. AUDI AG does not guarantee or accept any liability with respect to the correctness of information in this document. Copyright by AUDI AG.

9 - Control unit with rear driver side window regulator motor - J1016-

- ❑ Equipment version
- ❑ Removing and installing ⇒ page 125

10 - Driver door control unit - J386-

- ❑ Removing and installing

11 - Onboard supply control unit - J519-

- ❑ Overview of fitting locations ⇒ Electrical system; Rep. gr. 97 ; Control units; Overview of fitting locations - control units

12 - Bonnet contact switch - F266-

- ❑ In bonnet lock
- ❑ Removing and installing ⇒ page 127

13 - Bonnet contact switch 2 - F329-

- ❑ In bonnet lock
- ❑ Removing and installing ⇒ page 127

3.2 Removing and installing driver door control unit - J386- and front passenger door control unit - J387-

Protected by copyright. Copying for private or commercial purposes, in part or in whole, is not permitted unless authorised by AUDI AG. AUDI AG does not guarantee or accept any liability with respect to the correctness of information in this document. Copyright by AUDI AG.

Removing

– Remove door trim (front) ⇒ General body repairs, interior; Rep. gr. 70 ; Door trim (front); Removing and installing door trim (front) .

– Unplug electrical connectors -2 and 3-; to do so, pull locking element and press release mechanism downwards.

– Unplug electrical connector -4-.

– Move electrical connector -1- clear at door control unit.

– Press retaining catch -5- in direction of -arrow- and disengage door control unit from door shell.

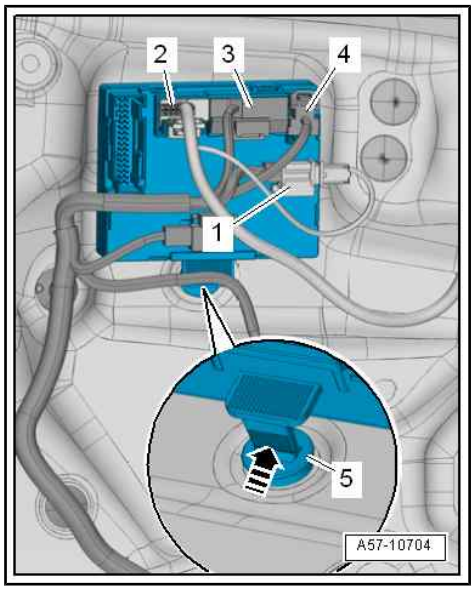

Installing

Installation is carried out in the reverse order; note the following:

- If renewing the driver door control unit - J386- or front passenger door control unit - J387- , select the function “Replace control unit” for the corresponding control unit ⇒ Vehicle diagnostic tester, `Diagnosis`.

3.3 Removing and installing rear driver side door control unit - J926- and rear passenger side door control unit - J927-

Removing

– Remove door trim (rear) ⇒ General body repairs, interior; Rep. gr. 70 ; Door trim (rear); Removing and installing door trim (rear) .

– Unplug electrical connectors -2-; to do so, pull locking element and press release mechanism downwards.

– Unplug electrical connector -3-.

– Press retaining catch -4- in direction of -arrow- and disengage door control unit -1- from door shell.

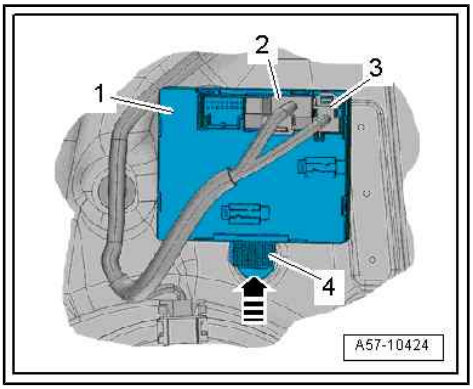

Installing

Installation is carried out in the reverse order; note the following:

- If renewing the rear driver side door control unit - J926- or rear passenger side door control unit - J927- , select the function “Replace control unit” for the corresponding control unit ⇒ Vehicle diagnostic tester, Diagnosis.

3.4 Removing and installing control unit with rear driver side window regulator motor - J1016- and control unit with rear passenger side window regulator motor - J1017-

Removing

Note

The control unit with rear window regulator motor can be removed or installed with the motor or the door window in any position.

Protected by copyright. Copying for private or commercial purposes, in part or in whole, is not permitted unless authorised by AUDI AG. AUDI AG does not guarantee or accept any liability with respect to the correctness of information in this document. Copyright by AUDI AG.

– Remove door trim (rear) ⇒ General body repairs, interior; Rep. gr. 70 ; Door trim (rear); Removing and installing door trim (rear) .

– Unplug electrical connector -1-; to do so, move locking element towards rear and press release mechanism downwards.

– Unscrew bolts -arrows- and detach control unit with window regulator motor -2- from window regulator.

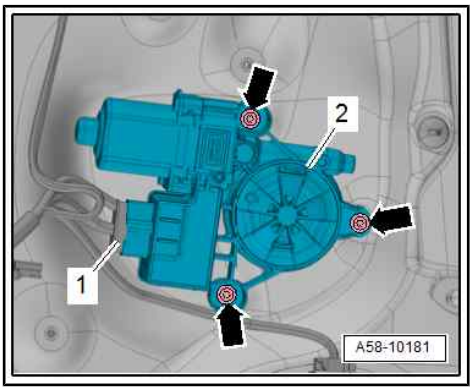

Installing

Installation is carried out in reverse order; note the following:

- Retaining clips -2- of threaded pins -3- for window regulator must be engaged in inner door panel.

– Slide control unit with window regulator motor -1- onto threaded pins and tighten bolts -4-.

- If renewing the control unit with rear driver side window regulator motor - J1016- or control unit with rear passenger side window regulator motor - J1017- , select the function “Replace control unit” for the corresponding control unit ⇒ Vehicle diagnostic tester, Diagnosis.

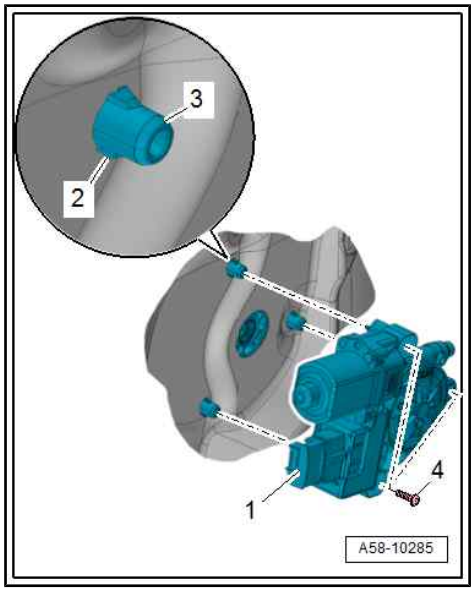

Tightening torques

◆ ⇒ “2.1 Exploded view - window regulator”, page 101 .

3.5 Removing and installing interface control unit for vehicle location system - J843-

⇒ “3.5.1 Removing and installing interface control unit for vehicle location system J843 - A3 and A3 Sportback”, page 126

⇒ “3.5.2 Removing and installing interface control unit for vehicle location system J843 - Saloon”, page 127

3.5.1 Removing and installing interface control unit for vehicle location system - J843- - A3 and A3 Sportback

Protected by copyright. Copying or distribution for commercial purposes, in part or in whole, is not permitted unless authorised by AUDI AG. AUDI AG does not guarantee or accept any liability with respect to the correctness of information in this document. Copyright by AUDI AG.

Removing

– Remove luggage compartment side trim (left-side) ⇒ General body repairs, interior; Rep. gr. 70 ; Luggage compartment trim panels; Removing and installing luggage compartment side trim .

– Unplug electrical connector -4-.

– Release retaining tab -2- -arrow- and pull interface control unit -3- out of retaining frame -1-.

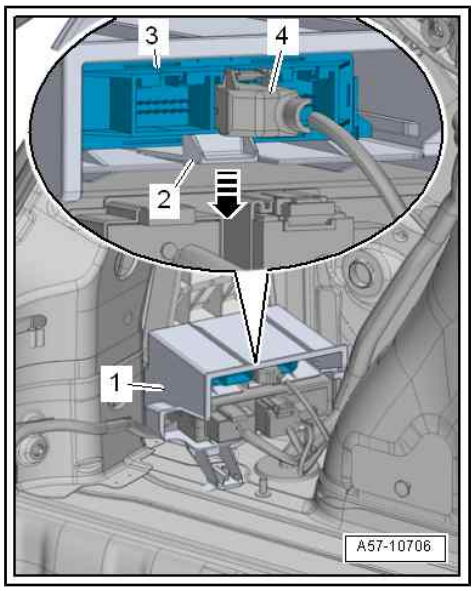

Installing

Installation is carried out in the reverse order; note the following:

- If renewing the interface control unit for vehicle location system - J843- , select the function “Replace control unit” for the corresponding control unit ⇒ Vehicle diagnostic tester, Diagnosis.

3.5.2 Removing and installing interface control unit for vehicle location system - J843- - Saloon

Removing

– Remove luggage compartment side trim (left-side) ⇒ General body repairs, interior; Rep. gr. 70 ; Luggage compartment trim panels; Removing and installing luggage compartment side trim .

– Release retaining tab -arrow- and pull trailer detector control unit -3- out of retaining frame -4-, if fitted.

– Move trailer detector control unit clear to one side with connectors -1 and 2- attached.

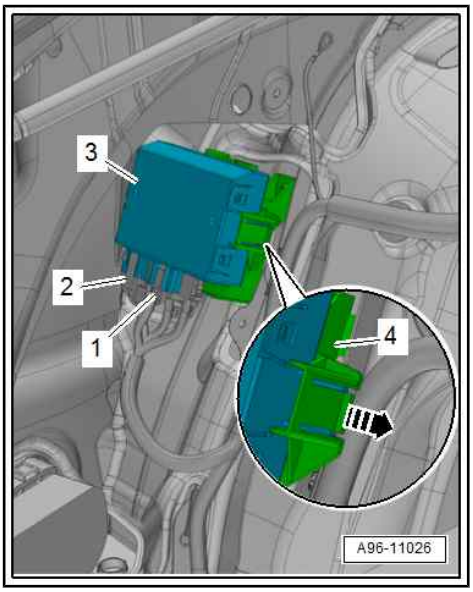

– Unplug electrical connector -1-.

– Release retaining tab -4- -arrow- and pull interface control unit -3- out of retaining frame -2-.

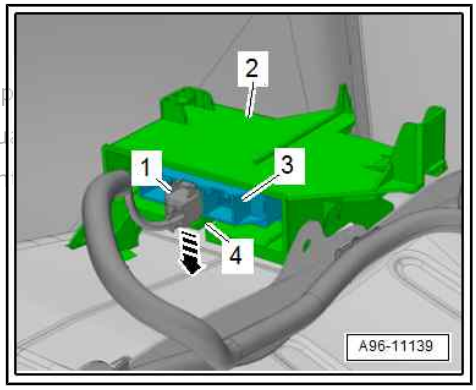

Copyright by AUDI AG. Copying for private or commercial purp
permitted unless authorised by AUDI AG. AUDI AG does not gu
with regard to the correctness of information in this document

Installing

Installation is carried out in the reverse order; note the following:

- If renewing the interface control unit for vehicle location system - J843- , select the function “Replace control unit” for the corresponding control unit ⇒ Vehicle diagnostic tester, Diagnosis.

3.6 Removing and installing bonnet contact switch - F266-

Removing

– Left-side: Remove filler neck for washer fluid reservoir ⇒ Electrical system; Rep. gr. 92 ; Windscreen washer system; Exploded view - windscreen washer system .

– Unplug electrical connector -1-.
– Unscrew bolts -2- and detach bonnet lock.

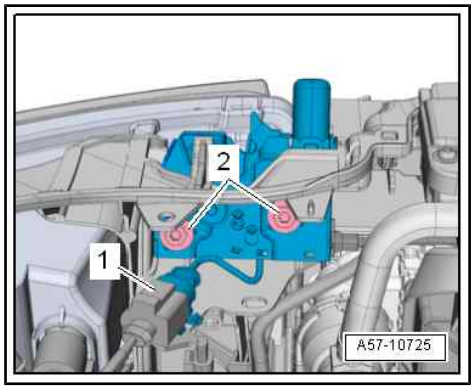

– Lift retaining tab -1- -arrow A-.
– Disengage contact switch -2- at bonnet lock -3- -arrow B- and detach contact switch.

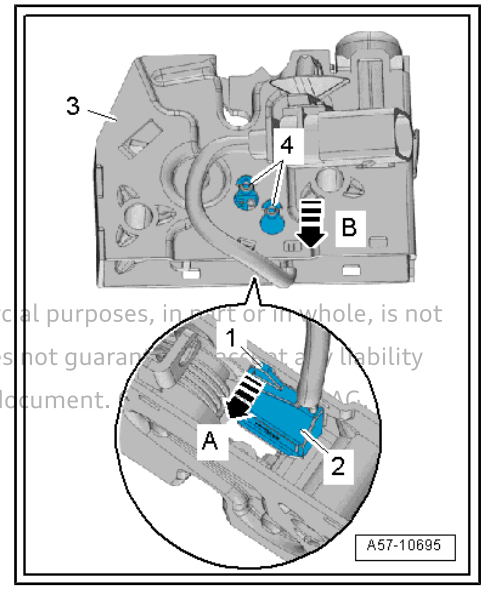

Installing

Installation is carried out in reverse order; note the following:

- Guide pins -4- on contact switch must be inserted correctly in bonnet lock.

Protected by copyright. Copying for private or commercial purposes, in part or in whole, is not permitted unless authorised by AUDI AG. AUDI AG does not guarantee or assume any liability with respect to the correctness of information in this document. Copyright by AUDI AG.

3.7 Removing and installing tank filler flap locking motor - V155-

Removing

– Remove cover for luggage compartment side trim (right-side).
– Take out tool kit.
– Disengage handle for manual release cable and move clear.
– Remove tank flap unit ⇒ page 80 .
– Remove bolts -arrows-.
– Detach tank filler flap locking motor -1- with manual release cable from tank flap unit -2-.
– If tank filler flap locking motor is to be renewed, remove manual release cable for locking tank flap ⇒ page 85 .

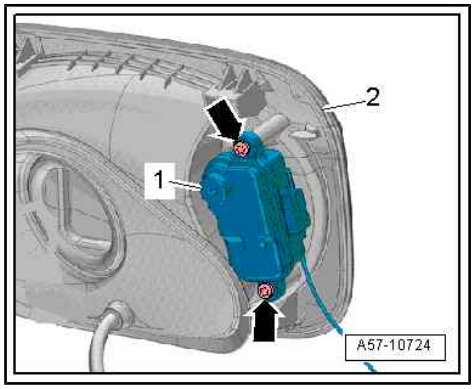

Installing

Installation is carried out in reverse sequence.

Tightening torques

♦ ⇒ “3.1 Exploded view - tank flap unit”, page 80 .

58 – Rear doors, door components

1 Door

⇒ “1.1 Exploded view - door”, page 129
⇒ “1.2 Exploded view - door seals”, page 131
⇒ “1.3 Removing and installing door”, page 131
⇒ “1.4 Adjusting door”, page 132
⇒ “1.5 Removing and installing door arrester”, page 137
⇒ “1.6 Removing and installing inner door seal”, page 138
⇒ “1.7 Removing and installing outer door seal”, page 139

1.1 Exploded view - door

⇒ “1.1.1 Exploded view - door, Sportback”, page 129
⇒ “1.1.2 Exploded view - door, Saloon”, page 130

1.1.1 Exploded view - door, Sportback

1 - Sealing grommet
- ❑ For door arrester

2 - Door
- ❑ Removing and installing ⇒ page 131

3 - Bolt
- ❑ 33 Nm

4 - Door arrester
- ❑ Removing and installing ⇒ page 137

5 - Cap
- ❑ For door arrester
- ❑ Note direction of installation

6 - Bolt
- ❑ Bolt, 2x
- ❑ 8 Nm

7 - Bolt
- ❑ 45 Nm

8 - Door hinge

9 - B-pillar

10 - Nut
- ❑ 32 Nm

11 - Bolt
- ❑ 32 Nm

12 - Stud
- ❑ 23 Nm

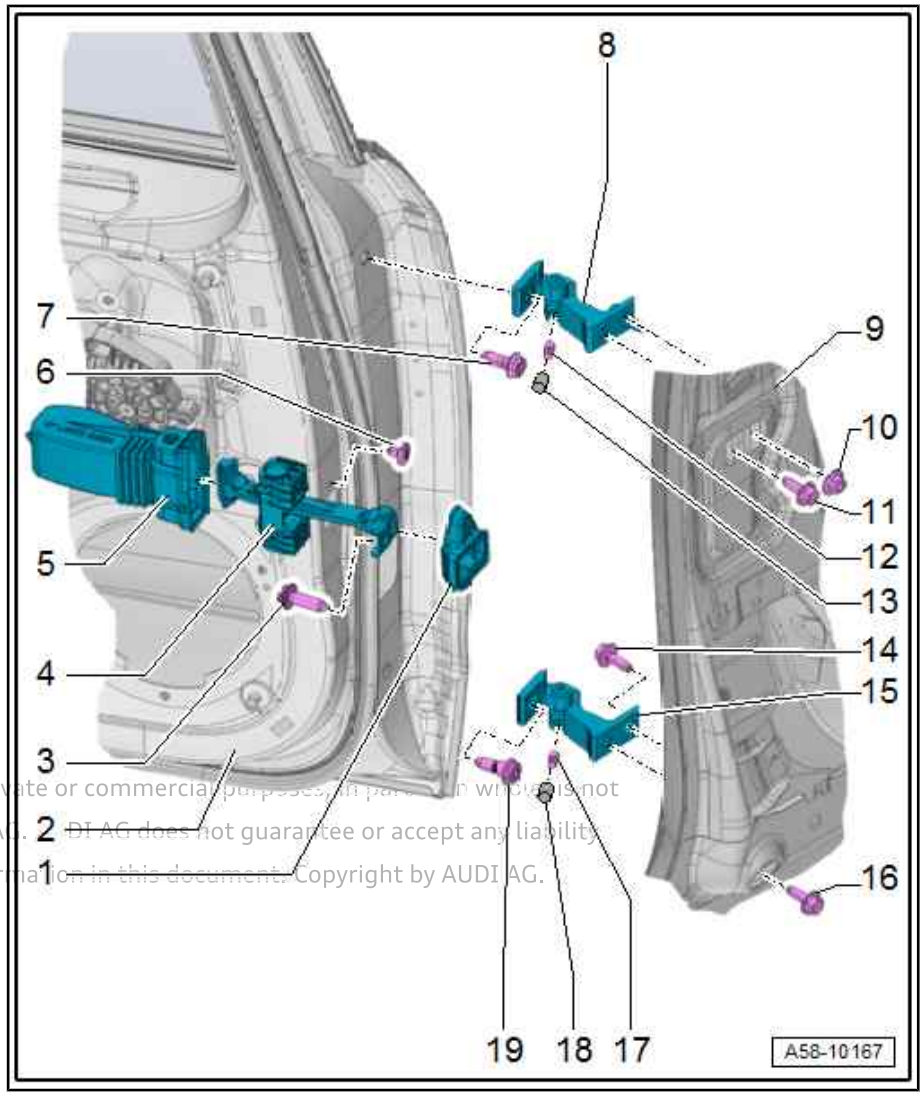

Protected by copyright. Copying for private or commercial purposes, in part or in whole, is not permitted unless authorised by AUDI AG. AUDI AG does not guarantee or accept any liability with respect to the correctness of information in this document. Copyright by AUDI AG.

13 - Cap
- ❑ Fit onto stud

14 - Bolt
- ❑ 32 Nm

15 - Door hinge

16 - Bolt
- ❑ 32 Nm

17 - Stud
- ❑ 23 Nm

18 - Cap
- ❑ Fit onto stud

19 - Bolt
- ❑ 45 Nm

Protected by copyright. Copying for private or commercial purposes, in part or in whole, is not permitted unless authorised by AUDI AG. AUDI AG does not guarantee or accept any liability with respect to the correctness of information in this document. Copyright by AUDI AG.

1.1.2 Exploded view - door, Saloon

1 - Door
- ❑ Removing and installing ⇒ page 131

2 - Bolt
- ❑ 33 Nm

3 - Door arrester
- ❑ Removing and installing ⇒ page 137

4 - Cap
- ❑ For door arrester
- ❑ Note direction of installation

5 - Bolt
- ❑ Bolt, 2x
- ❑ 8 Nm

6 - Bolt
- ❑ 45 Nm

7 - Door hinge

8 - Bolt
- ❑ 32 Nm

9 - B-pillar

10 - Bolt
- ❑ 32 Nm

11 - Stud
- ❑ 23 Nm

12 - Cap
- ❑ Fit onto stud

13 - Bolt
- ❑ 32 Nm

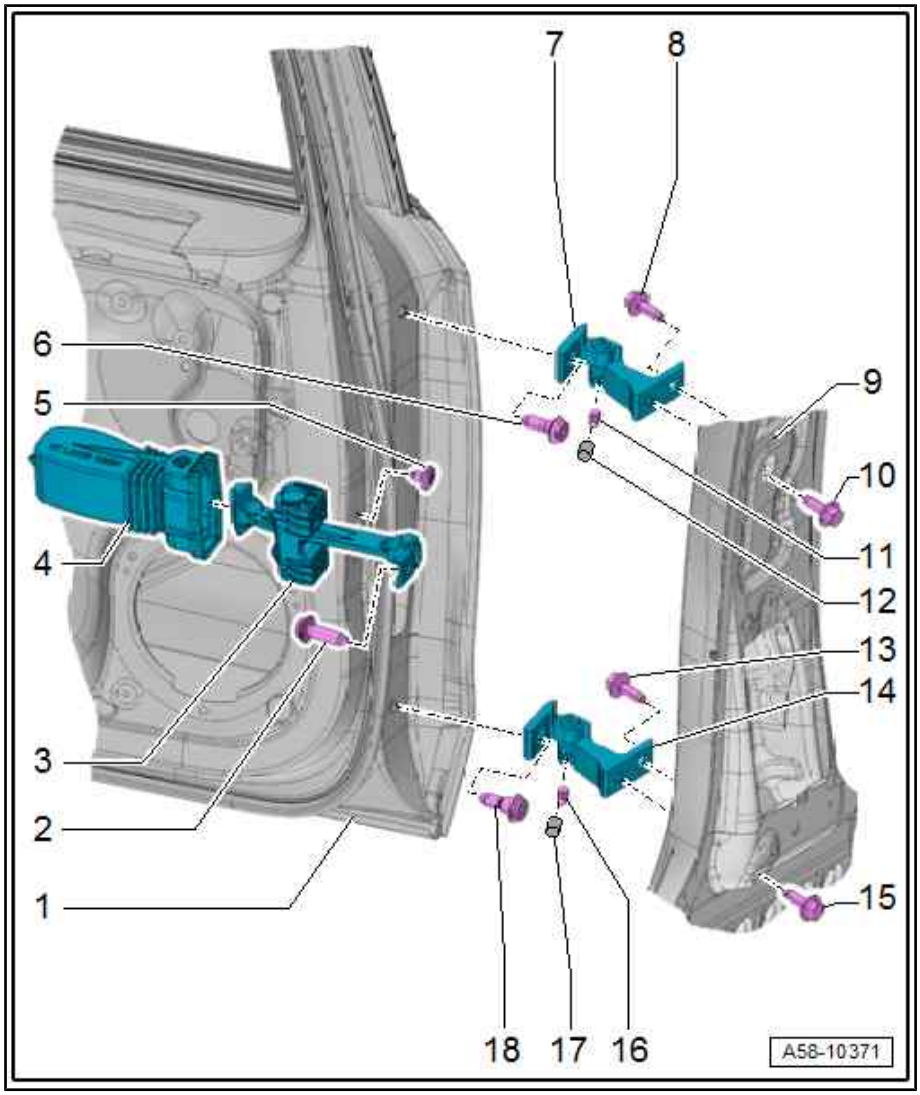

14 - Door hinge

15 - Bolt

- ❑ 32 Nm

16 - Stud

- ❑ 23 Nm

17 - Cap

- ❑ Fit onto stud

18 - Bolt

- ❑ 45 Nm

1.2 Exploded view - door seals

1 - Outer door seal

- ❑ Renew after removing
- ❑ Removing and installing ⇒ page 139

2 - Body

3 - Inner door seal

- ❑ Removing and installing ⇒ page 138

4 - Door

Protected by copyright. Copying for p
permitted unless authorised by AUD
with respect to the correctness of inf

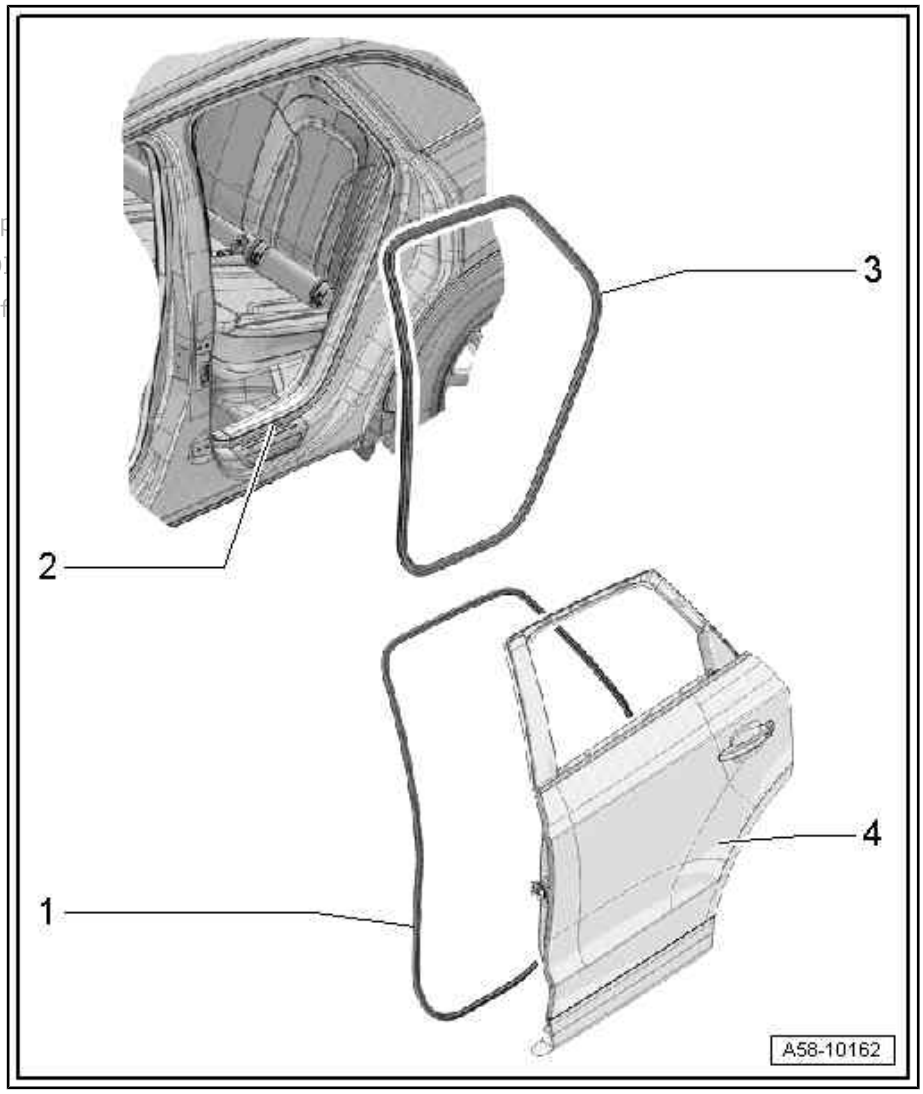

1.3 Removing and installing door

- A second mechanic is required to perform this step (as described on ⇒ page 132).

Removing

– Unplug door disconnector at B-pillar ⇒ Electrical system; Rep. gr. 97 ; Wiring .

– Mask B-pillar in vicinity of door arrester with adhesive tape to avoid damaging paintwork.

– Unscrew bolt -2- for door arrester.

– Detach caps -1- and -3- from studs.

– Unscrew studs -4- from door hinge (top and bottom).

– Carefully lift door off hinges.

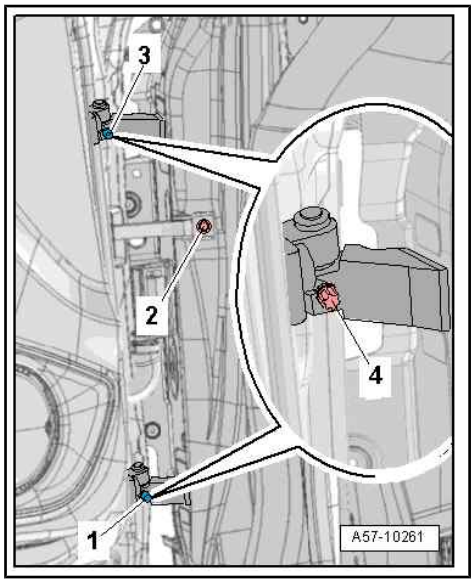

Installing

Installation is carried out in reverse order; note the following:

Note

The door does not have to be adjusted after it has been installed.

Tightening torques

◆ ⇒ “1.1 Exploded view - door”, page 129 .

1.4 Adjusting door

⇒ “1.4.1 Adjustment dimensions”, page 132

⇒ “1.4.2 Checking door adjustment”, page 133

⇒ “1.4.3 Lateral and longitudinal adjustment at hinge”, page 135

⇒ “1.4.4 Lateral adjustment at striker”, page 137

Protected by copyright. Copying for private or commercial purposes, in part or in whole, is not permitted unless authorised by AUDI AG. AUDI AG does not guarantee or accept any liability with respect to the correctness of information in this document. Copyright by AUDI AG.

1.4.1 Adjustment dimensions

G - Front door to rear door

- Gap width (with paintwork): 3.5 ... 4.5 mm
- Gap width (shell): 3.8 ... 4.8 mm
- Flush alignment 0 ... 1.0 mm
- Parallel adjustment = 0.5 mm

Adjusting ⇒ page 132

H - Rear door to body

- Gap width (with paintwork): 2.9 ... 3.9 mm
- Gap width (shell): 3.2 ... 4.2 mm
- Flush alignment ± 0.5 mm
- Parallel adjustment = 0.5 mm

Adjusting ⇒ page 132

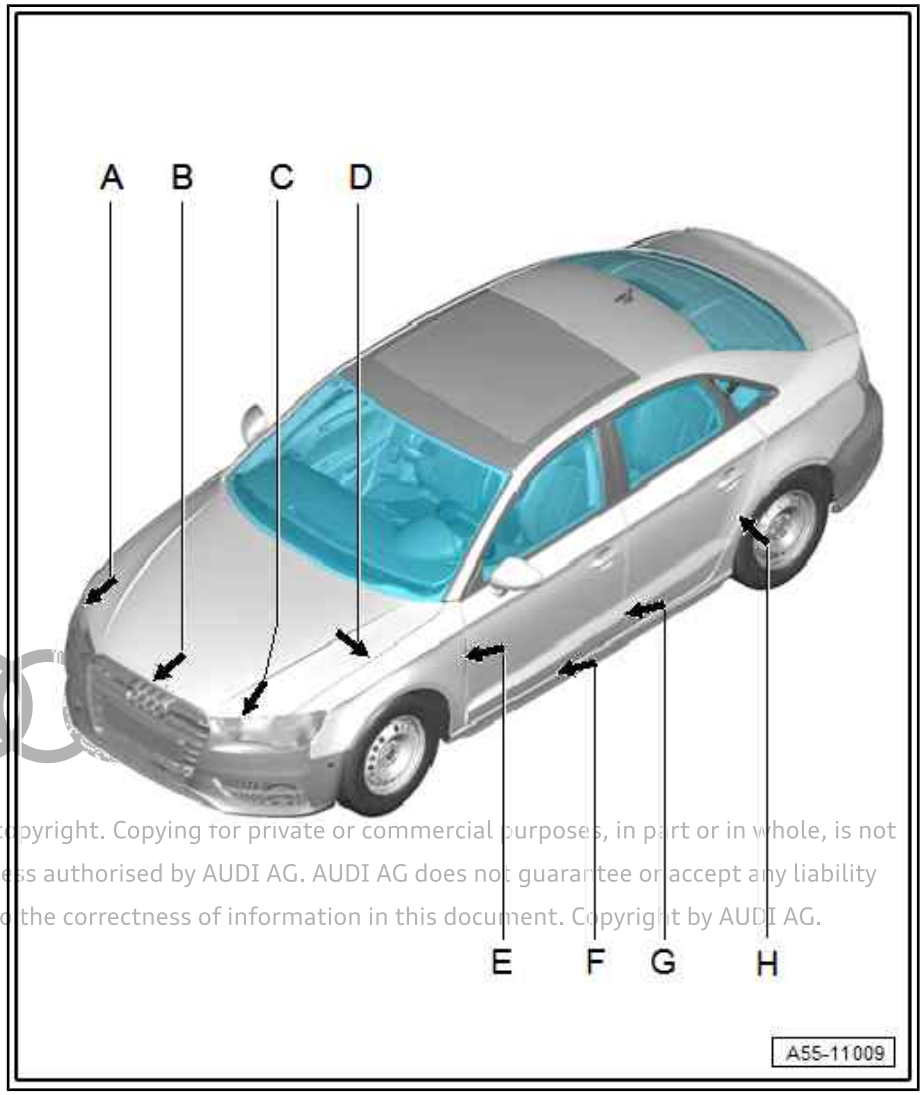

Protected by copyright. Copying for private or commercial purposes, in part or in whole, is not permitted unless authorised by AUDI AG. AUDI AG does not guarantee or accept any liability with respect to the correctness of information in this document. Copyright by AUDI AG.

1.4.2 Checking door adjustment

Measuring points for checking door adjustment with template - T40038 /17- ⇒ page 134

Checking lateral adjustment with template - T40038 /17- ⇒ page 134

Checking height adjustment with template - T40038 /17- ⇒ page 135

Special tools and workshop equipment required

- Setting gauge - 3371-

♦ Template - T40038 /17-

Measuring points for checking door adjustment with template - T40038 /17- :

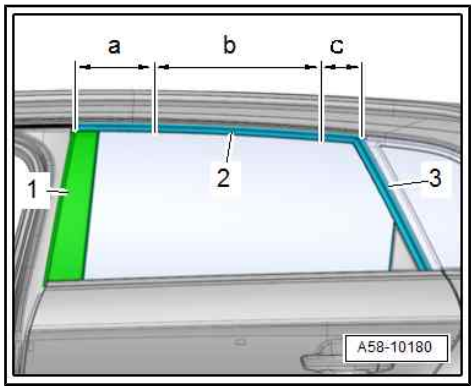

– Lateral and height adjustment must be checked over length -b- of door frame.

– With door closed, position template - T40038 /17- on door frame -2- at distance -a- from B-pillar trim -1- and distance -c- from C-pillar window frame -3-.

• Dimension -a- = 150 mm

• Distance -c- = 50 mm

Checking lateral adjustment with template - T40038 /17- :

Checking minimum position for door frame:

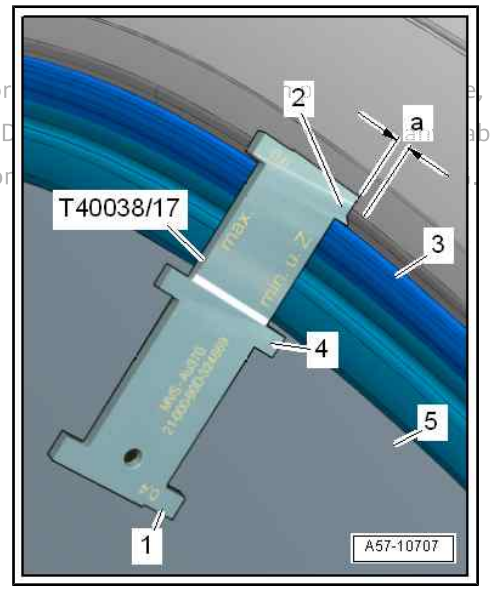

– Apply side of template with “min. u. Z” marking at door window -5- and at top at roof trim strip -3-.

– All contact points of the template make contact:

• Minimum position OK

– Contact point -4- does not make contact:

• Adjustment not OK (door frame to far towards inside)

– Contact points -1 and 4- make contact.

– Distance -a- is permissible at contact point -2-; if distance is greater than 1 mm, turn template and check “max” position.

• Dimension -a- = up to 1 mm

Protected by copyright. Copying for private or commercial purposes, in part or in whole, is not permitted unless authorised by AUDI AG. AUDI AG does not guarantee or assume any liability with respect to the correctness of information in this document.

Checking maximum position for door frame:

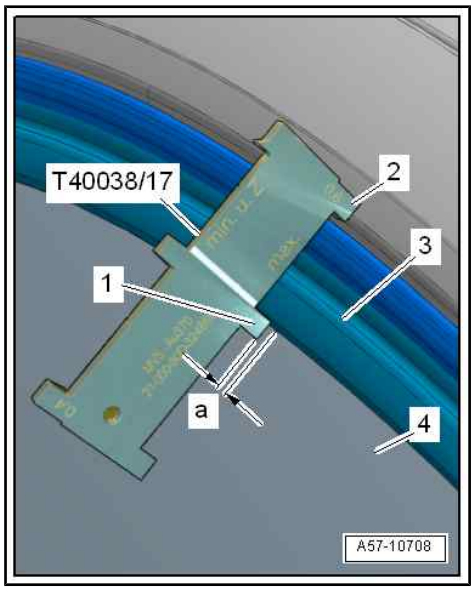

– Apply side of template with “max.” marking at door window -4- and at bottom at window guide -3-, as shown.

– All contact points of the template make contact:

• Maximum position OK

– Contact point -2- does not make contact:

• Adjustment not OK (door frame to far towards outside)

– Distance -a- is permissible at contact point -1-.

• Dimension -a- = up to 2 mm

• Minimum position OK

Checking height adjustment with template - T40038 /17- :

– Apply side of template with “min. u. Z” marking at door window -5- and at top at roof trim strip -3-.

– Contact point -2- must rest on roof trim strip at top.

– Contact point -6- may make contact with window guide (bottom) -4-.

• Door frame in lowest permissible position

– Distance -a- is permissible at contact point -6-; check at groove -1-.

• Distance -a- = max. 2 mm

• Door frame in highest permissible position

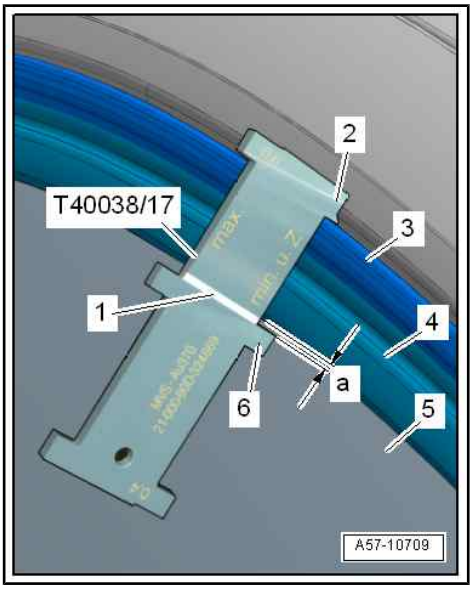

Adjusting ⇒ page 132

Protected by copyright. Copying for private or commercial purposes, in part or in whole, is not permitted unless authorised by AUDI AG. AUDI AG does not guarantee or accept any liability with respect to the correctness of information in this document. Copyright by AUDI AG.

1.4.3 Lateral and longitudinal adjustment at hinge

Lateral adjustment at hinge ⇒ page 136

Longitudinal adjustment at hinge - Sportback ⇒ page 136

Longitudinal adjustment at hinge - Saloon ⇒ page 136

Special tools and workshop equipment required

♦ Setting gauge - 3371-

♦ Template - T40038 /17-

– Remove B-pillar trim (bottom) ⇒ General body repairs, interior; Rep. gr. 70 ; Passenger compartment trim panels .

Lateral adjustment at hinge:

– Loosen bolts (top and bottom) -arrows A- at hinge.

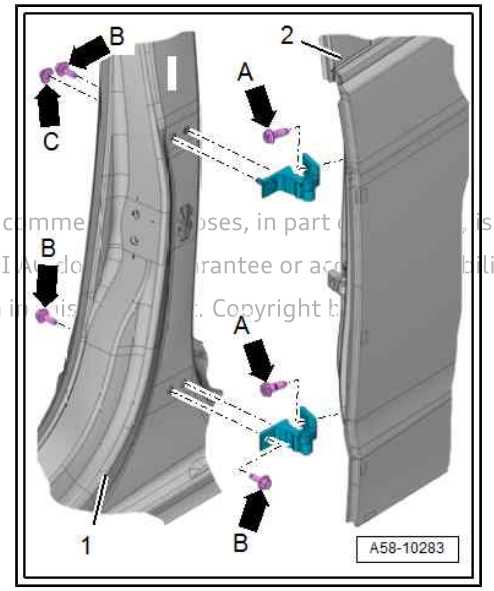

Note

- *Bolt -A- is a fitted bolt; therefore it is usually not necessary to adjust the door via this bolt.*
- *If it does become necessary to make an adjustment via this bolt, the bolt can be replaced with a bolt of the same length and property class.*

Protected by copyright. Copying for private or commercial purposes, in part or entirely, is not permitted unless authorised by AUDI AG. AUDI AG does not guarantee or accept any liability with respect to the correctness of information in this document. Copyright by AUDI AG.

– Adjust door -2- lengthwise.

– Tighten bolts -arrows A-.

Tightening torques

- ⇒ “1.1 Exploded view - door”, page 129 .

Longitudinal adjustment at hinge - Sportback:

– Loosen nut -arrow C- and bolts -arrows B- (top and bottom) at hinge and B-pillar -1-.

– Adjust door -2- lengthwise.

– Tighten nut -arrow C- and bolts -arrows B-.

Tightening torques

- ⇒ “1.1.1 Exploded view - door, Sportback”, page 129 .

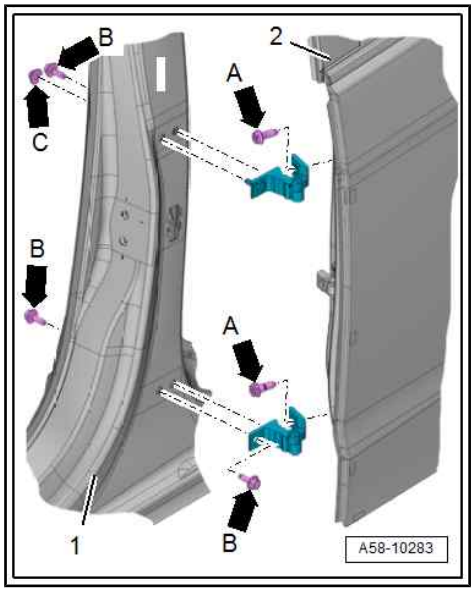

Longitudinal adjustment at hinge - Saloon:

– Loosen bolts (top and bottom) -arrows B- at hinge and B-pillar -1-.

– Adjust door -2- lengthwise.

– Tighten bolts -arrows B-.

Tightening torques

- ⇒ “1.1.2 Exploded view - door, Saloon”, page 130 .

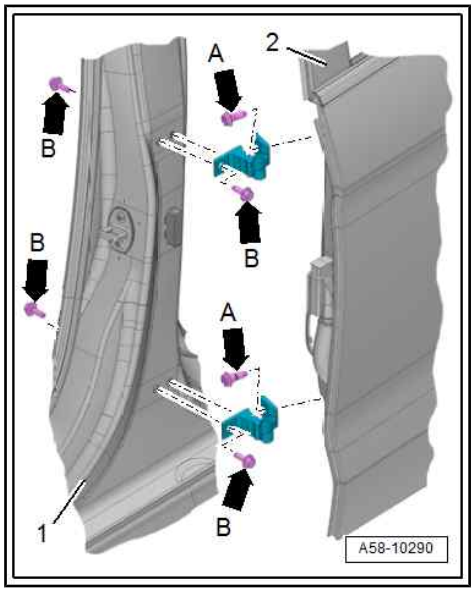

1.4.4 Lateral adjustment at striker

Special tools and workshop equipment required

♦ Setting gauge - 3371-

– Loosen bolts -arrows-.

– Move striker -1- until door is flush with body contour.

• The striker is only to be used for adjustment towards the centre of the vehicle.

• Do not adjust the height of the door via the striker; otherwise the door lock will be damaged.

• If adjustment is correct, striker should engage centrally in door lock.

– Tighten bolts -arrows-.

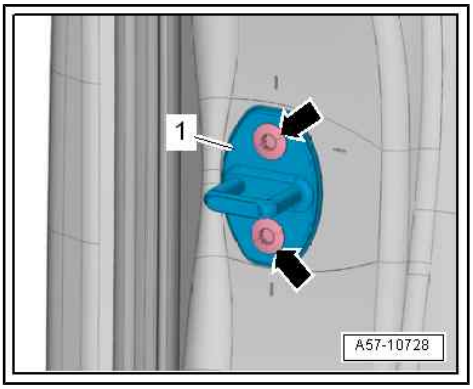

Tightening torques

♦ ⇒ “2.2 Exploded view - door handle and door lock”, page 144

1.5 Removing and installing door arrester

Removing

– Move door window to “closed” position.

– Remove door trim ⇒ General body repairs, interior; Rep. gr. 70 ; Door trim (rear); Removing and installing door trim (rear) .

– Remove lower loudspeaker ⇒ Communication; Rep. gr. 91 ; Sound system .

– Mask B-pillar in vicinity of door arrester with adhesive tape to avoid damaging paintwork.

– Unscrew bolt -arrow- for door arrester.

Protected by copyright. Copying for private or commercial purposes, in part or in whole, is not permitted unless authorised by AUDI AG. AUDI AG does not guarantee or accept any liability with respect to the correctness of information in this document. Copyright by AUDI AG.

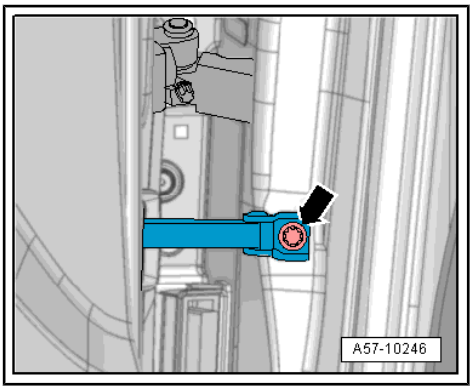

– If fitted, pull sealing grommet -2- off door arrester.

– Unscrew bolts -arrows- and take out door arrester -1- inwards.

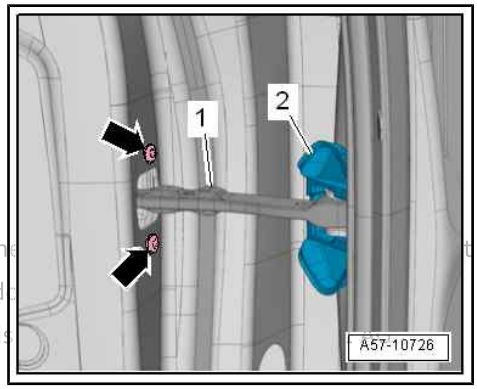

Protected by copyright. Copying for private or comm
permitted unless authorised by AUDI AG. AUDI AG d
with respect to the correctness of information in this

– Pull rubber sleeve -1- on door arrester to the side slightly -arrows A-.

– Detach rubber sleeve from door arrester -2- -arrow B-.

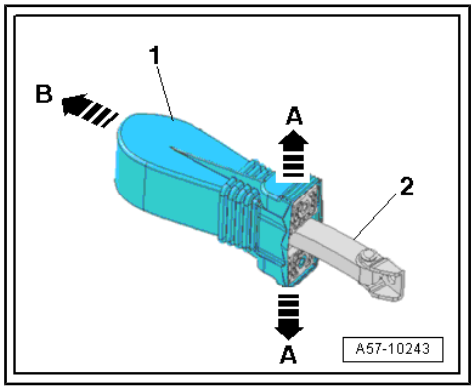

Installing

Installation is carried out in reverse order; note the following:

– Slide rubber sleeve onto door arrester (make sure rubber sleeve is fitted on correct side).

• Lettering for left or right side must be legible from top.

Tightening torques

♦ ⇒ “1.1 Exploded view - door”, page 129 .

1.6 Removing and installing inner door seal

Removing

– Remove C-pillar trim (rear) ⇒ General body repairs, interior; Rep. gr. 70 ; Passenger compartment trim panels .

– Remove B-pillar trim (bottom) ⇒ General body repairs, interior; Rep. gr. 70 ; Passenger compartment trim panels .

– Remove sill panel trim (rear) ⇒ General body repairs, interior; Rep. gr. 70 ; Passenger compartment trim panels .

– Remove roof grab handle ⇒ General body repairs, interior; Rep. gr. 68 ; Equipment; Removing and installing roof grab handle .

– Pull inner door seal off body flange.

Installing

Installation is carried out in reverse order; note the following:

– Position inner door seal moulding -3- on body flange so that vulcanised point -1- is between door hinge (top) and door arrester -2-.
– Position inner door seal moulding on body flange -4- in area of C-pillar (top) -arrow-.
– Position inner door seal moulding all along body flange and press on.

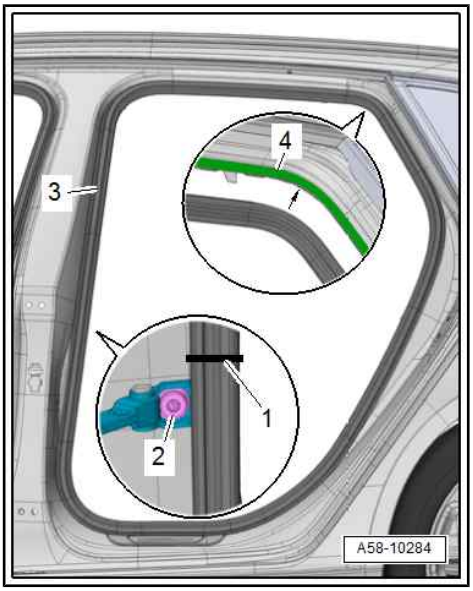

1.7 Removing and installing outer door seal

The following components have to be renewed after removal ⇒ page 131 .

Special tools and workshop equipment required

♦ Roller - 3356-

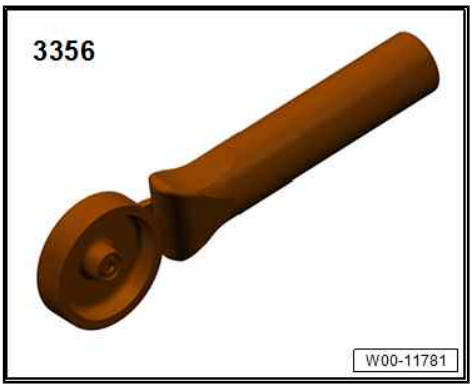

♦ Adhesive strip remover - VAS 6349-

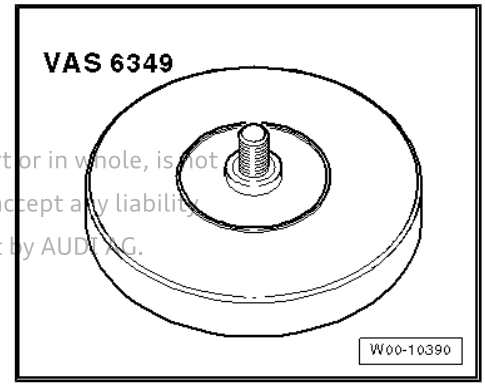

Protected by copyright. Copying for private or commercial purposes, in part or in whole, is not permitted unless authorised by AUDI AG. AUDI AG does not guarantee or accept any liability with respect to the correctness of information in this document. Copyright by AUDI AG.

♦ Cleaning solution - D 009 401 04-
♦ Applicator - D 009 500 25-
♦ Primer - D 355 205 A2-

Removing

– Remove window frame trim (rear) ⇒ General body repairs, interior; Rep. gr. 70 ; Door trim (rear) .

– Mark position of outer door seal -1- at window frame with adhesive tape -2-.

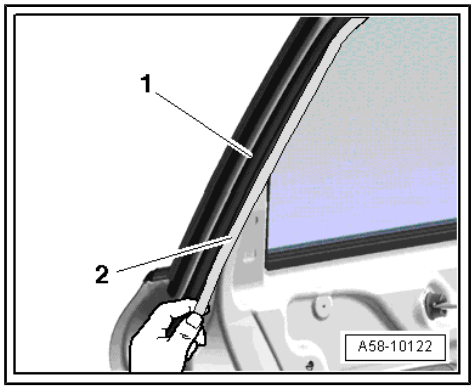

– Mark position of outer door seal -1- in area of door lock with adhesive tape -2-.
– Mask B-pillar in vicinity of door arrester with adhesive tape to avoid damaging paintwork.

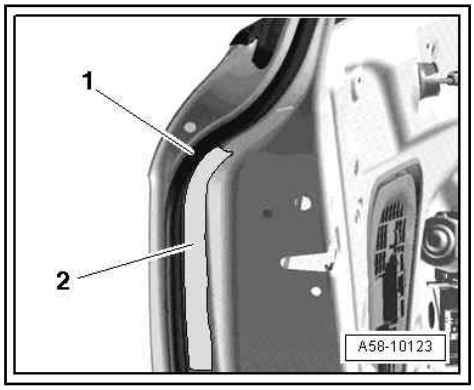

– Unscrew bolt -arrow- for door arrester.
– Pull outer door seal slightly off top of door frame and cut through with scissors (commercially available).

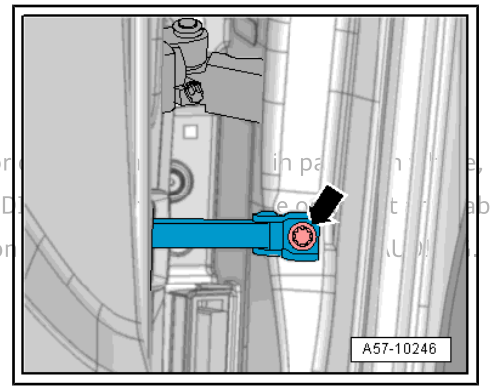

Protected by copyright. Copying for private or [illegible] in pa[illegible]e, is not permitted unless authorised by AUDI AG. AUD[illegible] [illegible]ability with respect to the correctness of information [illegible]

– Gradually stretch outer door seal lengthwise -arrow- and detach.

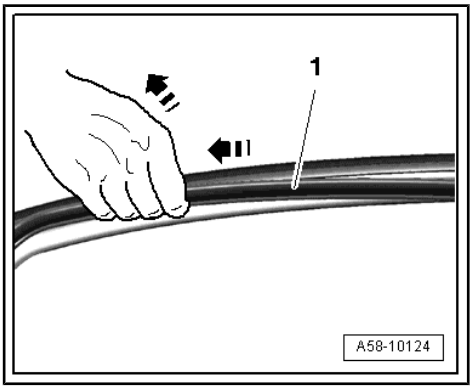

Note

By stretching the outer door seal lengthwise, the adhesive is separated from the door and the seal can be detached from the door without leaving any adhesive.

– Detach outer door seal completely.

Installing

Installation is carried out in reverse order; note the following:

- The vehicle and the seal must be at room temperature.
- The bonding surfaces must be free of dirt and grease.
- If the primer - D 355 205 A2- has been allowed to flash off for more than 3 hours, primer must be re-applied.
- When installing, do not stretch seal.
- To prevent the outer door seal from becoming detached or misaligned, it is important that the door is not closed for at least two hours.
- If the door has been renewed, use the routing of the outer door seal on the opposite side as a guide when positioning the outer door seal.

– Remove any residual adhesive with adhesive strip remover - VAS 6349- .

– Clean bonding surface on door with cleaning solution - D 009 401 04- .

Protected by copyright. Copying for private or commercial purposes, in part or in whole, is not permitted unless authorised by AUDI AG. AUDI AG does not guarantee or accept any liability with respect to the correctness of information in this document. Copyright by AUDI AG.

– Apply primer - D 355 205 A2- -item 1- to bonding area -2- on painted surface using applicator - D 009 500 25- -3- and allow to flash off.

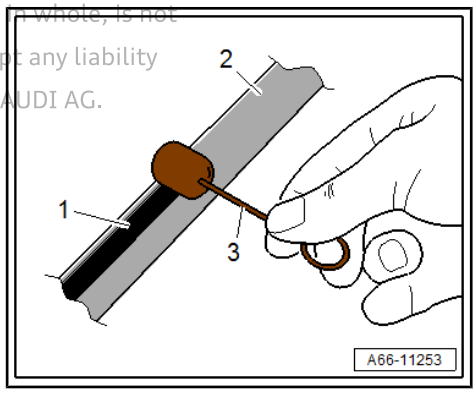

– Vulcanised point -4- on outer door seal -3- must be applied at door arrester in door -1-.

• When positioned correctly, the drain holes in the outer door seal are located at the bottom on the underside of the seal.

– Peel protective film off adhesive strip -2-.

– Bond on new seal and press on using roller - 3356- .

• Leave vehicle standing at room temperature for at least 2 hours with doors open.

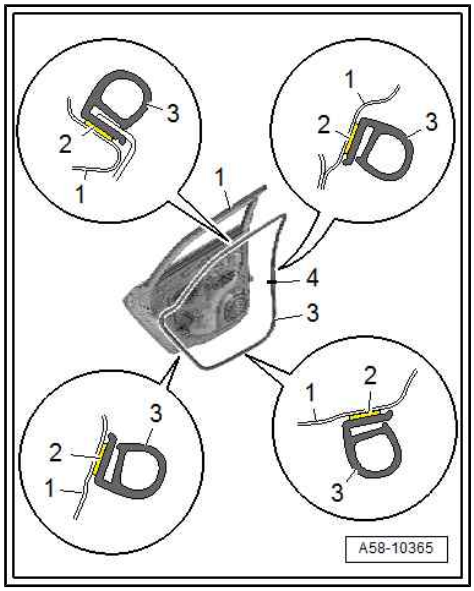

Protected by copyright. Copying for private or commercial purposes, in part or in whole, is not permitted unless authorised by AUDI AG. AUDI AG does not guarantee or accept any liability with respect to the correctness of information in this document. Copyright by AUDI AG.

2 Door components

⇒ “2.1 Exploded view - window regulator”, page 143

⇒ “2.2 Exploded view - door handle and door lock”, page 144

⇒ “2.3 Exploded view - window guides and window slot trim strips”, page 147

⇒ “2.4 Removing and installing window regulator”, page 148

⇒ “2.5 Removing and installing window regulator motor”, page 149

⇒ “2.6 Removing and installing door handle”, page 150

⇒ “2.7 Removing and installing door handle trim”, page 151

⇒ “2.8 Removing and installing housing”, page 151

⇒ “2.9 Removing and installing mounting bracket”, page 152

⇒ “2.10 Removing and installing operating cable for exterior door handle”, page 154

⇒ “2.11 Removing and installing door lock”, page 155

⇒ “2.12 Removing and installing striker”, page 156

⇒ “2.13 Removing and installing operating cable for interior door handle”, page 156

⇒ “2.14 Removing and installing inner door cover”, page 157

⇒ “2.15 Removing and installing window guide”, page 158

⇒ “2.16 Removing and installing guide rail for door window”, page 161

⇒ “2.17 Removing and installing inner window slot trim strip”, page 161

⇒ “2.18 Removing and installing outer window slot trim strip”, page 162

2.1 Exploded view - window regulator

Protected by copyright. Copying for private or commercial purposes, in part or in whole, is not permitted unless authorised by AUDI AG. AUDI AG does not guarantee or accept any liability with respect to the correctness of information in this document. Copyright by AUDI AG.

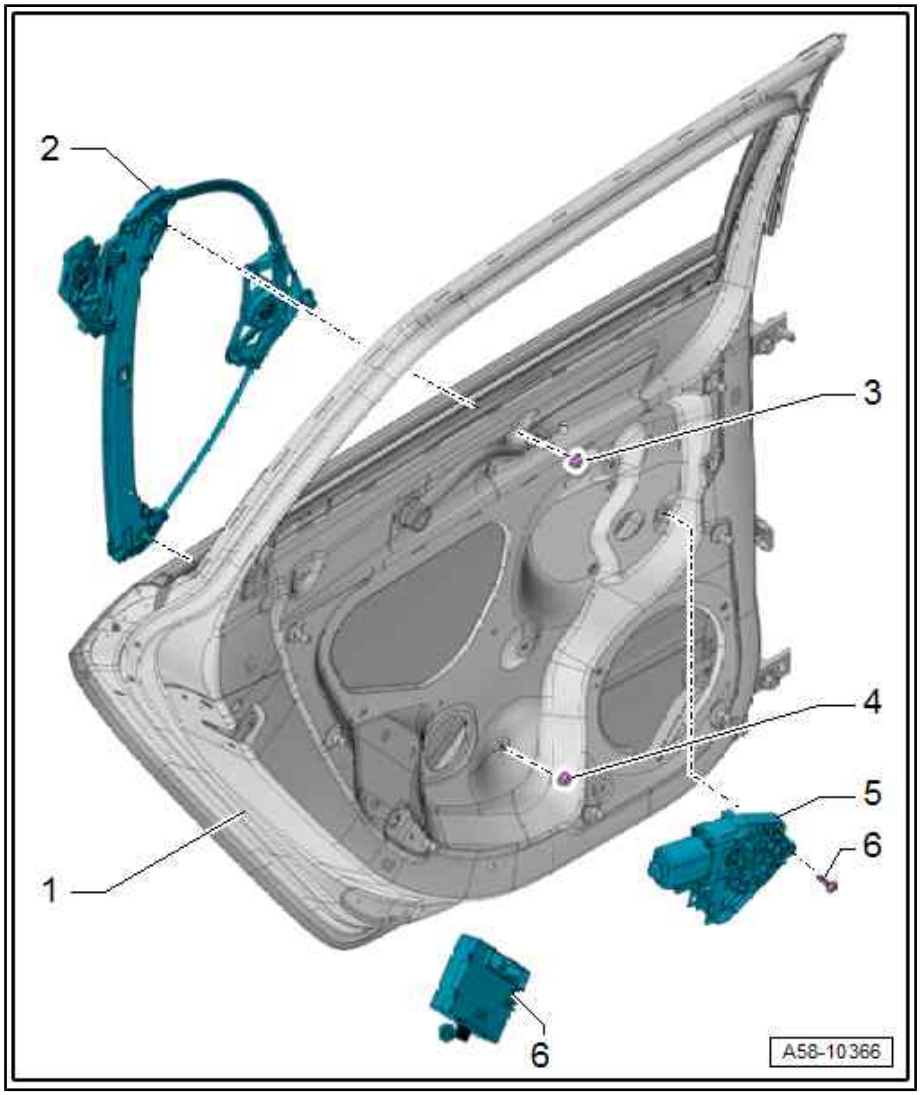

1 - Door

2 - Window regulator

- ❑ Removing and installing ⇒ page 148

3 - Nut

- ❑ 6 Nm

4 - Rear window regulator motor

Convenience system (low version)

- ❑ Control unit with rear driver side window regulator motor - J1016- , control unit with rear passenger side window regulator motor - J1017-
- ❑ Removing and installing ⇒ page 125

Convenience system (high version)

- ❑ Rear driver side window regulator motor - V471- , rear passenger side window regulator motor - V472-
- ❑ Removing and installing ⇒ page 149

5 - Bolt

- ❑ 3x
- ❑ 3.5 Nm

6 - Rear door control unit

- ❑ Equipment version
- ❑ Rear driver side door control unit - J926- , rear passenger side door control unit - J927-
- ❑ Overview of fitting locations ⇒ page 120

2.2 Exploded view - door handle and door lock

Exploded view - door handle and mounting bracket ⇒ page 144

Exploded view - door lock and striker ⇒ page 145

Exploded view - door handle and mounting bracket

Protected by copyright. Copying for private or commercial purposes, in part or in whole, is not permitted unless authorised by AUDI AG. AUDI AG does not guarantee or accept any liability with respect to the correctness of information in this document. Copyright by AUDI AG.

1 - Door handle trim

- ❑ Removing and installing ⇒ page 108

2 - Bolt

- ❑ 2 Nm

3 - Support

- ❑ Front
- ❑ Removing and installing ⇒ page 107

4 - Operating cable

- ❑ For exterior door handle
- ❑ Removing and installing ⇒ page 154

5 - Mounting bracket

- ❑ Removing and installing ⇒ page 108

6 - Support

- ❑ Rear
- ❑ Removing and installing ⇒ page 107

7 - Housing

- ❑ Removing and installing ⇒ page 151

8 - Door handle

- ❑ Removing and installing ⇒ page 107

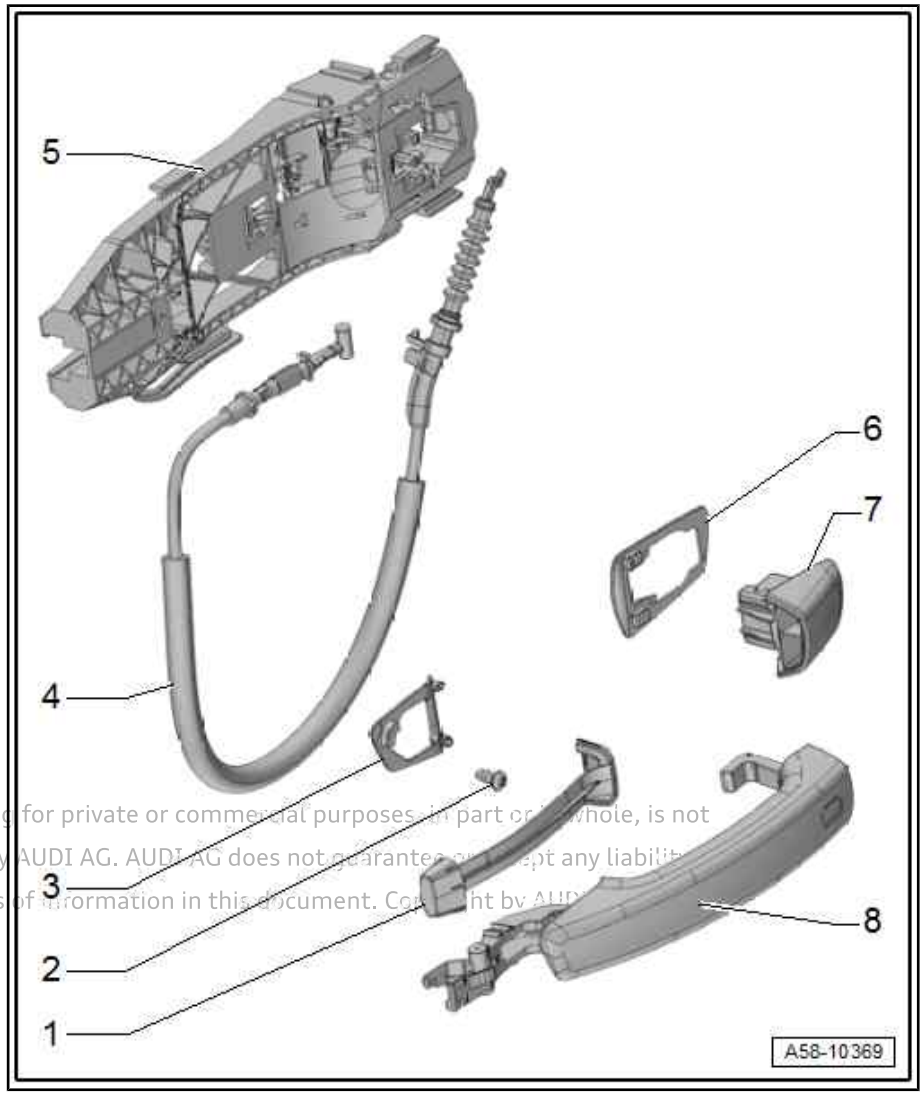

Protected by copyright. Copying for private or commercial purposes, in part or in whole, is not permitted unless authorised by AUDI AG. AUDI AG does not guarantee or accept any liability with respect to the correctness of information in this document. Copyright by AUDI AG.

Exploded view - door lock and striker

1 - Inner door cover

- ❑ Removing and installing ⇒ page 157

2 - Operating cable

- ❑ For interior door handle
- ❑ Removing and installing ⇒ page 156

3 - Grommet

- ❑ Can only be renewed together with operating cable ⇒ Item 2 (page 146)

4 - Door lock

- ❑ Removing and installing ⇒ page 155

5 - Bolt

- ❑ Bolt, 2x
- ❑ 19 Nm

6 - Bolt

- ❑ Bolt, 2x
- ❑ 25 Nm

7 - Striker

- ❑ Removing and installing ⇒ page 156

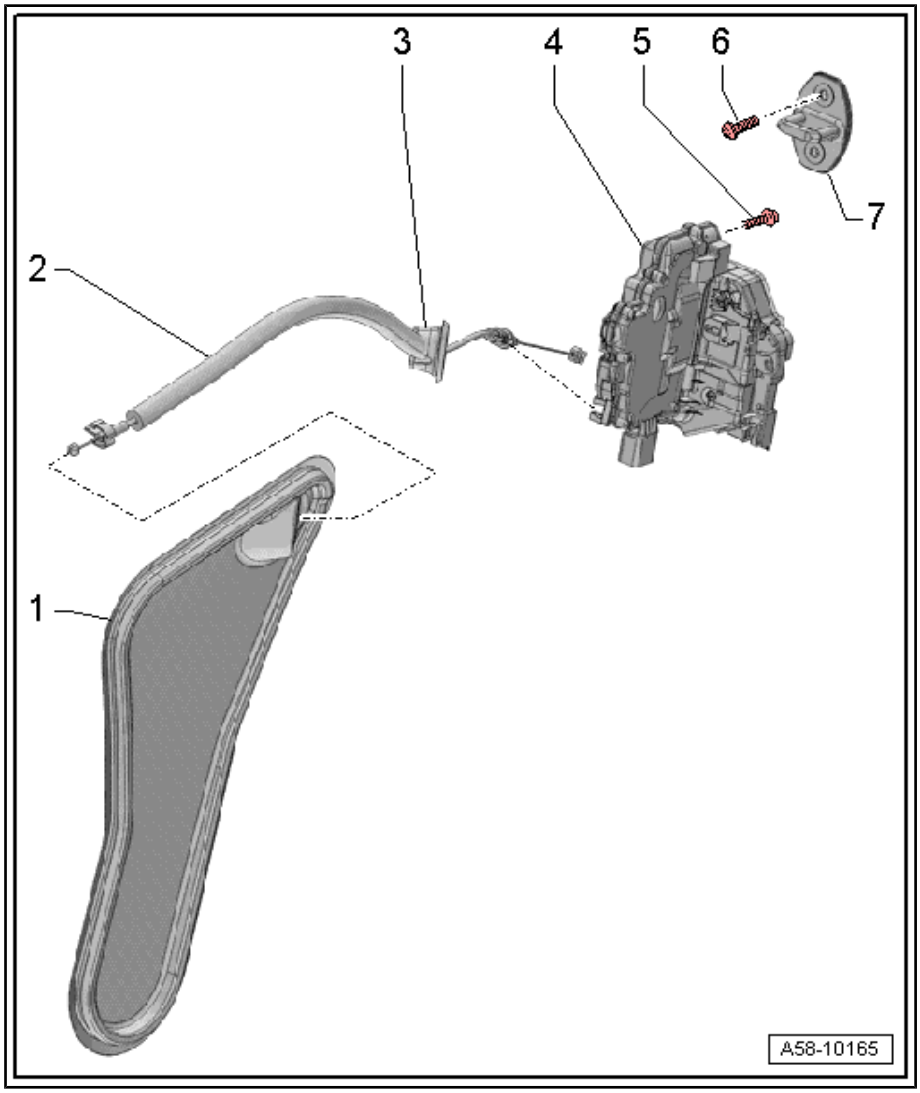

Protected by copyright. Copying for private or commercial purposes, in part or in whole, is not permitted unless authorised by AUDI AG. AUDI AG does not guarantee or accept any liability with respect to the correctness of information in this document. Copyright by AUDI AG.

2.3 Exploded view - window guides and window slot trim strips

⇒ "2.3.1 Exploded view - window guides and window slot trim strips, Sportback", page 147

⇒ "2.3.2 Exploded view - window guides and window slot trim strips, Saloon", page 148

2.3.1 Exploded view - window guides and window slot trim strips, Sportback

1 - Outer window slot trim strip
- ❑ Removing and installing ⇒ page 162

2 - Window guide
- ❑ Removing and installing ⇒ page 158

3 - Door

4 - Inner window slot trim strip
- ❑ Removing and installing ⇒ page 161

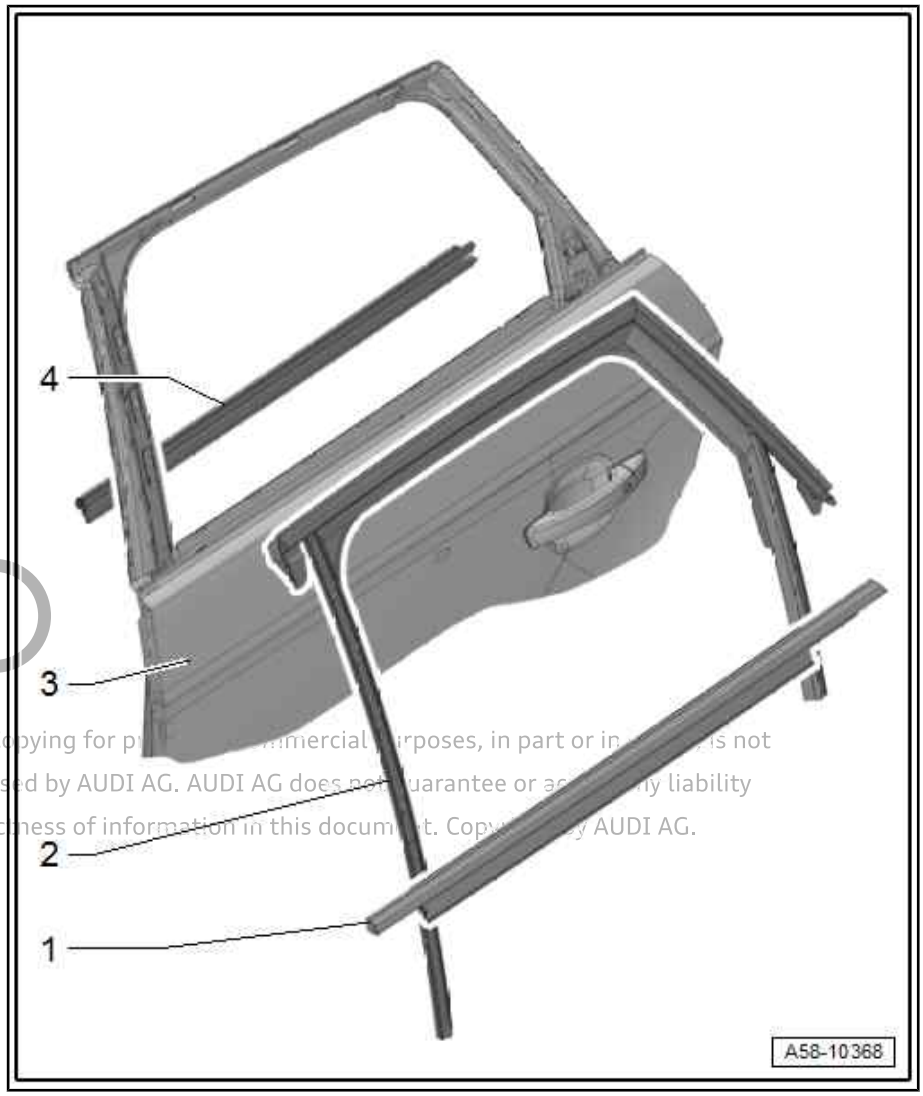

Protected by copyright. Copying for private or commercial purposes, in part or in whole, is not permitted unless authorised by AUDI AG. AUDI AG does not guarantee or accept any liability with respect to the correctness of information in this document. Copyright by AUDI AG.

2.3.2 Exploded view - window guides and window slot trim strips, Saloon

1 - Outer window slot trim strip
- ❑ Removing and installing ⇒ page 162

2 - Window guide
- ❑ Removing and installing ⇒ page 158

3 - Door

4 - Inner window slot trim strip
- ❑ Removing and installing ⇒ page 161

5 - Bolt
- ❑ Bolt, 2x
- ❑ 3.5 Nm

6 - Guide rail
- ❑ For door window
- ❑ Removing and installing ⇒ page 161

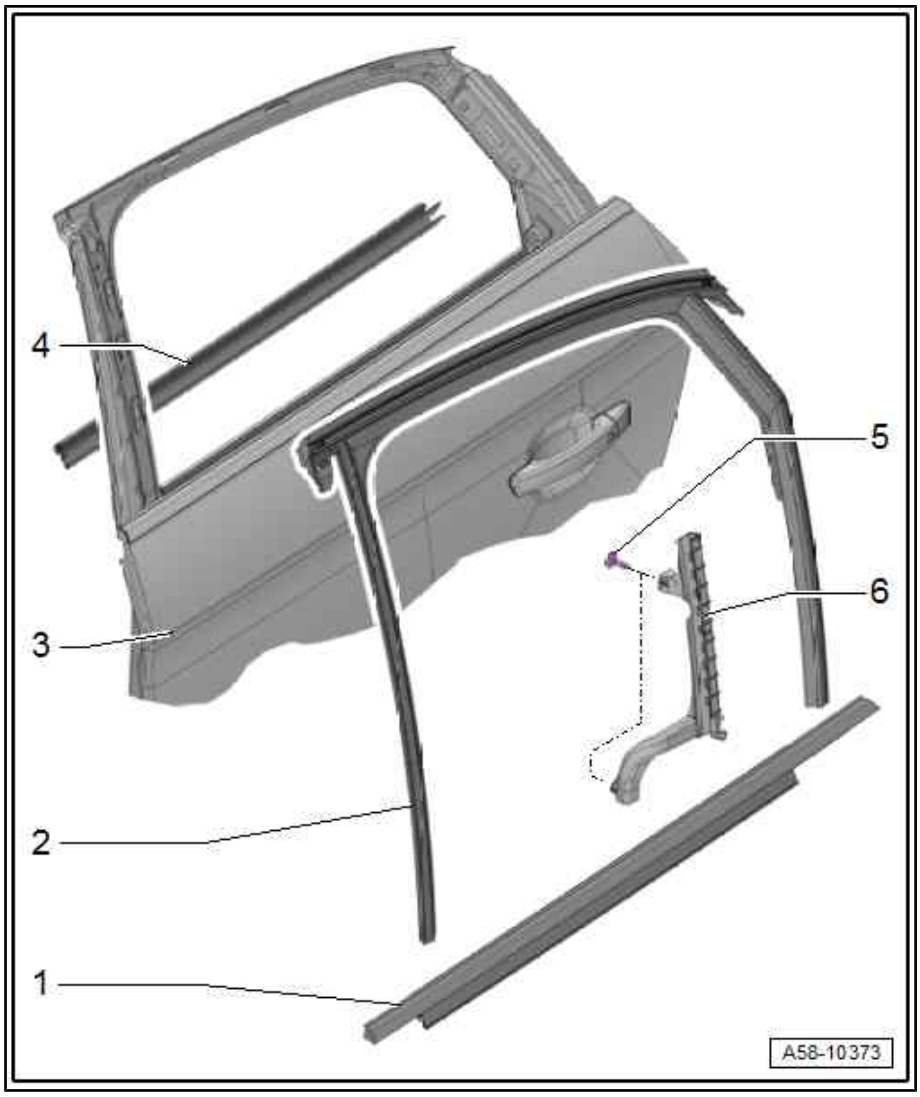

2.4 Removing and installing window regulator

Removing

– Remove window regulator motor ⇒ page 149 .

– Remove rear door window ⇒ page 313 .

– Remove lower loudspeaker ⇒ Communication; Rep. gr. 91 ; Sound system .

Copyright. Copying for private or commercial purposes, in part or in whole, is not permitted unless authorised by AUDI AG. AUDI AG does not guarantee or accept any liability with respect to the correctness of information in this document. Copyright by AUDI AG.

– Use an 11 mm socket to release retaining clips -3 and 4- of threaded pins -5- for window regulator (slide socket over threaded pins).
– Remove nuts -1, 2-.
– Take window regulator out through opening towards rear -arrow-.

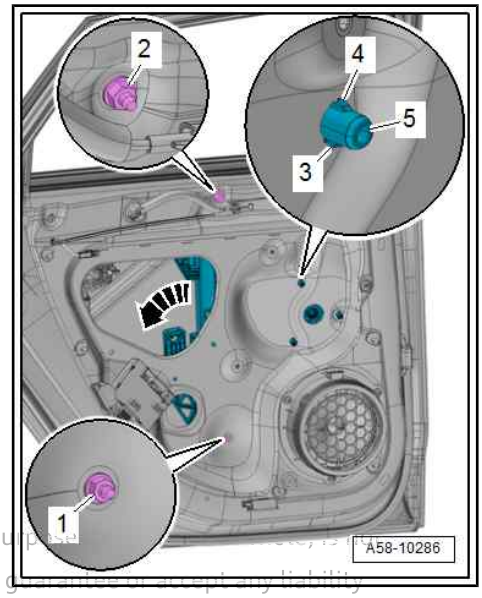

Installing

Installation is carried out in reverse order; note the following:

- Retaining clips of threaded pins for window regulator must be engaged in inner door panel.

Tightening torques

◆ ⇒ “2.1 Exploded view - window regulator”, page 143 .

Protected by copyright. Copying for private or commercial purposes, in part or in whole, is not permitted unless authorised by AUDI AG. AUDI AG does not guarantee or accept any liability with respect to the correctness of information in this document. Copyright by AUDI AG.

2.5 Removing and installing window regulator motor

Removing

Note

The window regulator motor can be removed or installed with the motor or door window in any position.

– Remove door trim (rear) ⇒ General body repairs, interior; Rep. gr. 70 ; Door trim (rear); Removing and installing door trim (rear) .
– Unplug electrical connector -1-; to do so, move locking element towards rear and press release mechanism downwards.
– Unscrew bolts -arrows- and detach window regulator motor -2- from window regulator.

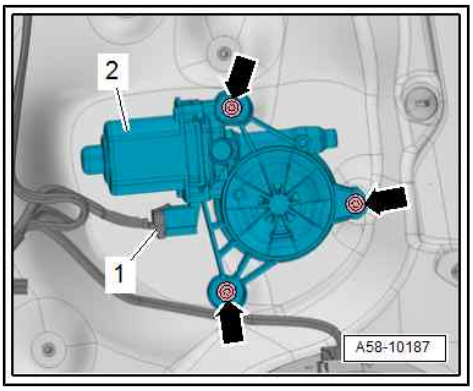

Installing

Installation is carried out in reverse order; note the following:

- Retaining clips -2- of threaded pins -3- for window regulator must be engaged in inner door panel.

– Slide window regulator motor -1- onto threaded pins and tighten bolts -4-.

Tightening torques

♦ ⇒ “2.1 Exploded view - window regulator”, page 101 .

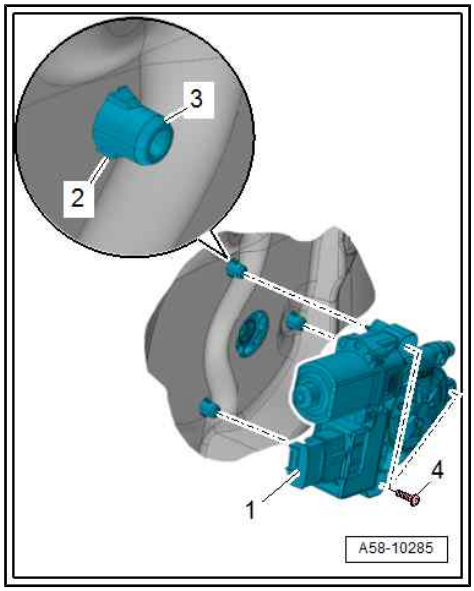

2.6 Removing and installing door handle

Removing

– Remove housing ⇒ page 151 .

– Pull door handle -1- in direction of -arrow-, thereby detaching door handle from operating lever in mounting bracket.

– Swivel door handle outwards and take out of mounting on mounting bracket.

– If renewing door handle, also remove the following components:

♦ Door handle trim ⇒ page 108

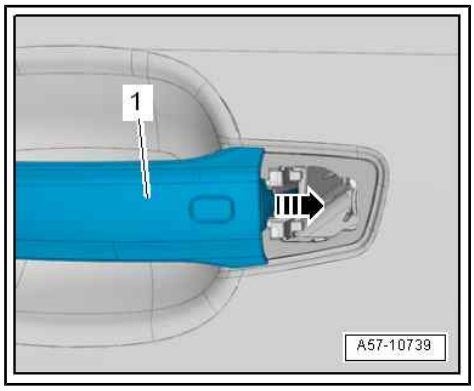

Installing

Installation is carried out in reverse order; note the following:

– Renew sealing piece for door handle -1- and -2- if damaged or brittle.

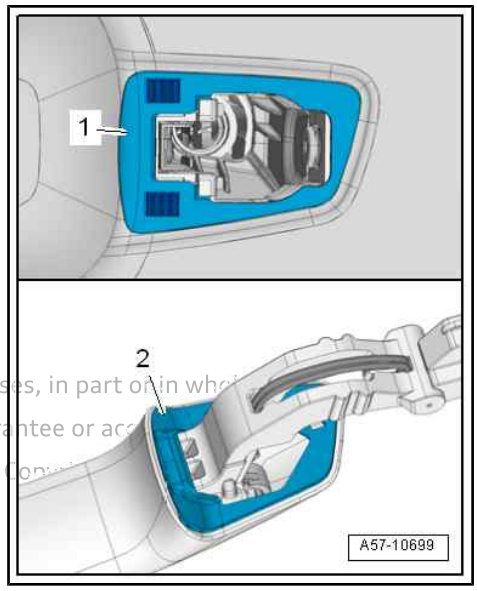

Protected by copyright. Copying for private or commercial purposes, in part or in whole, is not permitted unless authorised by AUDI AG. AUDI AG does not guarantee or accept liability with respect to the correctness of information in this document. Copyright by AUDI AG.

– Fit door handle -1- -arrow A-, making sure that door handle engages in mounting on mounting bracket -2-.
– Swivel door handle in direction of -arrow B- and engage it at front until it engages audibly -arrow C-.
• This will position actuator -3- in front of operating lever.

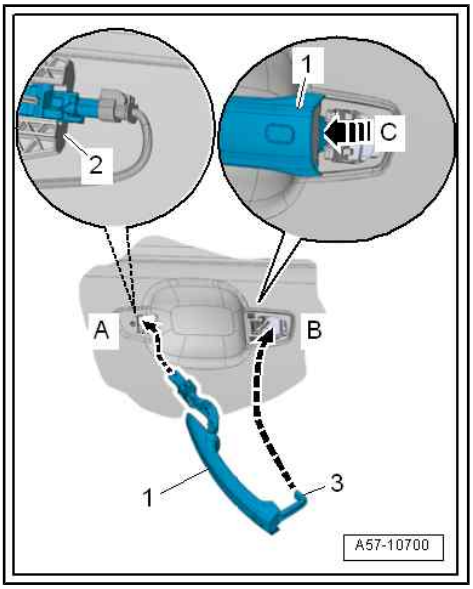

2.7 Removing and installing door handle trim

Removing

– Remove door handle ⇒ page 150 .
– Position a large, robust screwdriver -1- at door handle -2- as shown in illustration.
• Screwdriver must be applied at recess -3-.
– Press door handle trim -4- forwards out of fastener on door handle -arrow-.
– Pull door handle trim out of door handle.

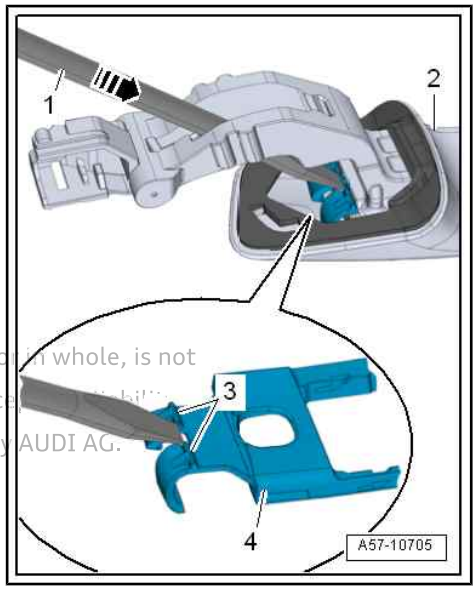

Installing

Installation is carried out in reverse order; note the following:

– Door handle trim must be inserted in door handle until it engages audibly.

Protected by copyright. Copying for private or commercial purposes, in part or in whole, is not permitted unless authorised by AUDI AG. AUDI AG does not guarantee or accept any liability with respect to the correctness of information in this document. Copyright by AUDI AG.

2.8 Removing and installing housing

Special tools and workshop equipment required

♦ Hook - T40207-

Protected by copyright. Copying for private or commercial purposes, in part or in whole, is not permitted unless authorised by AUDI AG. AUDI AG does not guarantee or accept any liability with respect to the correctness of information in this document. Copyright by AUDI AG.

Removing

– Remove cover plug -arrow-.

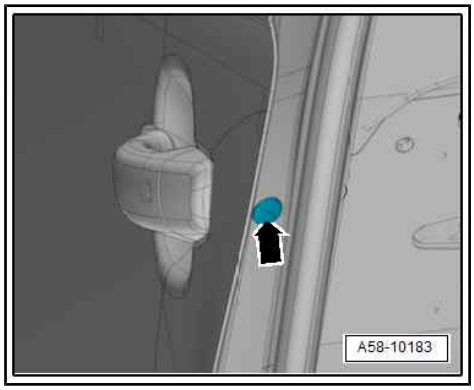

– Pull retainer -3- outwards -arrow B- with hook - T40207- .

• Bent end of hook must face inside of door.

– Pull door handle -1- outwards slightly -arrow A- and pull housing -2- out of mounting bracket.

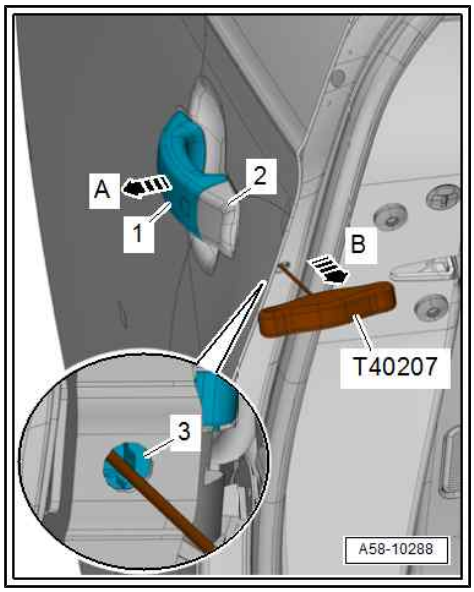

Installing

Installation is carried out in reverse sequence.

2.9 Removing and installing mounting bracket

• A second mechanic is required to perform this step (as described on ⇒ page 153).

Special tools and workshop equipment required

♦ Hook - T40207-

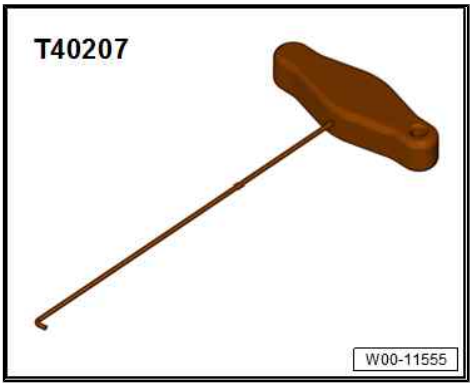

Removing

– Move door window to “closed” position.

– Remove door handle ⇒ page 150 .

> ⚠ **Caution**
>
> *Risk of damage to operating cable if it is bent.*
>
> ♦ *Operating cable must never be bent or kinked excessively.*

– Saloon: Remove guide rail for door window ⇒ page 161 .

– Detach sealing piece (rear) -3-.

– Remove bolt -1-.

– Press mounting bracket -2- slightly in direction of -arrow- from inside of door and detach.

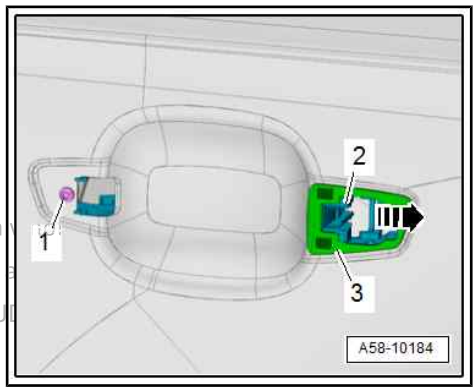

Protected by copyright. Copying for private or commercial purposes, in part or in
permitted unless authorised by AUDI AG. AUDI AG does not guarantee or accept a
with respect to the correctness of information in this document. Copyright by AU

– Move operating cable -3- clear at retainer -4-.

– Have a second mechanic pull door handle to “open” position and hold it in place.

– Using hook - T40207- , pull housing -2- with operating cable out of mounting bracket in direction of -arrow- (this will release securing tabs -1-).

– Move door handle to “closed” position.

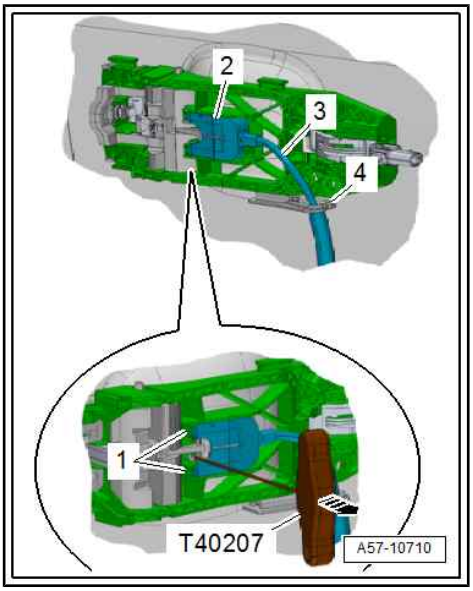

– Disengage operating cable -2- on operating lever -1- in direction of -arrow A-.

– Take mounting bracket out of door.

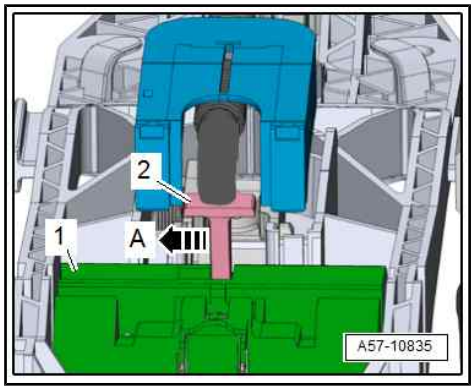

Installing

Installation is carried out in reverse sequence.

Tightening torques

♦ ⇒ “2.2 Exploded view - door handle and door lock”, page 144

2.10 Removing and installing operating cable for exterior door handle

Special tools and workshop equipment required

♦ Hook - T40207-

Protected by copyright. Copying for private or commercial purposes, in part or in whole, is not permitted unless authorised by AUDI AG. AUDI AG does not guarantee or assume any liability with respect to the correctness of information in this document. Copyright

Removing

> ⚠ **Caution**
>
> *Risk of damage to operating cable if it is bent.*
>
> ♦ *Operating cable must never be bent or kinked excessively.*

– Remove door lock with mounting bracket ⇒ page 155 .

– Turn operating cable on lever -2- 90° in direction of -arrow A- and take it out of cable support bracket -1-.

– Turn operating cable on operating lever -3- for door lock in direction of -arrow B-.

• The operating cable must be aligned with the opening on the operating lever.

– Disengage operating cable from operating lever.

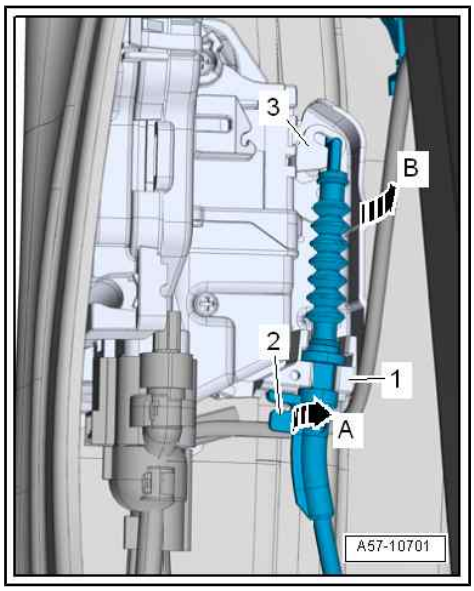

– Move operating cable -3- clear at retainer -4-.
– Move operating cable to “open” position and hold in this position.
– Using hook - T40207- , pull housing -2- with operating cable out of mounting bracket in direction of -arrow- (this will release securing tabs -1-).
– Move operating lever to “closed” position.

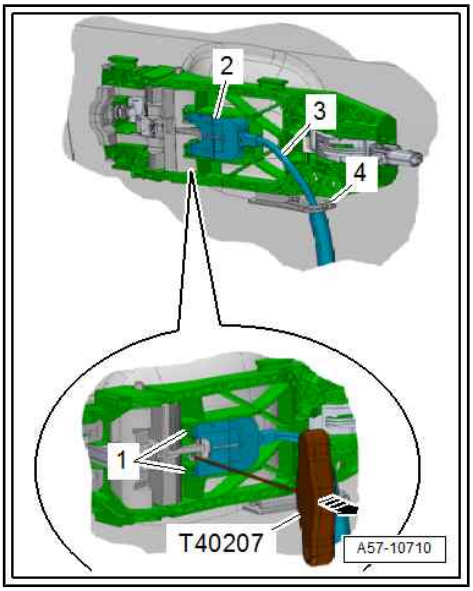

– Disengage operating cable -2- on operating lever -1- in direction of -arrow A-.

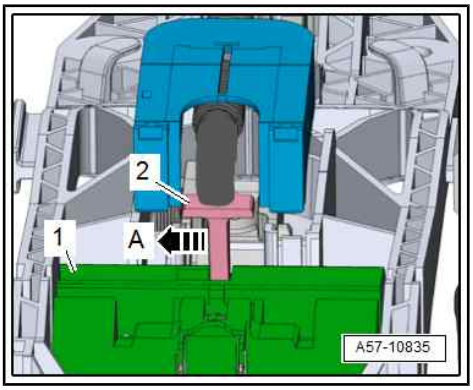

Installing

Installation is carried out in reverse sequence.

2.11 Removing and installing door lock

Removing

– Move door window to “closed” position.
– Remove door handle ⇒ page 150 .

> ⚠ **Caution**
>
> *Risk of damage to operating cable if it is bent.*
>
> ♦ *Operating cable must never be bent or kinked excessively.*

– Saloon: Remove guide rail for door window ⇒ page 161 .
– Detach sealing piece (rear) -3-.
– Remove bolt -1-.
– Press mounting bracket -2- slightly in direction of -arrow- from inside of door and detach.

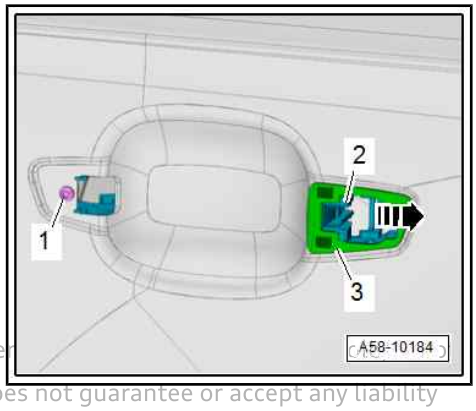

Protected by copyright. Copying for private or commer
permitted unless authorised by AUDI AG. AUDI AG does not guarantee or accept any liability
with respect to the correctness of information in this document. Copyright by AUDI AG.

– Remove bolts -arrows-.
– Press door lock -1- slightly to the side.
– If necessary, unplug connector.

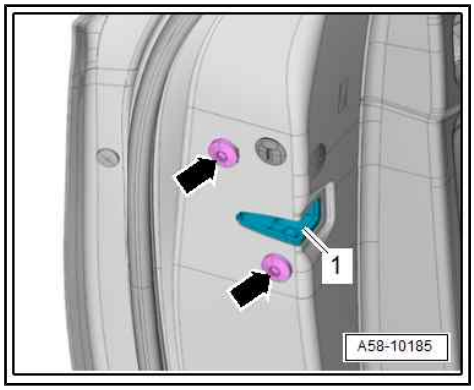

– Pull grommet -2- out of door -1- and remove operating cable -3-.
– Take mounting bracket together with door lock out of door.

Installing

Installation is carried out in reverse sequence.

Tightening torques

♦ ⇒ “2.2 Exploded view - door handle and door lock”, page 144

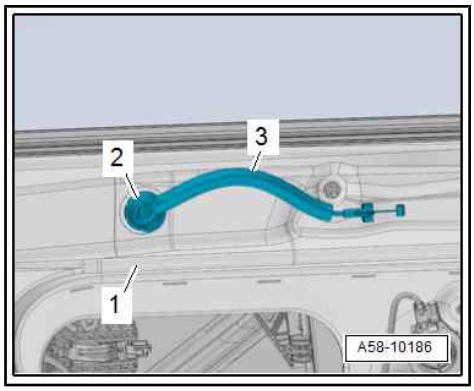

2.12 Removing and installing striker

Removing

– Unscrew bolts -arrows- and detach striker -1-.

Installing

Installation is carried out in reverse order; note the following:

– Adjust striker ⇒ page 137 .

Tightening torques

♦ ⇒ “2.2 Exploded view - door handle and door lock”, page 144

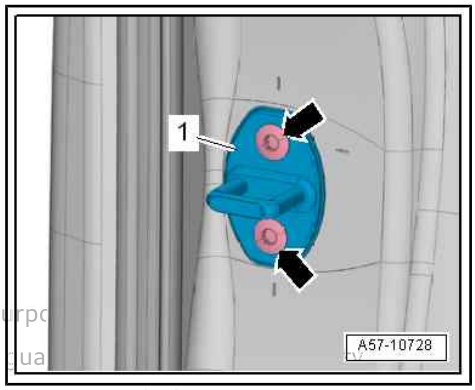

Protected by copyright. Copying for private or commercial purpo
permitted unless authorised by AUDI AG. AUDI AG does not gua
with respect to the correctness of information in this document. Copyright by AUDI AG.

2.13 Removing and installing operating cable for interior door handle

Removing

– Remove inner door cover ⇒ page 157 .

> ⚠ **Caution**
>
> *Risk of damage to operating cable if it is bent.*
>
> ♦ *Operating cable must never be bent or kinked excessively.*

– On Saloon, remove guide rail for door window ⇒ page 161 .

– Remove bolts -arrows-.
– Press door lock -1- slightly to the side.

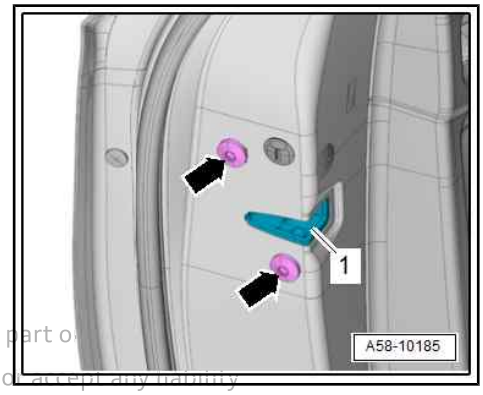

Protected by copyright. Copying for private or commercial purposes, in part or in whole, is not permitted unless authorised by AUDI AG. AUDI AG does not guarantee or accept any liability with respect to the correctness of information in this document. Copyright by AUDI AG.

– If necessary, unplug electrical connector -5-.
– Turn operating cable on lever -4- 90° in direction of -arrow B- and take it out of cable support bracket -3-.
– Disengage nipple -1- from release lever -2- at door lock -arrow A-.

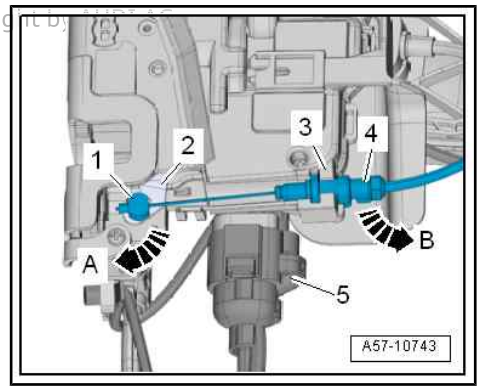

– Pull grommet -2- out of door -1- and remove operating cable -3-.

Installing

Installation is carried out in reverse sequence.

Tightening torques

♦ ⇒ “2.2 Exploded view - door handle and door lock”, page 144

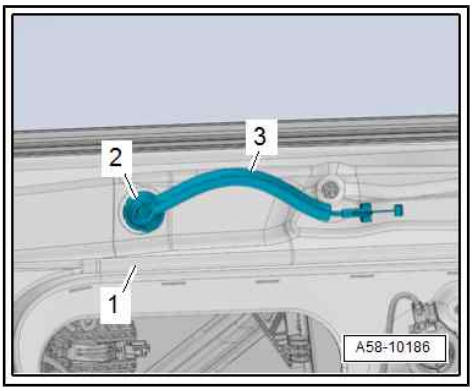

2.14 Removing and installing inner door cover

Special tools and workshop equipment required

♦ Wedges - T10383-

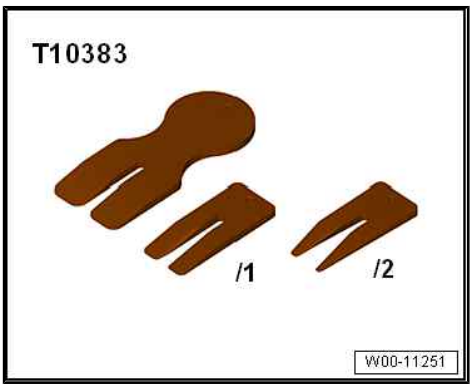

Removing

– Remove door trim (rear) ⇒ General body repairs, interior; Rep. gr. 70 ; Door trim (rear); Removing and installing door trim (rear) .

– Prise cover -1- off inner door panel with wedge - T10383/1- .

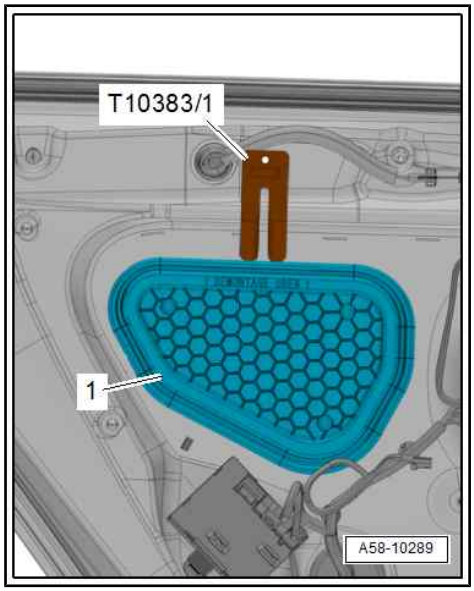

Installing

Installation is carried out in reverse order; note the following:

– Press on inner door cover until it engages audibly.

• Inner door cover must be flush.

2.15 Removing and installing window guide

⇒ "2.15.1 Removing and installing window guide - Sportback", page 158

⇒ "2.15.2 Removing and installing window guide - Saloon", page 159

2.15.1 Removing and installing window guide - Sportback

Removing

– Remove window frame trim ⇒ General body repairs, interior; Rep. gr. 70 ; Door trim (rear); Removing and installing window frame trim .

– Remove trim panel for B-pillar ⇒ page 361 .

– Remove trim panel for C-pillar ⇒ page 362 .

– Remove rear door window ⇒ page 313 .

Protected by copyright. Copying for private or commercial purposes, in part or in whole, is not permitted unless authorised by AUDI AG. AUDI AG does not guarantee or accept any liability with respect to the correctness of information in this document. Copyright by AUDI AG.

– Pull seal -2- out of guide rail -arrow A-.
– Pull window guide -1- off upwards -arrows B-.

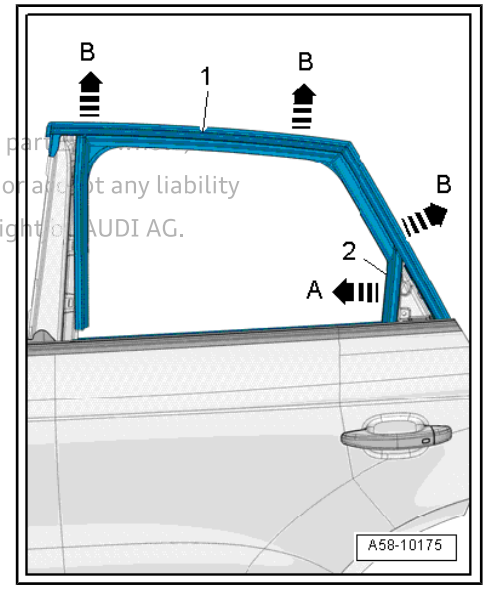

Installing

Protected by copyright. Copying for private or commercial purposes, in part or in whole, is not permitted unless authorised by AUDI AG. AUDI AG does not guarantee or accept any liability with respect to the correctness of information in this document. Copyright © AUDI AG.

Installation is carried out in reverse order; note the following:

– Fit sections of window guide on door flange in the sequence -1 ... 6-.
– 1. Apply corner of window guide -C- on top of door flange at B-pillar -B-.
– 2. Slide on window guide towards rear (as seen in direction of travel).
– 3. Apply window guide at top corner of C-pillar.
– 4. Press window guide onto door flange, gradually working downwards.
– 5. Align window guide with guide rail at B-pillar and insert seal -A- in guide rail.
– 6. Align window guide with guide rail at C-pillar and insert seal -D- in guide rail.

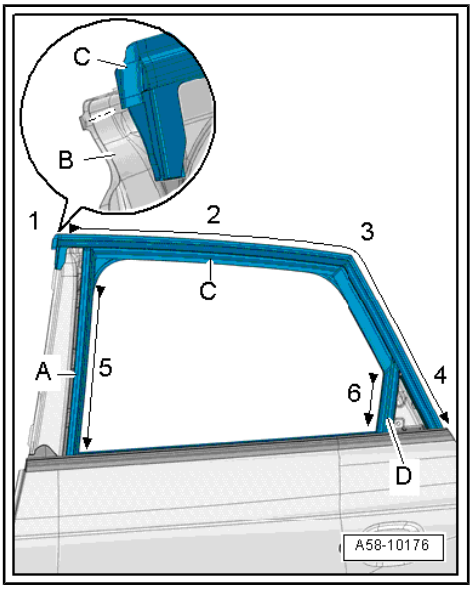

2.15.2 Removing and installing window guide - Saloon

Removing

– Remove rear door window ⇒ page 313 .
– Remove trim panel for B-pillar ⇒ page 361 .
– Remove trim panel for C-pillar ⇒ page 362 .

– Pull seal -2- out of guide rail -arrow A-.
– Saloon: Remove trim strip ⇒ page 356 .
– Pull window guide -1- off upwards -arrows B-.

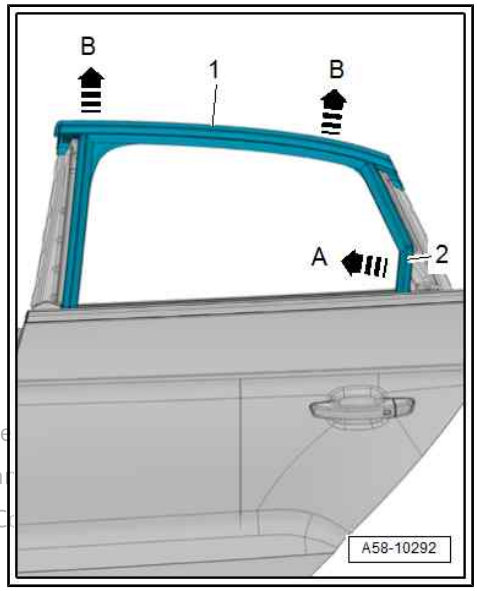

Installing

Installation is carried out in reverse order; note the following:

Protected by copyright. Copying for private or commercial purpose
permitted unless authorised by AUDI AG. AUDI AG does not guara
with respect to the correctness of information in this document. C

– Fit sections of window guide on door flange in the sequence -1 ... 6-.
– 1. Apply corner of window guide -C- on top of door flange at B-pillar -B-.
– 2. Slide on window guide towards rear (as seen in direction of travel).
– 3. Apply window guide at top corner of C-pillar.
– 4. Align window guide with guide rail at B-pillar and insert seal -A- in guide rail.
– 5. Press window guide onto door flange, gradually working downwards.
– 6. Insert seal -D- in guide rail.

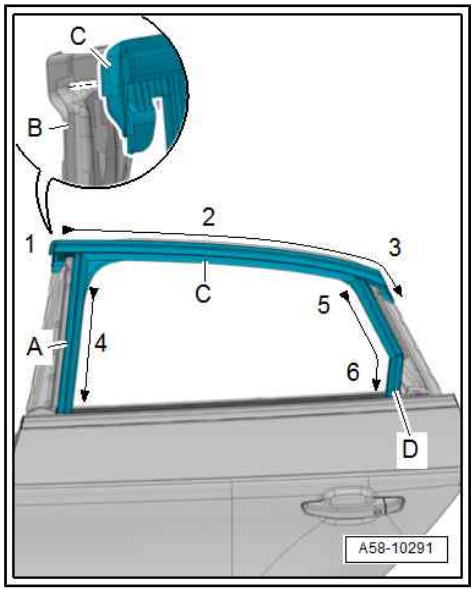

Saloon models with high-gloss package:

– Press retaining clips -1- into mountings on window guide -3-.
• Arrow -2- must face upwards.
• “HT” = Rear door

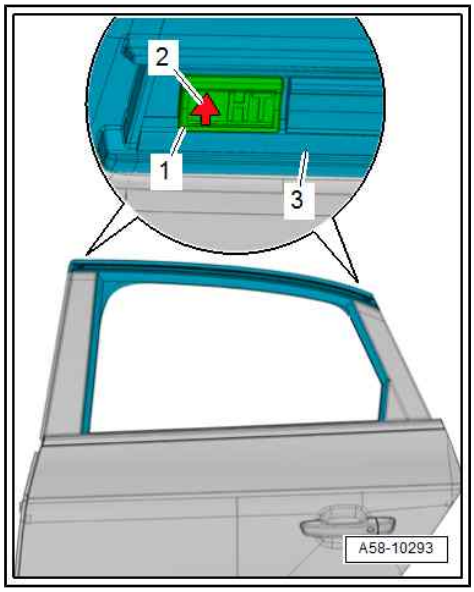

– Align trim strip -1- on door flange at C-pillar, insert into clips -3- and window guide -2- from below and press on along entire length.

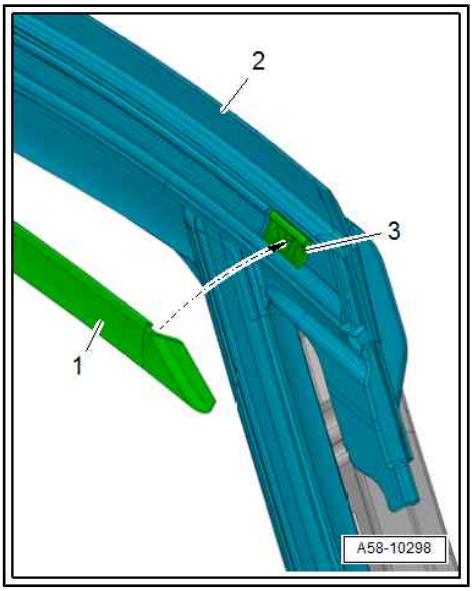

2.16 Removing and installing guide rail for door window

Protected by copyright. Copying for private or commercial purposes, in part or in whole, is not permitted unless authorised by AUDI AG. AUDI AG does not guarantee or accept any liability with respect to the correctness of information in this document. Copyright by AUDI AG.

Removing

– Move door window to “closed” position.

– Remove inner door cover ⇒ page 157 .

– Pull seal -3- for door window out of guide rail -4-.

– Remove bolts -1, 2-.

– Take out guide rail.

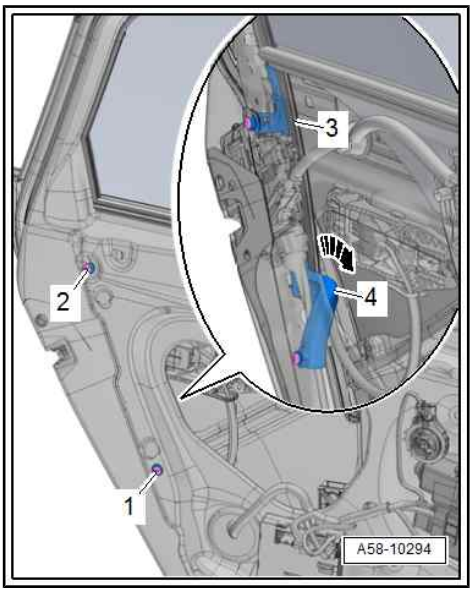

Note

If guide rail cannot be pulled out, swivel it slightly in direction of arrow.

Installing

- Tightening torque
  ⇒ “2.1 Exploded view - window regulator”, page 143

Installation is carried out in reverse order; note the following:

– Install inner door cover ⇒ page 157 .

2.17 Removing and installing inner window slot trim strip

Removing

– Remove window frame trim ⇒ General body repairs, interior; Rep. gr. 70 ; Door trim (rear); Removing and installing window frame trim .

– Lift off window slot trim strip -1- -arrows-.

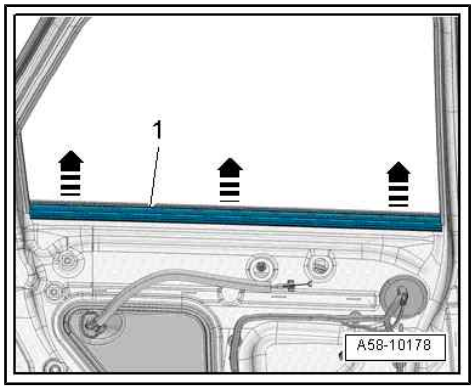

Installing

Installation is carried out in reverse order; note the following:

– Position window slot trim strip -1- so it is flush with window guide -2- at both ends -arrow- and press onto door seam, working towards centre.

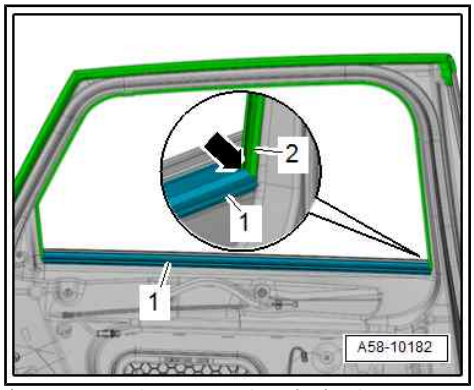

Protected by copyright. Copying for private or commercial purposes, in part or in whole, is not permitted unless authorised by AUDI AG. AUDI AG does not guarantee or accept any liability with respect to the correctness of information in this document. Copyright by AUDI AG.

2.18 Removing and installing outer window slot trim strip

Special tools and workshop equipment required

♦ Removal tool - T40219-

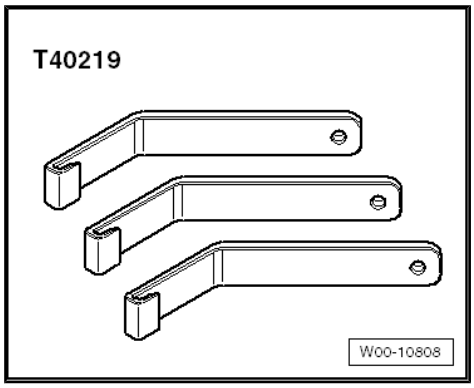

Preparing removal tool - T40219- :

- Before removing window slot trim strip, carefully bend removal tool - T40219- at the point indicated -arrow- so that removal tool can be applied behind retaining strip.

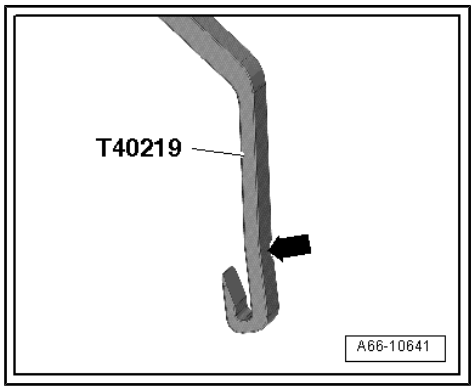

Removing

– Insert removal tool - T40219- next to guide -4- for window slot trim strip -3- and apply at retaining strip -2-.

• Front section -1- of removal tool -T40219- must be positioned as shown in illustration.

– Press removal tool - T40219- lightly in direction of -arrow- to release component.

• You should hear the retaining strip disengage.

– Carefully pull window slot trim strip upwards off door flange using removal tool - T40219- .

– Detach window slot trim strip.

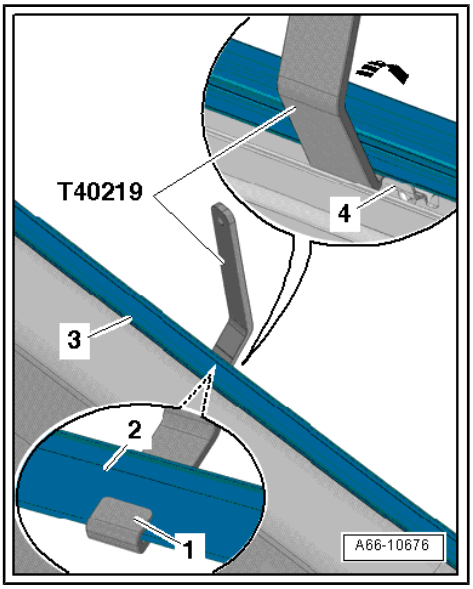

Installing

Installation is carried out in reverse order; note the following:

Note

For installing, you can coat the bottom edge of the window slot trim strip with tyre assembly paste.

– Position window slot trim strip -1- at trim panel for B-pillar on door seam and press on evenly -arrows-; retaining strip must be guided along guides -3- and must engage audibly at retaining plate -2-.

• When fixing retaining strip in position, it should engage underneath retaining plate.

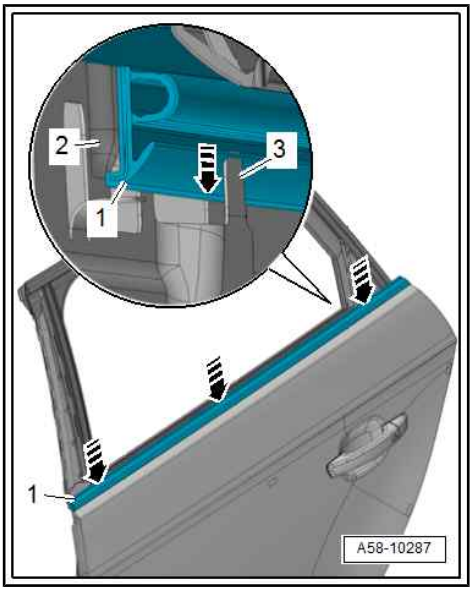

Protected by copyright. Copying for private or commercial purposes, in part or in whole, is not permitted unless authorised by AUDI AG. AUDI AG does not guarantee or accept any liability with respect to the correctness of information in this document. Copyright by AUDI AG.

60 – Sunroof

1 Sliding sunroof

⇒ “1.1 Exploded view - sliding sunroof”, page 164

⇒ “1.2 Exploded view - sunroof sun blind”, page 166

⇒ “1.3 Removing and installing sunroof frame”, page 166

⇒ “1.4 Removing and installing glass panel”, page 170

⇒ “1.5 Adjusting glass panel”, page 173

⇒ “1.6 Removing and installing slotted guide”, page 175

⇒ “1.7 Removing and installing sliding sunroof adjustment control unit J245 ”, page 177

⇒ “1.8 Adapting sliding sunroof adjustment control unit J245 ”, page 178

⇒ “1.9 Removing and installing front trim panel for sliding sunroof”, page 179

⇒ “1.10 Removing and installing sunroof seals”, page 184

⇒ “1.11 Removing and installing sunroof sun blind”, page 186

⇒ “1.12 Removing and installing wind deflector”, page 192

1.1 Exploded view - sliding sunroof

Protected by copyright. Copying for private or commercial purposes, in part or in whole, is not permitted unless authorised by AUDI AG. AUDI AG does not guarantee or accept any liability with respect to the correctness of information in this document. Copyright by AUDI AG.

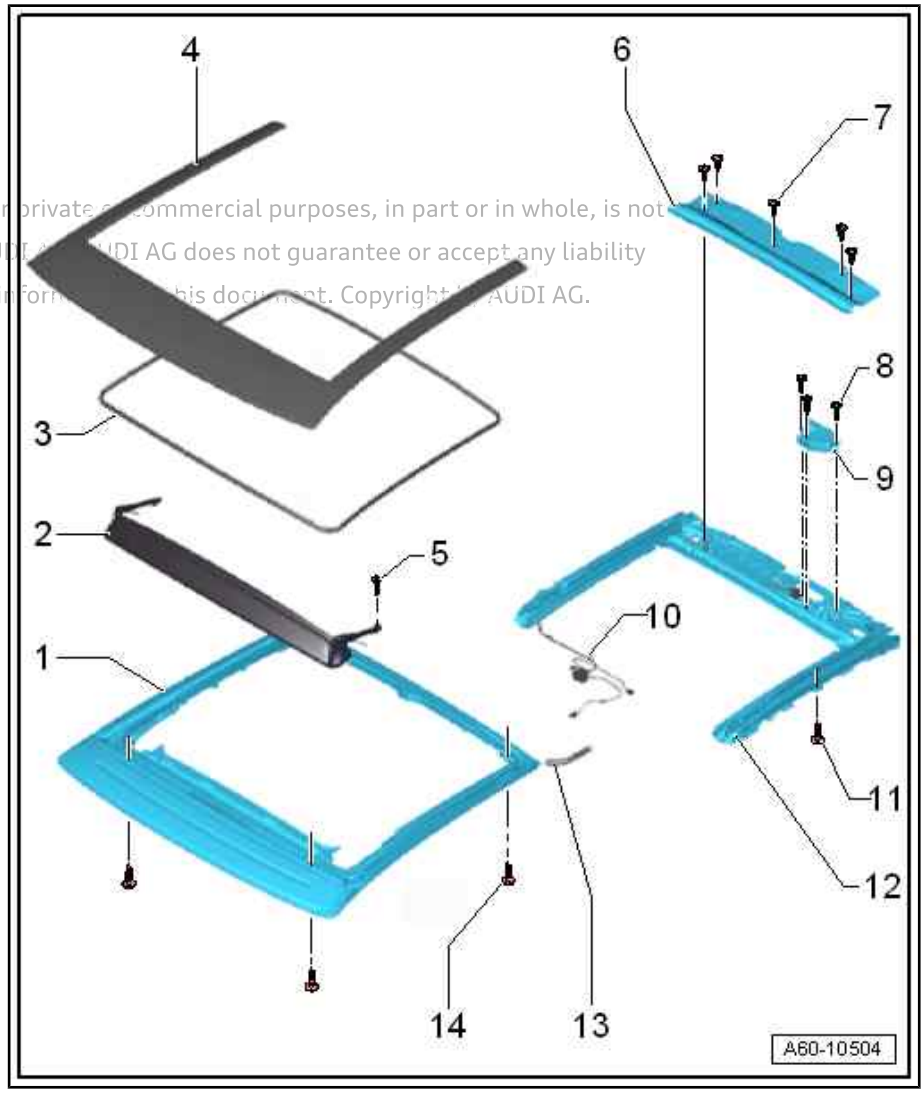

1 - Sunroof frame

- ❑ Removing and installing ⇒ page 166
- ❑ Perform adaption after installing

2 - Wind deflector

- ❑ Removing and installing ⇒ page 192
- ❑ Perform adaption after installing

3 - Seal

- ❑ Removing and installing ⇒ page 184
- ❑ Perform adaption after installing

4 - Front trim panel

- ❑ Removing and installing ⇒ page 179
- ❑ Perform adaption after installing

5 - Bolt

- ❑ 2 Nm

6 - Cover

7 - Bolt

- ❑ 2 Nm

8 - Bolt

- ❑ 3 Nm

9 - Motor (sliding sunroof adjustment control unit - J245-)

- ❑ Removing and installing ⇒ page 177
- ❑ Perform adaption after installing

10 - Water drain hose

- ❑ Removing and installing ⇒ page 199

11 - Bolt

- ❑ Slotted guide with hybrid frame: 3 Nm
- ❑ Slotted guide with plastic frame ⇒ page 177

12 - Frame for slotted guide

- ❑ With slotted guides and cables
- ❑ Removing and installing ⇒ page 175
- ❑ Perform adaption after installing

13 - Wiring harness

14 - Bolt

- ❑ 3.5 Nm

- Observe tightening sequence
- First tighten front bolts on right side, then on left side
- First tighten rear bolts on right side, then on left side

Protected by copyright. Copying for private or commercial purposes, in part or in whole, is not permitted unless authorised by AUDI AG. AUDI AG does not guarantee or accept any liability with respect to the correctness of information in this document. Copyright by AUDI AG.

1.2 Exploded view - sunroof sun blind

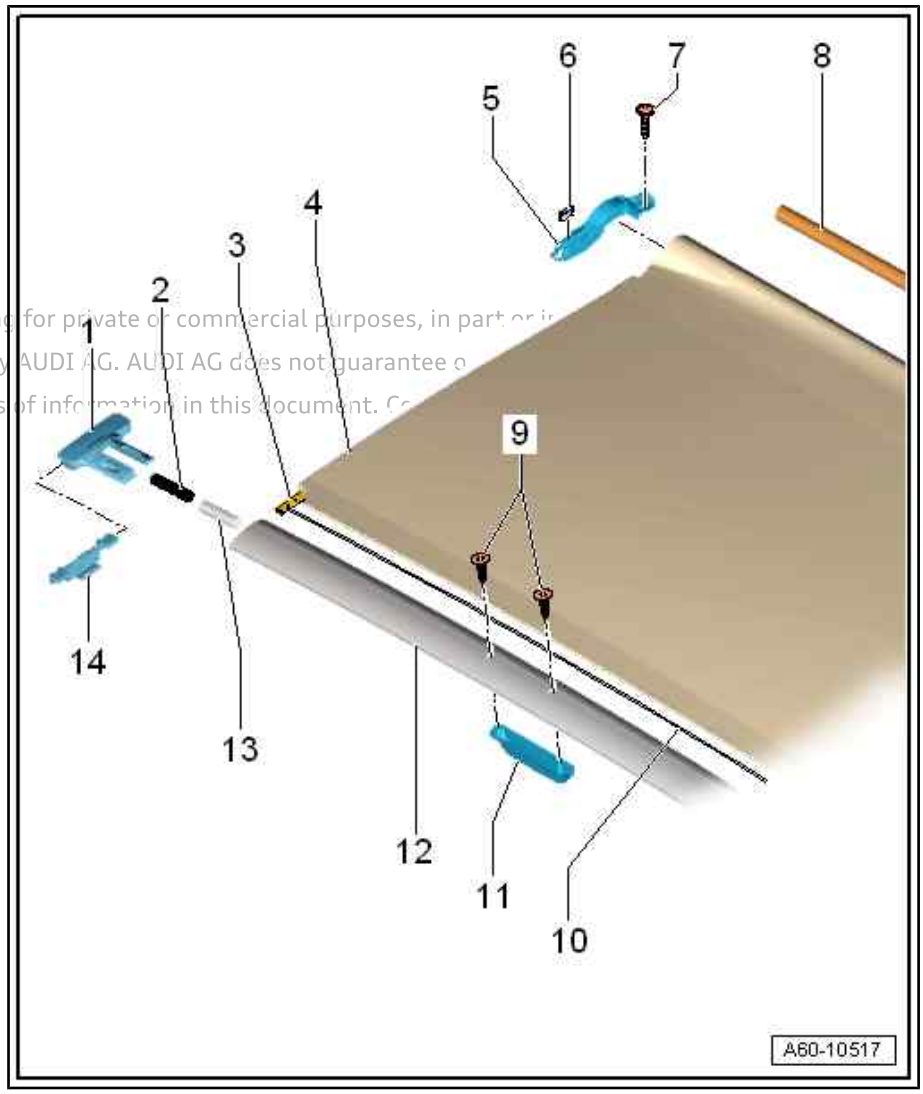

1 - Slide (top section)

2 - Spring

- ❑ Only fitted on right side

3 - Tensioning strap

- ❑ Not available as replacement part

4 - Sunroof sun blind

- ❑ Removing and installing ⇒ page 186

5 - Centring mechanism

- ❑ Not available as replacement part

6 - Stop

- ❑ Insert into centring mechanism from top

7 - Bolt

- ❑ 2 Nm

8 - Shaft

- ❑ Not available as replacement part

9 - Bolt

- ❑ 1 Nm

10 - Moulding

- ❑ Not available as replacement part
- – First insert from side into loop in sun blind fabric, then slide both components into tension bow ⇒ page 191 .

11 - Grip

12 - Tension bow

- ❑ Can be removed without removing sunroof sun blind
- ❑ Removing and installing ⇒ page 191

13 - Sleeve

- ❑ Only fitted on right side

14 - Slide (bottom section)

- ❑ Welded to tensioning strap

Protected by copyright. Copying for private or commercial purposes, in part or in
part is not permitted unless authorised by AUDI AG. AUDI AG does not guarantee o
with respect to the correctness of information in this document. Co

1.3 Removing and installing sunroof frame

Note

Usually it is not necessary to remove the sunroof frame to eliminate problems (note available replacement parts ⇒ Electronic parts catalogue).

Caution

After removing and installing mechanical components or control units for the sliding/tilting sunroof, always perform adaption via the Guided Functions mode in Guided Fault Finding (diagnostic address 09) ⇒ Vehicle diagnostic tester.

Special tools and workshop equipment required

- Electric cutter - V.A.G 1561A-

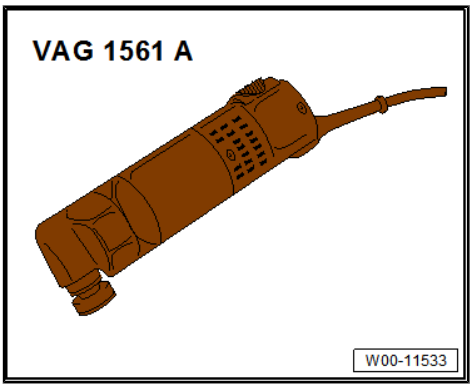

- Blade (L-shaped, 25.4 mm) - V.A.G 1561/22-

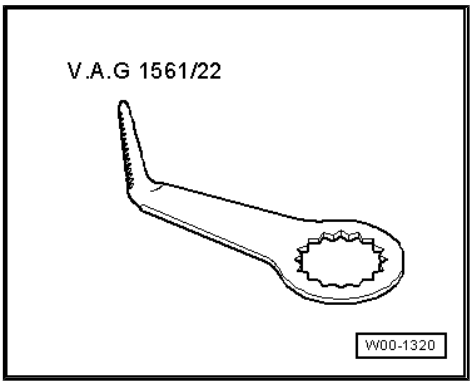

- Double cartridge gun - VAS 5237-

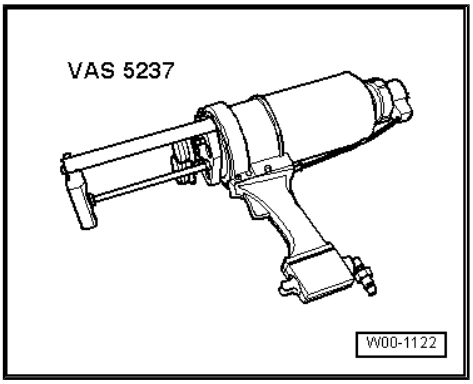

Materials

- 2-component window adhesive set - D 004 660 M2- [1)]
- 1-component window adhesive - DH 009 100 A2- [3)]

Protected by copyright. Copying for private or commercial purposes, in part or in whole, is not permitted unless authorised by AUDI AG. AUDI AG does not guarantee or accept any liability with respect to the correctness of information in this document. Copyright by AUDI AG.

1) Note minimum drying time ⇒ page 170 .

2) To process this material use double cartridge gun - VAS 5237- .

3) Small 180 ml cartridge for sealing and/or for use when the 400 ml double cartridge is not sufficient.

Removing

– Glass panel removed ⇒ page 170

– Front trim panel removed ⇒ page 179

– Unplug electrical connectors for sliding/tilting sunroof.

– Remove headliner ⇒ General body repairs, interior; Rep. gr. 70 ; Roof trim panels; Removing and installing moulded head-liner .

– Remove bolts -1- from sliding sunroof.

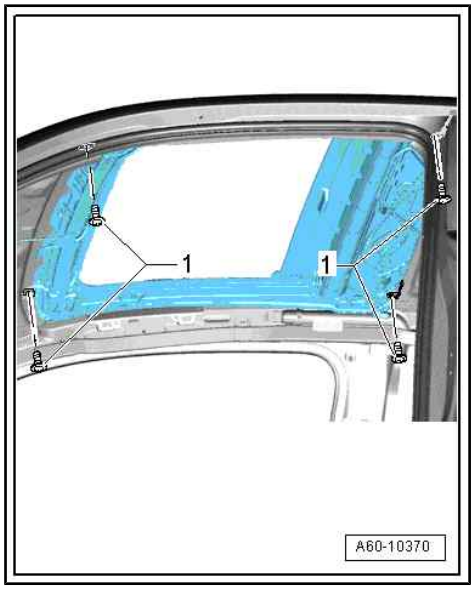

Note

The rear bolts are not fitted on the Saloon version.

– To remove, adhesive -1- between sunroof frame -2- and body must be cut through.

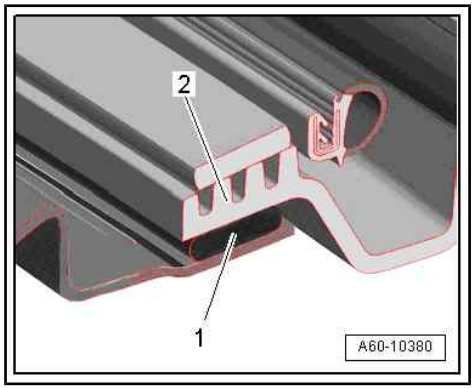

– Insert electric cutter - V.A.G 1561A- and blade (L-shaped, 25.4 mm) - V.A.G 1561/22- between body and frame at rear and cut out adhesive on both sides towards front.

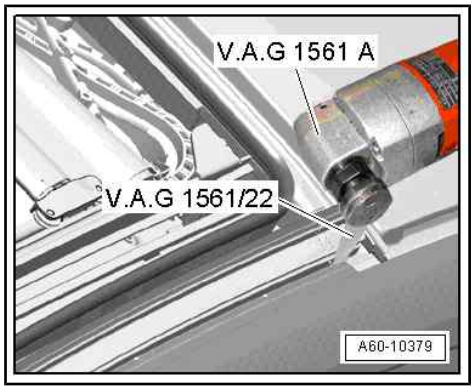

Protected by copyright. Copying for private or commercial purposes, in part or in whole, is not permitted unless authorised by AUDI AG. AUDI AG does not guarantee or accept any liability with respect to the correctness of information in this document. Copyright by AUDI AG.

– Cut out sunroof frame between windscreen and body, as shown.

– Also cut out sunroof frame at rear.

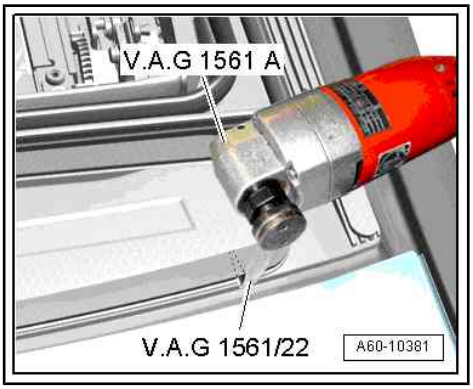

– Working from inside of vehicle, cut through adhesive bead between sunroof frame and body, as shown.

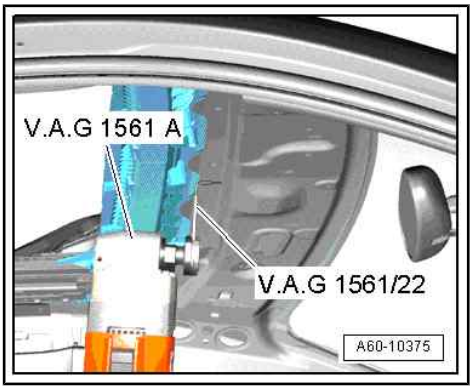

Installing

– Before applying adhesive, glass panel must be installed.

– Sliding/tilting sunroof frame is centred at front with glass panel and front trim panel.

– At the rear, this is done with the help of a centring pin aligned centrally with the hole in the centre of the vehicle ⇒ page 170 .

– Clean bonding surface all around with cleaning solution - D 009 401 04- .

– Apply glass/paint primer - D 009 200 02- as described below.

– Start application with fully soaked felt.

– Apply glass/paint primer with applicator evenly onto roof frame in one movement, as shown.

Protected by copyright. Copying for private or commercial purpo
permitted unless authorised by AUDI AG. AUDI AG does not gua
with respect to the correctness of information in this document

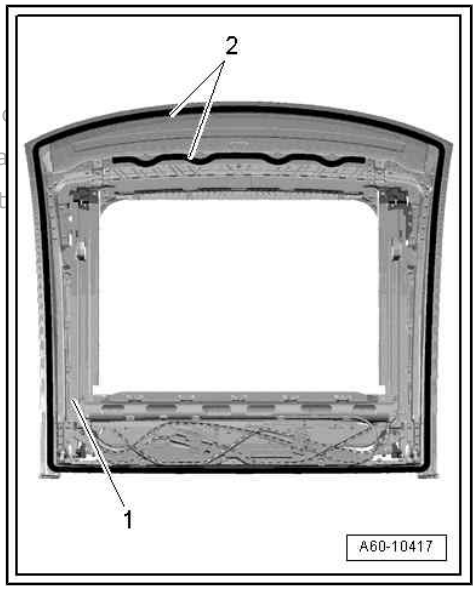

- Primer width approx. 20 mm
- Apply glass/paint primer centrally in relation to adhesive bead.
- Flash-off time: 10 minutes
- The sliding/tilting sunroof frame must be fitted within 10 minutes after applying the adhesive; otherwise the adhesive properties of the adhesive sealant will be impaired.

Dimensions for applying adhesive:

1 - Adhesive bead

2 - Glass/paint primer

3 - Sliding/tilting sunroof frame

- Dimension -a- = 8 mm
- Dimension -b- = 12 mm
- Dimension -c- = is determined by embossing on sunroof frame

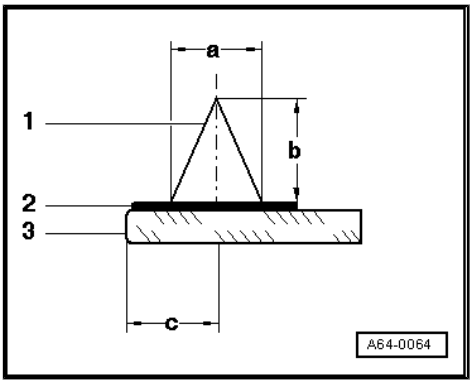

– Apply full surface of nozzle -2- to frame.

• Direction of application -arrow- for adhesive bead -1-.

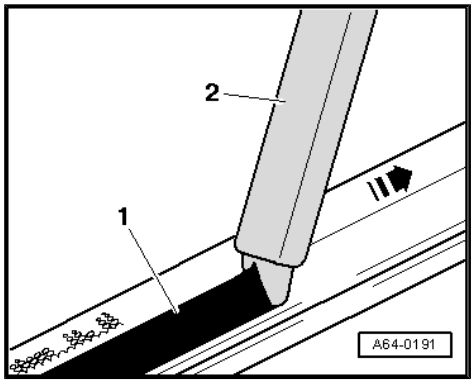

– Insert sliding/tilting sunroof frame with adhesive bead -1- in roof opening.

– Frame -3- is centred at rear of roof -2- with help of centring pin -arrow-.

– To do this, centring pin must be aligned centrally in hole.

– Tighten bolts -4- to specified torque ⇒ Item 14 (page 165) ; observe tightening sequence.

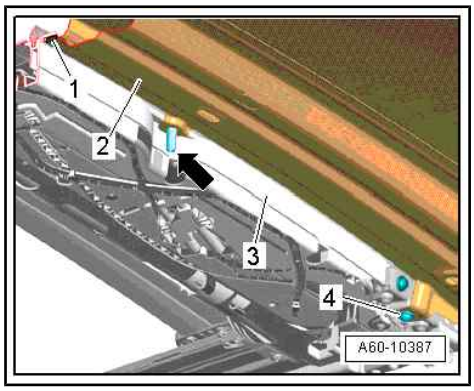

Minimum drying time

• For safety reasons, only use non-conductive 2-component adhesive with the designations listed below when installing the sliding/tilting sunroof.

• You must NOT drive the vehicle until the minimum drying time has elapsed, as the vehicle is otherwise not safe to drive.

Protected by copyright. Copying for private or commercial purposes, in part or in whole, is not permitted unless authorised by AUDI AG. AUDI AG does not guarantee or accept any liability with respect to the correctness of information in this document. Copyright by AUDI AG.

	Adhesive sealant	Minimum drying time (in hours)
Sliding/tilting sunroof frame	2-component window adhesive set - D 004 660 M2-	3

1.4 Removing and installing glass panel

Caution

After removing and installing mechanical components or control units for the sliding/tilting sunroof, always perform adaption via the Guided Functions mode in Guided Fault Finding (diagnostic address 09) ⇒ Vehicle diagnostic tester.

• Two further mechanics are required to perform this step (as described on ⇒ page 172).

1 - Bolt

- ❑ 5.5 Nm

2 - Guide rail

3 - Glass panel

- ❑ Observe markings -arrow- at rear when adjusting height ⇒ page 173
- ❑ Perform adaption after installing

4 - Bolt

- ❑ 5.5 Nm

Protected by copyright. Copyright by AUDI AG.

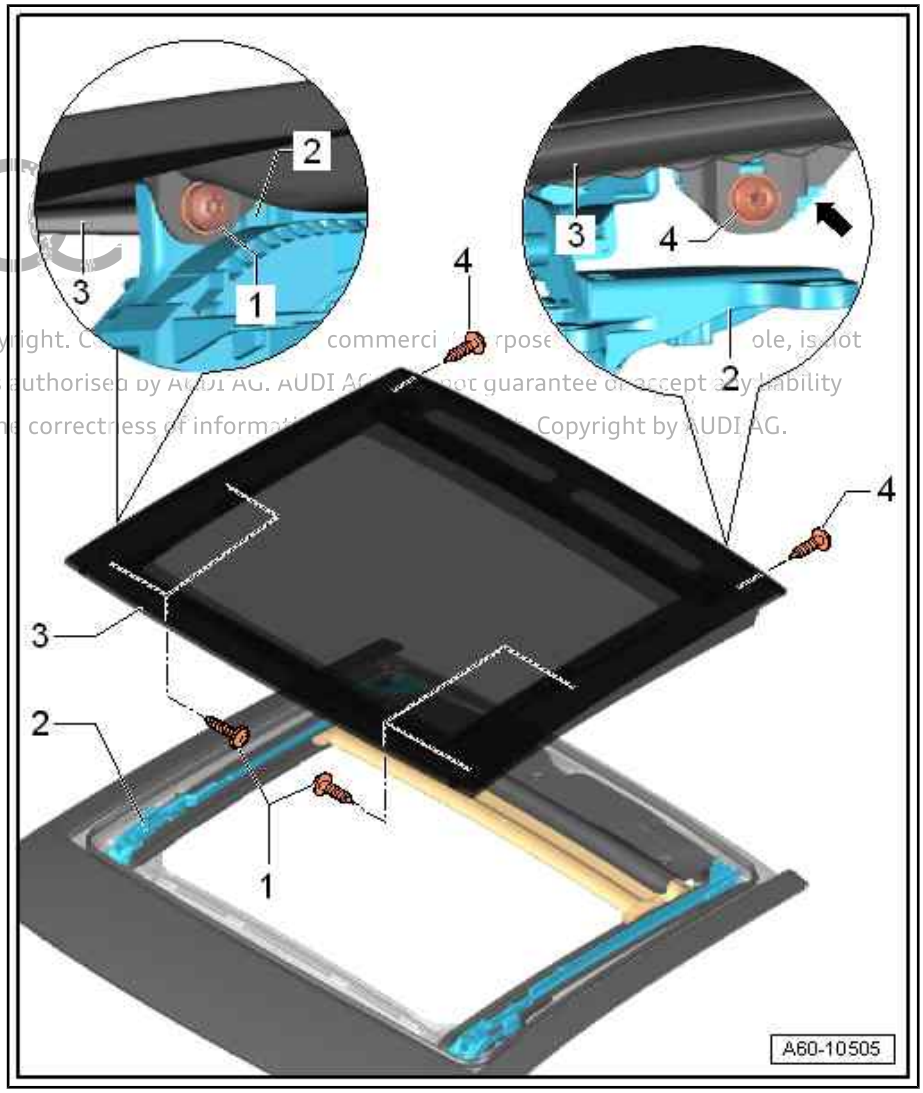

Removing glass panel

– Slide open panel approx. 150 mm to the rear.

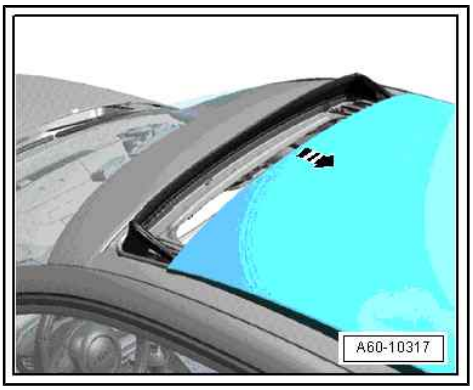

– Remove bolts from bottom of panel -arrow- on both sides.
– Seal opening between A-pillar and sunroof frame with cloth, paper or similar to prevent any bolts from falling into vehicle.

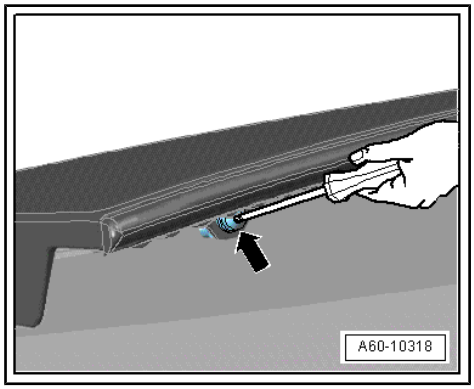

– Unscrew bolts (front) -arrow- from panel on both sides.

Protected by copyright. Copying for private or commercial purposes, in part or
permitted unless authorised by AUDI AG. AUDI AG does not guarantee or
with respect to the correctness of information in this document. Copying

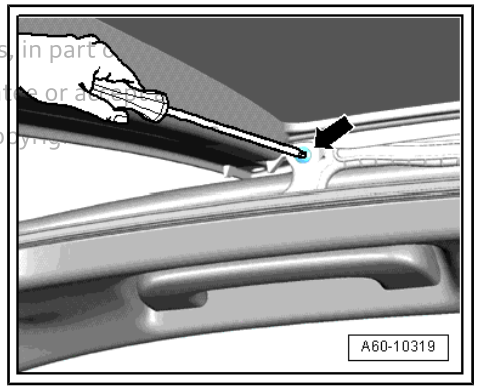

– Loosen bolts -arrow- in centre of panel, but do not remove.

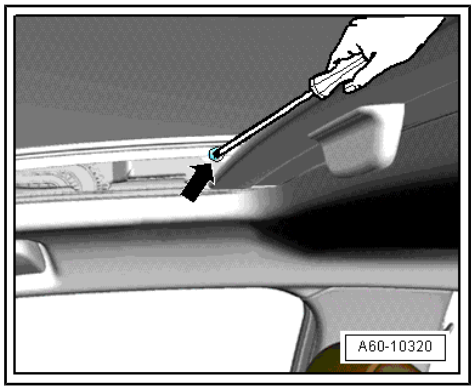

– Lift panel out of slotted guides with the help of a second mechanic.

Note

To avoid damage to the guide rails, always run them to the »roof closed« position after removing the panel.

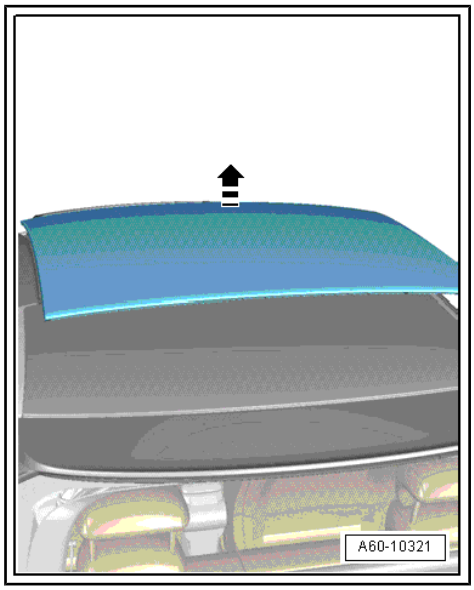

Move guide rails -1- to »roof closed« position.

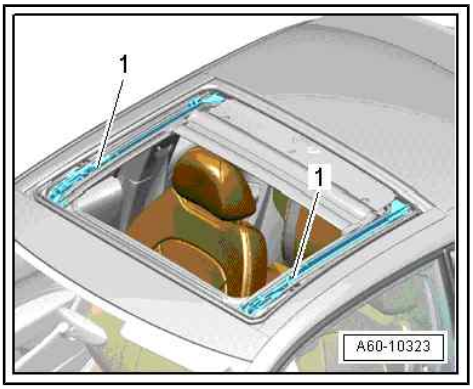

Installing

– Slide slotted guides approx. 150 mm to the rear.

– Lift panel onto slotted guides -1- with the help of a second mechanic.

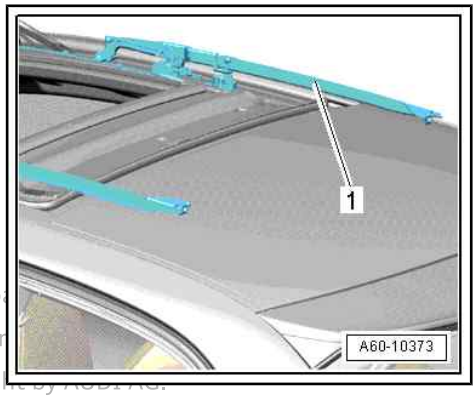

Protected by copyright. Copying for private or commercial purposes, in pa
permitted unless authorised by AUDI AG. AUDI AG does not guarantee or
with respect to the correctness of information in this document. Copyright by AUDI AG.

– Position panel frame so that recesses -arrow- are in line with the loosened bolts.

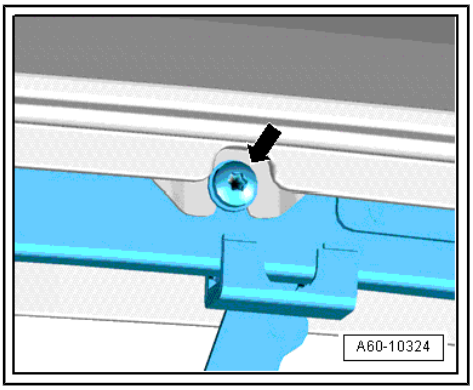

Note

Observe tightening sequence.

– First tighten bolts at rear, then at front and finally in centre.
– Close panel and check alignment with roof.
– If necessary, open and adjust panel.
– Tighten bolts to specified torque.

1.5 Adjusting glass panel

Note

Adjust height of glass panel only via rear edge.

Adjustment dimensions

1 - Glass panel

- Dimension -a- = 1.7 mm
- Dimension -b- = 0.5 mm

Protected by copyright. Copying for private or commercial purposes, in part or in whole, is not permitted unless authorised by AUDI AG. AUDI AG does not guarantee or assume any liability with respect to the correctness of information in this document. Copyright by AUDI AG.

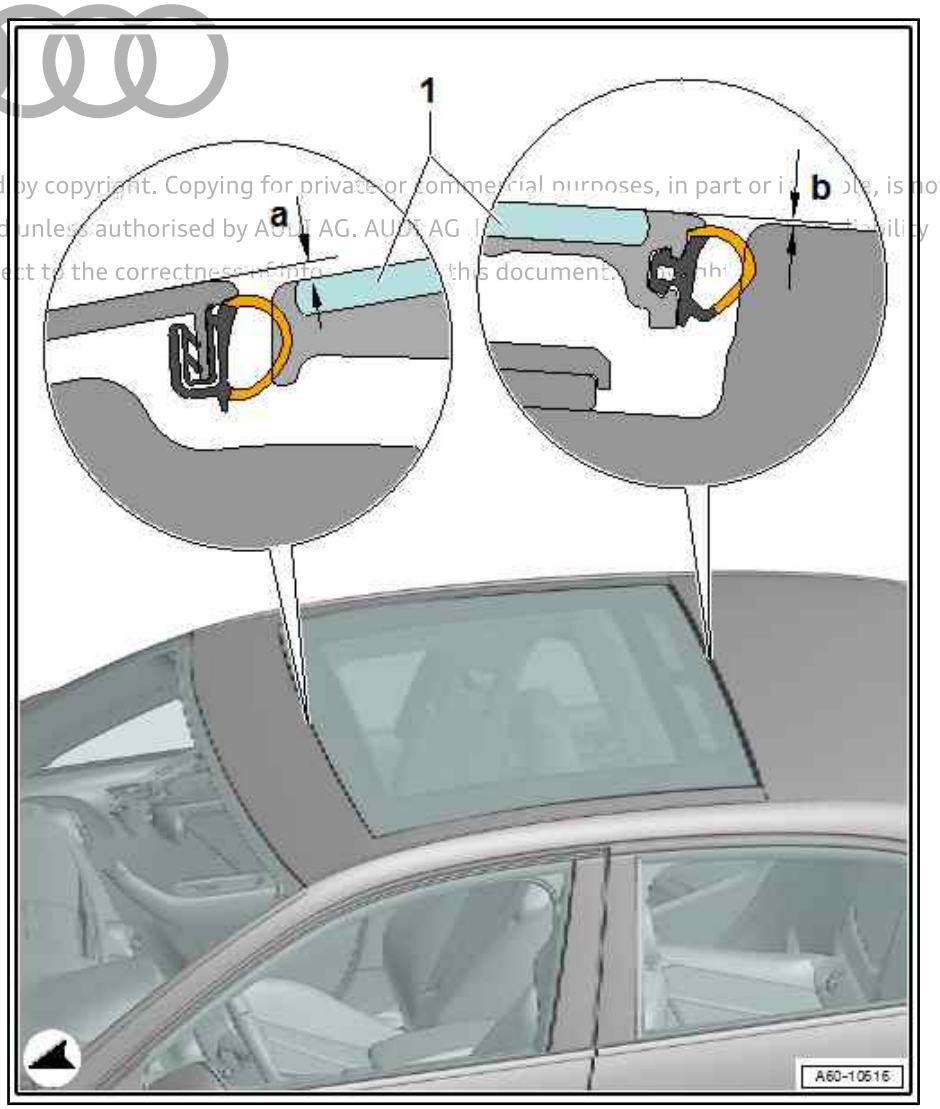

- Tilt glass panel -1- and unscrew bolts -2- at rear edge.
- Also loosen bolts in centre of glass panel.
- Adjust height of panel via markings -arrow- and setting dimensions ⇒ page 173 .
- Tighten bolts at rear edge of panel to torque ⇒ Item 4 (page 171) .
- Close panel and tighten centre bolts to torque ⇒ Item 1 (page 171) .

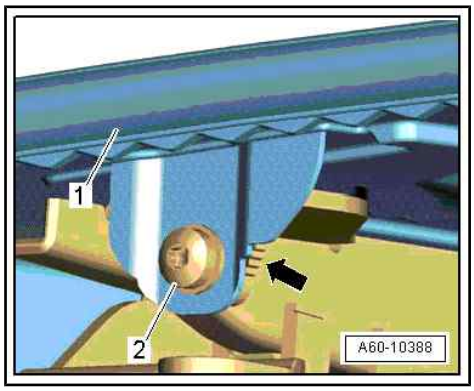

1.6 Removing and installing slotted guide

⇒ "1.6.1 Removing and installing slotted guide - hybrid frame ", page 175

⇒ "1.6.2 Removing and installing slotted guide - plastic frame ", page 176

1.6.1 Removing and installing slotted guide - hybrid frame

- Two further mechanics are required to perform this step (as described on ⇒ page 175).

Removing

> **Caution**
>
> *After removing and installing mechanical components or control units for the sliding/tilting sunroof, always perform adaption via the Guided Functions mode in Guided Fault Finding (diagnostic address 09) ⇒ Vehicle diagnostic tester.*

Note

- ♦ *Before removing, mark position of frame for slotted guide.*
- ♦ *One mechanic must loosen the bolted connections while a second holds the frame and takes it out of the vehicle.*

– Remove headliner ⇒ General body repairs, interior; Rep. gr. 70 ; Roof trim panels; Removing and installing moulded headliner .

– Trim panel for sunroof sun blind removed

– Mark position of frame for slotted guide -1- on sunroof frame using a felt-tip pen or similar.

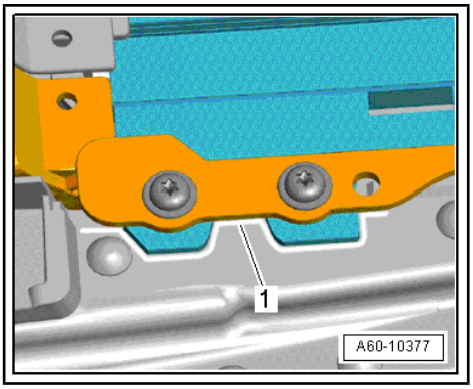

– First unscrew rear bolts -arrows- from frame.

- Bolts -arrow A- remain fitted initially during removal.

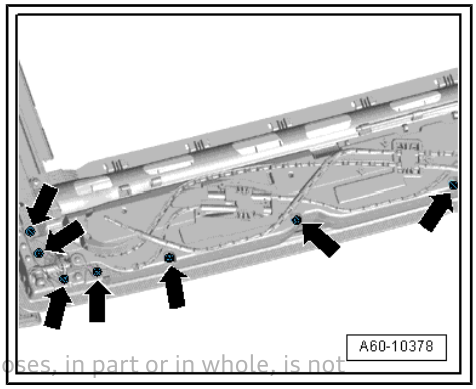

Protected by copyright. Copying for private or commercial purposes, in part or in whole, is not permitted unless authorised by AUDI AG. AUDI AG does not guarantee or accept any liability with respect to the correctness of information in this document. Copyright by AUDI AG.

– Remove bolts -arrows-.

– Take hold of frame and only then unscrew bolts -arrow A-.

– Lift frame out of vehicle through opened rear lid.

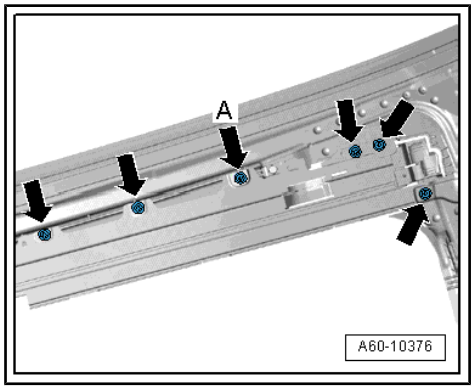

Installing

– When installing, align frame according to marks and secure with bolts.

– Tighten bolts alternately (from front to rear) to specified torque ⇒ Item 11 (page 165) .

1.6.2 Removing and installing slotted guide - plastic frame

• Two further mechanics are required to perform this step (as described on ⇒ page 177).

Removing

• After removing and installing mechanical components or control units for the sliding sunroof, always perform adaption via the Guided Functions mode in Guided Fault Finding (diagnostic address 09) ⇒ Vehicle diagnostic tester.

– Remove headliner ⇒ General body repairs, interior; Rep. gr. 70 ; Roof trim panels; Removing and installing moulded headliner .

– Remove glass panel ⇒ page 170 .

– Remove cover for sunroof sun blind ⇒ Item 6 (page 165) .

– Unplug electrical connector at sunroof motor and unfasten electrical wiring harness.

– Mark position -1- of frame for slotted guide on sunroof frame.

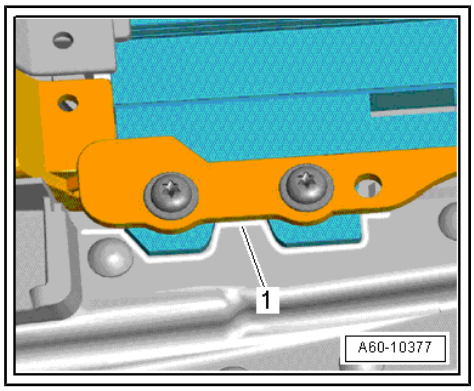

– Remove bolts -A, B-.

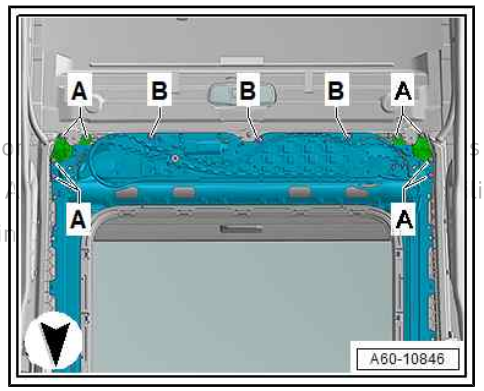

Protected by copyright. Copying for private or co s not
permitted unless authorised by AUDI AG. AUDI A ity
with respect to the correctness of information i

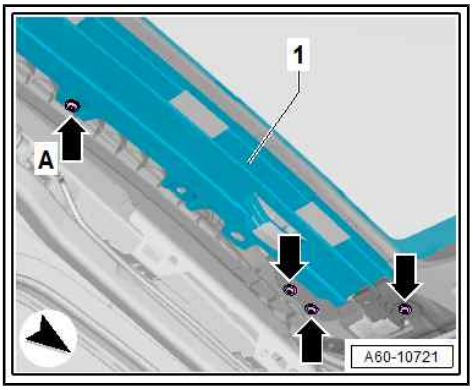

– Remove bolts -arrows-.

– Take hold of frame -1- and unscrew bolts -arrow A-.

– Lower frame -1- at rear, pull it out and lift it out of vehicle through opened rear lid.

– If renewing slotted guide, also remove the following components:

♦ Sunroof sun blind ⇒ page 186

Installing

– When installing, align frame according to marks and secure with bolts.

• When positioning the slotted guide, make sure it is only slid forward up to its correct position so that the wind deflector is not damaged.

– Tighten bolts alternately (from front to rear) to specified torque.

– Perform adaption ⇒ page 178 .

Tightening torques

♦ Bolts -A, B- ⇒ page 176 : 2.5 Nm

♦ Bolts -A- ⇒ page 177 : 3.5 Nm

♦ Bolts -arrows- ⇒ page 177 : 4 Nm

1.7 Removing and installing sliding sunroof adjustment control unit - J245-

WARNING

If the sliding sunroof adjustment control unit - J245- has been renewed, it has to be encoded via the Guided Functions mode of Guided Fault Finding ⇒ Vehicle diagnostic tester.

Note

If a defective sliding sunroof adjustment control unit - J245- is to be removed with the glass panel closed, the moulded headliner must be lowered around the bolts ⇒ Item 4 (page 171) at the rear edge of the panel (⇒ General body repairs, interior; Rep. gr. 70 ; Roof trim panels; Removing and installing moulded headliner), and the glass panel ⇒ page 170 must be removed.

Removing

– Glass panel removed ⇒ page 170

Protected by copyright. Copying for private or commercial purposes, in part or in whole, is not permitted unless authorised by AUDI AG. AUDI AG does not guarantee or accept any liability with respect to the correctness of information in this document. Copyright by AUDI AG.

– Unscrew bolts -1- and detach cover (rear) -2-.
– Unplug electrical connector for motor.

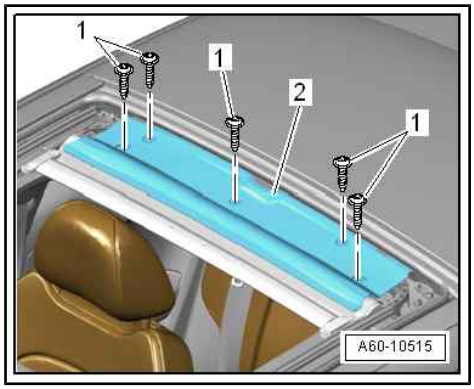

– Unscrew bolts from motor and pull off motor upwards.

Installing

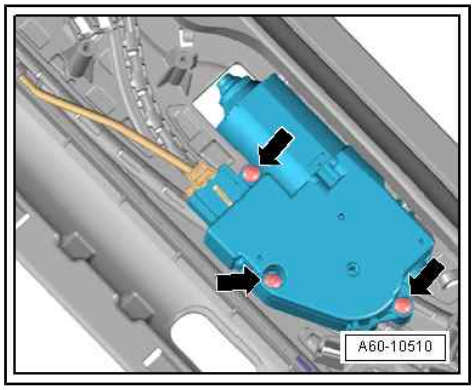

Note

When removing the motor, the retaining clip -1- can become detached; it must then be re-installed in the correct position.

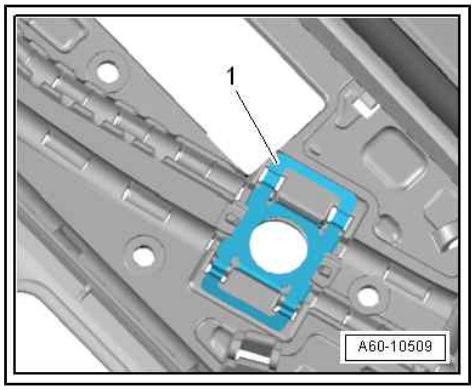

– Before installing motor, press retaining clip completely into frame, making sure it is positioned correctly.
– Insert motor and tighten bolts to specified torque ⇒ Item 8 (page 165) .
– Perform adaption ⇒ page 178 .

1.8 Adapting sliding sunroof adjustment control unit - J245-

Adapting sliding sunroof motor - V1-

Activating sliding sunroof adjustment control unit - J245-

WARNING

- *Panel must be installed when performing adaption - risk of damage.*
- *When the sliding sunroof adjustment control unit - J245- has been renewed, it has to be encoded and adapted via the Guided Functions mode in the Guided Fault Finding routine (diagnostic address 09) ⇒ Vehicle diagnostic tester.*

Protected by copyright. Copying for private or commercial purposes, in part or in whole, is not permitted unless authorised by AUDI AG. AUDI AG does not guarantee or accept any liability with respect to the correctness of information in this document. Copyright by AUDI AG.

1.9 Removing and installing front trim panel for sliding sunroof

Special tools and workshop equipment required

- Electric cutter - V.A.G 1561A-

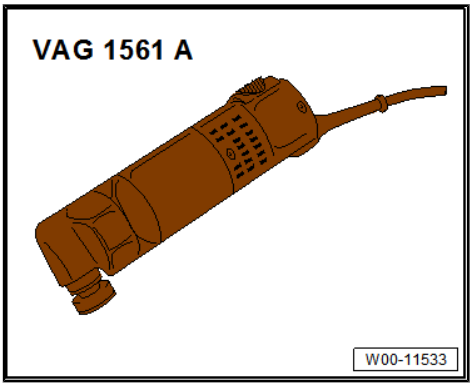

- Saw blade, Ø 80 mm - V.A.G 1561/26-
- Blade (L-shaped, 25.4 mm) - V.A.G 1561/22-

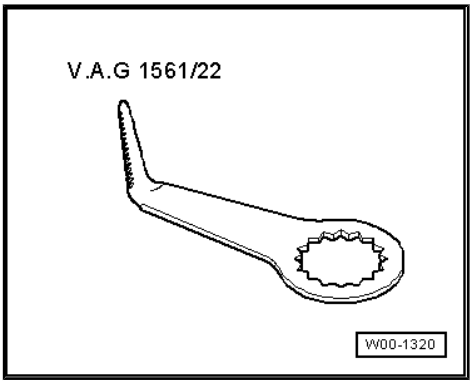

- Hand-cartridge gun - V.A.G 1628-

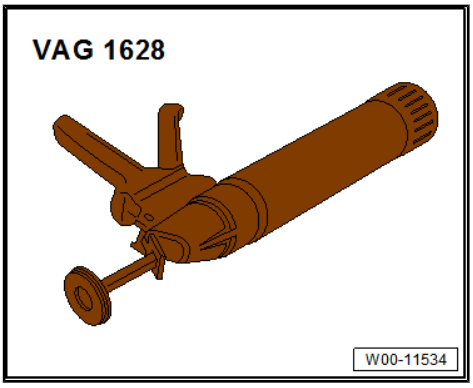

Materials

- **Cleaning solution - D 009 401 04-**
- Glass/paint primer - D 009 200 02-
- Assembly adhesive - D 190 MKD A3-

Protected by copyright. Copying for private or commercial purposes, in part or in whole, is not permitted unless authorised by AUDI AG. AUDI AG does not guarantee or accept any liability with respect to the correctness of information in this document. Copyright by AUDI AG.

Removing

Caution

After removing and installing mechanical components or control units for the sliding/tilting sunroof, always perform adaption via the Guided Functions mode in Guided Fault Finding (diagnostic address 09) ⇒ Vehicle diagnostic tester.

Note

Components are damaged irreparably when removed.

– To avoid damage to paintwork, mask body surfaces around sliding/tilting sunroof with adhesive tape.

– Make a mark over entire length of trim panel with distance -a- = 10 mm to inner edge.

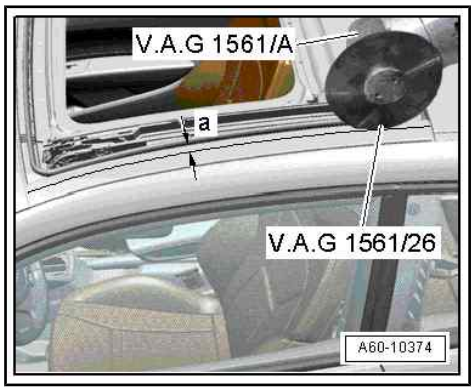

Protected by copyright. Copying for private or commercial purposes, in part or in whole, is not permitted unless authorised by AUDI AG. AUDI AG does not guarantee or accept any liability with respect to the correctness of information in this document. Copyright by AUDI AG.

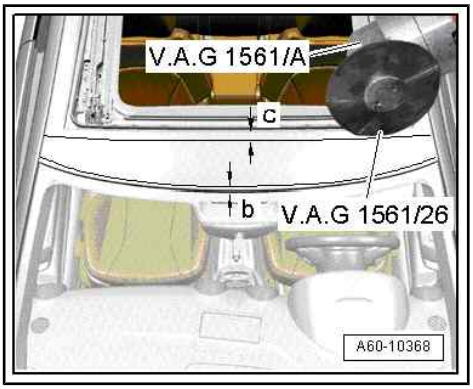

– Also make marks with distance -b- = 10 mm to front edge and with distance -c- = 10 mm to rear edge.
– Using electric cutter - V.A.G 1561A- and saw blade, Ø 80 mm - V.A.G 1561/26- , cut along marks from rear to front. To do so, fit a depth stop and set it to 5 mm.
– Also cut off a transverse strip each at front and rear edges of trim panel along marks.
– After the edges of the trim panel have been removed, the adhesive beads for the trim panel are now accessible.
– Use electric cutter - V.A.G 1561A- and blade (L-shaped, 25.4 mm) - V.A.G 1561/22- to cut through adhesive bead from rear to front on both sides.
– Proceed in the same manner for the two adhesive beads at the front of the trim panel.
– Cut through adhesive bead at centre of trim panel using cutting wire and two pull handles and remove remaining pieces of trim panel.

Installing

•
• The bonding surfaces must be free of dirt and grease.
• Do not cut back bonding surface until shortly before installation.
• Do not apply primer to bonding surface and do not use cleaning solution.
• The sliding/tilting sunroof must be closed during installation.

Note

The positions of the adhesive beads are stamped into the trim panel.

– Do not cut back remaining adhesive bead on sliding/tilting sunroof frame until shortly before installation.
– Roughen bonding surface slightly using fine abrasive paper (e.g. soft pad from paint shop).
– Clean bonding area on front trim panel with cleaning solution - D 009 401 04- .
– Prime area for adhesive bead -arrows- with glass/paint primer - D 009 200 02- and allow to flash off for 10 minutes.
– Apply assembly adhesive - D 190 MKD A3- -arrows- onto glass/paint primer.

Protected by copyright. Copying for private or commercial purposes, in part or in whole, is not permitted unless authorised by AUDI AG. AUDI AG does not guarantee or accept any liability with respect to the correctness of information in this document. Copyright by AUDI AG.

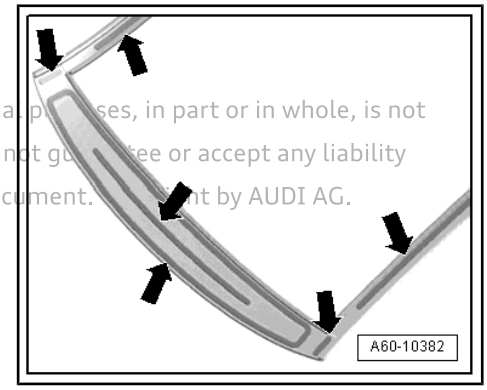

– In front section, do not apply adhesive within 10 cm (dimension -a-) of left and right side of trim panel.

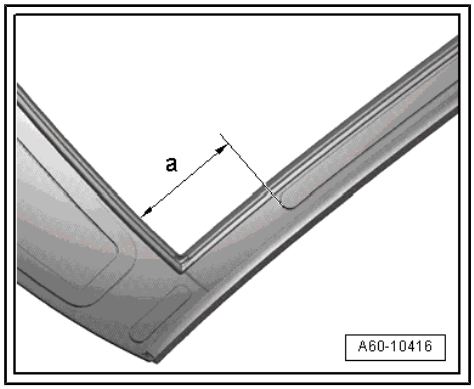

Dimensions for applying adhesive:

1 - Adhesive bead

2 - Glass/paint primer

3 - Trim panel for sliding/tilting sunroof

- Dimension -a- = 8 mm
- Dimension -b- = 12 mm
- Dimension -c- = is set by stamped markings on trim panel

– Insert trim panel in opening in roof, press it in so it is in line with sliding/tilting sunroof and fix in position with adhesive tape.

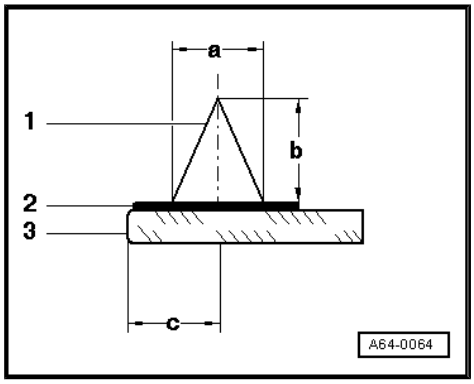

Installation position of front trim panel

Protected by copyright. Copying for private or commercial purposes, in part or in whole, is not permitted unless authorised by AUDI AG. AUDI AG does not guarantee or accept any liability with respect to the correctness of information in this document. Copyright by AUDI AG.

1 - Glass panel

2 - Front trim panel

- Dimension a = 2 mm ± 1 mm
- Dimension b = 0 + 0.5 mm (rear of trim must be flush with roof)
- Dimension c = 1.5 mm ± 0.5 mm
- Dimension d = 3 mm ± 0.5 mm
  - ❑ Press in front trim panel according to dimensions; front trim panel must be flush with edge of glass panel and parallel to glass panel surface.

3 - Roof

4 - Side frame

5 - Windscreen

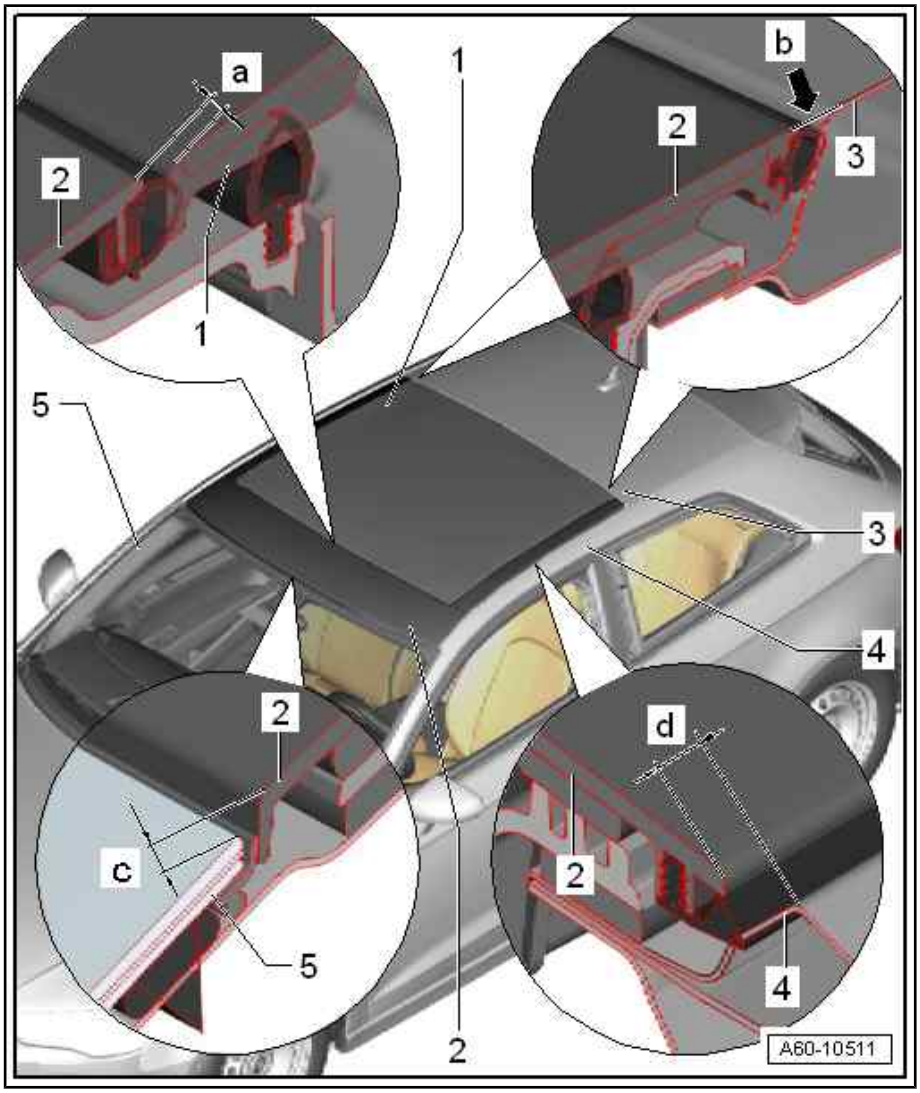

Minimum drying time

- When installing the trim panel, use only assembly adhesive with the designation detailed below.
- This type of adhesive is specified due to its elasticity and does not cause any cracks in the paint on the trim panel after it has hardened.
- You must NOT drive the vehicle until the minimum drying time has elapsed, as the vehicle is otherwise not safe to drive.

Protected by copyright. Copying for private or commercial purposes, in part or in whole, is not permitted unless authorised by AUDI AG. AUDI AG does not guarantee or accept any liability with respect to the correctness of information in this document. Copyright by AUDI AG.

	Adhesive sealant	Minimum drying time (in hours)
Trim panel for sliding/ tilting sunroof	Assembly adhesive - D 190 MKD A3-	3

1.10 Removing and installing sunroof seals

Caution

After removing and installing mechanical components or control units for the sliding/tilting sunroof, always perform adaption via the Guided Functions mode in Guided Fault Finding (diagnostic address 09) ⇒ Vehicle diagnostic tester.

Removing seal (top)

– Glass panel removed

1 - Seal (top)

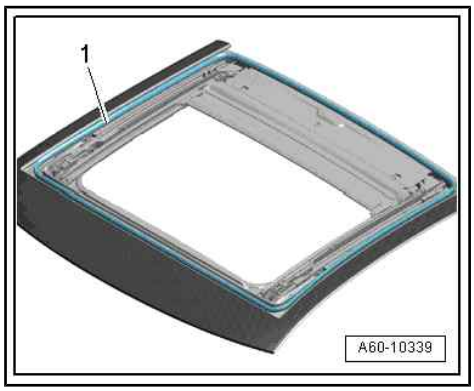

– Pull seal -1- upwards out of seal channel all around.

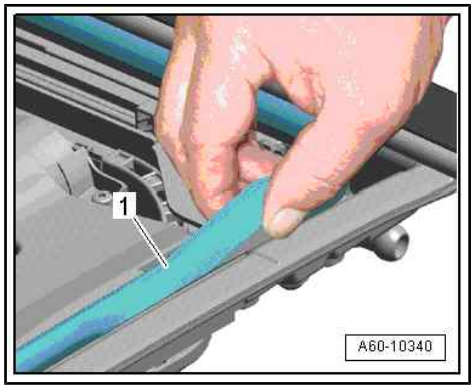

Installing seal (top)

Position seal on channel with lip -arrow- facing outwards.

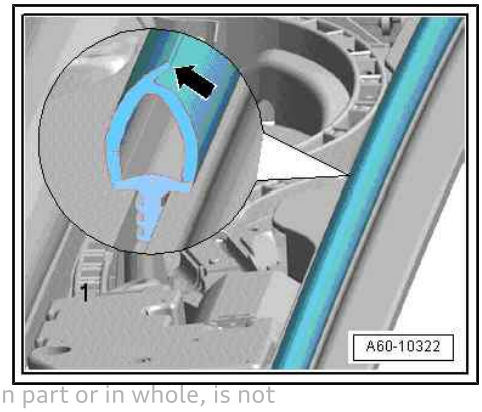

Protected by copyright. Copying for private or commercial purposes, in part or in whole, is not permitted unless authorised by AUDI AG. AUDI AG does not guarantee or accept any liability with respect to the correctness of information in this document. Copyright by AUDI AG.

– Align butt joint -arrow- of seal in centre of vehicle and press seal into channel.

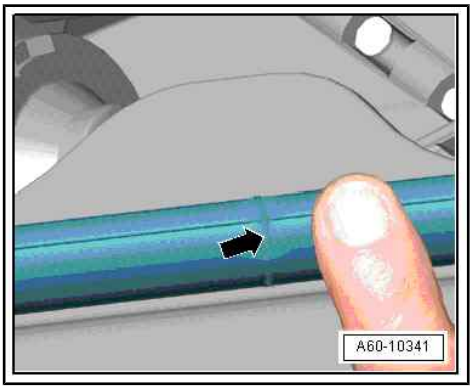

– Press seal into channel all around.

• Do not stretch the seal as otherwise it will not be possible to press the complete seal into the seal channel.

Protected by copyright. Copying for private or commercial purpose
permitted unless authorised by AUDI AG. AUDI AG does not guaran
with respect to the correctness of information in this document. Co

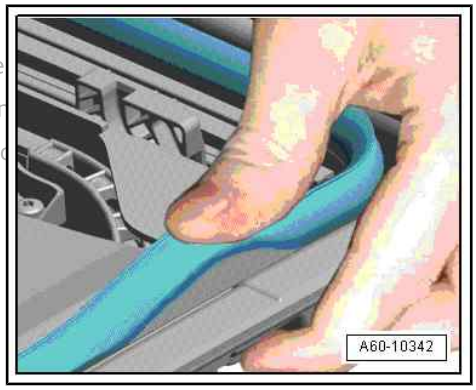

Renewing panel seal

– Open glass panel.

– Pull panel seal -1- out of channel at rear.

Installing

Note

Spray seal with soap solution or similar to make installation easier.

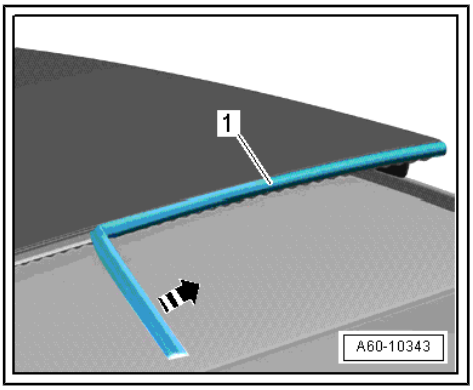

– Position seal -1- so it is flush with panel on both sides.

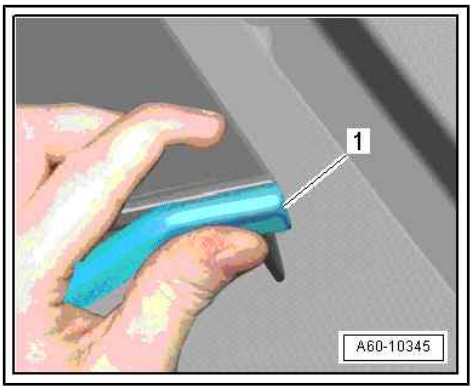

– Press seal -1- into channel as shown in detail view.

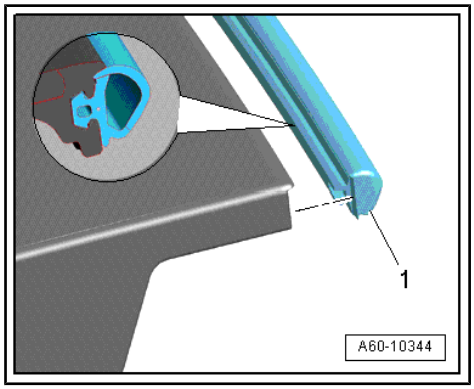

– Press seal -1- completely into channel, working inwards from both sides.

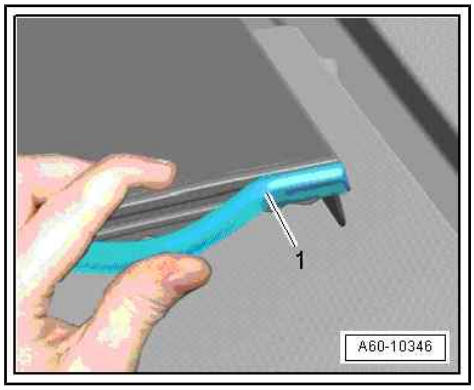

1.11 Removing and installing sunroof sun blind

Protected by copyright. Copying for private or commercial purposes, in part or in whole, is not permitted unless authorised by AUDI AG. AUDI AG does not guarantee or accept any liability with respect to the correctness of information in this document. Copyright by AUDI AG.

Removing tension bow

– Open glass panel.

– Slide sun blind forwards, closing it about halfway.

– Slide a plastic wedge into recess -arrow- and carefully lift slide (top section) -1- out of fastener on slide (bottom section).

• Do not lift top section of slide too far off bottom section.

– Open both slides by moving top sections towards rear against bottom sections.

– Lift off tension bow.

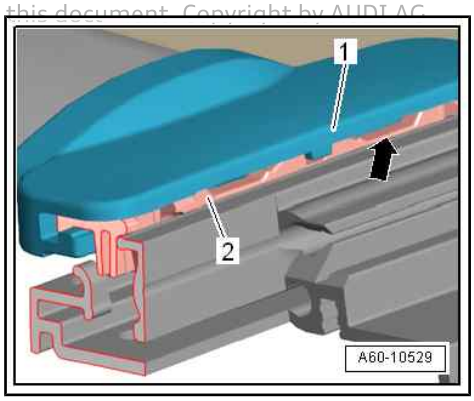

– Pull top sections of both slides -2- to the side out of tension bow -1-.

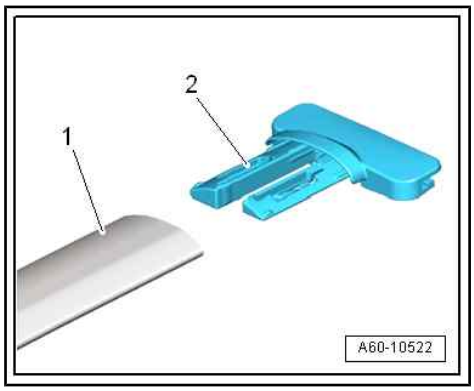

– Pull tension bow -2- to the side off sunroof sun blind -1-.

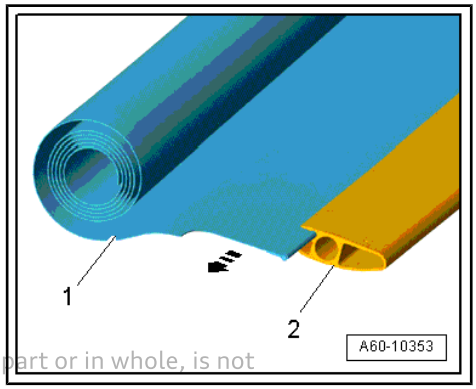

Protected by copyright. Copying for private or commercial purposes, in part or in whole, is not permitted unless authorised by AUDI AG. AUDI AG does not guarantee or accept any liability with respect to the correctness of information in this document. Copyright by AUDI

Removing sunroof sun blind

– Glass panel removed ⇒ page 170

– Remove bolts -1- from cover (rear) -2-.

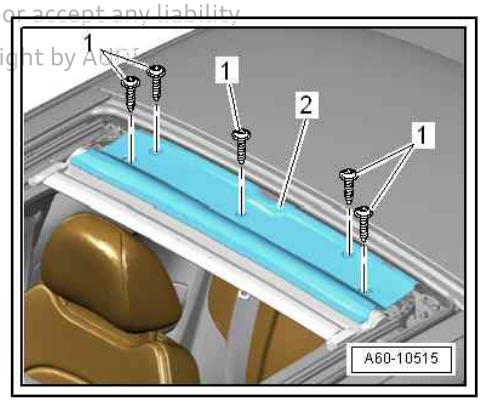

– Lift cover (rear) -1- off in direction of -arrow-.

– Move guide rails to "roof closed" position.

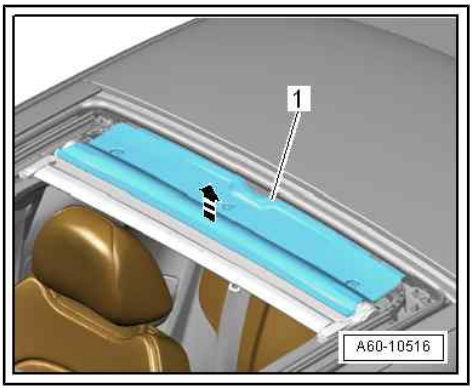

– Remove bolts -1- from rear of sunroof sun blind -2- on both sides.

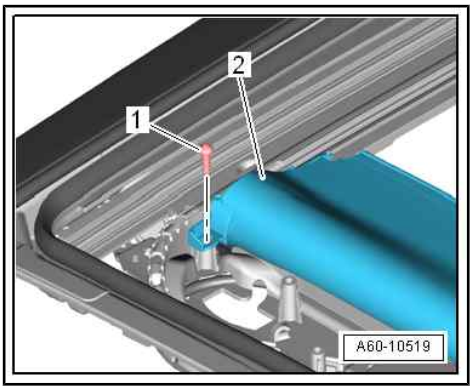

– Lift sunroof sun blind -1- diagonally up at rear (as shown) and pull tension bow with slides towards rear out of guides (in direction of -arrows-).

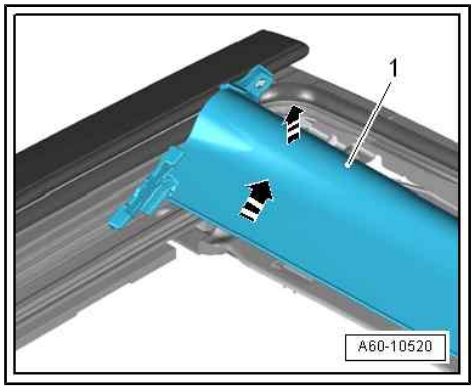

– Lift out sunroof sun blind -1-.

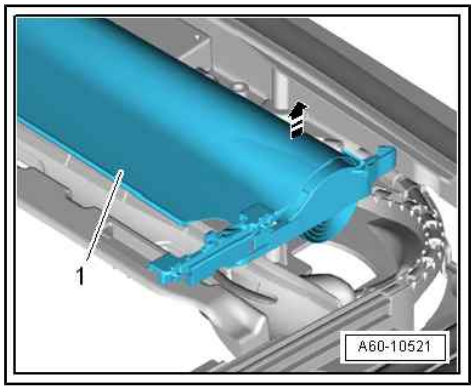

Installing sunroof sun blind

Protected by copyright. Copying for private or commercial purposes, in part or in whole, is not permitted unless authorised by AUDI AG. AUDI AG does not guarantee or accept any liability with respect to the correctness of information in this document. Copyright by AUDI AG.

1 - Slide (bottom section)

Note

Slide (bottom section) i tensioning strap.

- ❑ Slide (bottom section) must be inserted into guide together with tensioning strap, as shown in detail view of illustration.

2 - Slide (top section)

- ❑ Insert into slide (bottom section) ⇒ page 191

3 - Tension bow

4 - Moulding

5 - Tensioning strap

- ❑ Not available as replacement part

6 - Guide

7 - Crosspiece

- ❑ Not available as replacement part

8 - Bolt

- ❑ 2 Nm

9 - Centring mechanism

- ❑ Not available as replacement part
- ❑ Insert in guide ⇒ page 190

10 - Stop

– Insert into centring mechanism

11 - Sunroof sun blind

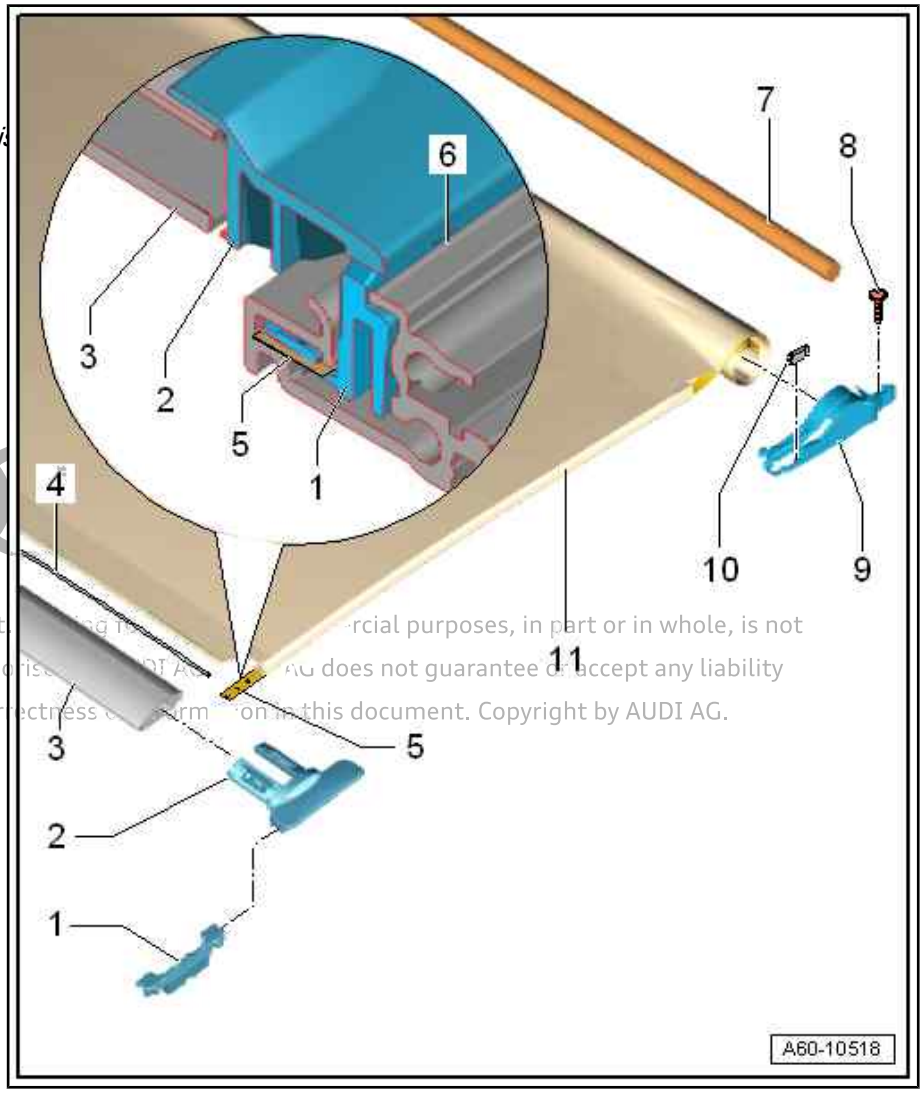

Protected by copyright. Copying for private or commercial purposes, in part or in whole, is not permitted unless authorised by AUDI AG. AUDI AG does not guarantee or accept any liability with respect to the correctness of information in this document. Copyright by AUDI AG.

– Insert slide (bottom section) in guide rail -arrow-.

• The slides must run exactly in the guides on both sides.

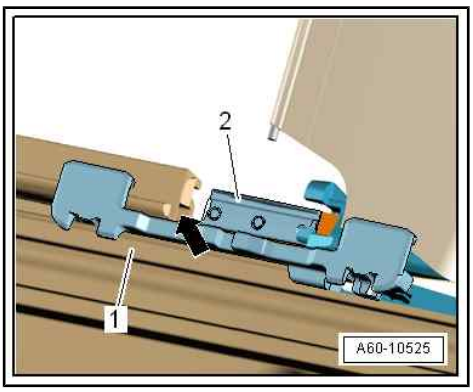

– Guide lugs -arrows- must rest on or run on guide, as shown.

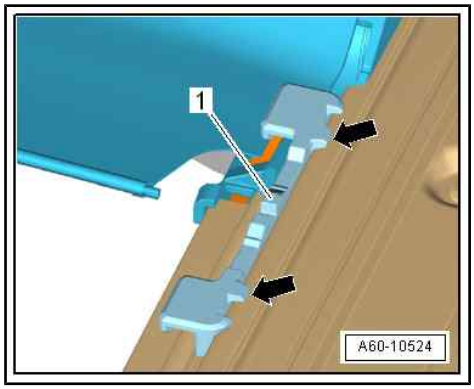

– Slide (bottom section) -2- must be inserted into guide rail -3-, as shown.
– Slide slide (top section) -1- with tensioning strap onto slide (bottom section) -2- from top.

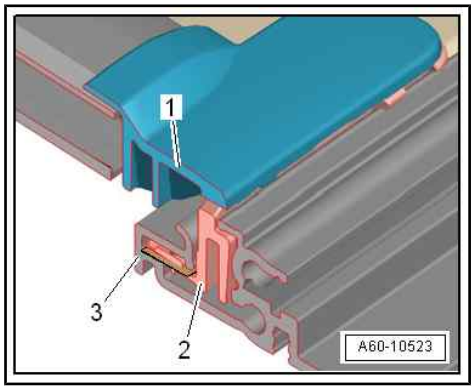

– Slide guide lug -arrow- of centring mechanism -2- flush into guide -1- on sunroof frame.

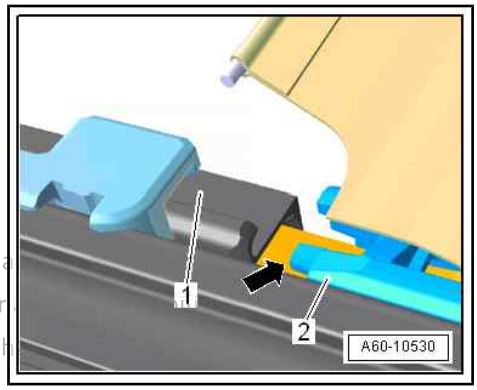

Protected by copyright. Copying for private or commercial purposes, in pa
permitted unless authorised by AUDI AG. AUDI AG does not guarantee or
with respect to the correctness of information in this document. Copyrigh

– Centring mechanism on sunroof sun blind must be slotted into guide rail at top -arrow-...

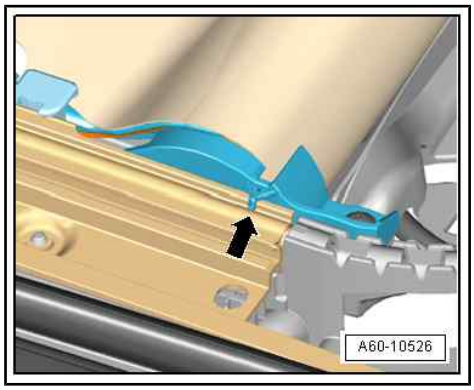

– ... and bottom -2- on both sides, as shown.
– To do so, guides of centring mechanism must be guided exactly into guide rail -arrow-.

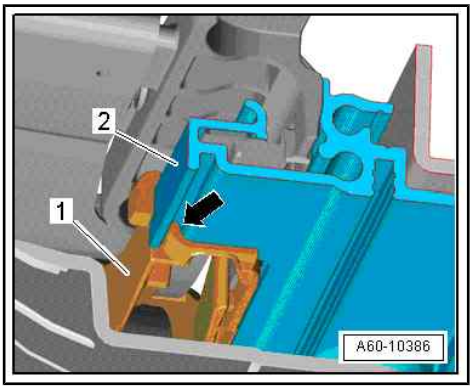

– Tighten bolt -1- to specified torque ⇒ Item 7 (page 166) .
– Install tension bow ⇒ page 191 .

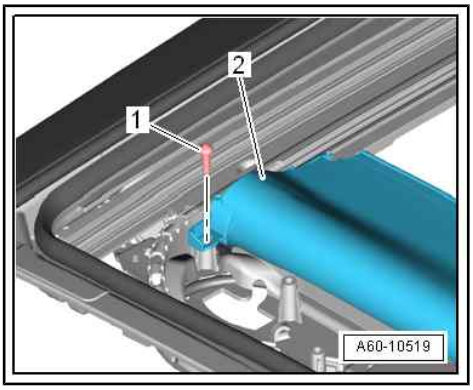

Installing tension bow

– Sunroof sun blind is installed ⇒ page 188 .
– Carefully insert moulding -2- of sun blind fabric -1- inserted into loop into moulding channel in tension bow.

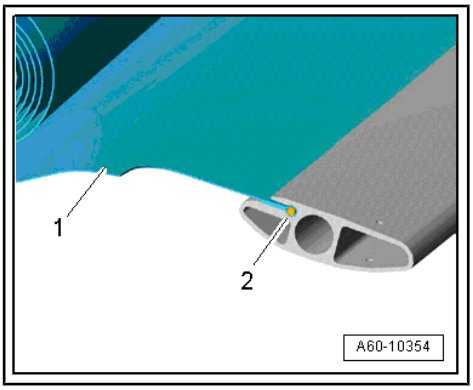

– Insert slides (top sections) -2- into tension bow -1- on both sides.
– Insert slide (top section) -3- from rear to front (direction of -arrow-) into slide (bottom section) as far as fastener -arrow-.

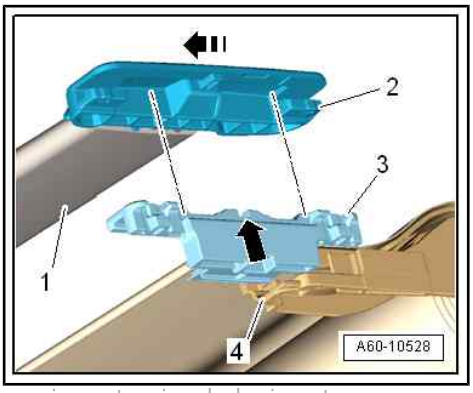

Protected by copyright. Copying for private or commercial purposes, in part or in whole, is not permitted unless authorised by AUDI AG. AUDI AG does not guarantee or accept any liability with respect to the correctness of information in this document. Copyright by AUDI AG.

Removing and installing grip

- Open glass panel.
- Remove bolts -2- and detach grip -1-.
- Re-install grip on tension bow and check that sun blind can be opened and closed completely.
- Tighten bolts to specified torque ⇒ Item 9 (page 166) .

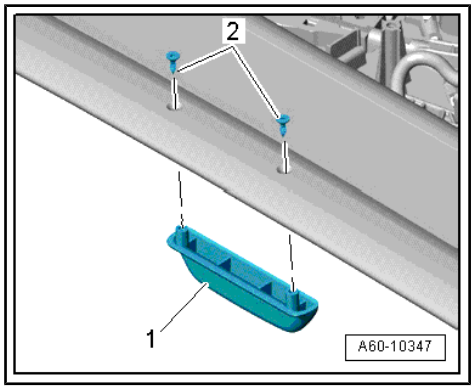

1.12 Removing and installing wind deflector

Removing ⇒ page 192

Installing ⇒ page 193 .

Protected by copyright. Copying for private or commercial purposes, in part or in whole, is not permitted unless authorised by AUDI AG. AUDI AG does not guarantee or accept any liability with respect to the correctness of information in this document. Copyright by AUDI AG.

Caution

After removing and installing mechanical components or control units for the sliding/tilting sunroof, always perform adaption via the Guided Functions mode in Guided Fault Finding (diagnostic address 09) ⇒ Vehicle diagnostic tester.

Removing

- Open sliding sunroof fully.
- Press wind deflector -1- down and pull moulding -2- out of surround frame on outside (both sides).

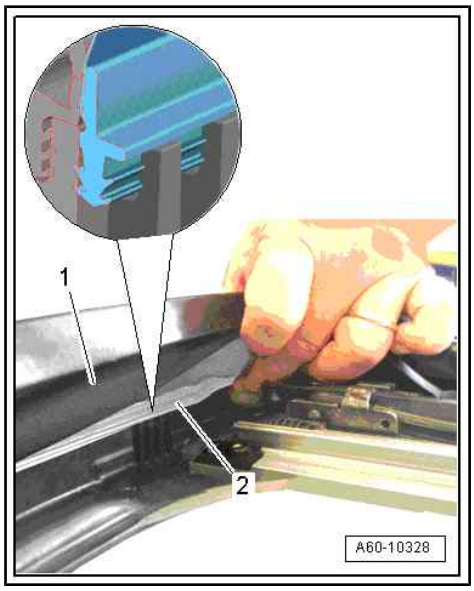

– Keep pressing wind deflector down and pull moulding -1- out of surround frame and upwards off retaining tabs.

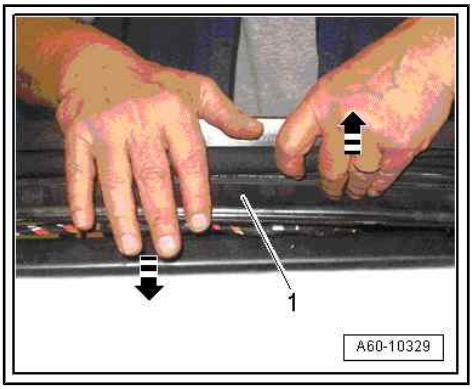

– Remove bolts (left and right) from bearing.
– Pull wind deflector -1- forwards out of mounting and lift off.

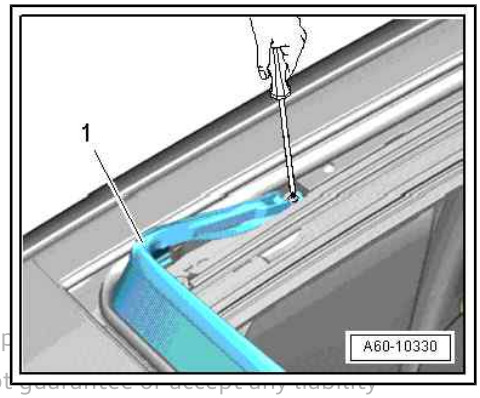

Note

Only raise wind deflector with retraction mechanism and pull out of mounting to side.

Installing

Protected by copyright. Copying for private or commercial p
permitted unless authorised by AUDI AG. AUDI AG does not
with respect to the correctness of information in this document. Copyright by AUDI AG.

Note

Note different versions of wind deflector.

Wind deflector without retraction mechanism

– Insert spring -1- in wind deflector -2-.

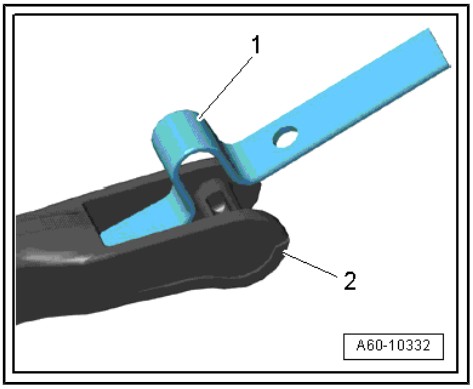

– Slide wind deflector with spring -1- towards rear into mounting.

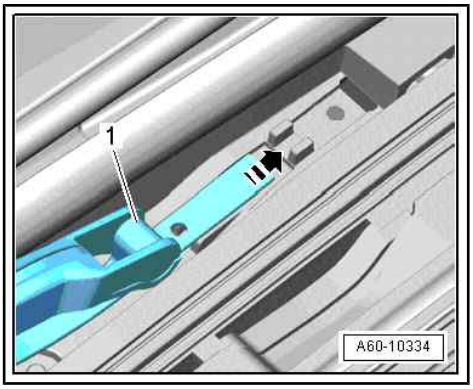

– Screw in bolts -2- and tighten to specified torque ⇒ Item 5 (page 165) .

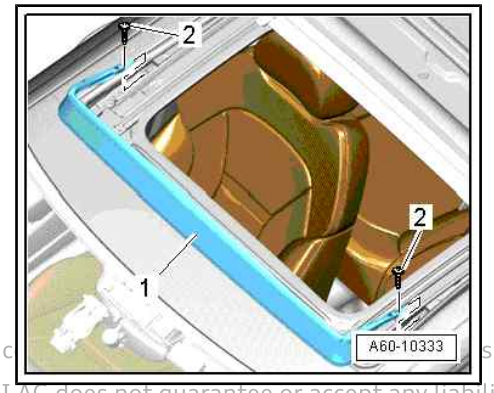

Protected by copyright. Copying for private or c s not permitted unless authorised by AUDI AG. AUDI AG does not guarantee or accept any liability with respect to the correctness of information i

Wind deflector with retraction mechanism

Note

The mounting for the wind deflector must remain installed; it is only removed in the illustration for greater clarity.

– Move wind deflector -3- to vertical position and engage from side in mounting -3-.

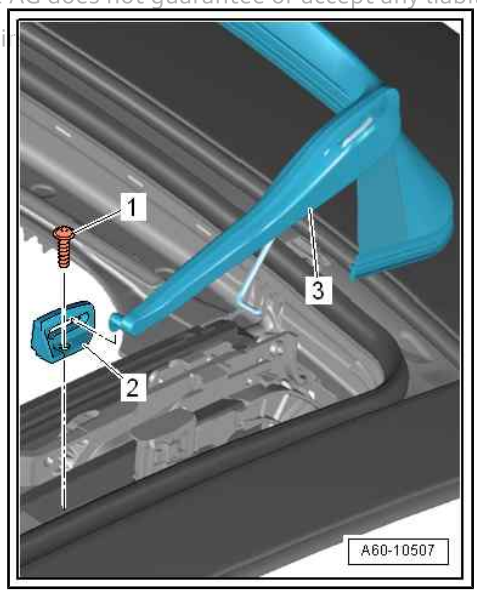

– Insert spring -2- in wind deflector -2-, as shown.

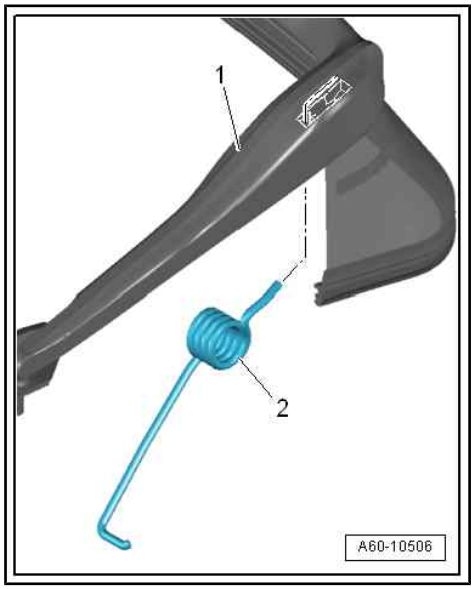

– Swivel wind deflector forwards and insert spring in guide on frame -arrow-.

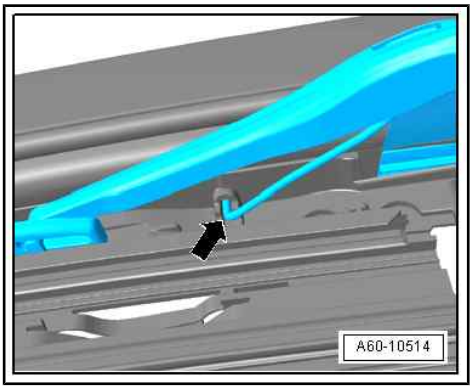

– Align moulding -1- centrally or so that it makes contact with stop -arrow-.

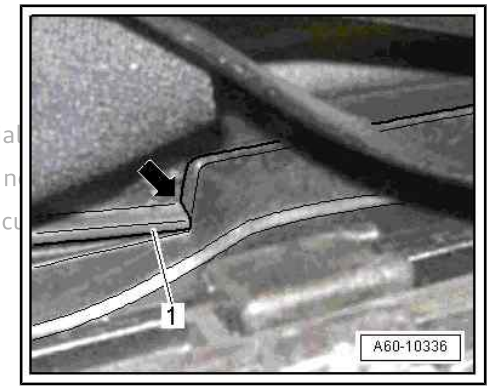

Note

The moulding must make contact with the stop; otherwise it will be distorted when it is pressed into the surround frame.

Protected by copyright. Copying for private or commercial
permitted unless authorised by AUDI AG. AUDI AG does n
with respect to the correctness of information in this docu

– Carefully press moulding -1- into surround frame (front) -2-.

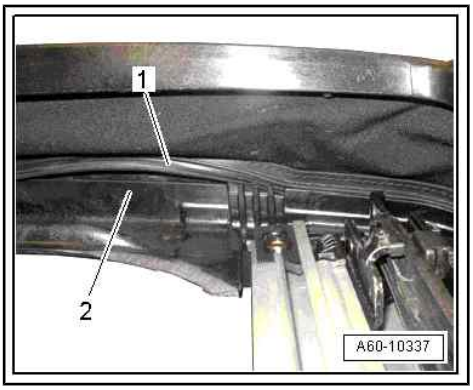

Note

Press the complete moulding evenly into the surround frame (moulding must not be wavy).

– Press moulding -1- into retaining tabs -arrows- of surround frame -2- using an assembly wedge.

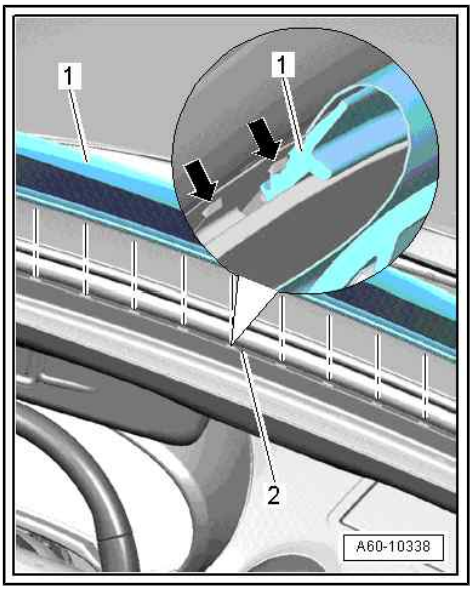

2 Water drain hoses

⇒ "2.1 Overview - water drain hoses", page 196

⇒ "2.2 Cleaning water drain hoses", page 198

⇒ "2.3 Removing and installing water drain hoses", page 199

2.1 Overview - water drain hoses

⇒ "2.1.1 Overview - water drain hoses, A3", page 196

⇒ "2.1.2 Overview - water drain hoses, Sportback", page 197

⇒ "2.1.3 Overview - water drain hoses, Saloon", page 198

2.1.1 Overview - water drain hoses, A3

1 - Sunroof

2 - Water drain hose

- ❑ Cleaning ⇒ page 198
- ❑ Removing and installing ⇒ page 199

3 - Connection

4 - Grommet

- – When installing, coat with soap solution and press completely into retainer

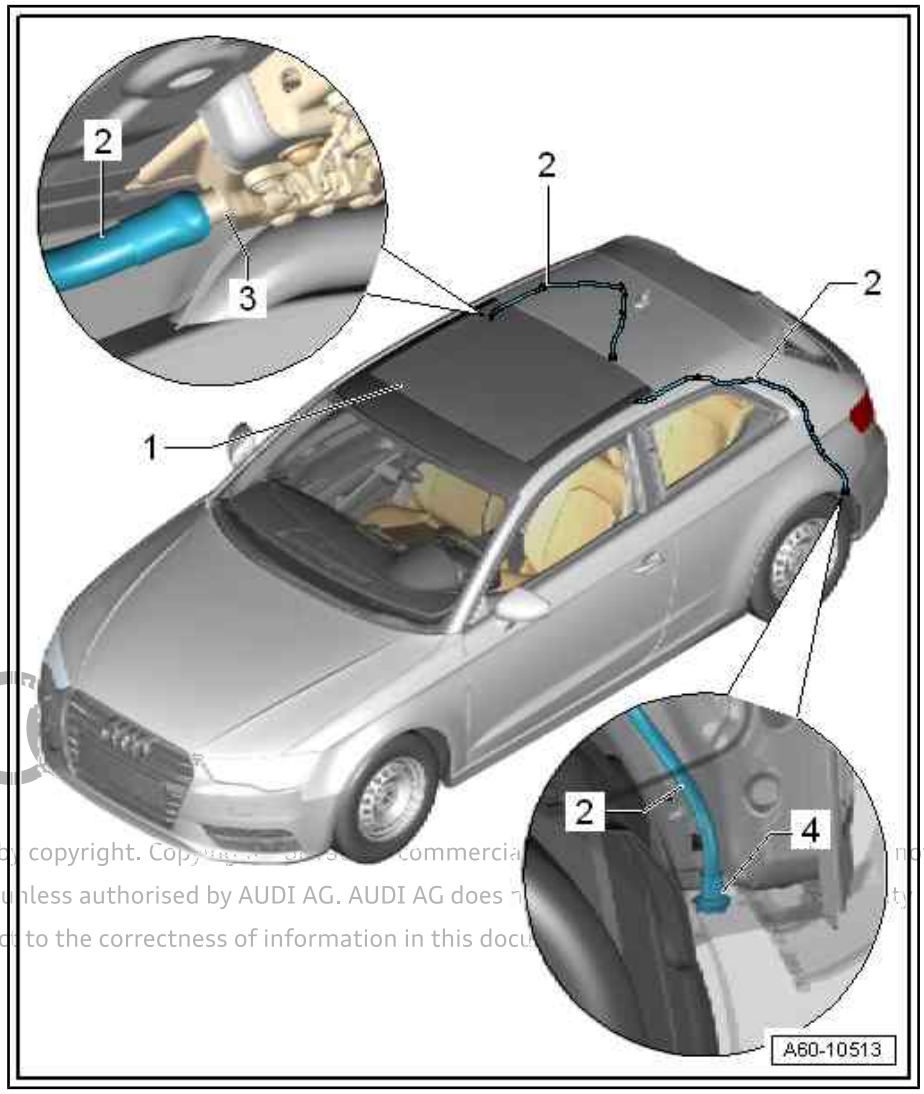

Protected by copyright. Copy... commercia... not permitted unless authorised by AUDI AG. AUDI AG does ... with respect to the correctness of information in this docu...

2.1.2 Overview - water drain hoses, Sportback

1 - Water drain hose

- ❑ Cleaning ⇒ page 198
- ❑ Removing and installing ⇒ page 199

2 - Sunroof frame

- ❑ With connection

3 - Grommet

- – When installing, coat with soap solution and press completely into retainer

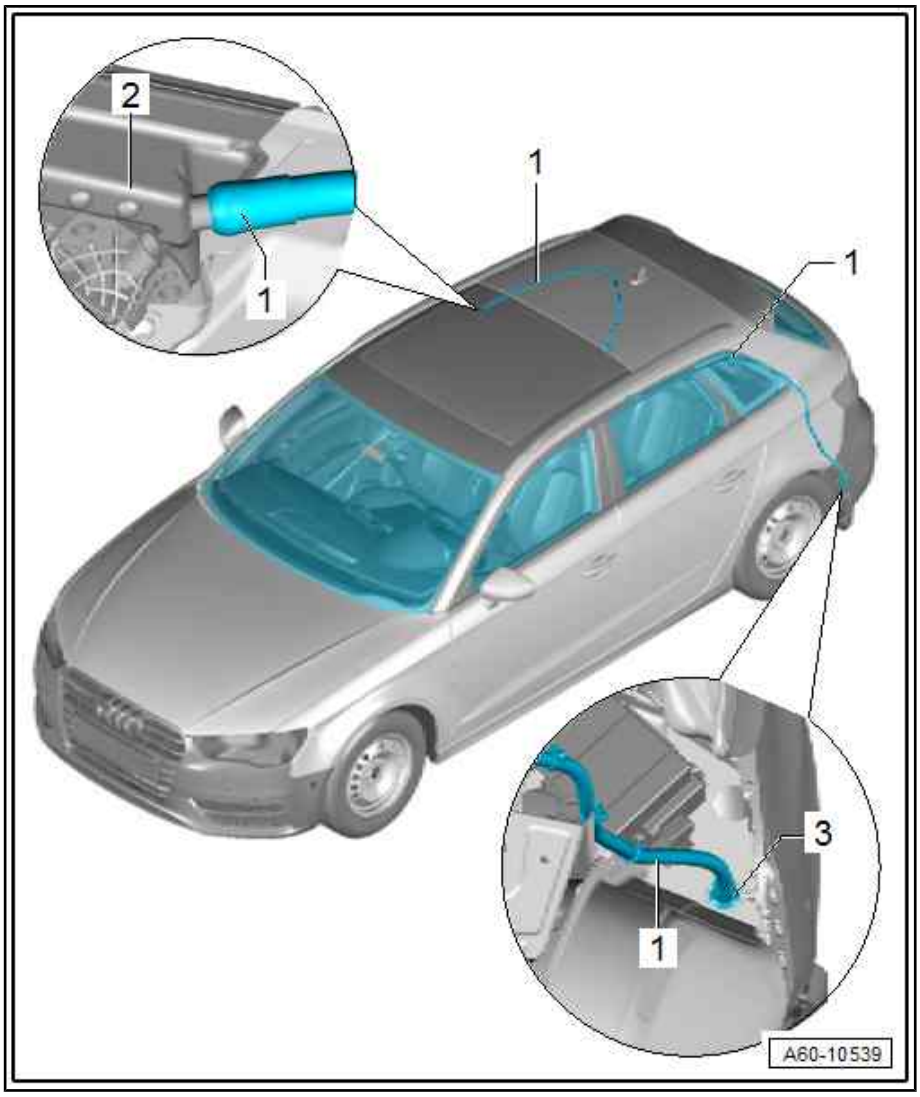

Protected by copyright. Copying for private or commercial purposes, in part or in whole, is not permitted unless authorised by AUDI AG. AUDI AG does not guarantee or accept any liability with respect to the correctness of information in this document. Copyright by AUDI AG.

2.1.3 Overview - water drain hoses, Saloon

1 - Water drain hose

- ❑ Cleaning ⇒ page 198
- ❑ Removing and installing ⇒ page 200

2 - Sunroof frame

- ❑ With connection

3 - Grommet

- – When installing, coat with soap solution and press completely into retainer

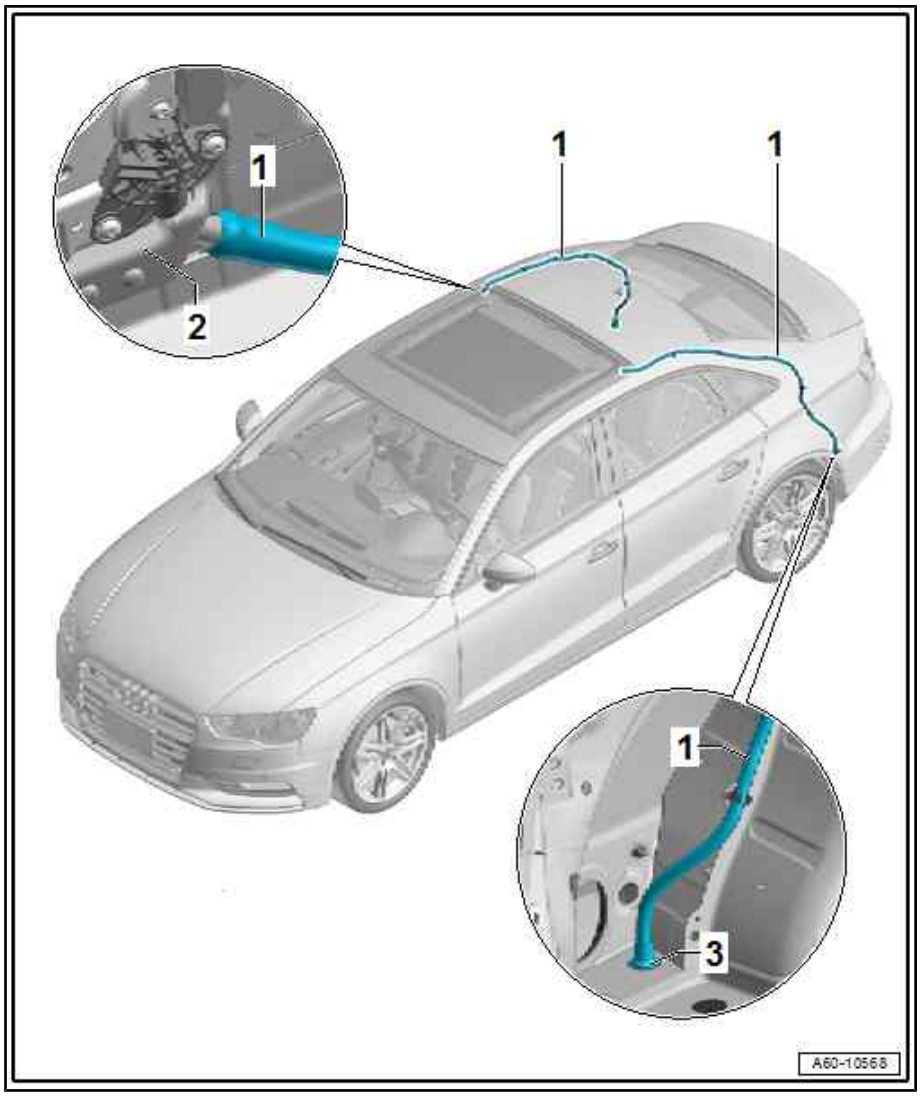

2.2 Cleaning water drain hoses

Special tools and workshop equipment required

- ♦ Cleaning and insertion aid - VAS 6620-

Protected by copyright. Copying for private or commercial purposes, in part or in whole, is not permitted unless authorised by AUDI AG. AUDI AG does not guarantee or accept any liability with respect to the correctness of information in this document. Copyright by AUDI AG.

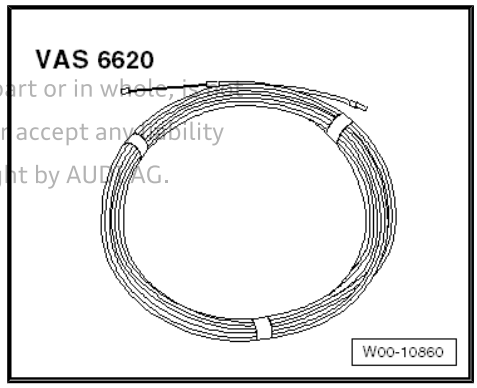

Note

Use cleaning and insertion aid - VAS 6620- to clean water drain hoses.

- Water drain hoses (rear) are routed on C-pillars and end in wheel housings (rear).
- Clean from bottom end of hose.
- Wheel housing liner (rear) must be pressed to the side.
- After glass panel has been removed, water drain hoses can also be cleaned from top.

2.3 Removing and installing water drain hoses

⇒ "2.3.1 Removing and installing water drain hoses - A3 and A3 Sportback", page 199

⇒ "2.3.2 Removing and installing water drain hoses - Saloon", page 200

2.3.1 Removing and installing water drain hoses - A3 and A3 Sportback

1 - Water drain hose (rear)

- Remove side trim ⇒ General body repairs, interior; Rep. gr. 70 ; Passenger compartment trim panels; Removing and installing D-pillar trim .
- To remove component, first pull it off at connection for sliding/tilting sunroof.
- Pull water drain hose out of hose retainers.
- Unfasten grommet from retainer and pull water drain hose downwards out of wheel housing.

2 - C-pillar

3 - Connection

4 - Hose retainer

- ❑ Clip into C-pillar / side panel in luggage compartment.
- ❑ Press water drain hose into retainers

5 - Grommet

- Coat with soap solution and press completely into retainer

6 - Retainer

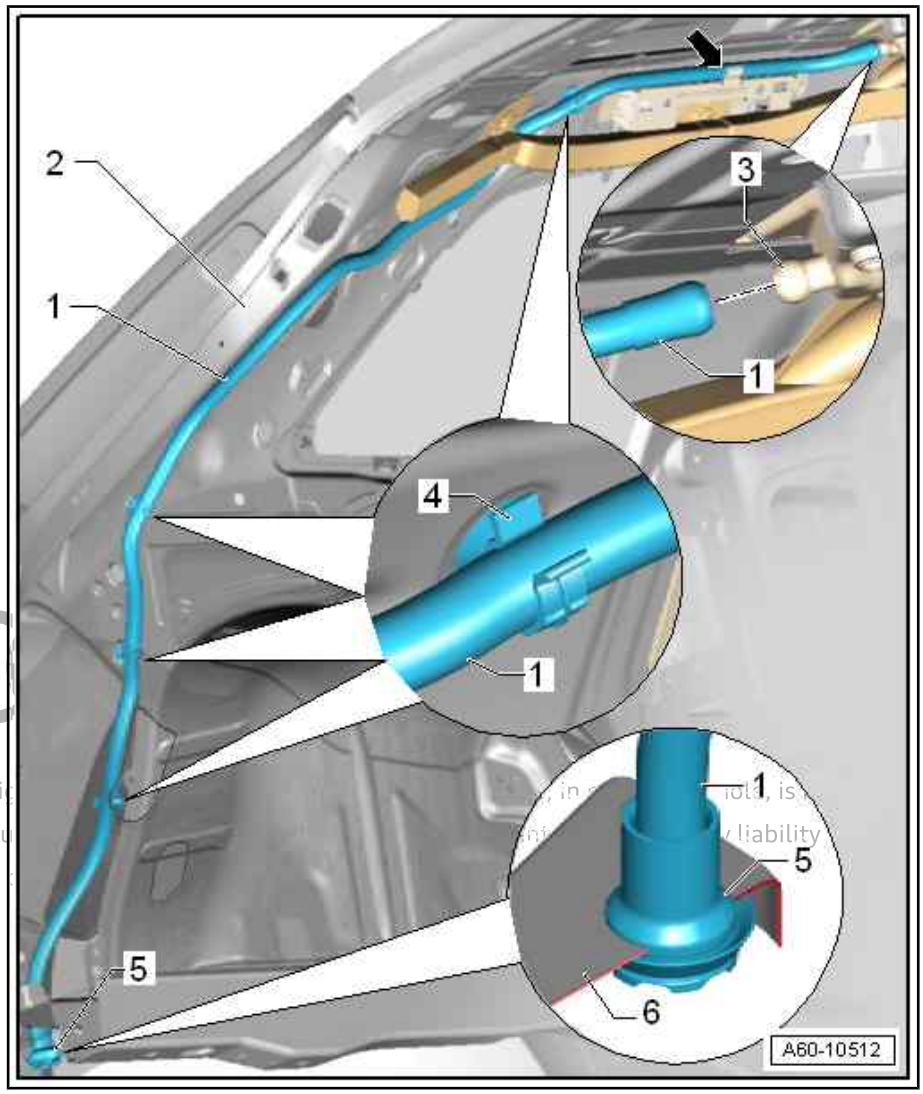

Protected by copyri
permitted unless au
with respect to the

2.3.2 Removing and installing water drain hoses - Saloon

1 - Water drain hose (rear)

- Remove luggage compartment side trim ⇒ General body repairs, interior; Rep. gr. 70 ; Luggage compartment trim panels; Removing and installing luggage compartment side trim .
- To remove component, first pull it off at connection for sliding/tilting sunroof.
- Pull water drain hose out of hose retainers.
- Unfasten grommet from retainer and pull water drain hose downwards out of wheel housing.

2 - C-pillar

3 - Connection

4 - Hose retainer

- ❑ Clip into C-pillar / side panel in luggage compartment.
- ❑ Press water drain hose into retainers.

5 - Grommet

- Coat with soap solution and press completely into retainer

6 - Retainer

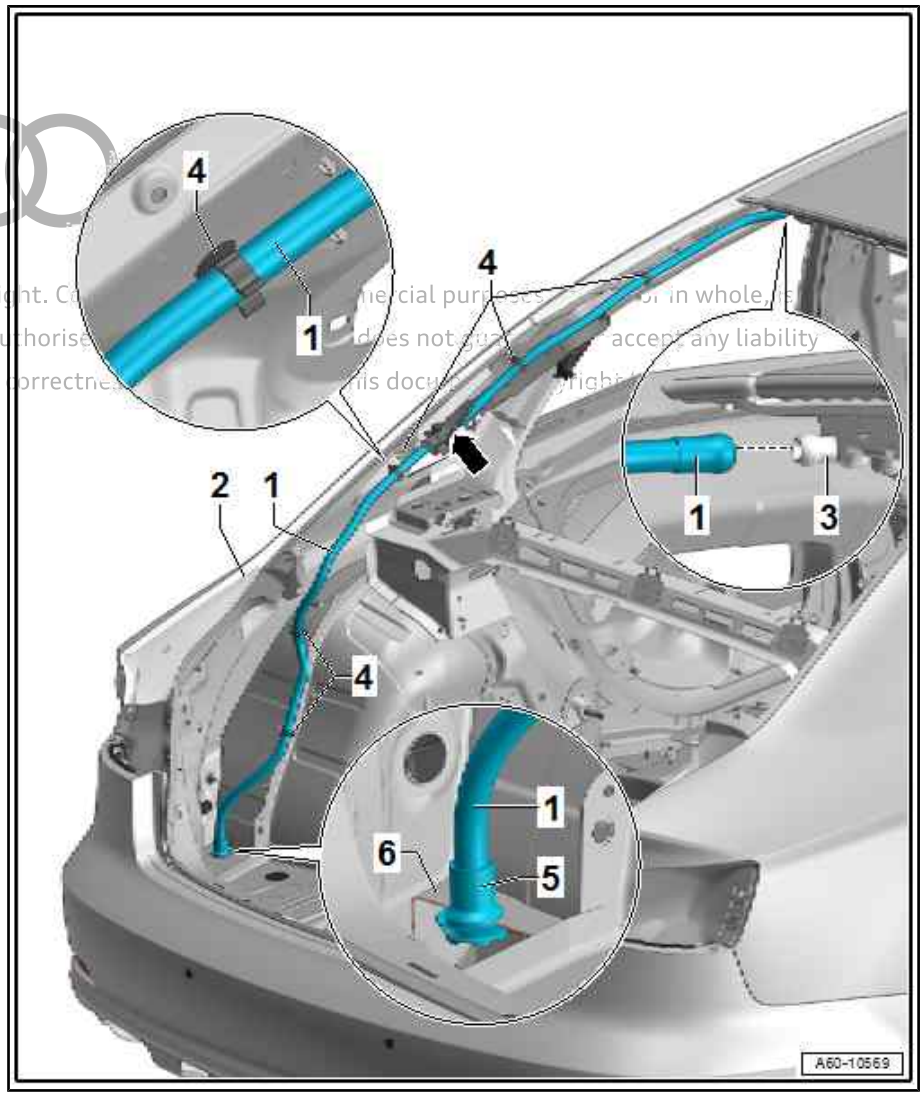

Protected by copyright. Commercial purposes, in whole or in part, are prohibited unless authorised. Audi does not guarantee or accept any liability with respect to the correctness of this document. All rights reserved.

63 – Bumpers

1 Bumper (front)

⇒ “1.1 Exploded view - bumper cover”, page 201

⇒ “1.2 Exploded view - impact bar”, page 211

⇒ “1.3 Removing and installing bumper cover”, page 214

⇒ “1.4 Adjusting bumper cover”, page 218

⇒ “1.5 Removing and installing bumper cover mounting”, page 221

⇒ “1.6 Removing and installing impact bar”, page 223

⇒ “1.7 Removing and installing attachments”, page 227

1.1 Exploded view - bumper cover

⇒ “1.1.1 Exploded view - bumper cover, A3 up to model year 2016”, page 201

⇒ “1.1.2 Exploded view - bumper cover, A3 from model year 2017 onwards”, page 203

⇒ “1.1.3 Exploded view - bumper cover, A3 S line and S3 up to model year 2016”, page 204

⇒ “1.1.4 Exploded view - bumper cover, RS 3 Sportback up to model year 2018”, page 205

⇒ “1.1.5 Exploded view - bumper cover, RS 3 Saloon, RS 3 Sportback from model year 2019 onwards”, page 206

⇒ “1.1.6 Exploded view - bumper cover, A3 Saloon from model year 2017 onwards”, page 208

⇒ “1.1.7 Exploded view - bumper cover, S3 Saloon up to model year 2016”, page 209

⇒ “1.1.8 Exploded view - bumper cover, A3 S line and S3 from model year 2017 onwards”, page 210

1.1.1 Exploded view - bumper cover, A3 up to model year 2016

Protected by copyright. Copying for private or commercial purposes, in part or in whole, is not permitted unless authorised by AUDI AG. AUDI AG does not guarantee or accept any liability with respect to the correctness of information in this document. Copyright by AUDI AG.

1 - Closure plate for bumper cover

- ❑ Removing and installing ⇒ page 228

2 - Bolt

- ❑ 2.5 Nm

3 - Air intake grille

- ❑ Removing and installing ⇒ page 231

4 - Bumper cover

- ❑ Removing and installing ⇒ page 214

5 - Mounting

- ❑ For speed nut

6 - Speed nut

7 - Bolt

- ❑ 4 Nm

8 - Mounting

- ❑ For fog light
- ❑ Different versions
- ❑ Removing and installing ⇒ page 241

9 - Bolt

- ❑ 4.5 Nm

10 - Cover for washer jet

- ❑ For headlight washer system
- ❑ Removing and installing ⇒ page 241

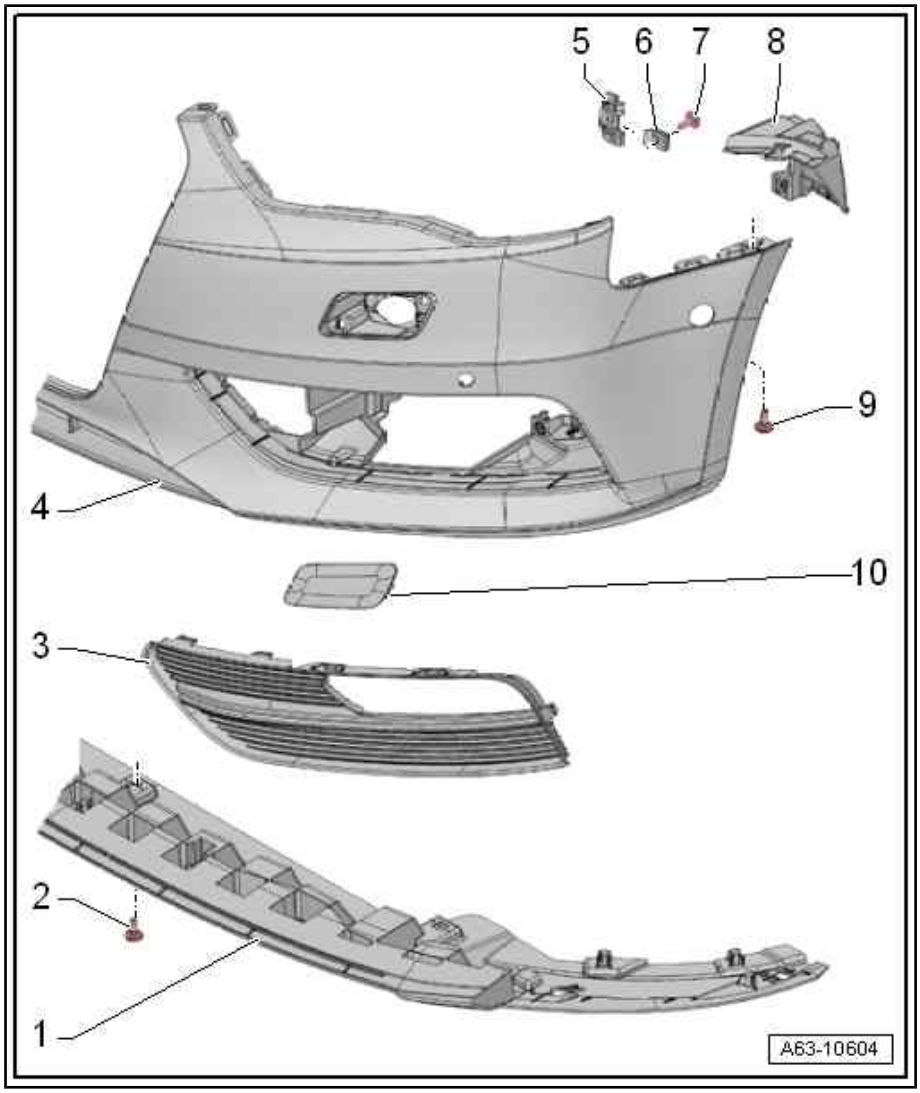

Protected by copyright. Copying for private or commercial purposes, in part or in whole, is not permitted unless authorised by AUDI AG. AUDI AG does not guarantee or accept any liability with respect to the correctness of information in this document. Copyright by AUDI AG.

1.1.2 Exploded view - bumper cover, A3 from model year 2017 onwards

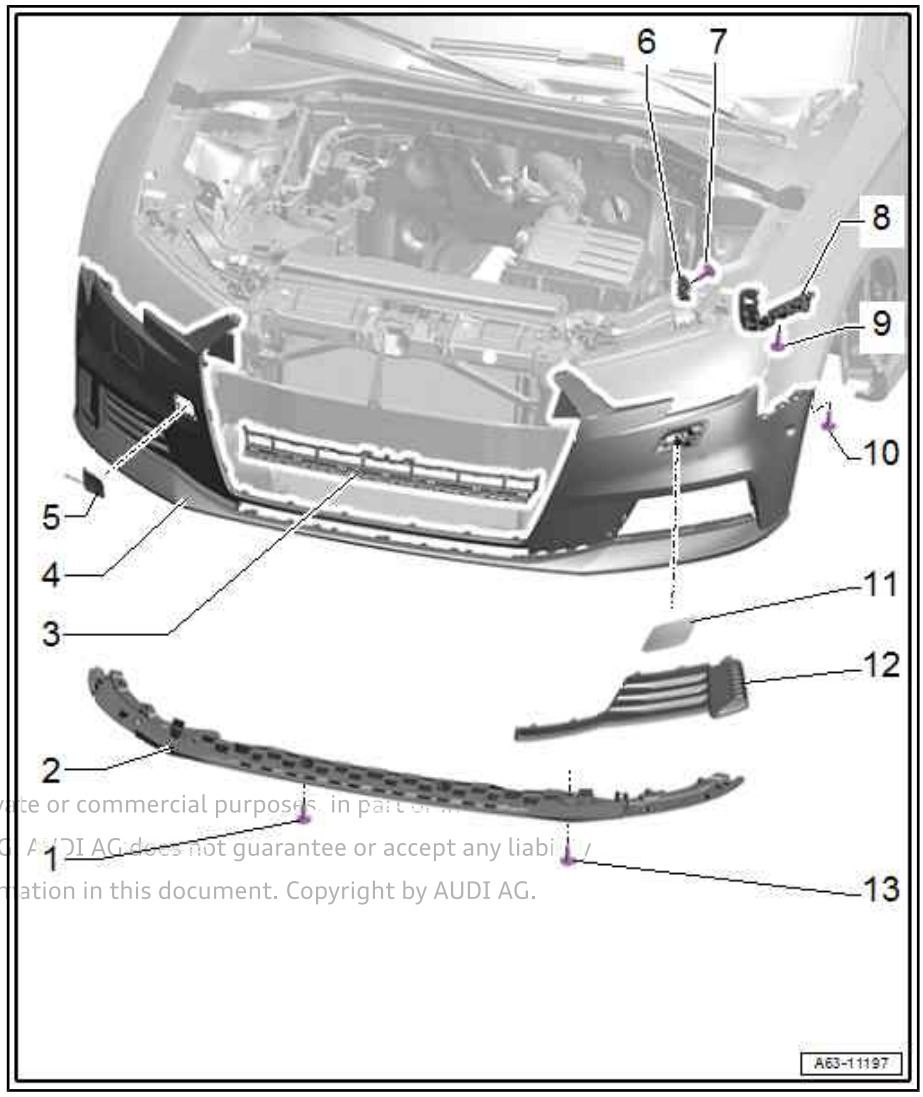

1 - Bolt
- ❑ 2.5 Nm

2 - Closure plate for bumper cover
- ❑ Removing and installing ⇒ page 229

3 - Air intake grille (centre)
- ❑ Removing and installing ⇒ page 236

4 - Bumper cover
- ❑ Removing and installing ⇒ page 214

5 - Cover for towing eye

6 - Mounting

7 - Bolt
- ❑ 4 Nm

8 - Mounting
- ❑ For bumper cover
- ❑ For securing headlight
- ❑ Exploded view ⇒ page 24

Protected by copyright. Copying for private or commercial purposes, in part or in
permitted unless authorised by AUDI AG. AUDI AG does not guarantee or accept any liability
with respect to the correctness of information in this document. Copyright by AUDI AG.

9 - Bolt
- ❑ Tightening torque ⇒ page 24

10 - Bolt
- ❑ 4.5 Nm

11 - Cover for washer jet
- ❑ For headlight washer system
- ❑ Removing and installing ⇒ page 241

12 - Air intake grille
- ❑ Removing and installing ⇒ page 233

13 - Bolt
- ❑ 3x
- ❑ 4.5 Nm

1.1.3 Exploded view - bumper cover, A3 S line and S3 up to model year 2016

Protected by copyright. Copying for private or commercial purposes, in part or in whole, is not permitted unless authorised by AUDI AG. AUDI AG does not guarantee or accept any liability with respect to the correctness of information in this document. Copyright by AUDI AG.

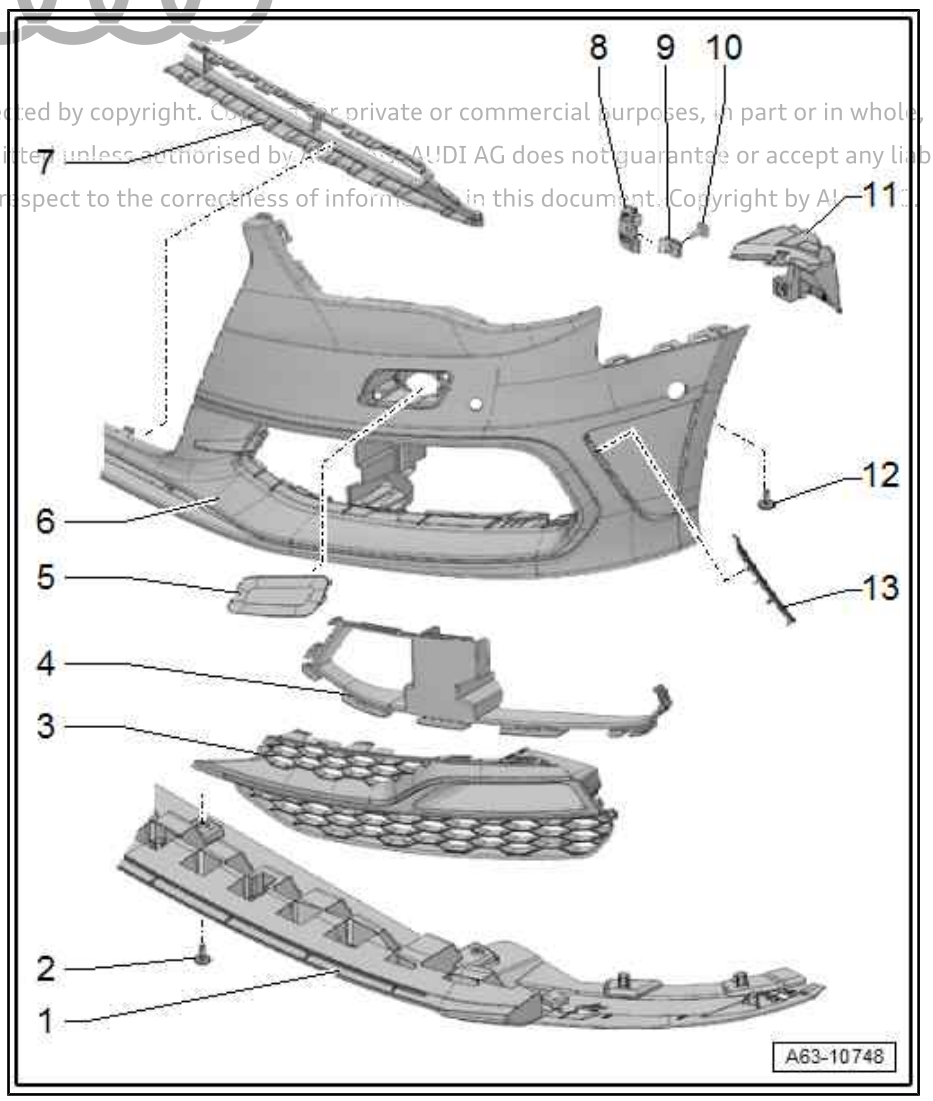

1 - Closure plate for bumper cover
- ❑ Removing and installing ⇒ page 228

2 - Bolt
- ❑ 2.5 Nm

3 - Air intake grille
- ❑ Removing and installing ⇒ page 232

4 - Cover
- ❑ For air intake grille

5 - Cover for washer jet
- ❑ For headlight washer system
- ❑ Removing and installing ⇒ page 241

6 - Bumper cover
- ❑ Removing and installing ⇒ page 214

7 - Air intake grille (centre)
- ❑ Removing and installing ⇒ page 236

8 - Mounting
- ❑ For speed nut

9 - Speed nut

10 - Bolt
- ❑ 4 Nm

11 - Mounting
- ❑ For fog light
- ❑ Different versions
- ❑ Removing and installing ⇒ page 241

12 - Bolt
- ❑ 4.5 Nm

13 - Air intake grille trim (side)
- ❑ Removing and installing ⇒ page 238

1.1.4 Exploded view - bumper cover, RS 3 Sportback up to model year 2018

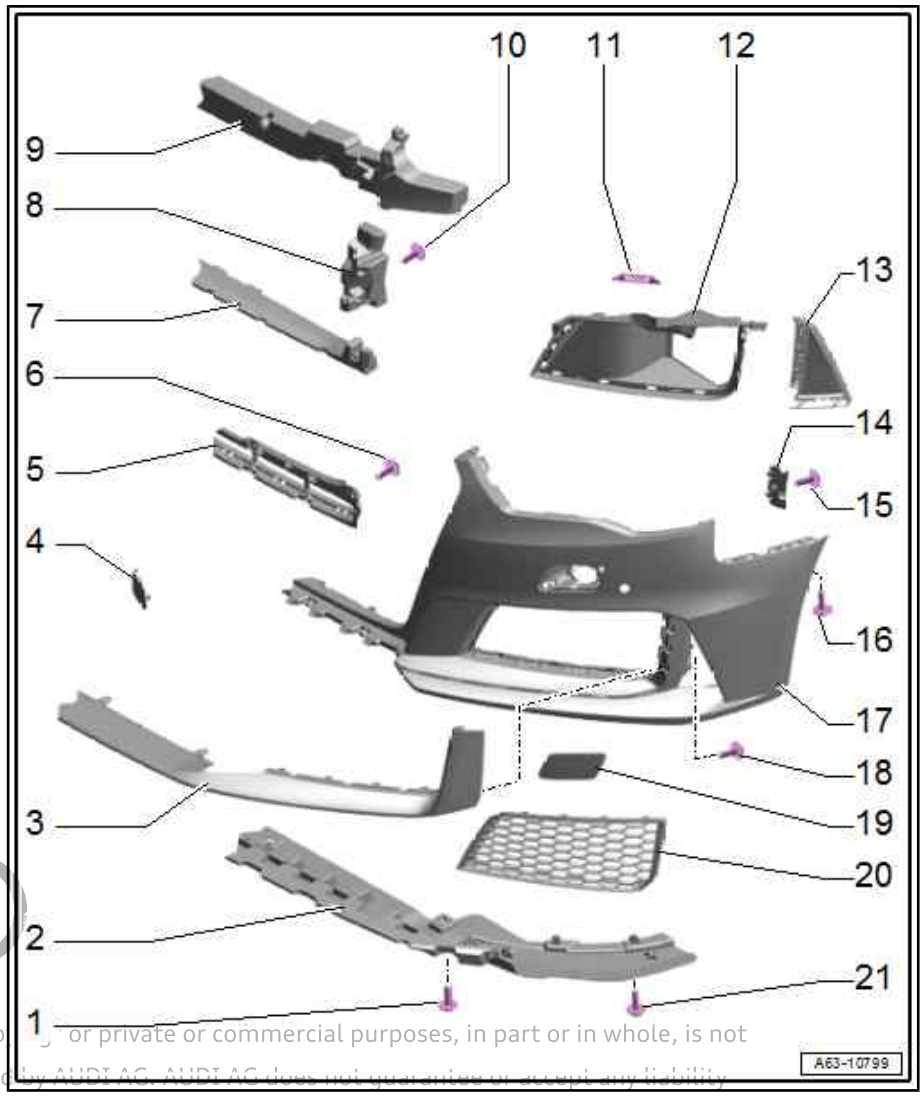

1 - Bolt
- ❑ 3x
- ❑ 2 Nm

2 - Closure plate for bumper cover
- ❑ Removing and installing ⇒ page 230

3 - Spoiler (bottom section)
- ❑ Removing and installing ⇒ page 242

4 - Cover for towing eye

5 - Reinforcement strut (bottom)
- ❑ Removing and installing ⇒ page 231

6 - Bolt
- ❑ 8x
- ❑ 2 Nm

7 - Moulded foam insert (bottom)
- ❑ Removing and installing ⇒ page 230

8 - Moulded foam insert (side)
- ❑ Removing and installing ⇒ page 230

9 - Moulded foam insert
- ❑ Removing and installing ⇒ page 248

10 - Bolt
- ❑ 2 Nm

11 - Retaining clip
- ❑ 6x

12 - Cover
- ❑ For air intake grille
- ❑ Removing and installing ⇒ page 237

13 - Trim
- ❑ For air inlet (side)
- ❑ Removing and installing ⇒ page 238

14 - Threaded mounting
- ❑ For bolt

15 - Bolt
- ❑ 4 Nm

16 - Bolt
- ❑ 2 Nm

17 - Bumper cover
- ❑ Removing and installing ⇒ page 214

Protected by copyright. Copying for private or commercial purposes, in part or in whole, is not permitted unless authorised by AUDI AG. AUDI AG does not guarantee or accept any liability with respect to the correctness of information in this document. Copyright by AUDI AG.

18 - Bolt

- ❑ 2 Nm

19 - Cover for washer jet

- ❑ For headlight washer system
- ❑ Removing and installing ⇒ page 241

20 - Air intake grille

- ❑ Removing and installing ⇒ page 235

21 - Bolt

- ❑ Bolt, 2x
- ❑ 2 Nm

1.1.5 Exploded view - bumper cover, RS 3 Saloon, RS 3 Sportback from model year 2019 onwards

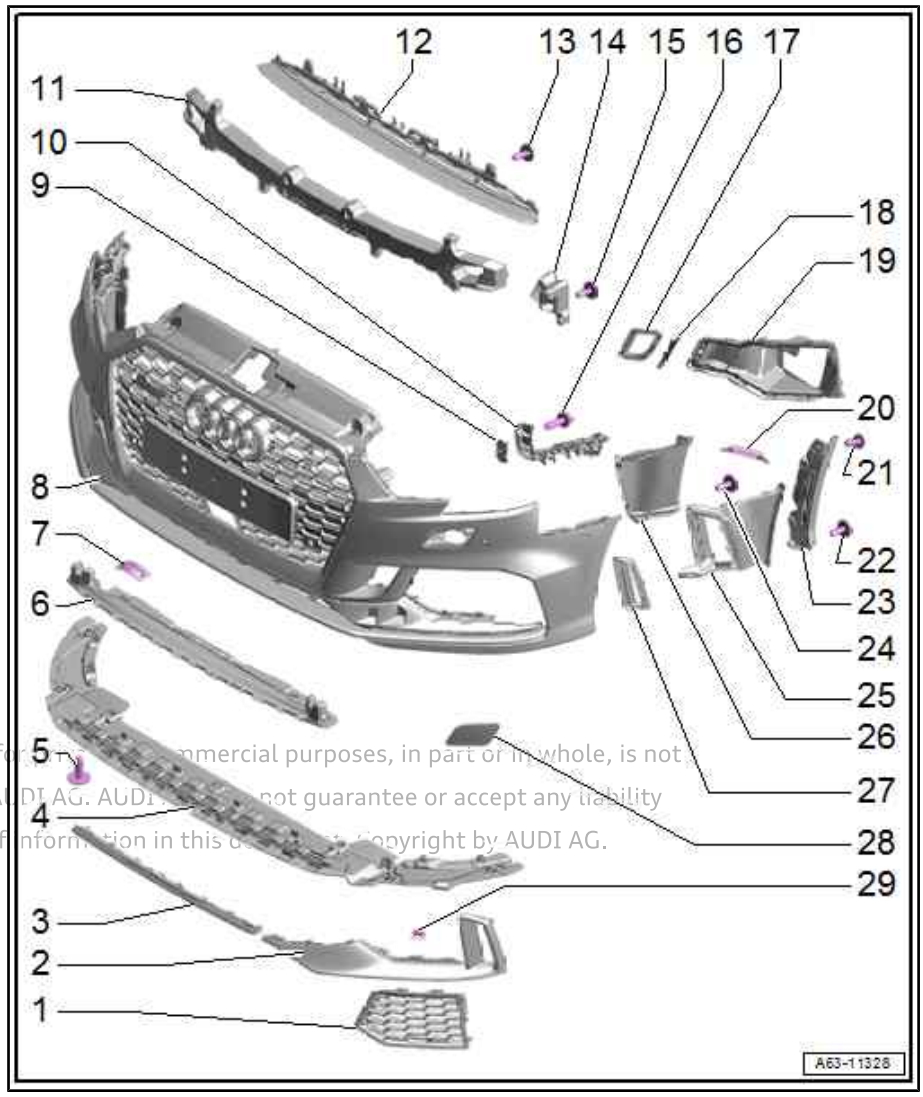

1 - Air intake grille

- ❑ Removing and installing ⇒ page 235

2 - Spoiler (bottom section)

- ❑ Removing and installing ⇒ page 244

3 - Trim strip

- ❑ Removing and installing ⇒ page 246

4 - Closure plate for bumper cover

- ❑ Removing and installing ⇒ page 229

5 - Bolt

- ❑ 3x
- ❑ 2 Nm

6 - Moulded foam insert (bottom)

- ❑ Removing and installing ⇒ page 229

7 - Retaining clip

- ❑ 4x

8 - Bumper cover

- ❑ With cover for towing eye
- ❑ Removing and installing ⇒ page 214

9 - Threaded mounting

- ❑ For bolt

10 - Mounting

- ❑ For bumper cover
- ❑ For securing headlight
- ❑ Exploded view ⇒ page 24

Protected by copyright. Copying for commercial purposes, in part or in whole, is not permitted unless authorised by AUDI AG. AUDI AG does not guarantee or accept any liability with respect to the correctness of information in this document. Copyright by AUDI AG.

11 - Moulded foam insert

- ❑ Removing and installing ⇒ page 248

12 - Reinforcement strut (bottom)

- ❑ Removing and installing ⇒ page 231

13 - Bolt

- ❑ 4x
- ❑ 2 Nm

14 - Moulded foam insert (side)

- ❑ Secured with pine-tree clip

15 - Pine-tree clip

16 - Bolt

- ❑ 4 Nm

17 - Frame

- ❑ For air inlet

18 - Partition grille

- ❑ Removing and installing ⇒ page 237

19 - Trim

- ❑ For air intake grille
- ❑ Removing and installing ⇒ page 237

Protected by copyright. Copying for private or commercial purposes, in part or in whole, is not permitted unless authorised by AUDI AG. AUDI AG does not guarantee or accept any liability with respect to the correctness of information in this document. Copyright by AUDI AG.

20 - Clip

- ❑ 4x

21 - Spreader rivet

- ❑ 4x

22 - Bolt

- ❑ 2 Nm

23 - Mounting

- ❑ For air inlet (side)
- ❑ Removing and installing ⇒ page 239

24 - Bolt

- ❑ 4x
- ❑ 2 Nm

25 - Outer trim

- ❑ For air inlet (side)
- ❑ Removing and installing ⇒ page 239

26 - Inner trim

- ❑ For air inlet (side)
- ❑ Removing and installing ⇒ page 239

27 - Connecting piece

- ❑ For spoiler (bottom section)
- ❑ Cannot be ordered separately; preparing for installation ⇒ page 245

28 - Cover for washer jet

- ❑ For headlight washer system
- ❑ Removing and installing ⇒ page 241

29 - Clip

1.1.6 Exploded view - bumper cover, A3 Saloon from model year 2017 onwards

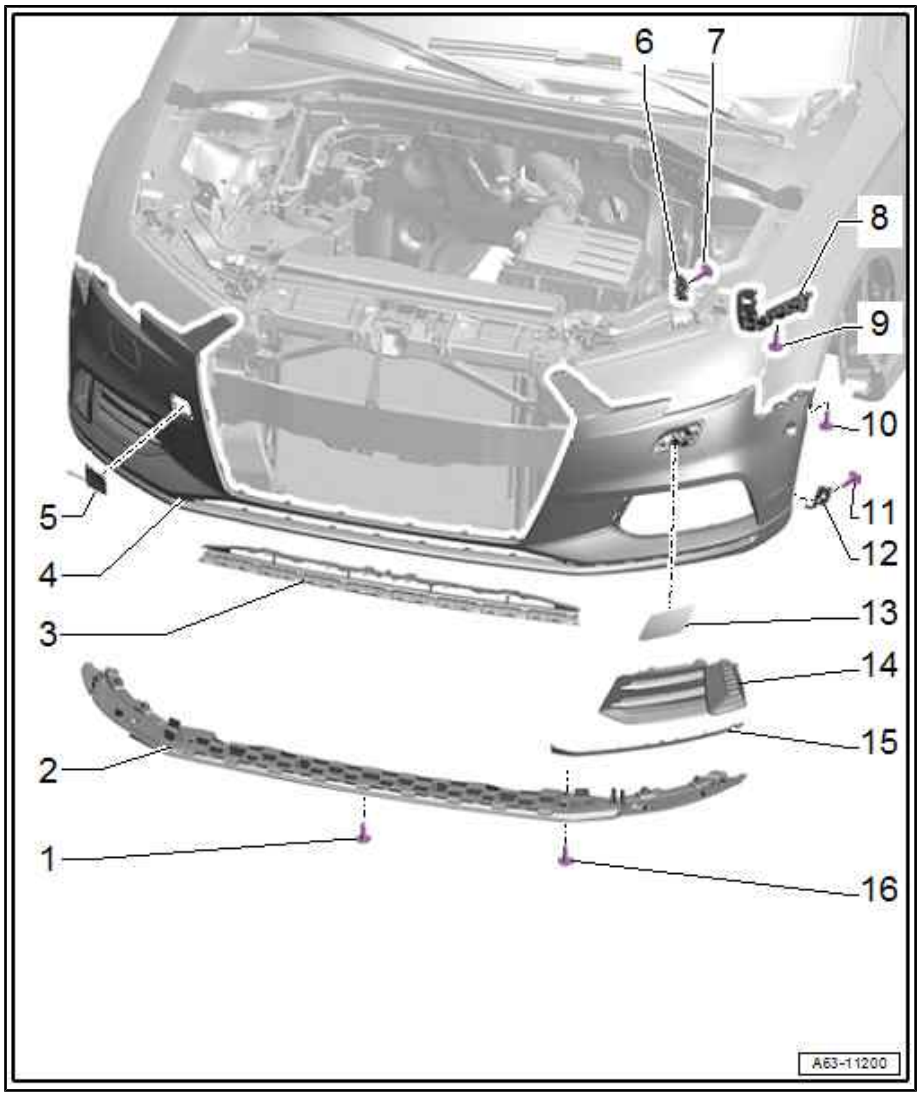

1 - Bolt
- ❑ 2.5 Nm

2 - Closure plate for bumper cover
- ❑ Removing and installing ⇒ page 229

3 - Air intake grille (centre)
- ❑ Removing and installing ⇒ page 236

4 - Bumper cover
- ❑ Removing and installing ⇒ page 214

5 - Cover for towing eye

6 - Mounting

7 - Bolt
- ❑ 4 Nm

8 - Mounting
- ❑ For bumper cover
- ❑ For securing headlight
- ❑ Exploded view ⇒ page 24

9 - Bolt
- ❑ Tightening torque ⇒ page 24

10 - Bolt
- ❑ 4.5 Nm

11 - Bolt
- ❑ 2 Nm

12 - Intermediate piece
- ❑ For securing wheel housing liner

13 - Cover for washer jet
- ❑ For headlight washer system
- ❑ Removing and installing ⇒ page 241

14 - Air intake grille
- ❑ Removing and installing ⇒ page 233

15 - Trim strip
- ❑ Removing and installing ⇒ page 233

16 - Bolt
- ❑ 3x
- ❑ 4.5 Nm

Protected by copyright. Copying for private or commercial purposes, in part or in whole, is not permitted unless authorised by AUDI AG. AUDI AG does not guarantee or accept any liability with respect to the correctness of information in this document. Copyright by AUDI AG.

1.1.7 Exploded view - bumper cover, S3 Saloon up to model year 2016

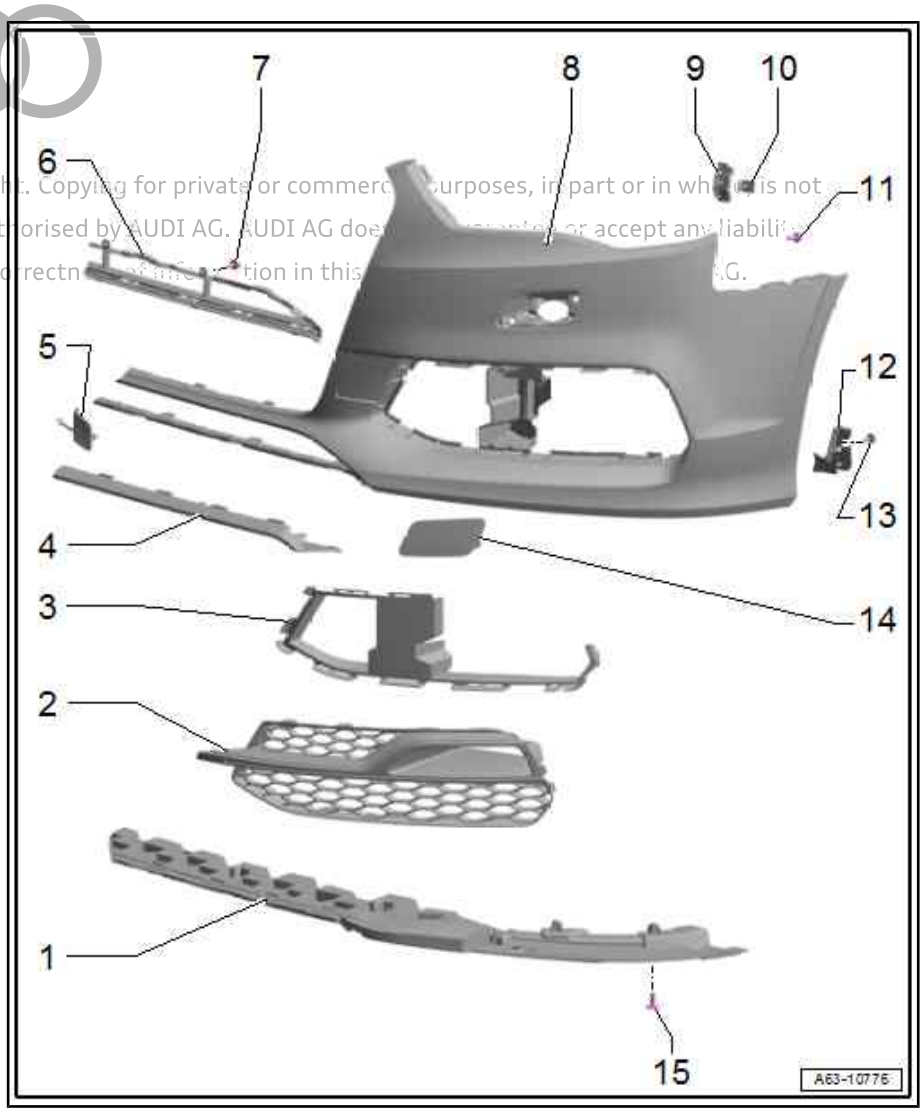

Protected by copyright. Copying for private or commercial purposes, in part or in whole is not permitted unless authorised by AUDI AG. AUDI AG does not guarantee or accept any liability with respect to the correctness of information in this document. Copyright by AUDI AG.

1 - Closure plate for bumper cover

- ❑ Removing and installing ⇒ page 228

2 - Air intake grille

- ❑ Removing and installing ⇒ page 232

3 - Cover

- ❑ For air intake grille

4 - Spoiler (bottom section)

- ❑ Removing and installing ⇒ page 244

5 - Cover for towing eye

6 - Reinforcement strut (bottom)

- ❑ Removing and installing ⇒ page 230

7 - Bolt

- ❑ 3x
- ❑ 2 Nm

8 - Bumper cover

- ❑ Removing and installing ⇒ page 214

9 - Mounting

- ❑ For speed nut

10 - Speed nut

11 - Bolt

- ❑ 4 Nm

12 - Intermediate piece

- ❑ For securing wheel housing liner

13 - Bolt

- ❑ 2 Nm

14 - Cover for washer jet

- ❑ For headlight washer system
- ❑ Removing and installing ⇒ page 241

15 - Bolt

- ❑ 2.5 Nm

1.1.8 Exploded view - bumper cover, A3 S line and S3 from model year 2017 onwards

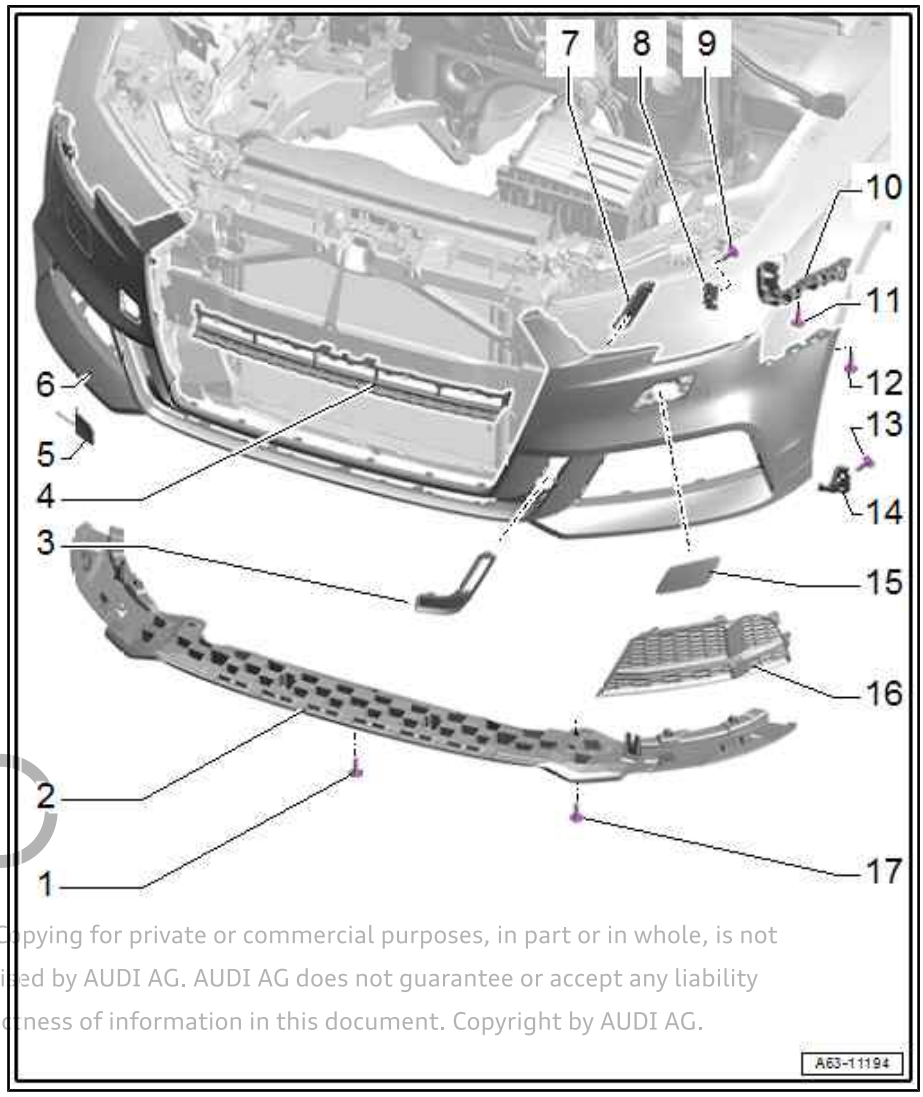

1 - Bolt
- ❑ 2.5 Nm

2 - Closure plate for bumper cover
- ❑ Removing and installing ⇒ page 229

3 - Trim
- ❑ Removing and installing ⇒ page 234

4 - Air intake grille (centre)
- ❑ Removing and installing ⇒ page 236

5 - Cover for towing eye

6 - Bumper cover
- ❑ Removing and installing ⇒ page 214

7 - Cover
- ❑ For trim

8 - Mounting

9 - Bolt
- ❑ 4 Nm

10 - Mounting
- ❑ For bumper cover
- ❑ For securing headlight
- ❑ Exploded view ⇒ page 24

11 - Bolt
- ❑ Tightening torque ⇒ page 24

12 - Bolt
- ❑ 4.5 Nm

13 - Bolt
- ❑ 2 Nm

14 - Intermediate piece
- ❑ For securing wheel housing liner

15 - Cover for washer jet
- ❑ For headlight washer system
- ❑ Removing and installing ⇒ page 241

16 - Air intake grille
- ❑ Removing and installing ⇒ page 233

17 - Bolt
- ❑ 3x
- ❑ 4.5 Nm

Copyright. Copying for private or commercial purposes, in part or in whole, is not permitted unless authorised by AUDI AG. AUDI AG does not guarantee or accept any liability with respect to the correctness of information in this document. Copyright by AUDI AG.

1.2 Exploded view - impact bar

⇒ "1.2.1 Exploded view - impact bar, A3 without high-voltage system", page 211

⇒ "1.2.2 Exploded view - impact bar, vehicles with high-voltage system", page 212

⇒ "1.2.3 Exploded view - impact bar, RS 3", page 213

1.2.1 Exploded view - impact bar, A3 without high-voltage system

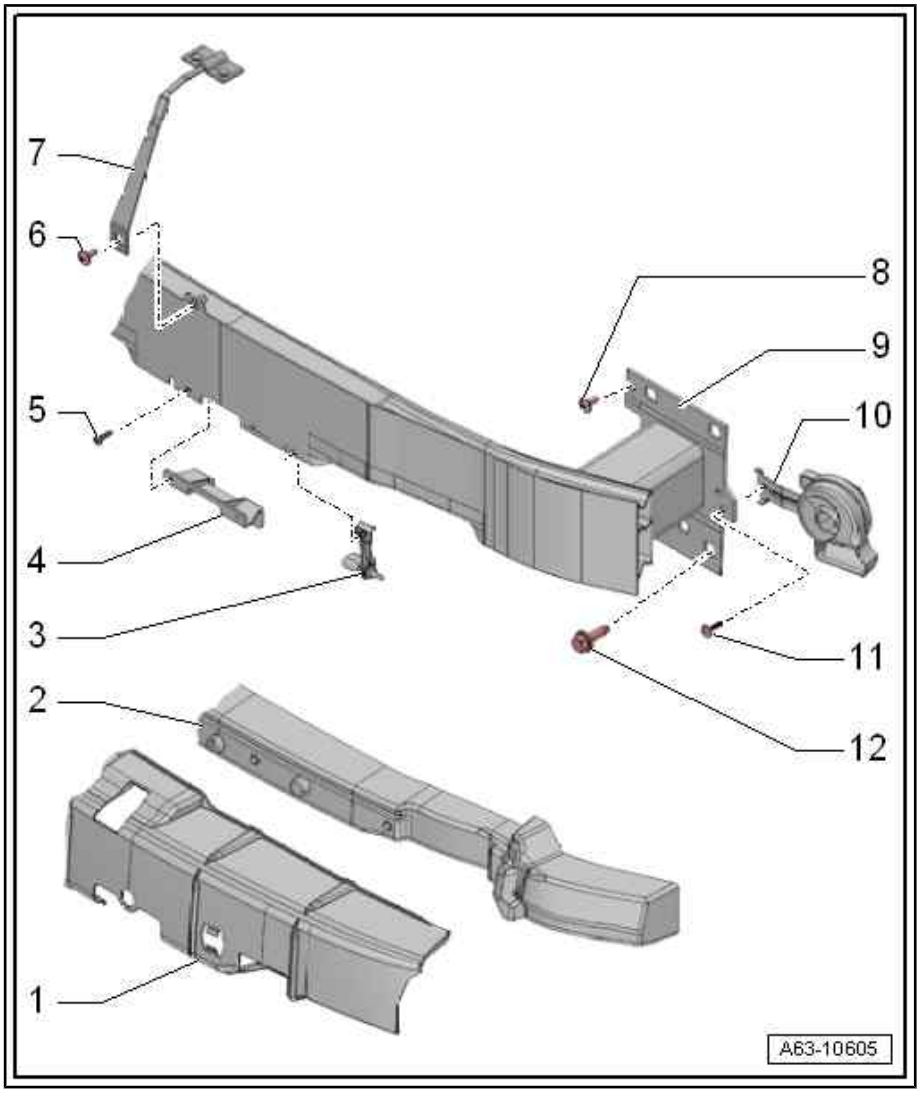

1 - Cover
- ❑ For impact bar

2 - Moulded foam insert
- ❑ Country-specific version
- ❑ Removing and installing ⇒ page 247

3 - Bracket
- ❑ For ambient temperature sensor - G17-
- ❑ Different versions
- ❑ Removing and installing ⇒ page 246

4 - Bracket
- ❑ For adaptive cruise control unit - J428-

5 - Bolt
- ❑ Tightening torque ⇒ Electrical system; Rep. gr. 27 ; Adaptive cruise control system; Overview of fitting locations - adaptive cruise control

6 - Bolt
- ❑ 3x
- ❑ Tightening torque ⇒ Item 6 (page 38)

7 - Retaining bracket
- ❑ For bonnet release lever

8 - Bolt
- ❑ 4.5 Nm

9 - Impact bar
- ❑ Removing and installing ⇒ page 223

10 - Bracket
- ❑ For horn
- ❑ Exploded view ⇒ Electrical system; Rep. gr. 90 ; Horn; Exploded view - horn

11 - Bolt
- ❑ Tightening torque ⇒ Electrical system; Rep. gr. 90 ; Horn; Exploded view - horn

12 - Bolt
- ❑ 4x
- ❑ 50 Nm

Protected by copyright. Copying for private or commercial purposes, in part or in whole, is not permitted unless authorised by AUDI AG. AUDI AG does not guarantee or accept any liability with respect to the correctness of information in this document. Copyright by AUDI AG.

1.2.2 Exploded view - impact bar, vehicles with high-voltage system

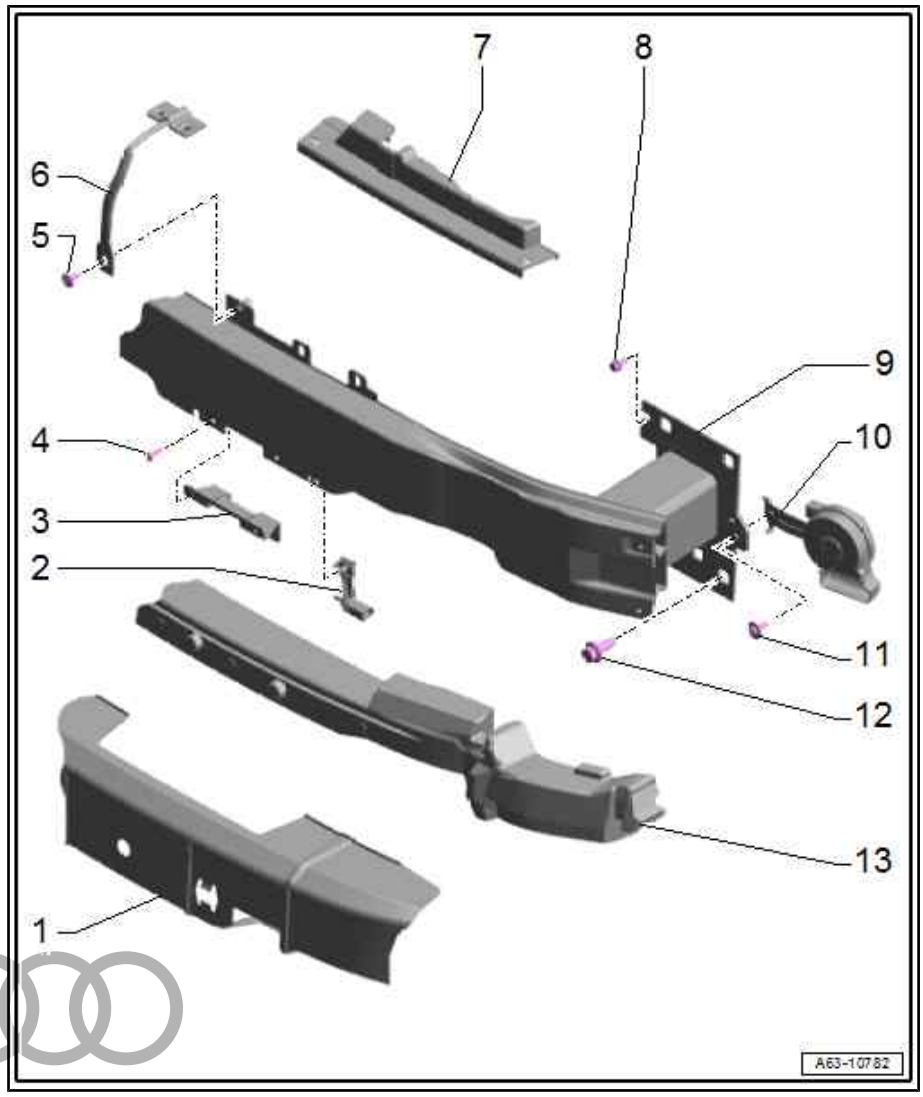

1 - Cover
- ❑ For impact bar

2 - Bracket
- ❑ For ambient temperature sensor - G17-
- ❑ Different versions
- ❑ Removing and installing ⇒ page 246

3 - Bracket
- ❑ For adaptive cruise control unit - J428-

4 - Bolt
- ❑ Tightening torque ⇒ Electrical system; Rep. gr. 27 ; Adaptive cruise control system; Overview of fitting locations - adaptive cruise control

5 - Bolt
- ❑ 3x
- ❑ Tightening torque ⇒ Item 6 (page 38)

6 - Retaining bracket
- ❑ For bonnet release lever

7 - Rubber cover

8 - Bolt
- ❑ 4.5 Nm

9 - Impact bar
- ❑ Removing and installing ⇒ page 223

10 - Bracket
- ❑ For horn
- ❑ Exploded view ⇒ Electrical system; Rep. gr. 90 ; Horn; Exploded view - horn

Protected by copyright. Copying for private or commercial purposes, in part or in whole, is not permitted unless authorised by AUDI AG. AUDI AG does not guarantee or accept any liability with respect to the correctness of information in this document. Copyright by AUDI AG.

11 - Bolt
- ❑ Tightening torque ⇒ Electrical system; Rep. gr. 90 ; Horn; Exploded view - horn

12 - Bolt
- ❑ 4x
- ❑ 50 Nm

13 - Moulded foam insert
- ❑ Country-specific version
- ❑ Removing and installing ⇒ page 247

1.2.3 Exploded view - impact bar, RS 3

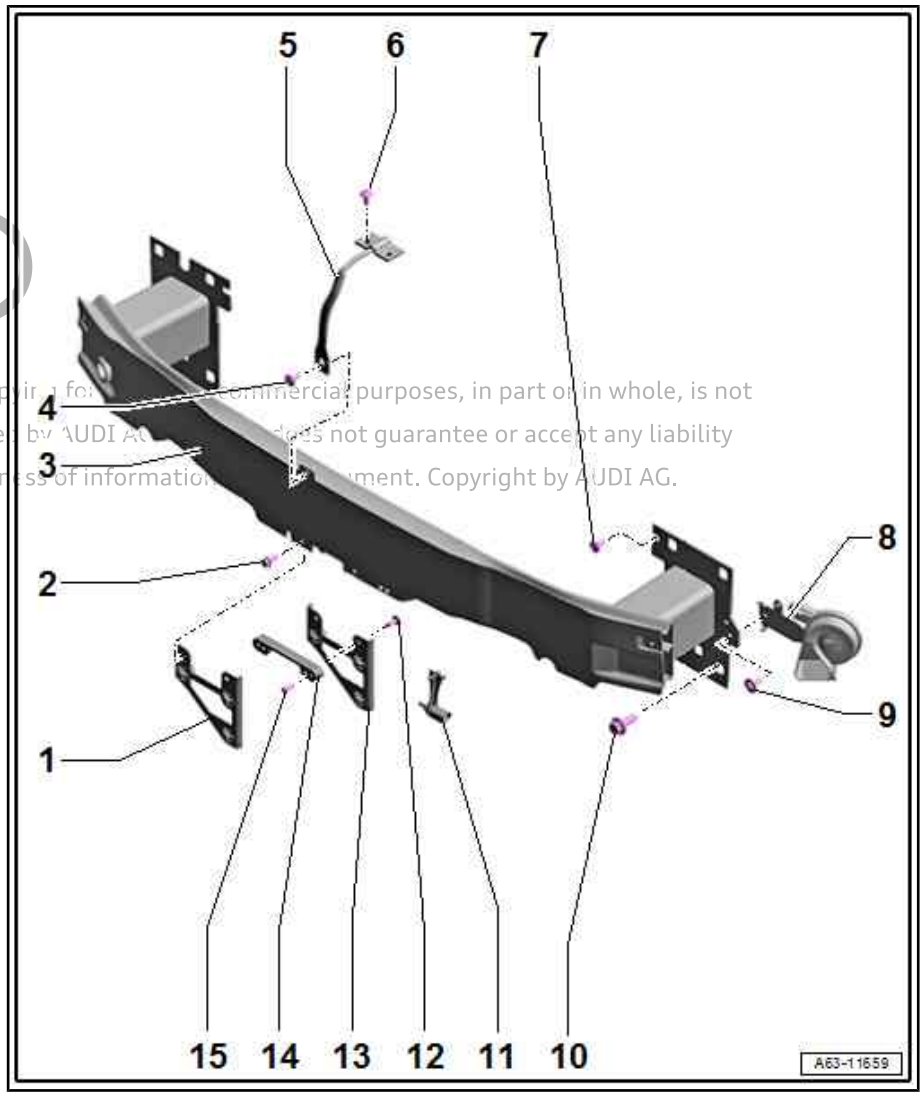

1 - Bracket
- ❑ For adaptive cruise control unit - J428-
- ❑ Up to model year 2018

2 - Bolt
- ❑ Tightening torque ⇒ Electrical system; Rep. gr. 27 ; Adaptive cruise control system; Overview of fitting locations - adaptive cruise control

3 - Impact bar
- ❑ Removing and installing ⇒ page 223

4 - Bolt
- ❑ Tightening torque ⇒ Item 6 (page 38)

5 - Retaining bracket
- ❑ For bonnet release lever

6 - Bolt
- ❑ Bolt, 2x
- ❑ Tightening torque ⇒ Item 6 (page 38)

7 - Bolt
- ❑ 4.5 Nm

8 - Bracket
- ❑ For horn
- ❑ Exploded view ⇒ Electrical system; Rep. gr. 90 ; Horn; Exploded view - horn

Protected by copyright. Copying for commercial purposes, in part or in whole, is not permitted unless authorised by AUDI AG. AUDI AG does not guarantee or accept any liability with respect to the correctness of information in this document. Copyright by AUDI AG.

9 - Bolt
- ❑ Tightening torque ⇒ Electrical system; Rep. gr. 90 ; Horn; Exploded view - horn

10 - Bolt
- ❑ 4x
- ❑ 50 Nm

11 - Bracket
- ❑ For ambient temperature sensor - G17-
- ❑ Removing and installing ⇒ page 246

12 - Bolt
- ❑ Bolt, 2x
- ❑ 8 Nm

13 - Bracket
- ❑ For adaptive cruise control unit - J428-
- ❑ From model year 2019 onwards

14 - Adapter
- ❑ From model year 2019 onwards

15 - Bolt

- ❑ Tightening torque ⇒ Electrical system; Rep. gr. 27 ; Adaptive cruise control system; Overview of fitting locations - adaptive cruise control

1.3 Removing and installing bumper cover

⇒ "1.3.1 Removing and installing bumper cover - A3 without auxiliary side radiator", page 214

⇒ "1.3.2 Removing and installing bumper cover - A3 with auxiliary side radiator", page 215

⇒ "1.3.3 Removing and installing bumper cover - RS 3", page 217

1.3.1 Removing and installing bumper cover - A3 without auxiliary side radiator

Vehicles from model year 2017 onwards: Bumper cover, crash sensors for pedestrian protection and airbag control unit - J234- are different for the basic and S line equipment versions. It is not permitted to interchange components. For assignment of bumper cover, crash sensors for pedestrian protection and airbag control unit - J234- , refer to ⇒ Electronic parts catalogue .

- A second mechanic is required to perform this step (as described on ⇒ page 215).

Special tools and workshop equipment required

♦ Engine bung set - VAS 6122-

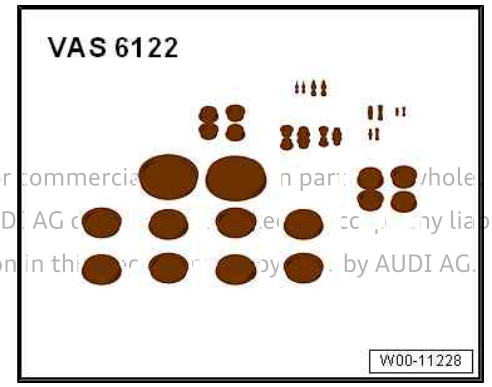

Protected by copyright. Copying for private or commercial purposes, in part or in whole, is not permitted unless authorised by AUDI AG. AUDI AG does not guarantee or assume any liability with respect to the correctness of information in this document. Copyright by AUDI AG.

Removing

– Turn front wheels to full lock and unfasten wheel housing liner in area of bumper cover (front).

– Place drip tray underneath connection point for fluid hose.

– Press release button and disconnect fluid hose -1- from headlight washer system pump -2-, if fitted.
– Seal hose connection with clean plug from engine bung set - VAS 6122- .
– If fitted, unplug electrical connector -3- for fog light.
– Unplug main connectors -4-.

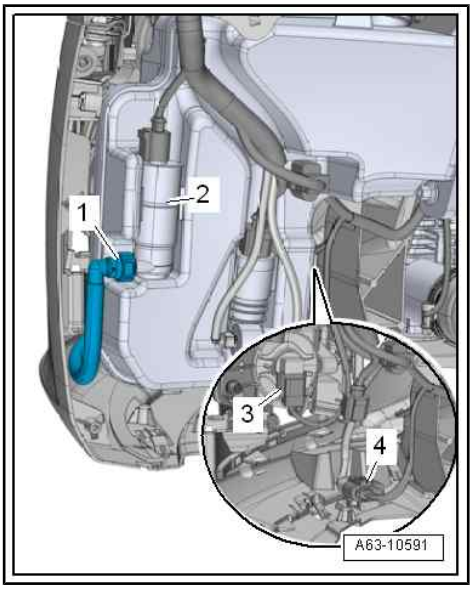

– Press unfastened wheel housing liner to side and remove bolts -arrows-.

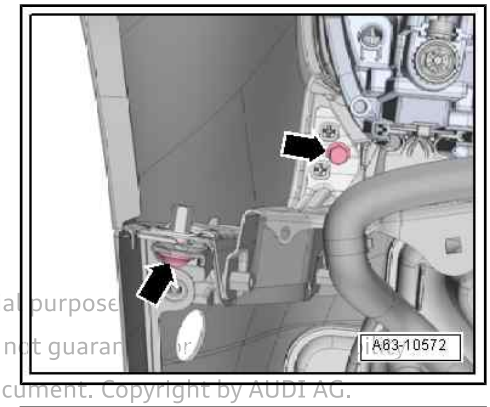

Protected by copyright. Copying for private or commercial purposes, in part, is not permitted unless authorised by AUDI AG. AUDI AG does not guarantee or assume liability with respect to the correctness of information in this document. Copyright by AUDI AG.

– Remove bolts -1, 2-.
– Detach side section -3- from side panel (front) -arrow- and detach bumper cover towards the front with the help of a second mechanic.
– e-tron: Unplug electrical connector at signature lighting.

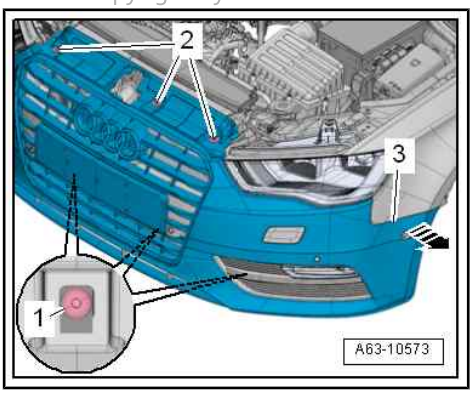

Installing

Installation is carried out in reverse order; note the following:

- Adjustment dimensions ⇒ page 218

Tightening torques

◆ ⇒ “1.1 Exploded view - bumper cover”, page 201 .

1.3.2 Removing and installing bumper cover - A3 with auxiliary side radiator

Vehicles from model year 2017 onwards: Bumper cover, crash sensors for pedestrian protection and airbag control unit - J234- are different for the basic and S line equipment versions. It is not permitted to interchange components. For assignment of bumper cover, crash sensors for pedestrian protection and airbag control unit - J234- , refer to ⇒ Electronic parts catalogue .

- A second mechanic is required to perform this step (as described on ⇒ page 217).

Special tools and workshop equipment required

♦ Engine bung set - VAS 6122-

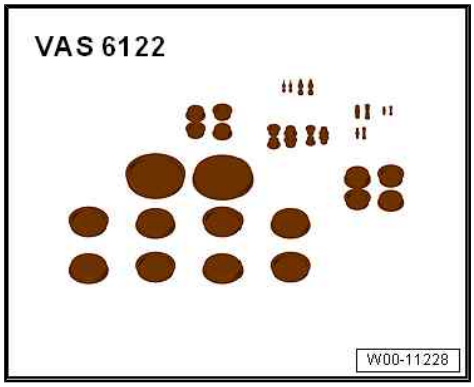

Removing

– Left side: Turn front wheels to full lock and unfasten wheel housing liner in area of bumper cover (front).

– Right side: Unfasten wheel housing liner (front) at bottom and push to side ⇒ page 408 .

– Place drip tray underneath connection point for fluid hose.

– Press release button and disconnect fluid hose -1- from headlight washer system pump -2-.

– Seal hose connection with clean plug from engine bung set - VAS 6122- .

– Move fluid hose -3- clear.

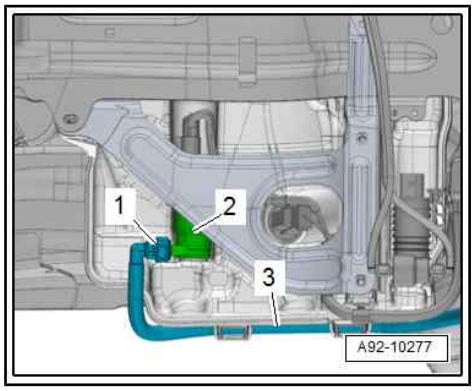

– Unplug central connector -arrow-.

Protected by copyright. Copying for private or commercial purposes, in pa
permitted unless authorised by AUDI AG. AUDI AG does not guarantee or
with respect to the correctness of information in this document. Copyrigh

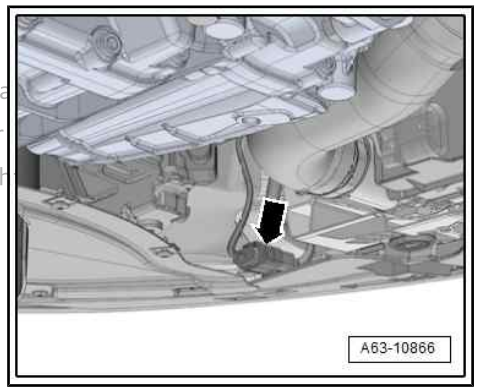

– Press unfastened wheel housing liner to side and remove bolts -arrows-.

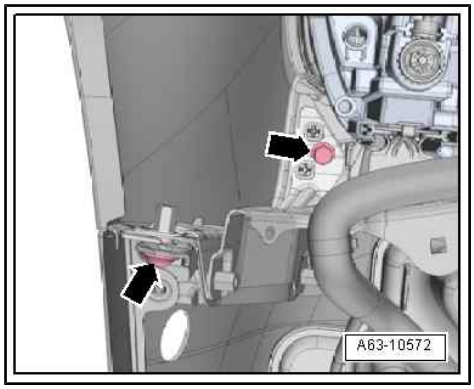

– Remove bolts -1, 2-.

– Detach side section -3- from side panel (front) -arrow- and detach bumper cover towards the front with the help of a second mechanic.

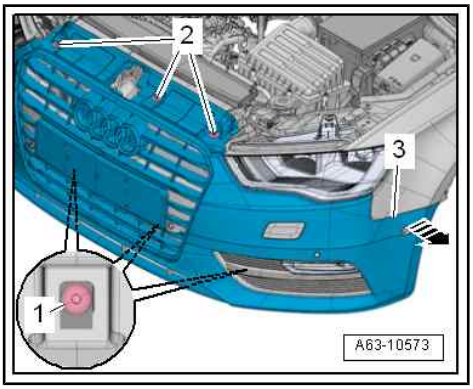

Installing

Installation is carried out in reverse order; note the following:

- Adjustment dimensions ⇒ page 218

Tightening torques

♦ ⇒ “1.1 Exploded view - bumper cover”, page 201 .

1.3.3 Removing and installing bumper cover - RS 3

Vehicles from model year 2017 onwards: Bumper cover, crash sensors for pedestrian protection and airbag control unit - J234- are different for the basic and S line equipment versions. It is not permitted to interchange components. For assignment of bumper cover, crash sensors for pedestrian protection and airbag control unit - J234- , refer to ⇒ Electronic parts catalogue .

- A second mechanic is required to perform this step (as described on ⇒ page 218).

Special tools and workshop equipment required

♦ Engine bung set - VAS 6122-

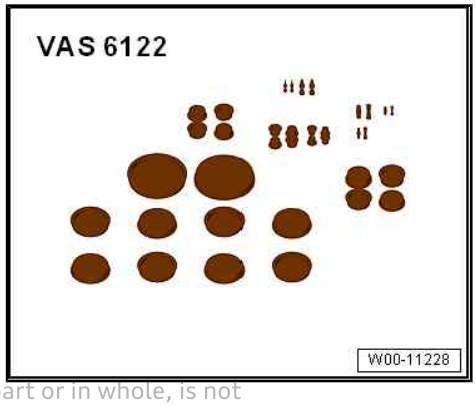

Protected by copyright. Copying for private or commercial purposes, in part or in whole, is not permitted unless authorised by AUDI AG. AUDI AG does not guarantee or accept any liability with respect to the correctness of information in this document. Copyright by AUDI AG.

Removing

– Sportback: Remove wheel spoiler (front) ⇒ page 412 .

– Saloon: Remove wheel housing liner ⇒ page 410 .

– Unplug central connector -arrow-.

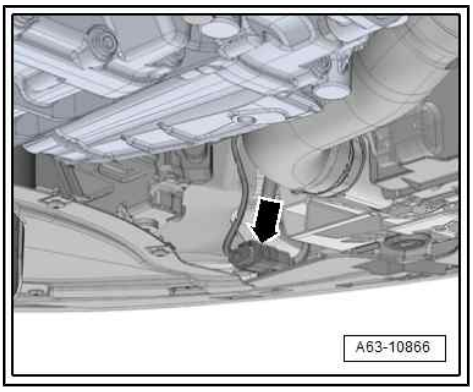

– Place drip tray underneath connection point for fluid hose.
– Press release button and detach headlight washer fluid line -1-.
– Seal hose connection with clean plug from engine bung set - VAS 6122- .
– Sportback: Press unfastened wheel housing liner to side and remove bolts -2 and 3-.

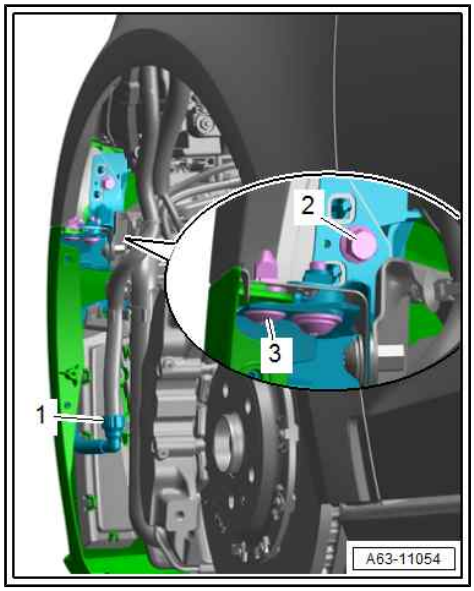

– Remove bolts -1, 2-.
– Detach side section -3- from side panel (front) -arrow- and detach bumper cover towards the front with the help of a second mechanic.

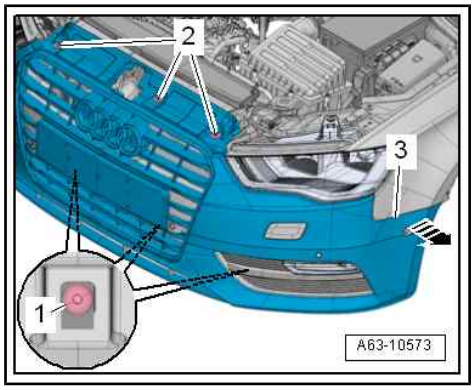

Note

Loosen the bolts on the bumper cover mounting if you are having difficulties pulling the side section out of the fasteners.

Installing

Installation is carried out in reverse order; note the following:

- Adjustment dimensions ⇒ page 218

Protected by copyright. Copying for private or commercial purposes, in part or in whole, is not permitted unless authorised by AUDI AG. AUDI AG does not guarantee or accept any liability with respect to the correctness of information in this document. Copyright by AUDI AG.

Tightening torques

♦ ⇒ “1.1 Exploded view - bumper cover”, page 201 .

1.4 Adjusting bumper cover

⇒ “1.4.1 Adjustment dimensions”, page 218

⇒ “1.4.2 Lateral and longitudinal adjustment”, page 220

1.4.1 Adjustment dimensions

Adjustment dimensions - vehicles up to model year 2016
⇒ page 218

Adjustment dimensions - vehicles from model year 2017 onwards
⇒ page 219

Adjustment dimensions - vehicles up to model year 2016

A - Radiator grille/bumper cover to bonnet

- Gap width = 4.5 mm

B - Bumper cover to bonnet

- Gap width = 4.5 mm

C - Bumper cover (side section) to wing panel

- Gap width = 0 mm

D - Bumper cover to headlight

- Gap width = 1.5 mm

E - Bumper cover to headlight

- Gap width = 2.5 mm

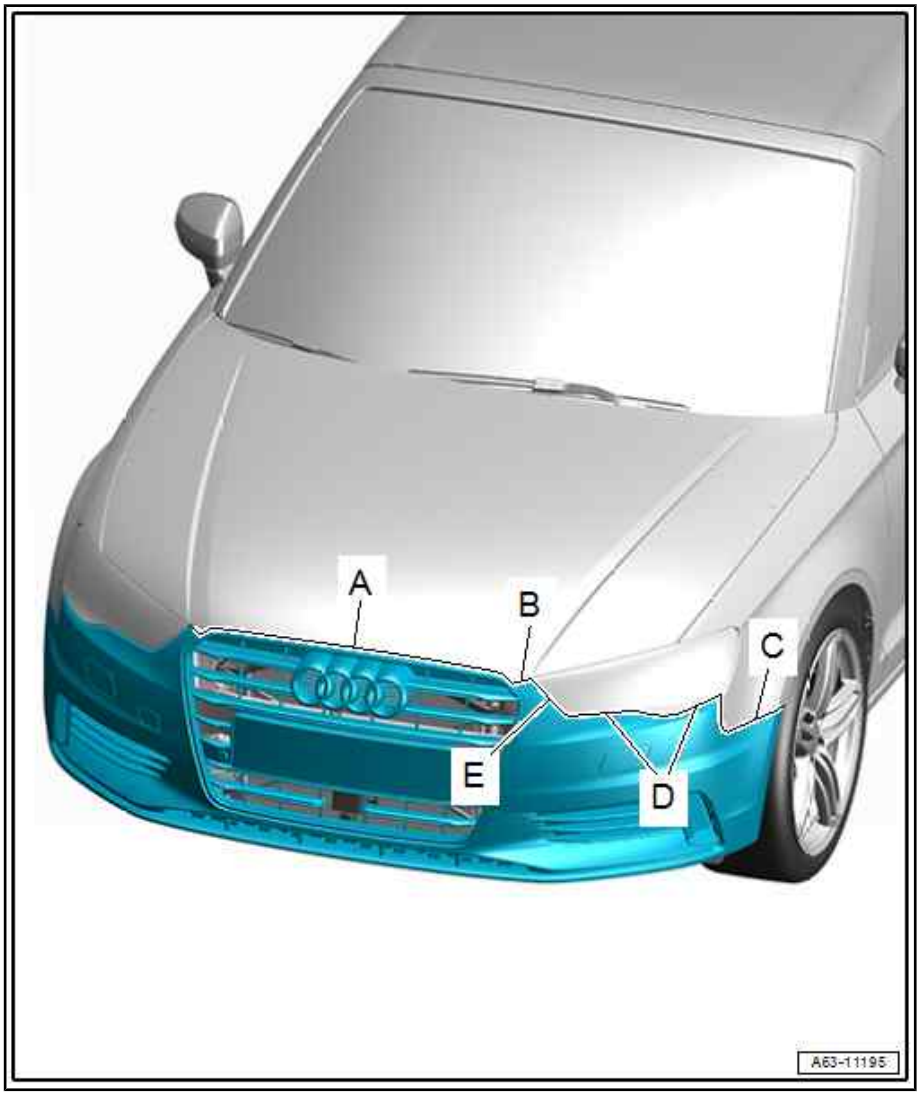

Adjustment dimensions - vehicles from model year 2017 onwards

Protected by copyright. Copying for private or commercial purposes, in part or in whole, is not permitted unless authorised by AUDI AG. AUDI AG does not guarantee or accept any liability with respect to the correctness of information in this document. Copyright by AUDI AG.

A - Radiator grille/bumper cover to bonnet

- Gap width = 4.5 mm

B - Bumper cover to bonnet

- Gap width = 4.6 mm

C - Bumper cover (side section) to wing panel

- Gap width = 0 mm

D - Bumper cover to headlight

- Gap width = 1.94 mm

E - Bumper cover to headlight

- Gap width = 1.84 mm

F - Bumper cover to headlight

- Gap width = 1.49 mm

G - Bumper cover to headlight

- Gap width = 2.0 mm

Protected by copyright. Copying for priv
permitted unless authorised by AUDI AG. AUD
with respect to the correctness of information in this document. Copyright

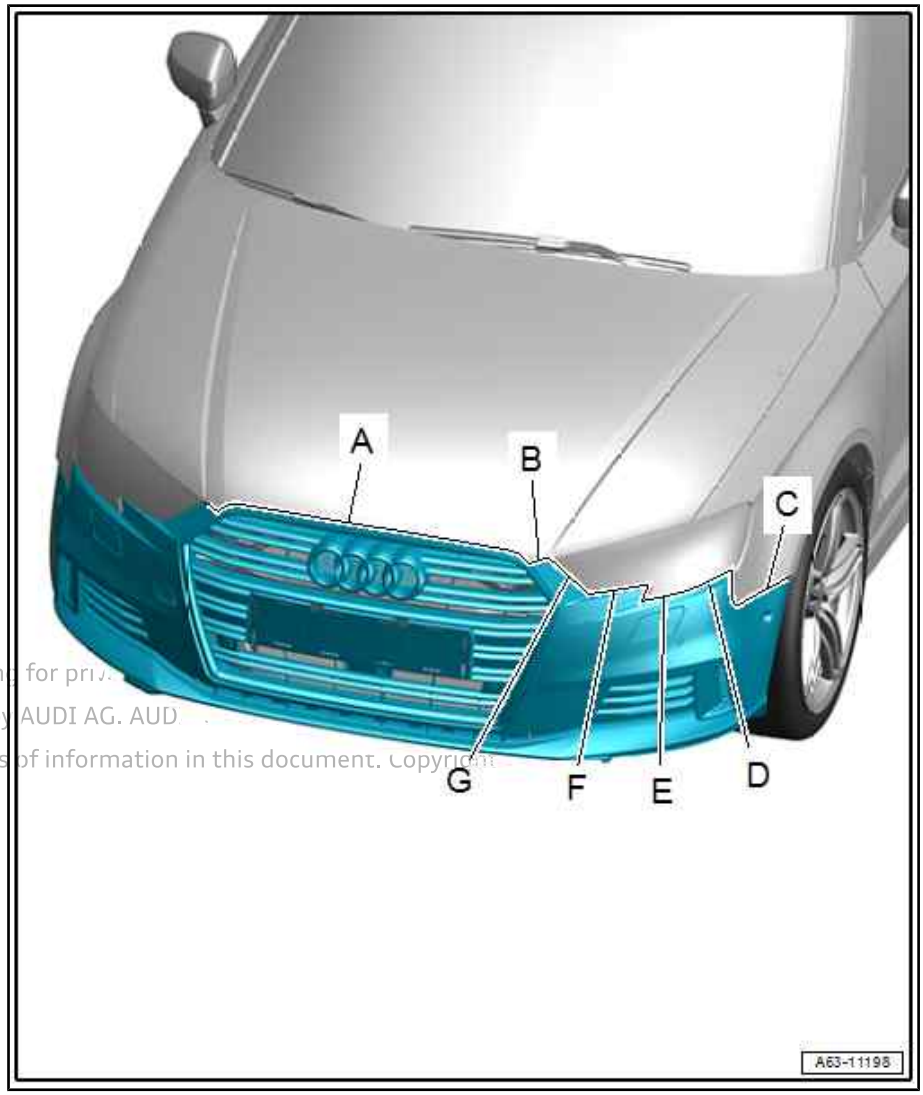

1.4.2 Lateral and longitudinal adjustment

- Adjustment dimensions ⇒ page 218

Special tools and workshop equipment required

♦ Setting gauge - 3371-

Procedure

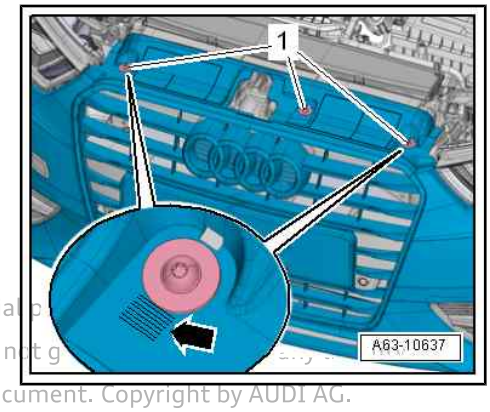

- Loosen bolts -1-.
- Align bumper cover (front) longitudinally according to markings -arrow-.
- Tighten bolts.
- Check that gap width is even and repeat adjustment if necessary.

Tightening torques

◆ ⇒ “1.1 Exploded view - radiator grille”, page 315 .

Protected by copyright. Copying for private or commercial p
permitted unless authorised by AUDI AG. AUDI AG does not g
with respect to the correctness of information in this document. Copyright by AUDI AG.

1.5 Removing and installing bumper cover mounting

⇒ “1.5.1 Removing and installing bumper cover mounting”, page 221

⇒ “1.5.2 Removing and installing bumper cover mounting - RS 3”, page 222

1.5.1 Removing and installing bumper cover mounting

Removing

- Remove front wheel housing liner ⇒ page 408 .
- Remove bolts -2, 3, 4-.
- Disengage side section -1- at side panel (front) -arrow-.

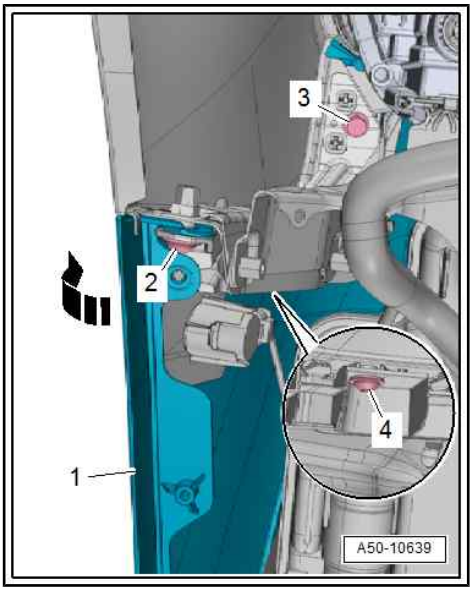

– Detach mounting -1- towards front -arrow-, taking care not to damage guide -2- for headlight.

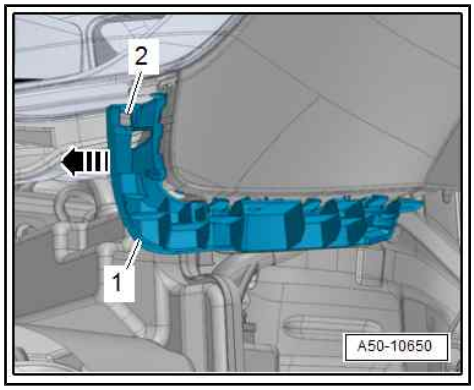

Installing

Installation is carried out in reverse order; note the following:

– Slide mounting onto guide on headlight.

Tightening torques

◆ ⇒ “2.1.1 Exploded view - wing”, page 24 .

1.5.2 Removing and installing bumper cover mounting - RS 3

Removing

– Sportback: Remove wheel spoiler (front) ⇒ page 412 .

– Saloon: Remove wheel housing liner ⇒ page 410 .

– Remove bolts -2, 3, 4-.

– Disengage side section -1- at side panel (front) -arrow-.

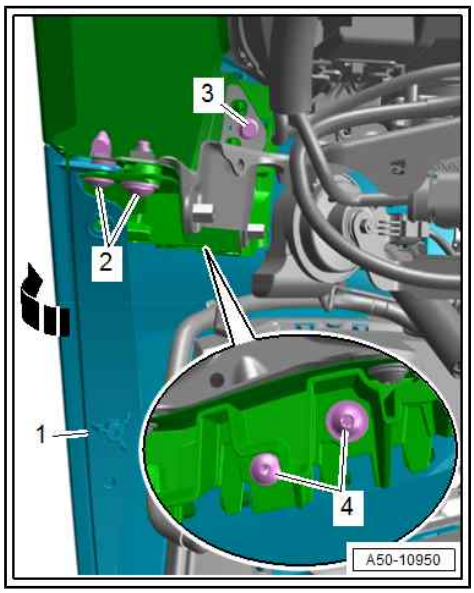

– Detach mounting -1- towards front -arrow-, taking care not to damage guide -2- for headlight.

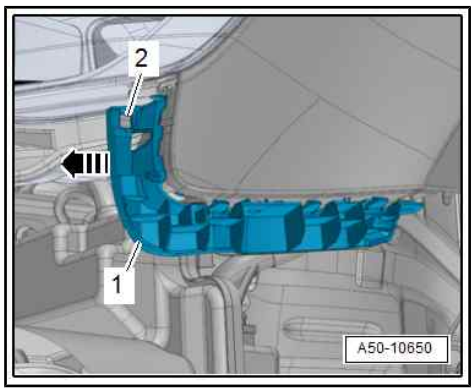

Installing

Installation is carried out in reverse order; note the following:

– Slide mounting onto guide on headlight.

Tightening torques

◆ ⇒ “2.1.2 Exploded view - wing, RS 3”, page 25 .

Protected by copyright. Copying for private or commercial purposes, in part or in whole, is not permitted unless authorised by AUDI AG. AUDI AG does not guarantee or accept any liability with respect to the correctness of information in this document. Copyright by AUDI AG.

1.6 Removing and installing impact bar

⇒ "1.6.1 Removing and installing impact bar - vehicles without high-voltage system", page 223

⇒ "1.6.2 Removing and installing impact bar - vehicles with high-voltage system", page 224

1.6.1 Removing and installing impact bar - vehicles without high-voltage system

- Depending on equipment version, the following additional work may be necessary ⇒ page 224 .

Removing

– Remove headlight ⇒ Electrical system; Rep. gr. 94 ; Headlights; Removing and installing headlights .

– Remove air duct for radiator ⇒ page 22 .

– Unscrew bolts -arrows- and detach retainer -1-.

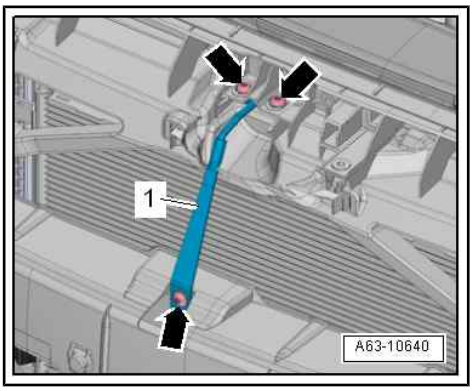

A3:

– Unplug electrical connector -1- at ambient temperature sensor - G17- -item 3-.

– Move electrical wiring harness clear at lock carrier.

Protected by copyright. Copying for private or commercial purposes, in part or whole, is not permitted unless authorised by AUDI AG. AUDI AG does not guarantee or accept any liability with respect to the correctness of information in this document. Copyright by AUDI AG.

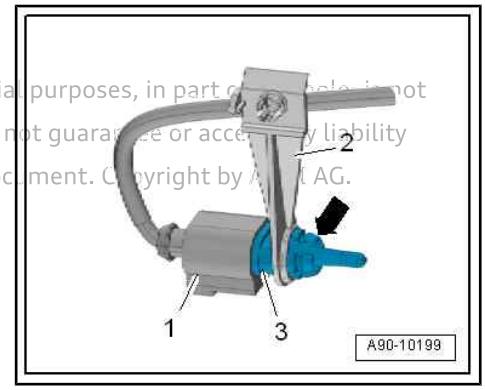

RS 3:

– Unplug electrical connectors -1 and 2-.

– Move electrical wiring harness -3- clear -arrows-.

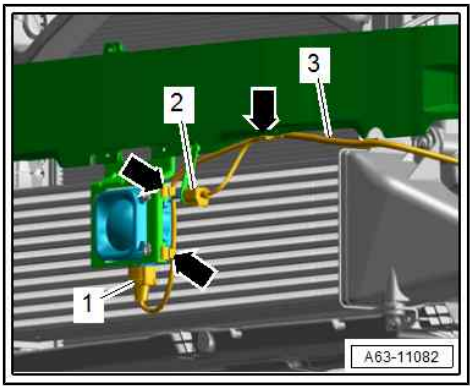

All versions (continued):

– Unscrew bolt -2- and detach horn with bracket.

– Unscrew bolts -1- and -arrows-.

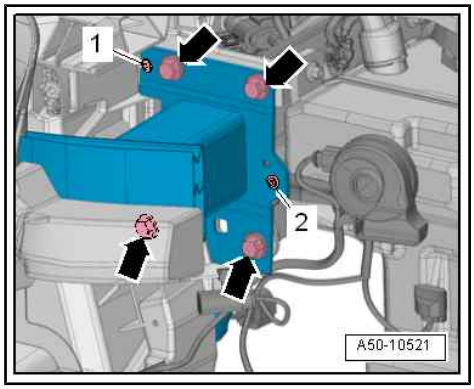

– Pull lock carrier -1- forwards slightly -arrow A-, swivel top of impact bar -2- down towards front -arrow B- and detach from lock carrier.

– If impact bar is to be renewed, also remove the following components:

♦ Moulded foam insert (if fitted) ⇒ page 247

♦ Bracket for ambient temperature sensor ⇒ page 246

♦ Bracket for adaptive cruise control unit ⇒ Electrical system; Rep. gr. 27 ; Adaptive cruise control; Overview of fitting locations - adaptive cruise control

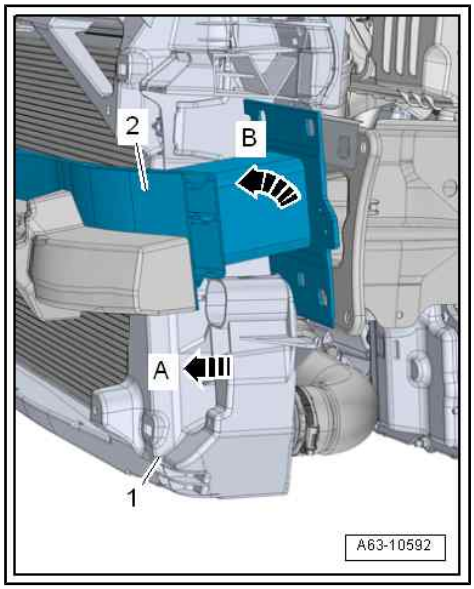

Installing

Installation is carried out in reverse order; note the following:

– Pull lock carrier -1- forwards slightly -arrow A-, insert impact bar -2- -arrow B- and move to installation position.

• Impact bar must be inserted behind guide -3- on lock carrier.

Depending on equipment version, the following additional work may be necessary:

– Calibrate adaptive cruise control ⇒ Running gear, axles, steering; Rep. gr. 44 ; Adaptive cruise control; Adjusting adaptive cruise control .

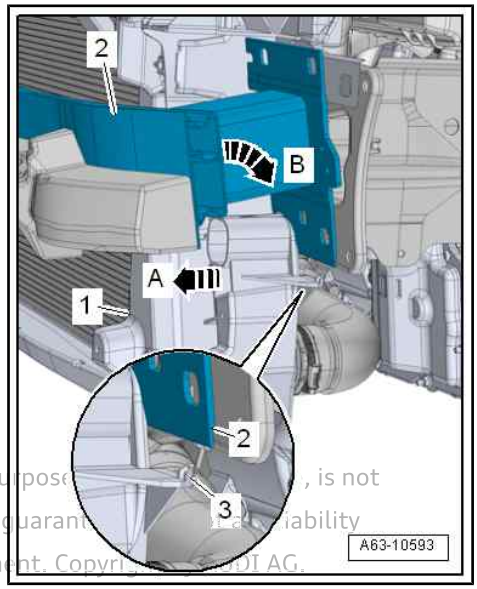

Tightening torques

♦ ⇒ “1.2 Exploded view - impact bar”, page 211 .

Protected by copyright. Copying for private or commercial purposes, in part or in whole, is not permitted unless authorised by AUDI AG. AUDI AG does not guarantee or assume any liability with respect to the correctness of information in this document. Copyright by AUDI AG.

1.6.2 Removing and installing impact bar - vehicles with high-voltage system

• Observe safety precautions ⇒ page 1 .

• Depending on equipment version, the following additional work may be necessary ⇒ page 226 .

Removing

- De-energise high-voltage system ⇒ 4-cylinder direct injection engine (1.2 ltr., 1.4 ltr. 4-valve TFSI EA 211); Rep. gr. 93 ; De-energising high-voltage system .
- Remove headlight ⇒ Electrical system; Rep. gr. 94 ; Headlights; Removing and installing headlights .
- Remove mounting for charging socket ⇒ Rep. gr. 93 ; Charging socket; Exploded view - charging socket .
- Move high-voltage wire clear.
- Remove air duct for radiator ⇒ page 22 .
- Unscrew bolts -arrows- and detach retainer -1-.

Protected by copyright. Copying for private or commercial purposes, in part or in whole, is not permitted unless authorised by AUDI AG. AUDI AG does not guarantee or accept any liability with respect to the correctness of information in this document. Copyright by AUDI AG.

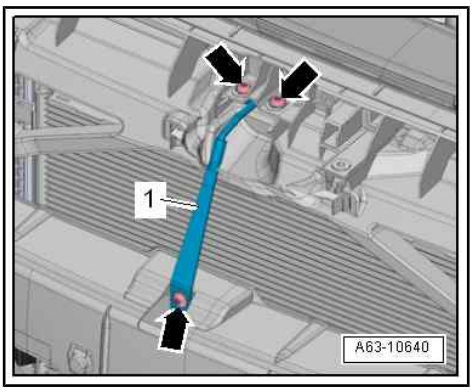

- Unplug electrical connector -1- at ambient temperature sensor - G17- -item 3-.
- Move electrical wiring harness clear at lock carrier.

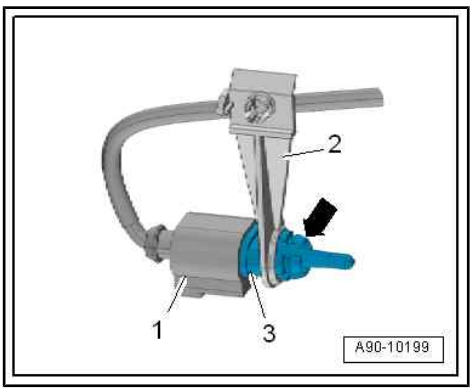

- Unscrew bolt -2- and detach horn with bracket.
- Unscrew bolts -1- and -arrows-.

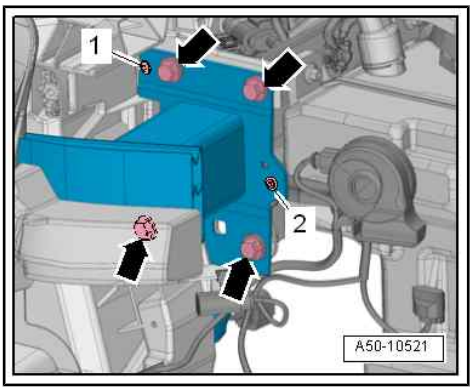

– Pull lock carrier -1- forwards slightly -arrow A-, swivel top of impact bar -2- down towards front -arrow B- and detach from lock carrier.

– If impact bar is to be renewed, also remove the following components:

♦ Moulded foam insert ⇒ page 247

♦ Bracket for ambient temperature sensor ⇒ page 246

♦ Bracket for adaptive cruise control unit ⇒ Electrical system; Rep. gr. 27 ; Adaptive cruise control; Overview of fitting locations - adaptive cruise control

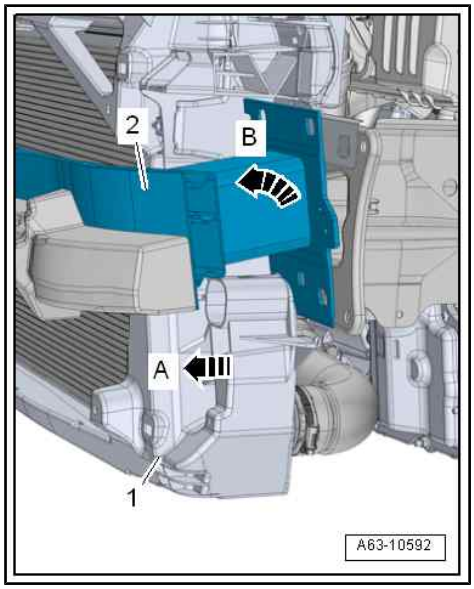

Installing

Installation is carried out in reverse order; note the following:

– Pull lock carrier -1- forwards slightly -arrow A-, insert impact bar -2- -arrow B- and move to installation position.

• Impact bar must be inserted behind guide -3- on lock carrier.

– Re-energise high-voltage system ⇒ Rep. gr. 93 ; Re-energising high-voltage system .

Depending on equipment version, the following additional work may be necessary:

– Calibrate adaptive cruise control ⇒ Running gear, axles, steering; Rep. gr. 44 ; Adaptive cruise control; Adjusting adaptive cruise control .

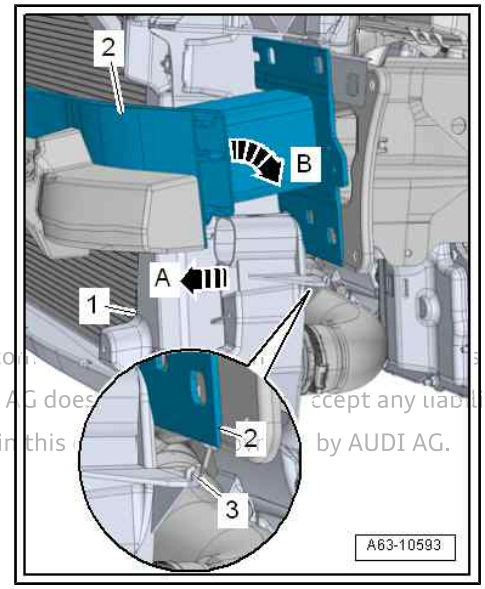

Protected by copyright. Copying for private or co[illegible] not permitted unless authorised by AUDI AG. AUDI AG does [illegible] ccept any liability with respect to the correctness of information in this [illegible] by AUDI AG.

Tightening torques

♦ ⇒ “1.2.2 Exploded view - impact bar, vehicles with high-voltage system”, page 212

1.7 Removing and installing attachments

⇒ “1.7.1 Removing and installing closure plate for bumper cover (front) - A3 up to model year 2016”, page 228

⇒ “1.7.2 Removing and installing closure plate for bumper cover (front) - A3 from model year 2017 onwards, RS 3 Saloon, RS 3 Sportback from model year 2019 onwards”, page 229

⇒ “1.7.3 Removing and installing closure plate for bumper cover (front) - RS 3 Sportback up to model year 2018”, page 230

⇒ “1.7.4 Removing and installing reinforcement strut (bottom) - S3 Saloon up to model year 2016”, page 230

⇒ “1.7.5 Removing and installing reinforcement strut (bottom) - RS 3 Sportback up to model year 2018”, page 231

⇒ “1.7.6 Removing and installing reinforcement strut (bottom) - RS 3 Saloon, RS 3 Sportback from model year 2019 onwards”, page 231

⇒ “1.7.7 Removing and installing air intake grille - A3 without auxiliary side radiator up to model year 2016”, page 231

⇒ “1.7.8 Removing and installing air intake grille - A3 and S3 with auxiliary side radiator”, page 232

⇒ “1.7.9 Removing and installing air intake grille - vehicles from model year 2017 onwards”, page 233

⇒ “1.7.10 Removing and installing trim strip”, page 233

⇒ “1.7.11 Removing and installing trim - A3 S line from model year 2017 onwards”, page 234

⇒ “1.7.12 Removing and installing air intake grille - RS 3 Sportback up to model year 2018”, page 235

⇒ “1.7.13 Removing and installing air intake grille - RS 3 Saloon, RS 3 Sportback from model year 2019 onwards”, page 235

⇒ “1.7.14 Removing and installing air intake grille (centre) - Saloon (basic version) from model year 2017 onwards”, page 236

⇒ “1.7.15 Removing and installing air intake grille (centre) - A3 S line up to model year 2016 and S3”, page 236

⇒ “1.7.16 Removing and installing air intake grille (centre) - A3 S line from model year 2017 onwards”, page 236

⇒ “1.7.17 Removing and installing air intake grille trim - RS 3 Sportback up to model year 2018”, page 237

⇒ “1.7.18 Removing and installing air intake grille trim - RS 3 Saloon, RS 3 Sportback from model year 2019 onwards”, page 237

⇒ “1.7.19 Removing and installing air intake grille trim (side) - A3 S line and S3 up to model year 2016”, page 238

⇒ “1.7.20 Removing and installing trim for air inlet (side) - RS 3 Sportback up to model year 2018”, page 238

⇒ “1.7.21 Removing and installing trim for air inlet (side) - RS 3 Saloon, RS 3 Sportback from model year 2019 onwards”, page 239

⇒ “1.7.22 Removing and installing cover for headlight washer jet”, page 241

⇒ “1.7.23 Removing and installing mounting for fog light”, page 241

⇒ “1.7.24 Removing and installing spoiler (bottom section) - RS 3 Sportback up to model year 2018”, page 242

Protected by copyright. Copying for private or commercial purposes, in part or in whole, is not permitted unless authorised by AUDI AG. AUDI AG does not guarantee or accept any liability with respect to the correctness of information in this document. Copyright by AUDI AG.

⇒ “1.7.25 Removing and installing spoiler (bottom section) - S3 Saloon”, page 244

⇒ “1.7.26 Removing and installing spoiler (bottom section) - RS 3 Saloon, RS 3 Sportback from model year 2019 onwards”, page 244

⇒ “1.7.27 Removing and installing trim strip”, page 246

⇒ “1.7.28 Removing and installing bracket for ambient temperature sensor G17 ”, page 246

⇒ “1.7.29 Removing and installing moulded foam insert - A3”, page 247

⇒ “1.7.30 Removing and installing moulded foam insert - RS 3 ”, page 248

1.7.1 Removing and installing closure plate for bumper cover (front) - A3 up to model year 2016

Removing

– Remove noise insulation (front) ⇒ page 377 .

– Unfasten front section of wheel housing liner and push to side.

– Move central connector -arrow- clear at retainer.

Protected by copyright. Copying for private or commercial purposes, in part or in whole, is not permitted unless authorised by AUDI AG. AUDI ... lity with respect to the correctness of information i...

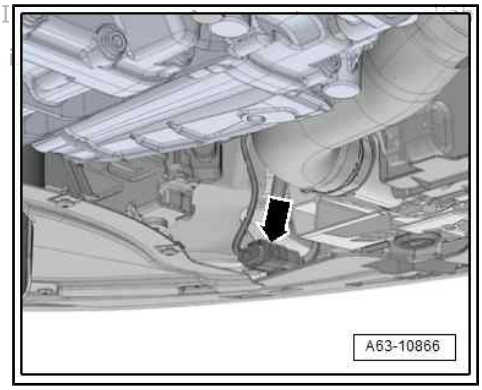

– If fitted, remove bolt -arrow-.

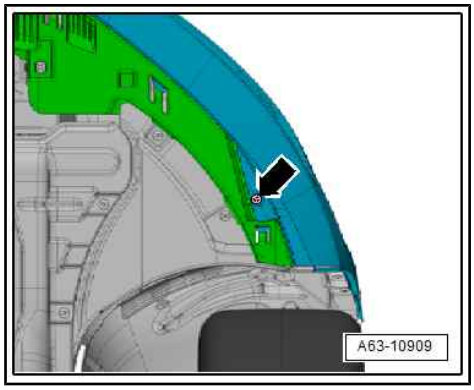

– Remove bolts -3-.
– Release catch -2- at closure plate -1- -arrow-.
– Detach closure plate for bumper cover (front) towards rear (as seen in direction of travel).
– If fitted, move headlight washer fluid line clear.

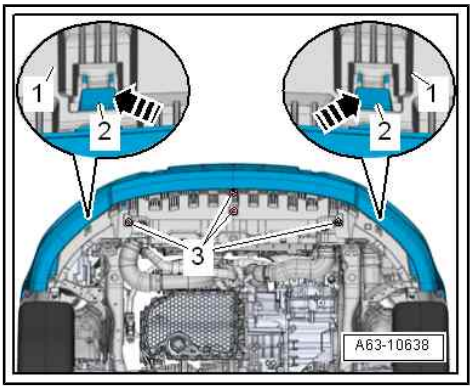

Installing

Installation is carried out in reverse sequence.

Tightening torques

♦ ⇒ “1.1 Exploded view - bumper cover”, page 201 .

♦ ⇒ “8.1.1 Exploded view - wheel housing liner (front)”, page 403 .

1.7.2 Removing and installing closure plate for bumper cover (front) - A3 from model year 2017 onwards, RS 3 Saloon, RS 3 Sportback from model year 2019 onwards

Removing

Protected by copyright. Copying for private or commercial purposes, in part or in whole, is not permitted unless authorised by AUDI AG. AUDI AG does not guarantee or accept any liability with respect to the correctness of information in this document. Copyright by AUDI AG.

– Remove noise insulation (front) ⇒ page 377 .
– A3: Unfasten front section of wheel housing liner and push to side.
– RS 3 Sportback: Remove wheel spoiler (front) ⇒ page 412 .
– RS 3 Saloon: Remove wheel housing liner ⇒ page 410 .
– Unplug electrical connector -3- and move central connector clear at retainer.
– Move fluid line -1- and electrical wiring harness -2- clear on both sides.

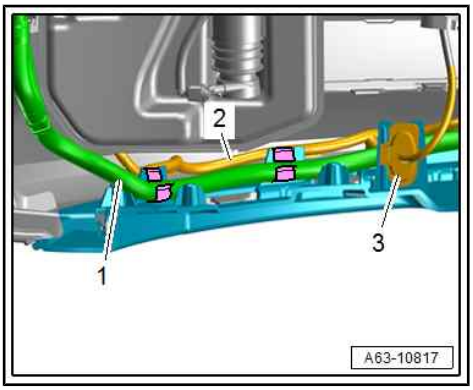

– Remove bolt -3-.
– Release fasteners -arrows-; at the same time, detach closure plate -2- for bumper cover (front) -1- towards rear (as seen in direction of travel) and remove.

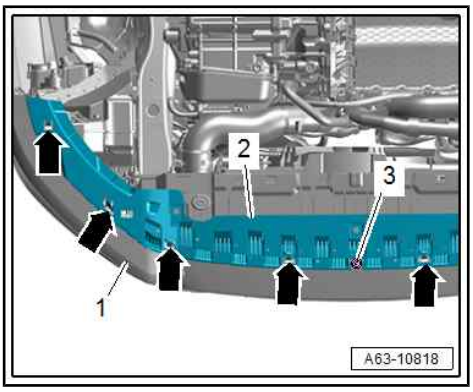

RS3 Saloon:

– Carefully press retaining clips -arrows- off guide lug using a screwdriver.

– Detach moulded foam insert (bottom) -2- from closure plate for bumper cover.

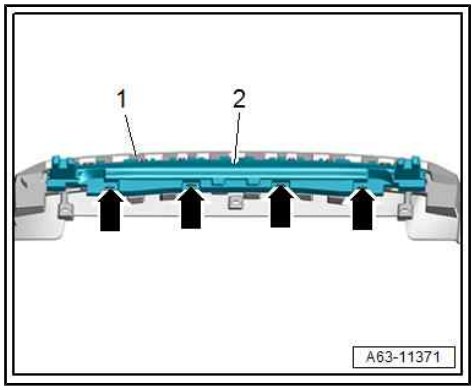

Installing

Installation is carried out in reverse sequence.

Tightening torques

♦ ⇒ "1.1.8 Exploded view - bumper cover, A3 S line and S3 from model year 2017 onwards", page 210 .

1.7.3 Removing and installing closure plate for bumper cover (front) - RS 3 Sportback up to model year 2018

Removing

– Remove noise insulation (front) ⇒ page 377 .

– Remove bolt -2- and detach moulded foam insert (side) -3-.

– Remove bolts -1-.

– Pull off closure plate for bumper cover -5- together with moulded foam insert (bottom) -4-.

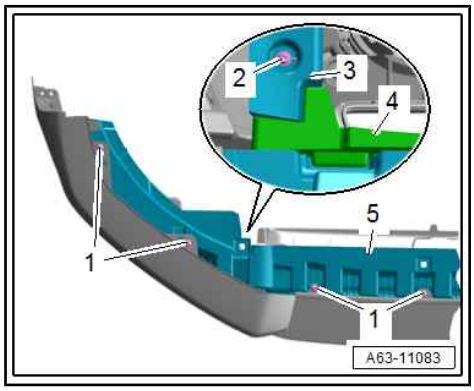

Installing

Installation is carried out in reverse sequence.

Tightening torques

♦ ⇒ "1.1.4 Exploded view - bumper cover, RS 3 Sportback up to model year 2018", page 205 .

1.7.4 Removing and installing reinforcement strut (bottom) - S3 Saloon up to model year 2016

Protected by copyright. Copying for private or commercial purposes, in part or in whole, is not permitted unless authorised by AUDI AG. AUDI AG does not guarantee or accept any liability with respect to the correctness of information in this document. Copyright by AUDI AG.

Removing

– Remove spoiler (bottom section) ⇒ page 244 .

– Move fluid line -3- and electrical wiring harness -4- clear.

– Remove bolts -5-.

– Release fasteners -arrows- and pull reinforcement strut -2- off bumper cover -1- towards rear.

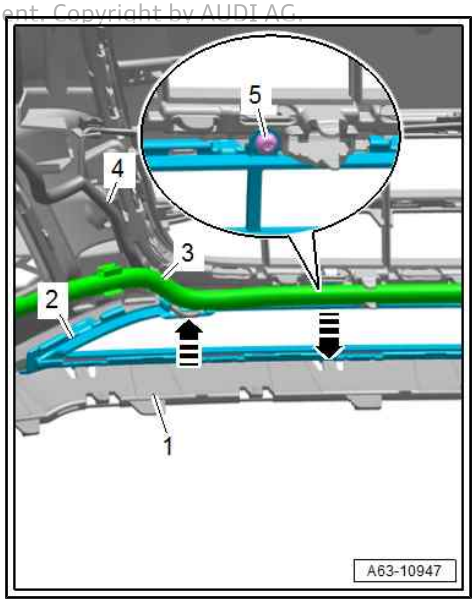

Installing

Installation is carried out in reverse sequence.

Tightening torques

♦ ⇒ "1.1.7 Exploded view - bumper cover, S3 Saloon up to model year 2016", page 209 .

1.7.5 Removing and installing reinforcement strut (bottom) - RS 3 Sportback up to model year 2018

Removing

– Remove bumper (front) ⇒ page 201 .

– Remove bolts -1-.

– Release fasteners -3- -arrow- and pull reinforcement strut -2- off bumper cover towards rear.

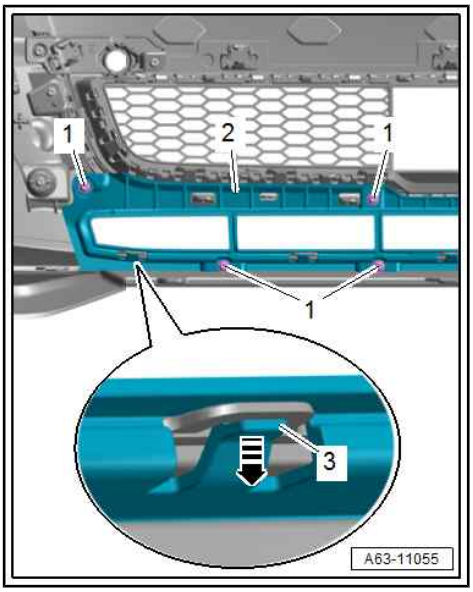

Installing

Installation is carried out in reverse order; note the following:

– Insert reinforcement strut (bottom) in bumper cover and press it on so that all retaining tabs engage properly.

Tightening torques

♦ ⇒ “1.1.4 Exploded view - bumper cover, RS 3 Sportback up to model year 2018”, page 205 .

1.7.6 Removing and installing reinforcement strut (bottom) - RS 3 Saloon, RS 3 Sportback from model year 2019 onwards

Removing

– Remove bumper (front) ⇒ page 201 .

– Remove closure plate for bumper cover (front) ⇒ page 229 .

– Move fluid line -4- and electrical wiring harness -2- clear.

– Remove bolts -3-.

– Release fasteners -arrows- and pull reinforcement strut -1- off bumper cover towards rear.

Protected by copyright. Copying for private or commerc
permitted unless authorised by AUDI AG. AUDI AG does
with respect to the correctness of information in this d

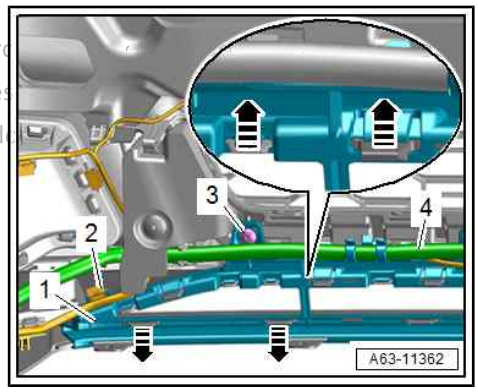

Installing

Installation is carried out in reverse order; note the following:

– Insert reinforcement strut (bottom) in bumper cover and press it on so that all retaining tabs engage properly.

Tightening torques

♦ ⇒ “1.1.5 Exploded view - bumper cover, RS 3 Saloon, RS 3 Sportback from model year 2019 onwards”, page 206 .

1.7.7 Removing and installing air intake grille - A3 without auxiliary side radiator up to model year 2016

Special tools and workshop equipment required

- Hook - T40207-

Protected by copyright. Copying for private or commercial purposes, in part or in whole, is not permitted unless authorised by AUDI AG. AUDI AG does not guarantee or accept any liability with respect to the correctness of information in this document. Copyright by AUDI AG.

Removing

– Insert hook - T40207- in opening -1- and pull air intake grille (bottom) -2- out of bumper cover -arrow-.

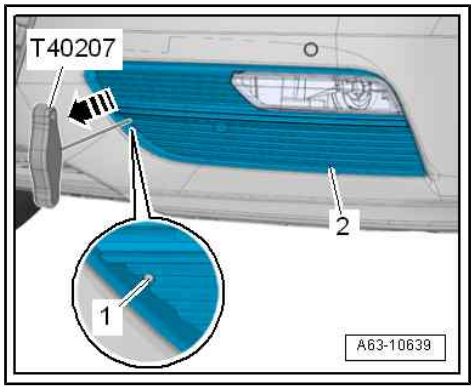

Note

The front bumper must be removed on vehicles without fog lights. Remove bumper cover (front) ⇒ page 214 *.*

Installing

Installation is carried out in reverse sequence.

1.7.8 Removing and installing air intake grille - A3 and S3 with auxiliary side radiator

Removing

– Remove bumper cover (front) ⇒ page 214 .

– Release fasteners -arrows- and pull air intake grille -2- off bumper cover -1-.

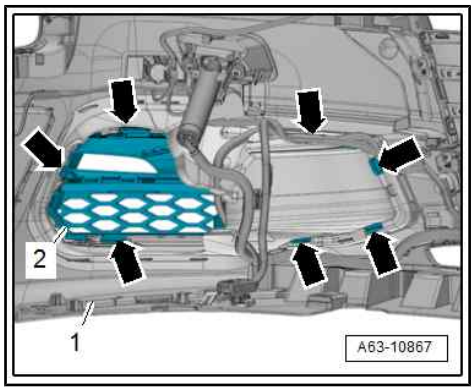

Installing

Installation is carried out in reverse order; note the following:

– Before installing air intake grille, position cover -2- on air intake grille -1-.
– Insert air intake grille in bumper cover and press it on so that all retaining tabs engage properly in bumper cover.

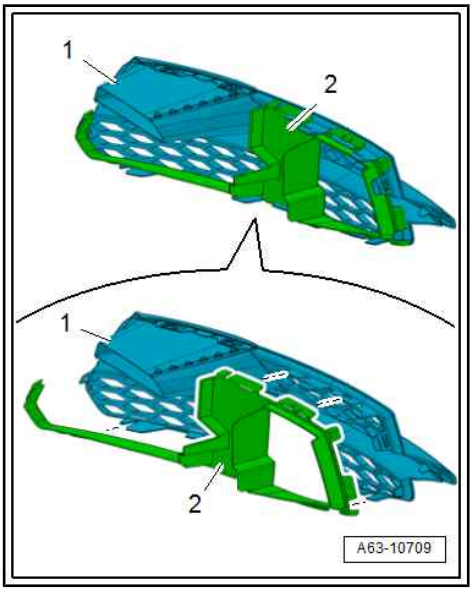

1.7.9 Removing and installing air intake grille - vehicles from model year 2017 onwards

Removing

– Remove bumper cover (front) ⇒ page 214 .
– A3: Release fasteners -arrows-.
– Remove air intake grille -1- towards front.

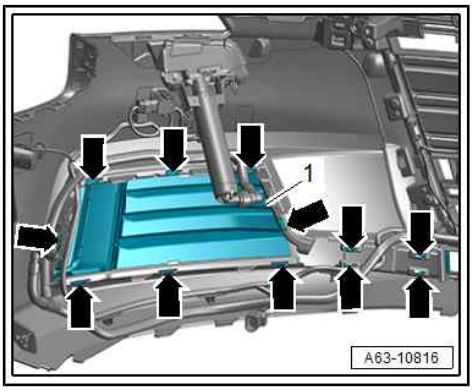

– A3 S line and Saloon: Release fasteners -arrows-.
– Remove air intake grille -1- towards front.

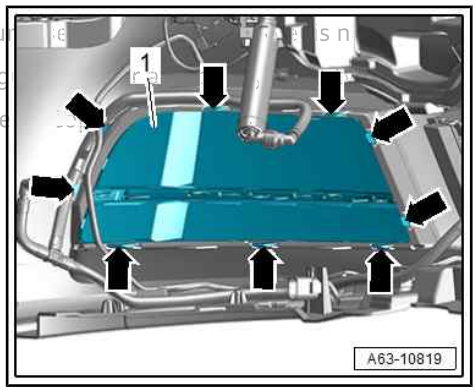

Protected by copyright. Copying for private or commercial pur
permitted unless authorised by AUDI AG. AUDI AG does not g
with respect to the correctness of information in this docume

Installing

Installation is carried out in reverse sequence.

1.7.10 Removing and installing trim strip

Removing

– Unfasten front section of wheel housing liner and push to side ⇒ page 408 .

– Release fasteners -arrows-.
– Detach trim strip -1- towards front.

Installing

Installation is carried out in reverse order; note the following:

– Press trim strip on until it engages audibly.

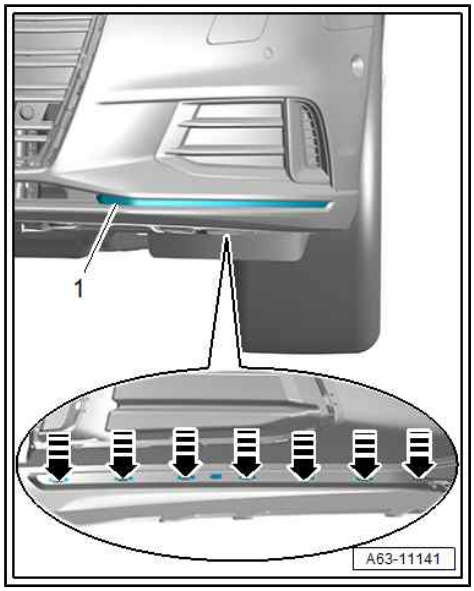

1.7.11 Removing and installing trim - A3 S line from model year 2017 onwards

Removing

– Remove closure plate for bumper cover (front) ⇒ page 229 .
– Release fasteners -arrows-.
– Detach cover -1- towards rear.

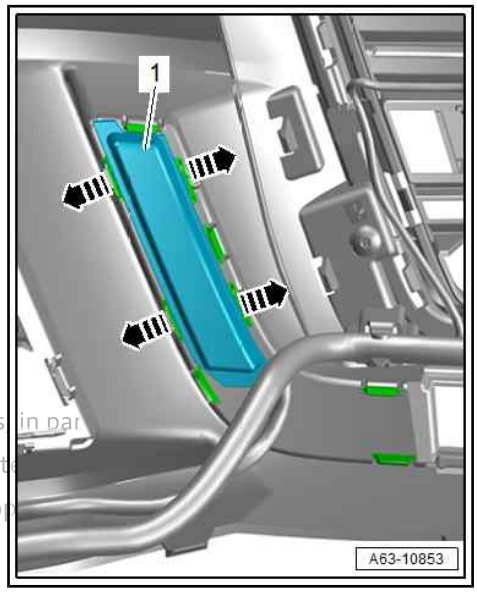

Protected by copyright. Copying for private or commercial purposes, in par
permitted unless authorised by AUDI AG. AUDI AG does not guarant
with respect to the correctness of information in this document. Co

– Release fasteners -arrows-.
– Detach trim -1- from bumper cover -2- towards front.

Installing

Installation is carried out in reverse order; note the following:

– Press cover and bumper cover on until they engage audibly.

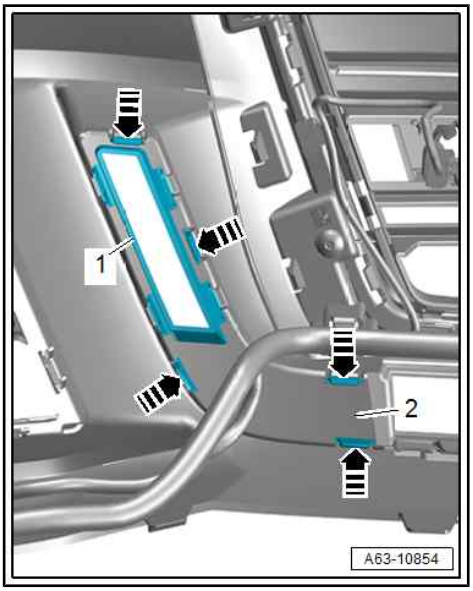

1.7.12 Removing and installing air intake grille - RS 3 Sportback up to model year 2018

Removing

– Pull air intake grille -2- off bumper cover -1- -arrow-.

Installing

Installation is carried out in reverse order; note the following:

– Insert air intake grille in bumper cover and press it on so that all retaining tabs engage properly in bumper cover.

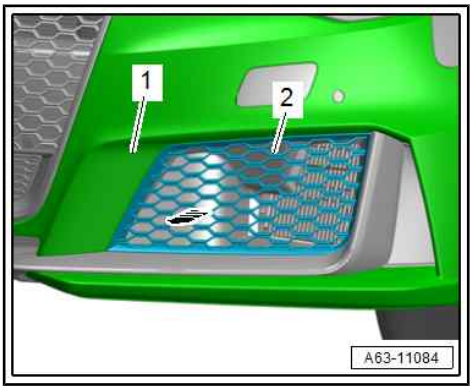

1.7.13 Removing and installing air intake grille - RS 3 Saloon, RS 3 Sportback from model year 2019 onwards

Protected by copyright. Copying for private or commercial purposes, in part or in whole, is not permitted unless authorised by AUDI AG. AUDI AG does not guarantee or accept any liability with respect to the correctness of information in this document. Copyright by AUDI AG.

Removing

– Remove air intake grille trim ⇒ page 237.
– Prise off clip -1-.
– Release fasteners -arrows-.
– Pull air intake grille -2- off bumper cover.

Installing

Installation is carried out in reverse order; note the following:

– Insert air intake grille in bumper cover and press it on so that all retaining tabs engage properly in bumper cover.

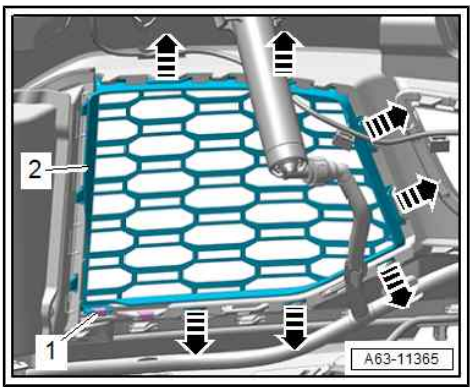

1.7.14 Removing and installing air intake grille (centre) - Saloon (basic version) from model year 2017 onwards

Removing

– Remove closure plate for bumper cover (front) ⇒ page 229 .

– If fitted, move headlight washer fluid hose clear.

– Release fasteners -arrows-.

– Detach air intake grille -2- from bumper cover -1-.

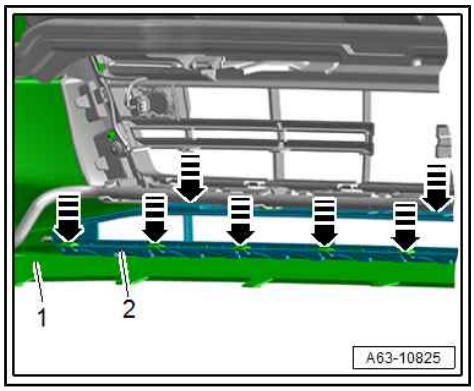

Installing

Installation is carried out in reverse order; note the following:

– Insert air intake grille in bumper cover and press it on so that all retaining tabs engage properly in bumper cover.

1.7.15 Removing and installing air intake grille (centre) - A3 S line up to model year 2016 and S3

Removing

– Remove closure plate for bumper cover (front) ⇒ page 228 .

– Release fasteners -arrows-.

– Detach air intake grille -2- from bumper cover -1-.

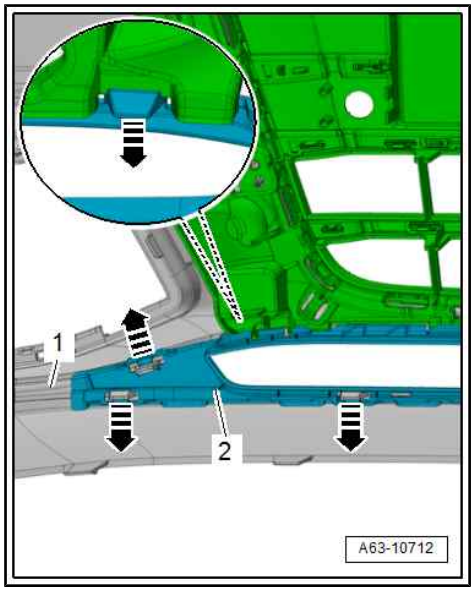

Installing

Installation is carried out in reverse order; note the following:

– Insert air intake grille in bumper cover and press it on so that all retaining tabs engage properly in bumper cover.

1.7.16 Removing and installing air intake grille (centre) - A3 S line from model year 2017 onwards

Removing

– Remove closure plate for bumper cover (front) ⇒ page 229 .

– If fitted, move headlight washer fluid hose clear.

Protected by copyright. Copying for private or commercial purposes, in part or in whole, is not permitted unless authorised by AUDI AG. AUDI AG does not guarantee or accept any liability with respect to the correctness of information in this document. Copyright by AUDI AG.

– Release fasteners -arrows-.
– Detach air intake grille -2- from bumper cover -1-.

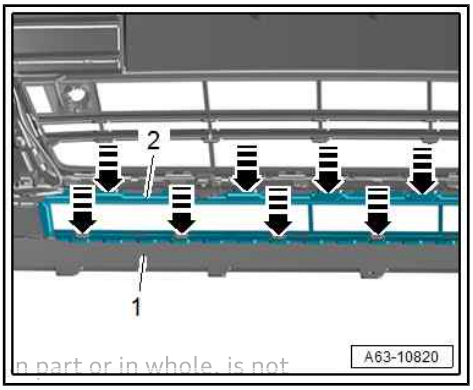

Installing

Installation is carried out in reverse order; note the following:

– Insert air intake grille in bumper cover and press it on so that all retaining tabs engage properly in bumper cover.

Protected by copyright. Copying for private or commercial purposes, in part or in whole, is not permitted unless authorised by AUDI AG. AUDI AG does not guarantee or accept any liability with respect to the correctness of information in this document. Copyright by AUDI AG.

1.7.17 Removing and installing air intake grille trim - RS 3 Sportback up to model year 2018

Removing

– Remove bumper cover (front) ⇒ page 214 .
– Move fluid line -1- clear.
– Move connector -4- and wiring harness -2- clear.
– Carefully press retaining clips -arrows- off guide lug using a screwdriver.
– Detach air intake grille trim -3-.

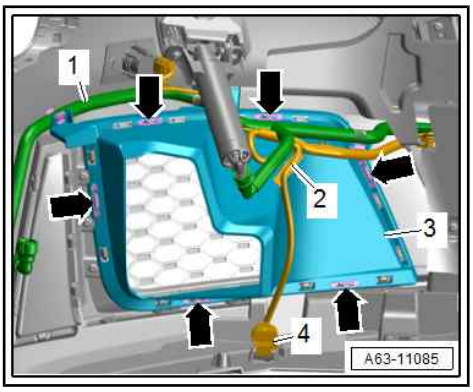

Installing

Installation is carried out in reverse sequence.

1.7.18 Removing and installing air intake grille trim - RS 3 Saloon, RS 3 Sportback from model year 2019 onwards

Removing

– Remove bumper cover (front) ⇒ page 214 .
– Move fluid line -4- and electrical wiring harness -3- clear.
– Release fasteners -2-.
– Detach air intake grille trim -1-.

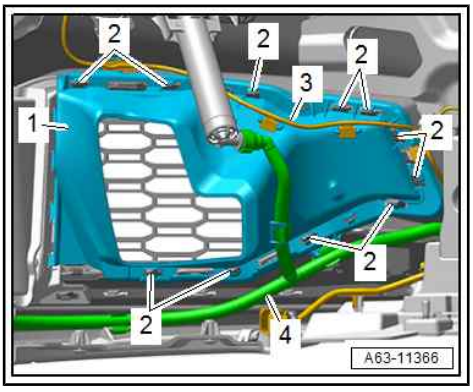

– Release fasteners -arrows-.

– Detach partition grille -1- from air intake grille trim -2-.

Installing

Installation is carried out in reverse sequence.

Protected by copyright. Copying for private or commercial purposes, in part or in whole, is not permitted unless authorised by AUDI AG. AUDI AG does not guarantee or assume any liability with respect to the correctness of information in this document.

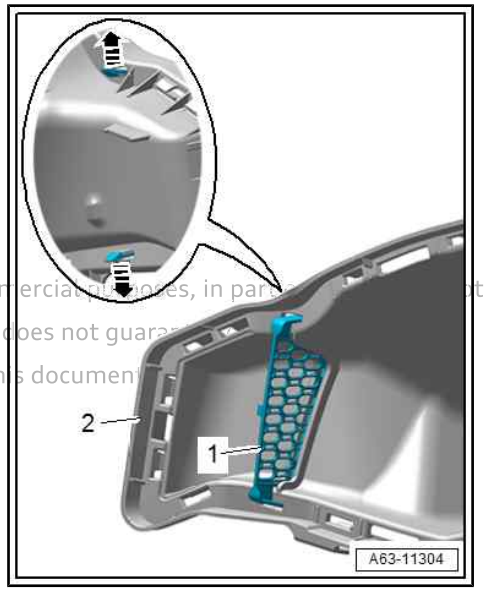

1.7.19 Removing and installing air intake grille trim (side) - A3 S line and S3 up to model year 2016

Removing

– Unfasten front section of wheel housing liner and push to side ⇒ page 408 .

– Reach behind bumper cover to fasteners -arrows- and press trim -2- out of bumper cover -1-.

– Remove air intake grille side trim.

Installing

Installation is carried out in reverse order; note the following:

– Insert air intake grille trim in bumper cover and press it on so that all retaining tabs engage properly in bumper cover.

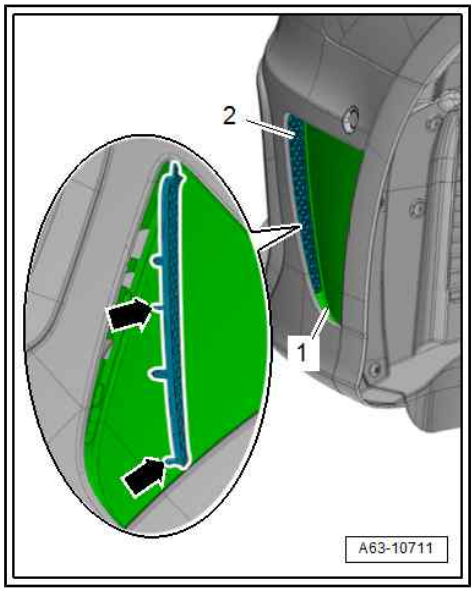

1.7.20 Removing and installing trim for air inlet (side) - RS 3 Sportback up to model year 2018

Removing

– Remove bumper cover (front) ⇒ page 214 .

– Move fluid line clear.

– Release fasteners -arrows- and pull trim -1- towards rear off bumper cover.

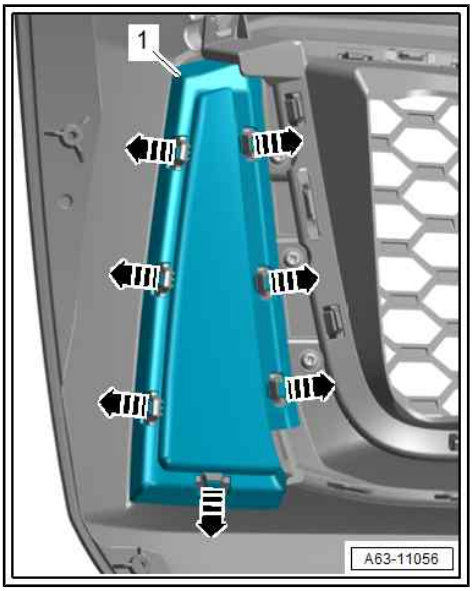

Installing

Installation is carried out in reverse order; note the following:

– Insert air intake grille trim in bumper cover and press it on so that all retaining tabs engage properly in bumper cover.

1.7.21 Removing and installing trim for air inlet (side) - RS 3 Saloon, RS 3 Sportback from model year 2019 onwards

Special tools and workshop equipment required

♦ Removal wedge - 3409-

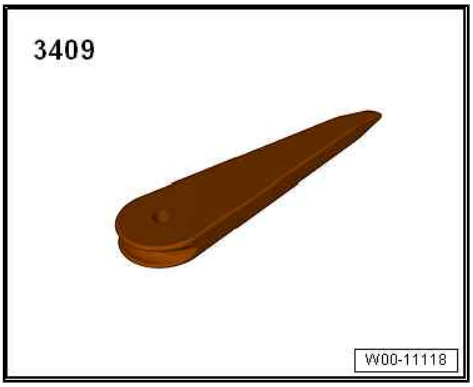

♦ Hot air blower - V.A.G 1416-

Protected by copyright. Copying for private or commercial purposes, in part or in whole, is not permitted unless authorised by AUDI AG. AUDI AG does not guarantee or accept any liability with respect to the correctness of information in this document. Copyright by AUDI AG.

♦ Cleaning solution - D 009 401 04-

♦ Primer - D355 205 A2-

Removing

– Remove air intake grille trim ⇒ page 237 .

– Move fluid line -5- clear.
– Remove spreader rivets -1 and 2-.
– Release fasteners -3- and pull trim -4- off towards inside.

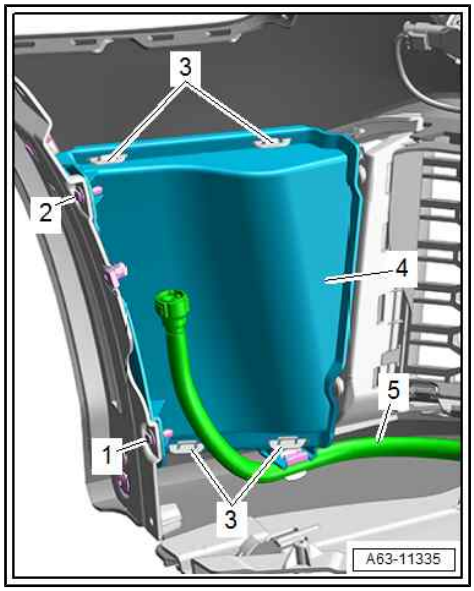

– Remove spreader rivets -2-.
– Remove bolt -1-.
– Carefully heat mounting -3- with hot air blower - V.A.G 1416- .
– Carefully detach adhesive strips -arrows- and at the same time pull off mounting.

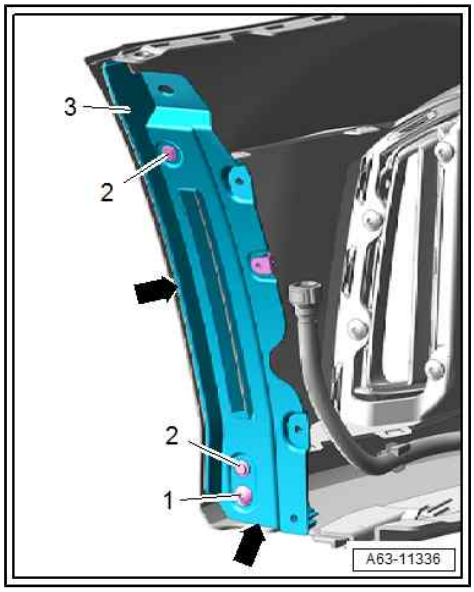

– Carefully press retaining clips -2- off guide lug using a screwdriver.
– Remove bolts -3, 4-.
– Release fastener -arrow- and pull trim -1- off bumper cover.

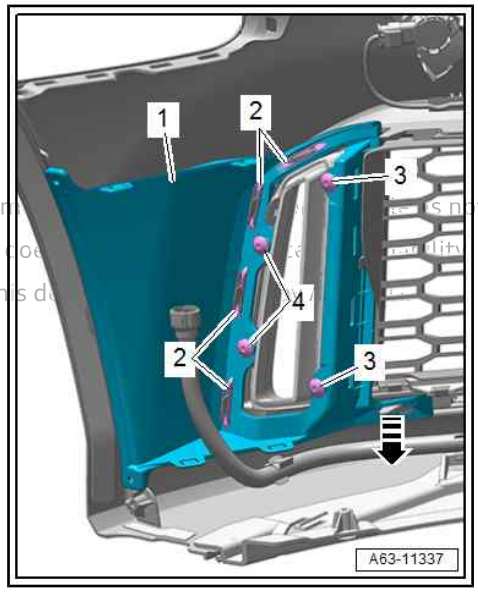

Installing

Installation is carried out in reverse order; note the following:

– Clean bonding surface on bumper cover with cleaning solution - D 009 401 04- .

- The bumper cover and the trim for air inlet (side) must be at room temperature.
- The bonding surfaces must be free of dirt and grease.

Protected by copyright. Copying for private or comm
permitted unless authorised by AUDI AG. AUDI AG
with respect to the correctness of information in this

– Apply primer - D355 205 A2- -item 1- to bonding surface -2- evenly in one stroke using applicator -3-.

– Wipe area treated with primer once with a clean paper towel and allow to flash off for 10 minutes.

• If the primer - D 355 205 A2- has been allowed to flash off for more than 3 hours, primer must be re-applied.

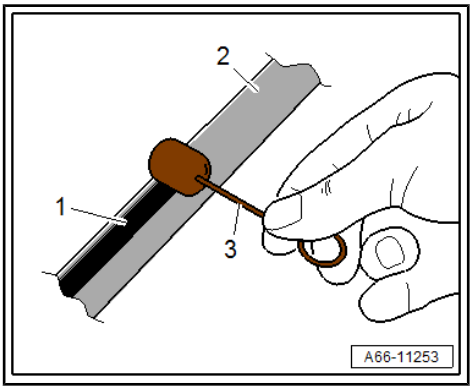

– Peel off protective film -2, 3- and press mounting -1- onto bumper cover over entire length.

• Leave vehicle standing at room temperature for at least 2 hours.

– Slide retaining clip onto retaining tab as far as stop, taking care that retaining tab does not break off.

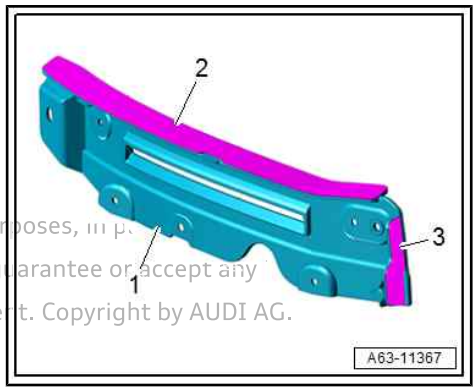

Protected by copyright. Copying for private or commercial purposes, in p
permitted unless authorised by AUDI AG. AUDI AG does not guarantee or accept any
Copyright by AUDI AG.

Tightening torques

◆ ⇒ “1.1.5 Exploded view - bumper cover, RS 3 Saloon, RS 3 Sportback from model year 2019 onwards”, page 206.

1.7.22 Removing and installing cover for headlight washer jet

Removing

– Pull telescopic section -2- of washer jet as far as possible out of bumper cover -arrow A-.

• Hold telescopic section in this position (pulled out).

– Press apart side sections -3- of washer jet cover -1- -arrow B-, carefully disengage cover from retaining pin and detach.

Installing

Installation is carried out in reverse order; note the following:

– Press on washer jet cover until it engages audibly.

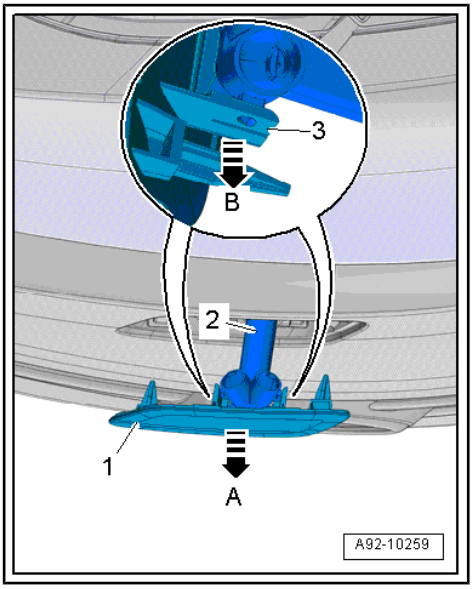

1.7.23 Removing and installing mounting for fog light

Removing

– Remove bumper cover (front) ⇒ page 214 .

– Remove air intake grille ⇒ page 231 .

– Remove fog light ⇒ Electrical system; Rep. gr. 94 ; Fog lights; Removing and installing fog lights .

– Release fasteners -arrows-.
– Pull mounting -2- off bumper cover -1-.

Installing

Installation is carried out in reverse sequence.

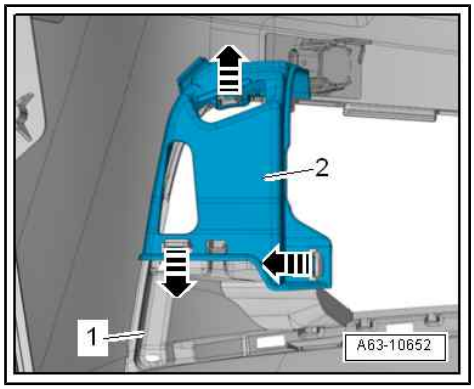

1.7.24 Removing and installing spoiler (bottom section) - RS 3 Sportback up to model year 2018

Special tools and workshop equipment required

♦ Removal wedge - 3409-

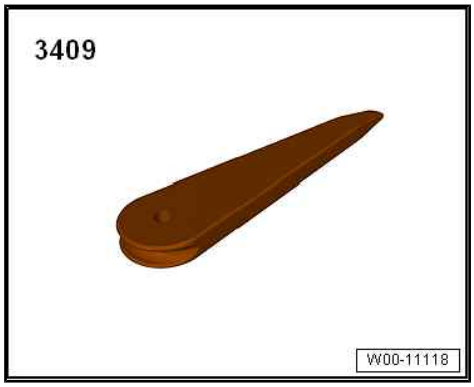

♦ Hot air blower - V.A.G 1416-

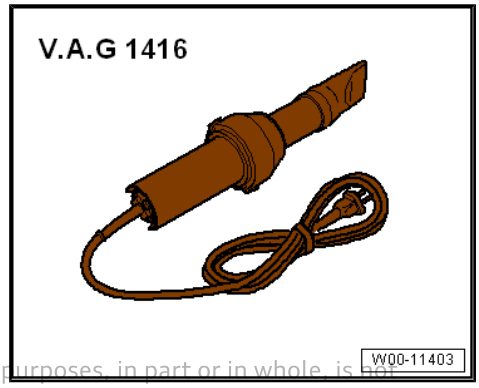

Protected by copyright. Copying for private or commercial purposes, in part or in whole, is not permitted unless authorised by AUDI AG. AUDI AG does not guarantee or accept any liability with respect to the correctness of information in this document. Copyright by AUDI AG.

♦ Cleaning solution - D 009 401 04-
♦ Primer - D355 205 A2-

Removing

– Remove air intake grille ⇒ page 235 .
– Remove reinforcement strut (bottom) ⇒ page 231 .
– Remove air intake grille trim ⇒ page 237 .
– Remove trim for air inlet (side) ⇒ page 238 .

– Remove bolts -1-.
– Release fasteners -2, 3-.

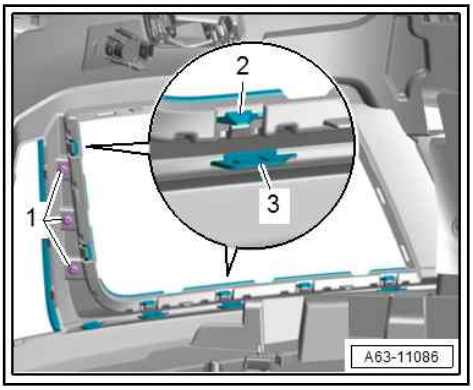

– Carefully heat bonded connection -3- with hot air blower - V.A.G 1416- and lever off bumper cover -2- using removal wedge - 3409- .
– Pull spoiler (bottom section) -1- off bumper cover -arrow-.

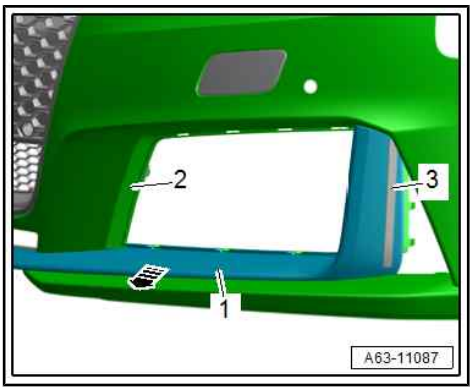

Installing

Installation is carried out in reverse order; note the following:

– Clean bonding surface on bumper cover with cleaning solution - D 009 401 04- .

• The vehicle and the spoiler (bottom section) must be at room temperature.

• The bonding surfaces must be free of dirt and grease.

– Apply primer - D355 205 A2- -item 1- to bonding surface -2- evenly in one stroke using applicator -3-.
– Wipe area treated with primer once with a clean paper towel and allow to flash off for 10 minutes.

• If the primer - D 355 205 A2- has been allowed to flash off for more than 3 hours, primer must be re-applied.

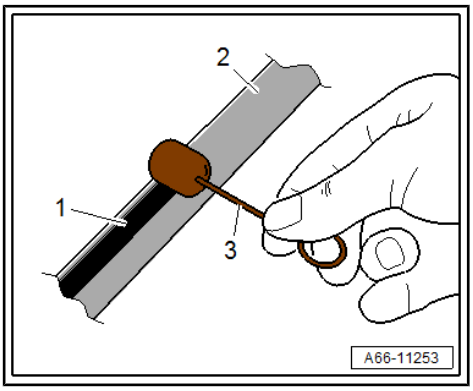

– Fold over ends of protective film or attach a removal aid -arrow- to protective film -4-.
– Apply spoiler (bottom section) -1- on bumper cover -2- and press on so that it engages audibly.
– Peel off protective film using removal aid -3- and press on spoiler (bottom section) onto bumper cover over entire length.

• Leave vehicle standing at room temperature for at least 2 hours.

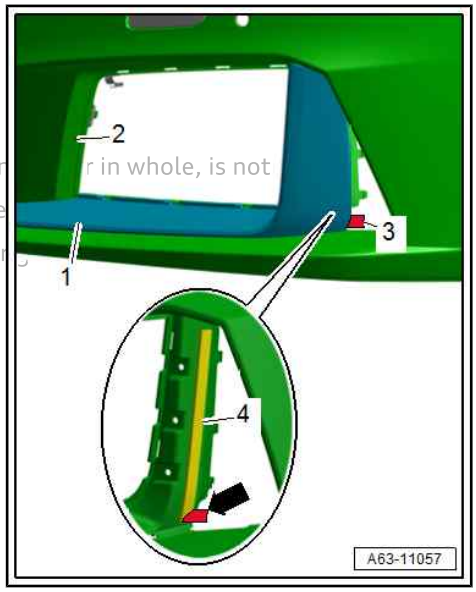

permitted unless authorised by AUDI AG. AUDI AG does not guarantee
with respect to the correctness of information in this document. Copyright

Tightening torques

♦ ⇒ “1.1.4 Exploded view - bumper cover, RS 3 Sportback up to model year 2018”, page 205 .

1.7.25 Removing and installing spoiler (bottom section) - S3 Saloon

Removing

– Remove closure plate for bumper cover (front) ⇒ page 228 .

– Release fasteners -arrows- and pull spoiler (bottom section) -2- towards front off bumper cover -1-.

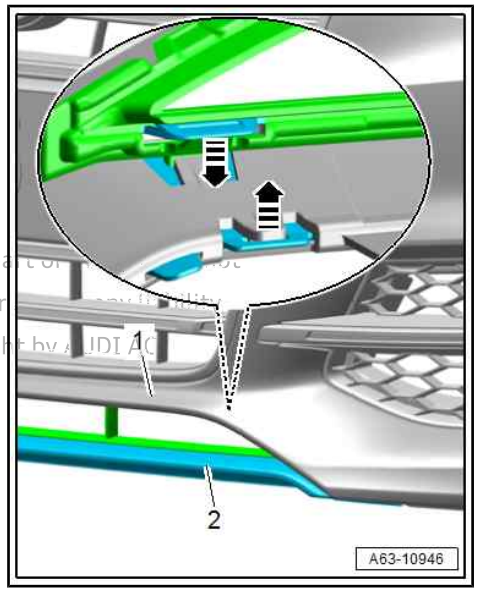

Installing

Installation is carried out in reverse sequence.

Protected by copyright. Copying for private or commercial purposes, in part or in whole, is not permitted unless authorised by AUDI AG. AUDI AG does not guarantee or assume any liability with respect to the correctness of information in this document. Copyright by AUDI AG

1.7.26 Removing and installing spoiler (bottom section) - RS 3 Saloon, RS 3 Sportback from model year 2019 onwards

Removing

– Remove air intake grille ⇒ page 235 .

– Remove reinforcement strut (bottom) ⇒ page 231 .

– Move fluid line -5- clear.

– Remove spreader rivets -1 and 2-.

– Release fasteners -3- and pull trim -4- off towards inside.

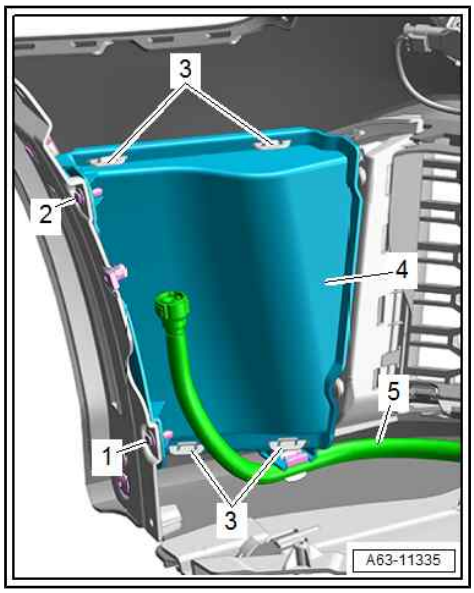

– Remove bolts -1, 2-.
– Prise off clip -3-.

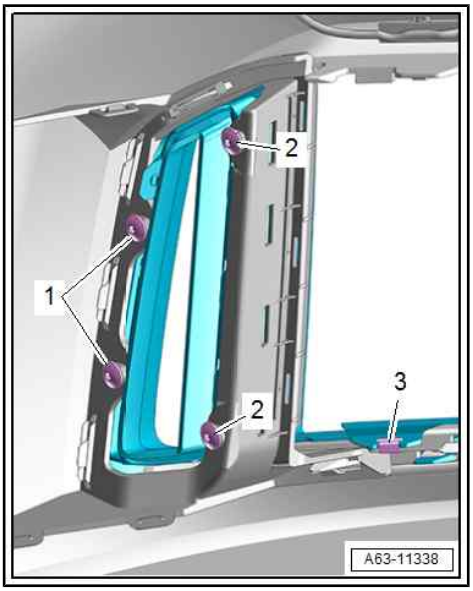

– Release fasteners -3, 4, 5-.
– Pull spoiler (bottom section) -1- off bumper cover -2- -arrow-.

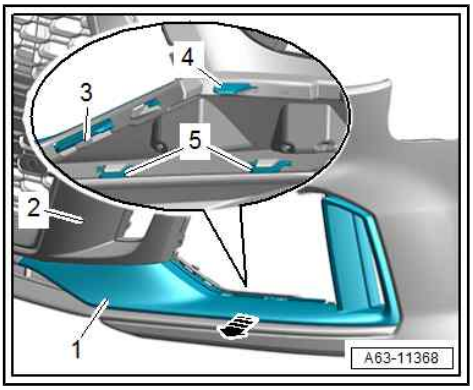

Preparing spoiler (bottom section) for installation with new parts

Note

The spoiler (bottom section) and the connecting piece are supplied as separate components for new orders and must be prepared as follows before installation:

Special tools and workshop equipment required

- ♦ Cleaning solution - D 009 401 04-
- ♦ Primer for plastic components - D 822 150 A1-
- ♦ 2-component plastic adhesive - D 88 KU2 A1-

- The spoiler (bottom section) and the connecting piece must be at room temperature.
- The bonding surfaces must be free of dirt and grease.

– Clean bonding surface with cleaning solution - D 009 401 04- .
– Apply primer for plastic components - D 822 150 A1- -item 1- to bonding surface -2- evenly in one stroke using applicator -3-.

Protected by copyright. Copying for private or commercial purposes, in part or in whole, is not permitted unless authorised by AUDI AG. AUDI AG does not guarantee or accept any liability with respect to the correctness of information in this document. Copyright by AUDI AG.

– Wipe area treated with primer once with a clean paper towel and allow to flash off for 10 minutes.

- If the primer for plastic components - D 822 150 A1- has been allowed to flash off for more than 3 hours, primer must be re-applied.

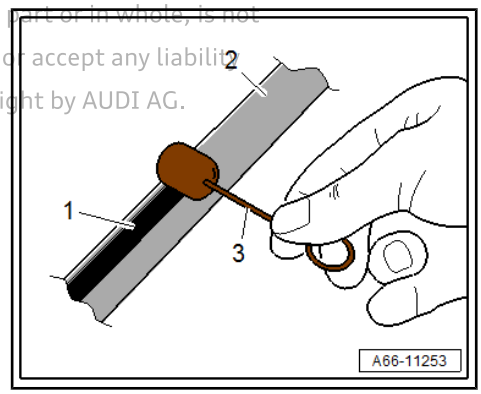

– Attach connecting piece -2- to spoiler (bottom section) -3- and secure in place with adhesive tape -1-.

– Fill 2-component plastic adhesive - D 88 KU2 A1- into the holes provided -arrows- until it can be seen at tabs -4-.

• Allow 20 minutes for adhesive on components to dry.

• Leave vehicle standing at room temperature for at least 1.5 hours.

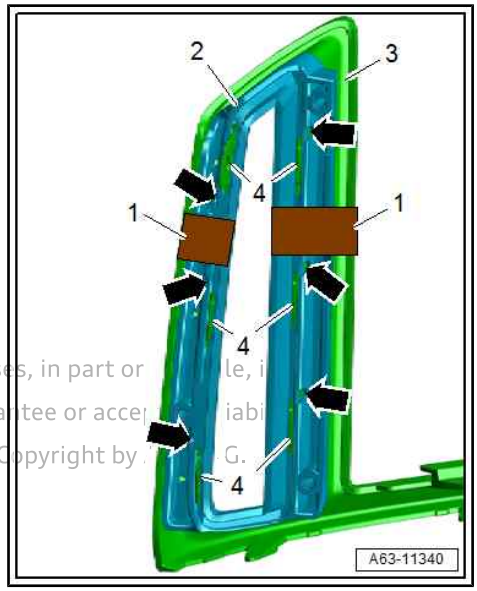

Installing

Installation is carried out in reverse sequence.

Tightening torques

◆ ⇒ "1.1.5 Exploded view - bumper cover, RS 3 Saloon, RS 3 Sportback from model year 2019 onwards", page 206 .

Protected by copyright. Copying for private or commercial purposes, in part or ... le, i... permitted unless authorised by AUDI AG. AUDI AG does not guarantee or accep... iabi... with respect to the correctness of information in this document. Copyright by ... G.

1.7.27 Removing and installing trim strip

Removing

– Remove spoiler (bottom section) on both sides ⇒ page 244 .

– Release fasteners -3-.

– Pull trim strip -1- off bumper cover -arrow-.

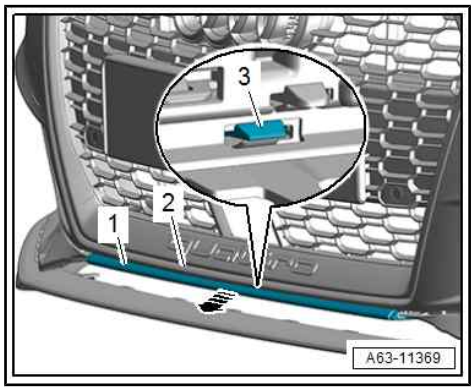

Installing

Installation is carried out in reverse sequence.

1.7.28 Removing and installing bracket for ambient temperature sensor - G17-

Removing

– Remove closure plate for bumper cover (front) ⇒ page 228 .

– Remove ambient temperature sensor ⇒ Rep. gr. 87 ; Further control components .

– Press out spreader pin -2- and detach bracket -1-.

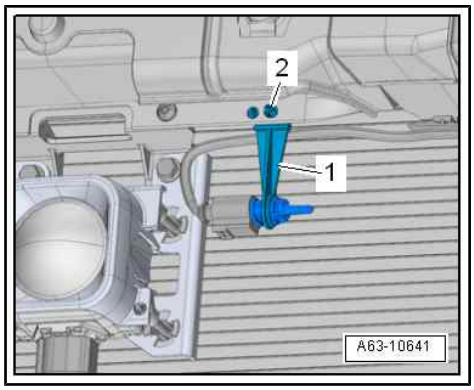

Installing

Installation is carried out in reverse sequence.

1.7.29 Removing and installing moulded foam insert - A3

- Observe safety precautions ⇒ General body repairs, interior; Rep. gr. 00 ; Safety precautions; Safety precautions when working on pyrotechnic components .

Removing

– Remove bumper cover (front) ⇒ page 214 .

– Vehicles without high-voltage system: Unscrew bolts -arrows- and detach retainer -1-.

– If fitted, cut through cable tie at bracket for crash sensor for pedestrian protection.

Protected by copyright. Copying for private or commercial pu
permitted unless authorised by AUDI AG. AUDI AG does not
with respect to the correctness of information in this docum

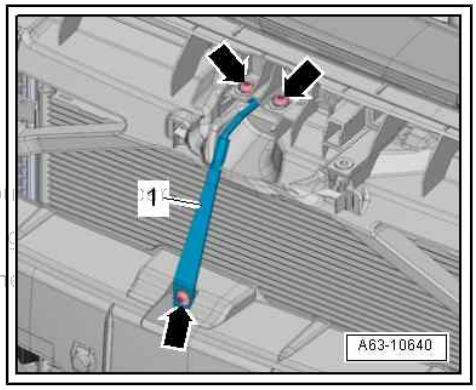

– Release retaining tabs -arrow- and disengage moulded foam insert -1- from impact bar.

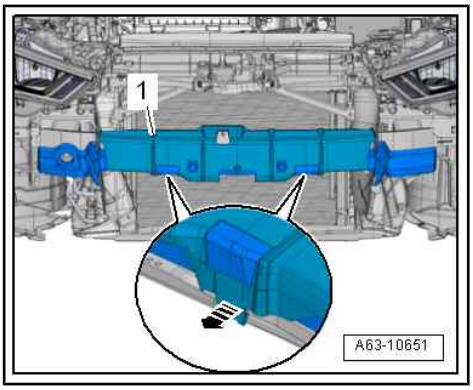

– Vehicles up to model year 2016: If fitted, move vacuum line -1- clear at moulded foam insert -2-.

– Detach moulded foam insert.

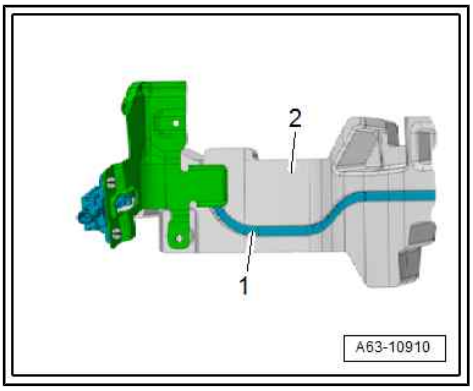

Installing

Installation is carried out in reverse order; note the following:

Vehicles up to model year 2016:

– Insert pressure hose -2- centrally in recess in moulded foam insert -1-, ensuring that coloured marking -3- is aligned with marking -4- on moulded foam insert.

– Insert pressure hose into recess in moulded foam insert evenly in both directions -arrows-.

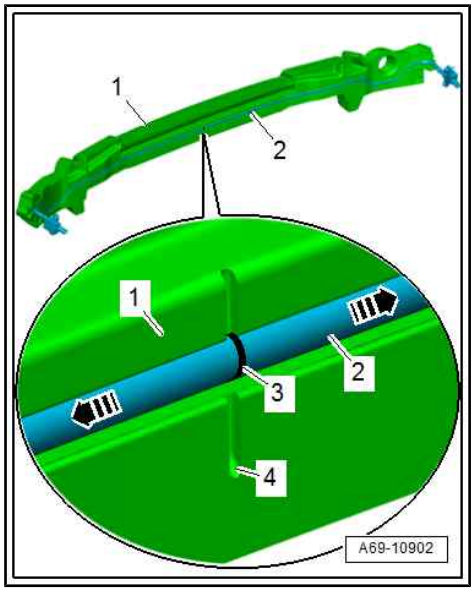

> ⚠ **WARNING**
>
> *Risk of damage to pressure hose if it is bent.*
>
> ◆ *Never kink or stretch pressure hose.*

– Secure moulded foam insert -1- to bracket on both sides with cable ties -2-; cable tie fastener -arrow- must be located at bottom of moulded foam insert.

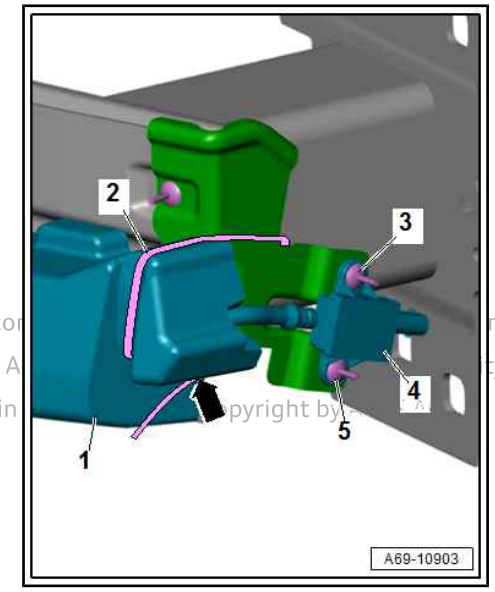

Tightening torques

◆ ⇒ Item 6 (page 38) .

Protected by copyright. Copying for private or co not
permitted unless authorised by AUDI AG. AUDI A ty
with respect to the correctness of information in pyright by

1.7.30 Removing and installing moulded foam insert - RS 3

Removing

– Remove bumper cover (front) ⇒ page 217 .

– Guide moulded foam insert -3- out of retainers -1 and 2- and detach.

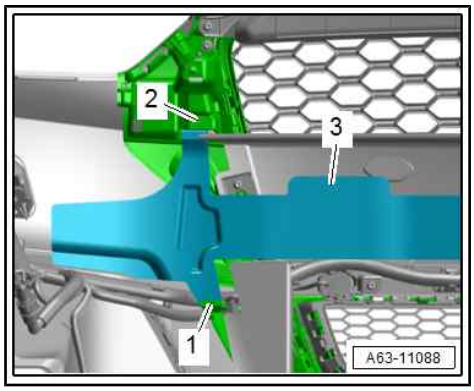

Installing

Installation is carried out in reverse sequence.

2 Bumper (rear)

⇒ “2.1 Exploded view - bumper cover”, page 249

⇒ “2.2 Exploded view - impact bar”, page 262

⇒ “2.3 Removing and installing bumper cover”, page 264

⇒ “2.4 Removing and installing impact bar”, page 267

⇒ “2.5 Removing and installing attachments”, page 271

2.1 Exploded view - bumper cover

⇒ “2.1.1 Exploded view - bumper cover, A3 and A3 Sportback up to model year 2016”, page 249

⇒ “2.1.2 Exploded view - bumper cover, vehicles with high-voltage system”, page 251

⇒ “2.1.3 Exploded view - bumper cover, A3 S line, S3 and S3 Sportback up to model year 2016”, page 252

⇒ “2.1.4 Exploded view - bumper cover, A3 and A3 Sportback from model year 2017 onwards”, page 254

⇒ “2.1.5 Exploded view - bumper cover, RS3 up to model year 2018”, page 255

⇒ “2.1.6 Exploded view - bumper cover, RS3 from model year 2019 onwards”, page 257

⇒ “2.1.7 Exploded view - bumper cover, A3 Saloon up to model year 2016”, page 258

⇒ “2.1.8 Exploded view - bumper cover, S line and S3 Saloon up to model year 2016”, page 259

⇒ “2.1.9 Exploded view - bumper cover, Saloon from model year 2017 onwards”, page 261

This document is protected by copyright. Copying for private or commercial purposes, in part or in whole, is not permitted without the prior consent of AUDI AG. AUDI AG does not guarantee or accept any liability with respect to the correctness of information in this document. Copyright by AUDI AG.

2.1.1 Exploded view - bumper cover, A3 and A3 Sportback up to model year 2016

WARNING

Damaged natural gas fuel tanks constitute an explosion risk - risk of death!

- *If components at the rear and/or rear side of the vehicle (e.g. bumper cover, rear lid, underbody trim, longitudinal member, rear cross panel, etc.) are removed due to accident damage, the natural gas fuel tanks must be checked for damage.*
- *Carry out assessment of damage to fuel tanks ⇒ Natural gas engines - General information; Rep. gr. 20 ; Assessing damage to fuel tanks .*

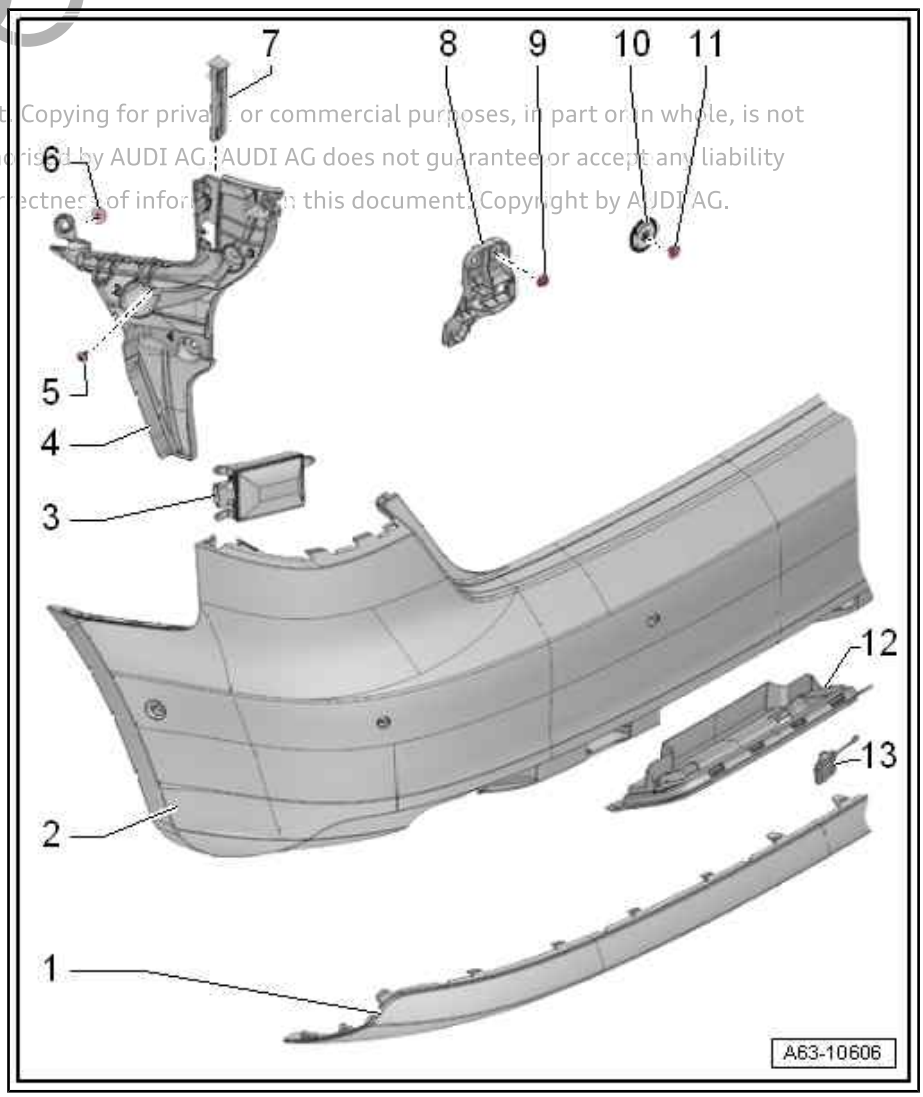

Protected by copyright. Copying for private or commercial purposes, in part or in whole, is not permitted without the express authorisation by AUDI AG. AUDI AG does not guarantee or accept any liability with respect to the correctness of information in this document. Copyright by AUDI AG.

1 - Base plate for bumper cover

- ❑ Removing and installing ⇒ page 273

2 - Bumper cover (rear)

- ❑ Removing and installing ⇒ page 264

3 - Lane change assist control unit

- ❑ Depending on version
- ❑ Overview ⇒ Electrical system; Rep. gr. 96 ; Lane change assist; Overview - lane change assist

4 - Mounting (side)

- ❑ For bumper cover
- ❑ Removing and installing ⇒ page 271

5 - Bolt

- ❑ 4x
- ❑ Tightening sequence ⇒ page 251

6 - Nut

- ❑ Tightening sequence ⇒ page 251

7 - Locking mechanism

- ❑ For securing bumper cover (rear) to mounting (top)

8 - Mounting

- ❑ For bumper cover
- ❑ Removing and installing ⇒ page 279

9 - Nut

- ❑ Bolt, 2x
- ❑ 2 Nm

10 - Cover

- ❑ 4x

11 - Nut

- ❑ 4x
- ❑ 5 Nm

12 - Cover

- ❑ At towing bracket
- ❑ Different versions

13 - Cover

- ❑ For towing eye

Bumper cover mounting (side) - tightening torque and sequence

– Tighten bolts and nut in sequence shown.

♦ Tighten bolts -1 ... 4- to 3 Nm.

♦ Tighten nut -5- to 2.5 Nm

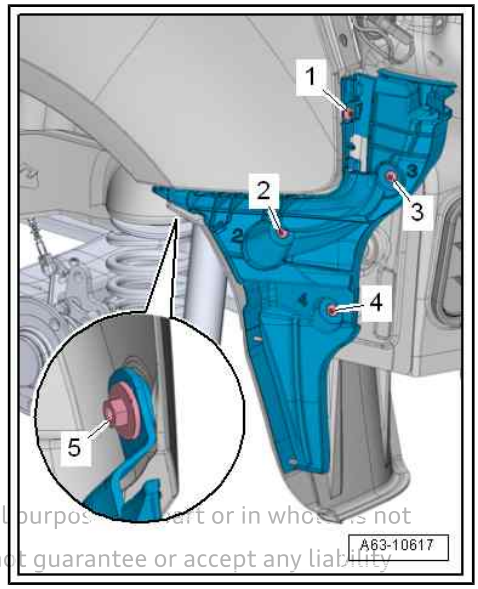

Protected by copyright. Copying for private or commercial purposes, in part or in whole is not permitted unless authorised by AUDI AG. AUDI AG does not guarantee or accept any liability with respect to the correctness of information in this document. Copyright by AUDI AG.

2.1.2 Exploded view - bumper cover, vehicles with high-voltage system

1 - Base plate for bumper cover

- ❑ Removing and installing ⇒ page 273

2 - Reflector

- ❑ Removing and installing ⇒ page 264

3 - Cover

4 - Mounting (side)

- ❑ For bumper cover
- ❑ Removing and installing ⇒ page 271

5 - Bolt

- ❑ 4x
- ❑ Tightening sequence ⇒ page 251

6 - Nut

- ❑ Tightening sequence ⇒ page 251

7 - Locking mechanism

- ❑ For securing bumper cover (rear) to mounting (top)

8 - Lane change assist control unit

- ❑ Depending on version
- ❑ Overview ⇒ Electrical system; Rep. gr. 96 ; Lane change assist; Overview - lane change assist

9 - Mounting

- ❑ For bumper cover

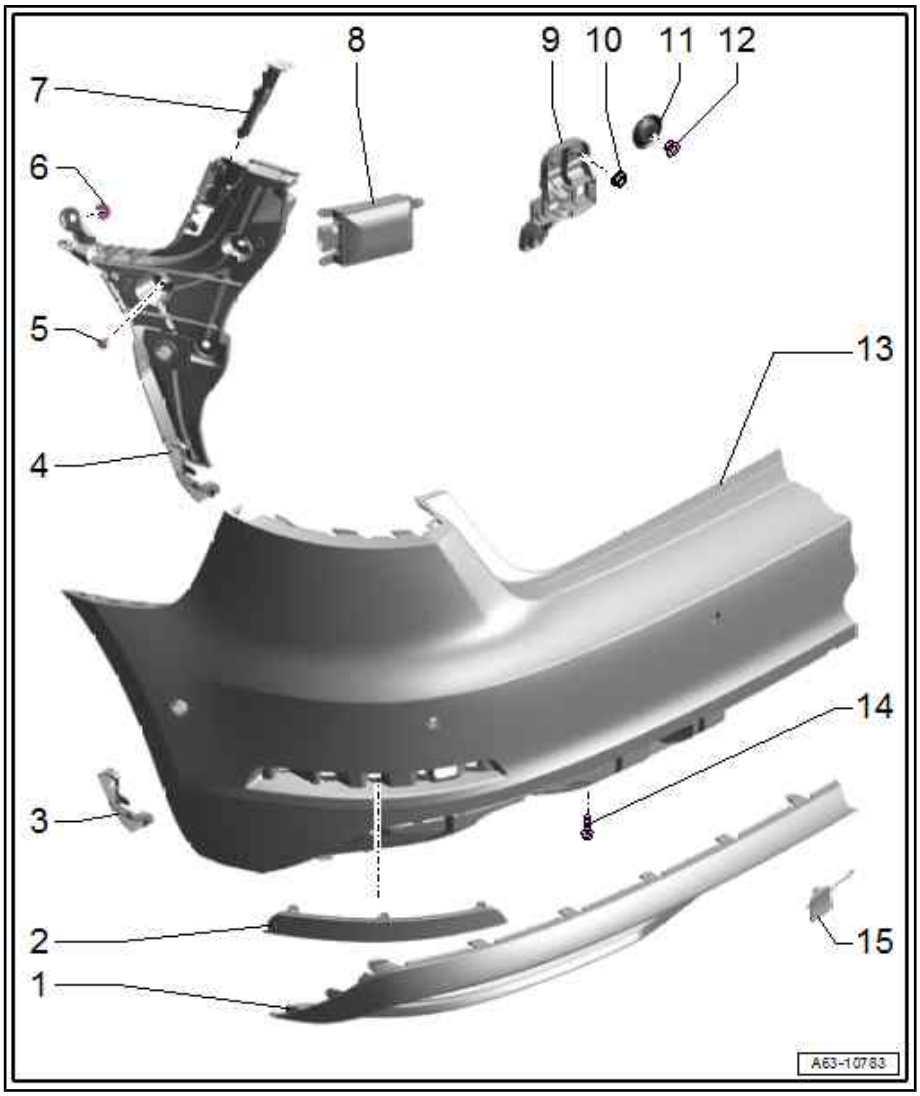

- ❑ Removing and installing ⇒ page 279

10 - Nut

- ❑ Bolt, 2x
- ❑ 2 Nm

11 - Cover

- ❑ 4x

12 - Nut

- ❑ 4x
- ❑ 5 Nm

Protected by copyright. Copying for private or commercial purposes, in part or in whole, is not permitted unless authorised by AUDI AG. AUDI AG does not guarantee or accept any liability with respect to the correctness of information in this document. Copyright by AUDI AG.

13 - Bumper cover (rear)

- ❑ Removing and installing ⇒ page 264

14 - Bolt

- ❑ Bolt, 2x
- ❑ 2 Nm

15 - Cover

- ❑ For towing eye

2.1.3 Exploded view - bumper cover, A3 S line, S3 and S3 Sportback up to model year 2016

WARNING

Damaged natural gas fuel tanks constitute an explosion risk - risk of death!

- *If components at the rear and/or rear side of the vehicle (e.g. bumper cover, rear lid, underbody trim, longitudinal member, rear cross panel, etc.) are removed due to accident damage, the natural gas fuel tanks must be checked for damage.*
- *Carry out assessment of damage to fuel tanks ⇒ Natural gas engines - General information; Rep. gr. 20 ; Assessing damage to fuel tanks .*

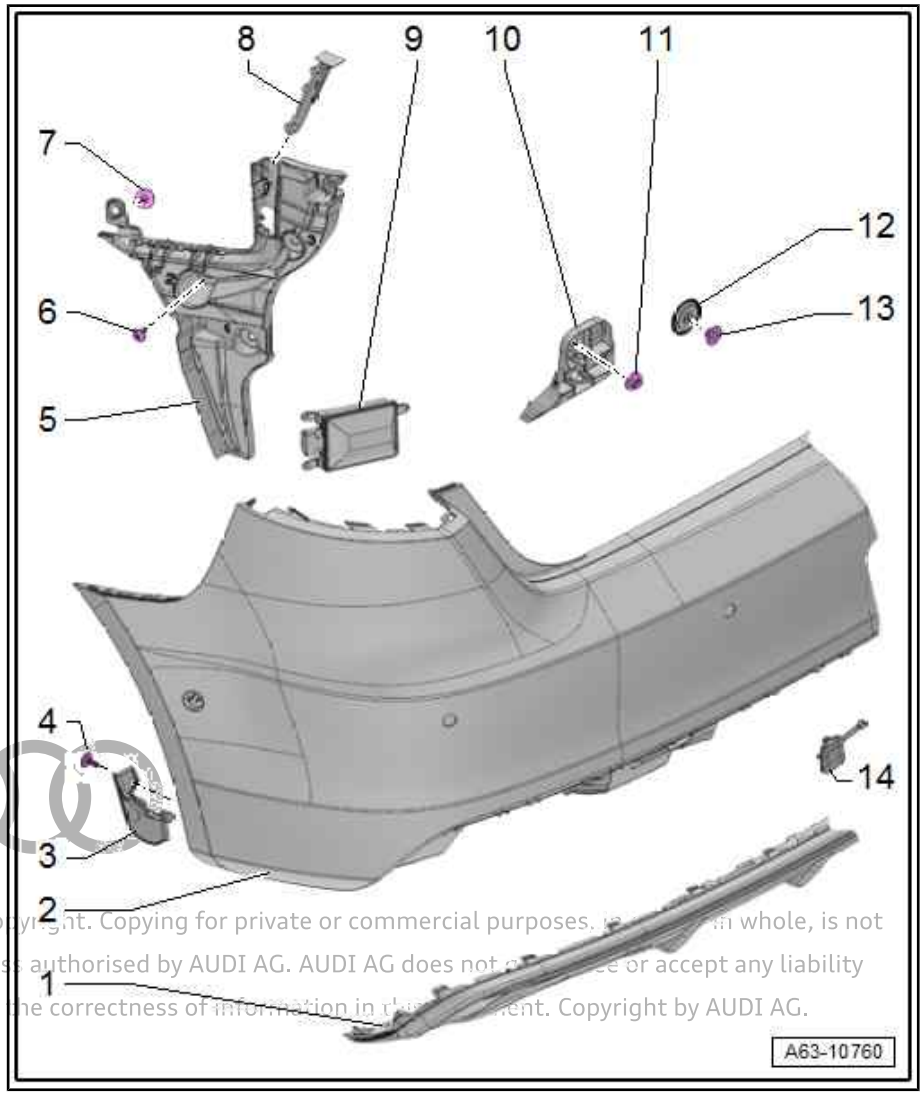

1 - Base plate for bumper cover

- ❑ Removing and installing ⇒ page 273

2 - Bumper cover (rear)

- ❑ Removing and installing ⇒ page 264

3 - Cover

4 - Bolt

- ❑ 2 Nm

5 - Mounting (side)

- ❑ For bumper cover
- ❑ Removing and installing ⇒ page 271

6 - Bolt

- ❑ 4x
- ❑ Tightening sequence ⇒ page 251

7 - Nut

- ❑ Tightening sequence ⇒ page 251

8 - Locking mechanism

- ❑ For securing bumper cover (rear) to mounting (top)

9 - Lane change assist control unit

- ❑ Depending on version
- ❑ Overview ⇒ Electrical system; Rep. gr. 96 ; Lane change assist; Overview - lane change assist

Protected by copyright. Copying for private or commercial purposes, in whole or in whole, is not permitted unless authorised by AUDI AG. AUDI AG does not guarantee or accept any liability with respect to the correctness of information in this document. Copyright by AUDI AG.

10 - Mounting

- ❑ For bumper cover
- ❑ Removing and installing ⇒ page 279

11 - Nut

- ❑ Bolt, 2x
- ❑ 2 Nm

12 - Cover

- ❑ 4x

13 - Nut

- ❑ 4x
- ❑ 5 Nm

14 - Cover

- ❑ For towing eye

2.1.4 Exploded view - bumper cover, A3 and A3 Sportback from model year 2017 onwards

WARNING

Damaged natural gas fuel tanks constitute an explosion risk - risk of death!

- *If components at the rear and/or rear side of the vehicle (e.g. bumper cover, rear lid, underbody trim, longitudinal member, rear cross panel, etc.) are removed due to accident damage, the natural gas fuel tanks must be checked for damage.*
- *Carry out assessment of damage to fuel tanks ⇒ Natural gas engines - General information; Rep. gr. 20 ; Assessing damage to fuel tanks .*

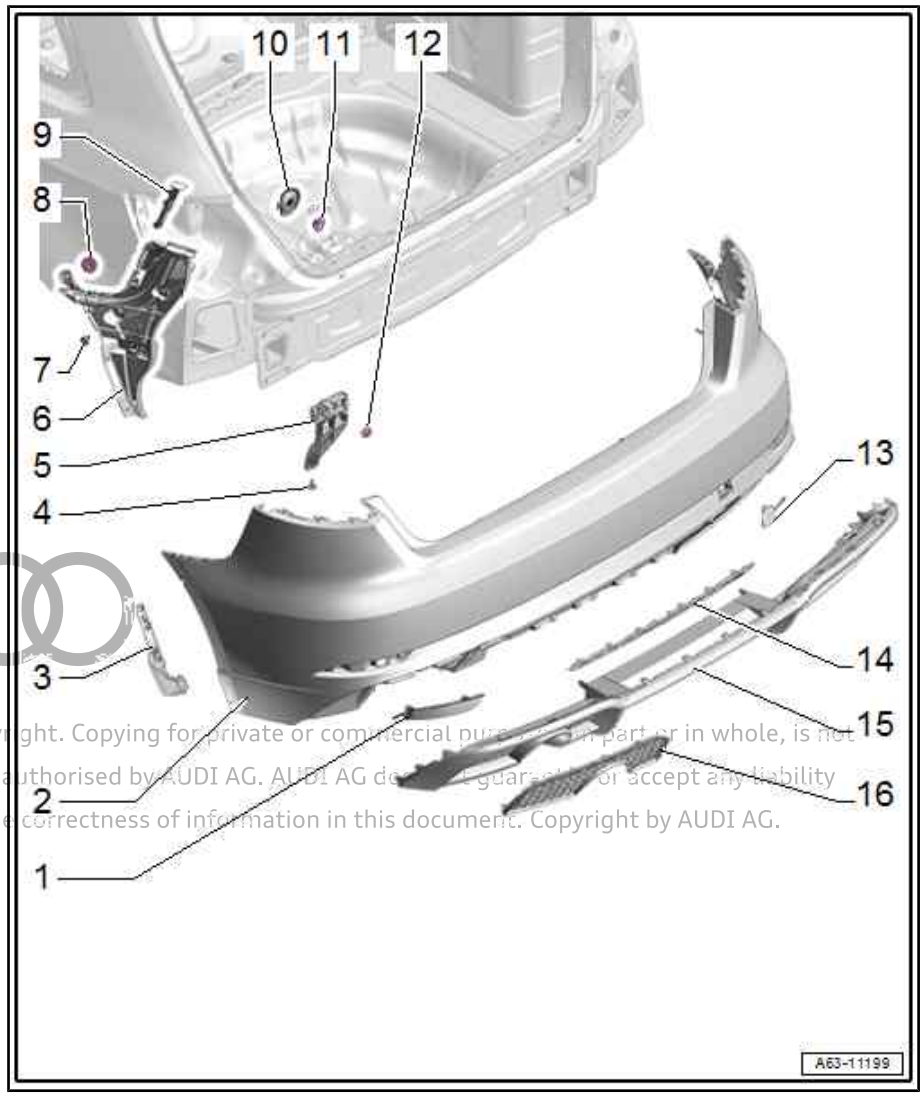

1 - Reflector
- ❑ Removing and installing ⇒ page 264

2 - Bumper cover (rear)
- ❑ Removing and installing ⇒ page 264

3 - Cover

4 - Bolt
- ❑ 2 Nm

5 - Mounting
- ❑ For bumper cover
- ❑ Removing and installing ⇒ page 279

6 - Mounting (side)
- ❑ For bumper cover
- ❑ Removing and installing ⇒ page 271

7 - Bolt
- ❑ 4x
- ❑ Tightening sequence ⇒ page 251

8 - Nut
- ❑ Tightening sequence ⇒ page 251

9 - Locking mechanism
- ❑ For securing bumper cover (rear) to mounting (top)

10 - Cover
- ❑ 4x

11 - Nut
- ❑ 4x
- ❑ 5 Nm

Protected by copyright. Copying for private or commercial purposes, in part or in whole, is not permitted unless authorised by AUDI AG. AUDI AG does not guarantee or accept any liability with respect to the correctness of information in this document. Copyright by AUDI AG.

12 - Nut
- ❑ Bolt, 2x
- ❑ 2 Nm

13 - Cover
- ❑ For towing eye

14 - Trim
- ❑ S line version only
- ❑ For bumper cover
- ❑ Removing and installing ⇒ page 276

15 - Base plate for bumper cover
- ❑ Removing and installing ⇒ page 273

16 - Trim
- ❑ S line version only
- ❑ For base plate for bumper cover
- ❑ Removing and installing ⇒ page 277

2.1.5 Exploded view - bumper cover, RS3 up to model year 2018

1 - Base plate for bumper cover
- ❑ Removing and installing ⇒ page 273

2 - Bumper cover (rear)
- ❑ Removing and installing ⇒ page 264

3 - Cover

4 - Bolt
- ❑ 2 Nm

5 - Wheel arch extension
- ❑ Removing and installing ⇒ page 273

6 - Bolt
- ❑ 2 Nm

7 - Spreader rivet

8 - Mounting (side)
- ❑ For bumper cover
- ❑ Removing and installing ⇒ page 271

9 - Bolt
- ❑ 4x
- ❑ Tightening sequence ⇒ page 251

10 - Bracket
- ❑ For wheel arch extension

11 - Nut
- ❑ Tightening sequence ⇒ page 251

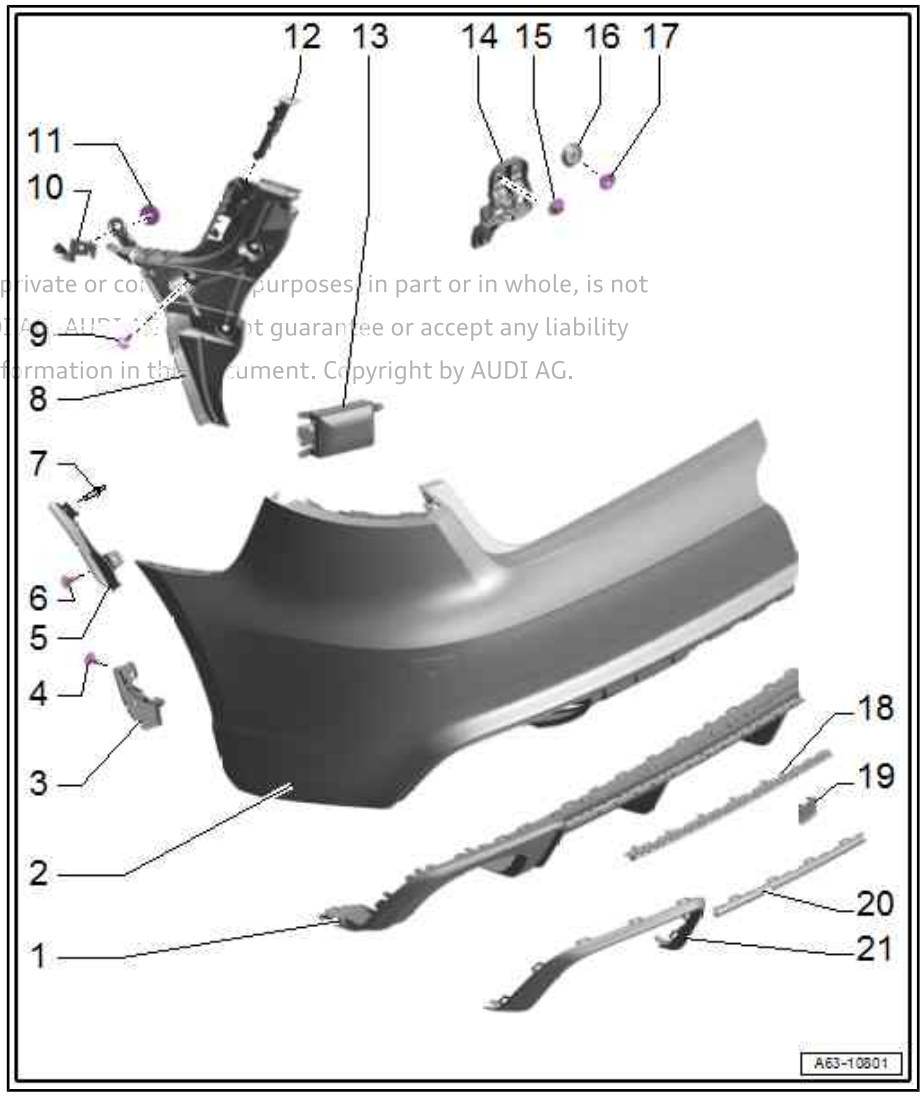

Protected by copyright. Copying for private or commercial purposes, in part or in whole, is not permitted unless authorised by AUDI AG. AUDI AG does not guarantee or accept any liability with respect to the correctness of information in this document. Copyright by AUDI AG.

Protected by copyright. Copying for private or commercial purposes, in part or in whole, is not permitted unless authorised by AUDI AG. AUDI AG does not guarantee or accept any liability with respect to the correctness of information in this document. Copyright by AUDI AG.

12 - Locking mechanism

- ❑ For securing bumper cover (rear) to mounting (top)

13 - Lane change assist control unit

- ❑ Depending on version
- ❑ Overview ⇒ Electrical system; Rep. gr. 96 ; Lane change assist; Overview - lane change assist

14 - Mounting

- ❑ For bumper cover
- ❑ Removing and installing ⇒ page 279

15 - Nut

- ❑ Bolt, 2x
- ❑ 2 Nm

16 - Cover

- ❑ 4x

17 - Nut

- ❑ 4x
- ❑ 5 Nm

18 - Trim

- ❑ For base plate for bumper cover
- ❑ Sportback only
- ❑ Removing and installing ⇒ page 277

19 - Cover

- ❑ For towing eye

20 - Trim strip

- ❑ For base plate for bumper cover
- ❑ Removing and installing ⇒ page 279

21 - Trim strip

- ❑ For tailpipe
- ❑ Removing and installing ⇒ page 278

2.1.6 Exploded view - bumper cover, RS3 from model year 2019 onwards

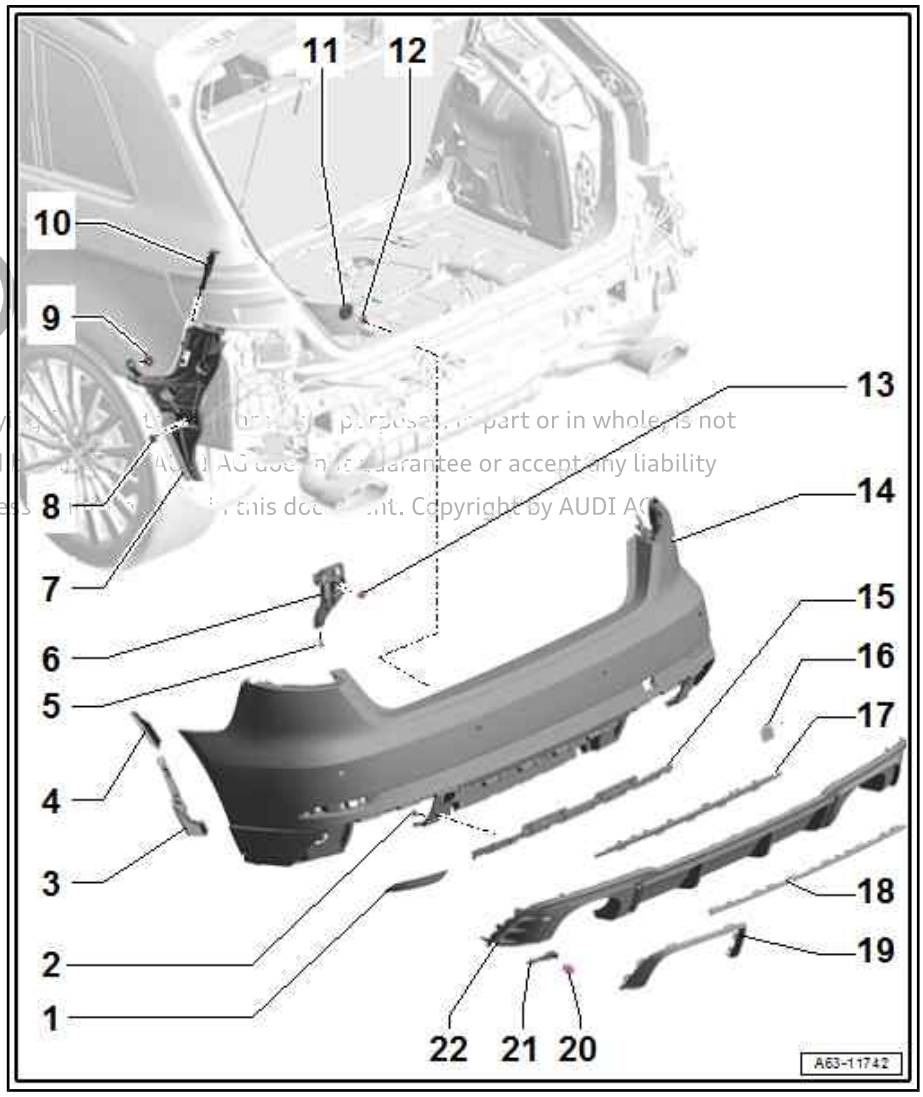

Protected by copyright. Copy[illegible] part or in whole, is not permitted unless authorised [illegible] AG does not guarantee or accept any liability with respect to the correctness [illegible] this doc[illegible]nt. Copyright by AUDI AG

1 - Reflector
- ❑ Removing and installing ⇒ page 264

2 - Bolt
- ❑ 4x
- ❑ 2 Nm

3 - Cover

4 - Wheel arch extension
- ❑ Removing and installing ⇒ page 275

5 - Bolt
- ❑ 2 Nm

6 - Mounting
- ❑ For bumper cover
- ❑ Removing and installing ⇒ page 279

7 - Mounting (side)
- ❑ For bumper cover
- ❑ Removing and installing ⇒ page 271

8 - Bolt
- ❑ 4x
- ❑ Tightening sequence ⇒ page 251

9 - Nut
- ❑ Tightening sequence ⇒ page 251

10 - Locking mechanism
- ❑ For securing bumper cover (rear) to mounting (top)

11 - Cover
- ❑ 4x

12 - Nut
- ❑ 4x
- ❑ 5 Nm

13 - Nut
- ❑ Bolt, 2x
- ❑ 2 Nm

14 - Bumper cover (rear)
- ❑ Removing and installing ⇒ page 264

15 - Retainer

16 - Cover
- ❑ For towing eye

17 - Adapter

18 - Trim strip

- ❑ For base plate for bumper cover
- ❑ Removing and installing ⇒ page 279

19 - Trim strip

- ❑ For tailpipe
- ❑ Removing and installing ⇒ page 278

20 - Spreader rivet

21 - Bracket

22 - Base plate for bumper cover

- ❑ Removing and installing ⇒ page 273

2.1.7 Exploded view - bumper cover, A3 Saloon up to model year 2016

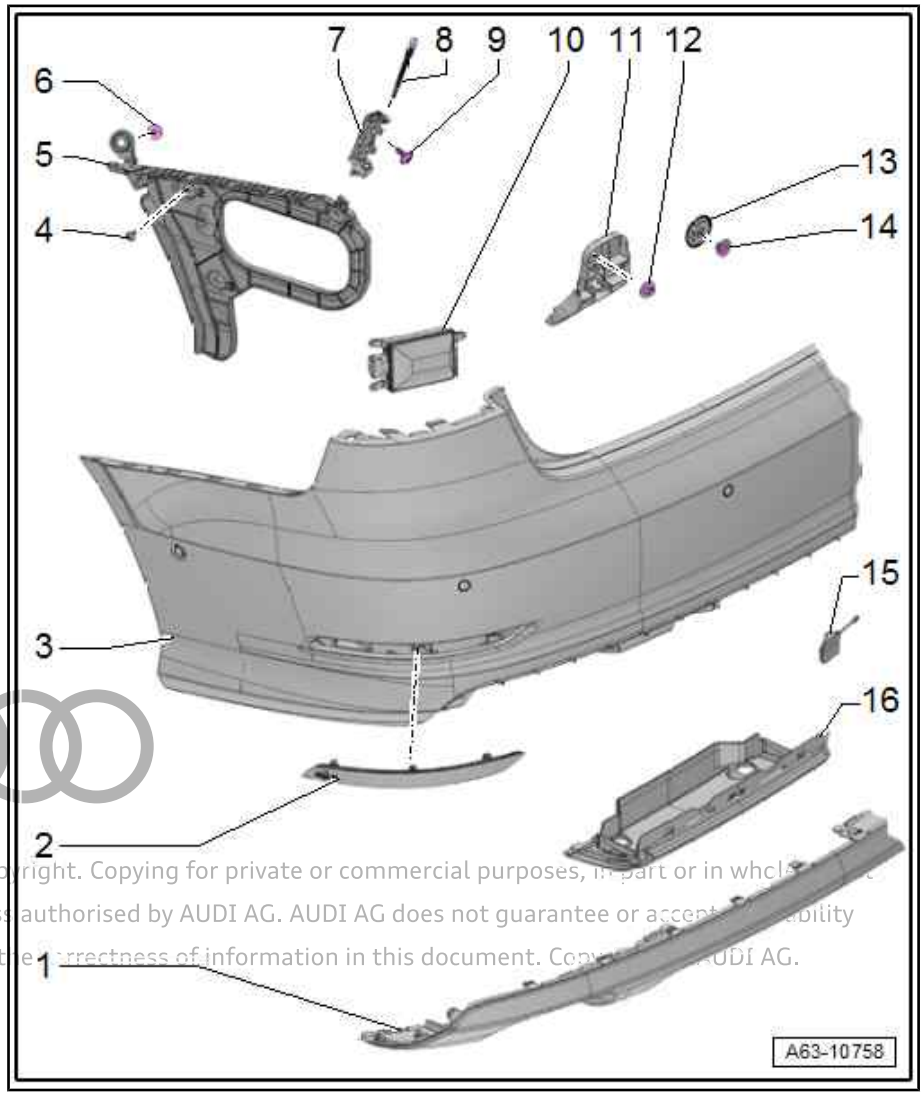

1 - Base plate for bumper cover

- ❑ Removing and installing ⇒ page 273

2 - Reflector

- ❑ Removing and installing ⇒ page 264

3 - Bumper cover (rear)

- ❑ Removing and installing ⇒ page 264

4 - Bolt

- ❑ 3x
- ❑ Tightening sequence ⇒ page 259

5 - Mounting (side)

- ❑ For bumper cover
- ❑ Removing and installing ⇒ page 272

6 - Nut

- ❑ Tightening sequence ⇒ page 259

7 - Guide (top)

- ❑ For securing bumper cover
- ❑ Removing and installing ⇒ page 271

8 - Locking mechanism

- ❑ For securing bumper cover (rear) to guide (top)

9 - Bolt

- ❑ Tightening sequence ⇒ page 259

10 - Lane change assist control unit

- ❑ Depending on version
- ❑ Overview ⇒ Electrical system; Rep. gr. 96 ; Lane change assist; Overview - lane change assist

Protected by copyright. Copying for private or commercial purposes, in part or in whole, is not permitted unless authorised by AUDI AG. AUDI AG does not guarantee or accept any liability with respect to the correctness of information in this document. Copyright by AUDI AG.

11 - Mounting
- ❑ For bumper cover
- ❑ Removing and installing ⇒ page 279

12 - Nut
- ❑ Bolt, 2x
- ❑ 2 Nm

13 - Cover
- ❑ 4x

14 - Nut
- ❑ 4x
- ❑ 5 Nm

15 - Cover
- ❑ For towing eye

16 - Cover
- ❑ At towing bracket
- ❑ Different versions

Protected by copyright. Copying for private or commercial purposes, in part or in whole, is not permitted unless authorised by AUDI AG. AUDI AG does not guarantee or accept any liability with respect to the correctness of information in this document. Copyright by AUDI AG.

Bumper cover mounting (side) - tightening torque and sequence

- ♦ Tighten bolts -1, 2, 3, 5- to 3 Nm.
- ♦ Tighten nut -4- to 2.5 Nm

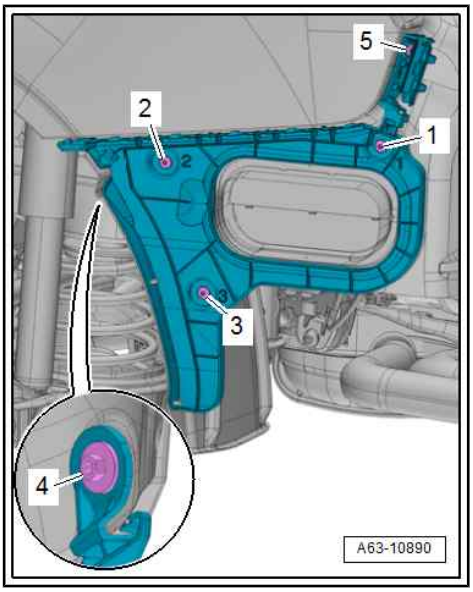

2.1.8 Exploded view - bumper cover, S line and S3 Saloon up to model year 2016

WARNING

Damaged natural gas fuel tanks constitute an explosion risk - risk of death!

- *If components at the rear and/or rear side of the vehicle (e.g. bumper cover, rear lid, underbody trim, longitudinal member, rear cross panel, etc.) are removed due to accident damage, the natural gas fuel tanks must be checked for damage.*
- *Carry out assessment of damage to fuel tanks ⇒ Natural gas engines - General information; Rep. gr. 20 ; Assessing damage to fuel tanks .*

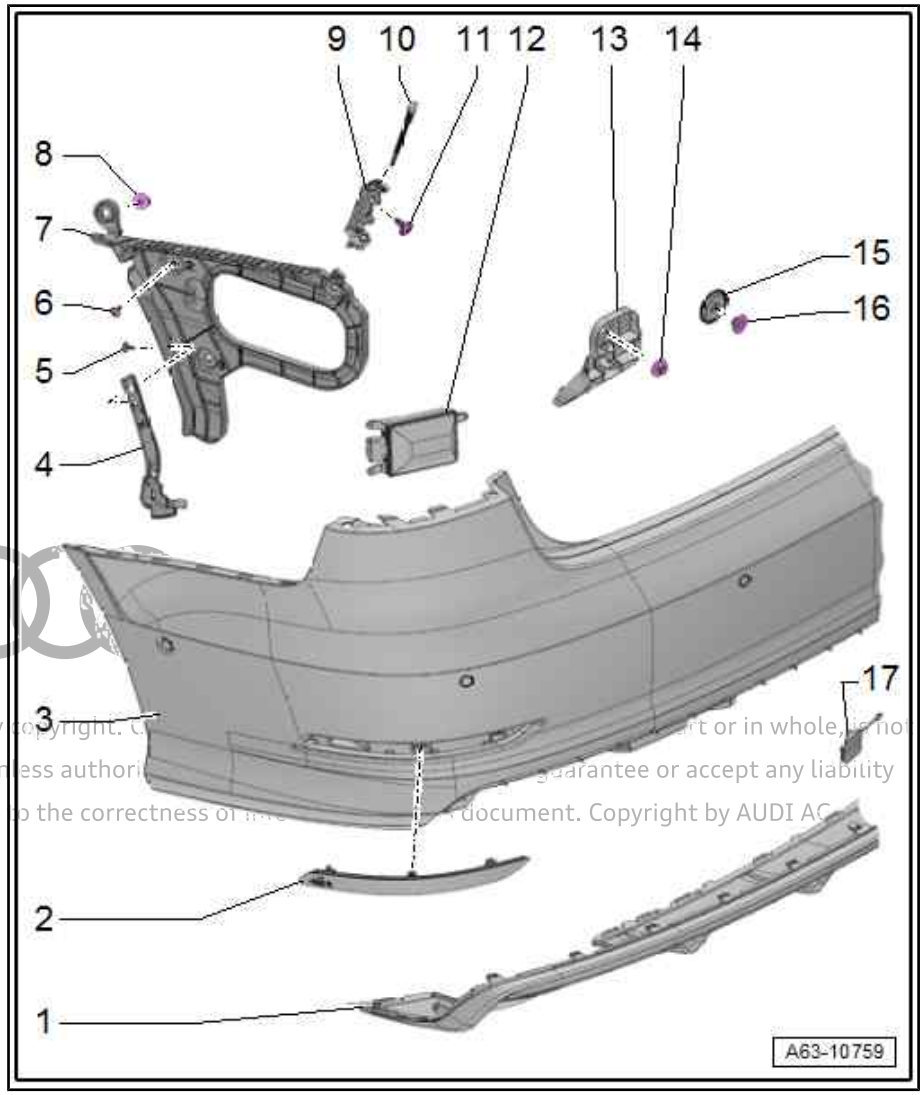

1 - Base plate for bumper cover

- ❑ Removing and installing ⇒ page 273

2 - Reflector

- ❑ Removing and installing ⇒ page 264

3 - Bumper cover (rear)

- ❑ Removing and installing ⇒ page 264

4 - Cover

5 - Bolt

- ❑ 2 Nm

6 - Bolt

- ❑ 3x
- ❑ Tightening sequence ⇒ page 251

7 - Mounting (side)

- ❑ For bumper cover
- ❑ Removing and installing ⇒ page 272

8 - Nut

- ❑ Tightening sequence ⇒ page 251

9 - Guide (top)

- ❑ For securing bumper cover
- ❑ Removing and installing ⇒ page 271

10 - Locking mechanism

- ❑ For securing bumper cover (rear) to mounting (top)

11 - Bolt

- ❑ Tightening sequence ⇒ page 259

12 - Lane change assist control unit

- ❑ Depending on version
- ❑ Overview ⇒ Electrical system; Rep. gr. 96 ; Lane change assist; Overview - lane change assist

13 - Mounting

- ❑ For bumper cover
- ❑ Removing and installing ⇒ page 279

14 - Nut

- ❑ Bolt, 2x
- ❑ 2 Nm

15 - Cover

- ❑ 4x

16 - Nut

- ❑ 4x
- ❑ 5 Nm

17 - Cover

- ❑ For towing eye

2.1.9 Exploded view - bumper cover, Saloon from model year 2017 onwards

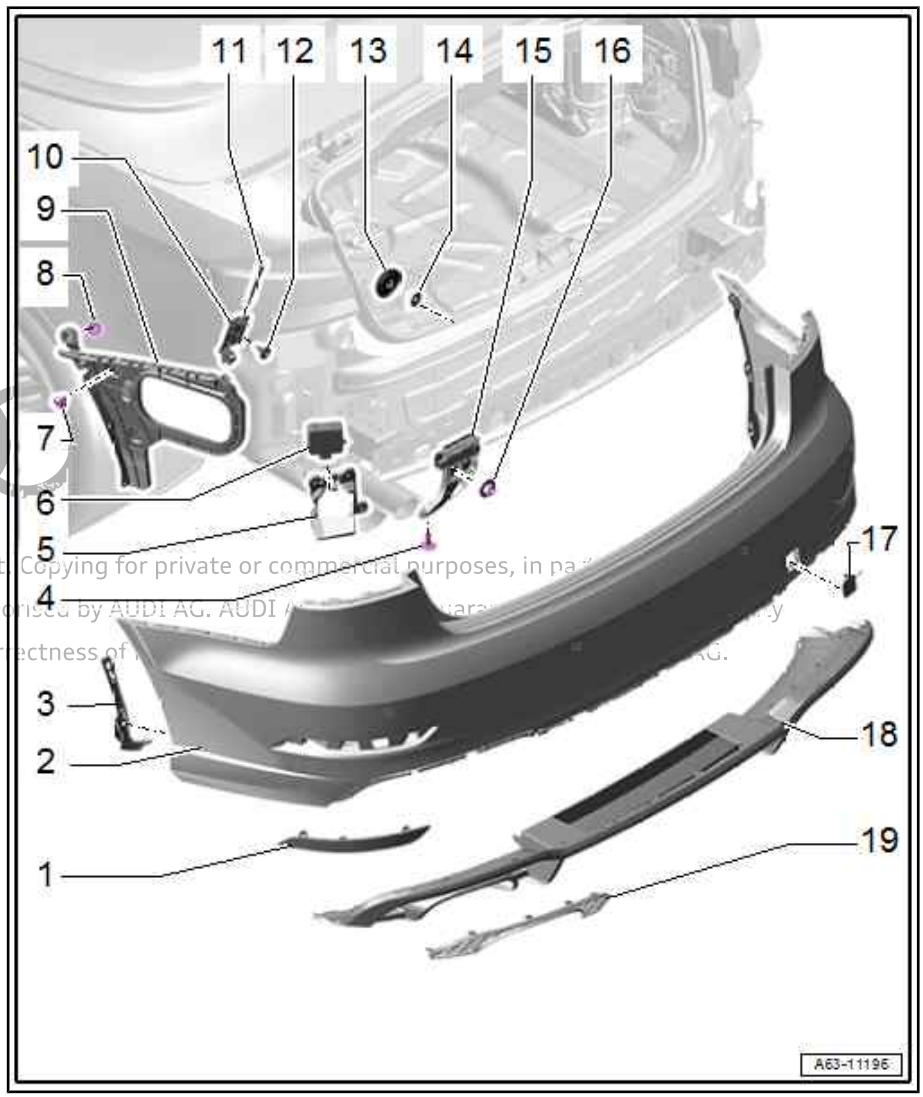

1 - Reflector

- ❑ Removing and installing ⇒ page 264

2 - Bumper cover (rear)

- ❑ Removing and installing ⇒ page 264

3 - Cover

4 - Bolt

- ❑ 2 Nm

5 - Mounting

- ❑ For lane change assist control unit

6 - Lane change assist control unit

- ❑ Depending on version
- ❑ Overview ⇒ Electrical system; Rep. gr. 96 ; Lane change assist; Overview - lane change assist

7 - Bolt

- ❑ 3x
- ❑ Tightening sequence ⇒ page 259

8 - Nut

- ❑ Tightening sequence ⇒ page 259

9 - Mounting (side)

- ❑ For bumper cover
- ❑ Removing and installing ⇒ page 272

10 - Guide (top)

- ❑ For securing bumper cover
- ❑ Removing and installing ⇒ page 271

11 - Locking mechanism

- ❑ For securing bumper cover (rear) to mounting (top)

12 - Bolt

- ❑ Tightening sequence ⇒ page 259

13 - Cover

- ❑ Bolt, 2x

14 - Nut

- ❑ 4x
- ❑ 5 Nm

15 - Mounting

- ❑ For bumper cover
- ❑ Removing and installing ⇒ page 279

16 - Nut

- ❑ Bolt, 2x
- ❑ 2 Nm

17 - Cover

- ❑ For towing eye

18 - Base plate for bumper cover

- ❑ Removing and installing ⇒ page 273

19 - Trim

- ❑ S line version only
- ❑ For bumper cover
- ❑ Removing and installing ⇒ page 277

Protected by copyright. Copying for private or commercial purposes, in part or in whole, is not permitted unless authorised by AUDI AG. AUDI AG does not guarantee or accept any liability with respect to the correctness of information in this document. Copyright by AUDI AG.

2.2 Exploded view - impact bar

WARNING

Damaged natural gas fuel tanks constitute an explosion risk - risk of death!

- *If components at the rear and/or rear side of the vehicle (e.g. bumper cover, rear lid, underbody trim, longitudinal member, rear cross panel, etc.) are removed due to accident damage, the natural gas fuel tanks must be checked for damage.*
- *Carry out assessment of damage to fuel tanks ⇒ Natural gas engines - General information; Rep. gr. 20 ; Assessing damage to fuel tanks .*

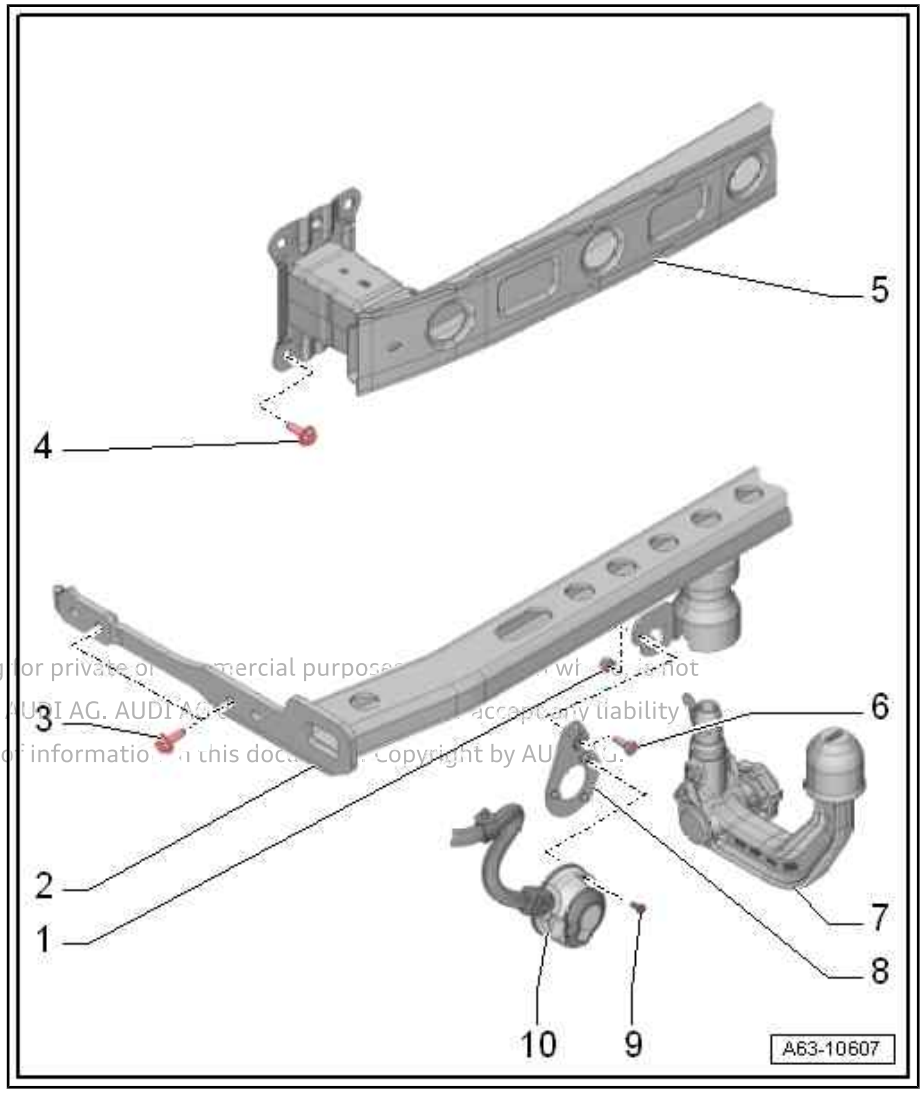

1 - Nut
- ❑ Self-locking
- ❑ Renew after removing

2 - Impact bar
- ❑ For vehicles with towing bracket
- ❑ Removing and installing ⇒ page 267

3 - Bolt
- ❑ Bolt, 2x
- ❑ 75 Nm

4 - Bolt
- ❑ 4x
- ❑ 23 Nm

5 - Impact bar
- ❑ For vehicles without towing bracket
- ❑ Removing and installing ⇒ page 267

Protected by copyright. Copying for private or commercial purposes, in whole or in part, is not permitted unless authorised by AUDI AG. AUDI AG does not accept any liability with respect to the correctness of information in this document. Copyright by AUDI AG.

6 - Bolt

7 - Towing bracket

8 - Mounting
- ❑ For socket

9 - Bolt
- ❑ 3x
- ❑ 3.5 Nm

10 - Socket
- ❑ Removing and installing ⇒ Electrical system; Rep. gr. 96 ; Towing bracket
- ❑ Pin assignment ⇒ Electrical system; Rep. gr. 96 ; Towing bracket

2.3 Removing and installing bumper cover

⇒ "2.3.1 Removing and installing reflector", page 264

⇒ "2.3.2 Removing and installing bumper cover", page 264

2.3.1 Removing and installing reflector

Removing

– Release fasteners -1- -arrows A-.

– Disengage reflector -3- from bumper cover -2- in direction of -arrow B-.

Installing

Installation is carried out in reverse sequence.

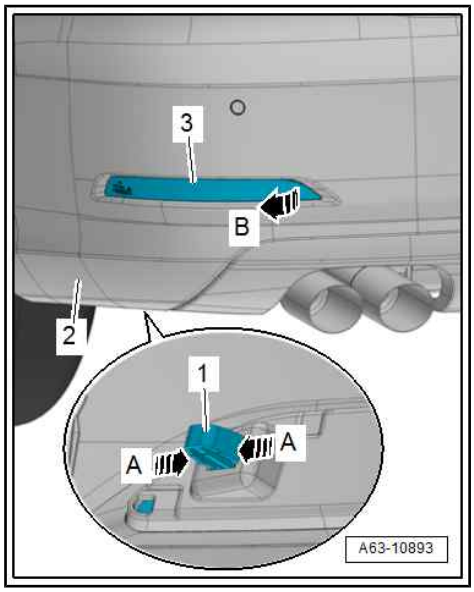

2.3.2 Removing and installing bumper cover

WARNING

Damaged natural gas fuel tanks constitute an explosion risk - risk of death!

- *If components at the rear and/or rear side of the vehicle (e.g. bumper cover, rear lid, underbody trim, longitudinal member, rear cross panel, etc.) are removed due to accident damage, the natural gas fuel tanks must be checked for damage.*
- *Carry out assessment of damage to fuel tanks ⇒ Natural gas engines - General information; Rep. gr. 20 ; Assessing damage to fuel tanks .*

- Depending on equipment version, the following additional work may be necessary ⇒ page 266 .

Special tools and workshop equipment required

Protected by copyright. Copying for private or commercial purposes, in part or in whole, is not permitted unless authorised by AUDI AG. AUDI AG does not guarantee or accept any liability with respect to the correctness of information in this document. Copyright by AUDI AG.

♦ Socket - T40078-

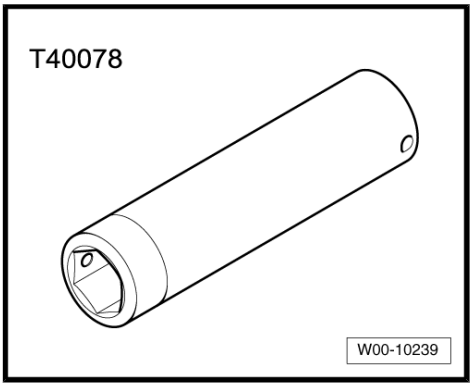

Removing

– Remove tail lights ⇒ Electrical system; Rep. gr. 94 ; Tail light cluster; Removing and installing tail light cluster .

– Open cover in luggage compartment side trim.

– Saloon: Remove luggage compartment side trim ⇒ General body repairs, interior; Rep. gr. 70 ; Luggage compartment trim panels; Removing and installing luggage compartment side trim .

– Remove rear cross panel trim ⇒ General body repairs, interior; Rep. gr. 70 ; Luggage compartment trim panels .

– Detach covers -1-.

– Unscrew nut -2- using socket - T40078- .

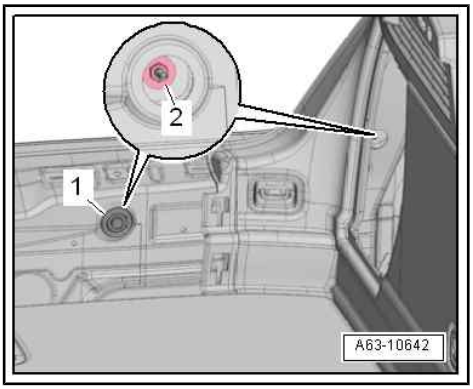

– Remove bolts -arrows-.

Protected by copyright. Copying for private or commercial purposes, in part or in whole, is not permitted unless authorised by AUDI AG. AUDI AG does not guarantee or assume liability with respect to the correctness of information in this document. Copyright by AUDI AG.

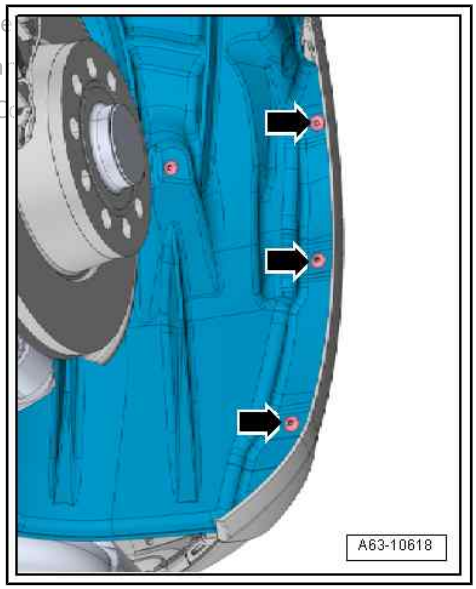

– Remove bolts -arrows-.

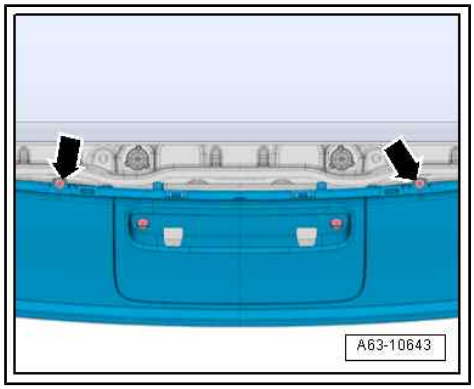

– Pull up locking mechanism -1- -arrow-.
– If fitted, move electrical wiring harness clear.
– Detach side section outwards from side panel and pull bumper cover -2- off slightly.

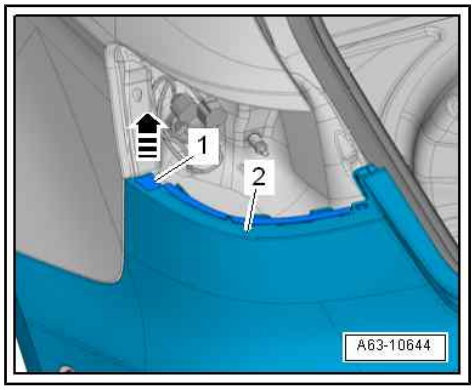

– Unplug electrical connectors -1 and 2-.
– Set down bumper cover on a soft surface.

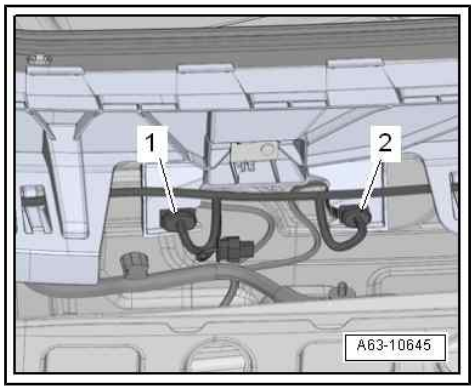

Installing

Installation is carried out in reverse order; note the following:

– Adhesive pad ⇒ Audi Paintwork manual

Depending on equipment version, the following additional work may be necessary:

– Calibrate lane change assist ⇒ Electrical system; Rep. gr. 96 ; Lane change assist; Calibrating lane change assist .

Tightening torques

♦ ⇒ “2.1 Exploded view - bumper cover”, page 249 .

Protected by copyright. Copying for private or commercial purposes, in part or in whole, is not permitted unless authorised by AUDI AG. AUDI AG does not guarantee or accept any liability with respect to the correctness of information in this document. Copyright by AUDI AG.

2.4 Removing and installing impact bar

⇒ "2.4.1 Removing and installing impact bar - vehicles without towing bracket", page 267

⇒ "2.4.2 Removing and installing impact bar - vehicles with manual towing bracket", page 267

⇒ "2.4.3 Removing and installing impact bar - vehicles with electric towing bracket", page 269

Protected by copyright. Copying for private or commercial purposes, in part or in whole, is not permitted unless authorised by AUDI AG. AUDI AG does not guarantee or accept any liability with respect to the correctness of information in this document. Copyright by AUDI AG.

2.4.1 Removing and installing impact bar - vehicles without towing bracket

> ⚠ WARNING
>
> *Damaged natural gas fuel tanks constitute an explosion risk - risk of death!*
>
> - *If components at the rear and/or rear side of the vehicle (e.g. bumper cover, rear lid, underbody trim, longitudinal member, rear cross panel, etc.) are removed due to accident damage, the natural gas fuel tanks must be checked for damage.*
> - *Carry out assessment of damage to fuel tanks ⇒ Natural gas engines - General information; Rep. gr. 20 ; Assessing damage to fuel tanks .*

Removing

– Remove bumper cover (rear) ⇒ page 264 .

– Move electrical wiring harness -2- clear.

– Remove bolts -arrows-.

– Detach impact bar -1-.

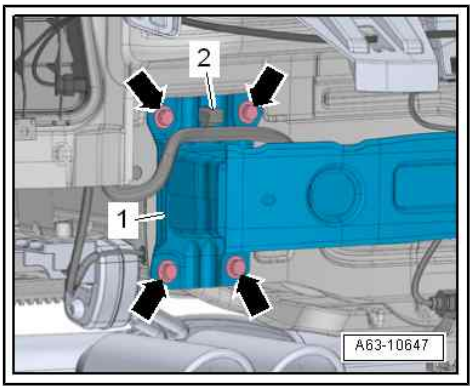

Installing

Installation is carried out in reverse sequence.

Tightening torques

♦ ⇒ "2.2 Exploded view - impact bar", page 262 .

2.4.2 Removing and installing impact bar - vehicles with manual towing bracket

> ⚠ WARNING
>
> *Damaged natural gas fuel tanks constitute an explosion risk - risk of death!*
>
> - *If components at the rear and/or rear side of the vehicle (e.g. bumper cover, rear lid, underbody trim, longitudinal member, rear cross panel, etc.) are removed due to accident damage, the natural gas fuel tanks must be checked for damage.*
> - *Carry out assessment of damage to fuel tanks ⇒ Natural gas engines - General information; Rep. gr. 20 ; Assessing damage to fuel tanks .*

- The following components have to be renewed after removal ⇒ page 262 .
- A second mechanic is required to perform this step (as described on ⇒ page 268).

Protected by copyright. Copying for private or commercial purposes, in part or in whole, is not permitted unless authorized by AUDI AG. AUDI AG does not guarantee or accept any liability with respect to the correctness of information in this document. Copyright by AUDI AG.

Removing

– Remove bumper cover (rear) ⇒ page 264 .

A3 and A3 Sportback:

– Vehicles with petrol engine: Remove activated charcoal filter ⇒ Rep. gr. 20 ; Activated charcoal filter system; Removing and installing activated charcoal filter .

– Unscrew bolt -arrow- and press wheel housing liner -1- slightly to the side.

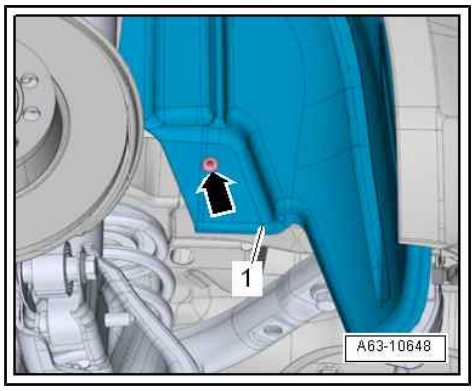

All versions (continued):

– Move electrical wiring harness -2- clear.

– Loosen bolted connection -arrow- at socket mounting -1-.

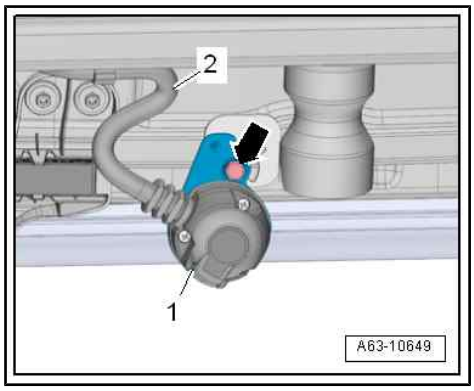

– Remove bolts -arrows-.

– Pull out impact bar -1- with the help of a second mechanic.

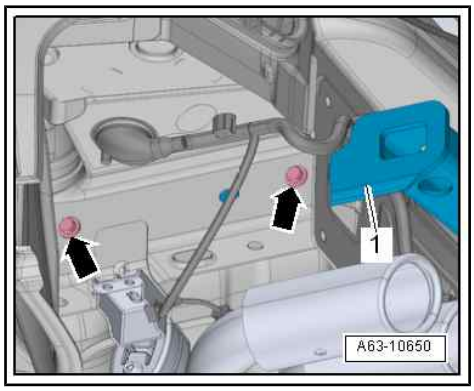

Installing

Installation is carried out in reverse order; note the following:

– Fit socket mounting -2- on impact bar and tighten bolted connection -1-.

- Socket mounting must be fitted so it can still just be turned -arrows- but is not loose.

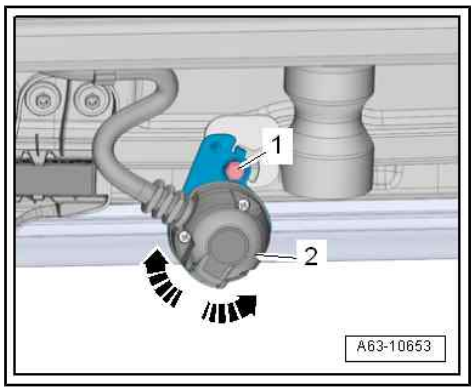

Tightening torques

◆ ⇒ “2.2 Exploded view - impact bar”, page 262 .

◆ ⇒ “8.1.1 Exploded view - wheel housing liner (front)”, page 403 .

2.4.3 Removing and installing impact bar - vehicles with electric towing bracket

WARNING

Damaged natural gas fuel tanks constitute an explosion risk - risk of death!

- *If components at the rear and/or rear side of the vehicle (e.g. bumper cover, rear lid, underbody trim, longitudinal member, rear cross panel, etc.) are removed due to accident damage, the natural gas fuel tanks must be checked for damage.*
- *Carry out assessment of damage to fuel tanks ⇒ Natural gas engines - General information; Rep. gr. 20 ; Assessing damage to fuel tanks .*

- A second mechanic is required to perform this step (as described on ⇒ page 270).

Removing

– Remove bumper cover (rear) ⇒ page 264 .

– A3 and A3 Sportback: Unplug electrical connector -5-.

– Slide protective foam element -2- back and unplug electrical connector -3-.

– Push grommet -1- through to other side and guide out wiring harness -4-.

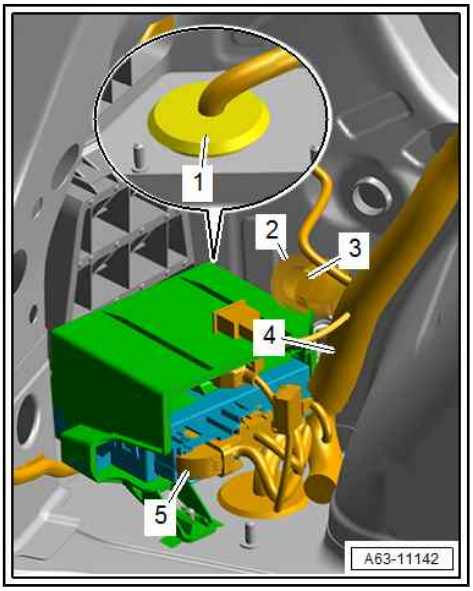

Protected by copyright. Copying for private or commercial purposes, in part or in whole, is not permitted unless authorised by AUDI AG. AUDI AG does not guarantee or accept any liability with respect to the correctness of information in this document. Copyright by AUDI AG.

– Saloon: Unplug electrical connector -5-.
– Slide protective foam element -3- back and unplug electrical connector -4-.
– Push grommet -1- through to other side and guide out wiring harness -2-.

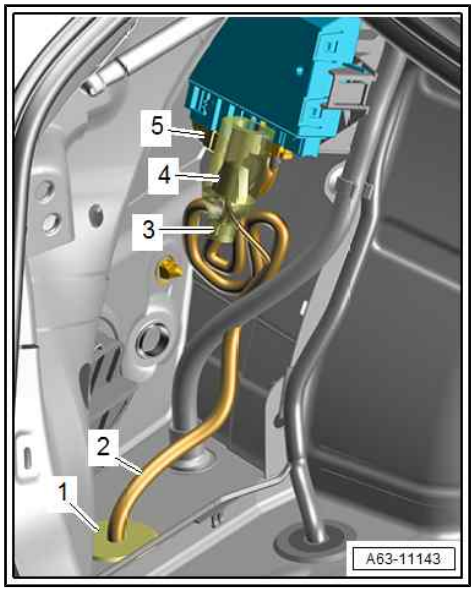

– Release towing bracket using button and extend it.
– Remove moulded foam insert -1- by pivoting it upwards -arrows- off impact bar -2-.
– Move wiring harness clear.

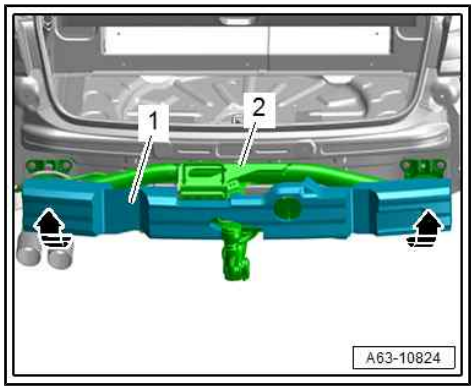

– Remove bolts -arrows-.
– Pull out impact bar -1- with the help of a second mechanic.

Installing

Installation is carried out in reverse sequence.

Tightening torques

◆ ⇒ “2.2 Exploded view - impact bar”, page 262 .

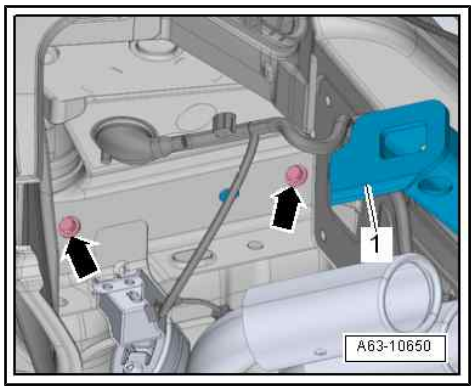

Protected by copyright. Copying for private or commercial purposes, in part or in whole, is not permitted unless authorised by AUDI AG. AUDI AG does not guarantee or accept any liability with respect to the correctness of information in this document. Copyright by AUDI AG.

2.5 Removing and installing attachments

⇒ “2.5.1 Removing and installing guide (top)”, page 271

⇒ “2.5.2 Removing and installing bumper cover mounting (side) - A3 and A3 Sportback”, page 271

⇒ “2.5.3 Removing and installing bumper cover mounting (side) - Saloon”, page 272

⇒ “2.5.4 Removing and installing base plate for bumper cover”, page 273

⇒ “2.5.5 Removing and installing base plate for bumper cover - RS 3 from model year 2019 onwards”, page 273

⇒ “2.5.6 Removing and installing wheel arch extension”, page 273

⇒ “2.5.8 Removing and installing bumper cover trim - A3 S line and A3 Sportback S line from model year 2017 onwards”, page 276

⇒ “2.5.9 Removing and installing trim for base plate for bumper cover - S line from model year 2017 onwards”, page 277

⇒ “2.5.10 Removing and installing trim for base plate for bumper cover - RS 3 Sportback up to model year 2018”, page 277

⇒ “2.5.11 Removing and installing tailpipe trim strip - RS 3”, page 278

⇒ “2.5.12 Removing and installing trim strip for base plate for bumper cover - RS 3”, page 279

⇒ “2.5.13 Removing and installing bumper cover mounting”, page 279

Protected by copyright. Copying for private or commercial purposes, in part or in whole, is not permitted unless authorised by AUDI AG. AUDI AG does not guarantee or accept any liability with respect to the correctness and completeness of this document. Copyright by AUDI AG.

2.5.1 Removing and installing guide (top)

Removing

– Remove bumper cover (rear) ⇒ page 264 .

– Remove bolt -3-.

– Release catch -1- and detach guide (top) -2- towards rear -arrow-.

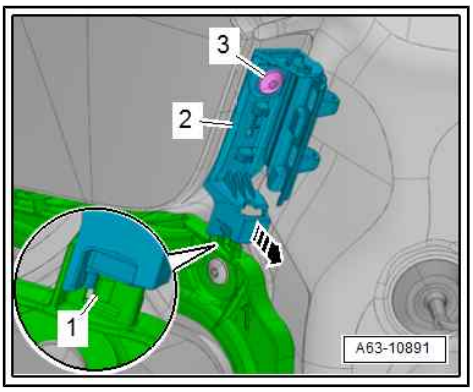

Installing

Installation is carried out in reverse sequence.

Tightening torques

♦ ⇒ Fig. ““Bumper cover mounting (side) - tightening torque and sequence”“ , page 259 .

2.5.2 Removing and installing bumper cover mounting (side) - A3 and A3 Sportback

Removing

– Remove bumper cover (rear) ⇒ page 264 .

– Unscrew bolts and nut -arrows-.

– Remove bumper cover mounting (side) -1-.

Installing

Installation is carried out in reverse sequence.

Tightening torques

♦ ⇒ Fig. ""Bumper cover mounting (side) - tightening torque and sequence"" , page 251 .

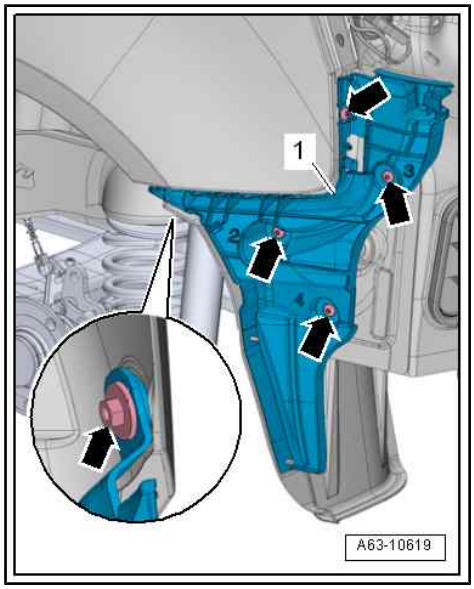

2.5.3 Removing and installing bumper cover mounting (side) - Saloon

Removing

– Remove bumper cover (rear) ⇒ page 264 .

– Unscrew bolts and nut -arrows-.

– Remove bumper cover mounting (side) -1-.

Protected by copyright. Copying for private or commercial purposes, permitted unless authorised by AUDI AG. AUDI AG does not guarantee with respect to the correctness of information in this document. Copy

Installing

Installation is carried out in reverse sequence.

Tightening torques

♦ ⇒ Fig. ""Bumper cover mounting (side) - tightening torque and sequence"" , page 251 .

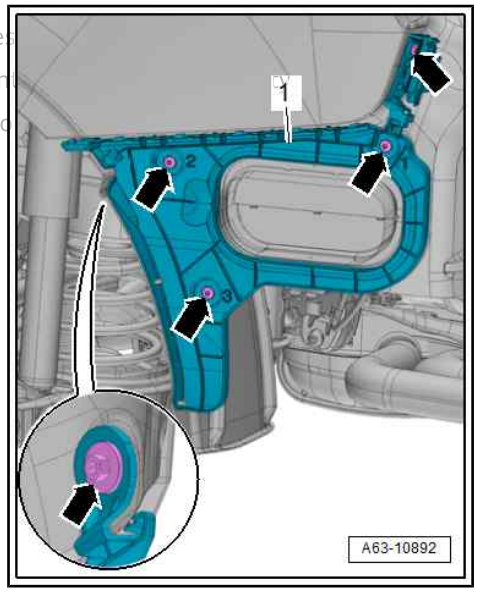

2.5.4 Removing and installing base plate for bumper cover

WARNING

Damaged natural gas fuel tanks constitute an explosion risk - risk of death!

- *If components at the rear and/or rear side of the vehicle (e.g. bumper cover, rear lid, underbody trim, longitudinal member, rear cross panel, etc.) are removed due to accident damage, the natural gas fuel tanks must be checked for damage.*
- *Carry out assessment of damage to fuel tanks ⇒ Natural gas engines - General information; Rep. gr. 20 ; Assessing damage to fuel tanks .*

Removing

– A3: Remove bumper cover (rear) ⇒ page 264 .

– Release fasteners -arrows- and pull base plate -1- off bumper cover -2-.

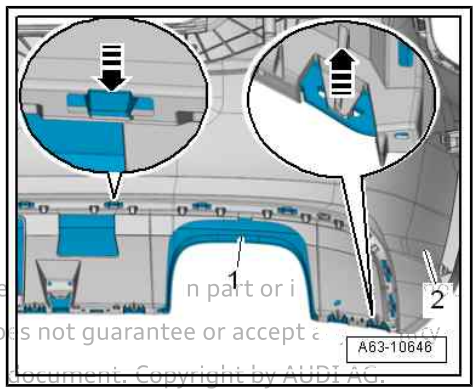

Installing

Installation is carried out in reverse order; note the following:

– Press base plate for bumper cover into bumper cover until it engages audibly.

Protected by copyright. Copying for private or comme n part or i
permitted unless authorised by AUDI AG. AUDI AG do s not guarantee or accept a
with respect to the correctness of information in this document. Copyright by AUDI AG.

2.5.5 Removing and installing base plate for bumper cover - RS 3 from model year 2019 onwards

Removing

– Remove bumper cover (rear) ⇒ page 264 .

– Remove bolts -arrow-.

– Release fasteners -2, 3, 4- and pull base plate -1- off bumper cover -5-.

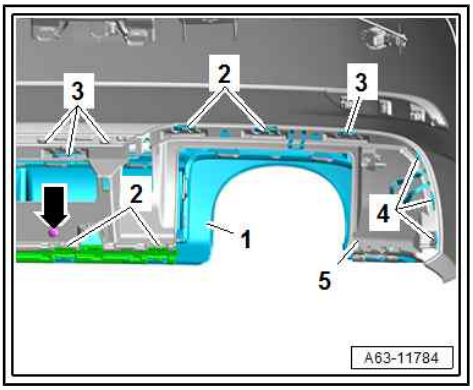

Installing

Installation is carried out in reverse order; note the following:

– Press base plate for bumper cover into bumper cover until it engages audibly.

Tightening torques

♦ ⇒ “2.1.6 Exploded view - bumper cover, RS3 from model year 2019 onwards”, page 257

2.5.6 Removing and installing wheel arch extension

Special tools and workshop equipment required

♦ Roller - 3356-

Protected by copyright. Copying for private or commercial purposes, in part or in whole, is not permitted unless authorised by AUDI AG. AUDI AG does not guarantee or accept any liability with respect to the correctness of information in this document. Copyright by AUDI AG.

♦ Hot air blower - V.A.G 1416-

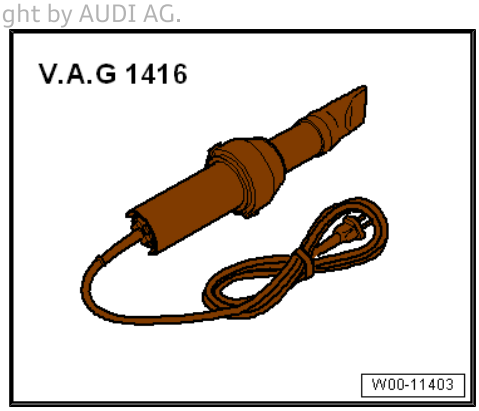

♦ Cleaning solution - D 009 401 04-

Removing

– Remove wheel housing liner (rear) ⇒ page 412 .

Sportback:

– Remove bolt -1-.

– Remove spreader rivet -2-.

– Detach wheel arch extension -3-.

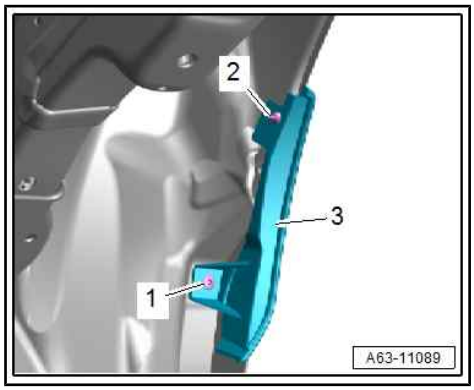

Saloon:

– Remove bolt -1-.

– Carefully heat wheel arch extension -2- with hot air blower - V.A.G 1416- .

– Separate adhesive bonds -arrows- and detach wheel arch extension.

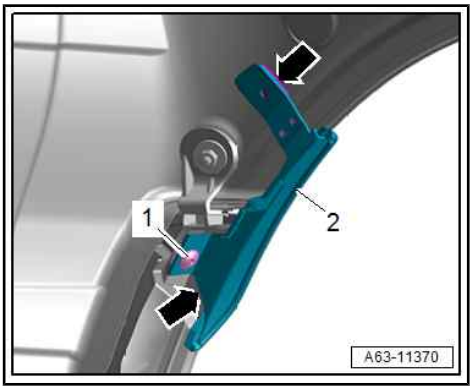

Installing

Installation is carried out in reverse order; note the following:

Saloon:

- The vehicle and the cover must be at room temperature.
- The bonding surfaces must be free of dirt and grease.

– Clean bonding surface with cleaning solution - D 009 401 04- .

– Peel protective film off adhesive strips -3, 4-.

– Fit wheel arch extension -1- and tighten bolt -2-.

– Press on wheel arch extension over entire length.

- Leave vehicle standing at room temperature for at least 30 minutes.

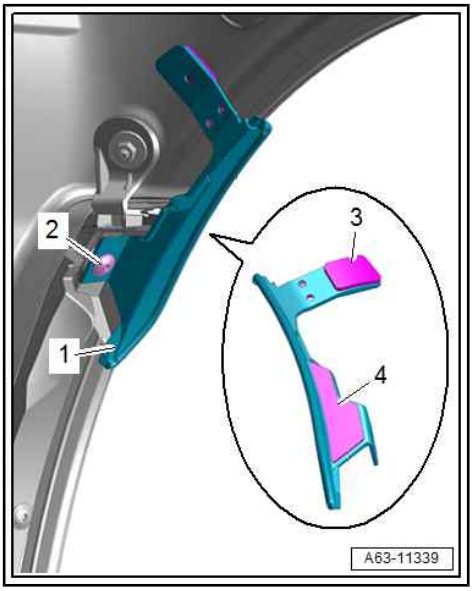

Tightening torques

◆ ⇒ “2.1.5 Exploded view - bumper cover, RS3 up to model year 2018”, page 255 .

2.5.7 Removing and installing wheel arch extension - RS 3 from model year 2019 onwards

Special tools and workshop equipment required

◆ Roller - 3356-

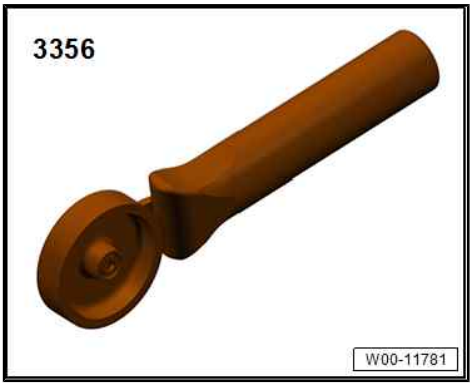

Protected by copyright. Copying for private or commercial purposes, in part or in whole, is not permitted unless authorised by AUDI AG. AUDI AG does not guarantee or accept any liability with respect to the correctness of information in this document. Copyright by AUDI AG.

♦ Hot air blower - V.A.G 1416-

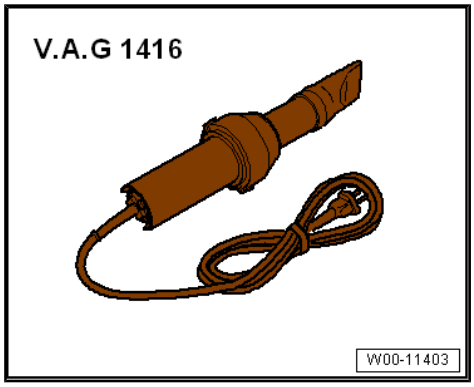

♦ Cleaning solution - D 009 401 04-

Removing

– Remove wheel housing liner (rear) ⇒ page 412 .

– Carefully heat wheel arch extension -2- with hot air blower - V.A.G 1416- .

– Separate adhesive bonds -arrows- and detach wheel arch extension.

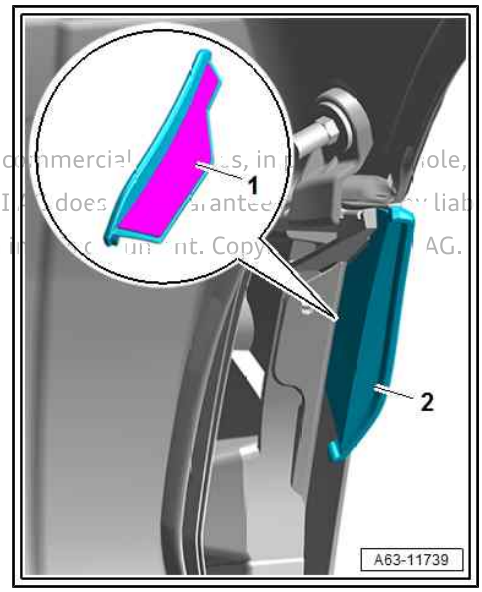

Installing

Protected by copyright. Copying for private or commercial purposes, in part or in whole, is not permitted unless authorised by AUDI AG. AUDI AG does not guarantee or assume any liability with respect to the correctness of information in this document. Copyright by AUDI AG.

Installation is carried out in reverse order; note the following:

• The vehicle and the cover must be at room temperature.

• The bonding surfaces must be free of dirt and grease.

– Clean bonding surface with cleaning solution - D 009 401 04- .

– Peel protective film off adhesive strips -3, 4-.

– Position wheel arch extension -1- and press it on along entire length.

• Leave vehicle standing at room temperature for at least 30 minutes.

2.5.8 Removing and installing bumper cover trim - A3 S line and A3 Sportback S line from model year 2017 onwards

Removing

– Remove base plate for bumper cover ⇒ page 273 .

– Release fasteners -arrows- and pull trim -2- off bumper cover -1-.

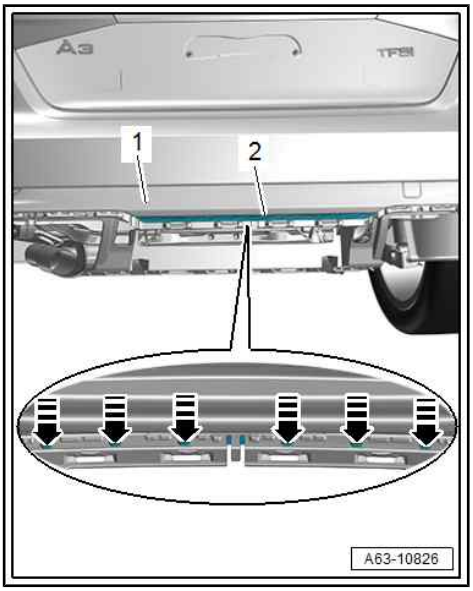

Installing

Installation is carried out in reverse sequence.

2.5.9 Removing and installing trim for base plate for bumper cover - S line from model year 2017 onwards

Removing

– Remove base plate for bumper cover ⇒ page 273 .

– Release fasteners -arrows- and pull trim -1- off base plate for bumper cover -2-.

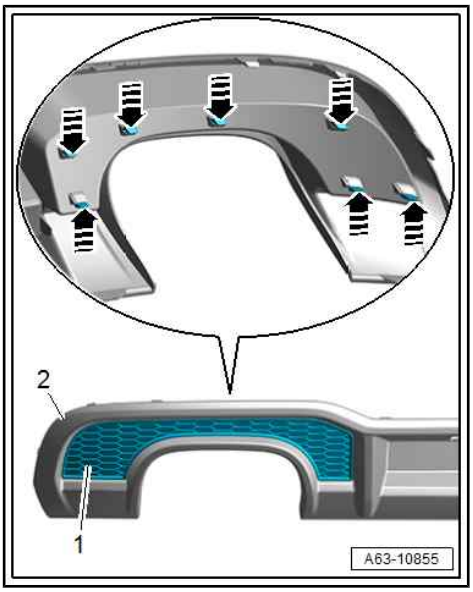

Installing

Installation is carried out in reverse sequence.

2.5.10 Removing and installing trim for base plate for bumper cover - RS 3 Sportback up to model year 2018

Removing

– Remove base plate for bumper cover ⇒ page 273 .

Protected by copyright. Copying for private or commercial purposes, in part or in whole, is not permitted unless authorised by AUDI AG. AUDI AG does not guarantee or accept any liability with respect to the correctness of information in this document. Copyright by AUDI AG.

– Release fasteners -3 and 4- and pull trim -2- off base plate for bumper cover -1-.

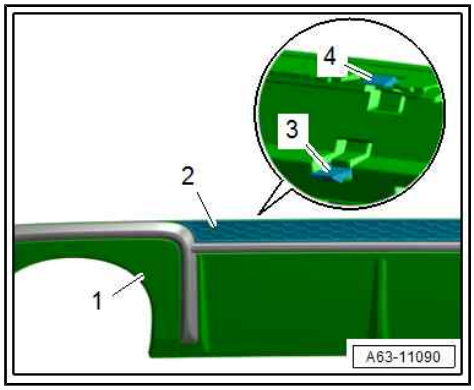

Installing

Installation is carried out in reverse sequence.

2.5.11 Removing and installing tailpipe trim strip - RS 3

Removing

– Remove base plate for bumper cover ⇒ page 273 .

– Release fasteners -2, 3 and 4- and pull trim strip -1- off base plate for bumper cover -5-.

Protected by copyright. Copying for private or commercial purposes, in part or in whole, is not permitted unless authorised by AUDI AG. AUDI AG does not guarantee or accept any liability with respect to the correctness of information in this document. Copyright

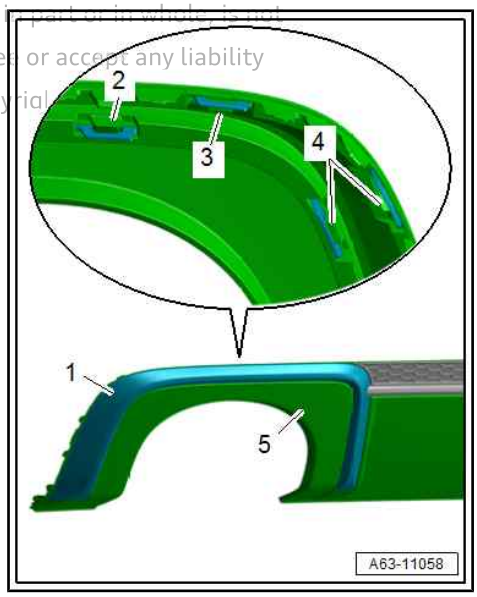

Installing

Installation is carried out in reverse order; note the following:

When sliding guide -1- on trim strip -3- into mounting on bumper cover -2-, make sure that it engages in mounting.

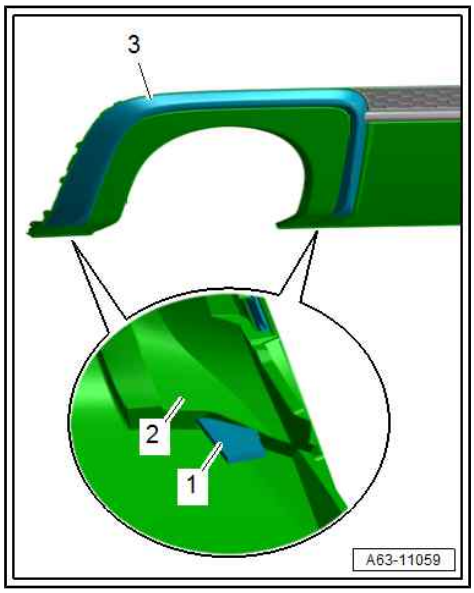

2.5.12 Removing and installing trim strip for base plate for bumper cover - RS 3

Removing

– Remove tailpipe trim strip ⇒ page 278 .

– Release fasteners -3 and 4- and pull trim strip -2- off base plate for bumper cover -1-.

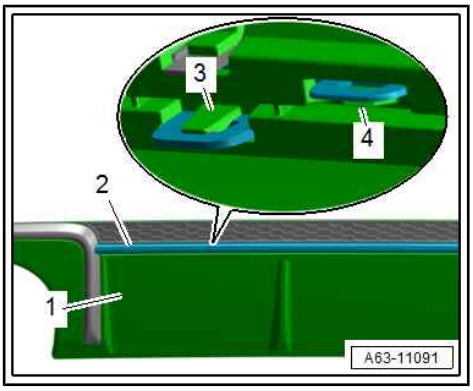

Installing

Installation is carried out in reverse sequence.

2.5.13 Removing and installing bumper cover mounting

Removing

– Remove bumper cover (rear) ⇒ page 264 .

– Remove nuts -arrows-.

– Remove bumper cover mounting -1-.

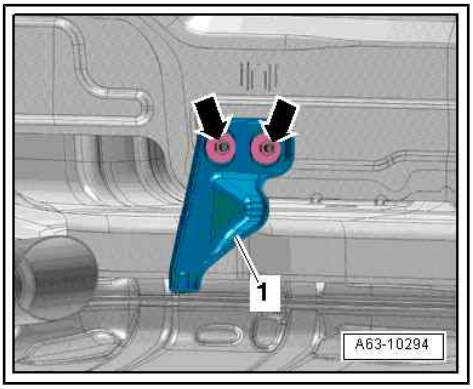

Installing

Installation is carried out in reverse sequence.

Tightening torques

♦ ⇒ “2.1 Exploded view - bumper cover”, page 249 .

Protected by copyright. Copying for private or commercial purposes, in part or in whole, is not permitted unless authorised by AUDI AG. AUDI AG does not guarantee or accept any liability with respect to the correctness of information in this document. Copyright by AUDI AG.

64 – Glazing

permitted unless authorised by AUDI AG. AUDI AG does not guarantee or accept any liability
Spr the correctness of information in this document. Copyright by AUDI AG.

1 Repair notes

⇒ “1.1 Minimum drying times for bonded windows”, page 280

⇒ “1.2 Repairing windows”, page 280

⇒ “1.3 Notes on installing flush-bonded windows”, page 281

⇒ “1.4 Preparing undamaged windows for installation”, page 284

⇒ “1.5 Preparing new windows for installation”, page 284

⇒ “1.6 Preparing body flange for installation”, page 286

⇒ “1.7 Cleaning off adhesive sealant”, page 286

1.1 Minimum drying times for bonded windows

- For safety reasons, use only non-conductive 2-component adhesive with the designations listed below when installing the windscreen or rear window.
- You must NOT drive the vehicle until the minimum drying time has elapsed, as the vehicle is otherwise not safe to drive.
- During the minimum drying time the vehicle must be left standing on a level surface at room temperature (at least 15 °C).

Window	Vehicle	Adhesive sealant	Minimum drying time (in hours)
Windscreen	With airbag	2-component window adhesive set - D 004 660 M2-	2
Rear window		2-component window adhesive set - D 004 660 M2-	2
Side windows		1-component window adhesive - DH 009 100 03-	3

1.2 Repairing windows

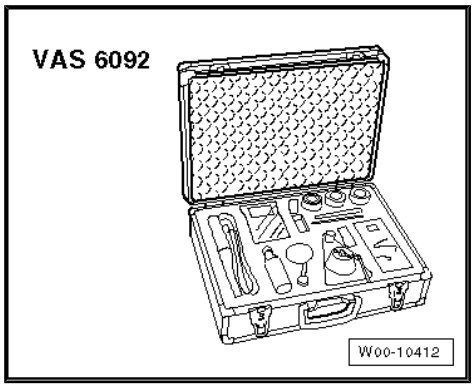

Special tools and workshop equipment required

♦ Windscreen repair kit - VAS 1993- or -VAS 6092-

Note

- *Windscreens damaged by stone chipping can be repaired using windscreen repair kit - VAS 6092- and resin, Talon - VAS 1993/2- .*
- *The damaged areas must not exceed a certain size and area, and must not be within the main field of vision.*
- *For detailed information, refer to the instructions supplied with each kit.*

1.3 Notes on installing flush-bonded windows

Special tools and workshop equipment required

- Removal kit for flush bonded windows - VAS 6452-

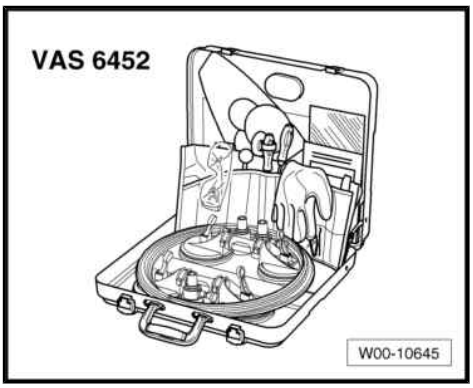

- Wire reel - VAS 6452/1-

Protected by copyright. Copying for private or commercial purposes, in part
permitted unless authorised by AUDI AG. AUDI AG does not guarantee or ac
with respect to the correctness of information in this document. Copyright b

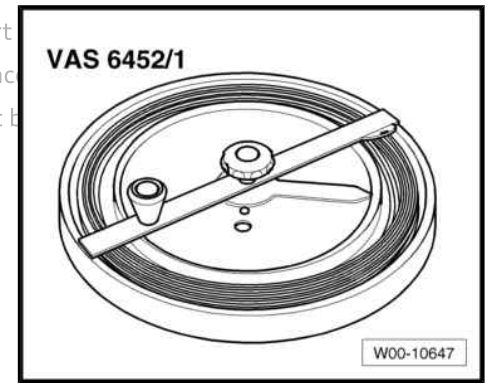

- Wire for removal kit - VAS 6452/2-
- Cutting tool - V.A.G 1351-

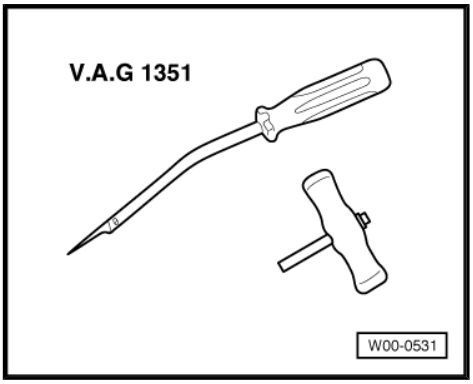

- Pull handle - V.A.G 1351/1-

- Suction lifter - V.A.G 1344-

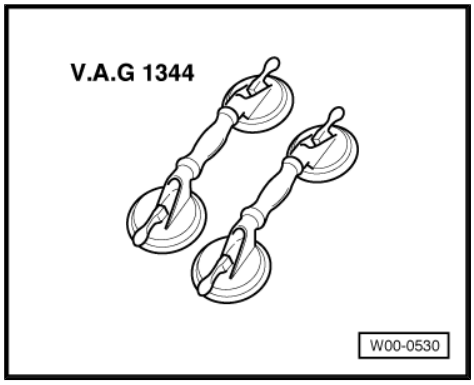

- Electric cutter - V.A.G 1561A-

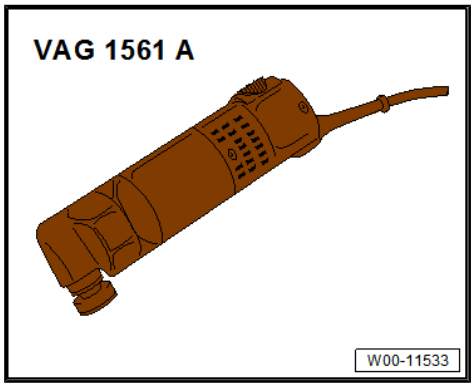

- Blade (offset) - V.A.G 1561/10-

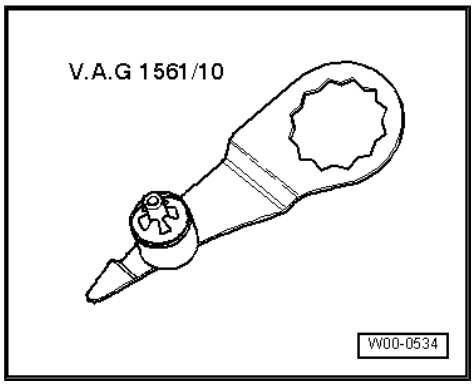

- Universal blade - V.A.G 1561/11-

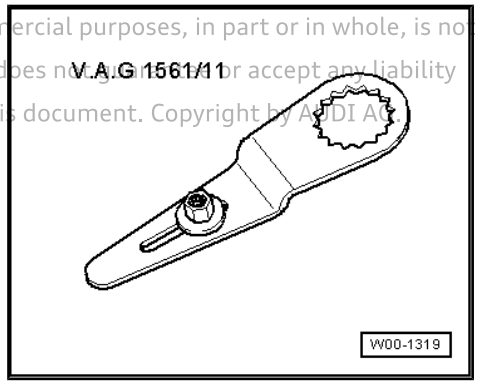

Protected by copyright. Copying for private or commercial purposes, in part or in whole, is not permitted unless authorised by AUDI AG. AUDI AG does not guarantee or assume any liability with respect to the correctness of information in this document. Copyright by AUDI AG

- Scraper (15 + 25 mm) - V.A.G 1561/7+8-

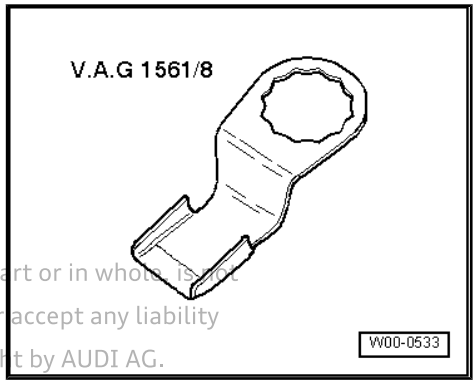

Protected by copyright. Copying for private or commercial purposes, in part or in whole, is not permitted unless authorised by AUDI AG. AUDI AG does not guarantee or accept any liability with respect to the correctness of information in this document. Copyright by AUDI AG.

- Double cartridge gun - VAS 5237-

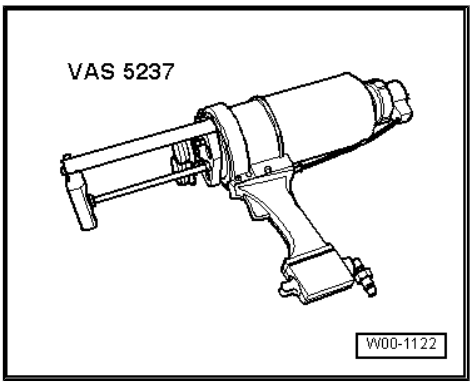

- Hand-cartridge gun - V.A.G 1628-

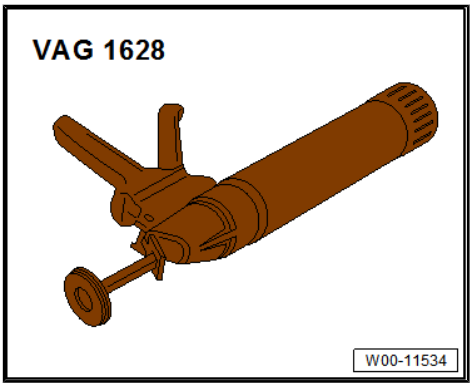

- Cartridge heater - V.A.G 1939A-

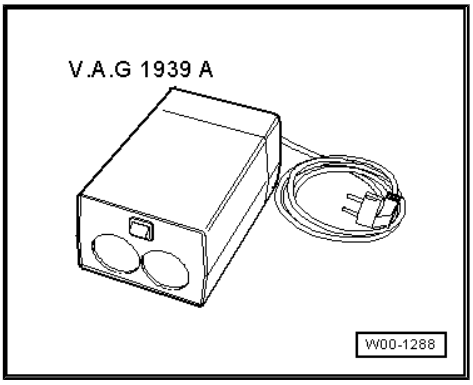

Materials

- 2-component window adhesive set - D 004 660 M2- [4)]
- 1-component window adhesive - DH 009 100 A2- [7)]

- ♦ Glass/paint primer - D 009 200 02-
- ♦ Cleaning solution - D 009 401 04-
- ♦ Applicator - D 009 500 25-
- ♦ Adhesive remover - D 002 000 10-
- ♦ Cutting wire - 6452/2- / cutting cord - 357 853 999-

4) Note minimum drying time ⇒ page 280 .

5) To process this material use double cartridge gun - VAS 5237- .

6) Heat using cartridge heater - V.A.G 1939 A- according to manufacturer's instructions.

7) Small 180 ml cartridge for sealing and/or for use when the 400 ml double cartridge is not sufficient.

1.4 Preparing undamaged windows for installation

Special tools and workshop equipment required

- ♦ Electric cutter - V.A.G 1561 A-
- ♦ Scraper (25 mm) - V.A.G 1561/8-

- The bonding surfaces must be free of dirt and grease.
- Do not cut back bonding surface until shortly before installation.
- Do not apply primer to bonding surface and do not use cleaning solution.

– Just before re-installing an undamaged window, use electric cutter - V.A.G 1561 A- and scraper (25 mm) - V.A.G 1561/8- to cut back the remaining adhesive sealant on the window and flange to give a smooth surface, but do NOT remove completely.

Note

The remaining material serves as a bonding surface when applying the new adhesive sealing material.

Applying adhesive ⇒ page 285

1.5 Preparing new windows for installation

– Clean all around bonding surface with cleaning solution - D 009 401 04- .

– Wipe clean surface with a dry, lint-free paper towel.

- The bonding surfaces must be free of dirt and grease.
- The glass must always be primed before applying adhesive sealant.
- The glass/paint primer is conductive and must not come into contact with the bus bar, e.g. of the rear window heating.
- The glass must be fitted within 15 minutes after applying the adhesive sealant.

Protected by copyright. Copying for private or commercial purposes, in part or in whole, is not permitted unless authorised by AUDI AG. AUDI AG does not guarantee or accept any liability with respect to the correctness of information in this document. Copyright by AUDI AG.

– Apply glass/paint primer - D 009 200 02- as described below.

Applying primer:

– Use applicator -2- to apply glass/paint primer -3- evenly and in one movement onto window -4- beside moulding -1-.

– Start application with fully soaked felt.

• Primer width approx. 20 mm

• Apply glass/paint primer centrally in relation to adhesive bead.

• Flash-off time: 10 minutes

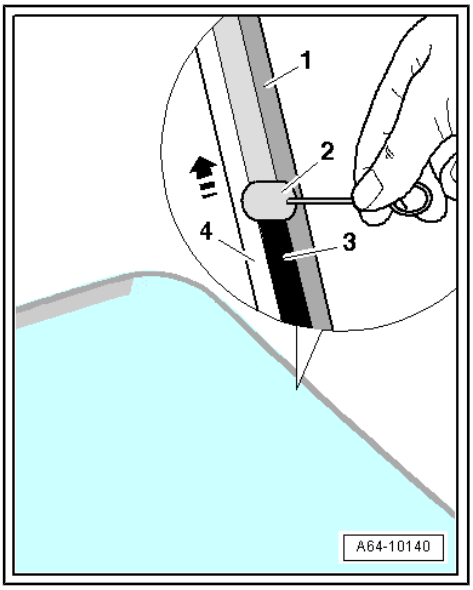

Applying adhesive:

Dimensions for applying adhesive:

1 - Adhesive bead

2 - Glass/paint primer

3 - Window

• Dimension -a- = 8 mm

• Dimension -b- = 12 mm

• Dimension -c-: note different distances from edge of window ⇒ Item 2 (page 287) .

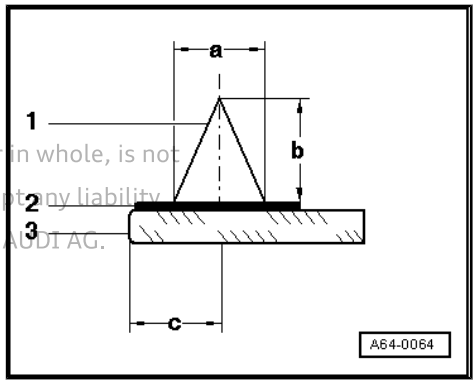

Protected by copyright. Copying for private or commercial purposes, in part or in whole, is not permitted unless authorised by AUDI AG. AUDI AG does not guarantee or accept any liability with respect to the correctness of information in this document. Copyright by AUDI AG.

Note

The cross-section of the adhesive bead is determined by the size of the applicator nozzle opening and the rate of application.

– Apply full surface of nozzle -2- to glass.

• Direction of application -arrow- for adhesive bead -1-.

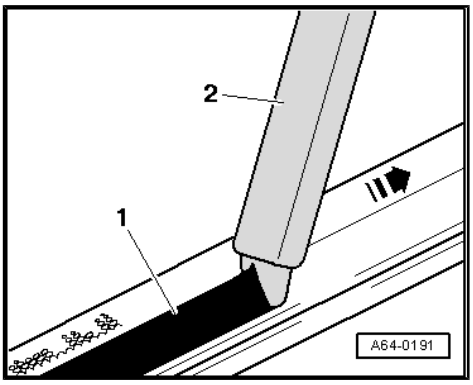

– Apply adhesive sealant -1- all around glass -2-, as shown.

– Windscreen or rear window glass must be installed in opening using two suction lifters.

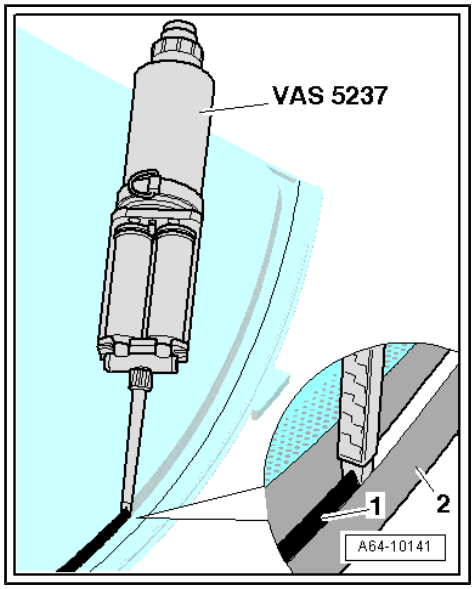

1.6 Preparing body flange for installation

- The bonding surfaces must be free of dirt and grease.
- Do not cut back bonding surface until shortly before installation.

– Shortly before installing the window, cut back the remaining adhesive sealant on the body flange with a carpet knife, but do not remove it completely.

Note

The remaining sealant is required as a base for better adhesion of the new adhesive sealant.

– If window flange has been damaged, repaired or renewed, paintwork structure must be repaired and, if necessary, anti-corrosion measures must be taken ⇒ Audi Paintwork Guide .

– Clean repaired area using cleaning solution - D 009 401 04- and then apply glass/paint primer - D 009 200 02- .

1.7 Cleaning off adhesive sealant

Protected by copyright. Copying for private or commercial purposes, in part or in whole, is not permitted unless authorised by AUDI AG. AUDI AG does not guarantee or accept any liability with respect to the correctness of information in this document. Copyright by AUDI AG.

We recommend using adhesive remover - D 002 000 10- for cleaning. Observe safety precautions when handling.

- When cleaning from inside the vehicle passenger compartment, make sure you do not exert outward pressure on the window you have just fitted.

Cleaning painted surfaces

– First clean painted surface with a dry cloth. Then clean off remaining adhesive sealant with adhesive remover - D 002 000 10- .

Cleaning plastic trim panels

– Allow adhesive sealant to dry (approx. 1 hour) and then pull off.

2 Windscreen

⇒ “2.1 Exploded view - windscreen”, page 287
⇒ “2.2 Removing and installing windscreen”, page 288

2.1 Exploded view - windscreen

Protected by copyright. Copying for private or commercial purposes, in part or in whole, is not permitted unless authorised by AUDI AG. AUDI AG does not guarantee or accept any liability with respect to the correctness of information in this document. Copyright by AUDI AG.

The following dimensions refer to distances between distinctive points. Mechanics must also pay attention to the routing of the original adhesive bead on the removed component.

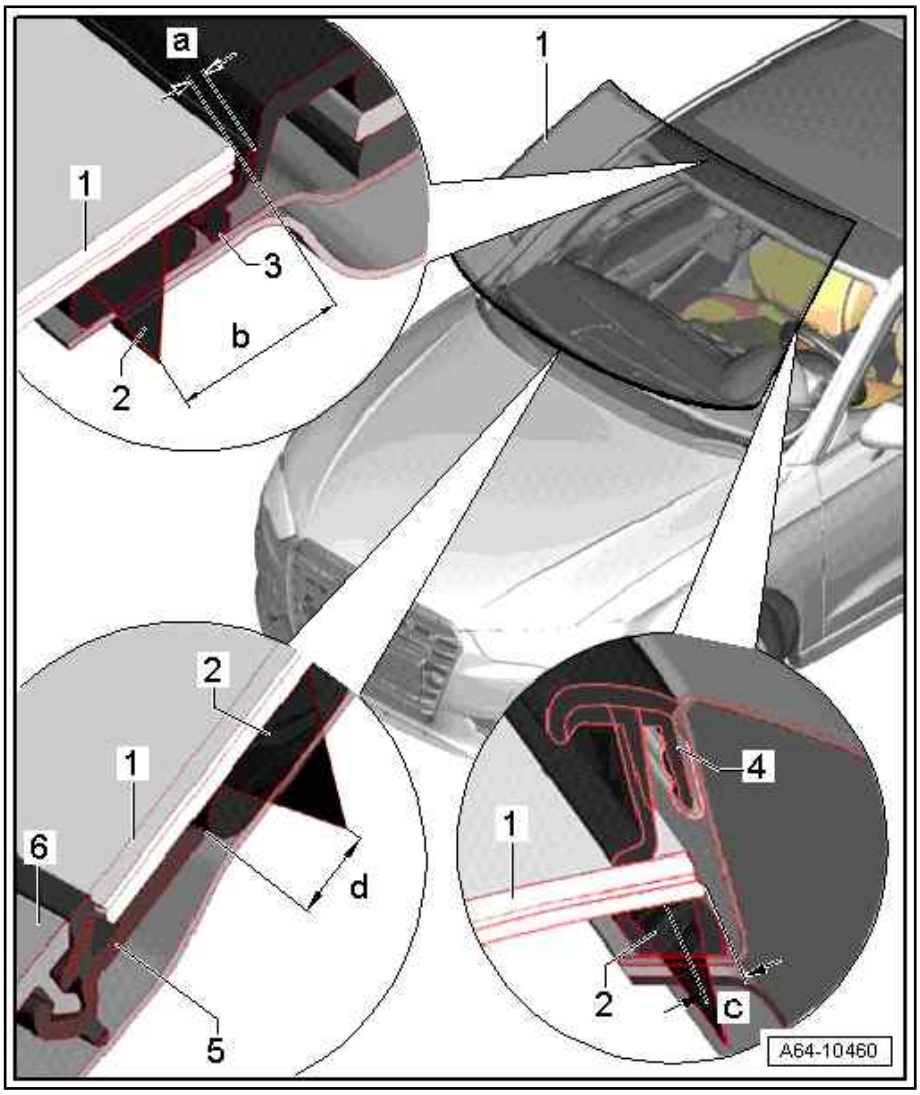

1 - Windscreen

- ❑ Distance from roof: dimension -a- = 2.5 mm
- ❑ Align centrally between A-pillars

2 - Adhesive bead

- ❑ Note minimum drying time ⇒ page 280

- Dimension -b- = 14 mm ± 2 mm
- Dimension -c- = 8 mm ± 2 mm
- Dimension -d- = 18 mm ± 2 mm

3 - Moulding

- ❑ Visible area must not be damaged

4 - Water deflector strip

- ❑ Removing and installing ⇒ page 352

5 - Surround for plenum chamber cover

- ❑ Not available as replacement part
- ❑ With a new windscreen, the protective beading must be pulled out before fitting the plenum chamber cover.

6 - Plenum chamber cover

- ❑ Allow window adhesive to dry (minimum: 2 hours) before pressing plenum chamber cover into retaining strip.

Removing protective beading

– Before fitting plenum chamber cover -4- when new windscreen -1- is installed, protective beading -2- must be removed from surround -3-.

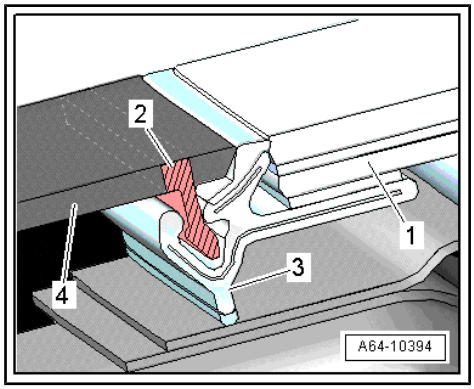

2.2 Removing and installing windscreen

- Depending on equipment version, the following additional work may be necessary ⇒ page 292 .

Removing

– Remove water deflector strip ⇒ page 352 .

– Remove wiper arms ⇒ Electrical system; Rep. gr. 92 ; Windscreen wiper system; Removing and installing wiper arms .

– Remove plenum chamber cover ⇒ page 34 .

– Remove sun visors (left, right and centre) ⇒ General body repairs, interior; Rep. gr. 68 ; Equipment; Exploded view - sun visors .

– Remove interior mirror ⇒ General body repairs, interior; Rep. gr. 68 ; Interior mirror; Exploded view - interior mirror .

– Remove trim for A-pillar (top left and right) ⇒ General body repairs, interior; Rep. gr. 70 ; Passenger compartment trim panels .

Protected by copyright. Copying for private or commercial purposes, in part or in whole, is not permitted unless authorized by AUDI AG. AUDI AG does not guarantee or accept any liability with respect to the correctness of information in this document. Copyright by AUDI AG.

> **WARNING**
>
> ***Risk of injury to hands and eyes due to glass splinters.***
>
> ***Danger of cutting yourself.***
>
> - ***Put on safety goggles.***
> - ***Put on protective gloves.***

– Use wire reel - VAS 6452/1- to reel off about 6.50 metres of cutting wire (corresponding to 6 turns) and cut off.

– Mask over body flange with adhesive tape -1- to avoid damage where awl is pushed through at the bottom.

– Pierce adhesive bead in this area with awl from inside to outside, as shown.

– Thread both ends of cutting wire -3- into awl -2- and pull through to the inside.

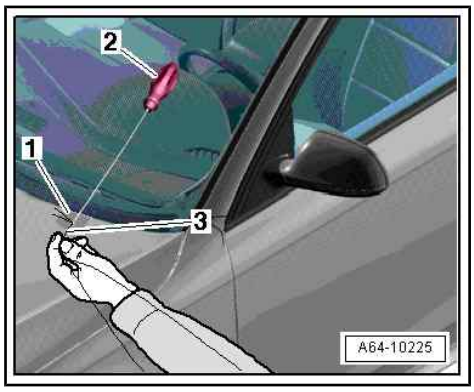

– Position cutting wire under glass all around windscreen, as shown.

• The wire ends must not be twisted at the point where they pass through the adhesive bead -arrow-.

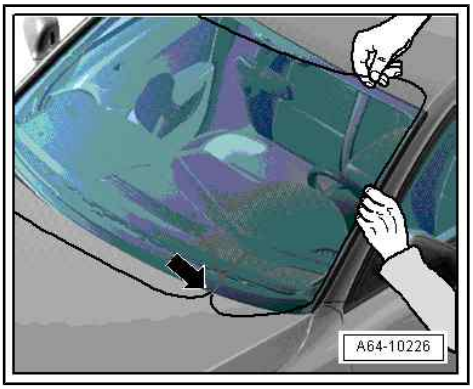

– Attach both reels to inside of glass, as shown.

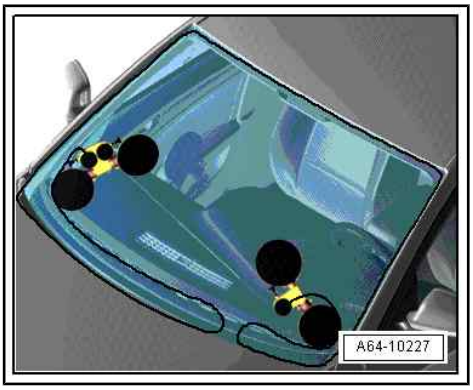

– Insert end of cutting wire -1- into reel -2-.

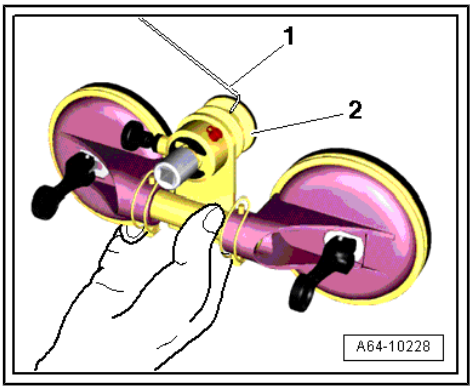

– Tension cutting wire and insert protective film -2- between dash panel and wire.

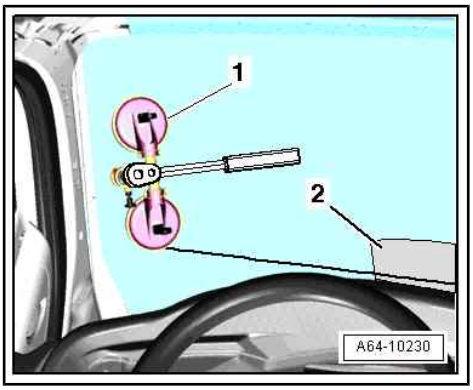

Protected by copyright. Copying for private or commercial purposes, permitted unless authorised by AUDI AG. AUDI AG does not guarantee or accept any liability with respect to the correctness of information in this document. Copyright by AUDI AG.

– Cut clear the first area. While doing so, wire is guided into integrated idler pulley -arrow- on reel.

Protected by copyright. Copying for private or commercial purposes, in part or in whole, is not permitted unless authorised by AUDI AG. AUDI AG does not guarantee or accept any liability with respect to the correctness of information in this document. Copyright by AUDI AG.

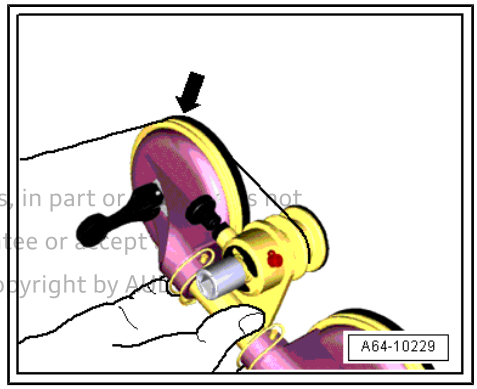

– Additionally insert guide awl -2- into adhesive bead, as shown, and attach it to window using suction pad so that wire runs along windscreen as close to the glass as possible.
– Adjust protective film -3- as necessary with length of wire and continue cutting clear using reel -1-.

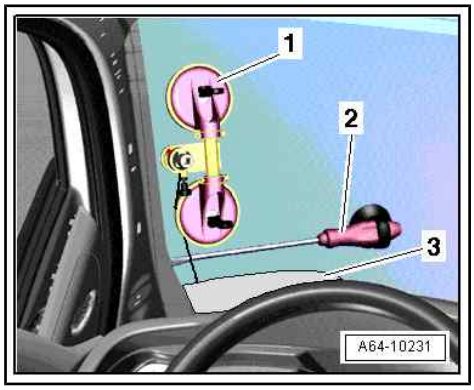

– Adjust reel and guide awl as shown, and cut clear area at A-pillar.
– Adjust reel and guide awl to approx. centre of windscreen, as shown.

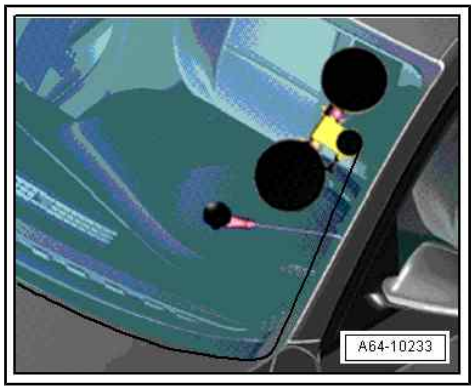

– Cut windscreen clear approx. to centre.

– Use second reel to cut bottom area of windscreen clear.

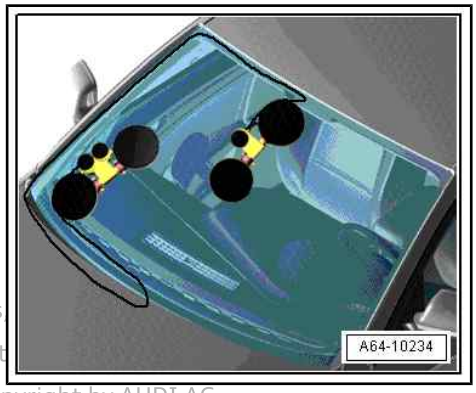

Protected by copyright. Copying for private or commercial purposes, permitted unless authorised by AUDI AG. AUDI AG does not guarant with respect to the correctness of information in this document. Copyright by AUDI AG.

– Move reel up and insert guide awl, as shown.

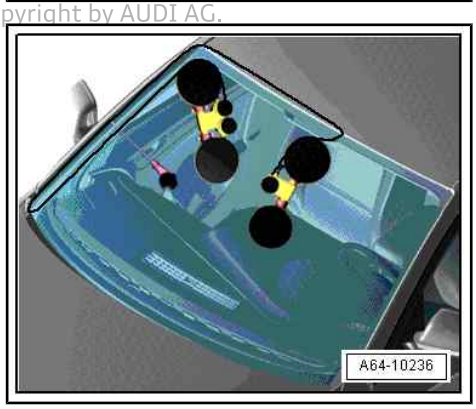

– Cut windscreen clear upwards along A-pillar.

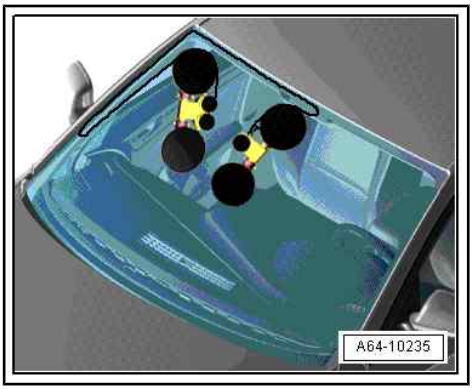

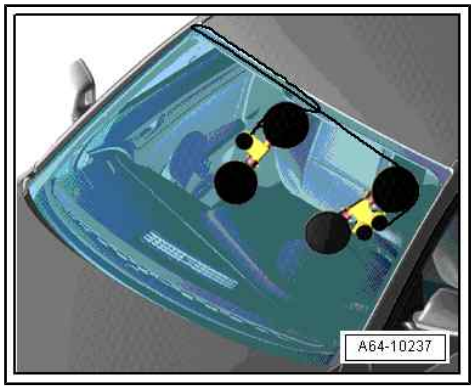

– Adjust reel over centre of windscreen and adjust first reel as shown and cut windscreen fully clear at top.

– Lift windscreen out of vehicle using two suction lifters.

Installing

– Fitting instructions ⇒ page 281

– Prepare undamaged glass for installation ⇒ page 284 .

– Prepare new glass for installation ⇒ page 284 .

– Prepare body flange for installation ⇒ page 286 .

– Using two suction lifters, insert windscreen in opening and align centrally.

• Distance from edge of windscreen to roof frame ⇒ Item 1 (page 287)

• Secure windscreen to roof at top with adhesive tape.

– Pull protective strip -2- out of windscreen surround before fitting plenum chamber cover ⇒ page 288 .

– Note minimum drying time ⇒ page 280 .

Depending on equipment version, the following additional work may be necessary:

– Calibrate front camera for driver assist systems ⇒ Running gear, axles, steering; Rep. gr. 44 ; Front camera for driver assist systems .

Protected by copyright. Copying for private or commercial purposes, in part or in whole, is not permitted unless authorised by AUDI AG. AUDI AG does not guarantee or accept any liability with respect to the correctness of information in this document. Copyright by AUDI AG.

3 Side windows

⇒ “3.1 Exploded view - rear side window”, page 293

⇒ “3.2 Removing and installing rear side window”, page 295

3.1 Exploded view - rear side window

⇒ “3.1.1 Exploded view - rear side window, A3”, page 293

⇒ “3.1.2 Exploded view - rear side window, Sportback”, page 294

⇒ “3.1.3 Exploded view - rear side window, Saloon”, page 294

3.1.1 Exploded view - rear side window, A3

The following dimensions refer to distances between distinctive points. Mechanics must also pay attention to the routing of the original adhesive bead on the removed component.

1 - Roof trim strip

- ❑ Removed (standard glazing)
- ❑ On vehicles with high-gloss package, roof trim strip must be pulled out of clips on side panel, C-pillar and roof in vicinity of side window.

2 - Side window

- ❑ Removing ⇒ page 295
- ❑ Installing ⇒ page 298 .
- ❑ If a removed window is to be reinstalled, it must be fixed in position with adhesive tape at the B-pillar and C-pillar.

3 - Window surround

- ❑ Not available as replacement part
- ❑ Visible area must not be damaged.

4 - Adhesive bead

5 - Locating pin

- ❑ Not available as replacement part
- ❑ Is cut in two when window is removed

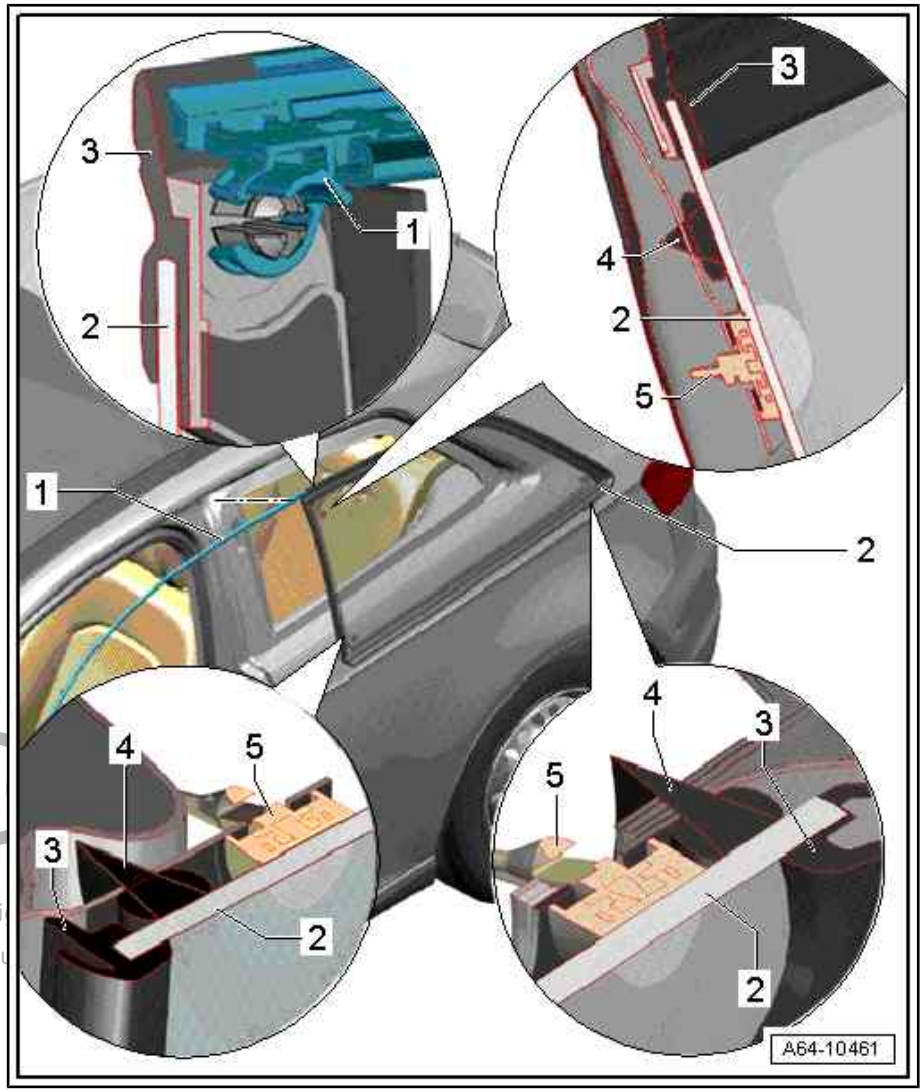

Reproduced by copyri
permitted unless au
with respect to the

3.1.2 Exploded view - rear side window, Sportback

The following dimensions refer to distances between distinctive points. Mechanics must also pay attention to the routing of the original adhesive bead on the removed component.

1 - Roof trim strip

- ❑ Removed (standard glazing)
- ❑ On vehicles with high-gloss package, roof trim strip must be pulled out of clips on side panel, C-pillar and roof in vicinity of side window.

2 - Side window

- ❑ Removing ⇒ page 296
- ❑ Installing ⇒ page 298 .
- ❑ If a removed window is to be reinstalled, it must be fixed in position with adhesive tape at the B-pillar and C-pillar.

3 - Moulding

- ❑ Not available as replacement part
- ❑ Visible area must not be damaged.

4 - Adhesive bead

- – Apply directly next to moulding

5 - Locating pin

- ❑ Not available as replacement part
- ❑ Is cut in two when window is removed

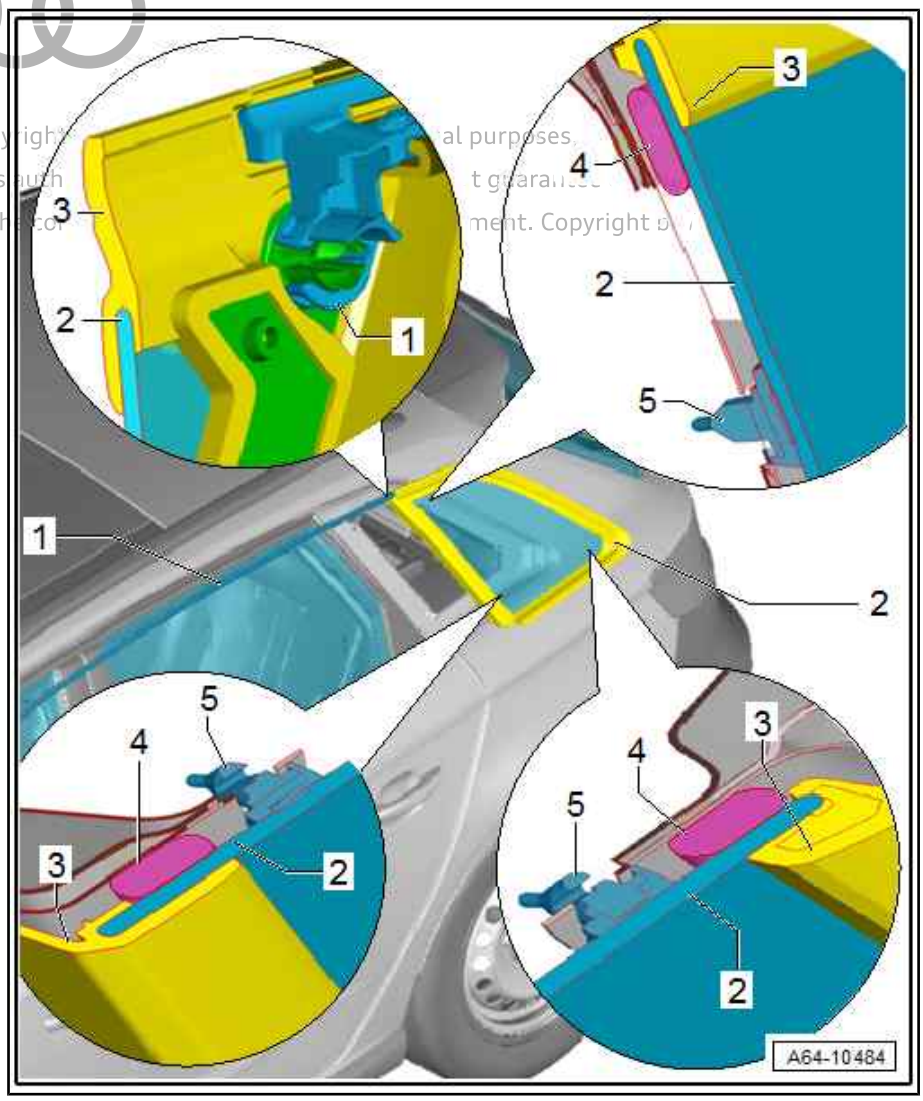

3.1.3 Exploded view - rear side window, Saloon

The following dimensions refer to distances between distinctive points. Mechanics must also pay attention to the routing of the original adhesive bead on the removed component.

1 - Side window

- ❑ Removing ⇒ page 297
- ❑ Installing ⇒ page 298 .

2 - Trim strip

3 - Moulding

- ❑ Not available as replacement part
- ❑ Visible area must not be damaged.

4 - Adhesive bead

5 - Locating pin

- ❑ Not available as replacement part
- ❑ Is cut in two when window is removed

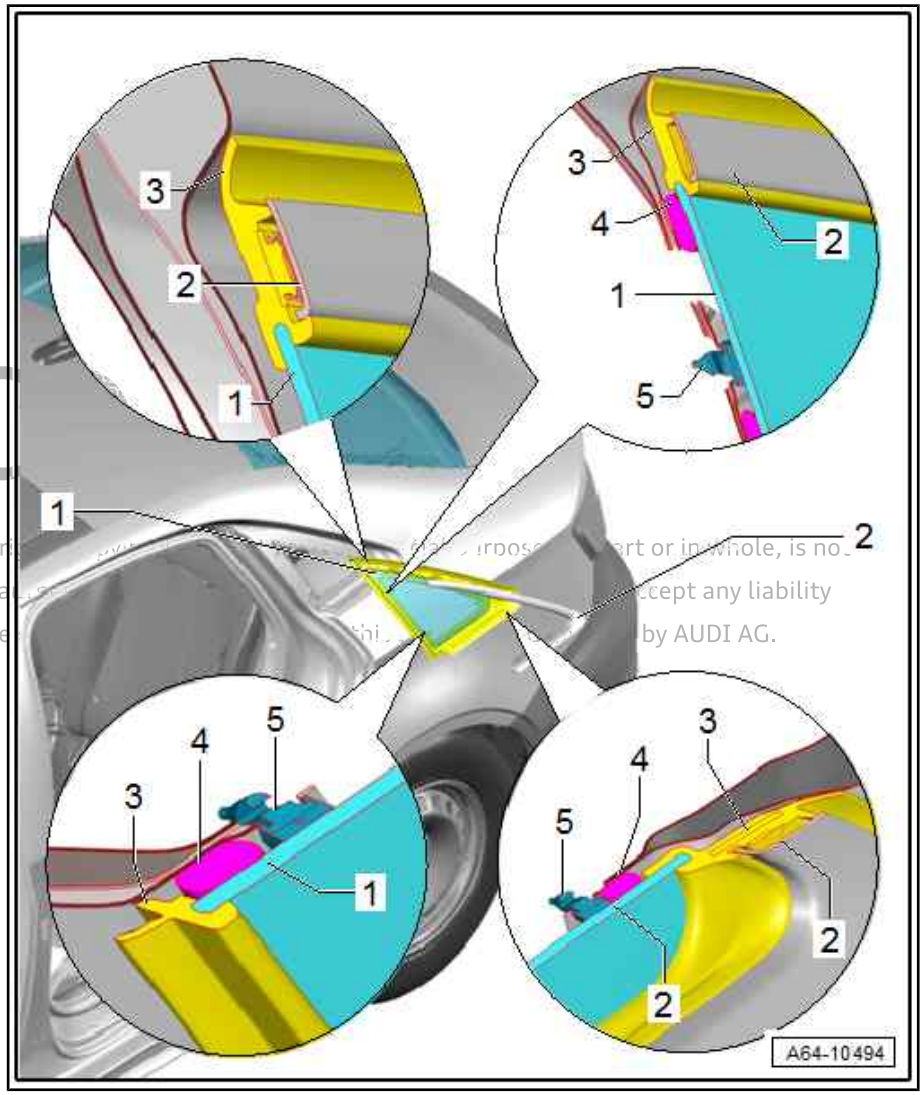

Protected by copyright. Copying for private or commercial purposes, in part or in whole, is not permitted unless authorised by AUDI AG. AUDI AG does not guarantee or accept any liability with respect to the correctness of information in this document. Copyright by AUDI AG.

3.2 Removing and installing rear side window

⇒ "3.2.1 Removing undamaged side window - A3", page 295

⇒ "3.2.2 Removing undamaged side window - Sportback", page 296

⇒ "3.2.3 Removing undamaged side window - Saloon", page 297

⇒ "3.2.4 Removing damaged side window", page 298

⇒ "3.2.5 Installing side window", page 298

3.2.1 Removing undamaged side window - A3

- Use adhesive tape to protect paintwork of side panel and roof in cutting area.
- Insert protective film between cutting cord and trim panels in vehicle interior.
- On vehicles with standard glazing, unclip roof trim strip ⇒ page 392 .

– On vehicles with high-gloss package, roof trim strip must be pulled out of clips on side panel, C-pillar and roof in vicinity of side window ⇒ page 393 .

> **WARNING**
>
> *Risk of injury to hands and eyes due to glass splinters.*
>
> *Danger of cutting yourself.*
>
> - *Put on safety goggles.*
> - *Put on protective gloves.*

– Route cutting cord around side window as shown in illustration.

– Secure ends X and Y in two pull handles of cutting tool - V.A.G 1351- .

– Insert protective film between cutting cord and trim panel on inside at point where cutting cord is inserted to prevent damage.

– Using a gentle sawing motion, pull cutting cord to front in direction of -arrow A- and cut through adhesive bead at bottom of side panel and at roof frame.

– This involves first cutting the locating pin at the back of the window and then the adhesive bead.

– Then pull cutting cord downwards in direction of -arrow B- through adhesive bead.

– Take window out of window opening.

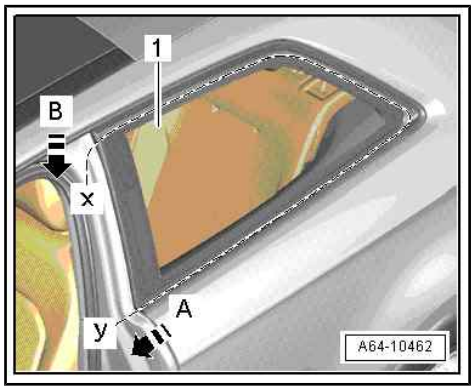

3.2.2 Removing undamaged side window - Sportback

– Use adhesive tape to protect paintwork of side panel and roof in cutting area.

– Insert protective film between cutting cord and trim panels in vehicle interior.

– On vehicles with standard glazing, unclip roof trim strip ⇒ page 392 .

– On vehicles with high-gloss package, roof trim strip must be pulled out of clips on side panel, C-pillar and roof in vicinity of side window ⇒ page 393 .

> **WARNING**
>
> *Risk of injury to hands and eyes due to glass splinters.*
>
> *Danger of cutting yourself.*
>
> - *Put on safety goggles.*
> - *Put on protective gloves.*

Protected by copyright. Copying for private or commercial purposes, in part or in whole, is not permitted unless authorised by AUDI AG. AUDI AG does not guarantee or accept any liability with respect to the correctness of information and data. Copyright by AUDI AG.

– Route cutting cord around side window as shown in illustration.
– Secure ends X and Y in two pull handles of cutting tool - V.A.G 1351- .
– Insert protective film between cutting cord and trim panel on inside at point where cutting cord is inserted to prevent damage.
– Using a gentle sawing motion, pull cutting cord to front in direction of -arrow A- and cut through adhesive bead at bottom of side panel and at roof frame.
– This involves first cutting the locating pin at the back of the window and then the adhesive bead.
– Then pull cutting cord downwards in direction of -arrow B- through adhesive bead.

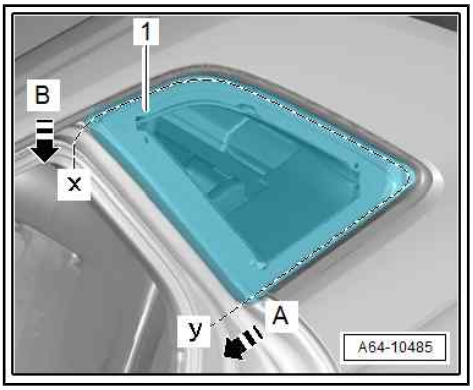

3.2.3 Removing undamaged side window - Saloon

– Use adhesive tape to protect paintwork of side panel and roof in cutting area.
– Insert protective film between cutting cord and trim panels in vehicle interior.

> ⚠ **WARNING**
>
> *Risk of injury to hands and eyes due to glass splinters.*
>
> *Danger of cutting yourself.*
>
> - *Put on safety goggles.*
> - *Put on protective gloves.*

– Route cutting cord around side window as shown in illustration.
– Secure ends X and Y in two pull handles of cutting tool - V.A.G 1351- .
– Insert protective film between cutting cord and trim panel on inside at point where cutting cord is inserted to prevent damage.
– Using a gentle sawing motion, pull cutting cord to front in direction of -arrow A- and cut through adhesive bead at bottom of side panel and at roof frame.
– This involves first cutting the locating pin at the back of the window and then the adhesive bead.
– Pull cutting cord downwards in direction of -arrow B- through adhesive bead.

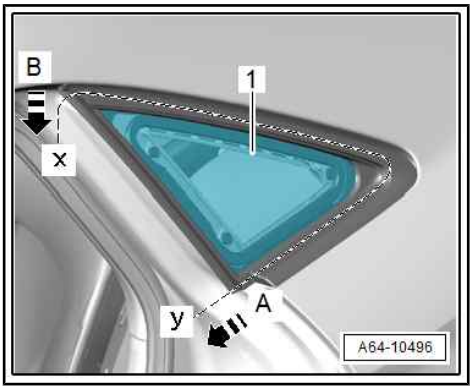

Protected by copyright. Copying for private or commercial purposes, in part or in whole, is not permitted unless authorised by AUDI AG. AUDI AG does not guarantee or accept any liability with respect to the correctness of information in this document. Copyright by AUDI AG.

3.2.4 Removing damaged side window

WARNING

Risk of injury to hands and eyes due to glass splinters.

Danger of cutting yourself.

- *Put on safety goggles.*
- *Put on protective gloves.*

– Protect body and interior against damage from glass splinters.

– Mask flange all around with fabric-backed adhesive tape.

– Remove glass fragments down to adhesive sealant.

– Insert protective film (e.g. from removal kit for flush bonded windows - VAS 6452-) between trim sections and remaining fragments of glass.

– Cut through adhesive sealant (with glass fragments) in window opening using electric cutter - V.A.G 1561A- and offset blade - V.A.G 1561/10- (with roller stop).

3.2.5 Installing side window

– Fitting instructions ⇒ page 281

– Prepare new glass for installation ⇒ page 284 .

– Prepare undamaged glass for installation ⇒ page 284 .

– Prepare body flange for installation ⇒ page 286 .

Note

Use 1-component window adhesive - DH 009 100 03- (small cartridge). If more than one window/glass has to be bonded, 2-component window adhesive set - D 004 660 M2- can also be used.

– Apply adhesive sealant all round next to moulding.

– When reinstalling an undamaged window, apply adhesive to remaining adhesive bead.

– Insert new window in opening and press locating pins into B-pillar; then press locating pin into C-pillar.

– When installing windows without locating pin, align window lengthwise at edge of side panel -arrow- and insert into window opening.

– Press roof trim strip and side trim strip (bottom) into clips on side panel, centralising window.

– Secure window glass in position in opening with adhesive tape.

– Minimum drying time ⇒ page 280

Protected by copyright. Copying for private or commercial purposes, in part or in whole, is not permitted unless authorised by AUDI AG. AUDI AG does not guarantee or accept any liability with respect to the correctness of information in this document. Copyright by AUDI AG.

4 Rear window

⇒ “4.1 Exploded view - rear window”, page 299

⇒ “4.2 Removing and installing rear window”, page 300

4.1 Exploded view - rear window

⇒ “4.1.1 Exploded view - rear window, A3 and A3 Sportback”, page 299

⇒ “4.1.2 Exploded view - rear window, Saloon”, page 299

4.1.1 Exploded view - rear window, A3 and A3 Sportback

The following dimensions refer to distances between distinctive points. Mechanics must also pay attention to the routing of the original adhesive bead on the removed component.

1 - Rear window

- ❑ Removing and installing ⇒ page 300
- ❑ Prior to removal, unplug all electrical connectors and move contacts inwards towards the centre of the window and fix in position with adhesive tape.

2 - Roof spoiler

- ❑ Removed ⇒ page 336

3 - Adhesive bead

- Width of bead = 8 mm ± 2 mm
- Height of bead = 12 mm + 2 mm
  - ❑ Distances from edge of window

- ♦ Dimension -a- = 8 mm
- ♦ Dimension -b- = 11 mm
- ♦ Dimension -c- = 2.2 mm
- ♦ Dimension -d- = 33 mm

4 - Spacers

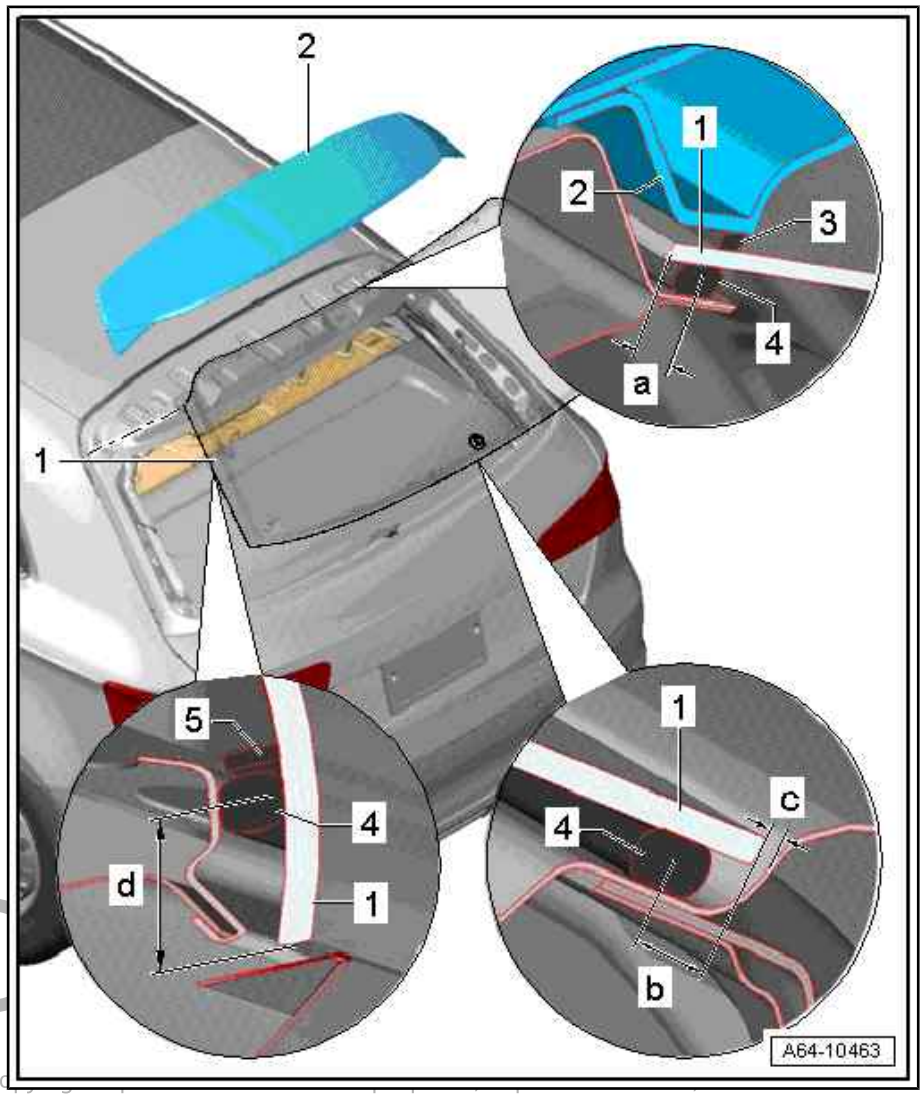

Protected by copyright. Copy
permitted unless authorised by AUDI AG. AUDI AG does not guarantee or accept any liability
with respect to the correctness of information in this document. Copyright by AUDI AG.

4.1.2 Exploded view - rear window, Saloon

The following dimensions refer to distances between distinctive points. Mechanics must also pay attention to the routing of the original adhesive bead on the removed component.

Protected by copyright. Copying for commercial purposes, in part or in whole, is not permitted unless authorised by AUDI AG. AUDI AG does not guarantee or accept any liability with respect to the information in this document. Copyright by AUDI AG.

1 - Rear window

- ❑ Prior to removal, unplug/unscrew all electrical connectors, move contacts inwards towards the centre of the window and fix in position with adhesive tape.
- ❑ Removing and installing ⇒ page 300

2 - Adhesive bead

- ❑ Note distances from edge of window.
- ❑ Dimension -a- = 12 mm
- ❑ Dimension -b- = 24 mm
- ❑ Dimension -c- = 10 mm

3 - Spacers

- ❑ Not available as replacement part

4 - Adhesive stopper strip

- ❑ Bond on adhesive stopper strip directly adjacent to bus bar for rear window heating.
- ❑ Window adhesive must not come into contact with bus bar for window heating.

5 - Body flange

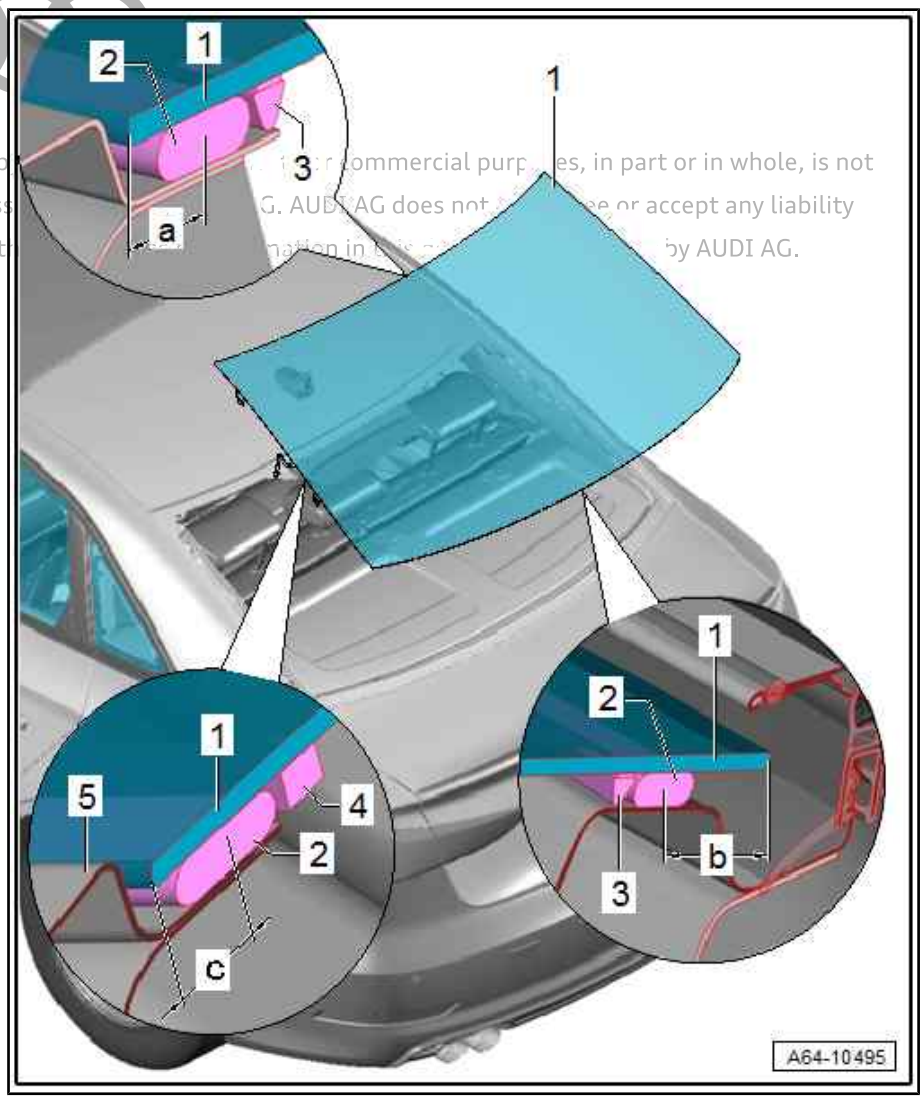

4.2 Removing and installing rear window

⇒ "4.2.1 Removing undamaged rear window - A3 and A3 Sportback", page 300

⇒ "4.2.2 Removing undamaged rear window - Saloon", page 304

⇒ "4.2.3 Removing damaged rear window", page 308

⇒ "4.2.4 Installing rear window", page 308

4.2.1 Removing undamaged rear window - A3 and A3 Sportback

- Roof spoiler removed ⇒ page 336
- Rear lid trim removed ⇒ General body repairs, interior; Rep. gr. 70 ; Luggage compartment trim panels .

– Unplug electrical connectors for heated rear window and window aerial, move towards centre of window and secure with adhesive tape.

WARNING

Risk of injury to hands and eyes due to glass splinters.

Danger of cutting yourself.

- *Put on safety goggles.*
- *Put on protective gloves.*

– Use wire reel - VAS 6452/1- to reel off about 6.50 metres of cutting wire (corresponding to 6 turns) and cut off.

– Pierce adhesive bead from inside to outside with awl -2-, as shown.

– Mask over body flange with adhesive tape -1- to avoid damage where awl is pushed through at the bottom.

– Thread both ends of cutting wire -3- into awl and pull through to the inside.

• The wire ends must not be twisted at the point where they pass through the adhesive bead -arrow-.

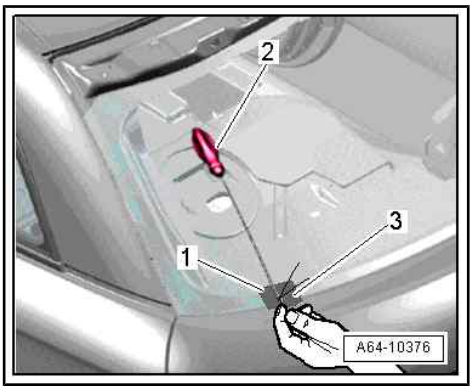

– Position cutting wire around rear window (under window), as shown.

Protected by copyright. Copying for private or commercial purposes
permitted unless authorised by AUDI AG. AUDI AG does not guarant
with respect to the correctness of information in this document. Co

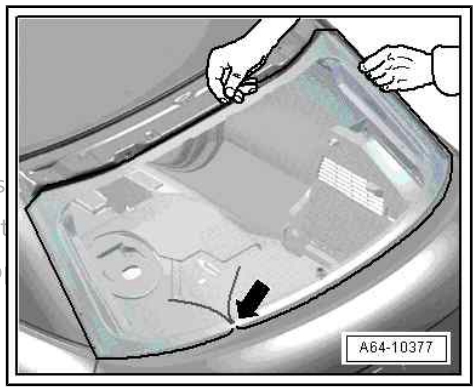

– Attach both reels to inside of glass, as shown.

– Additionally insert guide awl into the adhesive bead, as shown, and attach it to window using suction pad so that wire runs along window as close to the glass as possible.

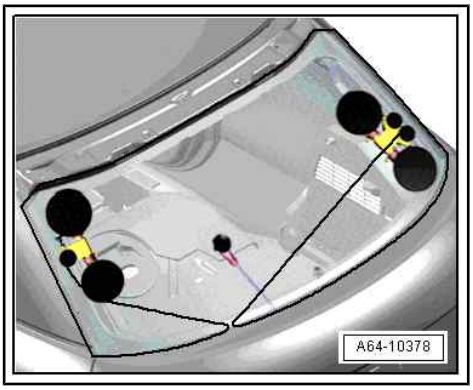

– Insert end of cutting wire -1- into reel -2-.

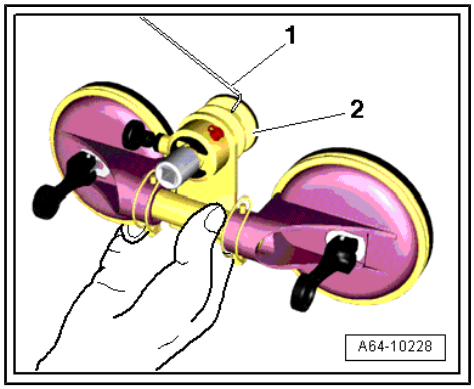

– Tension cutting wire with reel -1- and insert plastic film -2- from removal kit - VAS 6452- as protection between wire and rear shelf.

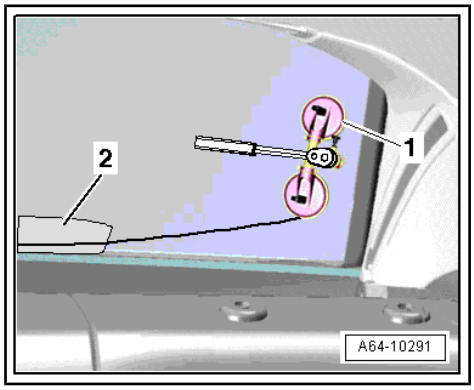

– Cut out first section of window glass at bottom.

Copyright by AUDI AG. Copying for private or commercial purpo
permitted unless authorised by AUDI AG. AUDI AG does not gua
with respect to the correctness of information in this document.

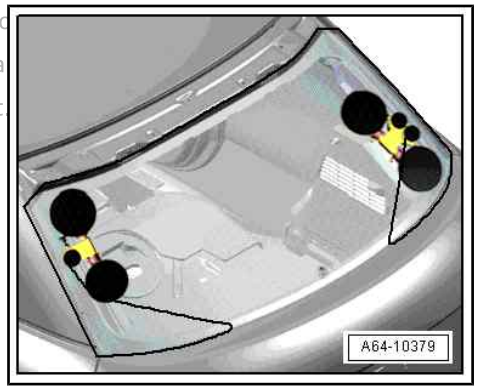

– Cut window glass clear at D-pillar (bottom).
– Position guide awl as shown and continue to cut window clear upwards at D-pillar.

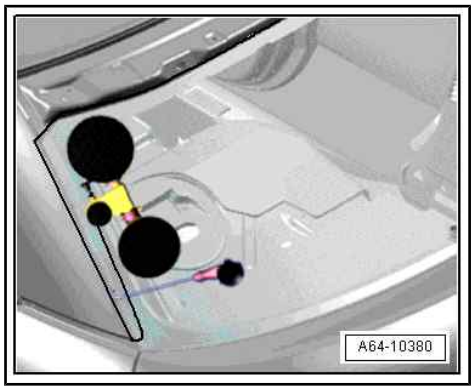

– Adjust reel and guide awl, as shown, and cut clear area at D-pillar (bottom) on opposite side.

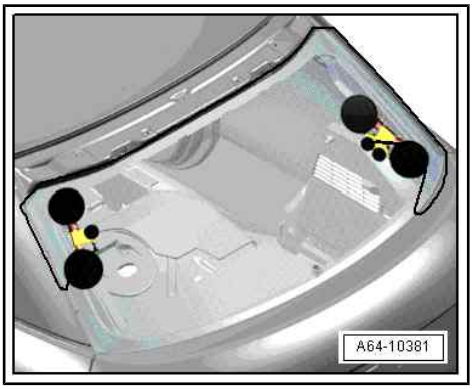

– Move reel up and apply guide awl.

– Cut out window towards top.

Protected by copyright. Copying for private or commercial purp
permitted unless authorised by AUDI AG. AUDI AG does not gua
with respect to the correctness of information in this document

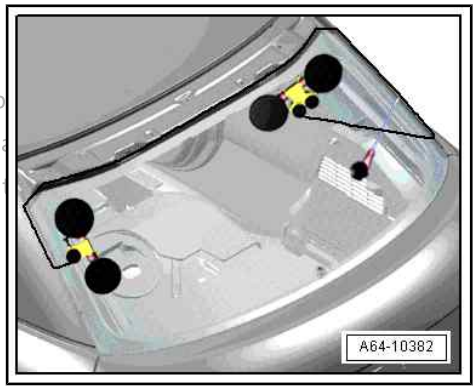

– Move reel as shown.

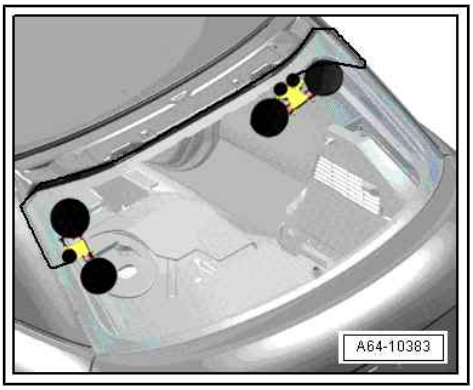

– Cut window clear at top right corner.

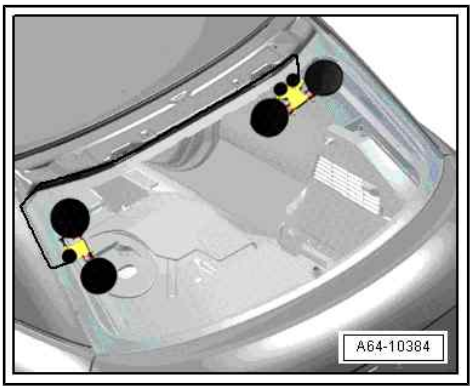

– Move reel to top left corner of window, as shown, and cut out window.

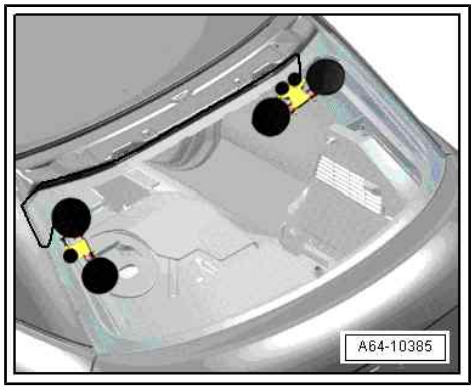

– Move left reel to approx. centre of window, as shown, and apply guide awl.

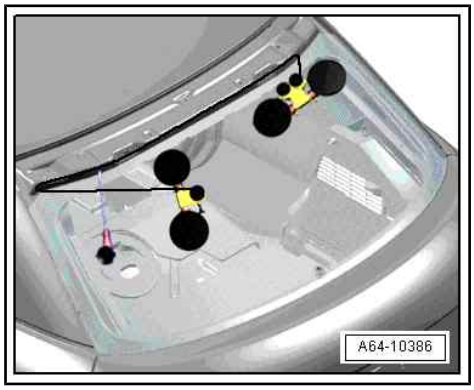

– Cut clear window from top edge approx. to centre.

Protected by copyright. Copying for private or commercial p
permitted unless authorised by AUDI AG. AUDI AG does not
with respect to the correctness of information in this docum

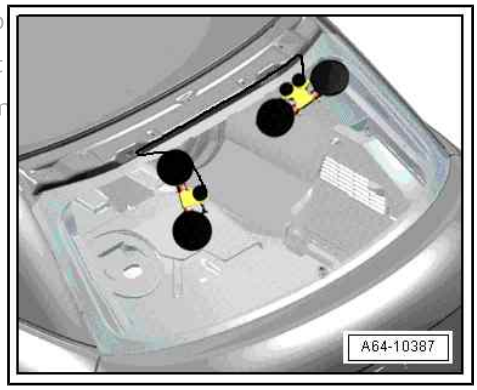

– Move right reel over left reel, as shown, and completely cut out window.
– Lift window out of rear lid using suction lifters.

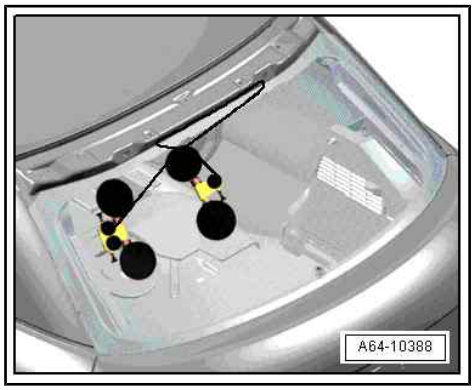

4.2.2 Removing undamaged rear window - Saloon

♦ D-pillar trim removed.
♦ High-level brake light removed

– Unscrew nut -3- for electrical connectors for heated rear window, disconnect wire -2- from stud, move it towards centre of window and secure with adhesive tape.

– When installing, tighten nut to 9 Nm.

– Unplug electrical connectors for window aerial -arrows-, move them towards centre of window and secure with adhesive tape.

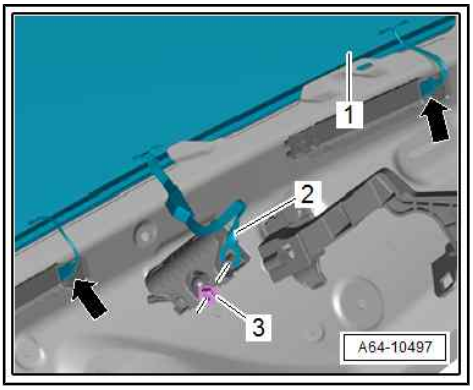

> ⚠ **WARNING**
>
> *Risk of injury to hands and eyes due to glass splinters.*
>
> *Danger of cutting yourself.*
>
> - *Put on safety goggles.*
> - *Put on protective gloves.*

– Use wire reel - VAS 6452/1- to reel off about 6.50 metres of cutting wire (corresponding to 6 turns) and cut off.

– Mask over body flange with adhesive tape -1- to avoid damage where awl is pushed through at the bottom.

– Thread both ends of cutting wire -3- into awl -2- and pull through to the inside.

- The wire ends must not be twisted at the point where they pass through the adhesive bead -arrow-.

Protected by copyright. Copying for private or commercial purposes, in par
permission of Audi AG is prohibited. Audi AG does not guarantee or a
with respect to the correctness of information in this document. Copyright

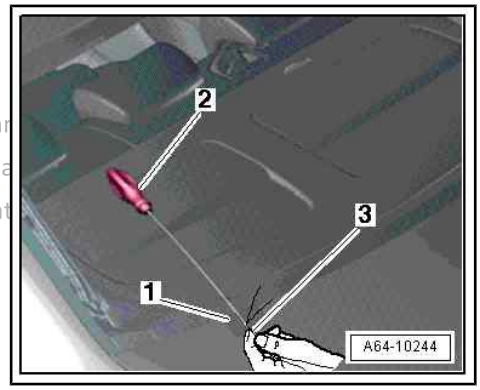

– Position cutting wire under glass all round rear window, as shown.

– Position cutting wire around rear window (under window), as shown.

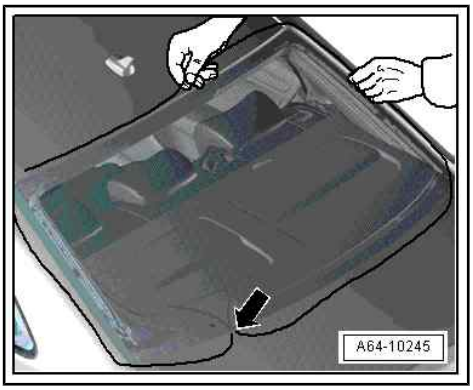

– Attach both reels to inside of glass, as shown.

– Insert end of cutting wire -1- into reel -2-.

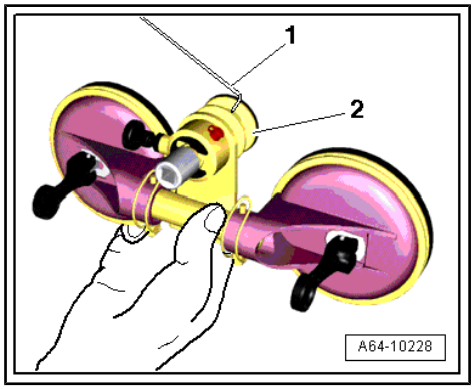

– Tension cutting wire with reel -1- and insert plastic film -2- from removal kit - VAS 6452- as protection between wire and rear shelf.

Protected by copyright. Copying for private or commercial purposes, i
permitted unless authorised by AUDI AG. AUDI AG does not guarante
with respect to the correctness of information in this document. Copy

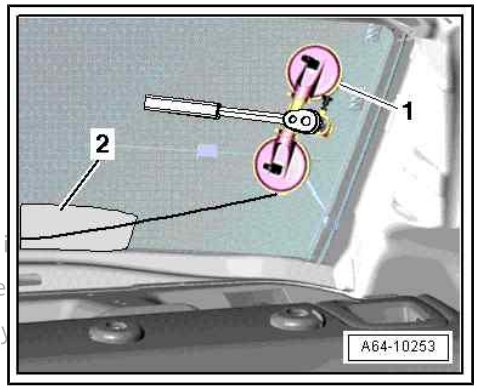

– Cut clear the first area. While doing so, wire is guided into integrated idler pulley -arrow- on reel.

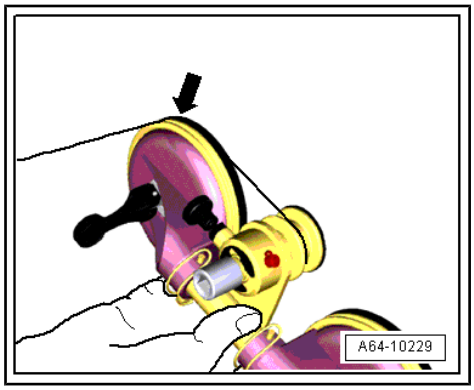

– Additionally insert guide awl -2- into adhesive bead, as shown, and attach it to window using suction pad so that wire runs along window as close to the glass as possible.

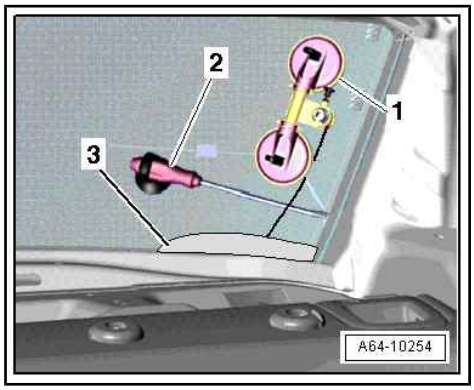

Protected by copyright. Copying for private or commercial purposes, in part or i
permitted unless authorised by AUDI AG. AUDI AG does not guarantee or accep
with respect to the correctness of information in this document. Copyright by A

– Adjust reel and guide awl, as shown, and cut clear area on D-pillar.

– Adjust reel and guide awl, as shown.

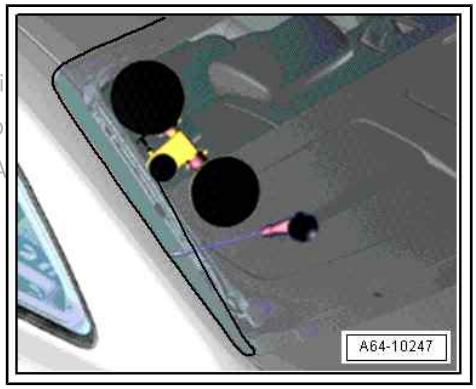

– Continue cutting windscreen clear up to around its centre.

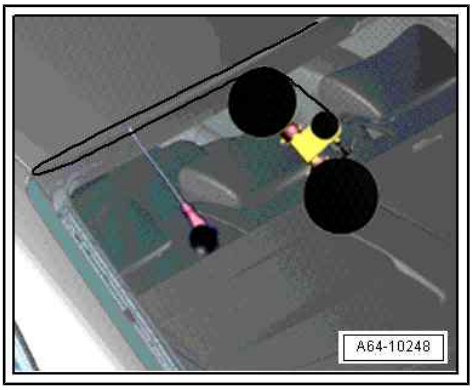

– Use second reel to cut clear bottom area of window.

– Move reel up and insert guide awl, as shown.

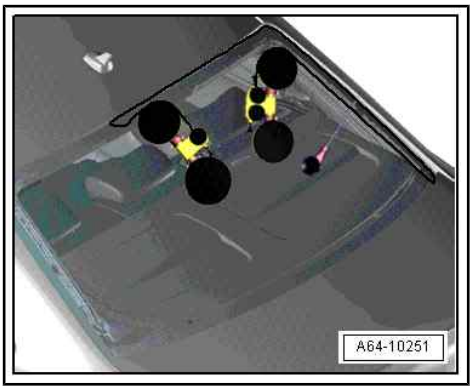

– Cut window clear upwards along D-pillar.

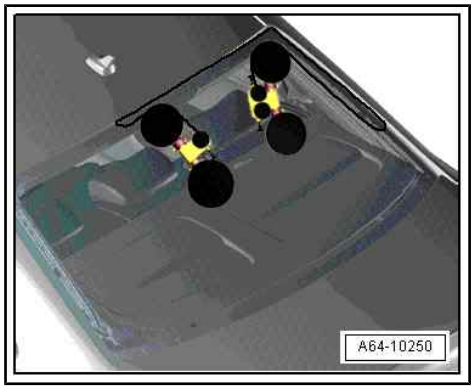

– Adjust reel over centre of window and adjust via first reel as shown and cut window fully clear at top.
– Remove window from window opening using suction lifters.

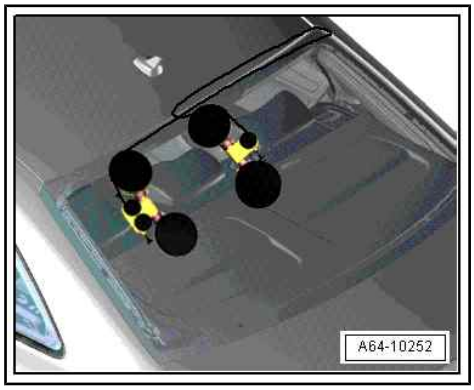

4.2.3 Removing damaged rear window

WARNING

Risk of injury to hands and eyes due to glass splinters.

Danger of cutting yourself.

- *Put on safety goggles.*
- *Put on protective gloves.*

– Protect body and interior against damage from glass splinters.
– Remove glass fragments down to adhesive sealant.
– Unplug electrical connectors for high-level brake light.
– Unplug electrical connectors for heated rear window and window aerial.
– Mask flange all around with fabric-backed adhesive tape.
– Cut through adhesive sealant (with glass fragments) in window opening using electric cutter - V.A.G 1561A- and offset blade - V.A.G 1561/10- (with roller stop).

4.2.4 Installing rear window

Protected by copyright. Copying for private or commercial purposes, in part or in whole, is not permitted unless authorised by AUDI AG. AUDI AG does not guarantee or accept any liability with respect to the correctness of information in this document. Copyright by AUDI AG.

– Fitting instructions ⇒ page 281
– Prepare new glass for installation ⇒ page 284 .
– Prepare undamaged glass for installation ⇒ page 284 .
– Prepare body flange for installation ⇒ page 286 .
– Fit rear window into window opening using suction lifters.
– Align glass so that spacing is equal on both sides.

– Minimum drying time ⇒ page 280
– Plug all electrical connectors for aerials back in/screw connection for heated rear window back in.

Protected by copyright. Copying for private or commercial purposes, in part or in whole, is not permitted unless authorised by AUDI AG. AUDI AG does not guarantee or accept any liability with respect to the correctness of information in this document. Copyright by AUDI AG.

5 Door windows

⇒ “5.1 Exploded view - front door window”, page 310
⇒ “5.2 Exploded view - rear door window”, page 311
⇒ “5.3 Removing and installing front door window”, page 312
⇒ “5.4 Removing and installing rear door window”, page 313

5.1 Exploded view - front door window

Note

Window regulator must be fitted before installing the door window.

1 - Door window

2 - Window regulator motor

3 - Cover

- ❑ Lever off and release door window through hole ⇒ page 312

4 - Inner door cover

- ❑ Removing and installing ⇒ page 115

5 - Window regulator

- ❑ Installed

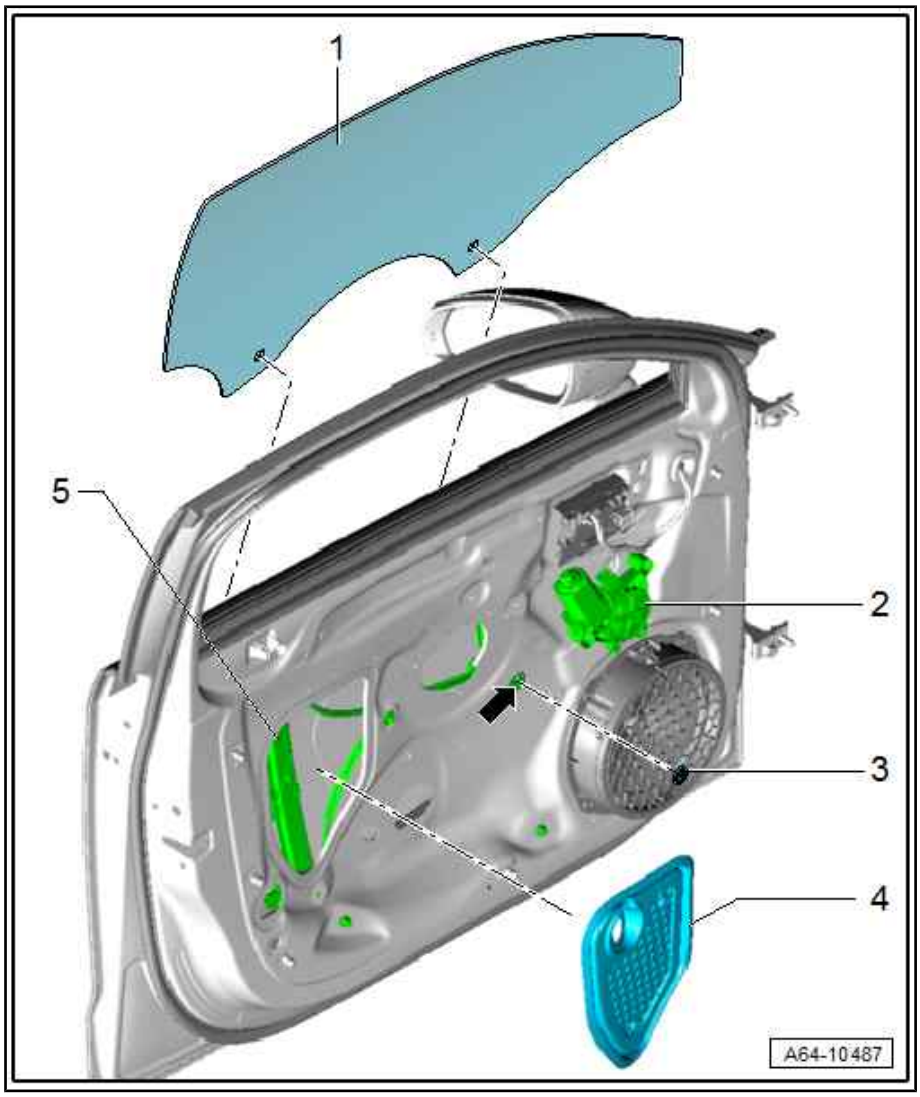

Protected by copyright. Copying for private or commercial purposes, in part or in whole, is not permitted unless authorised by AUDI AG. AUDI AG does not guarantee or accept any liability with respect to the correctness of information in this document. Copyright by AUDI AG.

5.2 Exploded view - rear door window

1 - Door window

- ❑ Removing and installing ⇒ page 313

2 - Stud

- ❑ Two parts, with locking pin
- ❑ Studs can be re-installed

3 - Control unit with rear driver side window regulator motor - J1016-

- ❑ Equipment version
- ❑ Removing and installing ⇒ page 125

4 - Cover

- ❑ Installed

5 - Window regulator

- ❑ Window regulator remains installed in door.

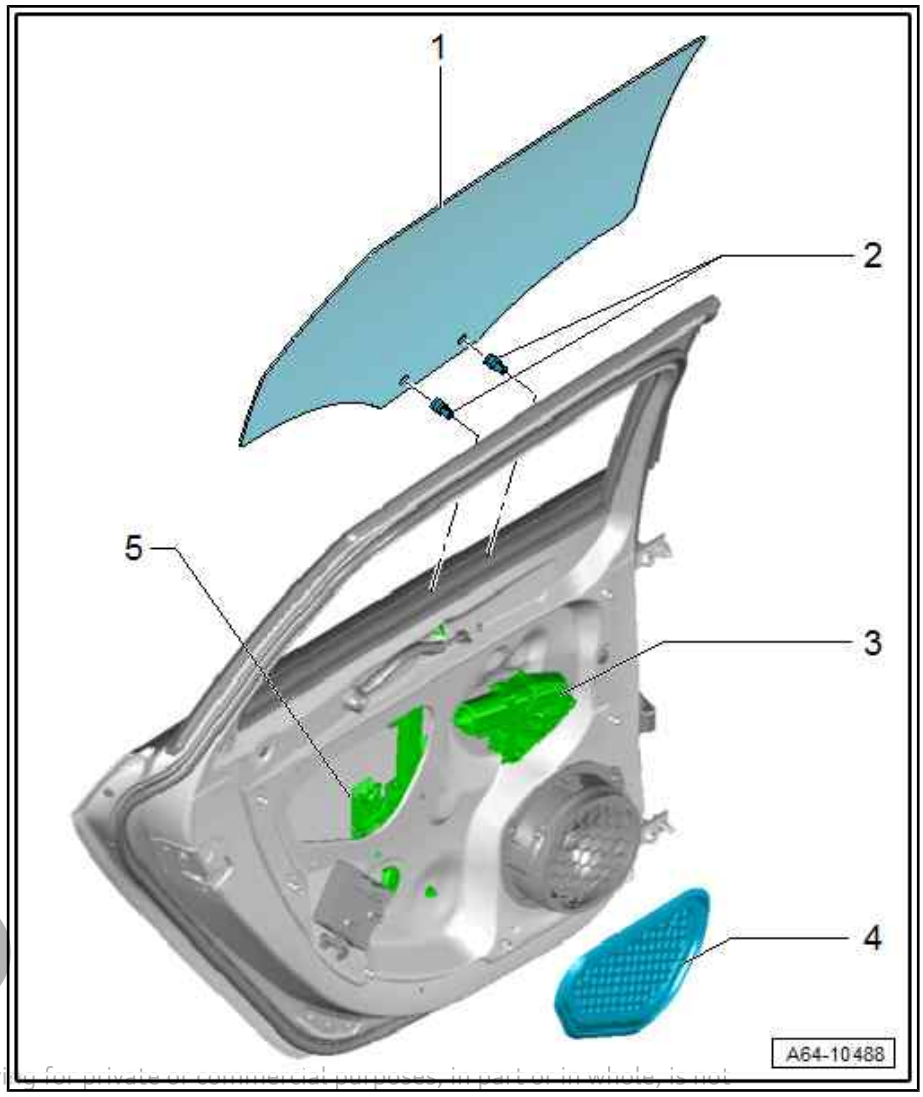

Protected by copyright. Copying for private or commercial purposes, in part or in whole, is not permitted unless authorised by AUDI AG. AUDI AG does not guarantee or accept any liability with respect to the correctness of information in this document. Copyright by AUDI AG.

5.3 Removing and installing front door window

1 - Door window

- ❑ Door trim removed ⇒ General body repairs, interior; Rep. gr. 70 ; Door trim (front); Exploded view - door trim (front)
- ❑ Inner door cover removed ⇒ page 115
- – Insert window regulator until actuator is visible in hole in inner door panel.
- – To remove, release fasteners on actuator -3- using a screwdriver and pull door window -1- up slightly in window guide.
- – Tilt door window towards front and pull it upwards, out of door.

2 - Window regulator

- ❑ Window regulator remains installed in door.

3 - Fastener

Protected by copyright. Copying for private or commercial purp
permitted unless authorised by AUDI AG. AUDI AG does not gua
with respect to the correctness of information in this document.

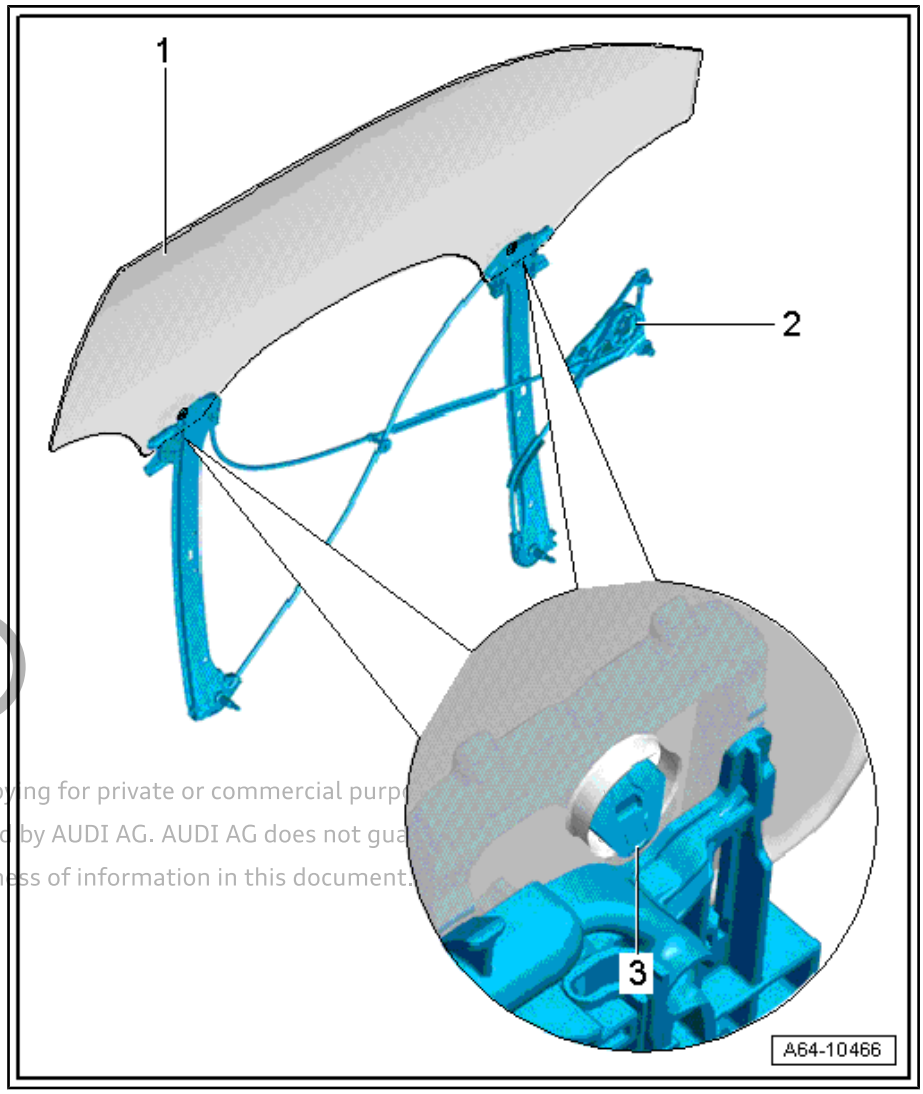

Releasing door window

- – Lower door window until recess becomes visible.
- – Use screwdriver or similar tool to press actuator -3- outwards through opening in window guide -1- and hole in door window -2- in order to release actuator.
- – Pull door window upwards out of actuator.
- – Tilt door window diagonally forwards and pull it upwards out of window guide.

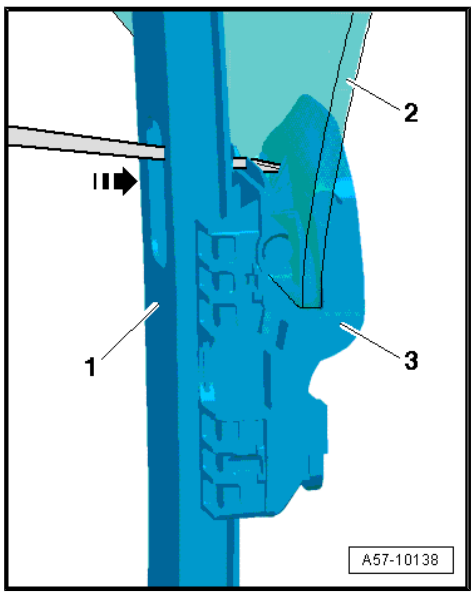

Inserting door window

- Fit door window -1- in window guide of door, inserting it diagonally towards front of vehicle.
- Align door window in window guides at front and rear and push window downwards.
- Press door window down into actuators.
- Actuators then engage in door window.

Protected by copyright. Copying for private or commercial purposes, i
permitted unless authorised by AUDI AG. AUDI AG does not guarantee
with respect to the correctness of information in this document. Copy

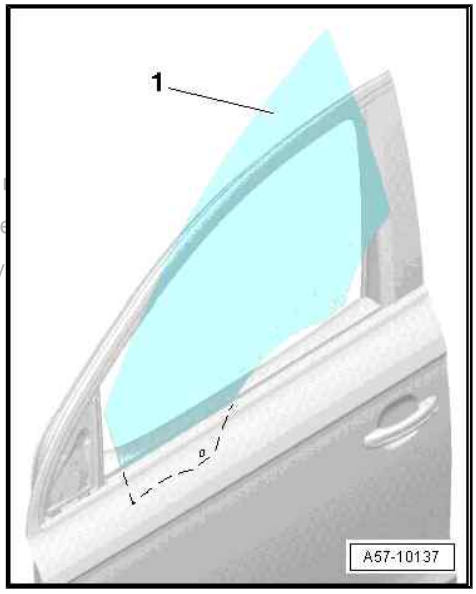

5.4 Removing and installing rear door window

Special tools and workshop equipment required

♦ Use removal tool - T40231- for standard glass.

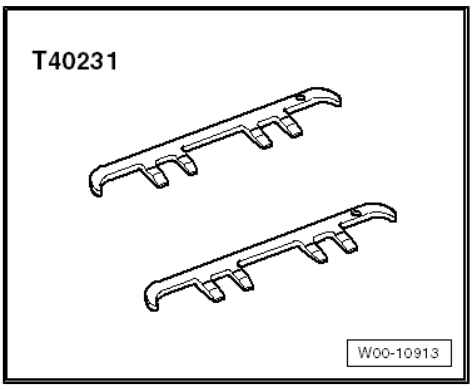

Removing door window

- Remove door trim ⇒ General body repairs, interior; Rep. gr. 70 ; Door trim (rear); Exploded view - door trim (rear) .
- Remove inner window slot trim strip ⇒ page 161 .
- Remove inner door cover ⇒ page 157 .
- Remove trim panel for C-pillar ⇒ page 362 .
- Insert removal tool - T40231- on both sides of door window and press downwards at mounting at window regulator -1-.
- This will bend open mounting at window regulator so that door window with retaining pins can be lifted out.
- Pull door window -2- upwards out of mounting and lift out of door.

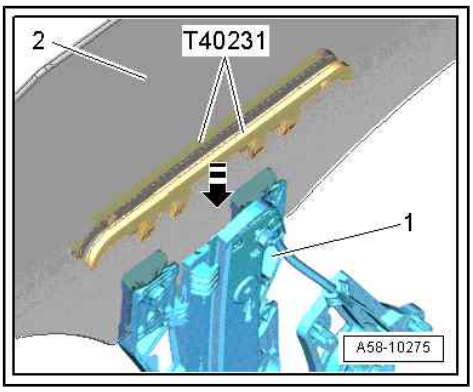

Installing door window

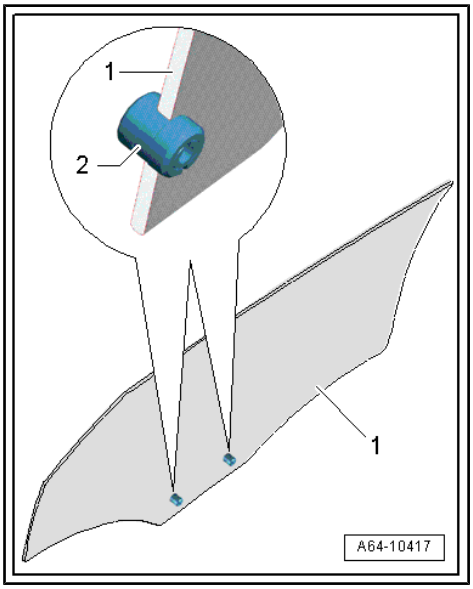

Note

When installing new standard-glass door windows, retaining pins must be pressed in first.

– Insert retaining pins -2- centrally in door window -1- and press locking pin in until it is flush.

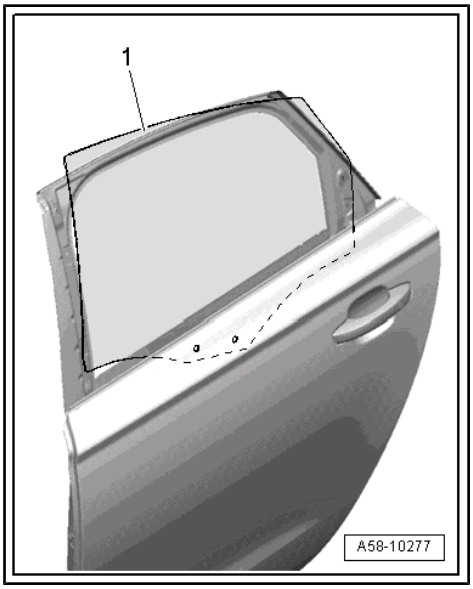

– Fit door window -1- in window guide of door, inserting it diagonally towards rear of vehicle.
– Align door window in window guides and slide window downwards; make sure door window moves exactly into mounting at front and rear.
– Press window down into mounting of window regulator.
– Retaining pins then engage audibly in mounting.

Protected by copyright. Copying for private or commercial purposes, in part or in whole, is not permitted unless authorised by AUDI AG. AUDI AG does not guarantee or accept any liability with respect to the correctness of information in this document. Copyright by AUDI AG.

66 – Exterior equipment

1 Radiator grille/front trim panel

⇒ “1.1 Exploded view - radiator grille”, page 315

⇒ “1.2 Removing and installing radiator grille”, page 323

1.1 Exploded view - radiator grille

⇒ “1.1.1 Exploded view - radiator grille, A3 up to model year 2016”, page 315

⇒ “1.1.2 Exploded view - radiator grille, A3 S line and S3 up to model year 2016”, page 317

⇒ “1.1.3 Exploded view - radiator grille, vehicles from model year 2017 onwards”, page 319

⇒ “1.1.4 Exploded view - radiator grille, RS 3 Sportback up to model year 2018”, page 320

⇒ “1.1.5 Exploded view - radiator grille, RS 3 Saloon, RS 3 Sportback from model year 2019 onwards”, page 321

⇒ “1.1.6 Exploded view - radiator grille, vehicles with high-voltage system”, page 322

1.1.1 Exploded view - radiator grille, A3 up to model year 2016

Protected by copyright. Copying for private or commercial purposes, in part or in whole, is not permitted unless authorised by AUDI AG. AUDI AG does not guarantee or accept any liability with respect to the correctness of information in this document. Copyright by AUDI AG.

1 - Audi emblem

- ❑ Exploded view ⇒ page 415

2 - Mounting bracket (right-side)

- ❑ For parking aid sender
- ❑ Removing and installing ⇒ page 333

3 - Radiator grille

- ❑ Country-specific version with parking aid (refer to ⇒ Electronic parts catalogue): Attach strip of sealant foam to radiator grille ⇒ page 330
- ❑ Removing and installing ⇒ page 323

4 - Bolt

- ❑ 3x
- ❑ 4.5 Nm

5 - Bolt

- ❑ 6x
- ❑ 1.5 Nm

6 - Mounting bracket (left-side)

- ❑ For parking aid sender
- ❑ Removing and installing ⇒ page 333

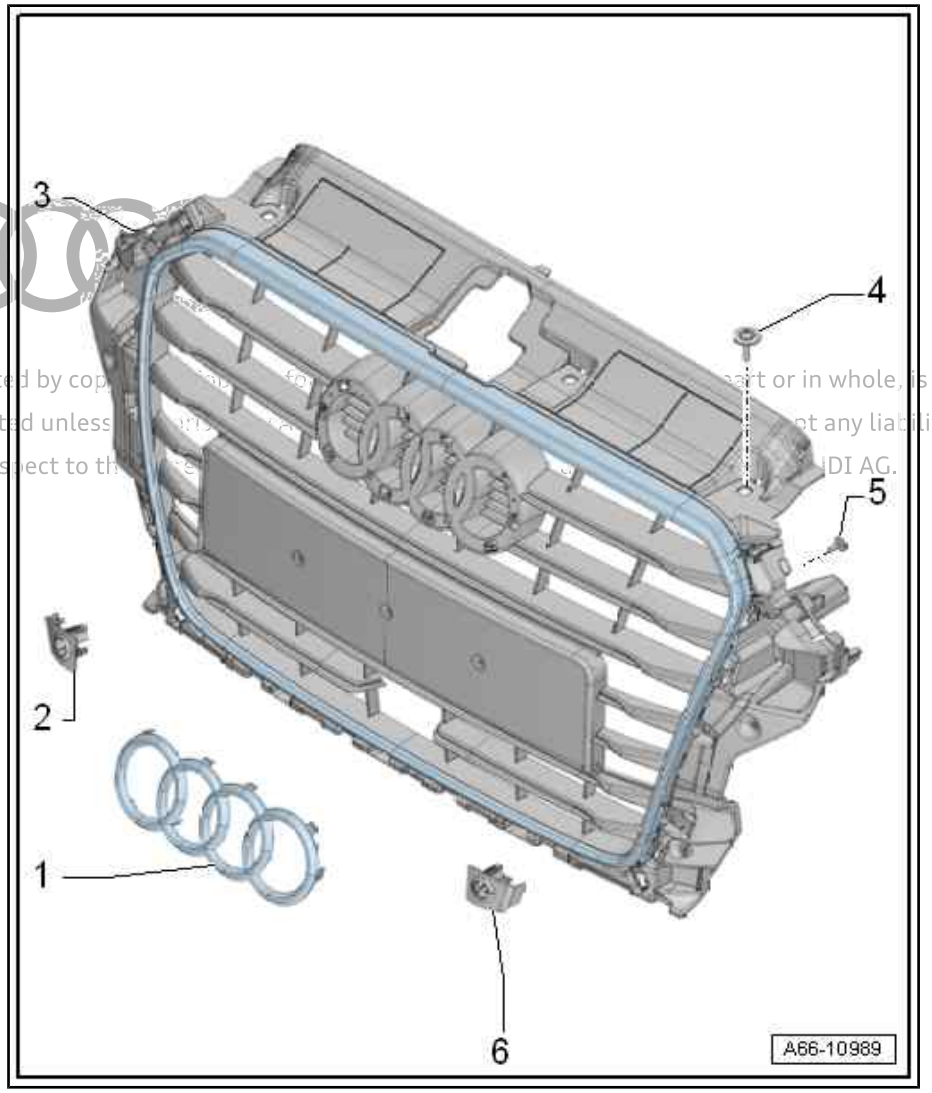

Protected by copyright. Copying for private or commercial purposes, in part or in whole, is not permitted unless authorized by AUDI AG. AUDI AG does not guarantee or accept any liability with respect to the correctness and completeness of this document.

1.1.2 Exploded view - radiator grille, A3 S line and S3 up to model year 2016

Note

If there are no cut-outs at the bottom left and right of the radiator grille for S3 models, new ones will have to be made.

1 - Audi emblem

- ❑ Exploded view ⇒ page 415

2 - Emblem

- ❑ Exploded view ⇒ page 415

3 - Radiator grille

- ❑ Country-specific version with parking aid (refer to ⇒ Electronic parts catalogue): Attach strip of sealant foam to radiator grille ⇒ page 330
- ❑ Removing and installing ⇒ page 323

4 - Reinforcement strut

- ❑ For radiator grille

5 - Bolt

- ❑ 3x
- ❑ 4.5 Nm

6 - Bolt

- ❑ 6x
- ❑ 1.5 Nm

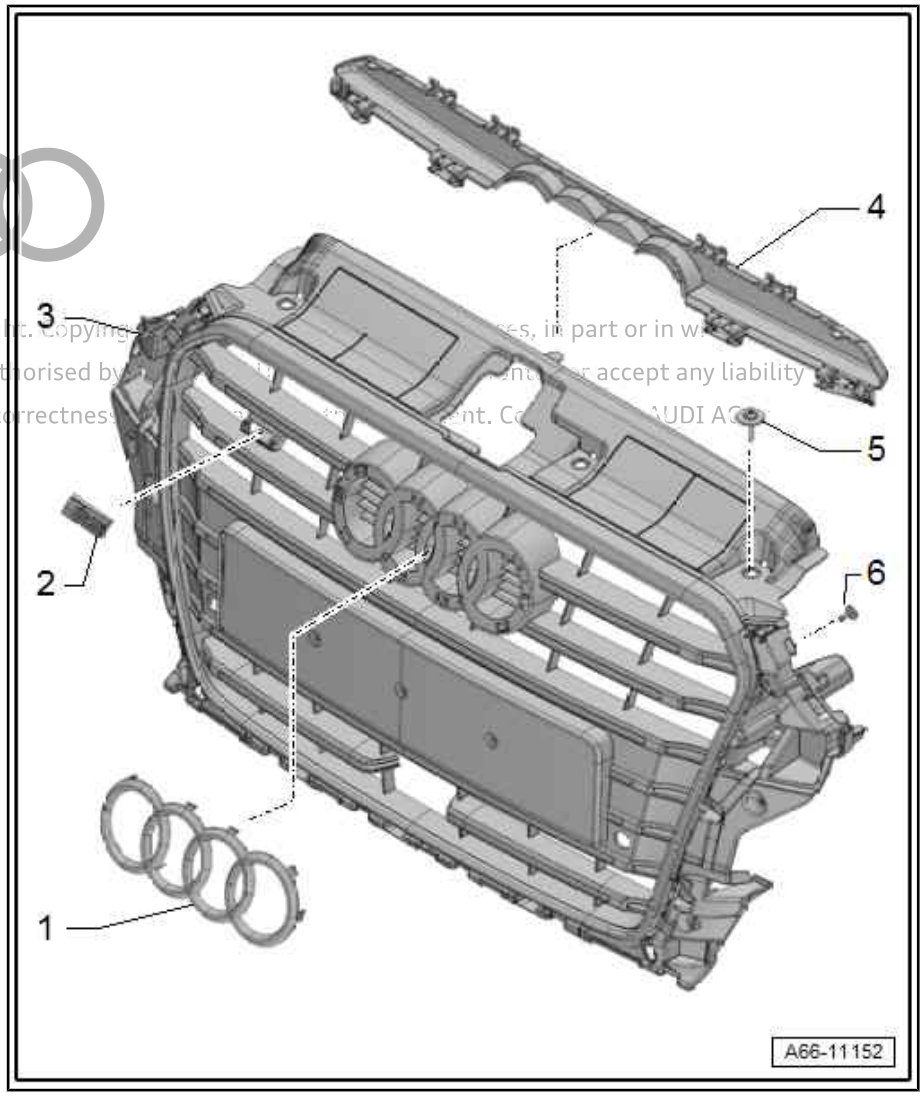

Copyright. Copying for private or commercial purposes, in part or in whole, is not permitted unless authorised by AUDI AG. AUDI AG does not guarantee or accept any liability with respect to the correctness and completeness of this document. Copyright by AUDI AG.

Making cut-outs on S3

Protected by copyright. Copying for private or commercial purposes, in part or in whole, is not permitted unless authorised by AUDI AG. AUDI AG does not guarantee or accept any liability with respect to the accuracy of information in this document. Copyright by AUDI AG.

1 - Radiator grille

- ❑ Make cut-outs at struts -arrows-, as shown ⇒ page 326 .

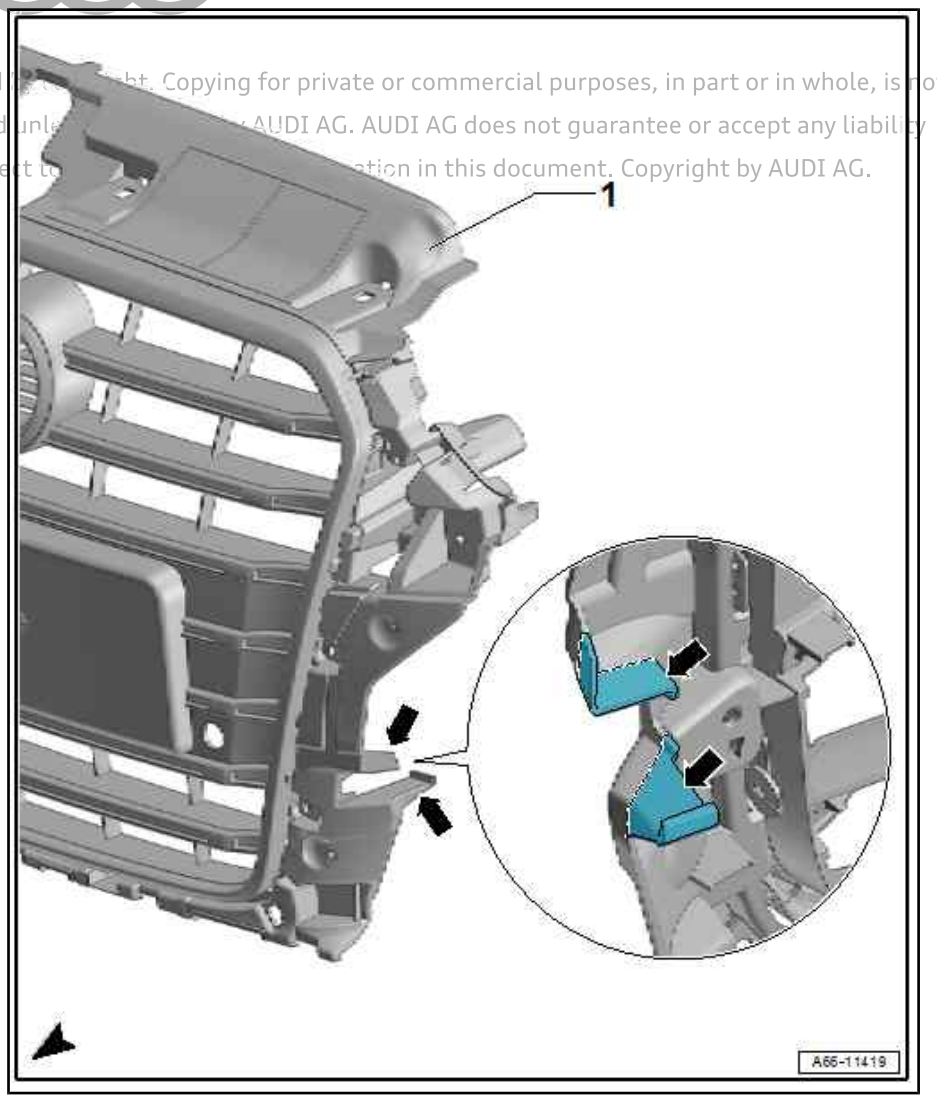

1.1.3 Exploded view - radiator grille, vehicles from model year 2017 onwards

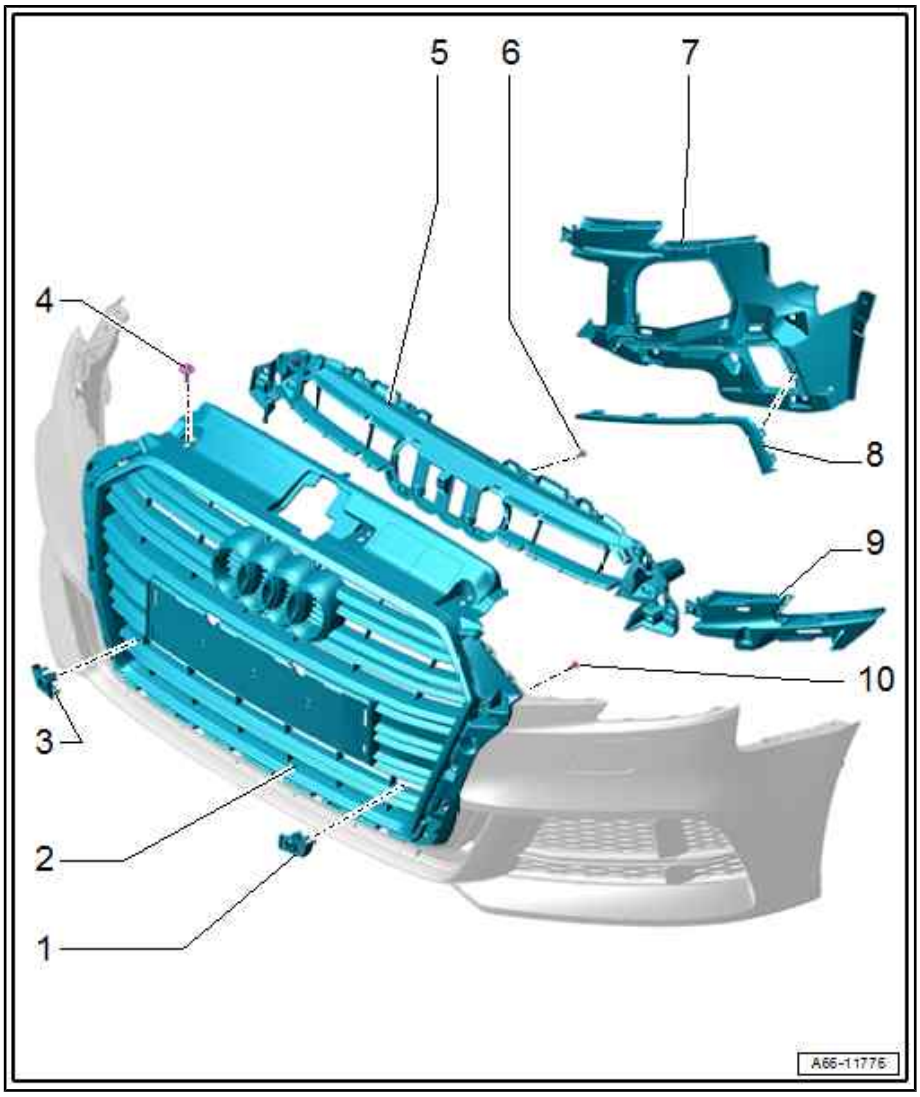

1 - Mounting bracket (left-side)
- ❑ For parking aid sender
- ❑ Removing and installing ⇒ page 333

2 - Radiator grille
- ❑ Removing and installing ⇒ page 324

3 - Mounting bracket (right-side)
- ❑ For parking aid sender
- ❑ Removing and installing ⇒ page 333

4 - Bolt
- ❑ 3x
- ❑ 4.5 Nm

5 - Closure plate for radiator grille
- ❑ Removing and installing ⇒ page 331

6 - Bolt
- ❑ 10x
- ❑ 1.5 Nm

7 - Closure plate for bumper cover
- ❑ e-tron only
- ❑ Removing and installing ⇒ page 324

8 - Trim
- ❑ e-tron only

9 - Closure plate for bumper cover
- ❑ Removing and installing ⇒ page 324

10 - Bolt
- ❑ 6x
- ❑ 1.5 Nm

Protected by copyright. Copying for private or commercial purposes, in part or in whole, is not permitted unless authorised by AUDI AG. AUDI AG does not guarantee or accept any liability with respect to the correctness of information in this document. Copyright by AUDI AG.

1.1.4 Exploded view - radiator grille, RS 3 Sportback up to model year 2018

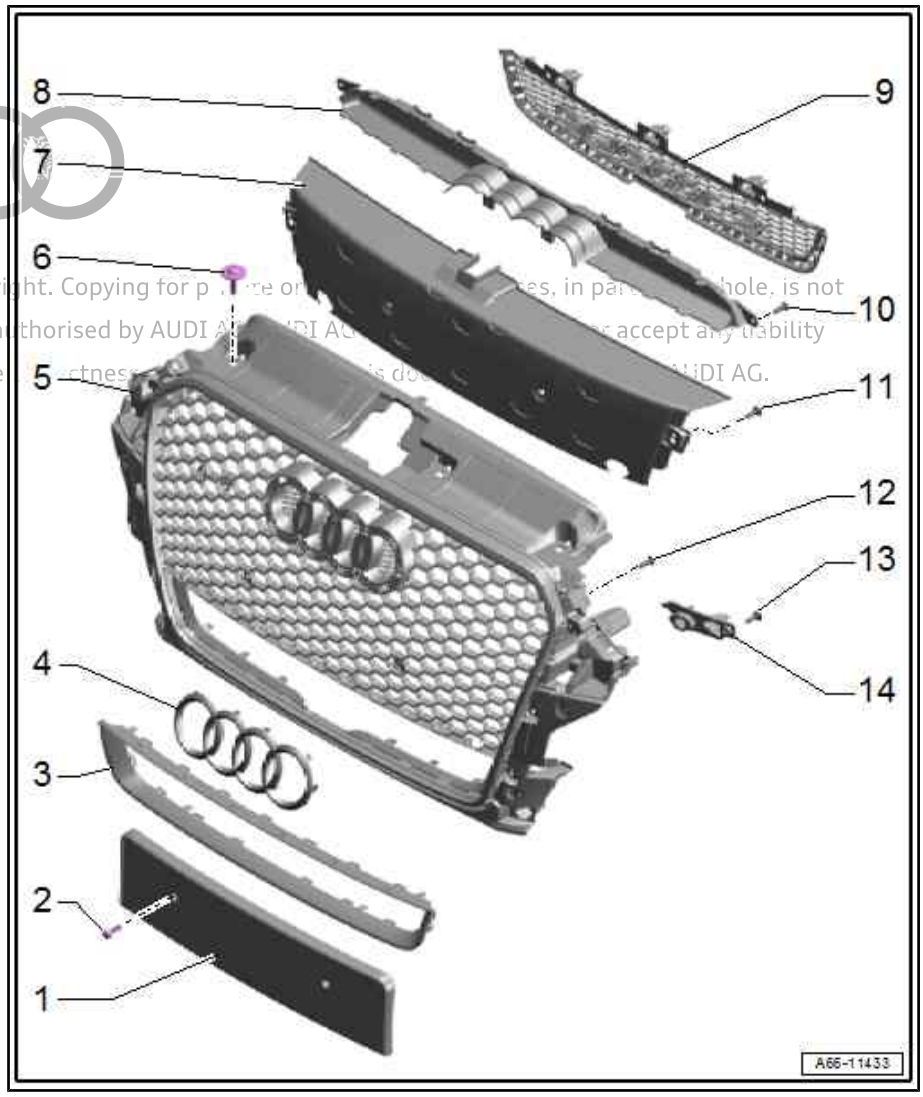

1 - Number plate holder
- ❑ Removing and installing ⇒ page 330

2 - Bolt
- ❑ Bolt, 2x
- ❑ 1 Nm

3 - Mounting
- ❑ Not available as replacement part
- ❑ For radiator grille (bottom)

4 - Audi emblem
- ❑ Exploded view ⇒ page 415

5 - Radiator grille
- ❑ Country-specific version with parking aid (refer to ⇒ Electronic parts catalogue): Attach strip of sealant foam to radiator grille ⇒ page 330
- ❑ Removing and installing ⇒ page 326

6 - Bolt
- ❑ 3x
- ❑ 4.5 Nm

7 - Mounting
- ❑ For moulded foam insert
- ❑ Removing and installing ⇒ page 328

8 - Reinforcement strut
- ❑ For radiator grille

9 - Radiator grille (bottom)
- ❑ Not available as replacement part

10 - Bolt
- ❑ 4x
- ❑ 1.5 Nm

11 - Bolt
- ❑ Bolt, 2x
- ❑ 1.5 Nm

12 - Bolt
- ❑ 4x
- ❑ 1.5 Nm

13 - Bolt
- ❑ Bolt, 2x
- ❑ 1.5 Nm

14 - Mounting
- ❑ For parking aid sender

- ❑ Removing and installing ⇒ page 334

1.1.5 Exploded view - radiator grille, RS 3 Saloon, RS 3 Sportback from model year 2019 onwards

Protected by copyright. Copying for private or commercial purposes, in part or in whole, is not permitted unless authorised by AUDI AG. AUDI AG does not guarantee or accept any liability with respect to the correctness of information in this document. Copyright by AUDI AG.

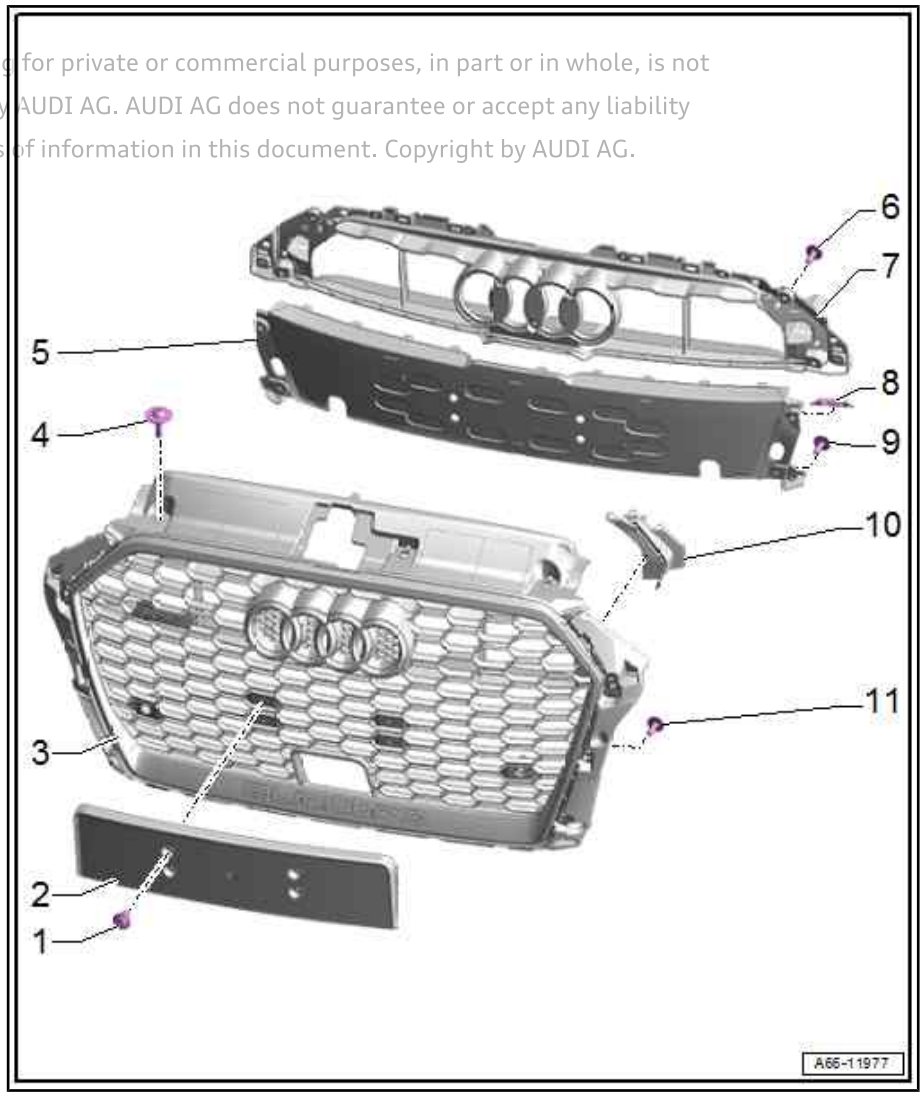

1 - Bolt
- ❑ 4x
- ❑ 1 Nm

2 - Number plate holder
- ❑ Removing and installing ⇒ page 330

3 - Radiator grille
- ❑ Removing and installing ⇒ page 324

4 - Bolt
- ❑ 3x
- ❑ 5 Nm

5 - Mounting
- ❑ For moulded foam insert
- ❑ Removing and installing ⇒ page 328

6 - Bolt
- ❑ 11x
- ❑ 1.5 Nm

7 - Closure plate for radiator grille
- ❑ Removing and installing ⇒ page 332

8 - Clip
- ❑ 8x

9 - Bolt
- ❑ 4x
- ❑ 1.5 Nm

10 - Cover

11 - Bolt
- ❑ 6x
- ❑ 1.5 Nm

1.1.6 Exploded view - radiator grille, vehicles with high-voltage system

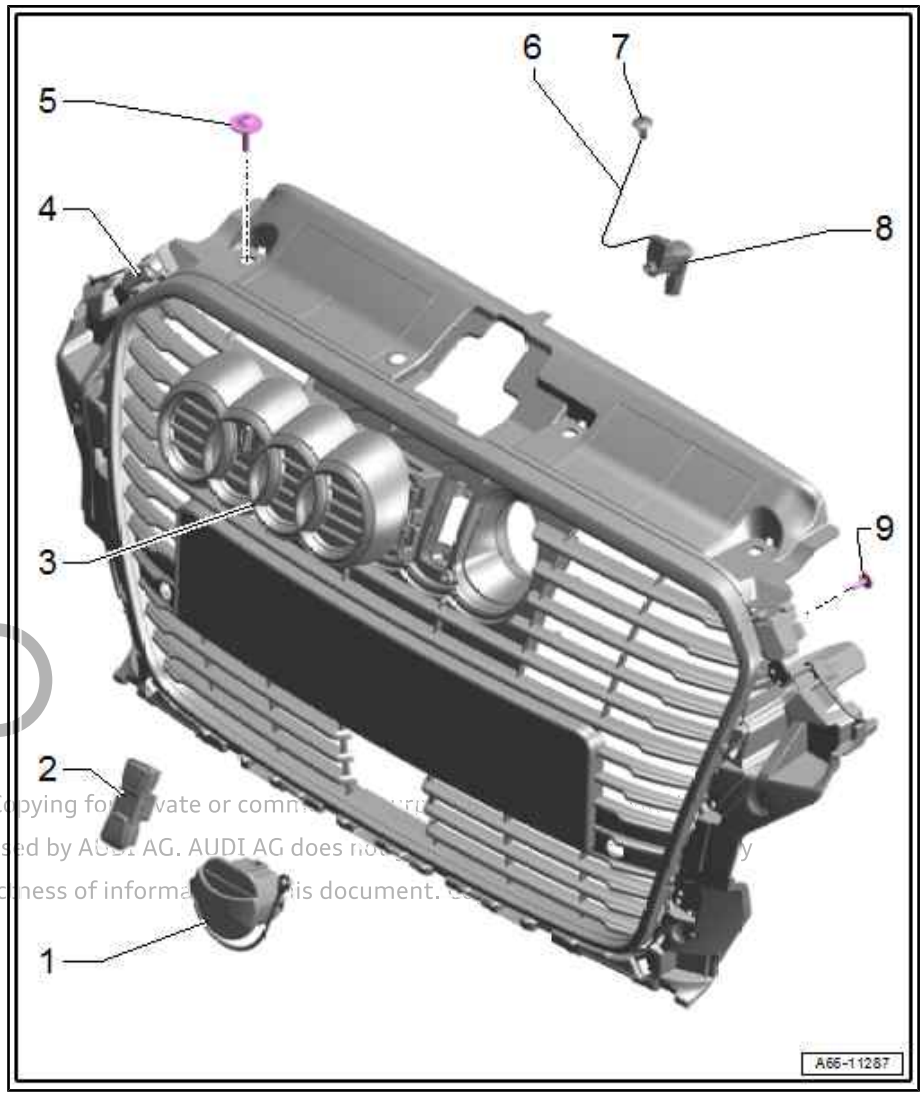

1 - Cap

- ❑ For charging socket

2 - Button and display module

- ❑ With LED module for charging socket 1 - L263- , immediate charge button - E766- and charge profile selector button - E808-
- ❑ Removing and installing ⇒ Rep. gr. 93 ; Charging socket; Exploded view - charging socket

3 - Flap for charging socket

- ❑ Removing: Open bonnet and pull pins upwards out of hinge.

4 - Radiator grille

- ❑ Country-specific version with parking aid (refer to ⇒ Electronic parts catalogue): Attach strip of sealant foam to radiator grille ⇒ page 330
- ❑ Depending on component version: Preparing a new radiator grille for installation ⇒ page 327
- ❑ Removing and installing ⇒ page 323

5 - Bolt

- ❑ 3x
- ❑ 4.5 Nm

6 - Manual release cable

- ❑ Removing and installing ⇒ page 329

7 - Pull knob

- ❑ For manual release cable

8 - Actuator for high-voltage charging flap lock 1 - F496-

- ❑ Removing and installing ⇒ page 329

9 - Bolt

- ❑ 6x
- ❑ 1.5 Nm

Copyright by AUDI AG. Copying for private or commercial purposes, in part or in whole, is not permitted unless authorised by AUDI AG. AUDI AG does not guarantee or assume any liability with regard to the correctness of information in this document.

1.2 Removing and installing radiator grille

⇒ “1.2.1 Removing and installing radiator grille - vehicles up to model year 2016”, page 323

⇒ “1.2.2 Removing and installing radiator grille - vehicles from model year 2017 onwards”, page 324

⇒ “1.2.3 Removing and installing radiator grille - RS 3 Sportback up to model year 2018”, page 326

⇒ “1.2.4 Making cut-out on S3 radiator grille”, page 326

⇒ “1.2.5 Preparing a new radiator grille for installation”, page 327

⇒ “1.2.6 Removing and installing mounting for moulded foam insert - RS 3 Sportback”, page 328

⇒ “1.2.7 Removing and installing mounting for moulded foam insert - RS 3 Saloon, RS 3 Sportback from model year 2019 onwards”, page 328

⇒ “1.2.8 Removing and installing actuator for high-voltage charging flap lock 1 F496 ”, page 329

⇒ “1.2.9 Removing and installing number plate holder”, page 330

⇒ “1.2.10 Fitting number plate holder - country-specific version (model year 2017)”, page 330

⇒ “1.2.11 Attaching strip of sealant foam to radiator grille”, page 330

⇒ “1.2.12 Removing and installing closure plate for radiator grille”, page 331

⇒ “1.2.14 Removing and installing mounting bracket for front parking aid sender - vehicles up to model year 2016”, page 333

⇒ “1.2.15 Removing and installing mounting bracket for front parking aid sender - vehicles from model year 2017 onwards ”, page 333

⇒ “1.2.16 Removing and installing mounting bracket for front parking aid sender - RS 3 Sportback up to model year 2018”, page 334

Reproduction or distribution for commercial purposes, in part or in whole, is not permitted unless authorised by AUDI AG. AUDI AG does not guarantee or accept any liability with respect to the correctness of information in this document. Copyright by AUDI AG.

1.2.1 Removing and installing radiator grille - vehicles up to model year 2016

Removing

– Remove bumper cover (front) ⇒ page 214 .

– If fitted, move headlight washer fluid hose clear.

– S3 Saloon: Remove reinforcement strut (centre) ⇒ page 230 .

– Unplug electrical connectors -1, 2, 3- and move wiring harness clear.
– Remove bolts -arrows-.

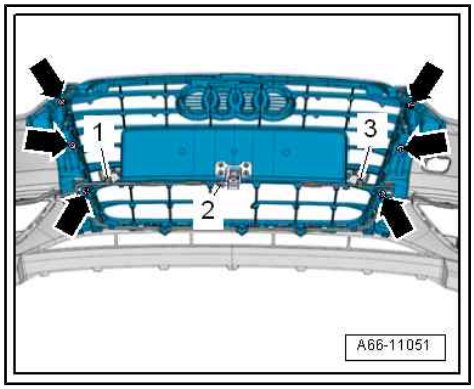

– Release tabs and catches -arrows-.
– Pull radiator grille -1- off bumper cover.
– If radiator grille is to be renewed, also remove the following components:

♦ Front airbag crash sensor for driver side - G283- ⇒ General body repairs, interior; Rep. gr. 69 ; Crash sensors for airbags; Overview of fitting locations - crash sensors for airbags
♦ Mounting bracket for parking aid sender ⇒ page 333
♦ Audi emblem ⇒ page 415

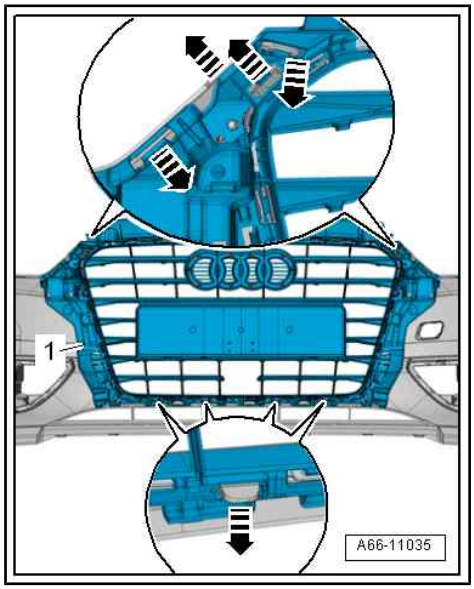

Installing

Installation is carried out in reverse sequence.

Tightening torques

♦ ⇒ “1.1 Exploded view - radiator grille”, page 315 .

1.2.2 Removing and installing radiator grille - vehicles from model year 2017 onwards

Removing

– Remove bumper cover (front) ⇒ page 214 .
– Remove air intake grille (centre) ⇒ page 227 .
– RS 3 Saloon: Remove reinforcement strut (bottom) ⇒ page 231 .
– RS 3 Sportback from model year 2019 onwards: Remove reinforcement strut (bottom) ⇒ page 231 .

Protected by copyright. Copying for private or commercial purposes, in part or in whole, is not permitted without the consent of AUDI AG. AUDI AG does not guarantee or accept any liability with respect to the correctness of information in this document. Copyright by AUDI AG.

– Release fasteners -arrows-.
– Detach closure plate -1- for bumper cover.

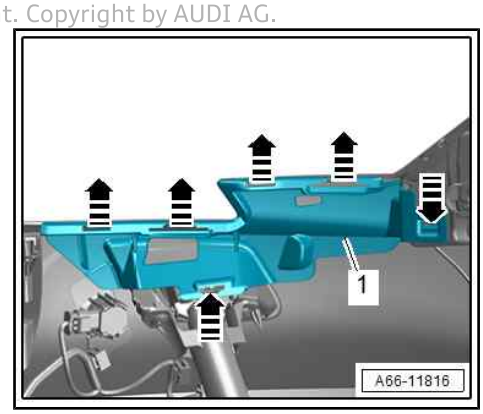

– e-tron: Release fasteners -arrows-.
– Detach closure plate -1- for bumper cover.
– RS 3 Saloon: Remove closure plate for radiator grille ⇒ page 331 .

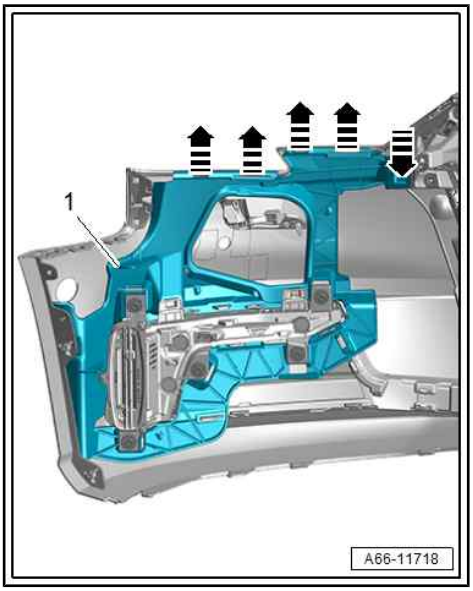

– Unplug electrical connector -1- and move wiring harness -2- clear.
– Remove bolts -arrows-.

Protected by copyright. Copying for private or commercial purposes, in part or in whole, is not permitted unless authorised by AUDI AG. AUDI AG does not guarantee or accept any liability with respect to the correctness of information in this document. Copyright by AUDI AG.

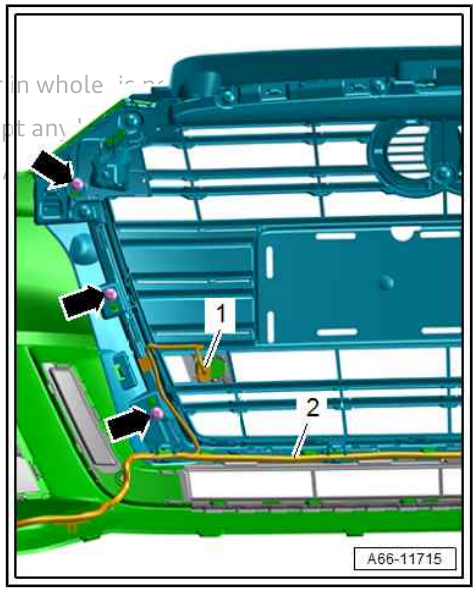

– Release tabs -2, 3- and fasteners -4, 5-.
– Pull radiator grille -1- off bumper cover.
– If radiator grille is to be renewed, also remove the following components:

♦ Front airbag crash sensor for driver side - G283- ⇒ General body repairs, interior; Rep. gr. 69 ; Crash sensors for airbags; Overview of fitting locations - crash sensors for airbags
♦ Mounting bracket for parking aid sender ⇒ page 333
♦ Emblem ⇒ page 418

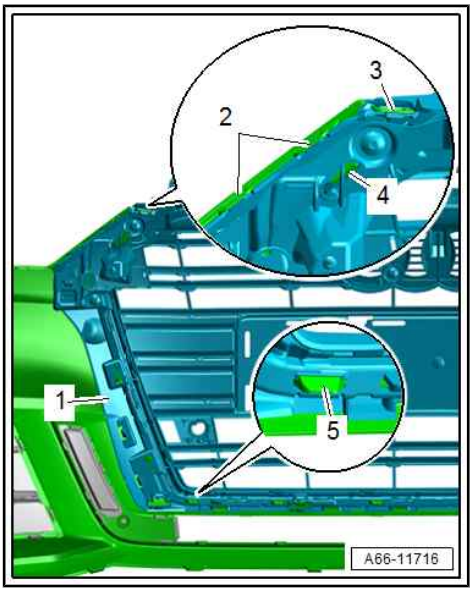

Installing

Installation is carried out in reverse sequence.

Tightening torques

♦ ⇒ “1.1 Exploded view - radiator grille”, page 315 .

1.2.3 Removing and installing radiator grille - RS 3 Sportback up to model year 2018

Removing

– Remove reinforcement strut (bottom) ⇒ page 231 .

– Remove mounting for moulded foam insert ⇒ page 328 .

– Remove bolts -arrows-.

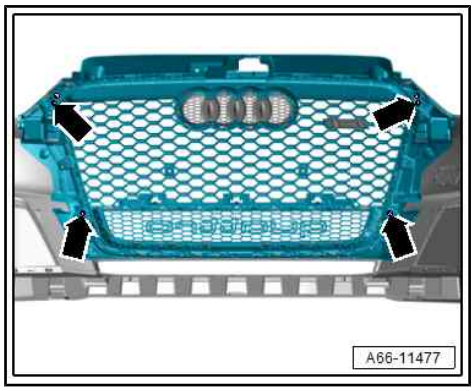

– Release tabs and catches -arrows-.

– Pull radiator grille -1- off bumper cover.

– If radiator grille is to be renewed, also remove the following components:

Protected by copyright. Copying for private or commercial purposes, in part or in whole, is not permitted unless authorised by AUDI AG. AUDI AG does not guarantee or assume any liability with respect to the correctness of information in this document. ©2019 AUDI AG.

◆ Mounting bracket for parking aid sender ⇒ page 334

◆ Audi emblem ⇒ “9.1 Exploded view - model badges and brand emblems”, page 415

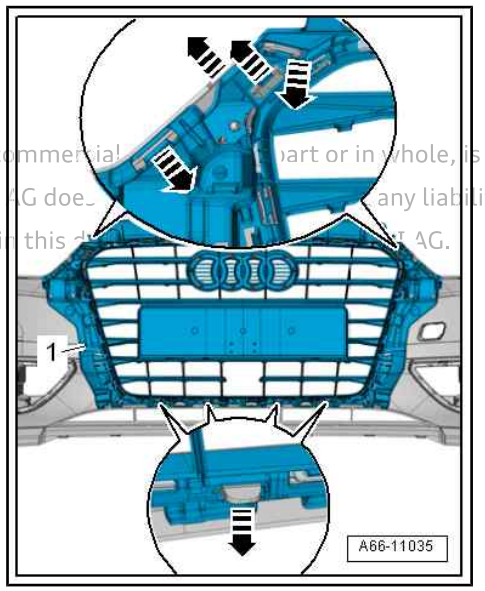

Installing

Installation is carried out in reverse sequence.

Tightening torques

◆ ⇒ “1.1.4 Exploded view - radiator grille, RS 3 Sportback up to model year 2018”, page 320 .

1.2.4 Making cut-out on S3 radiator grille

Procedure

– Make first section of cut-out by cutting horizontally at bottom.

– Cut along inside edge in radiator grille towards front, as shown.

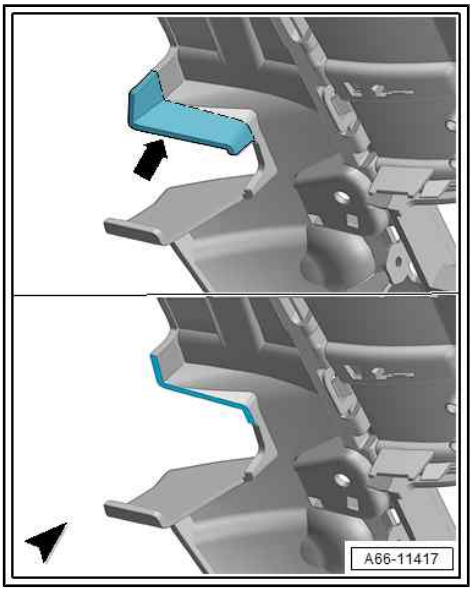

– Continue cutting upwards in a straight line along outside edge.
– Make second section of cut-out by cutting towards inside, maintaining a distance of -a- = 10 mm.

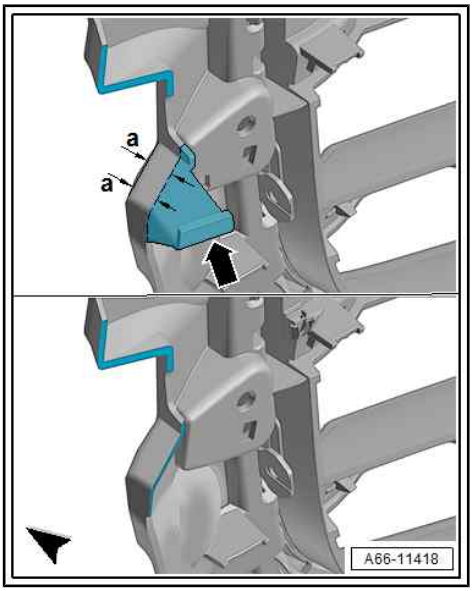

1.2.5 Preparing a new radiator grille for installation

Depending on the component version, it may be necessary to cut out an opening for the manual release mechanism on the A3 e-tron.

Protected by copyright. Copying for private or commercial purposes, in part or in whole, is not permitted unless authorised by AUDI AG. AUDI AG does not guarantee or accept any liability with respect to the correctness of information in this document. Copyright by AUDI AG.

Special tools and workshop equipment required

♦ Pneumatic jig-saw - VAS 6598A-

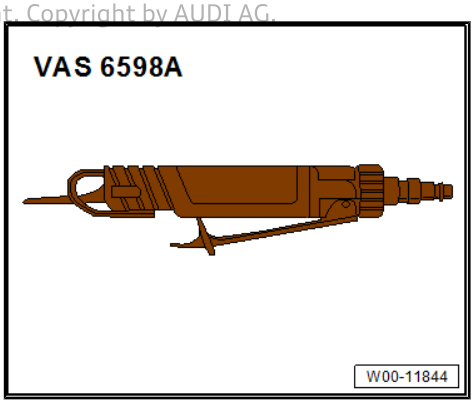

Procedure

– Mark outline for opening -3- on radiator grille -1-.

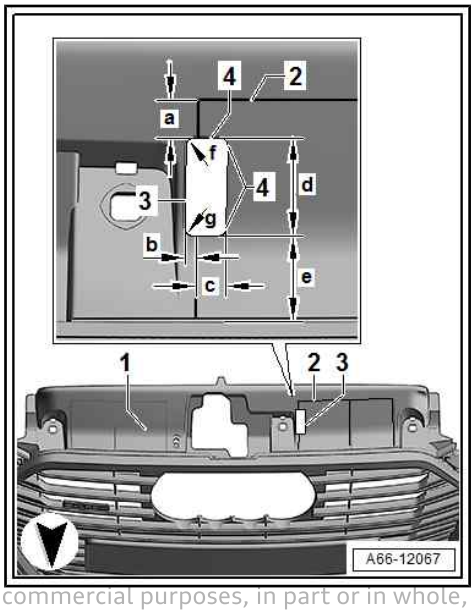

- ♦ -a- = 15 mm
- ♦ -b- = 4 mm
- ♦ -c- = 11 mm
- ♦ -d- = 39 mm
- ♦ -e- = 82 mm
- ♦ -f- = 6 mm
- ♦ -g- = 6 mm

– Drill holes -4- at corners.

– Using marked outlines as a guide, cut out opening with body saw - VAS 6598A- .

Protected by copyright. Copying for private or commercial purposes, in part or in whole, is not permitted unless authorised by AUDI AG. AUDI AG does not guarantee or accept any liability with respect to the correctness of information in this document. Copyright by AUDI AG.

1.2.6 Removing and installing mounting for moulded foam insert - RS 3 Sportback

Removing

– Remove number plate holder ⇒ page 330 .

– Remove moulded foam insert ⇒ page 248 .

– Remove mounting bracket for parking aid sender ⇒ page 334 .

– Remove bolts -arrows-.

– Detach mounting -1-.

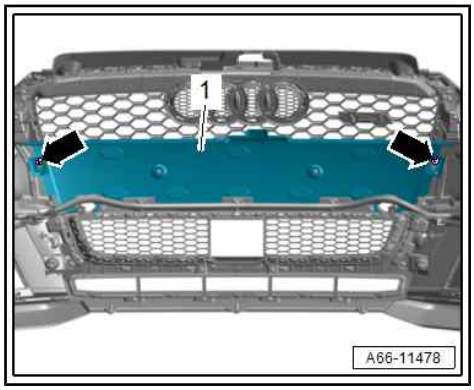

Installing

Installation is carried out in reverse sequence.

Tightening torques

- ♦ ⇒ “1.1.4 Exploded view - radiator grille, RS 3 Sportback up to model year 2018”, page 320 .

1.2.7 Removing and installing mounting for moulded foam insert - RS 3 Saloon, RS 3 Sportback from model year 2019 onwards

Removing

– Remove closure plate for radiator grille ⇒ page 332 .

– Release fasteners -arrows-.
– Detach mounting -2- from closure plate for radiator grille -1-.

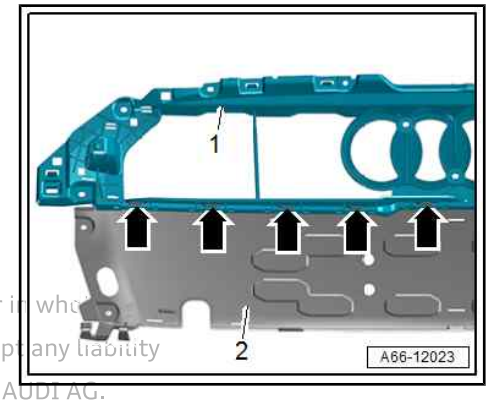

Installing

Installation is carried out in reverse sequence.

Protected by copyright. Copying for private or commercial purposes, in part or in whole, is not permitted unless authorised by AUDI AG. AUDI AG does not guarantee or accept any liability with respect to the correctness of information in this document. Copyright by AUDI AG.

1.2.8 Removing and installing actuator for high-voltage charging flap lock 1 - F496-

Removing

– Open flap for charging socket.
– Remove bumper cover (front) ⇒ page 214 .
– Pull out manual release cable -1-.
– Unfasten and remove cable nipple -3- from pull knob -2-.

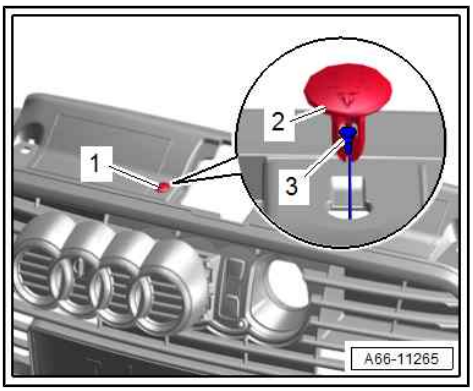

– Turn actuator -1- clockwise -arrow- and remove from mounting -2-.

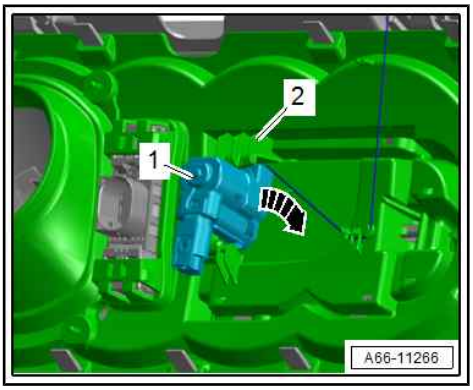

Installing

Installation is carried out in reverse order; note the following:

– Route cable -1- as shown in illustration.

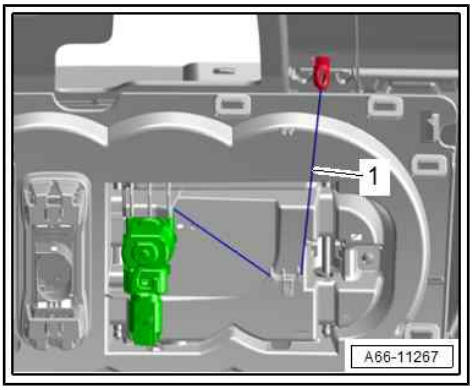

1.2.9 Removing and installing number plate holder

Removing

– Detach number plate.

– Remove bolts -2, 3-.

– Disengage number plate holder -1- upwards from honeycomb grille -arrow-; this disengages retainers -4-.

– Detach number plate holder.

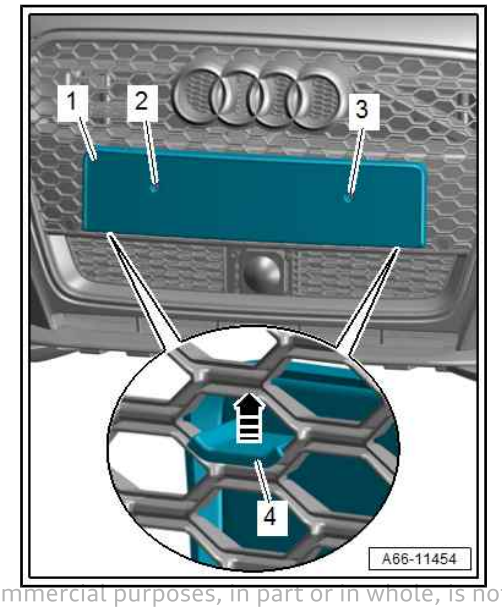

Installing

Installation is carried out in reverse order; note the following:

– The number plate holder must be inserted completely into the honeycomb grille.

Tightening torques

♦ ⇒ “1.1 Exploded view - radiator grille”, page 315 .

Protected by copyright. Copying for private or commercial purposes, in part or in whole, is not permitted unless authorised by AUDI AG. AUDI AG does not guarantee or accept any liability with respect to the correctness of information in this document. Copyright by AUDI AG.

1.2.10 Fitting number plate holder - country-specific version (model year 2017)

– Remove bumper cover ⇒ page 214 .

– Position number plate holder -1- on radiator grille -2- as shown, and clip it in so that fasteners -4, 5, 7- engage.

– Fit clips -6- over fasteners (top).

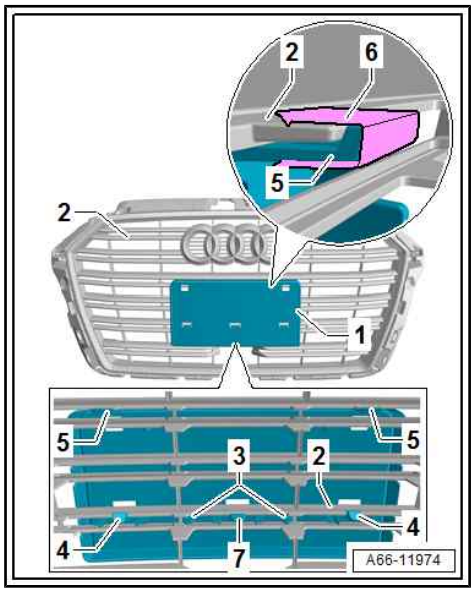

1.2.11 Attaching strip of sealant foam to radiator grille

On some country-specific versions with parking aid (refer to ⇒ Electronic parts catalogue), a strip of sealant foam must be attached to the radiator grille before installing the number plate holder for the corresponding country.

Special tools and workshop equipment required

♦ Cleaning solution - D 009 401 04-

- The bonding surfaces must be free of dust, grease and adhesive residue.

– Clean bonding surfaces with cleaning solution - D 009 401 04- .

– Position strip of sealant foam -1- at lower rounded corner -arrow- and attach between cut-outs -2- and number plate frame -3- (working upwards).

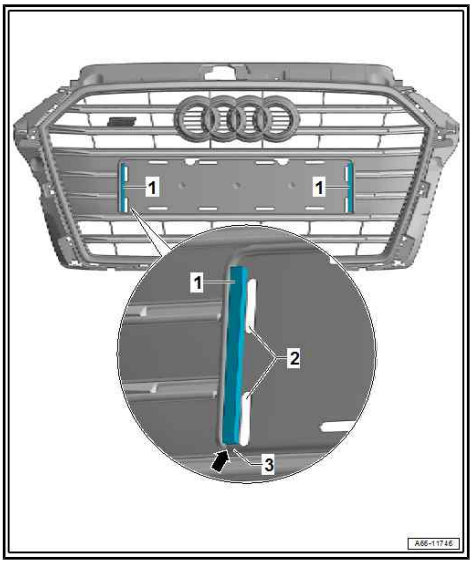

1.2.12 Removing and installing closure plate for radiator grille

Removing

Protected by copyright. Copying for private or commercial purposes, in part or in whole, is not permitted unless authorised by AUDI AG. AUDI AG does not guarantee or accept any liability with respect to the correctness of information in this document. Copyright by AUDI AG.

– Remove bumper cover (front) ⇒ page 214 .

– Release fasteners -arrows-.

– Detach closure plate -1- for bumper cover.

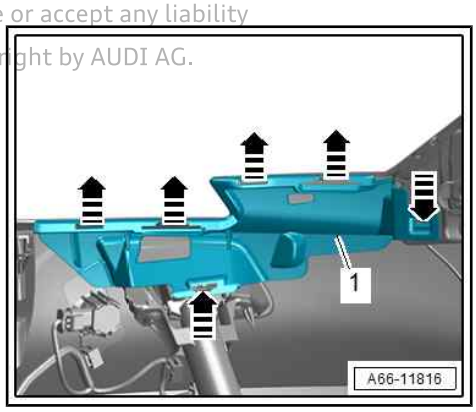

– e-tron: Release fasteners -arrows-.
– Detach closure plate -1- for bumper cover.

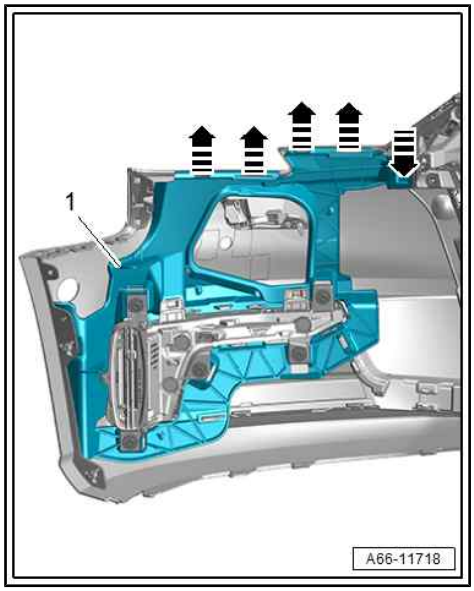

– Remove bolts -arrows-.
– Release fasteners -1, 3-.
– Detach closure plate -2- for radiator grille.

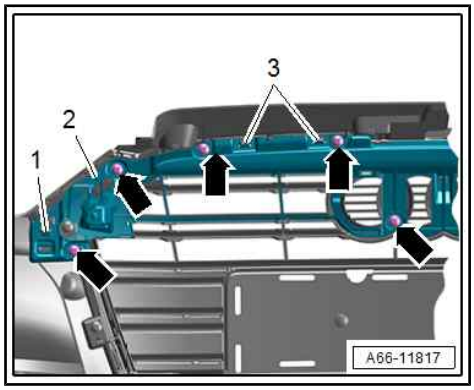

Installing

Installation is carried out in reverse sequence.

Tightening torques

◆ ⇒ “1.1.3 Exploded view - radiator grille, vehicles from model year 2017 onwards”, page 319

1.2.13 Removing and installing closure plate for radiator grille - RS 3 Saloon, RS 3 Sportback from model year 2019 onwards

Removing

– Remove moulded foam insert ⇒ page 248 .
– Remove parking aid senders ⇒ Electrical system; Rep. gr. 94 ; Parking aid; Removing and installing front parking aid senders .

Protected by copyright. Copying for private or commercial purposes, in part or in whole, is not permitted unless authorised by AUDI AG. AUDI AG does not guarantee or accept any liability with respect to the correctness of information in this document. Copyright by AUDI AG.

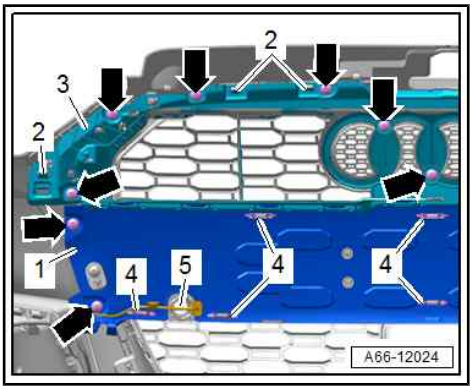

– Move electrical wiring harness -5- clear.
– Carefully press retaining clips -4- off guide lug using a screwdriver.
– Remove bolts -arrows-.
– Release fasteners -2-.
– Detach closure plate for radiator grille -3- together with mounting -1- for moulded foam insert.

Installing

Installation is carried out in reverse order; note the following:

– Slide retaining clip onto retaining tab as far as stop, taking care that retaining tab does not break off.

Tightening torques

◆ ⇒ "1.1.5 Exploded view - radiator grille, RS 3 Saloon, RS 3 Sportback from model year 2019 onwards", page 321

Protected by Copyright. Copying for private or commercial purposes, in part or in whole, is not permitted unless authorised by AUDI AG. AUDI AG does not guarantee or accept any liability with respect to the correctness of information in this document. Copyright by AUDI AG.

1.2.14 Removing and installing mounting bracket for front parking aid sender - vehicles up to model year 2016

Removing

– Disengage mounting bracket -4- for front parking aid sender in direction of -arrow A-.
– Press both retaining tabs to the side -arrows B- and at the same time press sender -3- out of mounting bracket -1-.

Installing

Installation is carried out in reverse sequence.

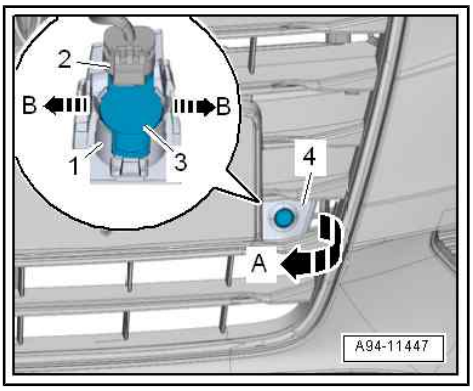

1.2.15 Removing and installing mounting bracket for front parking aid sender - vehicles from model year 2017 onwards

Removing

– Remove closure plate for bumper cover (front) ⇒ page 229 .
– Unplug electrical connector -1-.
– Release fasteners -arrows- and press mounting bracket -2- for parking aid sender towards front out of radiator grille.

Installing

Installation is carried out in reverse sequence.

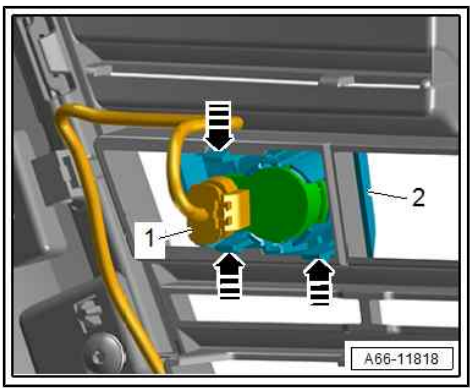

1.2.16 Removing and installing mounting bracket for front parking aid sender - RS 3 Sportback up to model year 2018

Removing

– Remove closure plate for bumper cover (front) ⇒ page 230 .

– Unplug electrical connector -1-.

– Move fluid line -2- and wiring harness -4- clear.

– Unscrew bolts -arrows- and detach mounting bracket -3-.

– If mounting bracket is to be renewed, remove parking aid sender ⇒ Electrical system; Rep. gr. 94 ; Parking aid; Removing and installing front parking aid senders .

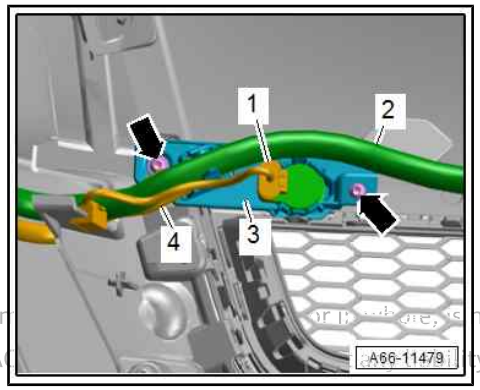

Installing

Installation is carried out in reverse sequence.

Protected by copyright. Copying for private or co
permitted unless authorised by AUDI AG. AUDI A
with respect to the correctness of information in this document. Copyright by AUDI AG.

Tightening torques

♦ ⇒ “1.1.4 Exploded view - radiator grille, RS 3 Sportback up to model year 2018”, page 320 .

2 Spoiler

⇒ “2.1 Exploded view - spoiler”, page 335

⇒ “2.2 Removing and installing spoiler”, page 336

2.1 Exploded view - spoiler

⇒ “2.1.1 Exploded view - spoiler”, page 335

⇒ “2.1.2 Exploded view - spoiler, Audi S3 Saloon”, page 336

2.1.1 Exploded view - spoiler

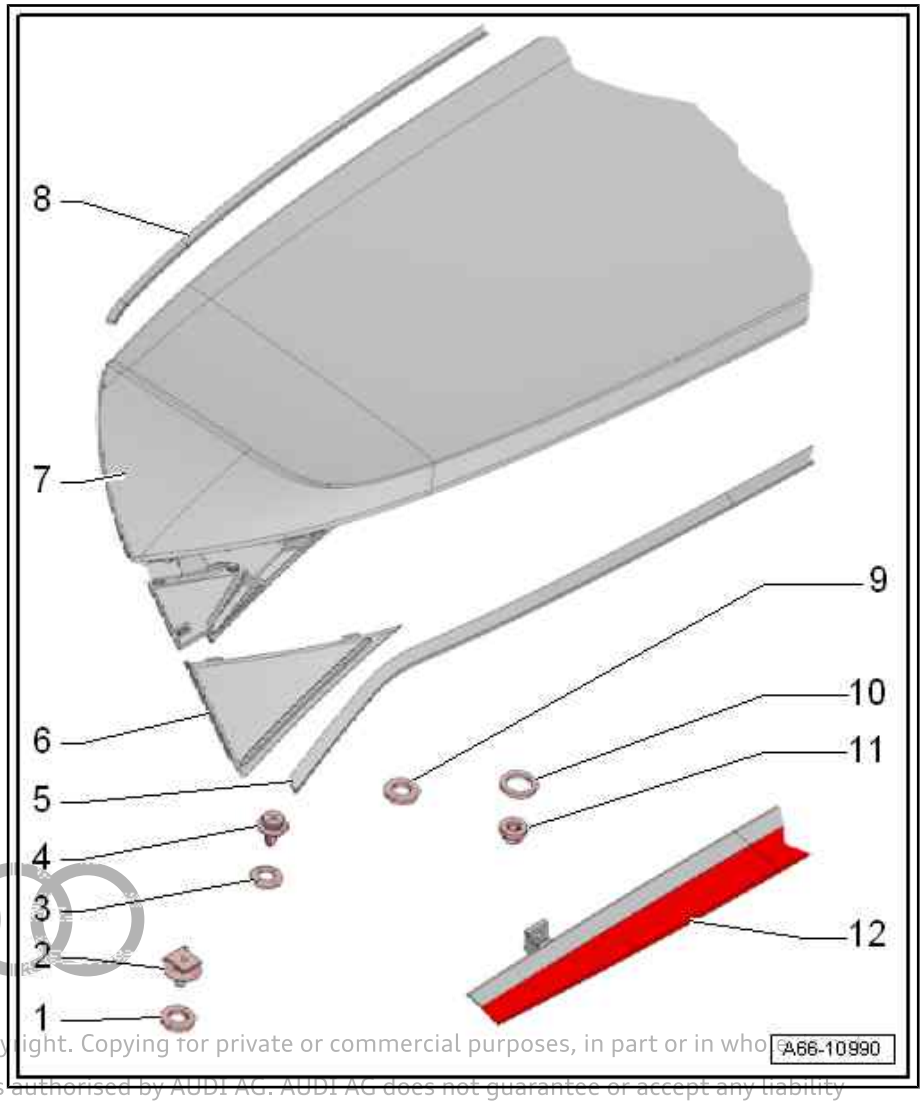

1 - Foam seal
- ❑ Renew if damaged

2 - Clip

3 - Foam seal
- ❑ 5x
- ❑ Renew if damaged

4 - Clip
- ❑ 5x

5 - Foam seal
- ❑ Renew if damaged

6 - Trim cover
- ❑ New trim covers must be bonded on additionally during installation ⇒ page 336 .

7 - Spoiler
- ❑ Removing and installing ⇒ page 336

8 - Foam seal
- ❑ Renew if damaged

9 - Foam seal
- ❑ For securing pin
- ❑ 3x

10 - Plastic washer
- ❑ 4x

11 - Nut
- ❑ 4x
- ❑ 4 Nm

12 - High-level brake light
- ❑ Exploded view ⇒ Electrical system; Rep. gr. 94 ; High-level brake light; Exploded view - high-level brake light

Protected by copyright. Copying for private or commercial purposes, in part or in whole, is not permitted unless authorised by AUDI AG. AUDI AG does not guarantee or accept any liability with respect to the correctness of information in this document. Copyright by AUDI AG.

2.1.2 Exploded view - spoiler, Audi S3 Saloon

1 - Rear lid

2 - Double-sided adhesive tape
- ❑ Centre front

3 - Double-sided adhesive tape
- ❑ Centre rear

4 - Spoiler
- ❑ Removing and installing ⇒ page 338

5 - Double-sided adhesive tape
- ❑ Outside

6 - Adhesive bridge

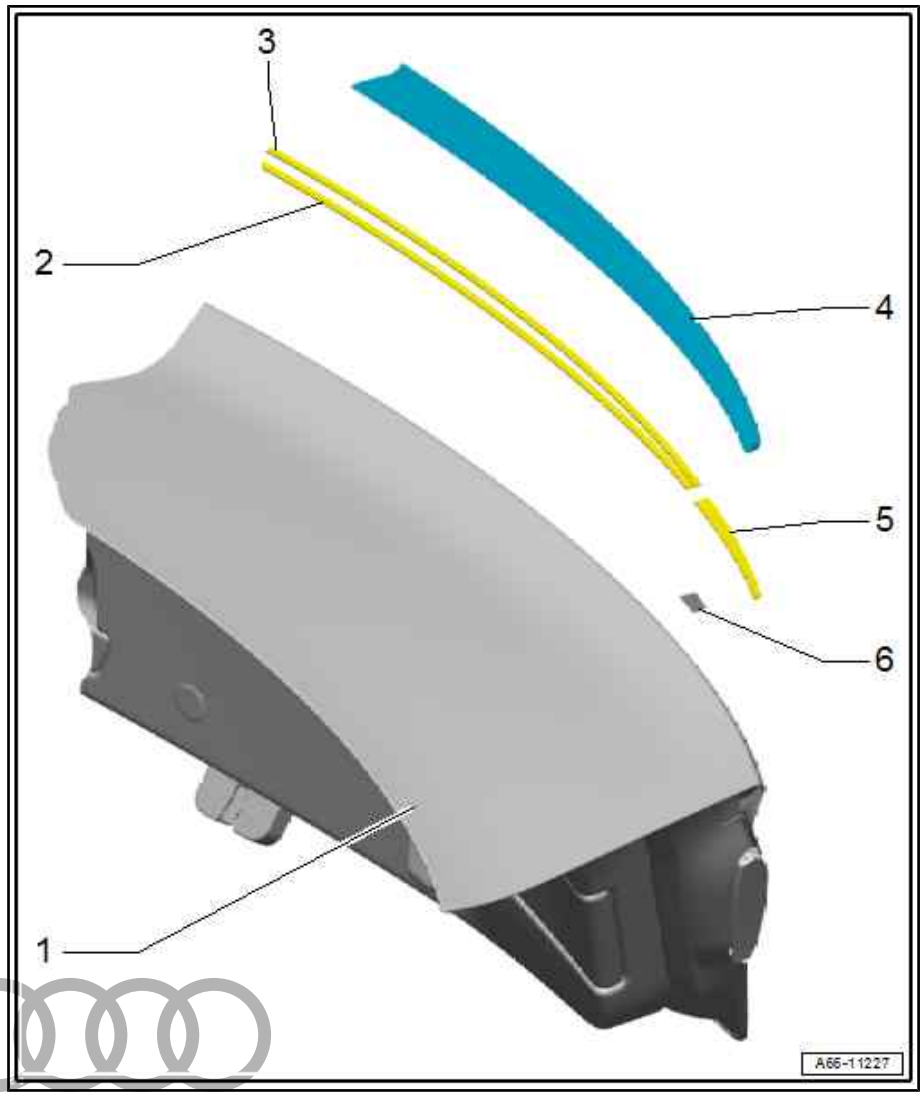

2.2 Removing and installing spoiler

⇒ "2.2.1 Removing and installing spoiler", page 336
⇒ "2.2.2 Removing and installing spoiler - S3 Saloon", page 338

Protected by copyright. Copying for private or commercial purposes, in part or in whole, is not permitted unless authorised by AUDI AG. AUDI AG does not guarantee or accept any liability with respect to the correctness of information in this document. Copyright by AUDI AG.

2.2.1 Removing and installing spoiler

Special tools and workshop equipment required

♦ Wedges - T10383-

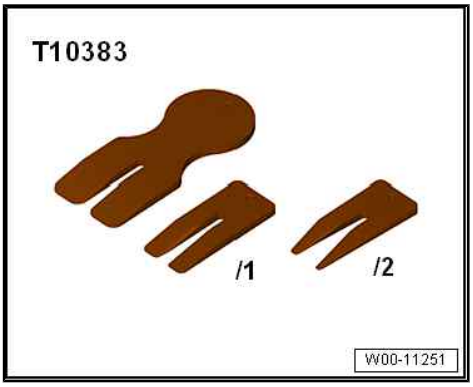

Removing

– Remove rear lid trim (top) ⇒ General body repairs, interior; Rep. gr. 70 ; Luggage compartment trim panels .

– Unplug electrical connector -1-.

– Unscrew bolt -2- and pull off aerial amplifier towards right side of vehicle.

– Unplug electrical connector -4-.

– Release catches and move leadthroughs -3, 5- clear.

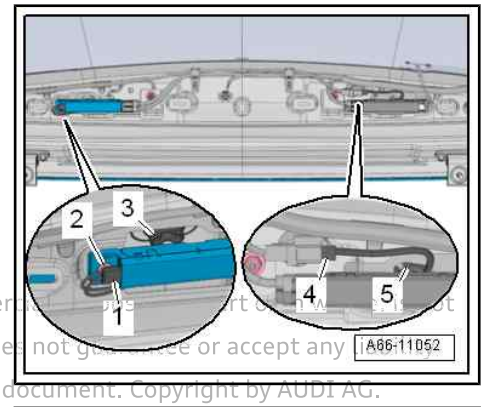

Protected by copyright. Copying for private or commercial purposes, in part or in whole, is not permitted unless authorised by AUDI AG. AUDI AG does not guarantee or accept any liability with respect to the correctness of information in this document. Copyright by AUDI AG.

– Move electrical wiring harness -1- clear at rear lid and press to one side.

– Unscrew nuts -arrow-.

– Release clip -2- with long-nose pliers.

– Close rear lid.

– Press spoiler off rear lid using wedge -T10383/1- and detach.

Installing

Installation is carried out in reverse order; note the following:

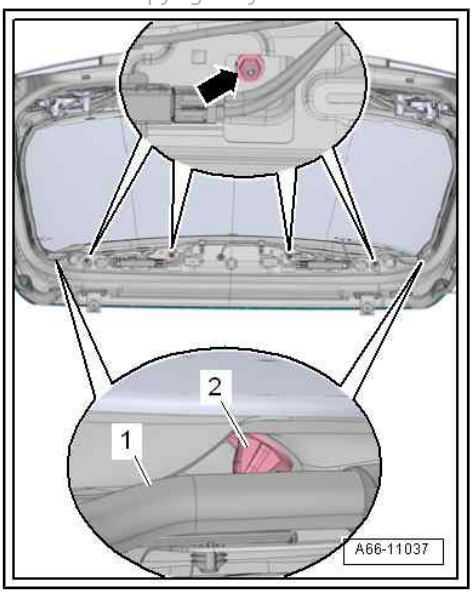

Protected by copyright. Copying for private or commercial purposes, in part or in whole, is not permitted unless authorised by AUDI AG. AUDI AG does not guarantee or accept any liability with respect to the correctness of information in this document. Copyright by AUDI AG.

Note

- *Check foam seals -2 and 5- for damage.*
- *Make sure that foam seals are seated on clips -1 and 6-, locating lugs -3- and plastic washers on threaded pins -4-.*

– Apply spoiler -B- on rear lid -A- and press on so that it engages audibly.

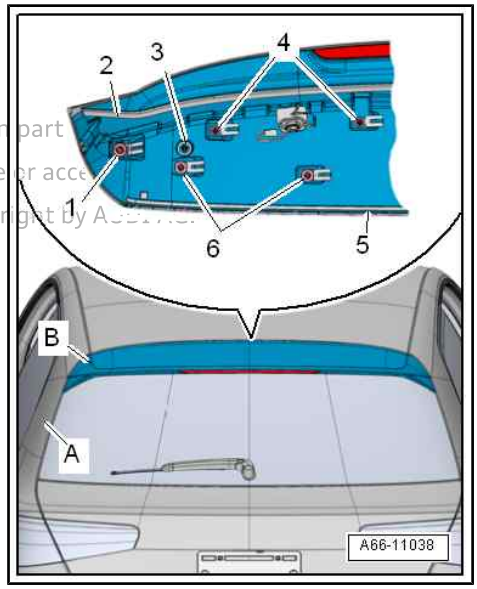

Tightening torques

- ⇒ “2.1.1 Exploded view - spoiler”, page 335 .

Installing trim cover for spoiler:

Note

New trim covers must be bonded on additionally during installation.

Special tools and workshop equipment required

- Cleaning solution - D 009 401 04-
- Primer - D 181 650 A1-
- 1-component window adhesive - DH 009 100 A2-

– Clean bonding surfaces -2- on spoiler -1- and on back of trim cover -3- with cleaning solution - D 009 401 04- .

– Apply primer - D 181 650 A1- to bonding surfaces on spoiler and on trim cover.

– After primer has flashed off, apply 1-component window adhesive - DH 009 100 A2- to bonding surfaces on spoiler.

– Insert trim cover in spoiler and secure in position with adhesive tape.

• Minimum drying time for adhesive: 3 hours.

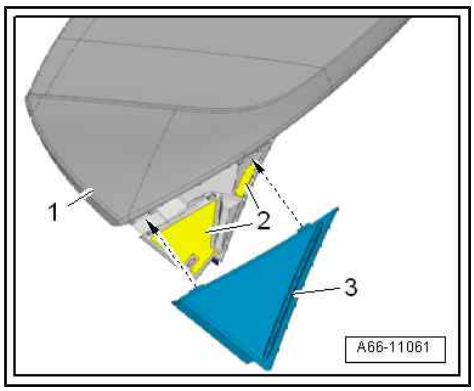

2.2.2 Removing and installing spoiler - S3 Saloon

Special tools and workshop equipment required

- Roller - 3356-

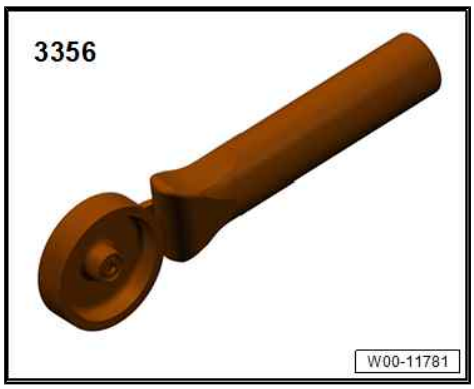

- Hot air blower - V.A.G 1416-

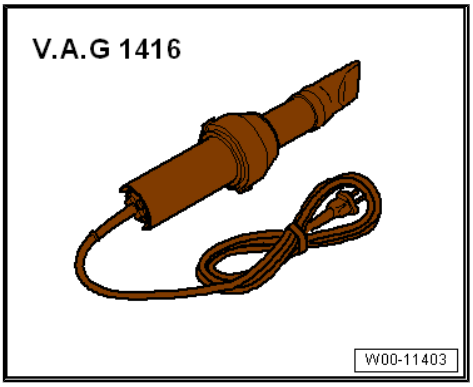

- Wedges - T10383-

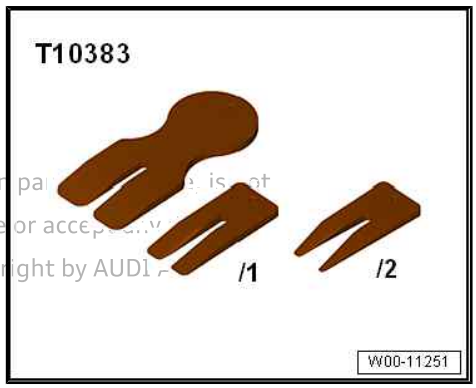

Protected by copyright. Copying for private or commercial purposes, in part or in whole, is not permitted unless authorised by AUDI AG. AUDI AG does not guarantee or accept any liability with respect to the correctness of information in this document. Copyright by AUDI AG.

- Fabric-backed adhesive tape
- Cleaning solution - D 009 401 04-
- Primer - D355 205 A2-

Removing

- The vehicle must be at room temperature (at least 15° Celsius).

– Carefully heat spoiler with hot air blower - V.A.G 1416- .

– Carefully release bonded connections -1 and 2- with wedge - T10383/1- and at the same time pull off spoiler.

- Spoiler cannot be removed without causing irreparable damage.

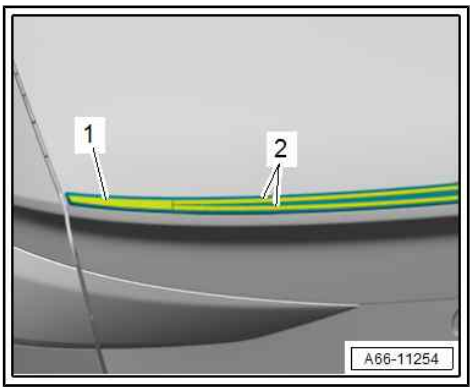

Installing

Installation is carried out in reverse order; note the following:

- The vehicle and the spoiler must be at room temperature.
- The bonding surfaces must be free of dirt and grease.

– If rear lid has been damaged, repaired or renewed, paintwork structure must be repaired and, if necessary, anti-corrosion measures must be taken ⇒ Audi Paintwork Guideline .

– Clean contact surface for spoiler on rear lid with cleaning solution - D 009 401 04- .

– Position spoiler on rear lid (as a test):

- Rear edge of spoiler -2- must be flush with edge -3- of rear lid.
- Spoiler must be centred on rear lid: dimension -x- = equal distance on left and right.

– Mark correct position of spoiler on rear lid with adhesive strips -1- or a paper template.

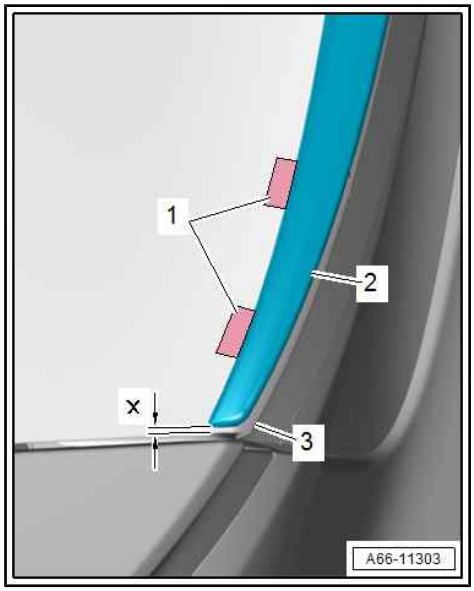

– Apply primer - D355 205 A2- -item 1- to bonding surface -2- on rear lid evenly in one stroke using applicator -3-.

– Wipe area treated with primer once with a clean paper towel and allow to flash off for 10 minutes.

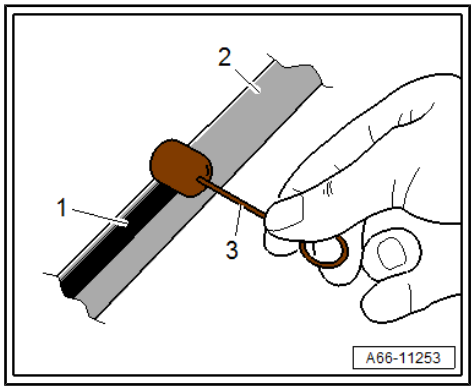

– Fold ends -1- of protective film up 90° at outer edges of spoiler.

– Position spoiler -2- according to markings made previously on rear lid and lightly press down on outer edges.

– Slowly peel off protective film -2- at outer edges of spoiler. Proceed particularly carefully in vicinity of adhesive bridge -4- so that individual sections of protective film -5- on inside are removed at the same time.

– Press on spoiler over entire length using roller - 3356- , working from inside to outside along inside surface (direction of travel = front).

- Leave vehicle standing at room temperature for at least 30 minutes.
- Wait at least 24 hours before putting any load on the component.

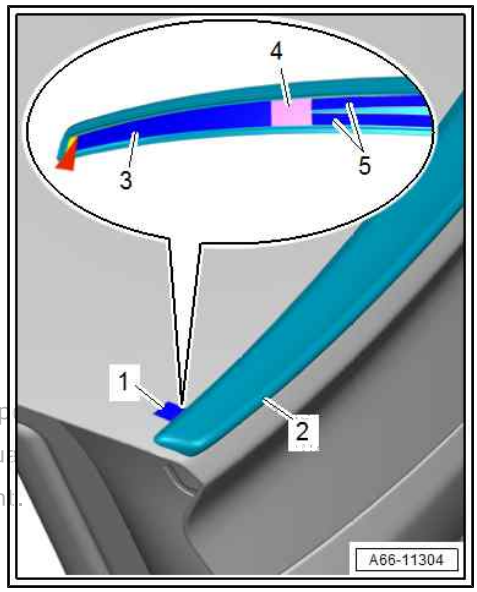

Protected by copyright. Copying for private or commercial purp
permitted unless authorised by AUDI AG. AUDI AG does not gu
with respect to the correctness of information in this document.

3 Strips / trim panels / extensions

⇒ “3.1 Exploded view - trim strip and covers”, page 341

⇒ “3.2 Exploded view - trim panels for A-pillar and B-pillar”, page 343

⇒ “3.3 Exploded view - trim panel for B/C-pillar”, page 344

⇒ “3.4 Exploded view - sill panel trim”, page 346

⇒ “3.5 Exploded view - side member trim”, page 348

⇒ “3.6 Exploded view - heat shield”, page 349

⇒ “3.7 Removing and installing water deflector strip”, page 352

⇒ “3.8 Removing and installing trim strip”, page 352

⇒ “3.9 Removing and installing cover”, page 358

⇒ “3.10 Removing and installing trim panel for A-pillar”, page 360

⇒ “3.11 Removing and installing trim panel for B-pillar on door”, page 361

⇒ “3.12 Removing and installing trim panel for C-pillar on door”, page 362

⇒ “3.13 Removing and installing sill panel trim”, page 363

⇒ “3.14 Removing and installing side member trim”, page 365

⇒ “3.15 Removing and installing heat shield for floor”, page 370

3.1 Exploded view - trim strip and covers

Protected by copyright. Copying for private or commercial purposes, in part or in whole, is not permitted unless authorised by AUDI AG. AUDI AG does not guarantee or accept any liability with respect to the correctness of information in this document. Copyright by AUDI AG.

1 - Trim strip for front door

- ❑ Removing and installing ⇒ page 355

2 - Trim strip for rear door

- ❑ Removing and installing ⇒ page 356

3 - Clip

- ❑ With marking indicating rear door

4 - Clip

- ❑ With marking indicating rear door

5 - Side window

6 - Trim strip for side window

- ❑ Removing and installing ⇒ page 358

7 - Clip

- ❑ With marking indicating front door

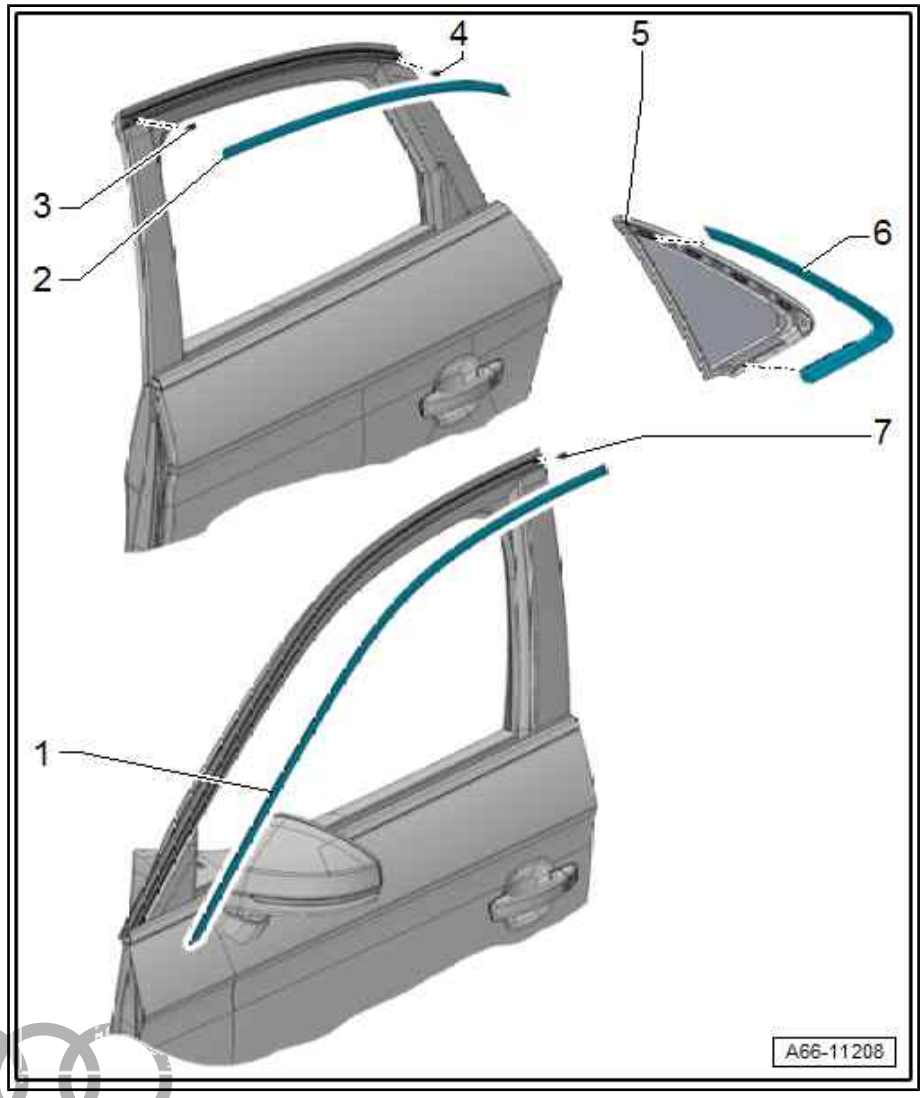

Protected by copyright. Copying for private or commercial purposes, in part or in whole, is not permitted unless authorised by AUDI AG. AUDI AG does not guarantee or accept any liability with respect to the correctness of information in this document. Copyright by AUDI AG.

3.2 Exploded view - trim panels for A-pillar and B-pillar

1 - Sealing piece
- ❑ For trim panel for A-pillar

2 - Bolt
- ❑ 2.5 Nm

3 - Cover

4 - Clip nut
- ❑ 3x

5 - Bolt
- ❑ 3x
- ❑ 2.5 Nm

6 - Trim panel for B-pillar at door
- ❑ Removing and installing ⇒ page 361

7 - Door

8 - Trim panel for A-pillar
- ❑ Removing and installing ⇒ page 360

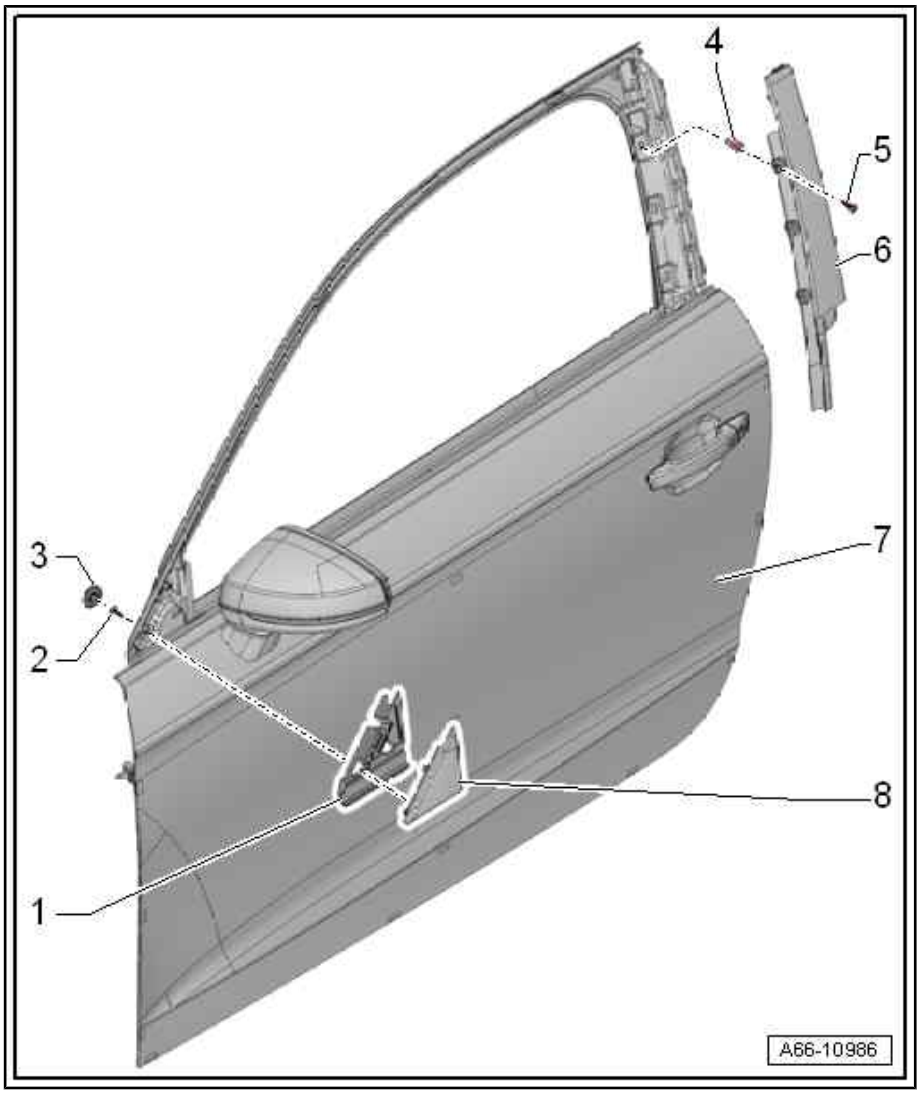

Protected by copyright. Copying for private or commercial purposes, in part or in whole, is not permitted unless authorised by AUDI AG. AUDI AG does not guarantee or accept any liability with respect to the correctness of information in this document. Copyright by AUDI AG.

3.3 Exploded view - trim panel for B/C-pillar

⇒ “3.3.1 Exploded view - trim panel for B/C-pillar, Sportback”, page 344

⇒ “3.3.2 Exploded view - trim panel for B/C-pillar, Saloon”, page 345

3.3.1 Exploded view - trim panel for B/C-pillar, Sportback

1 - Trim panel for B-pillar
- ❑ Removing and installing ⇒ page 361

2 - Seal
- ❑ For trim panel for B-pillar

3 - Clip nut
- ❑ 3x

4 - Grommet

5 - Bolt
- ❑ 2.5 Nm

6 - Seal
- ❑ For trim panel for C-pillar

7 - Trim panel for C-pillar
- ❑ Removing and installing ⇒ page 362

8 - Bolt
- ❑ 3x
- ❑ 2.5 Nm

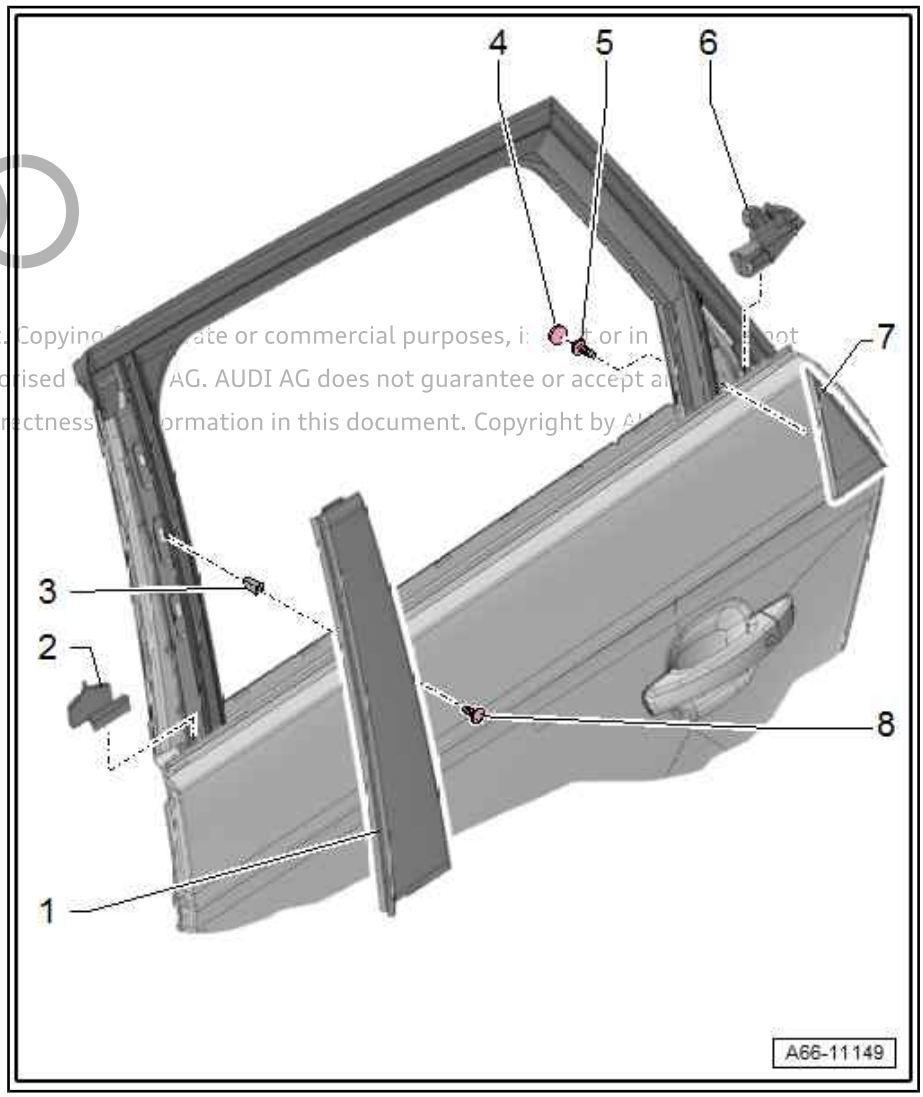

Protected by copyright. Copying for private or commercial purposes, in part or in whole, is not permitted unless authorised by AUDI AG. AUDI AG does not guarantee or accept any liability with respect to the correctness of information in this document. Copyright by AUDI AG.

3.3.2 Exploded view - trim panel for B/C-pillar, Saloon

1 - Trim panel for B-pillar
- ❑ Removing and installing ⇒ page 361

2 - Seal
- ❑ For trim panel for B-pillar

3 - Clip nut
- ❑ 3x

4 - Seal
- ❑ For trim panel for C-pillar

5 - Clip nut
- ❑ 3x

6 - Bolt
- ❑ 3x
- ❑ 2.5 Nm

7 - Trim panel for C-pillar
- ❑ Removing and installing ⇒ page 363

8 - Bolt
- ❑ 3x
- ❑ 2.5 Nm

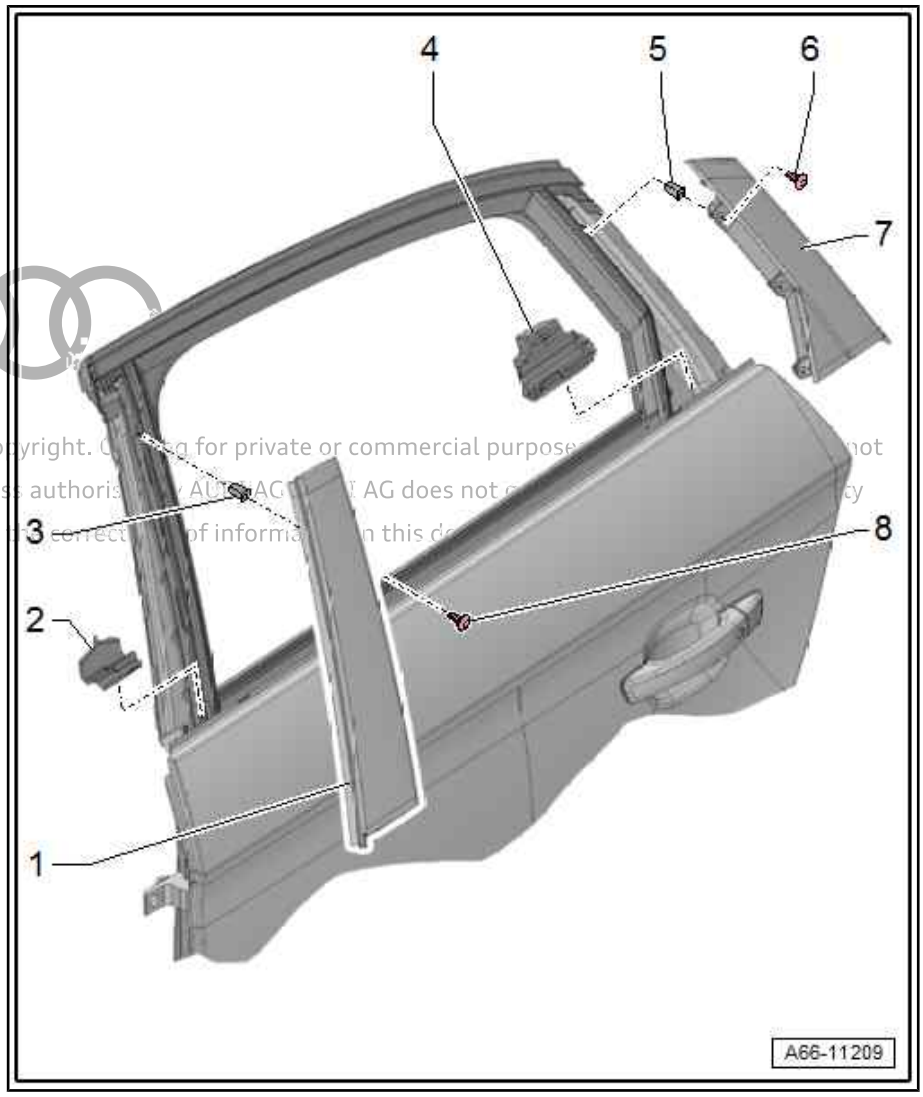

Protected by copyright. Copying for private or commercial purposes, in part or in whole, is not permitted unless authorised by AUDI AG. AUDI AG does not guarantee or assume any liability with respect to the correctness of information in this document.

3.4 Exploded view - sill panel trim

⇒ "3.4.1 Exploded view - sill panel trim, A3", page 346

⇒ "3.4.2 Exploded view - sill panel trim, Sportback and Saloon", page 347

3.4.1 Exploded view - sill panel trim, A3

1 - Sill panel trim (front)

- ❑ Removing and installing ⇒ page 363

2 - Grommet

- ❑ For side impact reinforcement for door
- ❑ Inserted in body

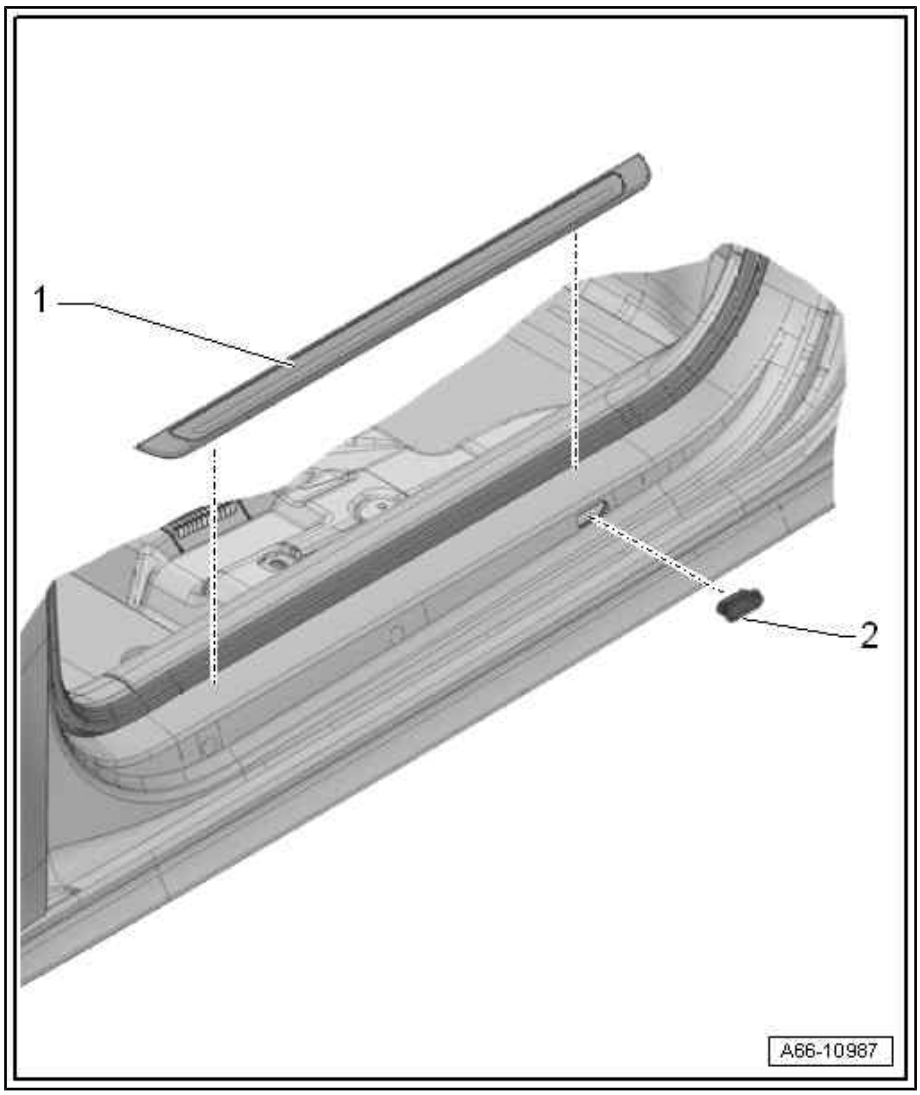

Protected by copyright. Copying for private or commercial purposes, in part or in whole, is not permitted unless authorised by AUDI AG. AUDI AG does not guarantee or accept any liability with respect to the correctness of information in this document. Copyright by AUDI AG.

3.4.2 Exploded view - sill panel trim, Sportback and Saloon

1 - Sill panel trim (front)

- ❑ Removing and installing ⇒ page 363

2 - Sill panel trim (rear)

- ❑ Removing and installing ⇒ page 363

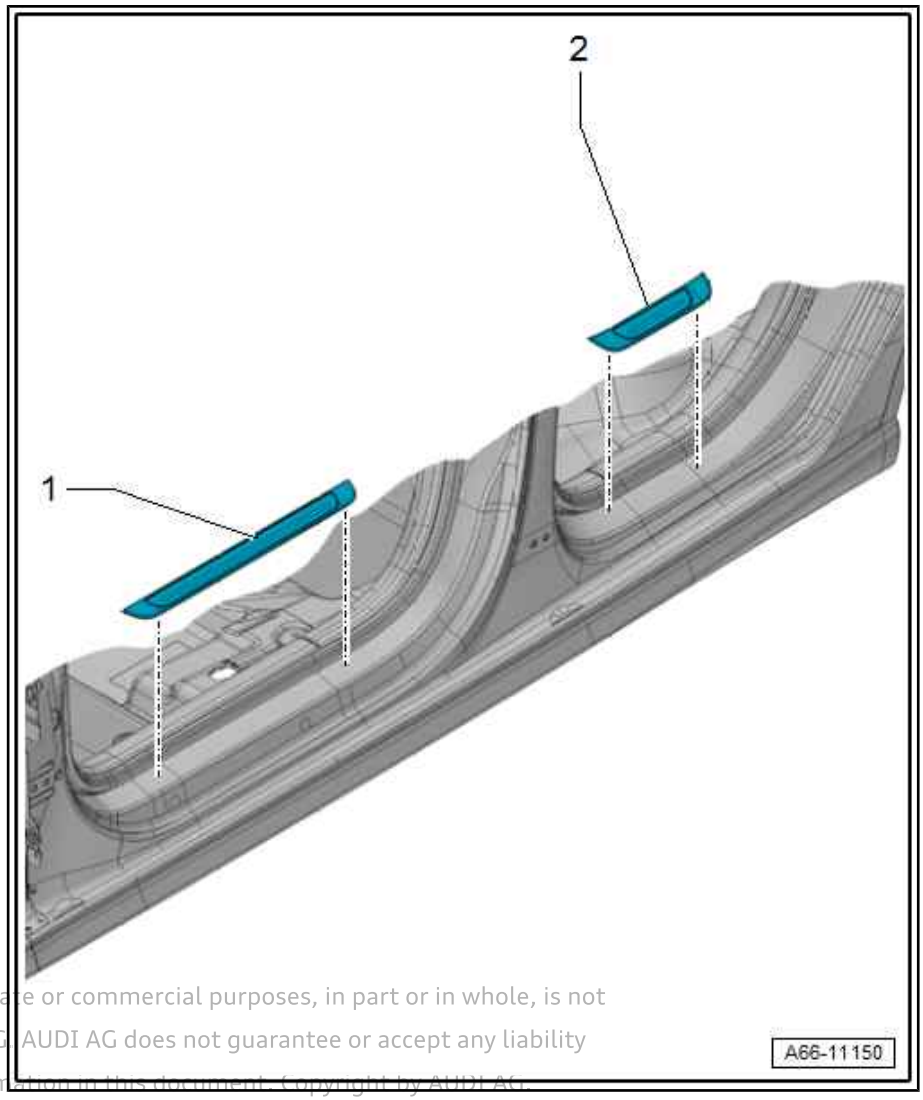

Protected by copyright. Copying for private or commercial purposes, in part or in whole, is not permitted unless authorised by AUDI AG. AUDI AG does not guarantee or accept any liability with respect to the correctness of information in this document. Copyright by AUDI AG.

3.5 Exploded view - side member trim

1 - Cover
- ❑ For wheel housing liner
- ❑ Different versions

2 - Securing clip
- ❑ Bolt, 2x

3 - Nut
- ❑ 7x
- ❑ 2 Nm

4 - Mounting
- ❑ For side member trim
- ❑ Removing and installing ⇒ page 368

5 - Side member trim
- ❑ Removing and installing ⇒ page 365

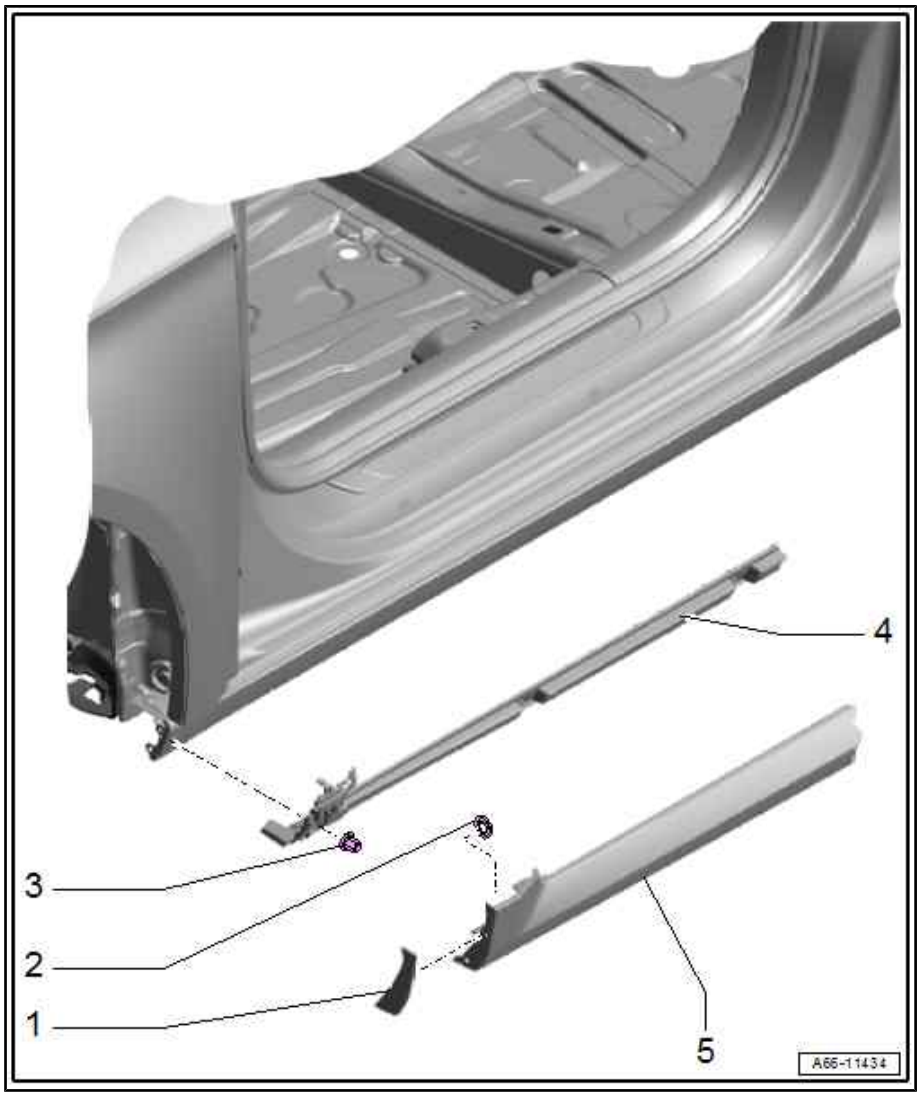

Protected by copyright. Copying for private or commercial purposes, in part or in whole, is not permitted unless authorised by AUDI AG. AUDI AG does not guarantee or accept any liability with respect to the correctness of information in this document. Copyright by AUDI AG.

3.6 Exploded view - heat shield

⇒ "3.6.1 Exploded view - heat shield (front)", page 349

⇒ "3.6.2 Exploded view - heat shield (rear), vehicles without high-voltage system", page 350

⇒ "3.6.3 Exploded view - heat shield (rear), vehicles with high-voltage system", page 351

3.6.1 Exploded view - heat shield (front)

1 - Heat shield
- ❑ For floor
- ❑ Removing and installing ⇒ page 370

2 - Clamping washer
- ❑ 5x

3 - Heat shield
- ❑ For plenum chamber partition panel

4 - Clamping washer
- ❑ 6x

5 - Heat shield
- ❑ For propshaft
- ❑ Removing and installing ⇒ page 371

6 - Clamping washer
- ❑ 4x

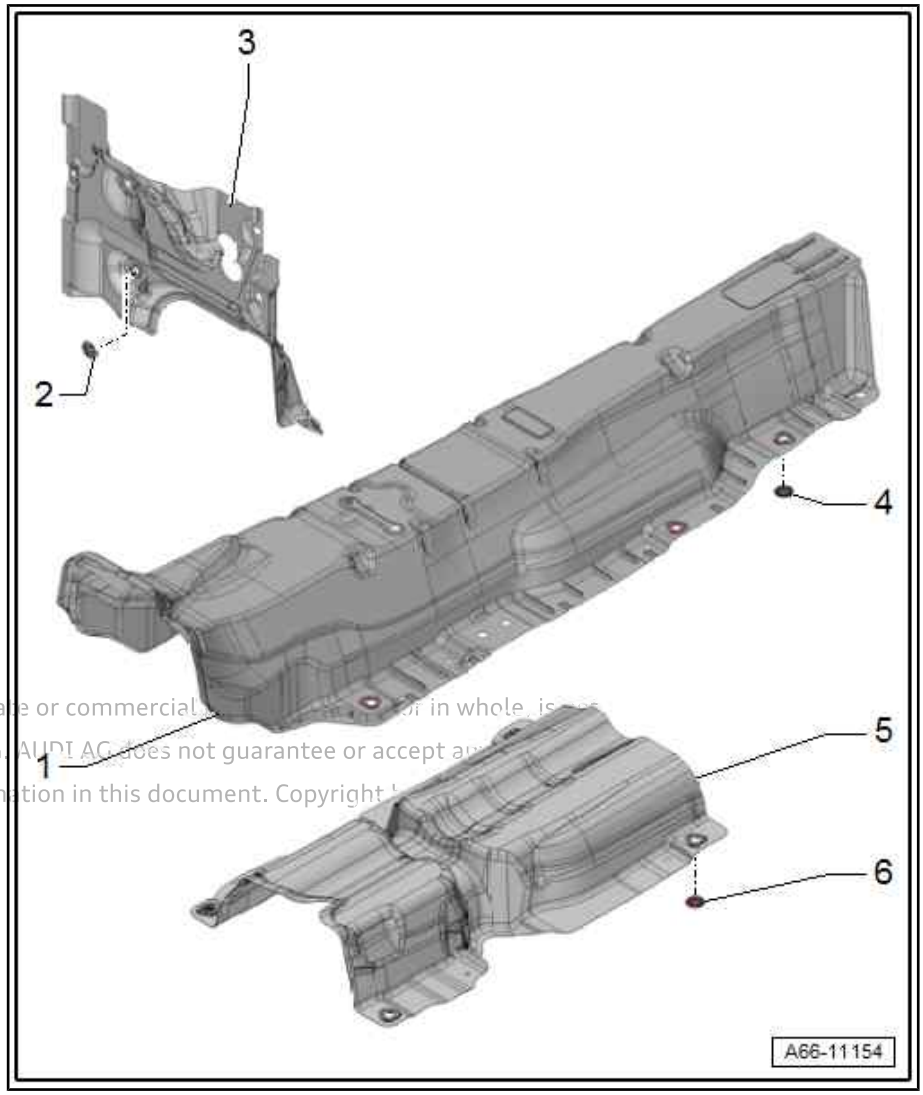

Protected by copyright. Copying for private or commercial purposes, in whole or in part, is not permitted unless authorised by AUDI AG. AUDI AG does not guarantee or accept any liability with respect to the correctness of information in this document. Copyright by AUDI AG.

3.6.2 Exploded view - heat shield (rear), vehicles without high-voltage system

WARNING

Damaged natural gas fuel tanks constitute an explosion risk - risk of death!

- *If components at the rear and/or rear side of the vehicle (e.g. bumper cover, rear lid, underbody trim, longitudinal member, rear cross panel, etc.) are removed due to accident damage, the natural gas fuel tanks must be checked for damage.*
- *Carry out assessment of damage to fuel tanks ⇒ Natural gas engines - General information; Rep. gr. 20 ; Assessing damage to fuel tanks .*

1 - Heat shield

- ❑ For exhaust system (centre)
- ❑ Removing and installing ⇒ page 372

2 - Heat shield

- ❑ For rear silencer
- ❑ Removing and installing ⇒ page 373

3 - Clamping washer

- ❑ Number fitted depends on version ⇒ Electronic parts catalogue

4 - Clamping washer

- ❑ 4x

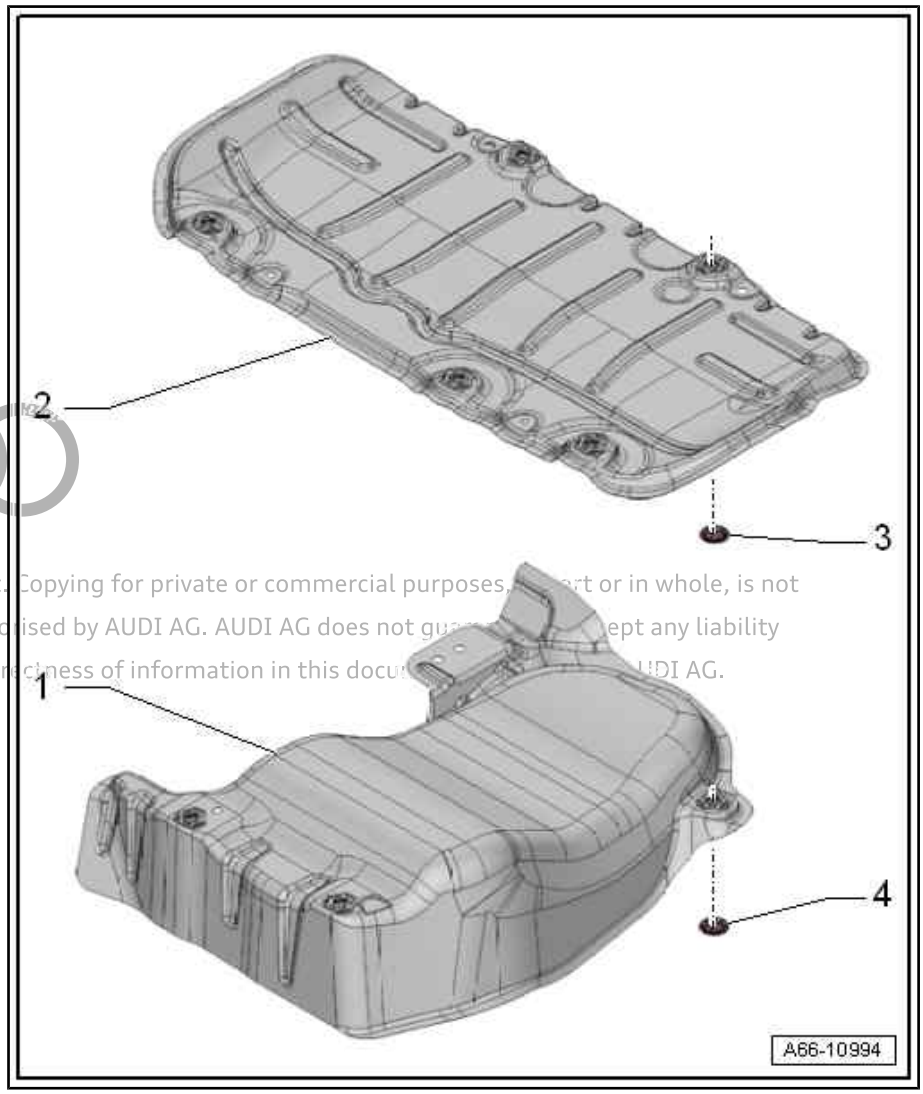

Protected by copyright. Copying for private or commercial purposes, in part or in whole, is not permitted unless authorised by AUDI AG. AUDI AG does not guarantee or accept any liability with respect to the correctness of information in this document. Copyright by AUDI AG.

3.6.3 Exploded view - heat shield (rear), vehicles with high-voltage system

1 - Bolt
- ❑ 3x
- ❑ 2 Nm

2 - Heat shield
- ❑ For hybrid battery unit
- ❑ Removing and installing ⇒ page 372

3 - Clamping washer
- ❑ Bolt, 2x

4 - Heat shield
- ❑ For rear silencer
- ❑ Removing and installing ⇒ page 373

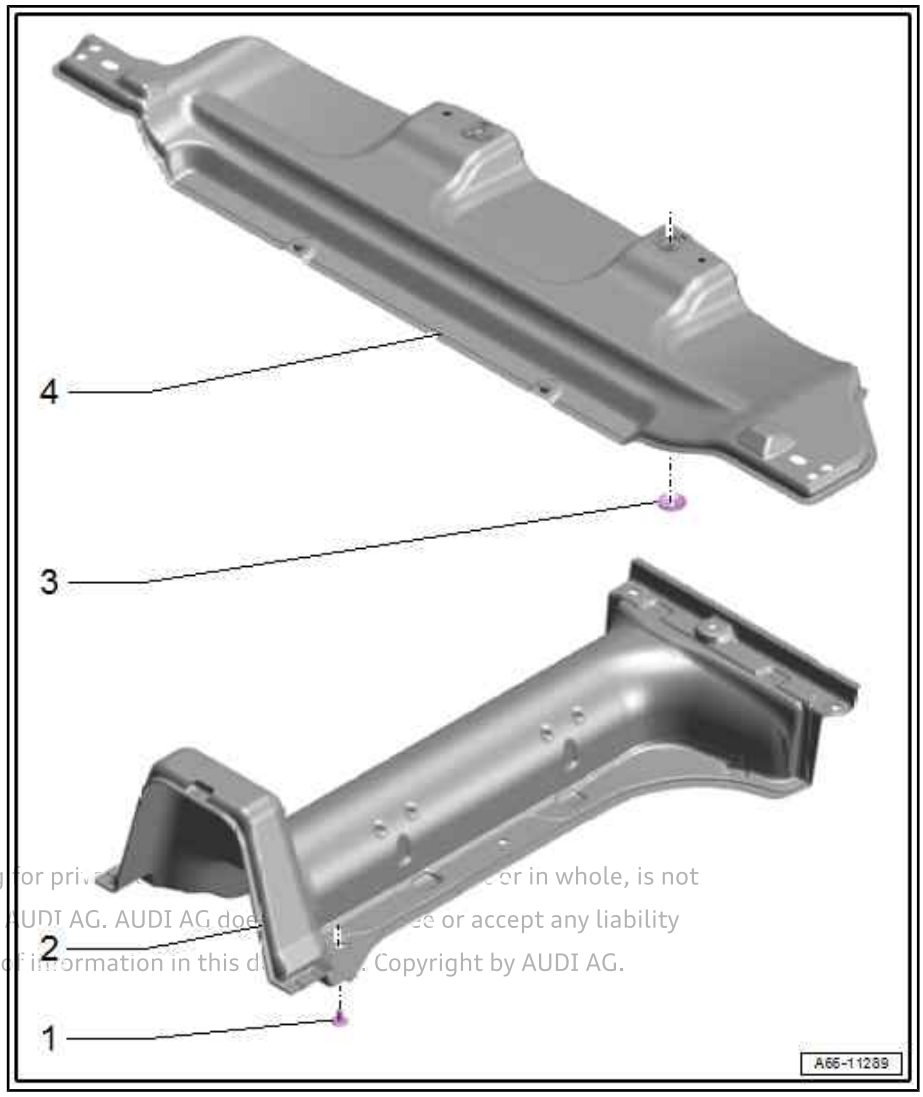

Protected by copyright. Copying for pri er in whole, is not permitted unless authorised by UDI AG. AUDI AG doe e or accept any liability with respect to the correctness of information in this d . Copyright by AUDI AG.

3.7 Removing and installing water deflector strip

1 - Pop rivet

- ❑ 5x

2 - Retaining strip

- To remove, drill off rivet heads and knock out rivet stems

3 - Water deflector strip

- To remove, pull out of retaining strip, starting at bottom
- When installing, lip must rest on windscreen (as shown in left detail view) and must not slide in behind edge of windscreen.
- Starting at top, press tab -arrow- downwards into retaining strip.

4 - Windscreen

Protected by copyright. Copyri
permitted unless authorised b
with respect to the correctness

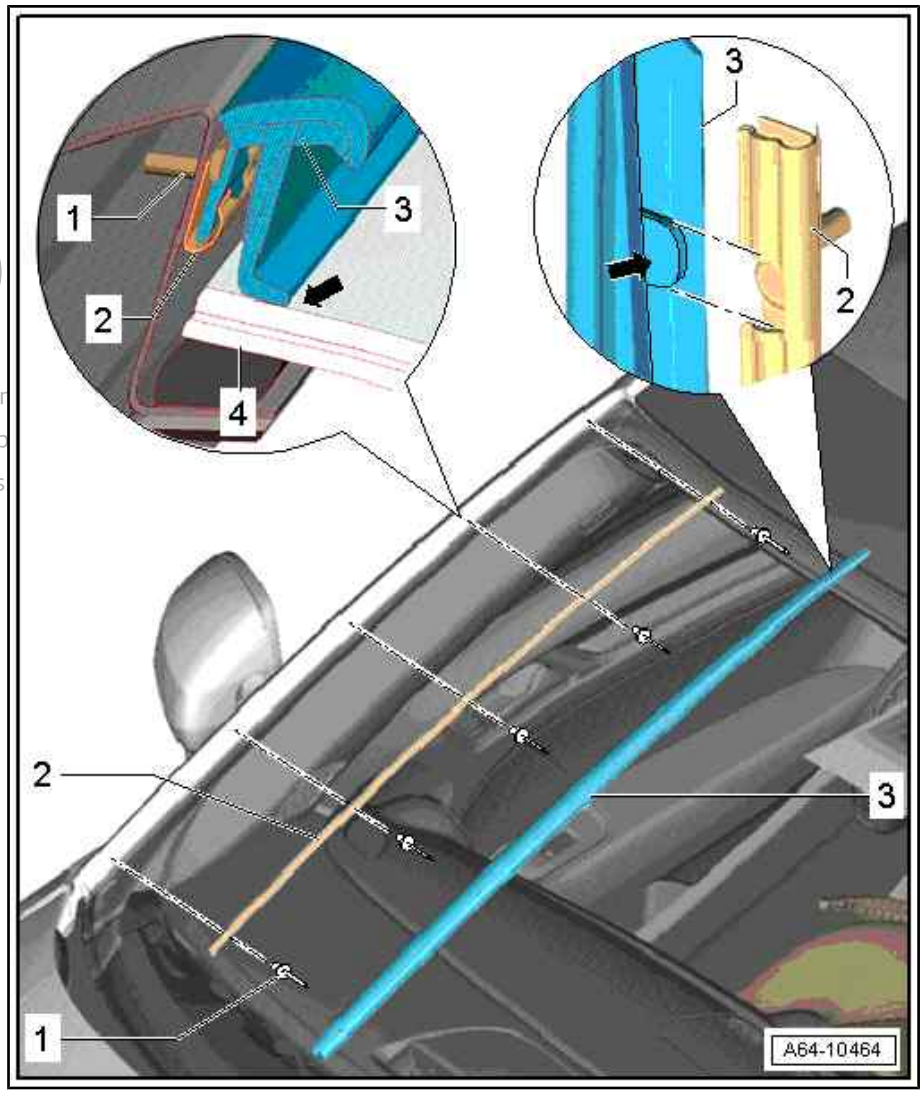

3.8 Removing and installing trim strip

⇒ "3.8.1 Removing and installing trim strip for side window - A3 with high-gloss package", page 352

⇒ "3.8.2 Removing and installing trim strip for side window - Sportback with high-gloss package", page 353

⇒ "3.8.3 Removing and installing trim strip for door (front) - Saloon", page 355

⇒ "3.8.4 Removing and installing trim strip for door (rear) - Saloon", page 356

⇒ "3.8.5 Removing and installing trim strip for side window - Saloon", page 358

3.8.1 Removing and installing trim strip for side window - A3 with high-gloss package

Special tools and workshop equipment required

♦ Wedges - T10383-

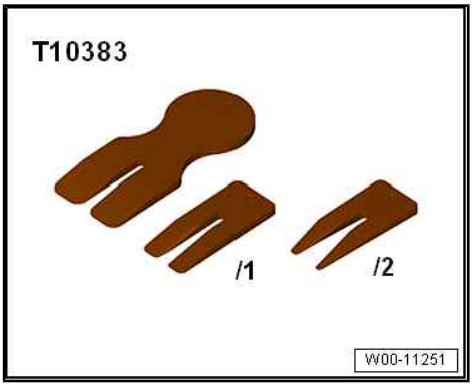

Removing

Note

Take care not to twist or bend trim strip for side window.

– Remove roof trim strip ⇒ page 392 .

Protected by copyright. Copying for private or commercial purposes, in part or in whole, is not permitted unless authorised by AUDI AG. AUDI AG does not guarantee or accept liability with respect to the correctness of information in this document. Copyright by AUDI AG.

– Mask area around trim strip for side window -2- with adhesive tape -1- to avoid damaging paintwork.

– Press trim strip for side window off clips -arrow- using wedge -T10383/1- .

– Detach trim strip for side window.

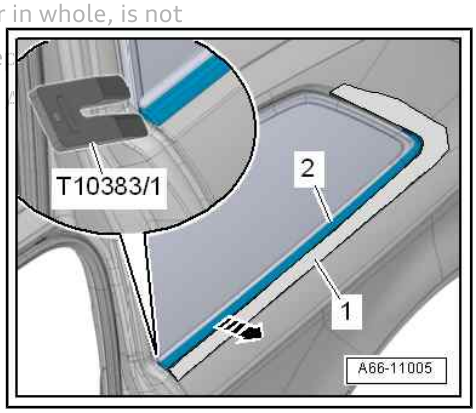

Installing

Installation is carried out in reverse order; note the following:

– Coat rubber strips and trim strip of side window with tyre assembly paste.

– Position trim strip -1- for side window at B-pillar at end -arrow- of rubber strip on body.

• Rubber strip -2- must be above trim strip.

• Clips -4- must be parallel to trim strip for side window.

– Press trim strip for side window onto clips so they engage audibly.

• Rubber strip must be above trim strip for side window.

• In bend of trim strip for side window, carefully fit rubber strip -3- above trim strip using wedge -T10383/1- .

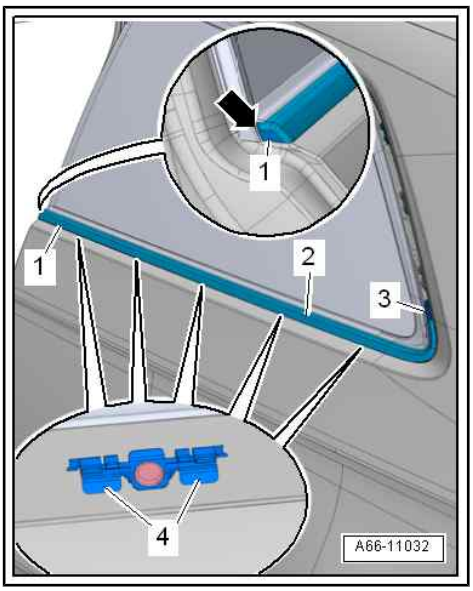

3.8.2 Removing and installing trim strip for side window - Sportback with high-gloss package

Special tools and workshop equipment required

♦ Wedges - T10383-

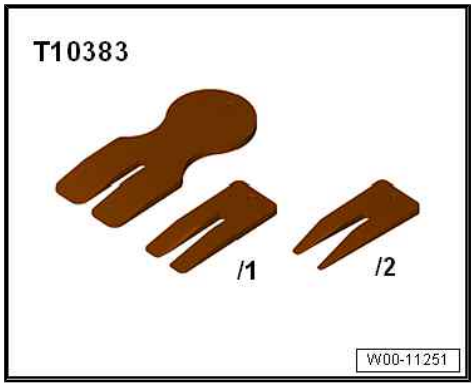

Removing

Note

Take care not to twist or bend trim strip for side window.

– Remove roof trim strip ⇒ page 392 .

– Mask area around trim strip for side window -2- with adhesive tape -1- as shown in illustration to avoid damaging paintwork.

– Press trim strip for side window off clips using wedge -T10383/1- .

– Detach trim strip for side window.

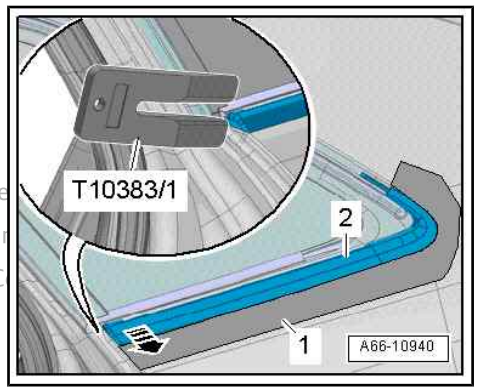

Protected by copyright. Copying for private or commercial purposes, permitted unless authorised by AUDI AG. AUDI AG does not guarantee with respect to the correctness of information in this document. C

Installing

Installation is carried out in reverse order; note the following:

– Coat rubber strips and trim strip of side window with tyre assembly paste.

– Position trim strip -1- for side window at C-pillar at corner -arrow- of rubber strip on body.

• Rubber strip -2- must be above trim strip.

• Clips -4- must be parallel to trim strip for side window.

– Press trim strip for side window onto clips so they engage audibly.

• Rubber strip must be above trim strip for side window.

• In bend of trim strip for side window, carefully fit rubber strip -3- above trim strip using wedge -T10383/1- .

– Install roof trim strip ⇒ page 392 .

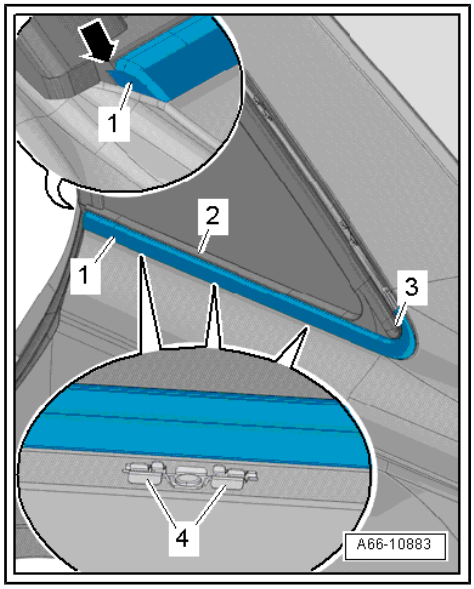

3.8.3 Removing and installing trim strip for door (front) - Saloon

Removing

– Lever trim strip -1- out of clip -arrow- by applying a narrow screwdriver -2- at recess.

– Carefully lever trim strip out of window guide -3- along entire length and detach.

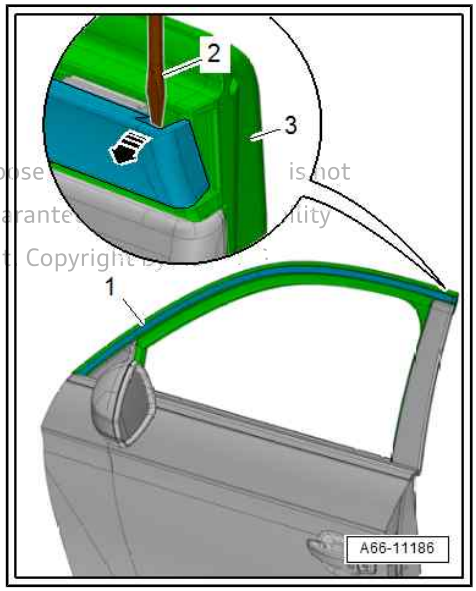

Installing

Protected by copyright. Copying for private or commercial purposes, in part or in whole, is not permitted unless authorised by AUDI AG. AUDI AG does not guarantee or assume any liability with respect to the correctness of information in this document. Copyright by AUDI AG.

Installation is carried out in reverse order; note the following:

Note

Renew retaining clip -2- if damaged.

– Press new retaining clip into mounting on window guide -3-.

- Arrow -1- must face upwards.
- “VT” = front door

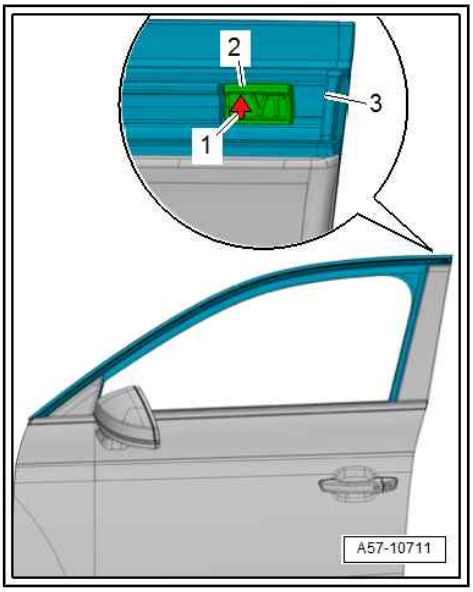

– Align trim strip -1- on door flange at B-pillar, insert into clip -3- and window guide -2- from below and press on along entire length.

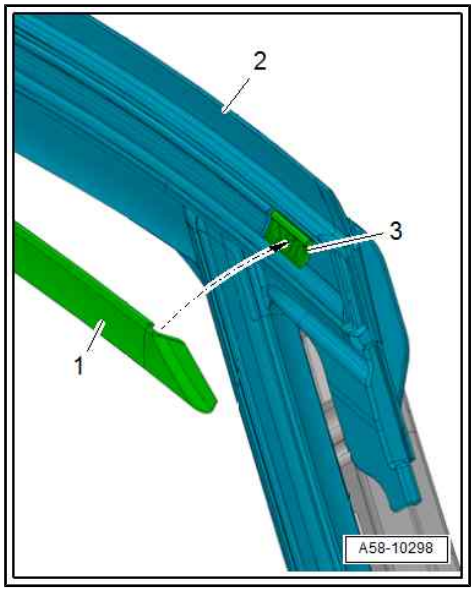

3.8.4 Removing and installing trim strip for door (rear) - Saloon

Removing

– Lever trim strip -1- out of clip -arrow- by applying a narrow screwdriver -3- at recess.

– Carefully lever trim strip out of window guide -2- along entire length and detach.

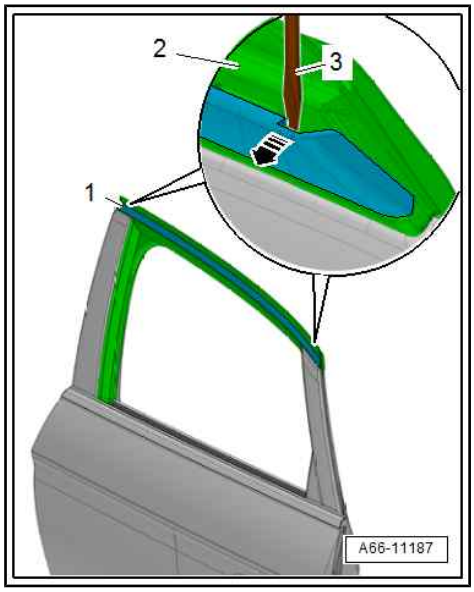

Installing

Installation is carried out in reverse order; note the following:

Note

Renew retaining clip if damaged.

– Before fitting trim strip, ensure that mountings for trim strip in window guide are parallel at front door and at side window.

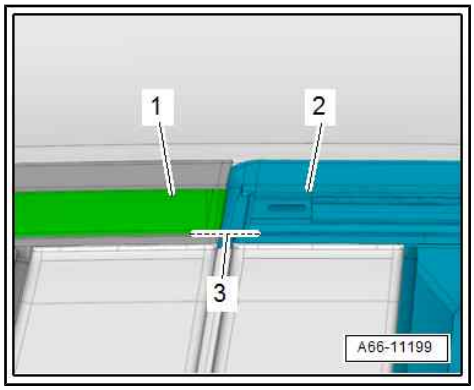

Protected by copyright. Copying for private or commercial purposes, in part or in whole, is not permitted unless authorised by AUDI AG. AUDI AG does not guarantee or accept any liability with respect to the correctness of information in this document. Copyright by AUDI AG.

- Mounting -2- for trim strip must be parallel -3- to trim strip -1- for front door.
- Mounting -1- for trim strip must be parallel -3- to trim strip -2- for side window.

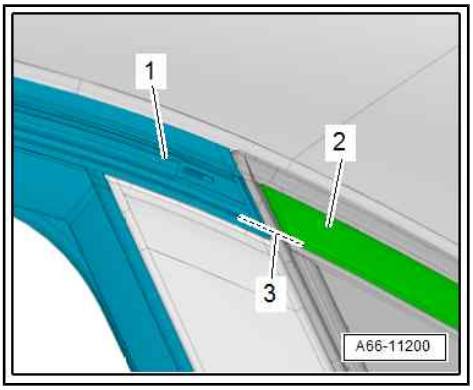

– Coloured clips are used to achieve and check correct adjustment.
- -a-= + 1.0 mm
- -b- = Standard position
- -c- = - 1.0 mm

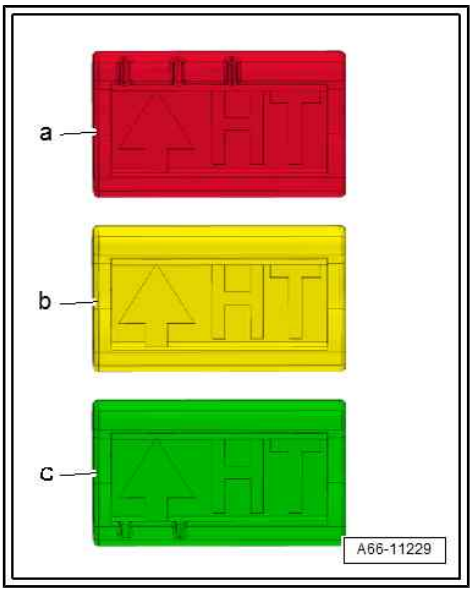

– Press new retaining clip -1- into mounting on window guide -3-.
- Arrow -2- must face upwards.
- “HT” = Rear door

Protected by copyright. Copying for private or commercial purposes, in part or in
permitted unless authorised by AUDI AG. AUDI AG does not guarantee or accept
with respect to the correctness of information in this document. Copyright by AUDI

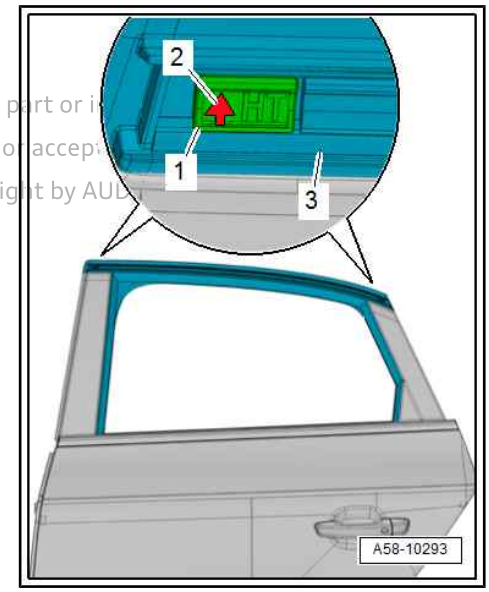

– Align trim strip -1- on door flange at C-pillar, insert into clips -3- and window guide -2- from below and press on along entire length.

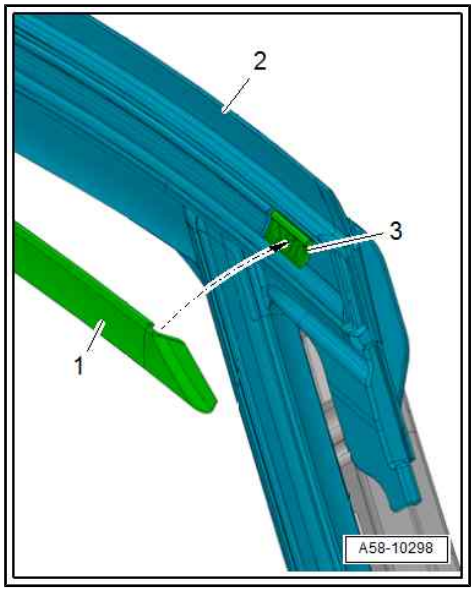

3.8.5 Removing and installing trim strip for side window - Saloon

Removing

– Remove side window ⇒ page 297 .

– Bend retaining tabs -1- so that they are straight and guide trim strip -3- out of mounting as far as possible -arrow A-.

– Slide trim strip out of mountings -2- -arrow B- and detach.

Installing

Installation is carried out in reverse sequence.

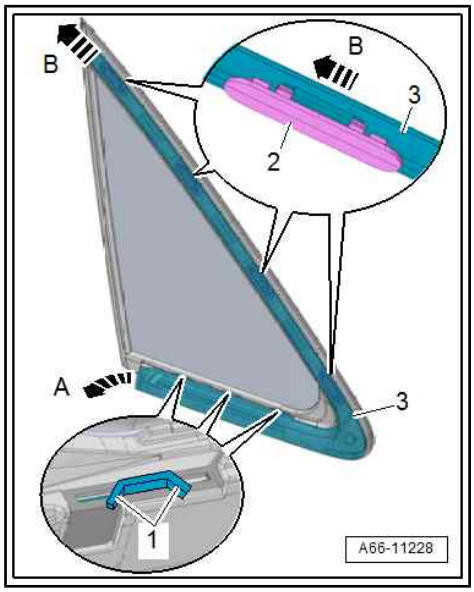

3.9 Removing and installing cover

⇒ “3.9.1 Removing and installing cover for wheel housing liner”, page 358

Protected by copyright. Copying for private or commercial purposes, in part or in whole, is not permitted unless authorised by AUDI AG. AUDI AG does not guarantee or accept any liability with respect to the correctness of information in this document. Copyright by AUDI AG.

3.9.1 Removing and installing cover for wheel housing liner

Special tools and workshop equipment required

- Roller - 3356-

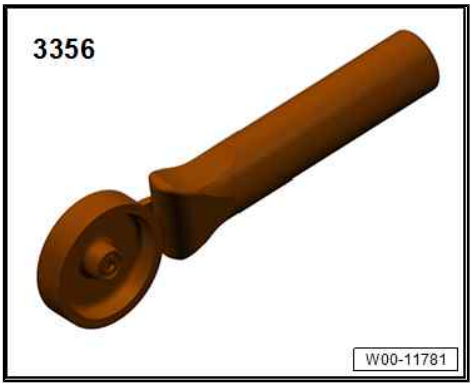

- Removal wedge - 3409-

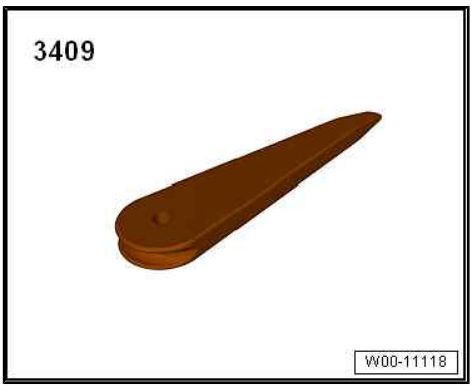

- Hot air blower - V.A.G 1416-

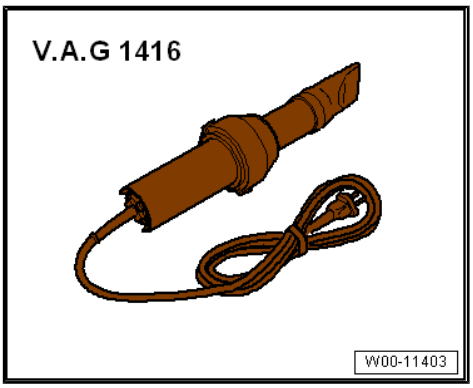

- Cleaning solution - D 009 401 04-

Protected by copyright. Copying for private or commercial purposes, in part or in whole, is not permitted unless authorised by AUDI AG. AUDI AG does not guarantee or accept any liability with respect to the correctness of information in this document. Copyright by AUDI AG.

Removing

– Carefully heat cover -3- with hot air blower - V.A.G 1416- .

– Release fasteners -1- -arrows- and carefully prise cover off wing -2- using removal wedge - 3409- .

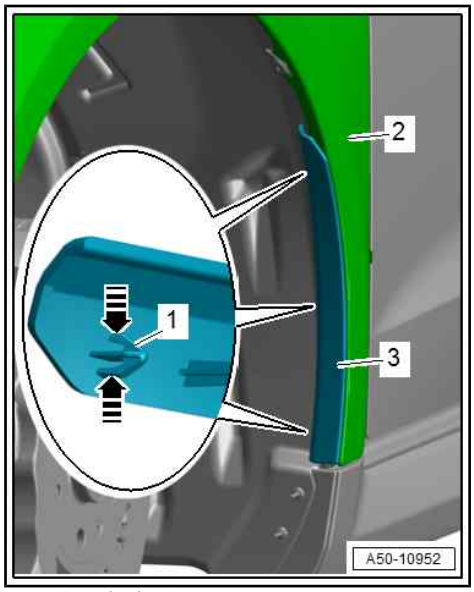

Installing

Installation is carried out in reverse order; note the following:

- The vehicle and the cover must be at room temperature.
- The bonding surfaces must be free of dirt and grease.

– Clean bonding surface on wing with cleaning solution - D 009 401 04- .

Protected by copyright. Copying for private or commercial purposes, in part or in whole, is not permitted unless authorised by AUDI AG. AUDI AG does not guarantee or with respect to the correctness of information in this document. Copyright

– Peel protective film off adhesive strip -1-.

– Position cover -2- on front wing, making sure that locating lugs -arrows- are pressed into mounting points.

– Press cover on over entire length of wing -3-.

- Leave vehicle standing at room temperature for at least 30 minutes.

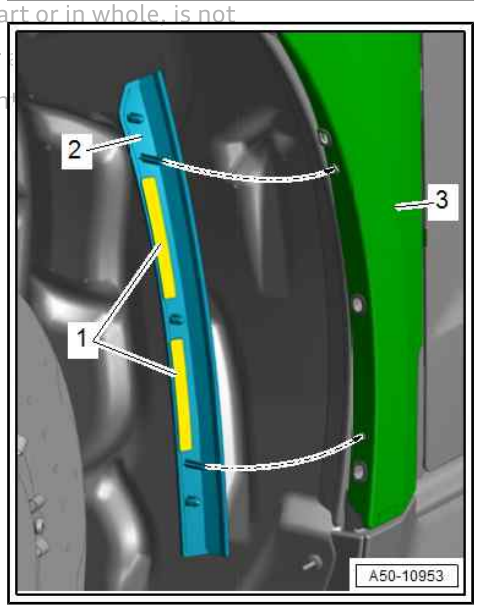

3.10 Removing and installing trim panel for A-pillar

Removing

– Pull off cover -2-.

– Remove bolt -1-.

– Press trim panel for A-pillar -item 3- out of window guide in direction of -arrow A- and remove towards side -arrow B-.

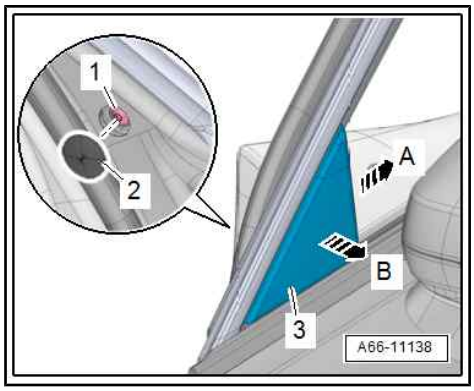

Installing

Installation is carried out in reverse sequence.

Tightening torques

◆ ⇒ “3.2 Exploded view - trim panels for A-pillar and B-pillar”, page 343 .

3.11 Removing and installing trim panel for B-pillar on door

⇒ “3.11.1 Removing and installing trim panel for B-pillar (front door)”, page 361

⇒ “3.11.2 Removing and installing trim panel for B-pillar (rear door)”, page 361

Protected by copyright. Copying for private or commercial purposes, in part or in whole, is not permitted unless authorised by AUDI AG. AUDI AG does not guarantee or accept any liability with respect to the correctness of information in this document. Copyright by AUDI AG.

3.11.1 Removing and installing trim panel for B-pillar (front door)

Removing

– Move door window to “open” position.

– Remove window frame trim ⇒ General body repairs, interior; Rep. gr. 70 ; Door trim (front); Removing and installing window frame trim .

– Pull seal -1- out of window guide (rear) in vicinity of trim panel for B-pillar.

– Remove bolts -arrows A-.

– Slide trim panel for B-pillar -item 4- downwards -arrow B-; lug -3- will be disengaged from cut-out -2-.

– Press trim panel for B-pillar towards outside until surrounding section of trim panel for B-pillar is disengaged.

– Pull out trim panel for B-pillar upwards.

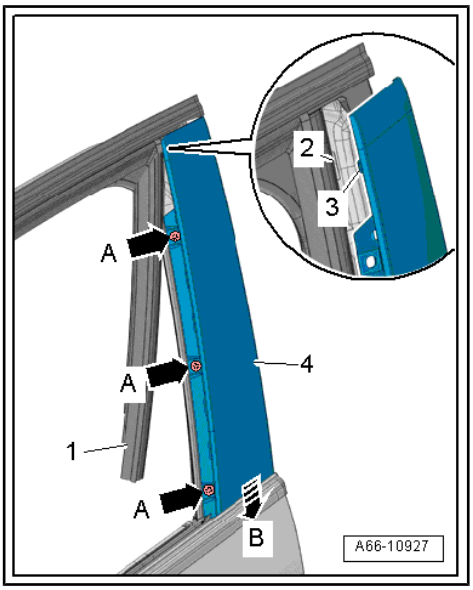

Installing

Installation is carried out in reverse sequence.

Tightening torques

♦ ⇒ “3.2 Exploded view - trim panels for A-pillar and B-pillar”, page 343 .

3.11.2 Removing and installing trim panel for B-pillar (rear door)

Removing

– Move door window to “open” position.

– Remove window frame trim ⇒ General body repairs, interior; Rep. gr. 70 ; Door trim (rear); Removing and installing window frame trim .

Protected by copyright. Copying for private or commercial purposes, in part or in whole, is not permitted unless authorised by AUDI AG. AUDI AG does not guarantee or accept any liability with respect to the correctness of information in this document. Copyright by AUDI AG.

– Pull seal -4- out of window guide (front) in vicinity of trim panel for B-pillar until bolts are accessible.
– Remove bolts -arrows A-.
– Slide trim panel for B-pillar -1- downwards -arrow B-; lug -2- will be disengaged from body cut-out -3-.
– Press trim panel for B-pillar towards outside until surrounding section of trim panel for B-pillar is disengaged.
– Pull trim panel for B-pillar upwards out of door opening.

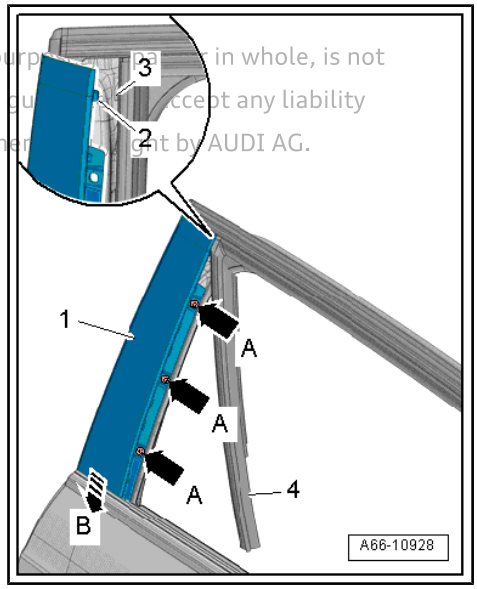

Installing

Installation is carried out in reverse sequence.

Tightening torques

◆ ⇒ “3.3 Exploded view - trim panel for B/C-pillar”, page 344 .

3.12 Removing and installing trim panel for C-pillar on door

⇒ “3.12.1 Removing and installing trim panel for C-pillar on door - Sportback”, page 362

⇒ “3.12.2 Removing and installing trim panel for C-pillar on door - Saloon”, page 363

3.12.1 Removing and installing trim panel for C-pillar on door - Sportback

Removing

– Move door window to “open” position.
– Remove window frame trim ⇒ General body repairs, interior; Rep. gr. 70 ; Door trim (rear); Removing and installing window frame trim .
– Prise out grommet -1-.
– Remove bolt -2-.

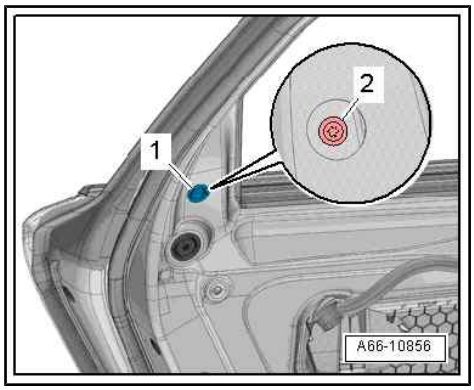

– Slide trim panel for C-pillar -item 1- downwards -arrow-; lug -2- will be disengaged from window seal -3- and retaining pin -4- will be disengaged from body cut-out -5-.

– Pull trim panel for C-pillar upwards out of door opening.

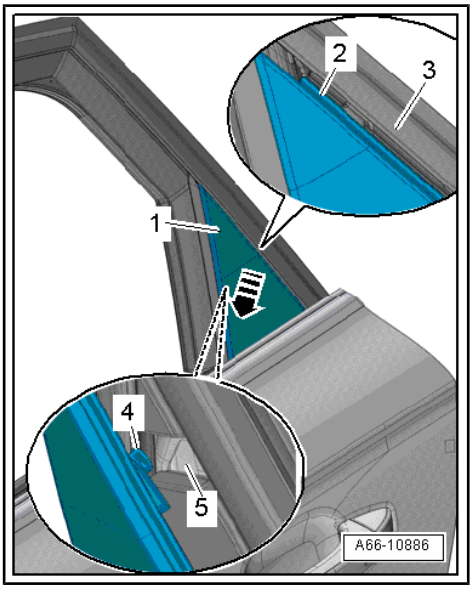

Installing

Installation is carried out in reverse sequence.

Tightening torques

♦ ⇒ “3.3.1 Exploded view - trim panel for B/C-pillar, Sportback”, page 344 .

3.12.2 Removing and installing trim panel for C-pillar on door - Saloon

Removing

– Move door window to “open” position.

– Remove window frame trim ⇒ General body repairs, interior; Rep. gr. 70 ; Door trim (rear); Removing and installing window frame trim .

– Pull seal -1- out of window guide in vicinity of trim panel for C-pillar until bolts are accessible.

– Remove bolts -arrows A-.

– Slide trim panel for C-pillar -4- downwards -arrow B-; lug -3- will be disengaged from body cut-out -2-.

– Press trim panel for C-pillar towards outside until surrounding section of trim panel for C-pillar is disengaged.

– Pull trim panel for C-pillar upwards out of door opening.

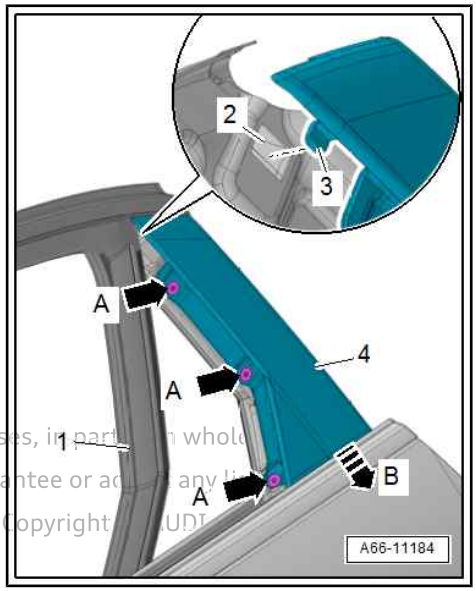

Installing

Installation is carried out in reverse sequence.

Tightening torques

♦ ⇒ “3.3.2 Exploded view - trim panel for B/C-pillar, Saloon”, page 345 .

Protected by copyright. Copying for private or commercial purposes, in part or in whole, is not permitted unless authorised by AUDI AG. AUDI AG does not guarantee or accept any liability with respect to the correctness of information in this document. Copyright © AUDI

3.13 Removing and installing sill panel trim

Special tools and workshop equipment required

- Roller - 3356-

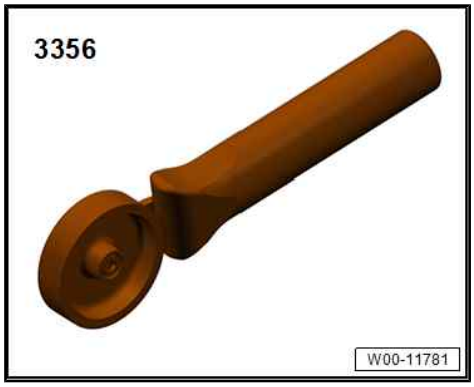

- Removal wedge - 3409-

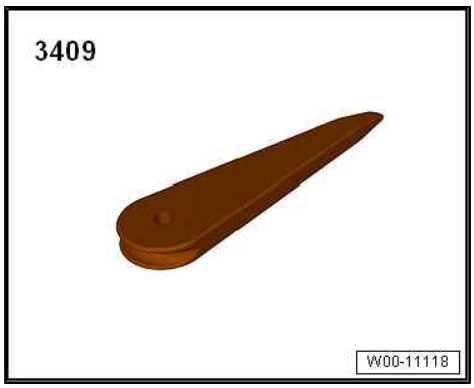

- Hot air blower - V.A.G 1416-

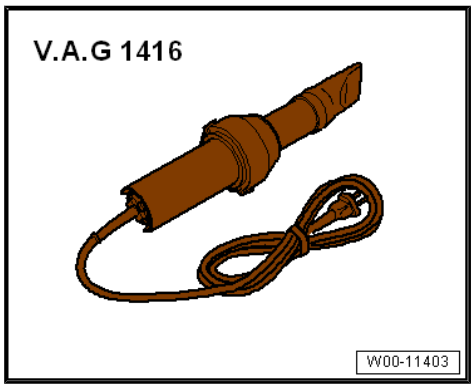

- Cleaning solution - D 009 401 04-

Protected by copyright. Copying for private or commercial purposes, in part or in whole, is not permitted unless authorised by AUDI AG. AUDI AG does not guarantee or accept any liability with respect to the correctness of information in this document. Copyright by AUDI AG.

Removing

– Carefully heat sill panel trim -1- with hot air blower - V.A.G 1416- .

– Using removal wedge - 3409- , carefully prise sill panel trim off side member -2- -arrow-.

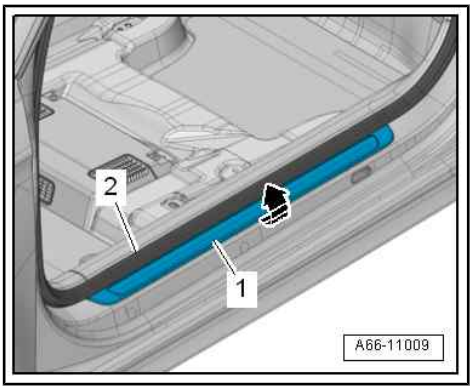

Note

The illustration shows an A3.

Installing

Installation is carried out in reverse order; note the following:

- The vehicle and the trim must be at room temperature.
- The bonding surfaces must be free of dirt and grease.
- If the primer - D 355 205 A2- has been allowed to flash off for more than 3 hours, primer must be re-applied.

– Completely remove any residual adhesive.

– Clean bonding surface on body with cleaning solution - D 009 401 04- .

– Starting at grommet -5-, mark dimension -a- on side member towards door seal with a water-soluble marker.

- Dimension -a- = 91 mm

– Peel protective film off adhesive strip -4-.

– Align sill panel trim -2- centrally with long edges at transition area -3- between side member and door seal -1- and position it -arrows-.

– Press sill panel trim onto side member over entire length using roller -3356- .

- Leave vehicle standing at room temperature for at least 30 minutes.
- Wait at least 24 hours before putting any load on the component.

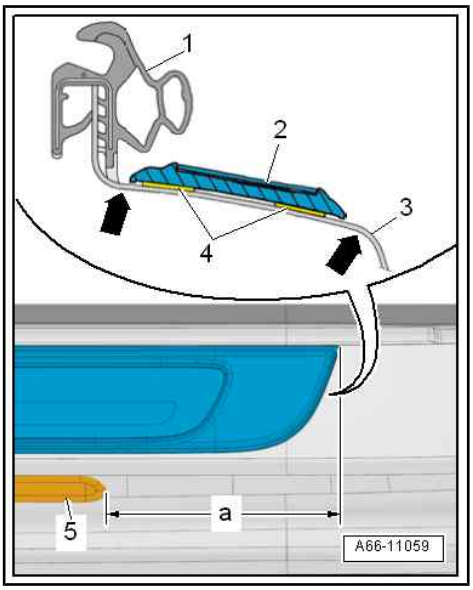

3.14 Removing and installing side member trim

⇒ “3.14.1 Removing and installing side member trim”, page 365

⇒ “3.14.2 Removing and installing mounting for side member trim”, page 368

Protected by copyright. Copying for private or commercial purposes, in part or in whole, is not permitted unless authorised by AUDI AG. AUDI AG does not guarantee or accept any liability with respect to the correctness of information in this document. Copyright by AUDI AG.

3.14.1 Removing and installing side member trim

Special tools and workshop equipment required

- Roller - 3356-

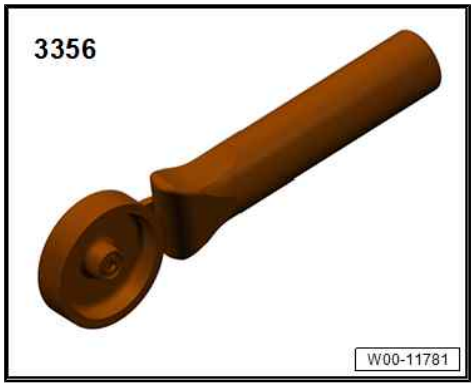

- Hot air blower - V.A.G 1416-

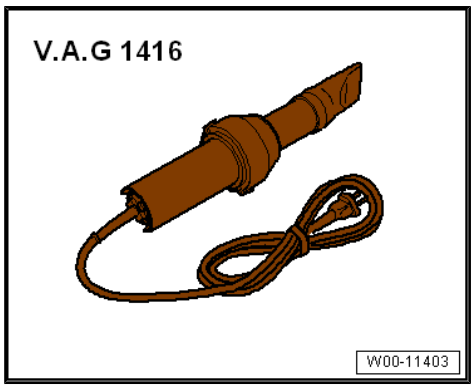

- Removal wedge - T40233-

Protected by copyright. Copying for private or commercial purposes, in part or in whole, is not permitted unless authorised by AUDI AG. AUDI AG does not guarantee or accept any liability with respect to the correctness of information in this document. Copyright by AUDI AG.

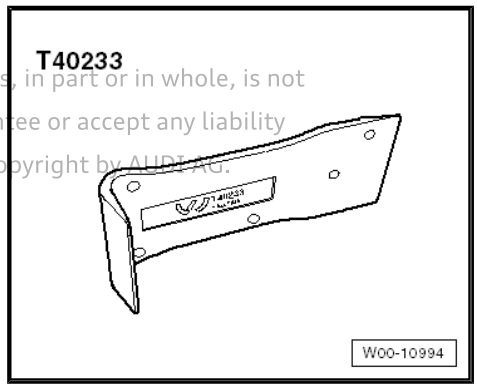

- Cleaning solution - D 009 401 04-
- Applicator - D 009 500 25-
- Primer - D 355 205 A2-
- Plastic primer - D 366 PR1 A1-

Removing

– Using removal wedge - T40233- , unfasten side member trim -2- (front) at wheel housing -1-.

– Release fasteners of side member trim at mounting -3- using removal wedge - T40233- .

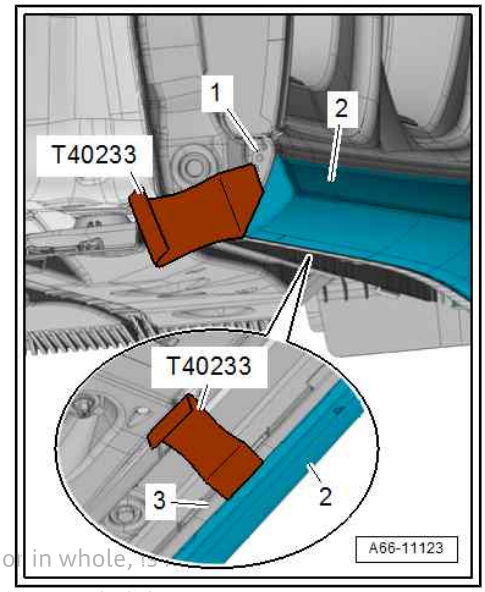

Protected by copyright. Copying for private or commercial purposes, in part or in whole, is not permitted unless authorised by AUDI AG. AUDI AG does not guarantee or accept any liability with respect to the correctness of information in this document. Copyright by AUDI AG.

– Carefully heat bonded area -1- with hot air blower - V.A.G 1416- .

– Pull bottom of side member trim -2- slightly outwards -arrows A- and then lift side member trim -arrow B- out of mounting -3- (adhesive bond will be released).

– Detach side member trim and set it down on a soft surface.

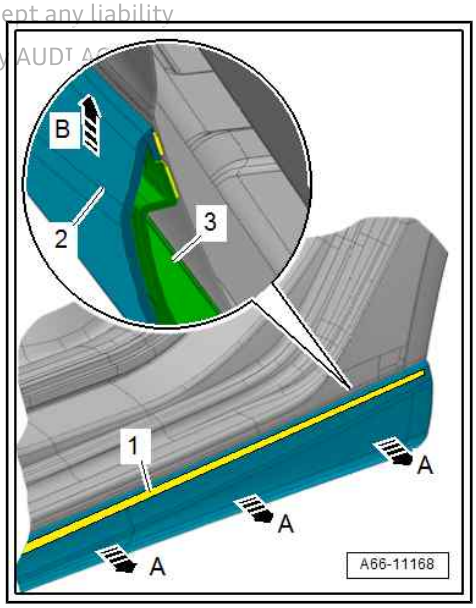

Installing

Installation is carried out in reverse order; note the following:

- The vehicle and the mounting must be at room temperature.
- The bonding surfaces must be free of dirt and grease.
- If the primer - D 355 205 A2- has been allowed to flash off for more than 3 hours, primer must be re-applied.

Preparations for re-installing side member trim:

– Completely remove any remaining adhesive from side member trim.

– Clean bonding area on plastic surface with cleaning solution - D 009 401 04- .

– Apply plastic primer - D 366 PR1 A1- to bonding surface of mounting and allow to flash off.

– Apply double-sided adhesive tape (⇒ Electronic parts catalogue) to same area on mounting.

Continued:

– Clean bonding area on painted surface with cleaning solution - D 009 401 04- .

– Apply primer - D 355 205 A2- to bonding area on painted surface using applicator - D 009 500 25- and allow to flash off.

– Fold over ends of protective film or attach a removal aid -arrow- to protective film -2-.
– Fit side member trim -1- in position at mounting and press on so that it engages audibly.
– Pull off protective film using removal aid and press on side member trim using roller -3356- .
• Leave vehicle standing at room temperature for at least 30 minutes.
• Wait at least 24 hours before putting any load on the component.

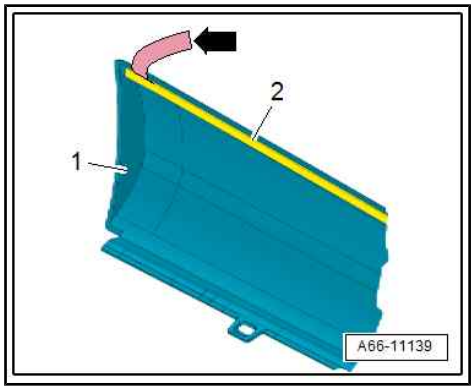

3.14.2 Removing and installing mounting for side member trim

Special tools and workshop equipment required

♦ Roller - 3356-

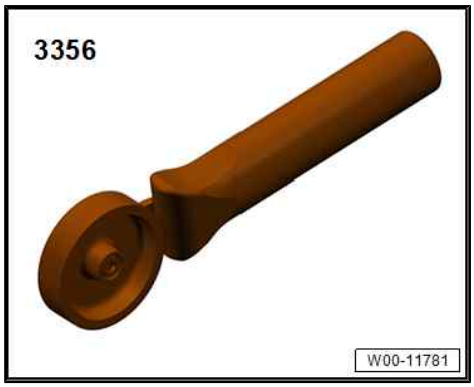

♦ Hot air blower - V.A.G 1416-

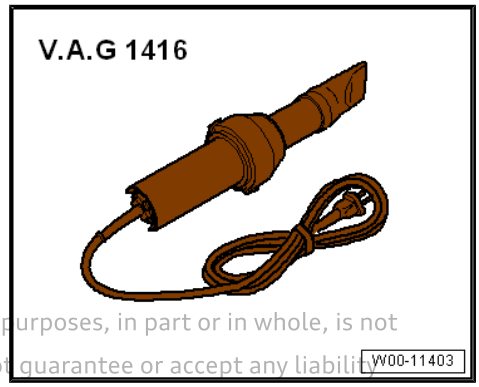

Protected by copyright. Copying for private or commercial purposes, in part or in whole, is not permitted unless authorised by AUDI AG. AUDI AG does not guarantee or accept any liability with respect to the correctness of information in this document. Copyright by AUDI AG.

♦ Removal wedge - T40233-

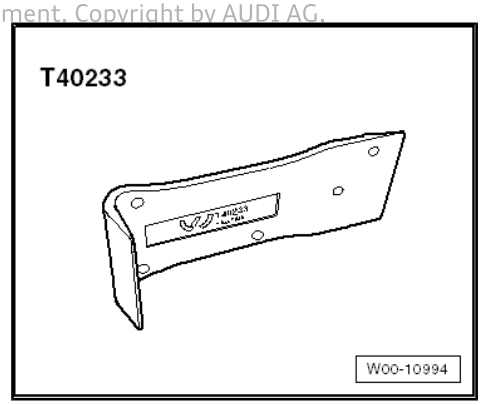

♦ Cleaning solution - D 009 401 04-
♦ Applicator - D 009 500 25-

- Primer - D 355 205 A2-
- Plastic primer - D 366 PR1 A1-

Removing

– Remove side member trim ⇒ page 365 .

– Remove nuts -arrows-.

– Carefully heat mounting -1- with hot air blower - V.A.G 1416- .

– Use removal wedge - T40233- to prise off mounting.

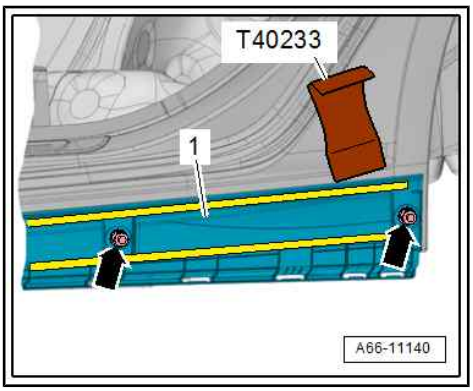

Installing

Installation is carried out in reverse order; note the following:

- The vehicle and the mounting must be at room temperature.
- The bonding surfaces must be free of dirt and grease.
- If the primer - D 355 205 A2- has been allowed to flash off for more than 3 hours, primer must be re-applied.

Preparations for re-installing mounting:

– Completely remove any remaining adhesive from mounting.

– Clean bonding area on plastic surface with cleaning solution - D 009 401 04- .

– Apply plastic primer - D 366 PR1 A1- to bonding surface of mounting and allow to flash off.

– Apply double-sided adhesive tape (⇒ Electronic parts catalogue) to same area on mounting.

Protected by copyright. Copying for private or commercial purposes, in part or in whole, is not permitted unless authorised by AUDI AG. AUDI AG does not guarantee or accept any liability with respect to the correctness of information in this document. Copyright by AUDI AG.

Continued:

– Clean bonding area on painted surface with cleaning solution - D 009 401 04- .

– Apply primer - D 355 205 A2- to bonding area on painted surface using applicator - D 009 500 25- and allow to flash off.

– Fit centring sleeves on outer and centre pins.

– Fit mounting and position it using centring sleeves.

– Pull protective film off adhesive tapes -1, 3-, press on side member trim -2- using roller -3356- and tighten nuts working from rear to front.

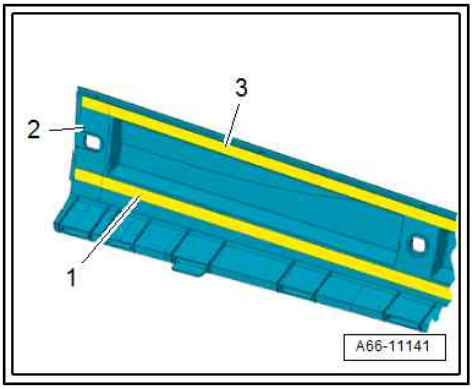

Tightening torques

- ⇒ “3.5 Exploded view - side member trim”, page 348 .

3.15 Removing and installing heat shield for floor

⇒ “3.15.1 Removing and installing heat shield for floor”, page 370

⇒ “3.15.2 Removing and installing heat shield for propshaft”, page 371

⇒ “3.15.3 Removing and installing heat shield for exhaust system (centre)”, page 372

⇒ “3.15.4 Removing and installing heat shield for hybrid battery unit”, page 372

⇒ “3.15.5 Removing and installing heat shield for rear silencer”, page 373

3.15.1 Removing and installing heat shield for floor

Removing

– Remove underbody trim (centre) ⇒ page 383 .

Front-wheel drive vehicles:

– Remove tunnel cross-piece (front) ⇒ page 387 .

– Remove exhaust system (rear) ⇒ Rep. gr. 26 ; Exhaust pipes/ silencers; Exploded view - silencers .

Four-wheel drive vehicles:

– Remove heat shield for propshaft ⇒ page 371 .

– Remove bolts -arrows- for propshaft centre bearing.

– A3: Detach propshaft at rear axle ⇒ Final drive; Rep. gr. 39 ; Propshaft; Removing and installing propshaft .

– RS 3 Saloon: Remove catalytic converter ⇒ Rep. gr. 26 ; Emission control system; Removing and installing catalytic converter .

– RS 3: Remove propshaft ⇒ Final drive; Rep. gr. 39 ; Propshaft; Removing and installing propshaft .

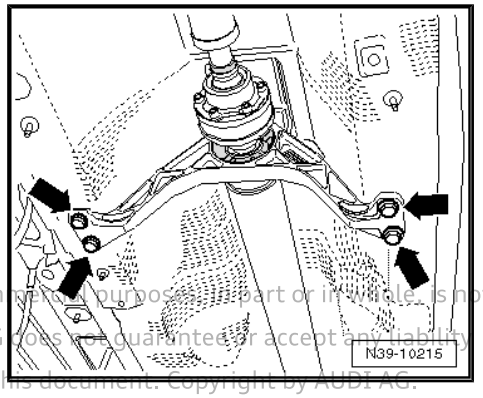

Protected by copyright. Copying for private or commercial purposes, in part or in whole, is not permitted unless authorised by AUDI AG. AUDI AG does not guarantee or accept any liability with respect to the correctness of information in this document. Copyright by AUDI AG.

All versions (continued):

– Remove tunnel cross-piece (rear) ⇒ page 387 .

– Unfasten clamping washers -arrows- and detach heat shield towards rear.

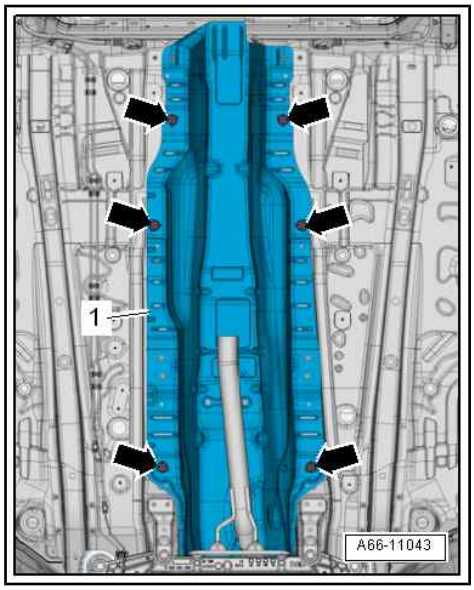

Installing

Installation is carried out in reverse sequence.

Tightening torques

◆ ⇒ “3.6 Exploded view - heat shield”, page 349 .

3.15.2 Removing and installing heat shield for propshaft

Removing

> **Caution**
>
> *Risk of damage to flexible joint due to incorrect handling.*
>
> - *Do not kink flexible joint more than 10°.*
> - *Install flexible joint so that it is not under tension.*

– A3: Loosen bolted connections -arrow-, slide clamp to rear and leave front exhaust pipe hanging.

– RS 3: Remove catalytic converter ⇒ Rep. gr. 26 ; Emission control system; Removing and installing catalytic converter .

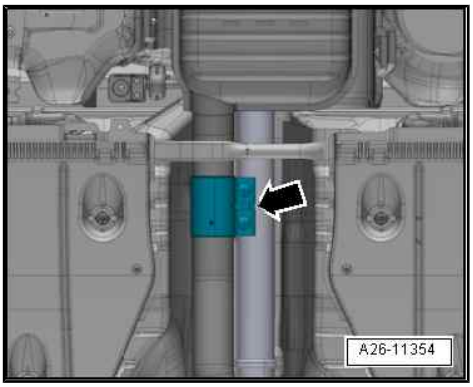

– Remove nuts -2, 4, 5, 6-.

– If fitted, remove bolts -1 and 7-.

– Unfasten clamping washers -arrows-.

– Take out heat shield -3- towards rear (as seen in direction of travel).

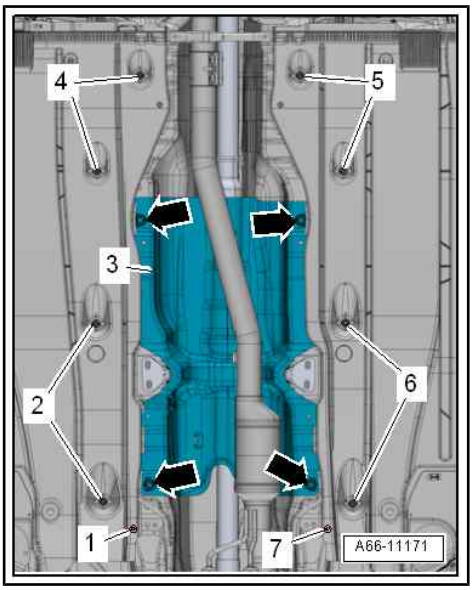

Installing

Installation is carried out in reverse sequence.

Tightening torques

- ⇒ “3.6 Exploded view - heat shield”, page 349 .
- ⇒ “5.1.1 Exploded view - underbody trim, vehicles without high-voltage system”, page 379 .

Protected by copyright. Copying for private or commercial purposes, in part or in whole, is not permitted unless authorised by AUDI AG. AUDI AG does not guarantee or accept any liability with respect to the correctness of information in this document. Copyright by AUDI AG.

3.15.3 Removing and installing heat shield for exhaust system (centre)

WARNING

Damaged natural gas fuel tanks constitute an explosion risk - risk of death!

- *If components at the rear and/or rear side of the vehicle (e.g. bumper cover, rear lid, underbody trim, longitudinal member, rear cross panel, etc.) are removed due to accident damage, the natural gas fuel tanks must be checked for damage.*
- *Carry out assessment of damage to fuel tanks ⇒ Natural gas engines - General information; Rep. gr. 20 ; Assessing damage to fuel tanks .*

Removing

– Remove exhaust system (rear) ⇒ Rep. gr. 26 ; Exhaust pipes/ silencers; Exploded view - silencers .

– Unfasten clamping washers -arrows-.

– Remove bolt -2-.

– Detach heat shield -1-.

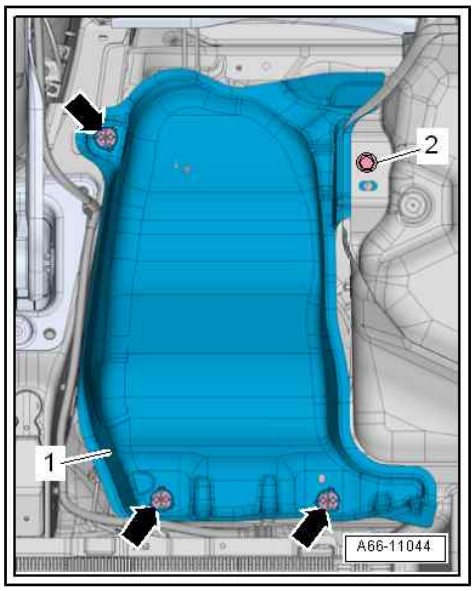

Installing

Installation is carried out in reverse sequence.

Tightening torques

♦ ⇒ “3.6 Exploded view - heat shield”, page 349 .

3.15.4 Removing and installing heat shield for hybrid battery unit

- Observe safety precautions ⇒ page 1 .

Special tools and workshop equipment required

♦ Engine and gearbox jack - VAS 6931-

Protected by copyright. Copying for private or commercial purposes, in part or in whole, is not permitted unless authorised by AUDI AG. AUDI AG does not guarantee or accept any liability with respect to the correctness of information in this document. Copyright by AUDI AG.

Removing

– Remove underbody trim (rear) ⇒ page 384 .

– Remove nuts -arrows-.

– Lower silencer slightly at rear with engine and gearbox jack - VAS 6931- ⇒ Rep. gr. 26 ; Exhaust pipes/silencers; Removing and installing silencer .

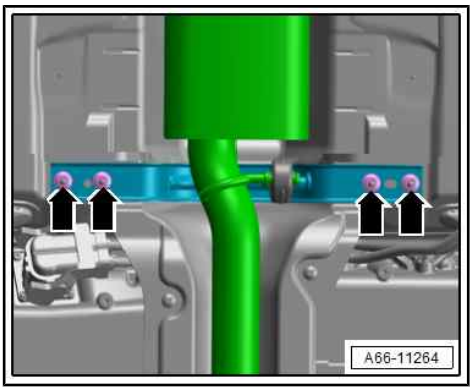

– Remove bolts -arrows-.

– Take out heat shield -2- for high-voltage battery between exhaust system -1- and hybrid battery unit.

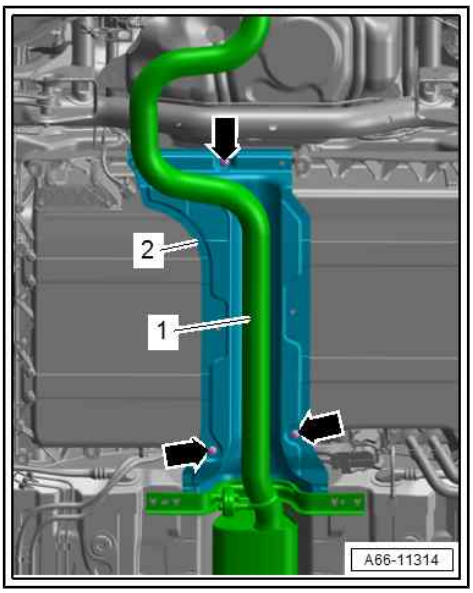

Installing

Installation is carried out in reverse sequence.

Tightening torques

♦ ⇒ “3.6 Exploded view - heat shield”, page 349 .

3.15.5 Removing and installing heat shield for rear silencer

WARNING

Damaged natural gas fuel tanks constitute an explosion risk - risk of death!

- *If components at the rear and/or rear side of the vehicle (e.g. bumper cover, rear lid, underbody trim, longitudinal member, rear cross panel, etc.) are removed due to accident damage, the natural gas fuel tanks must be checked for damage.*
- *Carry out assessment of damage to fuel tanks ⇒ Natural gas engines - General information; Rep. gr. 20 ; Assessing damage to fuel tanks .*

Special tools and workshop equipment required

Protected by copyright. Copying for private or commercial purposes, in part or in whole, is not permitted unless authorised by AUDI AG. AUDI AG does not guarantee or accept any liability with respect to the correctness of information in this document. Copyright by AUDI AG.

♦ Engine and gearbox jack - V.A.G 1383 A-

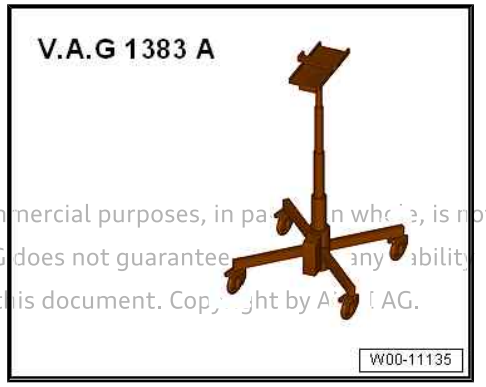

Protected by copyright. Copying for private or commercial purposes, in part or in whole, is not permitted unless authorised by AUDI AG. AUDI AG does not guarantee or assume any liability with respect to the correctness of information in this document. Copyright by AUDI AG.

Removing

– Unfasten mounting for rear silencer and lower it slightly with engine and gearbox jack - V.A.G 1383 A- ⇒ Rep. gr. 26 ; Exhaust pipes/silencers; Exploded view - silencers .

– Unfasten clamping washers -arrows-.

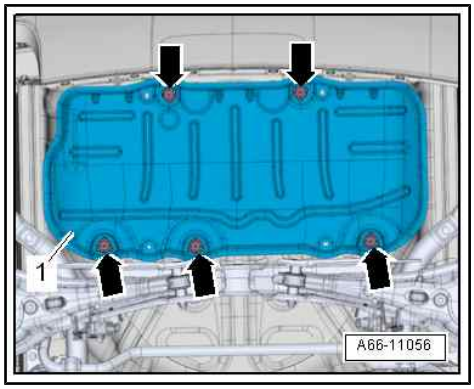

Note

The number of clamping washers fitted depends on the model version.

– Detach heat shield -1-.

Installing

Installation is carried out in reverse sequence.

Tightening torques

♦ ⇒ “3.6 Exploded view - heat shield”, page 349 .

4 Noise insulation

⇒ “4.1 Exploded view - noise insulation”, page 375

⇒ “4.2 Removing and installing noise insulation”, page 377

4.1 Exploded view - noise insulation

⇒ “4.1.1 Exploded view - noise insulation, standard equipment version”, page 375

⇒ “4.1.2 Exploded view - noise insulation, equipment version with underbody guard”, page 376

4.1.1 Exploded view - noise insulation, standard equipment version

1 - Bolt
- ❑ 2 Nm

2 - Speed nut

3 - Noise insulation (front)
- ❑ Depending on equipment: short noise insulation
- ❑ Removing and installing ⇒ page 377

4 - Bolt
- ❑ 2 Nm

5 - Spreader rivet

6 - Spreader rivet
- ❑ 4x

7 - Noise insulation (rear)
- ❑ Different versions
- ❑ Removing and installing ⇒ page 377

8 - Noise insulation (rear)
- ❑ Different versions
- ❑ Removing and installing ⇒ page 378

9 - Bolt
- ❑ 3x
- ❑ Renew after removing
- ❑ M8x20
- ❑ 6 Nm

10 - Bolt
- ❑ 6x
- ❑ 2 Nm

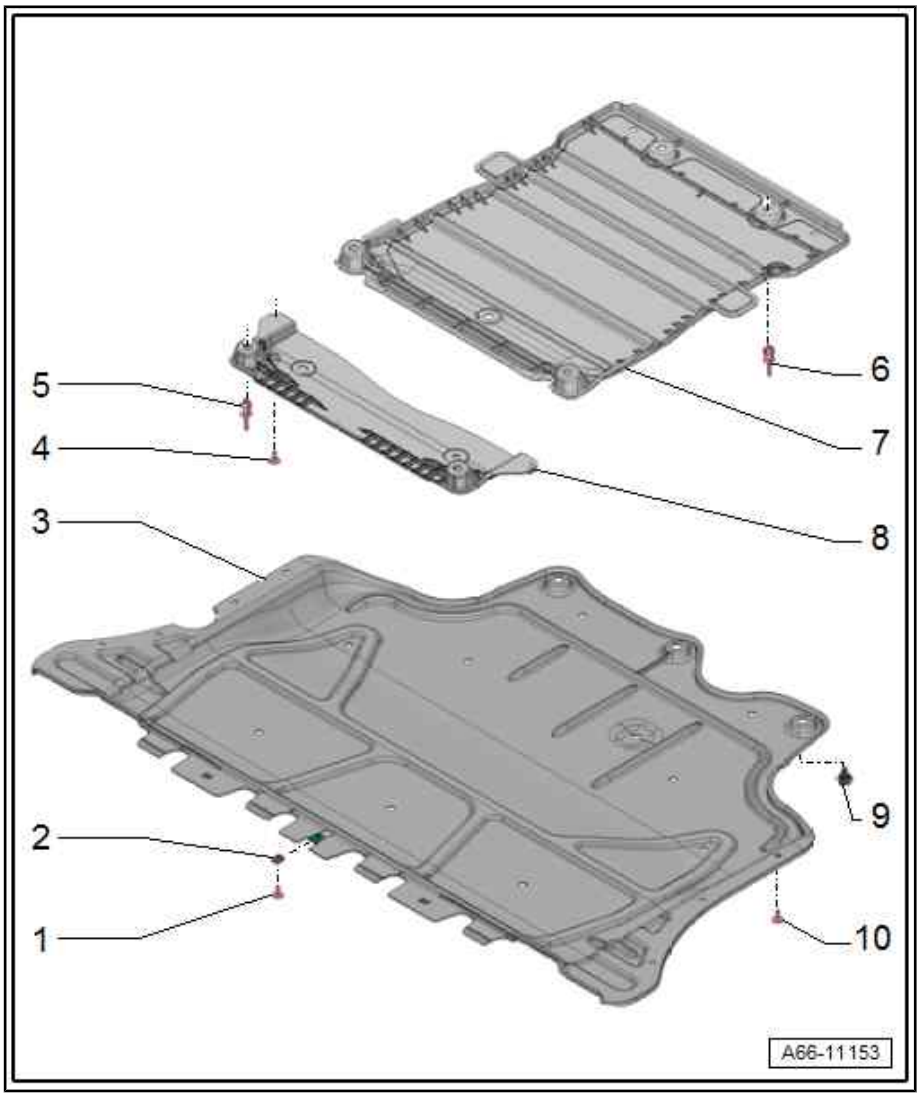

Protected by copyright. Copying for private or commercial purposes, in part or in whole, is not permitted unless authorised by AUDI AG. AUDI AG does not guarantee or accept any liability with respect to the correctness of information in this document. Copyright by AUDI AG.

4.1.2 Exploded view - noise insulation, equipment version with underbody guard

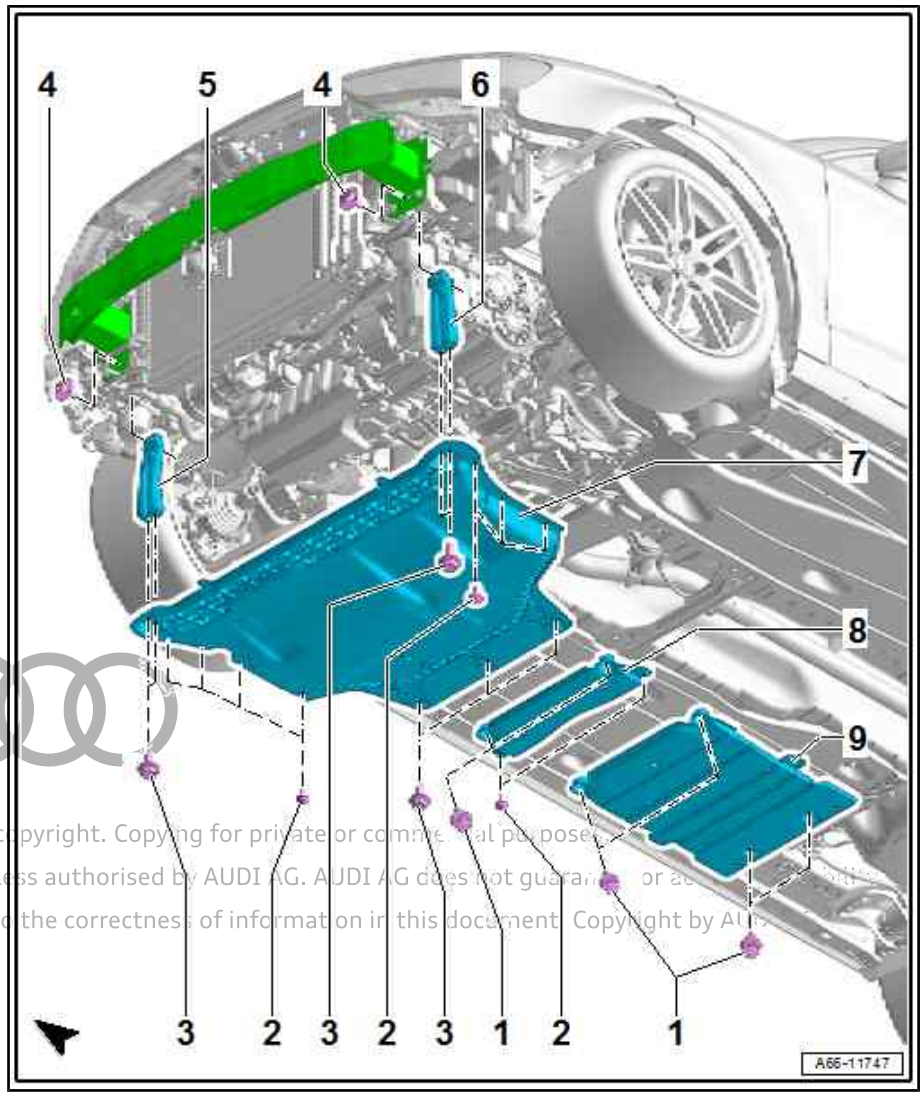

1 - Spreader rivet

- ❑ Depending on equipment version: 2x for noise insulation (rear) -8-
- ❑ Depending on equipment version: 4x for noise insulation (rear) -9-

2 - Bolt

- ❑ 7x
- ❑ 2 Nm

3 - Bolt

- ❑ 7x
- ❑ M8x25
- ❑ 20 Nm

4 - Bolt

- ❑ Bolt, 2x
- ❑ 20 Nm

5 - Bracket

- ❑ Right-side

6 - Bracket

- ❑ Left-side

7 - Skid plate

8 - Noise insulation (rear)

- ❑ Different versions
- ❑ Removing and installing ⇒ page 378

9 - Noise insulation (rear)

- ❑ Different versions
- ❑ Removing and installing ⇒ page 377

Protected by copyright. Copying for private or commercial purposes, in part or in whole, is not permitted unless authorised by AUDI AG. AUDI AG does not guarantee or assume any liability with respect to the correctness of information in this document. Copyright by AUDI AG.

4.2 Removing and installing noise insulation

⇒ “4.2.1 Removing and installing noise insulation (front)”, page 377

⇒ “4.2.2 Removing and installing noise insulation (rear) - version 1”, page 377

⇒ “4.2.3 Removing and installing noise insulation (rear) - version 2”, page 378

Protected by copyright. Copying for private or commercial purposes, in part or in whole, is not permitted unless authorised by AUDI AG. AUDI AG does not guarantee or accept any liability with respect to the correctness of information in this document. Copyright by AUDI AG.

4.2.1 Removing and installing noise insulation (front)

Removing

– Remove bolts -2 ... 5-.

– Release fasteners -arrows- and pull noise insulation (front) -1- off towards rear.

• This disengages guide tabs on noise insulation (front).

– Detach noise insulation (front).

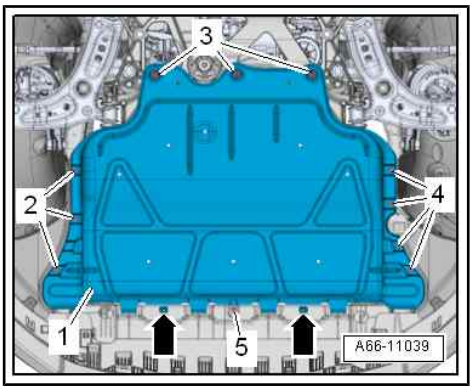

Installing

Installation is carried out in reverse sequence.

Tightening torques

♦ ⇒ “4.1 Exploded view - noise insulation”, page 375 .

4.2.2 Removing and installing noise insulation (rear) - version 1

Removing

– Unscrew nuts -1 and 2- and press underbody trim downwards slightly -arrow-.

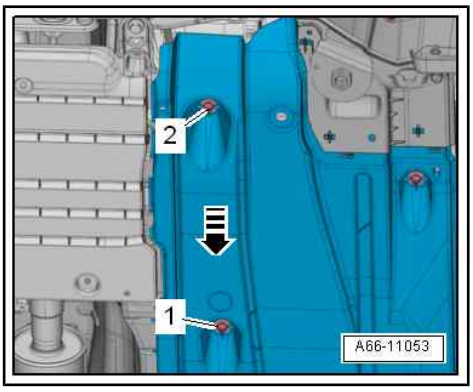

– Release spreader rivets -arrows-.

– Detach noise insulation (rear) -1-.

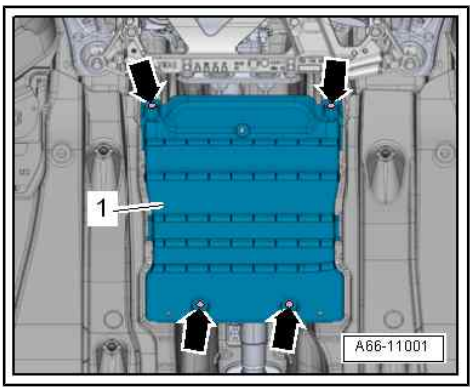

Installing

Installation is carried out in reverse sequence.

Tightening torques

♦ ⇒ “4.1 Exploded view - noise insulation”, page 375

♦ ⇒ “5.1 Exploded view - underbody trim”, page 379

4.2.3 Removing and installing noise insulation (rear) - version 2

Removing

– Release spreader rivets -arrows-.

– Remove bolts -1, 3-.

– Detach noise insulation (rear) -2-.

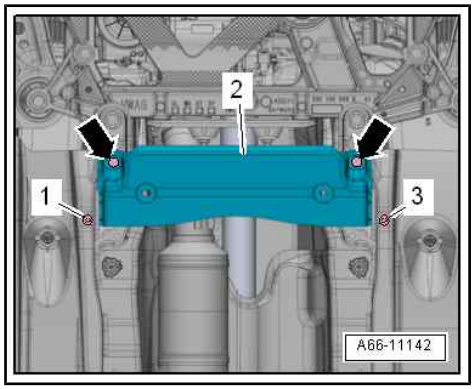

Installing

Installation is carried out in reverse sequence.

Tightening torques

◆ ⇒ “4.1 Exploded view - noise insulation”, page 375

◆ ⇒ “5.1 Exploded view - underbody trim”, page 379

Protected by copyright. Copying for private or commercial purposes, in part or in whole, is not permitted unless authorised by AUDI AG. AUDI AG does not guarantee or accept any liability with respect to the correctness of information in this document. Copyright by AUDI AG.

5 Underbody trim

⇒ “5.1 Exploded view - underbody trim”, page 379

⇒ “5.2 Removing and installing underbody trim”, page 382

⇒ “5.3 Removing and installing tunnel cross-piece”, page 387

5.1 Exploded view - underbody trim

⇒ “5.1.1 Exploded view - underbody trim, vehicles without high-voltage system”, page 379

⇒ “5.1.2 Exploded view - underbody trim, vehicles with high-voltage system”, page 381

5.1.1 Exploded view - underbody trim, vehicles without high-voltage system

WARNING

Damaged natural gas fuel tanks constitute an explosion risk - risk of death!

- *If components at the rear and/or rear side of the vehicle (e.g. bumper cover, rear lid, underbody trim, longitudinal member, rear cross panel, etc.) are removed due to accident damage, the natural gas fuel tanks must be checked for damage.*
- *Carry out assessment of damage to fuel tanks ⇒ Natural gas engines - General information; Rep. gr. 20 ; Assessing damage to fuel tanks .*

Protected by copyright. Copying for private or commercial purposes, in part or in whole, is not permitted unless authorised by AUDI AG. AUDI AG does not guarantee or accept any liability with respect to the correctness of information in this document. Copyright by AUDI AG.

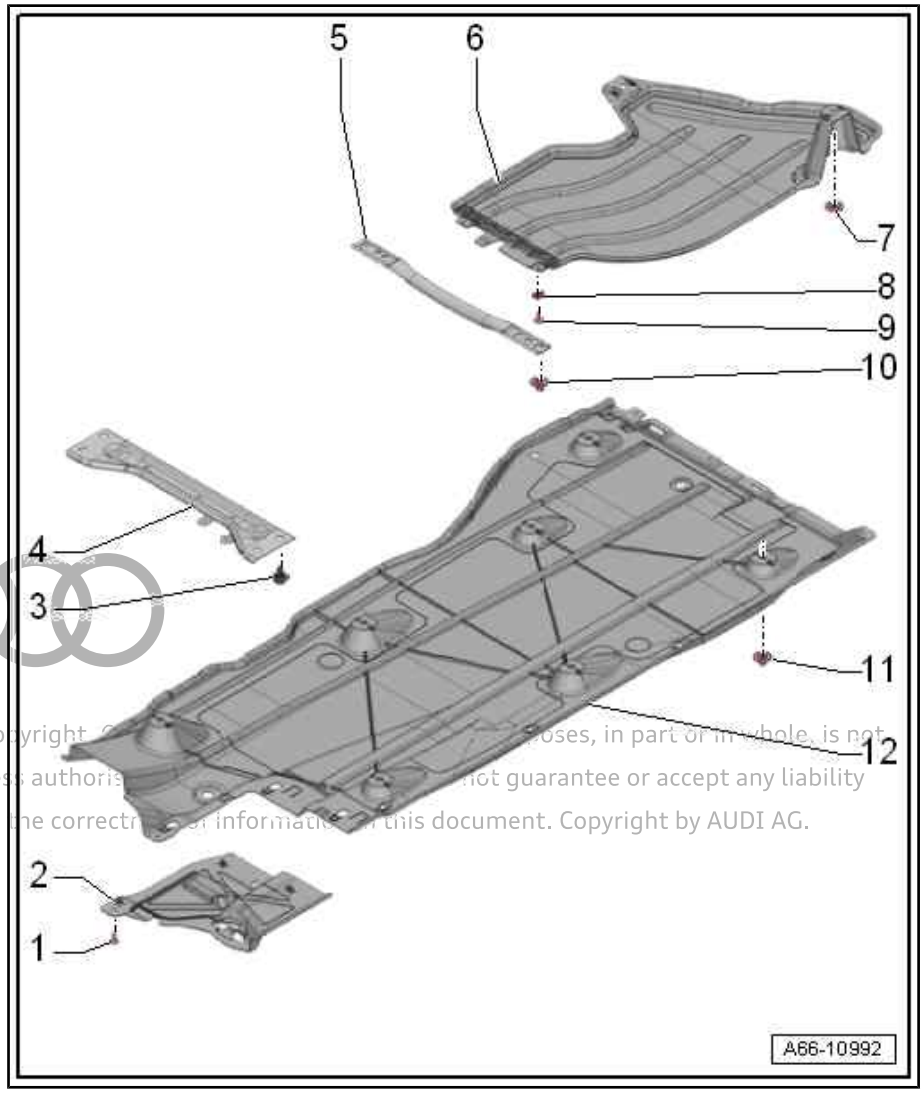

1 - Bolt
- ❑ 2 Nm

2 - Underbody trim (front)
- ❑ Removing and installing ⇒ page 382

3 - Bolt
- ❑ 4x
- ❑ 20 Nm

4 - Tunnel cross-piece (front)
- ❑ Different versions
- ❑ Removing and installing ⇒ page 387

5 - Tunnel cross-piece (rear)
- ❑ Removing and installing ⇒ page 388

6 - Underbody trim (rear)
- ❑ Removing and installing ⇒ page 384

7 - Clamping washer
- ❑ Bolt, 2x

8 - Speed nut
- ❑ Bolt, 2x

9 - Bolt
- ❑ Bolt, 2x
- ❑ 2 Nm

10 - Nut
- ❑ 4x
- ❑ 20 Nm

11 - Nut
- ❑ With retaining element
- ❑ 7x
- ❑ 2 Nm

12 - Underbody trim (centre)
- ❑ Removing and installing ⇒ page 383

Protected by copyright. Copying for private or commercial purposes, in part or in whole, is not permitted unless authorised. AUDI AG does not guarantee or accept any liability with respect to the correctness of information in this document. Copyright by AUDI AG.

Front diagonal struts for Audi A3 Cabriolet - tightening torque and tightening sequence

Note

- ♦ *Renew bolts which are tightened by turning through a specified angle.*
- ♦ *Vehicle must be standing on its wheels when tightening bolts.*

– Tighten bolts -arrows- to 90 Nm and turn 45° further.

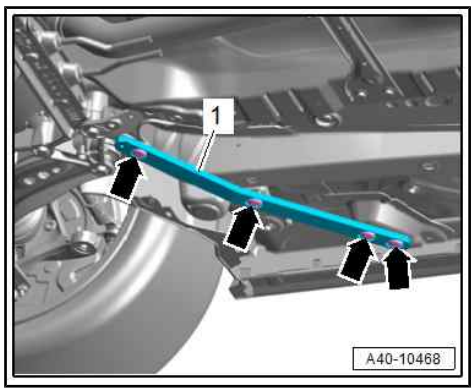

Rear diagonal struts for Audi A3 Cabriolet - tightening torque

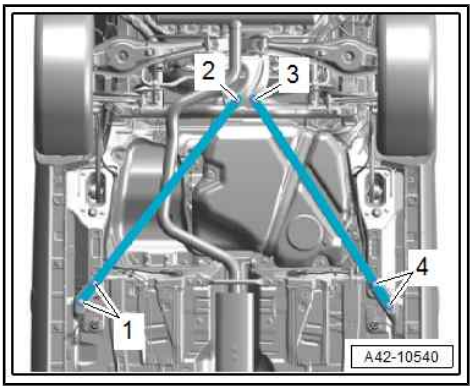

Note

- *Renew bolts which are tightened by turning through a specified angle.*
- *Vehicle must be standing on its wheels when tightening bolts.*

– Tighten bolts -1 ... 4- to 90 Nm and turn 45° further.

5.1.2 Exploded view - underbody trim, vehicles with high-voltage system

1 - Underbody trim (centre)
- ❑ Removing and installing ⇒ page 383

2 - Nut
- ❑ With retaining element
- ❑ 7x
- ❑ 2 Nm

3 - Bolt
- ❑ 4x
- ❑ 20 Nm

4 - Tunnel cross-piece (front)
- ❑ Removing and installing ⇒ page 387

5 - Tunnel cross-piece (rear)
- ❑ Removing and installing ⇒ page 388

6 - Nut
- ❑ 4x
- ❑ 20 Nm

7 - Underbody trim (rear)
- ❑ Removing and installing ⇒ page 385

8 - Bolt
- ❑ 5x
- ❑ 2 Nm

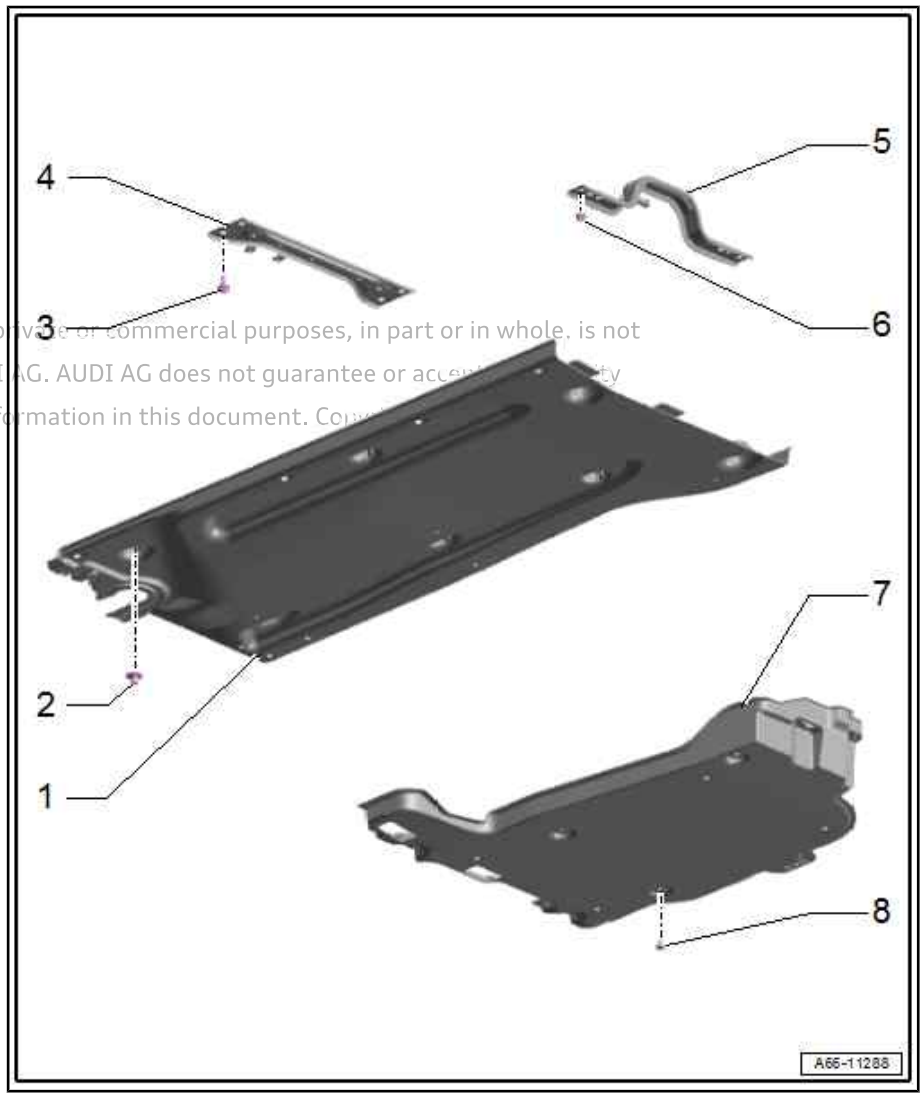

Protected by copyright. Copying for private or commercial purposes, in part or in whole, is not permitted unless authorised by AUDI AG. AUDI AG does not guarantee or accept any liability with respect to the correctness of information in this document. Copyright by AUDI AG.

Protective rail - tightening torque

– Tighten bolts to specified torque:

Bolts	Tightening torque
-1-	10 Nm
-2, 3-	⇒ Running gear, axles, steering; Rep. gr. 42 ; Axle beam; Exploded view - axle beam

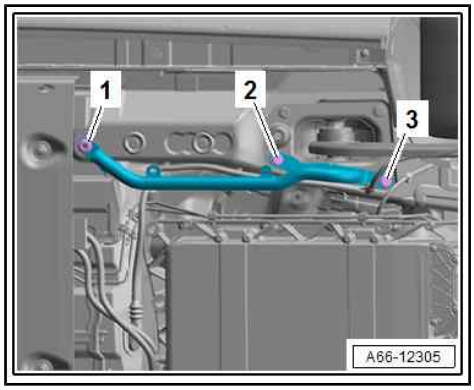

5.2 Removing and installing underbody trim

⇒ “5.2.1 Removing and installing underbody trim (front)”, page 382

⇒ “5.2.2 Removing and installing underbody trim (centre)”, page 383

⇒ “5.2.3 Removing and installing underbody trim (centre) - vehicles with high-voltage system”, page 383

⇒ “5.2.4 Removing and installing underbody trim (rear)”, page 384

⇒ “5.2.5 Removing and installing underbody trim (rear) - vehicles with high-voltage system”, page 385

⇒ “5.2.6 Removing and installing underbody trim for natural gas fuel tanks”, page 385

Protected by copyright. Copying for private or commercial purposes, in part or in whole, is not permitted unless authorised by AUDI AG. AUDI AG does not guarantee or accept any liability with respect to the correctness of information in this document. Copyright by AUDI AG.

5.2.1 Removing and installing underbody trim (front)

Removing

– Remove bolt -2-.

– Release retaining tabs -arrows-.

– Pull underbody trim (front) -1- out of fastener towards rear.

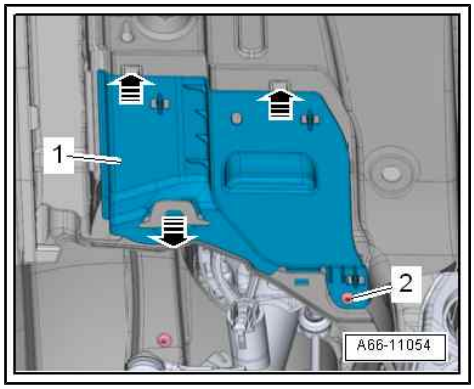

Installing

Installation is carried out in reverse order; note the following:

– Insert mounting for underbody trim (front) -1- in opening in underbody trim (centre) -2- -arrow A-.
– Slide underbody trim (front) forwards -arrow B- until it engages audibly.

Tightening torques

♦ ⇒ “5.1.1 Exploded view - underbody trim, vehicles without high-voltage system”, page 379 .

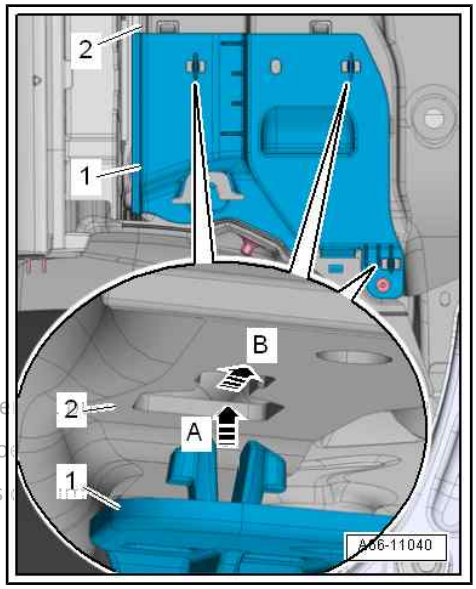

Protected by copyright. Copying for private or comme
permitted unless authorised by AUDI AG. AUDI AG do
with respect to the correctness of information in this

5.2.2 Removing and installing underbody trim (centre)

Removing

– Remove underbody trim (front) ⇒ page 382 .
– If fitted, remove underbody trim (rear) ⇒ page 384 .
– Remove nuts -arrows-.
– Detach underbody trim (centre) -1-.

Installing

Installation is carried out in reverse sequence.

Tightening torques

♦ ⇒ “5.1.1 Exploded view - underbody trim, vehicles without high-voltage system”, page 379 .

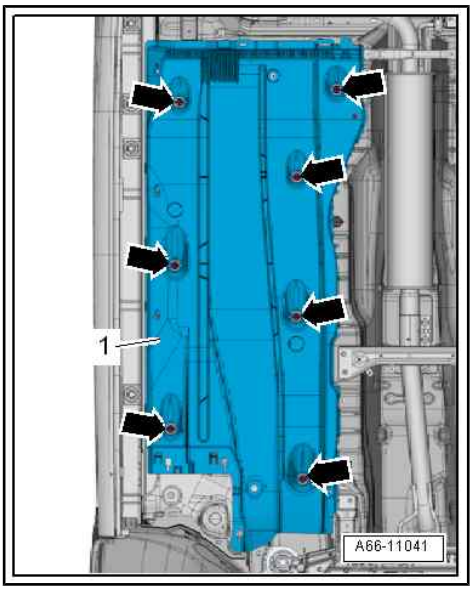

5.2.3 Removing and installing underbody trim (centre) - vehicles with high-voltage system

Removing

– Remove underbody trim (rear) ⇒ page 385 .

Protected by copyright. Copying for private or commercial purposes, in part, is not permitted unless authorised by AUDI AG. AUDI AG does not guarantee or accept any liability with respect to the correctness of information in this document. Copyright by AUDI AG.

– Remove bolt -1-.
– Remove nuts -2-.
– Pull underbody trim (centre) -3- off towards rear.

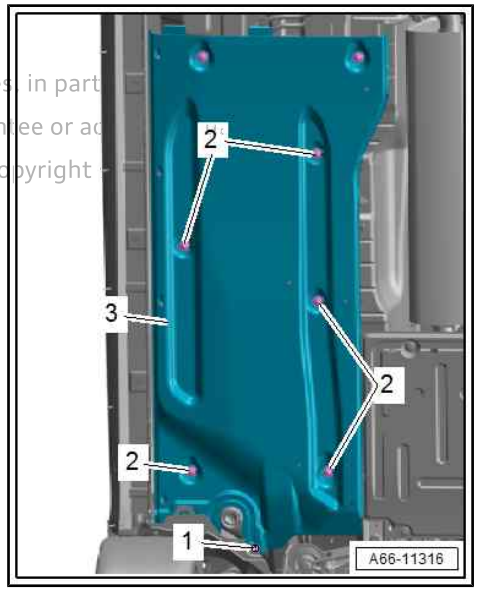

Installing

Installation is carried out in reverse sequence.

Tightening torques

♦ ⇒ “5.1.2 Exploded view - underbody trim, vehicles with high-voltage system”, page 381 .

5.2.4 Removing and installing underbody trim (rear)

> ⚠ **WARNING**
>
> *Damaged natural gas fuel tanks constitute an explosion risk - risk of death!*
>
> - *If components at the rear and/or rear side of the vehicle (e.g. bumper cover, rear lid, underbody trim, longitudinal member, rear cross panel, etc.) are removed due to accident damage, the natural gas fuel tanks must be checked for damage.*
> - *Carry out assessment of damage to fuel tanks ⇒ Natural gas engines - General information; Rep. gr. 20 ; Assessing damage to fuel tanks .*

Removing

– Unfasten clamping washers -arrows-.
– Remove bolts -2-.
– Detach underbody trim (rear) -1-.

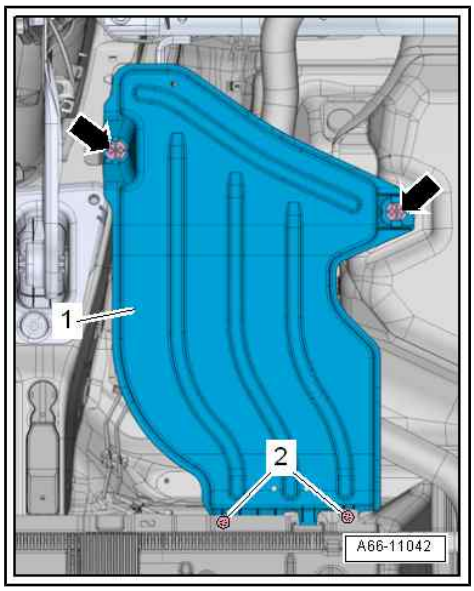

Installing

Installation is carried out in reverse sequence.

Tightening torques

♦ ⇒ “5.1.1 Exploded view - underbody trim, vehicles without high-voltage system”, page 379 .

5.2.5 Removing and installing underbody trim (rear) - vehicles with high-voltage system

Removing

– Remove nuts -1-.

– Remove bolts -2-.

– Detach underbody trim (rear) -3-.

Installing

Installation is carried out in reverse sequence.

Tightening torques

♦ ⇒ “5.1.2 Exploded view - underbody trim, vehicles with high-voltage system”, page 381 .

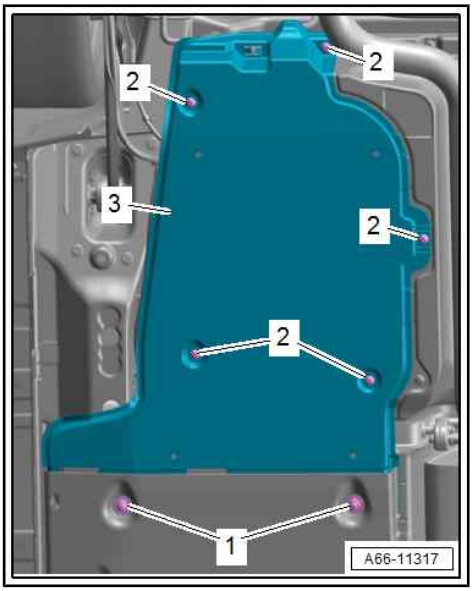

5.2.6 Removing and installing underbody trim for natural gas fuel tanks

WARNING

Damaged natural gas fuel tanks constitute an explosion risk - risk of death!

- *If components at the rear and/or rear side of the vehicle (e.g. bumper cover, rear lid, underbody trim, longitudinal member, rear cross panel, etc.) are removed due to accident damage, the natural gas fuel tanks must be checked for damage.*
- *Carry out assessment of damage to fuel tanks ⇒ Natural gas engines - General information; Rep. gr. 20 ; Assessing damage to fuel tanks .*

Protected by copyright. Copyright for private or commercial purposes, in part or in whole, is not permitted unless authorised by AUDI AG. AUDI AG does not guarantee or accept any liability with respect to the correctness of information in this document. Copyright by AUDI AG.

1 - Underbody trim for natural gas fuel tanks

- ❑ Removing
- – Unscrew nuts, working from front to rear.
- – Unhook underbody trim from mounting for fuel tank towards front, then pull it out towards rear.

Installing

- – Slide underbody trim (retaining hooks at front) into mounting for natural gas fuel tanks ⇒ page 386 .
- – Tighten nuts to specified torque, working from rear to front.

2 - Mounting for natural gas fuel tanks

3 - Natural gas fuel tanks

4 - Bolt

- ❑ Only installed on Saloon
- ❑ 2 Nm

5 - Nut

- ❑ 2 Nm

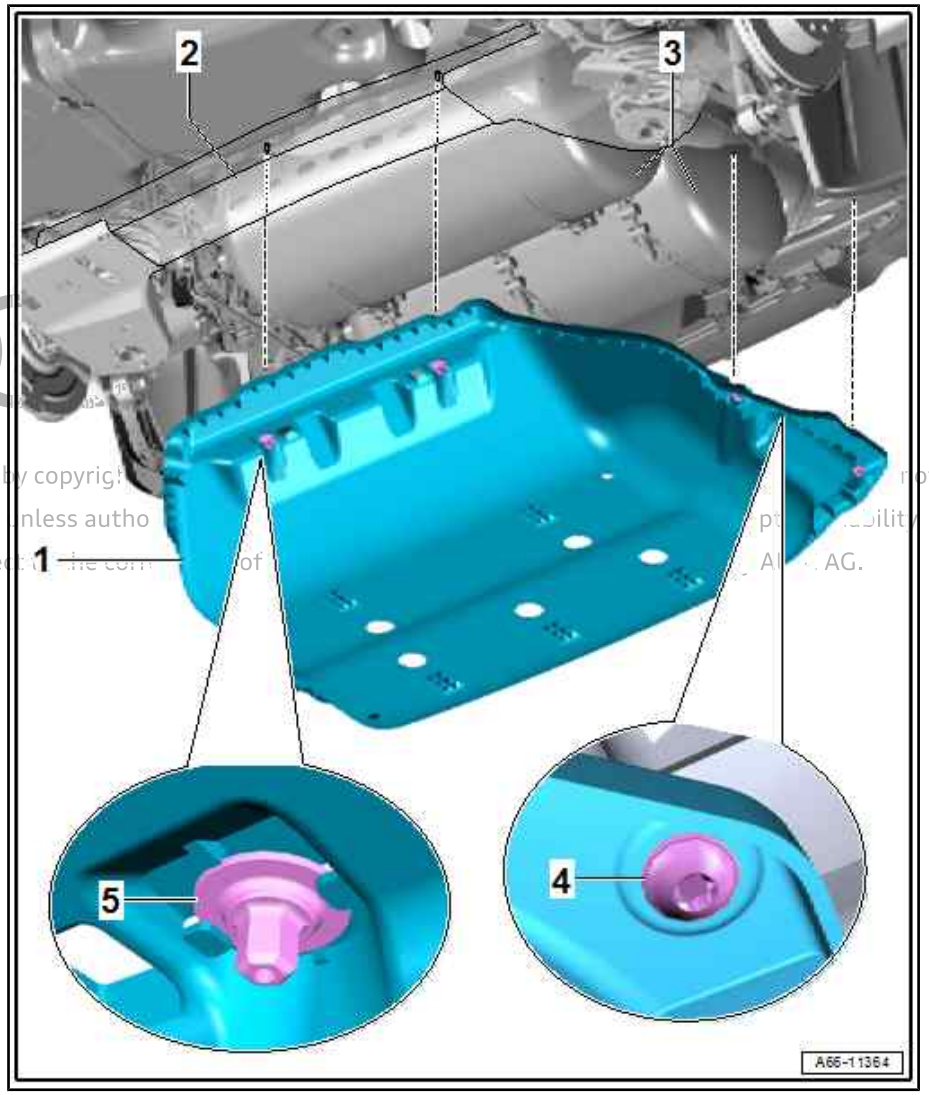

Protected by copyright. Copying for private or commercial purposes, in part or in whole, is not permitted unless authorized by AUDI AG. AUDI AG does not guarantee or accept any liability with respect to the correctness of information in this document.

Inserting underbody trim into mounting for natural gas fuel tanks

- – When installing underbody trim -1-, retaining hooks -arrows- must be inserted into mounting for natural gas fuel tanks -2-.

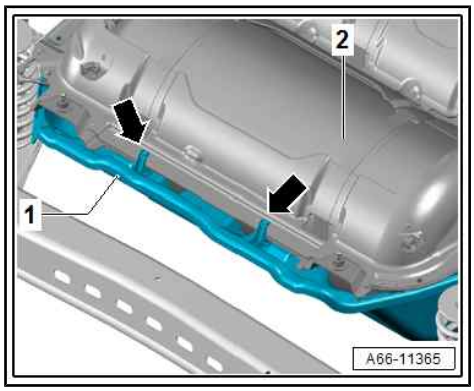

5.3 Removing and installing tunnel cross-piece

⇒ “5.3.1 Removing and installing tunnel cross-piece (front)”, page 387

⇒ “5.3.2 Removing and installing tunnel cross-piece (rear) - vehicles without high-voltage system”, page 388

⇒ “5.3.3 Removing and installing tunnel cross-piece (rear) - vehicles with high-voltage system”, page 388

5.3.1 Removing and installing tunnel cross-piece (front)

Removing

– If fitted, remove noise insulation (rear) ⇒ page 377 .

– Vehicles with TDI engine: Move electrical wiring harness -1- clear -arrows-.

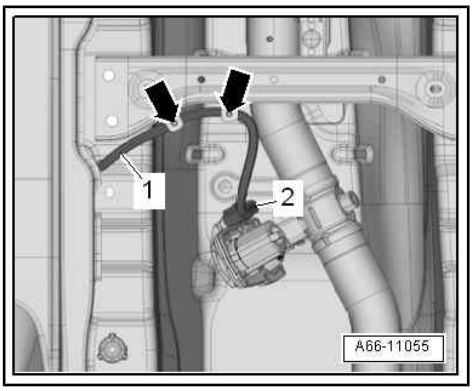

– Remove bolts -arrows-.

– Detach tunnel cross-piece (front) -1-.

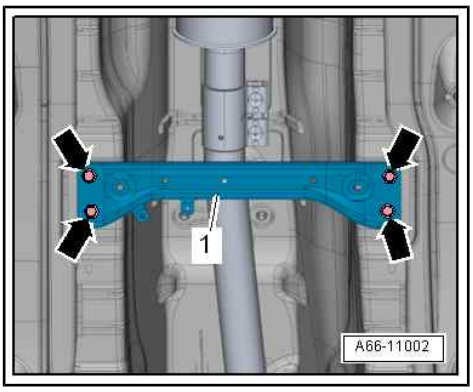

Installing

Installation is carried out in reverse sequence.

Tightening torques

- ⇒ “4.1 Exploded view - noise insulation”, page 375
- ⇒ “5.1.1 Exploded view - underbody trim, vehicles without high-voltage system”, page 379 .

Protected by copyright. Copying for private or commercial purposes, in part or in whole, is not permitted unless authorised by AUDI AG. AUDI AG does not guarantee or accept any liability with respect to the correctness of information in this document. Copyright by AUDI AG.

5.3.2 Removing and installing tunnel cross-piece (rear) - vehicles without high-voltage system

Removing

– Unscrew nuts -arrows- and press underbody trim -1- downwards slightly.

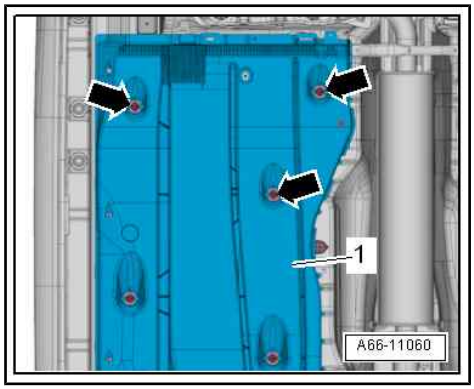

– Remove nuts -1, 3-.

– Detach tunnel cross-piece (rear) -2-.

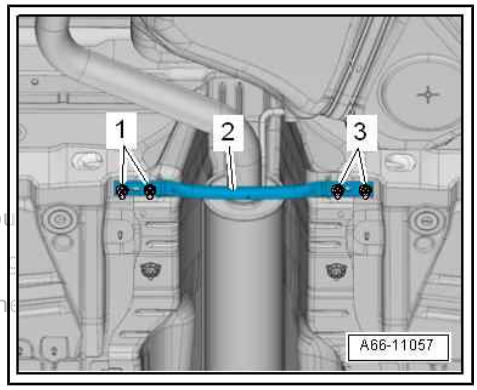

Installing

Installation is carried out in reverse sequence.

Tightening torques

♦ ⇒ “5.1.1 Exploded view - underbody trim, vehicles without high-voltage system”, page 379 .

Protected by copyright. Copying for private or commercial pu
permitted unless authorised by AUDI AG. AUDI AG does not
with respect to the correctness of information in this docum

5.3.3 Removing and installing tunnel cross-piece (rear) - vehicles with high-voltage system

Removing

– Remove underbody trim (rear) ⇒ page 385 .

– Unfasten exhaust system -1- from mounting -3-.

– Remove nuts -2, 5-.

– Detach tunnel cross-piece (rear) -4-.

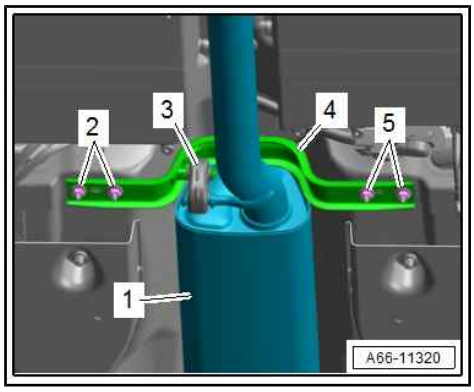

Installing

Installation is carried out in reverse sequence.

Tightening torques

♦ ⇒ “5.1.2 Exploded view - underbody trim, vehicles with high-voltage system”, page 381 .

6 Roof strips / roof rails

⇒ “6.1 Exploded view - roof rail”, page 389
⇒ “6.2 Exploded view - roof trim strip”, page 390
⇒ “6.3 Removing and installing roof rail”, page 391
⇒ “6.4 Removing and installing roof trim strip”, page 392

6.1 Exploded view - roof rail

1 - Nut

- ❑ 4x
- ❑ Apply locking fluid when installing; for locking fluid, refer to ⇒ Electronic parts catalogue
- ❑ Tightening sequence ⇒ page 390

2 - Compensation element

- ❑ 4x
- ❑ Removing and installing ⇒ page 391

3 - Stop washer

- ❑ 4x
- ❑ Renew if damaged

4 - Adjuster screw

- ❑ 4x
- ❑ Apply locking fluid when installing; for locking fluid, refer to ⇒ Electronic parts catalogue
- ❑ 0.5 Nm

5 - Roof rail

- ❑ Removing and installing ⇒ page 391

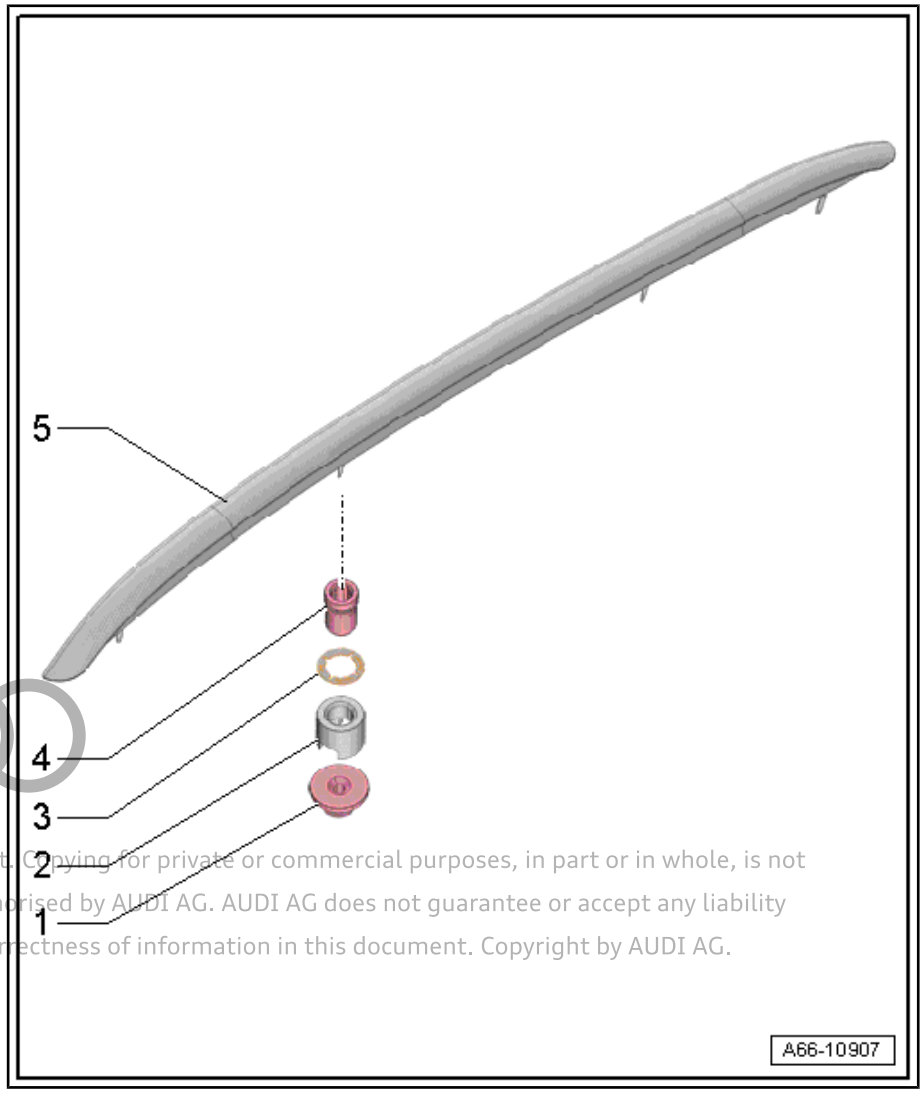

Protected by copyright. Copying for private or commercial purposes, in part or in whole, is not permitted unless authorised by AUDI AG. AUDI AG does not guarantee or accept any liability with respect to the correctness of information in this document. Copyright by AUDI AG.

Roof rail - tightening torque and sequence

– Tighten nuts to 10 Nm in the sequence -2, 3, 4, 1-.

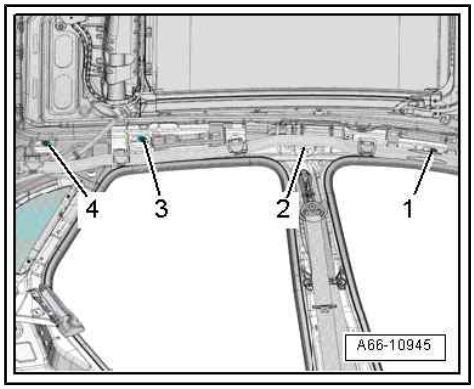

6.2 Exploded view - roof trim strip

Protected by copyright. Commercial purposes, in part or in whole, is not permitted unless authorized. AUDI AG does not guarantee or accept any liability with respect to the correctness of information in this document. Copyright by AUDI AG.

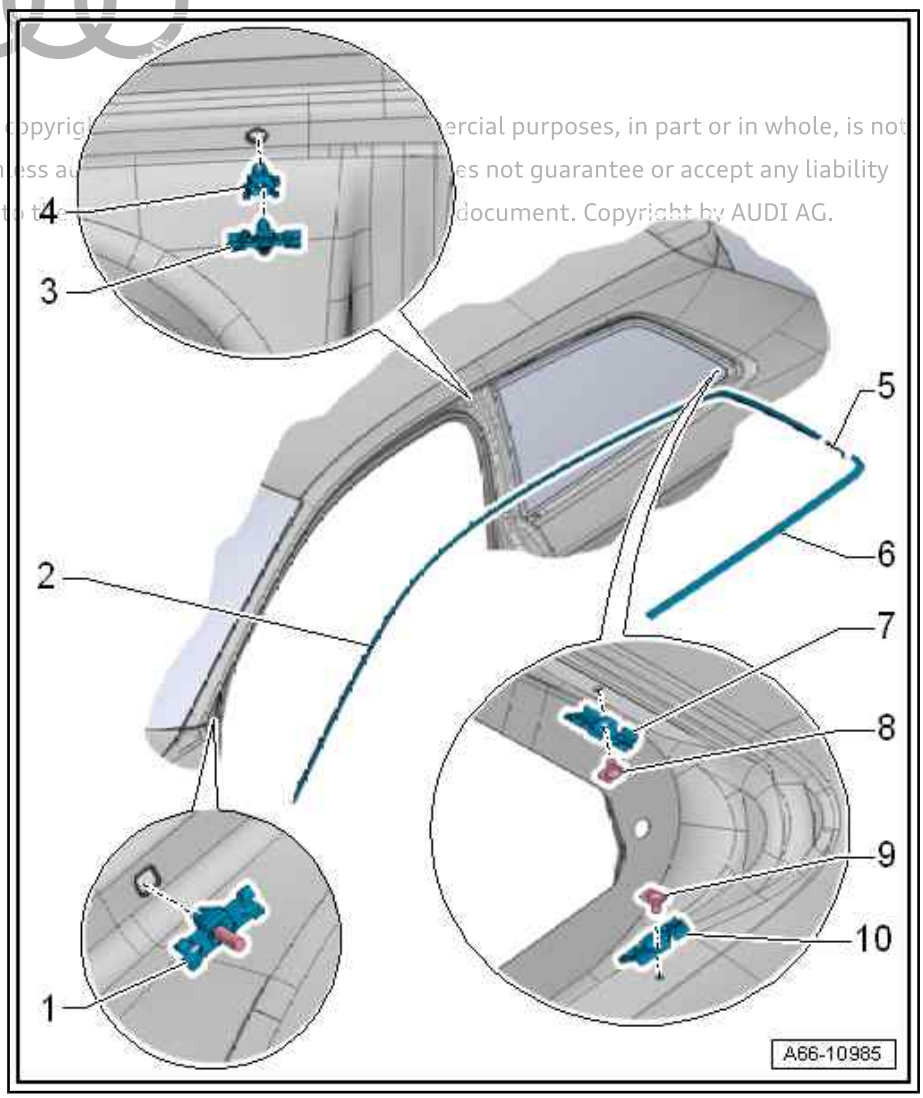

1 - Fastener
- ❑ A3: 9x
- ❑ Sportback: 13x

2 - Roof trim strip
- ❑ Removing and installing ⇒ page 392

3 - Fastener
- ❑ For mounting for clip

4 - Mounting for clip
- ❑ For positioning roof trim strip on body

5 - Seal
- ❑ For trim strip for side window
- ❑ Self-adhesive

6 - Trim strip for side window
- ❑ Equipment version with high-gloss package
- ❑ Removing and installing ⇒ page 352

7 - Clip
- ❑ A3: 5x
- ❑ Sportback: 4x

8 - Pop rivet
- ❑ A3: 5x
- ❑ Sportback: 4x

9 - Pop rivet
- ❑ A3: 6x
- ❑ Sportback: 2x

10 - Clip
- ❑ A3: 6x
- ❑ Sportback: 2x

6.3 Removing and installing roof rail

⇒ "6.3.1 Removing and installing roof rail", page 391

⇒ "6.3.2 Removing and installing compensation element", page 391

6.3.1 Removing and installing roof rail

- Observe safety precautions ⇒ General body repairs, interior; Rep. gr. 00 ; Safety precautions; Safety precautions when working on pyrotechnic components .

Special tools and workshop equipment required

♦ Socket - T40078-

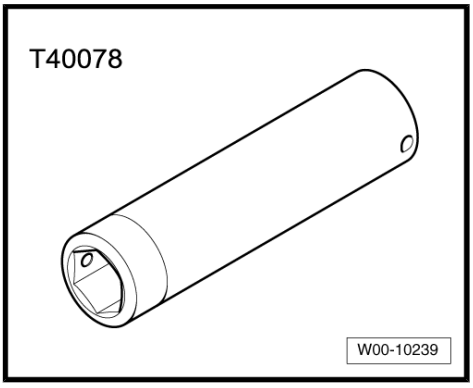

Removing

– Remove curtain airbag igniter (but leave curtain airbag installed) ⇒ General body repairs, interior; Rep. gr. 69 ; Curtain airbags .

– Unscrew nuts -arrow- using socket - T40078- .

– Lift off roof rail.

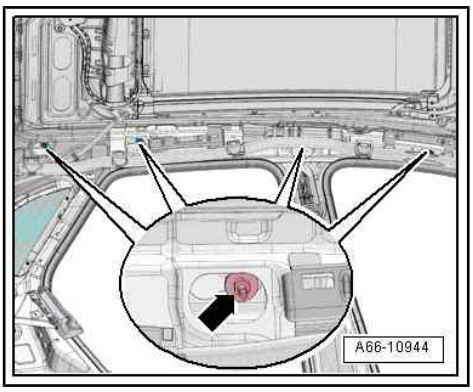

Installing

Installation is carried out in reverse order; note the following:

Note

♦ *Clean thread of stud on roof rail with a wire brush.*

♦ *Carefully remove any locking fluid residue from the threads of the nuts fitted with locking fluid using a thread tap. Otherwise, the studs could shear off when they are removed again.*

– Fit roof rail, inserting guide pin in mounting in roof of vehicle.

– Fit nuts with locking fluid and tighten ⇒ page 390 .

Tightening torques

♦ ⇒ Fig. ""Roof rail - tightening torque and sequence"" , page 390 .

Protected by copyright. Copying for private or commercial purposes, in part or in whole, is not permitted unless authorised by AUDI AG. AUDI AG does not guarantee or accept any liability with respect to the correctness of information in this document. Copyright by AUDI AG.

6.3.2 Removing and installing compensation element

Removing

– Remove roof rail ⇒ page 391 .

– Screw adjuster screw -1- into adjuster element -3-.
– Move adjuster element and take out of roof opening -2- from inside.

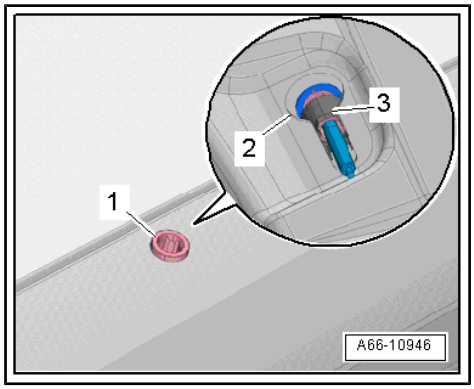

Installing

Installation is carried out in reverse order; note the following:

– Clean thread of adjuster screw -3- with a wire brush.
– Remove any remaining locking fluid from threaded hole of compensation element -1- with a suitable thread tap.
– Check stop washer -2- for damage.
• Stop washer must be seated in groove -arrow-.
– Screw adjuster screw -3- with locking fluid into compensation element -1-, insert in roof opening and secure.
– Install roof rail ⇒ page 391 .

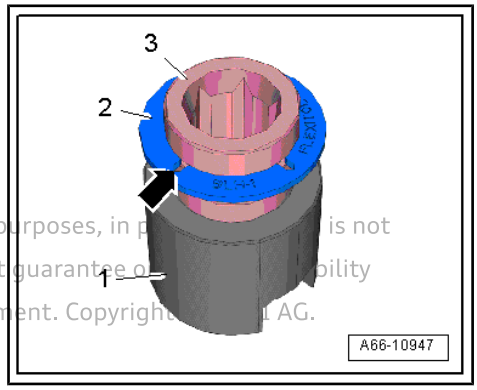

Protected by copyright. Copying for private or commercial purposes, in part or in whole, is not permitted unless authorised by AUDI AG. AUDI AG does not guarantee or assume any liability with respect to the correctness of information in this document. Copyright by AUDI AG.

6.4 Removing and installing roof trim strip

⇒ "6.4.1 Removing and installing roof trim strip - vehicles without high-gloss package", page 392

⇒ "6.4.2 Removing and installing roof trim strip - A3 with high-gloss package", page 393

⇒ "6.4.3 Removing and installing roof trim strip - Sportback with high-gloss package", page 395

6.4.1 Removing and installing roof trim strip - vehicles without high-gloss package

• A second mechanic is required to perform this step (as described on ⇒ page 393).

Special tools and workshop equipment required

♦ Wedges - T10383-

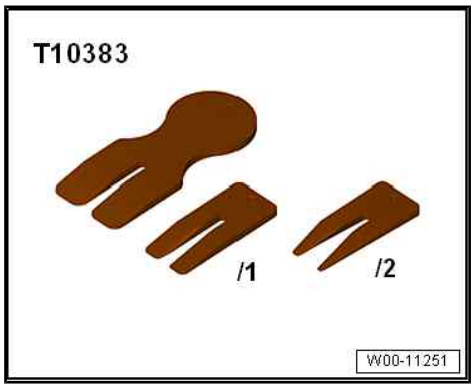

Removing

Note

Take care not to twist or bend roof trim strip.

– Open front door.
– Mask area around roof trim strip at A-pillar with adhesive tape -2- to avoid damaging paintwork.
– Starting at A-pillar, press roof trim strip -1- off retaining clips -arrow- using wedge -T10383/1- .

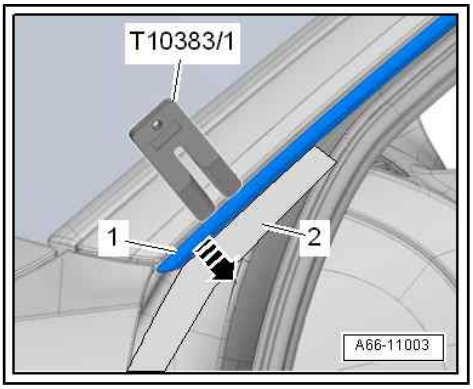

– Have a second mechanic hold the roof trim strip -1- to avoid damaging the paintwork.
– Disengage mounting -2- for roof trim strip from retaining pin -3- of rear side window.
– Detach roof trim strip.

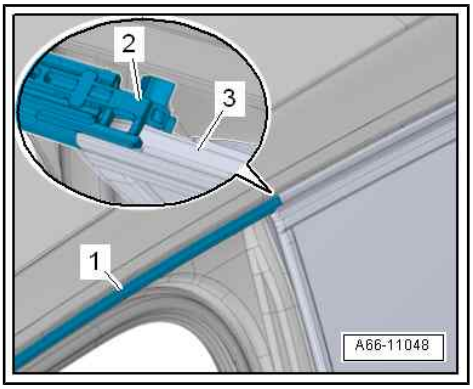

Installing

Installation is carried out in reverse order; note the following:

– Engage mounting -4- for roof trim strip -1- at retaining pin -5- of rear side window.
– Insert guide pin -2- of roof trim strip in hole -3- in roof of vehicle.
– Press roof trim strip onto retaining clips until it engages audibly.

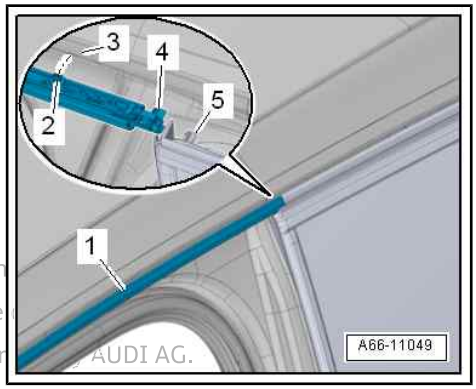

Protected by copyright. Copying for private or commercial purposes, in
permitted unless authorised by AUDI AG. AUDI AG does not guarantee
with respect to the correctness of information in this document. Copyr
AUDI AG.

6.4.2 Removing and installing roof trim strip - A3 with high-gloss package

- A second mechanic is required to perform this step (as described on ⇒ page 394).

Special tools and workshop equipment required

♦ Wedges - T10383-

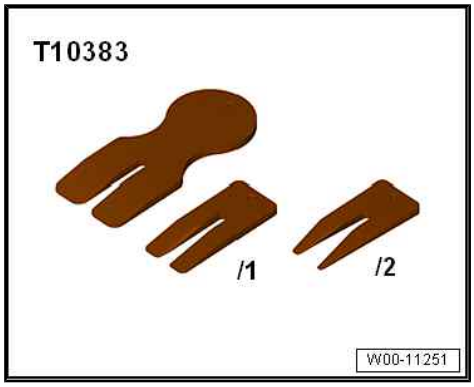

Removing

Note

Take care not to twist or bend roof trim strip.

– Open front door.
– Mask area around roof trim strip at A-pillar with adhesive tape -2- to avoid damaging paintwork.
– Starting at A-pillar, press roof trim strip -1- off retaining clips -arrow- using wedge -T10383/1- .

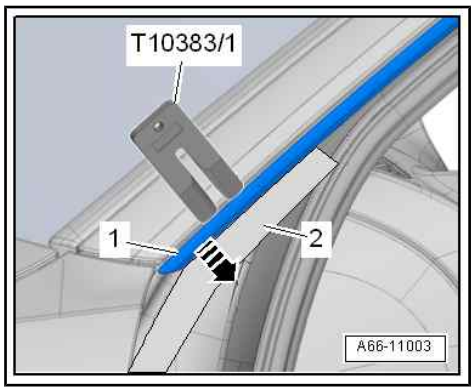

– Pull roof trim strip -2- out of clips -1- in area of rear side window.
– Have a second mechanic hold the roof trim strip to avoid damaging the paintwork.

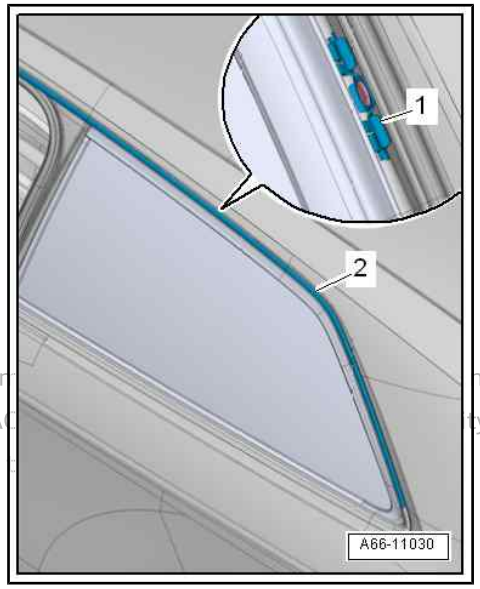

Protected by copyright. Copying for private or cor not
permitted unless authorised by AUDI AG. AUDI A ty
with respect to the correctness of information in

– Mask area around trim strip for side window with adhesive tape -3- to avoid damaging paintwork.
– Pull roof trim strip -2- out of clip on trim strip for side window -1- in direction of -arrow-.
– Detach roof trim strip.

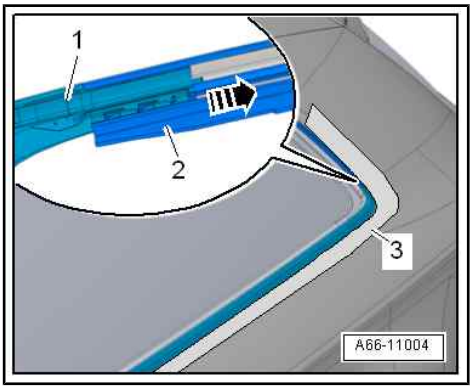

Installing

Installation is carried out in reverse order; note the following:

– Apply special lubricating paste - G 052 141 A2- into connecting clip -7- and/or into guide -6-.
– Fit roof trim strip -1- in trim strip -8- for side window.
• Clip -7- must be inserted correctly in guide -6-.
• Roof trim strip must make flush contact with trim strip for side window.
– Insert centring pin -5- of roof trim strip in clip mounting -4- and guide pin -2- in roof of vehicle.
– Press roof trim strip into clips in area of side window and onto retaining clips -3- so they engage audibly.

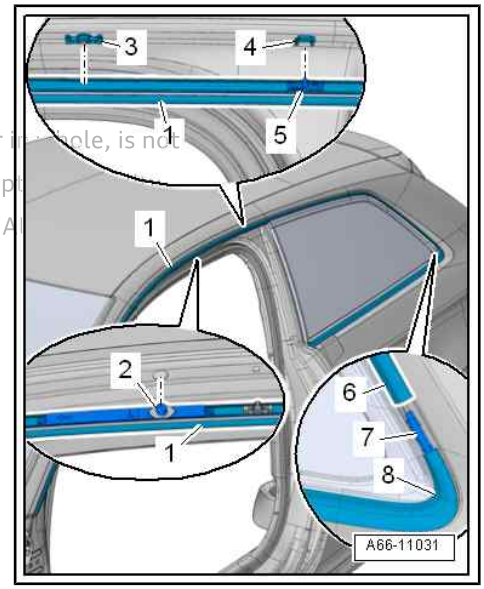

Protected by copyright. Copying for private or commercial purposes, in part or in whole, is not permitted unless authorised by AUDI AG. AUDI AG does not guarantee or accept any liability with respect to the correctness of information in this document. Copyright by AUDI AG.

6.4.3 Removing and installing roof trim strip - Sportback with high-gloss package

• A second mechanic is required to perform this step (as described on ⇒ page 396).

Special tools and workshop equipment required

♦ Wedges - T10383-

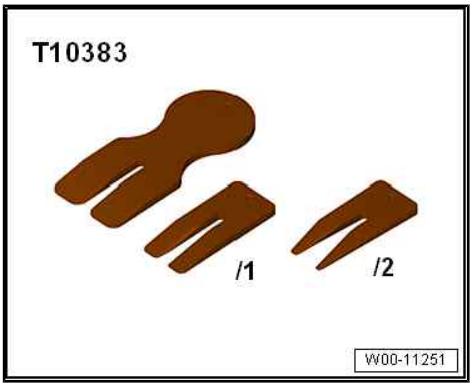

Removing

Note

Take care not to twist or bend roof trim strip.

– Open front and rear doors.
– Mask area around roof trim strip at A-pillar with adhesive tape -2- to avoid damaging paintwork.
– Starting at A-pillar, press roof trim strip -1- off retaining clips -arrow- using wedge -T10383/1- .

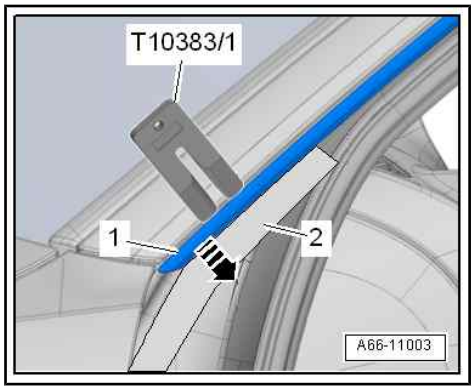

– Pull roof trim strip -2- out of clips -1- in area of rear side window.
– Have a second mechanic hold the roof trim strip to avoid damaging the paintwork.

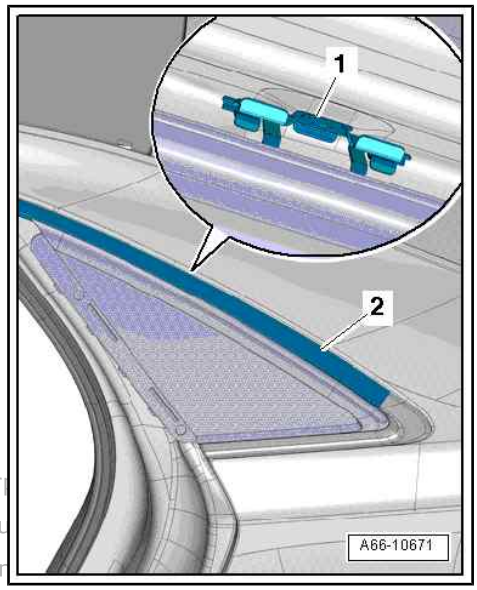

Protected by copyright. Copying for private or commercial pur
permitted unless authorised by AUDI AG. AUDI AG does not gu
with respect to the correctness of information in this documen

– Mask area around trim strip for side window with adhesive tape -3- to avoid damaging paintwork.
– Pull roof trim strip -2- out of clip on side window -1- in direction of -arrow-.
– Detach roof trim strip.

Installing

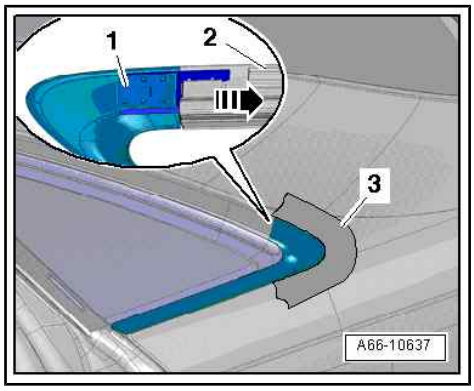

– Apply special lubricating paste - G 052 141 A2- into connecting clip -5- and/or into guide -6-.
– Fit roof trim strip -1- in trim strip -7- for side window.
• Clip -5- must be inserted correctly in guide -6-.
• Roof trim strip must make flush contact with trim strip for side window.
– Insert guide pin -4- of roof trim strip into clip mounting -3- in roof of vehicle.
– Press roof trim strip into clips in area of side window and onto retaining clips -2- so they engage audibly.

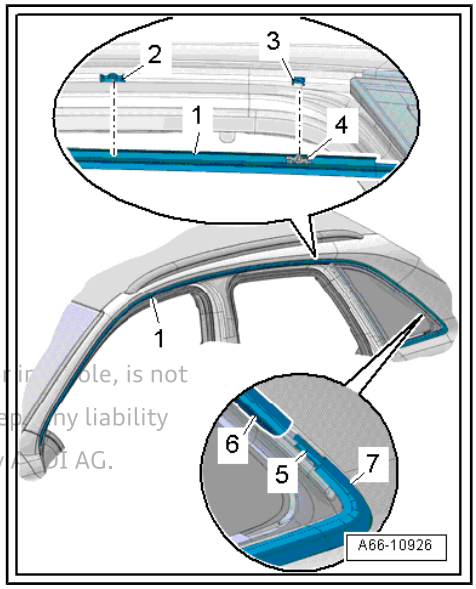

Protected by copyright. Copying for private or commercial purposes, in part or in whole, is not permitted unless authorised by AUDI AG. AUDI AG does not guarantee or accept any liability with respect to the correctness of information in this document. Copyright by AUDI AG.

7 Exterior mirrors

⇒ “7.1 Exploded view - exterior mirror”, page 398

⇒ “7.2 Removing and installing mirror glass”, page 399

⇒ “7.3 Removing and installing mirror adjustment unit”, page 400

⇒ “7.4 Removing and installing mirror trim”, page 400

⇒ “7.5 Removing and installing cover for mirror”, page 401

⇒ “7.6 Removing and installing exterior mirror”, page 401

7.1 Exploded view - exterior mirror

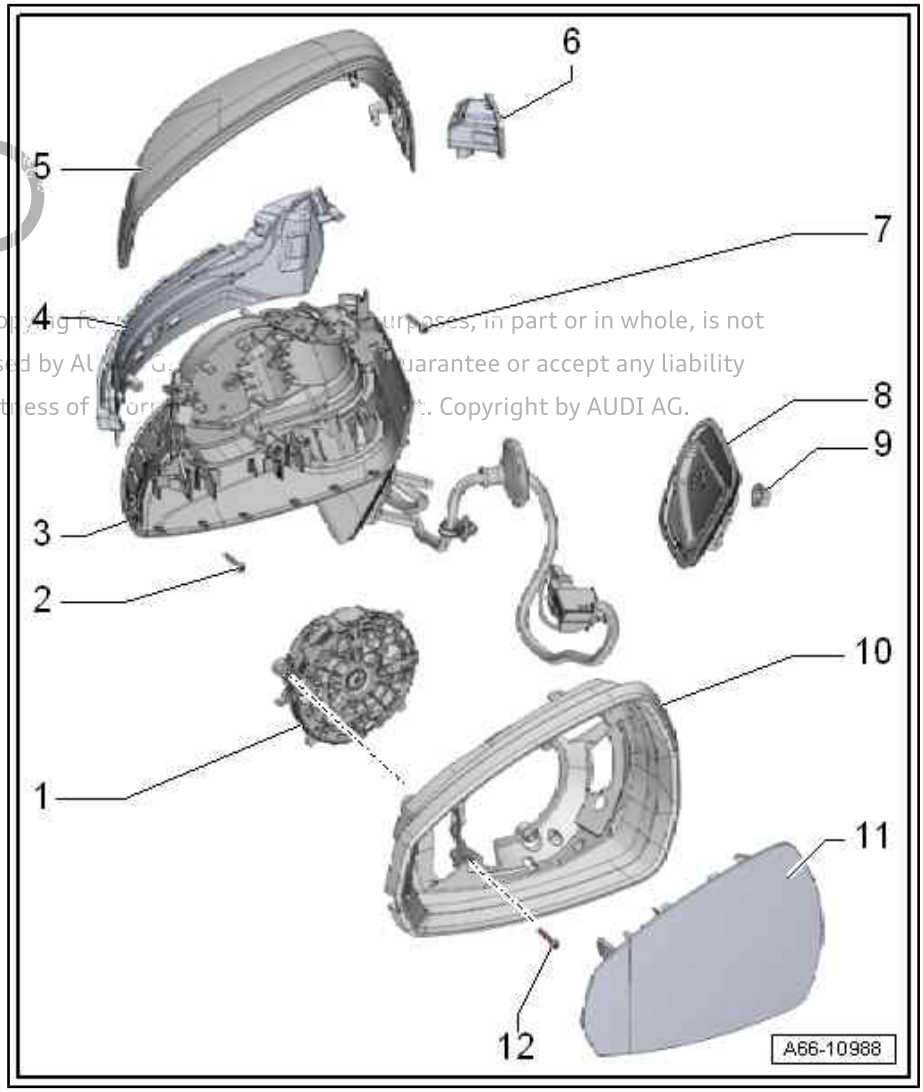

1 - Mirror adjustment unit

- ❑ Removing and installing ⇒ page 400

2 - Bolt

- ❑ 3x
- ❑ 1.5 Nm

3 - Exterior mirror

- ❑ Removing and installing ⇒ page 401

4 - Turn signal repeater bulb in exterior mirror

- ❑ Exploded view ⇒ Electrical system; Rep. gr. 94 ; Lights in exterior mirror; Exploded view - lights in exterior mirror

5 - Cover for mirror

- ❑ Removing and installing ⇒ page 401

6 - Lane change assist warning lamp in exterior mirror

- ❑ Overview ⇒ Electrical system; Rep. gr. 96 ; Lane change assist; Overview - lane change assist

7 - Bolt

- ❑ Bolt, 2x
- ❑ Tightening torque ⇒ Electrical system; Rep. gr. 94 ; Lights in exterior mirror; Exploded view - lights in exterior mirror

8 - Seal (bottom)

- ❑ For mirror base
- ❑ Renew if damaged

9 - Nut

- ❑ 3x
- ❑ 6 Nm

Protected by copyright. Copying for private or commercial purposes, in part or in whole, is not permitted unless authorised by AUDI AG. AUDI AG does not guarantee or accept any liability with respect to the correctness of information in this document. Copyright by AUDI AG.

10 - Mirror trim

- ❑ Removing and installing ⇒ page 400

11 - Mirror glass

- ❑ Removing and installing ⇒ page 399

12 - Bolt

- ❑ 1x or 3x (depending on equipment version)
- ❑ 1.5 Nm

7.2 Removing and installing mirror glass

Special tools and workshop equipment required

- ♦ Suction grip - 3208-

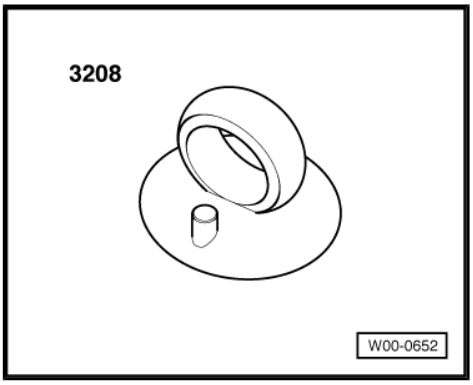

- ♦ Protective gloves

Protected by copyright. Copying for private or commercial purposes, in part or in whole, is not permitted unless authorised by AUDI AG. AUDI AG does not guarantee or accept any liability with respect to the correctness of information in this document. Copyright by AUDI AG.

Removing

> ⚠ **WARNING**
>
> *Risk of injury to hands and eyes due to glass splinters.*
>
> *Danger of cutting yourself.*
>
> - *Put on safety goggles.*
> - *Put on protective gloves.*

– Apply suction grip - 3208- on mirror glass -1-, as shown in illustration.

– Carefully pull mirror glass off mirror adjustment unit with suction grip - 3208- .

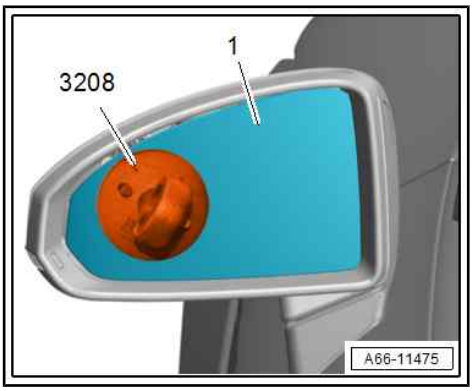

Protected by copyright. Copying for private or commercial purposes, in part, is not permitted unless authorised by AUDI AG. AUDI AG does not give any warranty with respect to the correctness of information in this document.

– Unplug electrical connectors -1 and 2- for mirror glass heating on rear of mirror glass -3-.
– If necessary, unclip electrical connector -4- from bracket and unplug.

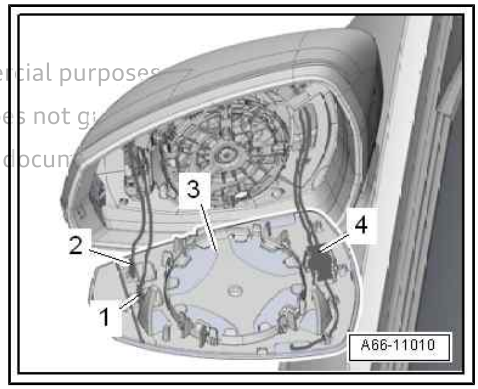

Installing

Installation is carried out in reverse order; note the following:

– Position mirror glass at mirror adjustment unit and press mirror glass on.

Note

Only exert pressure in the centre of the mirror when pressing on the mirror glass.

7.3 Removing and installing mirror adjustment unit

Removing

– Remove mirror glass ⇒ page 399 .

Version 1:

– Remove bolts -arrows-.
– Take adjustment unit -2- out of mounting.
– Unplug electrical connector -1-.

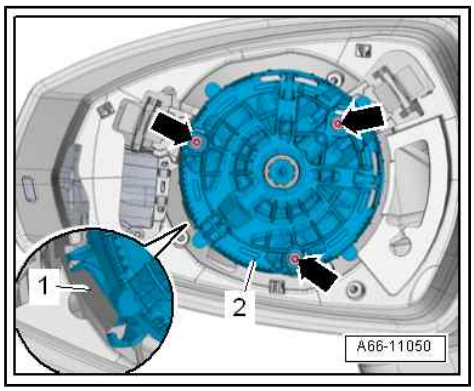

Version 2:

– Remove bolt -arrow-.
– Disengage mirror adjustment unit -2- on outside of mounting.
– Unplug electrical connector -1-.
– Detach mirror adjustment unit.

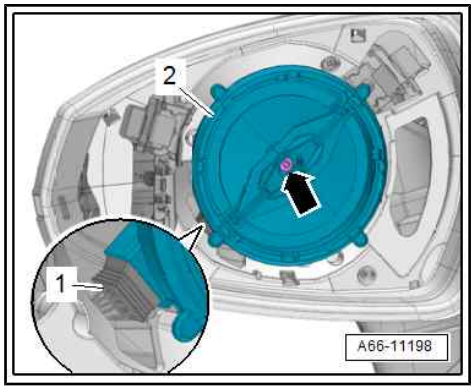

Installing

Installation is carried out in reverse sequence.

Tightening torques

♦ ⇒ “7.1 Exploded view - exterior mirror”, page 398 .

7.4 Removing and installing mirror trim

Removing

– Remove mirror adjustment unit ⇒ page 400 .

– Remove bolts -4-.
– Release retaining tabs -2- using a small screwdriver -1- -arrows-.
– Pull mirror trim -5- off towards rear.
– If necessary, pull electrical connector -3- out of mounting.

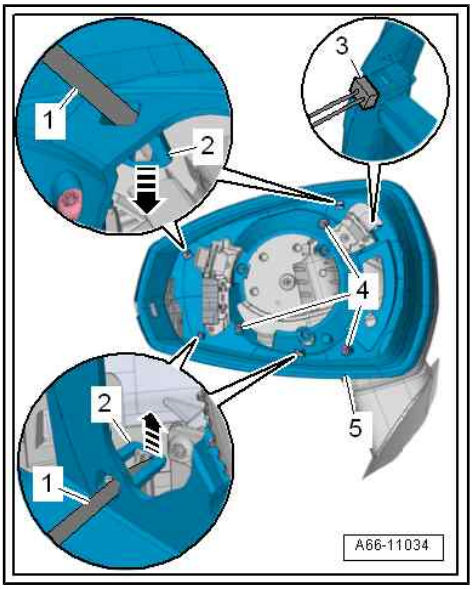

Installing

Installation is carried out in reverse order; note the following:

- You should hear mirror trim engage.

Tightening torques

♦ ⇒ “7.1 Exploded view - exterior mirror”, page 398 .

7.5 Removing and installing cover for mirror

Removing

– Remove mirror trim ⇒ page 400 .
– If fitted: Remove lane change assist warning lamp ⇒ Electrical system; Rep. gr. 96 ; Lane change assist; Overview - lane change assist .
– Release retaining tabs -2- -arrows-.
– Pull cover -1- for mirror off towards front.

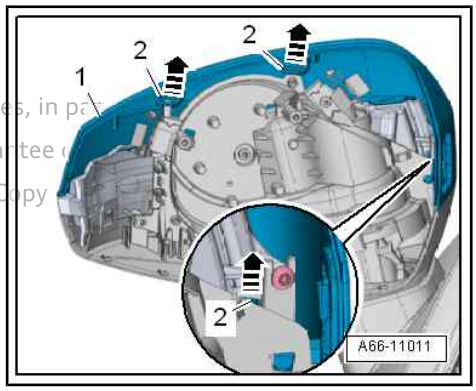

Installing

Installation is carried out in reverse sequence.

Tightening torques

♦ ⇒ “7.1 Exploded view - exterior mirror”, page 398 .

Protected by copyright. Copying for private or commercial purposes, in part or in whole, is not permitted unless authorised by AUDI AG. AUDI AG does not guarantee or assume any liability with respect to the correctness of information in this document. Copyright by AUDI AG.

7.6 Removing and installing exterior mirror

Removing

– Remove inner window slot trim strip ⇒ page 117 .
– Remove bass loudspeaker ⇒ Communication; Rep. gr. 91 ; Sound system; Overview of fitting locations - sound system .
– Remove door window ⇒ page 312 .

– Unplug electrical connector -2-.
– Unplug electrical wire and move electrical connector -1- clear.
– Prise out grommets -3 and 4-.

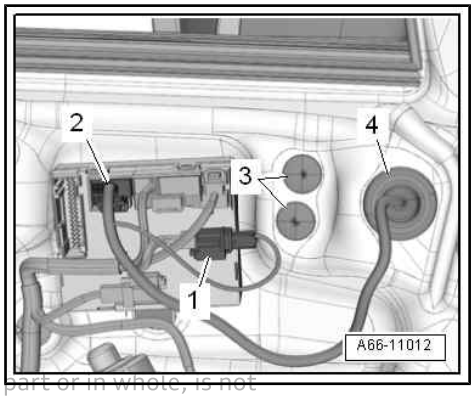

Protected by copyright. Copying for private or commercial purposes, in part or in whole, is not permitted unless authorized by Audi AG. Audi AG does not guarantee or accept any liability with respect to the correctness of information in this document. Copyright

– Pull cable retainers -arrows- off door shell and move electrical wiring harness -2- clear.
– Remove nuts -3-.
– Detach mounting for mirror adjustment unit and at the same time guide wiring harness with grommet out through door shell and behind guide rail -1-.

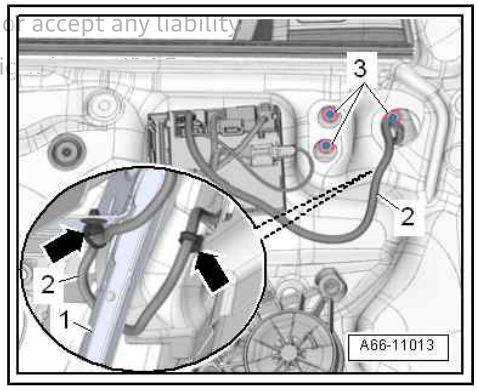

Installing

Installation is carried out in reverse order; note the following:

- Wiring harness must be routed and secured as described.

– Route electrical wiring harness -4- behind guide rail -1- for door window and secure cable retainers -2, 3- on door shell.

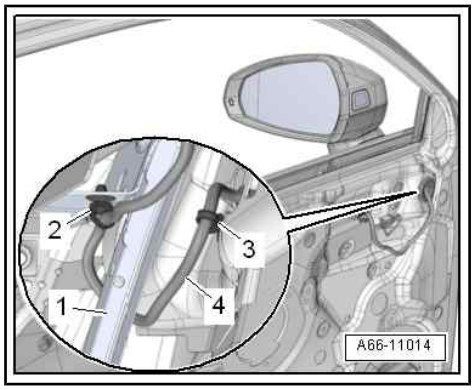

Tightening torques

◆ ⇒ “7.1 Exploded view - exterior mirror”, page 398 .

8 Wheel housing liners

⇒ "8.1 Exploded view - wheel housing liner (front)", page 403

⇒ "8.2 Exploded view - wheel housing liner (rear)", page 406

⇒ "8.3 Removing and installing wheel housing liner (front)", page 408

⇒ "8.4 Removing and installing wheel housing liner (rear)", page 412

8.1 Exploded view - wheel housing liner (front)

⇒ "8.1.1 Exploded view - wheel housing liner (front)", page 403

⇒ "8.1.2 Exploded view - wheel housing liner (front), RS 3 Sportback", page 404

⇒ "8.1.3 Exploded view - wheel spoiler (front), RS 3 Sportback", page 405

8.1.1 Exploded view - wheel housing liner (front)

1 - Bolt
- ❑ Bolt, 2x
- ❑ 2 Nm

2 - Grille for vented air
- ❑ For vehicles with auxiliary side radiator and vehicles with high-voltage system
- ❑ Removing and installing ⇒ page 411

3 - Bolt
- ❑ 9x
- ❑ 2 Nm

4 - Wheel housing liner (front)
- ❑ Removing and installing ⇒ page 408

5 - Nut
- ❑ 2 Nm

6 - Spreader rivet
- ❑ Number fitted depends on version

♦ A3 and A3 Sportback: 2x

♦ Saloon: 5x

7 - Bolt
- ❑ 2 Nm

8 - Spreader rivet
- ❑ 4x

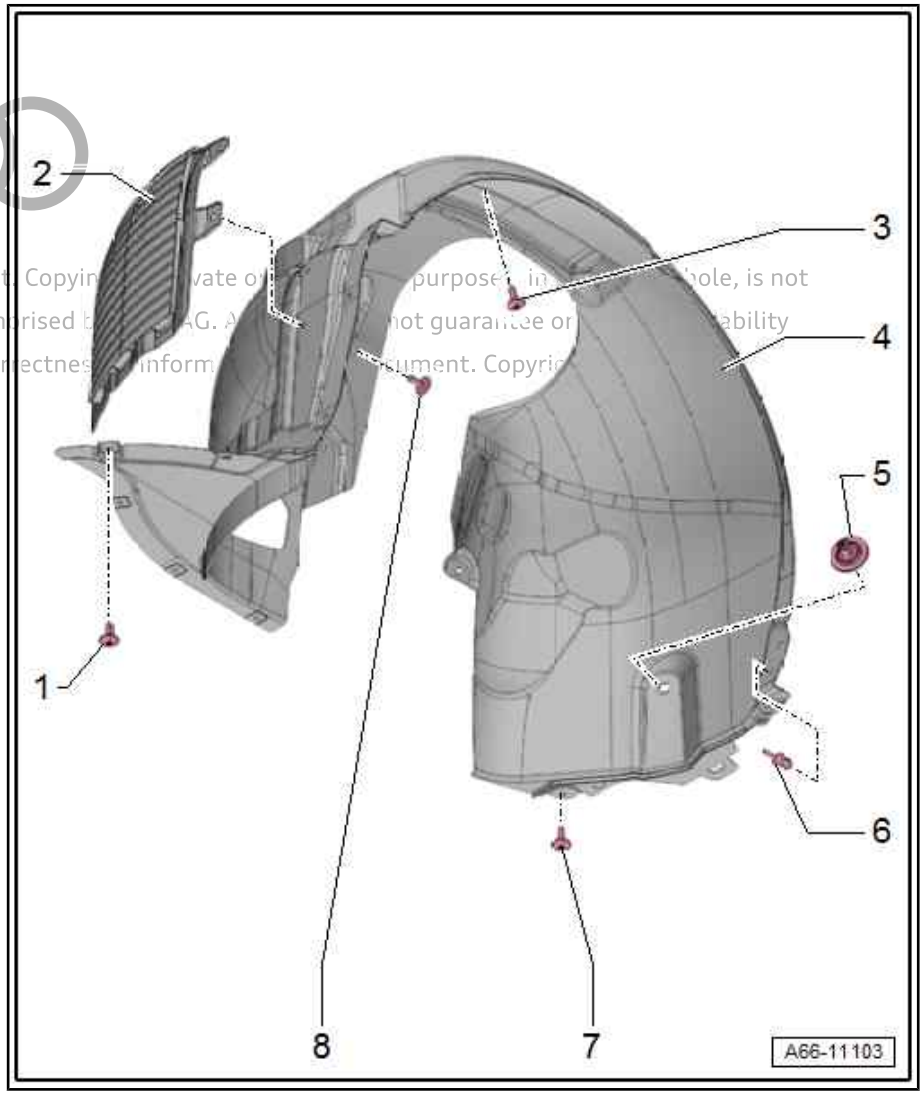

Protected by copyright. Copyin... vate o... purpose... in... hole, is not permitted unless authorised b... AG. A... not guarantee or ... ability with respect to the correctnes... inform... ument. Copyri...

8.1.2 Exploded view - wheel housing liner (front), RS 3 Sportback

1 - Wheel housing liner (front)
- ❑ Removing and installing ⇒ page 408

2 - Bolt
- ❑ 9x
- ❑ 2 Nm

3 - Bolt
- ❑ 2 Nm

4 - Retainer
- ❑ Bolt, 2x
- ❑ For securing wheel housing liner to wing

5 - Bolt
- ❑ Bolt, 2x
- ❑ 2 Nm

6 - Spreader rivet
- ❑ Bolt, 2x

7 - Nut
- ❑ 2 Nm

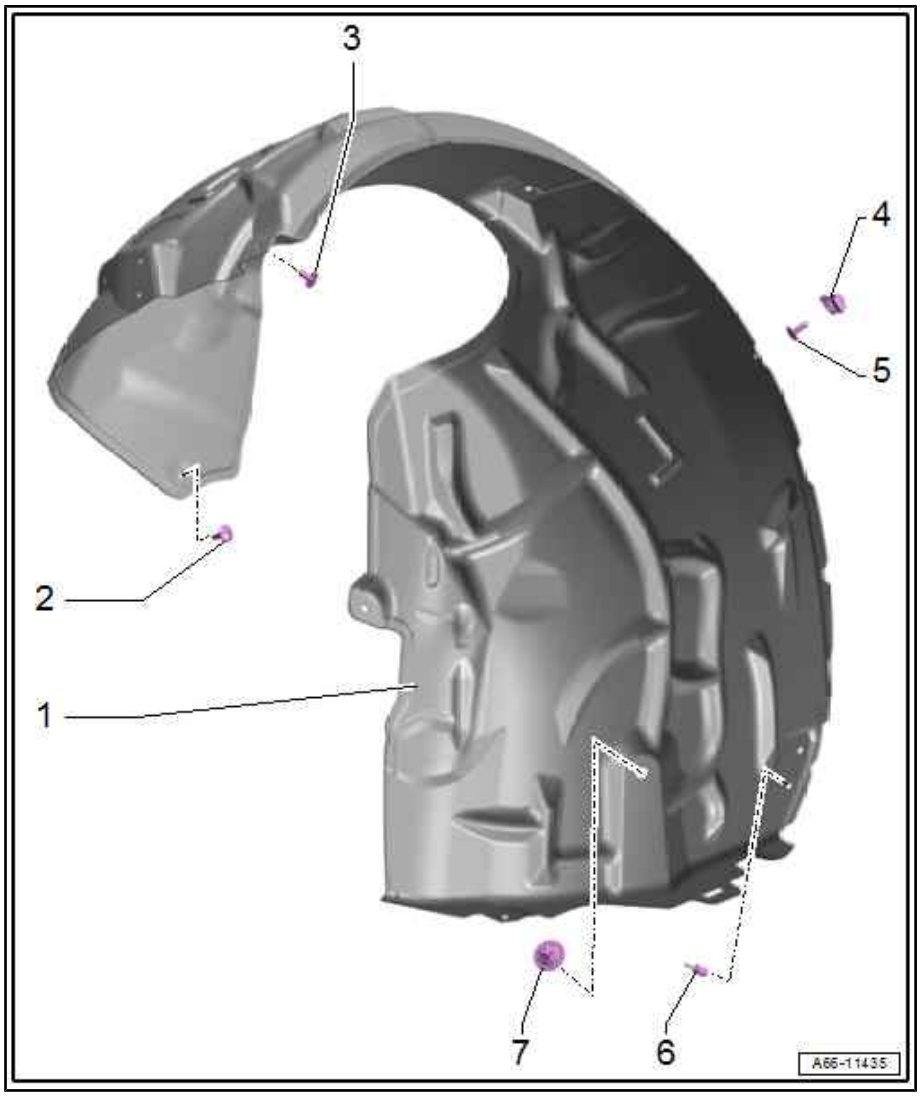

Protected by copyright. Copying for private or commercial purposes, in part or in whole, is not permitted unless authorised by AUDI AG. AUDI AG does not guarantee or accept any liability with respect to the correctness of information in this document. Copyright by AUDI AG.

8.1.3 Exploded view - wheel spoiler (front), RS 3 Sportback

1 - Bolt
- ❑ Bolt, 2x
- ❑ 2 Nm

2 - Speed nut
- ❑ 4x

3 - Plastic nut
- ❑ Bolt, 2x

4 - Wheel spoiler (front)
- ❑ Removing and installing ⇒ page 412

5 - Bolt
- ❑ Bolt, 2x
- ❑ 2 Nm

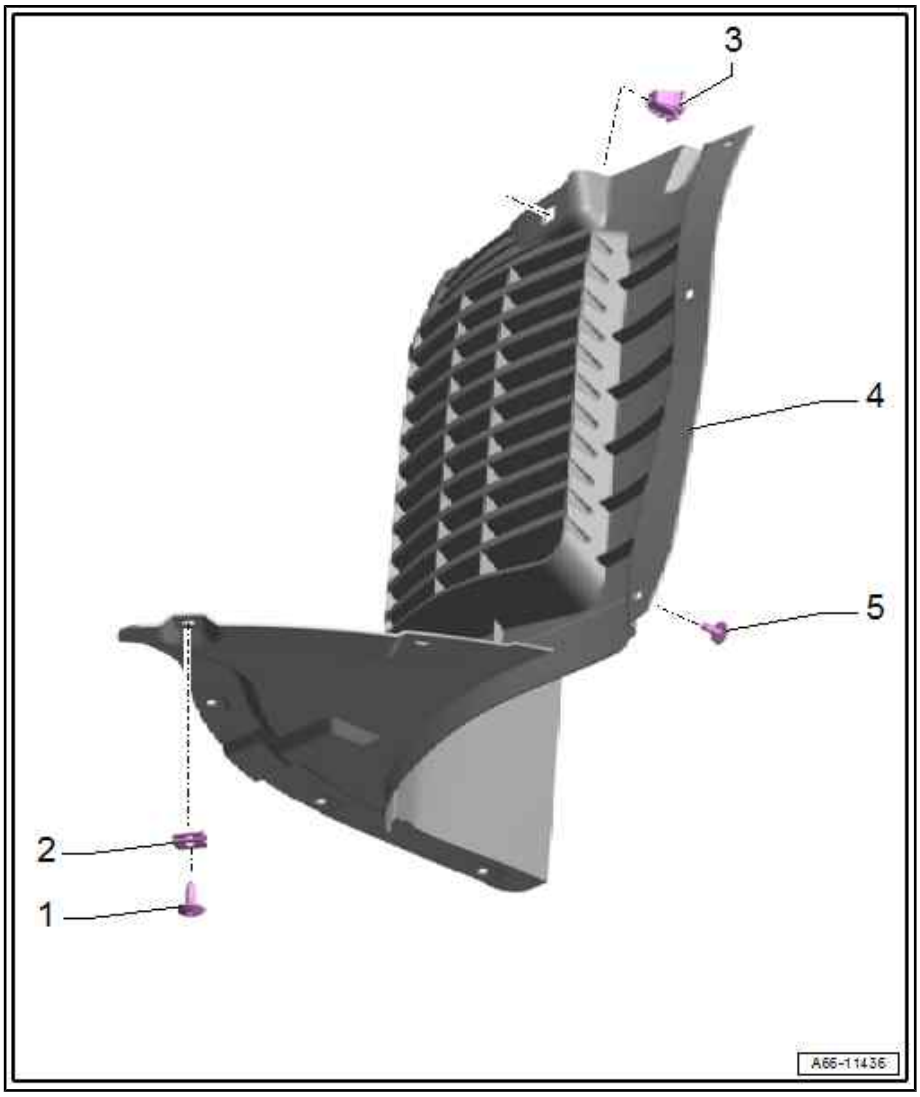

Protected by copyright. Copying for private or commercial purposes, in part or in whole, is not permitted unless authorised by AUDI AG. AUDI AG does not guarantee or accept any liability with respect to the correctness of information in this document. Copyright by AUDI AG.

8.2 Exploded view - wheel housing liner (rear)

⇒ "8.2.1 Exploded view - wheel housing liner (rear), A3 and A3 Sportback", page 406

⇒ "8.2.2 Exploded view - wheel housing liner (rear), Saloon", page 407

8.2.1 Exploded view - wheel housing liner (rear), A3 and A3 Sportback

Protected by copyright. Copying for private or commercial purposes, in part or in whole, is not permitted unless authorised by AUDI AG. AUDI AG does not guarantee or accept any liability with respect to the correctness of information in this document. Copyright by AUDI AG.

1 - Bolt
- ❑ Bolt, 2x
- ❑ 2 Nm

2 - Wheel spoiler (rear)
- ❑ To remove, loosen front section of wheel housing liner (rear) and press to the side ⇒ page 412 .

3 - Wheel housing liner (rear)
- ❑ Removing and installing ⇒ page 412

4 - Retaining clip
- ❑ 3x

5 - Bolt
- ❑ 3x
- ❑ Tightening sequence ⇒ page 407

6 - Bolt
- ❑ 3x
- ❑ 2 Nm

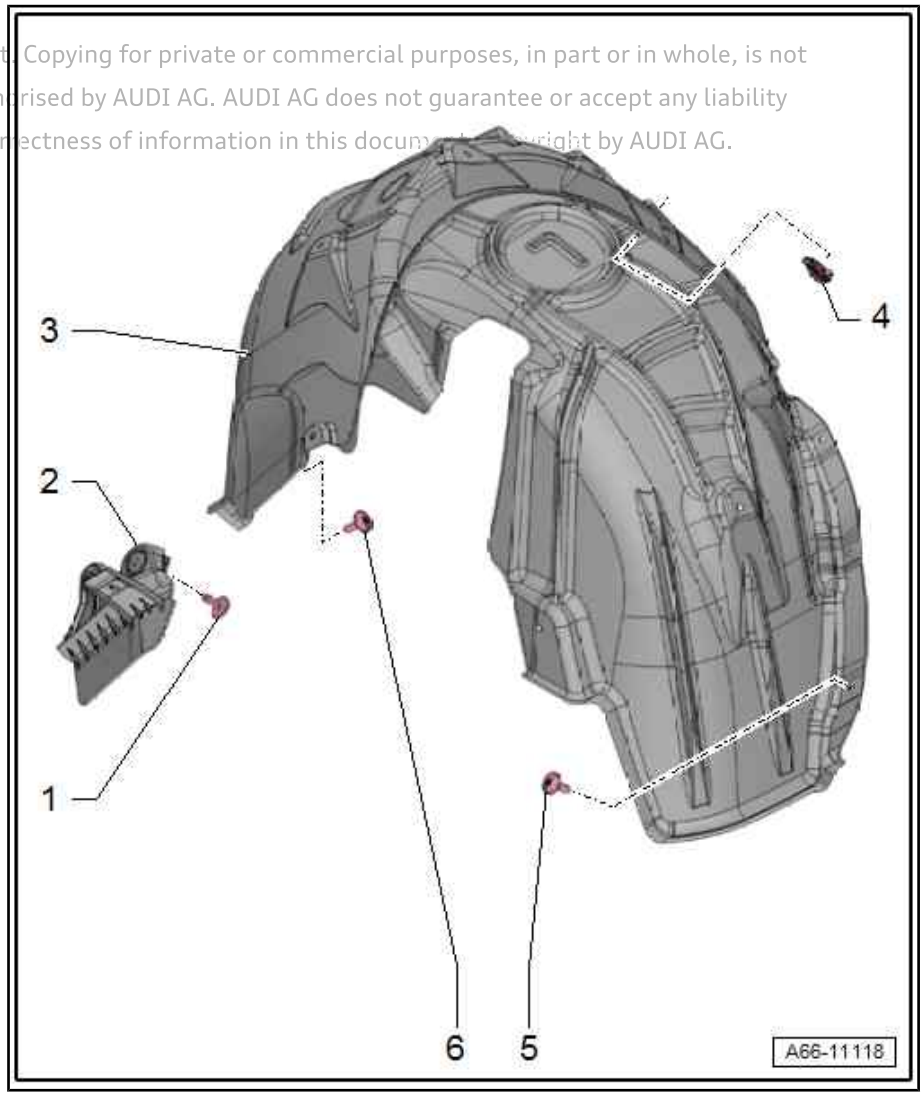

Wheel housing liner - tightening torque and sequence

– Tighten bolts to 2 Nm in sequence -1 … 3-.

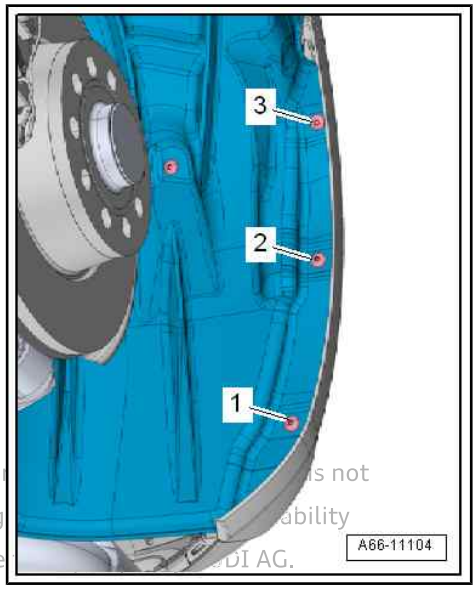

Protected by copyright. Copying for private or commercial pur s not permitted unless authorised by AUDI AG. AUDI AG does not g ability with respect to the correctness of information in this docume DI AG.

8.2.2 Exploded view - wheel housing liner (rear), Saloon

1 - Spreader rivet
- ❑ 3x

2 - Cover
- ❑ Removing and installing ⇒ page 414

3 - Wheel spoiler (rear)
- ❑ To remove, loosen front section of wheel housing liner (rear) and press to the side ⇒ page 412 .

4 - Bolt
- ❑ 3x
- ❑ 2 Nm

5 - Wheel housing liner (rear)
- ❑ Removing and installing ⇒ page 412

6 - Retaining clip
- ❑ 3x

7 - Bolt
- ❑ 3x
- ❑ Tightening sequence ⇒ page 407

8 - Bolt
- ❑ 3x
- ❑ 2 Nm

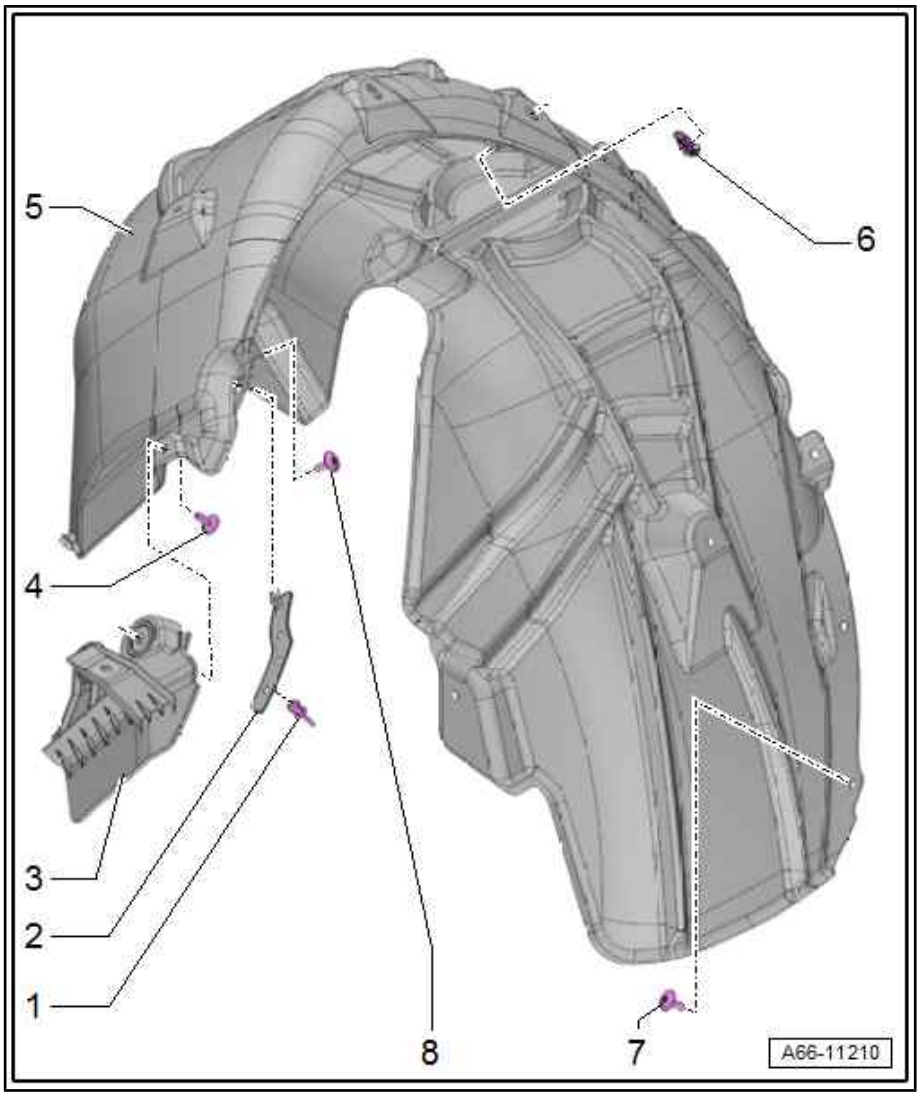

8.3 Removing and installing wheel housing liner (front)

⇒ “8.3.1 Removing and installing wheel housing liner (front) - A3 and A3 Sportback”, page 408

⇒ “8.3.2 Removing and installing wheel housing liner (front) - RS 3 Sportback”, page 409

⇒ “8.3.3 Removing and installing wheel housing liner (front) - Saloon”, page 410

⇒ “8.3.4 Removing and installing grille for vented air”, page 411

⇒ “8.3.5 Removing and installing wheel spoiler (front) - RS 3 Sportback”, page 412

8.3.1 Removing and installing wheel housing liner (front) - A3 and A3 Sportback

Special tools and workshop equipment required

- ♦ Pneumatic pop rivet pliers - V.A.G 2003A-
- ♦ Supplementary set for pneumatic pop rivet pliers - V.A.G 2003/1-

Removing

- Front wheel removed ⇒ Running gear, axles, steering; Rep. gr. 44 ; Wheels and tyres .

– Remove bolts -1-.

– Unscrew bolt -2- and disengage retainer -3- at wing panel.

– Unscrew nut -4-.

– Remove spreader rivets -5-.

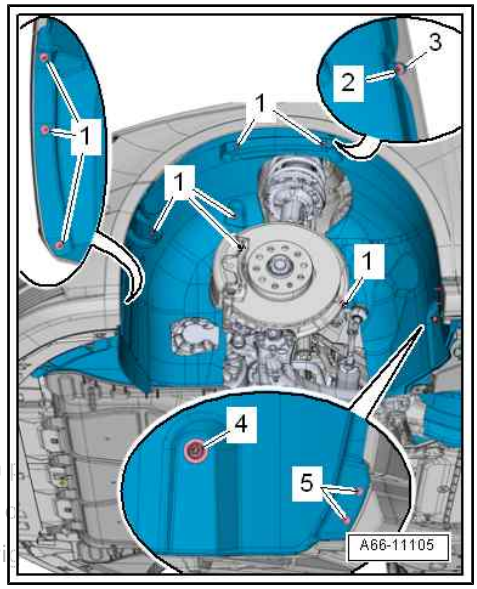

Protected by copyright. Copying for private or commercial purposes, in
permitted unless authorised by AUDI AG. AUDI AG does not guarantee
with respect to the correctness of information in this document. Copyri

– Remove bolts -1-.

– Release fastener -arrow- and take out wheel housing liner.

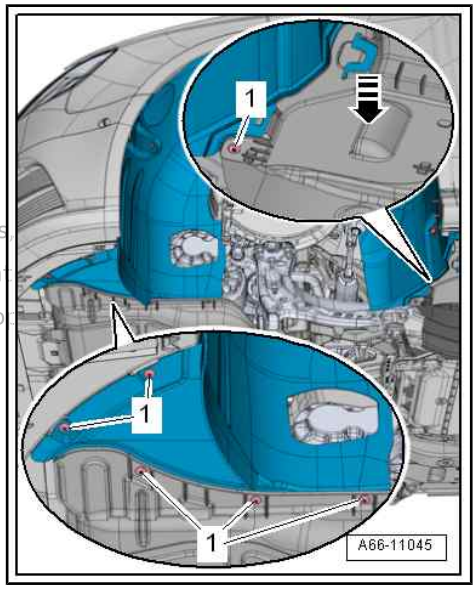

Installing

Installation is carried out in reverse sequence.

Tightening torques

Protected by copyright. Copying for private or commercial purposes, in part or in whole, is not permitted unless authorised by AUDI AG. AUDI AG does not guarantee or accept any liability with respect to the correctness of information in this document. Copyright by AUDI AG.

- ⇒ "8.1.1 Exploded view - wheel housing liner (front)", page 403.

8.3.2 Removing and installing wheel housing liner (front) - RS 3 Sportback

Special tools and workshop equipment required

- Pneumatic pop rivet pliers - V.A.G 2003A-
- Supplementary set for pneumatic pop rivet pliers - V.A.G 2003/1-

Removing

– Unscrew bolts -2- and disengage retainer -3- at wing panel.

– Remove bolts -1-.

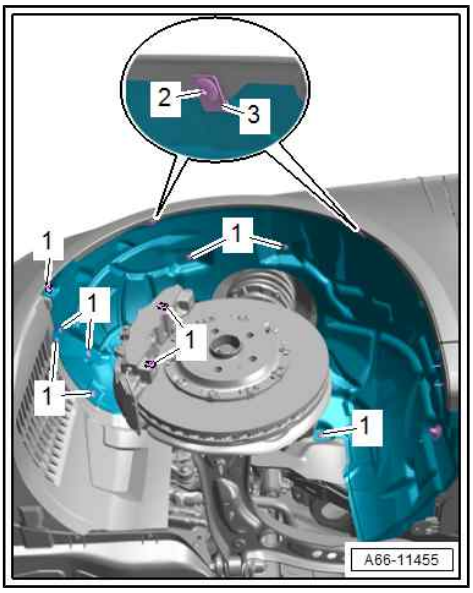

– Unscrew nut -2-.
– Remove spreader rivets -3-.
– Remove bolt -4-.
– Release fastener -arrow- and take out wheel housing liner -1-.

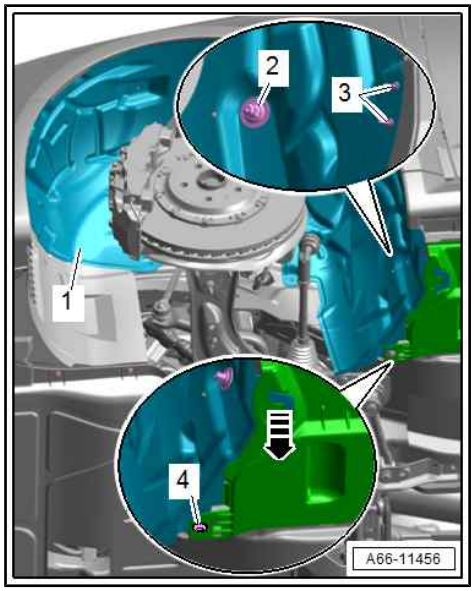

Installing

Installation is carried out in reverse sequence.

Tightening torques

♦ ⇒ “8.1.2 Exploded view - wheel housing liner (front), RS 3 Sportback”, page 404 .

8.3.3 Removing and installing wheel housing liner (front) - Saloon

Special tools and workshop equipment required

♦ Pneumatic pop rivet pliers - V.A.G 2003A-
♦ Supplementary set for pneumatic pop rivet pliers - V.A.G 2003/1-

Removing

• Front wheel removed ⇒ Running gear, axles, steering; Rep. gr. 44 ; Wheels and tyres .
– Remove bolts -1-.
– Unscrew bolt -2- and disengage retainer -3- at wing panel.
– Unscrew nut -5-.
– Remove spreader rivets -4 and 6-.

Protected by copyright. Copying for private or commercial purposes, in part or in whole, is not permitted unless authorised by AUDI AG. AUDI AG does not guarantee or assume any liability with respect to the correctness of information in this document.

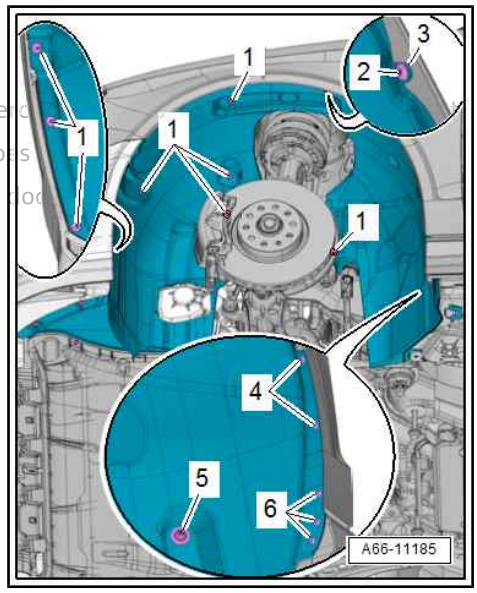

– Remove bolts -1-.
– Release fastener -arrow- and take out wheel housing liner.

Installing

Installation is carried out in reverse sequence.

Tightening torques

♦ ⇒ “8.1.1 Exploded view - wheel housing liner (front)”, page 403 .

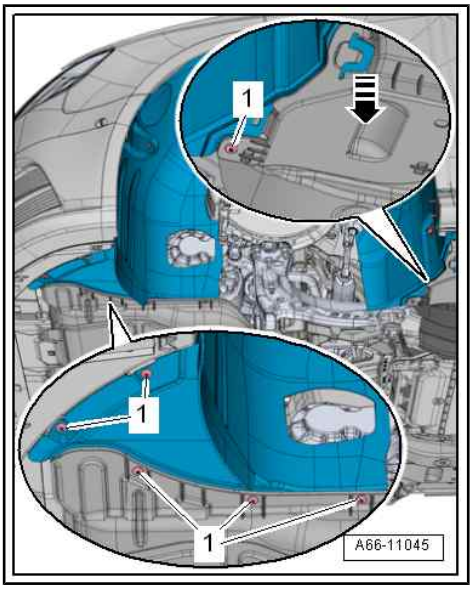

8.3.4 Removing and installing grille for vented air

Removing

– Remove front wheel housing liner ⇒ page 408 .
– Remove spreader rivets -1-.
– Detach grille -2- from wheel housing liner -3- -arrow-.

Installing

Installation is carried out in reverse sequence.

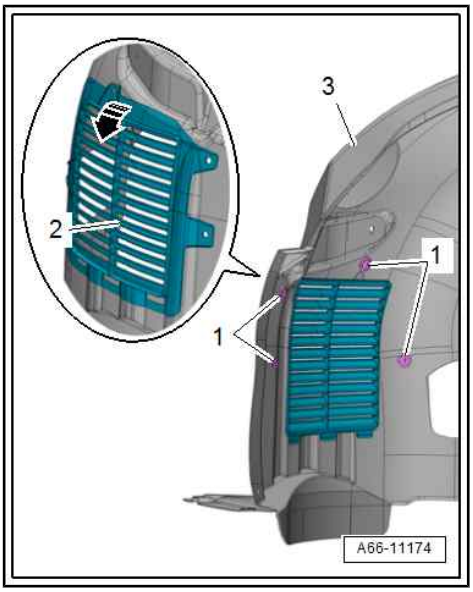

Protected by copyright. Copying for private or commercial purposes, in part or in whole, is not permitted unless authorised by AUDI AG. AUDI AG does not guarantee or accept any liability with respect to the correctness of information in this document. Copyright by AUDI AG.

8.3.5 Removing and installing wheel spoiler (front) - RS 3 Sportback

Removing

– Remove bolts -1, 3, 4 and 5-.

– Detach wheel spoiler -2-.

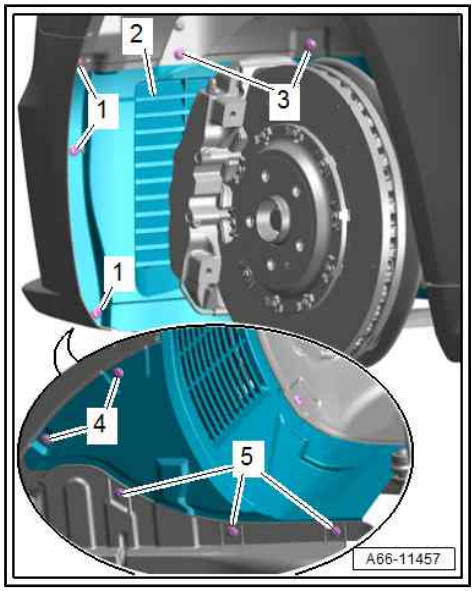

Installing

Installation is carried out in reverse sequence.

Tightening torques

♦ ⇒ “8.1.3 Exploded view - wheel spoiler (front), RS 3 Sportback”, page 405 .

8.4 Removing and installing wheel housing liner (rear)

⇒ “8.4.1 Removing and installing wheel housing liner (rear)”, page 412

⇒ “8.4.2 Removing and installing cover”, page 414

8.4.1 Removing and installing wheel housing liner (rear)

Removing

• Rear wheel removed ⇒ Running gear, axles, steering; Rep. gr. 44 ; Wheels and tyres .

– Remove bolts -1-.

– Detach retaining clips -2- from wheel housing liner.

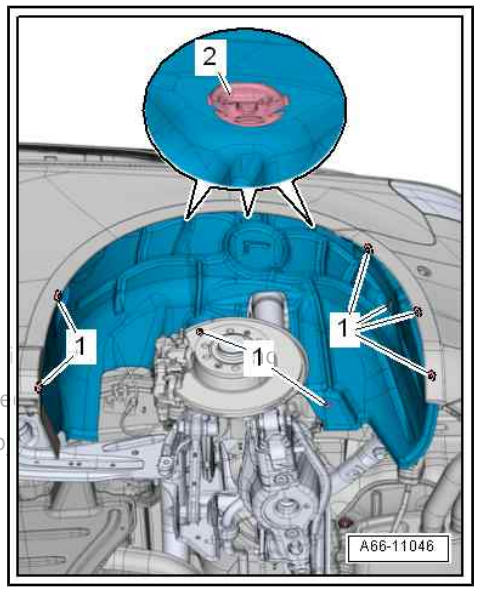

Protected by copyright. Copying for private or commercial purposes, permitted unless authorised by AUDI AG. AUDI AG does not guarante with respect to the correctness of information in this document. Cop

– To detach retaining clip -3-, use narrow long-nose pliers to disengage release lever -2- in direction of -arrow A- and press it off retaining pin -1- in direction of -arrow B-.

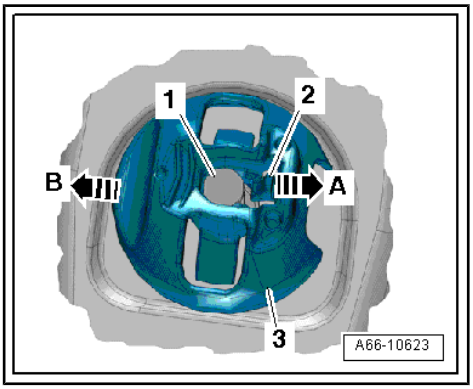

– Take out wheel housing liner -2- and, if fitted, detach from cover -1- -arrow-.

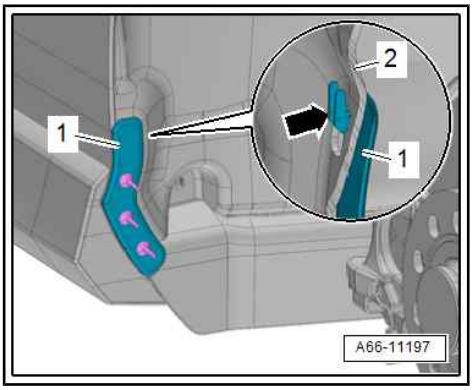

– Remove bolts -arrows-.

– Detach wheel spoiler -1-.

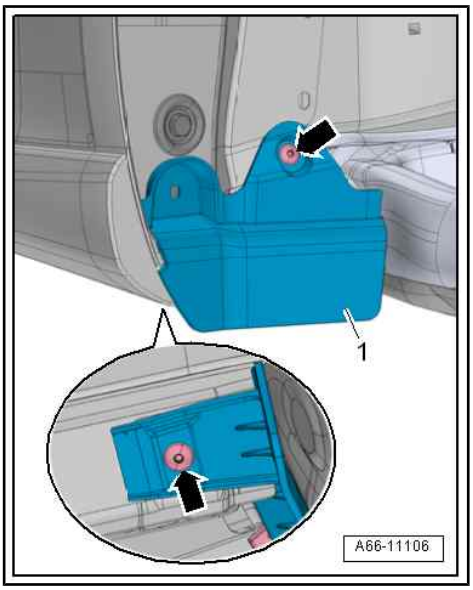

Installing

Installation is carried out in reverse order; note the following:

– After fitting, check that retaining clip is locked in position.

Tightening torques

♦ ⇒ Fig. ""Wheel housing liner - tightening torque and sequence"" , page 407 .

♦ ⇒ "8.2 Exploded view - wheel housing liner (rear)", page 406 .

Protected by copyright. Copying for private or commercial purposes, in part or in whole, is not permitted unless authorised by AUDI AG. AUDI AG does not guarantee or accept any liability with respect to the correctness of information in this document. Copyright by AUDI AG.

8.4.2 Removing and installing cover

Removing

– Remove spreader rivets -1-.

– Disengage cover -2- from wheel housing liner -3- -arrow- and detach.

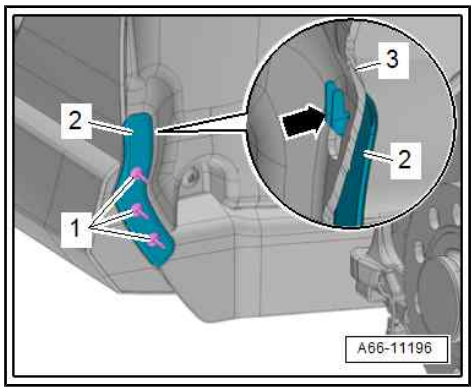

Installing

Installation is carried out in reverse sequence.

Protected by copyright. Copying for private or commercial purposes, in part or in whole, is not permitted unless authorised by AUDI AG. AUDI AG does not guarantee or accept any liability with respect to the correctness of information in this document. Copyright by AUDI AG.

9 Model badges and brand emblems

⇒ “9.1 Exploded view - model badges and brand emblems”, page 415

⇒ “9.2 Dimensions - model badges and brand emblems on rear”, page 416

⇒ “9.3 Renewing model badges and brand emblems on side”, page 417

⇒ “9.4 General notes on renewing model badges and brand emblems”, page 417

⇒ “9.5 Removing and installing model badges and emblems for radiator grille”, page 418

9.1 Exploded view - model badges and brand emblems

1 - Audi emblem

- ❑ Removing and installing ⇒ page 418

2 - S3 emblem

- ❑ Equipment version
- ❑ Removing and installing ⇒ page 418

3 - quattro emblem

- ❑ Equipment version
- ❑ Removing and installing ⇒ page 418

4 - Retaining clips

5 - Radiator grille

- ❑ Exploded view ⇒ page 315

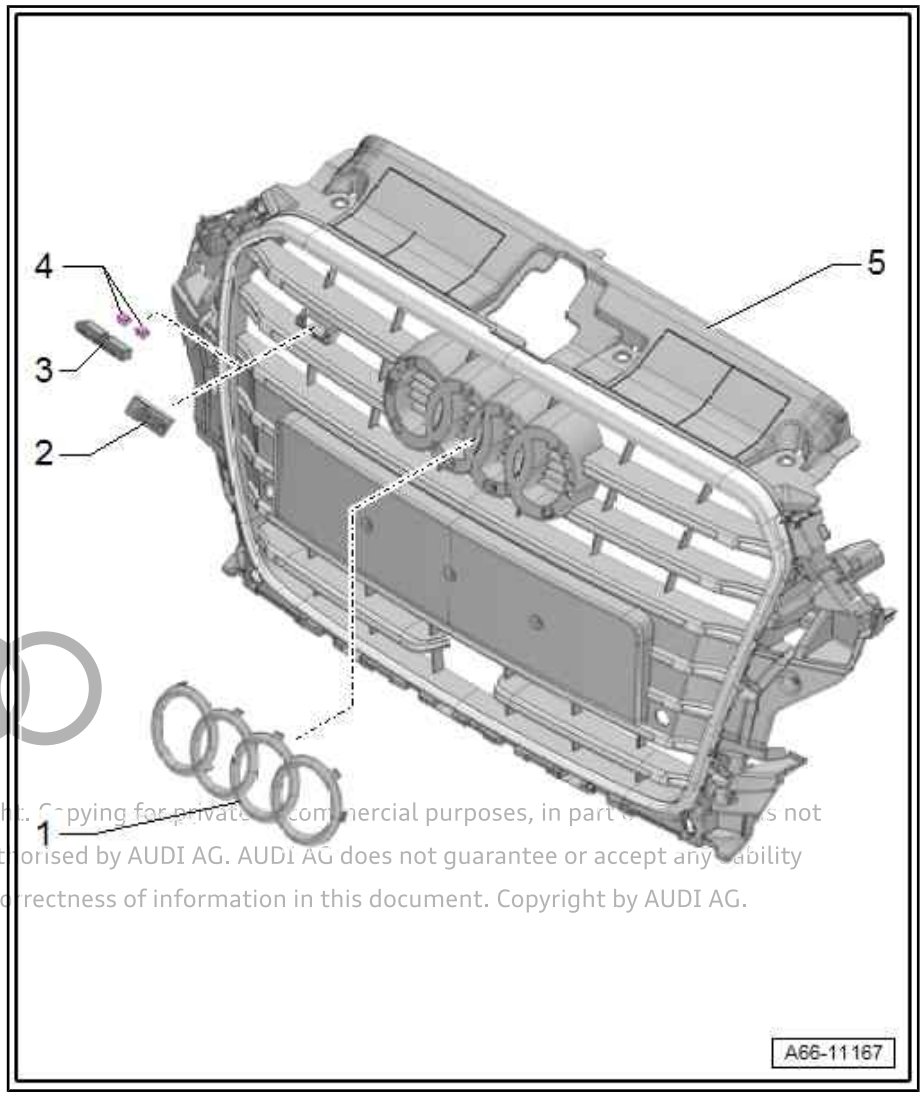

Protected by copyright. Copying for private or commercial purposes, in part or in whole, is not permitted unless authorised by AUDI AG. AUDI AG does not guarantee or accept any liability with respect to the correctness of information in this document. Copyright by AUDI AG.

9.2 Dimensions - model badges and brand emblems on rear

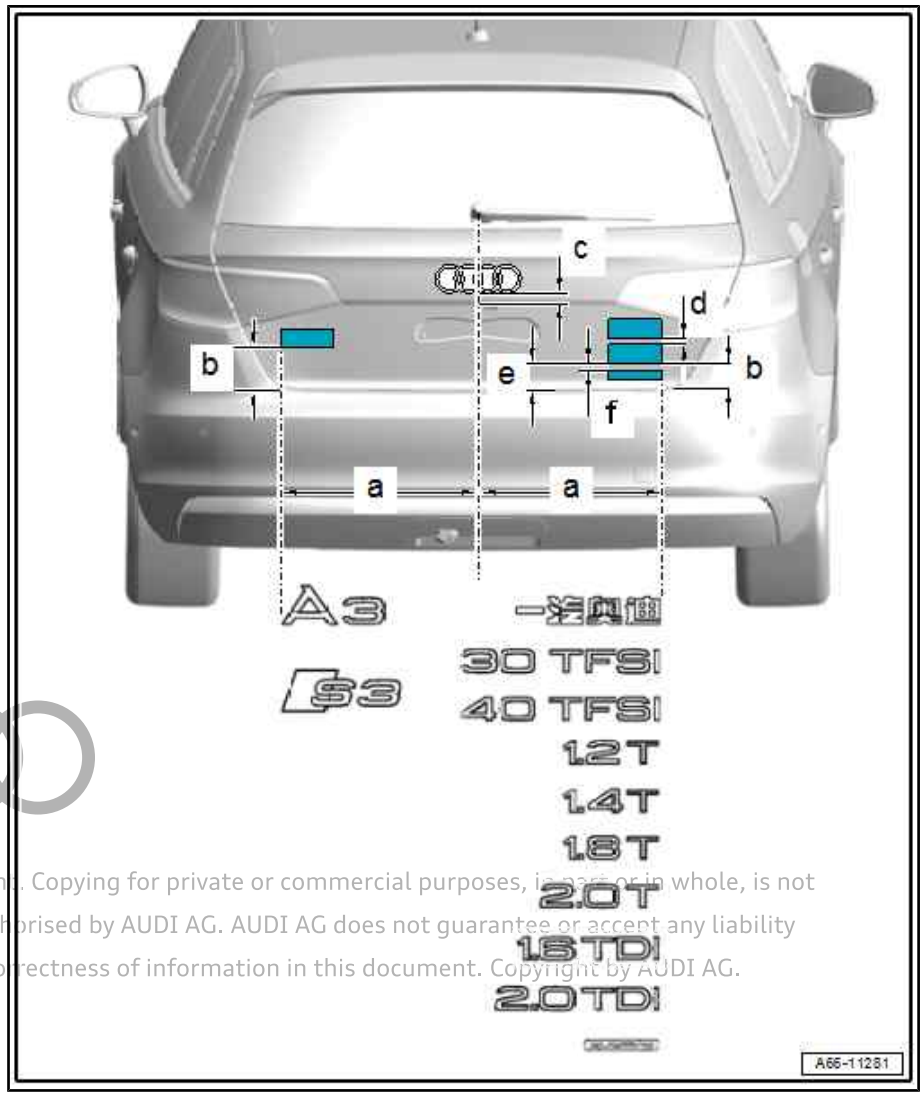

Protected by copyright. Copying for private or commercial purposes, in part or in whole, is not permitted unless authorised by AUDI AG. AUDI AG does not guarantee or accept any liability with respect to the correctness of information in this document. Copyright by AUDI AG.

A3

- Dimension -a- = 482 mm
- Dimension -b- = 50 mm
- Dimension -c- = 18 mm
- Dimension -d- - not on A3
- Dimension -e- = 50 mm
- Dimension -f- = 4 mm

Sportback

- Dimension -a- = 482 mm
- Dimension -b- = 49 mm
- Dimension -c- = 25.5 mm
- Dimension -d- = 20 mm (for emblem for China)
- Dimension -e- = 49 mm
- Dimension -f- = 4 mm

Saloon

- ♦ Dimension -a- = 461 mm
- ♦ Dimension -b- = 45 mm
- ♦ Dimension -c- = 12 mm
- ♦ Dimension -d- = 15 mm (for emblem for China)
- ♦ Dimension -e- = 46 mm
- ♦ Dimension -f- = 4 mm

9.3 Renewing model badges and brand emblems on side

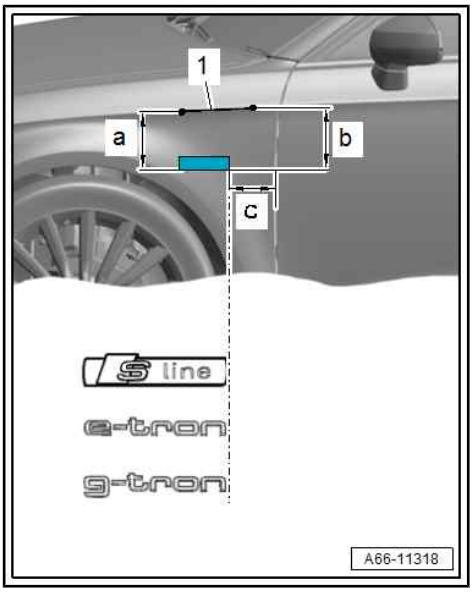

A3 and A3 Sportback:

- Dimension -a- = 57 mm
- Dimension -b- = 58 mm
- Distance -c- = 43 mm

-1- Reference edge in wing panel

Saloon:

- Dimension -a- = 75 mm
- Dimension -b- = 78 mm
- Distance -c- = 33 mm

-1- Reference edge in wing panel

9.4 General notes on renewing model badges and brand emblems

Special tools and workshop equipment required

- ♦ Roller - 3356-

Protected by copyright. Copying for private or commercial purposes, in part or in whole, is not permitted unless authorised by AUDI AG. AUDI AG does not guarantee or accept any liability with respect to the correctness of information in this document. Copyright by AUDI AG.

- ♦ Cleaning solution - D 009 401 04-
- ♦ Applicator - D 009 500 25-
- ♦ Primer - D 355 205 A2-
- Any model badges and brand emblems that are removed must be renewed.
- The vehicle and the model badges/brand emblems must be at room temperature.
- The bonding surfaces must be free of dirt and grease.
- If the primer - D 355 205 A2- has been allowed to flash off for more than 3 hours, primer must be re-applied.

– Completely remove any residual adhesive.

– Clean bonding surfaces with cleaning solution - D 009 401 04- .

– Apply primer - D 355 205 A2- -item 1- to bonding area -2- on painted surface using applicator - D 009 500 25- -3- and allow to flash off.

– Heat bonding surfaces with a hot air blower to approx. 40°C.

– After installing, press on emblems with roller.

• Leave vehicle standing at room temperature for at least 0.5 hours.

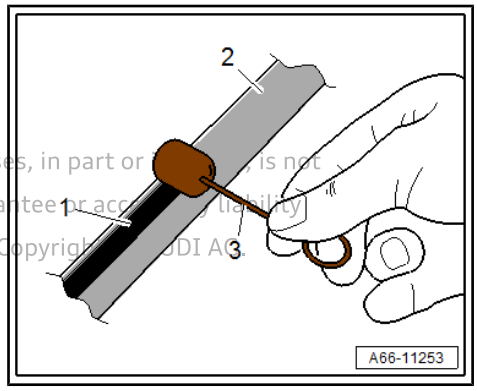

Protected by copyright. Copying for private or commercial purposes, in part or in whole, is not permitted unless authorised by AUDI AG. AUDI AG does not guarantee or accept any liability with respect to the correctness of information in this document. Copyright by AUDI AG.

9.5 Removing and installing model badges and emblems for radiator grille

⇒ “9.5.1 Removing and installing Audi emblem - vehicles without high-voltage system”, page 418

⇒ “9.5.2 Removing and installing quattro emblem - vehicles up to model year 2016”, page 419

⇒ “9.5.3 Removing and installing quattro emblem - vehicles from model year 2017 onwards”, page 419

⇒ “9.5.4 Removing and installing S3 emblem”, page 420

⇒ “9.5.5 Removing and installing RS 3 emblem”, page 420

9.5.1 Removing and installing Audi emblem - vehicles without high-voltage system

• General notes on renewing model badges and brand emblems ⇒ page 417

Removing

– Remove bumper cover (front) ⇒ page 214 .

– Vehicles from model year 2017 onwards: Remove closure plate for radiator grille ⇒ page 331 .

– To release, press retaining catch -1- carefully in direction of -arrow-.

– Detach Audi emblem -2- from radiator grille -3-.

Installing

Installation is carried out in reverse order; note the following:

– Press Audi emblem on until it engages audibly.

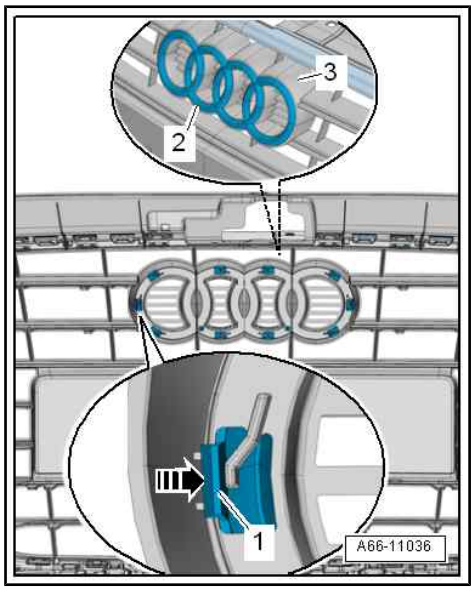

9.5.2 Removing and installing quattro emblem - vehicles up to model year 2016

- General notes on renewing model badges and brand emblems ⇒ page 417

Special tools and workshop equipment required

♦ Angled screwdriver - VAS 6416-

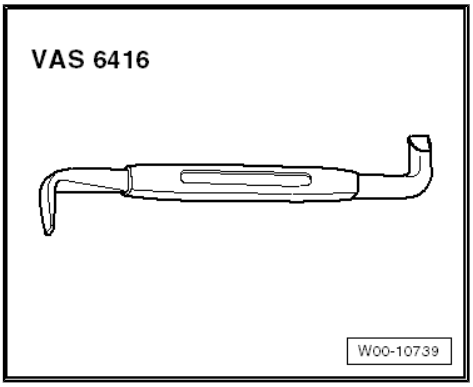

Removing

– Press off retaining clips -3- using angled screwdriver -VAS 6416- .

– Take quattro emblem -2- out of radiator grille -1-.

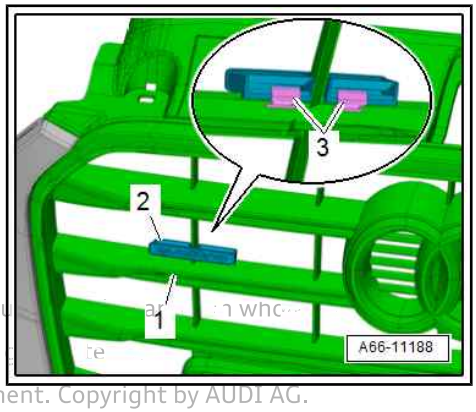

Note

If the emblem cannot be removed as described, the bumper cover (front) must be removed ⇒ page 214 .

Protected by copyright. Copying for private or commercial pu
permitted unless authorised by AUDI AG. AUDI AG does not
with respect to the correctness of information in this document. Copyright by AUDI AG.

Installing

– Installation is carried out in reverse sequence.

9.5.3 Removing and installing quattro emblem - vehicles from model year 2017 on-wards

- General notes on renewing model badges and brand emblems ⇒ page 417

Special tools and workshop equipment required

♦ Angled screwdriver - VAS 6416-

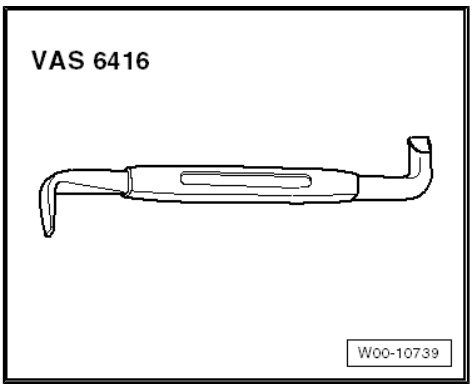

Removing

– Press off retaining clips -3- using angled screwdriver -VAS 6416- .

– Take quattro emblem -1- out of radiator grille -2-.

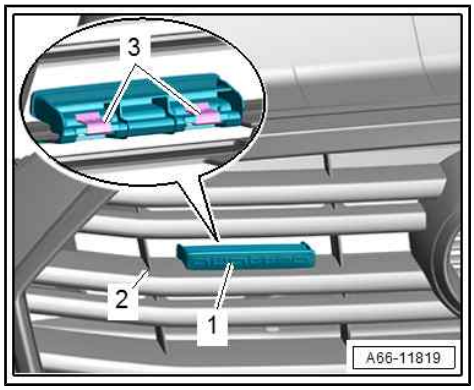

Note

If the emblem cannot be removed as described, the bumper cover (front) must be removed ⇒ page 214 .

Installing

Installation is carried out in reverse sequence.

9.5.4 Removing and installing S3 emblem

- General notes on renewing model badges and brand emblems ⇒ page 417

Removing

– Reach through openings on radiator grille and release fastener -arrow-.

– Take S3 emblem -2- out of radiator grille -1-.

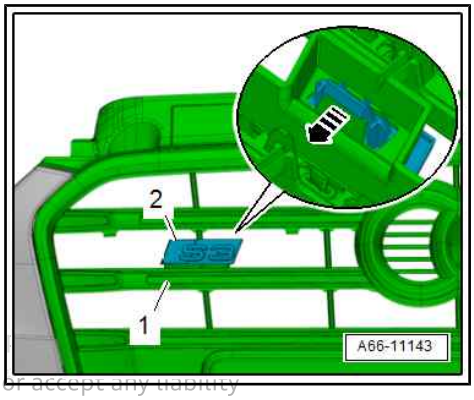

Note

If the emblem cannot be removed as described, the bumper cover (front) must be removed ⇒ page 214 .

Installing

Protected by copyright. Copying for private or commercial purposes, in part is not permitted unless authorised by AUDI AG. AUDI AG does not guarantee or accept any liability with respect to the correctness of information in this document. Copyright by AUDI AG.

Installation is carried out in reverse order; note the following:

– Position S3 emblem on radiator grille and press it on until it engages audibly.

9.5.5 Removing and installing RS 3 emblem

- General notes on renewing model badges and brand emblems ⇒ page 417

Removing

– Remove bumper cover (front) ⇒ page 217 .

– Release fasteners -arrows- and detach retaining strip -3-.
– Take RS 3 emblem -2- out of radiator grille -1-.

Installing

Installation is carried out in reverse order; note the following:

– Position RS 3 emblem on radiator grille and press retaining strip on until it engages audibly.

• The retaining strip can only be pressed on in one position.

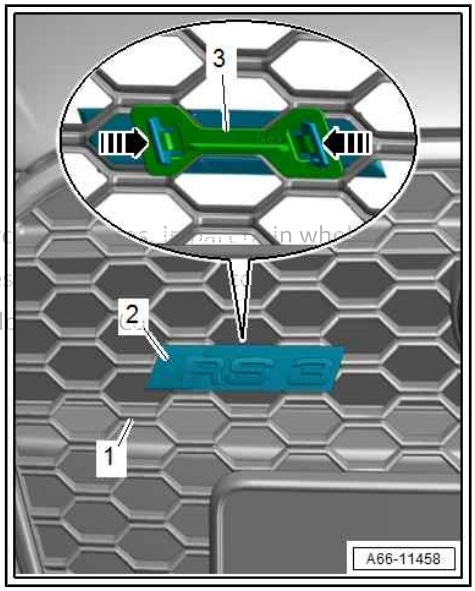

Protected by copyright. Copying for private or commercial purposes, in part or in whole, is not permitted unless authorized by AUDI AG. AUDI AG does not guarantee or assume any liability with respect to the correctness of information in this document.

10 Towing bracket

⇒ “10.1 Exploded view - towing bracket”, page 422

⇒ “10.2 Removing and installing trailer detector control unit J345 ”, page 424

10.1 Exploded view - towing bracket

⇒ “10.1.1 Exploded view - towing bracket, 3-door and 5-door models”, page 422

⇒ “10.1.2 Exploded view - towing bracket, Saloon”, page 423

10.1.1 Exploded view - towing bracket, 3-door and 5-door models

WARNING

Damaged natural gas fuel tanks constitute an explosion risk - risk of death!

- *If components at the rear and/or rear side of the vehicle (e.g. bumper cover, rear lid, underbody trim, longitudinal member, rear cross panel, etc.) are removed due to accident damage, the natural gas fuel tanks must be checked for damage.*
- *Carry out assessment of damage to fuel tanks ⇒ Natural gas engines - General information; Rep. gr. 20 ; Assessing damage to fuel tanks .*

Reproduction of this Service Information for private or commercial purposes, in part or in whole, is not permitted unless authorised by AUDI AG. AUDI AG does not guarantee or accept any liability with respect to the correctness of information in this document. Copyright by AUDI AG.

♦ Exploded view - impact bar ⇒ page 262

1 - Trailer socket - U10-

- ❑ Removing and installing ⇒ Electrical system; Rep. gr. 96 ; Towing bracket
- ❑ Pin assignment ⇒ Electrical system; Rep. gr. 96 ; Towing bracket

2 - Retaining frame

- ❑ For trailer detector control unit - J345-

3 - Trailer detector control unit - J345-

- ❑ Removing and installing ⇒ page 424

4 - Electrical connectors

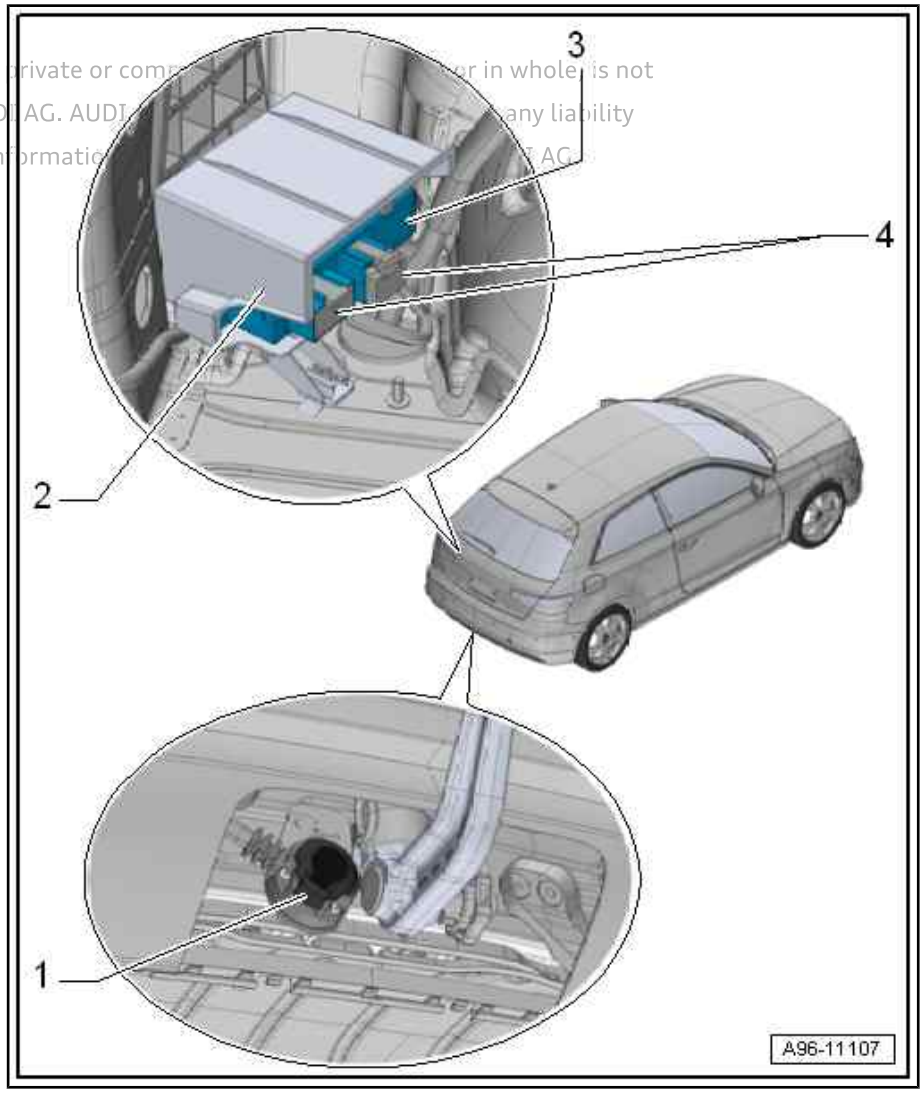

Protected by copyright. Copying for private or commercial purposes, in part or in whole, is not permitted unless authorised by AUDI AG. AUDI AG does not guarantee or assume any liability with respect to the correctness of information in this document. Copyright by AUDI AG.

10.1.2 Exploded view - towing bracket, Saloon

- ♦ Exploded view - impact bar ⇒ page 262

1 - Trailer socket - U10-

- ❑ Removing and installing ⇒ Electrical system; Rep. gr. 96 ; Towing bracket
- ❑ Pin assignment ⇒ Electrical system; Rep. gr. 96 ; Towing bracket

2 - Electrical connectors

3 - Trailer detector control unit - J345-

- ❑ Removing and installing ⇒ page 424

4 - Retaining frame

- ❑ For trailer detector control unit - J345-

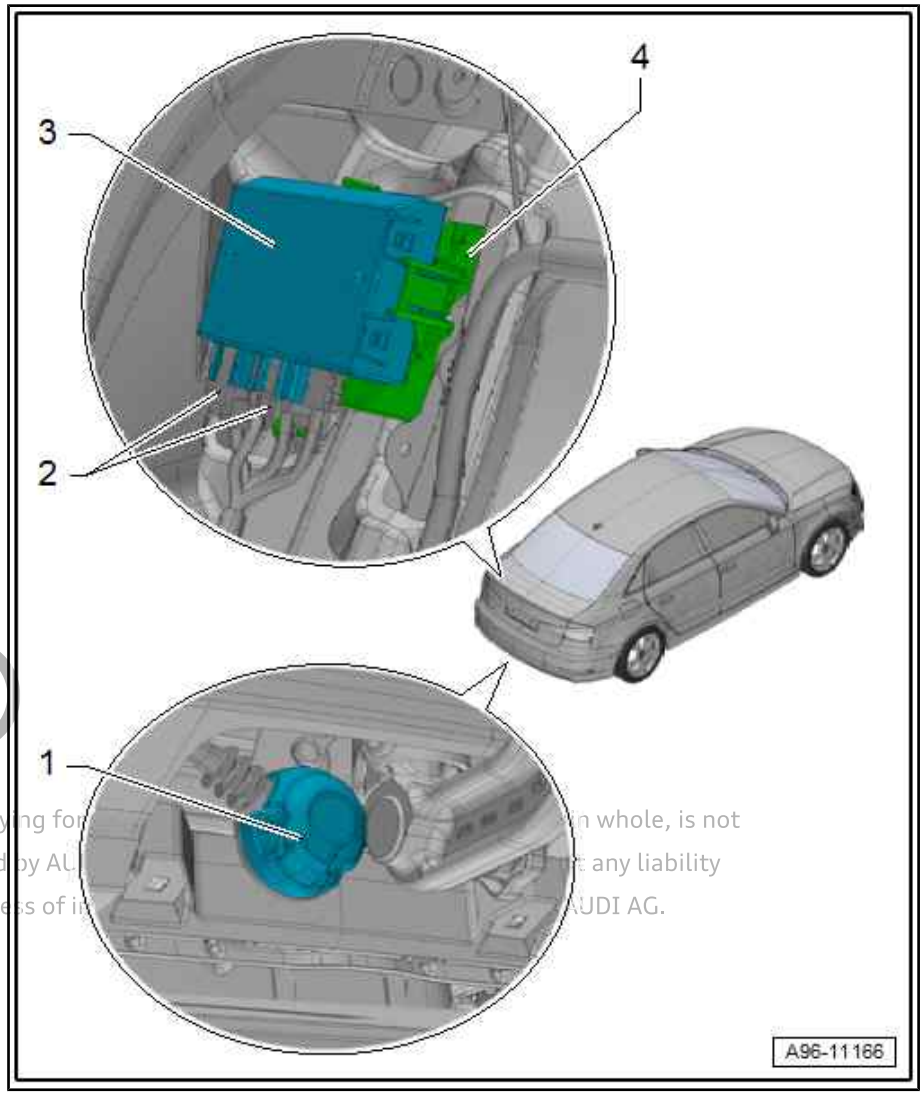

Protected by copyright. Copying for ... in whole, is not permitted unless authorised by AU... any liability with respect to the correctness of i... AUDI AG.

10.2 Removing and installing trailer detector control unit - J345-

⇒ "10.2.1 Removing and installing trailer detector control unit J345 - 3-door and 5-door models", page 424

⇒ "10.2.2 Removing and installing trailer detector control unit J345 - Saloon", page 425

10.2.1 Removing and installing trailer detector control unit - J345- - 3-door and 5-door models

Note

If renewing the control unit, select the function "Replace control unit" for the corresponding control unit ⇒ Vehicle diagnostic tester.

Removing

– Remove luggage compartment side trim (left-side) ⇒ General body repairs, interior; Rep. gr. 70 ; Luggage compartment trim panels; Removing and installing luggage compartment side trim .

– Manual towing bracket: Pull retaining frame -2- slightly off threaded pin -1-.
– Unplug electrical connectors -3 and 5-.
– Release retaining tab -6- -arrow- and pull trailer detector control unit -4- out of retaining frame.

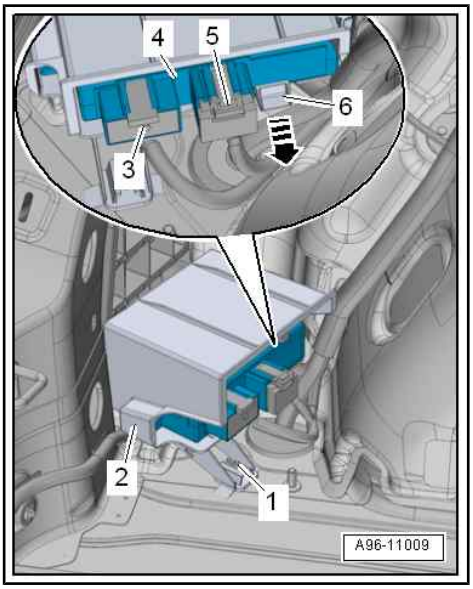

– Electric towing bracket: Pull retaining frame -2- slightly off threaded pin -1-.
– Unplug electrical connectors -3, 5, 6, 7-.
– Release retaining tab -arrow- and pull trailer detector control unit -4- out of retaining frame.

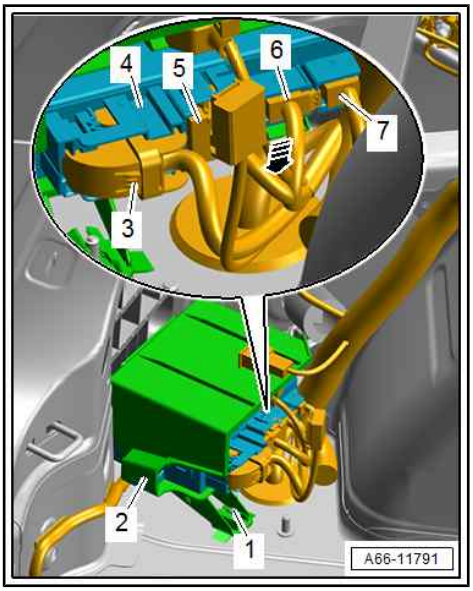

Installing

Installation is carried out in reverse sequence.

10.2.2 Removing and installing trailer detector control unit - J345- - Saloon

Note

If renewing the control unit, select the function "Replace control unit" for the corresponding control unit ⇒ Vehicle diagnostic tester.

Protected by copyright. Copying for private or commercial purposes, in part or in whole, is not permitted unless authorised by AUDI AG. AUDI AG does not guarantee or accept any liability with respect to the correctness of information in this document. Copyright by AUDI AG.

Removing

– Remove luggage compartment side trim (left-side) ⇒ General body repairs, interior; Rep. gr. 70 ; Luggage compartment trim panels; Removing and installing luggage compartment side trim .

– Manual towing bracket: Unplug electrical connectors -1 and 2-.
– Release retaining tab -arrow- and pull trailer detector control unit -3- out of retaining frame -4-.

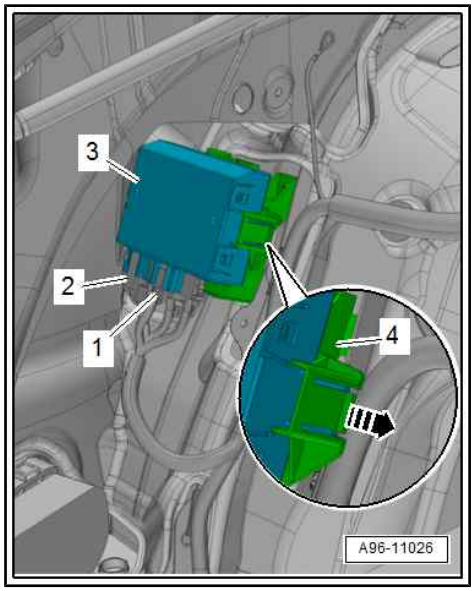

– Electric towing bracket: Unplug electrical connectors -1, 2, 3-.
– Release retaining tab -arrow- and pull trailer detector control unit -4- out of retaining frame -5-.

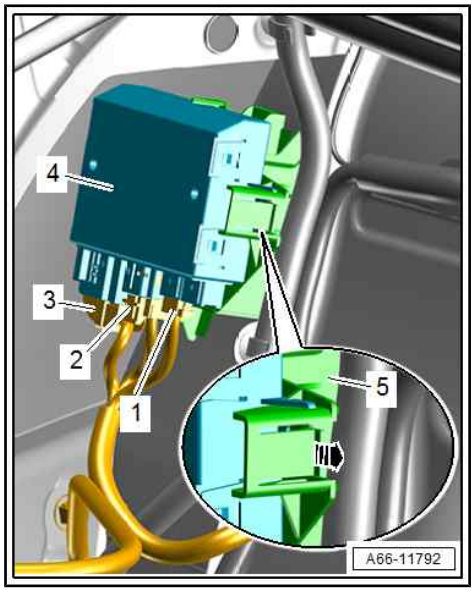

Installing

Installation is carried out in reverse sequence.

Protected by copyright. Copying for private or commercial purposes, in part or in whole, is not permitted unless authorised by AUDI AG. AUDI AG does not guarantee or accept any liability with respect to the correctness of information in this document. Copyright by AUDI AG.