Drive Belt Replacement

Removal Procedure

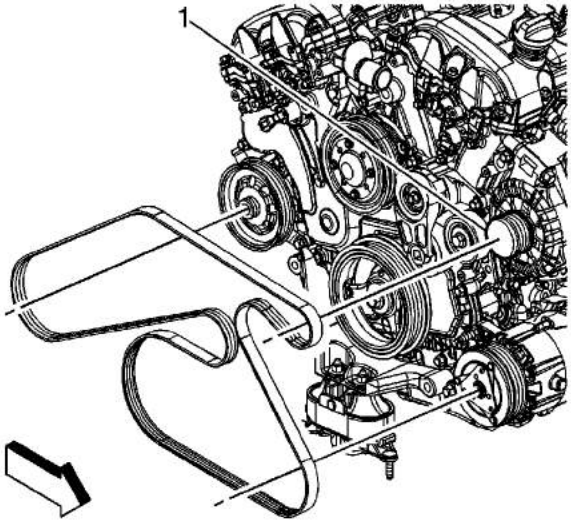

1. Remove the engine splash shield.
2. Remove the right side engine mount bracket. Refer to Engine Mount Bracket Replacement - Right Side .
3. Completely remove the lower engine mount bracket bolt.
4. Rotate the drive belt tensioner clockwise to release the drive belt tension.
5. Slide the drive belt off of the generator pulley (1).
6. Slowly release the drive belt tensioner.
7. Remove the drive belt from the accessory drive pulleys.

Installation Procedure

cardiagn.com

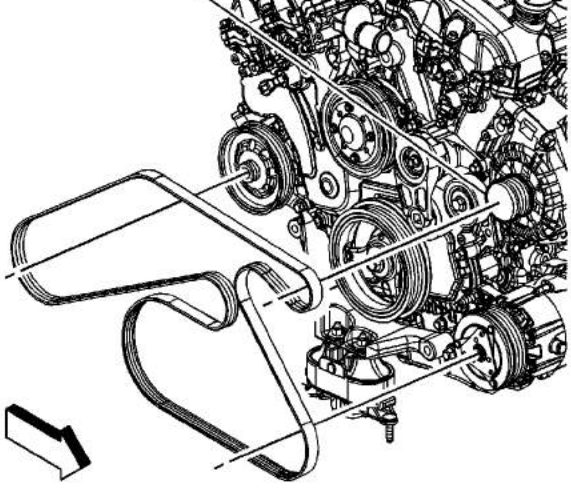

1. Install the drive belt to the crankshaft pulley, the tensioner and the idler pulley.
2. Rotate the drive belt tensioner clockwise.
3. Install the drive belt to the generator (1).

   Important: Ensure the drive belt is properly aligned and seated into the grooves of the accessory drive pulleys.

4. Slowly release the drive belt tensioner.
5. Raise the vehicle.
6. Partially thread the lower right side engine mount bracket bolt in place.
7. Install the right side engine mount bracket. Refer to Engine Mount Bracket Replacement - Right Side .
8. Install the engine splash shield.

cardiagn.com

Drive Belt Tensioner Replacement

Removal Procedure

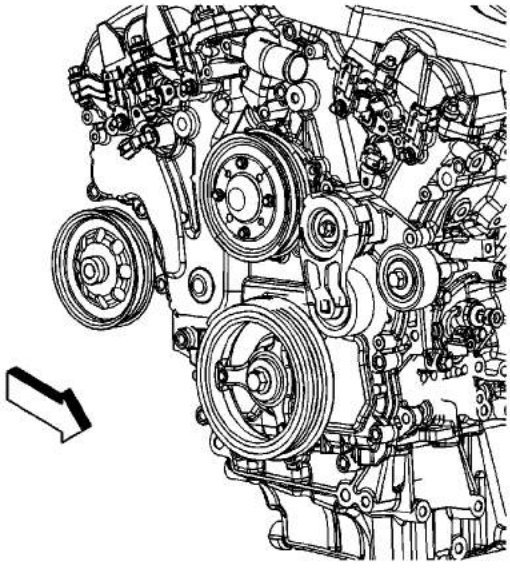

1. Remove the drive belt. Refer to Drive Belt Replacement.
2. Loosen the idler pulley.
3. Remove the engine harness channel bolt.
4. Remove the tensioner bolts.
5. Remove the tensioner.

Installation Procedure

Caution: Refer to Fastener Caution in the Preface section.

cardiagn.com

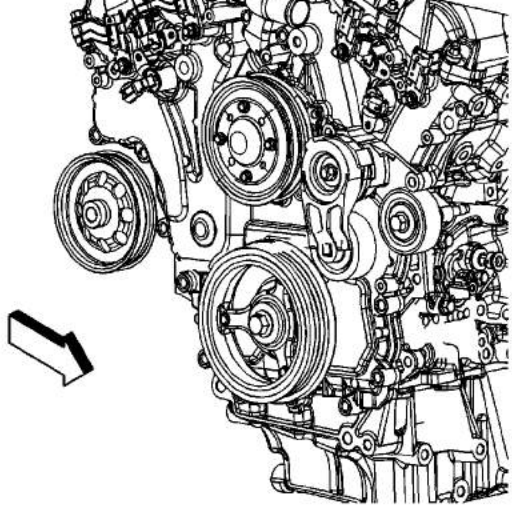

1. Position the tensioner and install the tensioner bolts. Tighten the bolts to **25 N·m (18 lb ft)**.
2. Tighten the idler pulley. Tighten the idler pulley bolt to **58 N·m (43 lb ft)**.
3. Install the engine harness channel bolt.
4. Install the drive belt. Refer to Drive Belt Replacement.

cardiagn.com

Drive Belt Idler Pulley Replacement

Removal Procedure

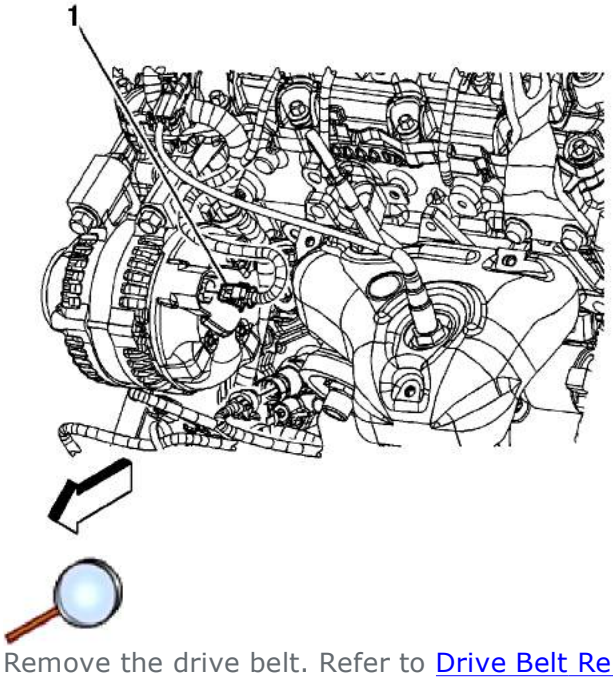

1. Remove the drive belt. Refer to Drive Belt Replacement.
2. Completely loosen the idler pulley bolt.
3. Disconnect the negative battery cable. Refer to Battery Negative Cable Disconnection and Connection.
4. Disconnect the generator electrical connector (1).

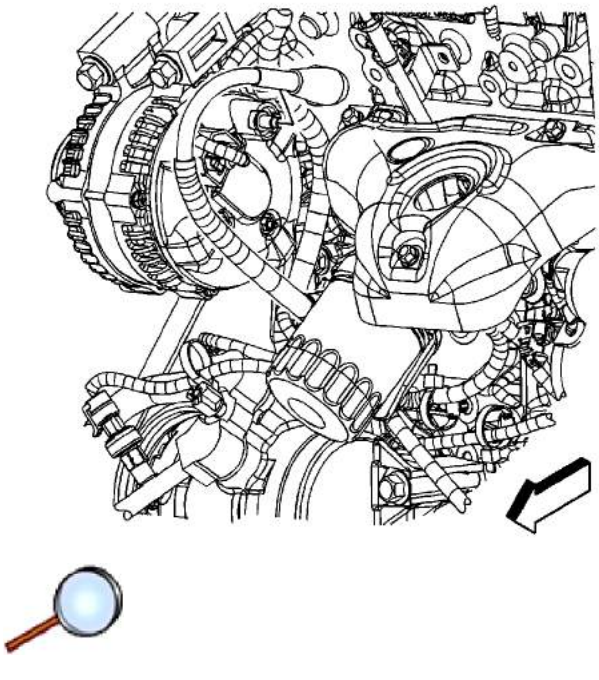

cardiagn.com

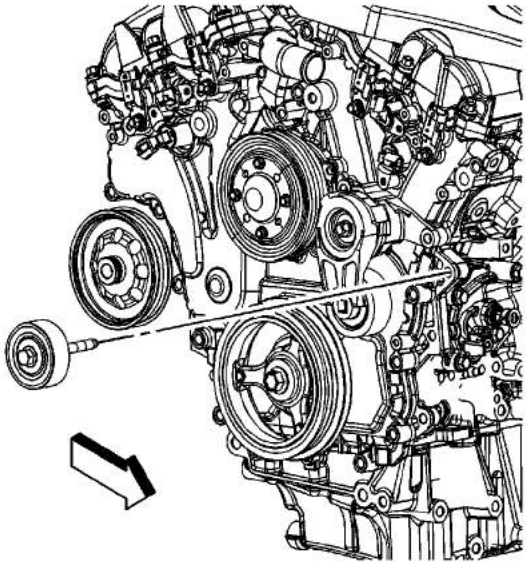

7. Remove the drive belt idler pulley bolt.
8. Remove the drive belt idler pulley.

Installation Procedure

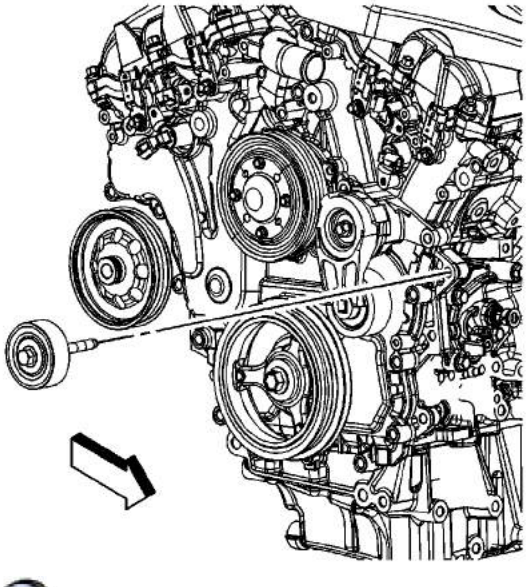

1. Install the drive belt idler pulley.

   Caution: Refer to Fastener Caution in the Preface section.

cardiagn.com

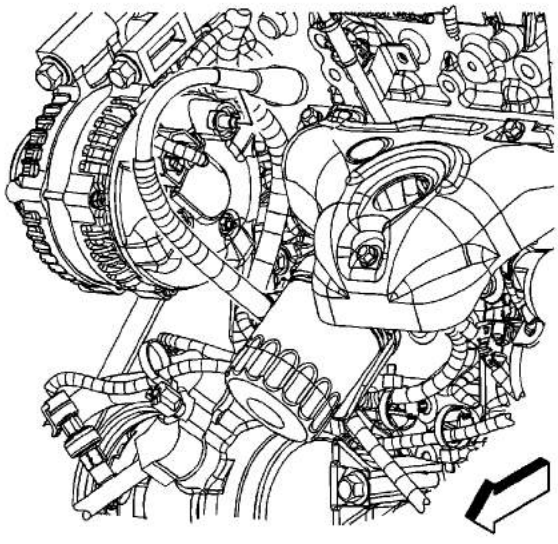

4. Install the battery cable.
5. Install the battery cable boot.

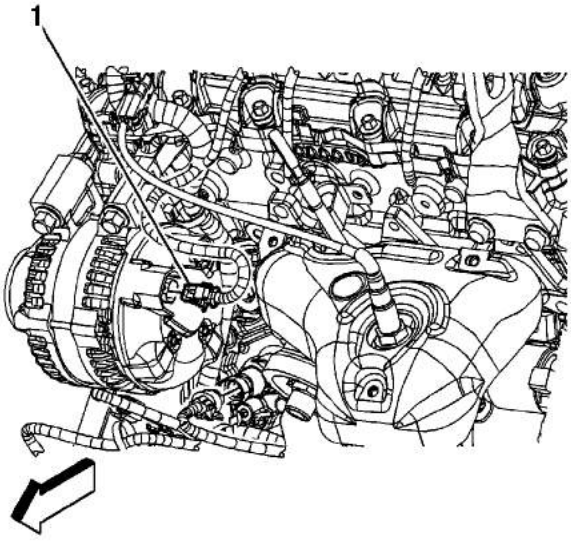

6. Connect the generator electrical connector.
7. Install the drive belt. Refer to Drive Belt Replacement.
8. Connect the negative battery cable. Refer to Battery Negative Cable Disconnection and Connection.

cardiagn.com

Engine Mount Inspection

Important: Before replacing any engine mount due to suspected fluid loss, verify that the source of the fluid is the engine mount, not the engine or accessories.

1. Install the engine support fixture. Refer to Engine Support Fixture .
2. Observe the engine mount while raising the engine. Raising the engine removes the weight from the engine mount and creates slight tension on the rubber.
3. Replace the engine mount if the engine mount exhibits any of the following conditions:
   - The hard rubber is covered with heat check cracks.
   - The rubber is separated from the metal plate of the engine mount.
   - The rubber is split through the center of the engine mount.
   - The engine mount itself is leaking fluid.
4. For engine mount replacement. Refer to Engine Mount Replacement - Right Side.

cardiagn.com

Engine Mount Replacement - Right Side

Removal Procedure

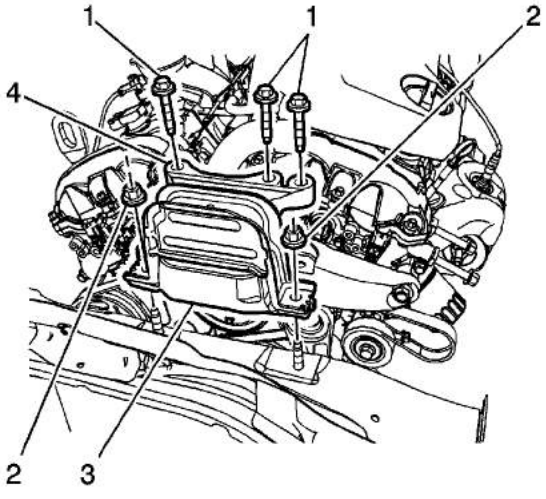

1. Remove the air cleaner assembly. Refer to Air Cleaner Assembly Replacement.
2. Using a floor jack and a block of wood, support the engine.
3. Remove the engine mount adapter bolts (1).
4. Remove the engine mount nuts (2).
5. Remove the engine mount (3) and engine mount adapter (4).

Installation Procedure

cardiagn.com

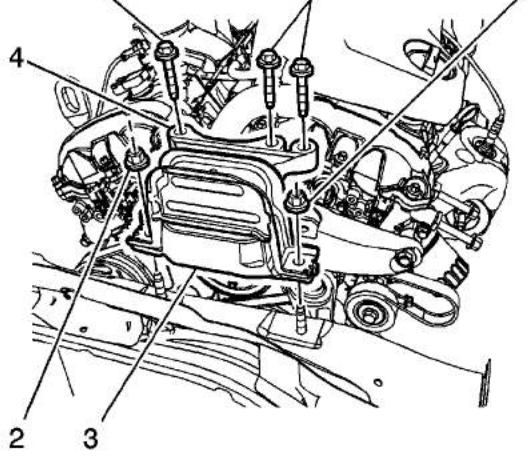

1. Install the engine mount (3) and engine mount adapter (4).

   Caution: Refer to Fastener Caution in the Preface section.

2. Install the engine mount nuts (2) and tighten to **85 N·m (63 lb ft)**.
3. Install the engine mount adapter bolts (1) and tighten to **50 N·m (38 lb ft)**.
4. Lower the engine.
5. Install the air cleaner assembly. Refer to Air Cleaner Assembly Replacement.

cardiagn.com

Engine Mount Bracket Replacement - Right Side

Removal Procedure

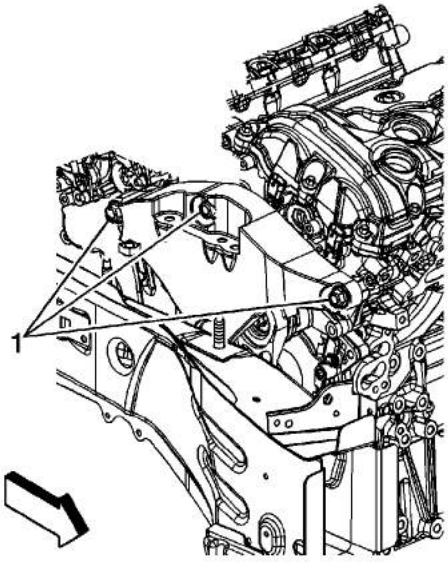

1. Remove the right side engine mount. Refer to Engine Mount Replacement - Right Side.
2. Raise and support the vehicle. Refer to Lifting and Jacking the Vehicle.
3. Lower the vehicle.
4. Remove the air cleaner assembly. Refer to Air Cleaner Assembly Replacement.
5. Using a floor jack and a block of wood, raise the engine.
6. Remove the engine mount adapter bracket bolts (1).
7. Remove the engine mount adapter.

Installation Procedure

cardiagn.com

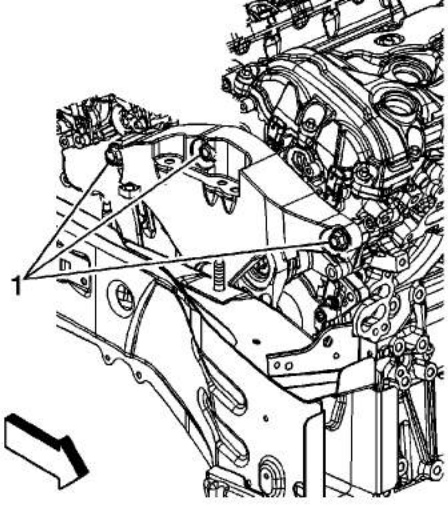

1. Install the engine mount bracket to the vehicle.

   Caution: Refer to Fastener Caution in the Preface section.

2. Install the upper engine mount bracket bolts (1) and tighten to **110 N·m (81 lb ft)**.
3. Lower the engine.
4. Raise and support the vehicle. Refer to Lifting and Jacking the Vehicle.
5. Lower the vehicle.
6. Install the right side engine mount. Refer to Engine Mount Replacement - Right Side.
7. Install the air cleaner assembly. Refer to Air Cleaner Assembly Replacement.

cardiagn.com

Fuel Injector Sight Shield Replacement

Removal Procedure

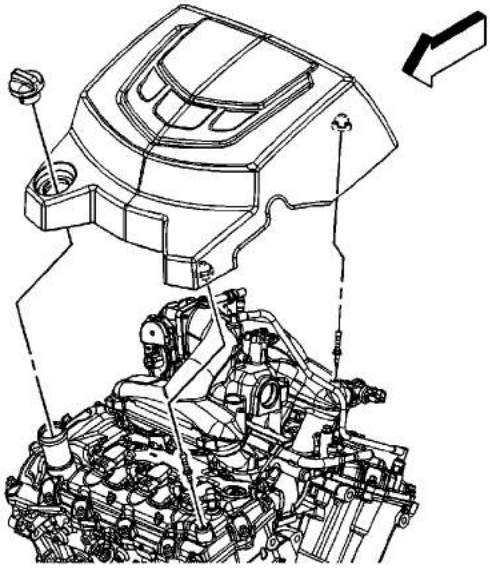

1. Remove the oil fill cap.
2. Lift upward and remove cover from ballstuds.

Installation Procedure

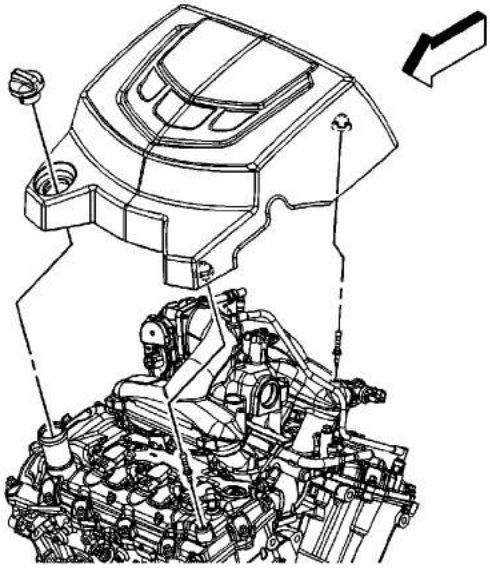

cardiagn.com

1. Push downward on cover and lock into place on ballstuds.
2. Install the oil fill cap.

cardiagn.com

Positive Crankcase Ventilation Hose / Pipe / Tube Replacement (Air Cleaner Duct / Valve Cover)

Removal Procedure

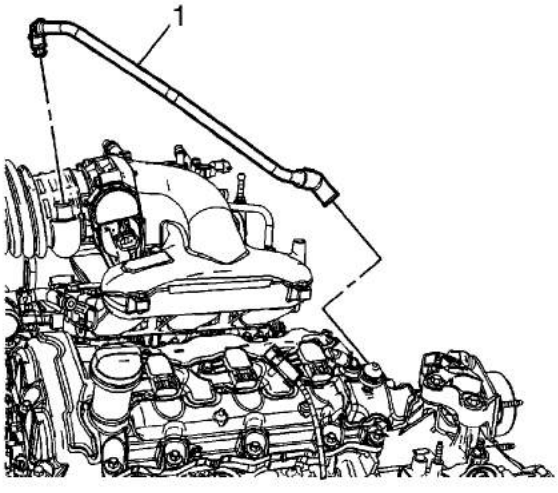

1. Remove the engine cover. Refer to Fuel Injector Sight Shield Replacement .
2. Disconnect the positive crankcase ventilation (PVC) fresh air pipe (1) from the air cleaner duct.
3. Disconnect the PVC air pipe from the valve cover.

Installation Procedure

cardiagn.com

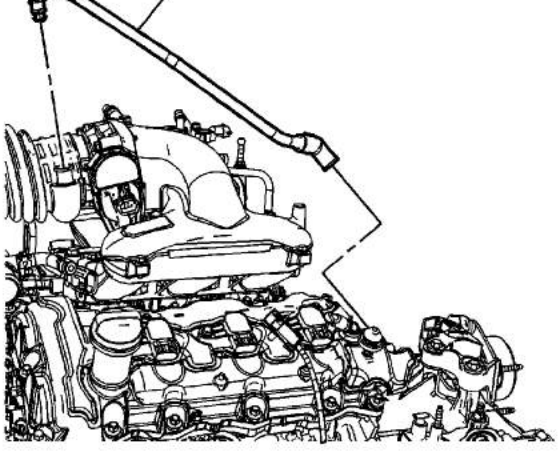

1. Connect the PVC air pipe to the valve cover valve.
2. Connect the PVC fresh air pipe (1) to the air cleaner duct.
3. Install the engine cover. Refer to Fuel Injector Sight Shield Replacement .

cardiagn.com

Positive Crankcase Ventilation Hose / Pipe / Tube Replacement (PCV Valve / Intake)

Removal Procedure

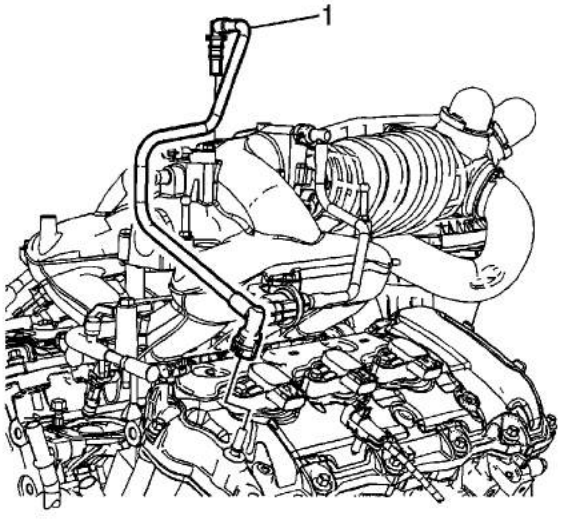

1. Remove the engine cover. Refer to Fuel Injector Sight Shield Replacement .
2. Disconnect the positive crankcase ventilation (PVC) fresh air pipe (1) from the upper intake manifold.
3. Disconnect the PVC foul air pipe from the PVC valve.

Installation Procedure

cardiagn.com

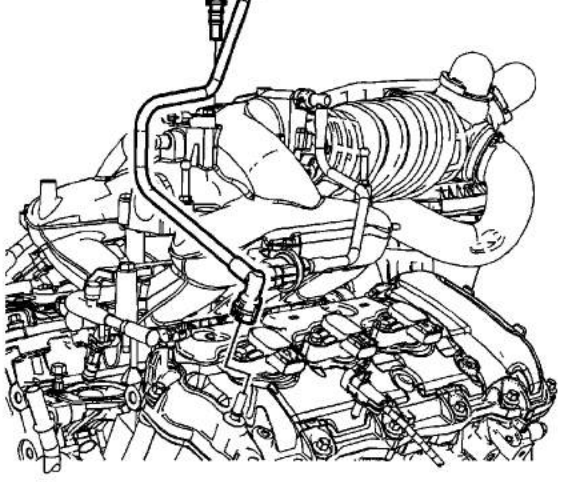

1. Connect the PVC foul air pipe to the PVC valve.
2. Connect the PVC fresh air pipe (1) to the upper intake manifold.
3. Install the engine cover. Refer to Fuel Injector Sight Shield Replacement .

cardiagn.com

Upper Intake Manifold Replacement

Removal Procedure

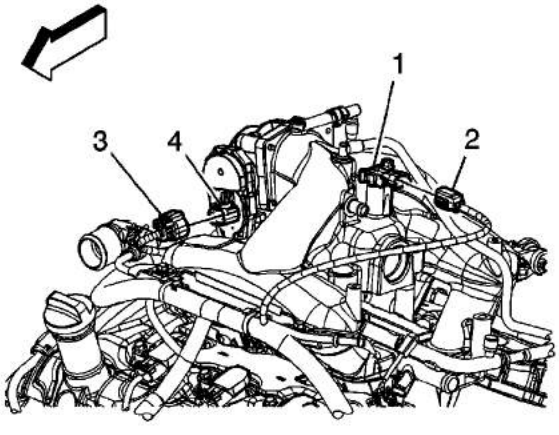

1. Remove the air cleaner outlet duct. Refer to Air Cleaner Outlet Duct Replacement.
2. Disconnect the wiring harness electrical connector (3) from the throttle body (4).

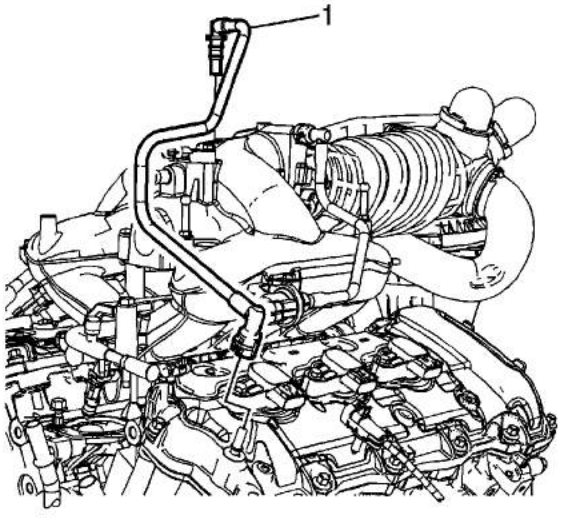

3. Disconnect the PCV line (1) from the top of the intake manifold and reposition aside.

cardiagn.com

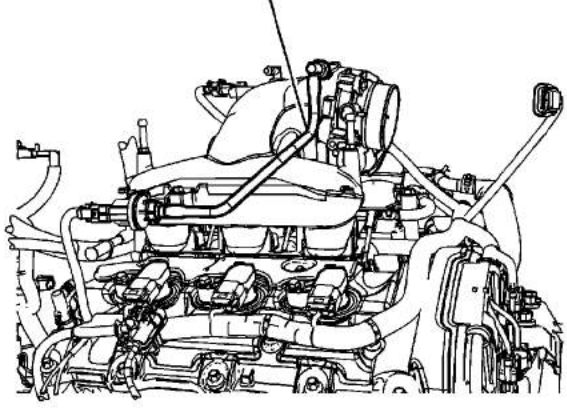

4. Disconnect the evaporative emissions (EVAP) canister purge line (1) and reposition aside.

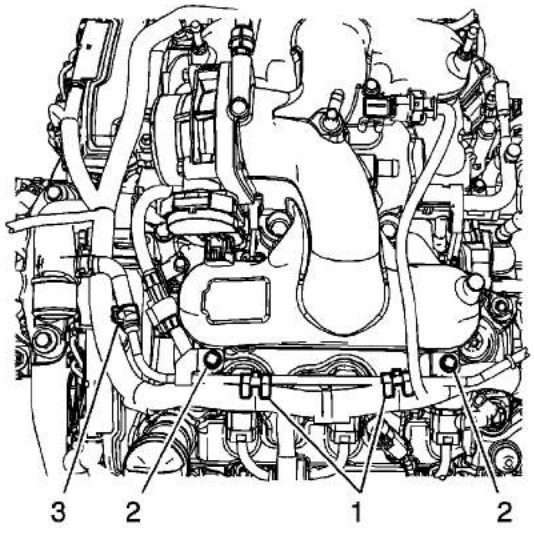

5. Disconnect the coolant hose bleed pipe.
6. Remove the engine harness retaining clips (1) from the bleed pipe.
7. Remove the bleed pipe bolts (2).
8. Remove the bleed pipe hose clamp (3).
9. Reposition the bleed pipe.
10. Remove the brake booster vacuum hose from the intake manifold.

cardiagn.com

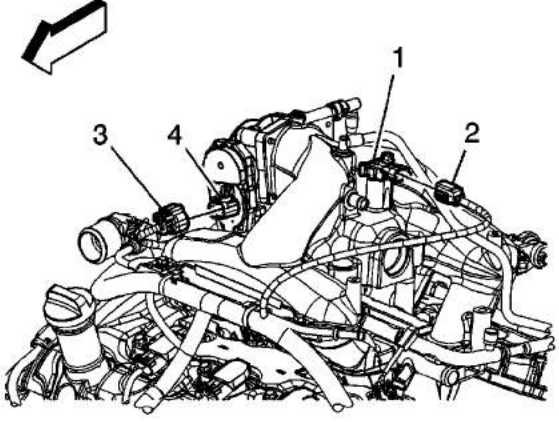

11. Disconnect the manifold air pressure (MAP) sensor electrical connector from the map sensor (1).

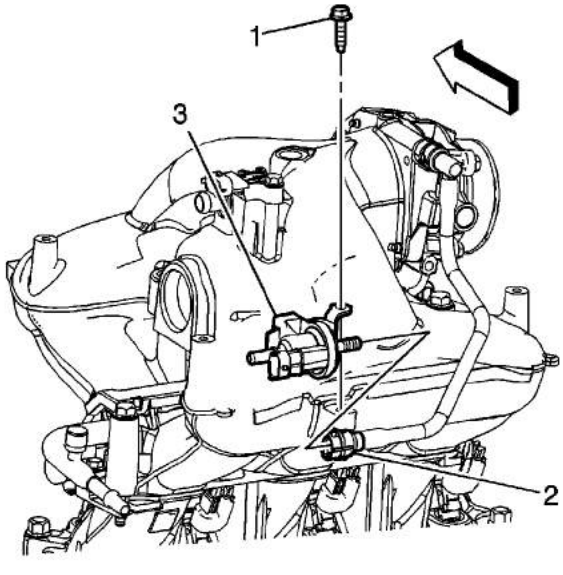

12. Remove the EVAP purge solenoid valve bolt (1).

cardiagn.com

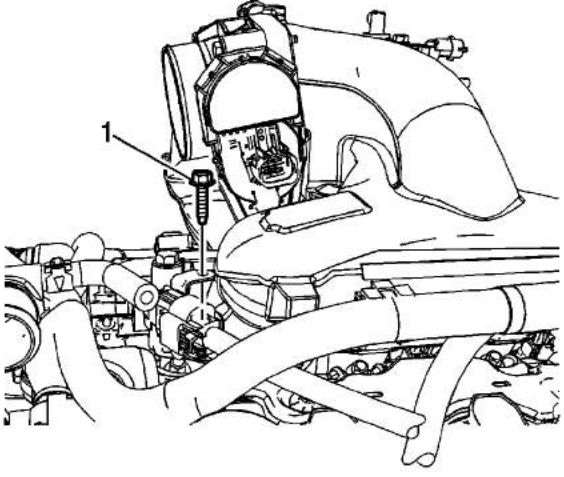

13. Remove the engine harness bracket bolt (1).

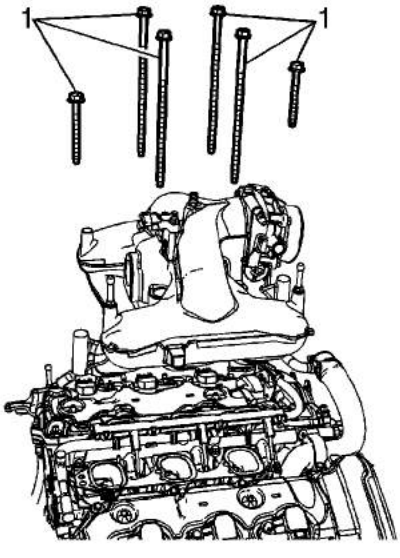

14. Remove the upper intake retaining bolts (1).
15. Remove the upper intake manifold and gasket. Discard the gasket.
16. If replacing the upper intake manifold complete the following steps:
    16.1. Remove the evaporative emissions (EVAP) purge solenoid valve. Refer to Evaporative Emission Canister Purge Solenoid Valve Replacement.
    16.2. Remove the throttle body. Refer to Throttle Body Assembly Replacement.

Installation Procedure

cardiagn.com

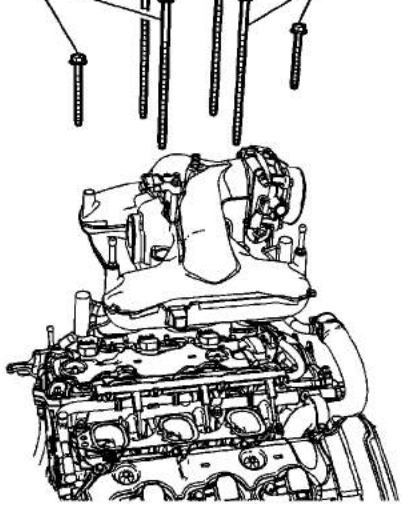

1. Install the upper intake manifold gaskets to the lower intake manifold and install the fir tree retainers to retain the upper intake manifold gasket position.
2. Install the upper intake manifold.
3. Apply threadlock to the bolt threads. Refer to Adhesives, Fluids, Lubricants, and Sealers.

   Caution: Refer to Fastener Caution in the Preface section.

4. Install the upper intake manifold bolts (1) and tighten to **25 N·m (18 lb ft)**.
5. If the upper manifold was replaced, complete the following steps:
   5.1. Install the throttle body. Refer to Throttle Body Assembly Replacement.
   5.2. Install the EVAP purge solenoid valve. Refer to Evaporative Emission Canister Purge Solenoid Valve Replacement.

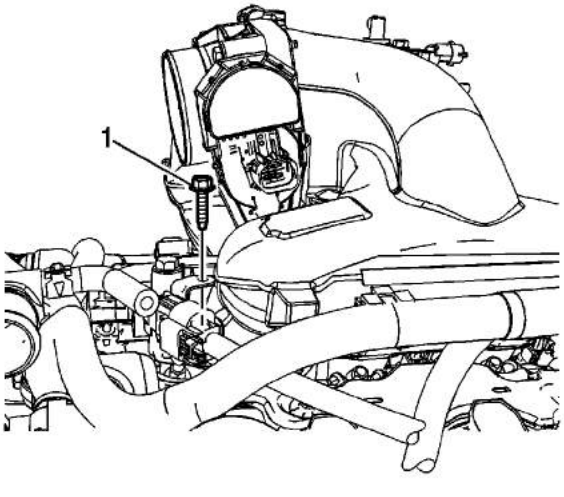

cardiagn.com

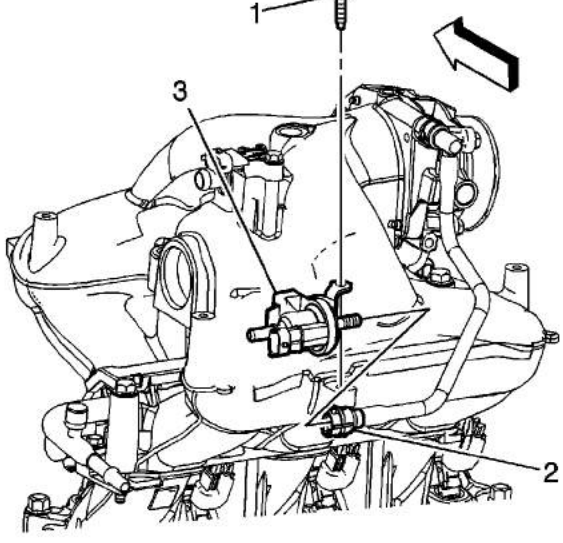

7. Install the EVAP purge solenoid valve bolt (1) and tighten to **10 N·m (89 lb in)**.

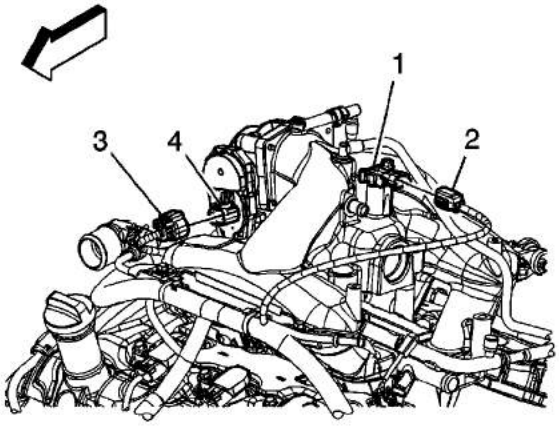

8. Connect the manifold air pressure (MAP) sensor electrical connector to the map sensor (1).

cardiagn.com

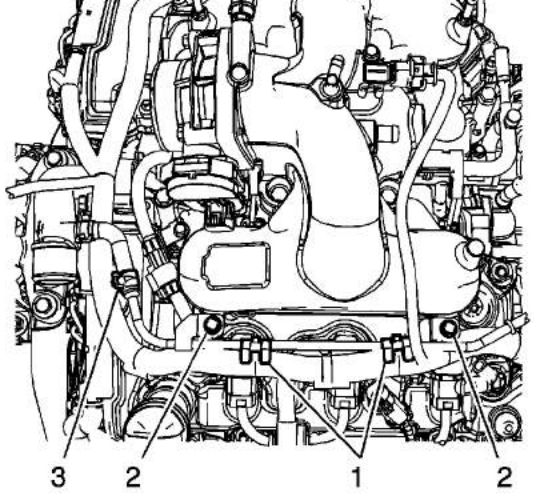

9. Install the brake booster vacuum hose to the intake manifold.
10. Position the bleed pipe.
11. Install the bleed pipe hose clamp (3).
12. Install the bleed pipe bolts (2) and tighten to **10 N·m (89 lb in)**.
13. Install the engine harness retaining clips (1) to the fuel feed pipe.
14. Connect the coolant hose bleed pipe.

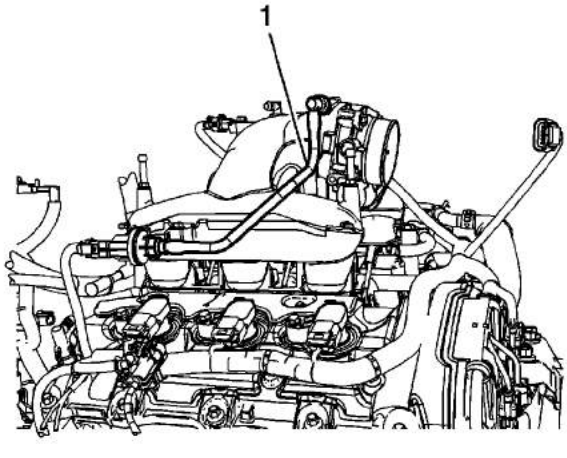

15. Connect the EVAP canister purge line (1).

cardiagn.com

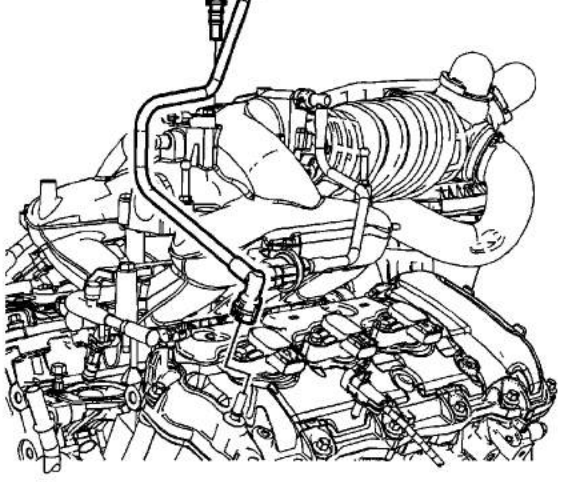

16. Connect the PCV line (1) to the top of the intake manifold.

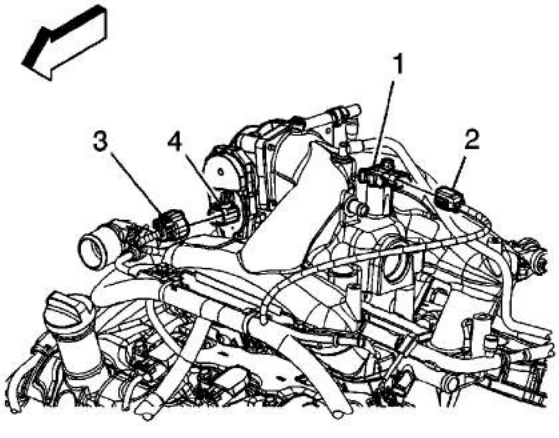

17. Connect the wiring harness electrical connector (3) to the throttle body (4).
18. Install the air cleaner outlet duct. Refer to Air Cleaner Outlet Duct Replacement.

cardiagn.com

Lower Intake Manifold Replacement

Removal Procedure

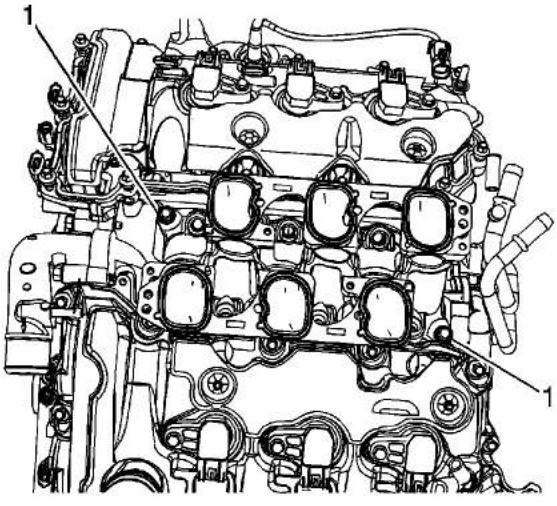

1. Remove the fuel injectors and fuel rail. Refer to Fuel Injector and Fuel Rail Replacement.
2. Remove the lower intake manifold bolts (1).
3. Remove the lower intake manifold and gasket from engine. Discard the gasket.
4. Clean and inspect the intake manifold and the sealing surfaces. Refer to Intake Manifold Cleaning and Inspection.

Installation Procedure

cardiagn.com

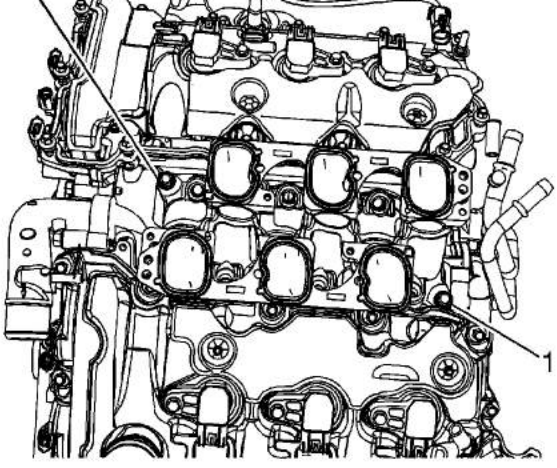

1. Install the lower intake manifold gasket.
2. Install the lower intake manifold bolts (1).

   Caution: Refer to Fastener Caution in the Preface section.

3. Install the fuel injectors and fuel rail. Refer to Fuel Injector and Fuel Rail Replacement.

   Tighten the bolts to **23 N·m (17 lb ft)**.

cardiagn.com

Oil Level Indicator Tube Replacement

Removal Procedure

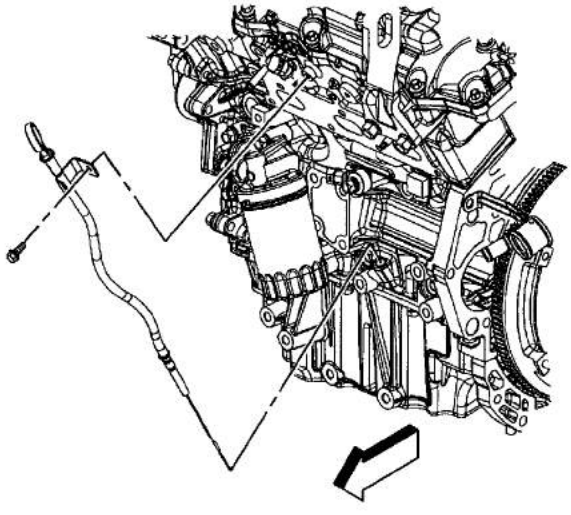

1. Turn the ignition OFF.
2. Remove the oil level indicator from the oil level indicator tube.
3. Remove the oil level indicator tube bolt.
4. Remove the oil level indicator tube up through the exhaust manifold.
5. If replacing only the oil level indicator tube seal, remove and discard the old seal.

Installation Procedure

cardiagn.com

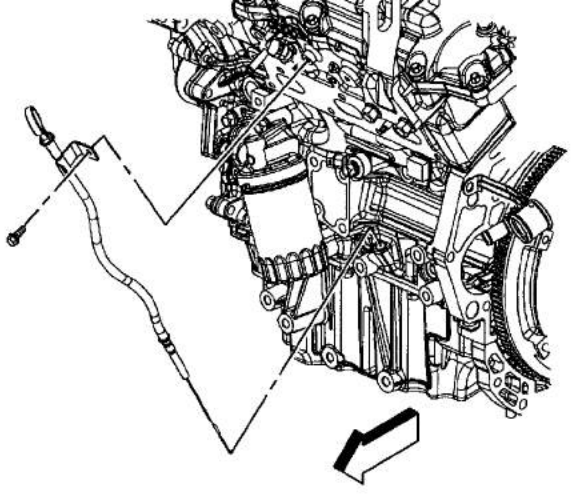

1. Install a new seal on the oil level indicator tube.
2. Install the oil level indicator tube.

   Caution: Refer to Fastener Caution in the Preface section.

3. Install the oil level indicator tube bolt and tighten to **10 N·m (89 lb in)**.
4. Install the oil level indicator in the oil level indicator tube.

cardiagn.com

Oil Filter Adapter Replacement

Removal Procedure

1. Unbolt the air conditioning compressor and set aside. Refer to Air Conditioning Compressor Replacement.

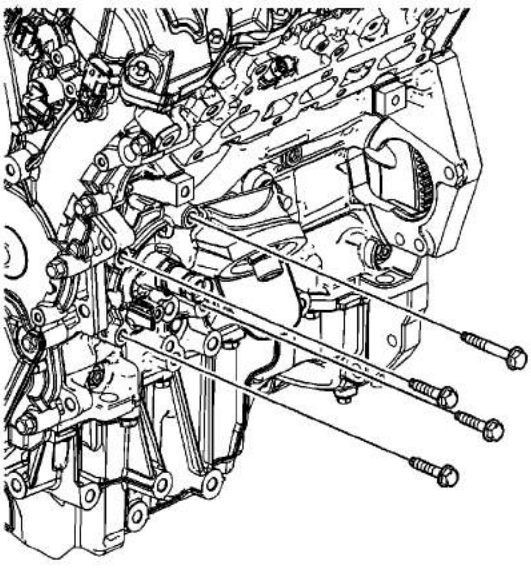

2. Remove and properly dispose of the oil filter. Refer to Engine Oil and Oil Filter Replacement.
3. Disconnect the oil pressure sensor electrical connector.
4. Remove the oil filter adapter bolts from the engine block.

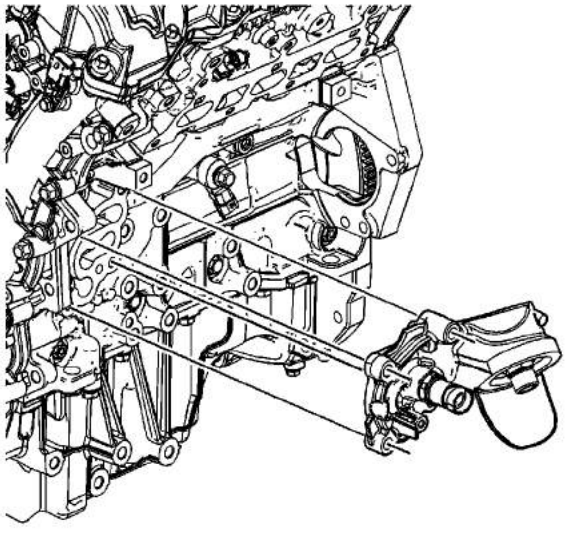

5. Remove the oil filter adapter.

© 2010 General Motors Corporation. All rights reserved.

cardiagn.com

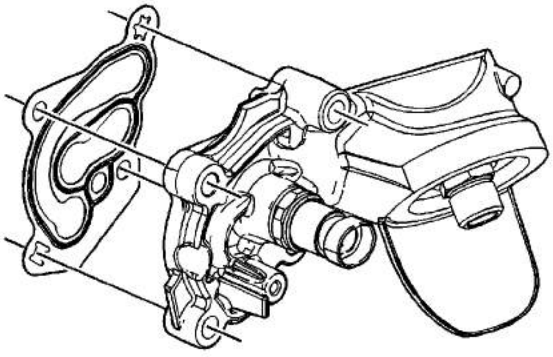

6. Remove and discard the oil filter adapter gasket.

Installation Procedure

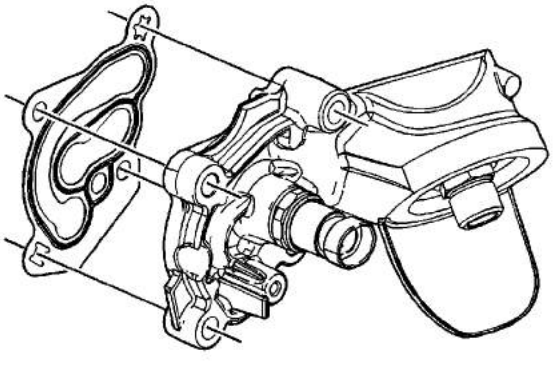

1. Position a NEW oil filter adapter gasket onto the oil filter adapter.

cardiagn.com

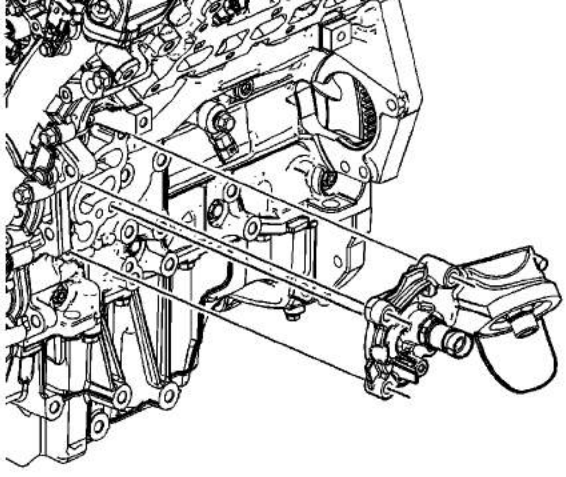

2. Place the oil filter adapter into position.

   Caution: Refer to Fastener Caution in the Preface section.

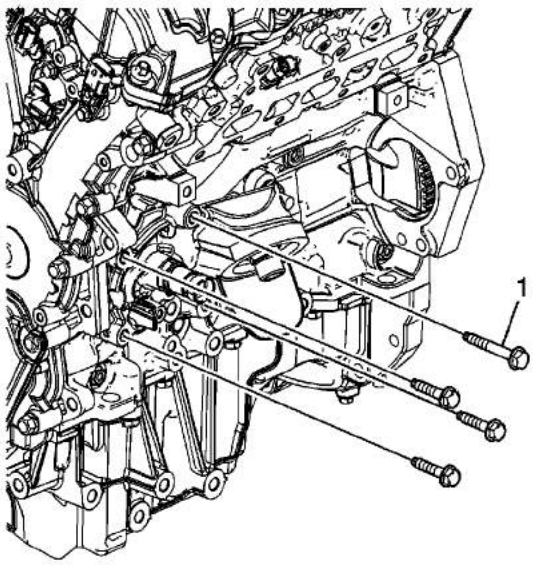

3. Install the oil filter adapter bolts. Ensure the longer bolts (1) is installed in the upper rear position.

   Tighten the oil filter adapter bolts to **23 N·m (17 lb ft)**.

4. Install a NEW oil filter. Refer to Engine Oil and Oil Filter Replacement.
5. Install the air conditioning compressor. Refer to Air Conditioning Compressor Replacement.

cardiagn.com

Crankshaft Balancer Replacement

Special Tools

- EN 46106 Flywheel Holding Tool
- J 38416-2 Crankshaft Button
- J 41816 Crankshaft Balancer Remover
- J 45059 Angle Meter

Removal Procedure

1. Remove the drive belt. Refer to Drive Belt Replacement.
2. Install the engine support fixture. Refer to Engine Support Fixture.
3. Remove the starter. Refer to Starter Motor Replacement.

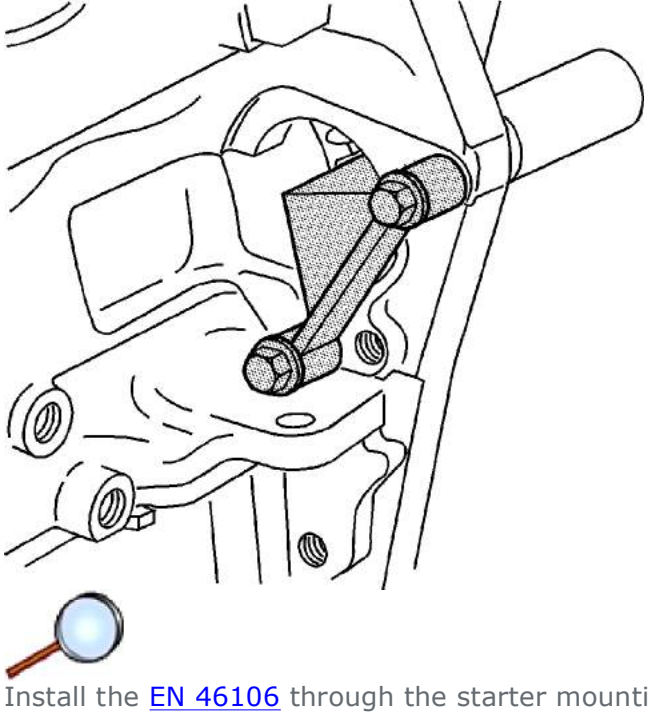

4. Install the EN 46106 through the starter mounting hole.
5. Remove the splash shield. Refer to Engine Splash Shield Replacement.

cardiagn.com

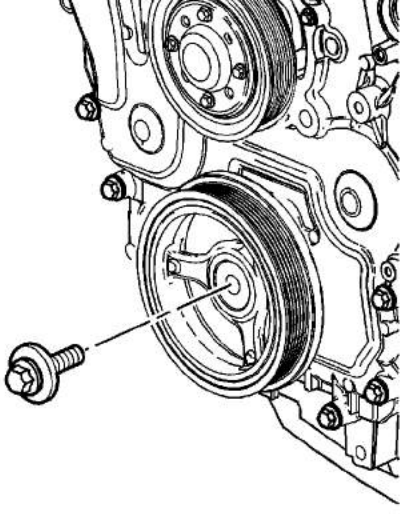

6. Remove the crankshaft balancer bolt.

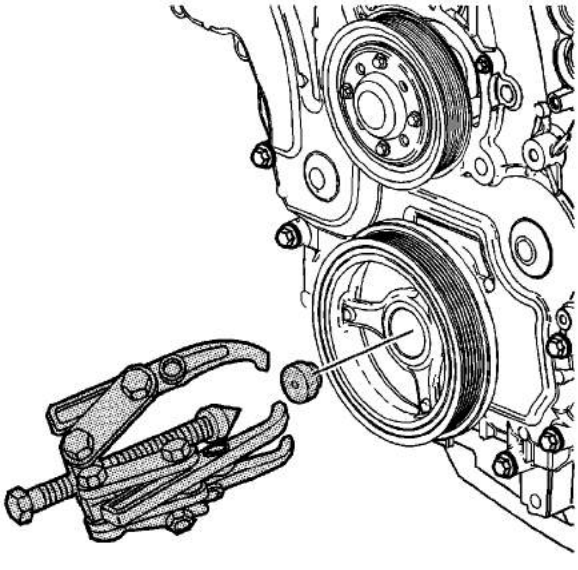

7. Install the J 38416-2 in the nose of the crankshaft.
8. Install the J 41816 in order to remove the crankshaft balancer.
9. Tighten the center bolt of the J 41816 in order to pull the crankshaft balancer off of the crankshaft.
10. Remove the J 41816 from the crankshaft balancer.

Installation Procedure

cardiagn.com

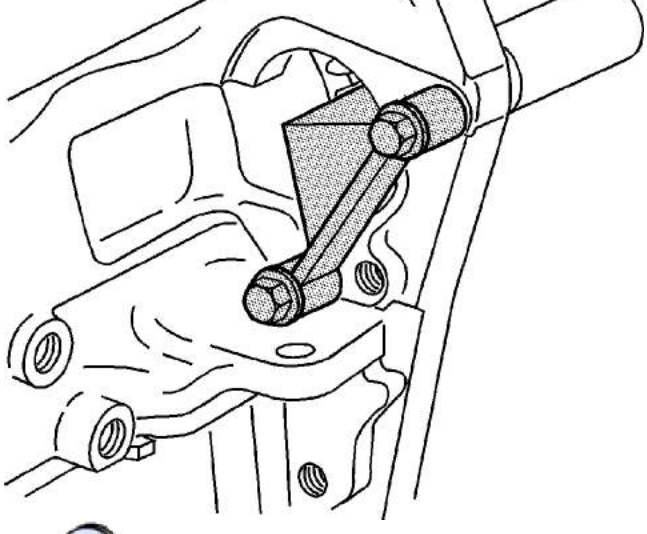

1. The EN 46106 must be installed onto the flywheel.
2. Use the J 41998-B , nut, bearing and washer to install the crankshaft balancer.

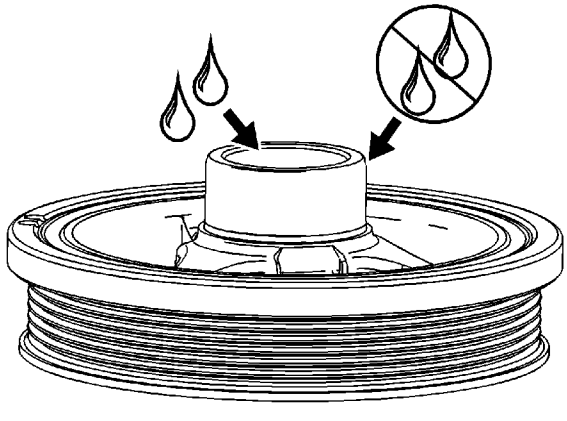

Note: Do not lubricate the crankshaft front oil seal or crankshaft balancer sealing surfaces. The crankshaft balancer is installed into a dry seal.

3. Apply lubricant to the inside of the crankshaft balancer hub bore.

cardiagn.com

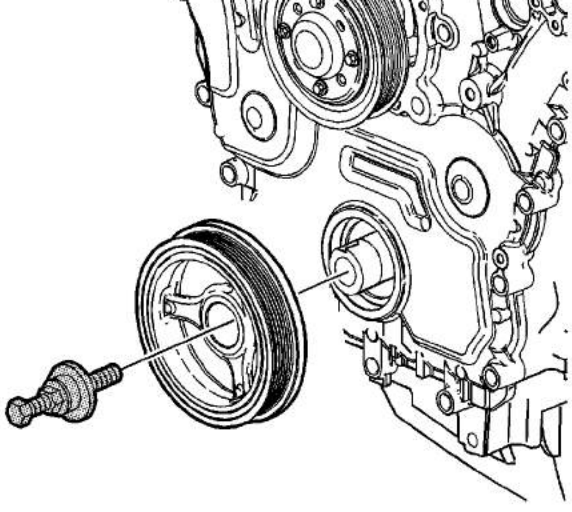

4. Place the crankshaft balancer in position on the crankshaft.
5. Thread the J 41998-B in the crankshaft. Ensure you engage at least 10 threads of the J 41998-B before pressing the crankshaft balancer in place.
6. Push the crankshaft balancer into position by tightening the nut on the J 41998-B until the large washer bottoms out on the crankshaft end.
7. Remove the J 41998-B .

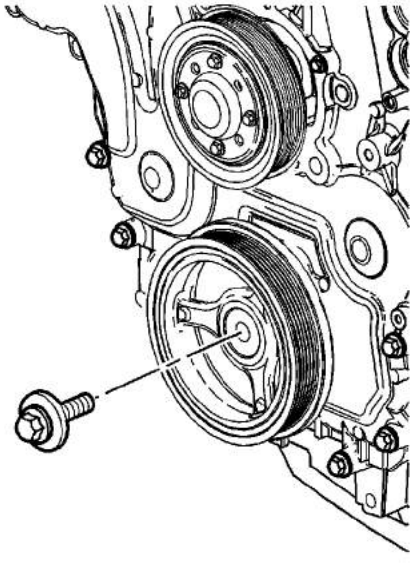

8. Install the crankshaft balancer bolt.

   Caution: Refer to Fastener Caution in the Preface section.

9. Tighten the crankshaft balancer bolt.
   - Tighten the crankshaft balancer bolt to **100 N·m (74 lb ft)**.
   - Tighten the crankshaft balancer bolt an additional **150 degrees** using the J 45059 .

cardiagn.com

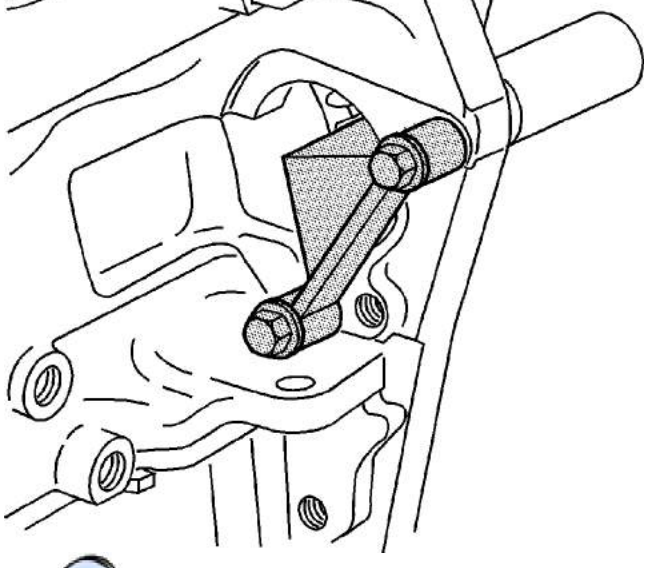

10. Install the splash shield. Refer to Engine Splash Shield Replacement.
11. Remove the EN 46106 .
12. Install the starter. Refer to Starter Motor Replacement.
13. Using engine support fixture, raise the engine into position.
14. Install the drive belt. Refer to Drive Belt Replacement.

cardiagn.com

Crankshaft Front Oil Seal Replacement

Tools Required

J 29184 Oil Seal Installer

Removal Procedure

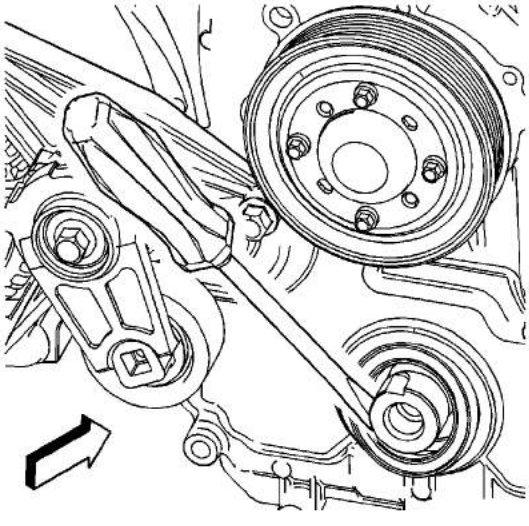

1. Remove the crankshaft balancer. Refer to Crankshaft Balancer Replacement.
2. Use a flat-bladed tool in order to remove the crankshaft oil seal. Use care not to damage the engine front cover or the crankshaft.

Installation Procedure

cardiagn.com

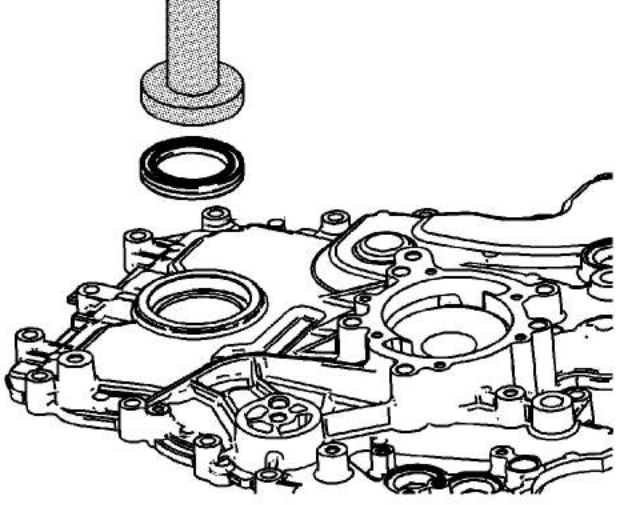

Important: Do not lubricate the crankshaft front oil seal or the crankshaft balancer sealing surfaces.

1. Use the J 29184 or equivalent to install the crankshaft front oil seal.
2. Install the crankshaft balancer. Refer to Crankshaft Balancer Replacement .

cardiagn.com

Camshaft Cover Replacement - Left Side

Special Tools

EN 46101 Spark Plug Tube Seal Guide

Removal Procedure

1. Remove the left bank spark plugs. Refer to Spark Plug Replacement.
2. Reposition spark plug wire harness aside.

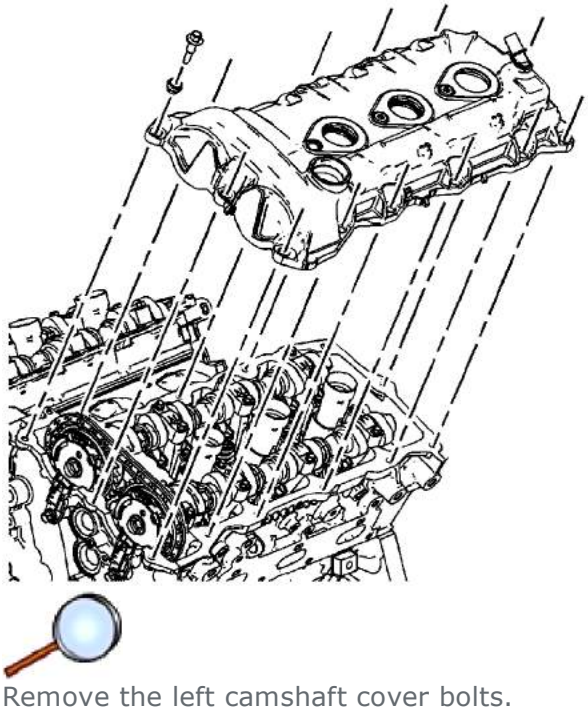

3. Remove the left camshaft cover bolts.
4. Remove the left camshaft cover from the left cylinder head.
5. Clean the mating surfaces of the cylinder head and the camshaft cover. Refer to Camshaft Cover Cleaning and Inspection.

cardiagn.com

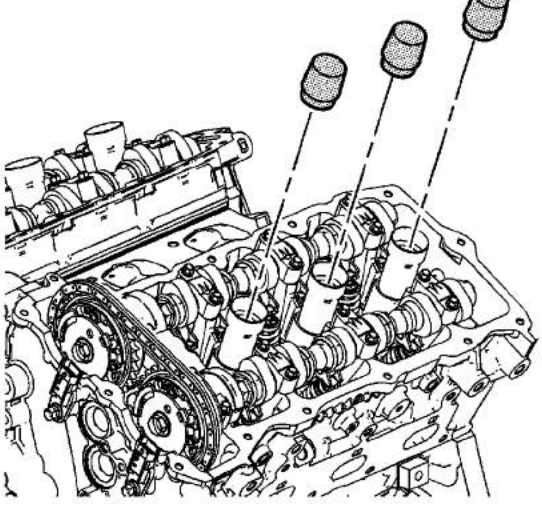

6. Install the EN 46101 onto the spark plug tubes of the left cylinder head.

Installation Procedure

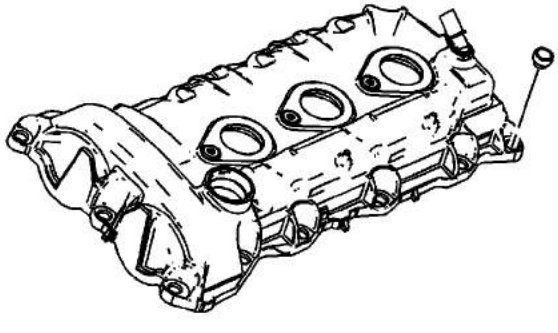

1. Install new camshaft cover bolt grommets prior to installing the camshaft cover bolts.

cardiagn.com

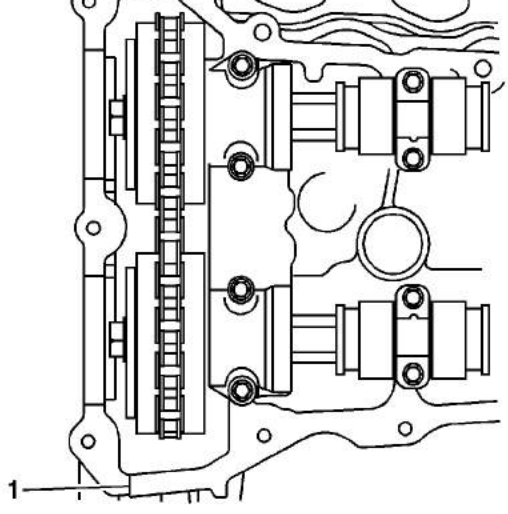

2. Place a bead 8 mm (0.3150 in) in diameter by 4 mm (0.1575 in) in height of RTV sealant, GM P/N 12378521 (Canadian P/N 88901148) or equivalent, on the engine front cover split lines (1).

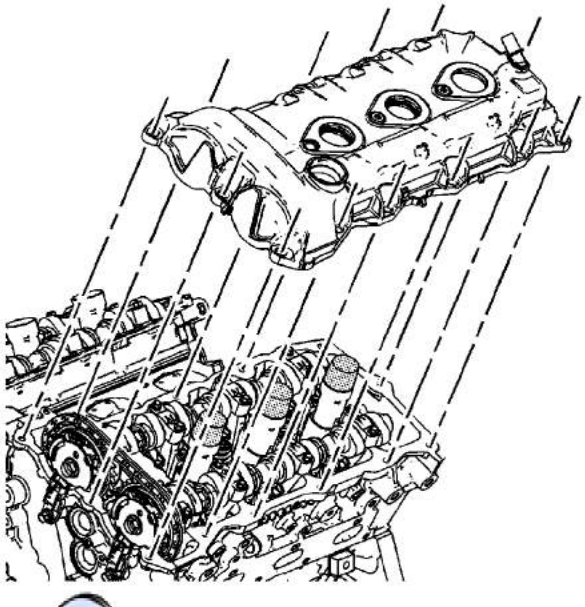

3. Place the left camshaft cover into position onto the left cylinder head.

cardiagn.com

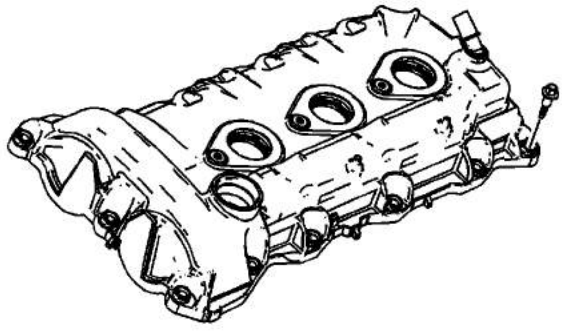

4. Loosely install the left camshaft cover bolts.

   Caution: Refer to Fastener Caution in the Preface section.

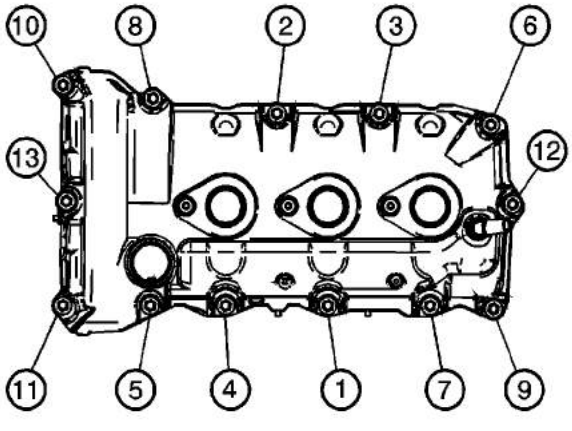

5. Tighten the left camshaft cover bolts in the sequence shown to **10 N·m (89 lb in)**.

cardiagn.com

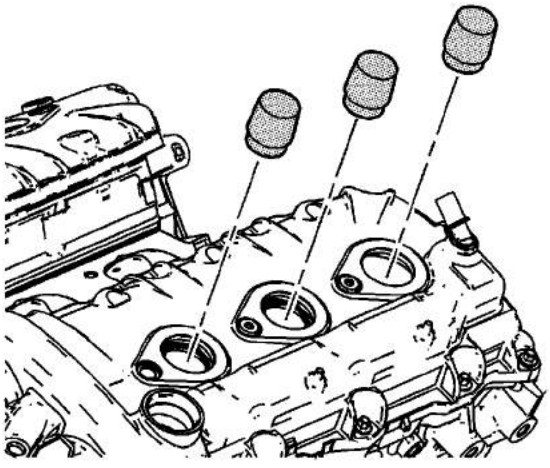

6. Remove the EN 46101 from the spark plug tubes of the left cylinder head.
7. Install NEW spark plugs into the left cylinder head. Refer to Spark Plug Replacement.

cardiagn.com

Camshaft Cover Replacement - Right Side

Special Tools

EN 46101 Spark Plug Tube Seal Guide

Removal Procedure

1. Remove the upper intake manifold. Refer to Upper Intake Manifold Replacement.
2. Remove the right bank spark plugs. Refer to Spark Plug Replacement.
3. Unbolt the power steering reservoir and position aside. Refer to Power Steering Fluid Reservoir Replacement.
4. Reposition engine wiring harness aside.

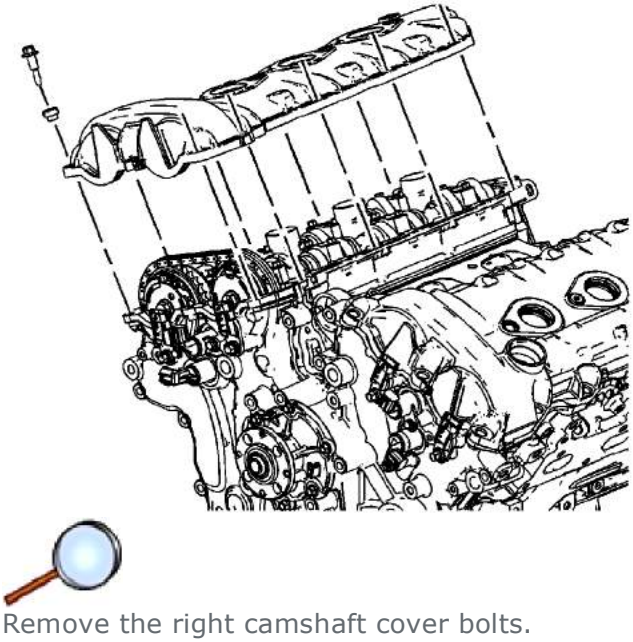

5. Remove the right camshaft cover bolts.
6. Remove the right camshaft cover from the right cylinder head.
7. Clean the mating surfaces of the cylinder head and the camshaft cover. Refer to Camshaft Cover Cleaning and Inspection.

cardiagn.com

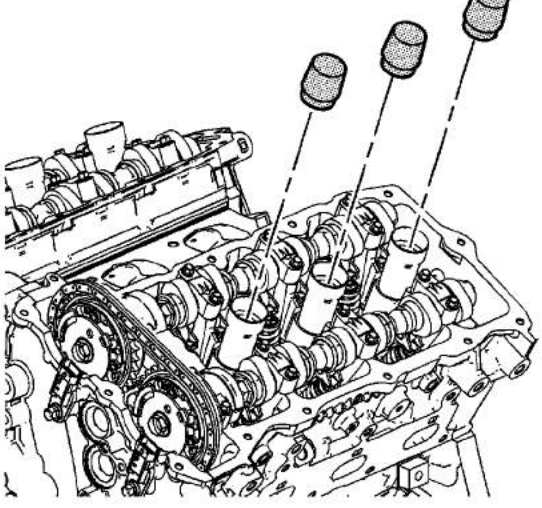

8. Install the EN 46101 onto the spark plug tubes of the left cylinder head.

Installation Procedure

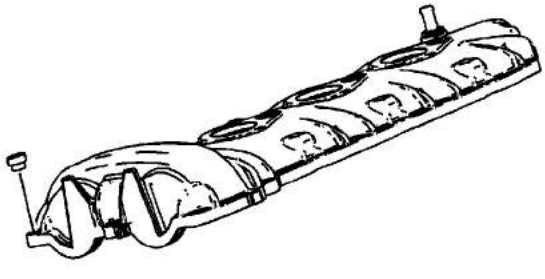

1. Install new camshaft cover bolt grommets prior to installing the camshaft cover bolts.

cardiagn.com

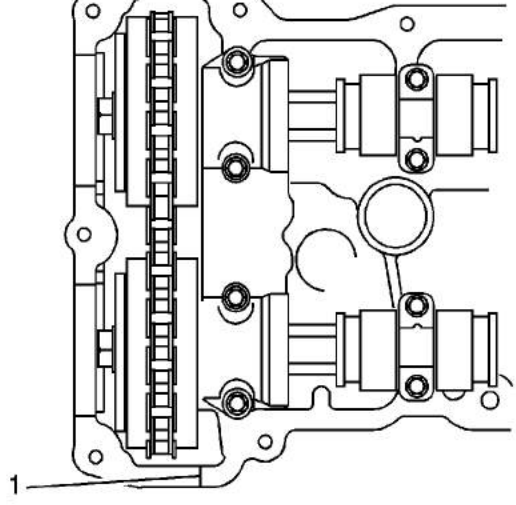

2. Place a bead 8 mm (0.3150 in) in diameter by 4 mm (0.1575 in) in height of RTV sealant, GM P/N 12378521 (Canadian P/N 88901148) or equivalent, on the engine front cover split lines (1).

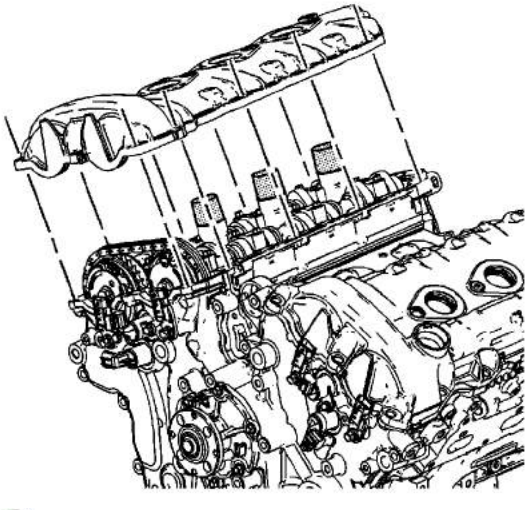

3. Place the right camshaft cover into position onto the right cylinder head.

cardiagn.com

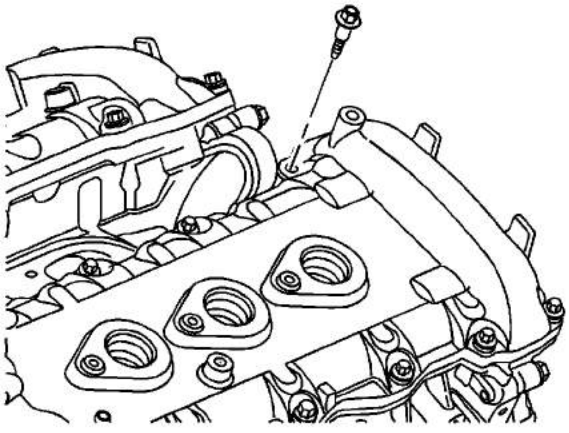

4. Loosely install the right camshaft cover bolts.

   Caution: Refer to Fastener Caution in the Preface section.

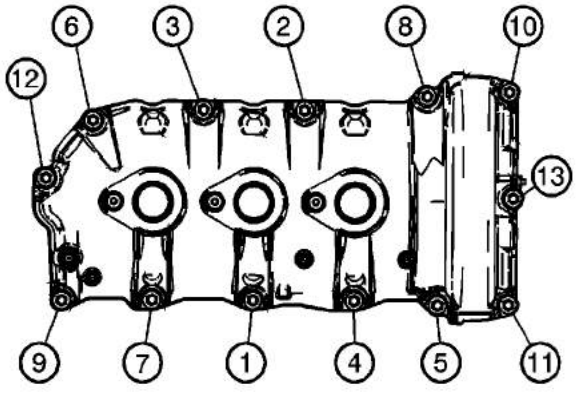

5. Tighten the right camshaft cover bolts in the sequence shown to **10 N·m (89 lb in)**.
6. Reposition engine wiring harness.
7. Install the power steering reservoir. Refer to Power Steering Fluid Reservoir Replacement.

cardiagn.com

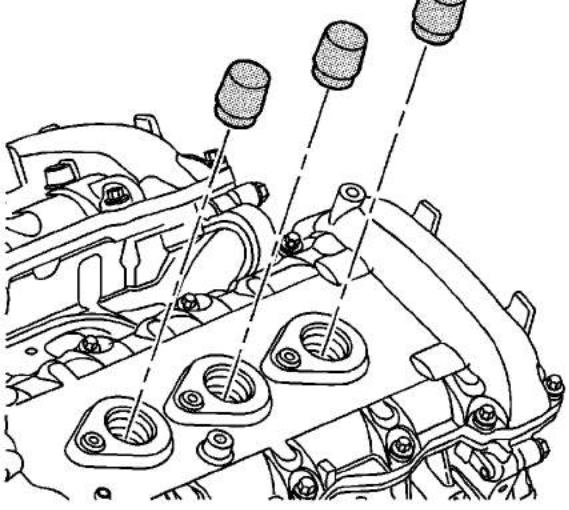

8. Remove the EN 46101 from the spark plug tubes of the right cylinder head.
9. Install NEW spark plugs into the right cylinder head. Refer to Spark Plug Replacement.
10. Install the upper intake manifold. Refer to Upper Intake Manifold Replacement.

cardiagn.com

Engine Front Cover Replacement

Special Tools

- EN 46105 Camshaft Locking Tool
- EN 46111 Crankshaft Rotational Socket
- EN 46109 Guide Pin Set

Removal Procedure

1. Remove the lower intake manifold. Refer to Lower Intake Manifold Replacement.
2. Remove the camshaft covers. Refer to Camshaft Cover Replacement - Left Side and Camshaft Cover Replacement - Right Side.
3. Drain the engine coolant. Refer to Cooling System Draining and Filling.
4. Remove the water outlet housing assembly.
5. Remove the drive belt tensioner. Refer to Drive Belt Tensioner Replacement.
6. Remove the water pump. Refer to Water Pump Replacement.
7. Remove the power steering pump and position aside. Refer to Power Steering Pump Replacement.
8. Remove the crankshaft balancer. Refer to Crankshaft Balancer Replacement.
9. Remove the camshaft position actuator valves from the front cover. Refer to Camshaft Position Sensor Replacement - Bank 2 (Left Side) Exhaust , Camshaft Position Sensor Replacement - Bank 2 (Left Side) Intake , Camshaft Position Sensor Replacement - Bank 1 (Right Side) Exhaust and Camshaft Position Sensor Replacement - Bank 1 (Right Side) Intake.
10. Remove the camshaft position actuator solenoid valves from the front cover. Refer to Camshaft Position Actuator Solenoid Valve Solenoid Replacement - Bank 1 (Right Side) Intake , Camshaft Position Actuator Solenoid Valve Solenoid Replacement - Bank 1 (Right Side) Exhaust , Camshaft Position Actuator Solenoid Valve Solenoid Replacement - Bank 2 (Left Side) Intake , and Camshaft Position Actuator Solenoid Valve Solenoid Replacement - Bank 2 (Left Side) Exhaust.
11. Remove the engine oil pan. Refer to Oil Pan Replacement.

cardiagn.com

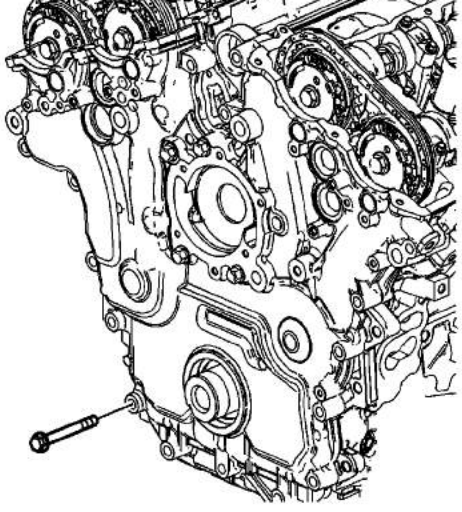

12. Remove the engine front cover bolts.

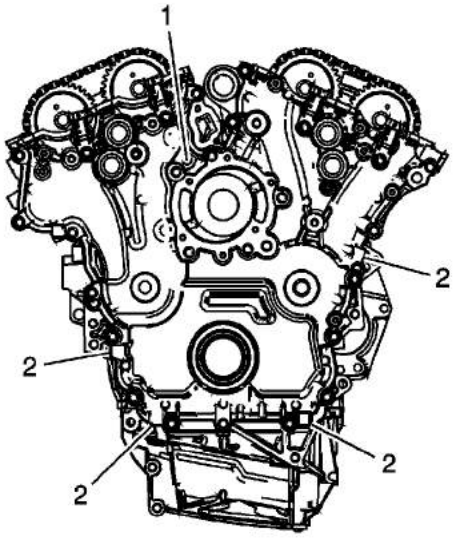

13. Loosely install a 10 x 1.5 mm bolt in the "jackscrew" hole (1).
14. Using the pry points (2) located at the edge of the front cover and the "jackscrew", shear the RTV sealant.

cardiagn.com

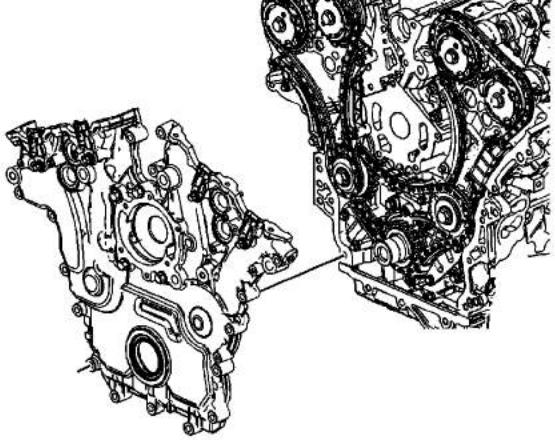

15. Remove the engine front cover.

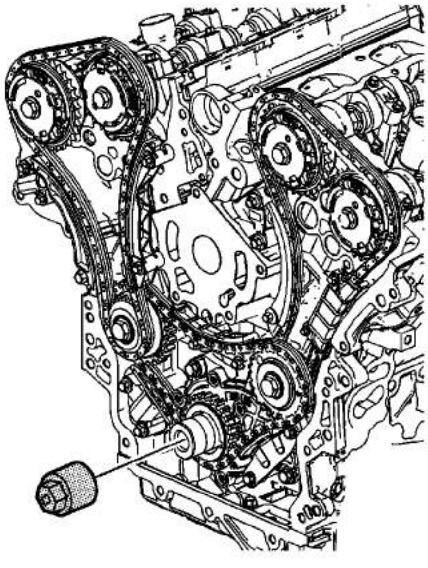

16. Using the EN 46111 , rotate the crankshaft until the left cylinder head camshafts align with the EN 46105-2 and the right cylinder head camshafts align with the EN 46105-1.

cardiagn.com

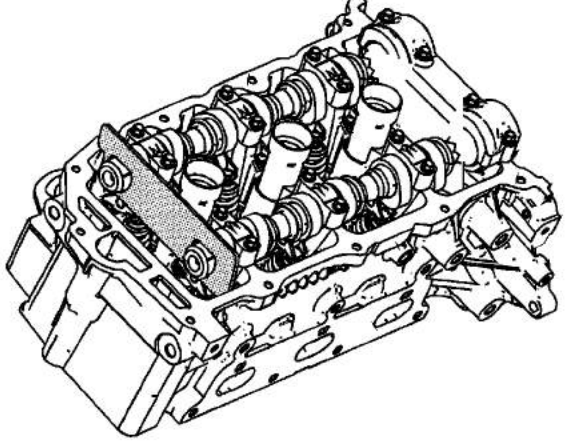

17. Install the EN 46105-1 to the right camshafts.

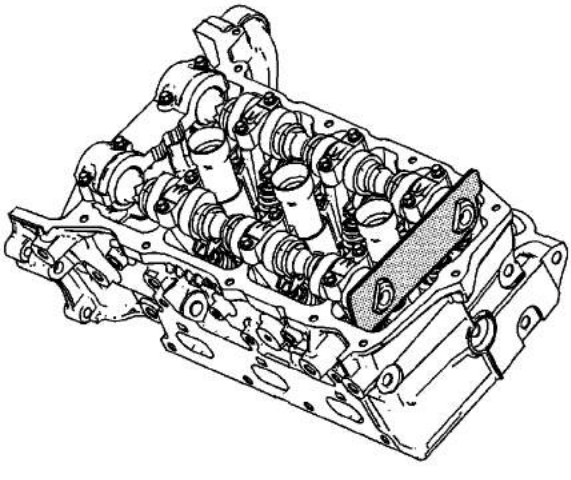

18. Install the EN 46105-2 to the left camshafts.

Installation Procedure

cardiagn.com

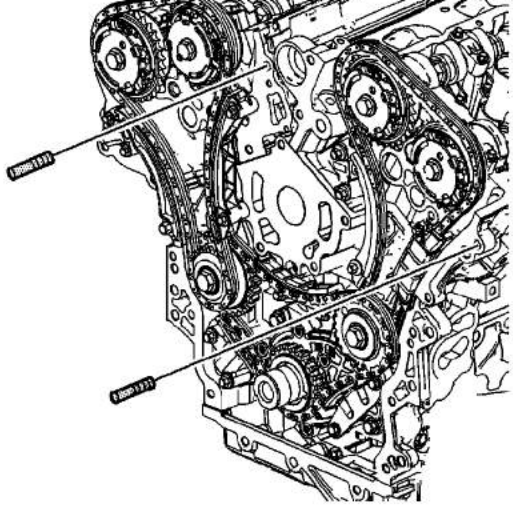

1. Install the 8 mm (0.315 in) guide from the EN 46109 into the cylinder block positions as shown.

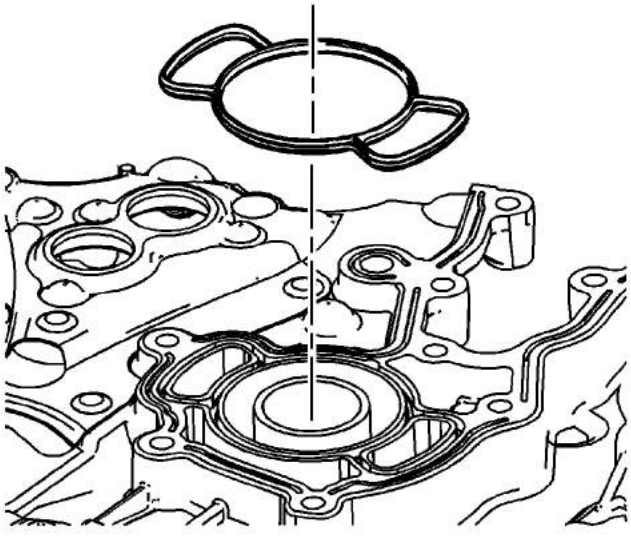

2. Install the engine front cover to cylinder block seal.

cardiagn.com

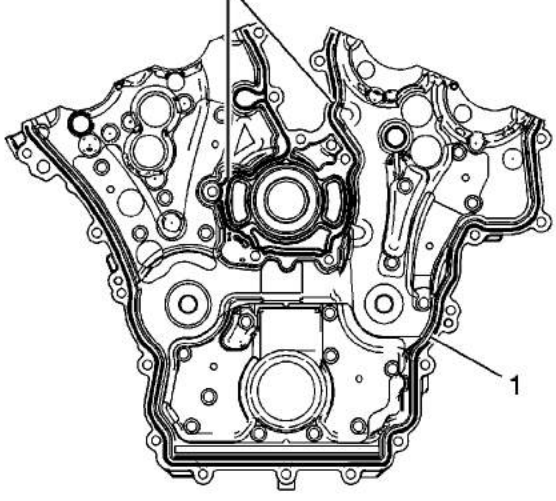

3. Place a 3 mm (0.118 in) bead of RTV sealant, GM P/N 12378521 (Canadian P/N 88901148) or equivalent, on the engine front cover as shown (1).

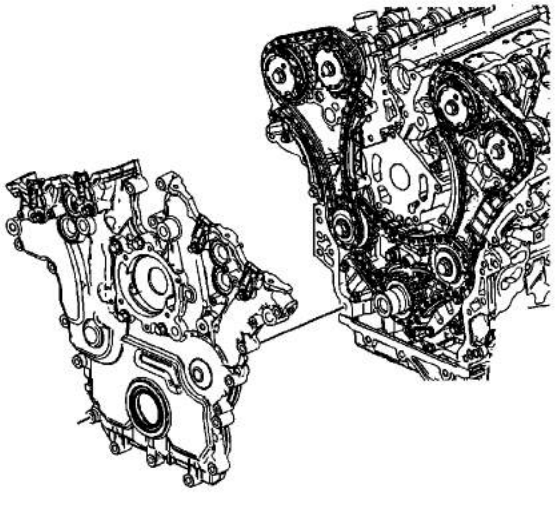

4. Place the engine front cover onto the EN 46109 and slide into position.
5. Remove the EN 46109 from the cylinder block.

cardiagn.com

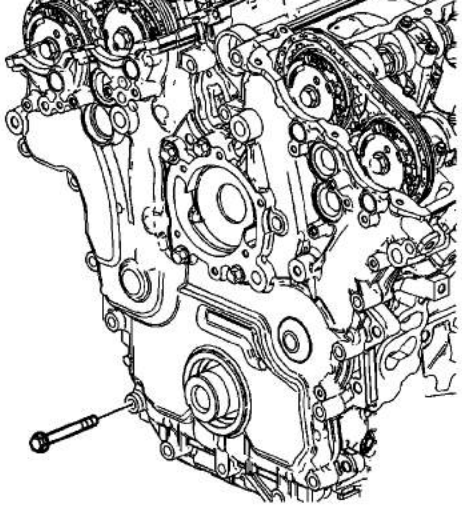

6. Hand start all the front cover bolts.

Caution: Refer to Fastener Caution in the Preface section.

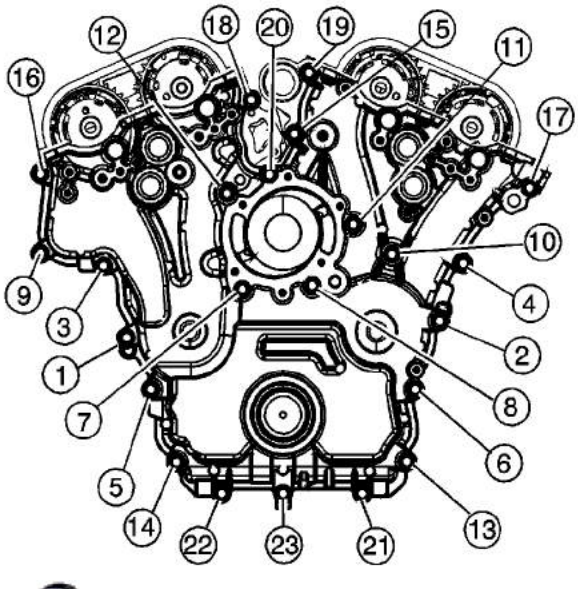

7. Tighten the engine front cover bolts in the sequence shown to **23 N·m (17 lb ft)**.
8. Install the engine oil pan. Refer to Oil Pan Replacement.
9. Install the camshaft position actuator solenoid valves from the front cover. Refer to Camshaft Position Actuator Solenoid Valve Solenoid Replacement - Bank 1 (Right Side) Intake , Camshaft Position Actuator Solenoid Valve Solenoid Replacement - Bank 1 (Right Side) Exhaust , Camshaft Position Actuator Solenoid Valve Solenoid Replacement - Bank 2 (Left Side) Intake , and Camshaft Position Actuator Solenoid Valve Solenoid Replacement - Bank 2 (Left Side) Exhaust.

cardiagn.com

Bank 2 (Left Side) Intake , Camshaft Position Sensor Replacement - Bank 1 (Right Side) Exhaust and Camshaft Position Sensor Replacement - Bank 1 (Right Side) Intake.

11. Install the crankshaft balancer. Refer to Crankshaft Balancer Replacement.
12. Install the power steering pump and position aside. Refer to Power Steering Pump Replacement.
13. Install the water pump. Refer to Water Pump Replacement.
14. Install the water outlet housing assembly.
15. Install the drive belt tensioner. Refer to Drive Belt Tensioner Replacement.
16. Install the camshaft covers. Refer to Camshaft Cover Replacement - Left Side and Camshaft Cover Replacement - Right Side.
17. Install the lower intake manifold. Refer to Lower Intake Manifold Replacement.
18. Refill the engine coolant. Refer to Cooling System Draining and Filling.

cardiagn.com

Secondary Camshaft Drive Chain Replacement - Left Side

Removal Procedure

1. Remove the engine front cover. Refer to Engine Front Cover Replacement .
2. Remove the right bank secondary camshaft drive chain tensioner. Refer to Secondary Camshaft Drive Chain Tensioner Removal - Right Side .
3. Remove the right bank secondary camshaft drive chain shoe. Refer to Secondary Camshaft Drive Chain Shoe Removal - Right Side .
4. Remove the right bank secondary camshaft drive chain guide. Refer to Secondary Camshaft Drive Chain Guide Removal - Right Side .
5. Remove the right bank secondary camshaft drive chain. Refer to Secondary Camshaft Drive Chain Removal - Right Side .
6. Remove the primary camshaft drive chain tensioner. Refer to Primary Camshaft Drive Chain Tensioner Removal .
7. Remove the primary upper camshaft drive chain guide. Refer to Primary Camshaft Drive Chain Guide Removal - Upper .
8. Remove the primary camshaft drive chain. Refer to Primary Camshaft Drive Chain Removal .
9. Remove the right bank camshaft intermediate drive chain idler. Refer to Camshaft Intermediate Drive Chain Idler Removal - Right Side .
10. Remove the left bank secondary camshaft drive chain tensioner. Refer to Secondary Camshaft Drive Chain Tensioner Removal - Left Side .
11. Remove the left bank secondary camshaft drive chain shoe. Refer to Secondary Camshaft Drive Chain Shoe Removal - Left Side .
12. Remove the left bank secondary camshaft drive chain guide. Refer to Secondary Camshaft Drive Chain Guide Removal - Left Side .
13. Remove the left bank camshaft intermediate drive chain idler. Refer to Camshaft Intermediate Drive Chain Idler Removal - Left Side .

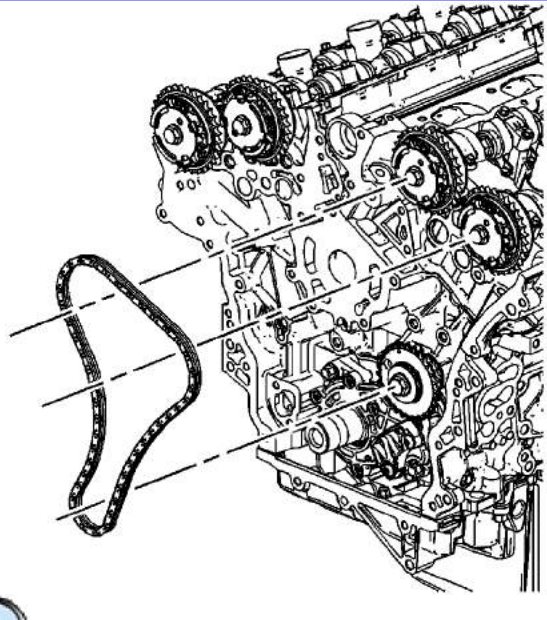

14. Remove the left bank secondary camshaft drive chain. Refer to Secondary Camshaft Drive

cardiagn.com

Drive Components Cleaning and Inspection . Replace components as necessary.

Installation Procedure

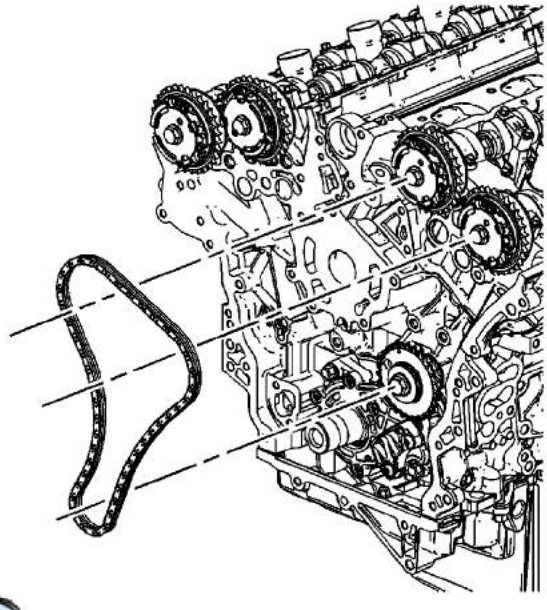

1. Install the left bank secondary camshaft drive chain. Refer to Secondary Camshaft Drive Chain Installation - Left Side .
2. Install the left bank camshaft intermediate drive chain idler. Refer to Camshaft Intermediate Drive Chain Idler Installation - Left Side .
3. Install the left bank secondary camshaft drive chain guide. Refer to Secondary Camshaft Drive Chain Guide Installation - Left Side .
4. Install the left bank secondary camshaft drive chain shoe. Refer to Secondary Camshaft Drive Chain Shoe Installation - Left Side .
5. Install the left bank secondary camshaft drive chain tensioner. Refer to Secondary Camshaft Drive Chain Tensioner Installation - Left Side .
6. Install the right bank camshaft intermediate drive chain idler. Refer to Camshaft Intermediate Drive Chain Idler Installation - Right Side .
7. Install the primary camshaft drive chain. Refer to Primary Camshaft Drive Chain Installation .
8. Install the primary upper camshaft drive chain guide. Refer to Primary Camshaft Drive Chain Guide Installation - Upper .
9. Install the primary camshaft drive chain tensioner. Refer to Primary Camshaft Drive Chain Tensioner Installation .
10. Install the right bank secondary camshaft drive chain. Refer to Secondary Camshaft Drive Chain Installation - Right Side .
11. Install the right bank secondary camshaft drive chain guide. Refer to Secondary Camshaft Drive Chain Guide Installation - Right Side .
12. Install the right bank secondary camshaft drive chain shoe. Refer to Secondary Camshaft Drive Chain Shoe Installation - Right Side .
13. Install the right bank secondary camshaft drive chain tensioner. Refer to Secondary Camshaft Drive Chain Tensioner Installation - Right Side .
14. Install the engine front cover. Refer to Engine Front Cover Replacement .

cardiagn.com

Secondary Camshaft Drive Chain Replacement - Right Side

Removal Procedure

1. Remove the spark plugs in order to ease crankshaft/engine rotation. Refer to Spark Plug Replacement .
2. Remove the engine front cover. Refer to Engine Front Cover Replacement .
3. Remove the right bank secondary camshaft drive chain tensioner. Refer to Secondary Camshaft Drive Chain Tensioner Removal - Right Side .
4. Remove the right bank secondary camshaft drive chain shoe. Refer to Secondary Camshaft Drive Chain Shoe Removal - Right Side .
5. Remove the right bank secondary camshaft drive chain guide. Refer to Secondary Camshaft Drive Chain Guide Removal - Right Side .

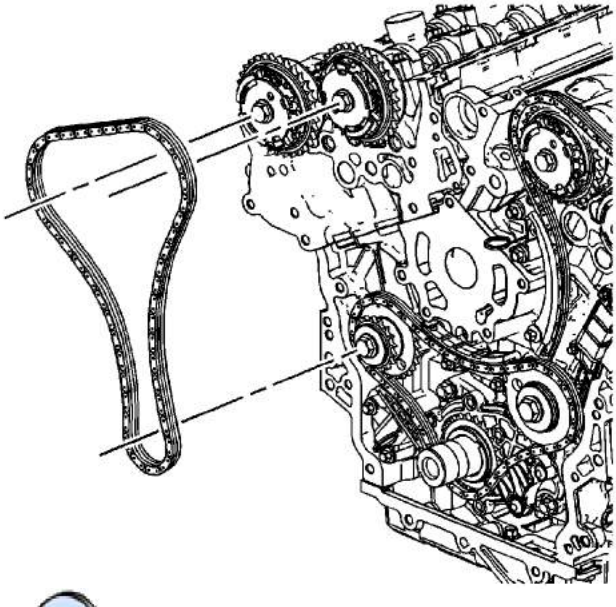

6. Remove the right bank secondary camshaft drive chain. Refer to Secondary Camshaft Drive Chain Removal - Right Side .

Installation Procedure

cardiagn.com

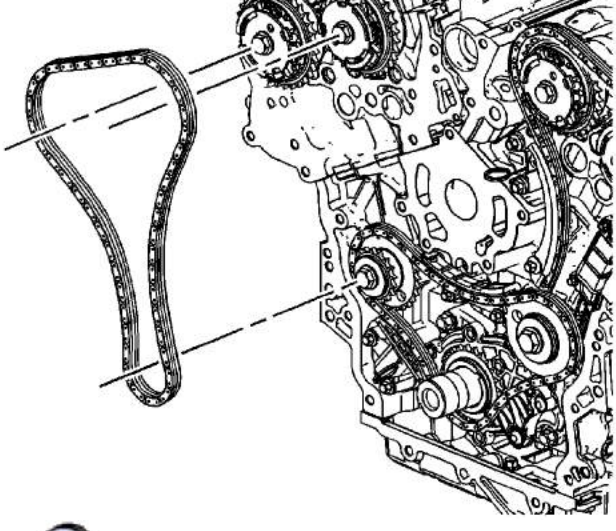

1. Install the right bank secondary camshaft drive chain. Refer to Secondary Camshaft Drive Chain Installation - Right Side .
2. Install the right bank secondary camshaft drive chain guide. Refer to Secondary Camshaft Drive Chain Guide Installation - Right Side .
3. Install the right bank secondary camshaft drive chain shoe. Refer to Secondary Camshaft Drive Chain Shoe Installation - Right Side .
4. Install the right bank secondary camshaft drive chain tensioner. Refer to Secondary Camshaft Drive Chain Tensioner Installation - Right Side .
5. Install the spark plugs. Refer to Spark Plug Replacement .
6. Install the engine front cover. Refer to Engine Front Cover Replacement .

cardiagn.com

Secondary Camshaft Drive Chain Tensioner Replacement - Left Side

Removal Procedure

1. Remove the spark plugs in order to ease crankshaft/engine rotation. Refer to Spark Plug Replacement .
2. Remove the engine front cover. Refer to Engine Front Cover Replacement .

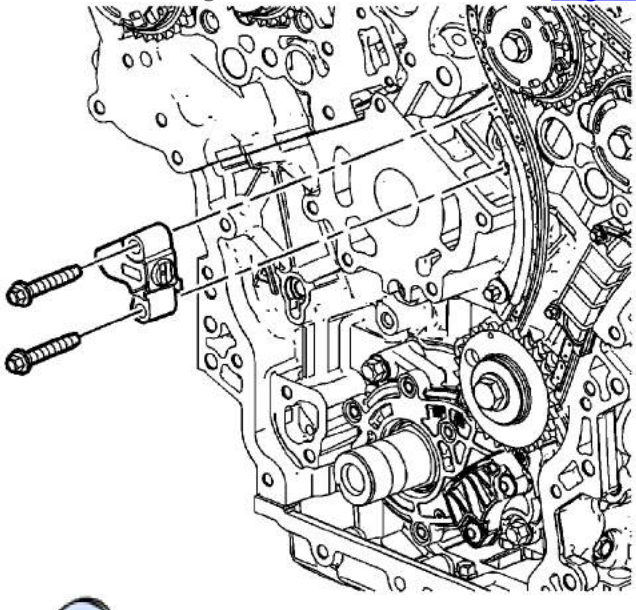

3. Remove the left bank secondary camshaft drive chain tensioner. Refer to Secondary Camshaft Drive Chain Tensioner Removal - Left Side .

Installation Procedure

cardiagn.com

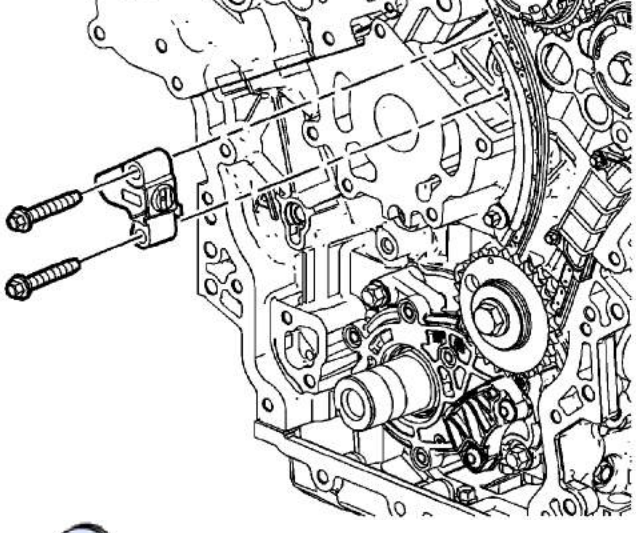

1. Install the left bank secondary camshaft drive chain tensioner. Refer to Secondary Camshaft Drive Chain Tensioner Installation - Left Side .
2. Install the spark plugs. Refer to Spark Plug Replacement .
3. Install the engine front cover. Refer to Engine Front Cover Replacement .

cardiagn.com

Secondary Camshaft Drive Chain Tensioner Replacement - Right Side

Removal Procedure

1. Remove the spark plugs in order to ease crankshaft/engine rotation. Refer to Spark Plug Replacement .
2. Remove the engine front cover. Refer to Engine Front Cover Replacement .

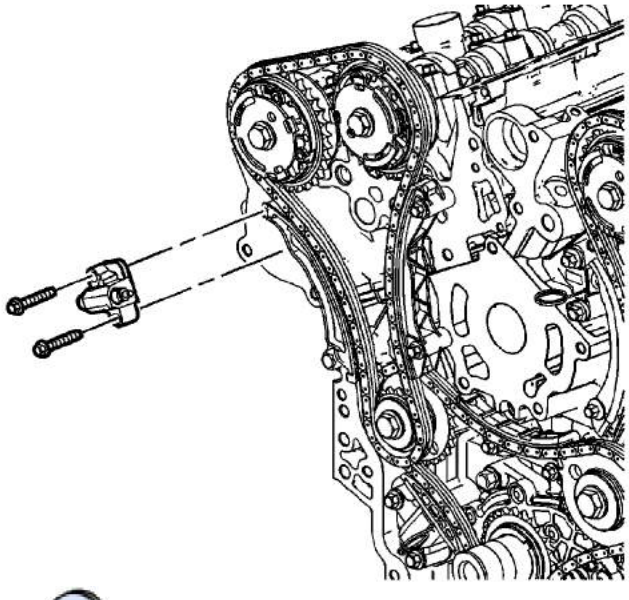

3. Remove the right bank secondary camshaft drive chain tensioner. Refer to Secondary Camshaft Drive Chain Tensioner Removal - Right Side .

Installation Procedure

cardiagn.com

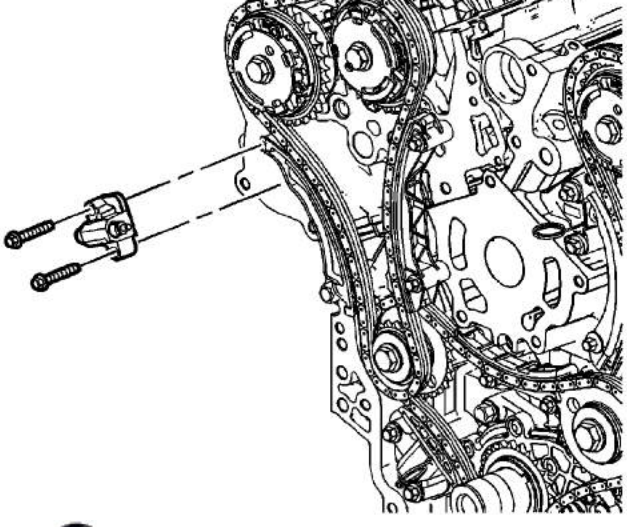

1. Install the right bank secondary camshaft drive chain tensioner. Refer to Secondary Camshaft Drive Chain Tensioner Installation - Right Side .
2. Install the spark plugs. Refer to Spark Plug Replacement .
3. Install the engine front cover. Refer to Engine Front Cover Replacement .

cardiagn.com

Secondary Camshaft Drive Chain Shoe Replacement - Left Side

Removal Procedure

1. Remove the spark plugs in order to ease crankshaft/engine rotation. Refer to Spark Plug Replacement.
2. Remove the engine front cover. Refer to Engine Front Cover Replacement.
3. Remove the left bank secondary camshaft drive chain tensioner. Refer to Secondary Camshaft Drive Chain Tensioner Removal - Left Side.
4. Remove the left bank secondary camshaft drive chain shoe. Refer to Secondary Camshaft Drive Chain Shoe Removal - Left Side.

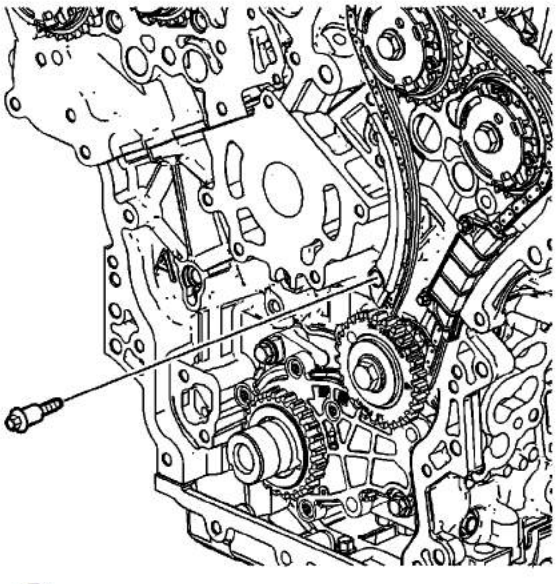

5. Remove the left secondary camshaft drive chain shoe bolt.

cardiagn.com

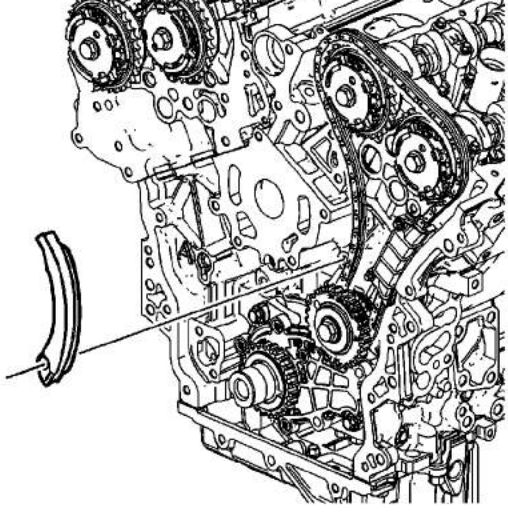

6. Remove the left secondary camshaft drive chain shoe.

Installation Procedure

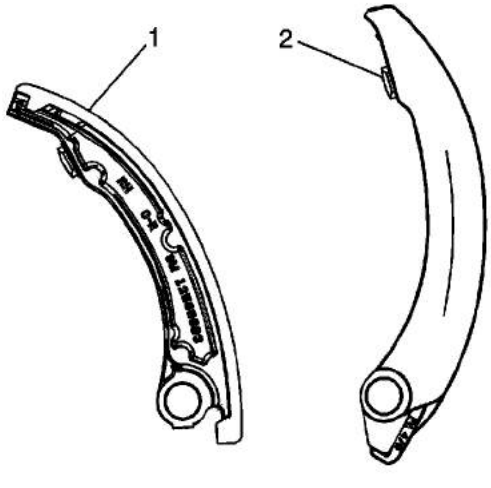

1. Ensure that the left secondary camshaft drive chain shoe (2) is being installed.

cardiagn.com

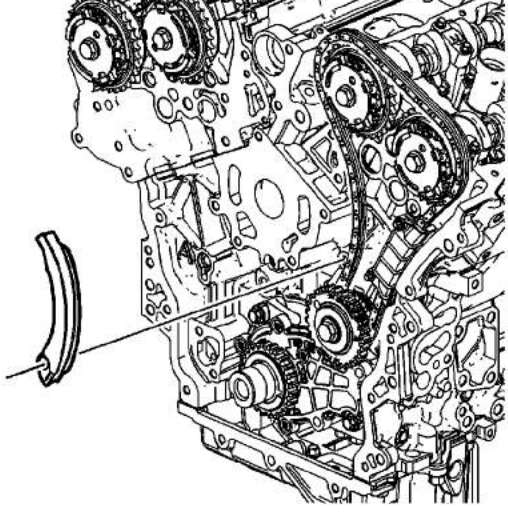

2. Position the left secondary camshaft drive chain shoe.

   Caution: Refer to Fastener Caution in the Preface section.

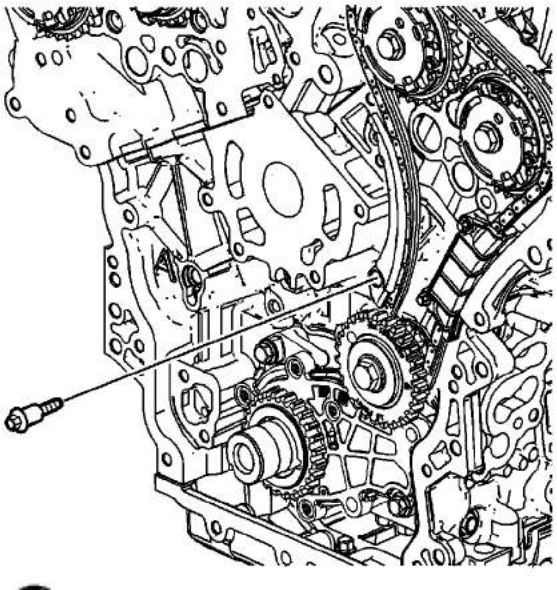

3. Install the secondary camshaft drive chain shoe bolt to **23 N·m (17 lb ft)**.
4. Install the left bank secondary camshaft drive chain tensioner. Refer to Secondary Camshaft Drive Chain Tensioner Installation - Left Side.
5. Install the engine front cover. Refer to Engine Front Cover Replacement.
6. Install the spark plugs. Refer to Spark Plug Replacement.

cardiagn.com

Secondary Camshaft Drive Chain Shoe Replacement - Right Side

Removal Procedure

1. Remove the spark plugs in order to ease crankshaft/engine rotation. Refer to Spark Plug Replacement .

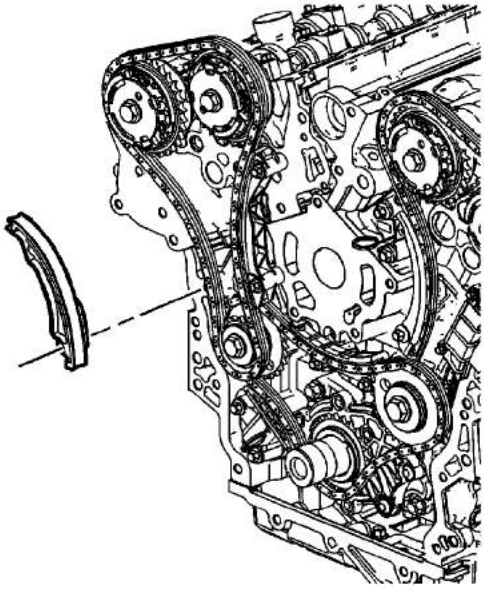

2. Remove the engine front cover. Refer to Engine Front Cover Replacement .
3. Remove the right bank secondary camshaft drive chain tensioner. Refer to Secondary Camshaft Drive Chain Tensioner Removal - Right Side .
4. Remove the right bank secondary camshaft drive chain shoe. Refer to Secondary Camshaft Drive Chain Shoe Removal - Right Side .

Installation Procedure

cardiagn.com

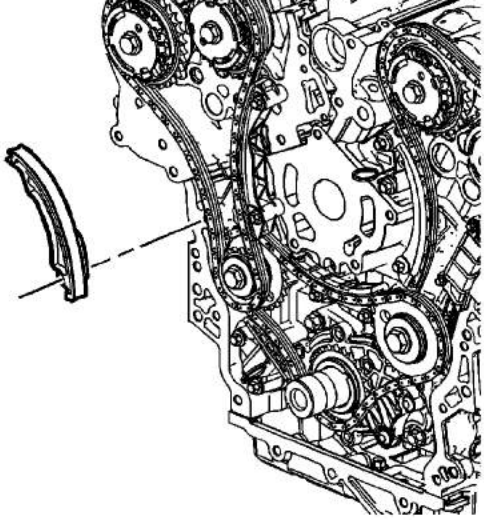

1. Install the right bank secondary camshaft drive chain shoe. Refer to Secondary Camshaft Drive Chain Shoe Installation - Right Side .
2. Install the right bank secondary camshaft drive chain tensioner. Refer to Secondary Camshaft Drive Chain Tensioner Installation - Right Side .
3. Install the spark plugs. Refer to Spark Plug Replacement .
4. Install the engine front cover. Refer to Engine Front Cover Replacement .

cardiagn.com

Secondary Camshaft Drive Chain Guide Replacement - Left Side

Removal Procedure

1. Remove the spark plugs in order to ease crankshaft/engine rotation. Refer to Spark Plug Replacement .
2. Remove the engine front cover. Refer to Engine Front Cover Replacement .
3. Remove the left bank secondary camshaft drive chain tensioner. Refer to Secondary Camshaft Drive Chain Tensioner Removal - Left Side .

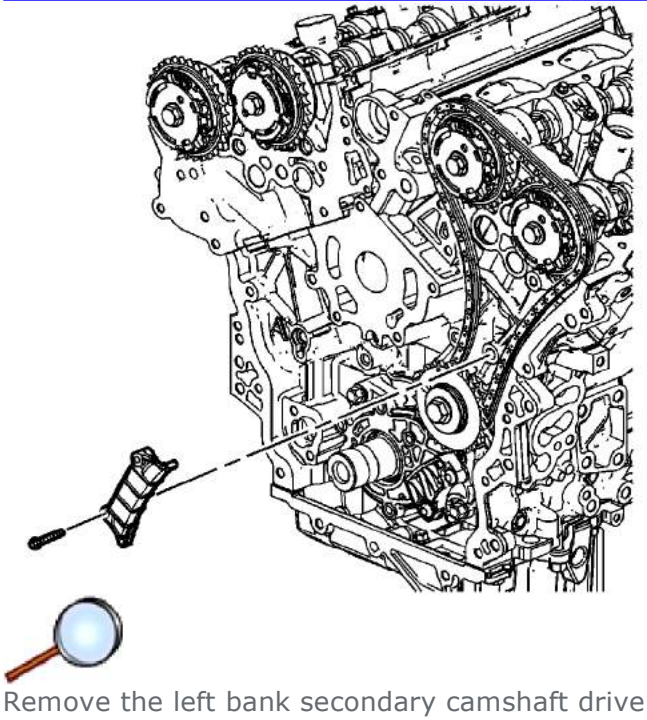

4. Remove the left bank secondary camshaft drive chain guide. Refer to Secondary Camshaft Drive Chain Guide Removal - Left Side .

Installation Procedure

cardiagn.com

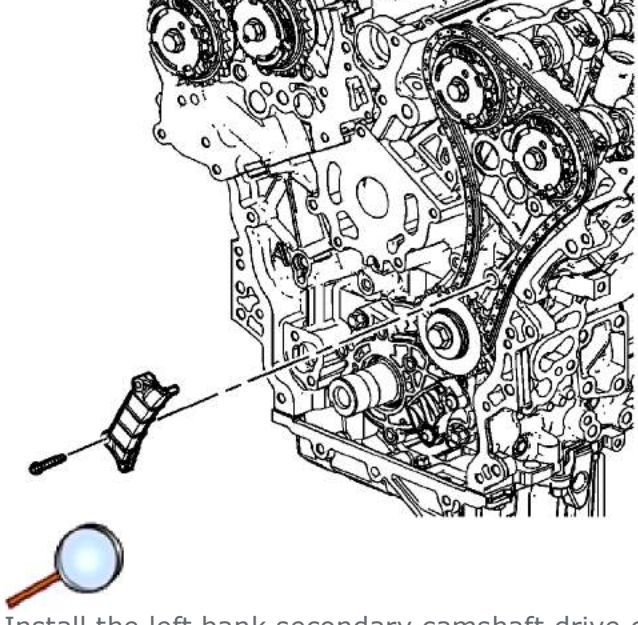

1. Install the left bank secondary camshaft drive chain guide. Refer to Secondary Camshaft Drive Chain Guide Installation - Left Side .
2. Install the left bank secondary camshaft drive chain tensioner. Refer to Secondary Camshaft Drive Chain Tensioner Installation - Left Side .
3. Install the spark plugs. Refer to Spark Plug Replacement .
4. Install the engine front cover. Refer to Engine Front Cover Replacement .

cardiagn.com

Secondary Camshaft Drive Chain Guide Replacement - Right Side

Removal Procedure

1. Remove the spark plugs in order to ease crankshaft/engine rotation. Refer to Spark Plug Replacement .
2. Remove the engine front cover. Refer to Engine Front Cover Replacement .
3. Remove the right bank secondary camshaft drive chain tensioner. Refer to Secondary Camshaft Drive Chain Tensioner Removal - Right Side .

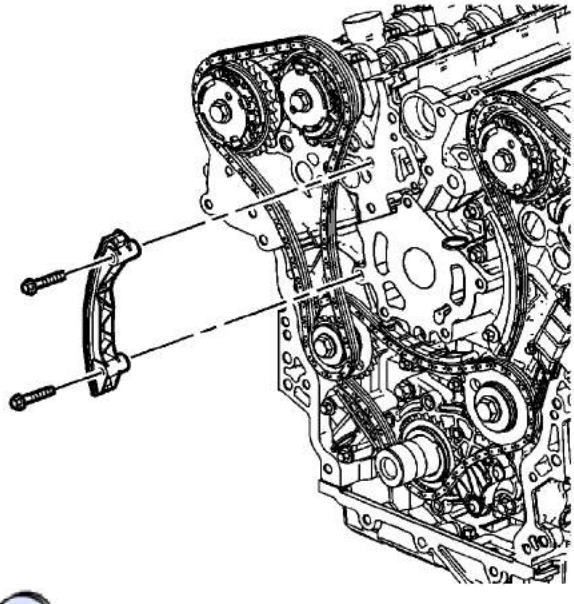

4. Remove the right bank secondary camshaft drive chain guide. Refer to Secondary Camshaft Drive Chain Guide Removal - Right Side .

Installation Procedure

cardiagn.com

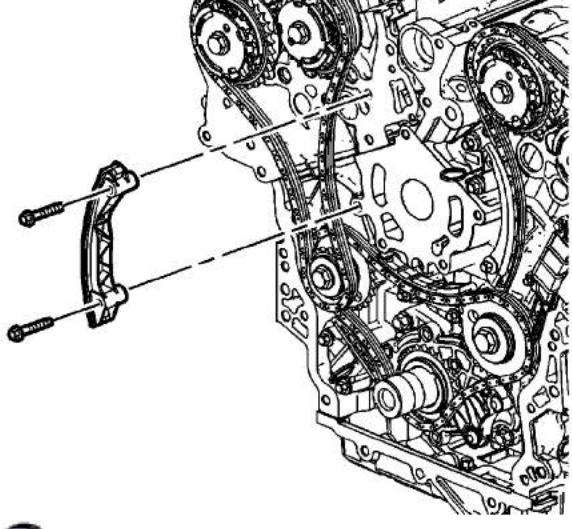

1. Install the right bank secondary camshaft drive chain guide. Refer to Secondary Camshaft Drive Chain Guide Installation - Right Side .
2. Install the right bank secondary camshaft drive chain tensioner. Refer to Secondary Camshaft Drive Chain Tensioner Installation - Right Side .
3. Install the engine front cover. Refer to Engine Front Cover Replacement .
4. Install the spark plugs. Refer to Spark Plug Replacement .

cardiagn.com

Primary Camshaft Drive Chain and Sprockets Replacement

Tools Required

EN 46111 Crankshaft Rotation Socket

Removal Procedure

1. Remove the spark plugs in order to ease crankshaft/engine rotation. Refer to Spark Plug Replacement .
2. Remove the engine front cover. Refer to Engine Front Cover Replacement .
3. Remove the right bank secondary camshaft drive chain tensioner. Refer to Secondary Camshaft Drive Chain Tensioner Removal - Right Side .
4. Remove the right bank secondary camshaft drive chain shoe. Refer to Secondary Camshaft Drive Chain Shoe Removal - Right Side .
5. Remove the right bank secondary camshaft drive chain guide. Refer to Secondary Camshaft Drive Chain Guide Removal - Right Side .
6. Remove the right bank secondary camshaft drive chain. Refer to Secondary Camshaft Drive Chain Removal - Right Side .
7. Remove the primary camshaft drive chain tensioner. Refer to Primary Camshaft Drive Chain Tensioner Removal .
8. Remove the primary camshaft drive chain upper guide. Refer to Primary Camshaft Drive Chain Guide Removal - Upper .

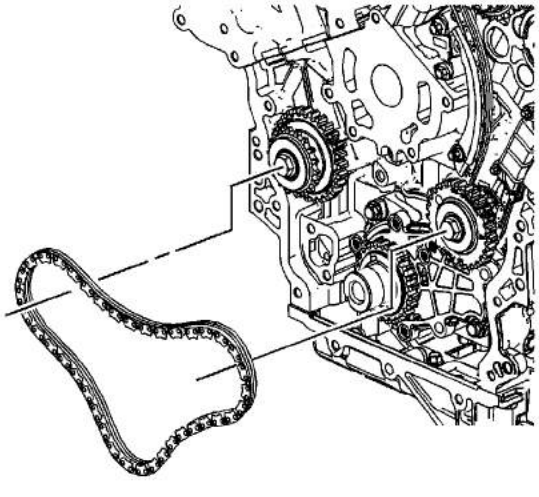

9. Remove the primary camshaft timing chain. Refer to Secondary Camshaft Drive Chain Removal - Right Side .

cardiagn.com

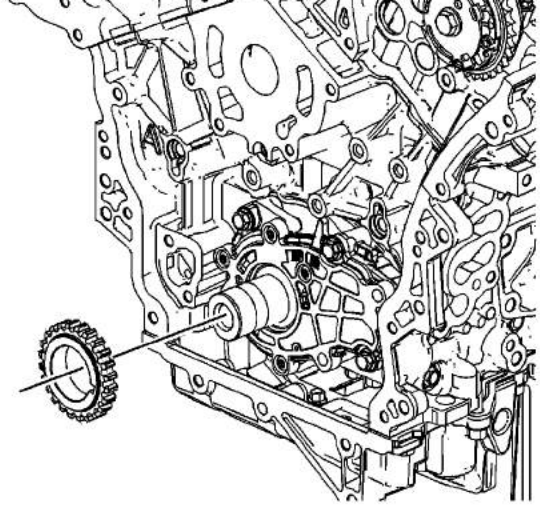

10. Remove the crankshaft sprocket from the nose of the crankshaft.

Installation Procedure

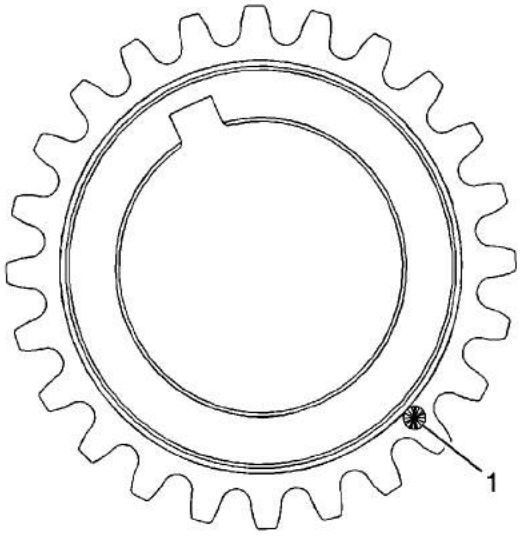

1. Ensure the crankshaft sprocket is installed with the timing mark (1) visible.

cardiagn.com

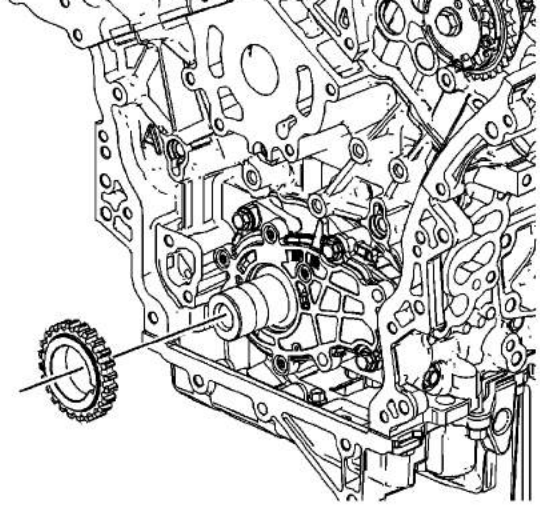

2. Install the crankshaft sprocket on to the nose of the crankshaft.
3. Align the notch in the crankshaft sprocket with the pin in the crankshaft.
4. Slide the crankshaft sprocket on the crankshaft nose until the crankshaft sprocket contacts the step in the crankshaft.

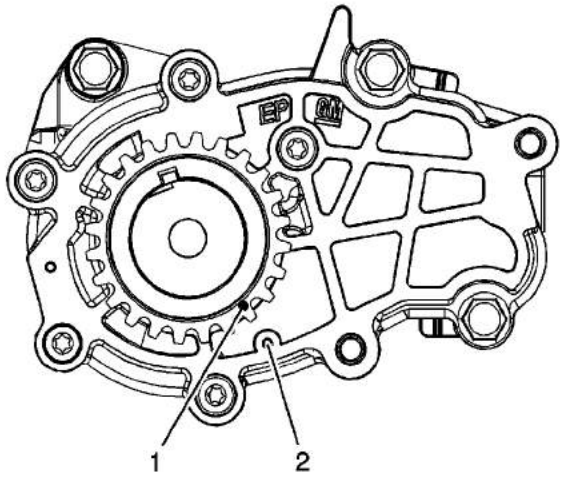

5. Ensure the crankshaft is in the stage one timing position with the crankshaft sprocket timing mark (1) aligned to the stage one timing mark on the oil pump cover (2) using the EN 46111 . Refer to Camshaft Timing Drive Chain Alignment Diagram - Stage One.

cardiagn.com

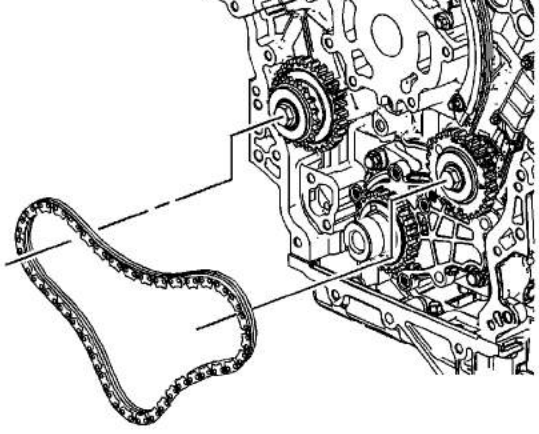

6. Install the primary camshaft timing chain. Refer to Primary Camshaft Drive Chain Installation .
7. Install the primary upper camshaft drive chain guide. Refer to Primary Camshaft Drive Chain Guide Installation - Upper .
8. Install the primary camshaft drive chain tensioner. Refer to Primary Camshaft Drive Chain Tensioner Installation .
9. Install the right bank secondary camshaft drive chain. Refer to Secondary Camshaft Drive Chain Installation - Right Side .
10. Install the right bank secondary camshaft drive chain guide. Refer to Secondary Camshaft Drive Chain Guide Installation - Right Side .
11. Install the right bank secondary camshaft drive chain shoe. Refer to Secondary Camshaft Drive Chain Shoe Installation - Right Side .
12. Install the right bank secondary camshaft drive chain tensioner. Refer to Secondary Camshaft Drive Chain Tensioner Installation - Right Side .
13. Install the spark plugs. Refer to Spark Plug Replacement .
14. Install the engine front cover. Refer to Engine Front Cover Replacement .

cardiagn.com

Timing Chain Idler Sprocket Replacement - Left Side

Removal Procedure

1. Remove the spark plugs in order to ease crankshaft/engine rotation. Refer to Spark Plug Replacement .

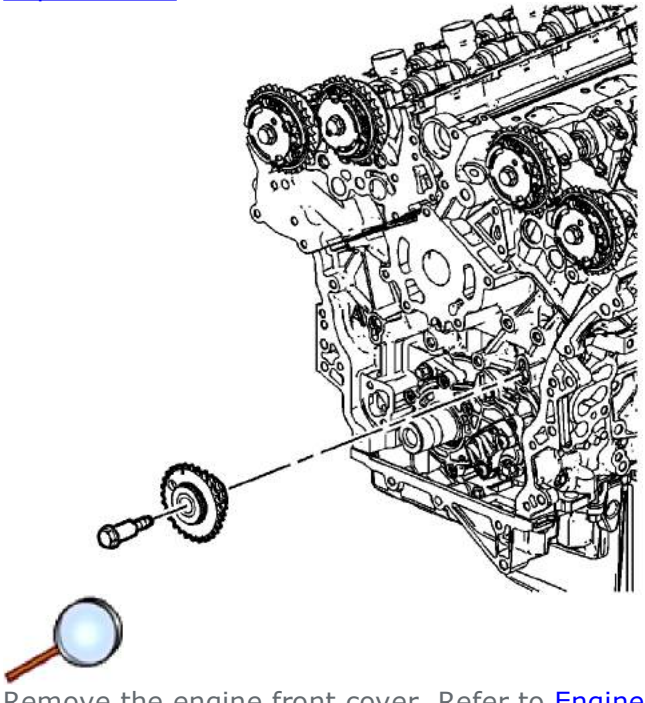

2. Remove the engine front cover. Refer to Engine Front Cover Replacement .
3. Remove the right bank secondary camshaft drive chain tensioner. Refer to Secondary Camshaft Drive Chain Tensioner Removal - Right Side .
4. Remove the right bank secondary camshaft drive chain shoe. Refer to Secondary Camshaft Drive Chain Shoe Removal - Right Side .
5. Remove the right bank secondary camshaft drive chain guide. Refer to Secondary Camshaft Drive Chain Guide Removal - Right Side .
6. Remove the right bank secondary camshaft drive chain. Refer to Secondary Camshaft Drive Chain Removal - Right Side .
7. Remove the primary camshaft drive chain tensioner. Refer to Primary Camshaft Drive Chain Tensioner Removal .
8. Remove the primary upper camshaft drive chain guide. Refer to Primary Camshaft Drive Chain Guide Removal - Upper .
9. Remove the primary camshaft drive chain. Refer to Primary Camshaft Drive Chain Removal .
10. Remove the right bank camshaft intermediate drive chain idler. Refer to Camshaft Intermediate Drive Chain Idler Removal - Right Side .

cardiagn.com

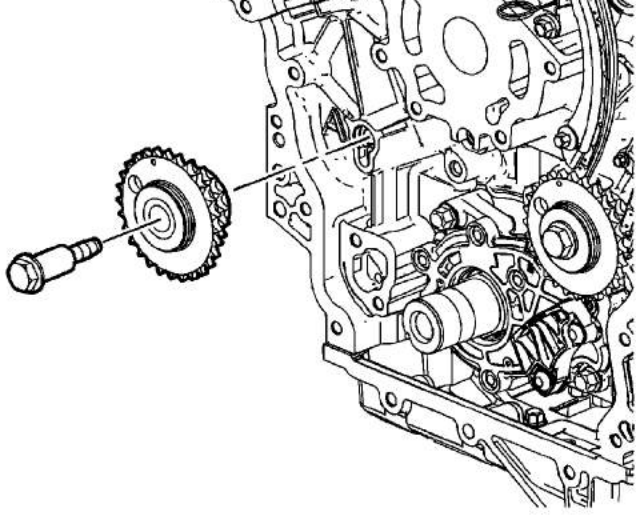

11. If you are servicing the left bank camshaft intermediate drive chain idler, perform the following steps:
    11.1. Remove the left bank secondary camshaft drive chain tensioner. Refer to Secondary Camshaft Drive Chain Tensioner Removal - Left Side .
    11.2. Remove the left bank secondary camshaft drive chain shoe. Refer to Secondary Camshaft Drive Chain Shoe Removal - Left Side .
    11.3. Remove the left bank secondary camshaft drive chain guide. Refer to Secondary Camshaft Drive Chain Guide Removal - Left Side .
    11.4. Remove the left bank secondary camshaft drive chain. Refer to Secondary Camshaft Drive Chain Removal - Left Side .
    11.5. Remove the left bank camshaft intermediate drive chain idler. Refer to Camshaft Intermediate Drive Chain Idler Removal - Left Side .

Installation Procedure

cardiagn.com

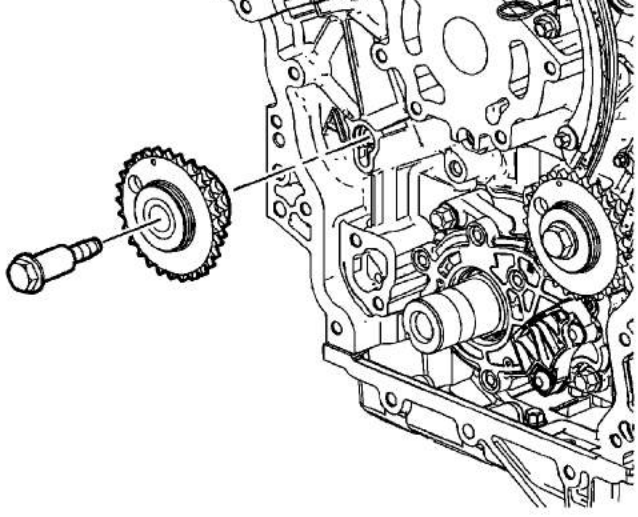

1. If you are servicing the left bank idler sprocket, perform the following steps:
   1.1. Install the left bank camshaft intermediate drive chain idler. Refer to Camshaft Intermediate Drive Chain Idler Installation - Left Side .
   1.2. Install the left bank secondary camshaft drive chain. Refer to Secondary Camshaft Drive Chain Installation - Left Side .
   1.3. Install the left bank secondary camshaft drive chain guide. Refer to Secondary Camshaft Drive Chain Guide Installation - Left Side .
   1.4. Install the left bank secondary camshaft drive chain shoe. Refer to Secondary Camshaft Drive Chain Shoe Installation - Left Side .
   1.5. Install the left bank secondary camshaft drive chain tensioner. Refer to Secondary Camshaft Drive Chain Tensioner Installation - Left Side .

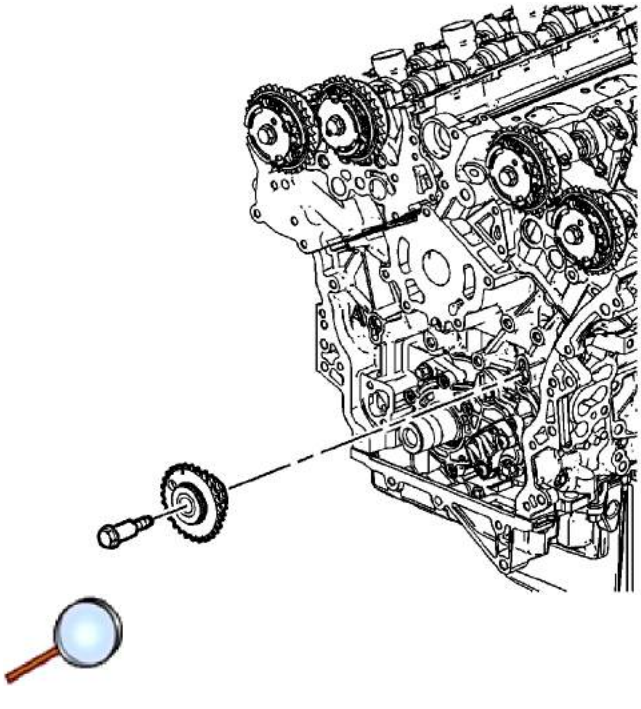

cardiagn.com

3. Install the primary camshaft drive chain. Refer to Primary Camshaft Drive Chain Installation .
4. Install the primary upper camshaft drive chain guide. Refer to Primary Camshaft Drive Chain Guide Installation - Upper .
5. Install the primary camshaft drive chain tensioner. Refer to Primary Camshaft Drive Chain Tensioner Installation .
6. Install the right bank secondary camshaft drive chain. Refer to Secondary Camshaft Drive Chain Installation - Right Side .
7. Install the right bank secondary camshaft drive chain guide. Refer to Secondary Camshaft Drive Chain Guide Installation - Right Side .
8. Install the right bank secondary camshaft drive chain shoe. Refer to Secondary Camshaft Drive Chain Shoe Installation - Right Side .
9. Install the right bank secondary camshaft drive chain tensioner. Refer to Secondary Camshaft Drive Chain Tensioner Installation - Right Side .
10. Install the spark plugs. Refer to Spark Plug Replacement .
11. Install the engine front cover. Refer to Engine Front Cover Replacement .

cardiagn.com

Primary Camshaft Drive Chain Tensioner Replacement

Removal Procedure

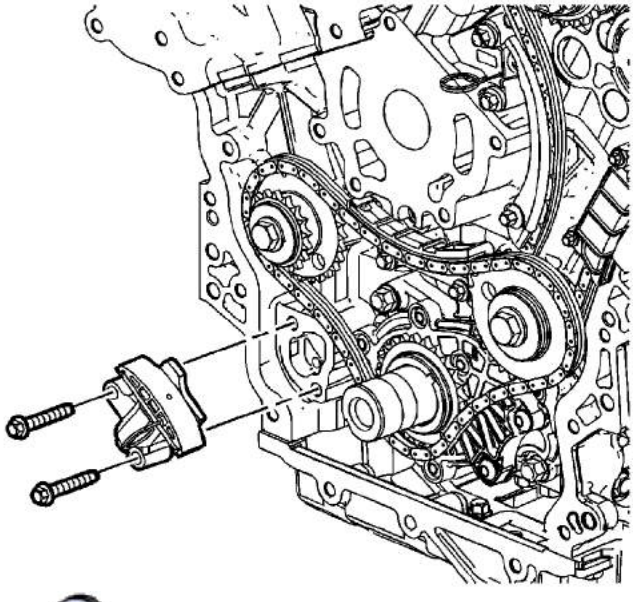

1. Remove the spark plugs in order to ease crankshaft/engine rotation. Refer to Spark Plug Replacement .
2. Remove the engine front cover. Refer to Engine Front Cover Replacement .

   Important: If the entire camshaft timing system is not in Stage 2 , Camshaft Timing Drive Chain Alignment Diagram , mark the timing chain and sprockets in order to ensure proper reassembly.

3. Remove the primary camshaft drive chain tensioner. Refer to Primary Camshaft Drive Chain Tensioner Removal .

Installation Procedure

cardiagn.com

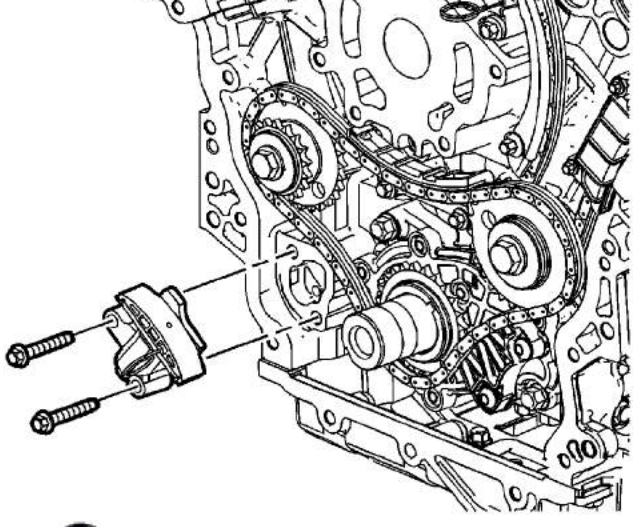

1. Install the primary camshaft drive chain tensioner. Refer to Primary Camshaft Drive Chain Tensioner Installation .
2. Install the spark plugs. Refer to Spark Plug Replacement .
3. Install the engine front cover. Refer to Engine Front Cover Replacement .

cardiagn.com

Primary Camshaft Drive Chain Guide Replacement - Lower

The primary camshaft drive chain guide is not serviceable separately. If the guide is worn or damaged, the guide must be replaced with the oil pump.

cardiagn.com

Primary Camshaft Drive Chain Guide Replacement - Upper

Removal Procedure

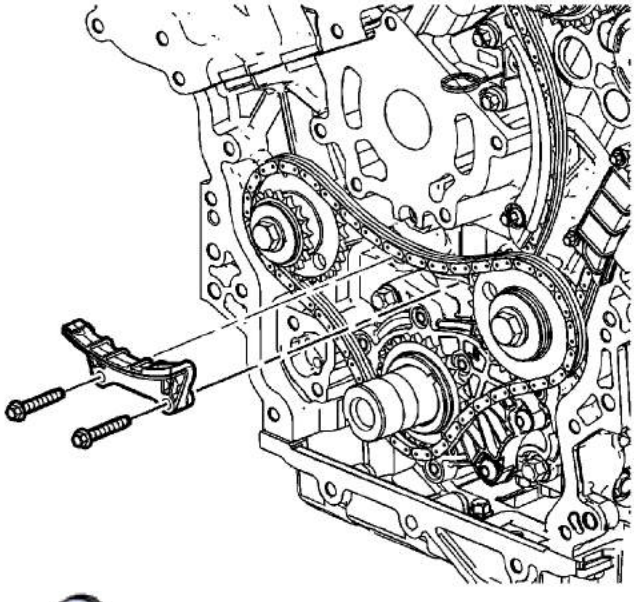

1. Remove the spark plugs in order to ease crankshaft/engine rotation. Refer to Spark Plug Replacement .
2. Remove the engine front cover. Refer to Engine Front Cover Replacement .
3. Remove the primary camshaft drive chain tensioner. Refer to Primary Camshaft Drive Chain Tensioner Removal .
4. Remove the primary upper camshaft drive chain guide. Refer to Primary Camshaft Drive Chain Guide Removal - Upper .

Installation Procedure

cardiagn.com

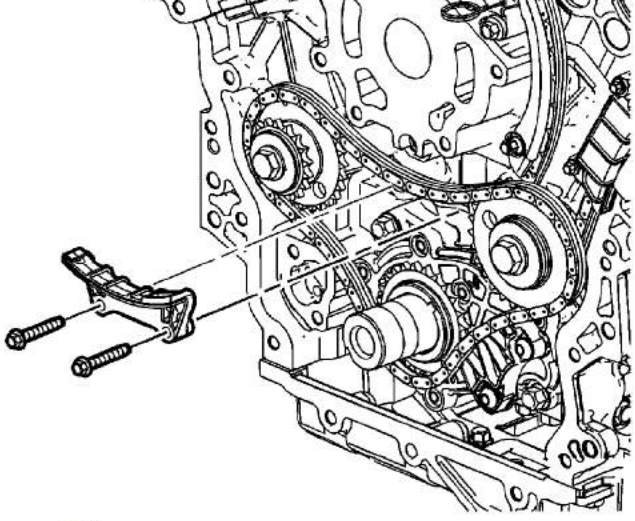

1. Install the primary upper camshaft drive chain guide. Refer to Primary Camshaft Drive Chain Guide Installation - Upper .
2. Install the primary camshaft drive chain tensioner. Refer to Primary Camshaft Drive Chain Tensioner Installation .
3. Install the engine front cover. Refer to Engine Front Cover Replacement .
4. Install the spark plugs. Refer to Spark Plug Replacement .

cardiagn.com

Camshaft Position Actuator Replacement - Bank 2 (Left Side) Exhaust

Special Tools

EN-48313 Timing Chain Retention Tool

Removal Procedure

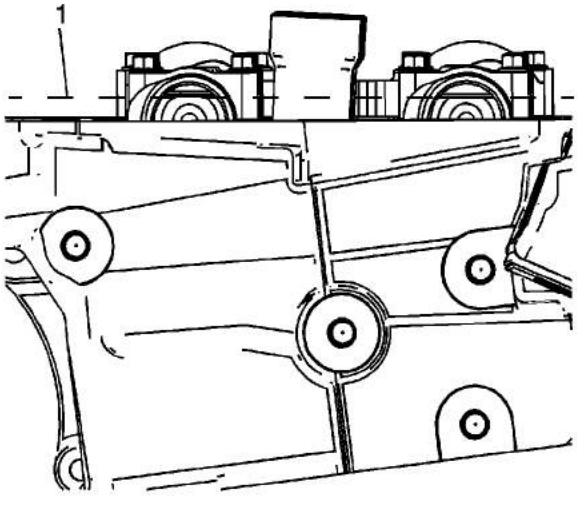

1. Remove the lower intake manifold. Refer to Lower Intake Manifold Replacement.
2. Remove the left camshaft cover. Refer to Camshaft Cover Replacement - Left Side.
3. Remove the left intake and exhaust camshaft position sensors. Refer to Camshaft Position Sensor Replacement - Bank 2 (Left Side) Intake and Camshaft Position Sensor Replacement - Bank 2 (Left Side) Exhaust.
4. Remove the left intake and exhaust camshaft position actuator solenoid. Refer to Camshaft Position Actuator Solenoid Valve Solenoid Replacement - Bank 2 (Left Side) Intake and Camshaft Position Actuator Solenoid Valve Solenoid Replacement - Bank 2 (Left Side) Exhaust.

   Note: Rotate the crankshaft balancer bolt in a clockwise direction ONLY.

5. Rotate the crankshaft balancer using the balancer bolt until the camshafts are in a neutral (low tension) position. The camshafts will be parallel with the camshaft cover rail (1).

cardiagn.com

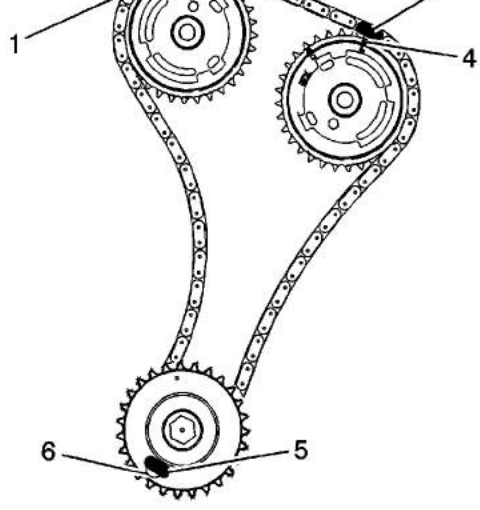

Note: Ensure that the camshaft timing chain and the camshaft position actuators are marked for proper assembly.

6. Use a paint stick to create an alignment mark on one of the timing chain links (2) and the adjacent tooth on the exhaust camshaft position actuator (1).
7. Use a paint stick to create an alignment mark on one of the timing chain links (3) and the adjacent tooth on the intake camshaft position actuator (4).

Caution: Refer to Torque Reaction Against Timing Drive Chain Caution in the Preface section.

8. Use an open end wrench on the hex cast into the left intake and exhaust camshafts and rotate the camshafts toward each other in order to create slack in the chain between the actuators.

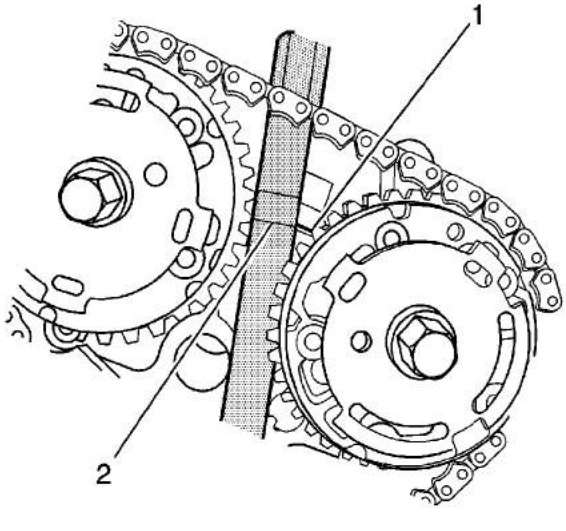

cardiagn.com

9. Unscrew the EN-48313 so that the legs of the tool are retracted.
10. Insert the EN-48313 between the camshaft actuators, rearward of the timing chain until the bottom line that is scribed in the body of the tool (2) is adjacent to the top surface of the cylinder head (1). This is the approximate installed position.

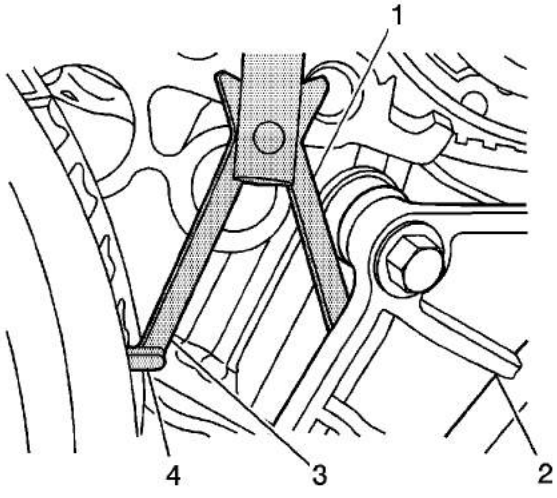

Note: The engine front cover is removed for clarity in the following graphics, but NOT required to perform the procedure.

11. Ensure that the feet (4) on the legs of the tool are facing the front of the engine.
12. Partially expand the legs (1, 3) of the EN-48313 by turning the T-shaped handle clockwise.
13. Insert the leg of the tool (1) behind the timing chain guide (2).
14. Continue expanding the EN-48313 until the legs (1, 3) contact the timing chain. Do not tighten at this time.

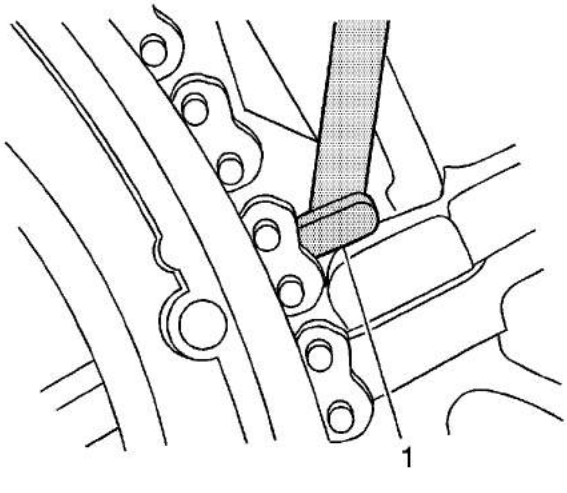

cardiagn.com

Note: Ensure that the foot (1) of the EN-48313 is engaged into one of the link pockets to prevent tool slippage during tightening of the EN-48313 .

15. Hand tighten the EN-48313 .

Caution: Refer to Torque Reaction Against Timing Drive Chain Caution in the Preface section.

16. Use an open end wrench on the hex cast into the left intake and exhaust camshafts and rotate the camshafts toward each other in order to create slack in the chain between the actuators.

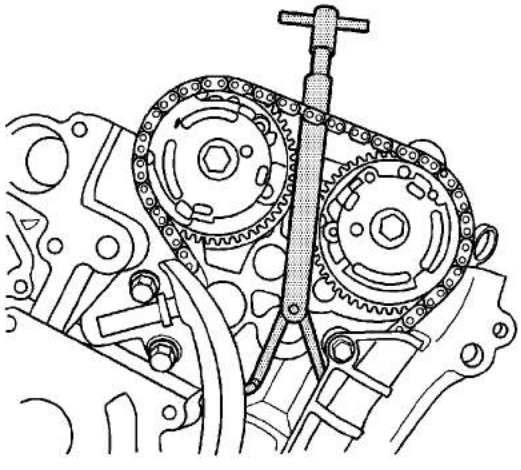

17. The EN-48313 is now properly installed to hold the timing chain in position.

Caution: Refer to Torque Reaction Against Timing Drive Chain Caution in the Preface section.

cardiagn.com

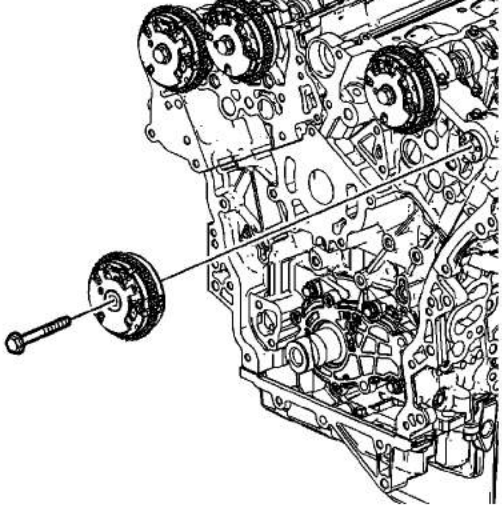

18. Use an open end wrench on the hex cast into the camshaft in order to prevent engine rotation when loosening the camshaft position actuator bolt.
19. Remove the left exhaust camshaft position actuator bolt.
20. Remove the left exhaust camshaft position actuator. When removing the actuator, place the chain on the engine cover side of the actuators.
21. Rotate the actuator in order to align the opening in the actuator reluctor wheel with the cam sensor boss in the front cover, to allow actuator removal.
22. If removing both the exhaust and intake camshaft actuators, the timing chain can be draped over the EN-48313 once the actuators have been removed.

Installation Procedure

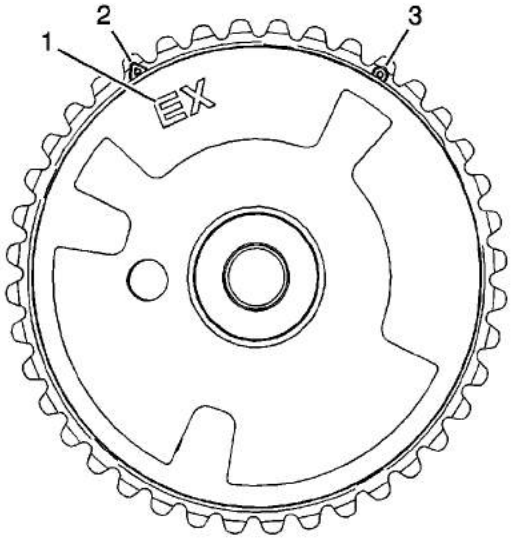

cardiagn.com

The marking is for an exhaust camshaft position actuator,

2. Ensure the proper timing mark is used. Observe the outer ring of the camshaft position actuator for the circle marking (3).

   The marking is for alignment to the highlighted timing chain link on the left side of the engine.

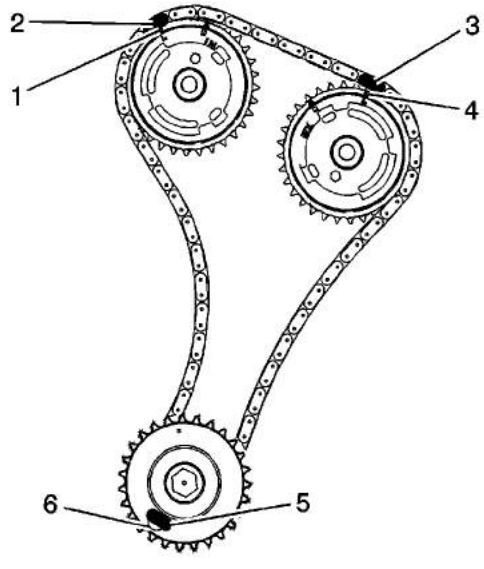

Note: Ensure that the camshaft timing chain and the camshaft position actuators are marked for proper assembly.

3. Align the exhaust camshaft actuator alignment mark (1) to the timing chain alignment mark (2) made during disassembly.
4. Ensure that the intake camshaft actuator alignment mark (4) and the timing chain alignment mark (3) are also aligned.
5. Position the exhaust camshaft actuator to the camshaft and install the actuator bolt hand tight.
6. Remove the EN-48313 .

Caution: Refer to Fastener Caution in the Preface section.

cardiagn.com

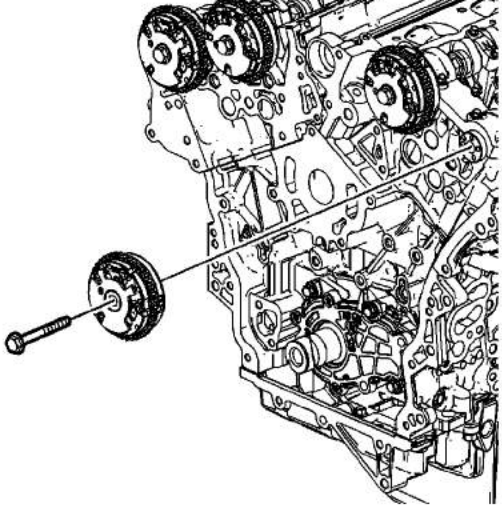

7. Tighten the exhaust camshaft position actuator bolt to **58 N·m (43 lb ft)**.
8. Install the left intake and exhaust camshaft position actuator solenoids. Refer to Camshaft Position Actuator Solenoid Valve Solenoid Replacement - Bank 2 (Left Side) Intake and Camshaft Position Actuator Solenoid Valve Solenoid Replacement - Bank 2 (Left Side) Exhaust.
9. Install the left intake and exhaust camshaft position sensors. Refer to Camshaft Position Sensor Replacement - Bank 2 (Left Side) Intake and Camshaft Position Sensor Replacement - Bank 2 (Left Side) Exhaust.
10. Install the left camshaft cover. Refer to Camshaft Cover Replacement - Left Side.
11. Install the lower intake manifold. Refer to Lower Intake Manifold Replacement.

cardiagn.com

Camshaft Position Actuator Replacement - Bank 1 (Right Side) Exhaust

Special Tools

EN-48313 Timing Chain Retention Tool

Removal Procedure

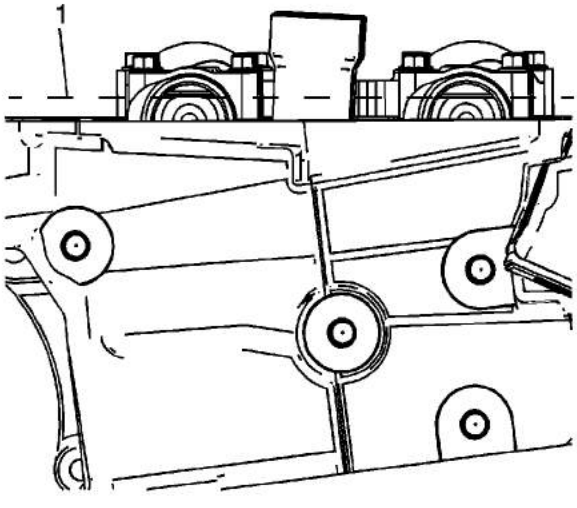

1. Remove the lower intake manifold. Refer to Lower Intake Manifold Replacement.
2. Remove the right camshaft cover. Refer to Camshaft Cover Replacement - Right Side.
3. Remove the right intake and exhaust camshaft position sensors. Refer to Camshaft Position Sensor Replacement - Bank 1 (Right Side) Intake and Camshaft Position Sensor Replacement - Bank 1 (Right Side) Exhaust.
4. Remove the right intake and exhaust camshaft position actuator solenoids. Refer to Camshaft Position Actuator Solenoid Valve Solenoid Replacement - Bank 1 (Right Side) Intake and Camshaft Position Actuator Solenoid Valve Solenoid Replacement - Bank 1 (Right Side) Exhaust.

   Note: Rotate the crankshaft balancer bolt in a clockwise direction ONLY.

5. Rotate the crankshaft balancer using the balancer bolt until the camshafts are in a neutral (low tension) position. The camshafts will be parallel with the camshaft cover rail (1).

cardiagn.com

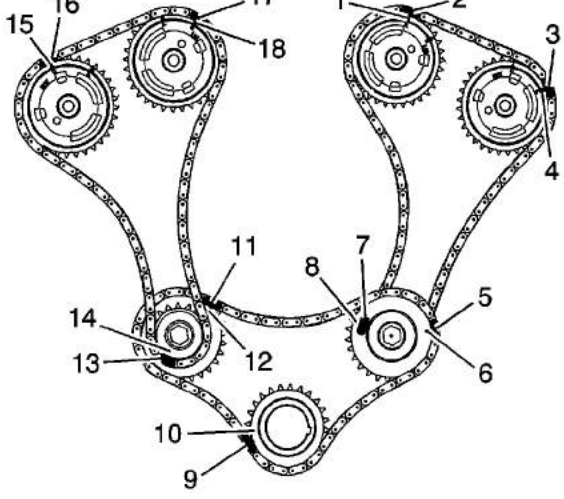

Note: Ensure that the camshaft timing chain and the camshaft position actuators are marked for proper assembly.

6. Use a paint stick to create an alignment mark (17) on one of the timing chain links and the adjacent tooth on the exhaust camshaft position actuator (18).
7. Use a paint stick to create an alignment mark (16) on one of the timing chain links and the adjacent tooth on the intake camshaft position actuator (15).

Caution: Refer to Torque Reaction Against Timing Drive Chain Caution in the Preface section.

8. Use an open end wrench on the hex cast into the left intake and exhaust camshafts and rotate the camshafts toward each other in order to create slack in the chain between the actuators.

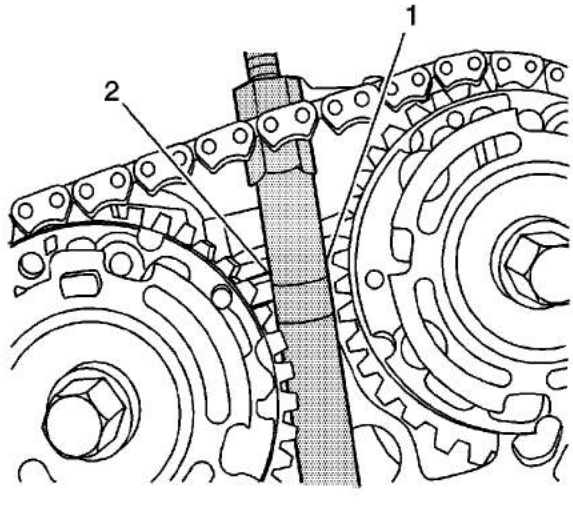

cardiagn.com

9. Unscrew the EN-48313 so that the legs of the tool are retracted.
10. Insert the EN-48313 between the camshaft actuators, rearward of the timing chain until the top line that is scribed in the body of the tool (1) is adjacent to the top surface of the cylinder head (2). This is the approximate installed position.

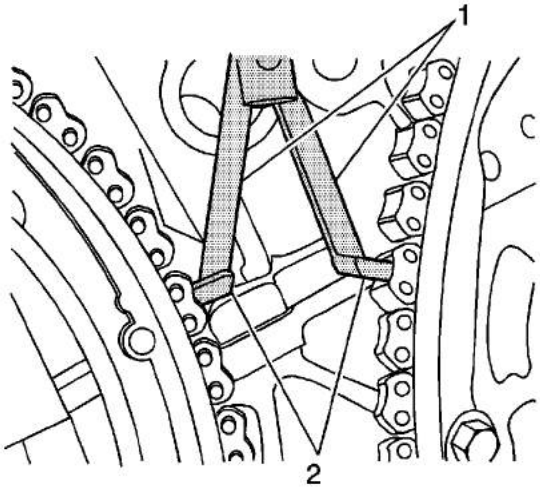

Note: The engine front cover is removed for clarity in the following graphics, but NOT required to perform the procedure.

11. Ensure that the feet (2) on the legs of the tool are facing the front of the engine.
12. Partially expand the legs (1) of the EN-48313 by turning the T-shaped handle clockwise.
13. Continue expanding the EN-48313 until the feet (2) contact the timing chain. Do not tighten at this time.

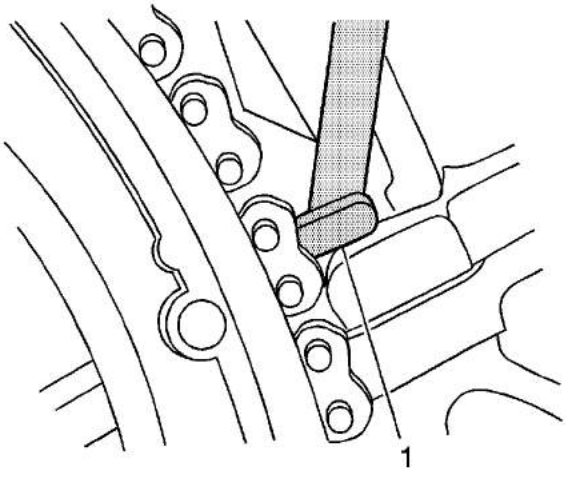

cardiagn.com

Note:

- Ensure that the foot (1) of the EN-48313 is engaged into one of the link pockets to prevent chain slippage during tightening of the EN-48313 .
- Do not allow the body of the EN-48313 to rotate when tightening the T-handle.

14. Hand tighten the EN-48313 .
15. Use an open end wrench on the hex cast into the body of the EN-48313 and hand tighten the T-handle.
16. Use an open end wrench on the hex cast into the right intake and exhaust camshafts and rotate the camshafts towards each other in order to create slack in the chain between the actuators.

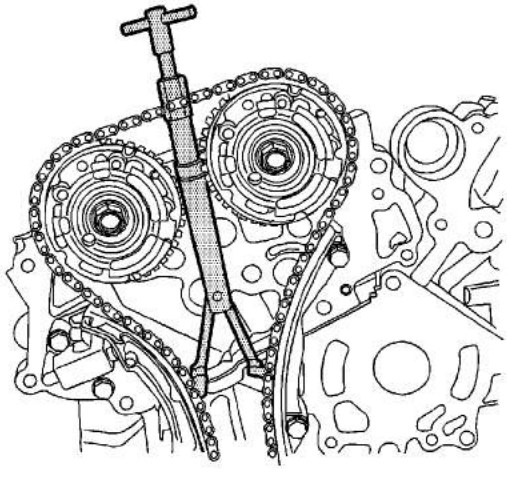

17. The EN-48313 is now properly installed to hold the timing chain in position.

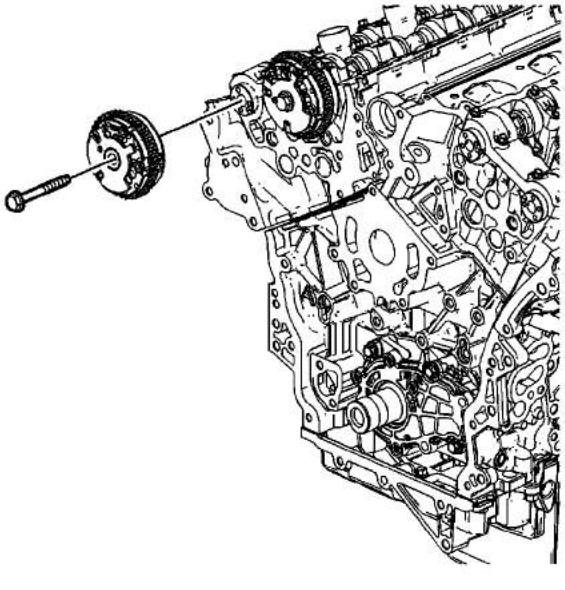

cardiagn.com

18. Use an open end wrench on the hex cast into the camshaft in order to prevent engine rotation when loosening the camshaft position actuator bolt.
19. Remove the right exhaust camshaft position actuator bolt.
20. Remove the right exhaust camshaft position actuator. When removing the actuator, place the chain on the engine cover side of the actuators.
21. Rotate the actuator in order to align the opening in the actuator reluctor wheel with the cam sensor boss in the front cover, to allow actuator removal.
22. If removing both the exhaust and intake camshaft actuators, the timing chain can be draped over the EN-48313 once the actuators have been removed.

Installation Procedure

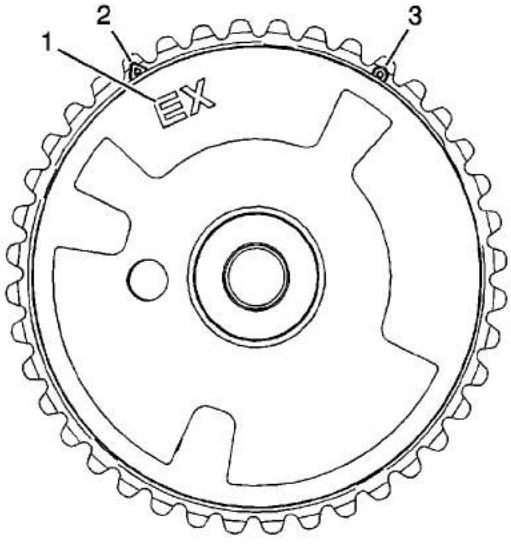

1. Ensure the proper camshaft position actuator is installed. Observe the body of the camshaft position actuator for the EX marking (1).

   The marking is for an exhaust camshaft position actuator,

2. Ensure the proper timing mark is used. Observe the outer ring of the camshaft position actuator for the triangle marking (2).

   The marking is for alignment to the highlighted timing chain link on the right side of the engine,

3. Use an open wrench on the hex cast into the camshaft in order to prevent camshaft rotation when tightening the camshaft position actuator bolt.

cardiagn.com

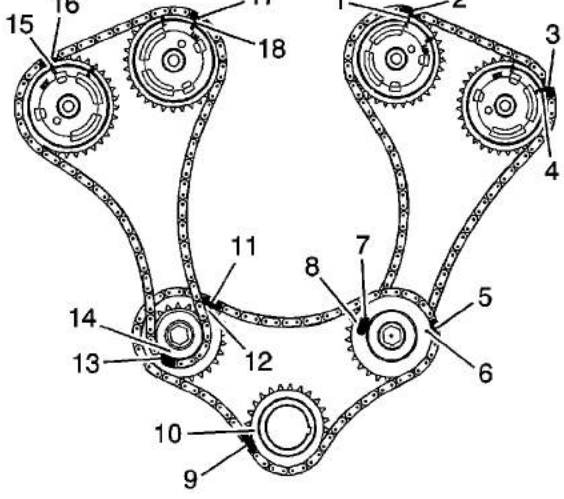

Note: Ensure that the camshaft timing chain and the camshaft position actuators are marked for proper assembly.

4. Align the exhaust camshaft actuator alignment mark (18) to the timing chain alignment mark (17) made during disassembly.
5. Ensure that the intake camshaft actuator alignment mark (15) and the timing chain alignment mark (16) are also aligned.
6. Position the exhaust camshaft actuator to the camshaft and install the actuator bolt hand tight.
7. Remove the EN-48313 .

Caution: Refer to Fastener Caution in the Preface section.

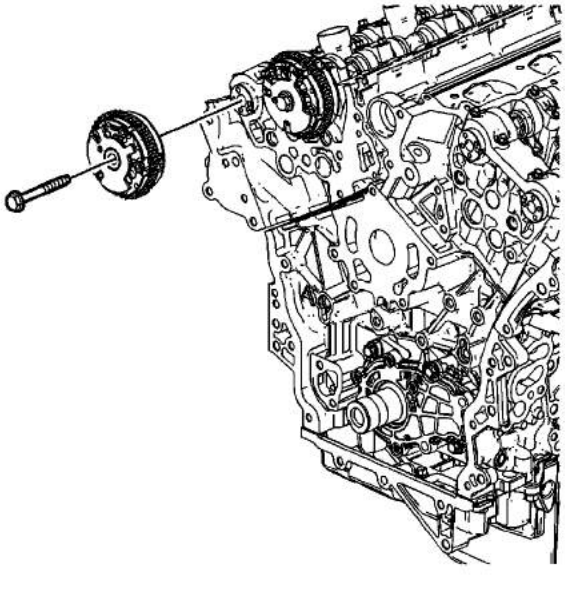

cardiagn.com

8. Tighten the right exhaust camshaft position actuator bolt to **58 N·m (43 lb ft)**.
9. Install the right intake and exhaust camshaft position actuator solenoids. Refer to Camshaft Position Actuator Solenoid Valve Solenoid Replacement - Bank 1 (Right Side) Intake and Camshaft Position Actuator Solenoid Valve Solenoid Replacement - Bank 1 (Right Side) Exhaust.
10. Install the right intake and exhaust camshaft position sensors. Refer to Camshaft Position Sensor Replacement - Bank 1 (Right Side) Intake and Camshaft Position Sensor Replacement - Bank 1 (Right Side) Exhaust.
11. Install the right camshaft cover. Refer to Camshaft Cover Replacement - Right Side.
12. Install the lower intake manifold. Refer to Lower Intake Manifold Replacement.

cardiagn.com

Camshaft Position Actuator Replacement - Bank 2 (Left Side) Intake

Removal Procedure

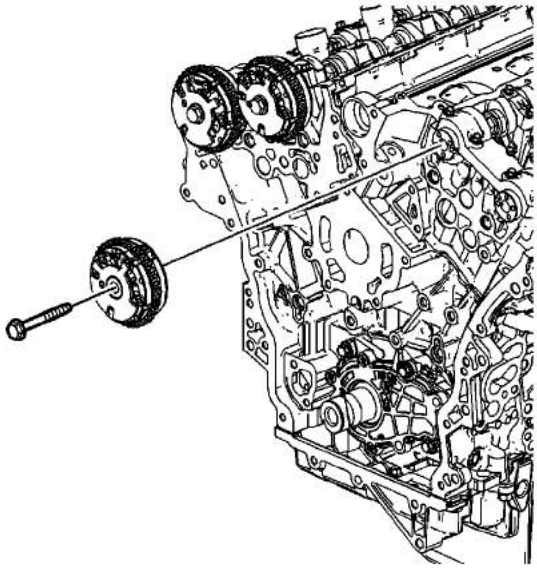

1. Remove the left exhaust camshaft actuator. Refer to Camshaft Position Actuator Replacement - Bank 2 (Left Side) Exhaust.
2. Remove the intake camshaft position actuator bolt.
3. Remove the left intake camshaft position actuator.

Installation Procedure

cardiagn.com

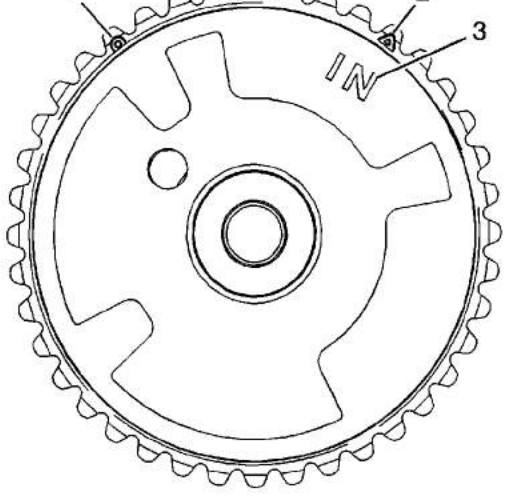

1. Ensure the proper camshaft position actuator is installed. Observe the body of the camshaft position actuator for the IN marking (3).

   The marking is for an intake camshaft position actuator.

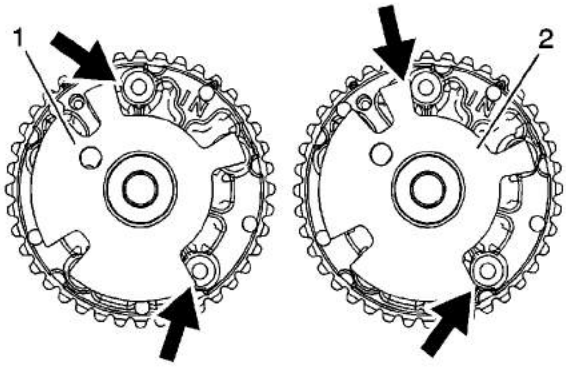

Caution: Ensure the proper camshaft position actuator is installed in the correct position. Failure to install the proper camshaft position actuator can effect engine performance and set an engine code.

2. Ensure the proper camshaft position actuator is being installed. The reluctor wheel on the right intake camshaft position actuator (1) is indexed in a different position compared to the

cardiagn.com

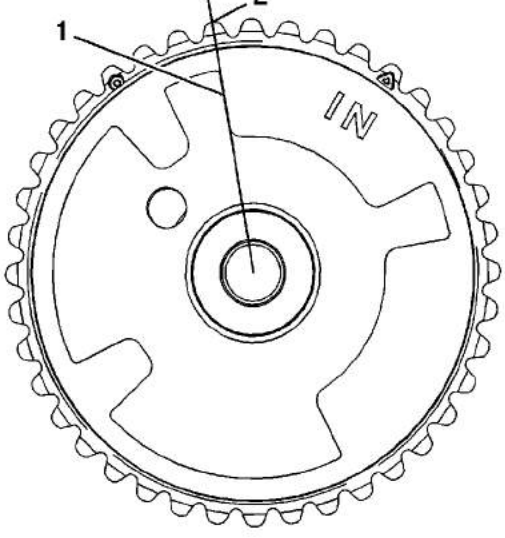

3. On the left intake camshaft actuator the edge of the reluctor wheel (1) lines up with the peak (2) of the sprocket tooth.

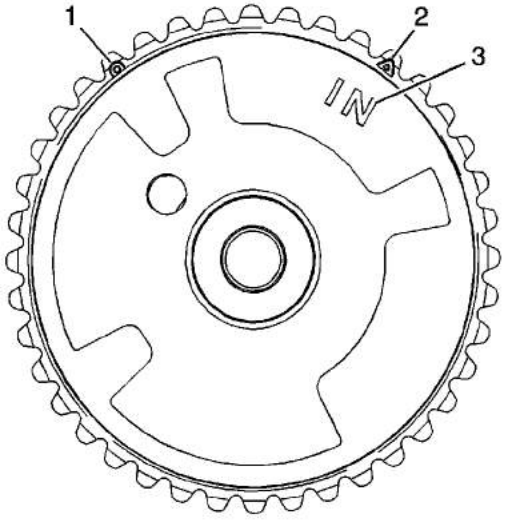

4. Ensure the proper timing mark is used. Observe the outer ring of the camshaft position actuator for the circle marking (1).

   The circle marking is for alignment to the highlighted timing chain link on the left side of the engine.

   Caution: Refer to Torque Reaction Against Timing Drive Chain Caution in the Preface section.

5. Use an open wrench on the hex cast into the camshaft in order to prevent camshaft rotation when tightening the camshaft position actuator bolt.

cardiagn.com

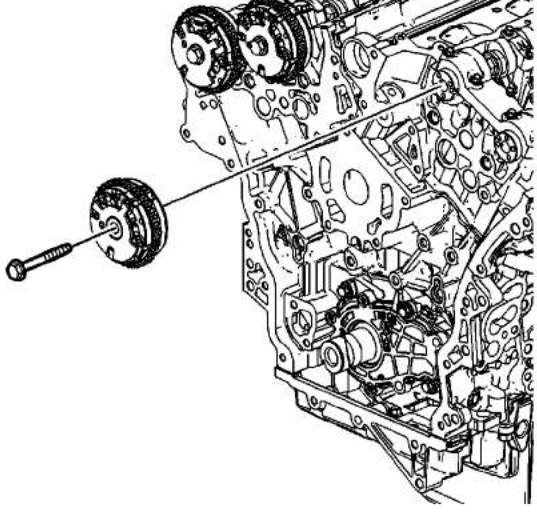

6. Locate the intake camshaft position actuator to the camshaft and loosely install the bolt.

   Caution: Refer to Torque Reaction Against Timing Drive Chain Caution in the Preface section.

   Note: Use an open-end wrench at the camshaft hex to prevent camshaft/engine rotation.

7. Tighten the camshaft position actuator bolt. Refer to Camshaft Position Actuator Installation - Left Side Intake.
8. Install the left exhaust camshaft actuator. Refer to Camshaft Position Actuator Replacement - Bank 2 (Left Side) Exhaust.

cardiagn.com

Camshaft Position Actuator Replacement - Bank 1 (Right Side) Intake

Removal Procedure

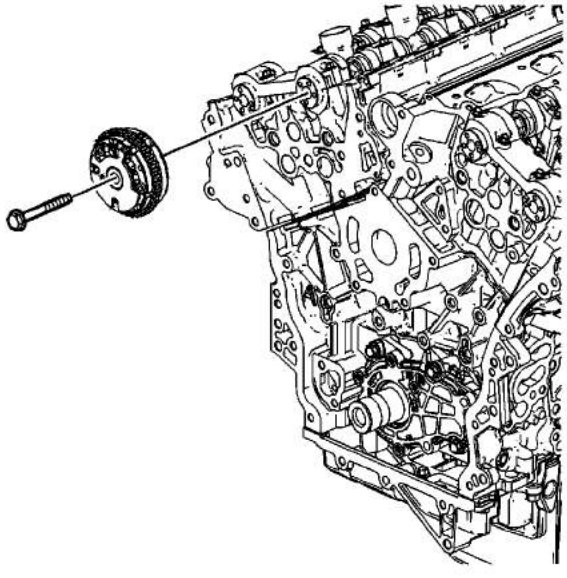

1. Remove the right exhaust camshaft actuator. Refer to Camshaft Position Actuator Replacement - Bank 1 (Right Side) Exhaust.
2. Remove the intake camshaft position actuator bolt.
3. Remove the right intake camshaft position actuator.

Installation Procedure

cardiagn.com

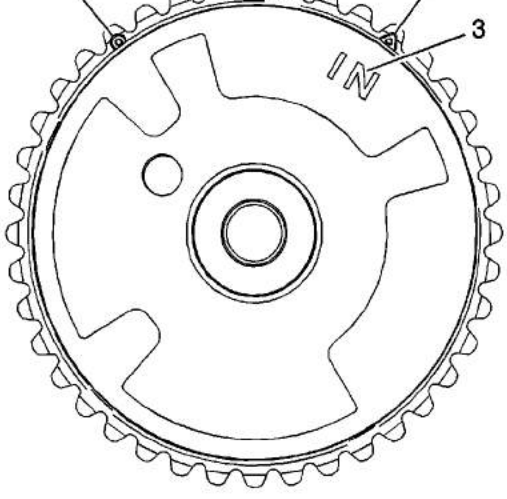

1. Ensure the proper camshaft position actuator is installed. Observe the body of the camshaft position actuator for the IN marking (3).

   The marking is for an exhaust camshaft position actuator.

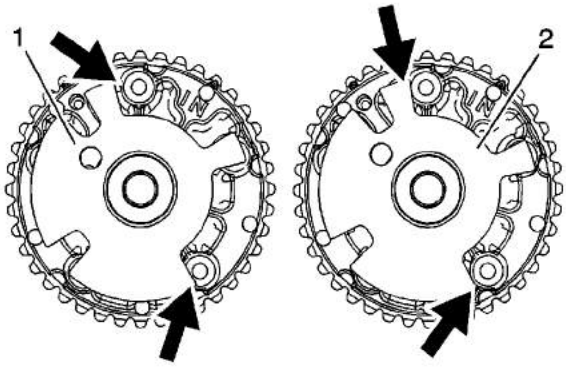

Caution: Ensure the proper camshaft position actuator is installed in the correct position. Failure to install the proper camshaft position actuator can effect engine performance and set an engine code.

2. Ensure the proper camshaft position actuator is being installed. The reluctor wheel on the right intake camshaft position actuator (1) is indexed in a different position compared to the

cardiagn.com

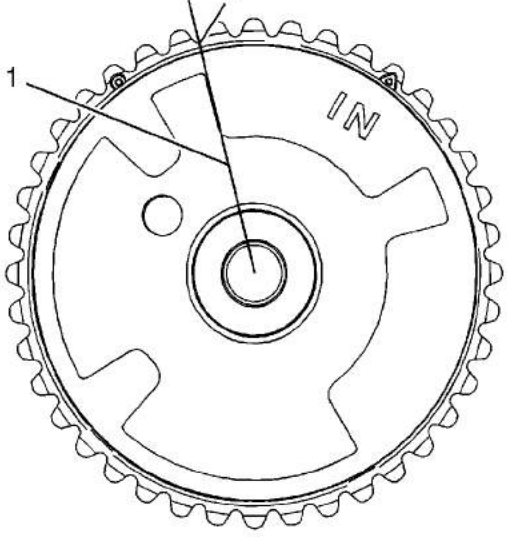

3. On the right intake camshaft actuator the edge of the reluctor wheel (1) lines up with the valley (2) of the sprocket tooth.

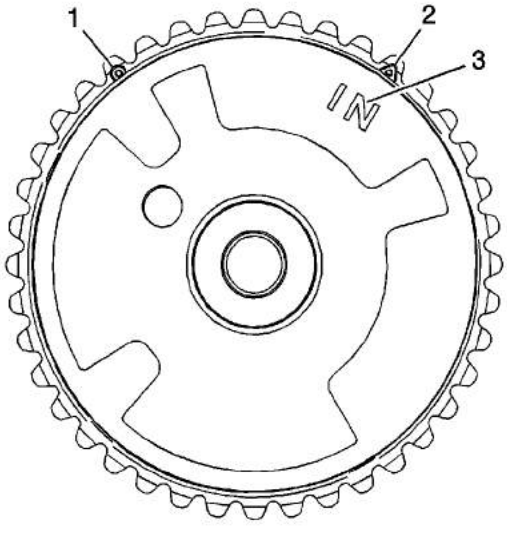

4. Ensure the proper timing mark is used. Observe the outer ring of the camshaft position actuator for the triangle marking (2).

   The triangle marking is for alignment to the highlighted timing chain link on the right side of the engine.

cardiagn.com

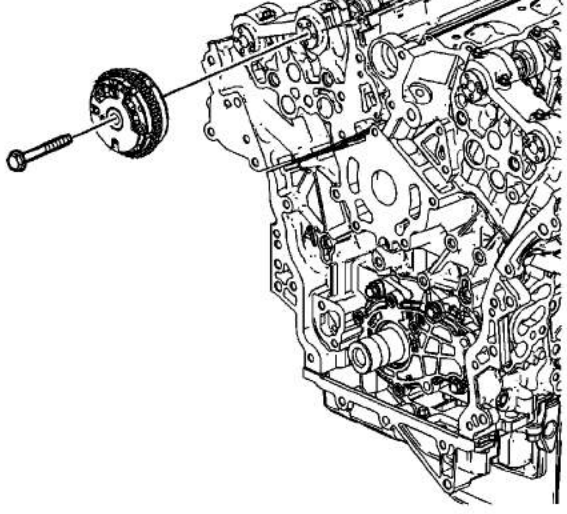

5. Locate the intake camshaft position actuator to the camshaft and loosely install the bolt.

   Caution: Refer to Torque Reaction Against Timing Drive Chain Caution in the Preface section.

   Note: Use an open-end wrench at the camshaft hex to prevent camshaft/engine rotation.

6. Tighten the camshaft position actuator bolt. Refer to Camshaft Position Actuator Installation - Right Side Intake.
7. Install the right exhaust camshaft actuator. Refer to Camshaft Position Actuator Replacement - Bank 1 (Right Side) Exhaust.

cardiagn.com

Setting Camshaft Timing

Important: Setting the camshaft timing is necessary whenever the camshaft drive system has been disturbed such that the relationship between any chain and sprocket has been lost. Even when only one sprocket is involved, multiple crankshaft rotations will not produce conditions where correct timing can be confirmed.

If necessary, follow the left bank secondary camshaft drive chain replacement procedures to reset the camshaft timing. Refer to Secondary Camshaft Drive Chain Replacement - Left Side .

cardiagn.com

Camshaft Replacement - Left Side

Special Tools

- EN 46108 Timing Chain Retention Tool
- EN 46111 Crankshaft Rotation Socket

Removal Procedure

1. Remove the lower intake manifold. Refer to Lower Intake Manifold Replacement.
2. Remove the left bank camshaft cover. Refer to Camshaft Cover Replacement - Left Side.
3. Remove the camshaft sensors. Refer to Camshaft Position Sensor Replacement - Bank 2 (Left Side) Exhaust and Camshaft Position Sensor Replacement - Bank 2 (Left Side) Intake.
4. Remove the camshaft position actuator solenoid. Refer to Camshaft Position Actuator Solenoid Valve Solenoid Replacement - Bank 2 (Left Side) Intake.
5. Remove the crankshaft balancer. Refer to Crankshaft Balancer Replacement.

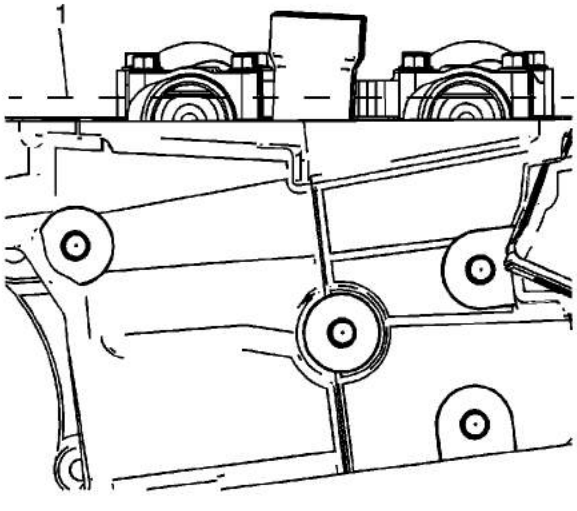

6. Rotate the crankshaft with the EN 46111 until the camshafts are in a neutral (low tension) position. The camshaft flats will be parallel with the camshaft cover rail (1).

   Caution: Refer to Torque Reaction Against Timing Drive Chain Caution in the Preface section.

cardiagn.com

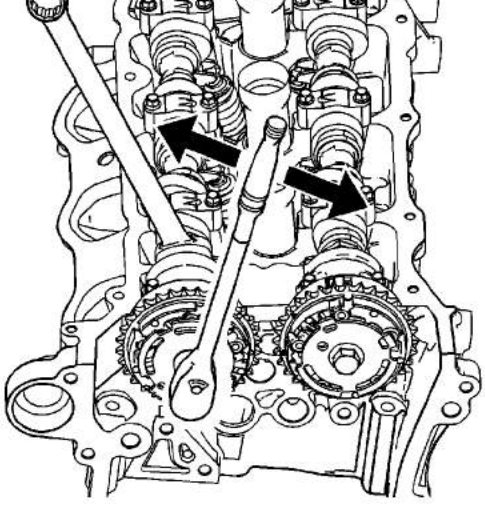

Note:

- Use an open-end wrench at the camshaft hex to prevent camshaft/engine rotation.
- DO NOT remove the camshaft position actuator bolt at this time.

7. Loosen the camshaft position actuator bolt.

Note: Ensure that the tips of the EN 46108 are fully engaged into the timing chain (3 and 4).

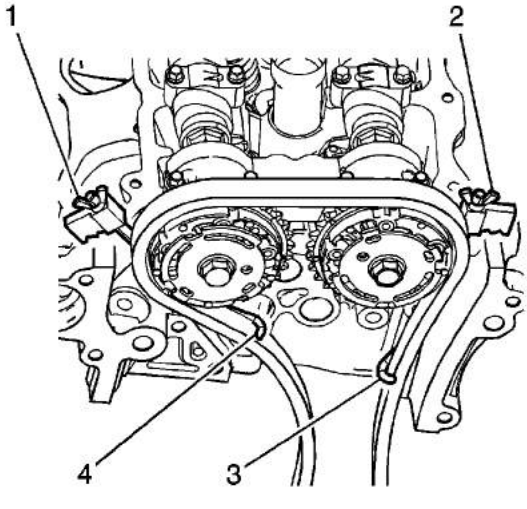

8. Install the EN 46108 (1 and 2) in order to retain the timing chain.

cardiagn.com

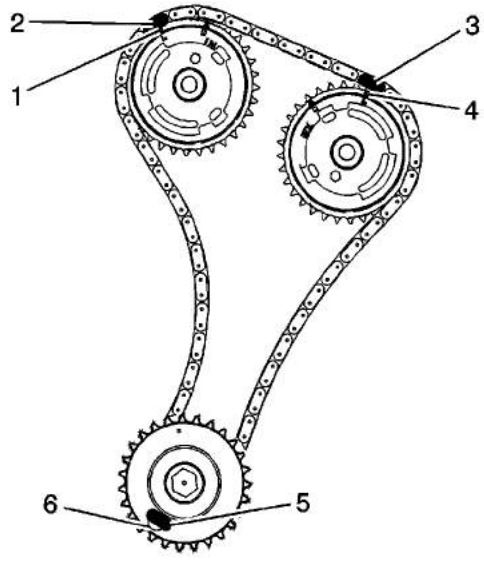

Note: Ensure that the camshaft timing chain and the camshaft position actuators are marked for proper assembly.

9. Mark the timing chain and the respective locations on the camshaft position actuators (1-4).
10. Remove the camshaft position actuator bolt.
11. Remove the camshafts. Refer to Camshaft Removal - Left Side.

Installation Procedure

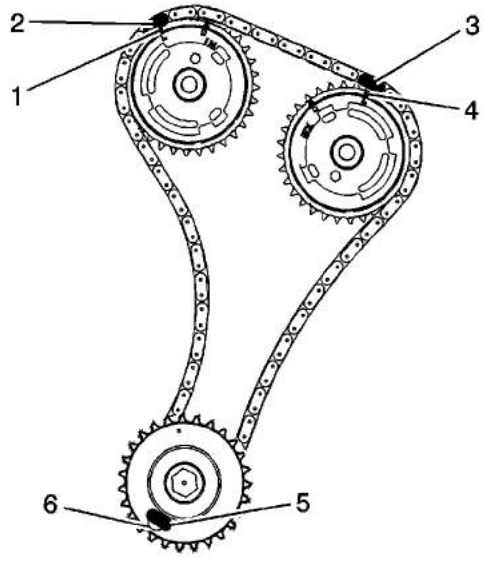

cardiagn.com

Note:

- Ensure that the marks on the camshaft position actuator and the timing chain (1-4) are aligned.
- DO NOT tighten the camshaft position actuator bolt at this time.

1. Locate the camshafts to the cylinder head and assemble the camshaft actuators to the camshafts.
2. Install the camshafts and the camshaft bearing caps. Refer to Camshaft Installation - Left Side.
3. Remove the EN 46108 .

Caution: Refer to Torque Reaction Against Timing Drive Chain Caution in the Preface section.

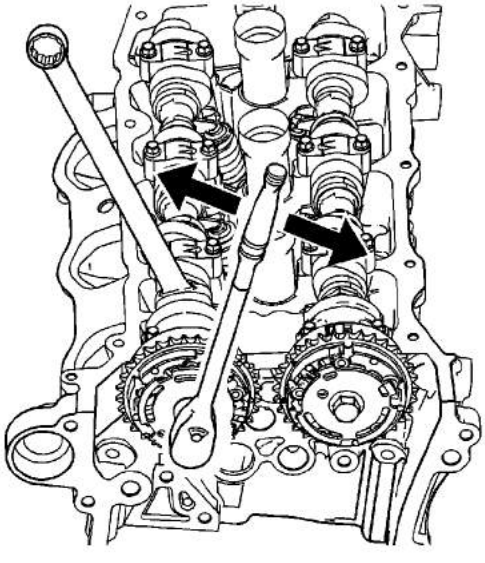

Note: Use an open-end wrench at the camshaft hex to prevent camshaft/engine rotation.

4. Install and tighten the camshaft position actuators. Refer to Camshaft Position Actuator Installation - Left Side Intake and Camshaft Position Actuator Installation - Left Side Exhaust.
5. Install the intake camshaft position actuator solenoid. Refer to Camshaft Position Actuator Solenoid Valve Solenoid Replacement - Bank 2 (Left Side) Intake.
6. Install the camshaft sensors. Refer to Camshaft Position Sensor Replacement - Bank 2 (Left Side) Exhaust and Camshaft Position Sensor Replacement - Bank 2 (Left Side) Intake.
7. Install the crankshaft balancer. Refer to Crankshaft Balancer Replacement.
8. Install the camshaft cover. Refer to Camshaft Cover Replacement - Left Side.
9. Install the lower intake manifold. Refer to Lower Intake Manifold Replacement.

cardiagn.com

Camshaft Replacement - Right Side

Special Tools

- EN 46108 Timing Chain Retention Tool
- EN 46111 Crankshaft Rotation Socket

Removal Procedure

1. Remove the lower intake manifold. Refer to Lower Intake Manifold Replacement.
2. Remove the camshaft cover. Refer to Camshaft Cover Replacement - Right Side.
3. Remove the camshaft sensors. Refer to Camshaft Position Sensor Replacement - Bank 1 (Right Side) Exhaust and Camshaft Position Sensor Replacement - Bank 1 (Right Side) Intake.
4. Remove the intake camshaft position actuator solenoid. Refer to Camshaft Position Actuator Solenoid Valve Solenoid Replacement - Bank 1 (Right Side) Intake.
5. Remove the crankshaft balancer. Refer to Crankshaft Balancer Replacement.

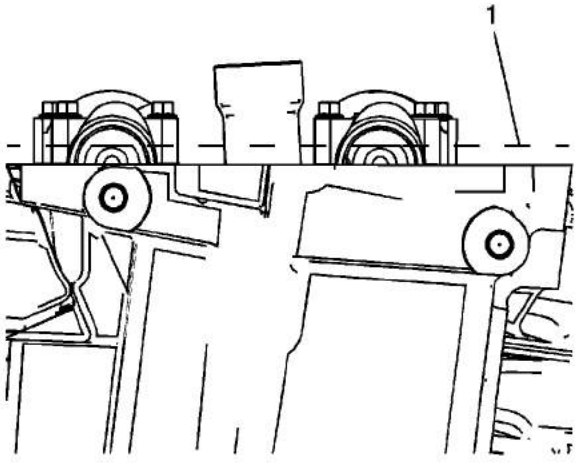

6. Rotate the crankshaft with the EN 46111 until the camshafts are in a neutral (low tension) position.

   The camshaft flats will be parallel with the camshaft cover rail (1).

   Caution: Refer to Torque Reaction Against Timing Drive Chain Caution in the Preface section.

cardiagn.com

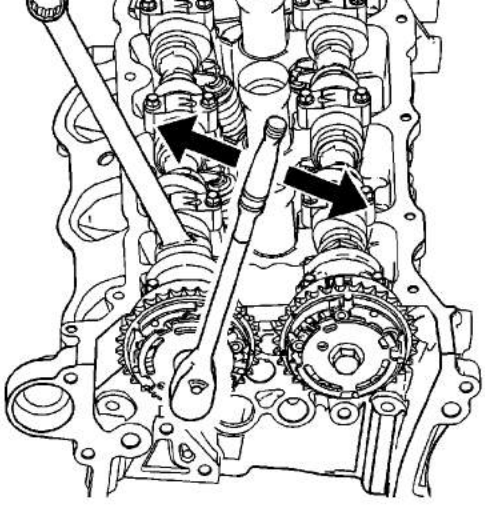

Note:

- Use an open-end wrench at the camshaft hex to prevent camshaft/engine rotation.
- DO NOT remove the camshaft position actuator bolt at this time.

7. Loosen the camshaft position actuator bolt.

Note: Ensure that the tips of the EN 46108 are fully engaged into the timing chain (3 and 4).

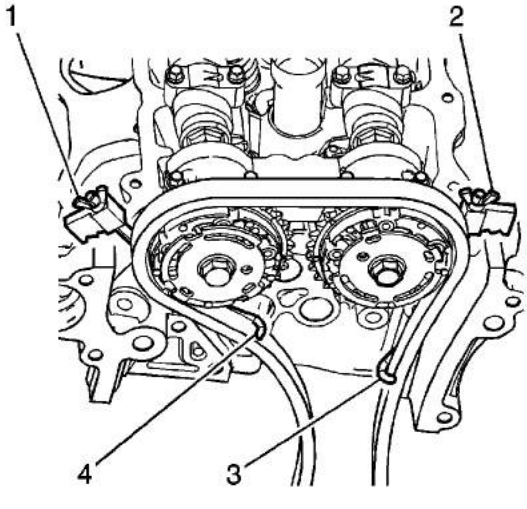

8. Install the EN 46108 (1 and 2) in order to retain the timing chain.

cardiagn.com

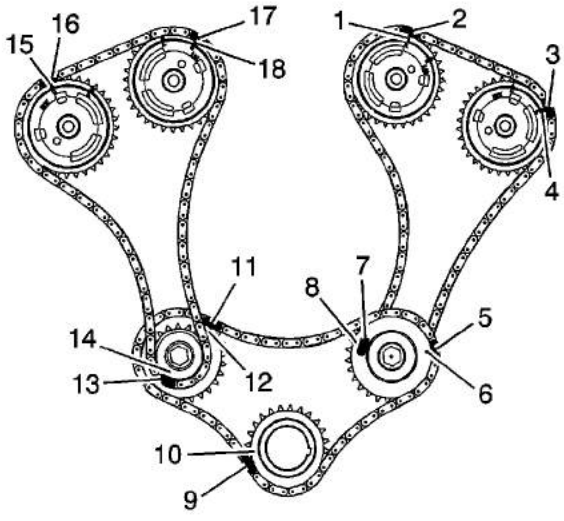

Note: Ensure that the camshaft timing chain and the camshaft position actuators are marked for proper assembly.

9. Mark the timing chain and the respective locations on camshaft position actuators (15-18).
10. Remove the camshaft position actuator bolt.
11. Remove the camshaft bearing caps and the camshaft. Refer to Camshaft Removal - Right Side.

Installation Procedure

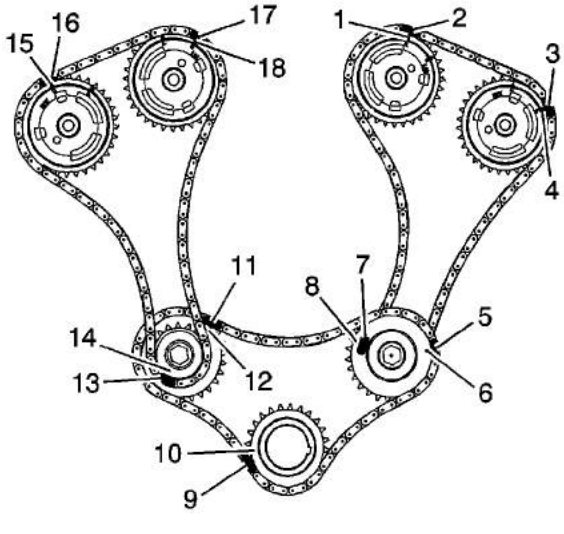

cardiagn.com

Note:

- Ensure that the marks on the camshaft position actuators and the timing chain (15-18) are aligned.
- DO NOT tighten the camshaft position actuator bolt at this time.

1. Locate the camshafts to the cylinder head and assemble the camshaft actuators to the camshafts.
2. Install the camshafts and the camshaft bearing caps. Refer to Camshaft Installation - Right Side.
3. Remove the EN 46108 .
4. Install the crankshaft balancer. Refer to Crankshaft Balancer Replacement.

Caution: Refer to Torque Reaction Against Timing Drive Chain Caution in the Preface section.

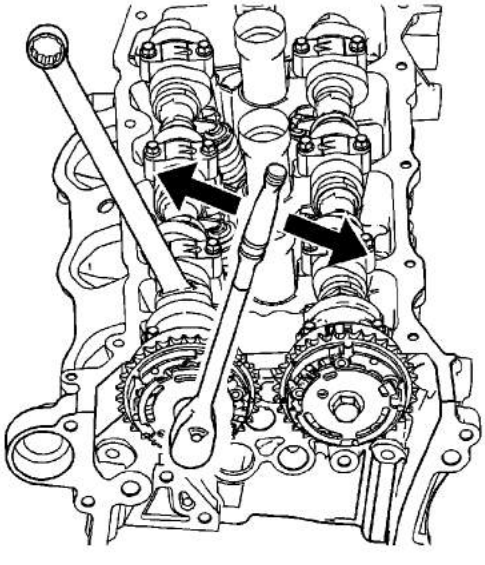

Note: Use an open-end wrench at the camshaft hex to prevent camshaft/engine rotation.

5. Install and tighten the camshaft position actuators. Refer to Camshaft Position Actuator Installation - Right Side Intake and Camshaft Position Actuator Installation - Right Side Exhaust.
6. Install the intake camshaft position actuator solenoid. Refer to Camshaft Position Actuator Solenoid Valve Solenoid Replacement - Bank 1 (Right Side) Intake.
7. Install the camshaft sensors. Refer to Camshaft Position Sensor Replacement - Bank 1 (Right Side) Exhaust and Camshaft Position Sensor Replacement - Bank 1 (Right Side) Intake.
8. Install the camshaft cover. Refer to Camshaft Cover Replacement - Right Side.
9. Install the lower intake manifold. Refer to Lower Intake Manifold Replacement.

cardiagn.com

Engine Support Fixture

Installation Procedure

Tools Required

- J 28467-B Universal Engine Support Fixture
- J 28467-7A Bolt Hook
- J-28467-13 Engine Support Fixture Adapters
- J 28467-34 Lift Hook Wing Nut and Washer
- J 36462-A Engine Support Adapter Leg Set
- J 42451-1 Engine Support Adapter

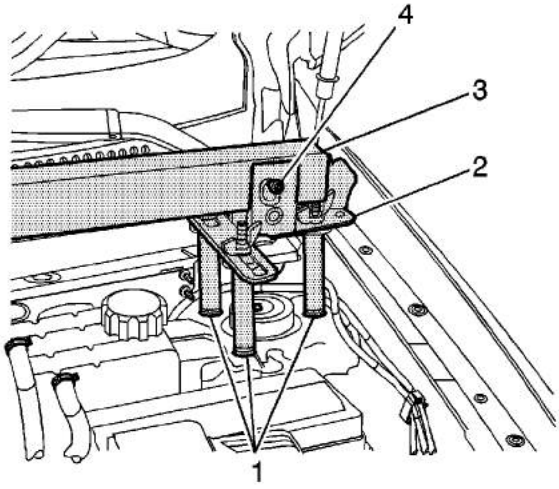

1. Remove the fuel injector sight shield. Refer to Fuel Injector Sight Shield Replacement .
2. Remove the engine mount bracket. Refer to Engine Mount Bracket Replacement - Right Side .
3. Install three J-28467-13 (1) and two J 28467-5 strut tower adapters (2) to the top of the left and right strut tower.
4. Install a 127 cm (50 in) engine support fixture cross bar J 28467-B (3) transversely across the vehicle between both J 28467-5 strut tower adapters (2).
5. Insert safety pins J-28467-10 (4) through the J 28467-5 strut tower adapters (2) and the cross bar (3) to prevent movement.
6. Support engine using a hydraulic jack.
7. Remove right side engine mount. Refer to Engine Mount Replacement - Right Side .
8. Remove camshaft position sensor. Refer to Camshaft Position Sensor Replacement - Bank 1 (Right Side) Intake .

cardiagn.com

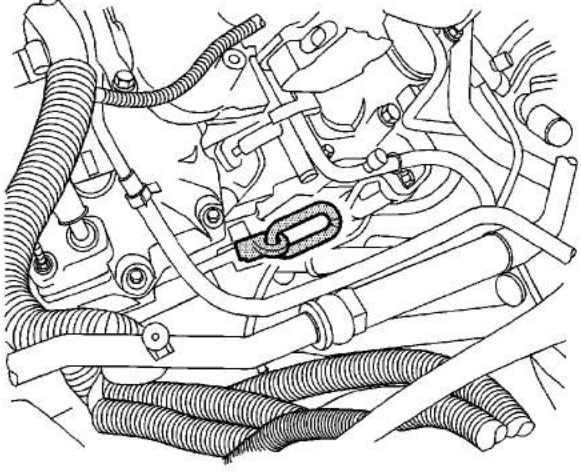

9. Install the engine support bracket J 42451-1 to the left side of engine.

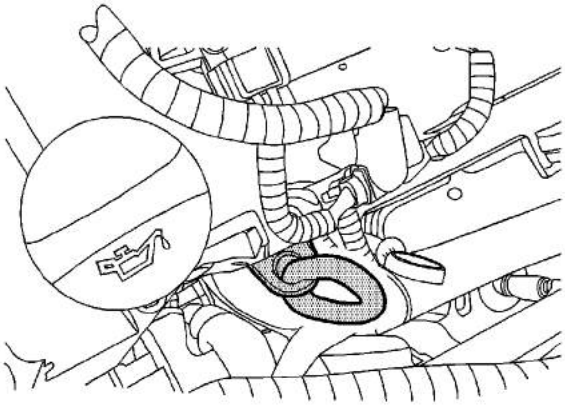

10. Install the engine support bracket (1) J 42451-1 and a 3.9 cm (1.5 in) spacer (2), to the right side of engine.

cardiagn.com

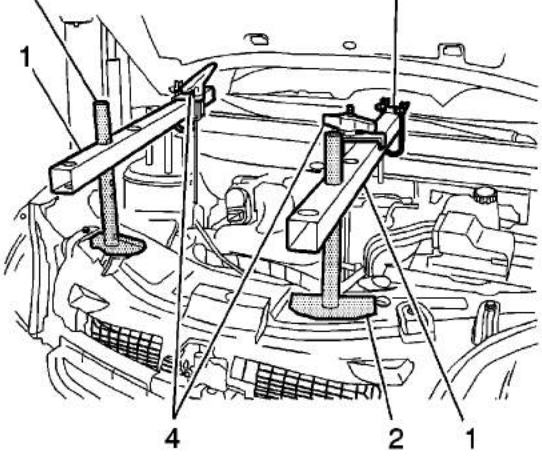

11. Position two 58 cm (23 in) engine support fixture cross bars (1) longitudinally with two J 36462-A leg assembly (2).
12. Install two J 28467-1A clamp (3) to secure the longitudinal mounted cross bar to the transverse mounted cross bar.

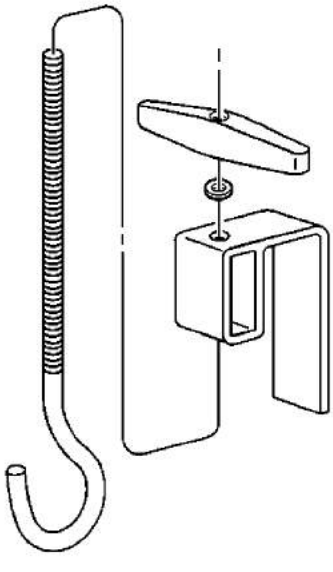

13. Assemble the lift hook wing nut J 28467-34 and the lift hook bracket J-28467-6A to the lift hook J 28467-7A .

cardiagn.com

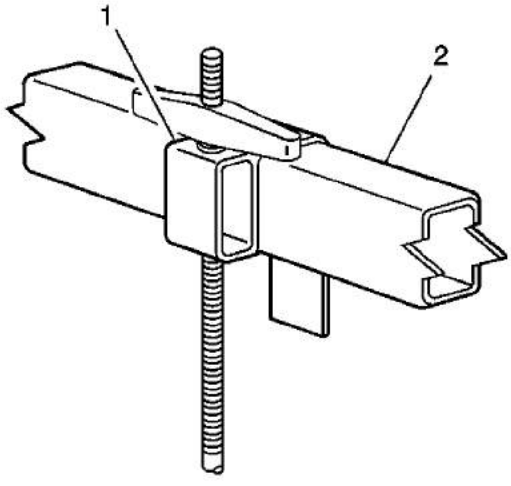

14. Install the lift hook and bracket assembly (1) to the longitudinal mounted cross bar (2).

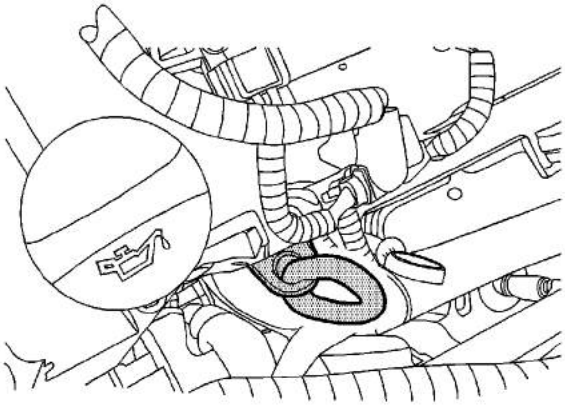

15. Position the J 28467-7A lift hook to the right engine lift bracket J 42451-1 (2).

cardiagn.com

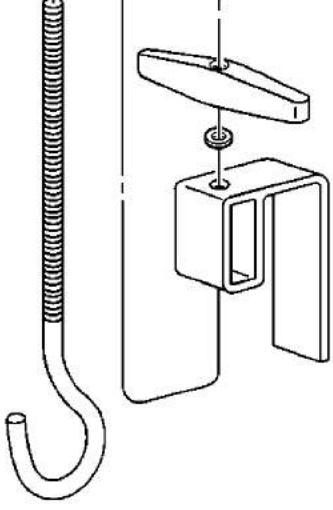

16. Assemble the lift hook wing nut J 28467-34 and the lift hook bracket J-28467-6A to the lift hook J 28467-7A .

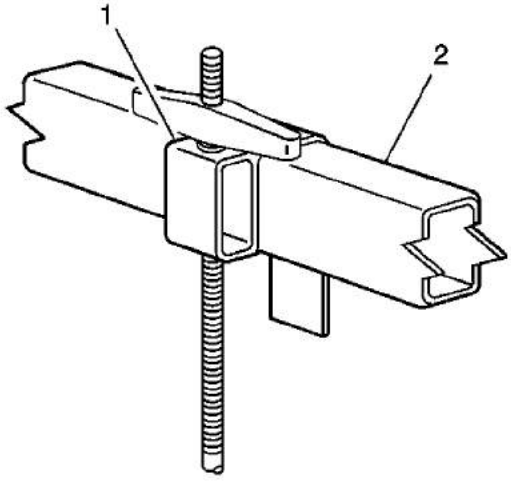

17. Install the lift hook and bracket assembly (1) to the longitudinal mounted cross bar (2).

cardiagn.com

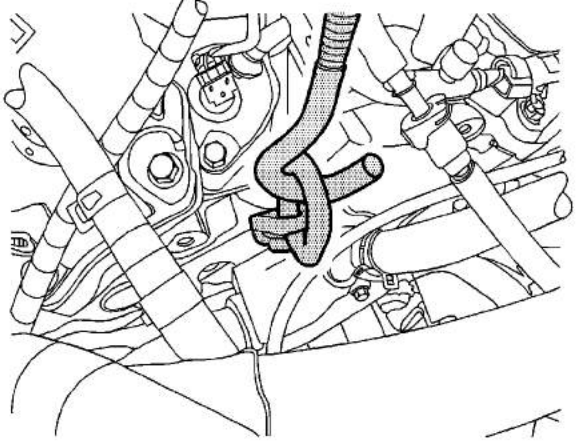

18. Position the J 28467-7A bolt hook (1) to the left engine lift bracket J 42451-1 (2).

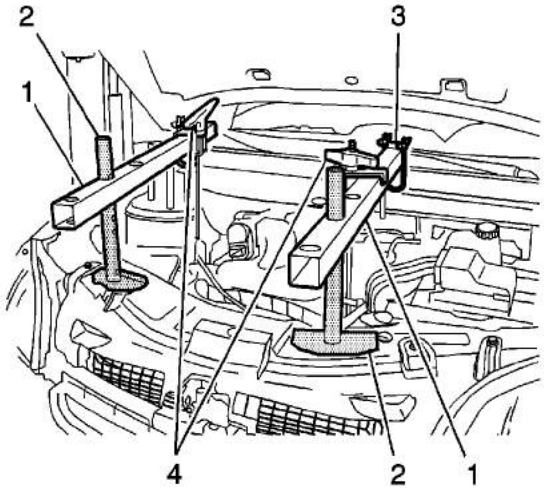

19. Evenly tighten both wing nuts J 28467-34 (4) until the engine weight is supported by the engine support fixture and no longer carried by the engine mounts.

cardiagn.com

Valve Rocker Arm Replacement - Left Side

Removal Procedure

1. Remove the applicable camshaft(s). Refer to Camshaft Replacement - Left Side .

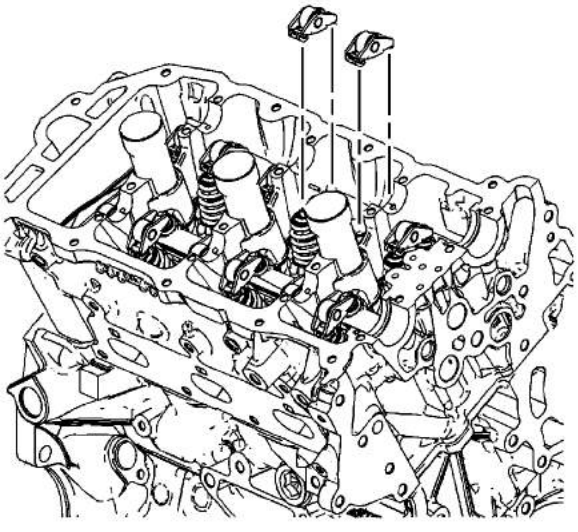

2. Remove the rocker arms. Refer to Valve Rocker Arm Removal - Left Side .
3. Clean and inspect the camshaft(s) and the rocker arm(s). Repair or replace as necessary. Refer to Camshaft Cleaning and Inspection and Valve Lifters Cleaning and Inspection .

Installation Procedure

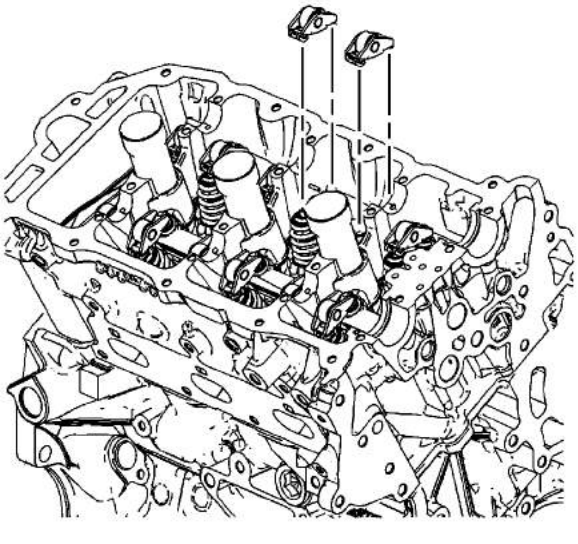

cardiagn.com

1. Install the rocker arms. Refer to Valve Rocker Arm Installation - Left Side .
2. Install the applicable camshaft(s). Refer to Camshaft Replacement - Left Side .

cardiagn.com

Valve Rocker Arm Replacement - Right Side

Removal Procedure

1. Remove the applicable camshaft(s). Refer to Camshaft Replacement - Left Side .

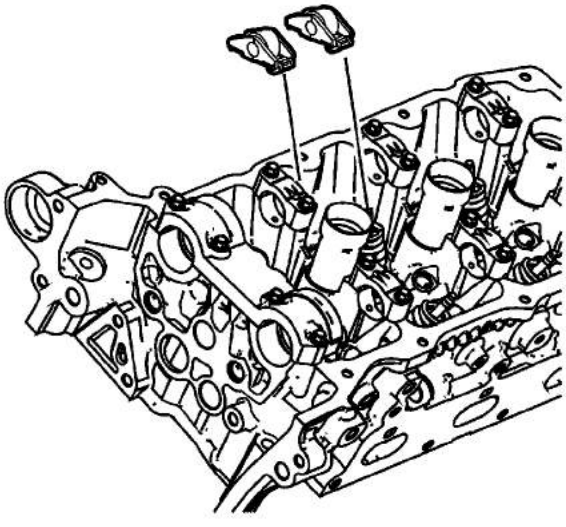

2. Remove the rocker arms. Refer to Valve Rocker Arm Removal - Right Side .
3. Clean and inspect the camshaft(s) and the rocker arm(s). Repair or replace as necessary. Refer to Camshaft Cleaning and Inspection and Valve Lifters Cleaning and Inspection .

Installation Procedure

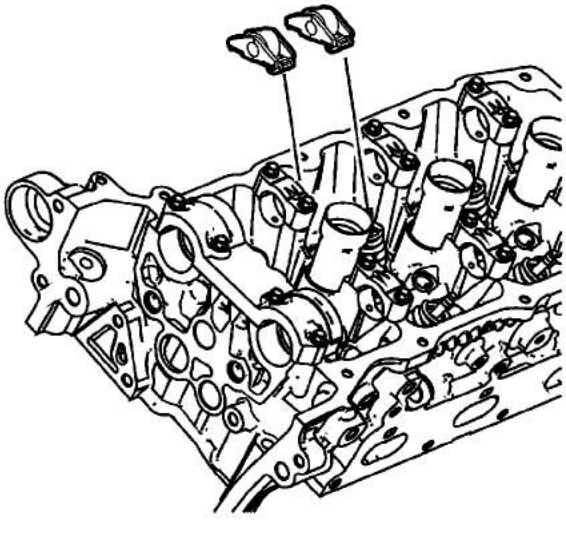

cardiagn.com

1. Install the rocker arms.
2. Install the applicable camshaft(s). Refer to Valve Rocker Arm Installation - Right Side .

cardiagn.com

Valve Lifter Replacement - Left Side

Removal Procedure

1. Remove the applicable camshaft(s). Refer to Camshaft Replacement - Left Side .
2. Remove the rocker arms. Refer to Valve Rocker Arm Removal - Left Side .

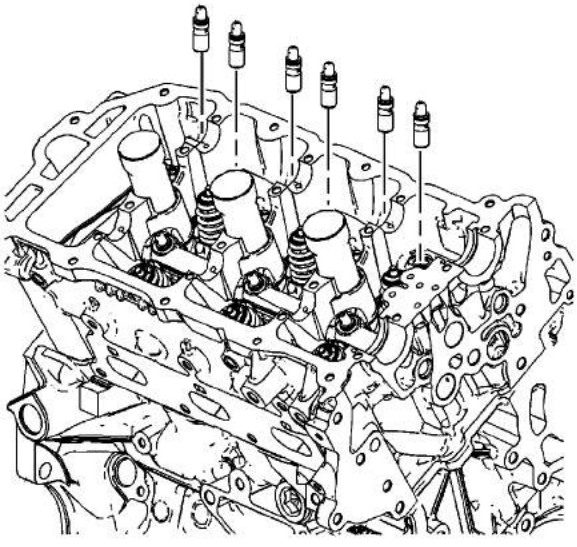

3. Remove the lifters. Refer to Valve Lifter Removal - Left Side .
4. Clean and inspect the camshaft(s), rocker arm(s) and lifter(s). Repair or replace as necessary. Refer to Camshaft Cleaning and Inspection and Valve Lifters Cleaning and Inspection.

Installation Procedure

cardiagn.com

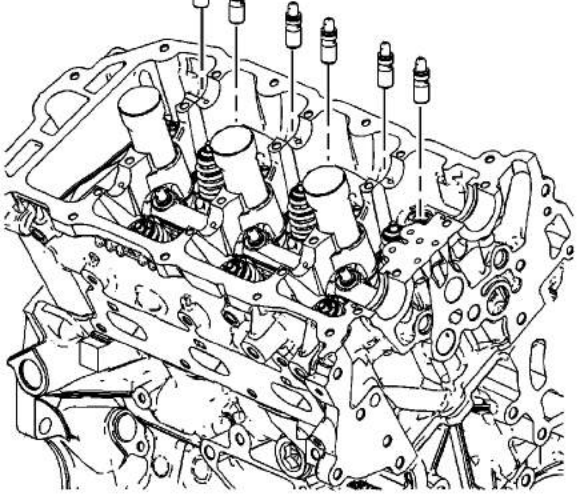

1. Install the lifters. Refer to Valve Lifter Installation - Left Side .
2. Install the rocker arms. Refer to Valve Rocker Arm Installation - Left Side .
3. Install the applicable camshaft(s). Refer to Camshaft Replacement - Left Side .

cardiagn.com

Valve Lifter Replacement - Right Side

Removal Procedure

1. Remove the applicable camshaft(s). Refer to Camshaft Replacement - Right Side .
2. Remove the rocker arms. Refer to Valve Rocker Arm Removal - Right Side .

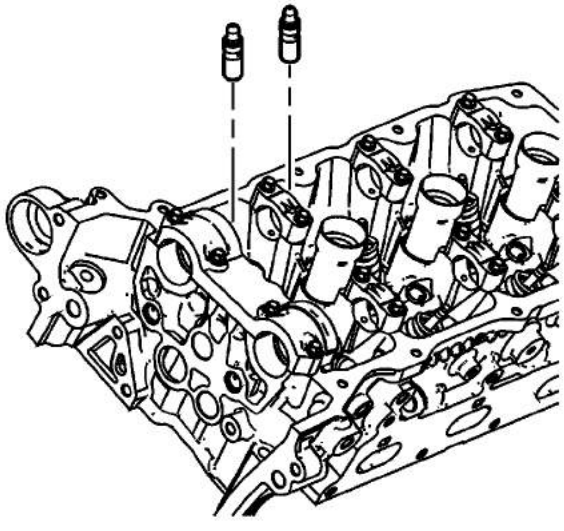

3. Remove the lifters. Refer to Valve Lifter Removal - Left Side .
4. Clean and inspect the camshaft(s) and the rocker arm(s). Repair or replace as necessary. Refer to Camshaft Cleaning and Inspection and Valve Lifters Cleaning and Inspection .

Installation Procedure

cardiagn.com

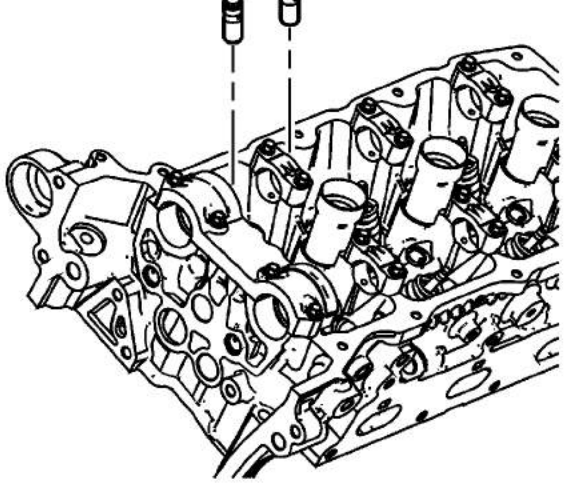

1. Install the lifters. Refer to Valve Lifter Installation - Right Side .
2. Install the rocker arms. Refer to Valve Rocker Arm Installation - Right Side .
3. Install the applicable camshaft(s). Refer to Camshaft Replacement - Right Side .

cardiagn.com

Valve Stem Oil Seal and Valve Spring Replacement - Left Side

Tools Required

- EN 46106 Flywheel Holding Tool
- EN 46110 On-Vehicle Valve Spring Compressor
- EN 46116 Valve Stem Seal Remover/Installer
- J 39313 Spark Plug Port Adapter

Removal Procedure

1. Remove the starter motor. Refer to Starter Motor Replacement .

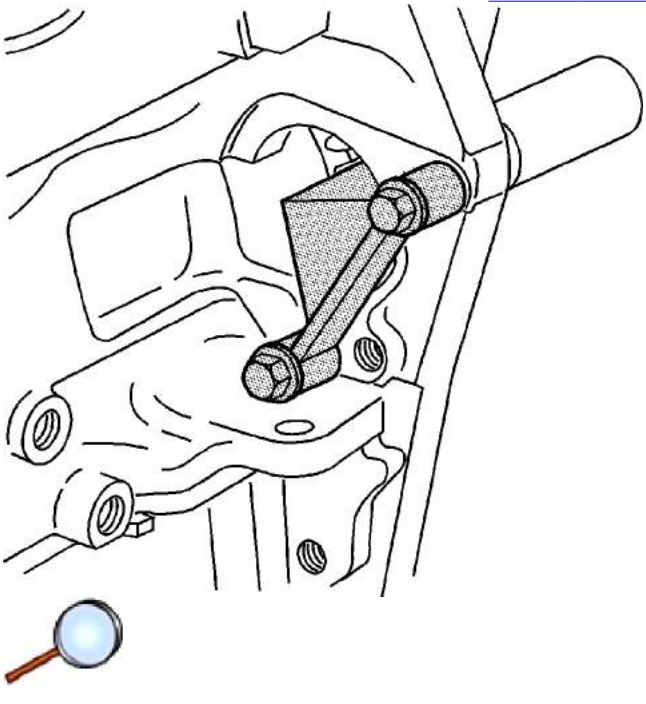

Important: If the EN 46106 is not installed, the crankshaft may rotate. If the crankshaft rotates, disassembly and reassembly of the entire camshaft timing system may be required.

2. Install the EN 46106 in order to prevent crankshaft rotation.
3. Remove the camshafts and rocker arms. Refer to Camshaft Replacement - Left Side .
4. Remove the spark plug from the applicable cylinder. Refer to Spark Plug Replacement .
5. Install the J 39313 to the applicable cylinder.
6. Connect the J 39313 to a compressed air source.

cardiagn.com

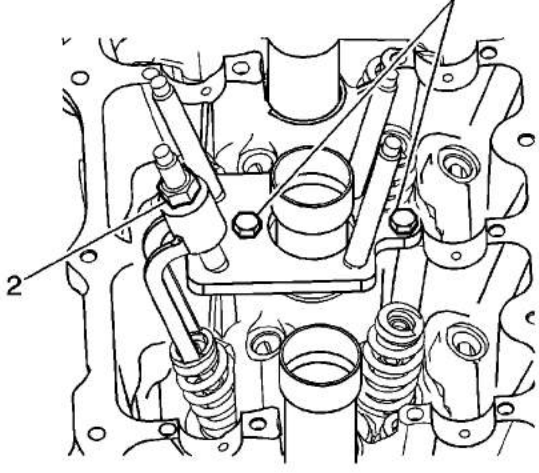

7. Install the EN 46110 above the applicable cylinder as shown.
8. Tighten the EN 46110 valve spring compressor nut (2).

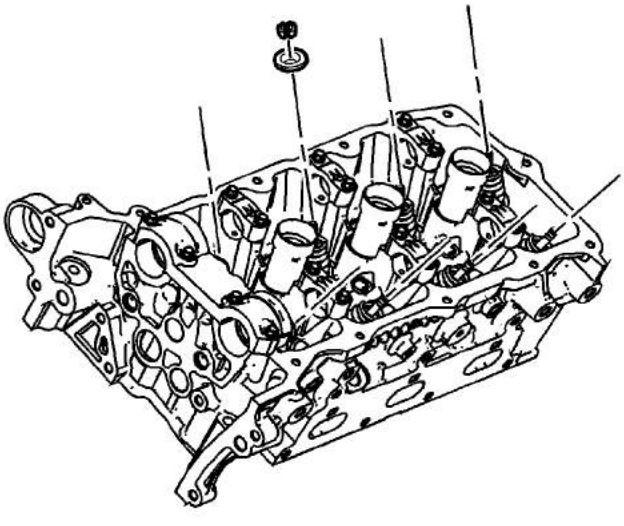

9. Remove the valve keepers.
10. Loosen the EN 46110 valve spring compressor nut.
11. Remove the valve spring retainer.

cardiagn.com

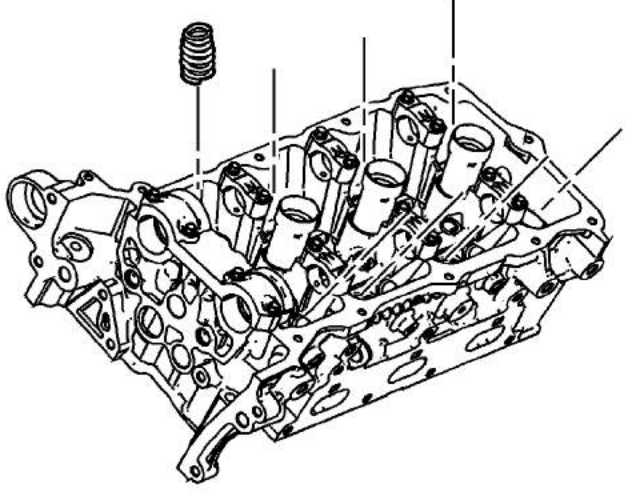

12. Remove the valve spring.

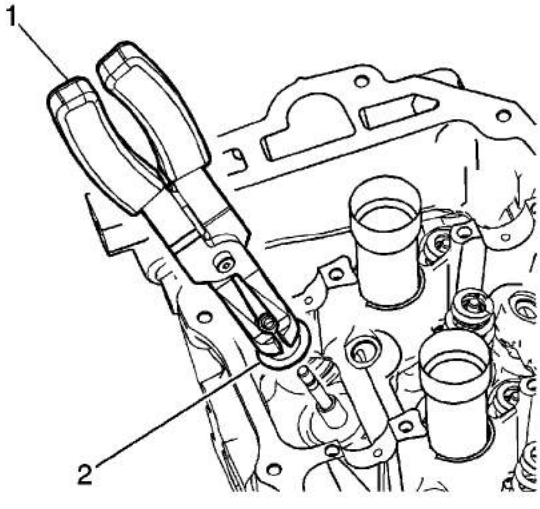

13. Use the EN 46116 (1) in order to remove the valve stem seal (2).

Installation Procedure

cardiagn.com

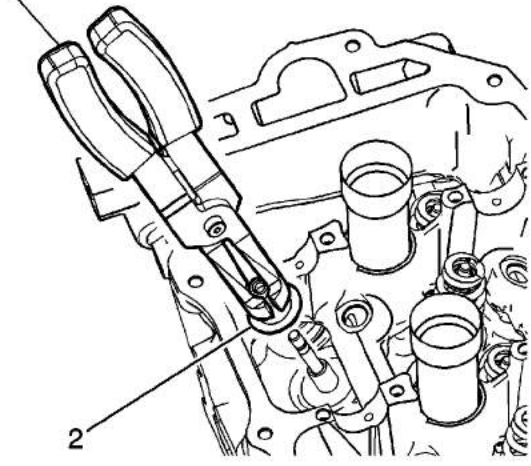

1. Use the EN 46116 (1) in order to install the valve stem seal (2).

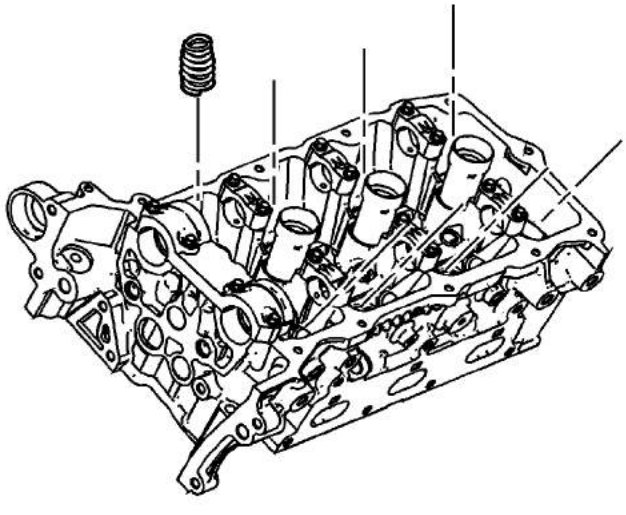

2. Install the valve spring.
3. Install the valve spring retainer.

cardiagn.com

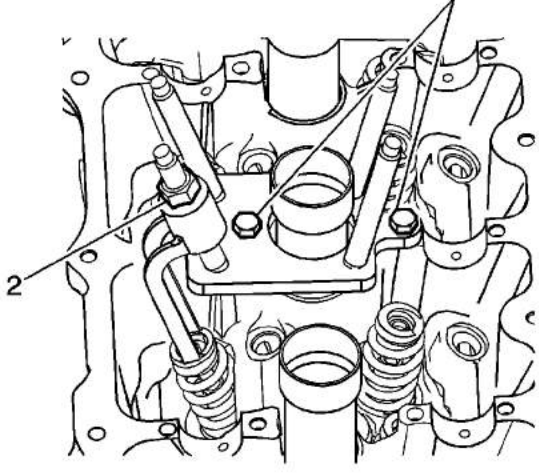

4. Install the EN 46110 above the applicable valve spring as shown.

   Tighten the EN 46110 valve spring compressor nut (2).

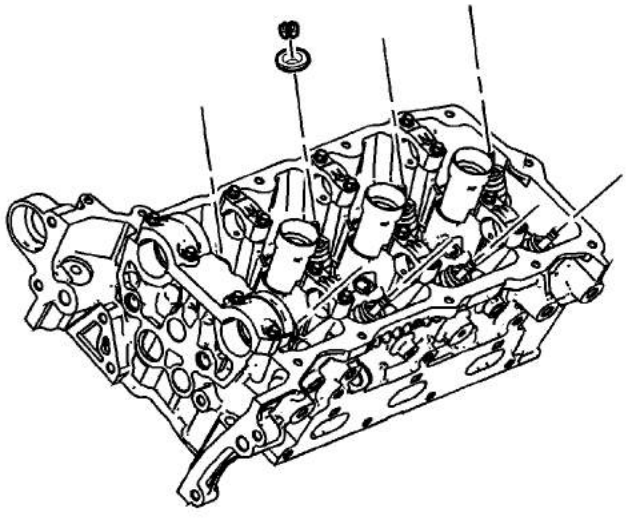

5. Install the valve spring keepers.
6. Remove the EN 46110 .
7. Disconnect the J 39313 from the compressed air source.
8. Remove the J 39313 .
9. Install the spark plugs. Refer to Spark Plug Replacement .
10. Install the rocker arms and camshafts. Refer to Camshaft Replacement - Left Side .
11. Remove the EN 46106 in order to prevent crankshaft rotation.
12. Install the starter motor. Refer to Starter Motor Replacement .

cardiagn.com

Valve Stem Oil Seal and Valve Spring Replacement - Right Side

Tools Required

- EN 46106 Flywheel Holding Tool
- EN 46110 On-Vehicle Valve Spring Compressor
- EN 46116 Valve Stem Seal Remover/Installer
- J 39313 Spark Plug Port Adapter

Removal Procedure

1. Remove the starter motor. Refer to Starter Motor Replacement .

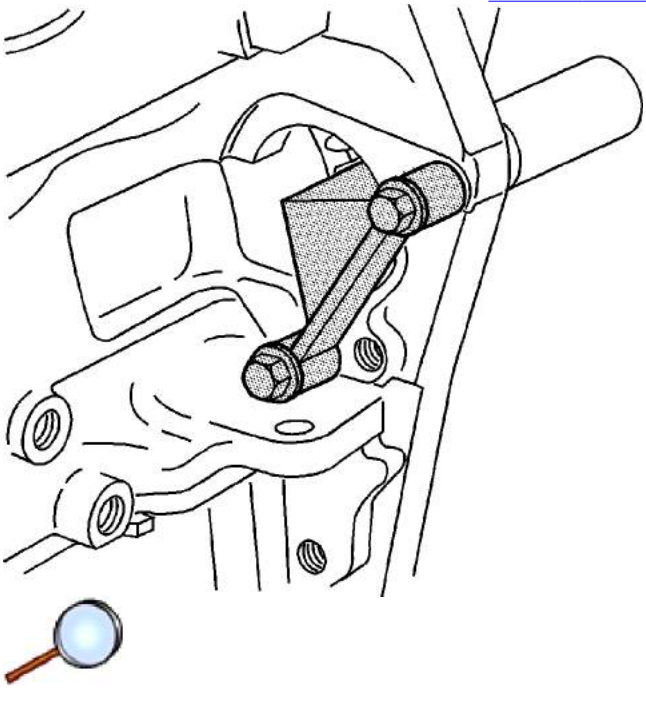

Important: If the EN 46106 is not installed, the crankshaft may rotate. If the crankshaft rotates, disassembly and reassembly of the entire camshaft timing system may be required.

2. Install the EN 46106 in order to prevent crankshaft rotation.
3. Remove the camshafts and rocker arms. Refer to Camshaft Replacement - Right Side .
4. Remove the spark plug from the applicable cylinder. Refer to Spark Plug Replacement .
5. Install the J 39313 to the applicable cylinder.
6. Connect the J 39313 to a compressed air source.

cardiagn.com

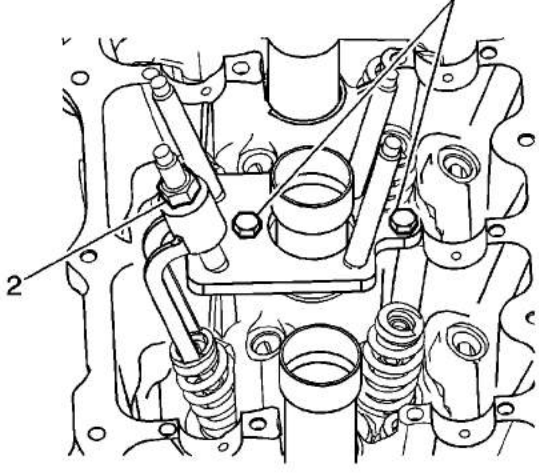

7. Install the EN 46110 above the applicable cylinder as shown.
8. Tighten the EN 46110 valve spring compressor nut (2).

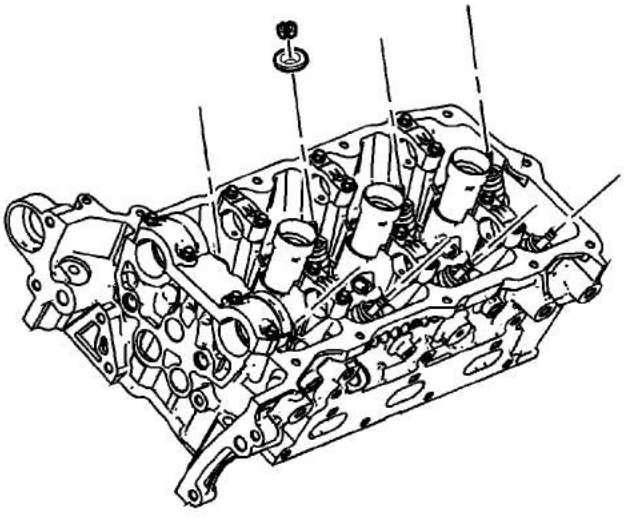

9. Remove the valve keepers.
10. Loosen the EN 46110 valve spring compressor nut.
11. Remove the valve spring retainer.

cardiagn.com

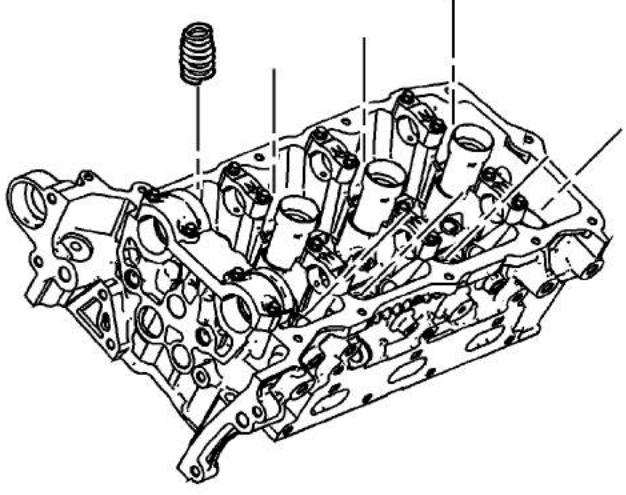

12. Remove the valve springs.

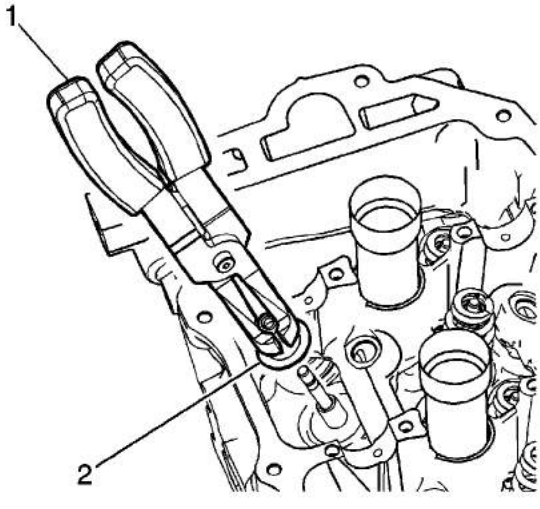

13. Use the EN 46116 (1) in order to remove the valve stem seal (2).

Installation Procedure

cardiagn.com

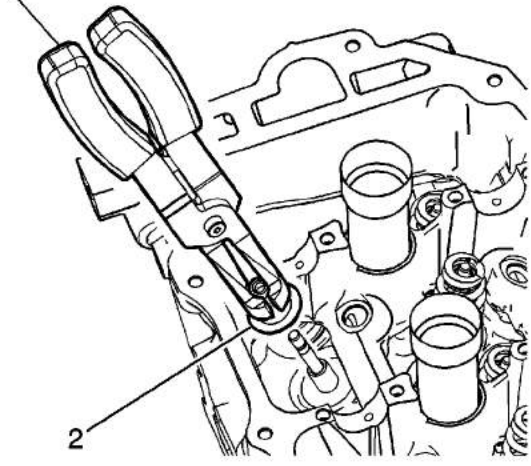

1. Use the EN 46116 (1) in order to install the valve stem seals (2).

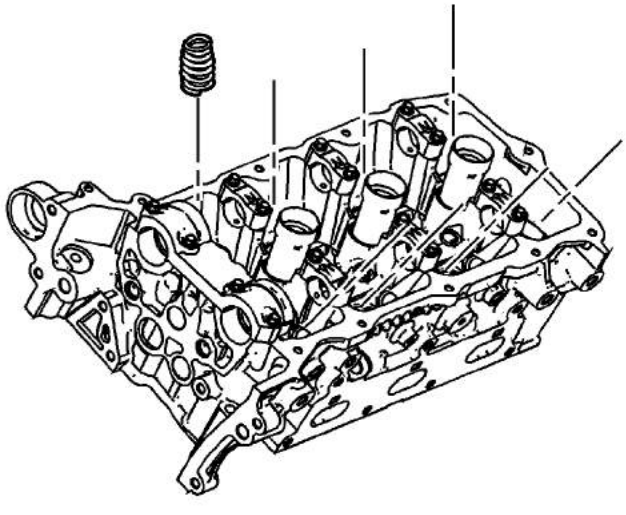

2. Install the valve spring.
3. Install the valve spring retainer.

cardiagn.com

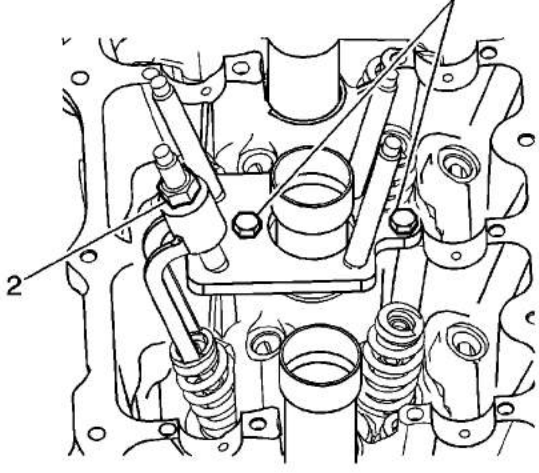

4. Install the EN 46110 above the applicable valve spring as shown.

   Tighten the EN 46110 valve spring compressor nut (2).

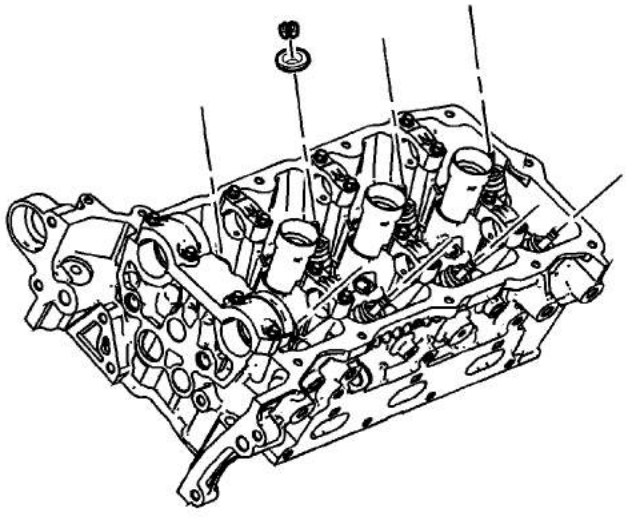

5. Install the valve spring keepers.
6. Remove the EN 46110 .
7. Disconnect the J 39313 from the compressed air source.
8. Remove the J 39313 .
9. Install the spark plugs. Refer to Spark Plug Replacement .
10. Install the rocker arms and camshafts. Refer to Camshaft Replacement - Right Side .
11. Remove the EN 46106 .
12. Install the starter motor. Refer to Starter Motor Replacement .

cardiagn.com

Cylinder Head Replacement - Left Side

Removal Procedure

1. Remove the left bank secondary timing chain. Refer to Secondary Camshaft Drive Chain Replacement - Left Side.
2. Remove the oil level indicator. Refer to Oil Level Indicator Tube Replacement.
3. Disconnect the coolant temperature sensor electrical connector.

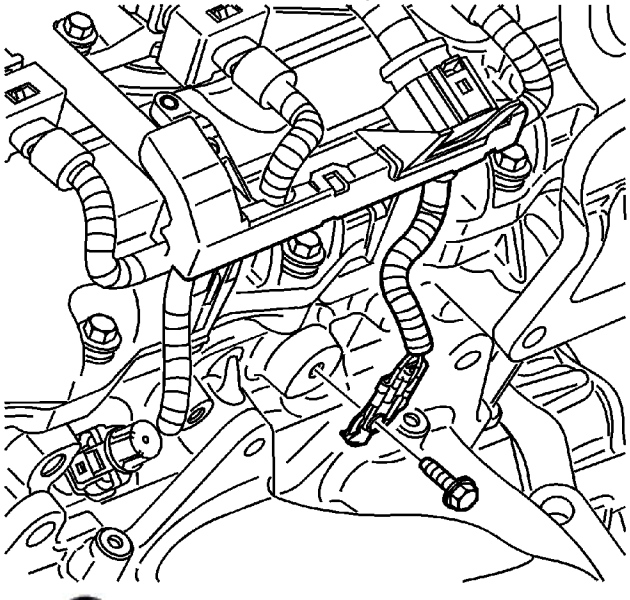

4. Remove the wiring harness ground from the cylinder head.
5. Remove the catalytic converter.

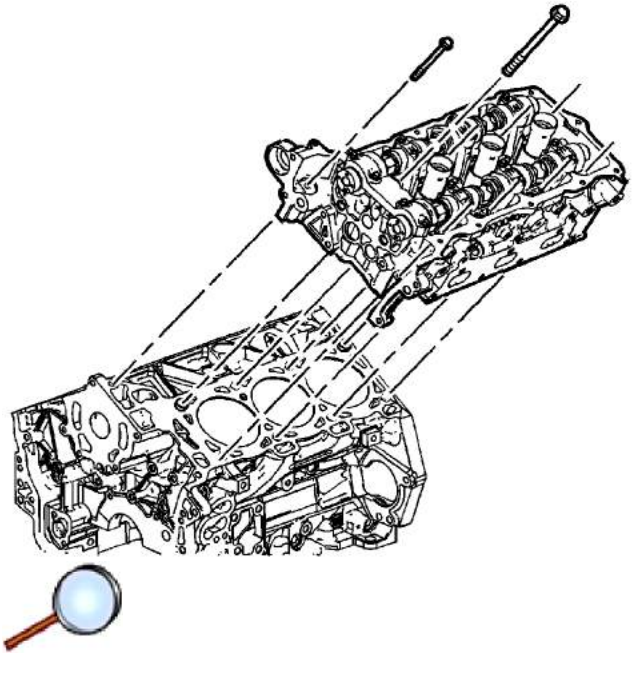

cardiagn.com

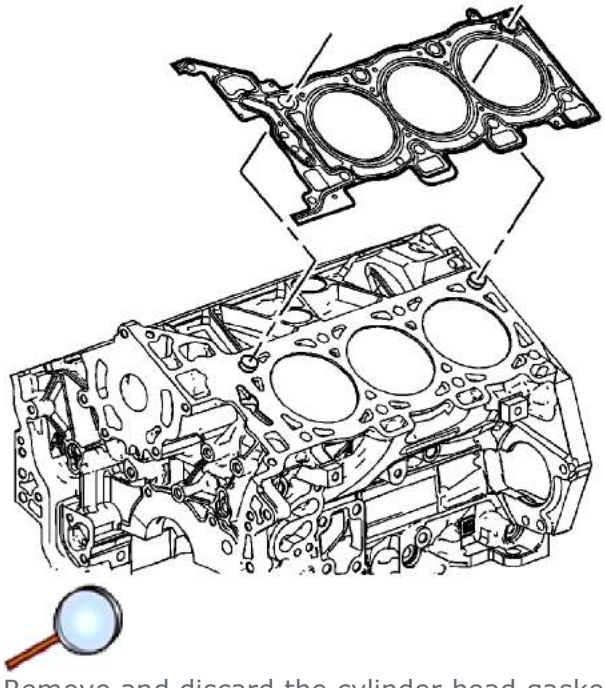

7. Remove and discard the cylinder head gasket.
8. Clean and inspect the cylinder head and the engine block sealing surfaces. Refer to Cylinder Head Cleaning and Inspection and Engine Block Cleaning and Inspection.
9. If necessary, perform the following steps:
   - Remove the exhaust manifold from the cylinder head. Refer to Exhaust Manifold Removal - Left Side.
   - Remove the camshaft. Refer to Camshaft Removal - Left Side.
   - Disassemble the cylinder head. Refer to Cylinder Head Disassemble.

Installation Procedure

1. If necessary, perform the following steps:
   - Assemble the cylinder head. Refer to Cylinder Head Assemble.
   - Install the camshaft. Refer to Camshaft Installation - Left Side.
   - Install the exhaust manifold to the cylinder head. Refer to Exhaust Manifold Installation - Left Side.

cardiagn.com

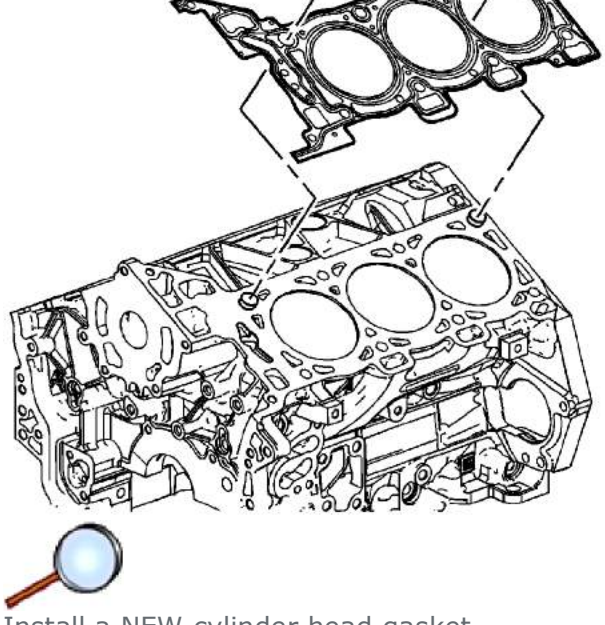

2. Install a NEW cylinder head gasket.

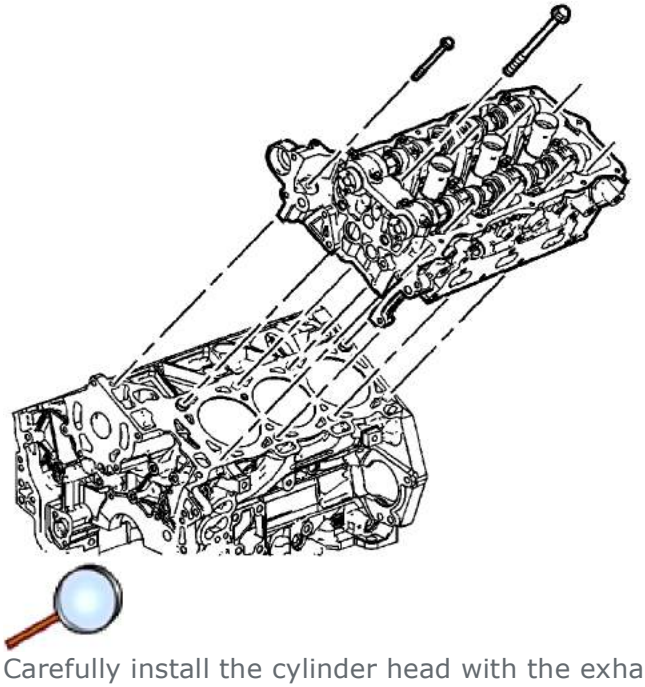

3. Carefully install the cylinder head with the exhaust manifold to the engine. Refer to Cylinder Head Installation - Left Side.
4. Install the catalytic converter to the exhaust manifold.
5. Connect the wiring harness electrical connector located at the side of the cylinder head.

Caution: Refer to Fastener Caution in the Preface section.

cardiagn.com

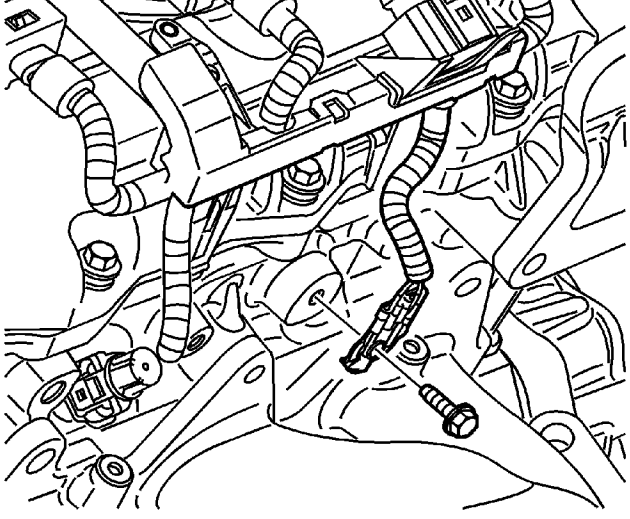

6. Install the wiring harness ground to the cylinder head. Tighten the wiring harness ground bolt to **10 N·m (89 lb in)**.
7. Install the coolant temperature sensor electrical connector.
8. Install the oil level indicator. Refer to Oil Level Indicator Tube Replacement.
9. Install the left bank secondary timing chain. Refer to Secondary Camshaft Drive Chain Replacement - Left Side.

cardiagn.com

Cylinder Head Replacement - Right Side

Removal Procedure

1. Remove the engine. Refer to Engine Replacement.
2. Remove the right bank secondary timing chain. Refer to Secondary Camshaft Drive Chain Replacement - Right Side.

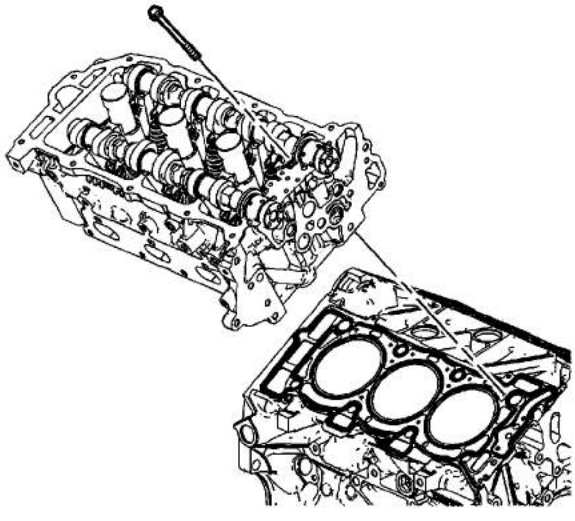

3. Remove the cylinder head with the exhaust manifold. Refer to Cylinder Head Removal - Right Side.

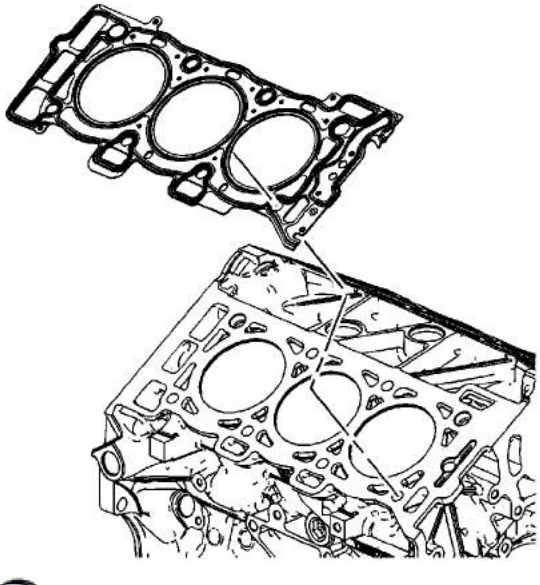

4. Remove and discard the cylinder head gasket.

© 2010 General Motors Corporation. All rights reserved.

cardiagn.com

6. If necessary, perform the following steps:
   - Remove the exhaust manifold from the cylinder head. Refer to Exhaust Manifold Removal - Right Side.
   - Remove the camshaft. Refer to Camshaft Removal - Right Side.
   - Disassemble the cylinder head. Refer to Cylinder Head Disassemble.

Installation Procedure

1. If necessary, perform the following steps:
   - Assemble the cylinder head. Refer to Cylinder Head Assemble.
   - Install the camshaft. Refer to Camshaft Installation - Right Side.
   - Install the exhaust manifold to the cylinder head. Refer to Exhaust Manifold Installation - Right Side.

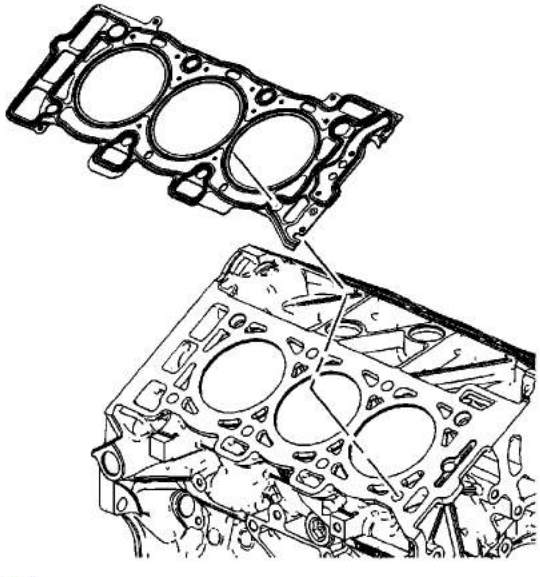

2. Install a NEW cylinder head gasket.

cardiagn.com

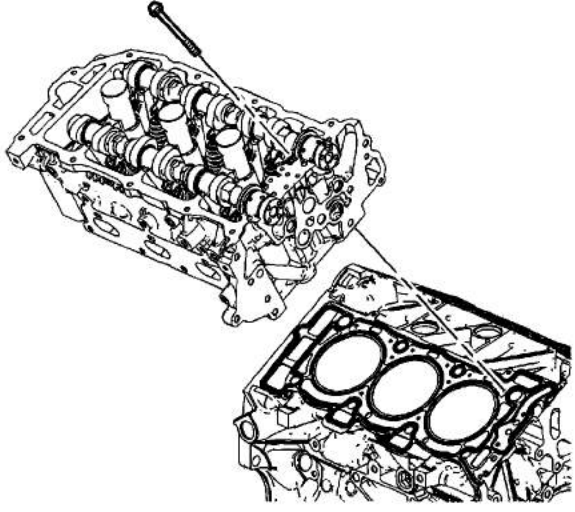

3. Carefully install the cylinder head with the exhaust manifold to the engine. Refer to Cylinder Head Installation - Right Side.
4. Install the right bank secondary timing chain. Refer to Secondary Camshaft Drive Chain Replacement - Right Side.
5. Install the engine. Refer to Engine Replacement.

cardiagn.com

Engine Flywheel Replacement

Removal Procedure

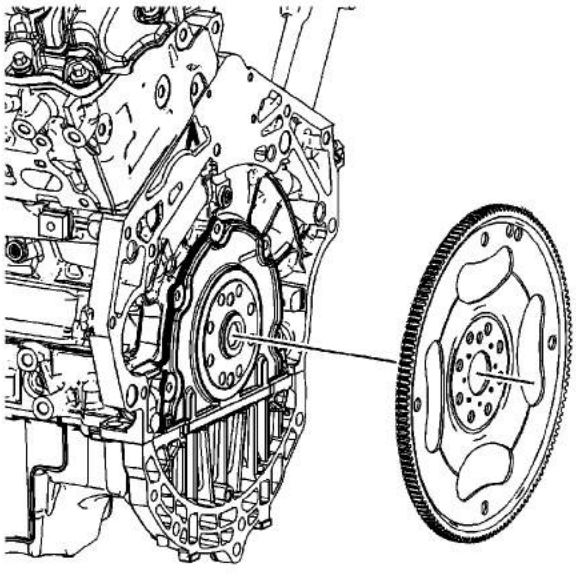

1. Remove the transmission.
2. Remove the engine flywheel bolts and flywheel. Refer to Engine Flywheel Removal .
3. Clean and inspect the flywheel. Refer to Engine Flywheel Cleaning and Inspection .

   If the flywheel teeth are damaged, inspect the starter for proper operation. Replace the starter if you find excessive wear or damage to the starter drive. Refer to Starter Motor Replacement .

Installation Procedure

cardiagn.com

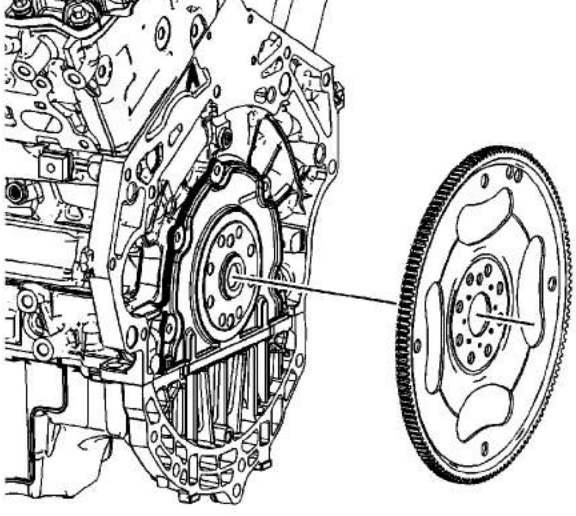

1. Install the engine flywheel and bolts. Refer to Engine Flywheel Installation .
2. Install the transmission.

cardiagn.com

Crankshaft Rear Oil Seal and Housing Replacement

Removal Procedure

1. Remove the engine flywheel. Refer to Engine Flywheel Replacement .
2. Remove the oil pan. Refer to Oil Pan Replacement .

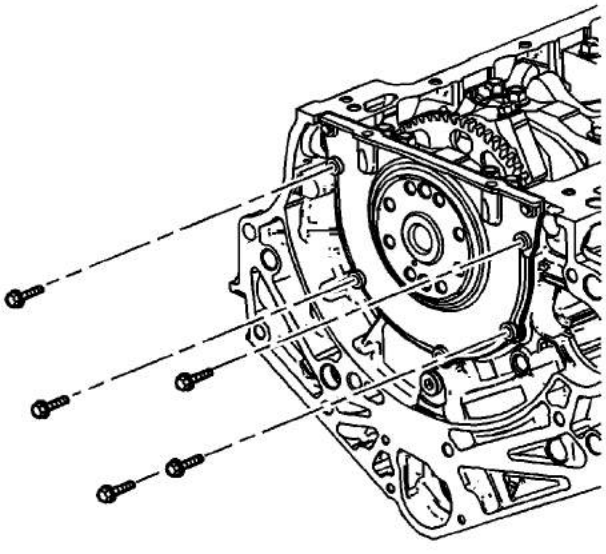

3. Remove the crankshaft rear oil seal and housing. Refer to Crankshaft Rear Oil Seal and Housing Removal .

Installation Procedure

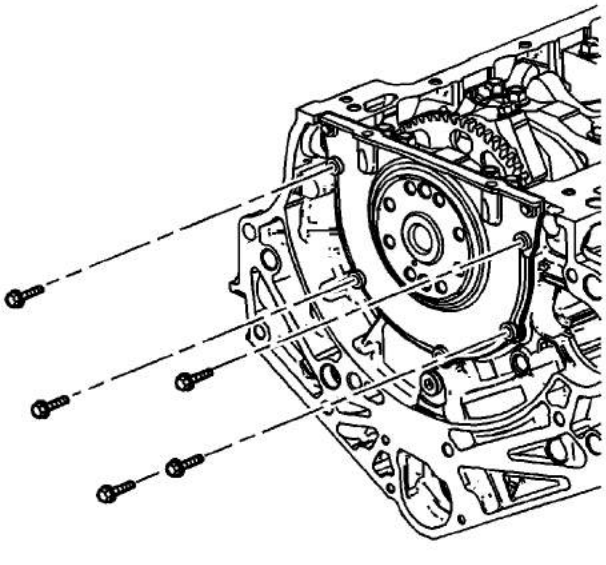

cardiagn.com

1. Install the crankshaft rear oil seal and housing. Refer to Crankshaft Rear Oil Seal and Housing Installation .
2. Install the oil pan. Refer to Oil Pan Replacement .
3. Install the engine flywheel. Refer to Engine Flywheel Replacement .

cardiagn.com

Oil Pump Replacement

Removal Procedure

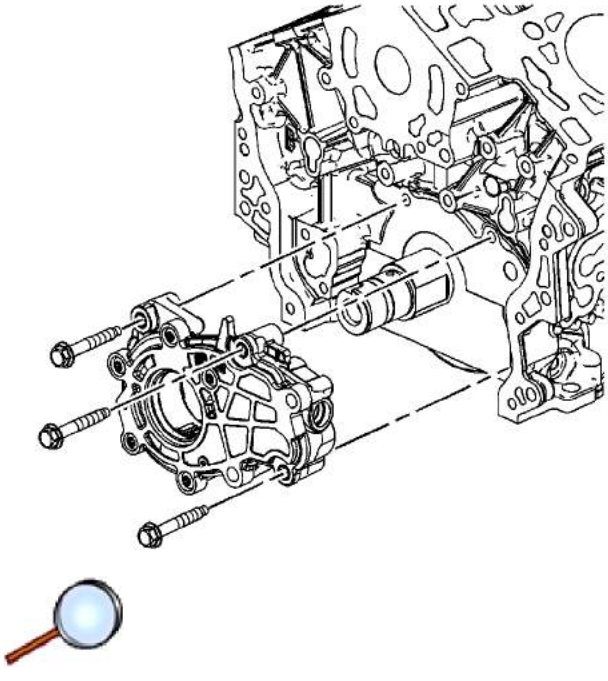

Important: Do not remove the left bank idler sprocket.

1. Remove the primary timing chain. Refer to Primary Camshaft Drive Chain and Sprockets Replacement .
2. Remove the oil pump bolts and the oil pump. Refer to Oil Pump Removal .

Installation Procedure

cardiagn.com

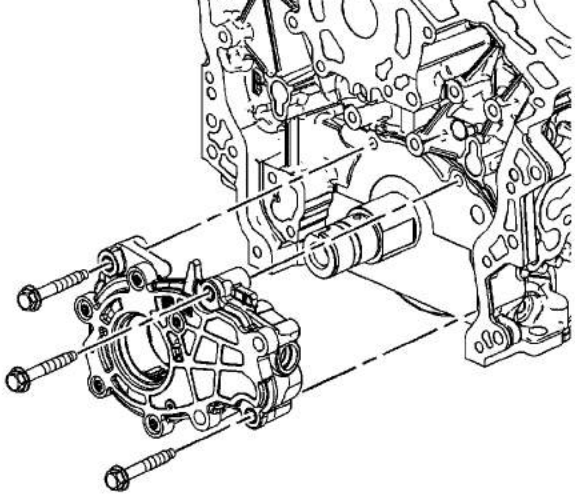

1. Install the oil pump. Refer to Oil Pump Installation .
2. Install the primary timing chain. Refer to Primary Camshaft Drive Chain and Sprockets Replacement .

cardiagn.com

Oil Pan Replacement

Special Tools

EN 46109 Guide Pin Set

Removal Procedure

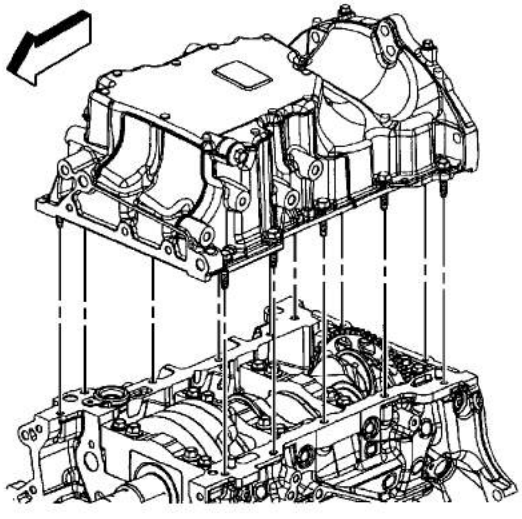

1. Disconnect the battery negative cable. Refer to Battery Negative Cable Disconnection and Connection.
2. Install the engine support fixture. Refer to Engine Support Fixture.
3. Remove the right side engine mount. Refer to Engine Mount Replacement - Right Side.
4. Raise and support the vehicle. Refer to Lifting and Jacking the Vehicle.
5. Drain the engine oil and remove the oil filter. Refer to Engine Oil and Oil Filter Replacement.
6. Remove the catalytic converter.
7. Remove the air conditioning (A/C) compressor. Refer to Air Conditioning Compressor Replacement.
8. Remove the oil pan bolts.
9. Remove the oil pan.
10. Clean the oil pan and the engine block gasket surface. Refer to Oil Pan Cleaning and Inspection.

Installation Procedure

cardiagn.com

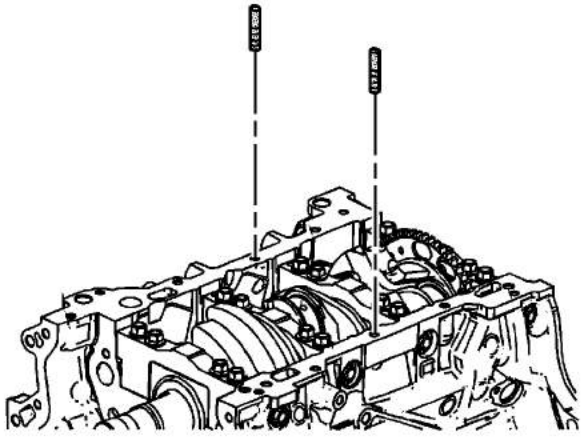

1. Install the 8 mm (0.315 in) guides from the EN 46109 into the center oil pan rail bolt hole on each side of the engine block.

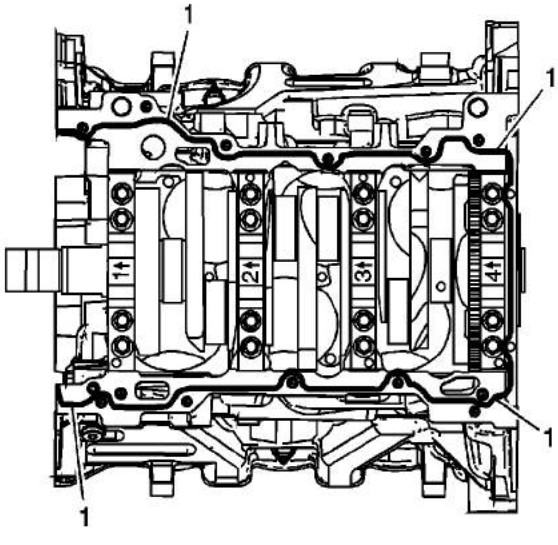

2. Place a 3 mm (0.118 in) bead (1) of RTV sealant, GM P/N 12378521 (Canadian P/N 88901148) or equivalent, on the block pan rail and the crankshaft rear oil seal housing.

cardiagn.com

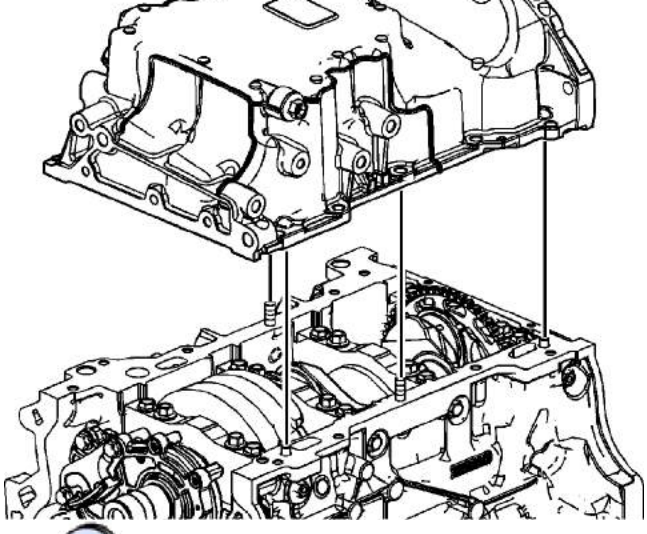

3. Position the oil pan onto the block.

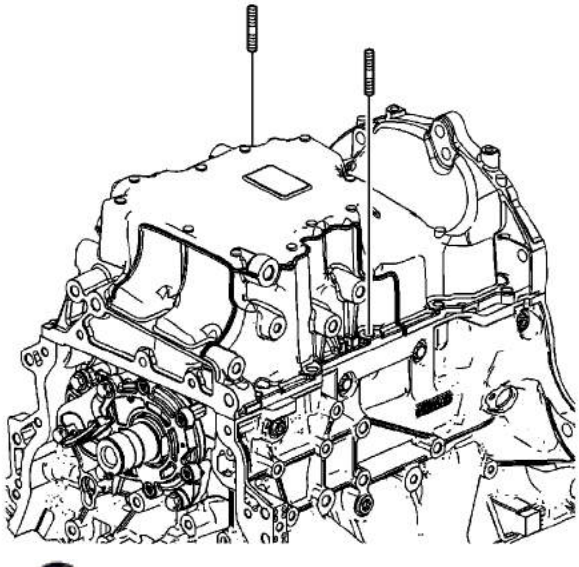

4. Remove the EN 46109 8 mm (0.315 in) guides from the engine block.

cardiagn.com

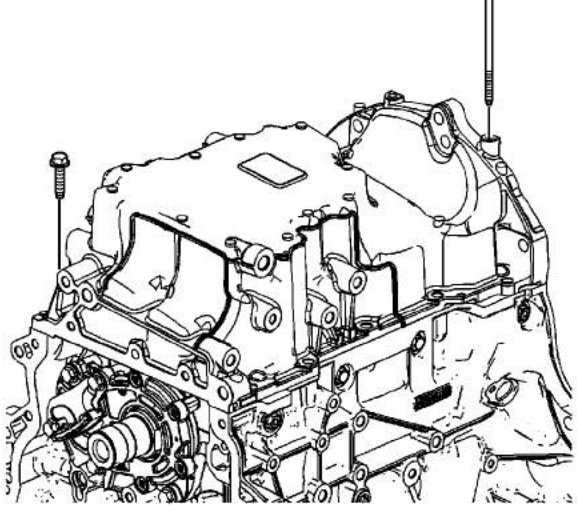

5. Loosely install the oil pan bolts.

   Caution: Refer to Fastener Caution in the Preface section.

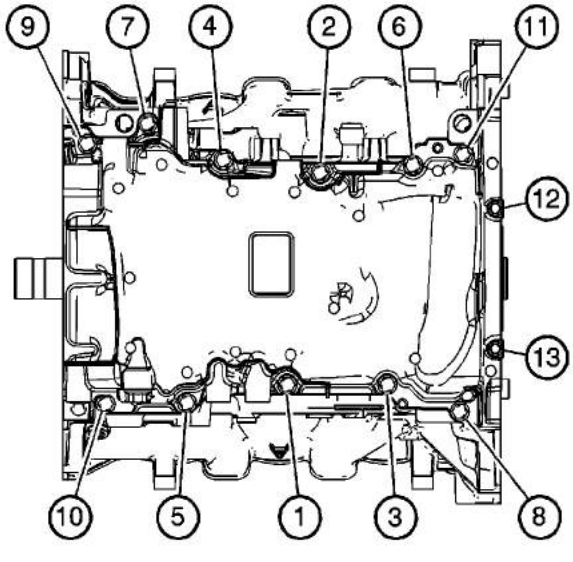

6. Tighten the oil pan bolts in sequence shown.
   - Tighten the 8 mm bolts (1-11) to **23 N·m (17 lb ft)**.
   - Tighten the 6 mm bolts (12, 13) to **10 N·m (89 lb in)**.
7. Install the air conditioning (A/C) compressor. Refer to Air Conditioning Compressor Replacement.
8. Install the catalytic converter.
9. Lower the vehicle. Refer to Lifting and Jacking the Vehicle.
10. Refill the engine oil. Refer to Engine Oil and Oil Filter Replacement.

cardiagn.com

13. Connect the battery negative cable. Refer to Battery Negative Cable Disconnection and Connection.

cardiagn.com

Engine Oil Pressure Sensor and / or Switch Replacement

Removal Procedure

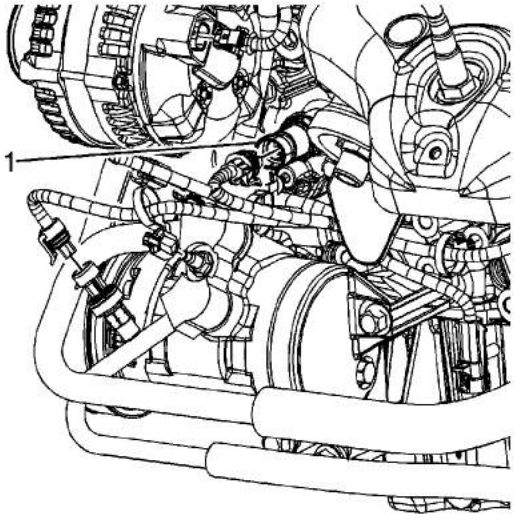

1. Turn the ignition OFF.
2. Disconnect the oil pressure sensor electrical connector.
3. Remove the oil pressure sensor (1).

Installation Procedure

Caution: Refer to Component Fastener Tightening Caution in the Preface section.

cardiagn.com

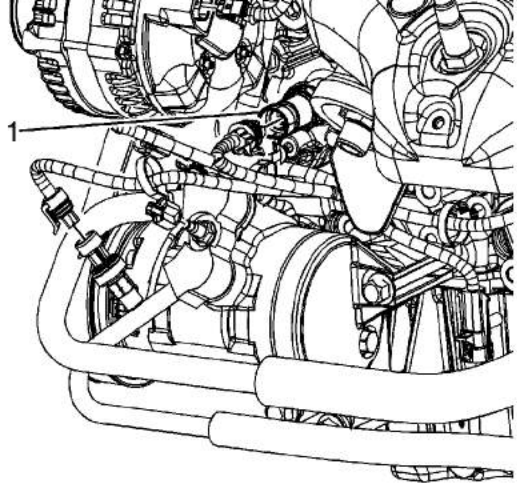

1. Install the oil pressure sensor (1) and tighten to **20 N·m (15 lb ft)**.
2. Connect the oil pressure sensor electrical connector.

cardiagn.com

Oil Pump Suction Pipe and Screen Assembly Replacement

Removal Procedure

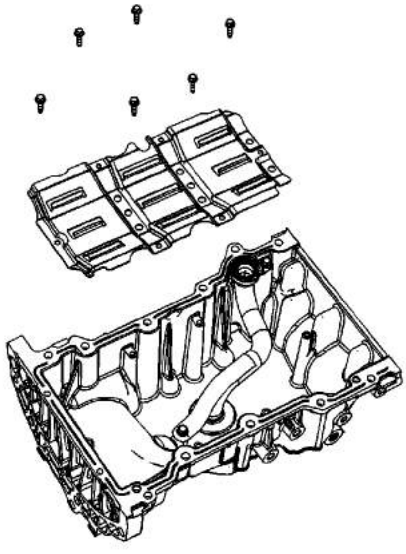

1. Remove the oil pan. Refer to Oil Pan Replacement.
2. Remove the oil pan scraper bolts.
3. Remove the oil pan scraper.

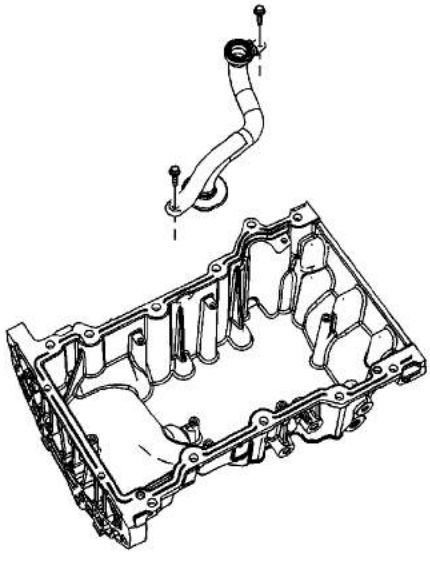

cardiagn.com

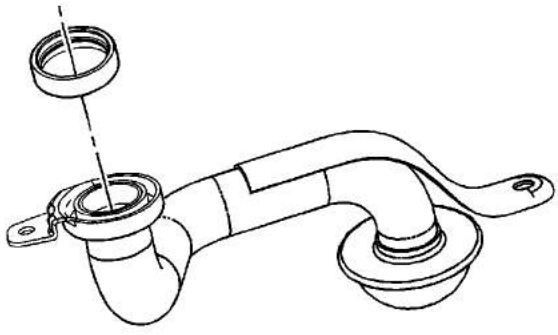

6. Remove the oil suction tube seal from the oil suction tube. Discard the oil suction tube seal.

Installation Procedure

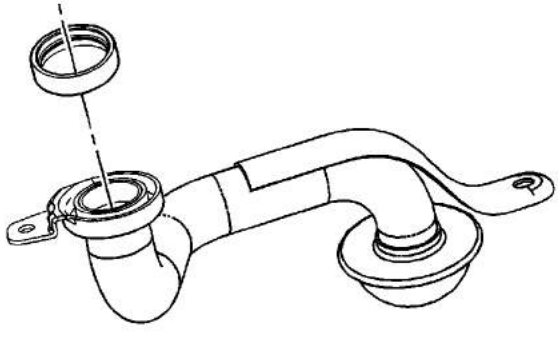

1. Install a NEW oil suction tube seal onto the oil suction tube. DO NOT reuse the old oil suction tube seal.

cardiagn.com

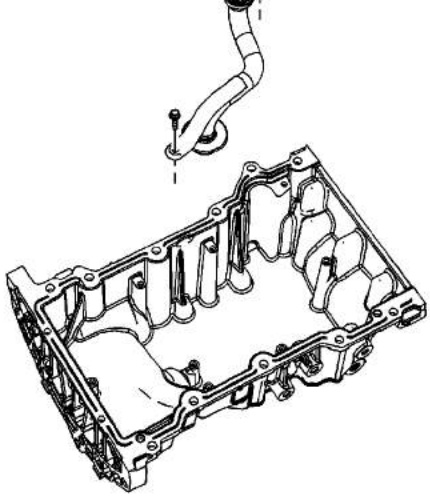

2. Install the oil suction pipe.

   Caution: Refer to Fastener Caution in the Preface section.

3. Install the oil suction pipe bolts and tighten to **10 N·m (89 lb in)**.

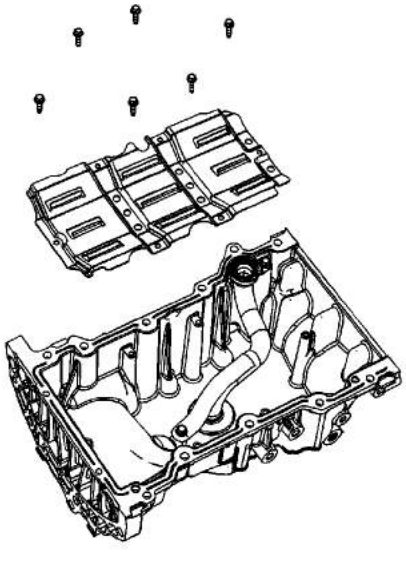

4. Install the oil pan scraper.
5. Install the oil pan scraper bolts and tighten to **10 N·m (89 lb in)**.
6. Install the oil pan. Refer to Oil Pan Replacement.

cardiagn.com

Engine Replacement (HP5)

Special Tools

J 39580 Engine Support Table

Removal Procedure

Danger: Always perform the High Voltage Disabling procedure prior to servicing any High Voltage component or connection. Personal Protection Equipment (PPE) and proper procedures must be followed.

The High Voltage Disabling procedure will perform the following tasks:

- Identify how to disable high voltage.
- Identify how to test for the presence of high voltage.
- Identify condition under which high voltage is always present and personal protection equipment (PPE) and proper procedures must be followed.

Failure to follow the procedures exactly as written may result in serious injury or death.

1. Disable the hybrid high voltage system. Refer to High Voltage Disabling
2. Disconnect the 12 volt battery negative cable. Refer to Battery Negative Cable Disconnection and Connection
3. Remove the front compartment sight shield. Refer to Front Compartment Sight Shields Replacement.
4. Remove the fuel injector sight shield. Refer to Fuel Injector Sight Shield Replacement
5. Drain the coolant from the generator control module. Refer Generator Control Module Cooling System Draining and Filling
6. Remove the power inverter module. Refer to Drive Motor Generator Power Inverter Module Removal and Installation
7. Remove the engine control module. Refer to Engine Control Module Replacement
8. Disconnect the air conditioning evaporator outlet hose. Refer to Evaporator Outlet Hose Replacement
9. Disconnect the air conditioning discharge hose from the condenser. Refer to Discharge Hose Replacement
10. Disconnect the air conditioning suction hose. Refer to Suction Hose Replacement
11. Disconnect the air conditioning liquid line from the condenser. Refer to Liquid Line Replacement
12. Disconnect the fuel lines from the engine. Refer to Fuel Hose/Pipes Replacement - Chassis
13. Disconnect the heater hoses from the engine. Refer to Heater Inlet Hose Replacement and Heater Outlet Hose Replacement
14. Disconnect all necessary engine electrical connectors. Refer to Harness Routing Views
15. Remove the left and right powertrain mount bolts.
16. Raise and support the vehicle. Refer to Lifting and Jacking the Vehicle.
17. Drain the engine oil.
18. Remove the front tire and wheel assemblies. Refer to Tire and Wheel Removal and Installation.
19. Remove the front brake disc calipers from the caliper mounting bracket, then suspend the

cardiagn.com

21. Remove the air deflector from the frame. Refer to Front Bumper Fascia Air Deflector Replacement.
22. Remove the front catalytic converters. Refer to Catalytic Converter Replacement - Left Side.
23. Remove the strut to steering knuckle retaining bolts.

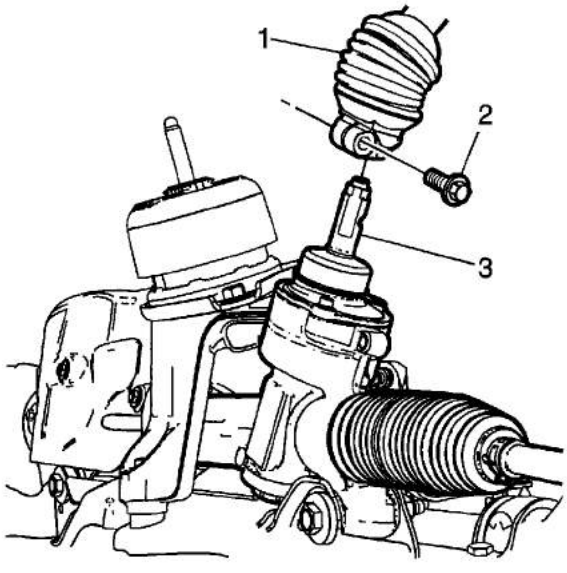

24. Disconnect the steering shaft coupling (1) from the steering gear. Refer to Steering Shaft Coupling Replacement.

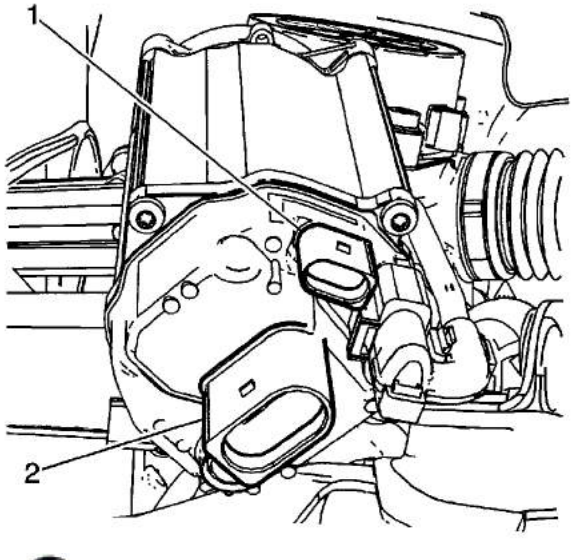

25. Disconnect the electrical connectors (1, 2) from the Electronic Power Steering rack motor.
26. Disconnect the out tie rod ends from the steering knuckle. Refer to Steering Linkage Outer Tie Rod Replacement
27. Disconnect the stabilizer links from the stabilizer bar. Refer to Stabilizer Shaft Link Replacement
28. Remove the steering gear electric motor ground strap from the underbody.

cardiagn.com

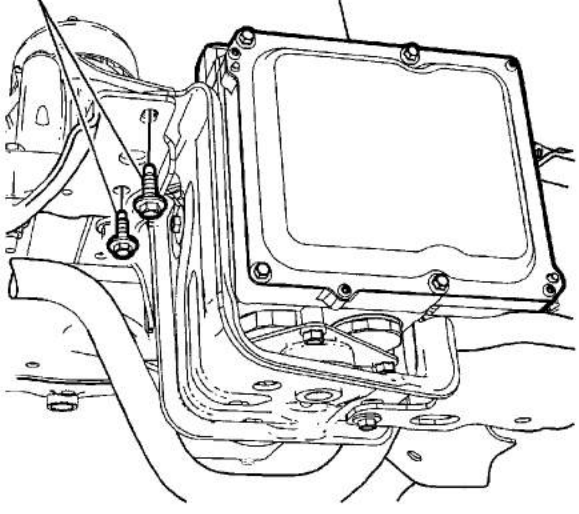

29. Remove the four bolts that attach the electric brake control module (EBCM) (1) to the frame.

Note: Support the EBCM with mechanics wire to the vehicle underbody.

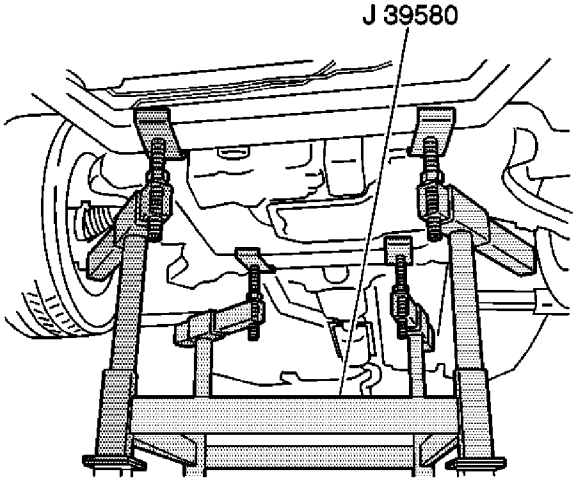

30. Lower the vehicle until the frame contacts the J 39580 .

cardiagn.com

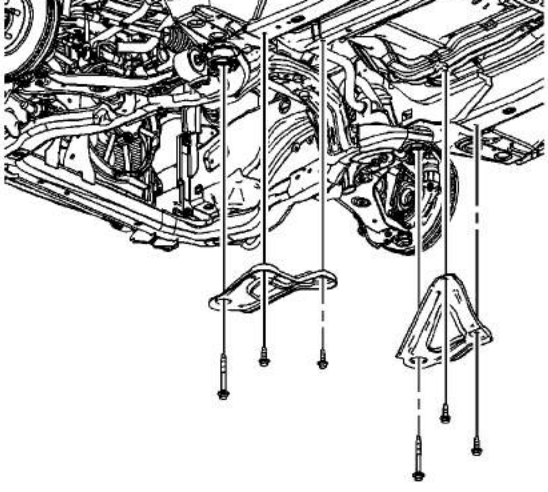

31. Remove the frame reinforcements. Refer to Drivetrain and Front Suspension Frame Reinforcement Replacement.
32. Remove the front frame retaining bolts.

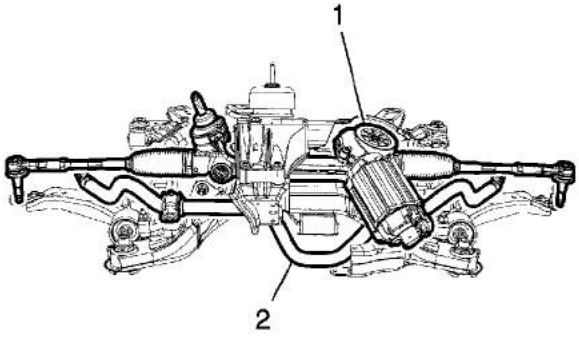

33. Raise the vehicle off of the frame with the radiator, condenser, engine, transaxle, power steering rack (1) and stabilizer bar still attached the frame.

Installation Procedure

cardiagn.com

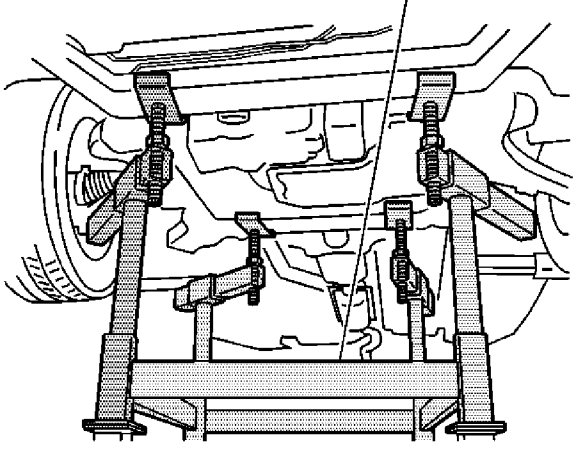

1. Lower the vehicle on to the frame.

   Caution: Refer to Fastener Caution in the Preface section.

2. Install the front frame bolts, then tighten the bolts to **155 N·m (114 lb ft)**.

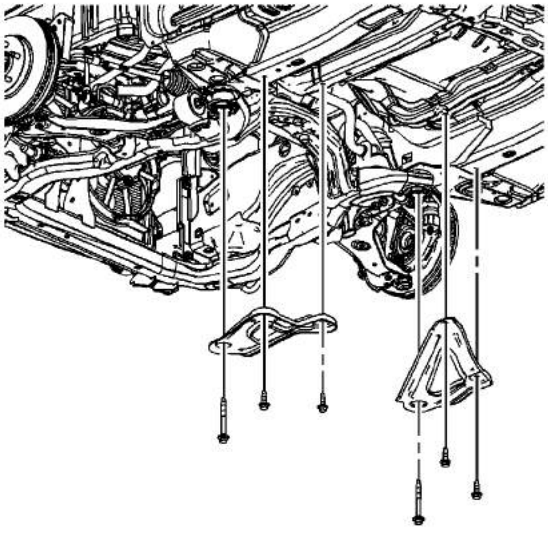

3. Install the frame reinforcements. Refer to Drivetrain and Front Suspension Frame Reinforcement Replacement.
4. Raise the vehicle off of the J 39580 .

cardiagn.com

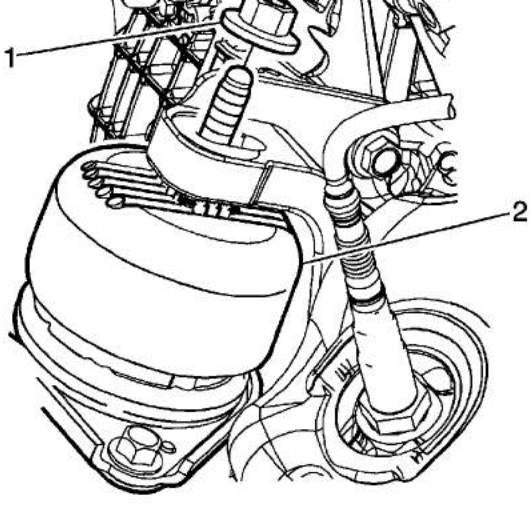

5. Install the rear transmission mount to bracket retaining nut, then tighten the nut to **100 N·m (74 lb ft)**.

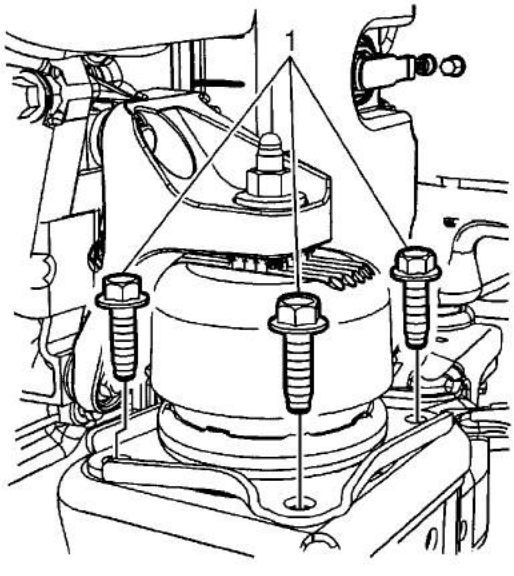

6. Install the front transmission mount to frame retaining bolts (1), then tighten the bolts to **76 N·m (56 lb ft)**.

cardiagn.com

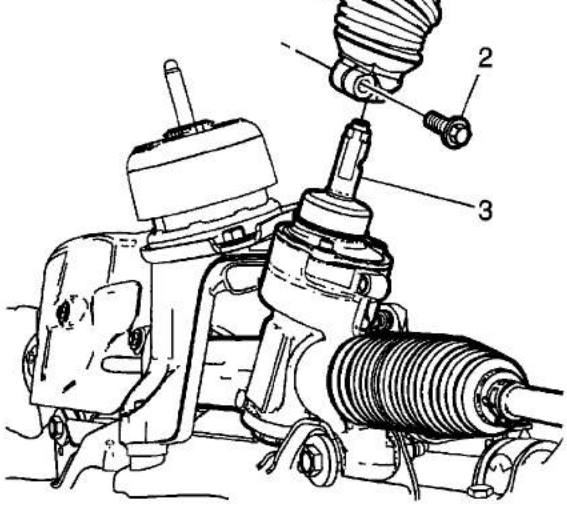

7. Install the steering shaft coupling (1) to the steering gear. Refer to Steering Shaft Coupling Replacement.
8. Install the four EBCM bolts, then tighten the bolts to **40 N·m (30 lb ft)**

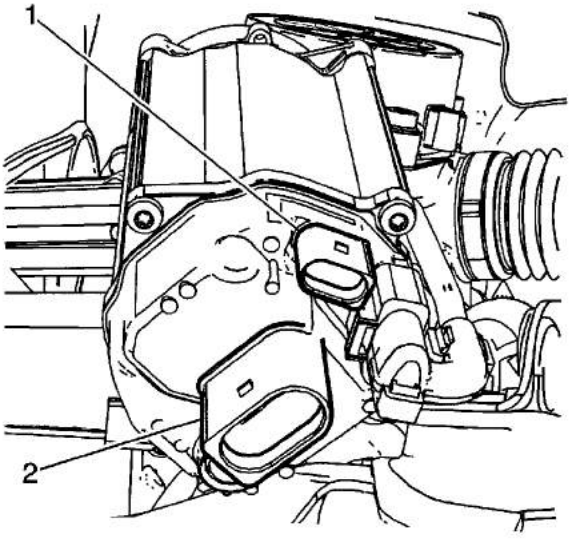

9. Connect the two electric power steering rack electrical connectors (1,2).
10. Install the steering gear electric motor ground strap to the underbody.

cardiagn.com

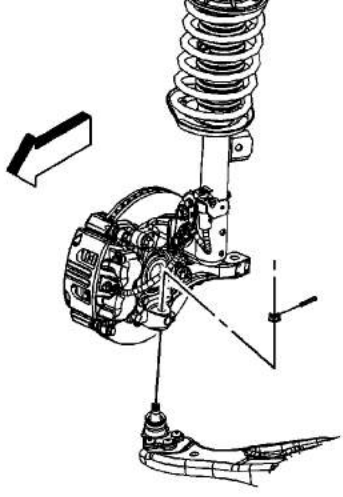

11. Install the lower ball joints to the steering knuckles. Refer to Lower Control Arm Replacement.
12. Connect both left and right stabilizer links. Refer to Stabilizer Shaft Insulator Replacement.
13. Connect the outer tie rod ends to the steering knuckle. Refer to Steering Linkage Outer Tie Rod Replacement
14. Install the strut to steering knuckle retaining bolts, then tighten the bolts to **180 N·m (133 lb ft)**
15. Install the front brake disc calipers to the caliper mounting bracket, then tighten the bolts to **27 N·m (20 lb ft)**
16. Install the front catalytic converters. Refer to Catalytic Converter Replacement - Left Side and Catalytic Converter Replacement - Right Side.
17. Connect the fuel lines to the engine. Refer to Fuel Hose/Pipes Replacement - Chassis
18. Connect the heater hoses to the engine. Refer to Heater Inlet Hose Replacement and Heater Outlet Hose Replacement
19. Connect all necessary engine electrical connectors. Refer to Harness Routing Views
20. Connect the air conditioning evaporator outlet hose. Refer to Evaporator Outlet Hose Replacement
21. Connect the air conditioning discharge hose to the condenser. Refer to Discharge Hose Replacement
22. Connect the air conditioning suction hose. Refer to Suction Hose Replacement
23. Connect the air conditioning liquid line to the condenser. Refer to Liquid Line Replacement
24. Install the engine control module. Refer to Engine Control Module Replacement
25. Install the power inverter module. Refer to Drive Motor Generator Power Inverter Module Removal and Installation
26. Install the air deflector to the frame. Refer to Front Bumper Fascia Air Deflector Replacement.
27. Install the engine splash shields. Refer to Engine Splash Shield Replacement.
28. Install the tire and wheel assemblies. Refer to Tire and Wheel Removal and Installation.
29. Install the front compartment sight shield. Refer to Front Compartment Sight Shields Replacement.
30. Fill the coolant reservoir for the generator control module. Refer Generator Control Module Cooling System Draining and Filling
31. Fill the engine with oil. Refer to Fluid and Lubricant Recommendations
32. Install the fuel injector sight shield. Refer to Fuel Injector Sight Shield Replacement
33. Enable the hybrid high voltage system. Refer to High Voltage Enabling

cardiagn.com

35. Check the wheel alignment. Refer to Wheel Alignment Measurement.

cardiagn.com

Engine Replacement (Without HP5)

Removal Procedure

1. Disconnect the negative battery cable. Refer to Battery Negative Cable Disconnection and Connection.
2. Disconnect the engine control module (ECM) connector from the under-hood fuse block.
3. Disconnect ground wire from frame, near battery box.
4. Remove the fuel injector sight shield. Refer to Fuel Injector Sight Shield Replacement.
5. Release the clamp from the brake booster vacuum hose connection.
6. Disconnect the brake booster vacuum hose from the intake manifold.
7. Remove the air cleaner assembly. Refer to Air Cleaner Assembly Replacement.
8. Discharge the fuel system. Refer to Fuel Pressure Relief.
9. Disconnect the evaporative emission (EVAP) hose/pipe from the EVAP canister purge solenoid valve. Refer to Plastic Collar Quick Connect Fitting Service.
10. Disconnect the engine fuel hose/pipe from the chassis fuel hose/pipe. Refer to Metal Collar Quick Connect Fitting Service.
11. Discharge the air conditioning (A/C) system. Refer to Refrigerant Recovery and Recharging.
12. Remove the A/C compressor hose assembly from the compressor. Cap or plug the hoses and compressor to prevent contamination. Refer to Compressor Hose Assembly Replacement.
13. Disconnect the transaxle shift control cable from the transaxle. Refer to Range Selector Lever Cable Replacement.
14. Drain the engine coolant from the cooling system. Refer to Cooling System Draining and Filling.
15. Tie the radiator, A/C condenser, and fan module assembly to the upper radiator support to keep the assembly with the vehicle when the frame and drivetrain is removed.
16. Disconnect the heater hoses from the engine. Refer to Heater Inlet Hose Replacement.
17. Remove the radiator inlet hose. Refer to Radiator Inlet Hose Replacement.
18. Raise and support the vehicle. Refer to Lifting and Jacking the Vehicle.
19. Remove the radiator outlet hose. Refer to Radiator Outlet Hose Replacement.

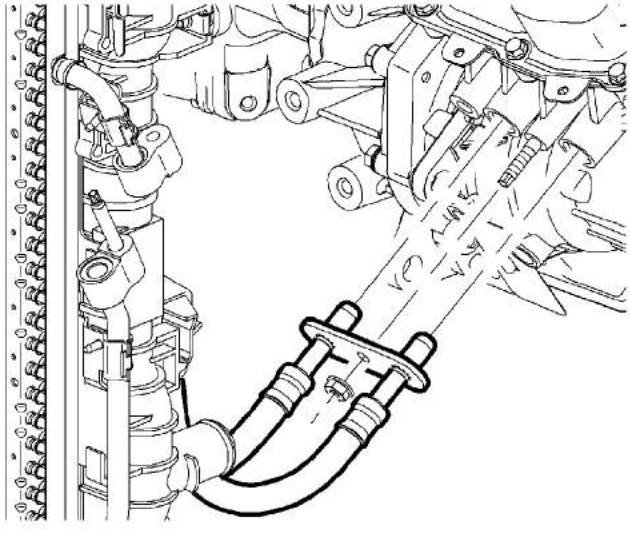

cardiagn.com

Replacement.

21. Cap the transaxle oil cooler lines and plug the transaxle oil cooler line fittings to prevent loss of transmission fluid.
22. Remove the catalytic converters and secure the rear half of the exhaust system to the vehicle underbody. Refer to Exhaust Manifold Replacement - Left Side and Exhaust Manifold Replacement - Right Side.
23. Remove the front tires. Refer to Tire and Wheel Removal and Installation.
24. Remove the right and left engine splash shields. Refer to Engine Splash Shield Replacement.

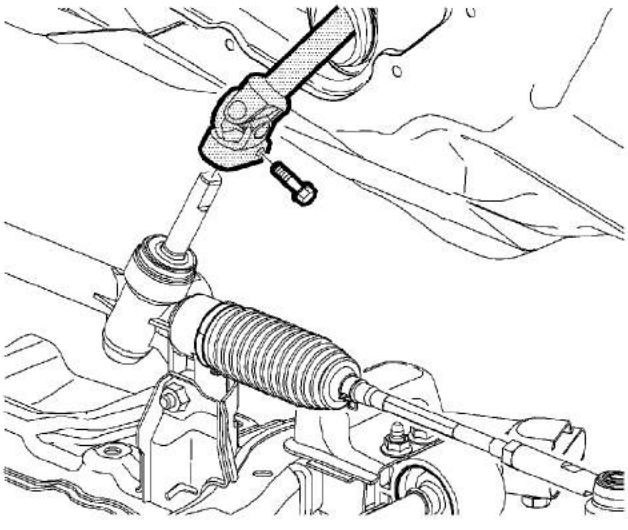

25. Remove the steering intermediate shaft pinch bolt and discard the bolt.
26. Disconnect the steering intermediate shaft from the steering gear.

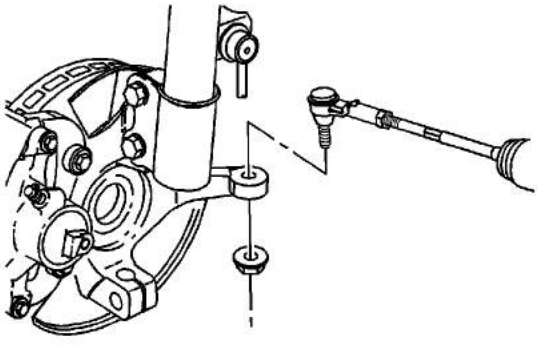

27. Remove the right and left outer tie rod ends from the steering knuckles. Refer to Steering Linkage Outer Tie Rod Replacement.

cardiagn.com

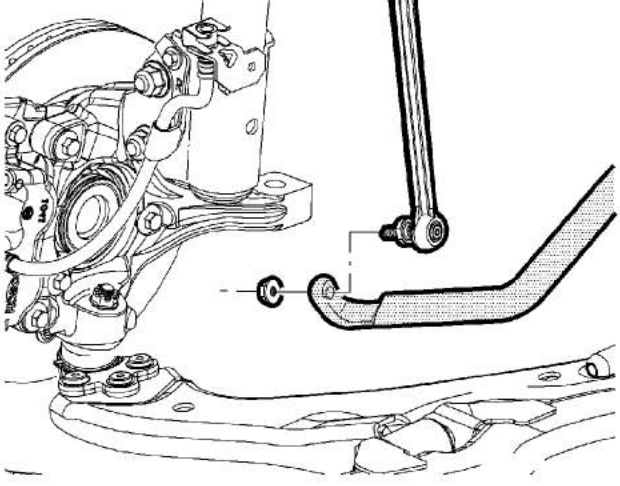

28. Remove the right and left stabilizer shaft links from the stabilizer shaft. Refer to Stabilizer Shaft Link Replacement.

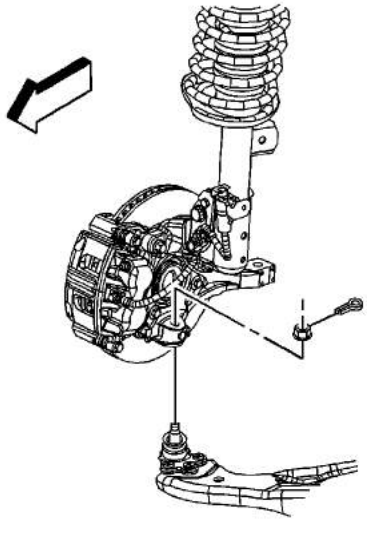

29. Remove the right and left lower ball joints from the steering knuckles. Refer to Lower Control Arm Replacement.
30. On front wheel drive (FWD) models, place a drain pan under the transaxle then separate the right and left front wheel drive shafts from the transaxle. Refer to Front Wheel Drive Shaft Replacement.
31. On all wheel drive (AWD) models, remove the rear wheel driveshaft. Refer to Rear Wheel Drive Shaft Replacement.

cardiagn.com

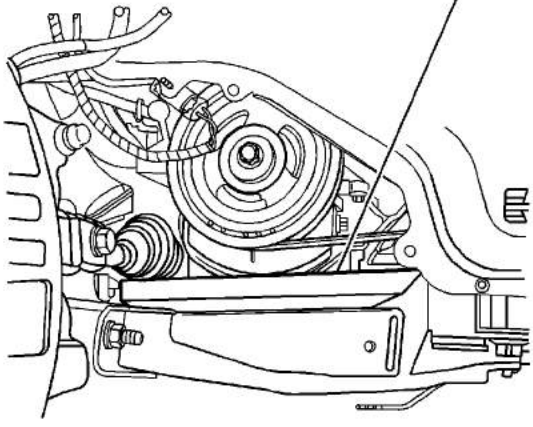

32. On all models, place a block of wood (1) between the frame and the engine oil pan in order to support the engine once the bolts are removed from the right engine mount.

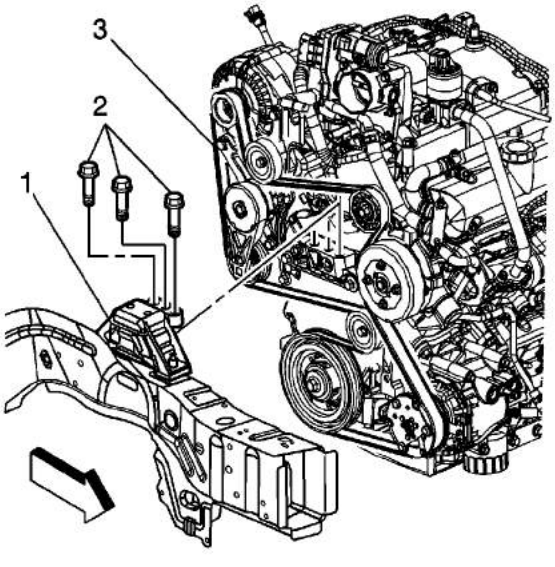

33. Lower the vehicle.
34. Remove the bolts (2) that secure the right engine mount (1) to the engine (3).

Note: Insure the vehicle body is secured to the hoist.

35. Raise the vehicle.
36. Place a universal frame support fixture or jackstands under the frame.
37. Lower the vehicle until the frame contacts the frame support fixture or jackstands.
38. Disconnect the wiring harness retaining clips near the right and left shock towers.
39. Remove the drivetrain and front suspension frame reinforcement. Refer to Drivetrain and Front Suspension Frame Reinforcement Replacement.

cardiagn.com

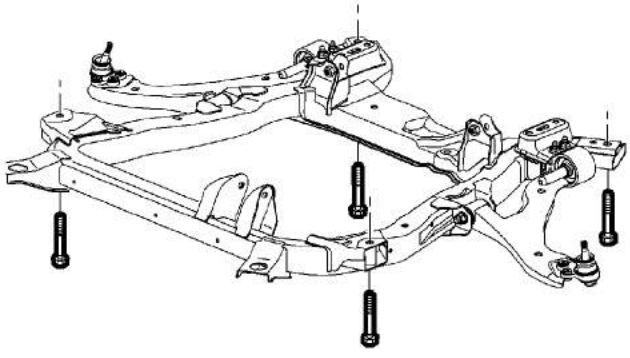

40. Remove the frame-to-body bolts. Discard the bolts.

Note: Inspect for areas of body to powertrain contact or entanglement of wires and hoses while separating the vehicle body and powertrain.

41. Carefully raise the vehicle body up away from the powertrain.

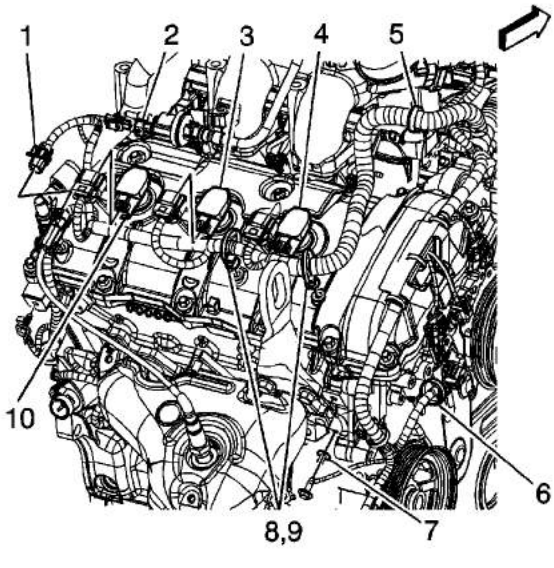

42. Disconnect the engine electrical wiring harness from the following components:
    - Oxygen sensor (1)
    - EVAP purge solenoid (2)
    - Ignition coils (3, 4, 10)
    - Ground leads (7, 11)

cardiagn.com

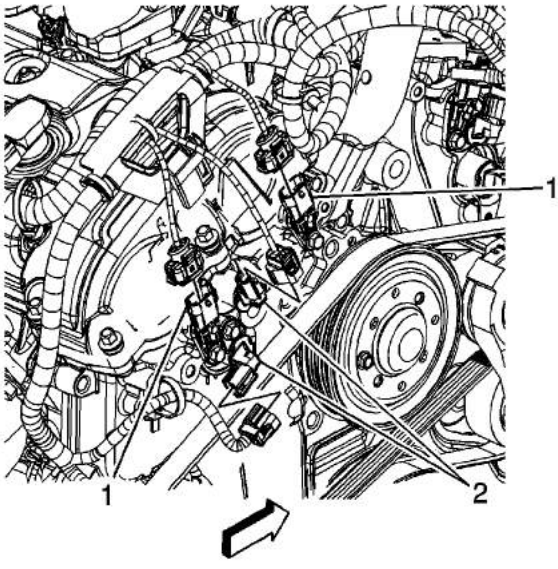

43. Disconnect the left and right cylinder head engine electrical wiring harness from the following components:
    - Camshaft position sensors (1)
    - Camshaft position actuators (2)

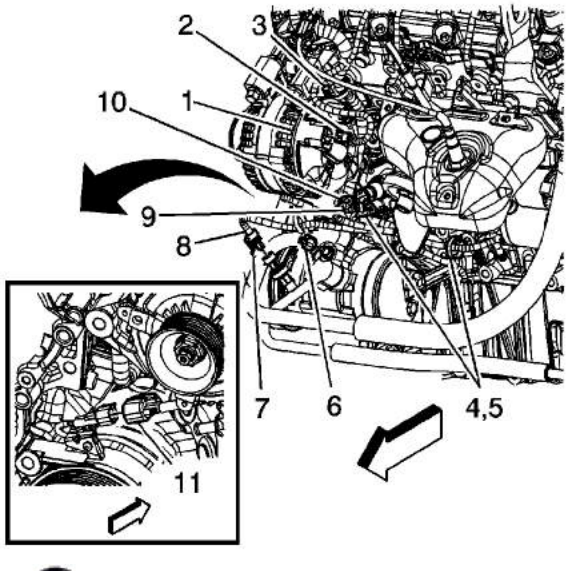

44. Disconnect the engine electrical wiring harness from the following components:
    - Generator (1)
    - Retainer clips (2, 3, 4, 5, 6, 7, 9)
    - A/C compressor hose (8)

cardiagn.com

- A/C compressor (8)

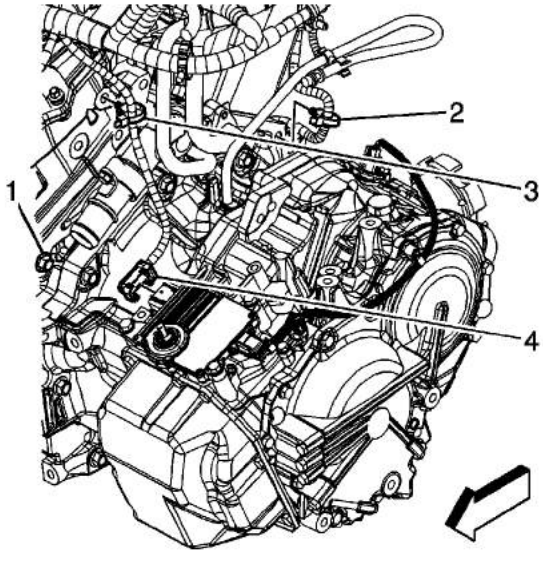

45. Disconnect the engine electrical wiring harness from the following components:
    - Battery cable (1)
    - Retainer clips (2, 3)
    - Transmission module (4)

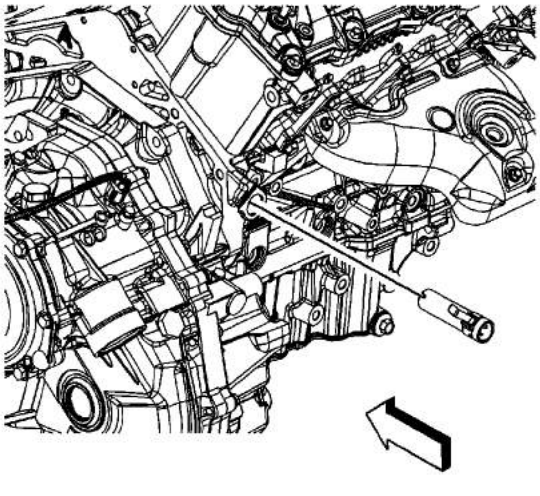

46. If equipped with an engine coolant heater, disconnect the coolant heater cord.
47. Remove the throttle body assembly. Refer to Throttle Body Assembly Replacement.

cardiagn.com

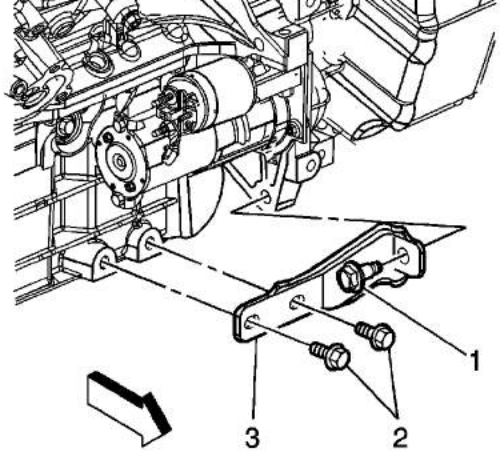

48. Remove the engine-to-transaxle brace bolts (1, 2) and brace (3).
49. Remove the starter motor. Refer to Starter Motor Replacement.

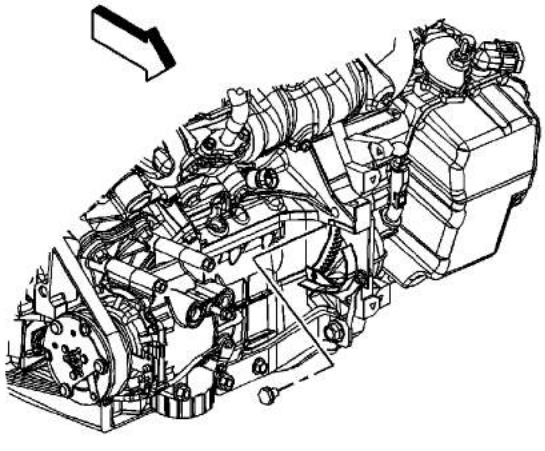

50. Remove the torque converter bolts.
51. Install the engine support adapters to the engine. Refer to Engine Support Fixture.
52. Support the engine weight with an engine hoist.

cardiagn.com

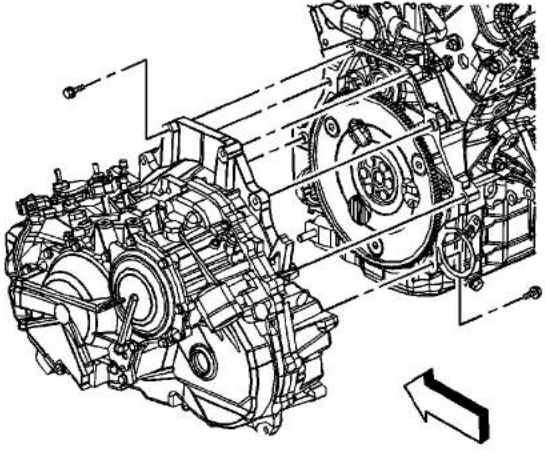

53. Remove the automatic transaxle bolts.
54. Separate the automatic transaxle from the engine.
55. Lift the engine away from the frame and the automatic transaxle.
56. Secure the engine to an engine stand.
57. Remove any additional engine components as necessary. Refer to appropriate component sections in manual if needed.

Installation Procedure

1. Remove the engine from the engine stand.

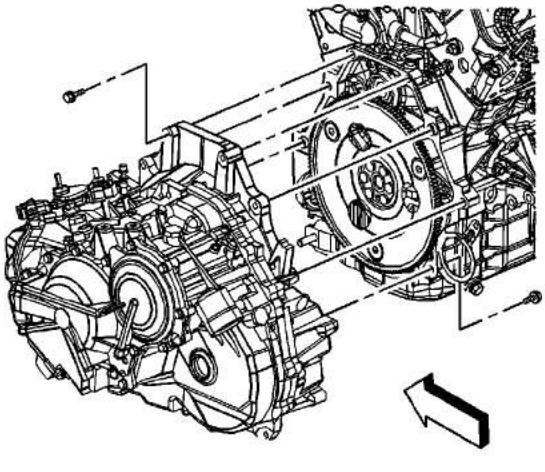

2. Align the engine to the frame and automatic transaxle.

   Caution: Refer to Fastener Caution in the Preface section.

cardiagn.com

engine on the frame once the engine hoist is removed.
5. Remove the engine hoist and lift chain.
6. Remove the engine support adapters from the engine. Refer to Engine Support Fixture.

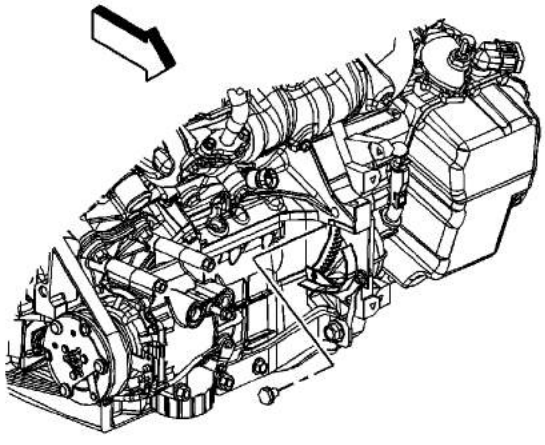

7. Install the torque converter bolts and tighten to **60 N·m (44 lb ft)**.
8. Install the starter motor. Refer to Starter Motor Replacement.

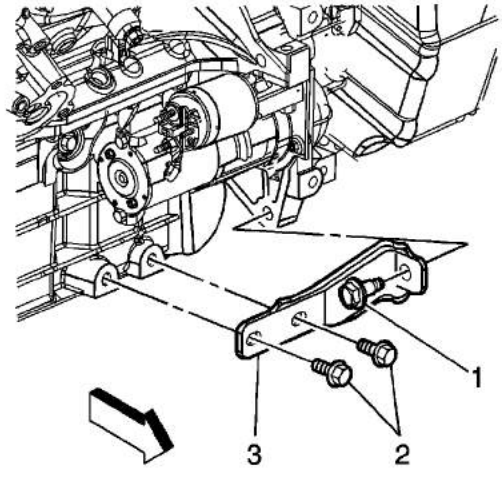

9. Install the engine to transaxle brace (3) and bolts (1, 2) and tighten the bolts to **50 N·m (37 lb ft)**.
10. Install the throttle body assembly. Refer to Throttle Body Assembly Replacement.

cardiagn.com

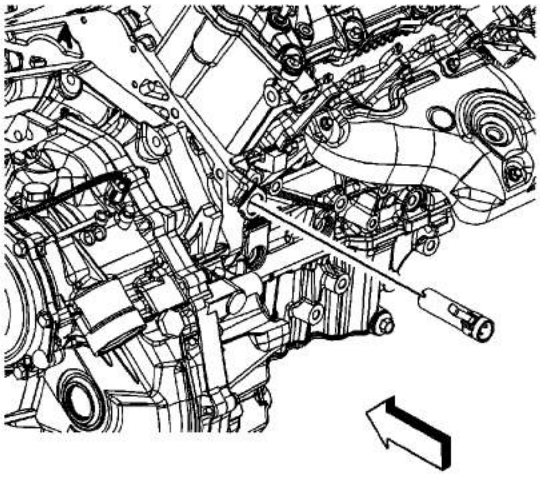

11. If equipped with an engine coolant heater, connect the coolant heater cord.

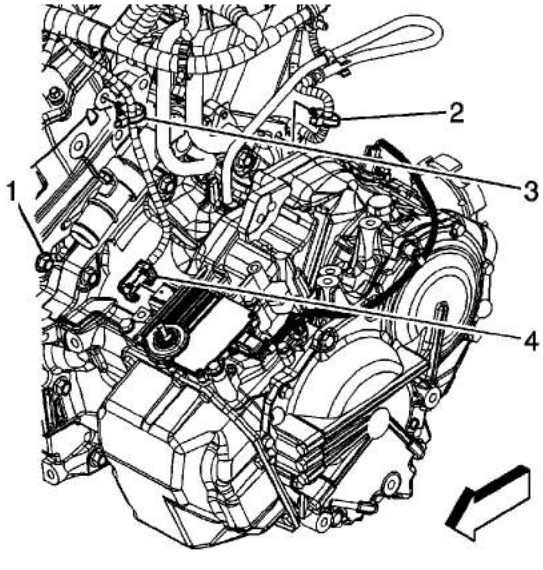

12. Connect the engine electrical wiring harness to the following components:
    - Transmission module (4)
    - Retainer clips (3, 2)
    - Battery cable (1)

    Tighten the bolt to **25 N·m (18 lb ft)**.

cardiagn.com

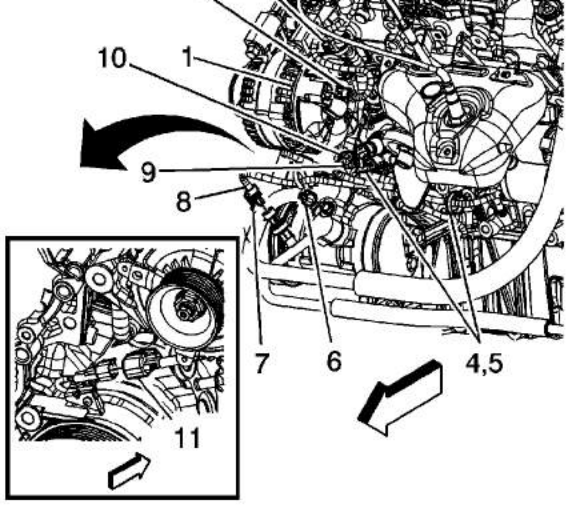

13. Connect the engine electrical wiring harness to the following components:
    - A/C compressor (8)
    - Oil pressure switch (10)
    - A/C compressor hose (8)
    - Retainer clips (2, 3, 4, 5, 6, 7, 9)
    - Generator (1)

    Tighten the nut to **13 N·m (115 lb in)**.

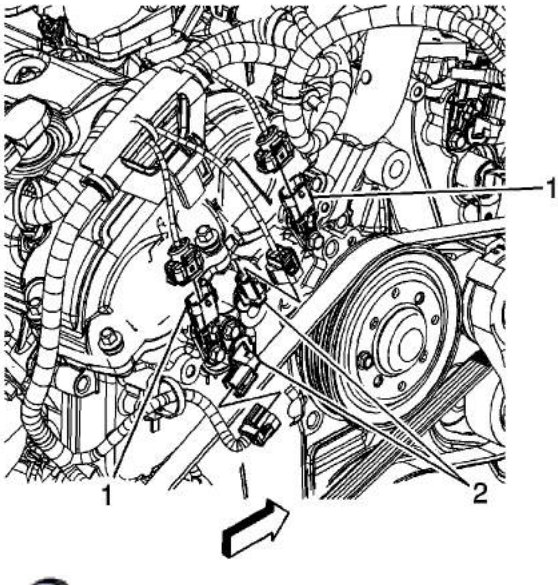

14. Connect the left and right cylinder head engine electrical wiring harness to the following components:
    - Camshaft position actuators (2)

cardiagn.com

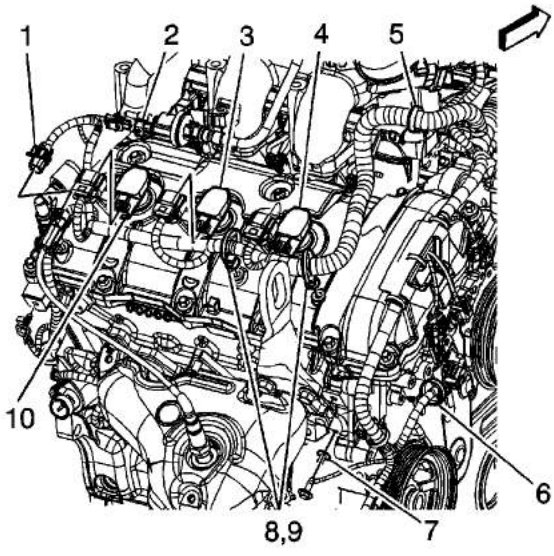

15. Connect the engine electrical wiring harness to the following components:
    - Install wire harness to retainers (5, 6, 8, 9)
    - Ground leads (7, 11)
    - Ignition coils (3, 4, 10)
    - EVAP purge solenoid (2)
    - Oxygen sensor (1)
16. Connect the wiring harness retaining clips near the right and left shock towers.

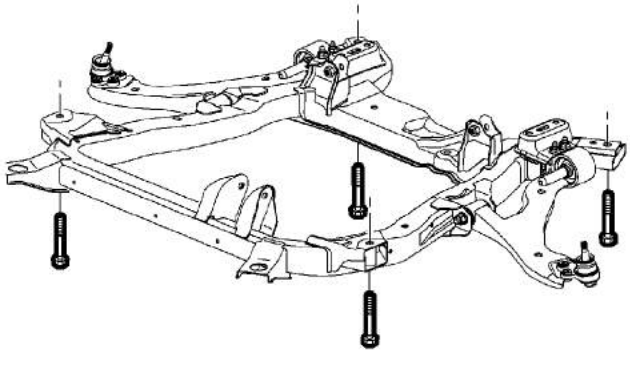

17. Install NEW frame-to-body bolts and tighten to **155 N·m (114 lb ft)**.
18. Install the drivetrain and front suspension frame reinforcement. Refer to Drivetrain and Front

cardiagn.com

support fixture or jackstands from under the vehicle.

20. Lower the vehicle.

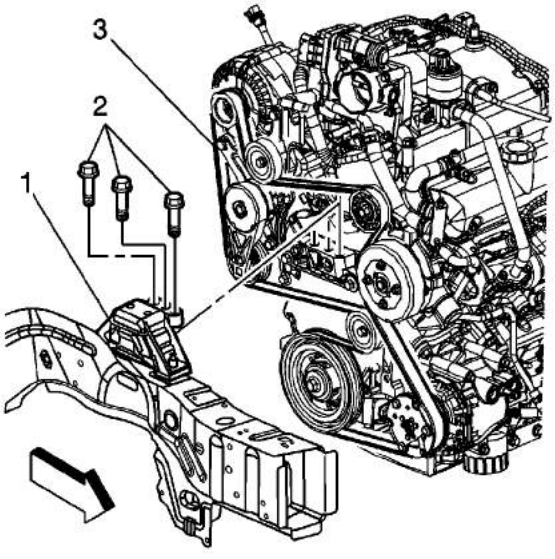

21. Install the bolts (2) that secure the right engine mount (1) to the engine (3). Tighten the bolts to **50 N·m (37 lb ft)**.
22. Raise the vehicle.

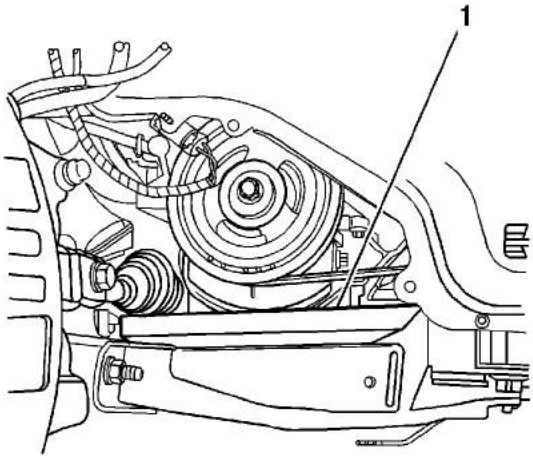

23. Remove the block of wood (1) between the frame and the engine oil pan used to support the engine while the bolts were removed from the right engine mount.
24. On AWD models, install the rear wheel driveshaft. Refer to Rear Wheel Drive Shaft Replacement.
25. On FWD models, install the right and left front wheel drive shafts into the transaxle. Refer to Front Wheel Drive Shaft Replacement.

cardiagn.com

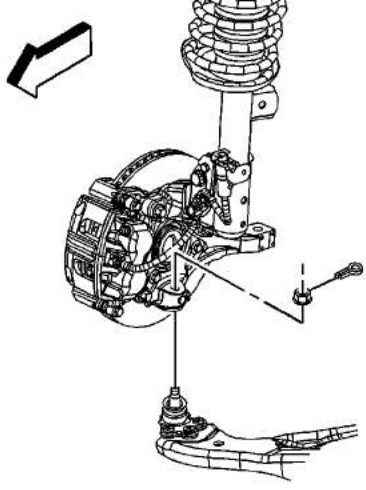

26. On all models, install the right and left lower ball joints to the steering knuckles. Refer to Lower Control Arm Replacement.

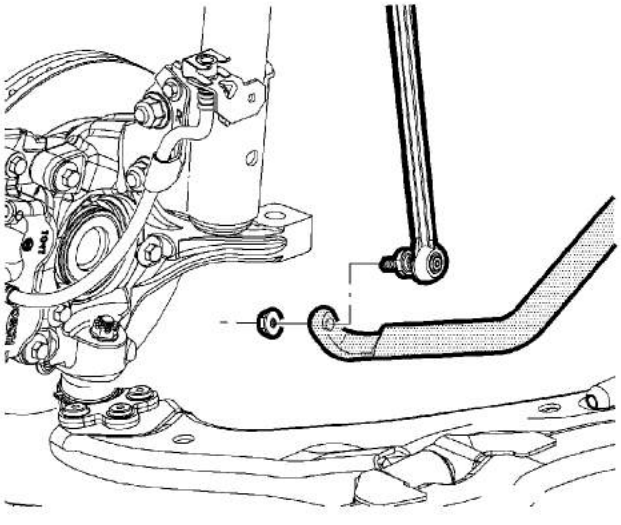

27. Install the right and left stabilizer shaft links to the stabilizer shaft. Refer to Stabilizer Shaft Link Replacement.

cardiagn.com

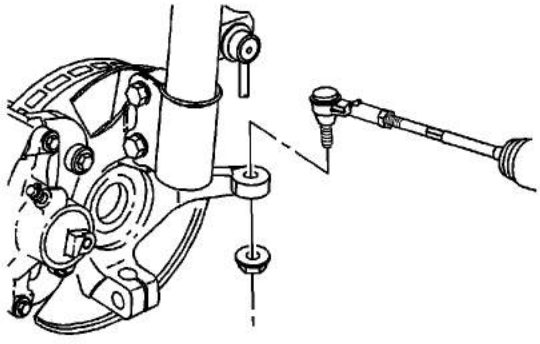

28. Install the right and left tie rod ends to the steering knuckles. Refer to Steering Linkage Outer Tie Rod Replacement.

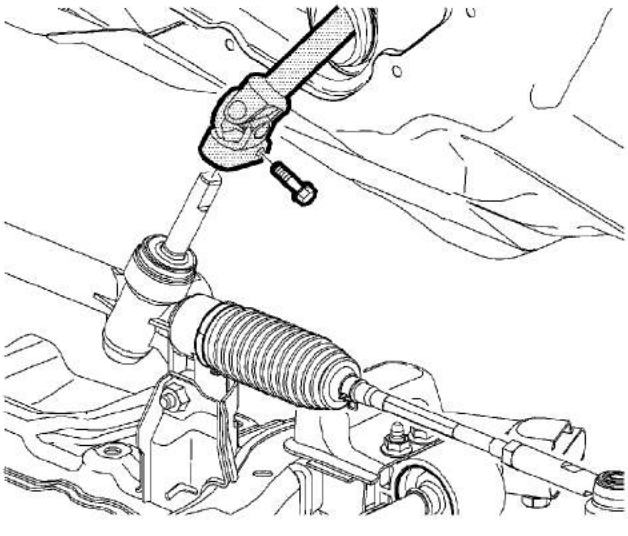

29. Connect the steering intermediate shaft to the steering gear.
30. Install a NEW pinch bolt to the steering intermediate shaft and tighten to **34 N·m (25 lb ft)**.
31. Install the right and left engine splash shields. Refer to Engine Splash Shield Replacement.
32. Install the front tires. Refer to Tire and Wheel Removal and Installation.
33. Install the catalytic converters. Refer to Exhaust Manifold Replacement - Left Side and Exhaust Manifold Replacement - Right Side.

cardiagn.com

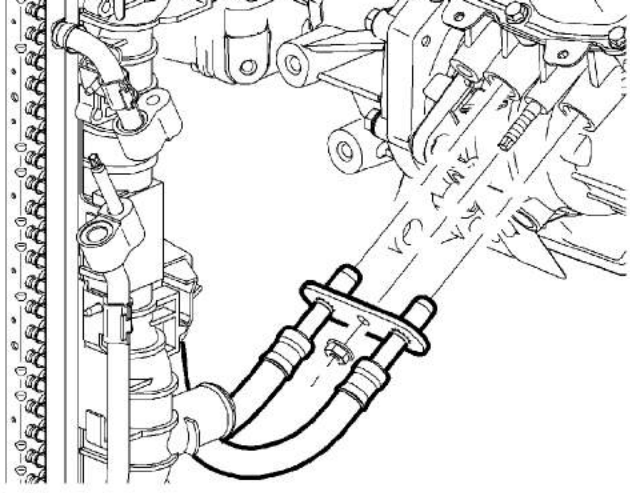

34. Install new seals and connect the transaxle oil cooler lines to the transaxle. Refer to Transmission Fluid Cooler Inlet Hose Replacement and Transmission Fluid Cooler Outlet Hose Replacement.
35. Install the radiator outlet hose. Refer to Radiator Outlet Hose Replacement.
36. Lower the vehicle.
37. Install the radiator inlet hose. Refer to Radiator Inlet Hose Replacement.
38. Connect the heater hoses to the engine. Refer to Heater Inlet Hose Replacement.
39. Untie the radiator, AC condenser, and fan module assembly from the upper radiator support.
40. Connect the transaxle shift control cable to the transaxle. Refer to Range Selector Lever Cable Replacement.
41. Install the AC compressor hose assembly to the compressor. Refer to Compressor Hose Assembly Replacement.

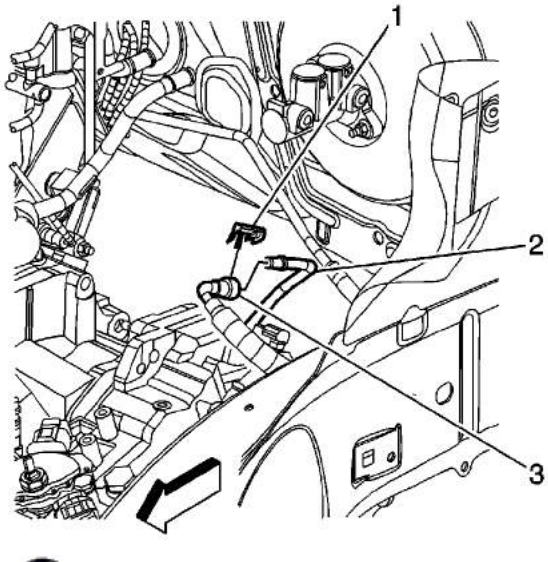

42. Connect the engine fuel hose/pipe (3) to the chassis fuel hose/pipe (2). Refer to Metal Collar Quick Connect Fitting Service.

cardiagn.com

44. Install the air cleaner assembly. Refer to Air Cleaner Assembly Replacement.

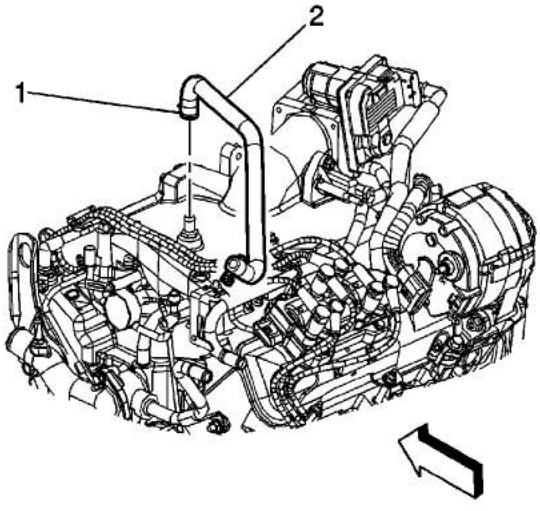

45. Connect the brake booster vacuum hose (2) to the intake manifold.
46. Position the clamp (1) on the brake booster vacuum hose connection.
47. Connect ground wire from frame, near battery box.
48. Connect the ECM connector to the under-hood fuse block.
49. Install the fuel injector sight shield. Refer to Fuel Injector Sight Shield Replacement.
50. Connect the negative battery cable. Refer to Battery Negative Cable Disconnection and Connection.
51. Fill the engine with engine oil. Refer to Approximate Fluid Capacities , Fluid and Lubricant Recommendations , and Maintenance Schedule.
52. Fill the engine with coolant. Refer to Cooling System Draining and Filling.
53. Check the transaxle fluid level. Refer to Transmission Fluid Replacement.
54. Charge the AC system. Refer to Refrigerant Recovery and Recharging.
55. Prime the fuel system.
    - 55.1. Cycle the ignition ON for 5 seconds then OFF for 10 seconds. Repeat cycling twice.
    - 55.2. Crank the engine until it starts. The maximum starter motor cranking time is 20 seconds.
    - 55.3. If the engine does not start, repeat the steps.
56. Perform the Crankshaft Position System Variation Learn procedure. Refer to Crankshaft Position System Variation Learn.

cardiagn.com

Engine Oil and Oil Filter Replacement

Removal Procedure

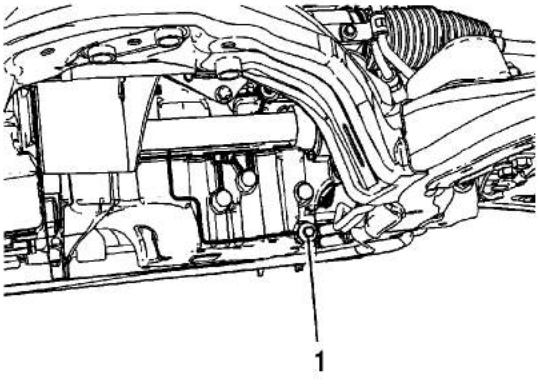

1. Raise and support the vehicle. Refer to Lifting and Jacking the Vehicle.
2. Place a drain pan under the oil pan drain plug.
3. Remove the oil pan drain plug (1). Allow the oil to drain completely.

   Caution: Refer to Fastener Caution in the Preface section.

4. Install the oil pan drain plug (1) and tighten to **20 N·m (15 lb ft)**.

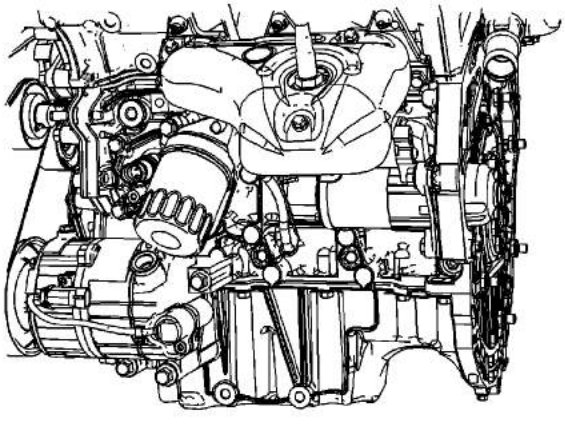

cardiagn.com

5. Place the drain pan under the oil filter.
6. Remove the oil filter. Allow the oil to drain completely.

Installation Procedure

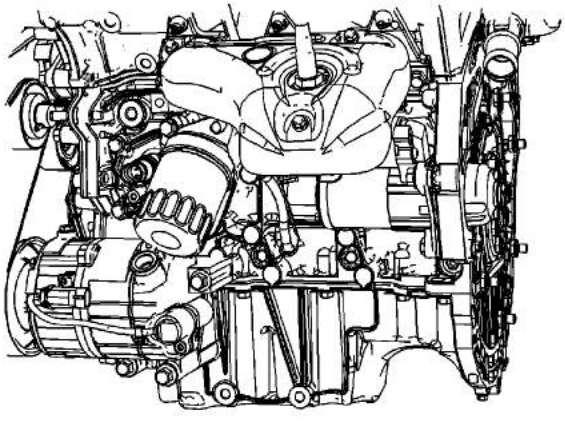

1. Lubricate the NEW oil filter gasket with clean engine oil.
2. Tighten the oil filter to **30 N·m (22 lb ft)**.
3. Lower the vehicle.
4. Fill the engine with oil to the appropriate mark.
5. Start the engine and inspect for leaks.

cardiagn.com