Engine (D4EB - Diesel 2.2)

GENERAL

ENGINE AND TRANSAXLE ASSEMBLY

TIMING SYSTEM

CYLINDER HEAD ASSEMBLY

ENGINE BLOCK

COOLING SYSTEM

LUBRICATION SYSTEM

INTAKE AND EXHAUST SYSTEM

GENERAL

SPECIFICATIONS E18A7ADE

Description		Specifications	Limit
General			
Type		1-type, SOHC	
Number of cylinder		4	
Bore		87mm(3.4252in.)	
Stroke		92mm(3.6220in.)	
Total displacement		2,188cc	
Compression ratio		17.3:1	
Firing order		1-3-4-2	
Valve timing			
Intake valve	Opens (BTDC)	7°	
	Closes (ABDC)	35°	
Exhaust valve	Opens (BBDC)	52°	
	Closes (ATDC)	6°	
Cylinder head			
Flatness of gasket surface		Less than 0.03mm (0.0012in) for width	
		Less than 0.09mm (0.0035in) for length	
		Less than 0.012mm (0.0005in) for 51 × 51 mm	
Camshaft			
Cam height	Intake	34.697mm (1.3660in)	
	Exhaust	34.571mm (1.3611in)	
Journal outer diameter		27.947 ~ 27.960mm(1.1003 ~ 1.1008in.)	
Bearing oil clearance		0.040 ~ 0.074mm (0.0016 ~ 0.0029in)	
End play		0.05 ~ 0.15mm (0.0020-0.0059in)	
Valve			
Valve length	Intake	95.5 ~ 95.9mm(3.7598 ~ 3.7756in.)	
	Exhaust	95.2 ~ 95.6mm(3.7480 ~ 3.7638in.)	
Stem outer diameter	Intake	5.933 ~ 5.953mm(0.2366 ~ 0.2344in.)	
	Exhaust	5.905 ~ 5.925mm(0.2325 ~ 0.2333in.)	
Face angle		45.5° ~ 46°	
Thickness of valve-head(margin)	Intake	1.5 ~ 1.7mm(0.0591 ~ 0.0669in.)	
	Exhaust	1.2 ~ 1.4mm(0.0472 ~ 0.0551in.)	
Valve stem to valve guide clearance	Intake	0.022 ~ 0.067mm(0.0009 ~ 0.0021in.)	
	Exhaust	0.050 ~ 0.095mm(0.0020 ~ 0.0037in.)	
Valve guide			

Description		Specifications	Limit
Length	Intake	36.25 ~ 36.75mm(1.4272 ~ 1.4468in.)	
	Exhaust	36.25 ~ 36.75mm(1.4272 ~ 1.4468in.)	
Valve spring			
Free length		38.8mm (1.5276in)	
Load		21.25±1.3kg/32.0mm(47.4±2.9 lb/1.2598in)	
Out of squareness		Less than 1.5°	
Valve seat			
Seat angle		44° ~ 46°	
Valve contacting width	Intake	0.95 ~ 1.25mm(0.0374 ~ 0.0492in.)	
	Exhaust	0.8825 ~ 1.0825mm(0.0347 ~ 0.0426in.)	
Piston			
Piston outer diameter		86.92 ~ 86.95mm (3.4220 ~ 3.4232in)	
Piston to cylinder clearance		0.07 ~ 0.09mm (0.0028 ~ 0.0035in)	
Ring groove width	No. 1 ring groove	2.415 ~ 2.445mm (0.0951 ~ 0.0963in.)	
	No. 2 ring groove	2.06 ~ 2.08mm (0.0811 ~ 0.0819in.)	
	Oil ring groove	3.02 ~ 3.04mm (0.1189 ~ 0.1197in.)	
Piston ring			
Side clearance	No. 1 ring	0.083 ~ 0.137mm (0.0033 ~ 0.0054in)	
	No. 2 ring	0.065 ~ 0.110mm (0.0026 ~ 0.0043in)	
	Oil ring	0.03 ~ 0.07mm (0.0012 ~ 0.0028in)	
End gap	No. 1 ring	0.25 ~ 0.40mm (0.0098 ~ 0.0157in)	
	No. 2 ring	0.40 ~ 0.60mm (0.0157 ~ 0.0236in)	
	Oil ring	0.20 ~ 0.40mm (0.0079 ~ 0.0157in)	
Piston pin			
Piston pin outer diameter		27.995 ~ 28.000mm (1.1022 ~ 1.1024in)	
Connecting rod			
Connecting rod bearing oil clearance		0.024 ~ 0.042mm(0.0009 ~ 0.0017in.)	
Crankshaft			
Main journal outer diameter		60.002 ~ 60.020mm (2.3623 ~ 2.3630in.)	
Pin journal outer diameter		50.008 ~ 50.026mm (1.9688 ~ 1.9695in.)	
Main bearing oil clearance		0.024 ~ 0.042mm(0.0009 ~ 0.0017in.)	0.1mm
End play		0.09 ~ 0.32mm (0.0035 ~ 0.126in)	
Cylinder block			
Cylinder bore		87mm(3.4252in.)	
Flywheel			
Runout		0.45mm(0.0177in.)	
Oil pump			

Description		Specifications	Limit
Side clearance	Tip clearance	0.12 ~ 0.20mm(0.0047 ~ 0.0079in.)	
	Radial clearance	0.13 ~ 0.23mm(0.0051 ~ 0.0091in.)	
Cooling system			
Cooling method		Forced circulation with electrical fan	
Coolant quantity		8.4L(8.88US qt, 7.39lmp qt)	
Thermostat	Type	Wax pellet type	
	Opening temperature	85±1.5°C (185±34.7°F)	
	Fully opened temperature	100°C (213°F)	
	Full lift	8mm (0.3150in.) or more	

TIGHTENING TORQUE

ITEM	N.m	kgf.m	lb.ft
Engine mounting bracket nuts/bolts(engine side)	63.7 ~ 83.4	6.5 ~ 8.5	47.0 ~ 61.5
Engine mounting bracket nuts(body side)	63.7 ~ 83.4	6.5 ~ 8.5	47.0 ~ 61.5
Engine mounting insulator bolt	78.5 ~ 98.1	8.0 ~ 10.0	57.9 ~ 72.3
Engine support bracket bolt	42.2 ~ 53.9	4.3 ~ 5.5	31.1 ~ 39.8
Front roll stopper bracket sub frame member bolt	49.0 ~ 63.7	5.0 ~ 6.5	36.2 ~ 47.0
Front roll stopper insulator bolt/nut	78.5 ~ 98.1	8.0 ~ 10.0	57.9 ~ 72.3
Rear roll stopper bracket sub frame member bolt	49.0 ~ 63.7	5.0 ~ 6.5	36.2 ~ 47.0
Rear roll stopper insulator bolt/nut	78.5 ~ 98.1	8.0 ~ 10.0	57.9 ~ 72.3
Transaxle mounting bracket bolt(transaxle side)	63.7 ~ 83.4	6.5 ~ 8.5	47.0 ~ 61.5
Transaxle mounting bracket bolt(body side)	63.7 ~ 83.4	6.5 ~ 8.5	47.0 ~ 61.5
Cylinder head cover bolt	7.8 ~ 9.8	0.8 ~ 1.0	5.8 ~ 7.2
Camshaft sprocket bolt	122.6 ~ 137.3	12.5 ~ 14.0	90.4 ~ 101.3
Camshaft bearing cap bolt	26.0 ~ 28.9	2.7 ~ 3.0	19.2 ~ 21.3
Air cleaner body mounting bolt	7.8 ~ 9.8	0.8 ~ 1.0	5.8 ~ 7.2
Crankshaft bolt	196.1 ~ 205.9	20.0 ~ 21.0	144.7 ~ 151.9
Damper pulley bolt	29.4 ~ 33.3	3.0 ~ 3.4	21.7 ~ 24.6
Cylinder head bolt(at cold)	63.7 + 120° + 120°	6.5 + 120° + 120°	47.0 + 120° + 120°
Timing belt auto tensioner bolt	49.0 ~ 53.9	5.0 ~ 5.5	36.2 ~ 39.8
Drive belt auto tensioner bolt	25.5 ~ 30.4	2.6 ~ 3.1	18.8 ~ 22.4
Timing belt auto tensioner adjusting bolt	9.8 ~ 11.8	1.0 ~ 1.2	7.2 ~ 8.7
Drive belt idler bolt	45.1 ~ 50.0	4.6 ~ 5.1	33.3 ~ 36.9
Oil pan bolt	9.8 ~ 11.8	1.0 ~ 1.2	7.2 ~ 8.7
Oil pan drain plug	34.3 ~ 44.1	3.5 ~ 4.5	25.3 ~ 32.5
Oil screen	9.8 ~ 11.8	1.0 ~ 1.2	7.2 ~ 8.7
Oil pressure switch	14.7 ~ 21.6	1.5 ~ 2.2	10.8 ~ 15.9
Oil filter fitting	47.1 ~ 51.0	4.8 ~ 5.2	34.7 ~ 37.6
Oil filter	22.6 ~ 24.5	2.3 ~ 2.5	16.6 ~ 18.1
Oil jet bolt	8.8 ~ 12.7	0.9 ~ 1.3	6.5 ~ 9.4
Oil pump cover bolt	7.8 ~ 9.8	0.8 ~ 1.0	5.8 ~ 7.2
Oil pump assembly	19.6 ~ 26.5	2.0 ~ 2.7	14.5 ~ 19.5
Oil lever gauge	9.8 ~ 11.8	1.0 ~ 1.2	7.2 ~ 8.7
Plug cap	7.8 ~ 9.8	0.8 ~ 1.0	5.8 ~ 7.2
Timing belt upper cover	7.8 ~ 11.8	0.8 ~ 1.2	5.8 ~ 8.7
Timing belt lower cover	7.8 ~ 11.8	0.8 ~ 1.2	5.8 ~ 8.7
Flywheel	68.6 ~ 78.5	7.0 ~ 8.0	50.6 ~ 57.9
Connecting rod cap bolt	24.5 + 90°	2.5 + 90°	18.1 + 90°
Water pump and cylinder block bolt	47.1 ~ 51.0	4.8 ~5.2	34.7 ~ 37.6

ITEM	N.m	kgf.m	lb.ft
Water inlet mounting bolt	9.8 ~ 11.8	1.0 ~ 1.2	7.2 ~ 8.7
Crankshaft bedplate bolt(15mm)-bearing cap bolt(M11 x 1.5P)	19.6 ~ 24.5	2.0 ~ 2.5	14.5 ~ 18.1
Crankshaft bedplate bolt(12mm)-bearing cap bolt(M8 x 1.25P)	29.4 ± 2.0 + 120°	3.0 ± 0.2 + 120°	21.7 ± 1.4 + 120°
Balance shaft assembly mounting bolt	33.0 ~ 37.0	3.4 ~ 3.8	24.4 ~ 27.3
Intake manifold and cylinder head mounting bolt/nut	52.0 ~ 55.9	5.3 ~ 5.7	38.3 ~ 41.2
Exhaust manifold and cylinder head mounting nut	14.7 ~ 21.6	1.5 ~ 2.2	10.8 ~ 15.9
Turbocharger supporting bolt	29.4 ~ 34.3	3.0 ~ 3.5	21.7 ~ 25.3
Turbocharger heat protector mounting bolt	34.3 ~ 44.1	3.5 ~ 4.5	25.3 ~ 32.5
Heater pipe protector mounting bolt	16.7 ~ 21.6	1.7 ~ 2.2	12.3 ~ 15.9
Exhaust manifold and front muffler mounting nut	7.8 ~ 9.8	0.8 ~ 1.0	5.8 ~ 7.2
Front muffler and catalytic convertor mounging nut	39.2 ~ 58.8	4.0 ~ 6.0	28.9 ~ 43.4
Catalytic covertor and center muffler mounting nut	39.2 ~ 58.8	4.0 ~ 6.0	28.9 ~ 43.4
Center muffler and main muffler mounting nut	39.2 ~ 58.8	4.0 ~ 6.0	28.9 ~ 43.4
Subframe mounting bolts/nuts	68.6 ~ 88.3	7.0 ~ 9.0	50.6 ~ 65.1
Subframe mounting bolts	137.3 ~ 156.9	14.0 ~ 16.0	101.3 ~ 115.7
Injector holder mounting bolts	39.2 ~ 53.9	4.0 ~ 5.5	28.9 ~ 39.8

TROUBLESHOOTING E72E93DD

Symptom	Suspect	Remedy
Engine misfire with abnormal internal lower engine noises.	Loose or improperly installed engine flywheel.	Repair or replace the flywheel as required.
	Worn piston rings (Oil consumption may or may not cause the engine to misfire.)	Inspect the cylinder for a loss of compression. Repair or replace as required.
	Worn crankshaft thrust bearings.	Replace the crankshaft and bearings as required.
Engine misfire with abnormal valve train noise.	Stuck valves (Carbon buildup on the valve stem can cause the valve not to close properly.)	Repair or replace as required
	Excessive worn or mis-aligned timing belt	Replace the timing belt and sprocket as required.
	Worn camshaft lobes.	Replace the camshaft and valve lifters.
Engine misfire with coolant consumption.	• Faulty cylinder head gasket and/or cranking or other damage to the cylinder head and engine block cooling system. • Coolant consumption may not cause the engine to overheat.	• Inspect the cylinder head and engine block for damage to the coolant passages and/or a faulty head gasket. • Repair or replace as required.
Engine misfire with excessive oil consumption.	Worn valves, valve guides and/or valve stem oil seals.	Repair or replace as required.
	Worn piston rings. (Oil consumption may or may not cause the engine to misfire)	• Inspect the cylinder for a loss of compression. • Repair or replace as required.
Engine noise on start-up, but only lasting a few seconds.	Incorrect oil viscosity.	• Drain the oil • Install the correct viscosity oil.
	Worn crankshaft thrust bearing.	• Inspect the thrust bearing and crankshaft. • Repair or replace as required.
Upper engine noise, regardless of engine speed.	Low oil pressure.	Repair or replace as required.
	Broken valve spring.	Replace the valve spring
	Worn or dirty valve lifters.	Replace the valve lifters.
	Stretched or broken timing belt and/or damaged sprocket teeth.	Replace the timing belt and sprockets.
	Worn timing chain tensioner, if applicable.	Replace the timing chain tensioner as required.
	Worn camshaft lobes.	• Inspect the camshaft lobes. • Replace the timing camshaft and valve lifters as required.
	Worn valve guides or valve stems.	Inspect the valves and valve guides, then repair as required.
	Stuck valves. (Carbon on the valve stem or valve seat may cause the valve to stay open.)	Inspect the vlaves and valve guides, then repair as required.

Symptom	Suspect	Remedy
Lower engine noise, regardless of engine speed.	Low oil pressure.	Repair or replace damaged components as required.
	Loose or damaged flywheel.	Repair or replace the flywheel.
	Damaged oil pan, contacting the oil pump screen.	• Inspect the oil pan. • Inspect the oil pump screen. • Repair or replace as required.
	Oil pump screen loose, damage or restired.	• Inspect the oil pump screen. • Repair or replace as required.
	Excessive piston-to-cylinder bore clearance.	• Inspect the piston and cylinder bore. • Repair as required.
	Excessive piston pin-to bore clearance.	• Inspect the piston, piston pin and the connecting rod. • Repair or replace as required.
	Excessive connecting rod bearing clearance	Inspect the following components and repair as required. • The connecting rod bearings. • The connecting rods. • The crankshaft. • The crankshaft journal.
	Excessive crankshaft bearing clearance	Inspect the following components and repair as required. • The crankshaft bearings. • The crankshaft journals.
	Incorrect piston, piston pin and connecting rod installation	• Verify the piston pins and connecting rods are installed correctly. • Repair as required.
Engine noise under load	Low oil pressure	Repair or replace as required.
	Excessive connecting rod bearing clearance	Inspect the following components and repair as required. • The connecting rod bearings. • The connecting rods. • The crankshaft
	Excessive crankshaft bearing clearnace	Inspect the following components, and repair as required. • The crankshaft bearings. • The crankshaft journals. • The cylinswe block crankshaft bearing bore.

Symptom	Suspect	Remedy
Engine will not crank-crakshaft will not rotate	Hydraulically cylinder • Coolant/antifreeze in cylinder. • Oil in cylinder. • Fuel in cylinder	1. Remove injectors and check for fluid. 2. Inspect for broken head gasket. 3. Inspect for cranked engine black or cylinder head. 4. Inspect for a sticking fuel injector and/or leaking fuel regulator.
	Broken timing chain and/or timing chain gears.	1. Inspect timing chain and gears. 2. Repair as required.
	Material cylinder • Broken valve • Piston material • Foreign meterial	1. Inspect cylinder for damaged components and/or foreign materials. 2. Repair or replace as required.
	Seized crankshaft or connecting rod bearings.	1. Inspect crankshaft and connecting rod bearing. 2. Repair as required.
	Bent or broken connecting rod.	1. Inspect connectong rods. 2. Repair as required.
	Broken crankshaft	1. Inspect crankshaft. 2. Repair as required.

SPEICAL SERVICE TOOLS E764F48B

Tool (Number and name)	Illustration	Use
Camshaft oil seal installer (09212-27100)	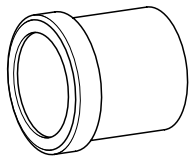 ACIE003A	Installation of the camshaft oil seal
Valve spring compressor (09222-27300)	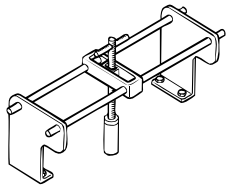 ACIE004A	Removal and installation of intake and exhaust valves
Valve stem oil seal installer (09222-27200)	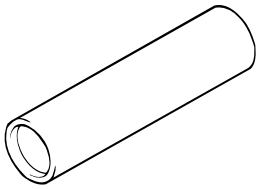 ACIE005A	Installation of valve stem oil seals
Crankshaft rear oil seal installer (09231-27000)	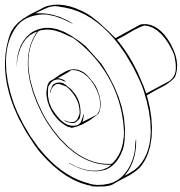 ACIE006A	Installation of the crankshaft real oil seal
Front case oil seal installer (09231-27100)	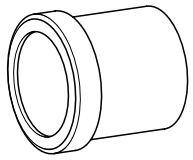 ACIE003A	Installation of the front case oil seal

Tool (Number and name)	Illustration	Use
Injector oil seal installer (09351-27401)	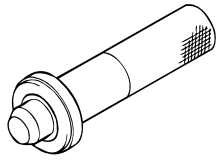 ACIE007A	Installation of the injector oil seal
Compression gauge & adapter (09351-27000) (09351-27100)	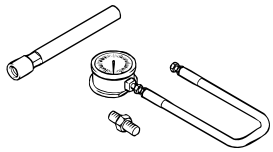 ACIE002A	Checking engine compression pressure
Oil filter wrench (09263-2E000)	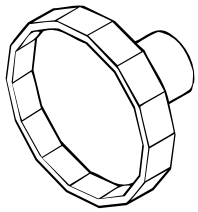 ACIE008A	Removal and installation of oil filter For the rest area except Europe LHD
Oil filter wrench (09263-27000)	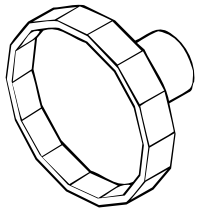 ACIE008A	Removal and installation of oil filter For Europe LHD

ENGINE AND TRANSAXLE ASSEMBLY

REMOVAL E1706BBE

CAUTION

- ***Make sure jacks and safety stands are placed properly.***
- ***Make sure the vehicle will not roll off stands and fall while you are working under it.***
- ***Use fender covers to avoid damaging painted surface.***
- ***Unplug the wiring connectors carefully while holding the connector portion to avoid damage.***
- ***Mark all wiring and hoses to avoid misconnection.***
  Also, be sure that they do not contact other wiring or hoses or interfere with other parts.

1. Remove the air duct(A).

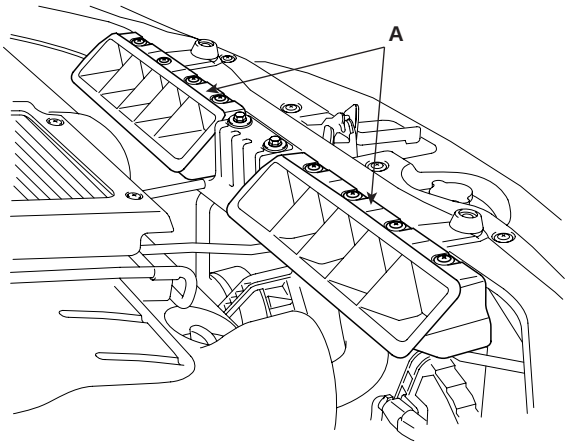

SCMEM6001D

2. Remove the battery terminals and the battery assembly(A).

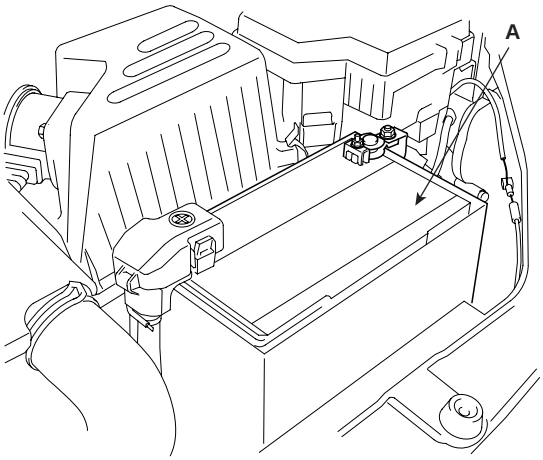

SCMEM6002D

3. Remove the intercooler system.

   1) Disconnect the connector(C) related to the BPS(Boost Pressure Sensor)(A) and the VGT(Variable Geometry Turbocharger) solenoid valve(B).

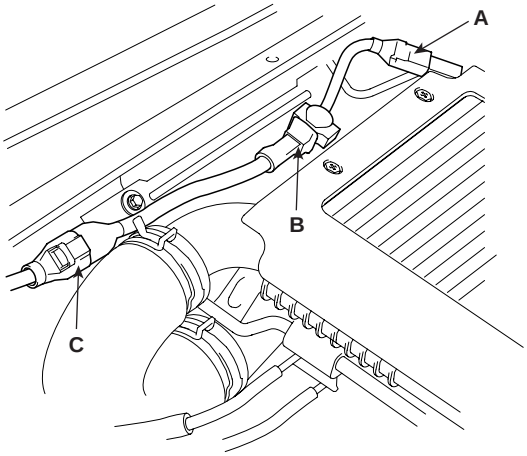

SCMEM6003D

   2) Disconnect the intercooler hoses(A).

   3) Disconnect the VGT(Variable Geometry Turbocharger) solenoid valve vaccum hoses(B).

   4) Remove the intercooler hose assembly(C).

Tightening torque :
7.8 ~ 11.8N.m(0.8~1.2kgf.m, 5.8 ~ 8.7lb-ft)

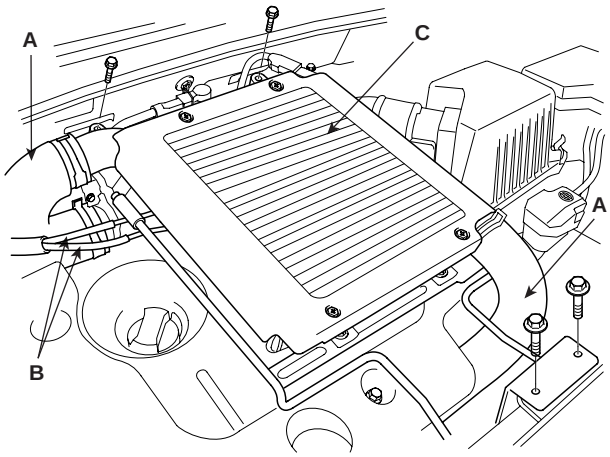

SCMEM6004D

4. Remove the under cover(A).

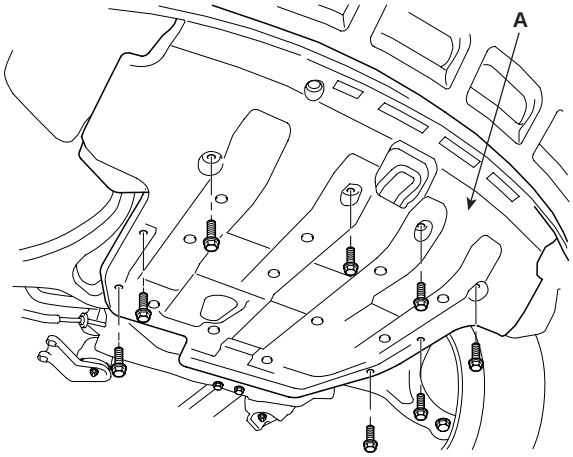

SCMEM6005D

5. Drain engine coolant and remove the radiator cap to speed draining.

6. Remove the drain plug(A) and the radiator lower hose(B).

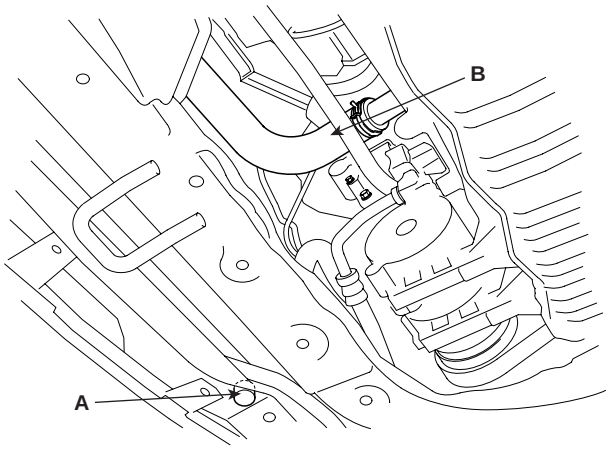

SCMEM6006D

7. Remove the air cleaner assembly.

   1) Disconnect the AFS(Air Flow Sensor) connector(A).

   2) After removing the air intake hose clamp, loosen the air cleaner assembly mounting bolts(2EA).

   3) Remove the air cleaner assembly(B).

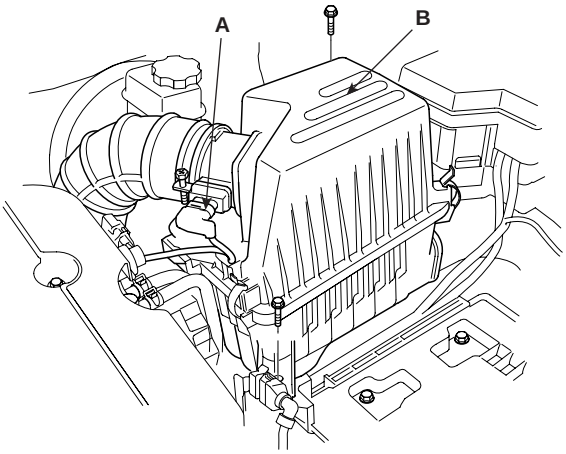

SCMEM6007D

8. Remove the battery tray(A), loosening the mounting bolts(4EA).

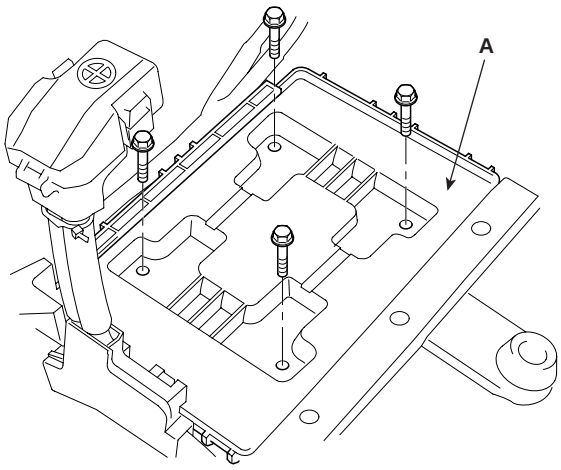

SCMEM6008D

9. Disconnect the ECU(Engine Control Unit) connectors(A) and remove its mounting bolts(B).

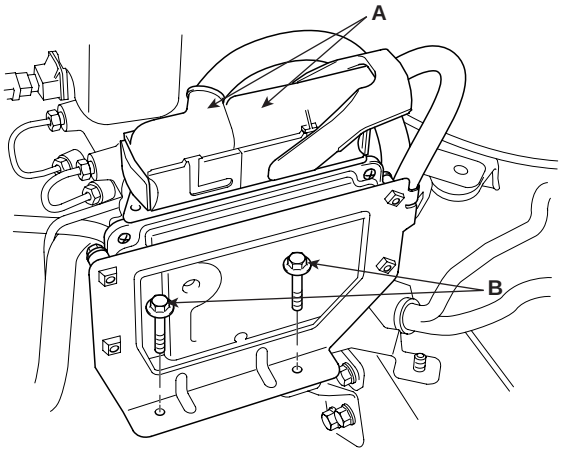

SCMEM6009D

10. Remove the engine cover(A).

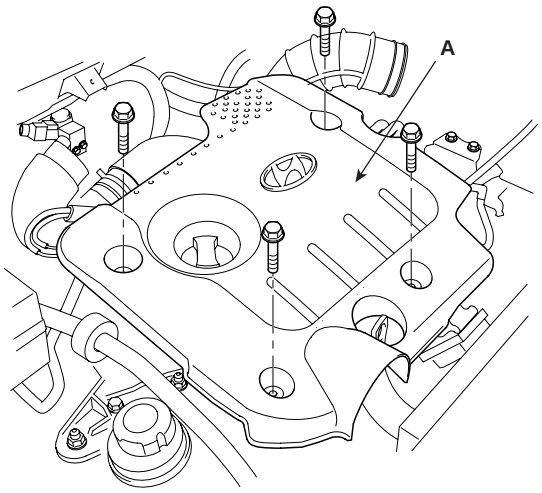

SCMEM6010D

11. Remove the hose between the intercooler and the intake system.

12. Remove the engine wirings.

1) Disconnect the rail pressure sensor connector(A) and the ECT(Engine Coolant Temperature) sensor connector(B).

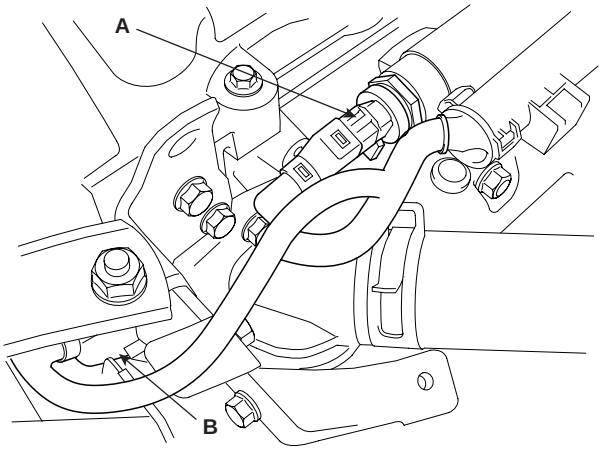

SCMEM6011D

2) Disconnect the camshaft position sensor connector(A), the rail pressure regulator connector(B), the swirl valve actuator connector(C), the electronic throttle body actuator connector(D), the oil pressure switch connector(E) and the crankshaft position sensor connector(F) and remove the connector/wire harness protector(G).

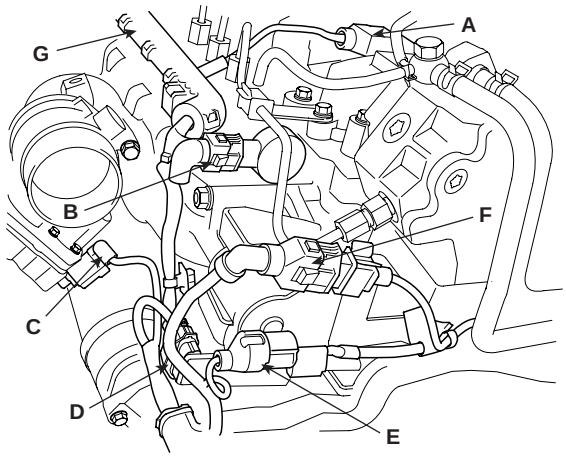

SCMEM6012D

3) Disconnect the EGR(Exhaust Gas Recirculation) solenoid valve connector(A), the glow plug(B), the fuel pressure regulator valve connector(C), the injector(D) and the connector/wire harness protector(E).

4) Disconnect the ground lines(F).

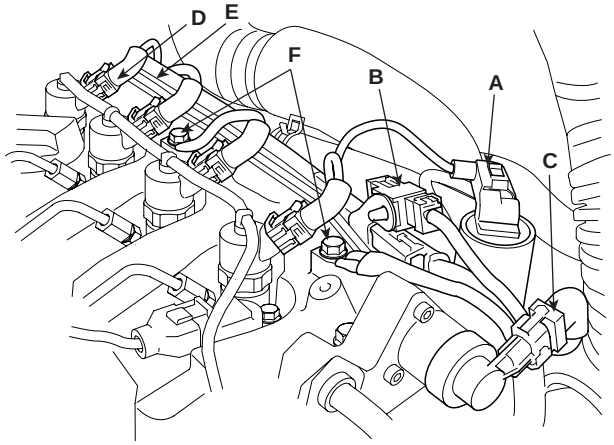

SCMEM6013D

13. Disconnect the ground line from the cylinder head(A).

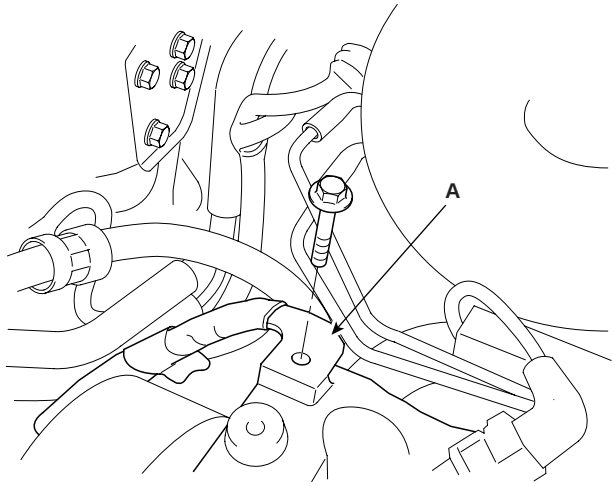

SCMEM6014D

14. Remove the fuel hose(A) and the fuel temperature sensor connector(B).

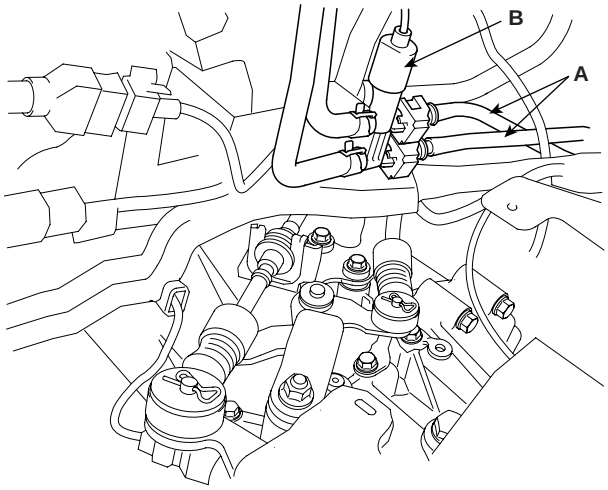

SCMEM6015D

15. Disconnect the brake booster vacuum hose(A) and the heater hoses(B).

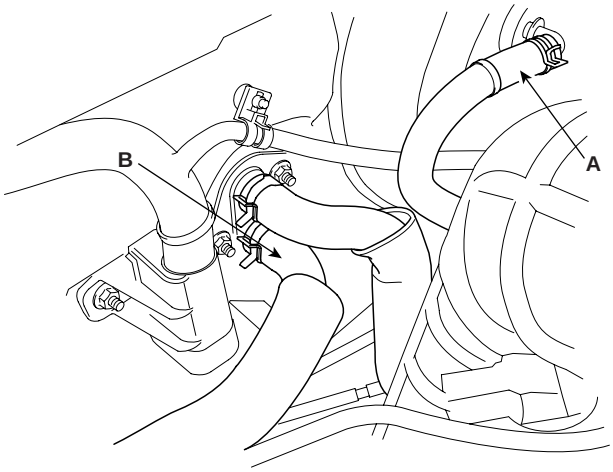

SCMEM6016D

16. Disconnect the upper radiator hose(A).

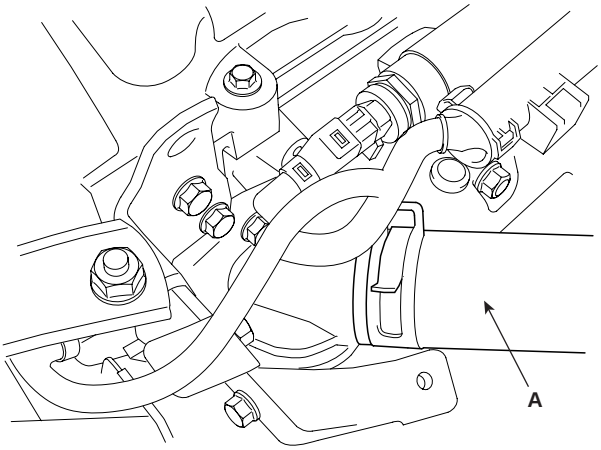

SCMEM6017D

17. Disconnect the battery cables to the fuse & relay box by removing the nuts.

18. Disconnect the front lamp connector(B).

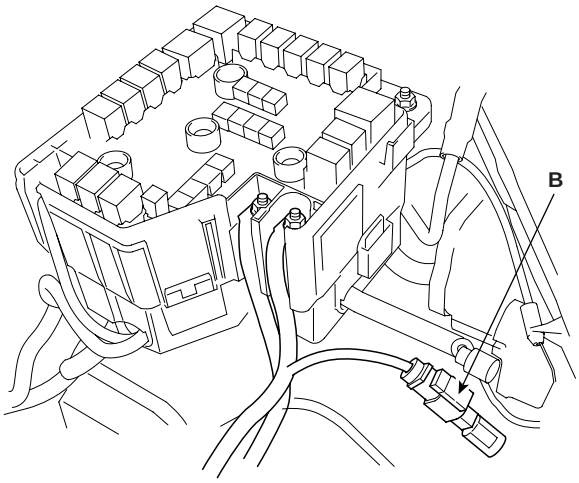

SCMM16004L

19. Remove the wirings related to the transaxle.

    1) Disconnect the back up lamp switch connector(A).

    2) Disconnect the neutral switch connector(B).

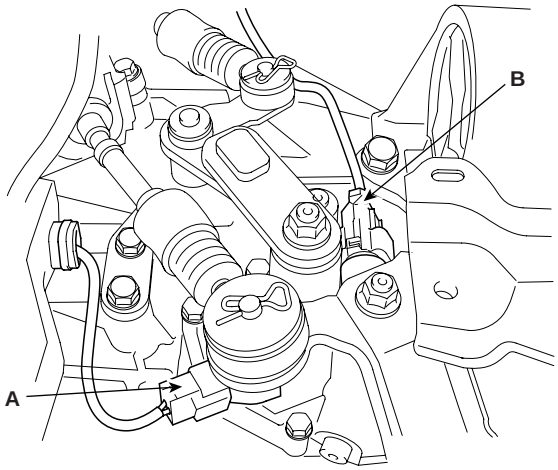

SCMEM6019D

    3) Disconnect the vehicle speed sensor.

20. Remove the shift cable assembly(A), the clip(B) and the pin(C).

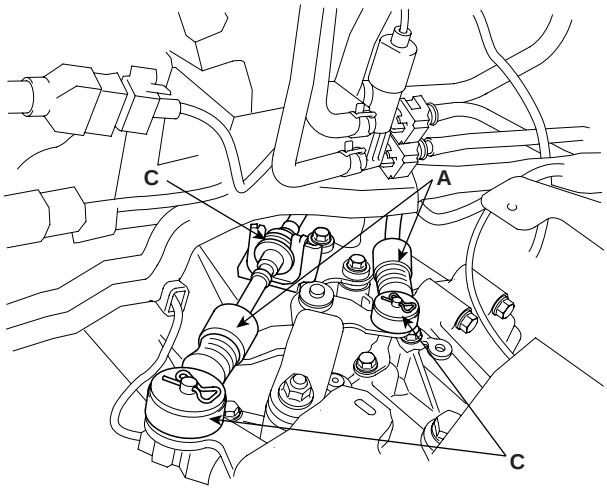

SCMM16005L

21. Remove the concentric slave cylinder with clamping the tube(A).

22. Remove the groung line mounting bolts(B) from the transaxle.

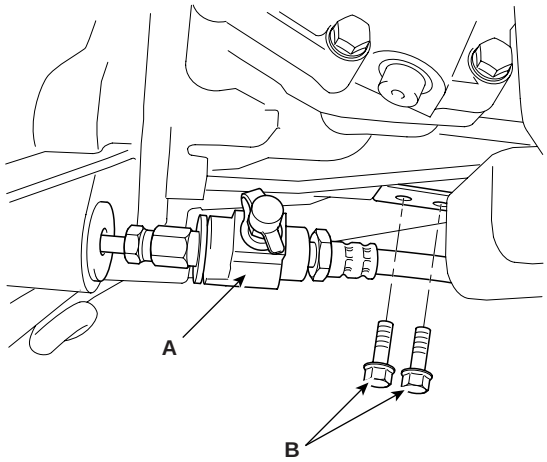

SCMEM6021D

23. Drain power steering oil.

24. Disconnect the power steering oil hose(A).

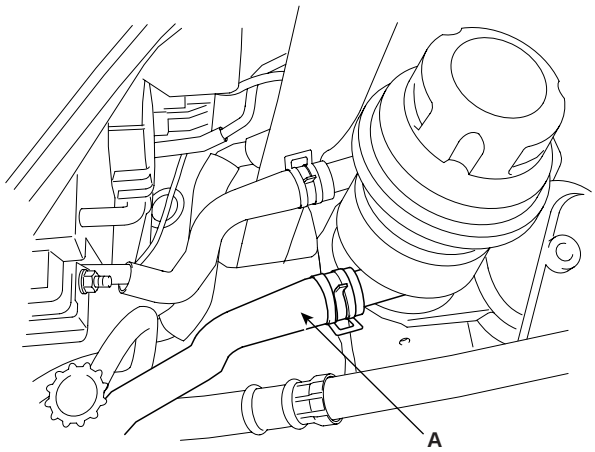

SCMEM6022D

25. Remove the clips(B) from the right side wheel guide(A).

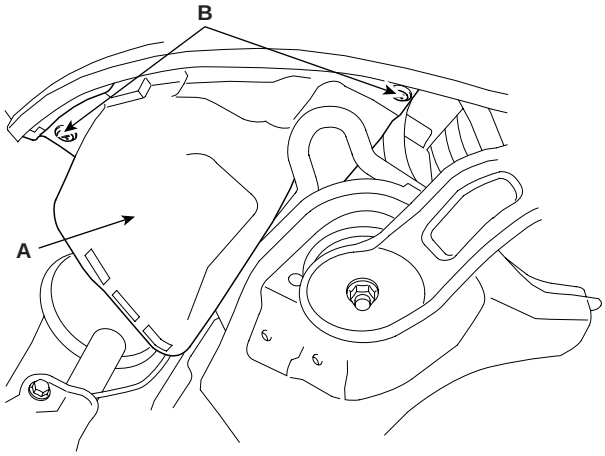

SCMEM6023D

26. Disconnect the power steering lower hose(A).

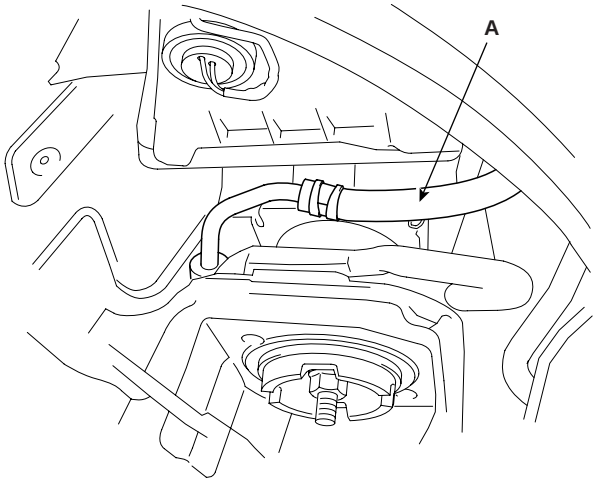

SCMEM6024D

27. Recover air-conditioning refrigerant and remove the high & low pressure hoses.(Refer to 'HA' group).

28. Remove the steering column universal joint mounting bolt(A).

29. Disconnect the EPS(Electronic Power Steering) sensor connector(B).

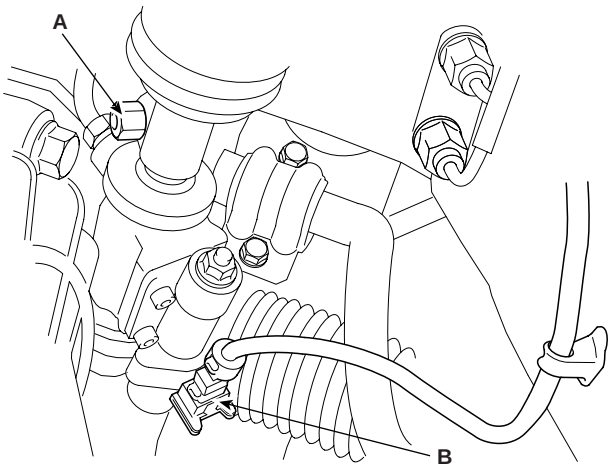

SCMEM6025D

30. Remove the front wheels and tires.

31. Remove the wheel speed sensor(A).(Refer to 'SS' group).

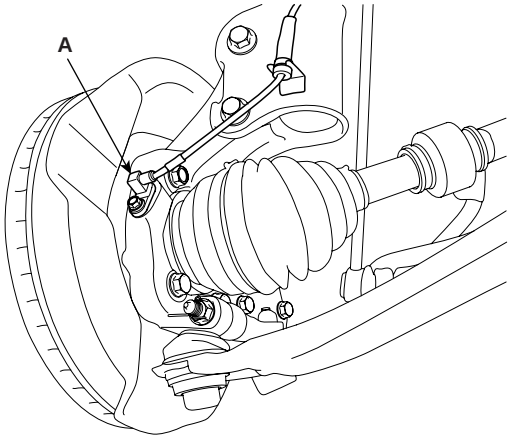

SCMEM6060D

32. After removing the mounting bolts(A) and the caliper(B), bind it up to the coil spring of the strut.

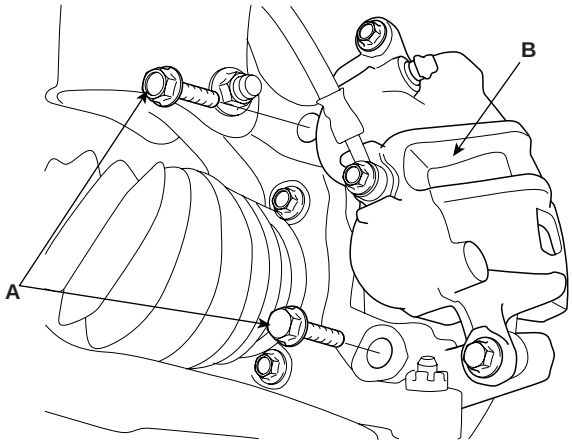

SCMDS6005D

33. Remove the strut assembly by removing the stabilizer bar(A) link nuts(B) and the strut lower mounting bolts(B).(Refer to 'SS' group).

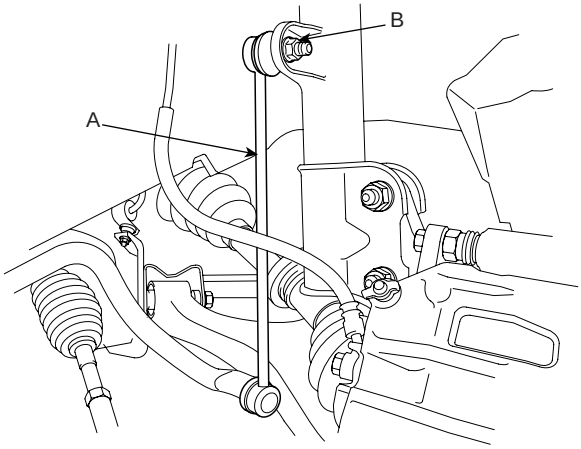

SCMSS6504D

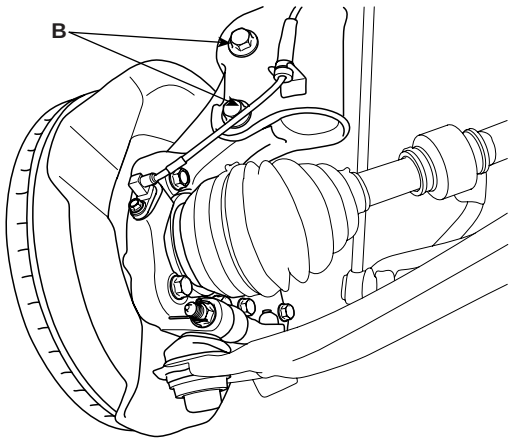

SCMEM6062D

34. Remove the front muffler(A).

Tightening torque :
39.2 ~ 58.8N.m(4.0 ~ 6.0kgf.m, 28.9 ~ 43.4lb-ft)

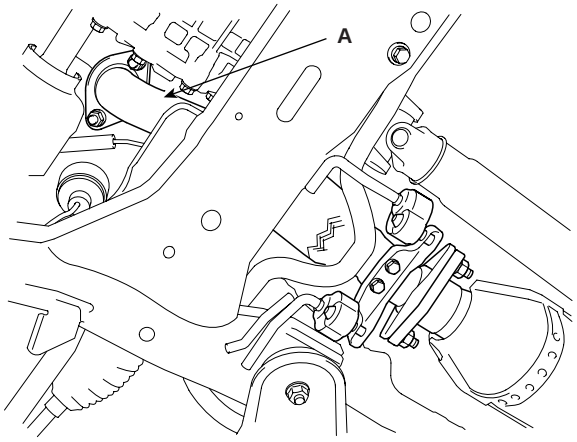

SCMEM6044D

35. Disconnect the propeller shaft(A).(Refer to 'DS' group).

Tightening torque :
49.0 ~ 68.6N.m(5.0 ~ 7.0kgf.m, 36.2 ~ 50.6lb-ft)

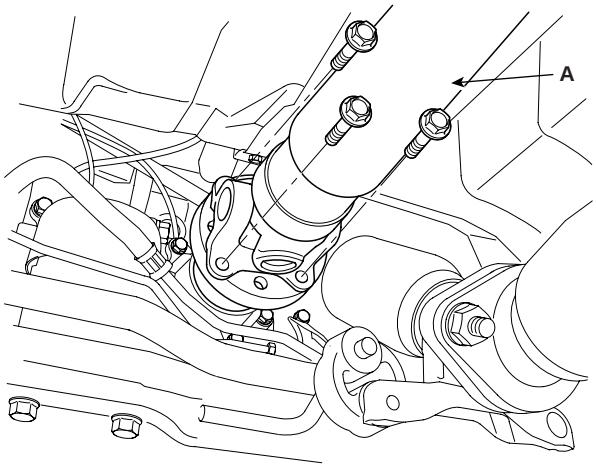

SCMEM6026D

NOTE

The propeller shaft is tightened by left-handed screw bolts.

36. Install a jack under the engine and transaxle assembly for supporting.

37. Remove the engine stay(A) and the engine mounting bracket(B).

Tightening torque :
Bolts, Nut(C): 39.2 ~ 53.9N.m(4.0 ~ 5.5kg.m, 28.9 ~ 39.8lb-ft)
Bolts, Nut(D): 63.7 ~ 83.4N.m(6.5 ~ 8.5kg.m, 47.0 ~ 61.5lb-ft)

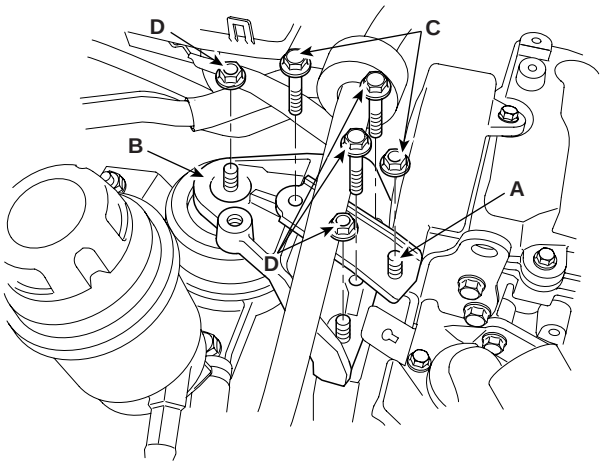

SCMEM6027D

38. Remove the transaxle mounting(A).(Refer to 'MT/AT' group).

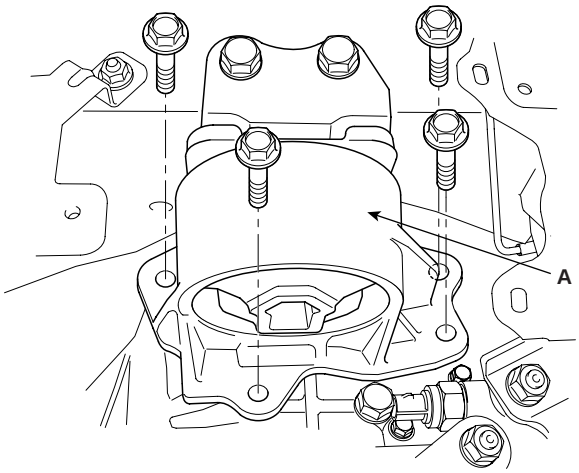

SCMEM6028D

39. Remove the subframe mounting bolts and nuts.

Tightening torque :
Bolts, Nuts: 68.6 ~ 88.3N.m(7.0 ~ 9.0kg.m, 50.6 ~ 65.1lb-ft)
Bolts: 137.3 ~ 156.9N.m(14.0 ~ 16.0kg.m, 101.3 ~ 115.7lb-ft)

40. Remove the engine and transaxle assembly by lifting the vehicle.

NOTE

When removing the engine and transaxle assembly, be careful not to damage any surrounding parts or body components.

INSTALLATION EE394374

Installation is in the reverse order of removal.
Perform the following :

- Adjust the shift cable.
- Adjust the throttle cable.
- Refill the engine with engine oil.
- Refill the transaxle with fluid.
- Refill the radiator and reservoir tank with engine coolant.
- Place the heater control knob on " HOT" position.
- Bleed air from the cooling system.
  - Start engine and let it run until it warms up. (until the radiator fan operates 3 or 4 times.)
  - Turn Off the engine. Check the level in the radiator, add coolant if needed. This will allow trapped air to be removed from the cooling system.
  - Put the radiator cap on tightly, then run the engine again and check for leaks.

- Clean the battery posts and cable terminals with sandpaper assemble them, then apply grease to prevent corrosion.
- Inspect for fuel leakage.
  - After assemble the fuel line, turn on the ignition switch (do not operate the starter) so that the fuel pump runs for approximately two seconds and fuel line pressurizes.
  - Repeat this operation two or three times, then check for fuel leakage at any point in the fuel line.

TIMING SYSTEM

COMPONENTS E32DA029

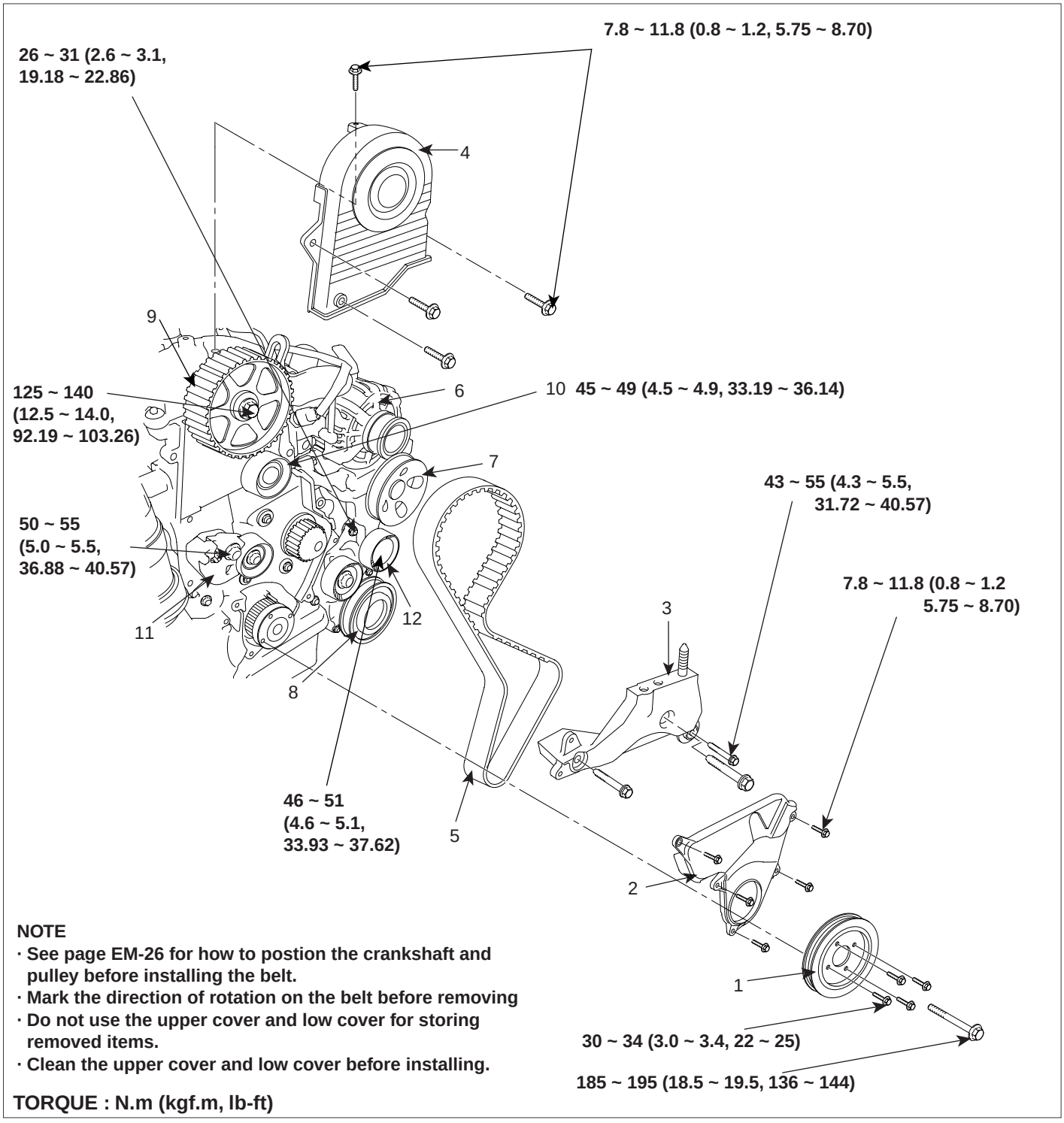

NOTE

- **See page EM-26 for how to postion the crankshaft and pulley before installing the belt.**
- **Mark the direction of rotation on the belt before removing**
- **Do not use the upper cover and low cover for storing removed items.**
- **Clean the upper cover and low cover before installing.**

TORQUE : N.m (kgf.m, lb-ft)

1. Damper pulley
2. Timing belt lower cover
3. Engine support bracket
4. Timing belt upper cover
5. Timing belt
6. Alternator and vacuum pump assembly
7. Power steering pump
8. Air conditioning compressor
9. Camshaft sprocket
10. Timing belt idler
11. Timing belt tensioner
12. Idler

SCMM16001L

REMOVAL E3E1740E

NOTE

- *Inspect the water pump before installing the timing belt.*

1. The tensioner should be lifted up to remove the drive belt(A).

2. Turn the crankshaft pulley to align the timing mark at TDC(Top Dead Center).

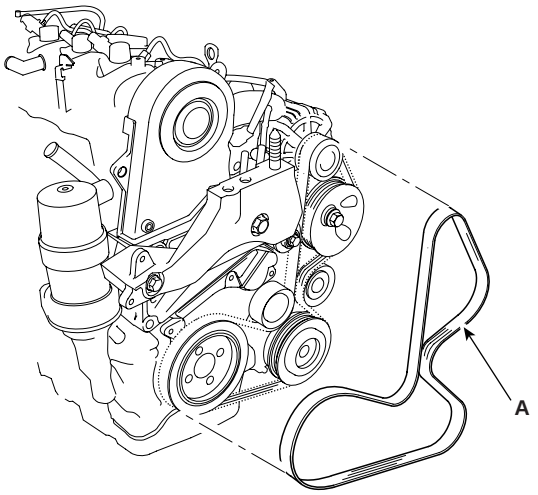

SCMEM6030D

3. Remove the crankshaft pulley(A) and the timing belt lower cover(B).

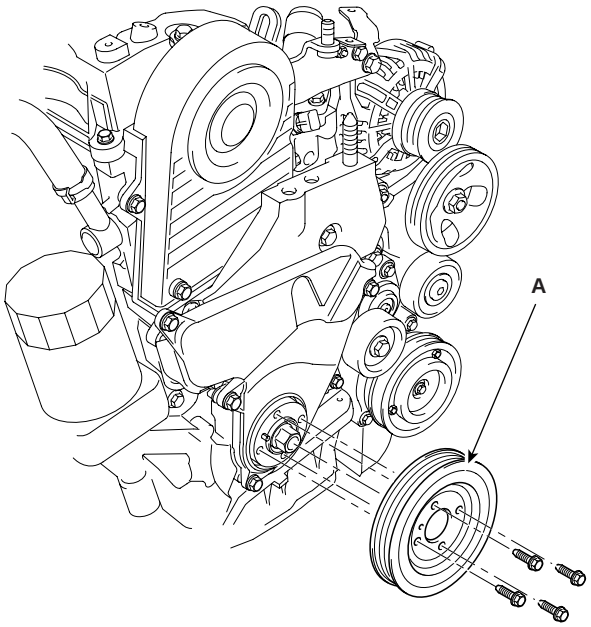

SCMEM6031D

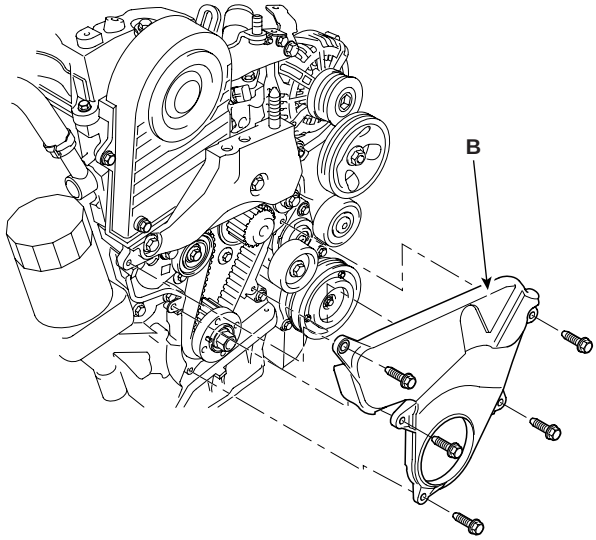

SCMM16006L

4. Remove the timing belt upper cover(A) and the engine support bracket(B).

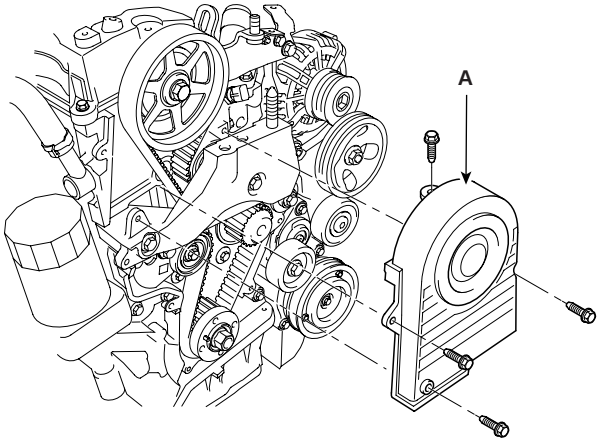

SCMEM6033D

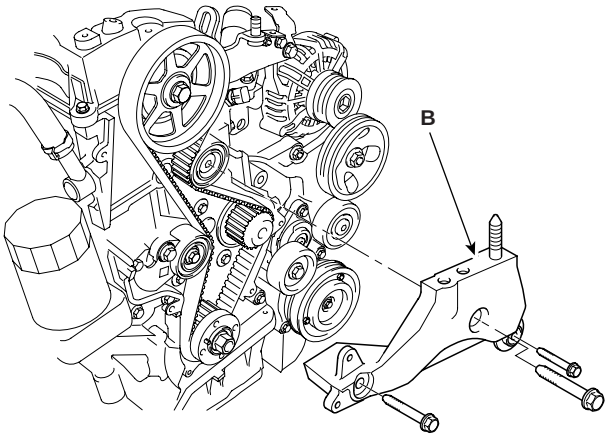

SCMM16007L

5. Insert a pin(A) into the aligned holes in the auto-tensioner(B).

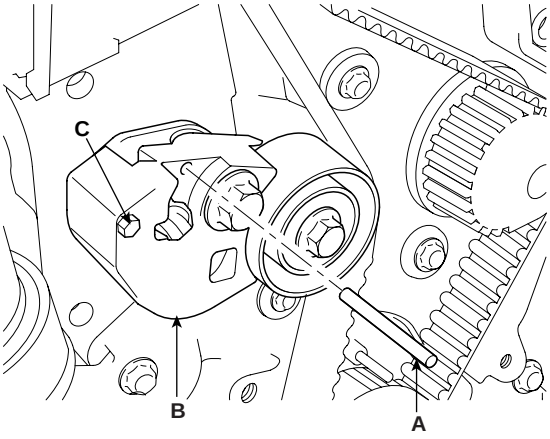

ACIE049A

6. Using a hexagonal wrench (5mm)(A), loosen the stop bolt(B). And then, turning the auto-tensioner(C) clockwise fully with the boss bolt(D) and 12mm spanner(E), retighten the stop bolt(B).

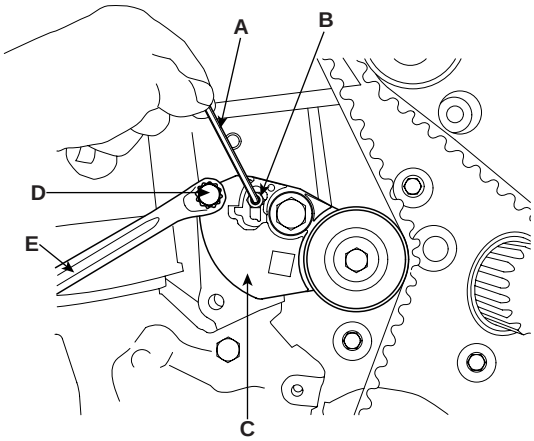

ACIE050A

7. Remove the timing belt.

NOTE

To be prepared in case the removed belt is used, mark an arrow on the timing belt in the direction of rotation before removing it.

INSPECTION EF5CAC28

1. Remove the upper cover.

2. Inspect the timing belt(A) for cracks and oil or coolant soaking.

NOTE

- *Replace the belt if oil or coolant soaked.*
- *Remove any oil or solvent that gets on the belt.*

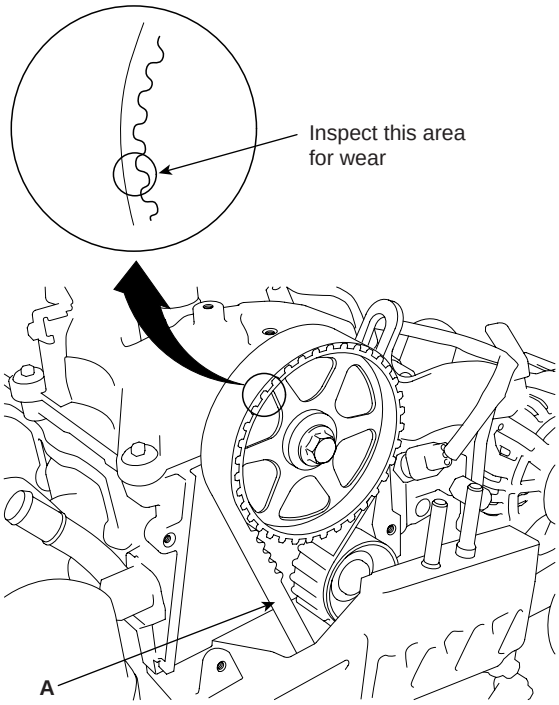

EDKD541A

SPROCKETS, TENSIONER, IDLER

1. Check the camshaft sprocket.
   Crankshaft sprocket, tensioner pulley and idler pulley for abnormal wear, cracks or damage. Replace as necessary.

2. Inspect the tensioner pulley and the idler pulley for easy and smooth rotation and check for play or noise. Replace as necessary.

3. Replace the pulley if there is a grease leak from its bearing.

INSTALLATION EC144B3B

1. Align the timing mark(A) on the camshaft sprocket(B) with the mark(C) on the cylinder head(D).

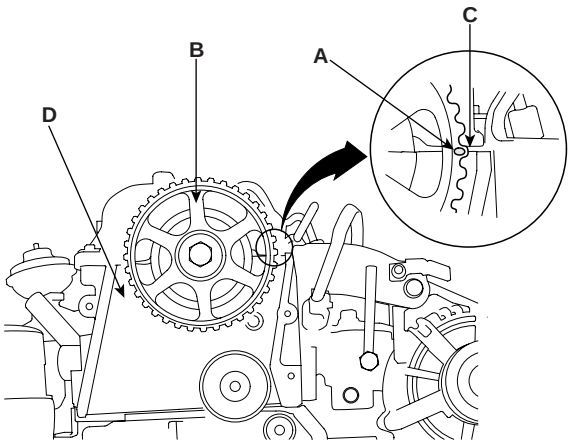

ACIE051A

2. Align the timing mark(A) on the crankshaft sprocket(B) with the pin(C) press fitted in the oil pump housing(D).

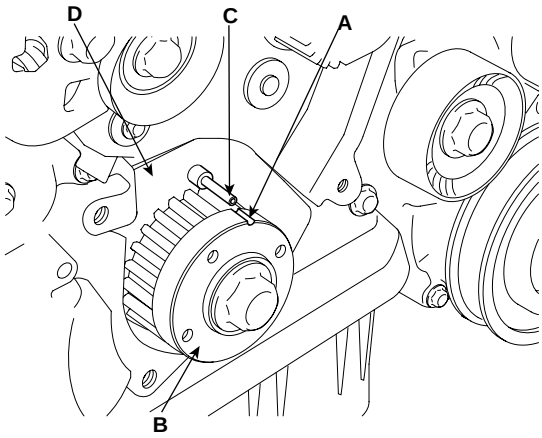

ACIE052A

3. Install the timing belt.
   a. Install the timing belt(A) tightly in the sequence shown.
      ① Timing belt drive pulley(B) (crakshaft) → ② Water pump pulley(C) ③ Timing belt idler(D) → ④ Camshaft sprocket(E) → ⑤ Timing belt tensioner(F).

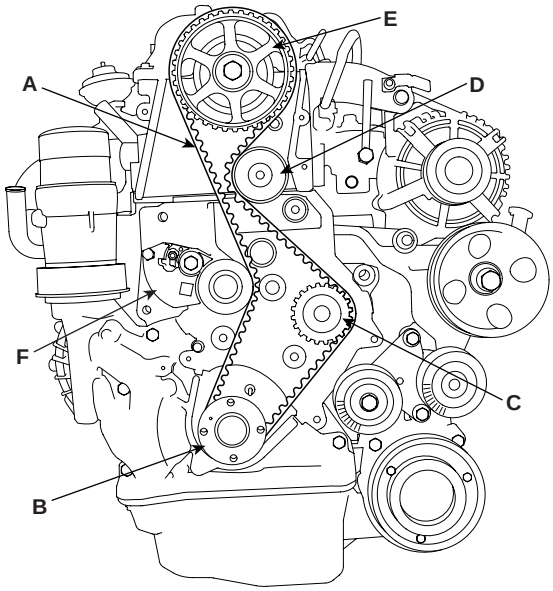

ACIE053A

   b. Insert a pin into the auto-tensioner.
   c. Using a hexagonal wrench (5mm)(A), loosen the auto-tensioner stop bolt(B).
   d. Turn the auto-tensioner(C) counterckockwise fulley to install the timing belt using the boss bolt(D) and 12mm spanner(E).

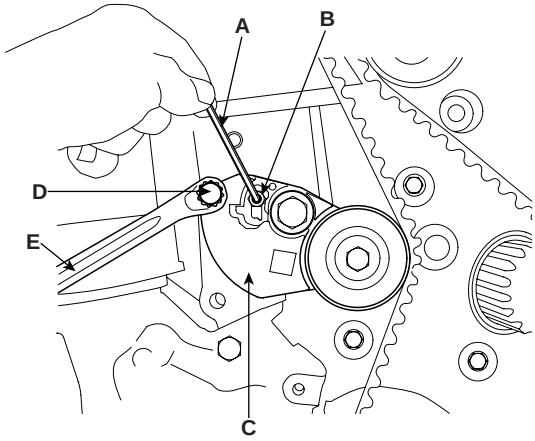

ACIE050A

   e. Rotate the crankshaft by hand 2 complate revolutions (clockwise) to take up any slack and set to TDC(Top Dead Center).

NOTE

Verify the timing marks are aligned again.

4. Tighten the stop bolt(B) and remove the fixing pin.

Tightening torque
Auto tensioner adjustable bolt
10 ~ 12N.m (1.0 ~ 1.2 kgf.m, 7 ~ 9lb-ft)

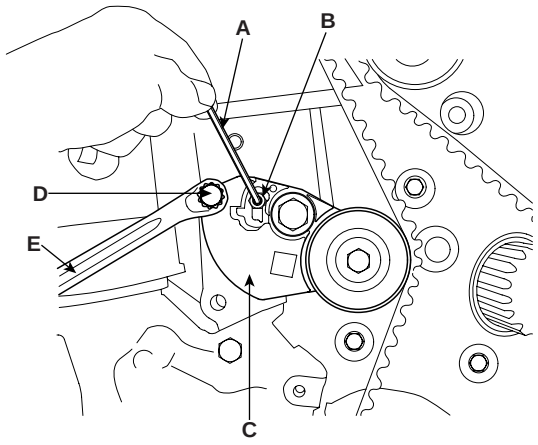

ACIE050A

5. Reinstall all removed components in the reverse order of removal.
   a. Install the engine bracket(A).

Tightening torque
43 ~ 55N.m (4.3 ~ 5.5kgf.m, 31.72 ~ 40.57lb-ft)

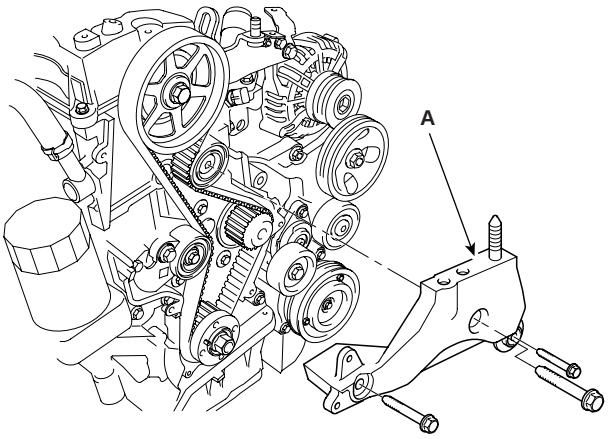

SCMEM6034D

   b. Install the timing belt upper cover(A) and lower cover(B).

Tightening torque
7.8 ~ 11.8N.m (0.8 ~ 1.2kgf.m, 5.75 ~ 8.70lb-ft)

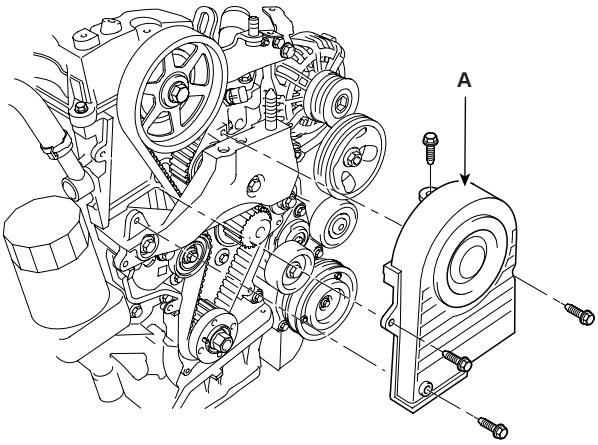

SCMEM6033D

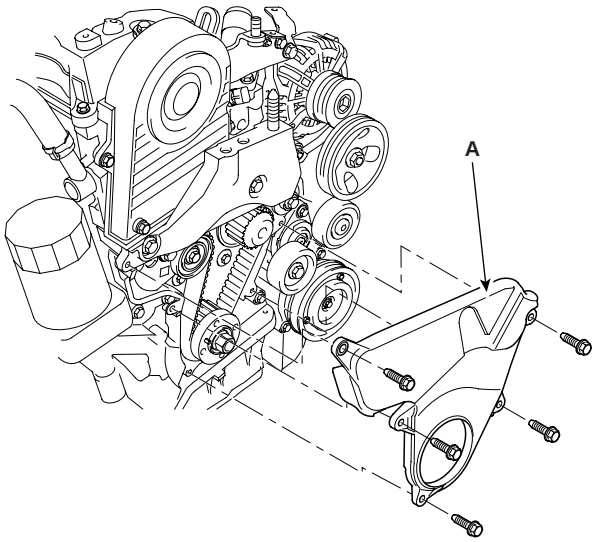

SCMEM6032D

c. Install the damper pulley(A).

Tightening torque
Damper pulley mounting bolt
30 ~ 34N.m (3.0 ~ 3.4kgf.m, 22 ~ 25lb-ft)

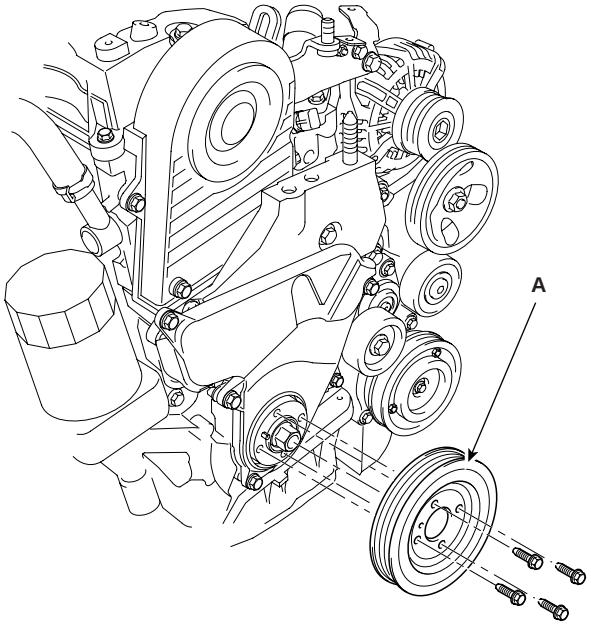

SCMEM6031D

d. Install the drive belt(A), following the sequence below.
1.Alternator → 2.Power steering → 3.Idler → 4.Air compressor → 5.Crankshaft pulley → 6.Tensioner.
The tensioner should be lifted up to install the drive belt(A).

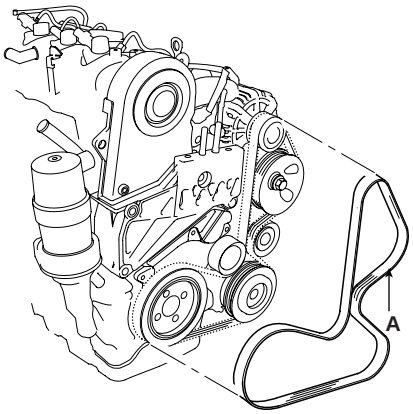

ACIE044A

NOTE

Clean the upper and lower covers before installation.

6. Install the side cover.
7. Install the front tires.(RH)
8. Install the engine mounting bracket.

CYLINDER HEAD ASSEMBLY

COMPONENTS ED362F83

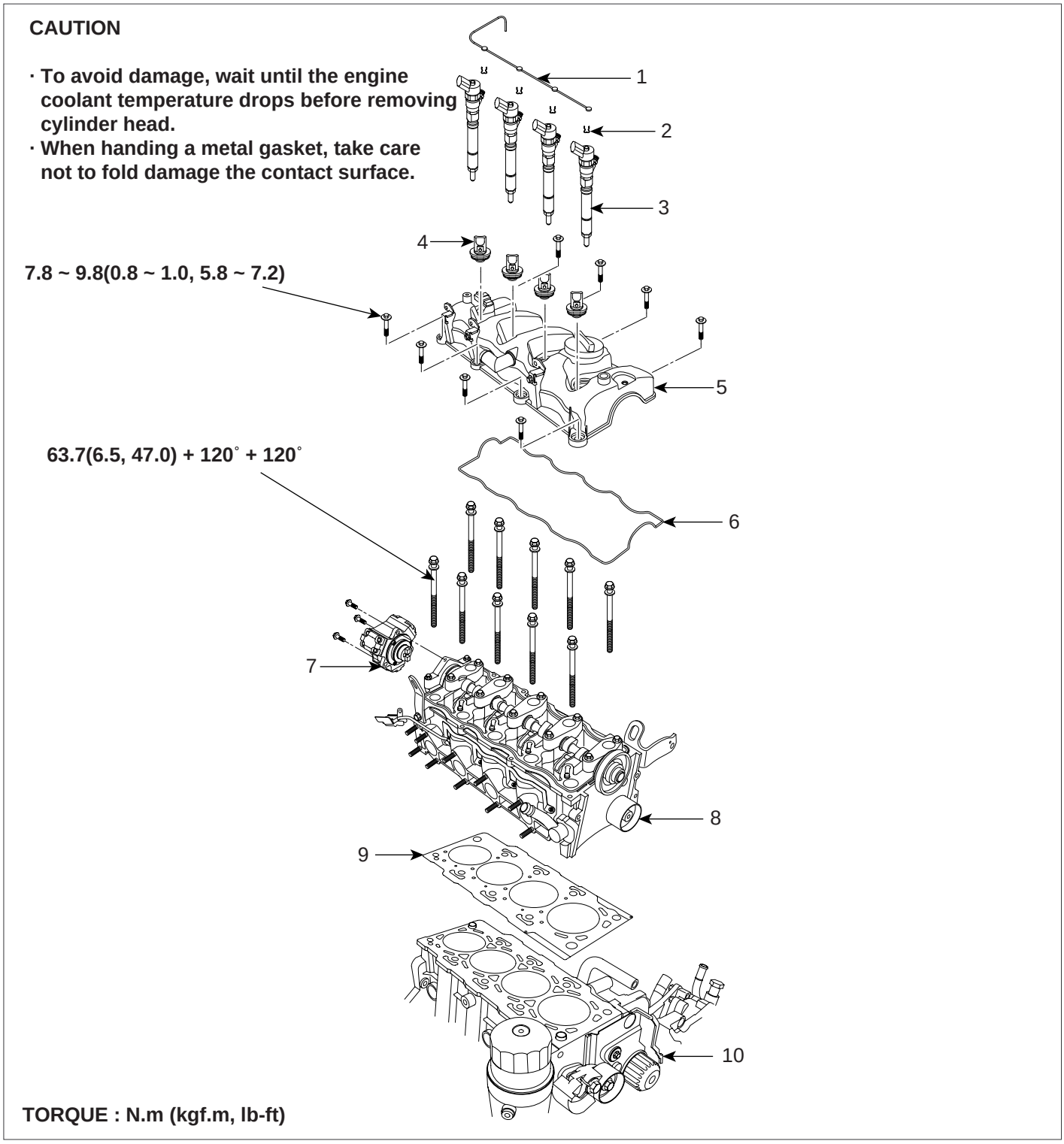

1. Fuel return hose
2. Cilp
3. Injector
4. Injector installation plug
5. Cylinder head cover
6. Cylinder head cover gasket
7. Fuel pump
8. Cylinder head
9. Cylinder head gasket
10. Cylinder block assembly

SCMM16002L

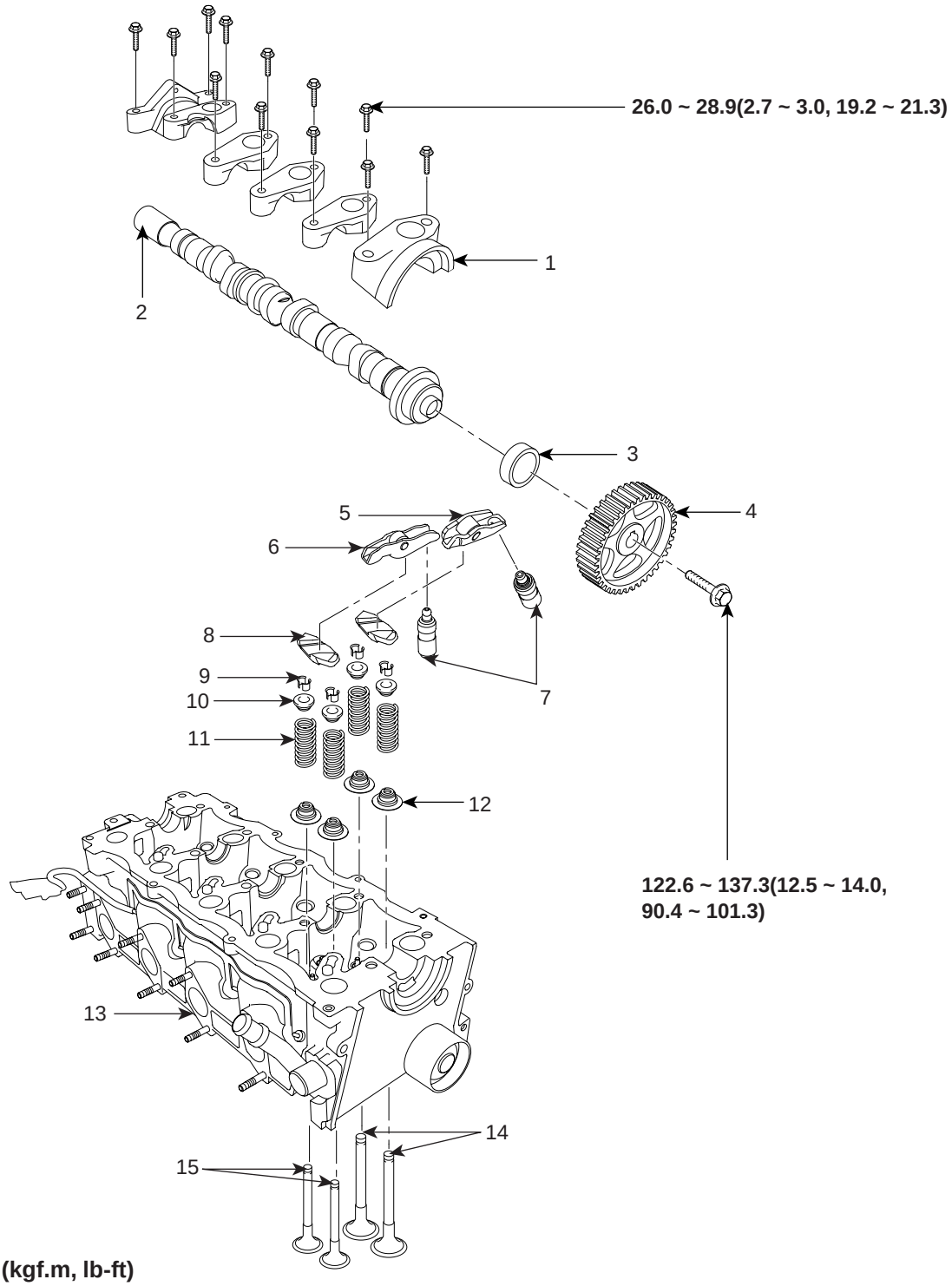

TORQUE : N.m (kgf.m, lb-ft)

1. Camshaft bearing cap
2. Camshaft
3. Oil seal
4. Camshaft sprocket
5. Intake cam follower
6. Exhaust cam follower
7. Lash adjuster
8. Valve cap
9. Valve spring retainer lock
10. Valve spring retainer
11. Valve spring
12. Valve stem seal
13. Cylinder head
14. Intake valves
15. Exhaust valves

SCMM16003L

REMOVAL ED877421

CAUTION

- ***Use fender covers to avoid damaging painted surfaces.***
- ***To avoid damage, unplug the wiring connectors carefully while holding the connector portion to avoid damage.***
- ***To avoid damaging the cylinder head, wait until the engine coolant temperature drops below normal temperature before loosening the retaining bolts.***

NOTE

Mark all wiring and hoses to avoid misconnection. Also, be sure that they do not contact other wiring or hoses, or interfer with other parts.

1. Before removing the cylinder head, the timing belt should be removed first. Refer to the timing belt 'removal' step.

2. Disconnect the fuel return hose after removing the clips(A).

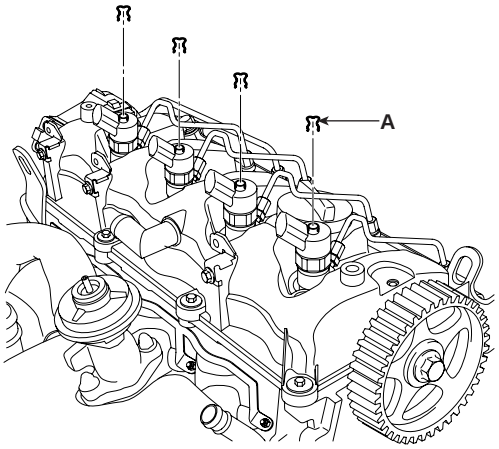

ACIE057A

3. Remove the plugs(A).
   a. Pull the plug up slightly. (more than 1mm)
   b. Rotate the plug 90° clockwise.
   c. Remove the plug with inserting a (-)driver between the plug assy(B) and the cylinder head cover(C).

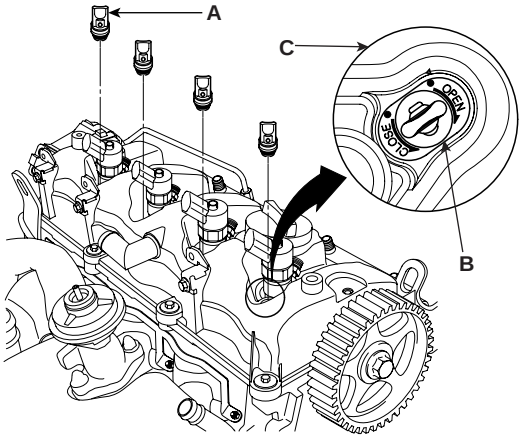

ACIE058A

4. Loosen the injector holder bolt(A) with 5mm hexagonal wrench(B).

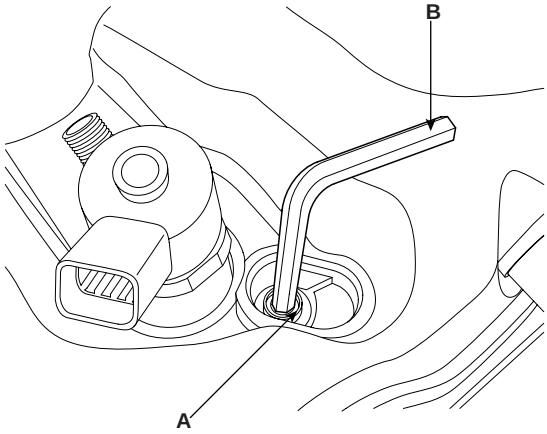

ACIE059A

5. Pull the injector holders(A) with the bolts(B).

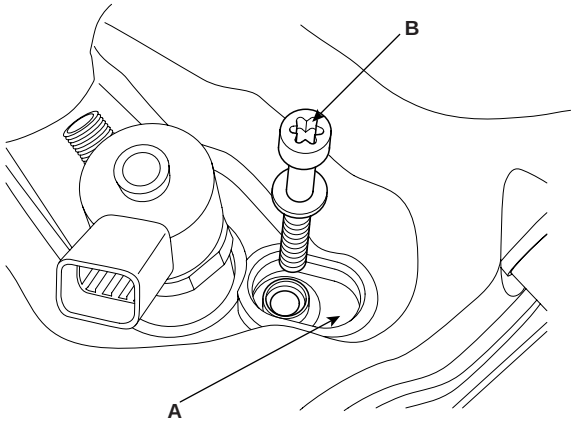

LCIF017A

6. Remove the injectors(A).

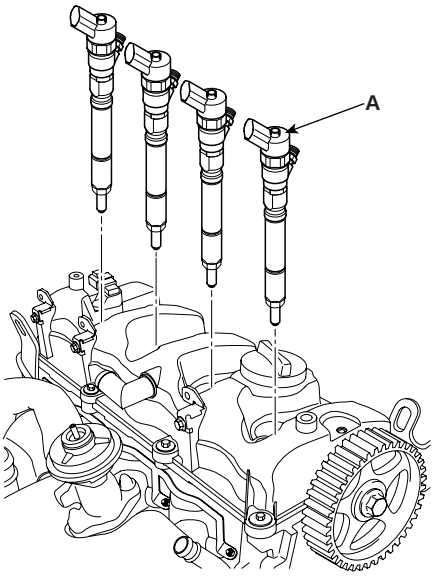

ACIE060A

7. Remove the cylinder head cover(B) mounting bolts(A).

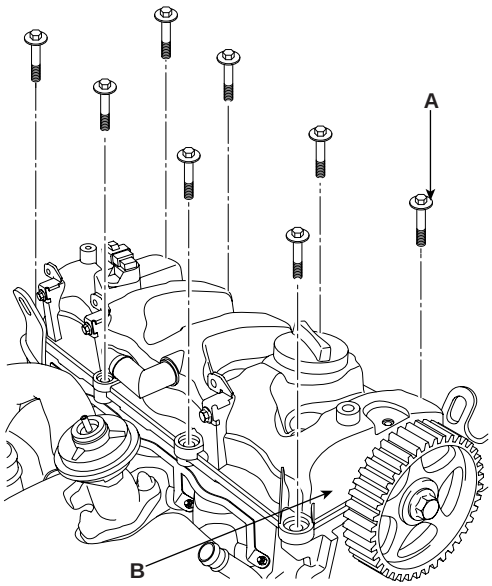

ACIE061A

8. Remove the cylinder head cover(A).

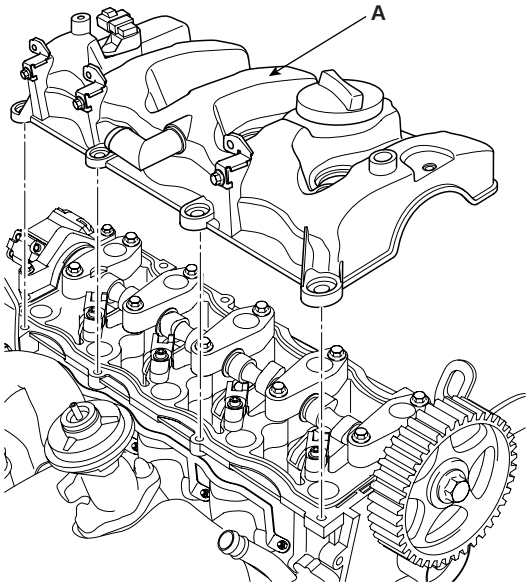

ACIE062A

9. Remove the injector holders(A) with the bolts(B) which was loosened in the step 5.

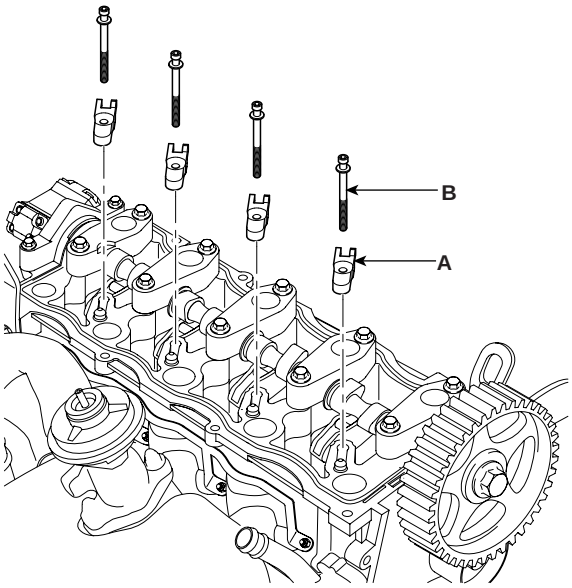

ACIE063A

10. Remove the cylinder head cover gasket(A).

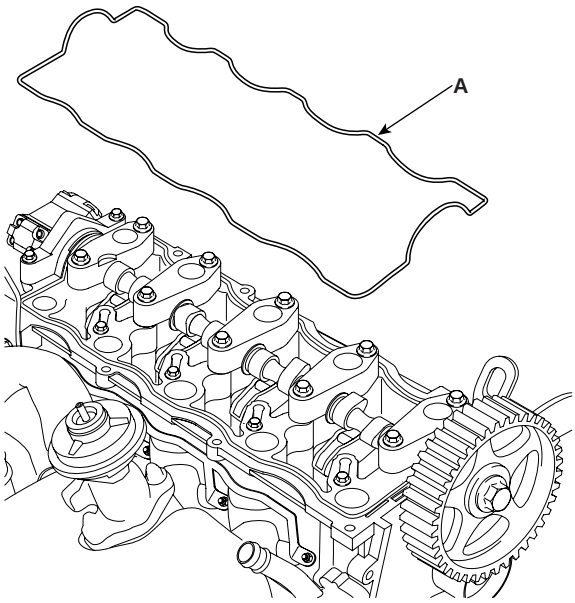

LCIF018A

11. Remove the metal tube(A) between the fuel pump(B) and the common rail(C).

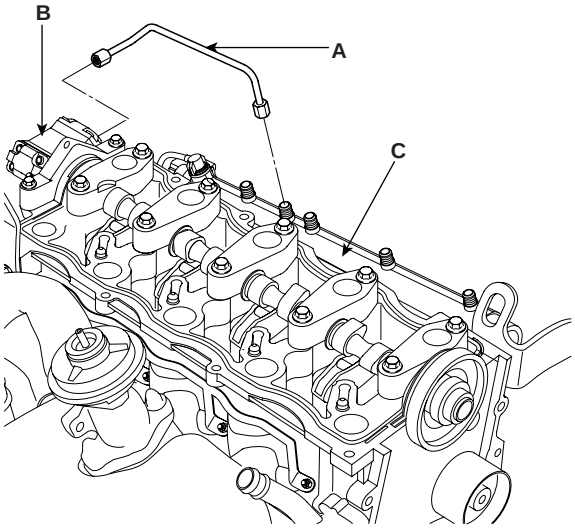

ACIE064A

12. Remove the fuel pump(A) after removing the three bolts(B).

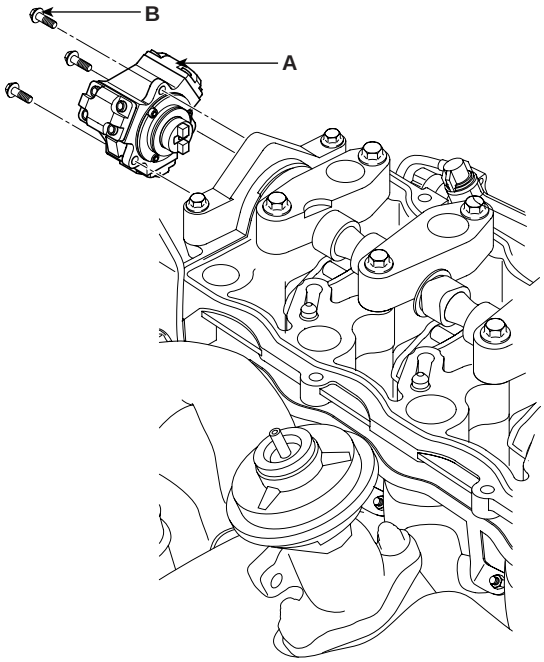

ACIE065A

13. Remove the exhaust manifold.

14. Remove the intake manifold.

15. Remove the cylinder head bolts(A), then remove the cylinder head(B).

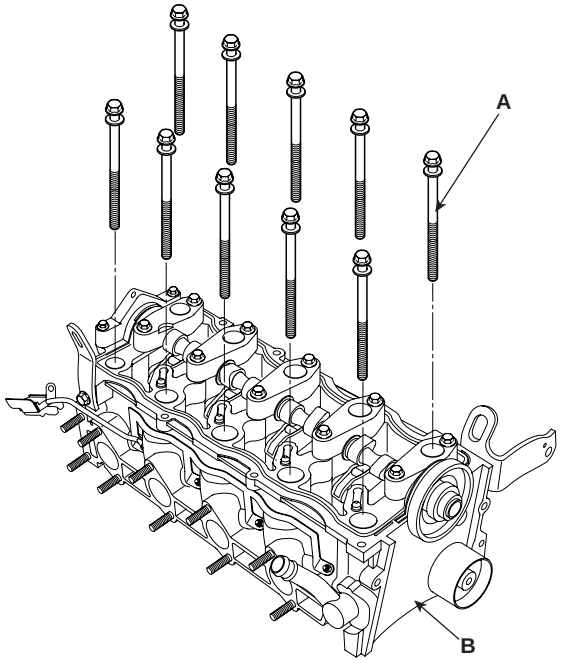

ACIE066A

CAUTION

To prevent warpage, unscrew the bolts in sqience 1/3 turn at a time: repeat the sequence until all bolts are loosened.

CYLINDER HEAD BOLTS LOOSENING SEQUENCE

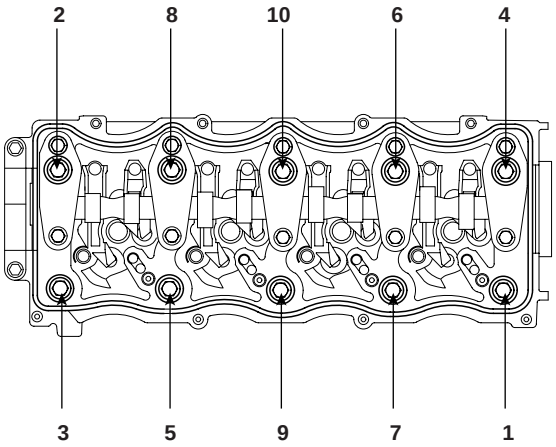

ACIE067A

DISASSEMBLY E9BF1486

NOTE

- *Identify parts as they are removed to ensure re-installation in original locations.*
- *Inspect camshafts.*

1. Remove the engine hangers, the knock bushes and the studs.

2. Remove the camshaft bearing caps(A).

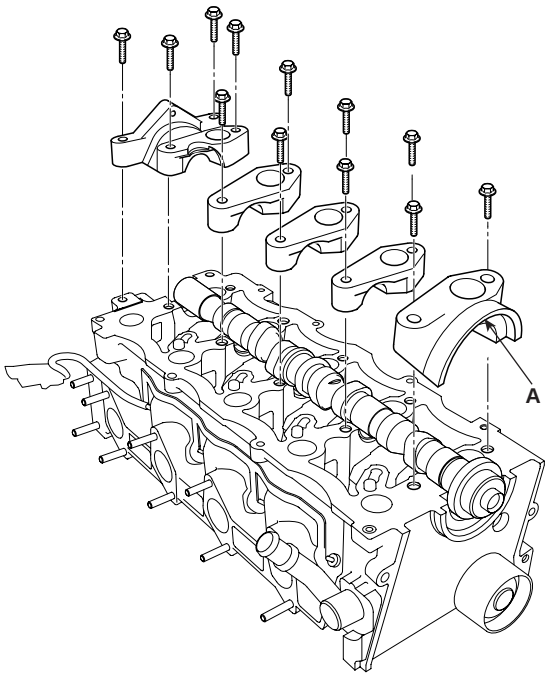

ACIE068A

3. Remove the camshaft(A) with the oil seal(B).

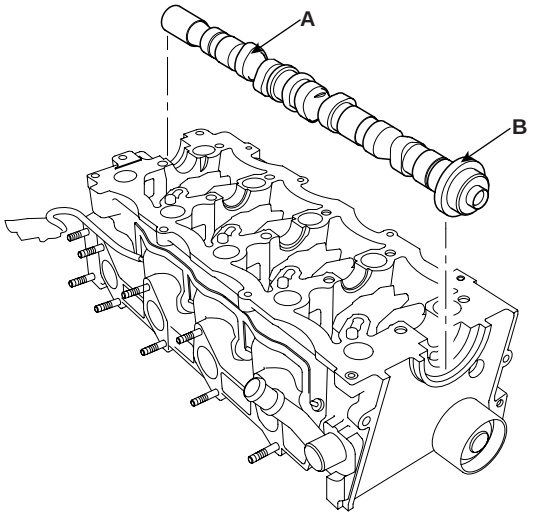

ACIE069A

4. Remove the In/Ex cam followers(A, B).

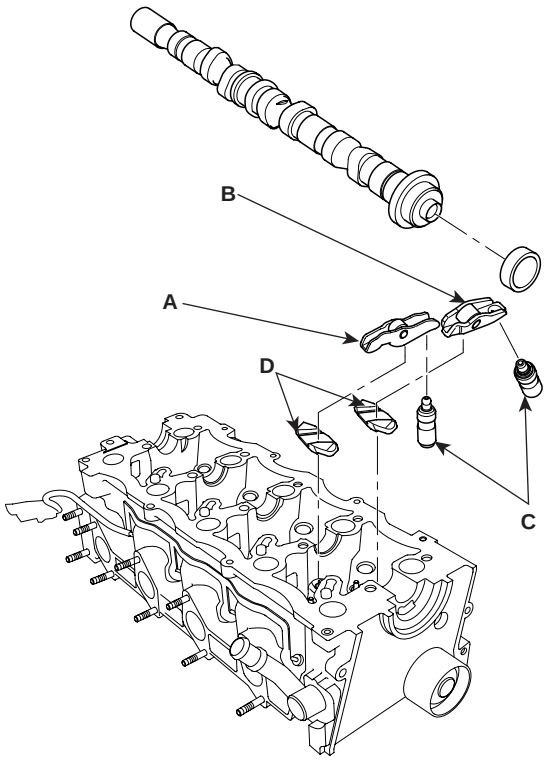

ACIE070A

5. Remove the lash adjusters(C).

6. Remove the valve caps(D).

7. Using an appropriate-sized socket and plastic mallet, lightly tap the valve retainer to loosen the valve retainer locks before installing the valve spring compressor.

NOTE

Identify valves and valve springs as they are removed so that each item can be reinstalled in its original position.

8. Using the SST(09222-27300), compress the valve spring(A) in order to remove the valve spring retainer locks(B).

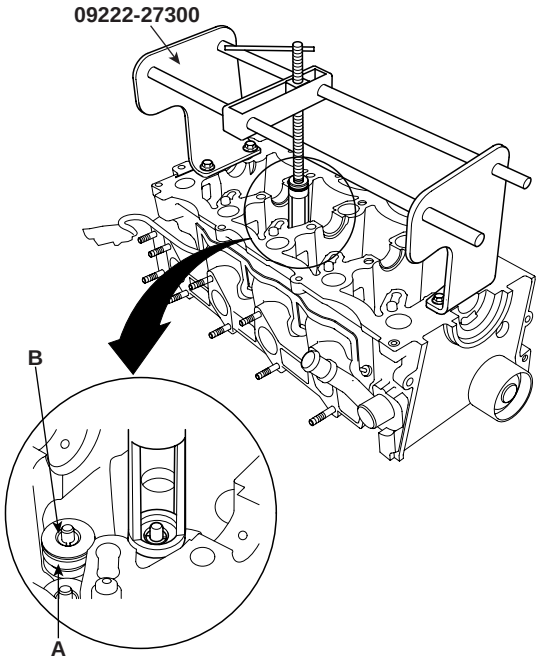

ACIE071A

9. Remove the valve stem seals(A).

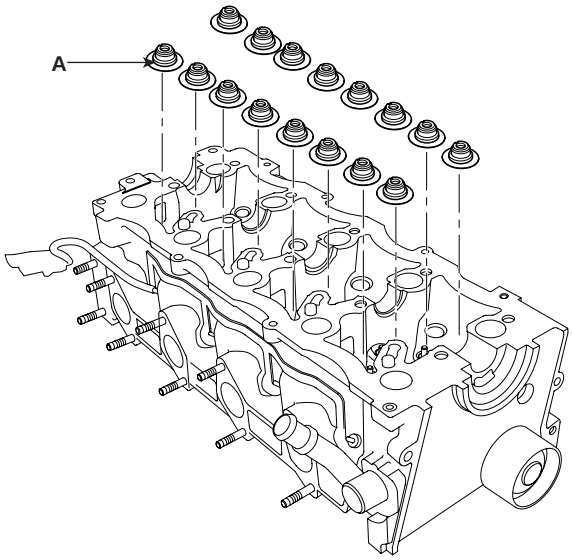

ACIE072A

INSPECTION E680F0AE

CAMSHAFT

NOTE

Do not rotate the camshaft during inspection.

1. Put the camshaft(A) and the camshaft bearing caps(B) on the cylinder head(C), then tighten the bolts to the specified torque with the following sequence below.

Specified torque
26.5 ~ 29.5N.m (2.65 ~ 2.95kgf.m, 20 ~ 22lb-ft)

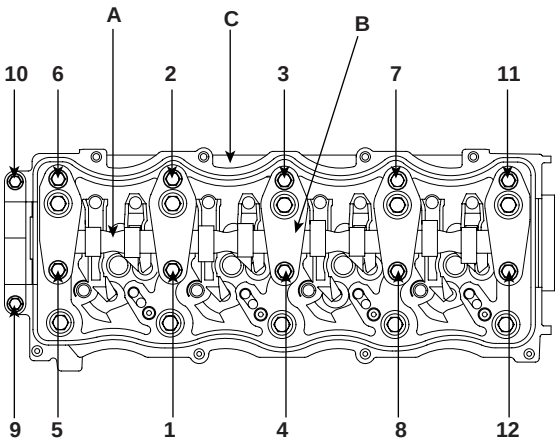

ACIE073A

2. Seat the camshaft by pushing it toward the rear of the cylinder head.

3. Zero the dial indicator(A) against the end of the camshaft(B).
   Push the camshaft(B) back and forth, and read the end play.

Camshaft End Play
Standard (New) : 0.05 ~ 0.15mm (0.002 ~ 0.006in.)

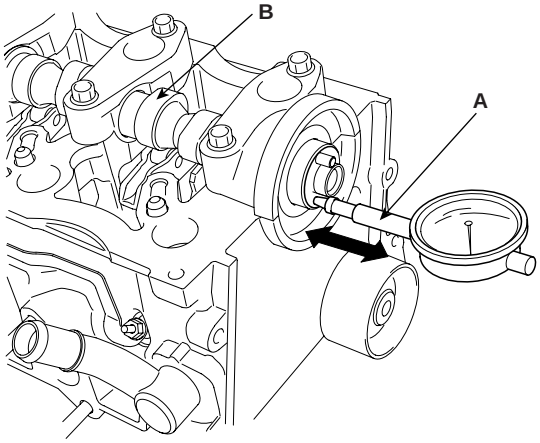

ACIE074A

4. Remove the bolts, then remove the camshaft bearing caps from the cylinder head(A).
   - Lift the camshaft(B) out of the cylinder head(A), wipe it clean. Replace the camshaft if any lobes are pitted, scored, or excessively worn.
   - Clean the camshaft bearing surfaces in the cylinder head, then set the camshaft back in place.
   - Place a plastigauge strip(C) across each journal.

5. Install the camshaft bearing caps and tighten the bolts to the specified torque.

6. Remove the camshaft bearing caps, then measure the widest portion of the plastigage(C) on each journal.

Camshaft-to-Camshaft bearing cap oil clearance
Standard (New)
0.040 ~ 0.074mm (0.0020 ~ 0.0029in.)

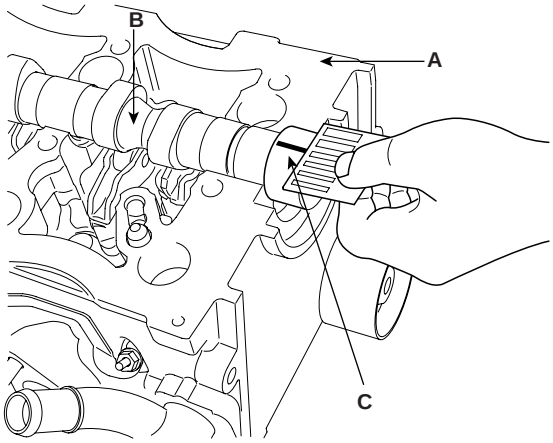

LCIF020A

7. Check the cam height wear.

[Standard]
Intake : 34.697mm (1.366in.)
Exhaust : 34.571mm (1.361in.)

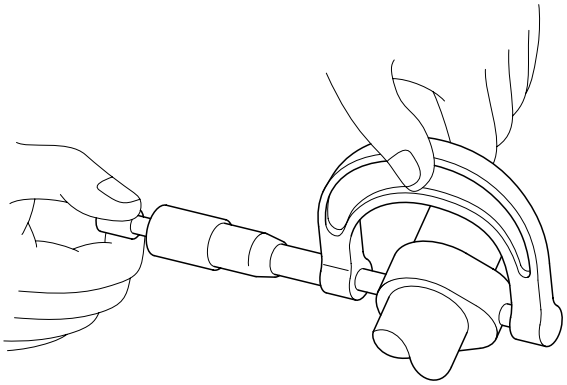

ACIE076A

WARPAGE

Check the cylinder head(A) for warpage.

- If warpage is less than 0.03mm (0.0012in.) for width, 0.09mm (0.0035in.) for length and 0.012mm (0.0035in) for 51mm ×51mm, cylinder head is in good condition.
- If warpage is over the standard value, replace the cylinder head.

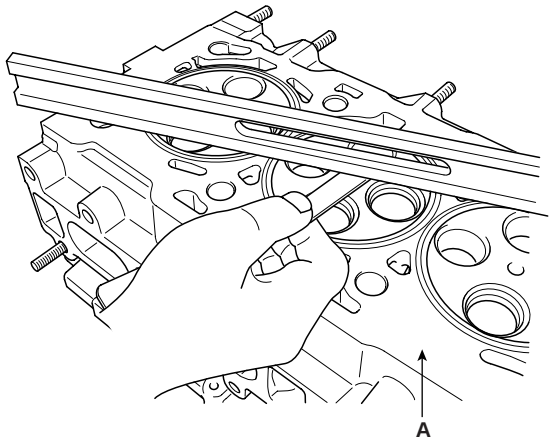

ACIE084A

Measure along edges, and three ways across center.

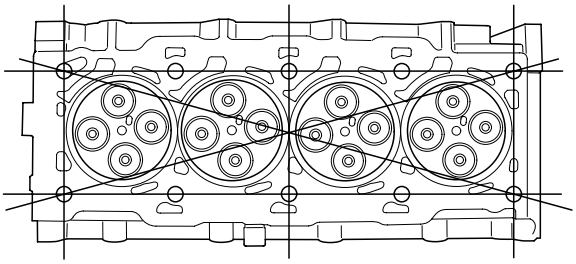

ACIE085A

REASSEMBLY E75104BF

NOTE

Prior to reassembling, cylinder head assembly shall be cleaned sufficiently to remove scrap and clust. (Clean holes with special care.)

1. Using the SST(09222-27200) insert the valve stem seals(A).

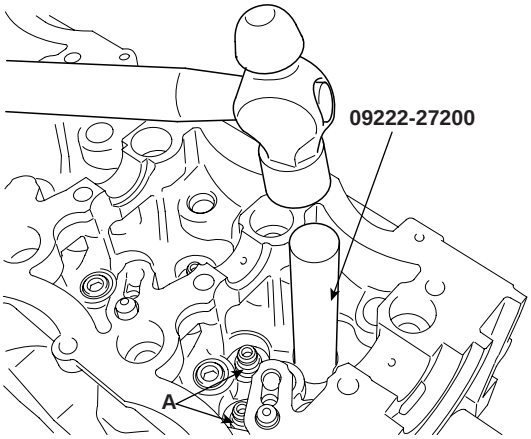

ACIE086A

2. Insert the valves through the valve stem seals.

NOTE

Make sure the valves move up and down smoothly.

3. Install the valve spring(A) and valve spring retainer(B), then install the SST (09222-27300, the valve spring compressor). Compress the spring(A) and install the valve spring retainer lock(c).

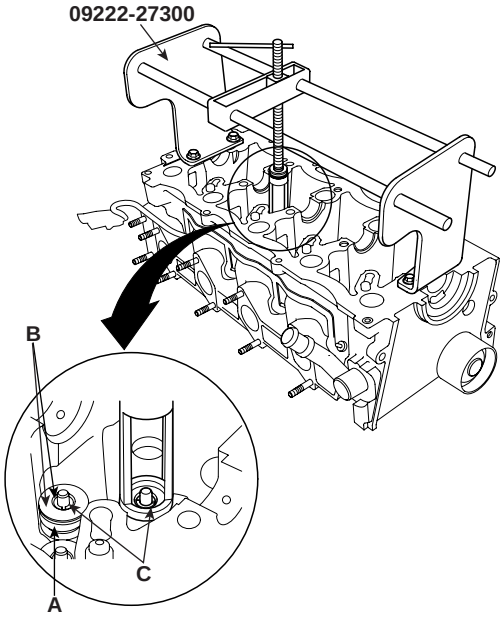

ACIE087A

4. Lightly tap the end of each valve stem two or three times with a plastic mallet to ensure proper seating of the valve and valve spring retainer locks.

   NOTE

   Tap the valve stem only along its axis so you do not bend the stem.

5. Assembly of lash adjuster.
   a. Until installing, lash adjuster shall be held upright so that gas oil in lash adjuster should not spill and assured that dust does not adhere to adjuster.
   b. Lash adjust shall be inserted tenderly to the cylinder head not to spill gas oil from lash adjuster. In case of spilling air bent shall be done in accordance with the air bent procedure below.

   NOTE

   Air bent procedure
   1. In case of lash adjuster alone.
   Stroke lash adjuster in gas oil 4~5 times by pushing its cap while pushing the ball down slightly by hard steel wire.
   Take care not to severely push hard steel wire down since ball is several grams.
   2. After installed on engine
   Lash adjuster might give out unusual noise if air is mingled. Apply slow racing from idle to 3,000rpm (Approximately one minute per one racing) and the air shall be removed from adjuster.
   Therefore noise can be extinguished.

6. Install the valve-caps.

7. Put the cam followers on the lash adjusters and valve caps.

8. After wiping down the camshaft and camshaft seal in the cylinder head, lubricate both surfaces and install the camshaft with engine oil.

9. Confirm that cam followers are located on lash adjusters and their rollers are in touch with camshaft.

10. In assembly camshaft bearing cap, to the cylinder head with the cylinder block, all pistons should be in the middle position between TDC(Top Dead Center) and BDC(Bottom ead Center) because valves come out of the bottom surface of the cylinder head.

11. Install the bolts loosely.

12. Tighten each bolt two turns at a time in the sequence shown below to ensure that the cam followers do not bind on the valves.

Tightening torque
26.5 ~ 29.5N.m (2.65 ~ 2.95kgf.m, 20 ~ 22lb-ft)

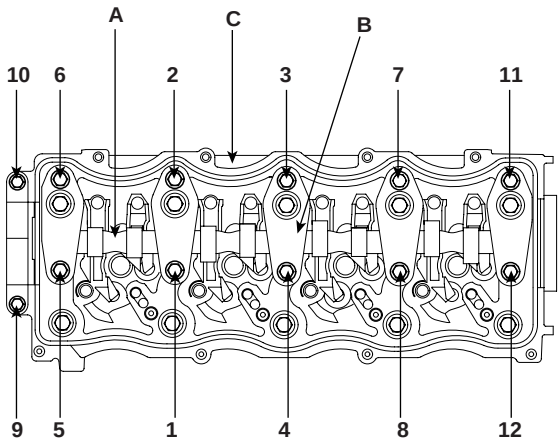

ACIE073A

INSTALLATION E4F40791

Install the cylinder head in the reverse order of removal :

NOTE

- *Always use a new head gasket.*
- *Cylinder head and cylinder block surface must be clean.*
- *Turn the crankshaft so the No.1 piston is at TDC(Top Dead Center).*

1. Cylinder head dowel pins must be aligned.

2. Select the cylinder head gasket.
   a. Measure the piston protrusion from the upper cylinder block face (I) on 8 places (A ~ H) at T.D.C. Measure on the crankshaft center line considering the piston migration.

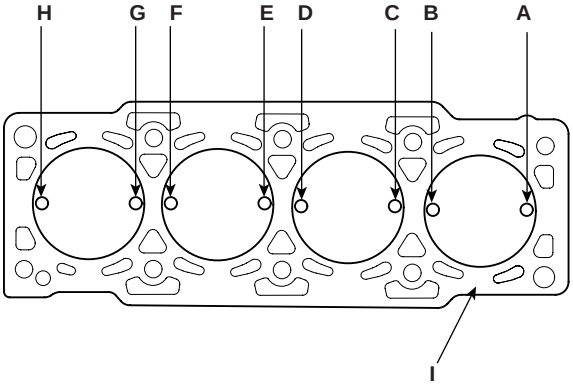

ACIE088A

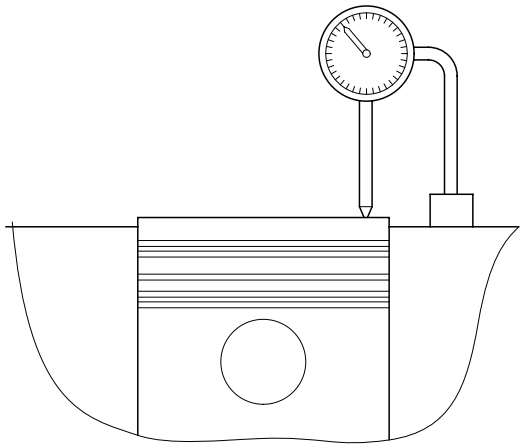

ACIE089A

   b. Select the gasket in the table below using the average value of piston protrusions.
   Although even the only 1 point is over than the each rank limit, use 1 rank upper gasket than specified in the table below.

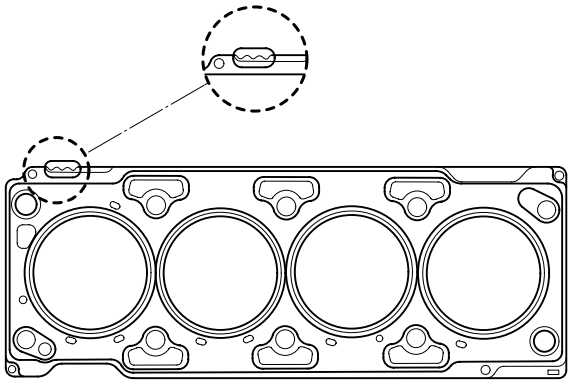

ACIE090A

Displacement	2.2 L		
Average of pisston protrusion	0.194 ~ 0.337mm (0.0079 ~ 0.013in.)	0.337 ~ 0.440mm (0.013 ~ 0.017in.)	0.440 ~ 0.542mm (0.017 ~ 0.021in.)
Gasket thickness	1.1 ± 0.05mm (0.0433 ± 0.0020in.)	1.2 ± 0.05mm (0.0472 ± 0.0020in.)	1.3 ± 0.05mm (0.0512 ± 0.0020in.)
Limit of each rank extant	0.43mm (0.0169in.)	0.53mm (0.0208in.)	-
Identification code	SCMEM6102D	SCMEM6103D	SCMEM6104D

   c. Install the gasket so that the identification mark faces toward the flywheel side.

3. Position the cylinder head assembly over the gasket.

4. Tighten the cylinder head bolts slightly.

5. Install the camshaft sprocket, aligning the timing mark.

Tightening torque
122.6 ~ 137.3N.m (12.5 ~ 14.0kgf.m, 90.4 ~ 101.3lb-ft)

6. Tighten the bolts to the specified torque

Tightening torque
63.7N.m (6.5kgf.m, 47.0lb-ft) + 120° + 120°

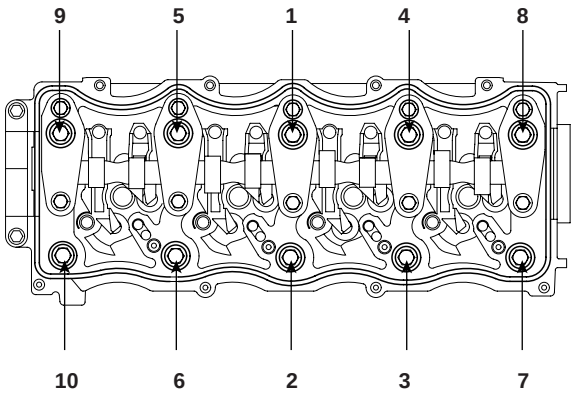

ACIE094A

NOTE

- *Tightening sequence of cylinder head bolt should be confirmed to the upper drawing.*
- *Cylinder head bolt must be replaced.*

7. Install the fuel pump assembly.

8. Install the intake/exhaust manifold assemblies.

9. Install the hose between the vacuum pump and the cylinder head.

10. If it is necessary to replace the oil seals on the cylinder head cover for injectors, use the SST(09351-27401).

11. Install the head cover gasket in the groove of the cylinder head cover.

NOTE

- *Cylinder head cover gasket must be replaced.*
- *Before installing the head cover gasket, throughly clean the seal and the groove.*
- *When installing, make sure the head cover gasket is seated securely in the corners of the recesses with no gap.*

12. Apply liquid gasket to the head cover gasket at the four corners of the recesses.

NOTE

- *Use liquid gasket LOCTITE 5699 or TH1212D.*
- *Check that the mating surface are clean and dry before applying liquid gasket.*
- *Do not install the parts if five minutes or more have elapsed since applying liquid gasket. Instead, reapply liquid gasket after removing old residue.*
- *After assembly, wait at least 30 minutes before filling the engine with oil.*

13. When installing the cylinder head cover, hold the head cover gasket in the groove by placing your fingers on the camshaft holder contacting surfaces (top of the semicircles).
Once the cylinder head cover is on the cylinder head, slide the cover slightly back and forth to seat the head cover gasket.

NOTE

- *Before installing the cylinder head cover, clean the cylinder head contacting surfaces with a shop towel.*
- *Do not touch the parts where liquid gasket was applied.*
- *Take care not to damage the oil seals when installing the cylinder head cover.*
- *Visually check the oil seals for damage.*
- *Replace any washer that is damaged or deteriorated.*

14. Tighten the nuts in two or three steps. In the final step, tighten all bolts, in sequence.

Tighten torque
8 ~ 10N.m (0.8 ~ 1.0kgf.m, 5.90 ~ 7.38lb-ft)

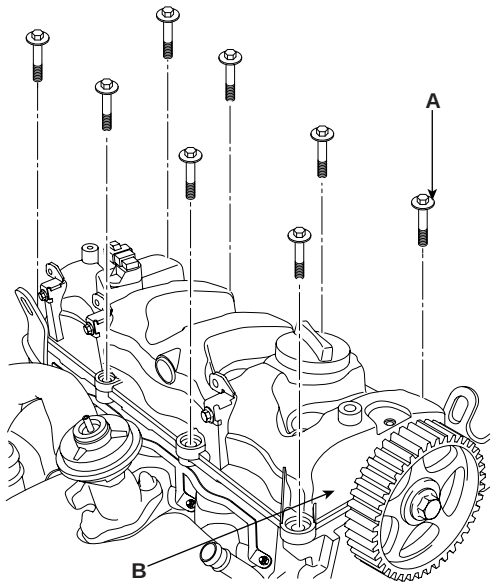

SCMEM6071D

NOTE

After assembly, wait at least 30 minutes before filling the engine with oil.

15. After installating, check that all tubes, hoses and connectors are installed correctly.

16. Insert the injectors(C), moving back the injector holders(A) with the bolts(B).

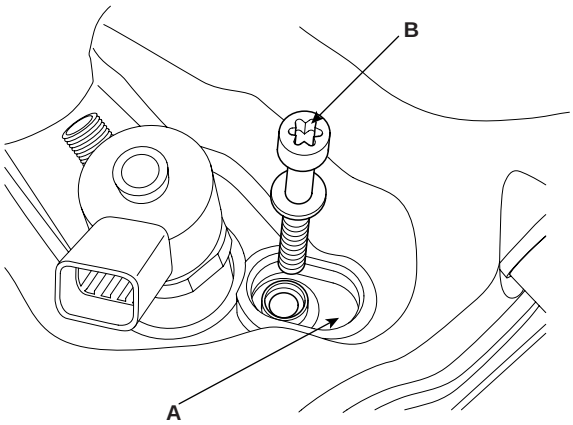

ACIE096A

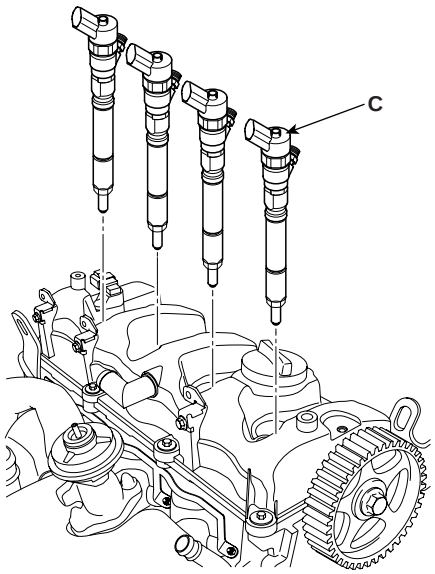

ACIE095A

17. Tighten the injector holder bolts(A) with 5mm hexagonal wrench(B).

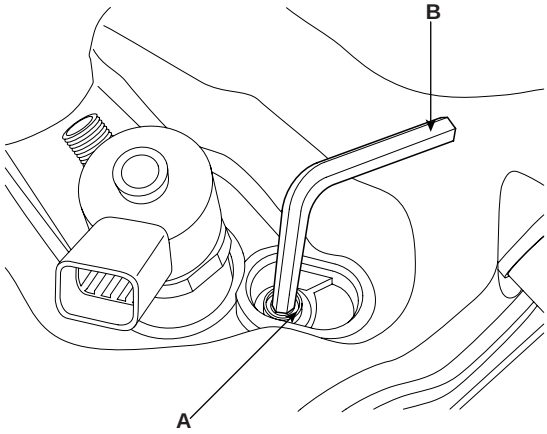

ACIE059A

18. Install the injector plug(A).

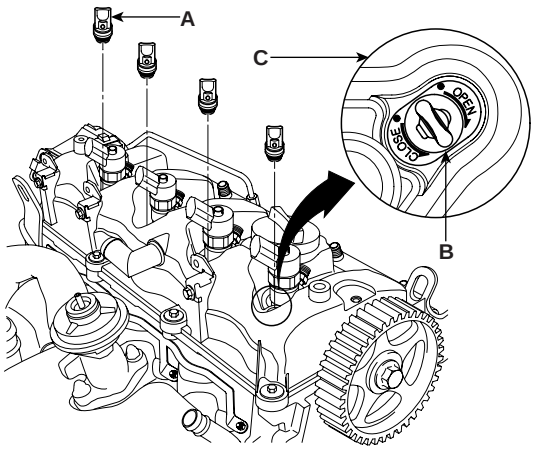

ACIE097A

a. Make sure that the stopper of the plug faces 'OPEN' side. Otherwise pull and rotate the plug clockwise so the stopper should face 'OPEN' side.
b. Apply the engine oil on the head cover mating surface or the gasket of the plug.
c. Insert the plugs in the head cover.
d. Rotate the plug inserted counterclockwise 90˚ .
e. After installation, rotate the plug clockwise. If it is rotated, repeat the step a ~ d.

NOTE

Plug gasket must be replaced.

ENGINE BLOCK

COMPONENTS E9326704

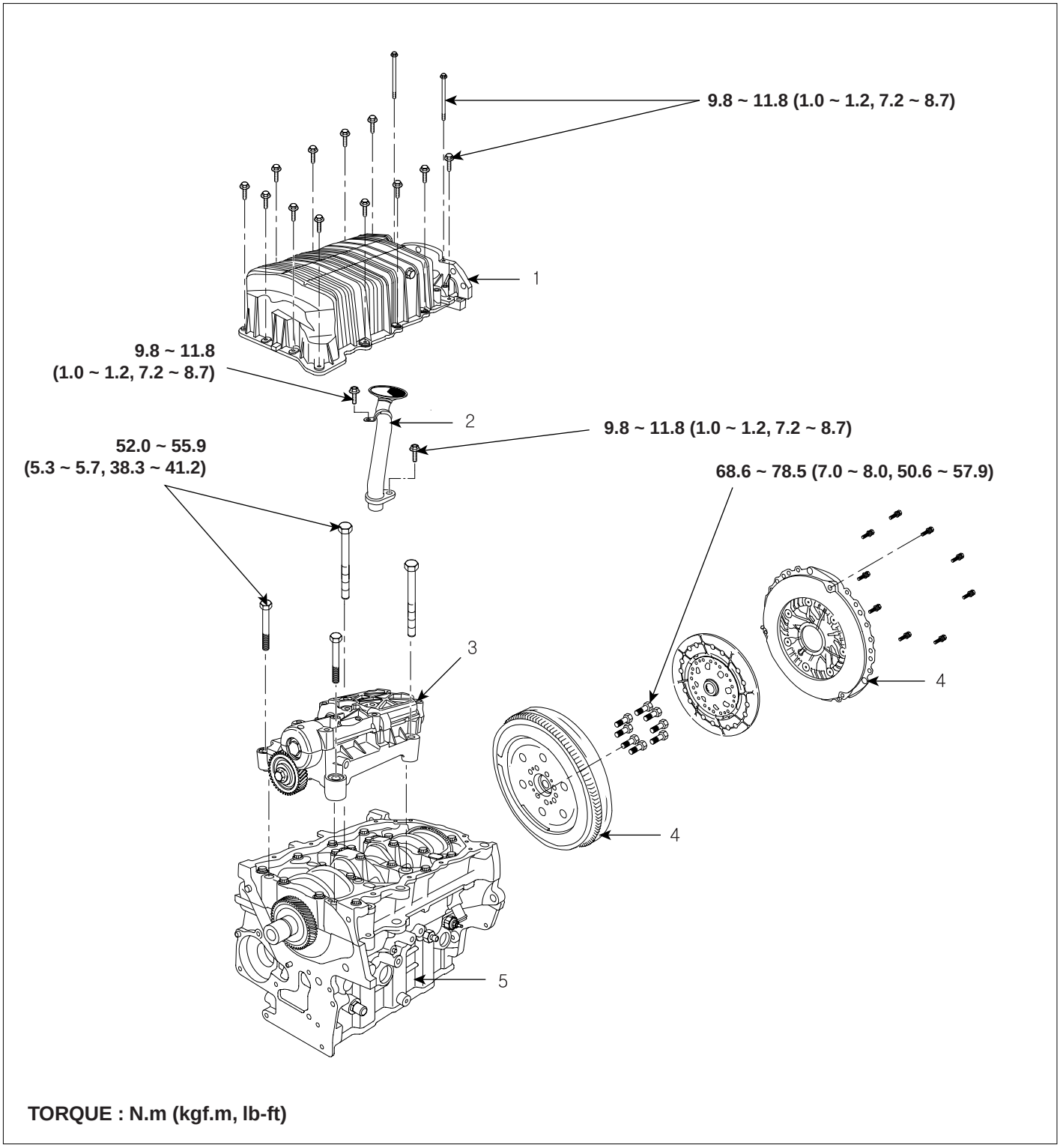

1. Oil pan
2. Oil screen
3. Balance shaft assembly
4. Duel mass flywheel
5. Clutch assembly

SCMM16008L

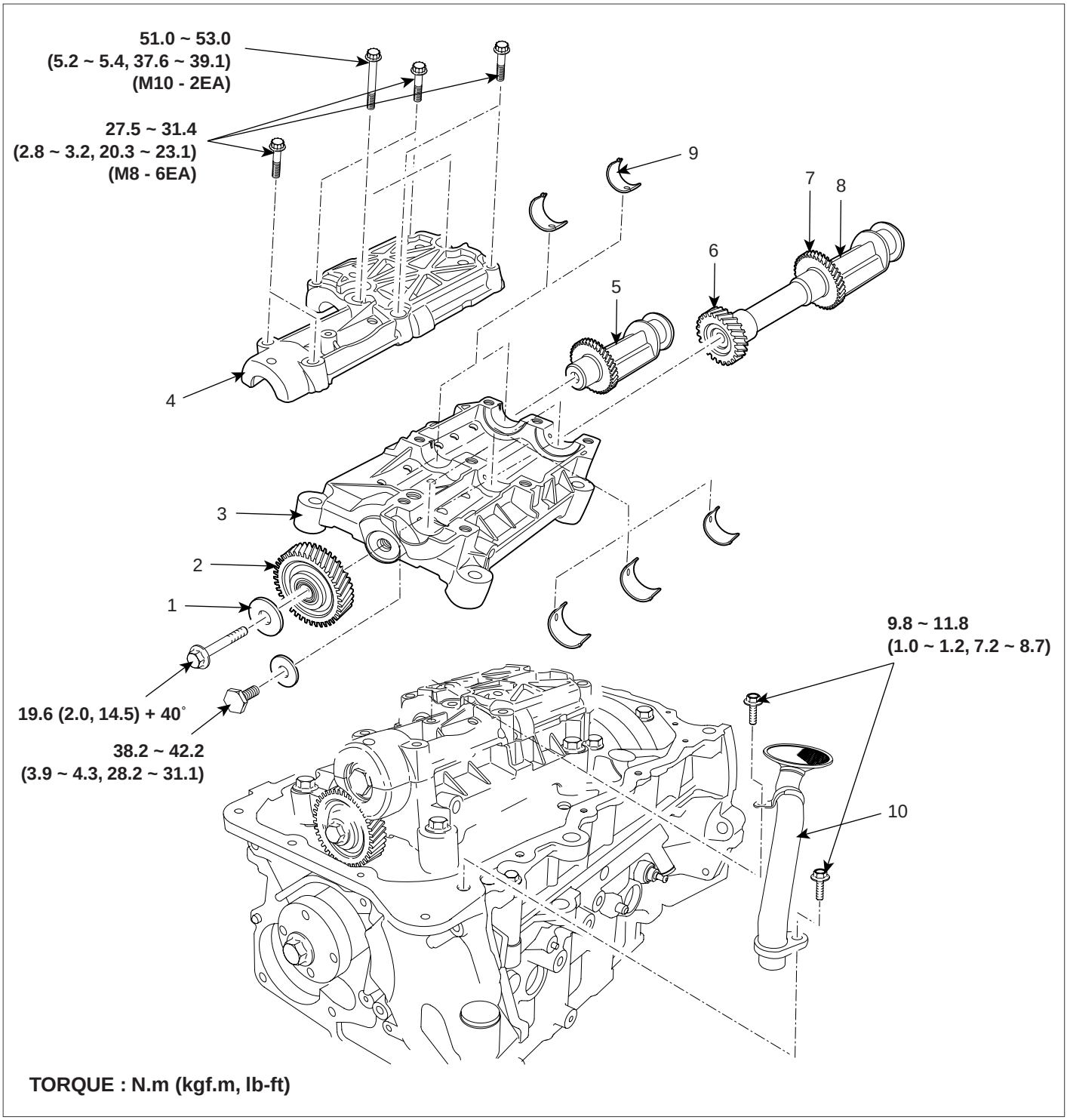

1. Washer
2. Balance shaft intermediate gear
3. Balance shaft upper carrier
4. Balance shaft lower carrier
5. Balance driven shaft
6. Balance shaft drive gear
7. Balance shaft driver gear
8. Balance driver shaft
9. Balance shaft bearing
10. Oil screen

SCMM16009L

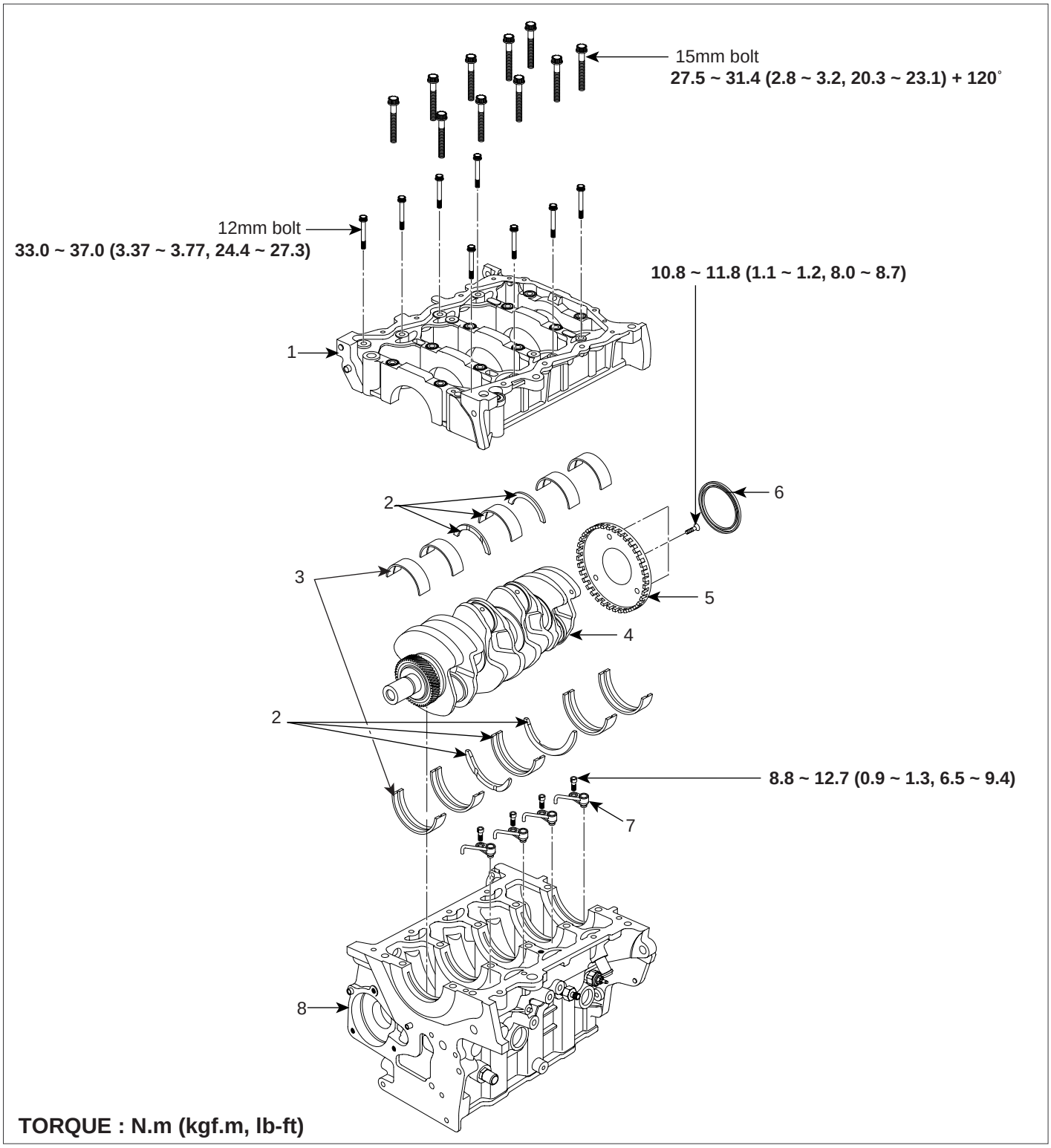

1. Bad plate
2. Center bearings
3. Main bearings
4. Crankshaft
5. Crankshaft position sensor wheel
6. Crankshaft rear oil seal
7. Piston cooling jet (Oil jet)
8. Engine block

SCMM16010L

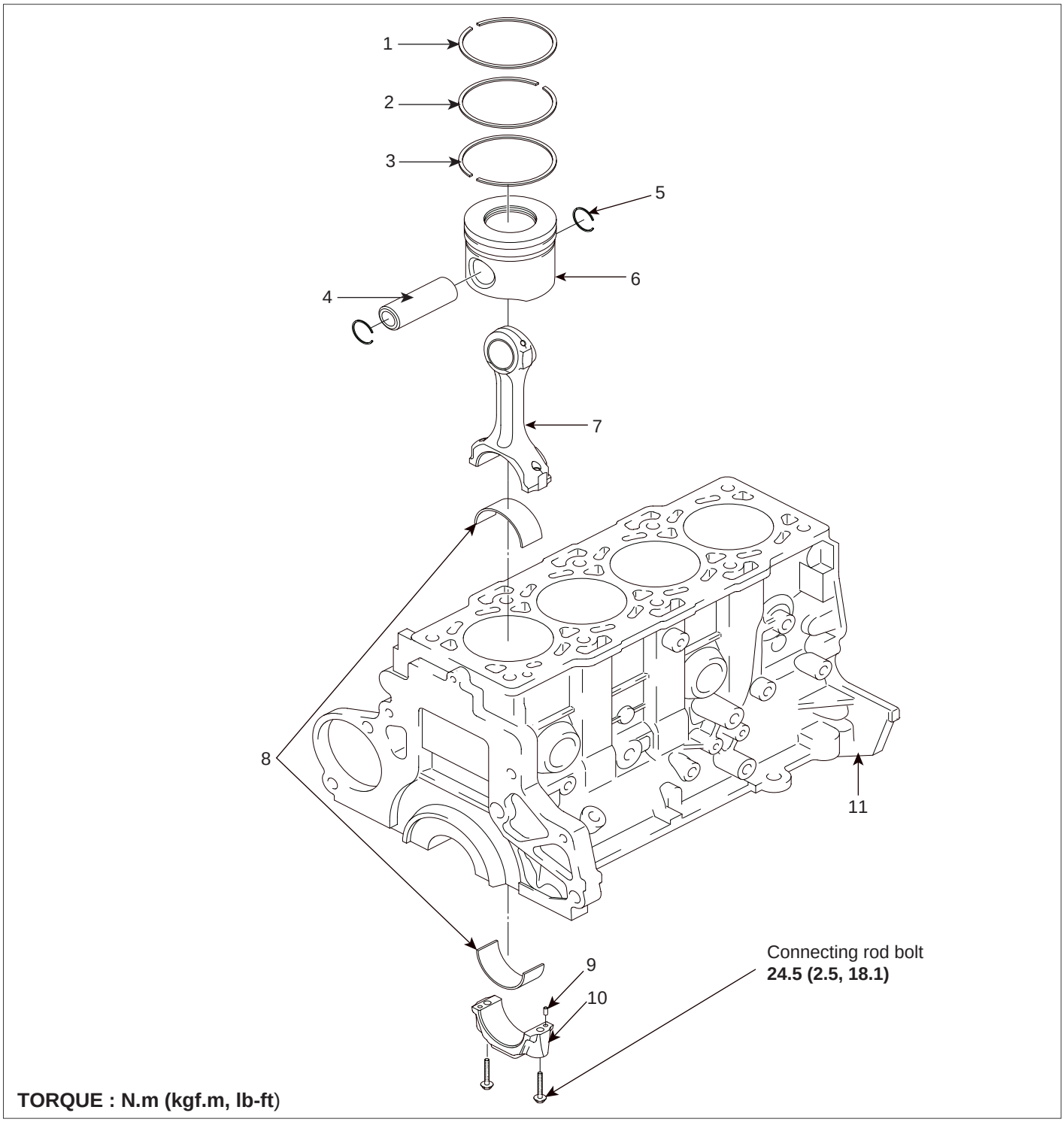

1. Piston ring No. 1
2. Piston ring No. 2
3. Oil ring
4. Piston pin
5. Snap ring
6. Piston
7. Connecting rod
8. Connecting rod bearings
9. Dowel pin
10. Connecting rod bearing cap
11. Engine block

SCMM16011L

REMOVAL E55C8328

1. Remove the engine and transaxle assembly from the vehicle.
2. Remove the transmission from the engine and transaxle assembly by loosening bolts.
3. Remove the eight flywheel bolts, then separate the flywheel from the crankshaft flange.
4. Remove the timing belt assembly.
5. Remove the intake and the exhaust manifold.
6. Remove the cylinder head assembly.
7. Remove the alternator. (See EE group - alternator)
8. Remove the engine oil level gauge(A).

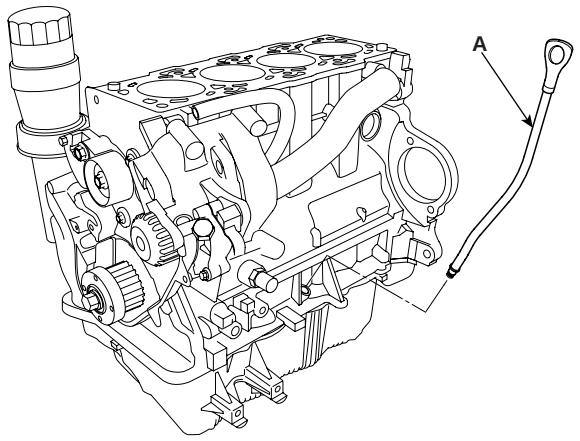

ACIE102A

9. Remove the CKP(Crankshaft Position Sensor)(A) and the oil pressure switch(B).

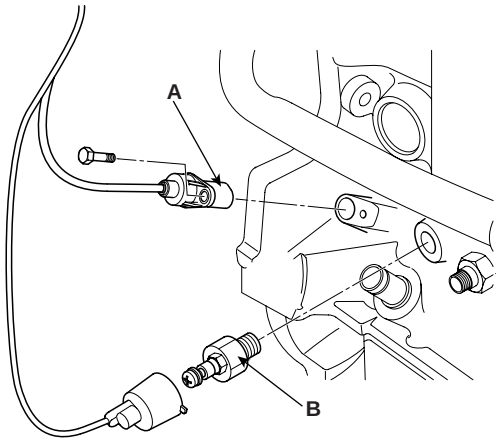

ACIE103A

10. Remove the heater and oil cooler return pipe assembly(A) after loosening the hose clamps(B) and the bolts(C, D, E).

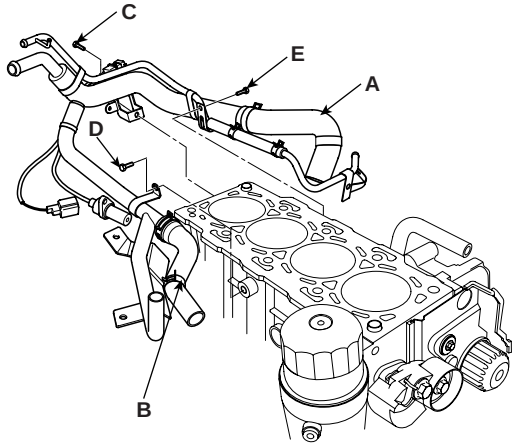

ACIE104A

11. Remove the tube(A) between the vacuum pump and the cylinder head.

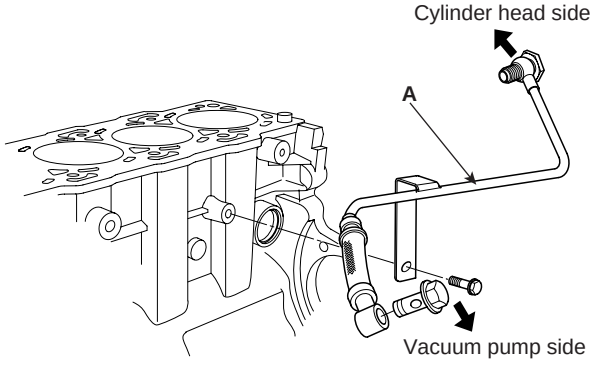

LCIF026A

12. Remove the power steering pump mounting bracket assembly(A).

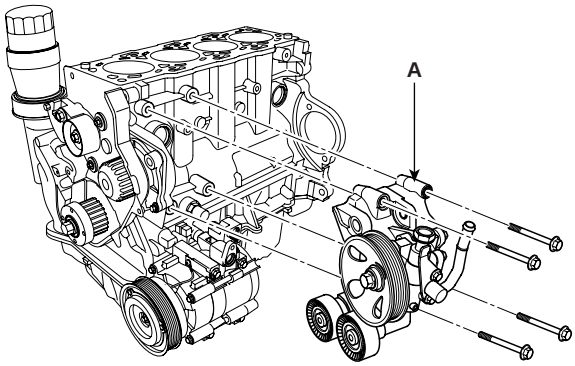

ACIE106A

13. Remove the water inlet pipe assembly(A) by loosening a bolt(B) and clamps.

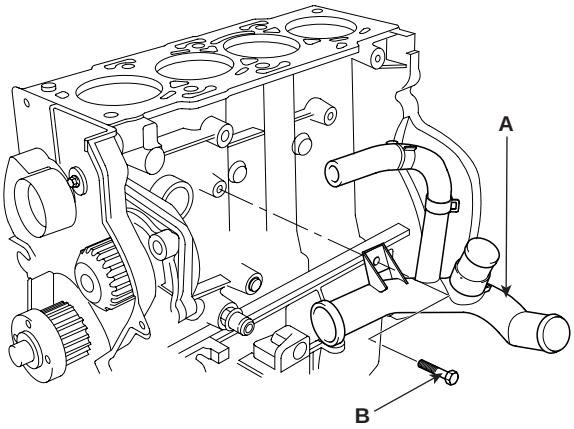

ACIE107A

14. Remove the air compressor(A). (See HA group - compressor)

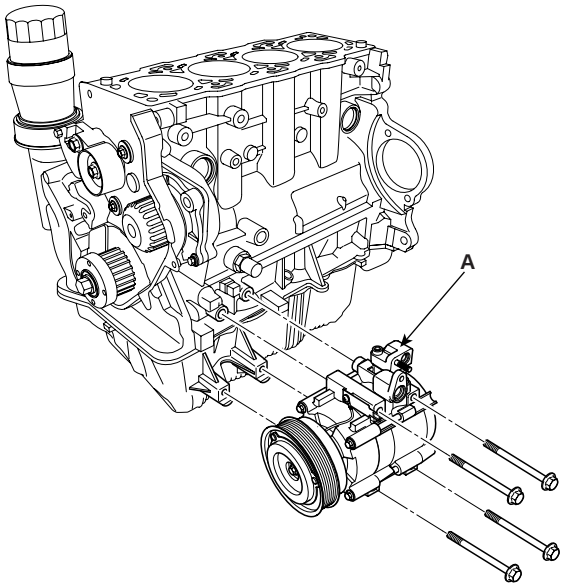

ACIE108A

15. Remove the auto-tensioner(A) by loosening the bolt(B).

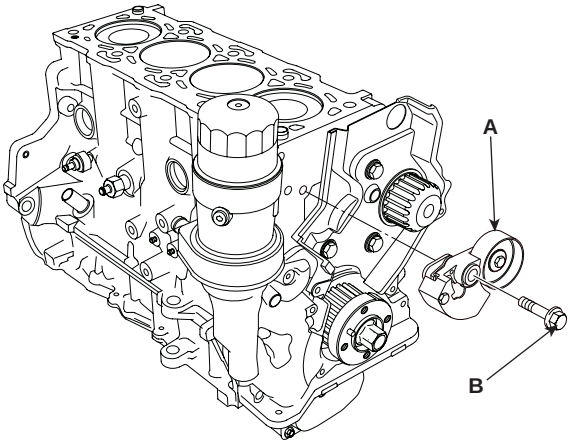

ACIE109A

16. Remove the timing belt rear cover(A).

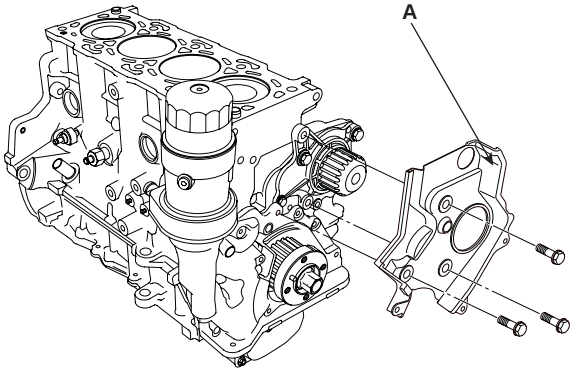

ACIE110A

17. Remove the water pump assembly(A) with the gasket(B).

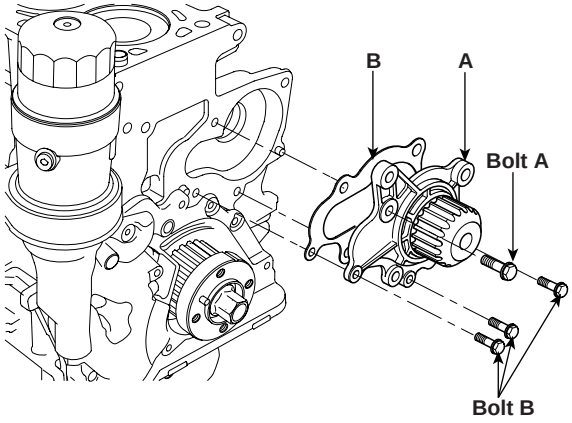

LCIF027A

18. Remove the oil pan(A) after removing the oil-pan acoustic shield.

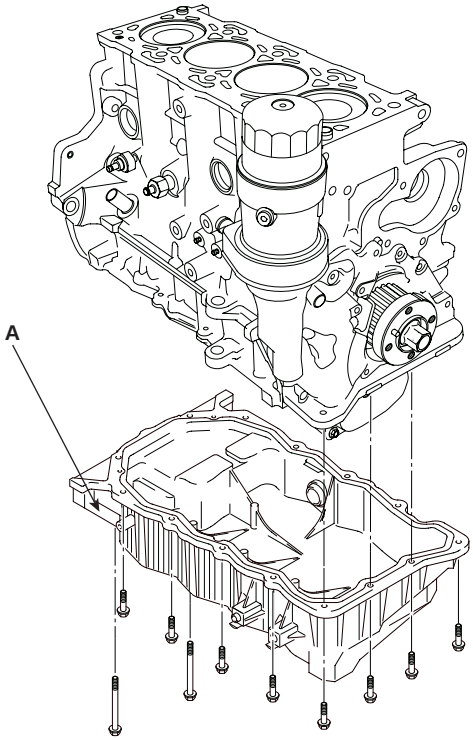

ACIE112A

NOTE

An oil-pan acoustic shield can be also removed when removing a transmission from an engine.

19. Remove the oil screen(A) for removal of the oil pump case.

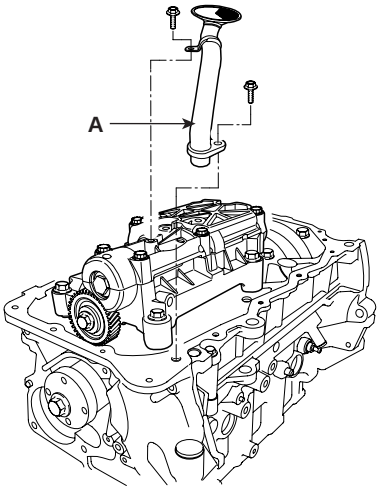

SCMM16012L

20. Remove the crankshaft bolt(A), then seperate the crankshaft sprocket(B).

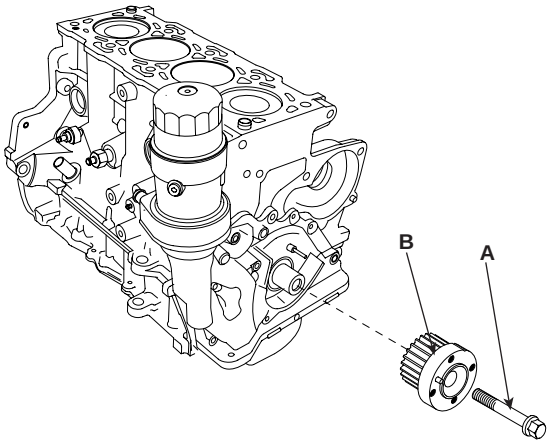

ACIE114A

21. Remove the oil-pump assembly(B) by loosening the bolts(A).

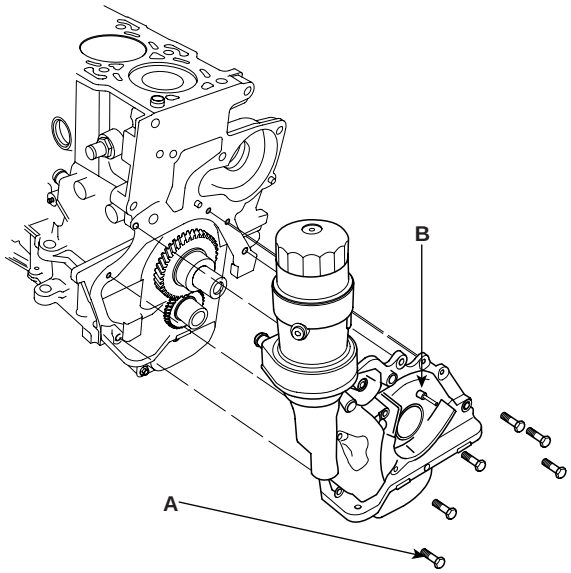

ACIE115A

DISASSEMBLY EA4886D5

1. Remove the balance shaft assembly(A).

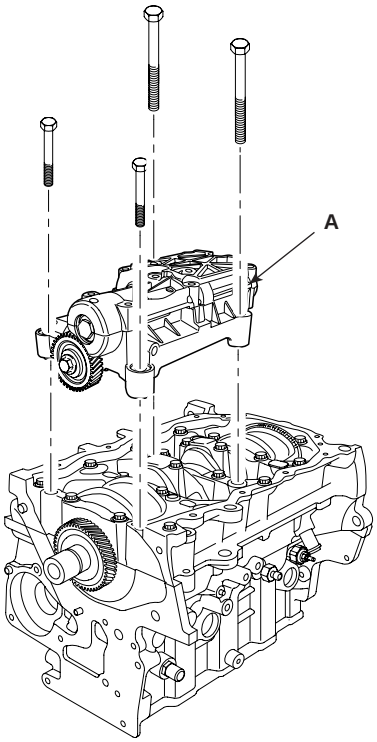

SCMEM6055D

2. Remove the bed plate assembly.
   - Remove the bolts(A).
     To prevent warpage, unscrew the bolts in sequence 1/3 turn at a time : repeat the sequence until all bolts are loosened.
   - Remove the bolts(B).

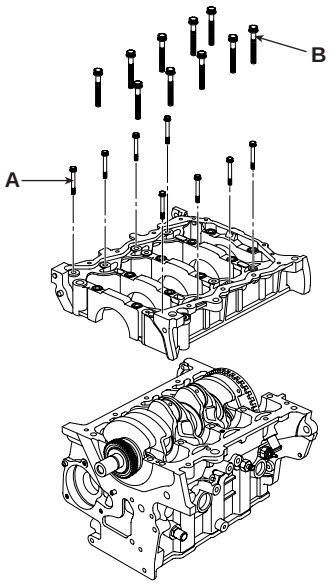

ACIE117A

3. Remove the connecting rod bearing caps(A) and bearings(B).
   - After removing No. 1 and 4 connecting rod bearing caps and turn the crankshaft No. 2 and 3 crankpins are at the top.
   - Remove the rest bearing caps and bearings.
   - Keep all caps/bearings in order.

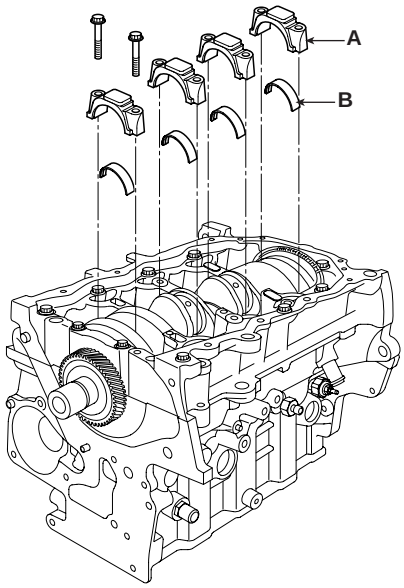

ACIE118A

4. If you can feel a ridge of metal or hard cabon around the top of each cylinder, remove it with a ridge reamer. Follow the reamer manufacturer's instructions. If the ridge is not removed, it may damage the pistons as they are pushed out.

5. Drive out the piston assembly from the engine block.
   a. Reinstall the connecting rod bearings and caps after removing each piston/connecting rod assembly.
   b. To avoid mixup on reassembly, mark each piston/connecting rod assembly with its cylinder number.

6. Lift the crankshaft(A) out of the engine block(B), being careful not to damage the journals.

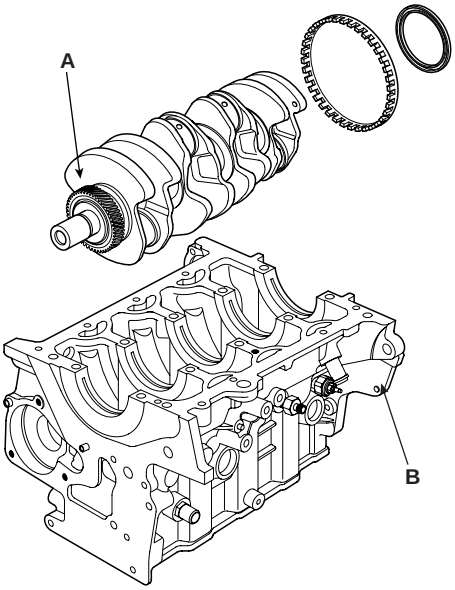

ACIE119A

7. Remove the piston oil jet(A) by loosening the hexagonal bolt(B) with a hexagonal wrench.

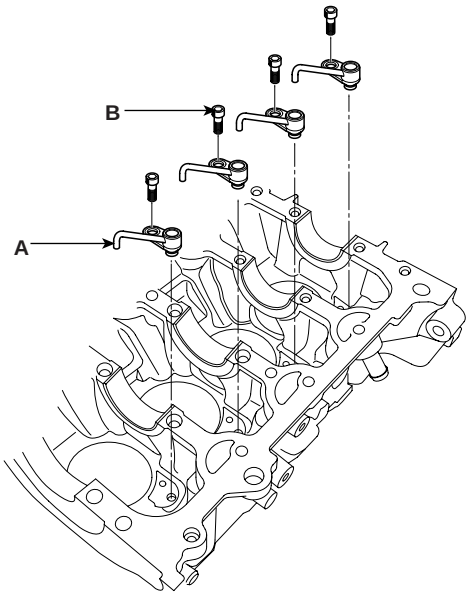

ACIE120A

BALANCER

1. Remove the balance shaft intermediate gear bolt(A) and dive gear bolt(B).

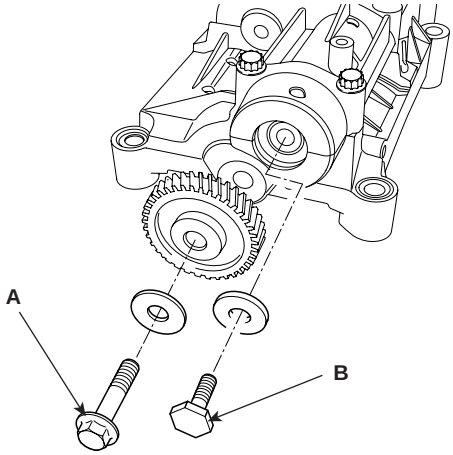

SCMEM6050D

2. Remove the balance shaft lower carrier.

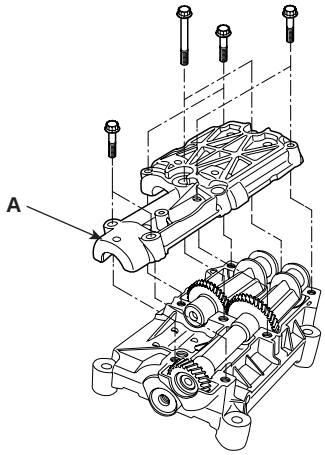

SCMEM6051D

3. Remove the balance driven shaft(A) and balance dive shaft(B).

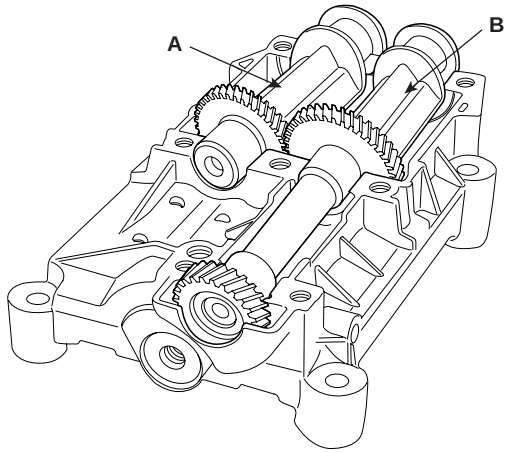

SCMEM6052D

4. Remove the balance shaft bearing(B) from balance shaft upper carrier(A).

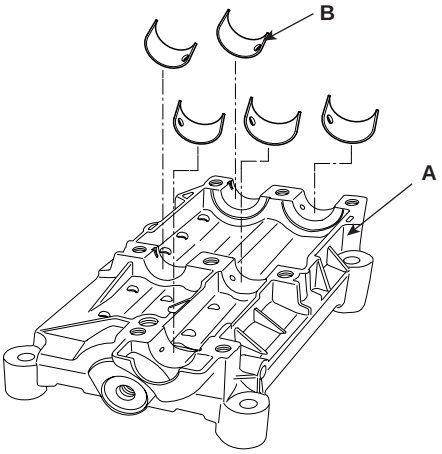

SCMEM6053D

REPLACEMENT E0EBB461

MAIN BEARING SELECTION

Crankshaft Bore Code Location

1. Letters have been stamped on the end of the block as a code for the size of each of the 5 main journal bores. Write down the crank bore codes.
   If you can't read the codes because of accumulated dirt and dust, do not scrub them with a wire brush or scraper. Clean them only with solvent or detergent.

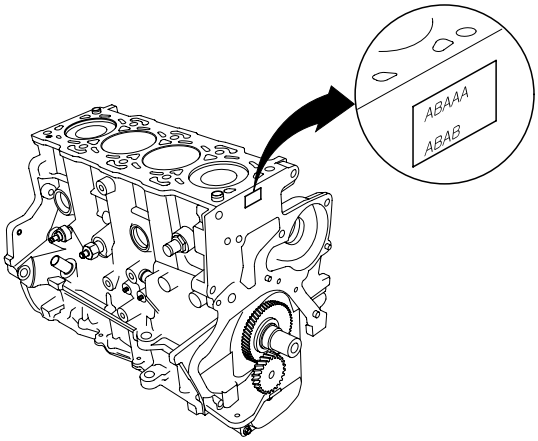

ACIE129A

Discrimination of cylinder block

Discrimination		SIZE (mm) (Inside diameter of crank bore)
Class	Mark	
A	A	Ø64 (0 ~ +0.006)
B	B	Ø64 (+0.006 ~ +0.012)
C	C	Ø64 (+0.012 ~ +0.018)

Main Journal Code Locations

2. The main Journal Codes are stamped on the No.1 web.

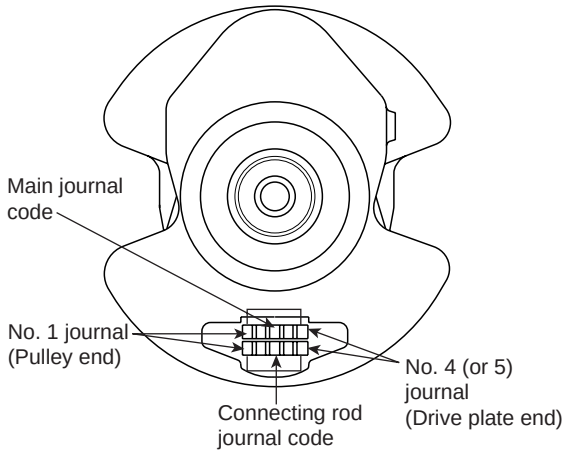

LCIF031A

Discrimination of crank shaft

Discrimination		SIZE (mm) (Outside diameter of main journal)
Class	Mark	
I	A	Ø60 (+0.014 ~ +0.020)
II	B	Ø60 (+0.008 ~ +0.014)
III	C	Ø60 (+0.002 ~ +0.008)

3. Use the crank bore codes and crank journal codes to select the appropriate replacement bearings from the following table.

NOTE

- *Color code is on the edge of the bearing. Refer to the table in the step 6 of the main bearing clearance inspection.*
- *When using bearing halves of different colors, it dose not matter which color is used in the top or bottom.*

Installing procedure of bearing

Shaft bore combination		Bearing mark	Oil clearance
Shaft mark	Bore mark		
I (A)	A (A)	A (BLUE)	0.024 ~ 0.042 mm
	B (B)	B (BLACK)	
	C (C)	C (-)	
II (B)	A (A)	B (BLACK)	
	B (B)	C (-)	
	C (C)	D (GREEN)	
III (C)	A (A)	C (-)	
	B (B)	D (GREEN)	
	C (C)	E (YELLOW)	

ROD BEARING SELECTION

1. Inspect each connecting rod for cracks and heat damage.

Connecting Rod Big End Bore Code Locations

2. Each rod has tolernance range from 0 to 0.018mm (0.0007in.), in 0.006mm (0.0002in.) increments, depending on the size of its big end bore. It's then stamped with a letter (A, B or C) indicating the range. You may find any combination of letters in any engine.

   If you can't read the code because of an accumulation of oil and varnish, do not scrub them with a wire brush or scraper. Clean them only with solvent or detergent.

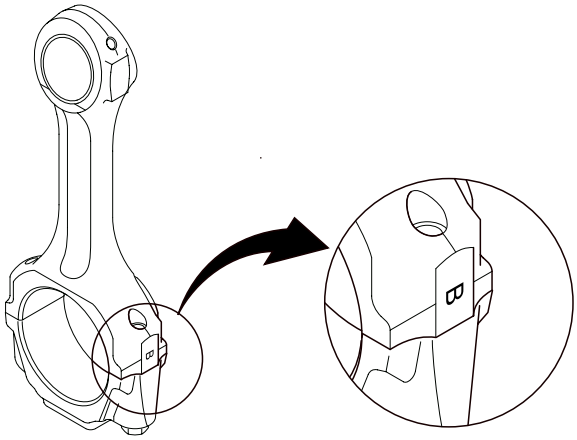

LCIF032A

NOTE

Discrimination connecting rod

Discrimination		SIZE (mm) (Inside diameter of connecting rod big end bore)
Class	**Mark**	
A	A	Ø 53 (0 ~ +0.006)
B	B	Ø 53 (+0.006 ~ +0.012)
C	C	Ø 53 (+0.012 ~ +0.018)

Connecting Rod Journal Code Locations

3. The connecting Rod Journal Codes are stamped on the No. 1 web.

Connecting rod journal code locations (letters)

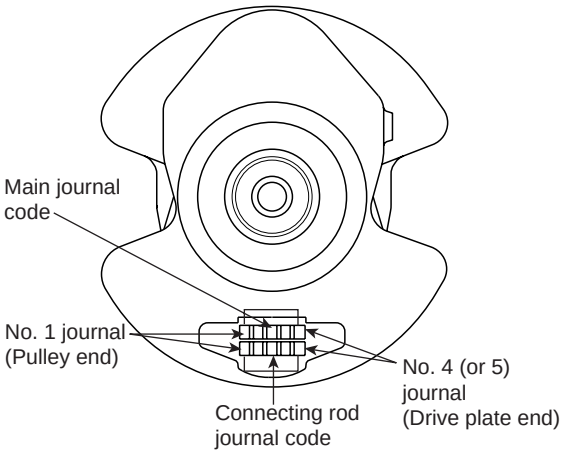

LCIF031A

NOTE

Discrimination of crank shaft pin

Discrimination		SIZE (mm) (Outside diameter of pin)
Class	**Mark**	
I	A	Ø50 (+0.020 ~ +0.026)
II	B	Ø50 (+0.014 ~ +0.020)
III	C	Ø50 (+0.008 ~ +0.014)

4. Use the big end bore codes and rod journal codes to select appropriate replacement bearings from the following table.

NOTE

Color code is on the edge of the bearing.
Refer to the table in the step 5 of rod bearing clearance inspection.

Shaft bore combination		Bearing mark	Oil clearance
Sahft mark	**Bore mark**		
I	A (A)	A (BLUE)	0.024 ~ 0.042 mm
	B (B)	B (BLACK)	
	C (C)	C (WHITE)	
II	A (A)	B (BLACK)	
	B (B)	C (WHITE)	
	C (C)	D (GREEN)	
III	A (A)	C (WHITE)	
	B (B)	D (GREEN)	
	C (C)	E (YELLOW)	

PISTON, PIN AND CONNECTING ROD

1. Apply engine oil to the piston pin snap rings and turn them in the ring grooves.

NOTE

Take care not to damage the ring grooves.

2. Remove both snap rings(A) carefully so they do not go flying or get lost. Wear eye protection.

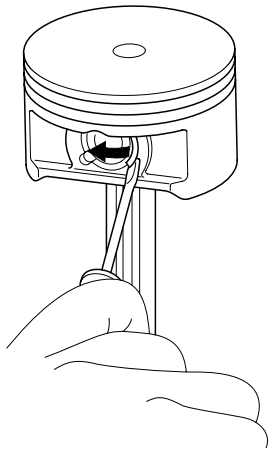

LCIF033A

3. Remove the piston pin and the conecting rod assembly.

4. Measure the diameter of the piston pin.

Piston Pin Diameter
Standard (New)
27.995 ~ 28.000mm (1.1022 ~ 1.1024in.)

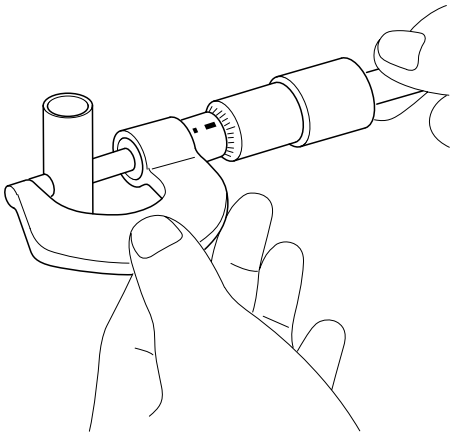

ACIE134A

NOTE

Inspect the piston, piston pin and connecting rod when they are at room temperature.

5. Set a snap ring in one side of piston pin hole.

6. Before inserting the piston pin, apply a sufficient amount of the lubricant oil to the outer surface of the piston, the inner surface of the piston pin hole and the small end bore of the connecting rod.

7. Insert the piston pin(A). Assembly the piston and connecting rod with the embossed front marks on the same side.

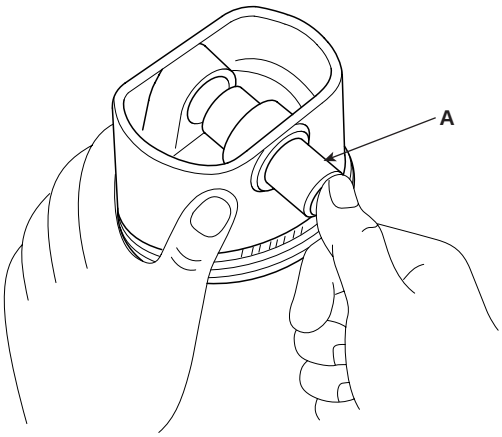

ACIE133A

NOTE

The front mark of the piston is embossed on the piston whereas some letters are located on a side surface of the connecting rod as the front mark.

CAUTION

- ***Be sure to keep the small end bore, piston pin hole and piston pin undamaged and unscratched when inserting the piston pin.***
- ***Set the snap rings to be sure for contacting with the groove of the piston pin hole.***

PISTON RING

1. Using a piston, push a new ring into the cylinder bore.

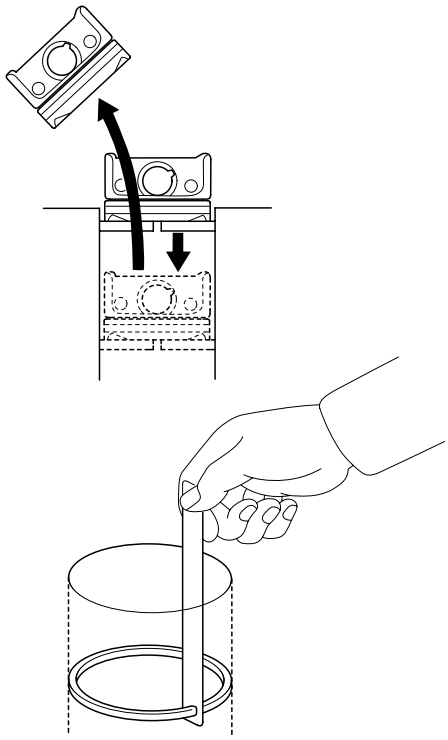

ACIE137A

2. Measure the piston ring end-gap(B) with a feeler gauge :
   - If the gap is too small, check to see if you have the proper rings for your engine.
   - If the gap is too large, recheck the cylinder bore diameter against the wear limits.
     If the bore is over the service limit, the cylinder block must be rebored.

Piston Ring End-Gap
Top ring
Standard (New) : 0.25 ~ 0.40mm (0.0098 ~ 0.0157in.)
Second Ring
Standard (New) : 0.40 ~ 0.60mm (0.0157 ~ 0.0236in.)
Oil Ring
Standard (New) : 0.20 ~ 0.40mm (0.008 ~ 0.016in.)

3. After installing a new set of rings, measure the ring-to-groove clearances :

Top Ring Clearance
Standard (New)
0.083 ~ 0.137mm (0.0033 ~ 0.0054in.)

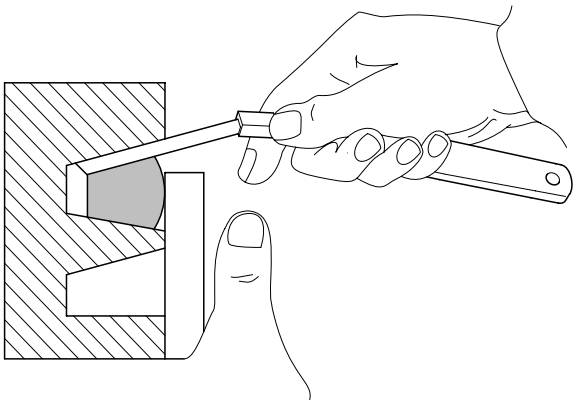

ACIE135A

Second Ring Clearance
Standard (New)
0.065 ~ 0.110mm (0.00256 ~ 0.00433in.)

Oil Ring Clearance
Standard (New)
0.03 ~ 0.07mm (0.00118 ~ 0.00275in.)

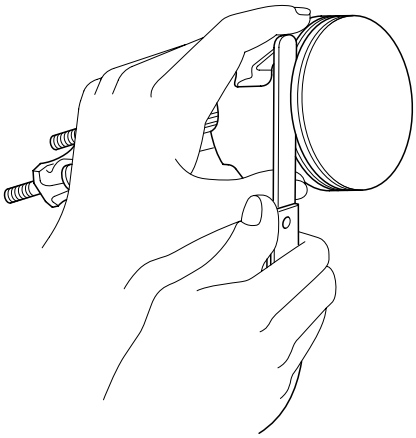

ACIE136A

INSPECTION E969687D

FLYWHEEL

1. Inspect ring gear teeth for wear or damage.

2. Flywheel bolts should be free from detrimental flaws.

CONNECTING ROD AND CRANKSHAFT END PLAY

1. Measure the connecting rod end play with a feeler gauge(A) between the connecting rod(B) and crankshaft(C).

Connecting Rod End play
Standard (New) : 0.10 ~ 0.35mm (0.004 ~ 0.014in.)

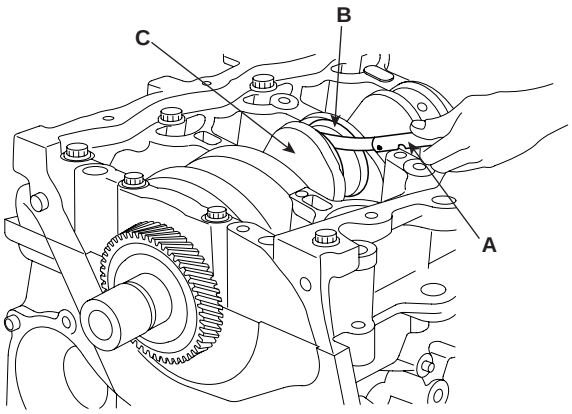

ACIE131A

2. If the connecting rod end play is out-of-tolerance, install a new connecting rod, and recheck. If it is still out-of-tolerance, replace the crankshaft.

3. If the end play is excessive. Replace parts as necessary.

MAIN BEARING CLEARANCE

1. To check main bearing-to-journal oil clearance, remove the bed plate, the crankshaft and the bearing halves.

2. Clean each main journal and bearing half with a clean shop towel.

3. Cut plastigauge to the same length as the width of the bearing.

4. Place one strip of plastigauge across each main journal on the cylinder block and the bed plate, avoiding the oil holes.

5. Reinstall the bearings, crankshaft and bed plate then torque the bolts to the specified valve.

NOTE

Do not rotate the crankshaft during inspection.

6. Remove the bed plate and bearings again and measure the widest part of the plastigauges with a calibrated scale on which an arrow of marks has beeen printed.

Main bearing-to-journal Oil Clearance
Standard (valve)
0.024 ~ 0.042mm (0.0009 ~ 0.0017in.)

NOTE

Discrimination of crankshaft main bearing

Discrimination		SIZE (mm) (Thickness of bearing)	Place of identification mark
Class	Mark		
E	YELLOW	1.987~1.990	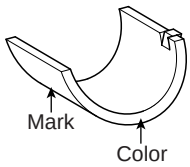 LCIF047A
D	GREEN	1.984~1.987	
C	-	1.981~1.984	
B	BLACK	1.978~1.981	
A	BLUE	1.975~1.978	

7. If the plastigauge mesaure too wide or too narrow, remove the crankshaft, and remove the upper half of the bearing. Install a new, complete bearing with the same color code(s), and recheck the clearance. Do not file, shim, or scrape the bearings to adjust clearance.

8. If the plastigauge shows the clearance is still incorrect, try the next larger or smaller bearing (the color listed above or below that one), and check again. If the proper clearance cannot be obtained by using the appropriate larger or smaller bearings, replace the crankshaft and start over.

ROD BEARING CLEARANCE

1. Remove the connecting rod cap and bearing half.

2. Clean the crankshaft rod journal bearing half with a clean shop towel.

3. Place pastigauge across the rod journal.

4. Reinstall the bearing half and cap, and torque the bolt.

NOTE

Do not rotate the crankshaft during inspecition.

5. Remove the rod cap and bearing half and measure the widest part of the plastigauge.

Connectinng Rod Bearing-to-Journal Oil
Clearance : 0.024 ~ 0.042mm (0.0009 ~ 0.0017in.)

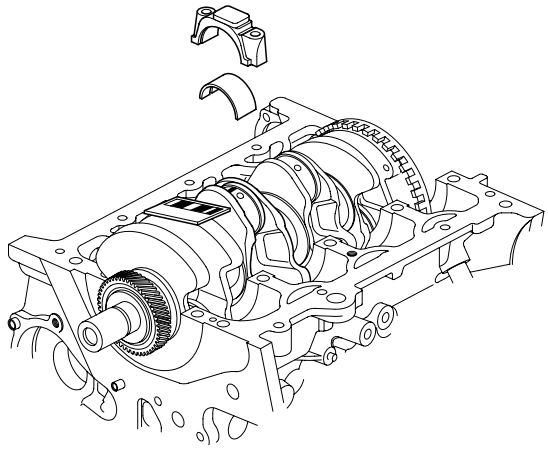

ACIE132A

6. If the plastigauge measure too wide or too narrow, remove the upper half of the bearing, install a new, complete bearing with the same color code(s), and recheck the clearance. Do not file, shim, or scrape the bearings or the caps to adjust clearance.

NOTE

Discrimination of connecting rod bearing

Discrimination		Size (Thick-ness of bearing)	Place of Identification
Class	Mark		
E	YELLOW	1.484 ~ 1.487	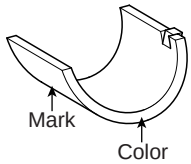 LCIF047A
D	GREEN	1.481 ~ 1.484	
C	WHITE	1.478 ~ 1.481	
B	BLACK	1.475 ~ 1.478	
A	BLUE	1.472 ~ 1.475	

7. If the plastigauge shows the clearance is still incorrect, try the next larger or smaller bearins (the color listed above or below that one), and check clearance again. If the proper clearance cannot be obtained by using the appropriate larger or smaller bearing, replace the crankshaft and start over.

BLOCK AND PISTON

1. Check the piston for distortion or cracks.

2. Measure the piston diameter at a point 10mm (0.4in) from the bottom of the skirt. There are three standard-size pistons (A. B and C). The letter is stamped on the top of the piston. Letters are also stamped on the block as cylinder bore sizes.

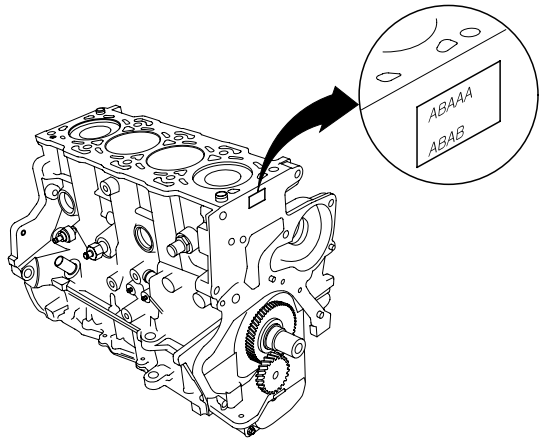

ACIE129A

Piston Diameter and Cylinder Bore
Standard value :

Grade	A	B	C
Piston Outer Diameter (mm)	86.92 ~ 86.93	86.93 ~ 86.94	86.94 ~ 86.95
Cylinder Bore (mm)	87.00 ~ 87.01	87.01 ~ 87.02	87.02 ~ 87.03
Clearance (mm)	0.070 ~ 0.090		

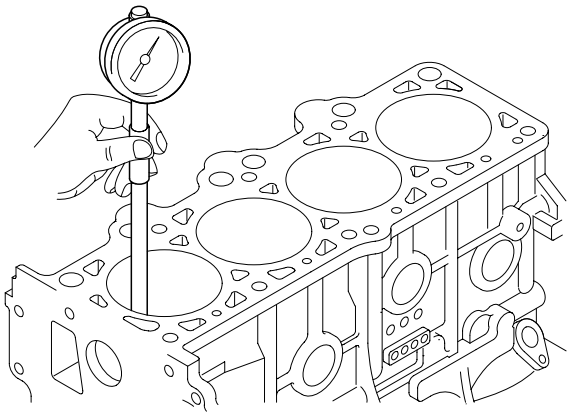

ACIE139A

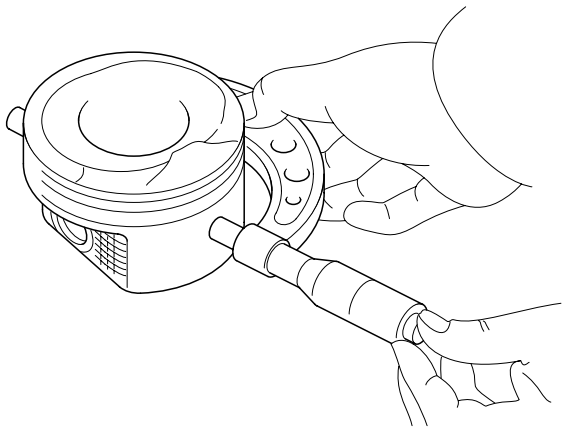

ACIE140A

3. Scored or scratched cylinder bores must be honed.

4. Check the top of the block for warpage. Measure along the edges and across the center.

Engine Block Warpage
Standard (New)
0.042mm (0.00165in.) for width
0.096mm (0.00378in.) for legth
0.012mm (0.00047in.)/50×50mm

CYLINDER HONING

Only a scored or scratched cylinder bore must be honed.

1. Measure the cylinder bores.
   If the block is to be reused, hone the cylinders and remeasure the bores.

2. Hone the cylinder bores with honing oil and a fine stone. Do not use stones that are worn or broken.

3. When honing is complate, thoroughly clean the engine block of all metal particles. Wash the cylinder bores with hot soapy water, then dry and oil them immediately to prevent rusting. Never use solvent, it will redistribute the grit on the cylinder walls.

4. If scoring or scratches are still present in the cylinder bores after honing to the service limit, rebore the cylinder block. Some light vertical scoring and scratching is acceptable if it is not deep enough to catch your fingernail and does not run the full length of the bore.

REASSEMBLY E7D325AA

BALANCE SHAFT

1. Install the balance shaft bearing(B) to the balance shaft upper carrier(A).

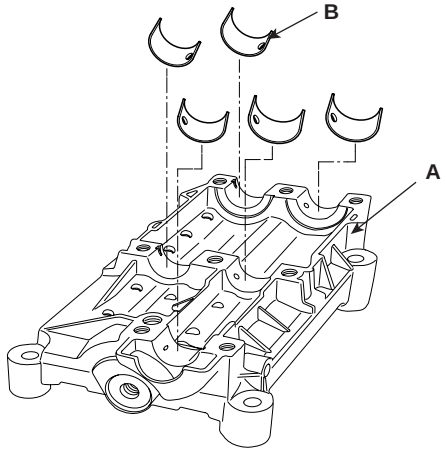

SCMEM6053D

2. Install the balance driven shaft(A) and the balance driver shaft(B).

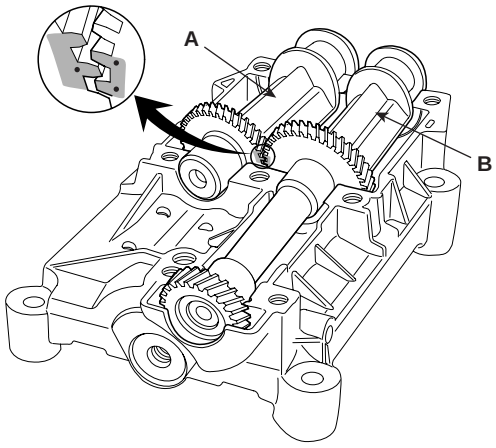

SCMEM6057D

CAUTION

Confirm the gear marks.

3. Install the balance shaft lower carrier(A) after installing the balance bearing to the lower carrier.

Tightening torque
Bolt(B) : 52 ~ 54N.m (5.2 ~ 5.4kgf.m, 37.6 ~ 39.1lb-ft)
Bolts(C) : 28 ~ 32N.m (2.8 ~ 3.2kgf.m, 20.3 ~ 23.1lb-ft)

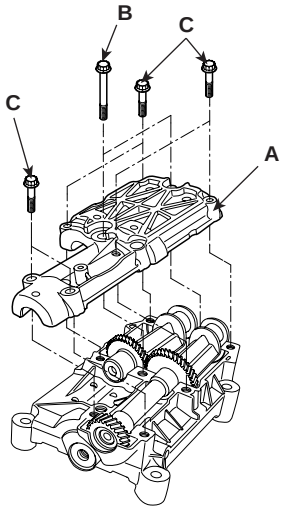

SCMEM6058D

4. Install the balance shaft drive gear bolt(B) and the intermediate gear bolt(A).

Tightening torque
Bolts(A) : 20N.m (2.0kgf.m, 14.5lb-ft, 14.5lb-ft)
± 104(°F)
Bolts(B) :39 ~ 43N.m (3.9 ~ 4.3kgf.m, 28.2 ~ 31.1lb-ft)

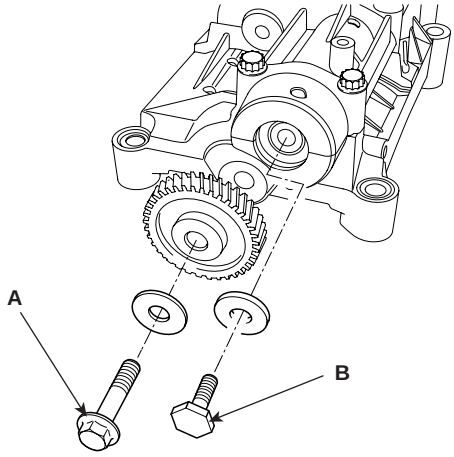

SCMEM6050D

CAUTION

Confirm the gear marks.

PISTON

1. Remove the connecting rod caps then install the ring compressor and check that the bearing is securely in place.

2. Position the marks facing the timing belt side of the engine.

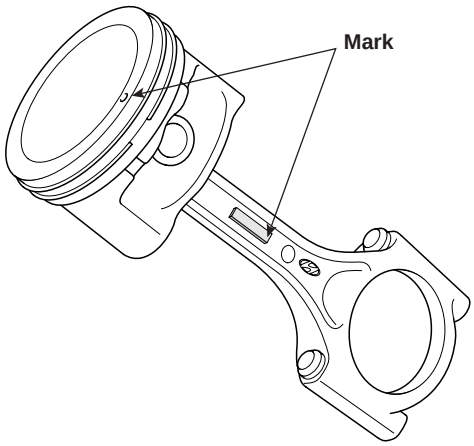

LCIF039A

3. Position the piston in the cylinder and tap it in using the wooden handle of hammer.
Maintain downward force on the ring compressor to prevent the rings from expanding before entering the cylinder bore.

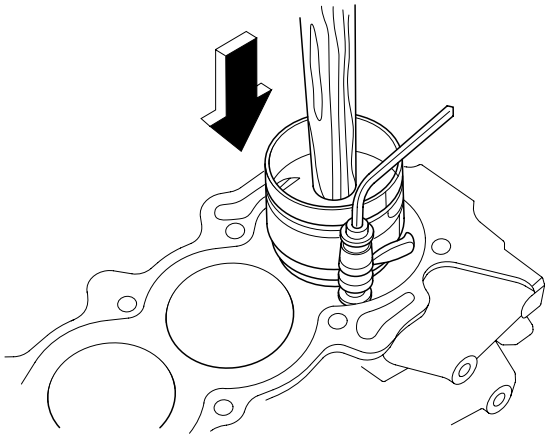

ACIE146A

4. Stop after the ring compressor pops free, and check the connecting rod-to-crank journal alignment before pushing the piston into place.

5. Check the connecting rod bearing clearance with plastigauge.

6. Apply engine oil to the bolt threads, then install the rod caps with bearings.

CRANKSHAFT AND BALANCER

1. Install the oil jets, tightening the hexagon socket head bolts with the torque 10 ~ 13Nm (0.1 ~ 1.3kgf.m, 7.2 ~ 9.4lb-ft)

2. Apply a coat of engine oil to the main bearings.

3. Install the bearing halves in the engine block.

4. Hold the crankshaft so rod journal No. 2 and rod journal No. 3 are straight up.

5. Lower the crankshaft into the block.

6. Install the bearing halves in the bed plate after applying a coat of engine oil.

7. Install the bed plate(C) to the engine block. After applying the sealant (LOCTITE 5205, DREIBOND 5105 or HYLOMAR 3000).

Tightening torque
15mm(B)
28 ~ 32N.m + (2.8 ~ 3.2kgf.m, 20.65 ~23.60lb-ft) + 120°
12mm(A)
33.7 ~ 37.7N.m (3.3 ~ 3.7kgf.m, 24.9 ~27.8lb-ft)

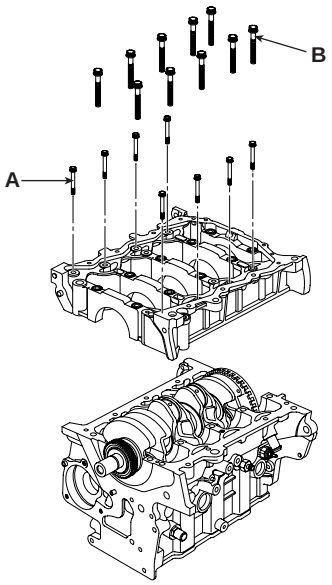

ACIE117A

8. Rotate the crankshaft clockwise to be seated properly.

9. Check the main bearing clearance with plastigauge.

10. Install the piston and connecting rod assemblies.
    a. Apply coat of engine oil to the connecting rod bearings.
    b. Install the bearing halves in the connecting rods.
    c. Insert the assemblies into the cylinder bores.
    d. Install the connecting rod caps and bolts finger tight
    e. Rotate the crankshaft clockwise, seat the journals into connecting rod No.2 and connecting rod No.3. Install the connecting rod caps and bolts finger tight. Install caps so the bearing recess is on the same side as the recess in the rod.
    f. Check the connecting rod bearing clearance with plastigage.
    g. Apply engine oil to the bolt threads, then install the rod caps within bearings and torque the bolts to 25N.m + 90° (250kgf.m + 90°, 18.44lb-ft + 90°).

11. Using the SST(09231-27000), install the crankshaft oil seal(A) squarely.

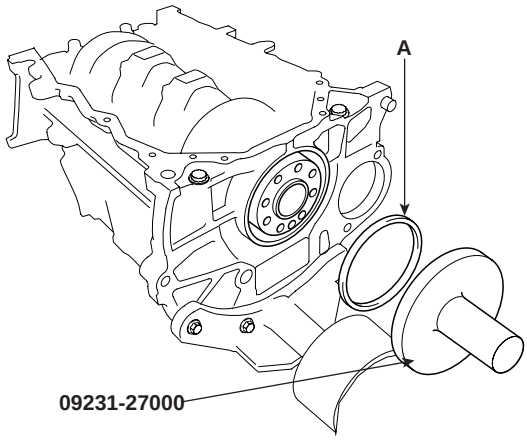

ACIE147A

12. Clean and dry the mating surfaces.
    Apply a light coat of oil to the crankshaft and to the lip of the seal.

13. Install the balance shaft assembly(A) onto the bed plate with the bolts (B,C).

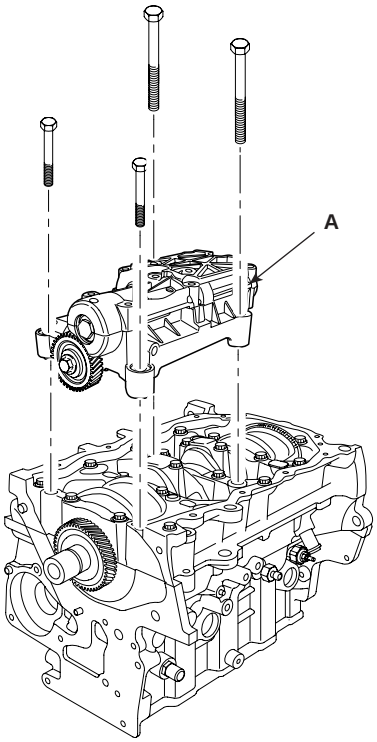

SCMEM6055D

Tightening torque
53 ~ 57N.m (5.3 ~ 5.7kgf.m, 39.09 ~ 42.04lb-ft)

NOTE

Pay attention to the timing marks on the driver gears of the balance shaft and the crankshaft.

INSTALLATION EB9422DC

1. Clean and dry the oil pump mating surface.

2. Install the oil pump
   a. Install a new crankshaft oil seal in the oil pump.
   b. Apply liquid gasket evenly to the block mating surface of the oil pump.

Standard liquid gaskets (or sealants) LOCTITE5900 or equivalent

- Apply liquid gasket in a wide bead : 2.5 ± 0.5m
- Apply the liquid gasket without stoping.
- Assemble the oil pump within 5 minutes after applying.

   c. Grease the lips of the oil seals.
   d. Align the inner rotor with the crankshaft drive gear and install the oil pump(B).

Tightening torque(A) 20 ~ 27N.m (2.0 ~ 2.7kgf.m, 14.75 ~ 19.91lb-ft)

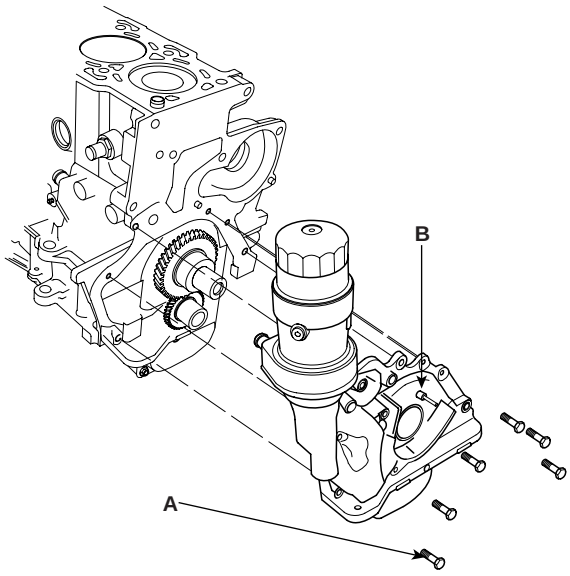

ACIE115A

   e. Clean the excess grease off the crankshaft and check the seals for distortion.

3. Install the crankshaft key(A) on the crankshaft assembly.

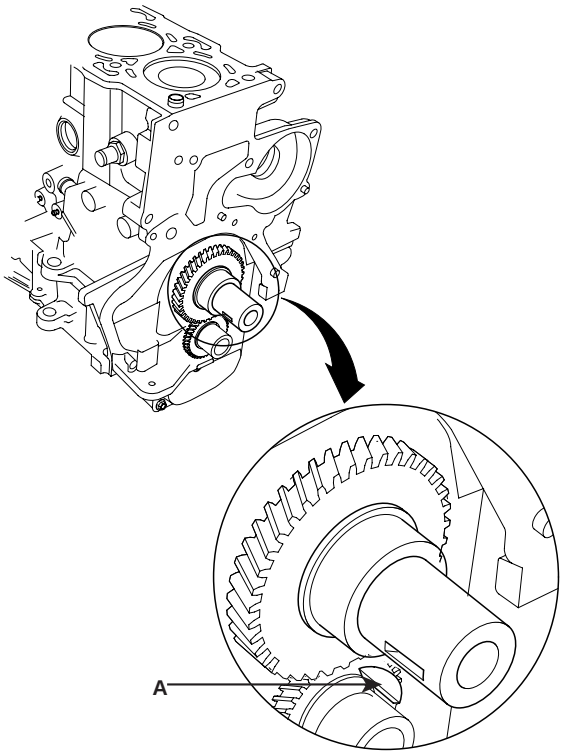

LCIF040A

4. Insert the crankshaft sprocket(B) then tighten the crankshaft bolt(A).

Tightening torque 196.1 ~ 205.9N.m (20.0 ~ 21.0kgf.m, 144.7 ~ 151.9lb-ft)

NOTE

Align the timing mark on the sproket.

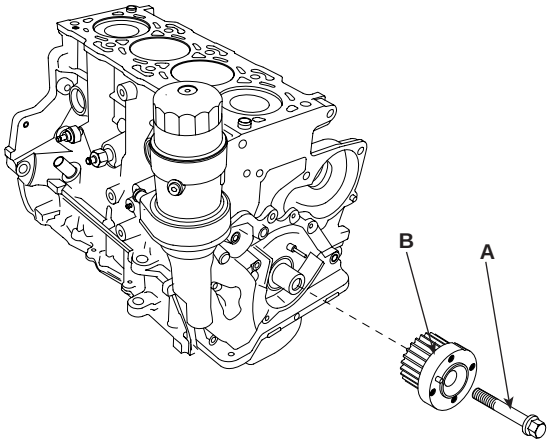

ACIE114A

5. Install the oil screen(A) on the oil pump case(B) and the engineblock.

Tightening torque
10 ~ 12N.m (1.0 ~ 1.2kgf.m, 7.37 ~ 8.85lb-ft)

NOTE

The bolt B should be tightened after the installation of the bolt A.

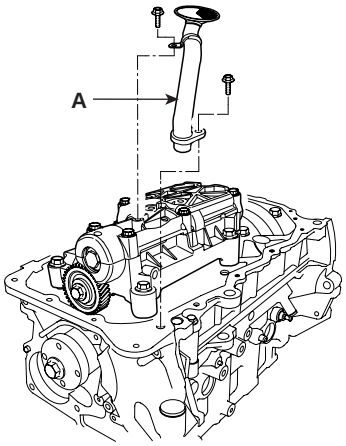

SCMEM6054D

6. Clean and dry the bed plate and the oil pan mating surfaces.

7. Apply liquid gasket evenly to the bed plate mating surface of the oil pan. Install the oil pan.

NOTE

- *Standard liquid gasket : LOCTITE 5900*
- *Assemble the oil pan in 5 mimutes after applying the liquid gasket.*
- *Apply liquid gasket in a 3mm wide bead without stopping.*
- *The clearance between the liquid gasket and the flange inner end should be 2 ~ 3mm.*

8. Tighten the bolt in two or three steps. In the final step, tighten all bolts.

Tightening torque
10 ~ 12N.m (1.0 ~ 1.2kgf.m, 7.38 ~ 8.851lb-ft)

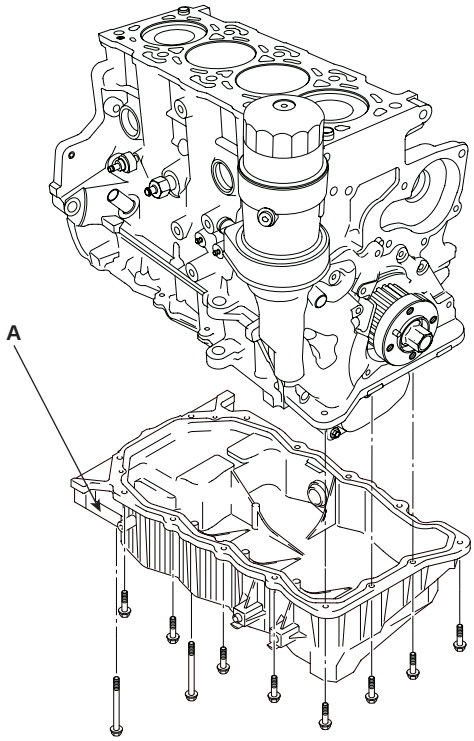

ACIE112A

NOTE

After installing the oil pump assembly and the oil pan, remove the oil cooler and fill the 50cc engine oil.

9. Install the water pump.

10. Install the auto-tensioner(A).

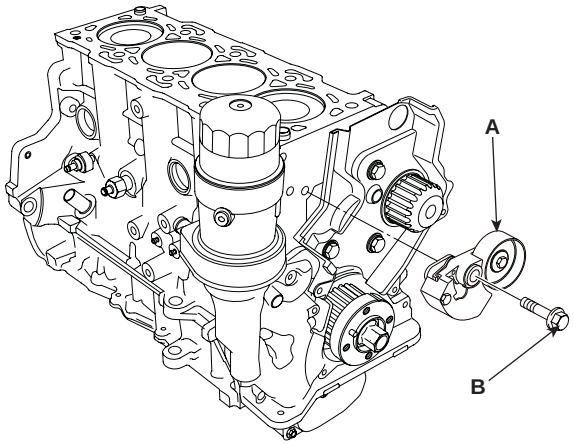

ACIE109A

11. Install the air compressor(A). (See HA group - compressor)

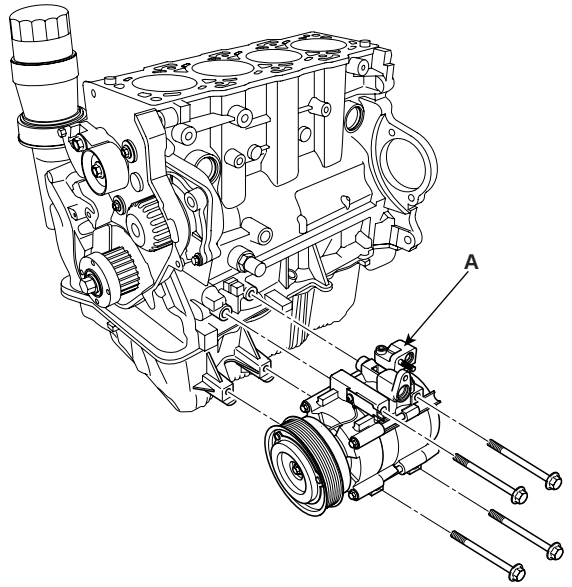

ACIE108A

12. Install the water inlet pipe assembly(A), tightening the bolt(B).

Tightening torque
20 ~ 25N.m (2.0 ~ 2.5kgf.m, 14.75 ~ 18.44lb-ft)

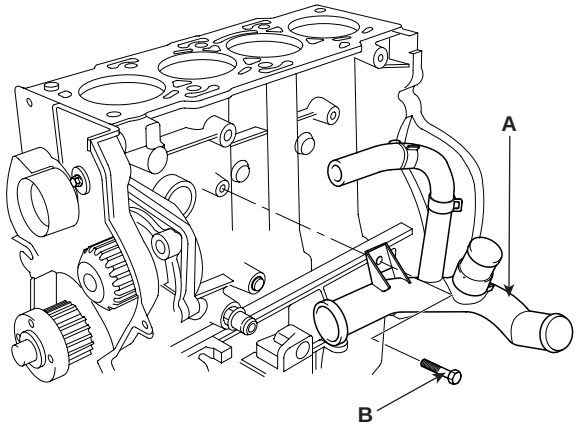

ACIE107A

13. Install the power steering pump mounting bracket assembly(A).

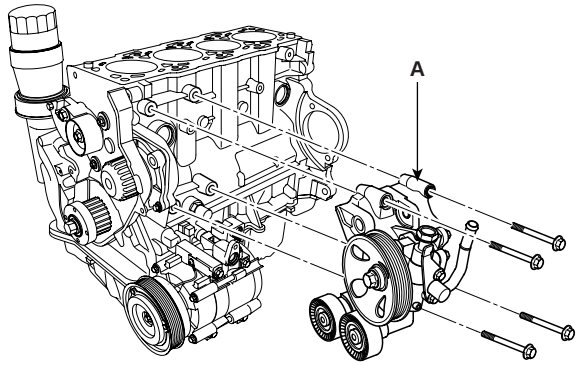

ACIE106A

14. Install the heater and oil cooler return pipe(A) assembly.

Tightening torque
Rear side bolt and left side bolt(C, D)
20 ~ 25N.m (2.0 ~ 2.5kgf.m, 14.75 ~ 18.44lb-ft)
Right side bolt(E)
8 ~ 10N.m (0.8 ~ 1.0kgf.m, 5.90 ~ 7.38lb-ft)

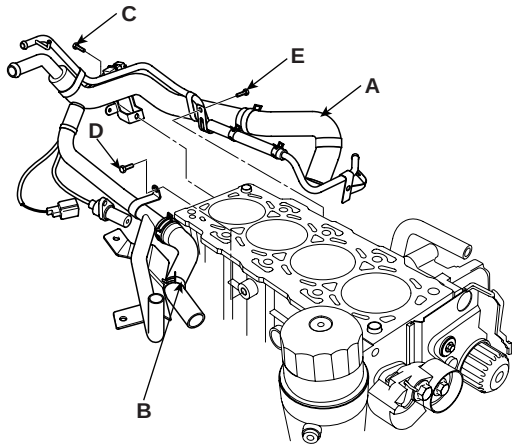

ACIE104A

15. Install the CKP(Crankshaft Position Sensor)(A) and the oil pressure switch(B).

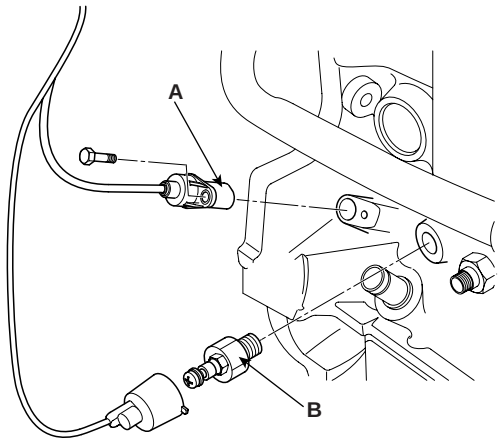

ACIE103A

16. Install the cylinder head assembly.

17. Install the intake/exhaust manifold assemblies.

18. Install the oil level gauge(A).

Tightening torque
10 ~ 12N.m (1.0 ~ 1.2kgf.m, 7.38 ~ 8.85lb-ft)

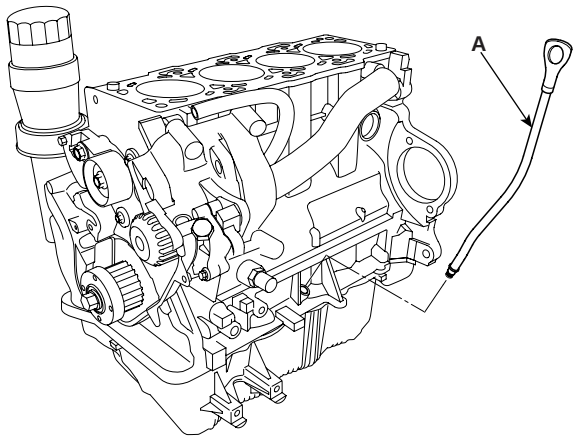

ACIE102A

19. Install the timing belt assembly.

COOLING SYSTEM

COMPONENTS E5E014EC

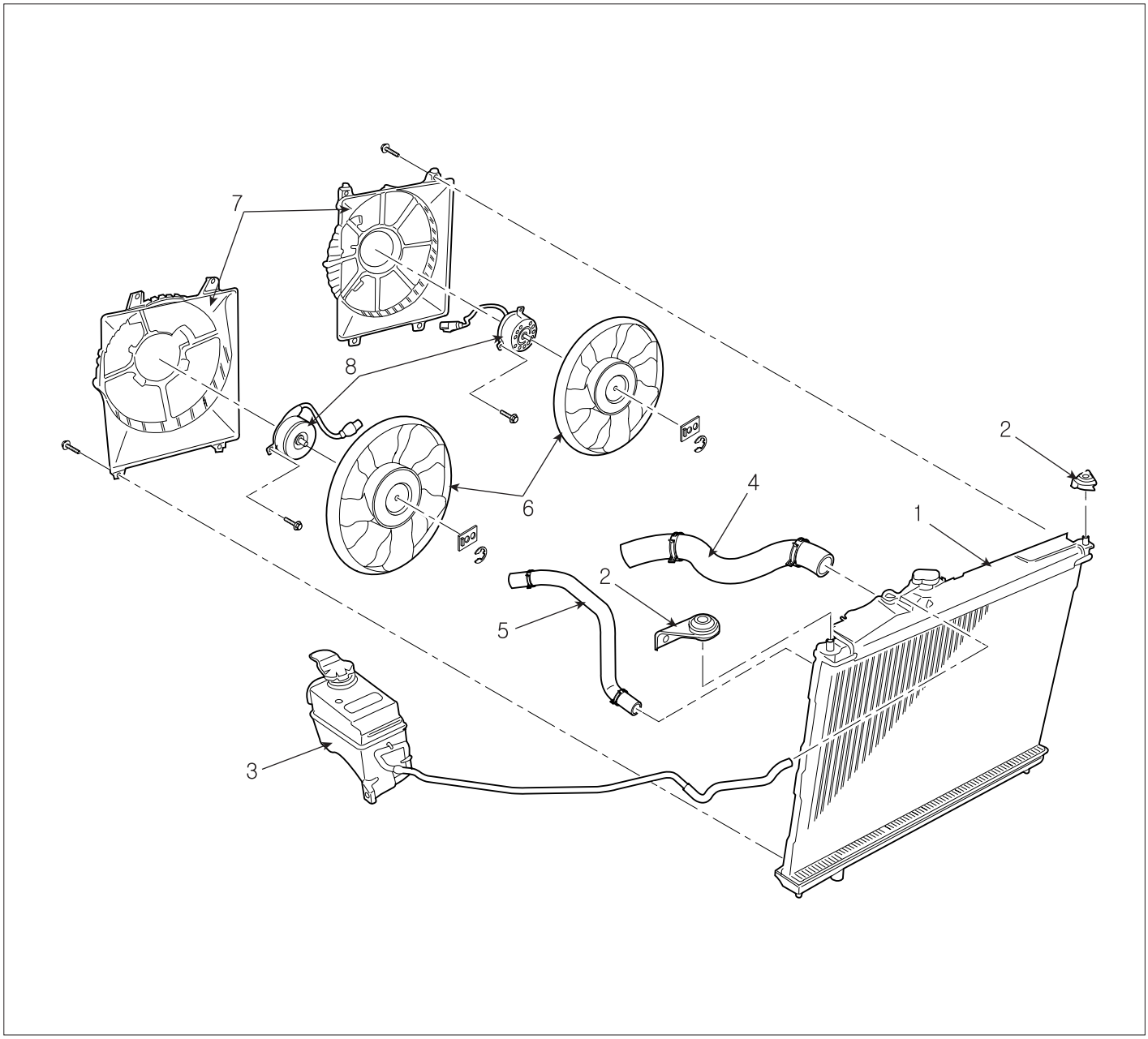

1. Radiator
2. Radiator bracket
3. Engine coolant reservoir tank
4. Radiator upper hose
5. Radiator lower hose
6. Radiator fan
7. Shroud
8. Fan motor

SCMM16015L

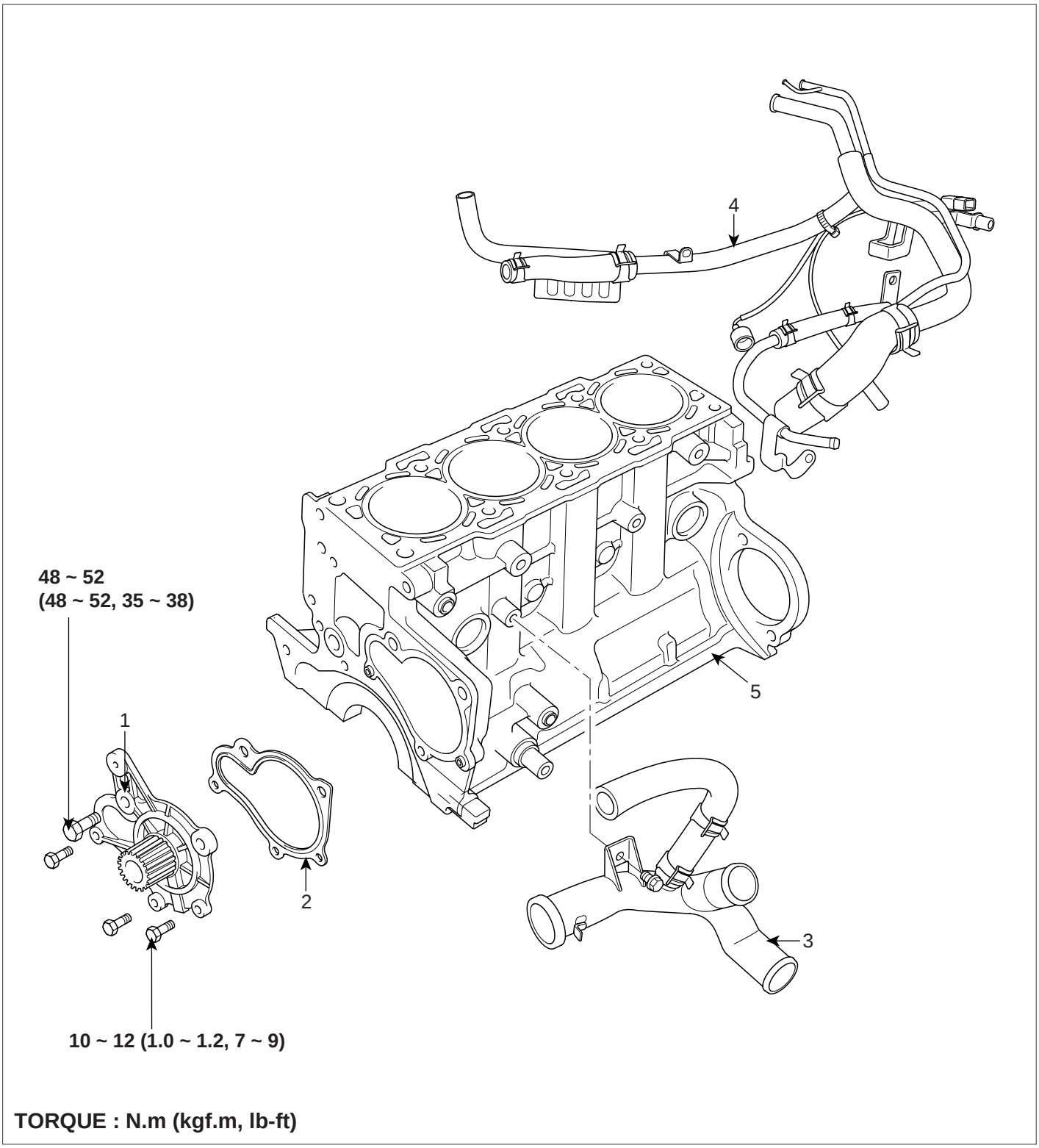

TORQUE : N.m (kgf.m, lb-ft)

1. Coolant pump
2. Gasket
3. Coolant inlet pipe
4. Coolant hose & pipe
5. Cylinder block

SCMM16014L

ENGINE COOLANT REFILLING AND BLEEDING E8429B6D

WARNING

Never remove the radiator cap when the engine is hot.
Serious scalding could be caused by hot fluid under high pressure escaping from the radiator.

CAUTION

When pouring engine coolant, be sure to shut the relay box lid and not to let coolant spill on the electrical parts of the paint. If any coolant spills, rinse it off immediately.

1. Slide the heater temperature control lever to maximum heat. Make sure the engine and radiator are cool to the touch.
2. Remove the radiator cap.
3. Loosen the drain plug(A), and drain the coolant.

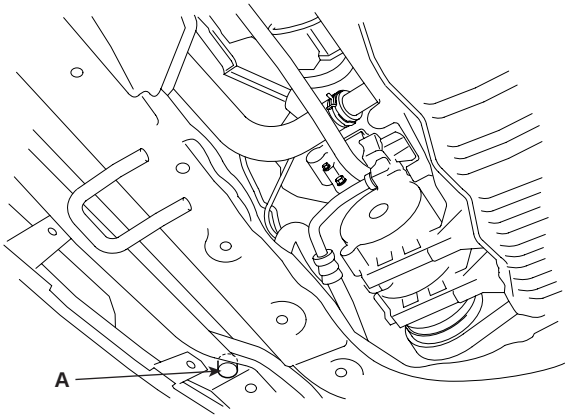

SCMM16013L

4. Tighten the radiator drain plug(A) securely.
5. Remove the coolant reservoir tank. Drain the coolant and reinstall the coolant reservoir tank. Fill the coolant reservoir tank to the MAX mark with the coolant.

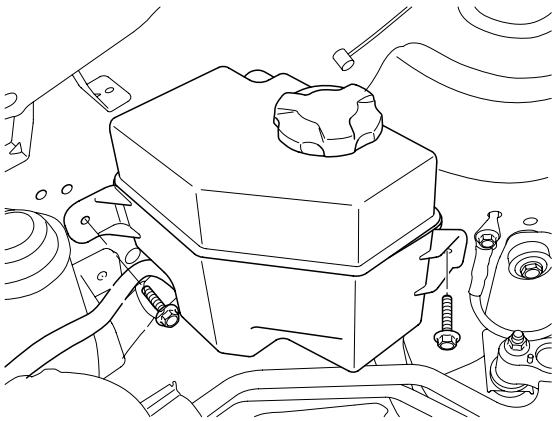

ACJF037A

6. Fill the coolant into the radiator to the base of filler neck. Gently squeeze the upper/lower hoses of radiator so as to bleed air easily.

NOTE

- *Use only genuine antifreeze/coolant.*
- *For best corrosion protection, the coolant concentration must be maintained year-round at 50% minimum. Coolant concentrations less than 50% may not provide sufficient protection against corrosion of freezing.*
- *Coolant concentrations greater then 60% will impair cooling efficiency and are not recommended.*

CAUTION

- ***Do not mix different brands of antifreeze/coolants.***
- ***Do not use additional rust inhibitors or antirust products; they may not be compatible with the coolant.***

7. Start the engine and allow coolant to circulates. When the cooling fan operates and coolant circulates, refill coolant through the radiator filler neck.
8. Repeat 7 until the cooling fan 3~5 times and bleed air sufficiently out of the cooling system.
9. Install the radiator cap and fill the reservoir tank to the "MAX" line with coolant.
10. Run the vehicle under idle until the cooling fan operates 2~3 times.
11. Stop the engine and allow coolant to cool.
12. Repeat steps 6 to 11 until the coolant level stays constant and all air is bleed out of the cooling system.

NOTE

Recheck the coolant level in the reservoir tank for 2~3 days after replacing coolant.

Coolant capacity : 8.4 liters(8.88 US qt, 7.39 Imp qt)

REPLACEMENT E24A9ED2

WATER PUMP

1. Drain the engine coolant after removing drain plug(A).

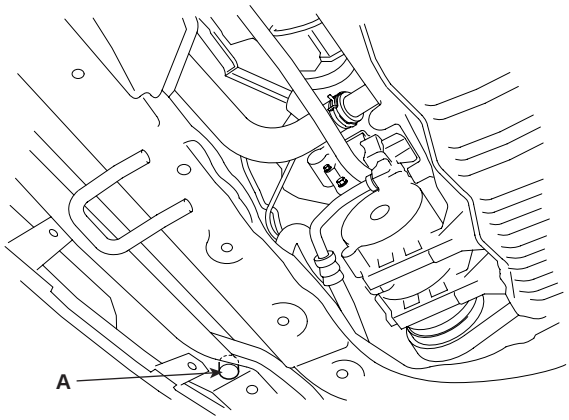

SCMM16013L

2. Remove the drive belt and the timing belt.

3. Remove the timing belt rear cover(A).

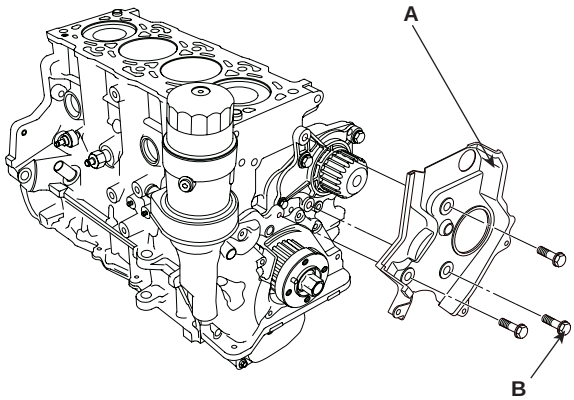

SCMEM6123D

CAUTION

Damage of the water pump or coolant-leakage can be occurred when the longer bolt than the specification(18mm) is used.

4. Remove the water pump(A) with the gasket(B) by removing four bolts. (One bolt A and three bolt B)

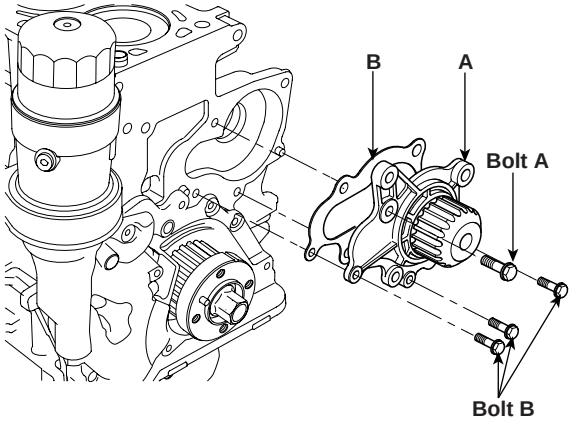

LCIF027A

5. Inspect, repair and clean the mating surface on the engine block.

6. Install the water pump, with a new gasket in the reverse order of removal.

Tightening torque
For timing belt rear cover
7.8 ~ 11.8N.m (0.8 ~ 1.2kgf.m, 5.8 ~ 8.7lb-ft)
For water pump
Bolt A :
47.1 ~ 51.0N.m (4.8 ~ 5.2kgf.m, 34.7 ~ 37.6lb-ft)
Bolt B :
9.8 ~ 11.8N.m (1.0 ~ 1.2kgf.m, 7.2 ~ 8.7lb-ft)

7. Clean the spilled engine coolant.

RADIATOR

1. Remove the under cover.
2. Drain the engine coolant after removing drain plug. Remove the radiator cap to speed draining.
3. Remove the radiator upper hose(A).

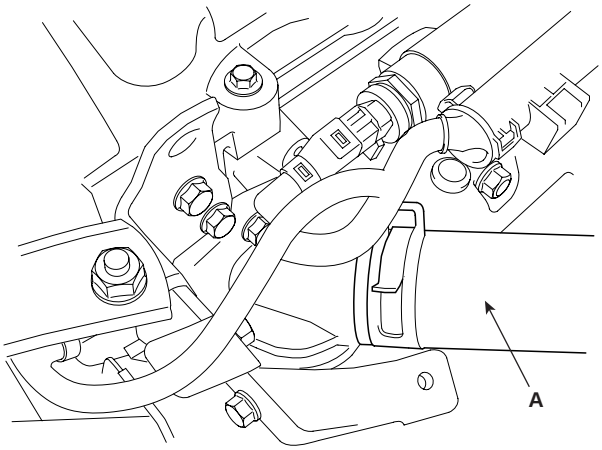

SCMEM6017D

4. Remove the cooling fan motor connector(A, B).

LEFT

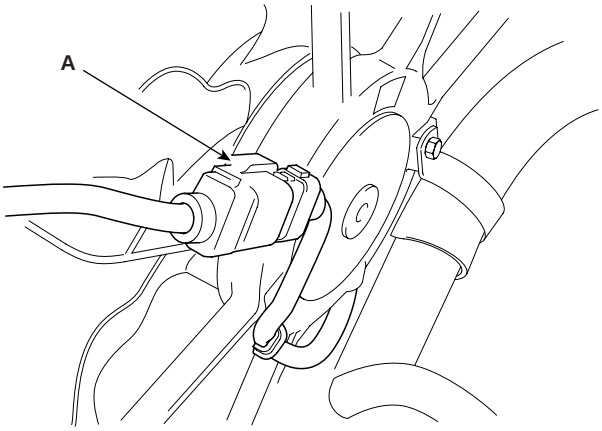

SCMEM6036D

RIGHT

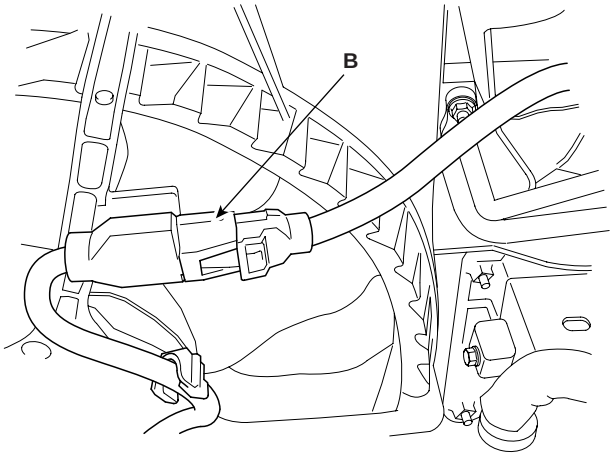

SCMEM6037D

5. Remove the radiator grill upper cover(A).

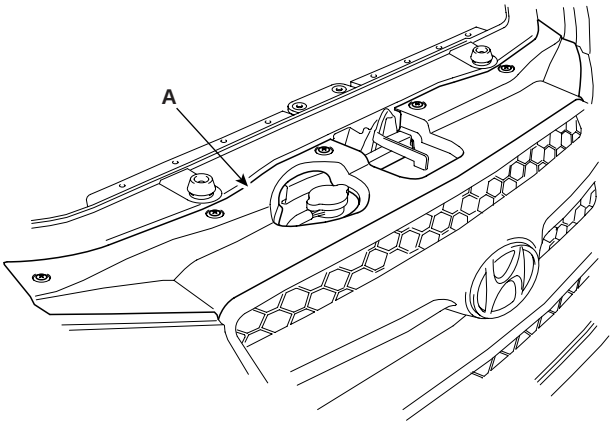

SCMEM6039D

6. Remove the front bumper after removing the front lamp cleaning nozzle cover.(Refer to 'BD' group)
7. Remove the radiator cap hose(A).

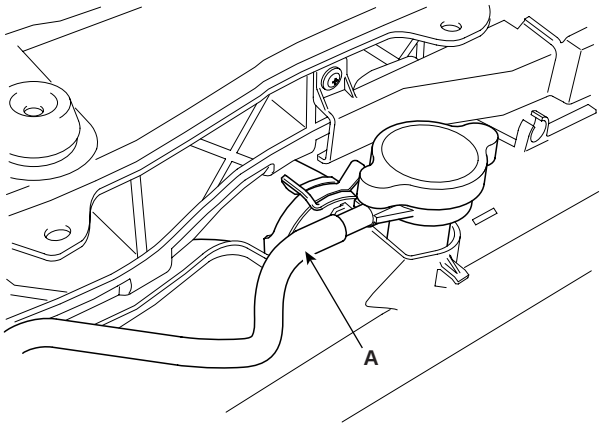

SCMEM6040D

8. Remove the left side cooling fan assembly first.

NOTE

Remove the radiator lower hose bracket mounting bolt.

9. Remove the radiator bracket bolts(A).

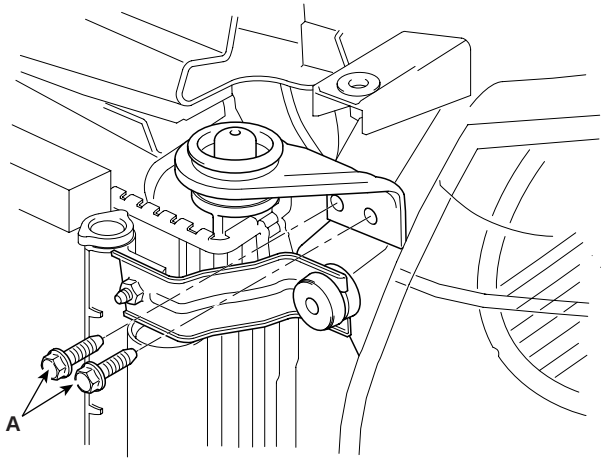

SCMEM6041D

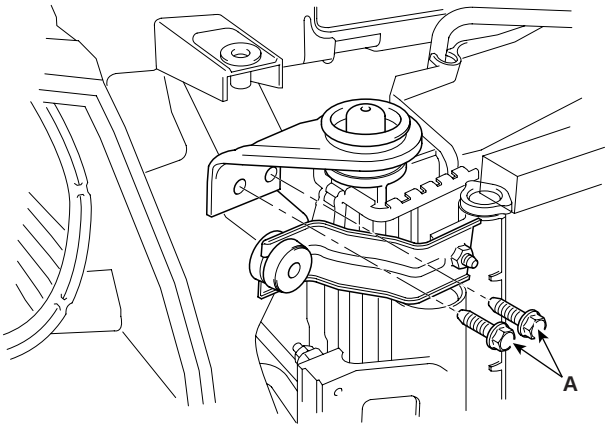

SCMEM6042D

10. Remove the radiator from engine room.

THERMOSTAT

1. Drain the engine coolant.
2. Remove the coolant inlet fitting.
3. Remove the thermostat(A).

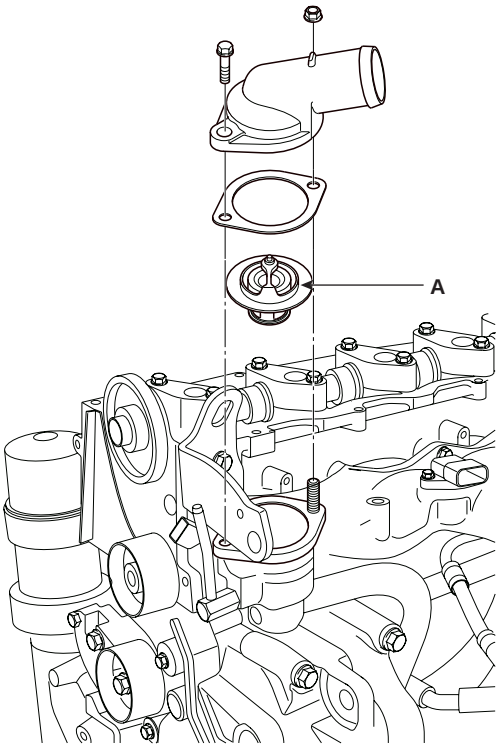

SCMM16020L

INSPECTION EBA8B55E

THERMOSTAT

Replace the thermostat if it is open at room temperature.

To test closed thermostat :

1. Suspend the thermostat in a container of water.
   Do not let the thermometer touch the bottom of the hot comtainer.

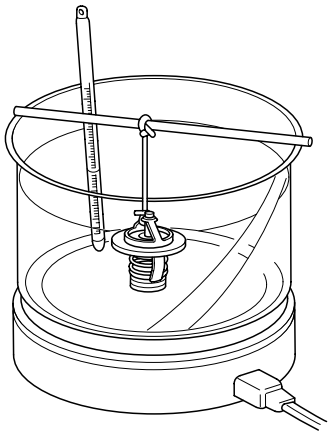

ACIE153A

2. Heat the water and check the temperature with the thermomster. Check the temperature at which the thermostat first opens, and at which it is fully open.

3. Measure the lift height of the thermostat when it is fully open.

STANDARD THERMOSTAT
Lift height : above 8.0mm (0.31in.)
Starts opening: 85 ± 1.5°C (185 ± 34.7°F)
Fully open : 100°C (212°F)

LUBRICATION SYSTEM

COMPONENTS EB5DDECB

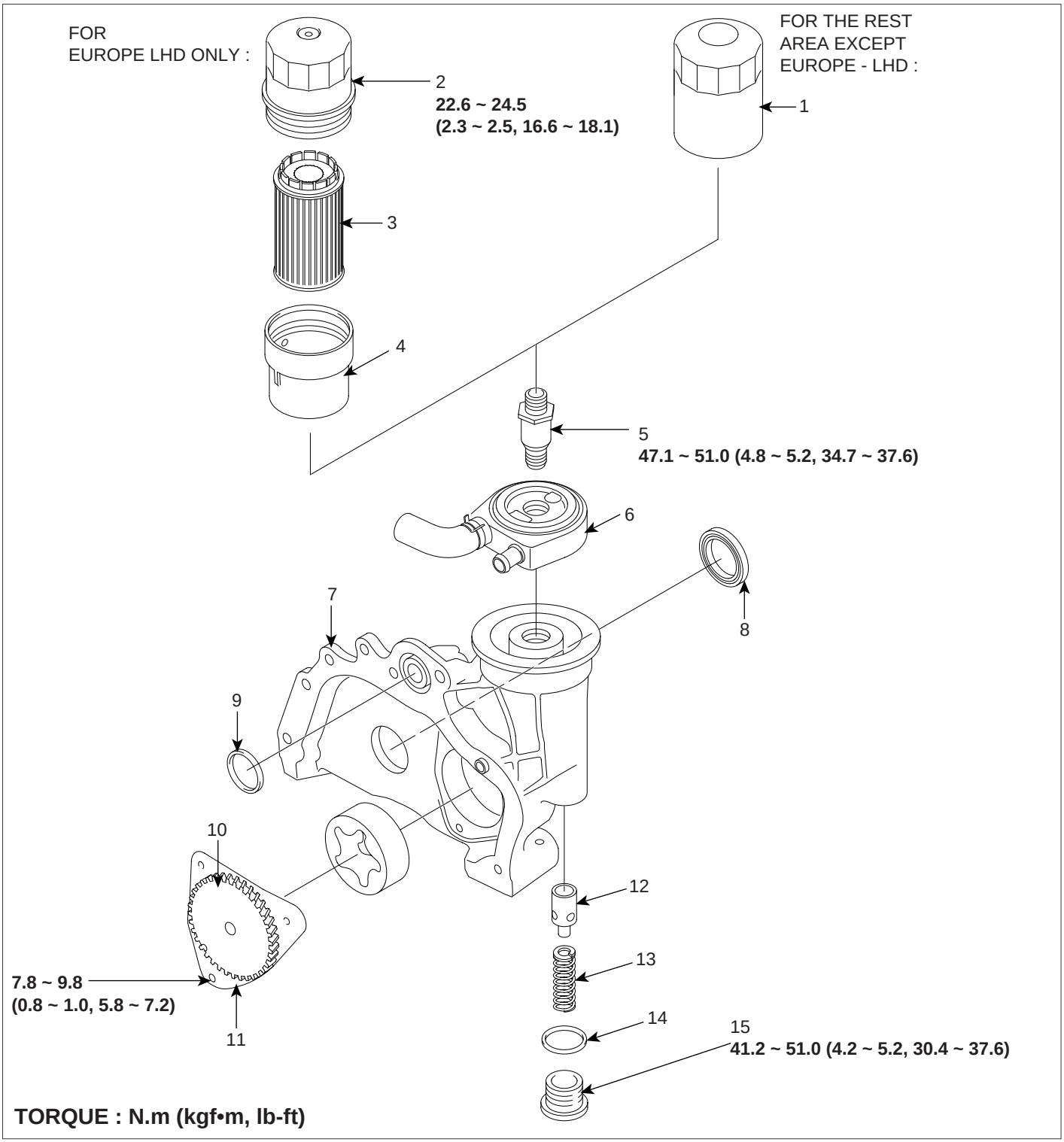

1. Oil filter assembly
2. Oil filter upper cap
3. Oil filter
4. Oil filter lower case
5. Oil filter fitting
6. Oil cooler
7. Oil pump housing
8. Oil seal
9. O-ring
10. Oil pump drive gear
11. Oil pump cover
12. Relief plunger
13. Relief spring
14. Relief cap washer
15. Relief cap

SCMM16016L

REPLACEMENT EB27D92C

ENGINE OIL FILTER

NOTE

There are two kinds of oil filters. One is for Eurpe LHD and the orther is for the rest area except Eurpe LHD (Left Hand Drive).

For Eurpe LHD :

1. Remove the oil filter upper cap from lower case with SST(09263-2E000 the oil filter wrench.).
2. Inspect the threads and rubber packing. Wipe off the seat on the oil pump assembly, then apply a light coat of oil to the oil pump assembly upper cap packing.
3. Install the new oil filter by hand to the upper cap.
4. After the rubber seal seats, tighten the oil filter clockwise with the special tool.

For the rest area except Eurpe LHD :

1. Remove the oil filter(A) with the SST(09263-27000, the oil filter wrench).

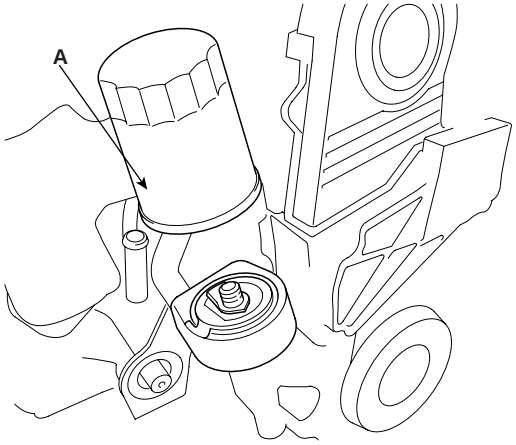

ACIE158A

2. Inspect the threads and the packing on the apply a light coat of oil new filter. Wipe off the seat.
3. Install the new oil filter by hand.
4. After the packing seats, tighten the oil filter clockwise with the SST(09263-27000).

ENGINE OIL

NOTE

Under normal conditions, the oil filter should be replaced at every other oil change. Use severe conditions, the oil filter should be replaced at each oil change.

1. Warm up the engine.
2. Remove the drain bolt, and drain the engine oil.
3. Reinstall the drain bolt with a new washer.

Tightening torque
35 ~ 45N.m (3.5 ~ 4.5kgf.m, 25.8 ~ 33.2lb-ft)

4. Refill with the recommended oil.

SELECTION OF ENGINE OIL

1. RECOMMENDED API classification : CH-4 OR ABOVE

RECOMMENDED ACEA classification : B4 OR ABOVE

RECOMMENDED SAE viscosity grades :

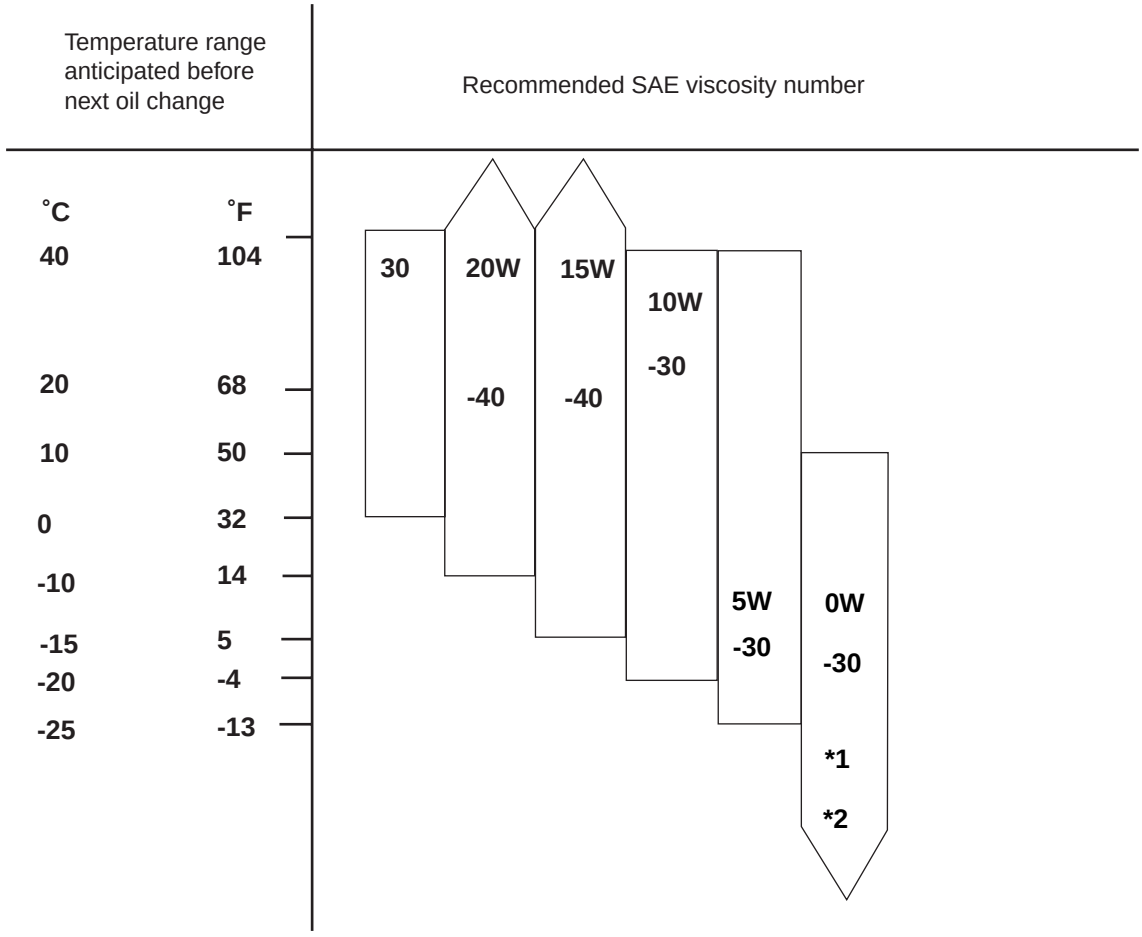

***1 Restricted by driving condition and environment.**
***2 Not recommended for sustained high speed vehicle operation**

LCIG053A

For best performance and maximum protection of all types of operation, selection only those lubricants which :

1) Satisfy the requirement of the API or ACEA classification.

2) Have the proper SAE grade number for expected ambient temperature range.

Lubricants which do not have both SAE grade number and an API or ACEA service classification on the container should not be used.

REMOVAL E2A45270

OIL PUMP

1. Drain the engine oil.
2. Remove the damper pulley(A).

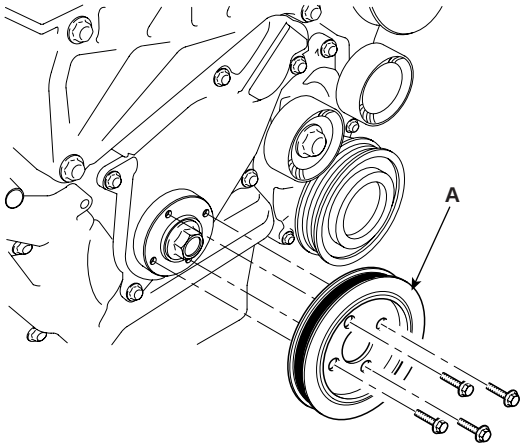

ACIE045A

3. Remove the timing belt assembly.
4. Remove the timing belt tensioner(A).

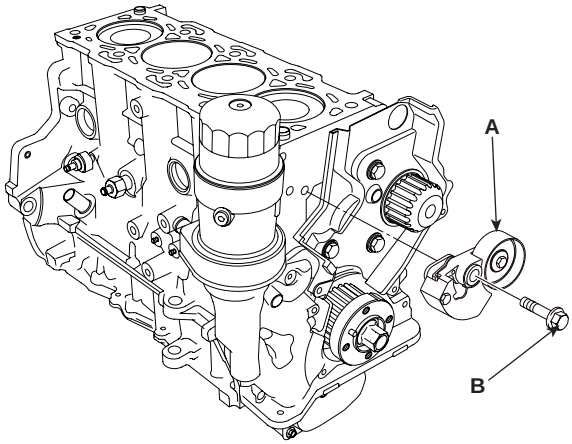

ACIE109A

5. Remove the timing rear cover(A).

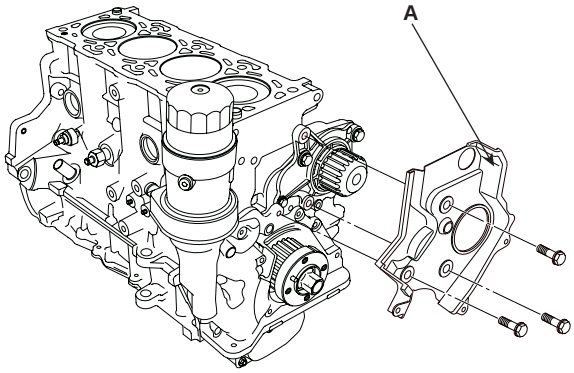

ACIE110A

6. Separate oil pan(A) from the engine block with an oil pan seal cutter.

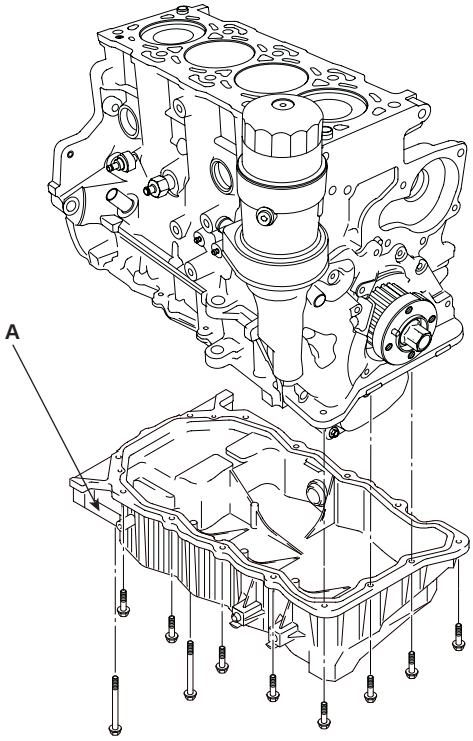

ACIE112A

7. Remove the crankshaft sproket(B) with bolt(A).

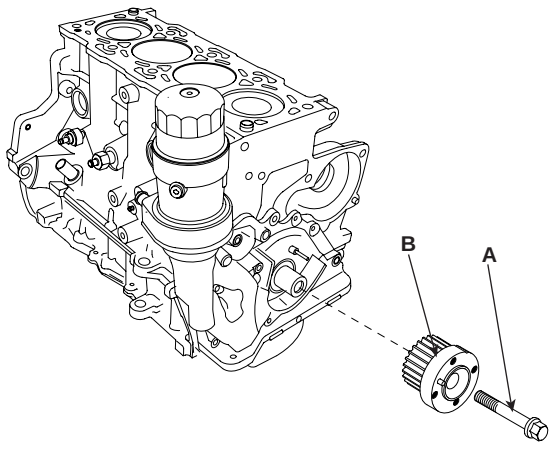

ACIE114A

8. Remove the oil screen.

9. Remove the mounting bolts(A) and the oil pump assembly(B).

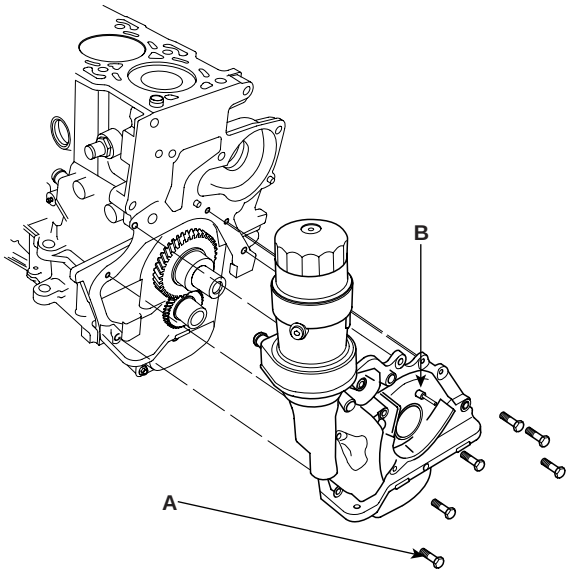

ACIE115A

DISASSEMBLY E587BEB1

OIL PUMP

1. Remove the three hexagon socket head bolts(A) from the oil pump cover(B).

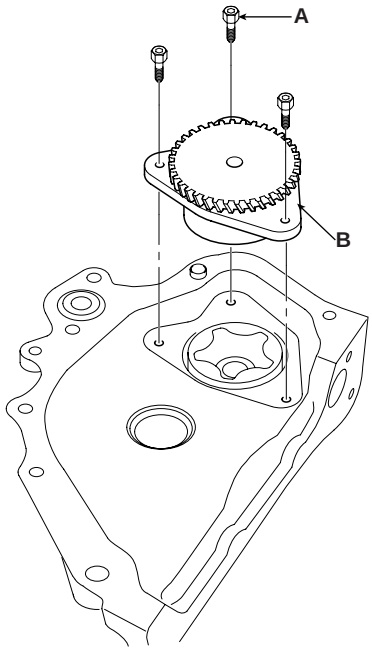

ACIE159A

2. Remove the oil pump cover with the inner rotor and the drive gear.

3. Remove the outer rotor from the oil pump case.

4. Remove the old oil seals from the oil pump case.

5. Remove the O ring(A) from the oil pump case(B).

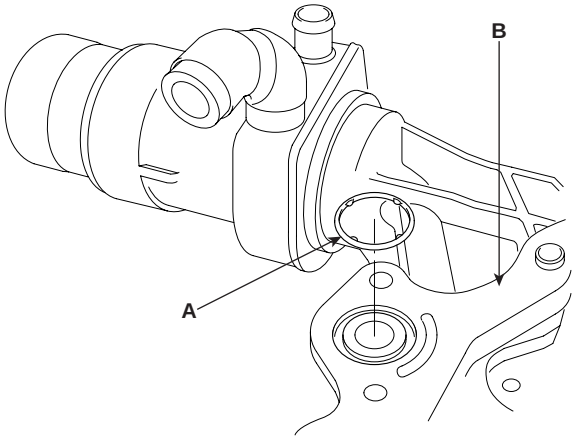

ACIE160A

6. Remove the relief cap(A), relief cap washer(B), relief spring(C) and relief plunger(D).

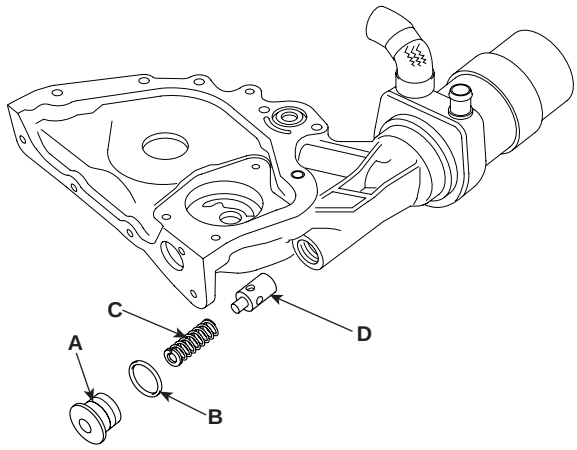

ACIE161A

7. Remove the oil filter. Refer to the engine oil filter replacement.

8. Remove the oil cooler and hose assembly after seperating the oil filter fitting.

INSPECTION EDDDB38B

OIL PUMP

1. Check the inner-to-outer rotor tip clearance between the inner rotor(A) and outer rotor(B). If the inner-to-outer rotor clearance exceeds the service limit, replace the inner and outer rotors.

Inner Rotor-to-Outer Rotor tip Clearance
Standard (New)
0.12 ~ 0.20mm (0.0047 ~ 0.0079in.)

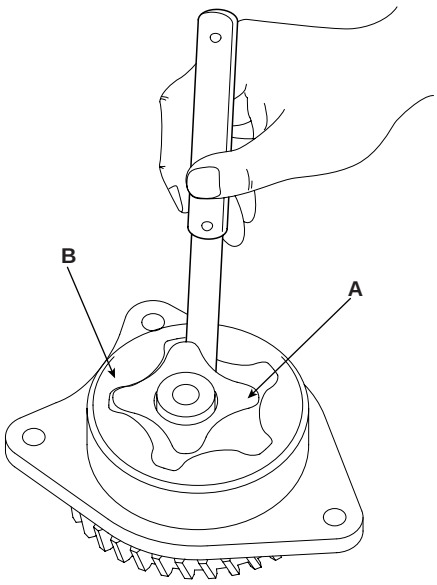

ACIE163A

2. Check the housing-to-rotor axial clearance between the rotor and oil pump cover housing. If the housing-to-rotor axial clearance exceeds the service limit, replace the set of inner and outer rotors and/or the pump housing.

Housing-to-Rotor Axial Clearance
Standard (New)
0.020 ~ 0.070mm (0.00079 ~ 0.00276in.)

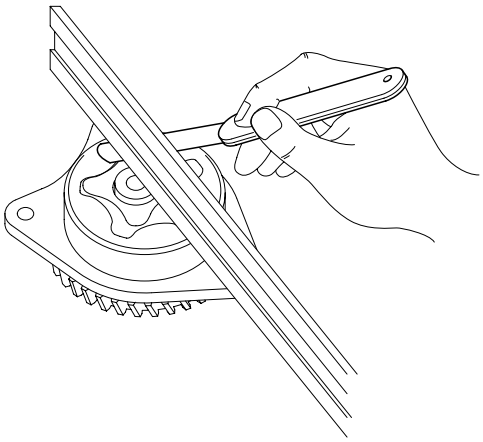

ACIE162A

3. Inspect both rotors and the oil pump cover housing for scoring or other damage. Replace parts if necessary.

OIL PRESSURE SWITCH

On Vehicle :

1. Remove the wire from the engine oil pressure switch(B).

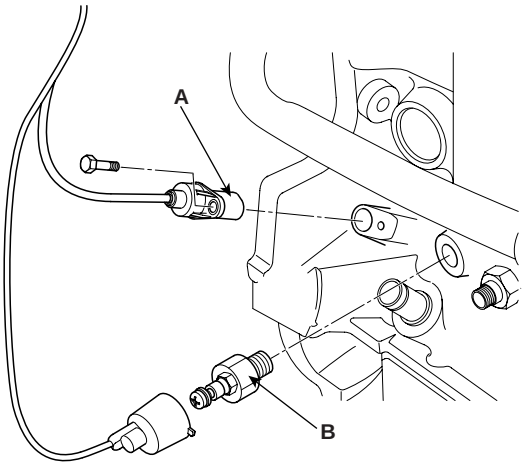

LCIF043A

2. Check for continuity between the positive terminal and the engine(ground). There should be continuity with the engine stopped. There should be no continuity with the engine running.

3. If the switch fails to operate, check the engine oil level. If the engine oil level is OK, check the engine oil pressure.

After diassembling engine :

1. Remove the oil pressure switch(A) from the engine block.
2. Connect a tester (ohm range) between the terminal(B) and the body(C) of the switch to check for continuity. The switch is normal if there is continuity. If they is no continuity, replace the switch.

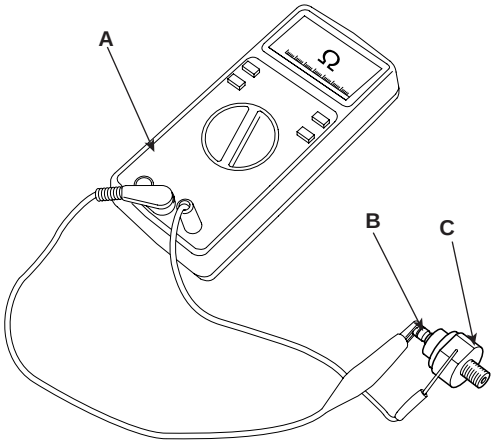

ACIE164A

3. Insert a thin rod(A) in the oil hole of the switch and push it in lightly. The switch is normal of no continuity as detected (infinite resistance on the tester). If there is continuity, replace the switch.

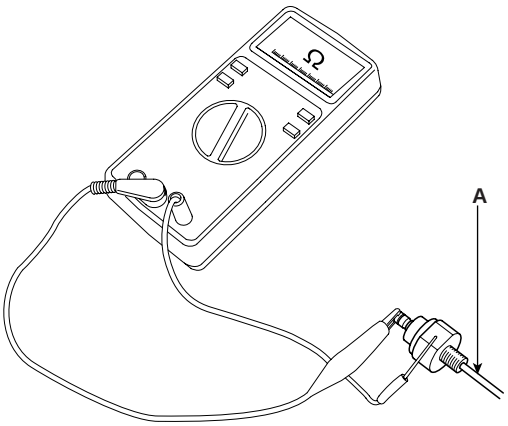

ACIE165A

REASSEMBLY E0DF6B94

OIL PUMP

1. Insert the relief plunger(D), the relief spring(C) and the relief cap washer(B). Then torque the relief cap(A).

Tightening torque 42 ~ 52N.m (4.2 ~ 5.2kgf.m, 30.98 ~ 38.35lb-ft)

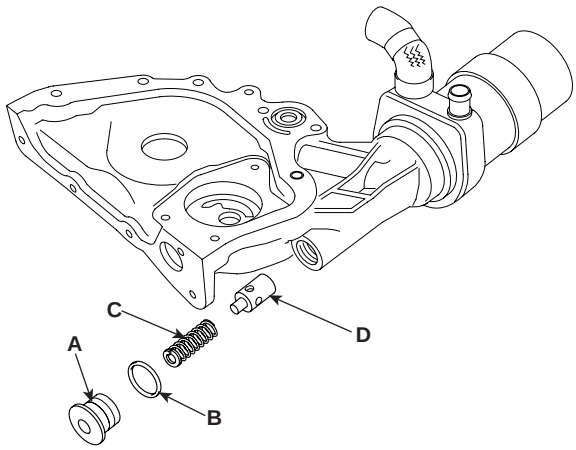

ACIE161A

2. Install the O ring(A) to the oil pump case(B)after applying engine oil.

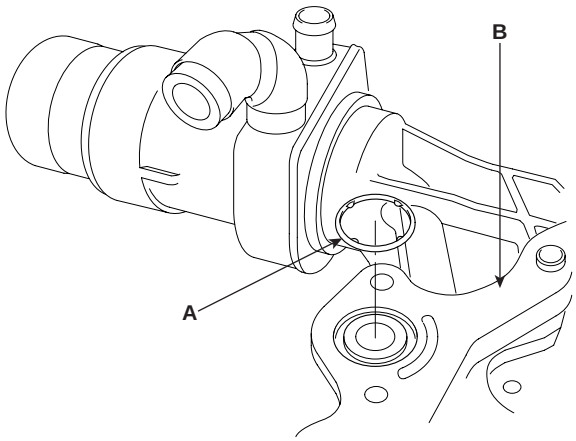

ACIE160A

3. Assemble the inner/outer rotors with engine oil the drive gear and the oil pump cover.

4. Install the oil pump cover(B)assembly to the oil pump case with the three hexagon socket head bolts(A).

Tightening torque
7.8 ~ 9.8N.m (0.8 ~ 1.0kgf.m, 5.8 ~ 7.2lb-ft)

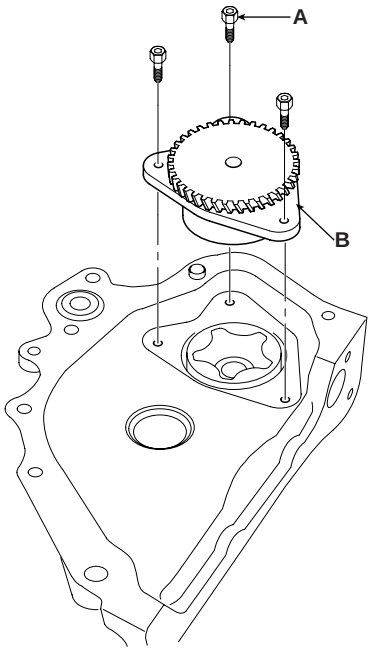

ACIE159A

5. The oil seal which was disassembled in 'Disassembly' step is recommended to be installed after the installation of the crankshaft.

INSTALLATION EF98A45A

1. Install the oil pump case(B) and the oil pan on the engine block.

Tightening torque
20 ~ 27N.m (2.0 ~ 2.7kgf.m, 15 ~ 20lb-ft)

NOTE

Standard liquid gasket : LOCTITE 5900, or equivalent.

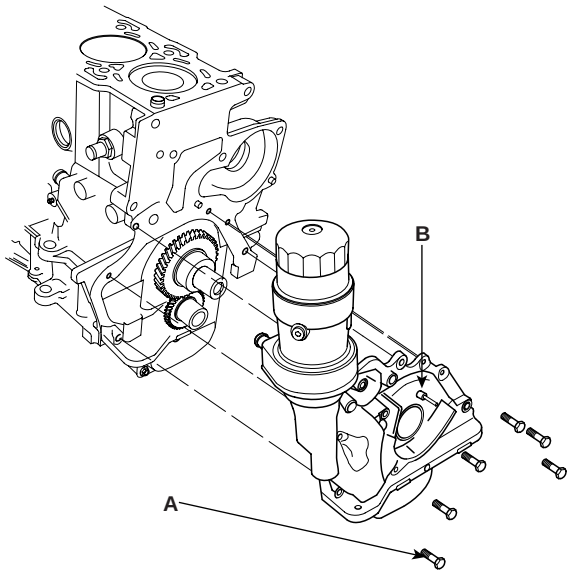

ACIE115A

2. Fill the engine oil in the room below the oil cooler (50cc)

3. Tightening the oil filter fitting, install the oil cooler and hose assembly.

NOTE

Before assembling the oil cooler. Apply SAE 20w oil on the O rings.

Tightening torque
48 ~ 52N.m (4.8 ~ 5.2kgf.m, 35.4 ~ 38.14lb.ft)

4. Install the oil filter for Eurpe LHD.
   - Install the non return valve assy of the oil filter lower case to the oil filter fitting.

Tightening torque
34 ~ 36N.m (3.4 ~ 3.6kgf.m, 25.08 ~ 26.55lb-ft)

   - After fixing the filter, tighten the oil filter upper cap.

Tightening torque
23 ~ 25N.m (2.3 ~ 2.5kgf.m, 16.96 ~ 18.44lb-ft)

5. Install the oil filter for the rest areas except Europe LHD.
   a. Torque the oil filter assy with the SST(09263-27000).

6. Install the oil screen(A).

Tightening torque
10 ~ 12N.m (1.0 ~ 1.2kgf.m, 7 ~ 9lb-ft)

7. Install the oil pan(A).

Tightening torque
10 ~ 12N.m (1.0 ~ 1.2kgf.m, 7 ~ 9lb-ft)

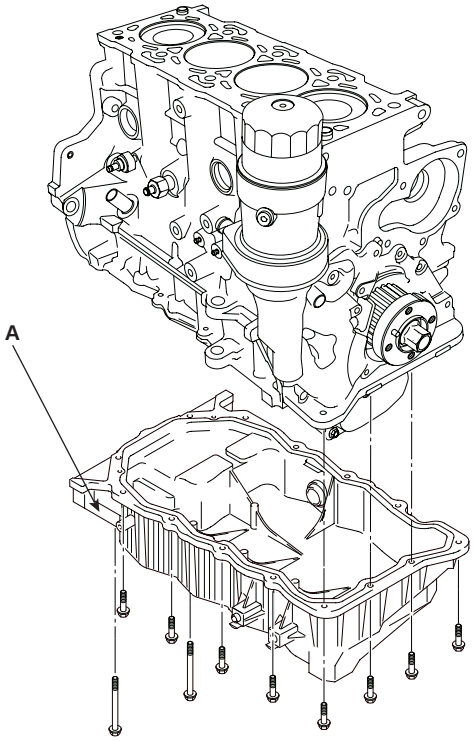

ACIE112A

NOTE

- *Standard liquid gasket : LOCTITE 5900*
- *Assemble the oil pan in 5 mimutes after applying the liquid gasket.*
- *Apply liquid gasket in a 3mm wide bead without stopping.*
- *The clearance between the liquid gasket and the flange inner end should be 2 ~ 3mm.*

8. Install the crankshaft sprocket(B) with bolt(A).

Tightening torque
196.1 ~ 205.9N.m (20.0 ~ 21.0kgf.m, 144.7 ~ 151.9lb-ft)

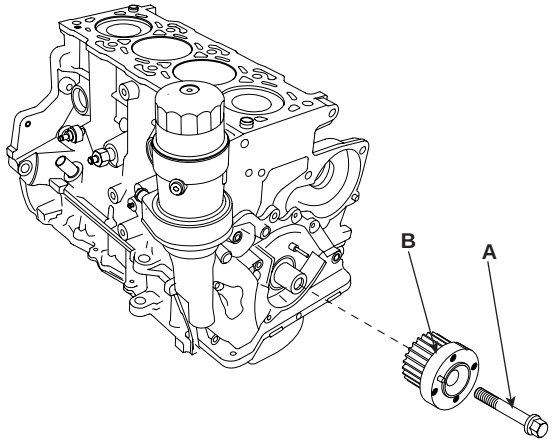

ACIE114A

9. Install the timing belt rear cover(A).

Tightening torque
8 ~ 12N.m (0.8 ~ 1.2kgf.m, 6 ~ 9lb-ft)

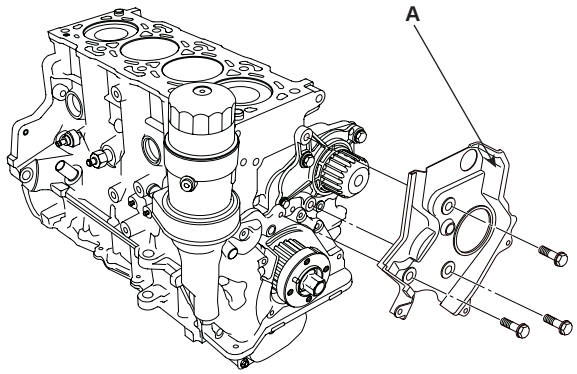

ACIE110A

10. Install the auto tensioner(A).

Tightening torque
50 ~ 55N.m (5.0 ~ 5.5kgf.m, 37 ~ 40.5lb-ft)

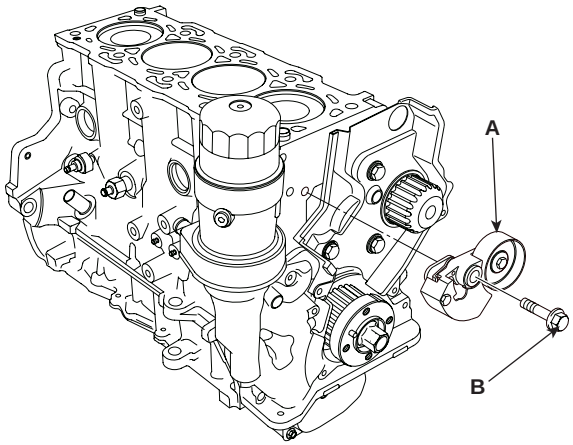

ACIE109A

11. Install the timing belt.

12. Install the crankshaft damper pulley(A).

Tightening torque
30 ~ 34N.m (3.0 ~ 3.4kgf.m, 22 ~ 25lb-ft)

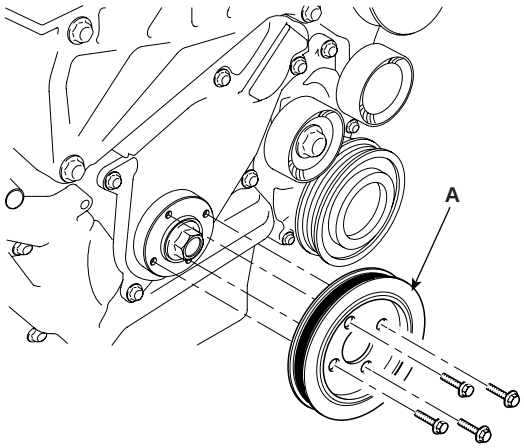

ACIE045A

INTAKE AND EXHAUST SYSTEM

COMPONENTS E86FAACF

INTAKE MANIFOLD

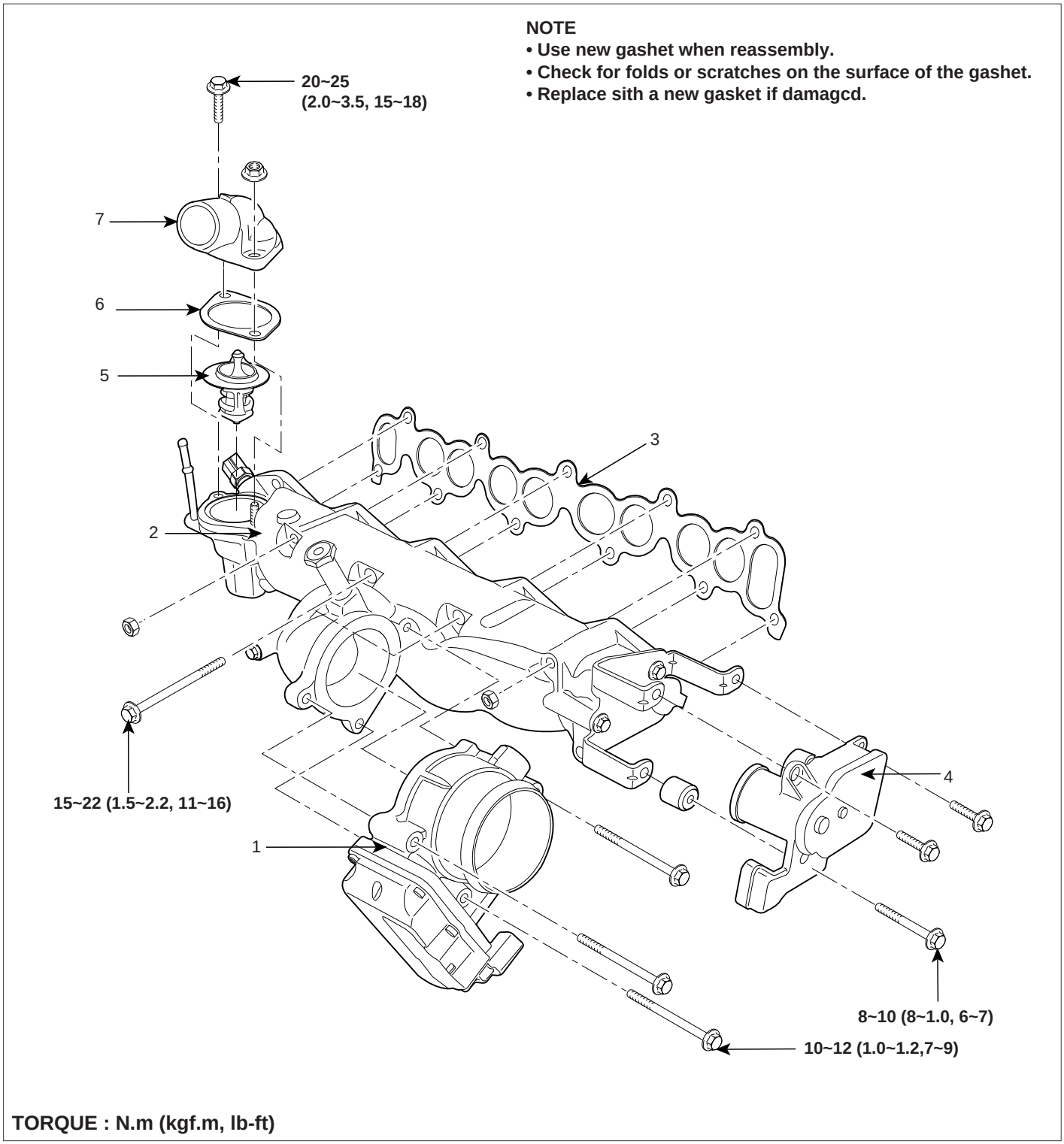

1. Throttle body
2. Intake manifold
3. Intake manifold gasket
4. Swirl valve actuator
5. Thermostat
6. Thermostat gasket
7. Thermostat housing

SCMM16017L

EXHAUST MANIFOLD

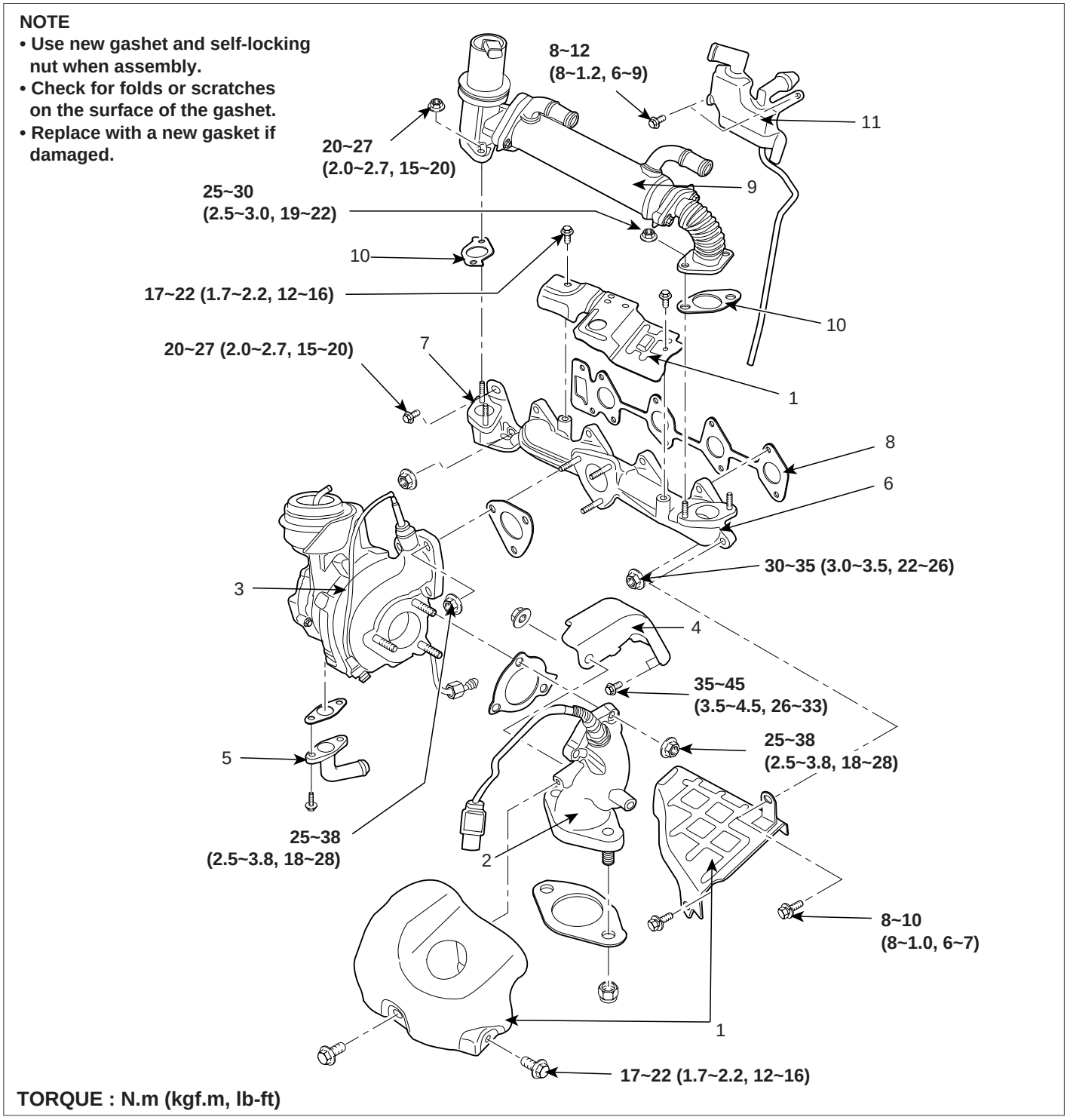

1. Heat protector
2. Turbo charger discharge pipe
3. Turbo charger assembly
4. Turbo charger support bracket
5. Turbo charger oil drain pipe
6. Exhaust manifold
7. EGR elbow
8. Exhaust manifold gasket
9. EGR valve and cooler assembly
10. EGR valve and cooler assembly gasket
11. Oil separator assembly

SCMM16018L

MUFFLER

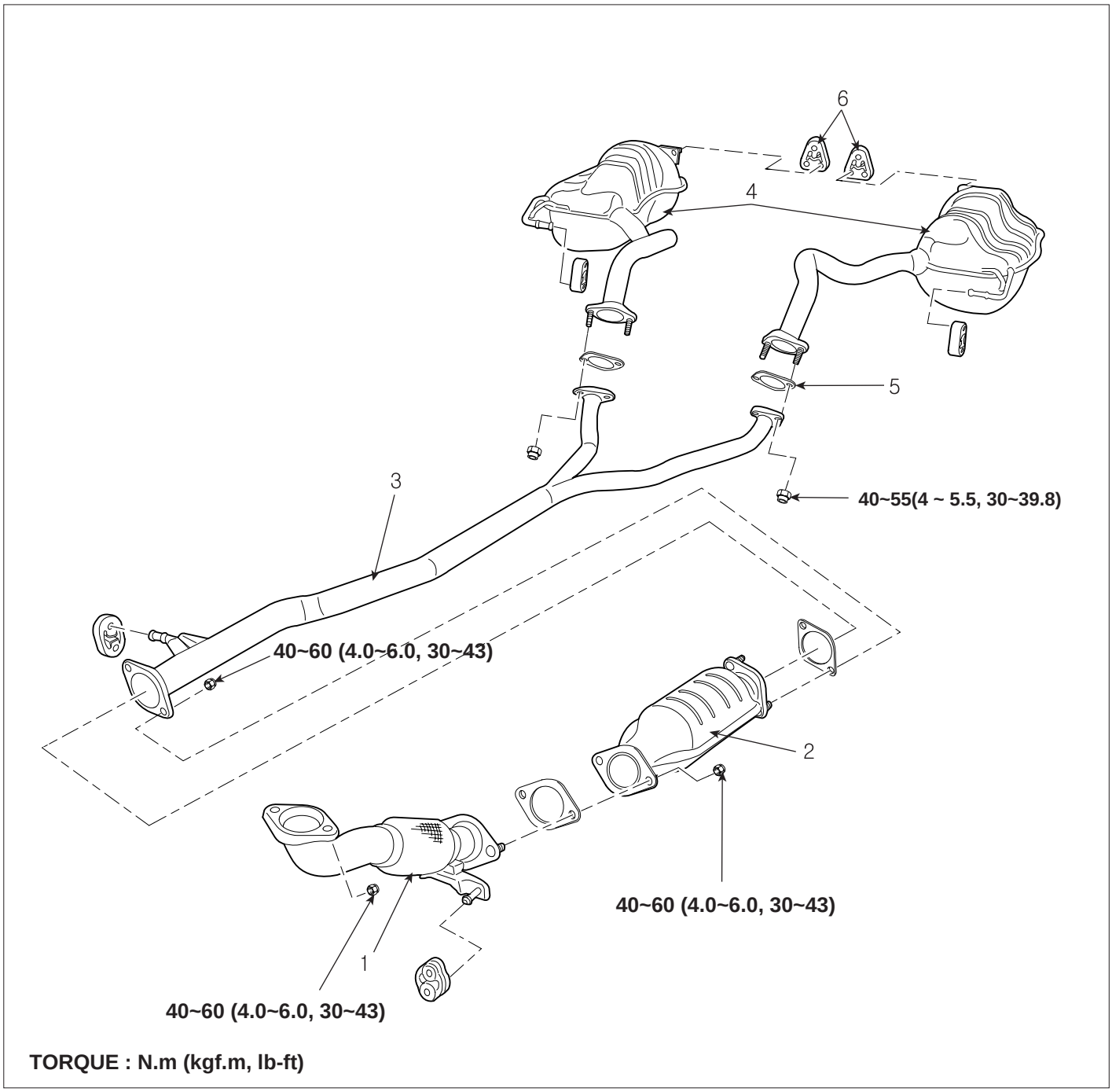

1. Front muffler
2. CPF(Catalyzed Particulate Filter)
3. Center muffler
4. Main muffler
5. Gasket
6. Rubber hanger

SCMM16019L

REMOVAL E4B0222C

INTAKE MANIFOLD

1. Remove the alternator. (See EE group - alternator)
2. Remove the intercooler hose.
3. Remove the engine coolant bleed hose.
4. Remove the radiator upper hose.
5. Disconnect the engine wire harness connectors from intake manifold side.
6. Remove the oil level gauge(A).

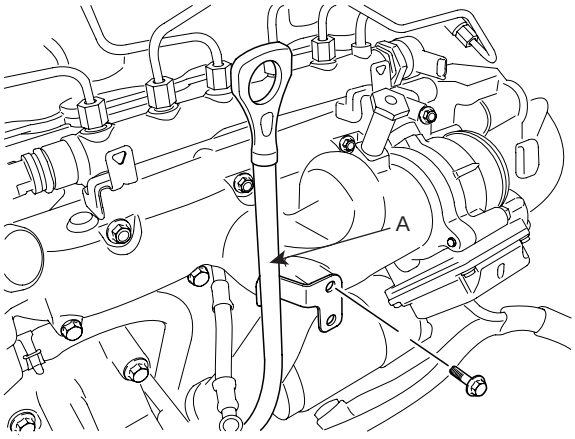

LCIG016A

7. Remove the common rail(A).(See FL group)

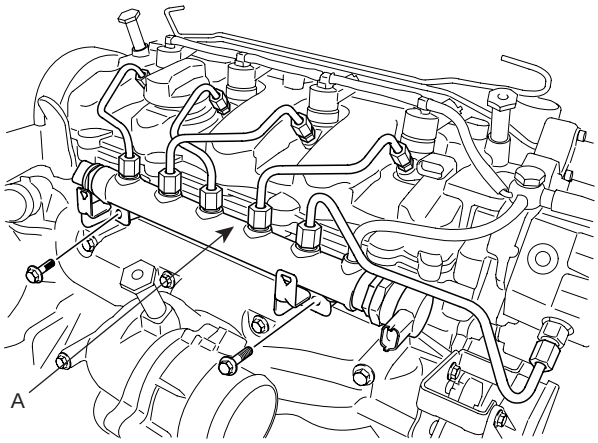

LCIG017A

8. Remove the thermostat housing(A).

Tightening torque :
20 ~ 25N.m (2.0 ~ 2.5kgf.m, 15 ~ 18lb-ft)

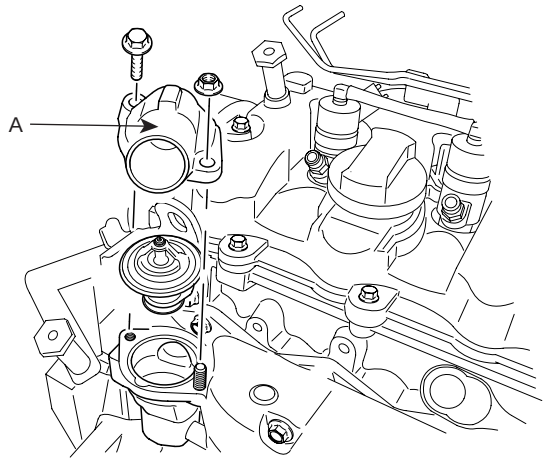

LCIG018A

9. Remove the EGR throttle body(A).

Tightening torque :
10 ~ 12N.m (1.0 ~ 1.2kgf.m, 7 ~ 9lb-ft)

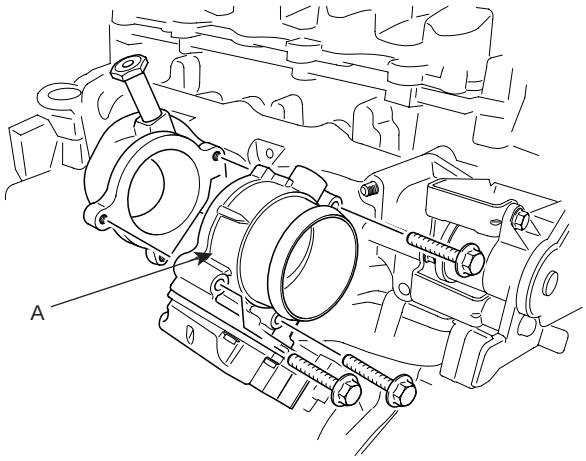

LCIG019A

10. Remove the intake manifold(A).

Tightening torque :
15 ~ 22N.m (1.5 ~ 2.2kgf.m, 11 ~ 16lb-ft)

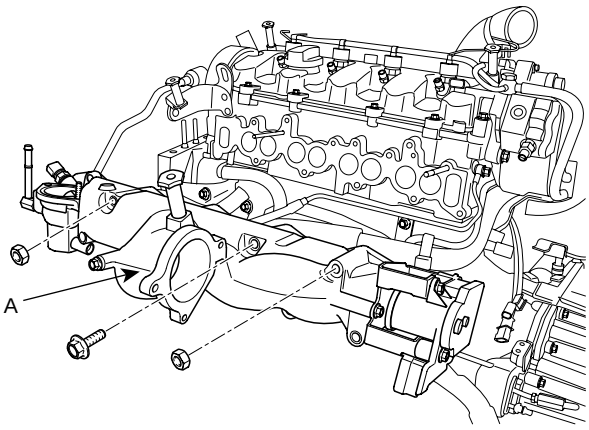

LCIG020A

11. Installation is in the reverse order of removal.

EXHAUST MANIFOLD

1. Remove the air duct and air cleaner housing.
2. Remove the battery tray.
3. Remove the intercooler pipe.
4. Disconnect the engine wire harness connectors from exhaust manifold side.
5. Disconnect the brake booster vacuum hose and heater hose.
6. Disconnect the EGR cooler hoses(A, B), lambda sensor connector(C) and VGT exhaust gas temperature sensor connector(D).

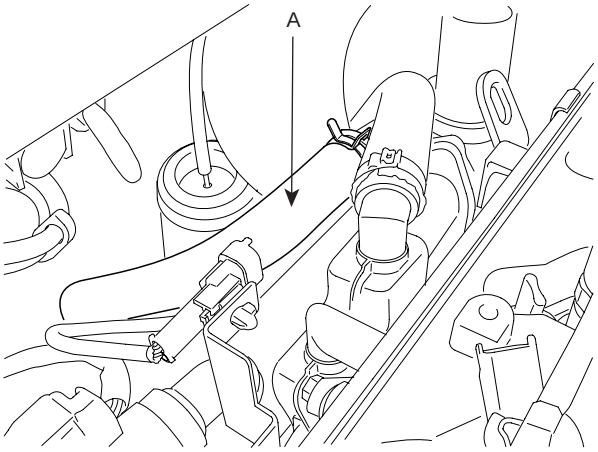

LCIG009A

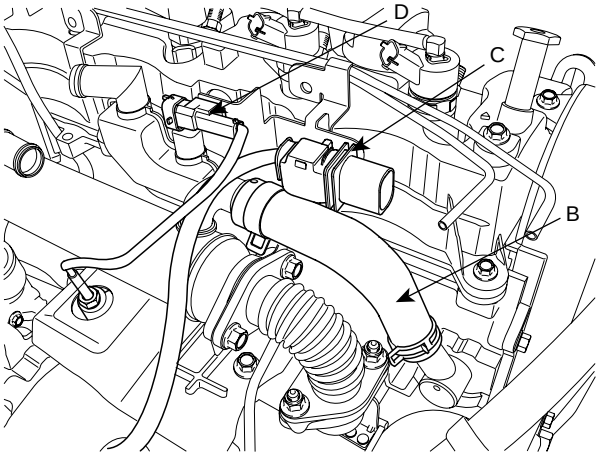

LCIG021A

7. Disconnect the turbo charger air intake hoses(A), breather hose(B) and VGT actuator vacuum hose(C).

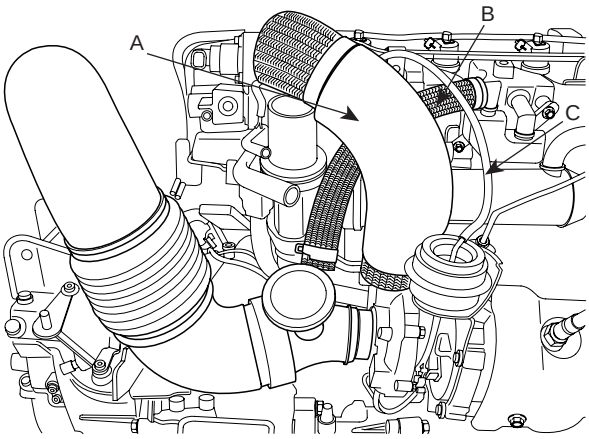

LCIG022A

NOTE

Using the SST(09495-3K000), install the breather hose clamp.

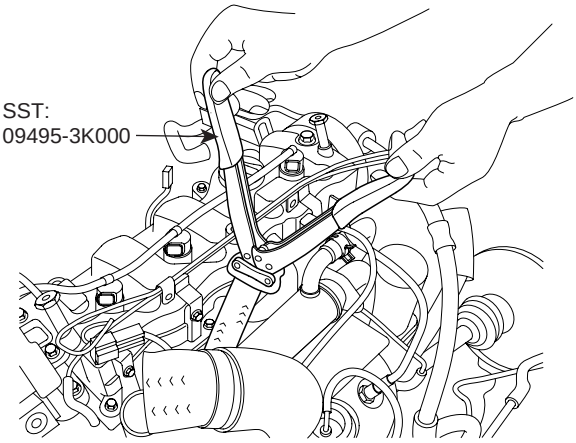

LCIG023A

8. Remove the EGR valve and cooler assembly(A).

Tightening torque :
Nuts(B), Bolt(C):
20 ~ 27N.m (2.0 ~ 2.7kgf.m, 15 ~ 20lb-ft)
Nuts(D) : 25 ~ 30N.m (250 ~ 300kgf.m, 19 ~ 22lb-ft)

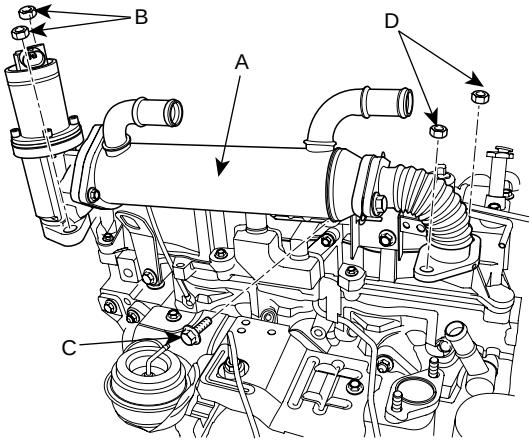

LCIG024A

9. Remove the oil separator(A).

Tightening torque :
8 ~ 12N.m (8 ~ 1.2kgf.m, 6 ~ 9lb-ft)

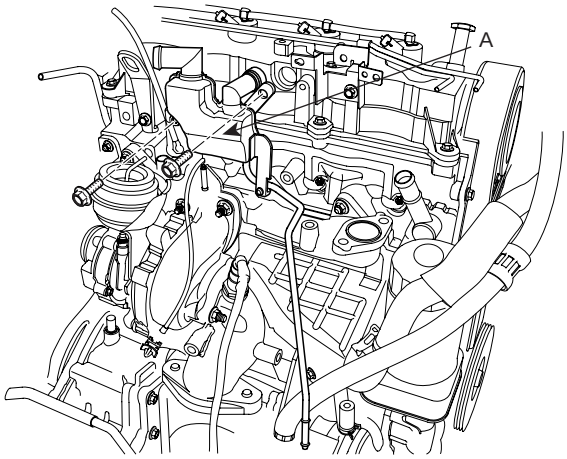

LCIG025A

10. Remove the turbo charger heat protector(A, B).

Tightening torque :
17 ~ 22N.m (170 ~ 220kgf.m, 12 ~ 16lb-ft)

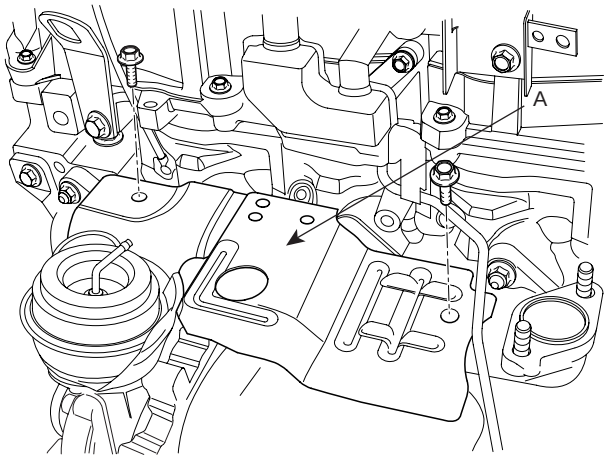

SCMEM6114D

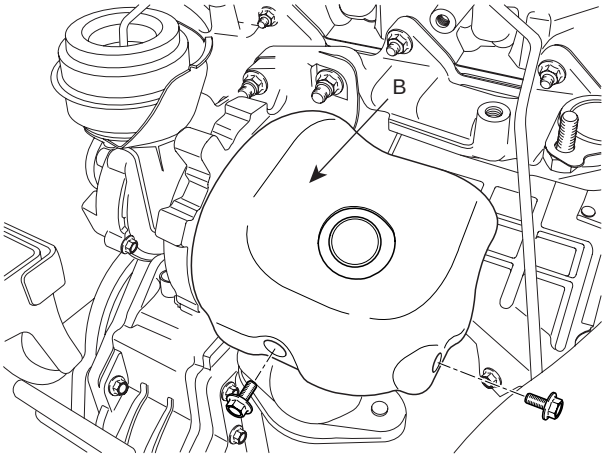

SCMEM6115D

11. Remove the heater pipe heat protector(A).

Tightening torque :
8 ~ 10N.m (8 ~ 1.0kgf.m, 6 ~ 7lb-ft)

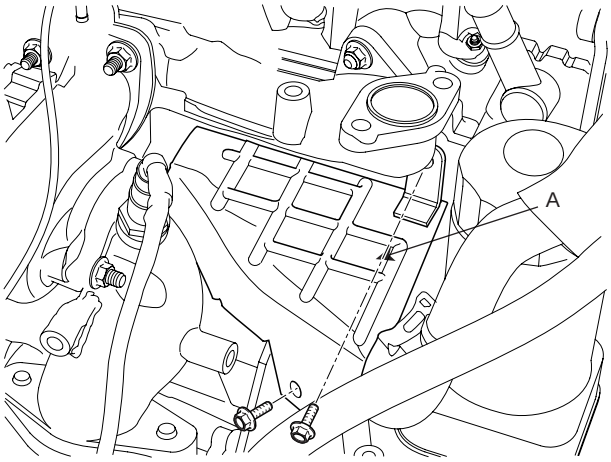

LCIG028A

12. Disconnect the turbo charger oil feed pipe(A) and oil return hose(B).

Tightening torque :
35 ~ 45N.m (3.5 ~ 4.5kgf.m, 25.3 ~ 32.5lb-ft)

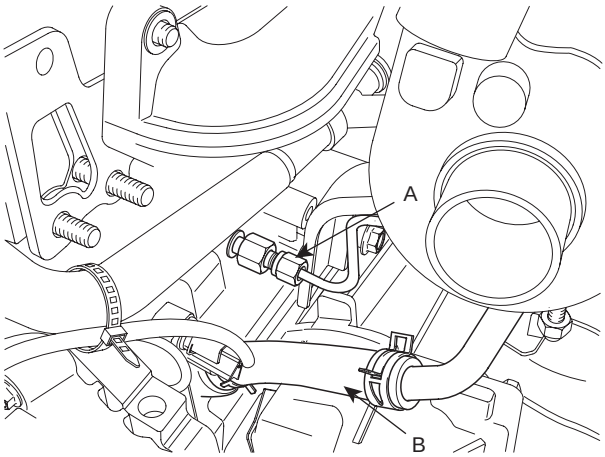

LCIG029A

13. Remove the turbocharger support bracket mounting bolts(A).

Tightening torque :
35 ~ 45N.m (3.5 ~ 4.5kgf.m, 26 ~ 33lb-ft)

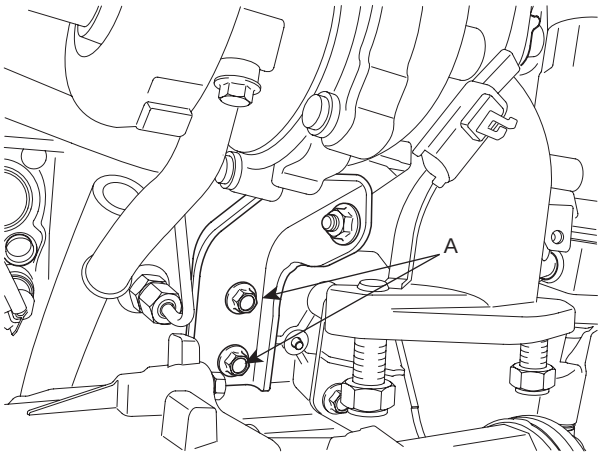

LCIG030A

14. Remove the front muffler(A).

Tightening torque :
40 ~ 60N.m (4.0 ~ 6.0kgf.m, 30 ~ 43lb-ft)

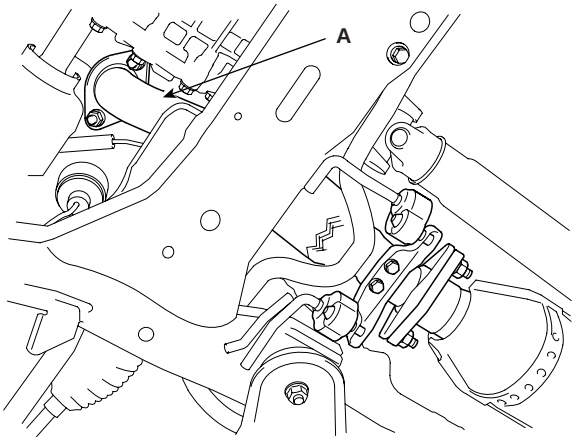

SCMEM6044D

15. Remove the EGR elbow(A) and turbocharger & exhaust manifold assembly(B).

Tightening torque :
EGR elbow bolt and nuts :
20 ~ 27N.m (2.0 ~ 2.7kgf.m, 15 ~ 20lb-ft)
Exhaust manifold nuts :
30 ~ 35N.m (3.0 ~ 3.5kgf.m, 22 ~ 26lb-ft)

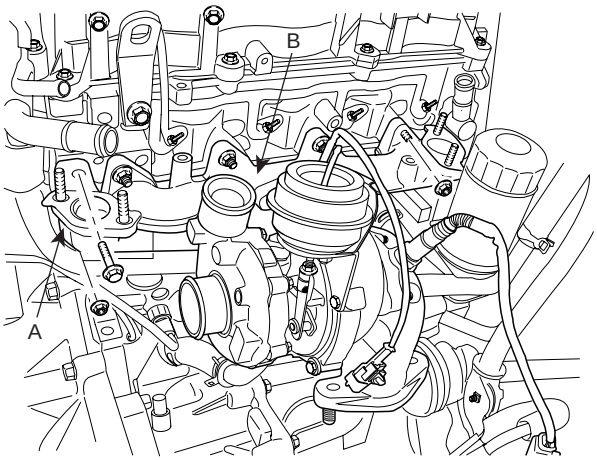

LCIG031A

16. Installation is in the reverse order of removal.

MUFFLER

1. Remove the front muffler(A).

Tightening torque :
40 ~ 60N.m (4.0 ~ 6.0kgf.m, 30 ~ 43lb-ft)

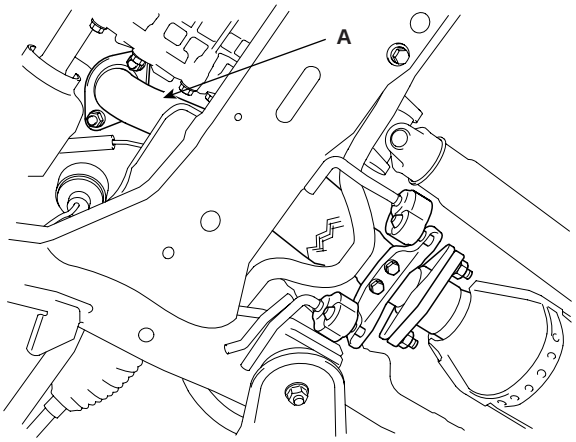

SCMEM6044D

2. Remove the catalytic convertor(A) and the center muffler(B).

Tightening torque :
40 ~ 60N.m (4.0 ~ 6.0kgf.m, 30 ~ 43lb-ft)

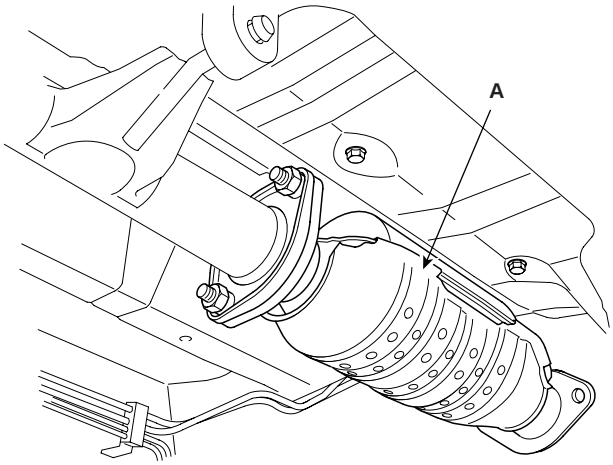

SCMEM6045D

3. Remove the main muffler(A).

Tightening torque :
40 ~ 55N.m (4.0 ~ 5.5kgf.m, 28.9 ~ 39.8lb-ft)

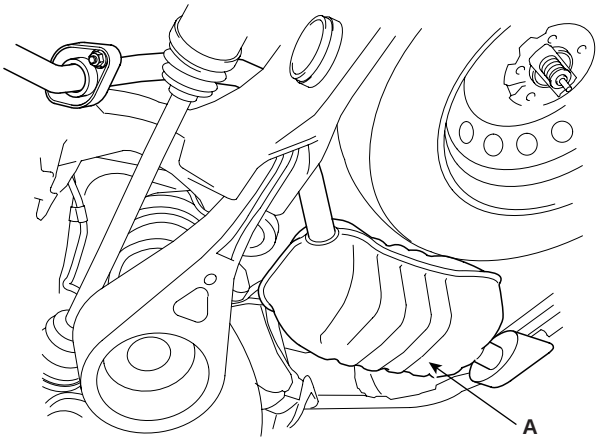

SCMEM6047D

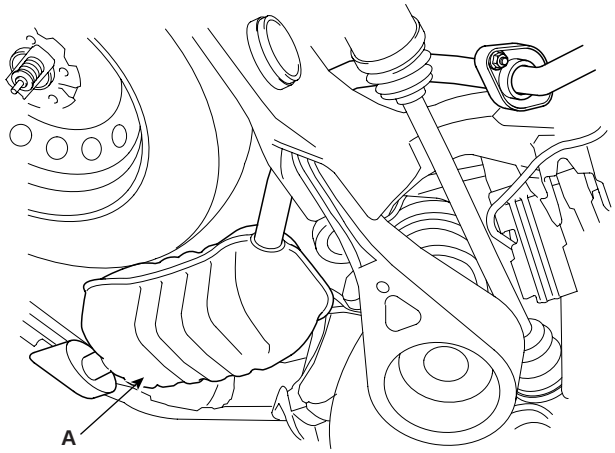

SCMEM6048D

4. Installation is in the reverse order of removal.

REPLACEMENT E41CC23B

INTERCOOLER

1. Remove the intercooler.

   1) Disconnect the integrated connector(C) that connectors the BPS(Boost Pressure sensor) sensor connector(A) and the VGT solenoid valve connector(B).

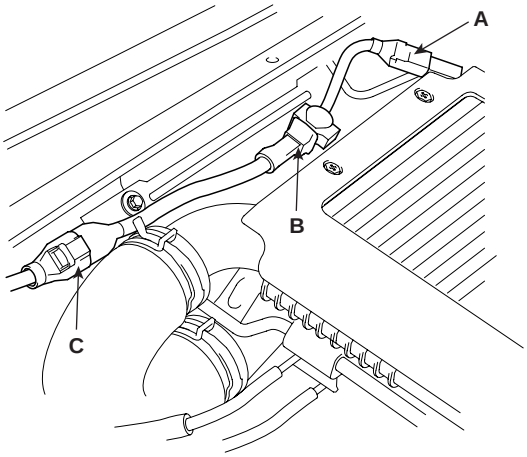

SCMEM6003D

   2) Remove the intercooler hose(A).

   3) Remove the VGT solenoid valve.

   4) Remove the intercooler(C).

Tightening torque
80 ~ 120N.m (0.8 ~ 1.2kgf.m, 5.8 ~ 8.7lb-ft)

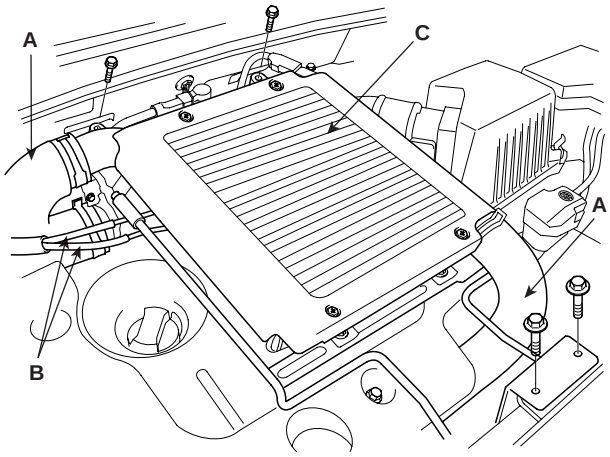

SCMEM6004D

INSTALLATION EE407A32

INTAKE MANIFOLD

1. Install the intake manifold.

Tightening torque
15 ~ 20N.m(1.5 ~ 2.0kgf.m, 10.8 ~ 14.5lb-ft)

2. Install the delivery pipe.(See FL group).
3. Install the throttle flap vacuum hose.
4. Install the coolant bleed hose.
5. Install the radiator hose.
6. Install the intercooler hose.
7. Install the alternator.

EXHAUST MANIFOLD

1. Install the exhaust manifold(A) on the cylinder head with a new gasket(B).
   Install the turbocharger supporting bracket and the oil feed/return pipes.

Tightening torque
Exhaust manifold : 30 ~ 35N.m(3.0 ~ 3.5kgf.m, 21.7 ~ 25.3lb-ft)
Turbo charger support bracket : 35 ~ 40N.m(3.5 ~ 4.0kgf.m, 25.3 ~ 28.9lb-ft)
Oil feed pipe : 12 ~ 18N.m(1.2 ~ 1.8kgf.m, 8.7 ~ 13lb-ft)

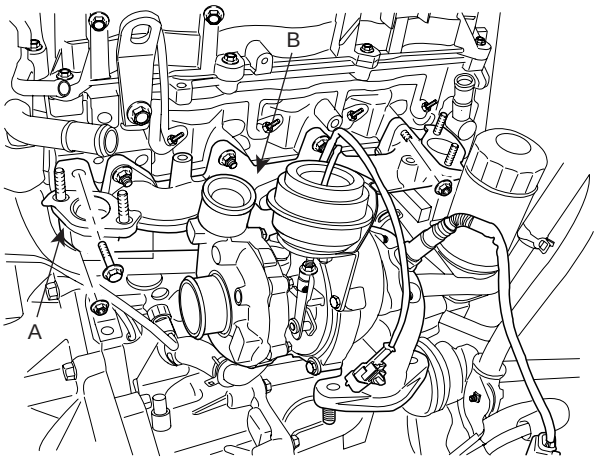

LCIG031A

2. Install the heat protector.

Tightening torque
12 ~ 16N.m(1.2 ~ 1.6kgf.m, 8.7 ~ 10.8lb-ft)

3. Install the EGR valve and EGR cooler assembly(A).

Tightening torque
25 ~ 30N.m(2.5 ~ 3.0kgf.m, 18.1 ~ 21.7lb-ft)

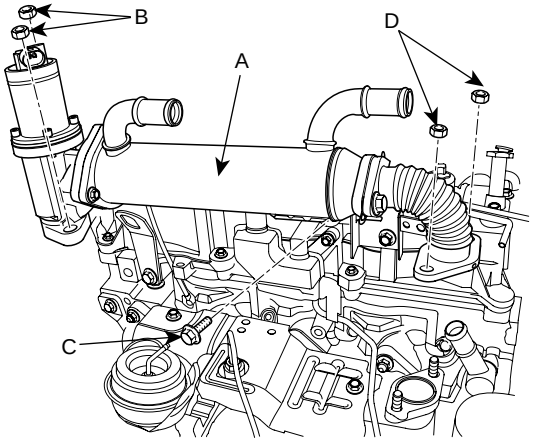

LCIG024A

4. Install the EGR valve vacuum hose.
5. Install the EGR cooler hose(A).

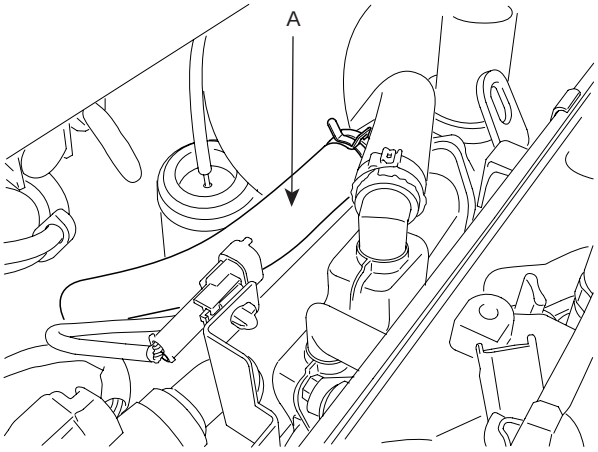

LCIG009A