GAS DISCHARGE - XENON HEADLAMPS

General information

Xenon technology is becoming increasingly more popular with respect to halogen lights because of the advantages they offer:
- higher light efficiency for decreasing electrical power draw;
- the high light flow emission makes it possible to reduce the dimensions of the light cluster (in particular the height)
- the life-span is on average double that of a halogen bulb
- better visibility for better perception of obstacles (xenon lights provide approximately three times more light than a normal halogen headlight)
- quicker reaction times: the road, the road side and the carriageway are better lit and the reaction times for avoiding obstacles are reduced
- safer driving, deeper visibility and quicker perception of obstacles compensates the unpleasant feeling which accompanies driving at night and in poor weather thus increasing driving comfort.

The devices needed for operation are:
- **xenon bulbs:**

The light beam of a xenon bulb exceeds that of a halogen light in both depth and width allowing to identify obstacles better and faster. Light from a xenon bulb is white and clear, very similar to sun light (see light spectrum below).
The bulb contains xenon gas at a pressure of 3 bars.It is powered in high voltage generated by two photovoltaic arcs to produce light.
Xenon bulbs have a consumption of approximately 35 Watts, against the 55/60 Watts of traditional solutions. Reliability and duration are such to not require replacement for the entire life of the car.
The lighting power of xenon headlights is currently 3000 lumen, approximately double that of traditional halogen bulbs.
- **elliptic lens:**

The standard elliptic module is fitted inside the headlight and secured to the main beam spot reflector.
- **electronic control (ballast)**

The main function of the ballast is to trigger the high voltage pulses to light up the bulb instantly and hold extra power for a few seconds in order to heat up the bulb electrodes, control the current and the voltage for maintaining the required light flow.
- **dynamic beam height correction**

The correct light beam during operation is guaranteed by an automatic dynamic correction system which adapts the beam to the load of the car and roughness of the road.
It mainly consists of two sensors fitted on the front/rear suspensions which control the headlight level.

Light flow comparison (Isolux chart) comparing halogen source and gas discharge source

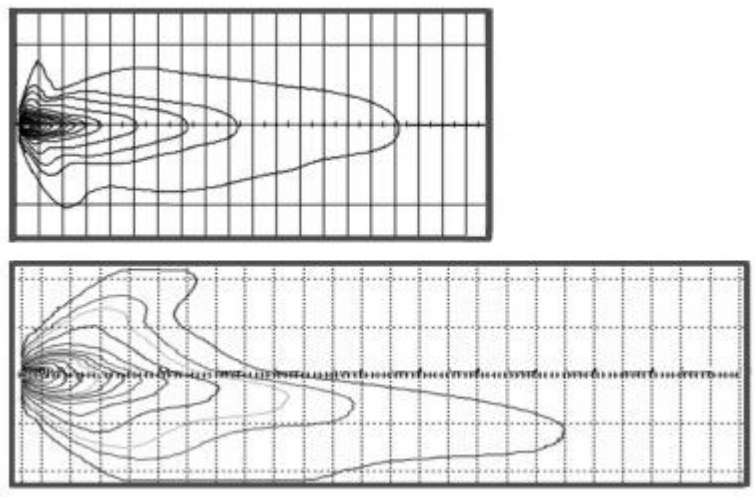

Cardiagn.com

Afs (automatic frontlight system)

This is an advanced control system which, through the CAN, allows the light beam to be adjusted in accordance with the steering system controls.
The light beam follows the steering controls by performing a rotation proportional to the radius of curvature up to a maximum of 15° and permitting the vehicle state-of-the art dynamic driving safety.

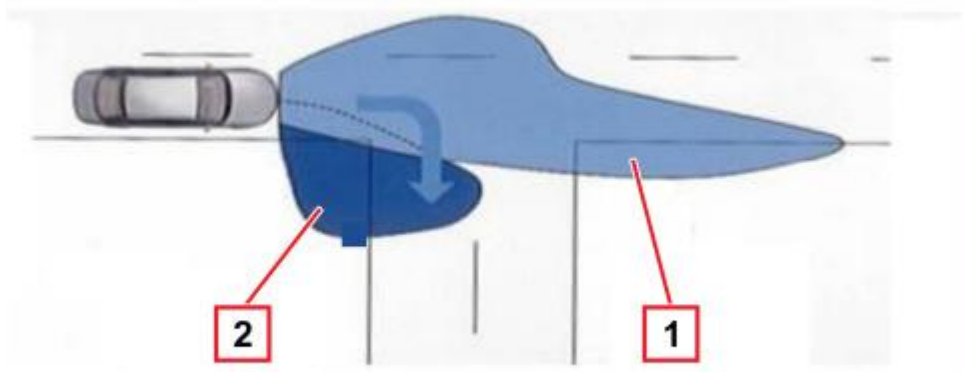

1 - "Basic" light beam
2 - Additional light beam

This logic is managed by the "Self-adaptive Lighting Node" located under the central tunnel and can be activated or deactivated through the dedicated button located among the controls in the middle of the dashboard.

Headlight

The components needed for operating the system (lamp, ignitor, ballast, corrector motor) are integrated inside the light cluster along with the traditional components (side lights, direction indicators, dipped beam headlight).
The unit consists of:

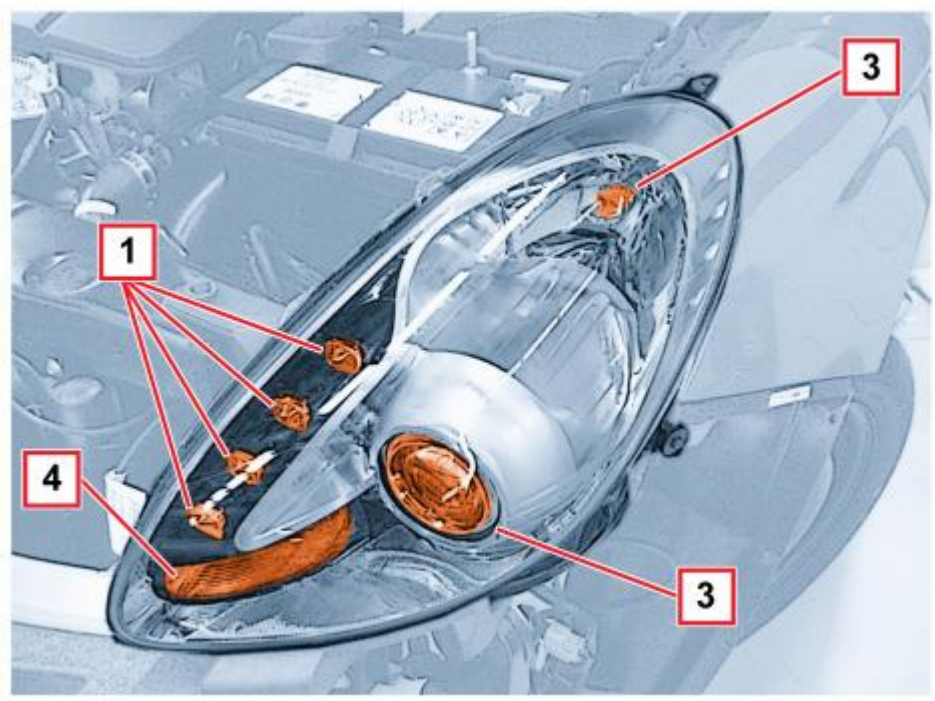

cardiagn.com

1 - Side/day light
2 - Main beam light (flasher)
3 - GAS DISCHARGE LAMP (dipped headlamps / main beams)
4 - Direction indicator

Headlight features

The front light cluster mainly consists of:
- **clear polycarbonate outer lens** with scratch-proof and anti-UV paint;
- **polypropylene casing** with fibreglass containing extensions for fixing to the body, the latter are collapsible to meet pedestrian impact type approval requirements. The casing also includes a housing at the bottom for fixing a bumper support bracket to ensure the profile between the 2 parts.
The casing also contains housings for attaching direction bulb holders and the electrical connection, ventilation plugs and housings for the xenon and LED control units.
- main **decorative frame** in metallic polyamide; the frame/reflector and LED base are secured to this; its surface finish enhances its technological aspect; it has some slots on the sides;
-**direction reflector** made out of metallic polyamide with a housing for attaching to a clear diaphragm with horizontal prism designs;
- **side light/DRL LED unit** made out of a black polycarbonate frame, a metallic polyamide reflector casing onto which the LEDs are attached, fitted on a flexible structure;
-**main beam reflector** made out of painted, metallic BMC with a housing for the adjustment blocks and attachment of the elliptical module.
Bulbs present:
- D1S xenon bulb for dipped-beam/main-beam headlights junction.
- Module with 4 "K2 lumiled" type LEDs for side lights and daytime running lights function
- "Hypervision" PY 24 W module for direction indicators function
- H1-55 W-12 V halogen bulb for main beam headlights spot function.

Xenon bulb

The light source of a two-function xenon module is a D1S bulb mounted on an elliptical module powered at high voltage by an ignitor supplied by a ballast which converts the power values to those needed to trigger the arch in the range from approximately 20000 to 85 Volts (operations needed approximately 15 sec).
Light is generated by an arc sparked between two electrodes contained in the glass ampoule.The arc is maintained during the entire operation of the bulb.

1 - Lamp
2 - Ignitor
3 - Ceramic insulation
4 - Connector
In detail, the operation of a xenon bulb consists of four phases:
- Ignition: During this stage the ballast produces a voltage capable of causing the engagement of a suitable device located in the ignitor. A step-up transformer circuit transfers the suitably amplified excess voltage to the bulb thereby causing a discharge between the electrodes.
- Take-over (arc maintenance) during this stage (lasting several seconds) the bulb receives the excess power supply necessary for producing the rapid evaporation of the metallic halides contained in the bulb in order to guarantee that the operating brightness is reached quickly. In these conditions the bulb produces a light flash that is twice the intensity of normal for a period of about 100 microseconds.
- Warm up for a period of about two minutes, the ballast regulates the light intensity determining the physical state of the bulb from its impedance properties (closed loop control).
- Steady state: the light beam is continuously controlled in a closed loop also in running conditions.The ignitor is arranged in the base of the lamp itself; the ballast is arranged in the control unit.

Bi-litronic function

The switching between the dipped and main beam functions for xenon bulbs takes place by means of a suitably shaped metal screen that is lowered for dipped operation and raised for main beam operation.
The movement of the screen is produced by a coil which, when activated, moves a pin which pushes on the screen and lowers it.
When the coil is no longer activated, a spring returns the screen to its original position.

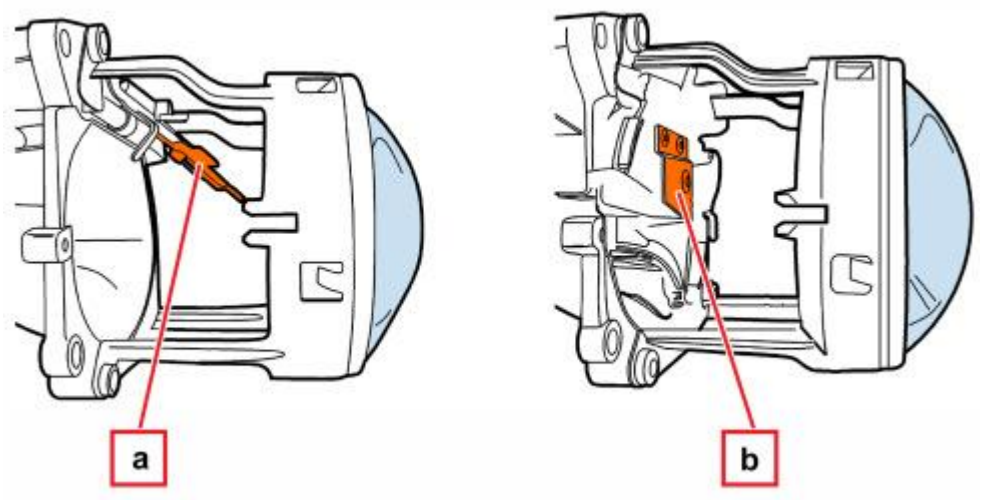

a) screen lowered: main beam headlamp
b) screen in rest position: dipped headlamp

Lamp rear view

cardiagn.com

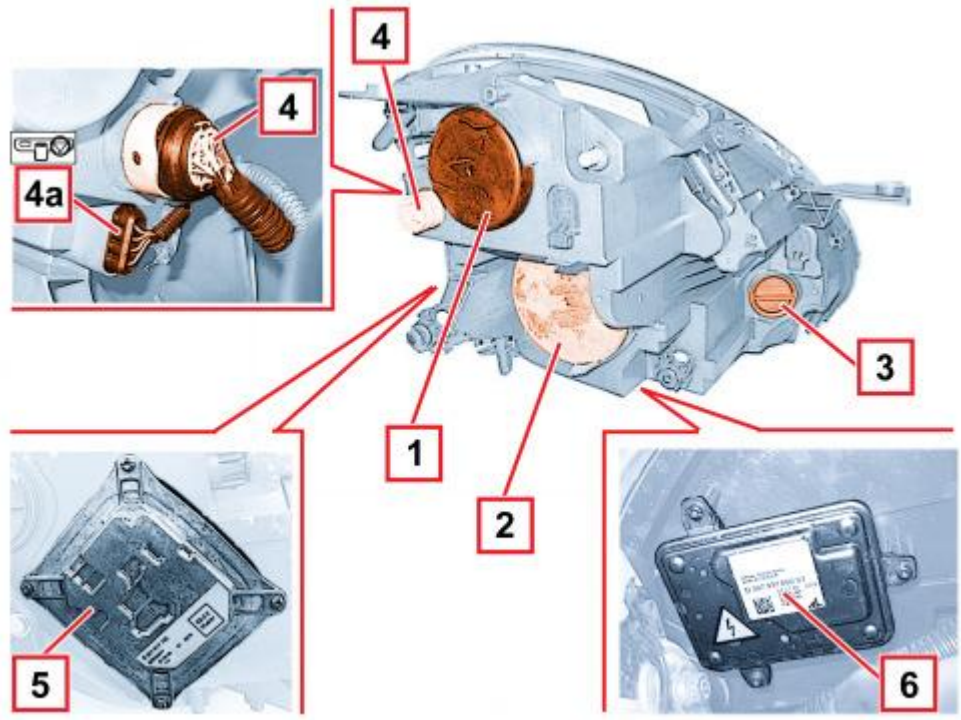

1 - Dipped beam and side/day light lid
2 - Dipped headlamps lid
3 - Direction indicators lid
4 - Connector
4b - Connector (for right headlamp only)
5 - LED control unit
6 - Self-adaptive module stepper control unit

Control unit

The logics for the above functions are managed by the "Self-adaptive Lighting Node" located on the central tunnel, passenger side.
The electronic control unit co-ordinates the operation of the entire system:
- it receives signals from the vertical geometry sensors located on the front and rear suspension;
- it receives the signals for vehicle speed, steering angle, angular steering speed, etc. through the CAN
- it has a diagnosis function and, through serial line, it manages the two sets of electronics on the headlamps.
These, in turn:
- receive the dipped headlamp and main beam headlamp power supply and control
- control the gas bulbs
- control the angle adjustment motors
- control the horizontal adjustment motors also thanks to a position sensor located in the headlamp.

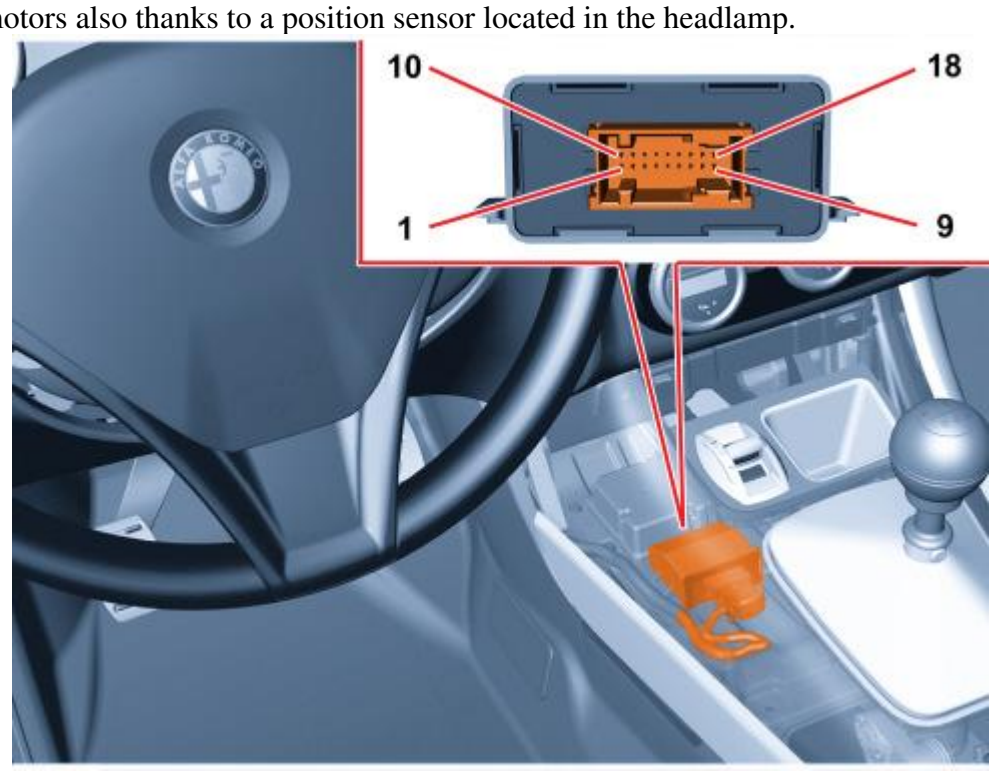

Control unit PIN OUT:
1 - Ignition-operated power supply
2 - Signal input from AFS activation button
3 - Earth
4 - Signal from sensor on rear suspension
6 - AFS activation LED signal
7 - LIN 2 serial line
8 - CAN L line
9 - CAN L line
10 - Power supply for sensors on suspension
12 - Earth for sensors on suspension
13 - Signal from sensor on front suspension
16 - LIN 1 serial line
17 - CAN-H line

cardiagn.com

18 - CAN-H line

Automatic headlamp alignment corrector

Xenon headlights must be equipped by law with a dynamic alignment corrector to prevent dazzling oncoming vehicles.The device works in the following conditions:
- static type, due to the distribution of the load;
- dynamic type, due to acceleration and deceleration.

The dynamic corrector also improves driving comfort because the illuminated area is stabilised and the driver's eye does not need to constantly adapt to changes of lighting.
The device consists of:
- a stepper actuator for each headlamp.
- two load sensors, connected to the front and rear suspension, right side.

Correction

Light beam correction is made by means of the load sensor signal which, connected to the suspensions, provides an indication of vehicle load.
The control unit is activated at every Key on and resets the headlamps to the exact distance (calculated depending on the vehicle load) which consists of completely lowering and then positioning the reflector.
The load sensor signals are periodically acquired and a suitable average taken in order to readjust the position of the headlamp if necessary (e.g. fuel consumption whilst driving). This readjustment is not immediate.It is filtered in time to avoid undesired corrections (e.g. potholes, rough roads, etc.).
This correction is also made with the lights off, so that the moment the beam is switched on it is already correctly positioned.

Load sensors

The sensors are fastened to the vehicle bodyshell, whilst a suitable shaped lever follows the movement of the suspension.
The sensor receives a power supply from the headlamp control unit and provides a linear output signal proportional to the position of the suspension in relation to the bodyshell.

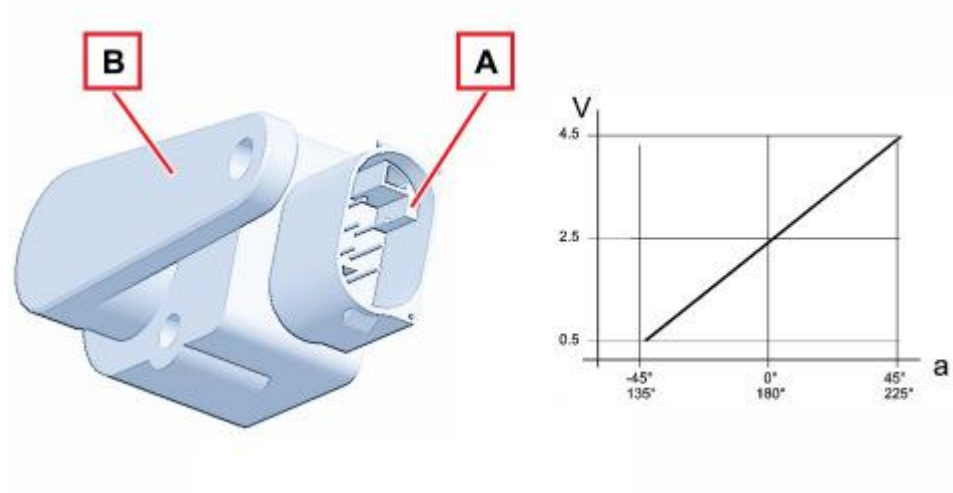

A - Part fastened to the bodyshell
B - Part fastened to the suspension linkage
a - Lever angle
V - Sensor output signal voltage

Adjustment actuator

A stepper actuator inside the light cluster carries out this adjustment. It consists of an electric stepper motor and a worm screw reduction unit which transforms the rotary motion of a hinged push rod into linear motion by means of a ball joint on the reflective surface.

Self-diagnosis

The electronics that manage the system have an auto diagnostic function that continuously checks operation.
The control unit carries out continuous self-diagnosis of system operation. In particular it detects and stores any faults.
The faults memorized in the control unit can be analyzed using the Examiner or other diagnostic equipment.

Recovery

The auto diagnostic management logic also has a recovery function: if errors are detected, the system no longer works properly and therefore the incorrect adjustment of the light beam could be dangerous and dazzle other vehicles.
The light beam is therefore positioned downwards in order not to dazzle anyone, but allows sufficient light to drive safely to a service centre.
The light beam is positioned downwards in the incorrect or lacking programming of the control unit.

Resetting

If the master control unit (in the left headlamp) is replaced, a self-learning procedure must be carried out, connecting to the diagnostic equipment, which makes it possible to automatically reset the system which should recognize the the position of the headlamp correctly aligned in position 0 from where the various adjustments can be set.

cardiagn.com