Workshop Manual

Audi A4 2001 ➤
Audi A4 Cabriolet 2003 ➤
Audi A6 2005 ➤
Audi A8 2003 ➤

Rear final drive 01R

Edition 02.2010

Protected by copyright. Copying for private or commercial purposes, in part or in whole, is not permitted unless authorised by AUDI AG. AUDI AG does not guarantee or accept any liability with respect to the correctness of information in this document. Copyright by AUDI AG.

List of Workshop Manual Repair Groups

Repair Group

00 - Technical data

39 - Final drive - rear differential

Protected by copyright. Copying for private or commercial purposes, in part or in whole, is not permitted unless authorised by AUDI AG. AUDI AG does not guarantee or accept any liability with respect to the correctness of information in this document. Copyright by AUDI AG.

Technical information should always be available to the foremen and mechanics, because their careful and constant adherence to the instructions is essential to ensure vehicle road-worthiness and safety. In addition, the normal basic safety precautions for working on motor vehicles must, as a matter of course, be observed.

All rights reserved.
No reproduction without prior agreement from publisher.

Copyright © 2015 Audi AG, Ingolstadt

A005A600920

Contents

00 - Technical data 1

1 Rear final drive identification 1

2 Code letters, allocation, transmission ratios, capacities 3

2.1 Audi A4 2001 ‣ – Code letters, allocation, transmission ratios, capacities 3

2.2 Audi Cabriolet 2003 ‣ – Code letters, allocation, transmission ratios, capacities 4

2.3 Audi A6 2005 ‣ – Code letters, allocation, transmission ratios, capacities 4

2.4 Audi A8 2003 ‣ – Code letters, allocation, transmission ratios, capacities 5

3 Transmission layout 6

4 General repair instructions 8

4.1 Contact corrosion! 8

4.2 Jacking mode (vehicles with pneumatic suspension) 8

4.3 Special tools 8

4.4 Components 8

39 - Final drive - rear differential 11

1 Servicing propshaft - overview 11

1.1 Removing and installing propshaft on Audi A4, Audi Cabriolet and Audi A6 12

1.2 Removing and installing propshaft on Audi A8 19

1.3 Detaching and attaching propshaft at rear final drive 26

2 Measuring and marking radial run-out at flange for propshaft 30

3 Checking gear oil in rear final drive 31

4 Exploded view - rear final drive on Audi A4, Audi Cabriolet and Audi A6 32

4.1 Removing rear final drive on Audi A4, Audi Cabriolet and Audi A6 32

5 Exploded view - rear final drive on Audi A8 37

5.1 Removing and installing rear final drive on Audi A8 38

6 Renewing flange shaft oil seals 42

6.1 Renewing flange shaft oil seals on Audi A4, Audi Cabriolet 42

6.2 Renewing flange shaft oil seals on Audi A6 46

6.3 Renewing flange shaft oil seals on Audi A8 48

7 Renewing oil seal for propshaft flange on rear final drive (rear final drive installed) 55

8 General overview - dismantling and assembling rear final drive 60

9 Exploded view - removing and installing differential 61

9.1 Removing differential 63

10 Exploded view - dismantling and assembling differential 65

11 Exploded view - removing and installing pinion shaft; dismantling and assembling pinion shaft 74

11.1 Removing and installing pinion shaft; dismantling and assembling pinion shaft 75

12 Adjusting pinion shaft and crown wheel 85

12.1 Adjustment and marking of final drive gear set 85

12.2 Position of shims 87

12.3 Table of adjustments 87

12.4 Recommended sequence for adjusting gear set 88

12.5 Adjusting pinion shaft 88

12.6 Adjusting crown wheel 93

Protected by copyright. Copying for private or commercial purposes, in part or in whole, is not permitted unless authorised by AUDI AG. AUDI AG does not guarantee or accept any liability with respect to the correctness of information in this document. Copyright by AUDI AG.

Protected by copyright. Copying for private or commercial purposes, in part or in whole, is not permitted unless authorised by AUDI AG. AUDI AG does not guarantee or accept any liability with respect to the correctness of information in this document. Copyright by AUDI AG.

00 – Technical data

1 Rear final drive identification

Copyright by AUDI AG. Copying for private or commercial purposes, in part or in whole, is not permitted unless authorised by AUDI AG. AUDI AG does not guarantee or accept any liability with respect to the correctness of information in this document. Copyright by AUDI AG.

Note

When installing a new rear final drive unit, it is important to verify not only the code letters of the final drive but also the PR No. and the engine code of the vehicle in the ⇒ Electronic parts catalogue . This is necessary to ensure that the correct version is installed.

The rear final drive 01R is installed in conjunction with the following gearbox types:

- 5-speed manual gearbox 01A, four-wheel drive
- 6-speed manual gearbox 01E, four-wheel drive
- 6-speed manual gearbox 02X, four-wheel drive
- 6-speed manual gearbox 0A3, four-wheel drive
- Automatic gearbox 01V, four-wheel drive
- Automatic gearbox 09E, four-wheel drive
- Automatic gearbox 09L, four-wheel drive

Allocation
⇒ "2.1 Audi A4 2001 ▸ – Code letters, allocation, transmission ratios, capacities", page 3

Allocation
⇒ "2.2 Audi Cabriolet 2003 ▸ – Code letters, allocation, transmission ratios, capacities", page 4

Allocation
⇒ "2.3 Audi A6 2005 ▸ – Code letters, allocation, transmission ratios, capacities", page 4

Allocation
⇒ "2.4 Audi A8 2003 ▸ – Code letters, allocation, transmission ratios, capacities", page 5

Location on rear final drive

Code letters and date of manufacture -arrow 1-

Final drive 01R -arrow 2-

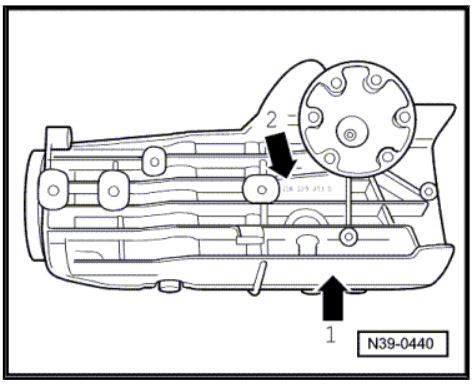

Final drive 01R -arrow 2-

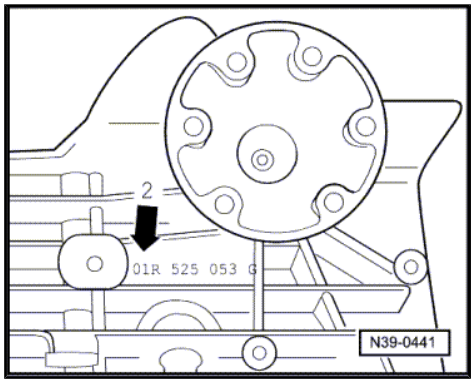

Code letters and date of manufacture for rear final drive

Protected by copyright. Copying for private or commercial purposes, in part or in whole, is not permitted unless authorised by AUDI AG. AUDI AG does not guarantee or assume any liability with respect to the correctness of information in this document. Copyright by AUDI AG.

Example:	FGL	15	12	03
	|	|	|	|
	Code letters	Day	Month	Year -2003- of manufacture

Other information can be disregarded.

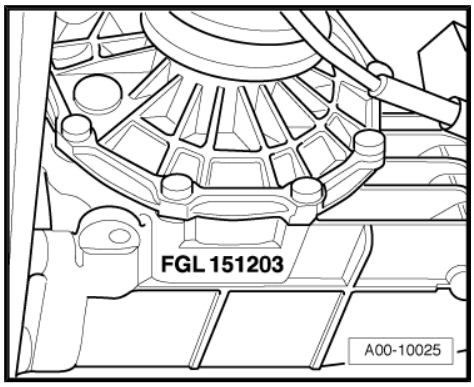

2 Code letters, allocation, transmission ratios, capacities

- ⇒ “2.1 Audi A4 2001 ‣ – Code letters, allocation, transmission ratios, capacities”, page 3
- ⇒ “2.2 Audi Cabriolet 2003 ‣ – Code letters, allocation, transmission ratios, capacities”, page 4
- ⇒ “2.3 Audi A6 2005 ‣ – Code letters, allocation, transmission ratios, capacities”, page 4
- ⇒ “2.4 Audi A8 2003 ‣ – Code letters, allocation, transmission ratios, capacities”, page 5

2.1 Audi A4 2001 ‣ – Code letters, allocation, transmission ratios, capacities

The following data can be found in the ⇒ Electronic parts catalogue .

- Date of manufacture
- Allocation to engine and manual or automatic gearbox according to code letters and PR numbers

Rear final drive		01R		
Code letters		**ETQ**	**ETR**	**ETS**
Ratio	Final drive $Z_2 : Z_1$	37 : 9 = 4.111	37 : 9 = 4.111	35 : 9 = 3.889
Capacity		1.5 litres		
Specification		Gear oil G 052 145 A1 (container size 0.5 litre) Gear oil G 052 145 S2 (container size 1.0 litre)		
Drive shaft flange ∅		75.5 mm	70.7 mm	75.5 mm

Protected by copyright. Copying for private or commercial purposes, in part or in whole, is not permitted unless authorised by AUDI AG. AUDI AG does not guarantee or accept any liability with respect to the correctness of information in this document. Copyright by AUDI AG.

Rear final drive		01R		
Code letters		**ETT**	**EUB**	**EXZ**
Ratio	Final drive $Z_2 : Z_1$	35 : 9 = 3.889	37 : 10 = 3.700	35 : 9 = 3.889
Capacity		1.5 litres		
Specification		Gear oil G 052 145 A1 (container size 0.5 litre) Gear oil G 052 145 S2 (container size 1.0 litre)		
Drive shaft flange ∅		70.7 mm	75.5 mm	75.5 mm

Rear final drive		01R		
Code letters		**FUB**	**GDF**	**HCC**
Ratio	Final drive $Z_2 : Z_1$	35 : 8 = 4.375	31 : 10 = 3.100	31 : 10 = 3.100
Capacity		1.5 litres		
Specification		Gear oil G 052 145 A1 (container size 0.5 litre) Gear oil G 052 145 S2 (container size 1.0 litre)		
Drive shaft flange ∅		75.5 mm	75.5 mm	75.5 mm

2.2 Audi Cabriolet 2003 ▸ – Code letters, allocation, transmission ratios, capacities

The following data can be found in the ⇒ Electronic parts catalogue .

- Date of manufacture
- Allocation to engine and manual or automatic gearbox according to code letters and PR numbers

Rear final drive		01R		
Code letters		**ETS**	**EXZ**	**GDF**
Ratio	Final drive $Z_2 : Z_1$	35 : 9 = 3.889	35 : 9 = 3.889	31 : 10 = 3.100
Capacity		1.5 litres		
Specification		Gear oil G 052 145 A1 (container size 0.5 litre) Gear oil G 052 145 S2 (container size 1.0 litre)		
Drive shaft flange ∅		75.5 mm	75.5 mm	75.5 mm

2.3 Audi A6 2005 ▸ – Code letters, allocation, transmission ratios, capacities

The following data can be found in the ⇒ Electronic parts catalogue .

- Date of manufacture
- Allocation to engine and manual or automatic gearbox according to code letters and PR numbers

Rear final drive		01R		
Code letters		**ETQ**	**ETS**	**FGL**
Ratio	Final drive $Z_2 : Z_1$	37 : 9 = 4.111	35 : 9 = 3.889	32 : 9 = 3.556
Capacity		1.5 litres		
Specification		Gear oil G 052 145 A1 (container size 0.5 litre) Gear oil G 052 145 S2 (container size 1.0 litre)		
Drive shaft flange ∅		75.5 mm	75.5 mm	75.5 mm

Protected by copyright. Copying for private or commercial purposes, in part or in whole, is not permitted unless authorised by AUDI AG. AUDI AG does not guarantee or accept any liability with respect to the correctness of information in this document. Copyright by AUDI AG.

Rear final drive		01R		
Code letters		**FUB**	**GSZ**	**HCC**
Ratio	Final drive $Z_2 : Z_1$	35 : 8 = 4.375	32 : 9 = 3.556	31 : 10 = 3.100
Capacity		1.5 litres		
Specification		Gear oil G 052 145 A1 (container size 0.5 litre) Gear oil G 052 145 S2 (container size 1.0 litre)		
Drive shaft flange ∅		75.5 mm	75.5 mm	75.5 mm

2.4 Audi A8 2003 ▸ – Code letters, allocation, transmission ratios, capacities

The following data can be found in the ⇒ Electronic parts catalogue .

- Date of manufacture
- Allocation to engine and manual or automatic gearbox according to code letters and PR numbers

Rear final drive		01R		
Code letters		**EYC**	**GMZ**	**GZG**
Ratio	Final drive $Z_2 : Z_1$	31 : 10 = 3.100	32 : 9 = 3.556	32 : 9 = 3.556
Capacity		1.5 litres		
Specification		Gear oil G 052 145 A1 (container size 0.5 litre) Gear oil G 052 145 S2 (container size 1.0 litre)		
Drive shaft flange ∅		108 mm	108 mm	108 mm

Rear final drive		01R		
Code letters		**HCL**	**HWA**	**HWB**
Ratio	Final drive $Z_2 : Z_1$	31 : 10 = 3.100	31 : 10 = 3.100	32 : 9 = 3.556
Capacity		1.5 litres		
Specification		Gear oil G 052 145 A1 (container size 0.5 litre) Gear oil G 052 145 S2 (container size 1.0 litre)		
Drive shaft flange ∅		108 mm	108 mm	108 mm

Rear final drive		01R		
Code letters		**JSR**		
Manufactured	from to	06.06 09.06		
Ratio	Final drive $Z_2 : Z_1$	32 : 9 = 3.556		
Capacity		1.5 litres		
Specification		Gear oil G 052 145 A1 (container size 0.5 litre) Gear oil G 052 145 S2 (container size 1.0 litre)		
Drive shaft flange ∅		108 mm		
Select correct unit by checking engine, manual gearbox and automatic gearbox versions in ⇒ Electronic parts catalogue .				

Protected by copyright. Copying for private or commercial purposes, in part or in whole, is not permitted unless authorised by AUDI AG. AUDI AG does not guarantee or accept any liability with respect to the correctness of information in this document. Copyright by AUDI AG.

3 Transmission layout

- Illustrated with 6-speed manual gearbox 0A3, four-wheel drive

Identification

Note

Arrows point in direction of travel

1 - Engine
2 - Clutch
3 - Manual gearbox
4 - Input shaft (main shaft)
5 - Front differential
6 - Front pinion shaft (output shaft)
7 - Hollow shaft
8 - Centre differential
9 - Propshaft
10 - Rear pinion shaft
11 - Rear differential

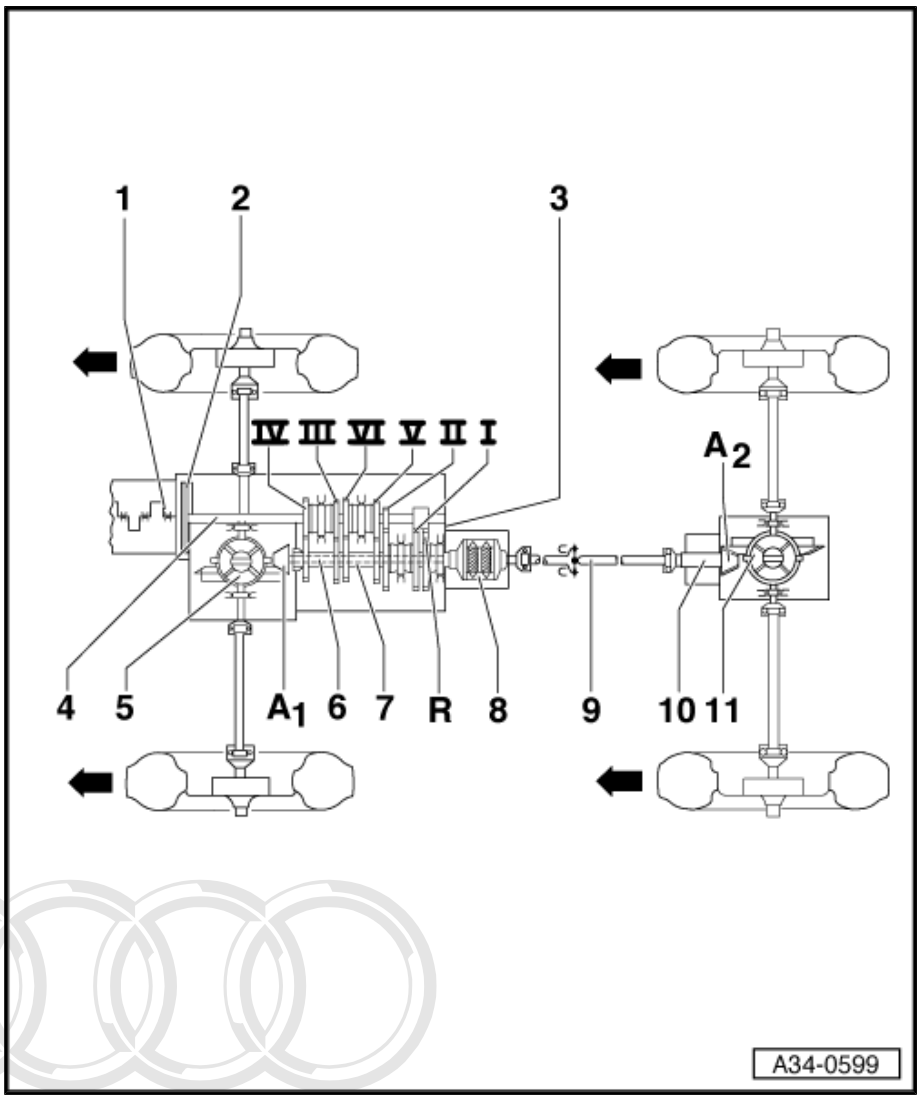

Ratio

Note

Arrows point in direction of travel

Protected by copyright. Copying for private or commercial purposes, in part or in whole, is not permitted unless authorised by AUDI AG. AUDI AG does not guarantee or accept any liability with respect to the correctness of information in this document. Copyright by AUDI AG.

I - 1st gear
II - 2nd gear
III - 3rd gear
IV - 4th gear
V - 5th gear
VI - 6th gear
R - Reverse gear
A1 - Final drive (front)
A2 - Final drive (rear)

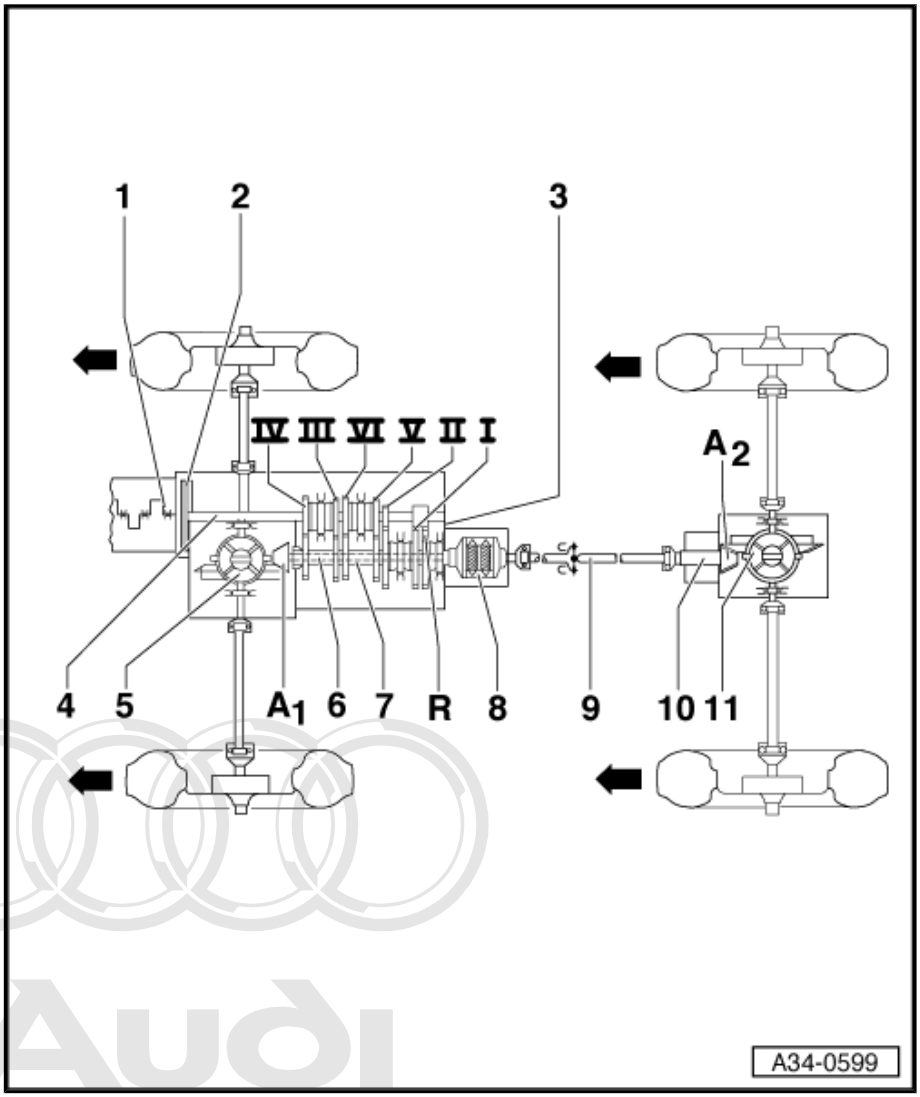

Protected by copyright. Copying for private or commercial purposes, in part or in whole, is not permitted unless authorised by AUDI AG. AUDI AG does not guarantee or accept any liability with respect to the correctness of information in this document. Copyright by AUDI AG.

4 General repair instructions

Proper tools and the maximum possible care and cleanliness are essential for satisfactory repairs. The usual basic safety precautions also naturally apply when carrying out repair work.

A number of generally applicable instructions for the various repair procedures are summarised here under the designation “Components” ⇒ page 8 . They apply to the work described in this Manual.

4.1 Contact corrosion!

Contact corrosion can occur if non-approved fasteners are used on the vehicle (bolts, nuts, washers etc.).

For this reason, only fasteners with a special surface coating are fitted.

Rubber or plastic parts and adhesives also consist of non-conductive materials.

If you are not sure whether used parts can be re-installed, always fit new parts ⇒ Electronic parts catalogue .

Please note:

- We recommend using only genuine replacement parts: these have been fully tested and are compatible with aluminium.
- We recommend the use of accessories approved by Audi.
- Damage caused by contact corrosion is not covered under warranty.

4.2 Jacking mode (vehicles with pneumatic suspension)

Before raising the vehicle on a 2-column lifting platform (wheels off the ground) you must first activate the jacking mode ⇒ Rep. Gr. 43 .

4.3 Special tools

For a complete list of special tools used in this Workshop Manual ⇒ "Special tools, Workshop equipment"

4.4 Components

Rear final drive

- Allocate bolts and other components according to final drive code letters, refer to ⇒ Electronic parts catalogue .
- When installing a new rear final drive unit, check the oil level in the final drive and top up if necessary ⇒ page 31 .
- Capacity and specification ⇒ page 3
- When installing mounting brackets as well as other waxed components, the contact surfaces must be cleaned. The contact surfaces must be free of wax and grease.
- Thoroughly clean all joints and connections and the surrounding areas before dismantling.

Protected by copyright. Copying for private or commercial purposes, in part or in whole, is not permitted unless authorised by AUDI AG. AUDI AG does not guarantee or accept any liability with respect to the correctness of information in this document. Copyright by AUDI AG.

O-rings, oil seals and gaskets

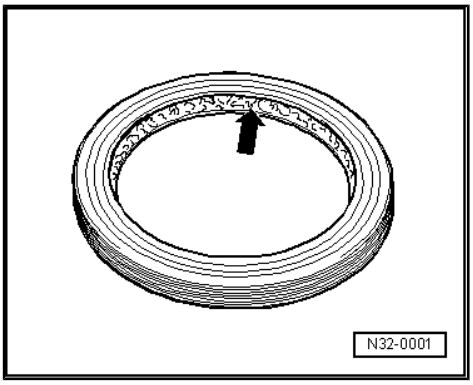

- Always renew O-rings, seals and gaskets.
- After removing gaskets and seals, always inspect the contact surface on the housing or shaft for burrs resulting from removal or for other signs of damage.
- Thoroughly clean housing joint surfaces before assembling.
- Before installing oil seals, lightly oil the outer circumference of the seal and fill the space between the sealing lips -arrow- about half full with grease -G 052 128 A1- .
- The open side of the oil seals faces toward the side with fluid filling.
- Lightly lubricate O-rings before installation to prevent them from being trapped and damaged during assembly.
- After renewing seals and gaskets, check and, if necessary, top up oil level in final drive ⇒ page 31 .

Locking elements

Protected by copyright. Copying for private or commercial purposes, in part or in whole, is not permitted unless authorised by AUDI AG. AUDI AG does not guarantee or accept any liability with respect to the correctness of information in this document. Copyright by AUDI AG.

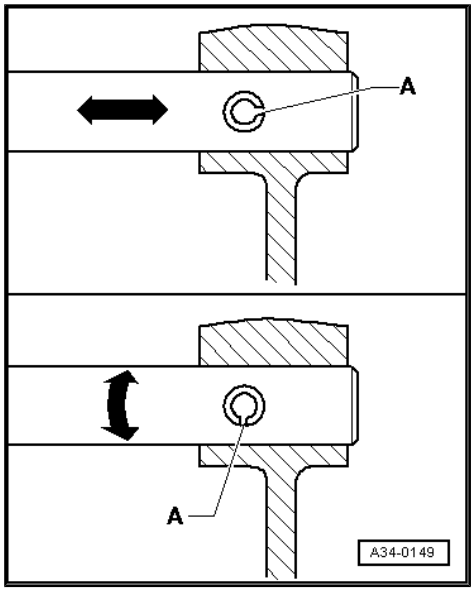

- Do not over-stretch circlips.
- Always renew circlips which have been damaged or over-stretched.
- Circlips must be properly seated in the base of the groove.
- Renew spring pins. Position: the slit -A- should be in line with the line of force -arrow-.

Nuts, bolts

- Nuts and bolts for securing covers and housings must be slackened and tightened in diagonal sequence.
- Loosen and tighten particularly sensitive parts in diagonal sequence and in stages, taking care to keep them straight.
- The tightening torques stated apply to non-oiled nuts and bolts.
- Always renew self-locking bolts and nuts.
- Clean the threads of bolts which are secured with locking fluid using a wire brush (does not apply to propshaft bolts: these must be renewed). Then apply locking fluid -AMV 185 101 A1- to bolt threads before installing.
- Threaded holes which take self-locking bolts or bolts coated with locking fluid must be cleaned (using a tap or similar). Otherwise there is a danger of the bolts shearing off the next time they are removed.

Bearings

- Install needle bearings so the lettering (side with thicker metal) faces towards the installing tool.
- Install new tapered roller bearings as supplied; do not lubricate additionally with oil.
- Always renew the tapered roller bearings on one shaft together as a set and use new bearings from a single manufacturer.
- Lubricate bearing seats lightly with gear oil before pressing bearings onto shafts.
- Lubricate bearing seats lightly with gear oil before installing bearings and outer bearing races in final drive housing.
- Heat inner races to approx. 100° C before installing.
- Do not interchange the outer or inner races of bearings of the same size (the bearings are paired).

Protected by copyright. Copying for private or commercial purposes, in part or in whole, is not permitted unless authorised by AUDI AG. AUDI AG does not guarantee or accept any liability with respect to the correctness of information in this document. Copyright by AUDI AG.

Shims

- Use a micrometer to measure the shims at several points. Tolerance variations make it possible to obtain the exact shim thickness required.
- Check for burrs and damage.
- Do not install shims which are damaged or not in perfect condition.

39 – Final drive - rear differential

1 Servicing propshaft - overview

Note

- *Refer to general repair instructions* *⇒ page 8* *.*
- *No repair work can be carried out on the propshaft with the exception of removing, installing and adjusting.*
- *The propshaft should normally be kept straight when it is stored or transported.*
- *The propshaft can be bent as far as the stop at the centre joint, but must not be subjected to any kind of force. The centre joint or the protective boot can be damaged if the joint is forced against its stop.*
- *The propshaft must be tied up or supported at one end if it is detached only at the gearbox or at the rear final drive. If necessary, the propshaft can be bent as far as the stop at the centre joint, but it must not be subjected to force.*
- *Before removing, mark the positions of all parts in relation to each other. Reinstall in the same position to avoid excessive imbalance, resulting in bearing damage and rumbling noise.*
- *Use counterhold tool -T10172- with adapters -T10172/5- to slacken and tighten the propshaft bolts.*
- *After detaching the propshaft from the rear final drive, the additional balancing washer (thicker washer) that may be fitted between the lock plate and the bolt head (hexagon socket bolt) must not be reinstalled.*
- *If problems occur (noise or vibration), ensure that the centre bearing is free of stress and check the radial runout of the propshaft flange at the rear final drive before renewing the propshaft* *⇒ page 30* *.*

Protected by copyright. Copying for private or commercial purposes, in part or in whole, is not permitted unless authorised by AUDI AG. AUDI AG does not guarantee or accept any liability with respect to the correctness of information in this document. Copyright by AUDI AG.

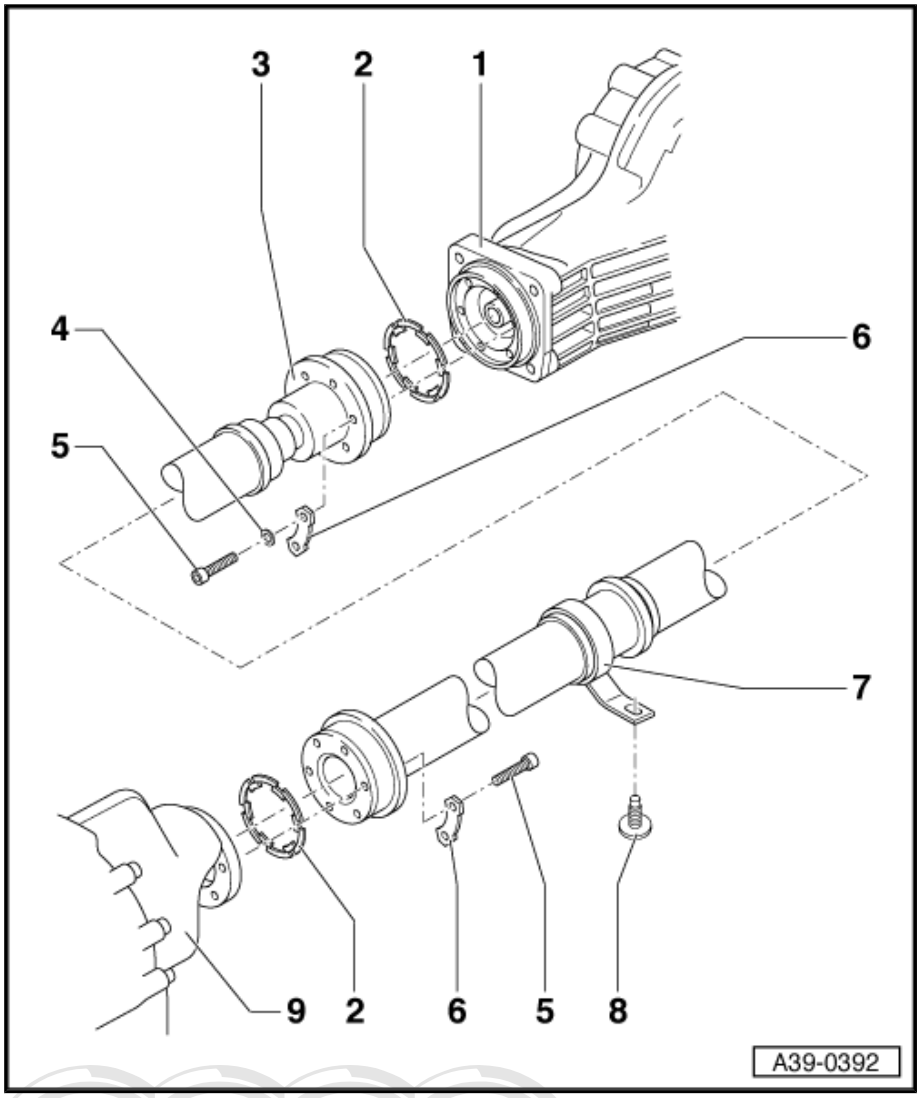

1 - Rear final drive

- ❑ Removing and installing on Audi A4, Audi Cabriolet and Audi A6 ⇒ page 32
- ❑ Removing and installing on Audi A8 ⇒ page 37

2 - Gasket

- ❑ Renew
- ❑ Pull off protective foil
- ❑ Degrease flange shaft and glue on gasket

3 - Propshaft

- ❑ Removing and installing on Audi A4, Audi Cabriolet and Audi A6 ⇒ page 12
- ❑ Removing and installing on Audi A8 ⇒ page 19

4 - Balancing washer

- ❑ Not fitted on all vehicles
- ❑ May be fitted between one socket head bolt ⇒ Item 5 (page 12) and one lock plate ⇒ Item 6 (page 12) at rear final drive
- ❑ If fitted, this balancing washer must not be reinstalled after the propshaft has been detached from the rear final drive.

5 - Hexagon socket head bolt, 55 Nm

- ❑ Self-locking
- ❑ Always renew
- ❑ For correct version, refer to ⇒ Electronic parts catalogue
- ❑ The tapped holes for the bolts in the flange shafts must always be cleaned (e.g. with a thread tap)
- ❑ Use counterhold tool -T10172- with adapters -T10172/5- to slacken and tighten

6 - Lock plate

7 - Centre bearing

8 - Hexagon bolt, 25 Nm

9 - Gearbox

Protected by copyright. Copying for private or commercial purposes, in part or in whole, is not permitted unless authorised by AUDI AG. AUDI AG does not guarantee or accept any liability with respect to the correctness of information in this document. Copyright by AUDI AG.

1.1 Removing and installing propshaft on Audi A4, Audi Cabriolet and Audi A6

Special tools and workshop equipment required

- Assembly tool -3139-

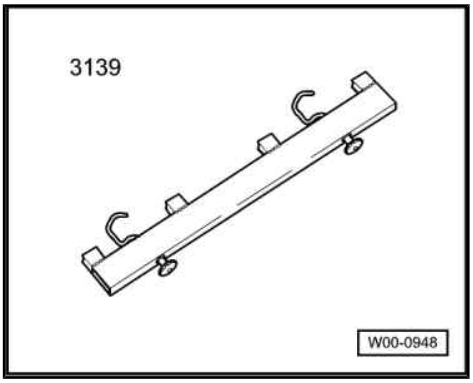

- Removal lever -80 - 200-

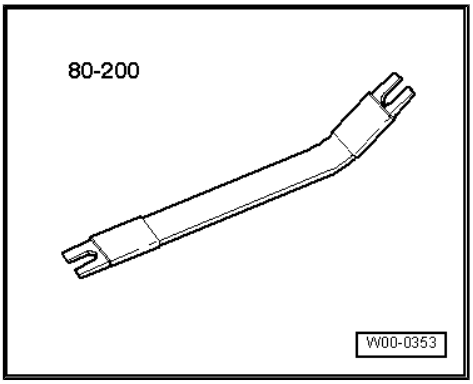

- Counterhold tool -T10172- with adapters -T10172/5-

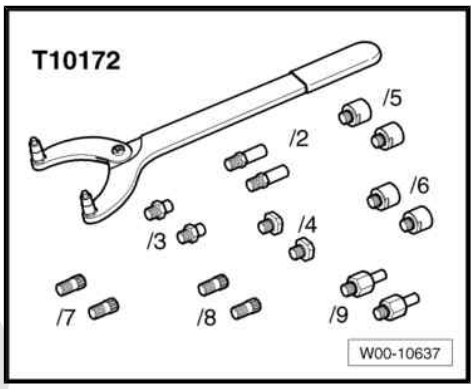

- Engine and gearbox jack -V.A.G 1383 A- with universal gearbox support -V.A.G 1359/2-

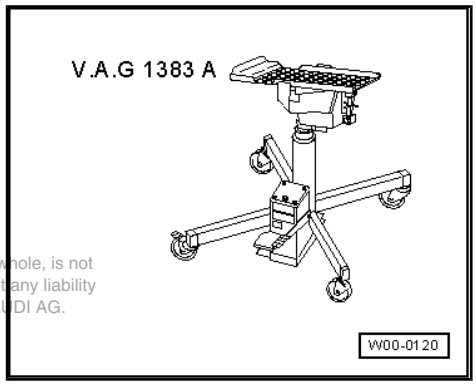

Protected by copyright. Copying for private or commercial purposes, in part or in whole, is not permitted unless authorised by AUDI AG. AUDI AG does not guarantee or accept any liability with respect to the correctness of information in this document. Copyright by AUDI AG.

- Please refer to notes ⇒ page 11 .
- Repairs on the propshaft should be carried out on a two pillar hoist.

– Disconnect exhaust system at clamps -arrows-.

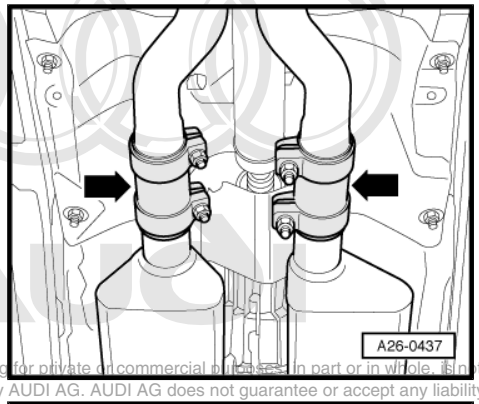

Protected by copyright. Copying for private or commercial purposes, in part or in whole, is not permitted unless authorised by AUDI AG. AUDI AG does not guarantee or accept any liability with respect to the correctness of information in this document. Copyright by AUDI AG.

– If fitted, remove rear cross piece -1-.

– Remove rear section of exhaust system -2- behind clamps ⇒ Rep. Gr. 26 .

Audi A6:

– Detach heat shield -3- from vehicle underbody -arrows-.

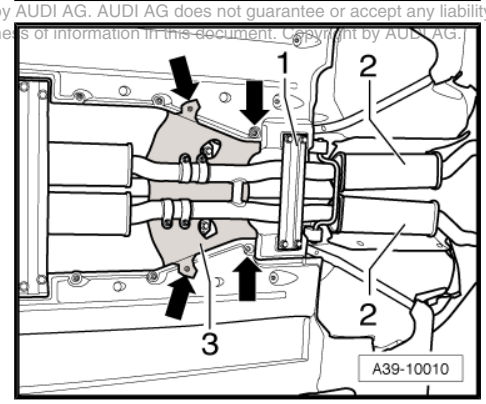

Audi A4 and Audi Cabriolet:

– Lever off fasteners -A- for heat shield above centre bearing.

– Unscrew securing bolts for centre bearing -B-. Support the propshaft by hand during this procedure.

– Remove heat shield with propshaft supported.

– Fit securing bolts for centre bearing -B- again and hand-tighten.

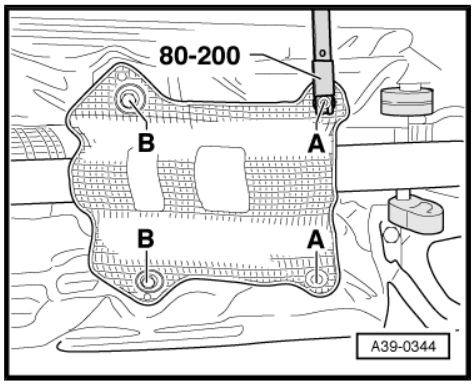

Continued for all vehicles:

– Remove bolts securing front exhaust pipes -1- and -2-. Secure front exhaust pipes to side of underbody.

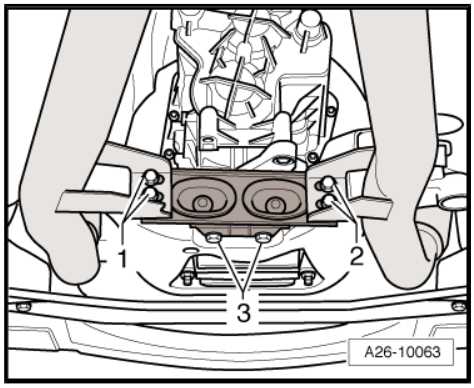

Note

The flexible pipe connection (de-coupling element) on the front exhaust pipe must not be bent more than 10° – otherwise it can be damaged.

– Detach heat shield -A- from gearbox -arrows-.

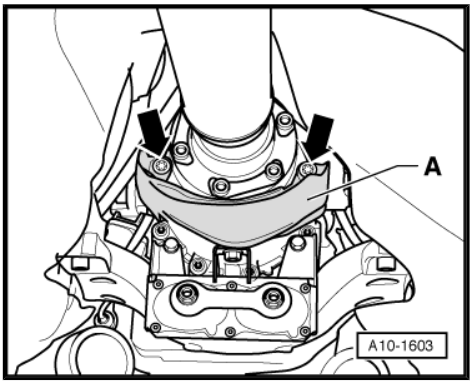

– Check whether there is a factory marking (coloured dot) -arrows A and B- on the propshaft flange and on the rear final drive flange.
– If not, mark position of propshaft flange -arrow A- in relation to rear final drive flange -arrow B- with paint marker.

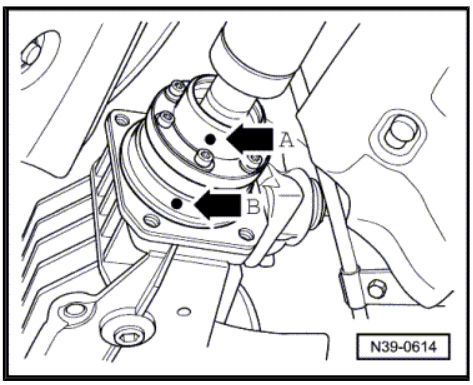

Protected by copyright. Copying for private or commercial purposes, in part or in whole, is not permitted unless authorised by AUDI AG. AUDI AG does not guarantee or accept any liability with respect to the correctness of information in this document. Copyright by AUDI AG.

– Attach assembly tool 3139 and tighten plastic nuts.

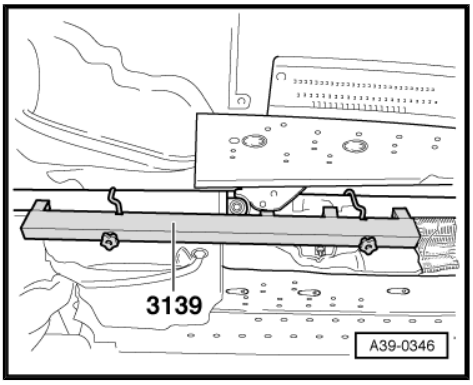

Note

Do not fit assembly tool onto balance plates.

– Remove bolts -arrows- securing centre bearing.

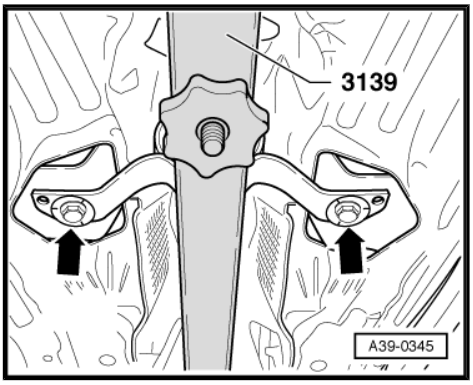

– Remove bolts from connection between propshaft and gearbox (counterhold using counterhold tool -T10172- with -T10172/5-).

– Remove propshaft from gearbox and support propshaft with engine and gearbox jack -V.A.G 1383 A- .

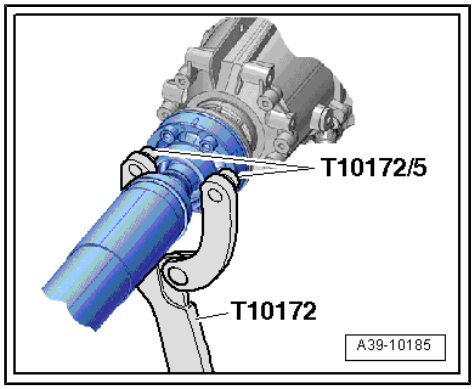

– Remove bolts -1- (6x) on rear CV joint.

– Use counterhold tool -T10172- with adapters -T10172/5- .

– Remove the propshaft.

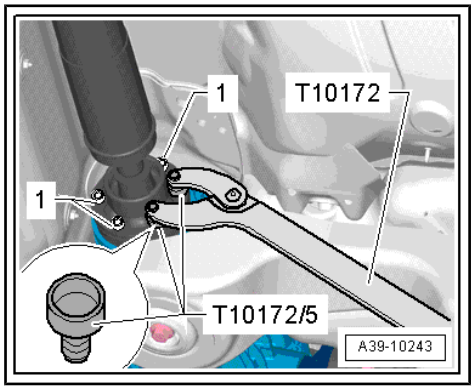

Note

The propshaft must be kept straight when it is stored or transported.

Installing propshaft on Audi A4 and Cabriolet and on Audi A6

Perform installation in reverse sequence of removal. Note the following:

- Remove old, dried-out high-temperature grease from CV joints and flanges for propshaft. Put in exactly the same quantity of fresh high-temperature grease -G 052 133 A2- .
- Clean all remaining locking fluid out of the tapped holes in the propshaft flange shafts on the gearbox and rear final drive. The threads can be cleaned with a thread tap. Otherwise the securing bolts can shear off when they are screwed in.
- After detaching the propshaft from the rear final drive, the additional balancing washer (thicker washer) that may be fitted between the lock plate and one of the securing bolts must not be reinstalled.
- Always install new securing bolts for propshaft (self-locking bolts).
- Note correct position of propshaft: the central CV joint is located behind the centre bearing and towards the rear final drive.
- Make sure that the marks on the propshaft flange -arrow A- and on the gearbox/final drive flange -arrow B- are in line.
- If a new propshaft is being installed and the factory marking on the rear final drive flange is no longer visible, the radial run-out at the flange for the propshaft must be measured ⇒ page 30 , and the coloured marking on the new propshaft must be aligned with the new marking on the flange.

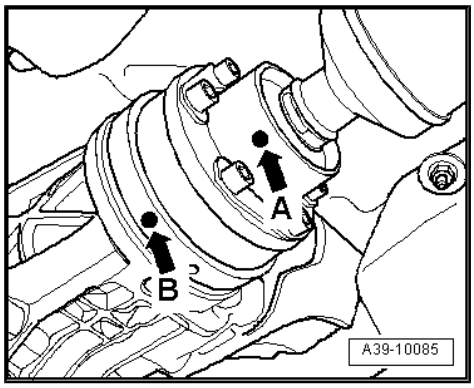

Protected by copyright. Copying for private or commercial purposes, in part or in whole, is not permitted unless authorised by AUDI AG. AUDI AG does not guarantee or accept any liability with respect to the correctness of information in this document. Copyright by AUDI AG.

– Gaskets for propshaft on flanges of gearbox and rear final drive must be renewed. Degrease sealing surfaces and glue on new gaskets.

– Bring propshaft into position and fit new bolts at rear final drive -arrows- and at gearbox.

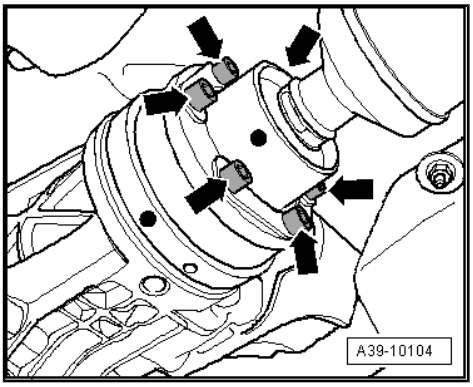

– Screw in securing bolts -arrows- so that centre bearing can still be moved.

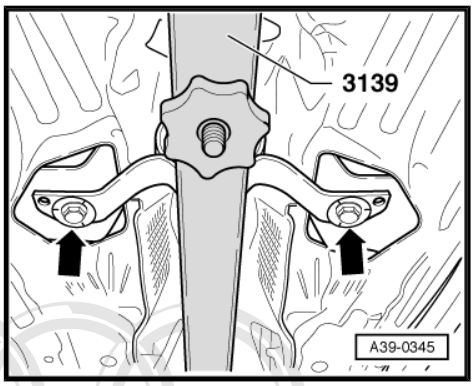

– Tighten bolts -1- securing propshaft on rear final drive to specified torque ⇒ Item 5 (page 12) .
– Use counterhold tool -T10172- with adapters -T10172/5- .

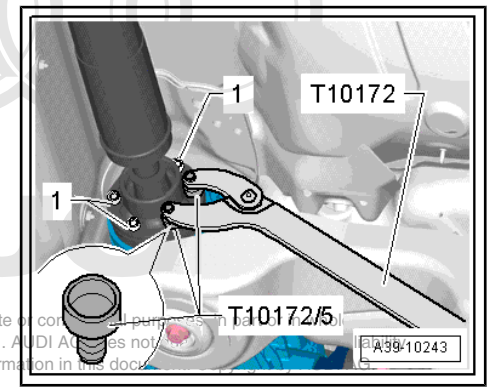

Protected by copyright. Copying for private or commercial purposes, in part or in whole, is not permitted unless authorised by AUDI AG. AUDI AG does not guarantee or assume any liability with respect to the correctness of information in this document.

– Tighten bolts securing propshaft (front end) to specified setting ⇒ Item 5 (page 12) .
– Use counterhold tool -T10172- with adapters -T10172/5- .
– Remove assembly tool -3139- .

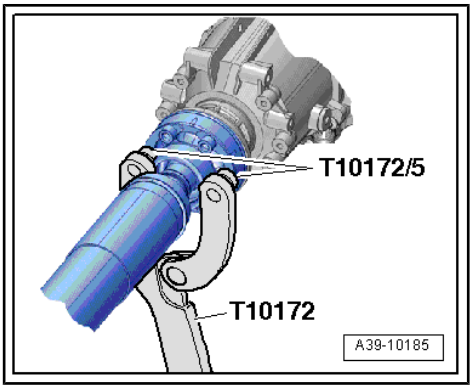

Audi A4 and Audi Cabriolet:

– Remove securing bolts -arrows-. The propshaft must be supported by a second mechanic during this procedure.

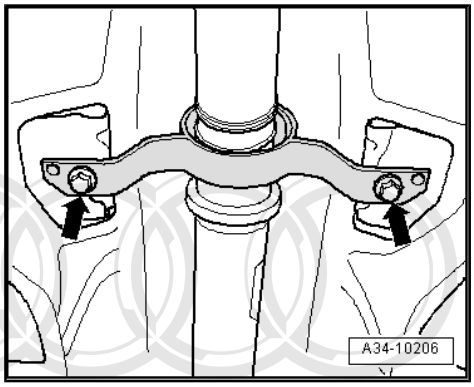

– Install heat shield -2- (continue to support propshaft).

– Fit securing bolts -4- on left and right again and screw in a few turns.

– Secure heat shield -2- on centre bearing -3- with one bolt on each side -1- (M8 x 30).

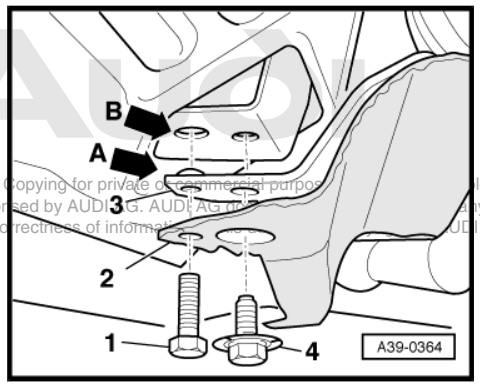

Protected by copyright. Copying for private or commercial purposes, in part or in whole, is not permitted unless authorised by AUDI AG. AUDI AG does not guarantee or assume any liability with respect to the correctness of information in this document. Copyright by AUDI AG.

Note

The centralising lug -arrow A- must fit in the locating hole -arrow B- when tightening the bolt with washer -4-.

– Secure centre propshaft bearing to body so it is free of stress and tighten -2-. Tightening torque ⇒ Item 8 (page 12)

– Remove locating bolts -1-.

– Insert retaining clips for heat shield.

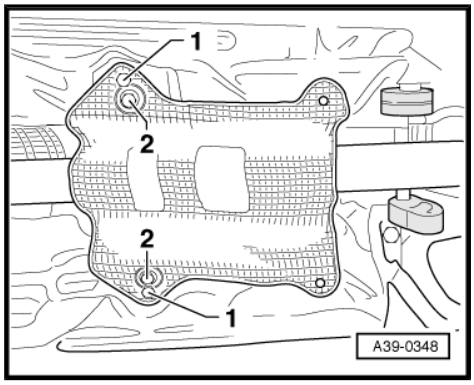

Audi A6:

– Secure centre propshaft bearing to body so it is free of stress and tighten. The centralising lugs on the centre bearing mounting must fit in the locating holes -arrows-. Tightening torque ⇒ Item 8 (page 12)

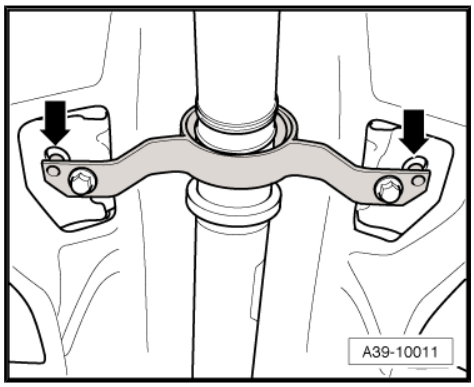

– Secure heat shield -3- to vehicle underbody -arrows-.

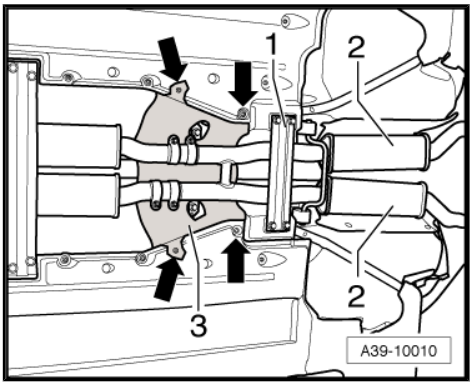

Continued for all vehicles:

– Secure heat shield -A- on gearbox -arrows-.

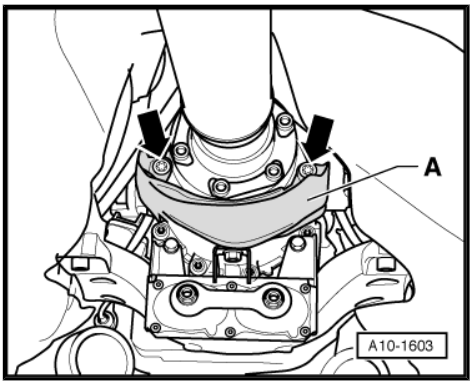

– Where required, secure front exhaust pipes -1- and -2-.

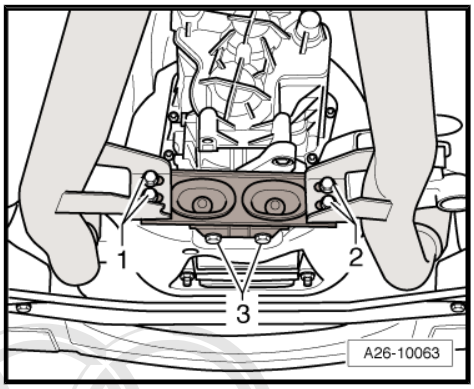

– Install rear section of exhaust system -2- ⇒ Rep. Gr. 26 .
– Where fitted, install rear cross piece -1- ⇒ Rep. Gr. 40 .

Tightening torque

Component	Nm
Heat shield for propshaft to gearbox	25

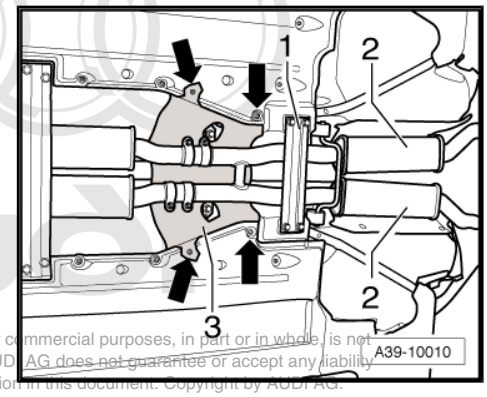

Protected by copyright. Copying for private or commercial purposes, in part or in whole, is not permitted unless authorised by AUDI AG. AUDI AG does not guarantee or accept any liability with respect to the correctness of information in this document. Copyright by AUDI AG.

1.2 Removing and installing propshaft on Audi A8

Special tools and workshop equipment required

- Assembly tool -3139-

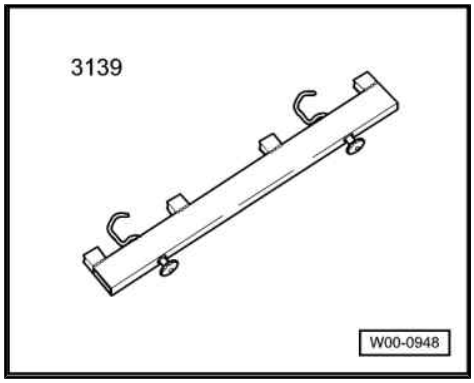

- Counterhold tool -T10172- with adapters -T10172/5-

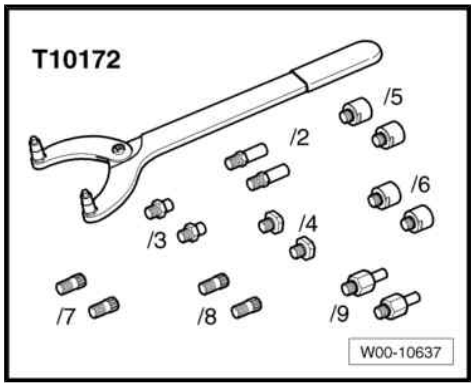

- Engine and gearbox jack -V.A.G 1383 A- with universal support -V.A.G 1359/2-

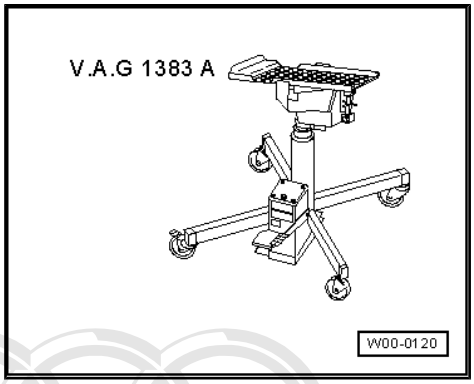

Removing propshaft

Note

- *Observe notes* *⇒ page 11* *.*
- *Repairs on the propshaft should be carried out on a two pillar hoist.*

Protected by copyright. Copying for private or commercial purposes, in part or in whole, is not permitted unless authorised by AUDI AG. AUDI AG does not guarantee or accept any liability with respect to the correctness of information in this document. Copyright by AUDI AG.

– Disconnect exhaust system at clamps -1- and -2-.

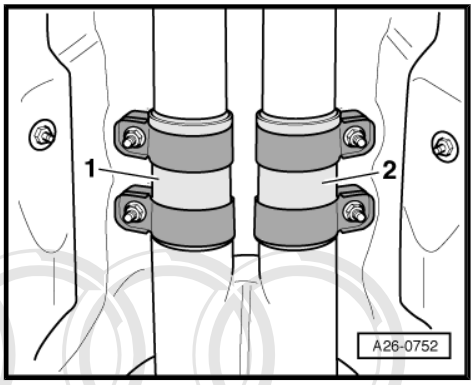

– Remove both cross pieces -A- and -B-.
– Remove rear section of exhaust system -C- ⇒ Rep. Gr. 26 .

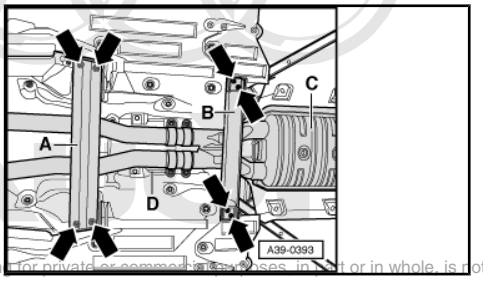

Protected by copyright. Copying for private or commercial purposes, in part or in whole, is not permitted unless authorised by AUDI AG. AUDI AG does not guarantee or accept any liability with respect to the correctness of information in this document. Copyright by AUDI AG.

– Remove heat shield -arrows-.

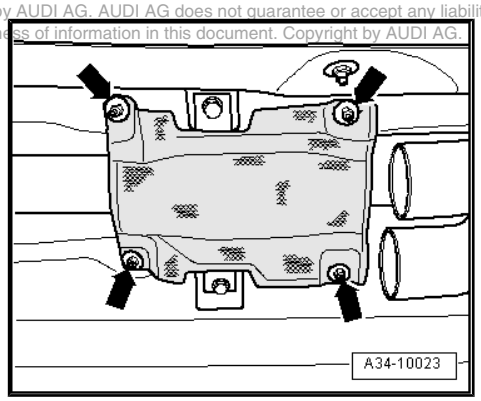

– Remove bolts -arrows- and secure main catalytic converters to side of underbody.

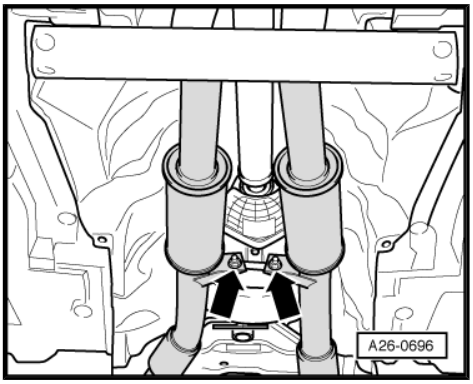

Note

The flexible pipe connection (de-coupling element) on the front exhaust pipe must not be bent more than 10° – otherwise it can be damaged.

– Unbolt heat shield -A- from gearbox -arrows-.

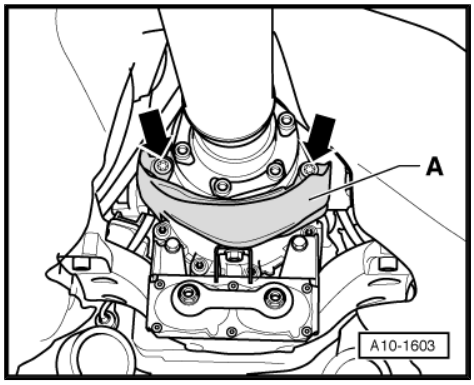

– If fitted, remove cover for rear final drive -arrows A and B-.

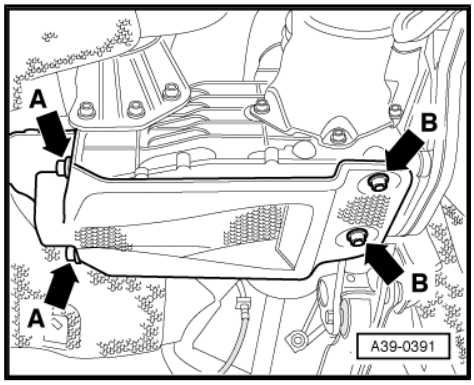

– Check whether there is a factory marking (coloured dot) -arrows A and B- on the propshaft flange and on the rear final drive flange.
– If not, mark position of propshaft flange -arrow A- in relation to rear final drive flange -arrow B- with paint marker.

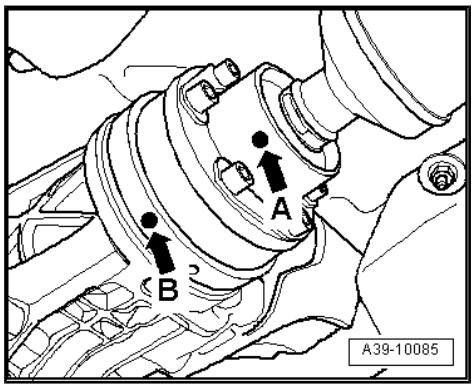

– Attach assembly tool -3139- with -3139/4- , and tighten the plastic nuts.

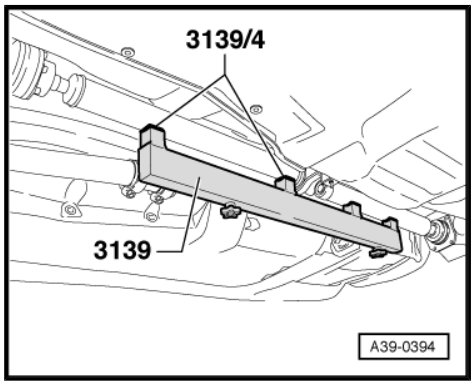

Note

Do not fit assembly tool onto balance plates.

Protected by copyright. Copying for private or commercial purposes, in part or in whole, is not permitted unless authorised by AUDI AG. AUDI AG does not guarantee or accept any liability with respect to the correctness of information in this document. Copyright by AUDI AG.

– Remove bolts -arrows- securing centre bearing.

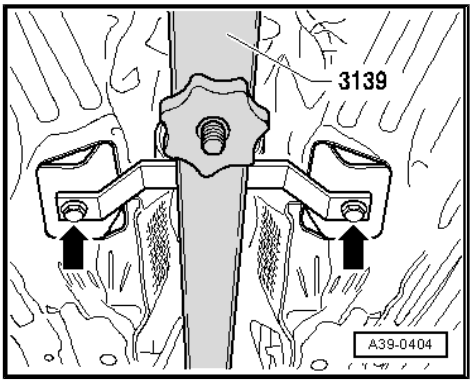

– Remove bolts from connection between propshaft and gearbox (counterhold using counterhold tool -T10172- with -T10172/5-).
– Remove propshaft from gearbox and support propshaft with engine and gearbox jack -V.A.G 1383 A- .

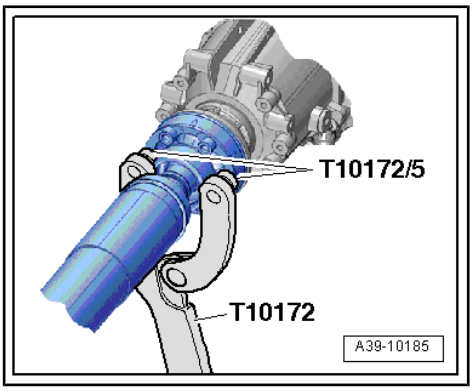

– Remove bolts -1- (6x) on rear CV joint.
– Use counterhold tool -T10172- with adapters -T10172/5- .
– Remove the propshaft.

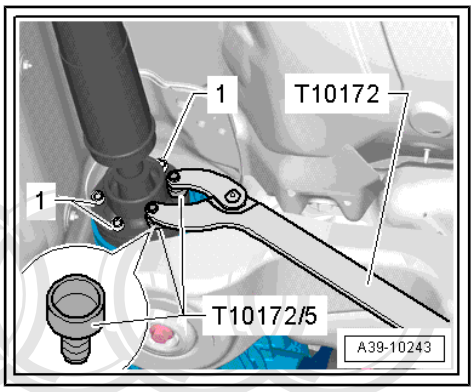

Note

The propshaft must be kept straight when it is stored or transported.

Installing propshaft on Audi A8

Perform installation in reverse sequence of removal. Note the following:

Protected by copyright. Copying for private or commercial purposes, in part or in whole, is not permitted unless authorised by AUDI AG. AUDI AG does not guarantee or accept any liability with respect to the correctness of information in this document. Copyright by AUDI AG.

- Remove old, dried-out high-temperature grease from CV joints and flanges for propshaft. Put in exactly the same quantity of fresh high-temperature grease -G 052 133 A2- .
- Clean all remaining locking fluid out of the tapped holes in the propshaft flange shafts on the gearbox and rear final drive. The threads can be cleaned with a thread tap. Otherwise the securing bolts can shear off when they are screwed in.
- After detaching the propshaft from the rear final drive, the additional balancing washer (thicker washer) that may be fitted between the lock plate and one of the securing bolts must not be reinstalled.
- Always install new securing bolts for propshaft (self-locking bolts).
- Note correct position of propshaft: the central CV joint is located behind the centre bearing and towards the rear final drive.
- Make sure that the marks on the propshaft flange -arrow A- and on the gearbox/final drive flange -arrow B- are in line.
- If a new propshaft is being installed and the factory marking on the rear final drive flange is no longer visible, the radial run-out at the flange for the propshaft must be measured ⇒ page 30 , and the coloured marking on the new propshaft must be aligned with the new marking on the flange.

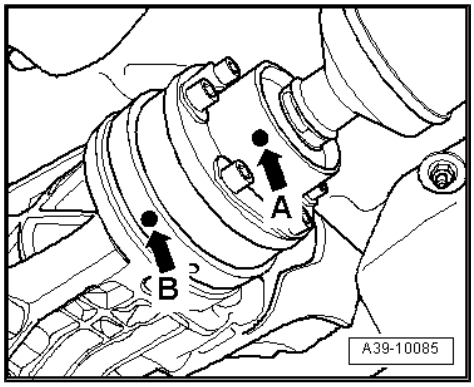

– Gaskets for propshaft on flanges of gearbox and rear final drive must be renewed. Degrease sealing surfaces and glue on new gaskets.

– Bring propshaft into position and fit new bolts at rear final drive -arrows- and at gearbox.

Protected by copyright. Copying for private or commercial purposes, in part or in whole, is not permitted unless authorised by AUDI AG. AUDI AG does not guarantee or accept any liability with respect to the correctness of information in this document. Copyright by AUDI AG.

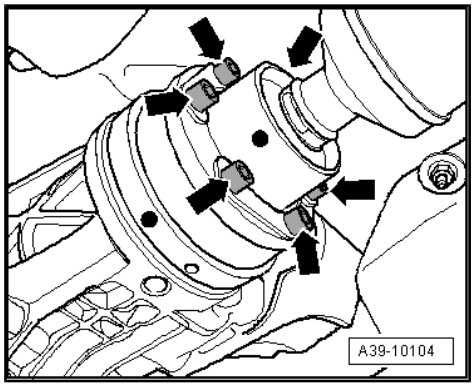

– Screw in securing bolts -arrows- so that centre bearing can still be moved.

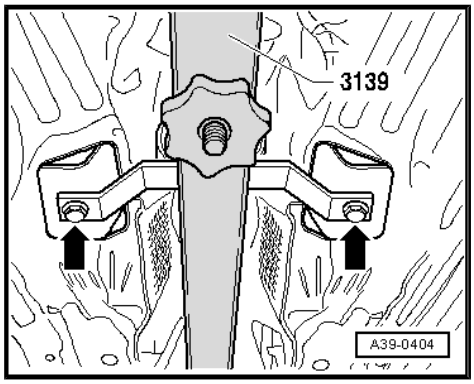

– Tighten bolts -1- securing propshaft on rear final drive to specified torque ⇒ Item 5 (page 12) .
– Use counterhold tool -T10172- with adapters -T10172/5- .

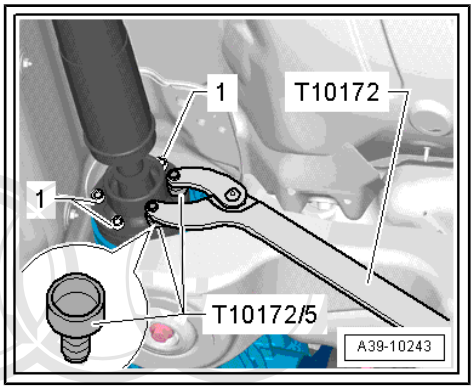

– Tighten bolts securing propshaft (front end) to specified setting ⇒ Item 5 (page 12) .
– Use counterhold tool -T10172- with adapters -T10172/5- .
– Remove assembly tool -3139- .

Protected by copyright. Copying for private or commer part or in whole, is not permitted unless authorised by AUDI AG. AUDI AG ee or accept any liability with respect to the correctness of information in yright by AUDI AG.

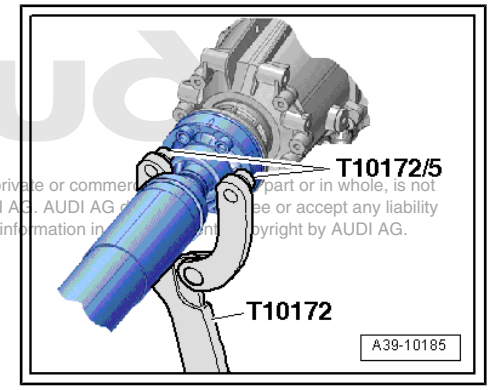

Moving centre bearing to central position:

– Slacken securing bolts for centre bearing slightly.
– Move propshaft forward onto stop and mark position of centre bearing on body -arrow A-.
– Move propshaft to rear onto stop and mark position of centre bearing on body -arrow B-.
– Move propshaft to right onto stop and mark position of centre bearing on body -arrow 1-.
– Move propshaft to left onto stop and mark position of centre bearing on body -arrow 2-.
– Move propshaft to central position -arrow C- and -arrow 3-.
• The centre bearing must be positioned in central position between marks -arrow A- and -arrow B- and between -arrow 1- and -arrow 2-.
– Tighten securing bolts of centre bearing to torque ⇒ Item 8 (page 12) .

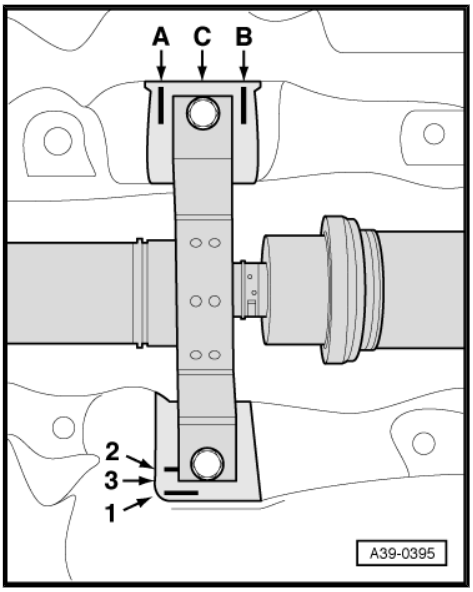

Continued:

– Install heat shield below centre bearing -arrows-.

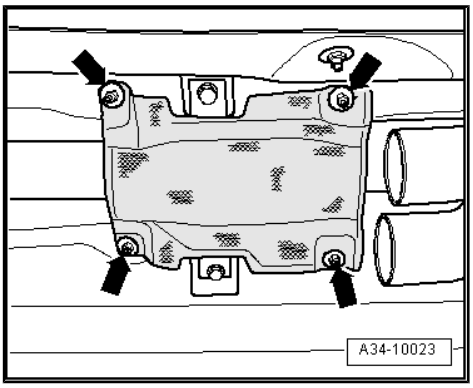

– Install heat shield -A- -arrows-.

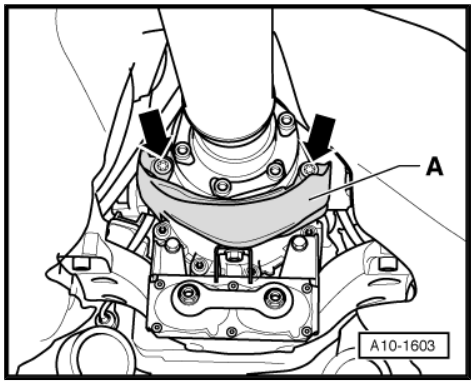

– Install cover for rear final drive (if previously removed). Tightening torques: -arrows A- ⇒ Item 16 (page 37) and -arrows B- ⇒ Item 13 (page 37) .

– Install exhaust system and perform stress-free alignment ⇒ Rep. Gr. 26 .

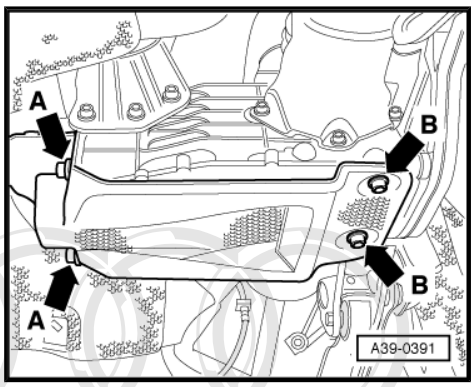

– Install both cross pieces -A- and -B- ⇒ Rep. Gr. 66 .

Tightening torques

Component	Nm
Heat shield for propshaft to gearbox	25

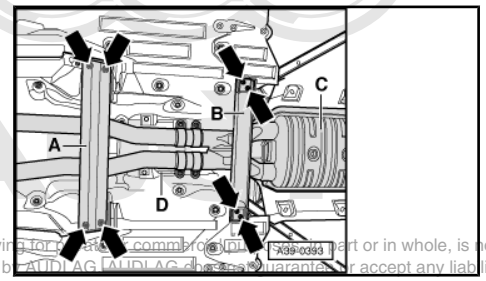

Protected by copyright. Copying for private or commercial purposes, in part or in whole, is not permitted unless authorised by AUDI AG. AUDI AG does not guarantee or accept any liability with respect to the correctness of information in this document. Copyright by AUDI AG.

1.3 Detaching and attaching propshaft at rear final drive

Special tools and workshop equipment required

♦ Counterhold tool -T10172- with adapters -T10172/5-

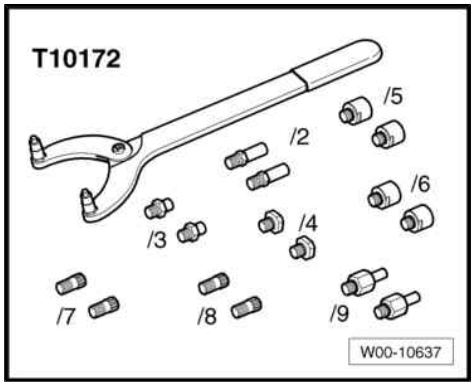

♦ High-temperature grease -G 052 133 A2-

Detaching propshaft from rear final drive

♦ Please refer to notes ⇒ page 11 .

♦ Repairs on the propshaft should be carried out on a two pillar hoist.

– Release clamps -1- and -2- and remove rear section of exhaust system ⇒ Rep. Gr. 26 .

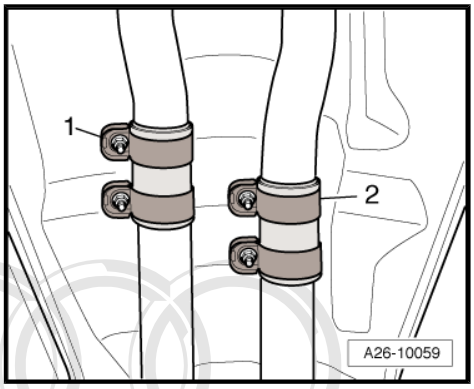

– If fitted, remove cover for rear final drive -arrows A and B-.

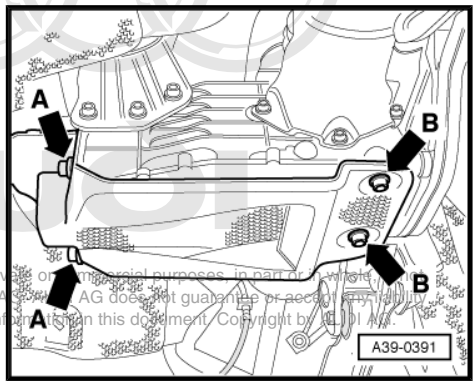

Protected by copyright. Copying for private or commercial purposes, in part or in whole, is not permitted unless authorised by AUDI AG. AUDI AG does not guarantee or accept any liability with respect to the correctness of information in this document. Copyright by AUDI AG.

– Check whether there is a factory marking (coloured dot) on the propshaft flange and on the rear final drive flange.
– If not, mark position of propshaft flange -arrow A- in relation to rear final drive flange -arrow B- with paint marker.

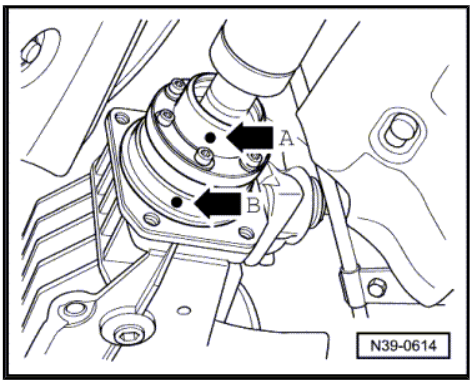

– Remove bolts -1- (6x) on rear CV joint.
– Use counterhold tool -T10172- with adapters -T10172/5- .

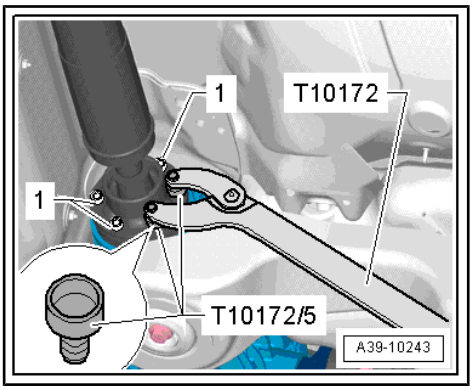

– Separate propshaft from rear final drive and tie up -arrow-.

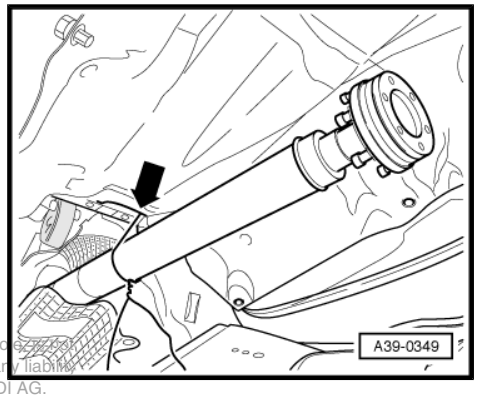

Attaching propshaft to rear final drive

Perform installation in reverse sequence of removal. Note the following:

- Remove old, dried-out high-temperature grease from CV joints and flanges for propshaft. Put in exactly the same quantity of fresh high-temperature grease -G 052 133 A2- .
- Clean remaining locking fluid out of tapped holes in flange shaft on rear final drive. The threads can be cleaned with a thread tap. Otherwise the securing bolts can shear off when they are screwed in.
- After detaching the propshaft from the rear final drive, the additional balancing washer (thicker washer) that may be fitted between the lock plate and one of the securing bolts must not be reinstalled.
- Always install new securing bolts for propshaft (self-locking bolts).

Protected by copyright. Copying for private or commercial purposes, in part or in whole, is not permitted unless authorised by AUDI AG. AUDI AG does not guarantee or accept any liability with respect to the correctness of information in this document. Copyright by AUDI AG.

– Gasket for propshaft on rear final drive flange must be renewed. Degrease sealing surface and glue on new gasket.

– Make sure that the marks on the propshaft flange -arrow A- and on the rear final drive flange -arrow B- are in line.

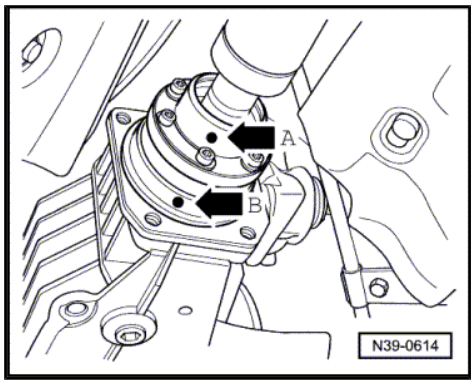

– Bring propshaft into position at rear final drive and fit new bolts -arrows-.

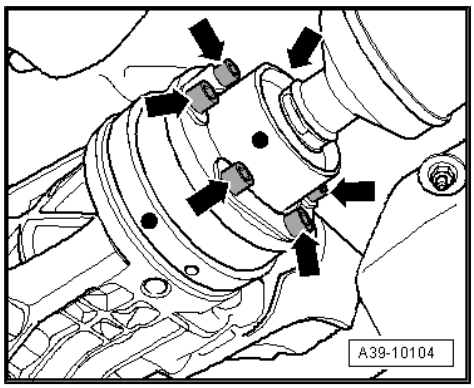

– Tighten bolts -1- securing propshaft on rear final drive to specified torque ⇒ Item 5 (page 12) .

– Use counterhold tool -T10172- with adapters -T10172/5- .

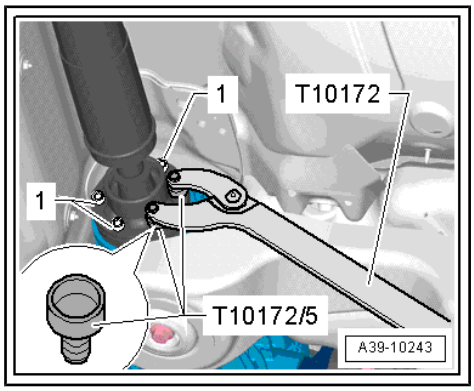

– Install cover for rear final drive (if previously removed). Tightening torques: -arrows A- ⇒ Item 16 (page 37) and -arrows B- ⇒ Item 13 (page 37) .

– Install rear section of exhaust system ⇒ Rep. Gr. 26 .

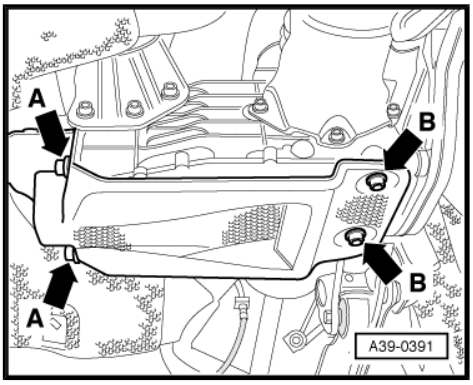

Protected by copyright. Copying for private or commercial purposes, in part or in whole, is not permitted unless authorised by AUDI AG. AUDI AG does not guarantee or accept any liability with respect to the correctness of information in this document. Copyright by AUDI AG.

2 Measuring and marking radial run-out at flange for propshaft

Special tools and workshop equipment required

- Universal dial gauge bracket -VW 387-

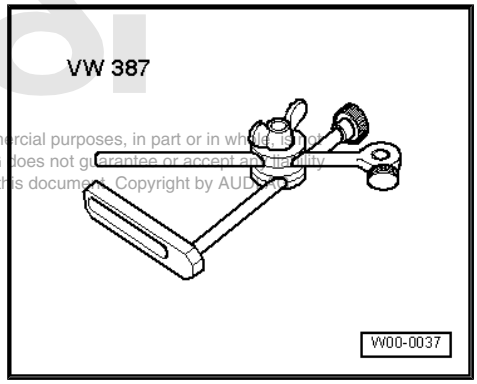

Protected by copyright. Copying for private or commercial purposes, in part or in whole, is not permitted unless authorised by AUDI AG. AUDI AG does not guarantee or accept any liability with respect to the correctness of information in this document. Copyright by AUDI AG.

- Dial gauge
- Bolt M10×30

Note

- *The radial run-out must always be measured when the flange for the propshaft at the rear final drive has been removed. Remove old paint marking and make new marking.*
- *If a new propshaft is being installed and the marking on the flange shaft of the rear final drive is no longer visible, the point of maximum radial run-out (corresponding to the maximum distance from the axis of rotation) must be measured with a dial gauge and marked with a coloured dot -arrow B-.*
- *The coloured dot on the propshaft -arrow A- is then brought into alignment with this marking -arrow B-.*
- *The radial run-out can be measured without removing the rear final drive.*

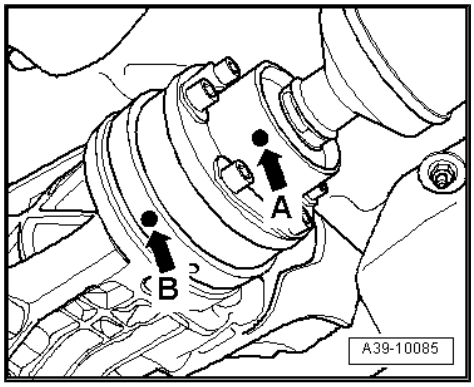

– Unbolt propshaft from rear final drive ⇒ page 26 .
– Secure measuring equipment to rear final drive with bolt -A- (M10x30).
– Apply dial gauge to machined surface on inner side of flange for propshaft -arrow- and set to “0” with a preload of 1 mm.
– Turn both rear wheels in the same direction to turn the flange through one complete rotation.
– Mark point of maximum radial run-out with coloured dot on outside of flange (corresponding to maximum distance from axis of rotation).
– Then remove previous marking on flange.
– Attach propshaft ⇒ page 28 .

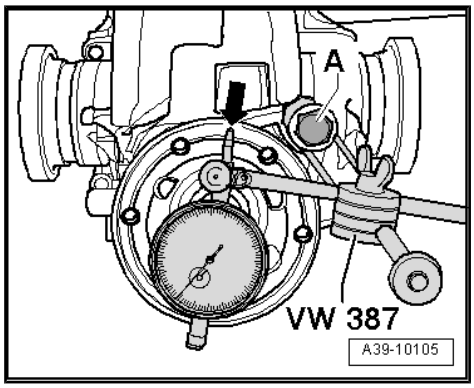

3 Checking gear oil in rear final drive

Special tools and workshop equipment required

♦ Drip tray -V.A.G 1306-

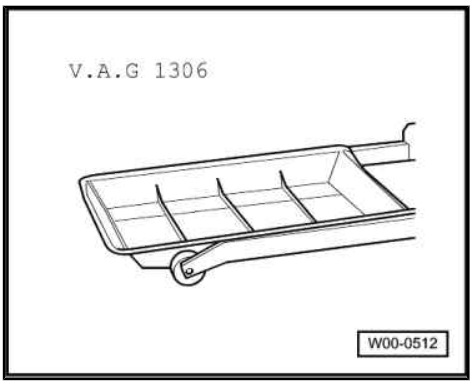

♦ Torque wrench -V.A.G 1331-

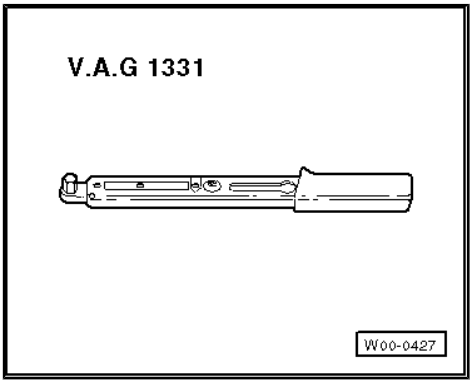

♦ Place drip tray -V.A.G 1306- underneath.

– Remove screw plug -arrow- to check gear oil.

The oil level is correct when the rear final drive is filled to the bottom lip of the filler hole.

• Gear oil specification ⇒ page 4 .

– Screw in plug -arrow- and tighten. Tightening torque ⇒ Item 10 (page 61)

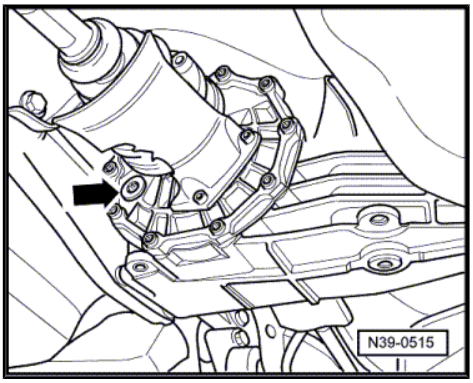

Protected by copyright. Copying for private or commercial purposes, in part or in whole, is not permitted unless authorised by AUDI AG. AUDI AG does not guarantee or accept any liability with respect to the correctness of information in this document. Copyright by AUDI AG.

4 Exploded view - rear final drive on Audi A4, Audi Cabriolet and Audi A6

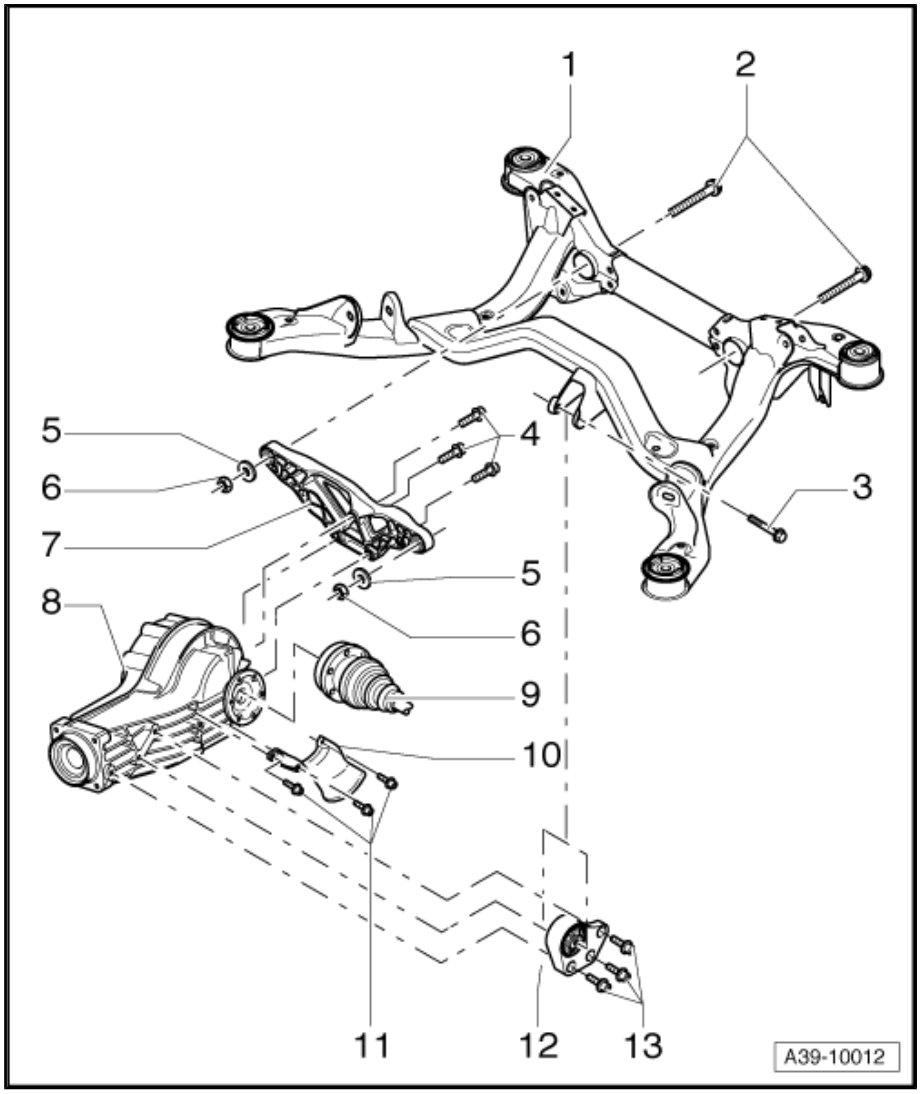

1 - Subframe
- ❑ Removing and installing ⇒ Rep. Gr. 42

2 - Hexagon bolt

3 - Hexagon bolt
- ❑ 40 Nm
- ❑ Secures final drive support to subframe
- ❑ Renew nut if fitted

4 - Hexagon socket head bolts
- ❑ 40 Nm

5 - Washer

6 - Nut
- ❑ 55 Nm
- ❑ Self-locking
- ❑ Renew

7 - Rear cross member

8 - Rear final drive
- ❑ Removing and installing ⇒ page 32

9 - Drive shaft
- ❑ Removing and installing ⇒ Rep. Gr. 42

10 - Heat shield

11 - Hexagon socket head bolts
- ❑ 25 Nm

12 - Final drive support

13 - Hexagon socket head bolts
- ❑ 40 Nm

4.1 Removing rear final drive on Audi A4, Audi Cabriolet and Audi A6

Special tools and workshop equipment required

Protected by copyright. Copying for private or commercial purposes, in part or in whole, is not permitted unless authorised by AUDI AG. AUDI AG does not guarantee or accept any liability with respect to the correctness of information in this document. Copyright by AUDI AG.

- Torque wrench -V.A.G 1332-

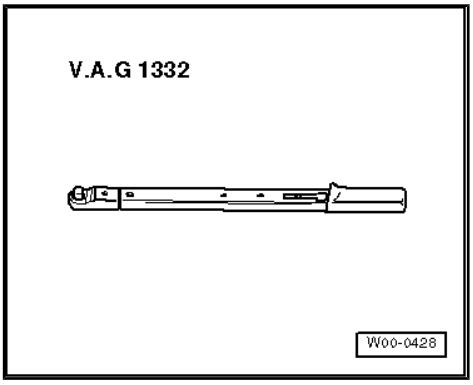

- Engine and gearbox jack -V.A.G 1383 A- with universal gearbox support -V.A.G 1359/2-

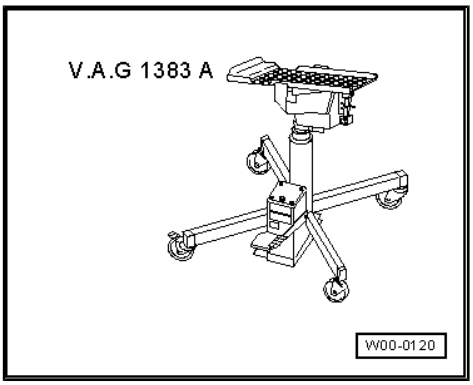

Removing

Refer to general repair instructions ⇒ page 8 .

– Remove rear section of exhaust system behind clamps -arrows- ⇒ Rep. Gr. 26 .

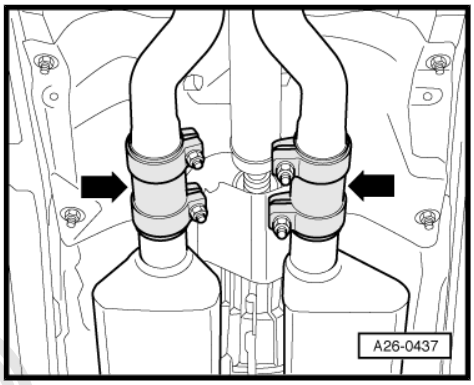

– Check whether there is a factory marking (coloured dot) on the propshaft flange and on the rear final drive flange.
– If not, mark position of propshaft flange -arrow A- in relation to rear final drive flange -arrow B- with paint marker.
– Unbolt propshaft from rear final drive ⇒ page 26 .

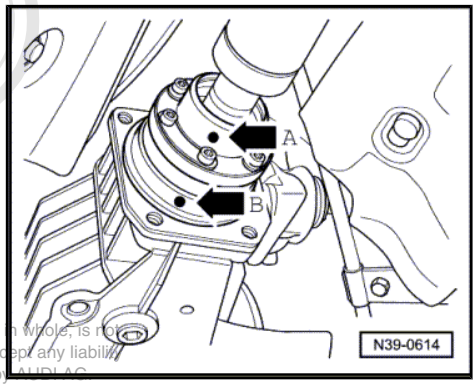

Protected by copyright. Copying for private or commercial purposes, in part or in whole, is not permitted unless authorised by AUDI AG. AUDI AG does not guarantee or accept any liability with respect to the correctness of information in this document. Copyright by AUDI AG.

– Separate propshaft from rear final drive and tie up to one side -arrow-.

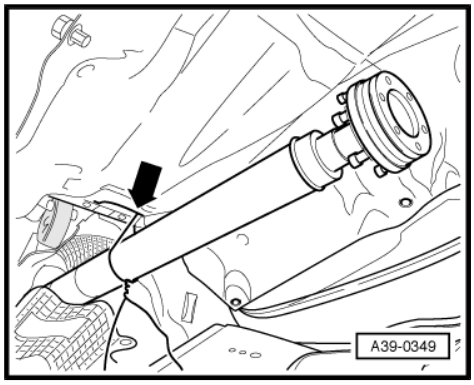

– Remove heat shields (left and right) from rear final drive -arrows-.
– Unbolt drive shafts (left and right).

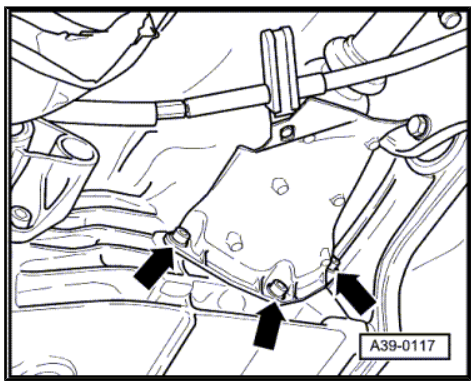

– Position engine and gearbox jack -V.A.G 1383 A- with universal gearbox support -V.A.G 1359/2- under rear final drive.
– Secure rear final drive to universal gearbox support with a strap.

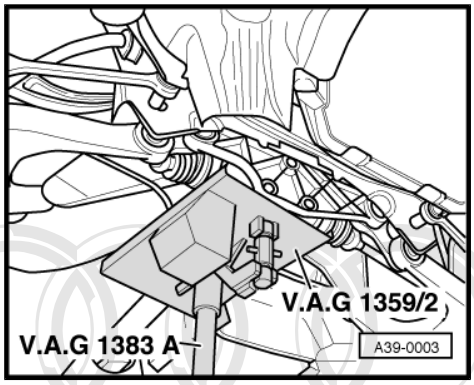

– Remove securing bolts -arrows- for final drive support.

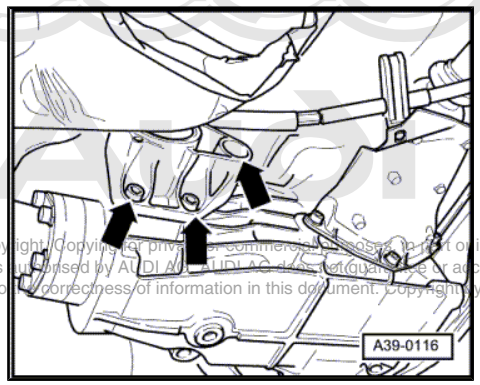

Protected by copyright. Copying for private or commercial purposes, in part or in whole, is not permitted unless authorised by AUDI AG. AUDI AG does not guarantee or accept any liability with respect to the correctness of information in this document. Copyright by AUDI AG.

– Remove securing bolts -arrow A- and -arrows B- from cross member.

Bolt -arrow A- remains in cross member.

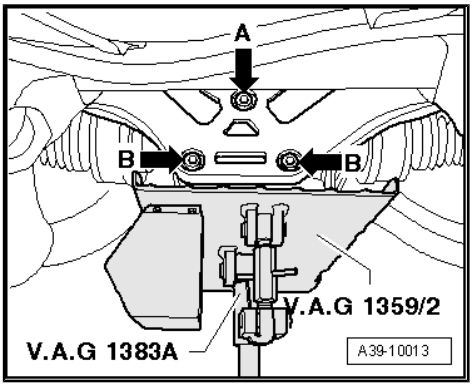

– Slightly lower rear final drive.
– Turn rear final drive slightly to the side and pull drive shafts out of flange shafts alternately on each side.
– Lower rear final drive completely.

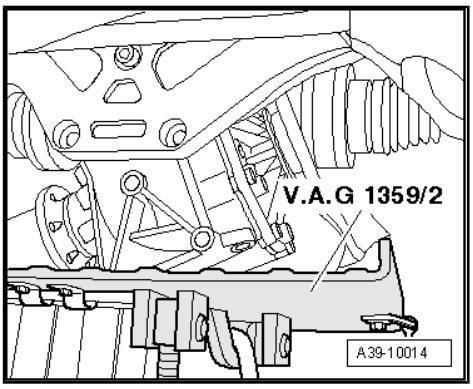

Installing rear final drive on Audi A4, Audi Cabriolet and Audi A6

Perform installation in reverse sequence of removal. Note the following:

– Turn rear final drive to the side.
– Lift rear final drive and fit drive shafts into flange shafts alternately on each side.

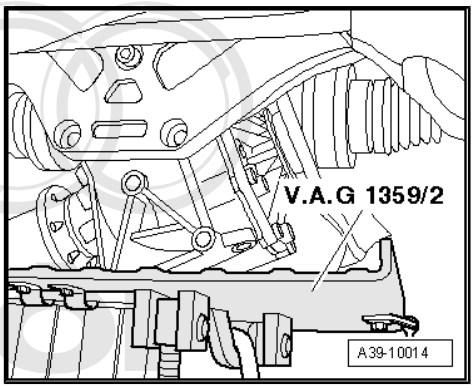

– Install securing bolt -arrow A- and tighten lightly to start with.
– Install securing bolts -arrows B-.
– Tighten securing bolts -arrow A- and -arrows B-. Tightening torque ⇒ Item 4 (page 32)

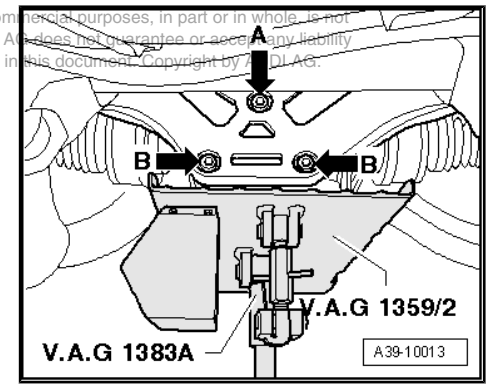

Printed by Copyright. Copyright or private or commercial purposes, in part or in whole, is not permitted unless authorised by AUDI AG. AUDI AG does not guarantee or accept any liability with respect to the correctness of information in this document. Copyright by AUDI AG.

– Tighten securing bolts -arrows- for final drive support. Tightening torque ⇒ Item 13 (page 32)

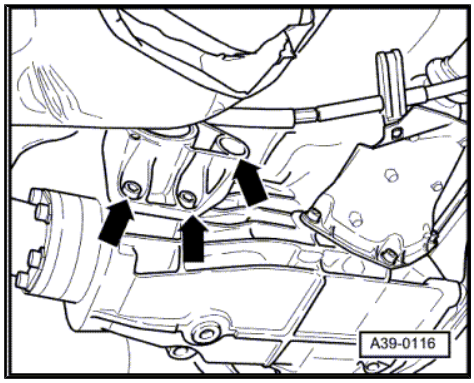

– Attach drive shafts ⇒ Rep. Gr. 42 .
– Install heat shields (left and right) on rear final drive -arrows-. Tightening torque ⇒ Item 11 (page 32)
– Attach propshaft to rear final drive ⇒ page 28 .
– Check oil level in rear final drive ⇒ page 31 .
– Install rear section of exhaust system ⇒ Rep. Gr. 26 .

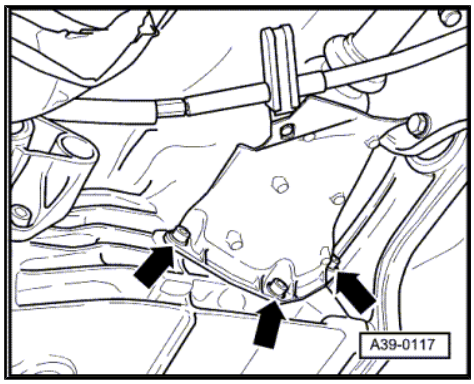

Protected by copyright. Copying for private or commercial purposes, in part or in whole, is not permitted unless authorised by AUDI AG. AUDI AG does not guarantee or accept any liability with respect to the correctness of information in this document. Copyright by AUDI AG.

5 Exploded view - rear final drive on Audi A8

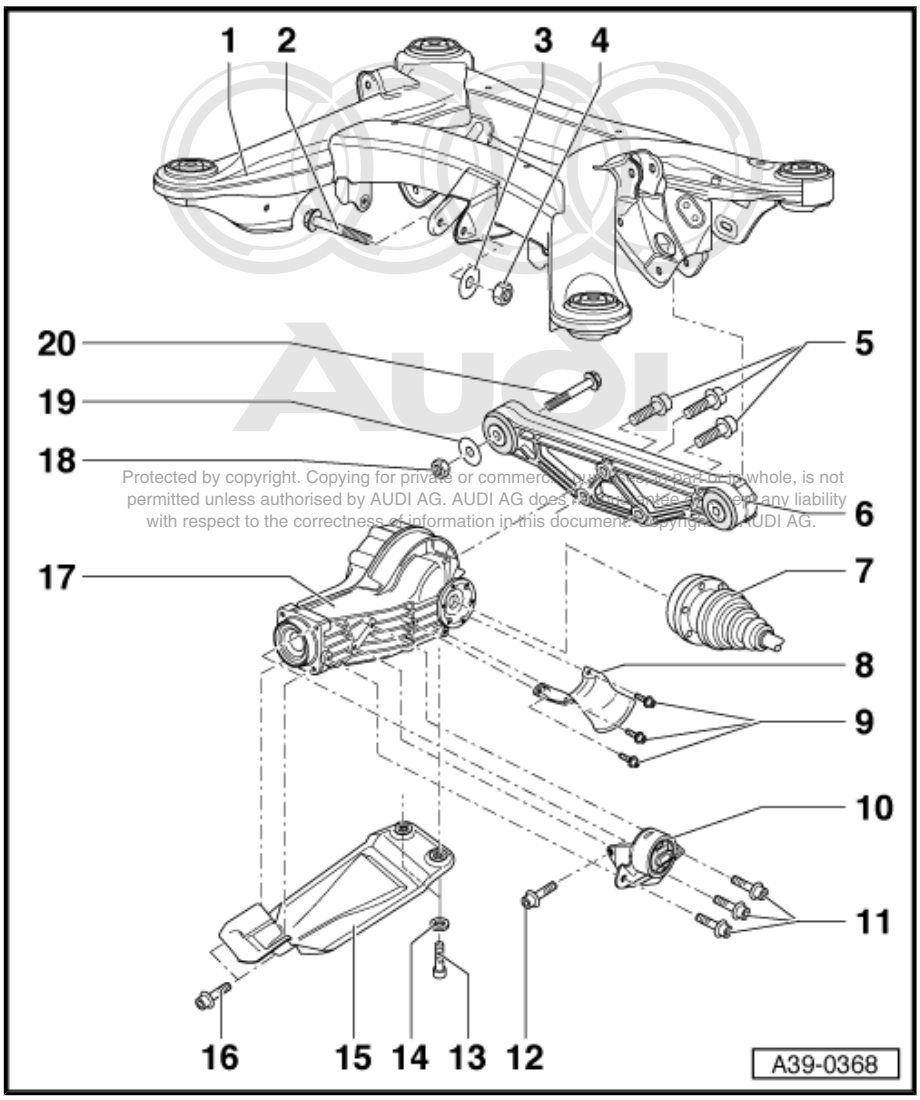

Protected by copyright. Copying for private or commercial purposes, in part or in whole, is not permitted unless authorised by AUDI AG. AUDI AG does not make any representations or give any liability with respect to the correctness of information in this document. Copyright by AUDI AG.

1 - Subframe
- ❑ Removing and installing ⇒ Rep. Gr. 42

2 - Hexagon bolt

3 - Washer

4 - Nut
- ❑ 40 Nm
- ❑ Self-locking
- ❑ Renew

5 - Hexagon socket head bolts
- ❑ 55 Nm

6 - Rear cross member

7 - Drive shaft
- ❑ Removing and installing ⇒ Rep. Gr. 42

8 - Heat shield

9 - Bolt with washer
- ❑ 25 Nm

10 - Final drive support
- ❑ Note assembly sequence ⇒ page 41

11 - Hexagon socket head bolts
- ❑ 40 Nm + 90°
- ❑ Renew

12 - Hexagon socket head bolt
- ❑ 40 Nm + 90°
- ❑ Renew

13 - Hexagon socket head bolts
- ❑ 20 Nm

14 - Washer

15 - Cover
- ❑ Depending on version

16 - Bolt with washer
- ❑ 40 Nm

17 - Rear final drive
- ❑ Removing and installing ⇒ page 38

18 - Nut
- ❑ Self-locking
- ❑ Renew
- ❑ Tightening torque ⇒ Rep. Gr. 42

19 - Washer

20 - Hexagon bolt

5.1 Removing and installing rear final drive on Audi A8

Special tools and workshop equipment required

- Torque wrench -V.A.G 1332-

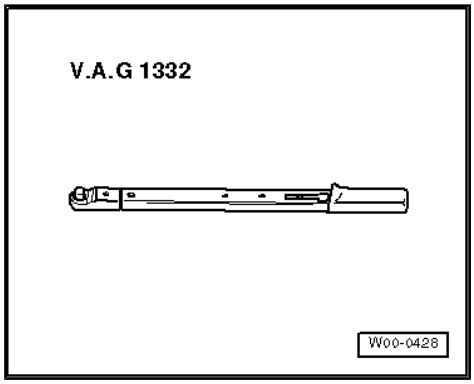

- Engine and gearbox jack -V.A.G 1383 A- with universal support -V.A.G 1359/2-

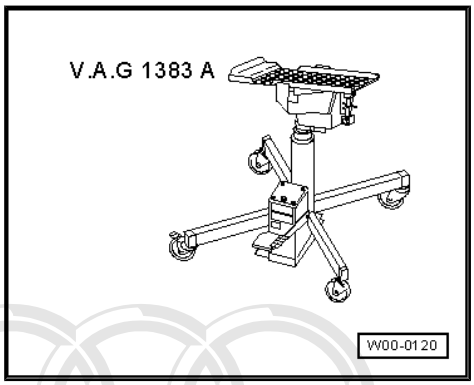

Removing

Refer to general repair instructions ⇒ page 8 .

– Remove rear section of exhaust system behind clamps -1- and -2- ⇒ Rep. Gr. 26 .

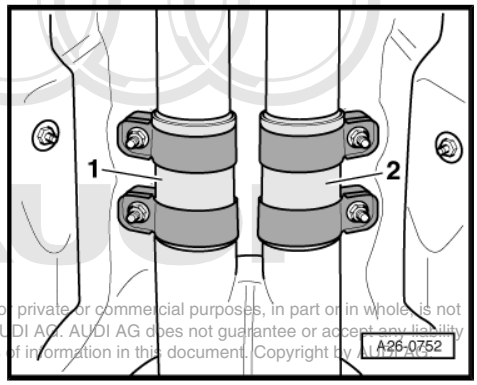

Protected by copyright. Copying for private or commercial purposes, in part or in whole, is not permitted unless authorised by AUDI AG. AUDI AG does not guarantee or accept any liability with respect to the correctness of information in this document. Copyright by AUDI AG.

– If fitted, remove cover for rear final drive -arrows A and B-.

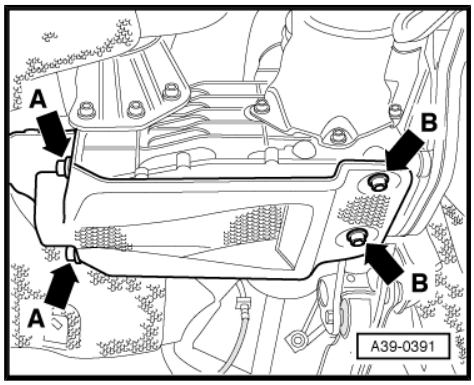

– Check whether there is a factory marking (coloured dot) -arrows A and B- on the propshaft flange and on the rear final drive flange.
– If not, mark position of propshaft flange -arrow A- in relation to rear final drive flange -arrow B- with paint marker.
– Unbolt propshaft from rear final drive ⇒ page 26 .

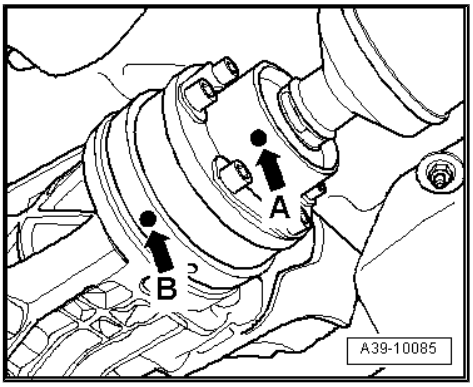

– Tie up propshaft to side -arrow-.

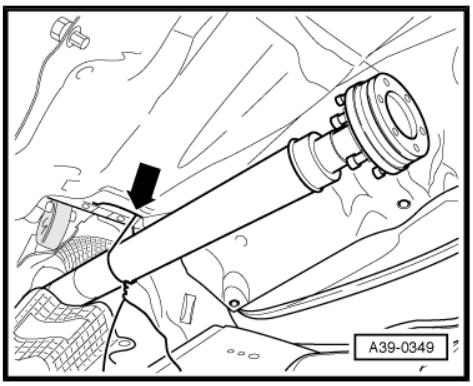

– Remove heat shields from rear final drive -arrows-.
– Unbolt drive shafts (left and right).

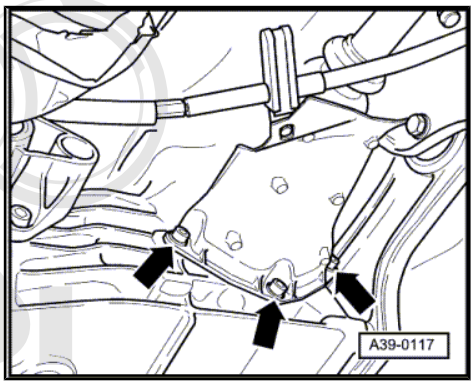

– Position engine and gearbox jack -V.A.G 1383 A- with universal support -V.A.G 1359/2- below rear final drive .

Protected by copyright. Copying for private or commercial purposes, in part or in whole, is not permitted unless authorised by AUDI AG. AUDI AG does not guarantee or assume any liability with respect to the correctness of information in this document. Copyright by AUDI AG.

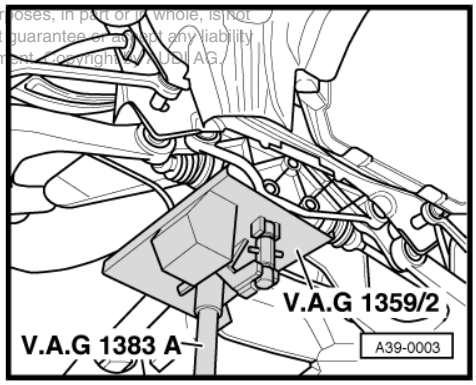

– Unscrew bolts for final drive support -arrows A and B-.

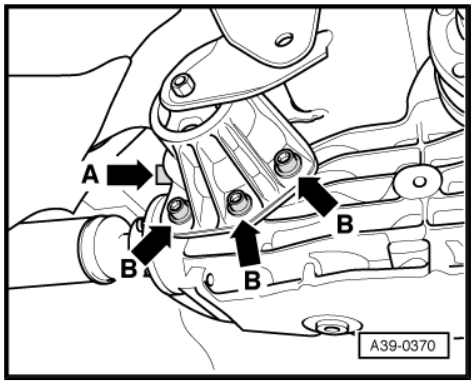

– Remove bolts -arrows- for rear cross member.

Protected by copyright. Copying for private or commercial purposes, in part or in whole, is not permitted unless authorised by AUDI AG. AUDI AG does not guarantee or accept any liability with respect to the correctness of information in this document. Copyright by AUDI AG.

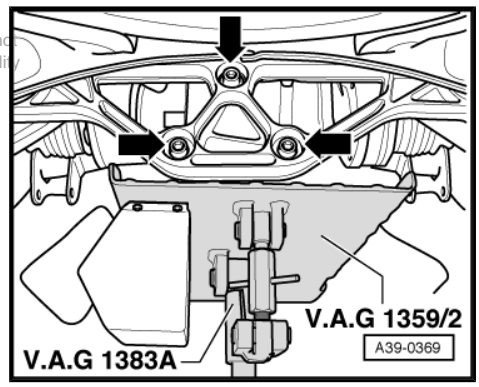

– Slightly lower rear final drive.
– Turn rear final drive slightly to the side and pull drive shafts out of flange shafts alternately on each side.
– Lower rear final drive completely.

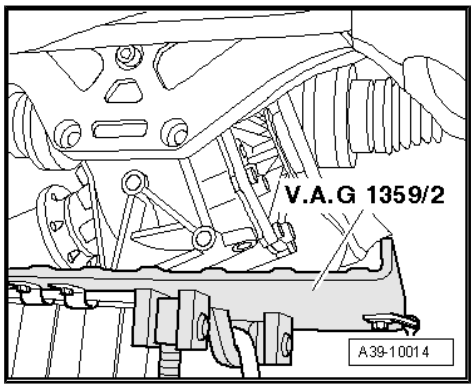

Installing rear final drive on Audi A8

Perform installation in reverse sequence of removal. Note the following:

– Turn final drive to the side.
– Lift rear final drive and fit drive shafts into flange shafts alternately on each side.

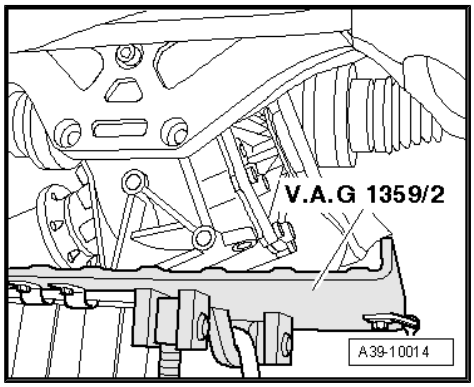

– Fit and tighten bolts -arrows-. Tightening torque ⇒ Item 5 (page 37)

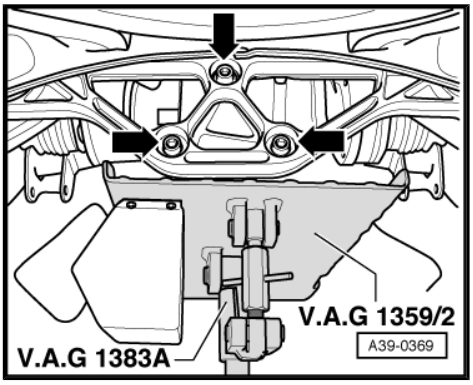

Protected by copyright. Copying for private or commercial purposes, in part or in whole, is not permitted unless authorised by AUDI AG. AUDI AG does not guarantee or accept any liability with respect to the correctness of information in this document. Copyright by AUDI AG.

Installation instructions for final drive support

– Fit bolts -A- and -B- and tighten lightly to start with (final drive support must be in full contact with final drive).

– First tighten bolt -A-, then bolts -B-. Tightening torque ⇒ Item 11 (page 37) and ⇒ Item 12 (page 37) .

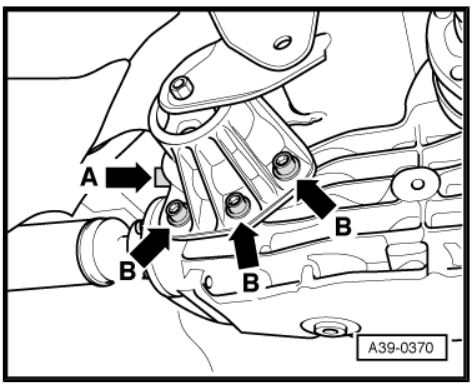

– Attach drive shafts ⇒ Rep. Gr. 42 .

– Fit heat shields on rear final drive -arrows-. Tightening torque ⇒ Item 9 (page 37)

– Renew gasket on flange for propshaft and secure propshaft to rear final drive (markings must face each other ⇒ page 28).

– Check gear oil level in rear final drive ⇒ page 31 .

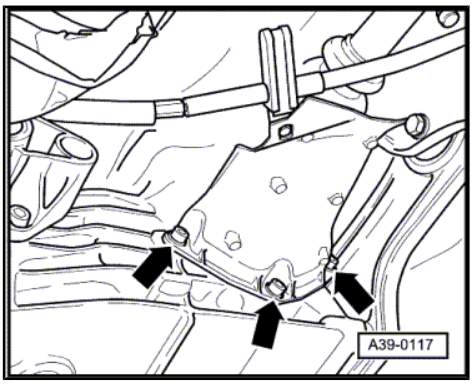

– Install cover for rear final drive (if previously removed). Tightening torques: -arrows A- ⇒ Item 16 (page 37) and -arrows B- ⇒ Item 13 (page 37) .

– Install rear section of exhaust system and perform stress-free alignment ⇒ Rep. Gr. 26 .

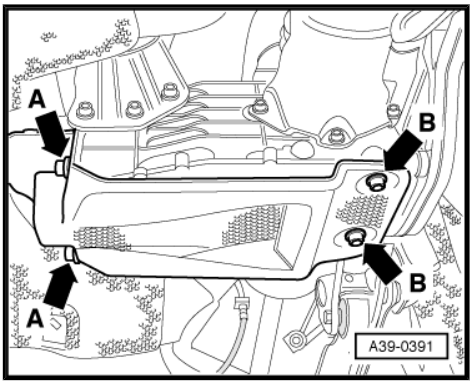

6 Renewing flange shaft oil seals

- ⇒ “6.1 Renewing flange shaft oil seals on Audi A4, Audi Cabriolet”, page 42
- ⇒ “6.2 Renewing flange shaft oil seals on Audi A6”, page 46
- ⇒ “6.3 Renewing flange shaft oil seals on Audi A8”, page 48

6.1 Renewing flange shaft oil seals on Audi A4, Audi Cabriolet

Special tools and workshop equipment required

- Punch -2062-
- Drip tray -V.A.G 1306-
- Torque wrench - V.A.G 1331-
- Torque wrench - V.A.G 1332-
- Sealing grease - G 052 128 A1-

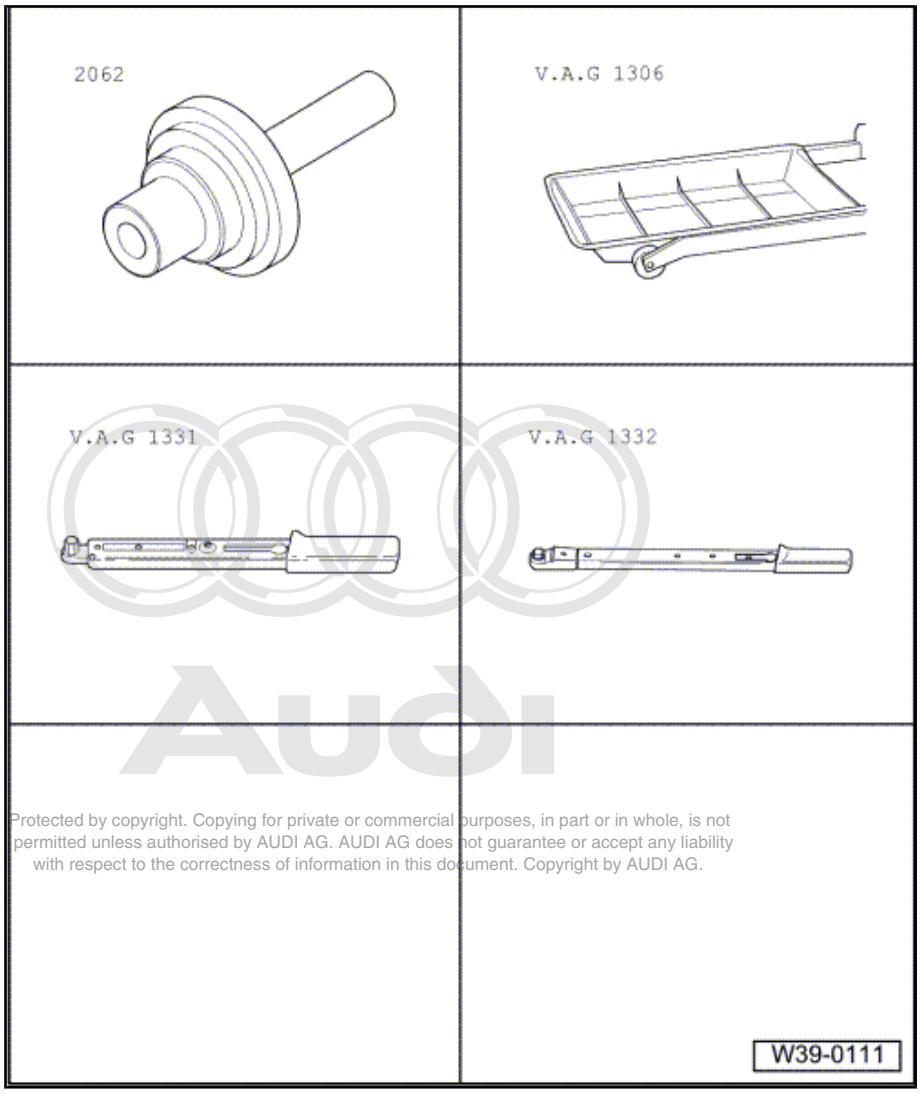

Protected by copyright. Copying for private or commercial purposes, in part or in whole, is not permitted unless authorised by AUDI AG. AUDI AG does not guarantee or accept any liability with respect to the correctness of information in this document. Copyright by AUDI AG.

Special tools and workshop equipment required

- Engine and gearbox jack -V.A.G 1383 A- with universal gearbox support -V.A.G 1359/2-

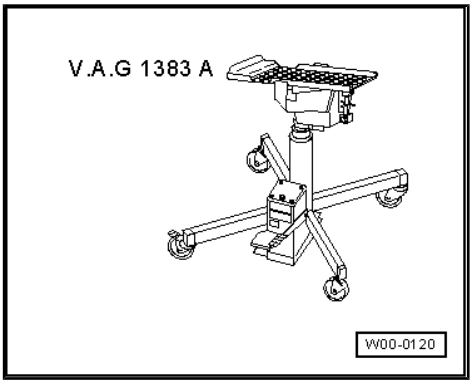

- Support -T10149-

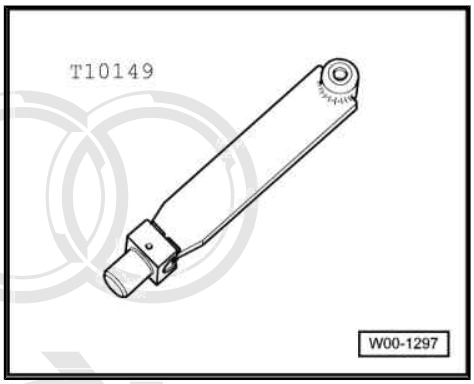

Protected by copyright. Copying for private or commercial purposes, in part or in whole, is not permitted unless authorised by AUDI AG. AUDI AG does not guarantee or accept any liability with respect to the correctness of information in this document. Copyright by AUDI AG.

Removing

- Rear final drive installed
- Observe the general repair instructions ⇒ page 8

Note

All the illustrations show the left-hand side of the rear final drive. Removal and installation of the flange shaft and oil seal on the right-hand side is identical.

– Remove bolts -2- and detach heat shield.

– Unscrew bolts -1-.

– Push drive shaft outwards so it telescopes slightly and pivot drive shaft out of flange shaft.

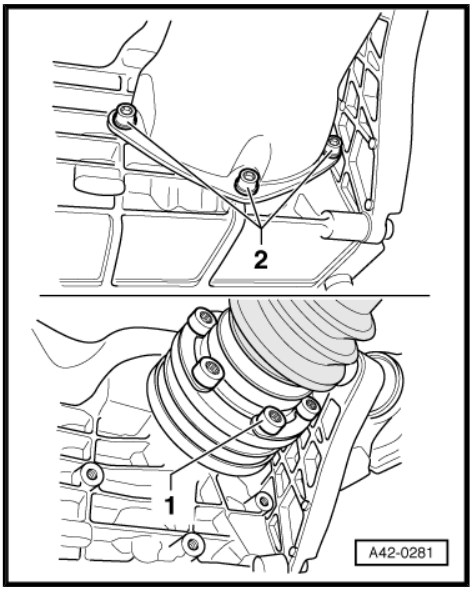

If the drive shaft cannot be pivoted clear of the flange shaft. proceed as follows:

– Remove wheel on relevant side.

– Attach support -T10149- with one wheel bolt.

– Insert support -T10149- in engine and gearbox jack -V.A.G 1383 A- .

– Raise wheel bearing housing just far enough (not more than 10 cm) to be able to pivot drive shaft out of flange shaft.

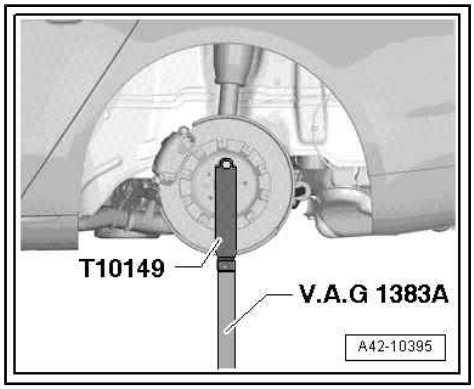

WARNING

- *Do not raise the wheel bearing housing further than 10 cm! Otherwise there is a risk that the vehicle may slip off the lifting platform.*
- *If necessary place a weight of approx. 50 kg in the luggage compartment, or secure the vehicle to the lifting platform using tensioning strap -T10038- or similar.*
- *Do not raise or lower vehicle while engine and gearbox jack -V.A.G 1383 A- is positioned under the vehicle.*
- *Do not leave engine and gearbox jack -V.A.G 1383 A- under vehicle for longer than necessary.*

Continued

– Remove securing bolt for flange shaft; to do this screw two bolts into the flange and counterhold flange shaft using a lever.

– Place drip tray -V.A.G 1306- underneath.

– Pull out flange shaft.

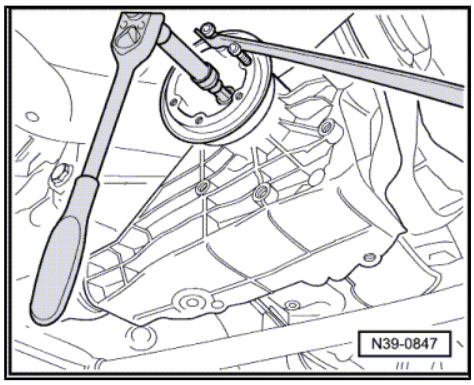

– If fitted, lever out dust ring using a screwdriver.

• The dust ring will be damaged on removal and must be renewed.

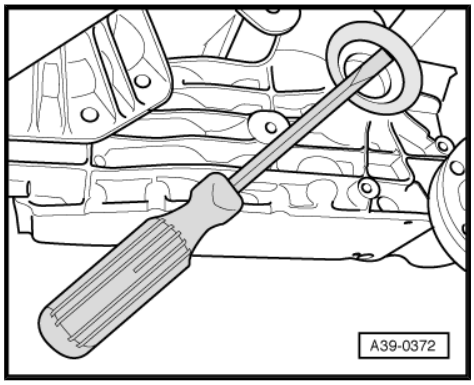

Protected by copyright. Copying for private or commercial purposes, in part or in whole, is not permitted unless authorised by AUDI AG. AUDI AG does not guarantee or accept any liability with respect to the correctness of information in this document. Copyright by AUDI AG.

– Pry out oil seal with a suitable lever.

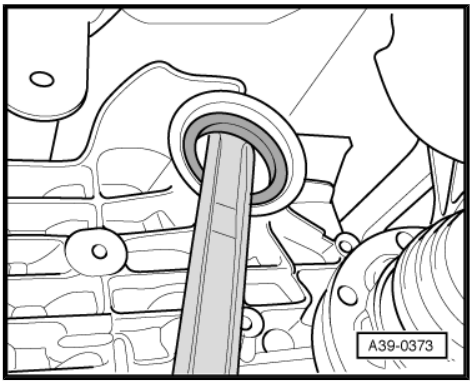

Installing

Perform installation in reverse sequence of removal. Note the following:

– Lightly lubricate outer circumference of oil seal with gear oil.

– Pack space between sealing lip and dust lip half-full with sealing grease -G 052 128 A1- .

– Drive in new seal onto stop (take care to keep seal straight).

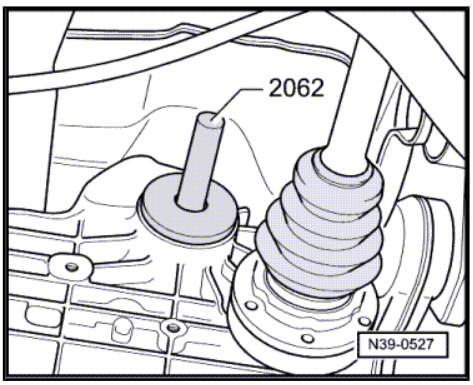

– Drive in new dust ring -arrow- onto stop.

– Install flange shaft.

– Screw in and tighten securing bolt for flange shaft ⇒ Item 8 (page 61) .

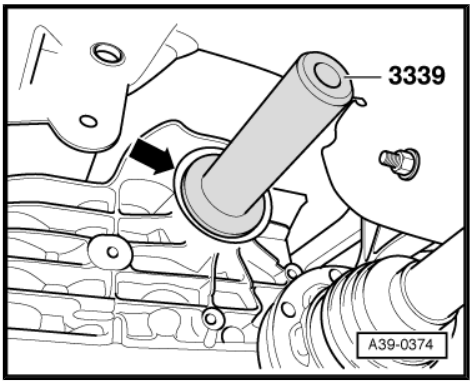

– Attach drive shaft ⇒ Rep. Gr. 42 .

– Install heat shield and tighten bolts -2-. Tightening torque ⇒ Item 11 (page 32)

– Check oil level in rear final drive ⇒ page 31 .

– If previously removed, install wheel and tighten wheel bolts ⇒ Wheels and tyres; Rep. Gr. 44 .

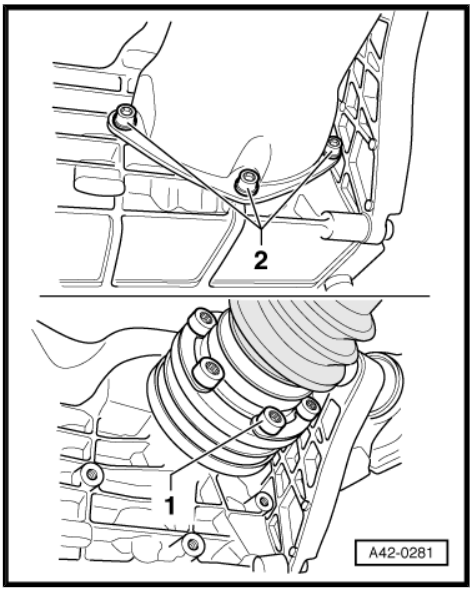

Protected by copyright. Copying for private or commercial purposes, in part or in whole, is not permitted unless authorised by AUDI AG. AUDI AG does not guarantee or accept any liability with respect to the correctness of information in this document. Copyright by AUDI AG.

6.2 Renewing flange shaft oil seals on Audi A6

- The oil seals can be only be renewed with the rear final drive removed.

Special tools and workshop equipment required

- Punch -2062-
- Drip tray -V.A.G 1306-
- Torque wrench - V.A.G 1331-
- Torque wrench - V.A.G 1332-
- Sealing grease - G 052 128 A1-

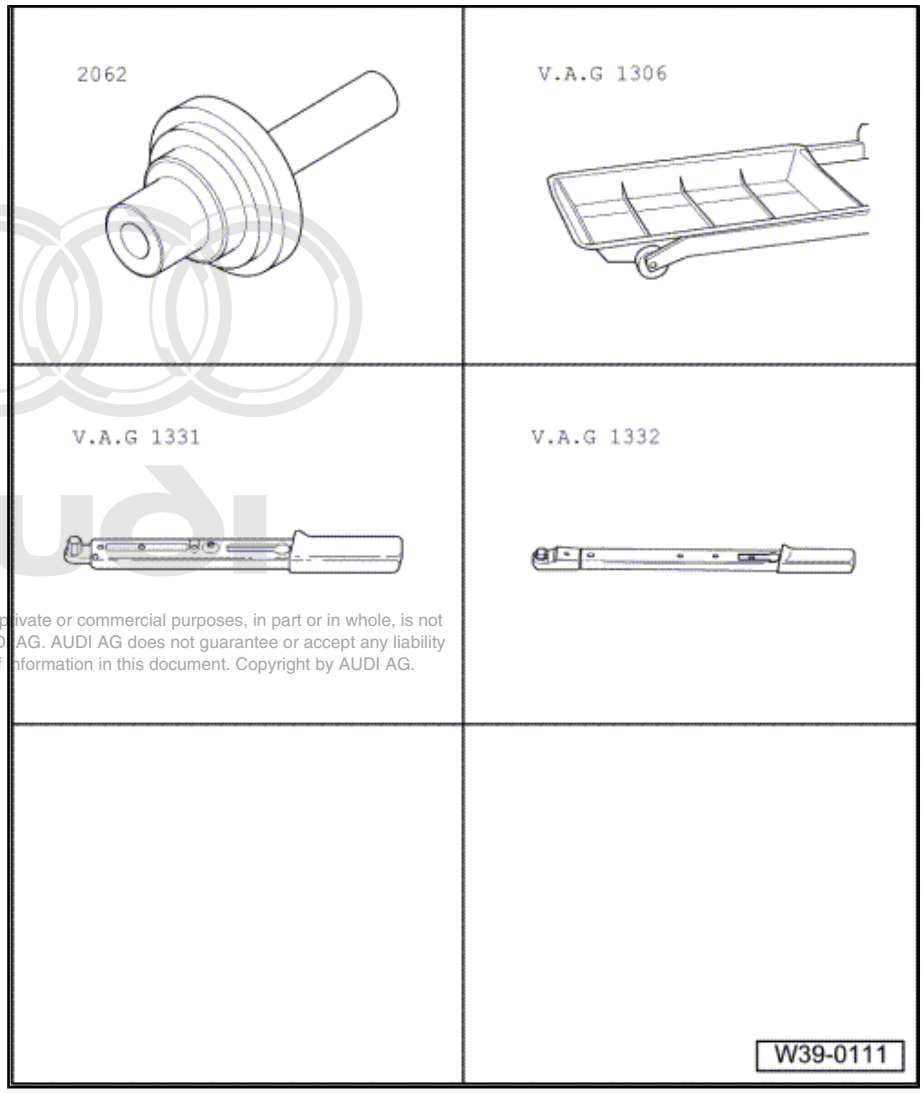

Protected by copyright. Copying for private or commercial purposes, in part or in whole, is not permitted unless authorised by AUDI AG. AUDI AG does not guarantee or accept any liability with respect to the correctness of information in this document. Copyright by AUDI AG.

Special tools and workshop equipment required

- Engine and gearbox jack -V.A.G 1383 A- with universal gearbox support -V.A.G 1359/2-

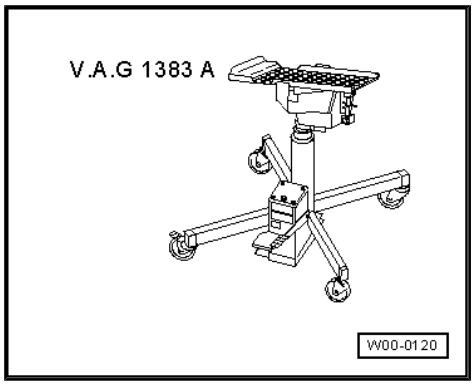

Removing

- Observe the general repair instructions ⇒ page 8 .
- Remove rear final drive ⇒ page 32 .

Note

All the illustrations show the left-hand side of the rear final drive. Removal and installation of the flange shaft and oil seal on the right-hand side is identical.

– Place drip tray -V.A.G 1306- underneath.

– Remove securing bolt for flange shaft; to do this screw two bolts into the flange and counterhold flange shaft using a lever.

– Pull out flange shaft.

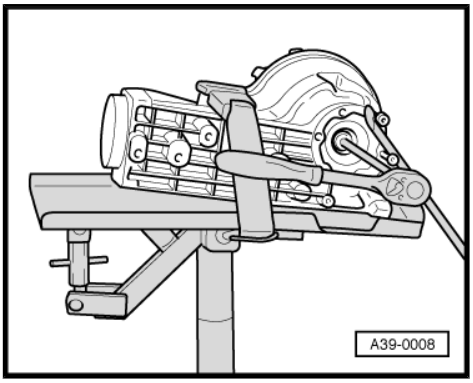

– If fitted, lever out dust ring using a screwdriver.

- The dust ring will be damaged on removal and must be renewed.

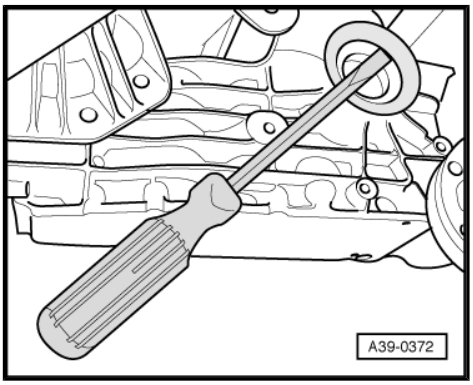

– Pry out oil seal with a suitable lever.

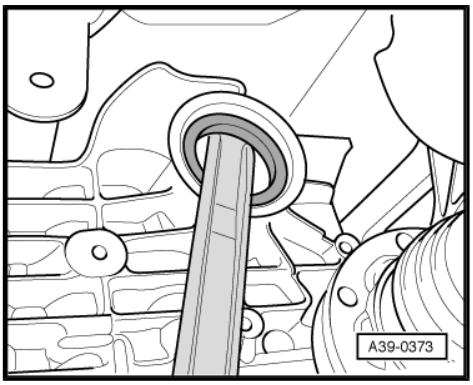

Protected by copyright. Copying for private or commercial purposes, in part or in whole, is not permitted unless authorised by AUDI AG. AUDI AG does not guarantee or accept any liability with respect to the correctness of information in this document. Copyright by AUDI AG.

Installing

Perform installation in reverse sequence of removal. Note the following:

– Lightly lubricate outer circumference of oil seal with gear oil.

– Pack space between sealing lip and dust lip half-full with sealing grease -G 052 128 A1- .

– Drive in new seal onto stop (take care to keep seal straight).

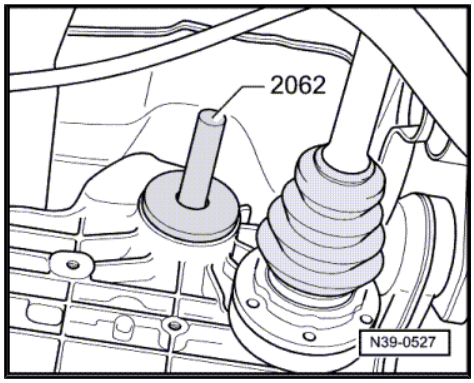

– If previously fitted, drive in new dust ring -arrow- onto stop.

– Install flange shaft.

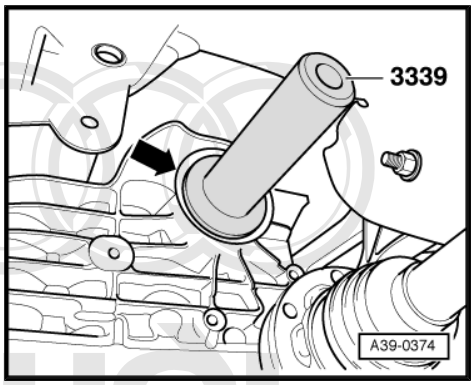

– Screw in and tighten securing bolt for flange shaft ⇒ Item 8 (page 61) .

– Install rear final drive ⇒ page 35 .

– Check oil level in rear final drive ⇒ page 31 .

Protected by copyright. Copying for private or commercial purposes, in part or in whole, is not permitted unless authorised by AUDI AG. AUDI AG does not guarantee or accept any liability with respect to the correctness of information in this document. Copyright by AUDI AG.

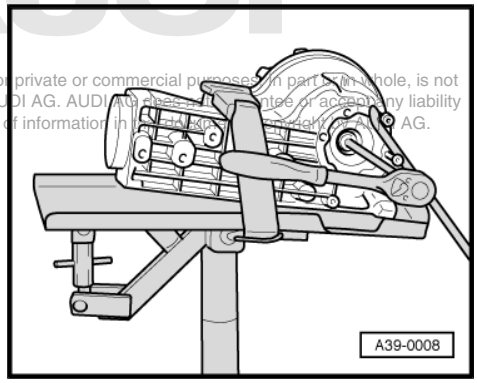

6.3 Renewing flange shaft oil seals on Audi A8

Special tools and workshop equipment required

- Punch -2062-
- Drip tray -V.A.G 1306-
- Torque wrench - V.A.G 1331-
- Torque wrench - V.A.G 1332-
- Sealing grease - G 052 128 A1-

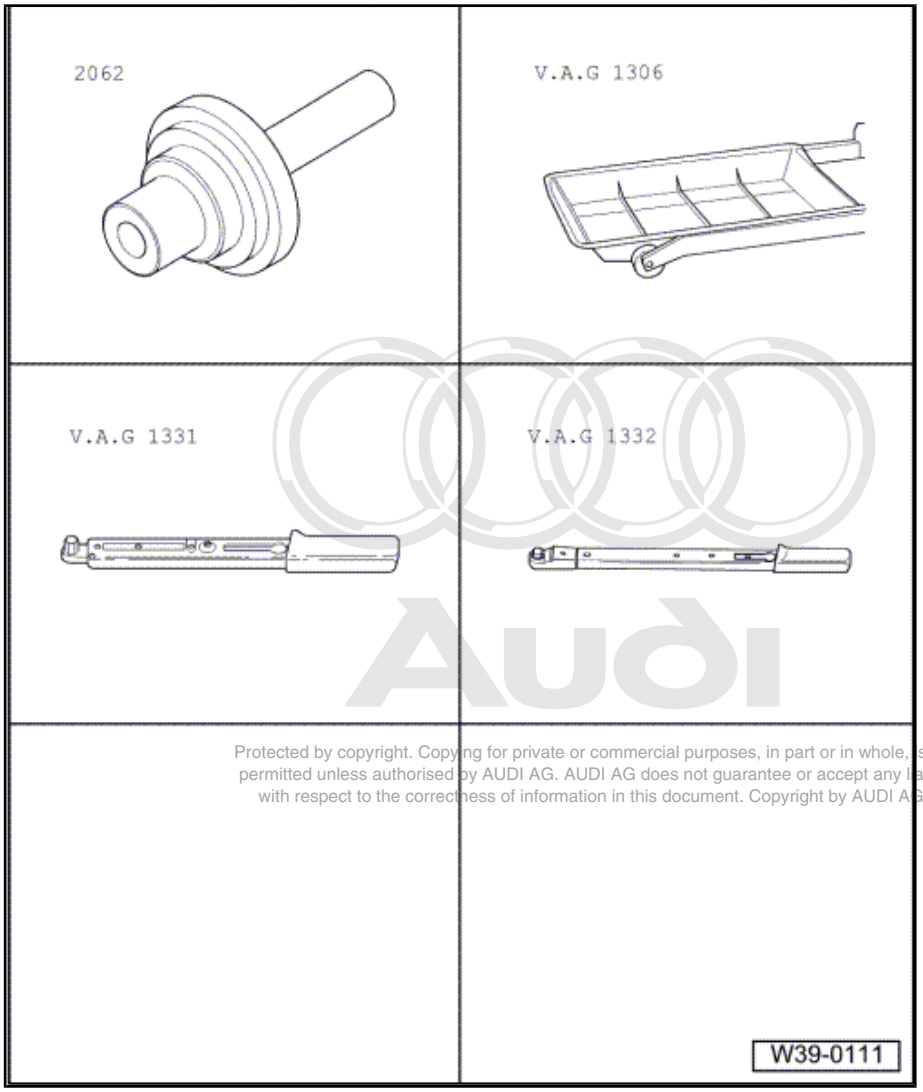

Protected by copyright. Copying for private or commercial purposes, in part or in whole, is not permitted unless authorised by AUDI AG. AUDI AG does not guarantee or accept any liability with respect to the correctness of information in this document. Copyright by AUDI AG.

Special tools and workshop equipment required

- Engine and gearbox jack -V.A.G 1383 A- with universal gearbox support -V.A.G 1359/2-

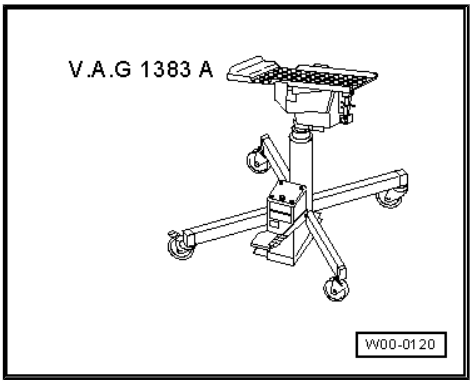

Removing

- Rear final drive installed
- Observe the general repair instructions ⇒ page 8 .

Note

All the illustrations show the left-hand side of the rear final drive. Removal and installation of the flange shaft and oil seal on the right-hand side is identical.

– Remove rear section of exhaust system behind clamps -1- and -2- ⇒ Rep. Gr. 26 .

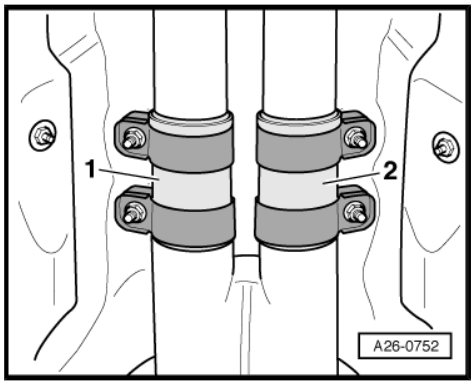

– If fitted, remove cover for rear final drive -arrows A and B-.

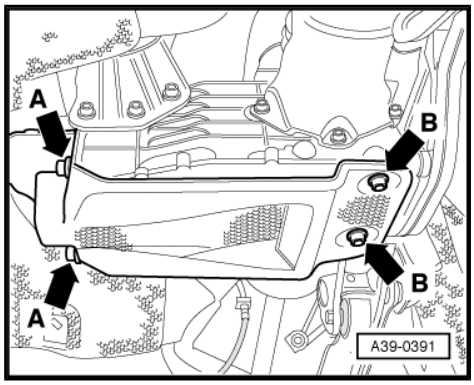

– Remove bolts -2- and detach heat shield.
– Unscrew bolts -1- for drive shaft.

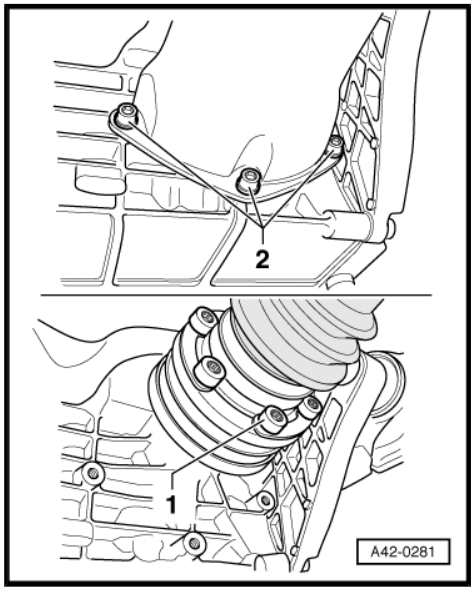

Protected by copyright. Copying for private or commercial purposes, in part or in whole, is not permitted unless authorised by AUDI AG. AUDI AG does not guarantee or accept any liability with respect to the correctness of information in this document. Copyright by AUDI AG.

– Position engine and gearbox jack -V.A.G 1383 A- with universal support -V.A.G 1359/2- below rear final drive.

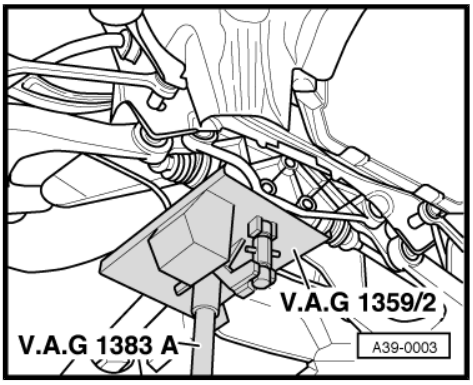

– Remove bolts -arrows- for rear cross member.

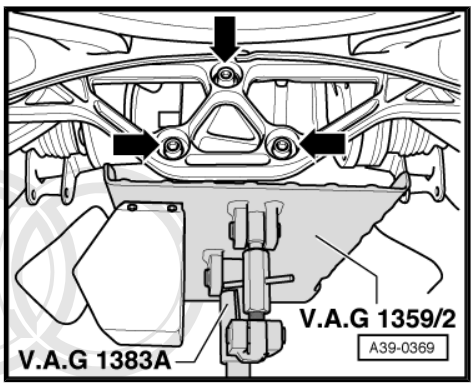

– Unscrew bolts for final drive support -arrows A and B-.

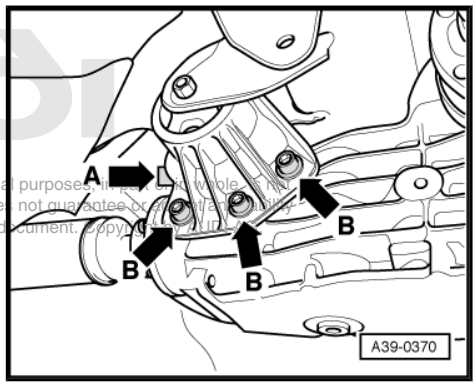

Protected by copyright. Copying for private or commercial purposes, in part or in whole, is not permitted unless authorised by AUDI AG. AUDI AG does not guarantee or assume liability with respect to the correctness of information in this document. Copyright by AUDI AG.

– Push rear final drive towards the right as far as possible.
– Tilt rear final drive upwards -arrow A-.
– Push drive shaft outwards so it telescopes slightly -arrow B- and pivot drive shaft out of flange shaft.

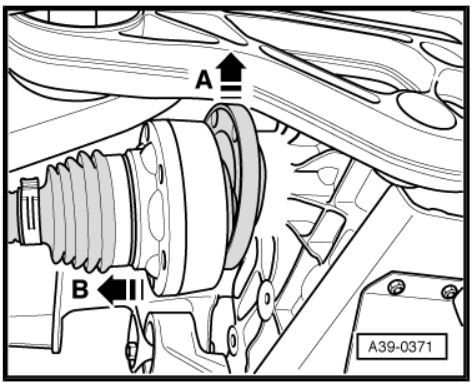

– Place drip tray -V.A.G 1306- underneath.

– Remove securing bolt for flange shaft; to do this screw two bolts into the flange and counterhold flange shaft using a lever.

– Pull out flange shaft.

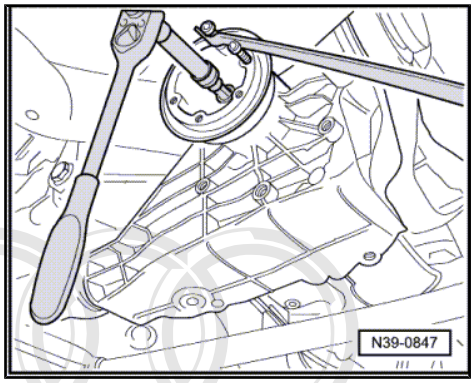

– If fitted, lever out dust ring using a screwdriver.

• The dust ring will be damaged on removal and must be renewed.

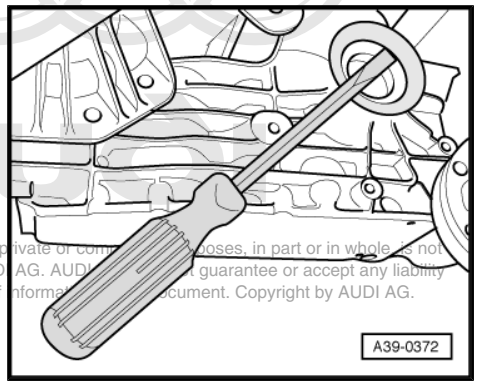

Protected by copyright. Copying for private or com poses, in part or in whole, is not permitted unless authorised by AUD AG. AUD t guarantee or accept any liability with respect to the correctness of nforma cument. Copyright by AUDI AG.

– Pry out oil seal with a suitable lever.

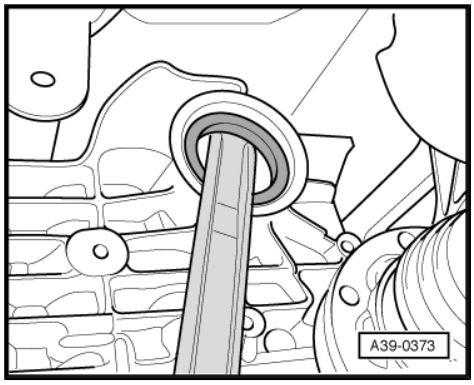

Installing

Perform installation in reverse sequence of removal. Note the following:

– Lightly lubricate outer circumference of oil seal with gear oil.

– Pack space between sealing lip and dust lip half-full with sealing grease -G 052 128 A1- .

– Drive in new seal onto stop (take care to keep seal straight).

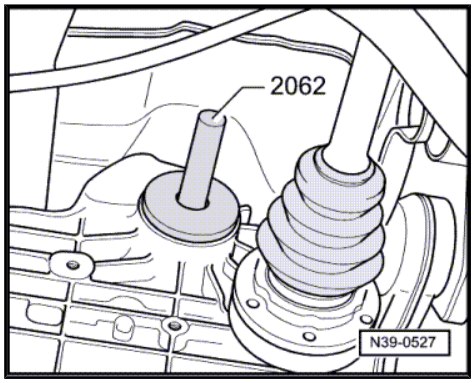

– If originally fitted, drive in new dust ring -arrow- onto stop.
– Install flange shaft.
– Screw in and tighten securing bolt for flange shaft
⇒ Item 8 (page 61) .

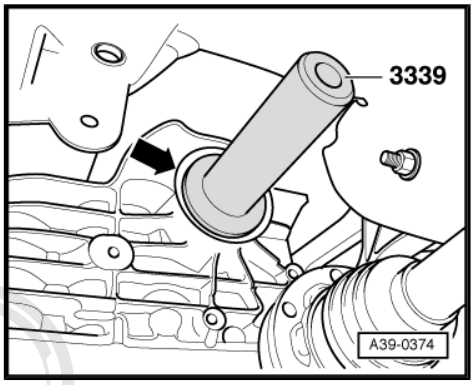

– Attach drive shaft ⇒ Rep. Gr. 42 .
– Install heat shield and tighten bolts -2-. Tightening torque
⇒ Item 11 (page 32)

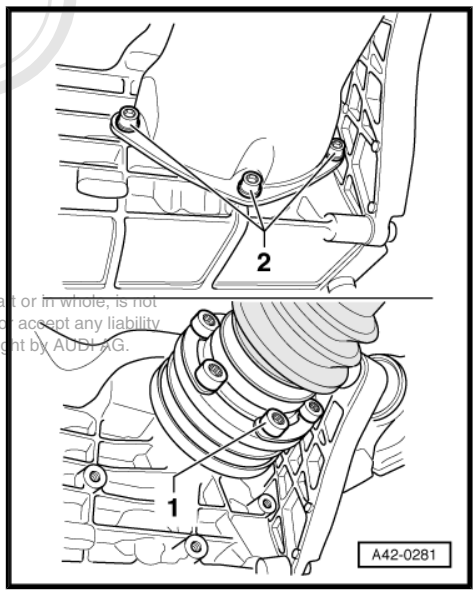

Protected by copyright. Copying for private or commercial purposes, in part or in whole, is not permitted unless authorised by AUDI AG. AUDI AG does not guarantee or accept any liability with respect to the correctness of information in this document. Copyright by AUDI AG.

– Fit and tighten bolts -arrows-. Tightening torque
⇒ Item 5 (page 37)

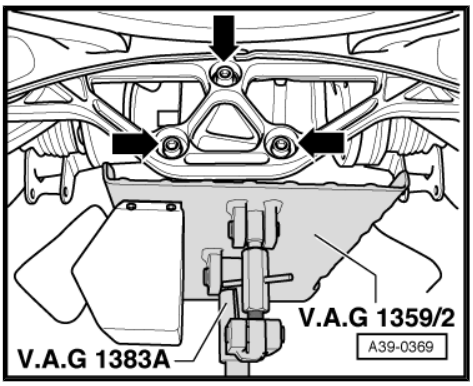

Installation instructions for final drive support

– Fit bolts -A- and -B- and tighten lightly to start with (final drive support must be in full contact with final drive).
– First tighten bolt -A-, then bolts -B-. Tightening torque
⇒ Item 11 (page 37) and ⇒ Item 12 (page 37) .

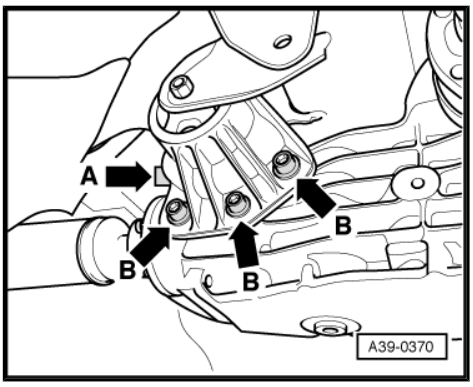

– Install cover for rear final drive (if previously removed). Tightening torques: -arrows A- ⇒ Item 16 (page 37) and -arrows B- ⇒ Item 13 (page 37) .
– Check oil level in rear final drive ⇒ page 31 .
– Install rear section of exhaust system and perform stress-free alignment ⇒ Rep. Gr. 26 .

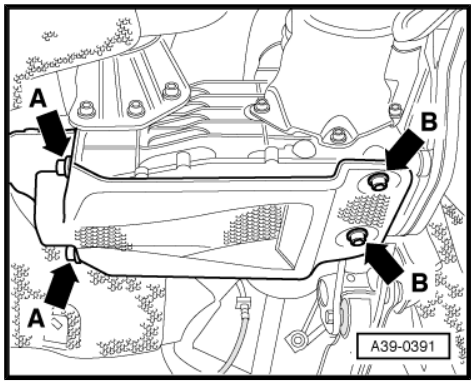

Protected by copyright. Copying for private or commercial purposes, in part or in whole, is not permitted unless authorised by AUDI AG. AUDI AG does not guarantee or accept any liability with respect to the correctness of information in this document. Copyright by AUDI AG.

7 Renewing oil seal for propshaft flange on rear final drive (rear final drive installed)

Special tools and workshop equipment required

- Drive flange installing tool -VW 391-
- Multi-purpose tool -VW 771-
- Puller hook -VW 771/3-
- Punch -3026-
- Counterhold tool -3028-
- Drift sleeve -3143-
- Sealing grease -G 052 128 A1-
- Locking fluid -D 000 600-
- 2 x Hexagon bolts M 8 x 30
- Hexagon bolt M 10 x 100 10.9

Protected by copyright. Copying for private or commercial purposes, in part or in whole, is not permitted unless authorised by AUDI AG. AUDI AG does not guarantee or accept any liability with respect to the correctness of information in this document. Copyright by AUDI AG.

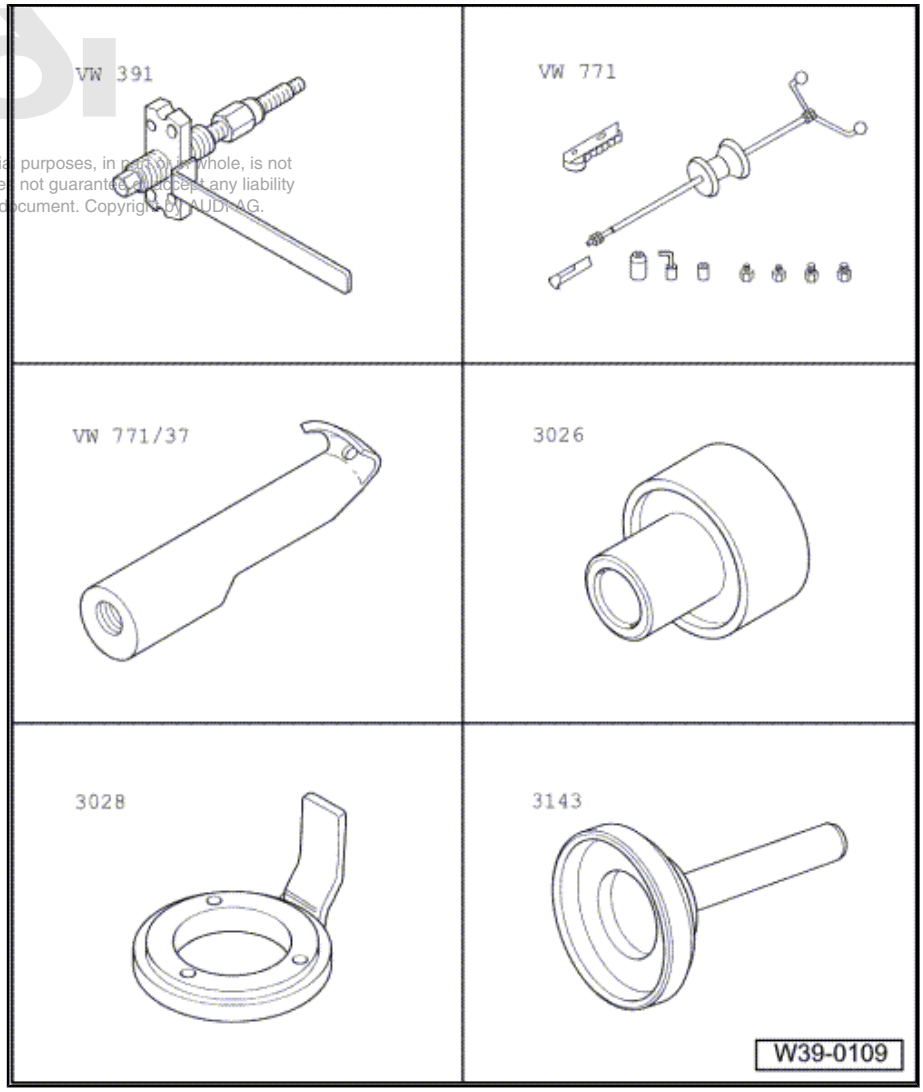

- Torque wrench -V.A.G 1332-

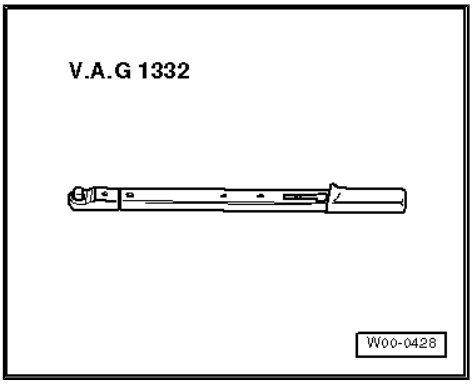

♦ Engine and gearbox jack -V.A.G 1383 A- with universal gearbox support -V.A.G 1359/2-

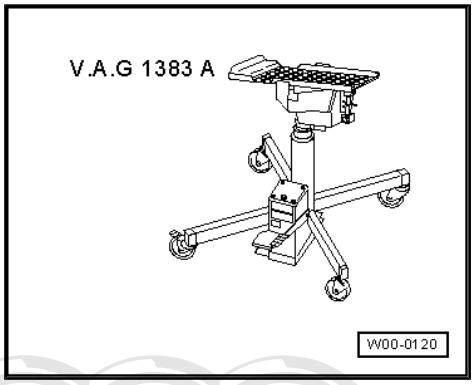

Removing

- Rear final drive installed
- Refer to general repair instructions ⇒ page 8 .

– Remove rear section of exhaust system ⇒ Rep. Gr. 26 .

– Detach propshaft from rear final drive and tie up ⇒ page 26 .

– Position engine and gearbox jack -V.A.G 1383 A- with universal gearbox support -V.A.G 1359/2- under rear final drive.

Protected by copyright. Copying for private or commercial purposes, in part or in whole, is not permitted unless authorised by AUDI AG. AUDI AG does not guarantee or accept any liability with respect to the correctness of information in this document. Copyright by AUDI AG.

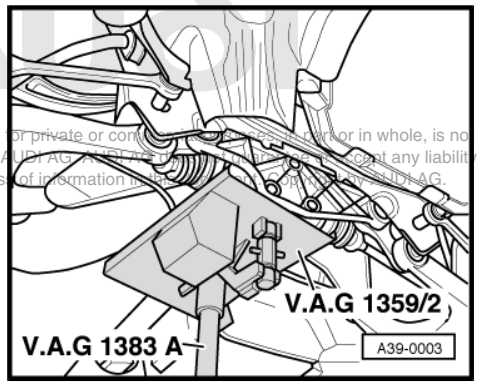

– If fitted, unscrew securing bolt for final drive support -arrow A-.

– Remove securing bolts -arrows B-.

– Carefully lower rear final drive until flange for propshaft is accessible.

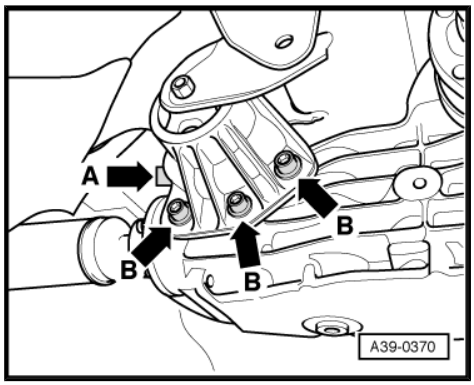

Determining dimension “a” and dimension “b”

- ♦ Distance from flange to pinion shaft = dimension “a”
- ♦ Distance from flange to pinion shaft securing nut = dimension “b”
- – Note measurements.

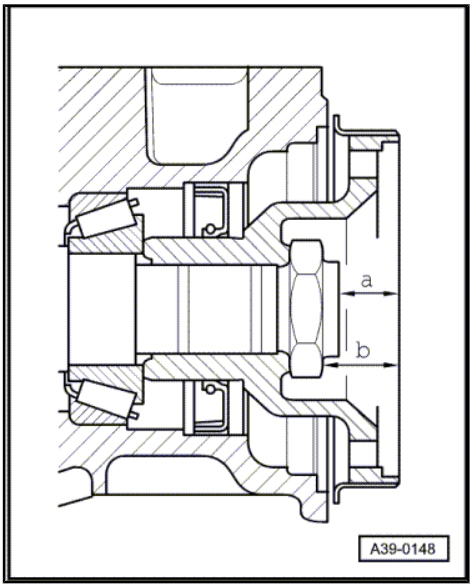

- – Mark position of securing nut relative to pinion shaft with paint -arrow-.

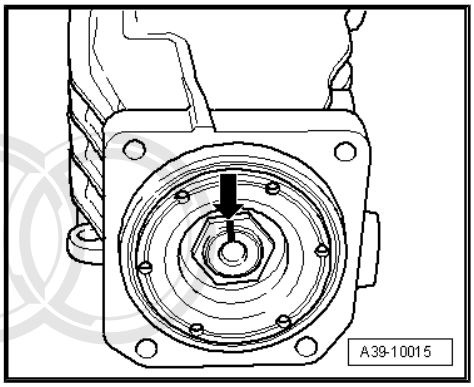

- – Bolt on counterhold tool -3028- .
- – Unscrew securing nut for pinion shaft completely. Count the number of turns required and make a note of this number.

Re-install the originally fitted hexagon nut to secure the flange to the pinion shaft. Otherwise it will not be possible to re-install components in their original position.

Protected by copyright. Copying for private or commercial purposes, in part or whole, is not permitted unless authorised by AUDI AG. Audi AG does not guarantee or assume liability with respect to the correctness of information in this document. Copyright

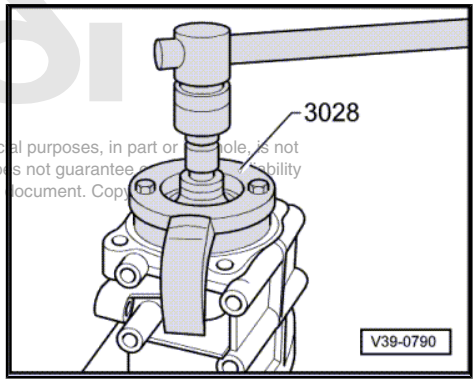

- – Screw 2 hexagon bolts M 8 x 30 -A- into flange.
- – Place drip tray -V.A.G 1306- underneath.
- – Pull off flange with drive flange installing tool -VW 391- .

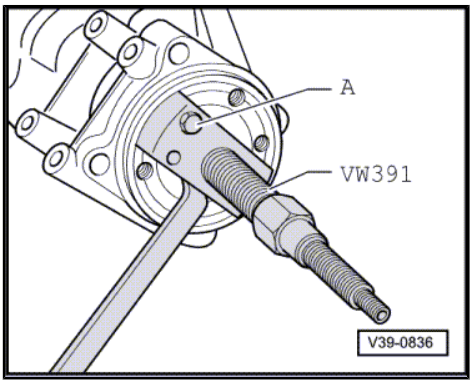

– Pull out oil seal.

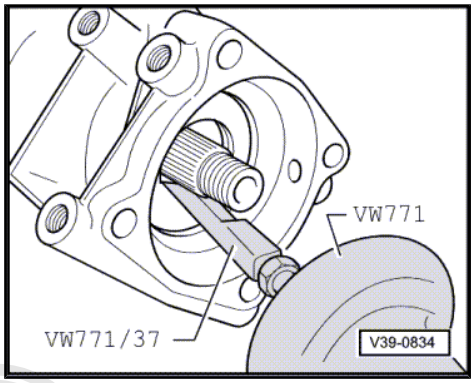

Installing

Perform installation in reverse sequence of removal. Note the following:

– Always renew O-ring behind flange.

– Lubricate O-ring with gear oil before installing.

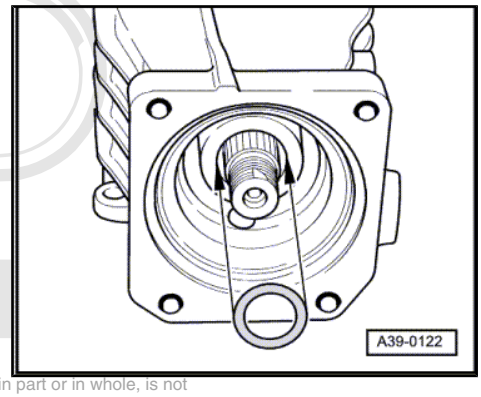

Protected by copyright. Copying for private or commercial purposes, in part or in whole, is not permitted unless authorised by AUDI AG. AUDI AG does not guarantee or accept any liability with respect to the correctness of information in this document. Copyright by AUDI AG.

– Lightly lubricate outer circumference and sealing lips of oil seal with gear oil.

– Pack space between sealing lip and dust lip half-full with sealing grease -G 052 128 A1- .

– Drive in new seal onto stop (take care to keep seal straight).

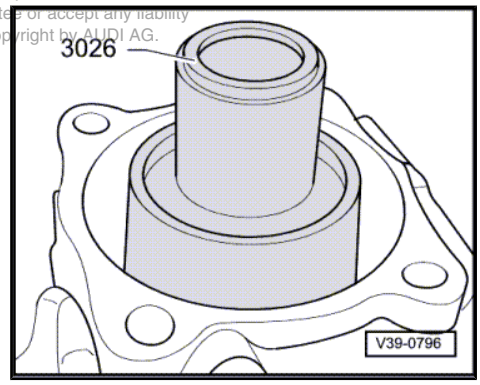

– Drive on propshaft flange until securing nut can be fitted onto pinion shaft.

– The threads on the pinion shaft and securing nut must be cleaned so they are free of grease residue, and then coated thinly with locking fluid -D 000 600- .

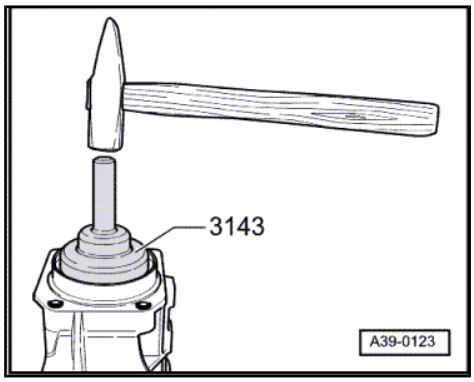

– Install the originally fitted hexagon nut and tighten to the previously marked position -arrow- by turning the same number of turns as noted on removal.

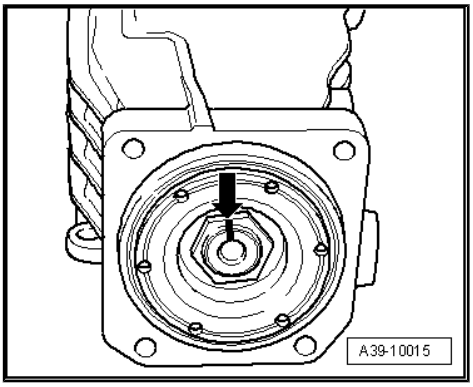

Checking dimension “a” and dimension “b”

- O-ring -1- must be installed when performing measurements.
- The hexagon nut must be exactly at the previously marked position.

The measurements must be the same as noted previously ⇒ page 57 , within a tolerance of ± 0.3 mm.

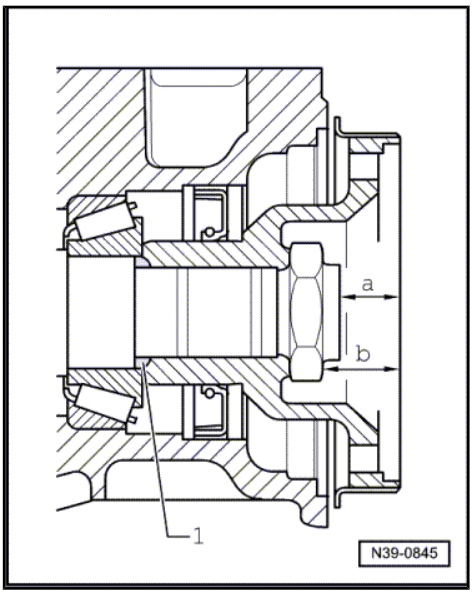

– Secure hexagon nut.

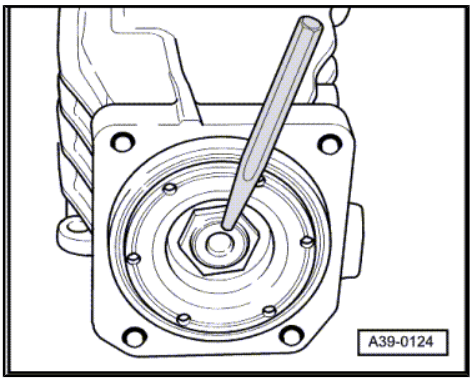

Protected by copyright. Copying for private or commercial purposes, in part or in whole, is not permitted unless authorised by AUDI AG. AUDI AG does not guarantee or accept any liability with respect to the correctness of information in this document. Copyright by AUDI AG.

Installation instructions for final drive support

– Fit bolts -A- and -B- and tighten lightly to start with (final drive support must be in full contact with final drive).

– First tighten bolt -A-, then bolts -B-. Tightening torque ⇒ Item 11 (page 37) and ⇒ Item 12 (page 37) .

– Install propshaft on rear final drive ⇒ page 28 .

– Check oil level in rear final drive ⇒ page 31 .

– Install rear section of exhaust system and perform stress-free alignment ⇒ Rep. Gr. 26 .

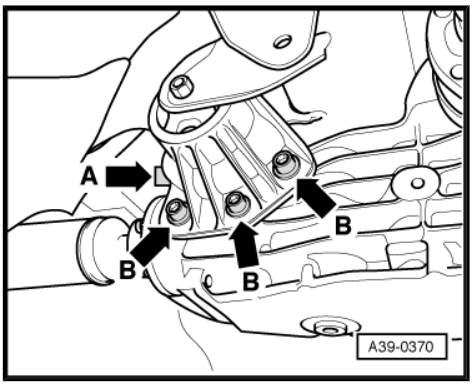

8 General overview - dismantling and assembling rear final drive

1 - Rear final drive housing

2 - Spacer sleeve

- ❑ Always renew

3 - Propshaft flange

- ❑ Removing and installing ⇒ page 74

4 - Pinion shaft

- ❑ Is mated with crown wheel, always renew together as a set
- ❑ Removing and installing ⇒ page 74

5 - Cover for final drive

6 - Differential

- ❑ Removing and installing ⇒ page 61
- ❑ Dismantling and assembling ⇒ page 65

7 - Crown wheel

- ❑ Is paired with pinion shaft (final drive gear set)
- ❑ Removing and installing ⇒ page 65

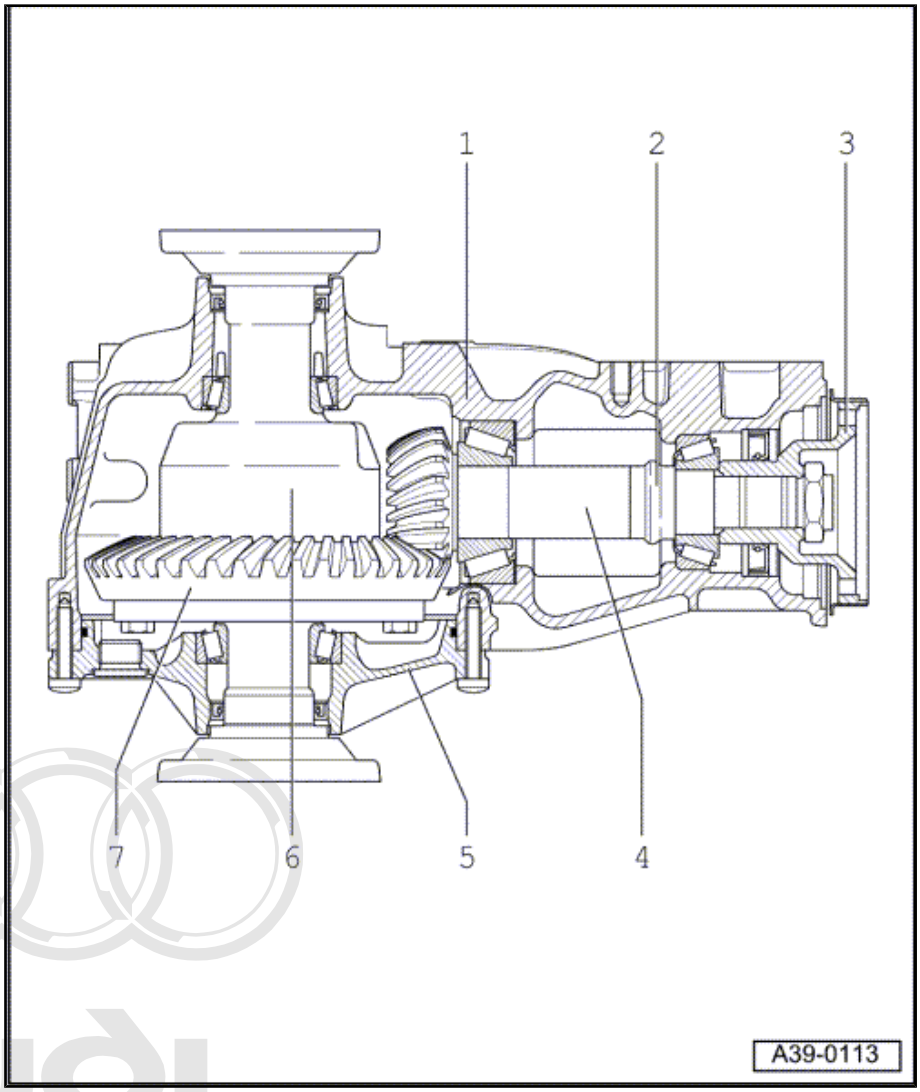

Protected by copyright. Copying for private or commercial purposes, in part or in whole, is not permitted unless authorised by AUDI AG. AUDI AG does not guarantee or accept any liability with respect to the correctness of information in this document. Copyright by AUDI AG.

9 Exploded view - removing and installing differential

Refer to general repair instructions ⇒ page 8 .

Clamp rear final drive in assembly stand ⇒ page 62

1) Adjustment work is required if these components are renewed
⇒ page 87

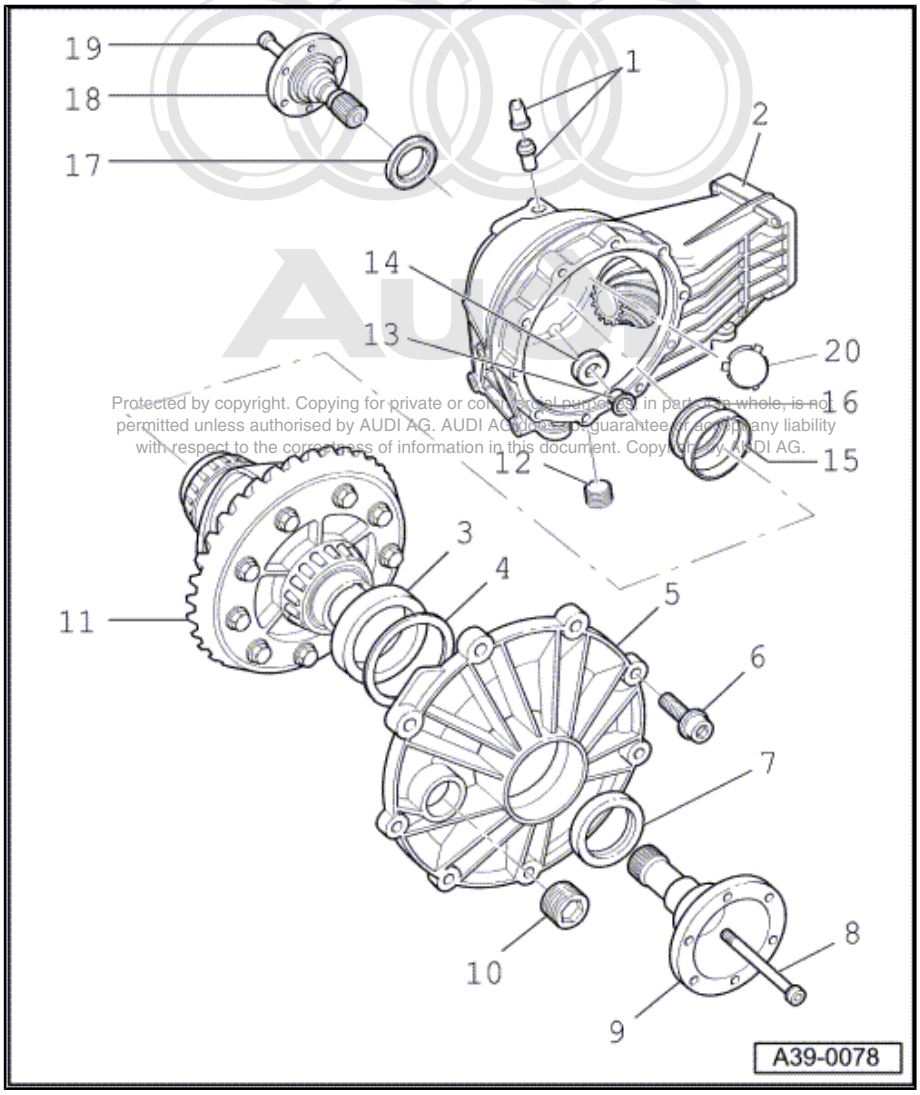

Protected by copyright. Copying for private or commercial purposes, in part or in whole, is not permitted unless authorised by AUDI AG. AUDI AG does not guarantee or accept any liability with respect to the correctness of information in this document. Copyright by AUDI AG.

1 - Breather sleeve
- ❑ With rubber valve
- ❑ Installation position ⇒ page 63

2 - Rear final drive housing [1)]
- ❑ Removing and installing pinion shaft ⇒ page 74

3 - Large tapered roller bearing outer race [1)]
- ❑ Removing and installing ⇒ page 65

4 - Shim S_1
- ❑ Note thickness
- ❑ Table of adjustments ⇒ page 87

5 - Cover for rear final drive [1)]
- ❑ With O-ring
- ❑ Always renew O-ring
- ❑ Lubricate O-ring with gear oil before installing

6 - Torx bolt, 25 Nm

7 - Oil seal
- ❑ Renewing ⇒ page 42

8 - Hexagon socket head bolt, 25 Nm

9 - Flange shaft
- ❑ Removing and installing ⇒ page 62

10 - Screw plug, 35 Nm
- ❑ Checking gear oil in rear final drive ⇒ page 31
- ❑ Capacity and specification ⇒ page 4

11 - Differential with crown wheel [1)]
- ❑ Dismantling and assembling ⇒ page 65

12 - Oil drain plug, 35 Nm

13 - Bush
- ❑ Holds magnet in position
- ❑ Drive in onto stop

14 - Magnet
- ❑ Always clean before re-installing

15 - Small tapered roller bearing outer race [1)]
- ❑ Removing and installing ⇒ page 65

16 - Shim S_2

- ❑ Note thickness
- ❑ Table of adjustments ⇒ page 87

17 - Oil seal

- ❑ Renewing ⇒ page 42

18 - Flange shaft

- ❑ Removing and installing ⇒ page 62

19 - Hexagon socket head bolt, 25 Nm

20 - Cover

- ❑ Installing ⇒ page 62

Clamping rear final drive to assembly stand

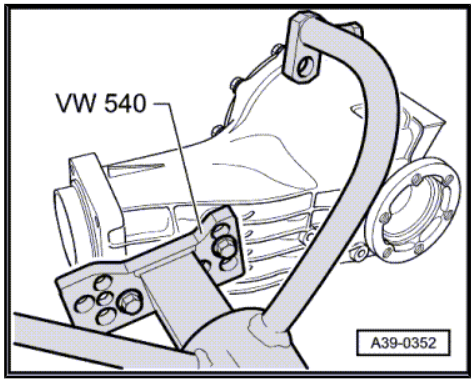

Removing and installing flange shaft

– Remove securing bolt for flange shaft; to do this screw two bolts into the flange and counterhold flange shaft using a lever.

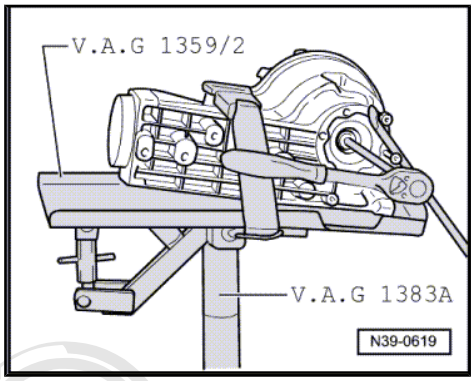

Driving in cover onto stop

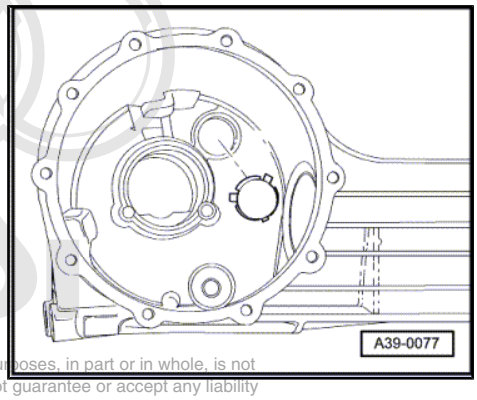

Protected by copyright. Copying for private or commercial purposes, in part or in whole, is not permitted unless authorised by AUDI AG. AUDI AG does not guarantee or accept any liability with respect to the correctness of information in this document. Copyright by AUDI AG.

Installation position of breather sleeve

After pressing in, breather sleeve must protrude 13 mm out of housing (dimension -a-).

Slot in rubber valve must be aligned in direction of travel.

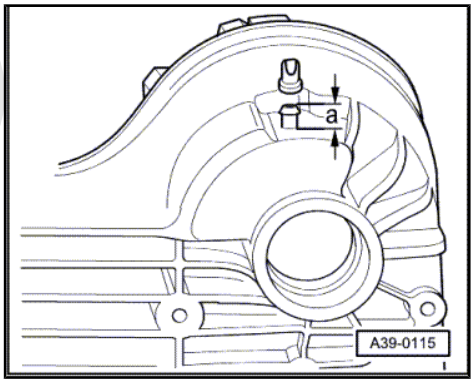

Protected by copyright. Copying for private or commercial purposes, in part or in whole, is not permitted unless authorised by AUDI AG. AUDI AG does not guarantee or accept any liability with respect to the correctness of information in this document. Copyright by AUDI AG.

9.1 Removing differential

Special tools and workshop equipment required

- Support clamp -VW 313-
- Engine and gearbox support -VW 540-
- Drip tray -V.A.G 1306-
- Torque wrench - V.A.G 1331-
- Engine and gearbox jack - V.A.G 1383 A- with universal gearbox support - V.A.G 1359/2-
- Sealing grease - G 052 128 A1-

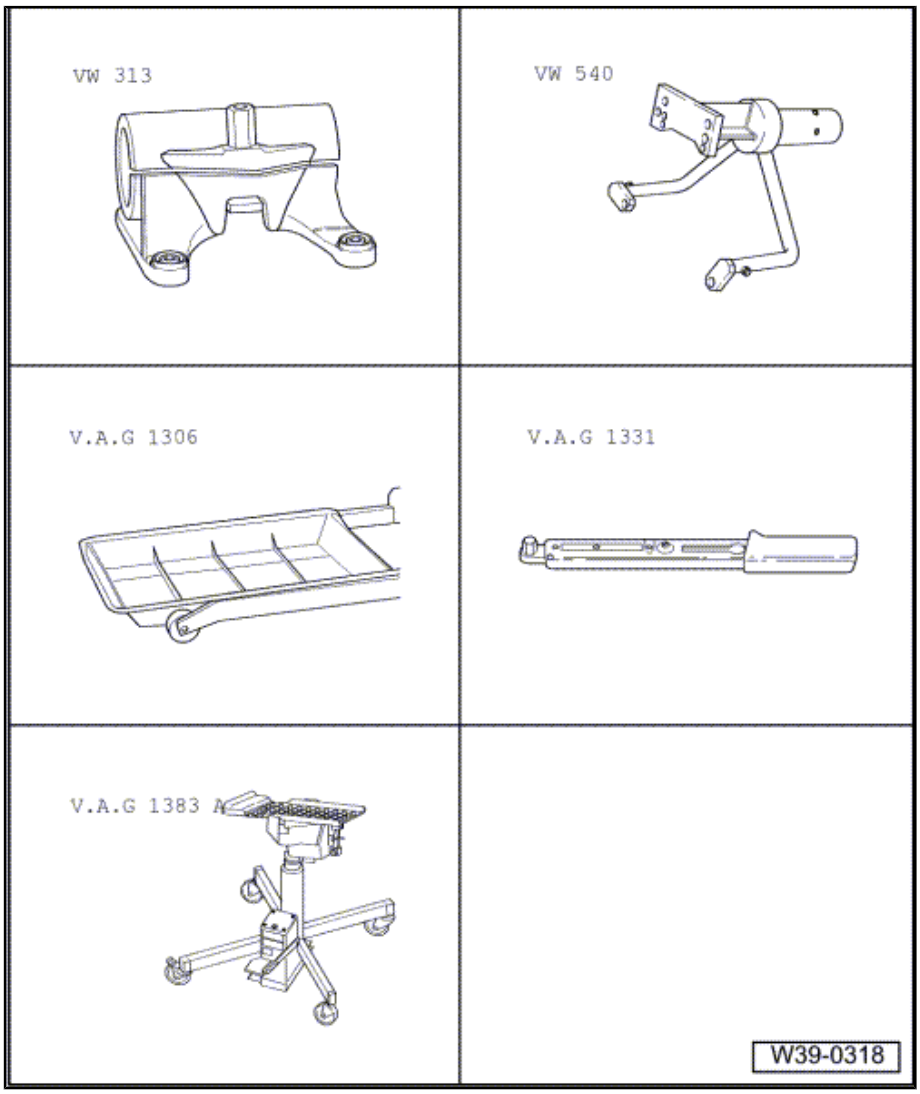

Removing

- Rear final drive removed ⇒ page 32

Clamp rear final drive in assembly stand ⇒ page 62

– Place drip tray -V.A.G 1306- underneath.

– Drain off gear oil.

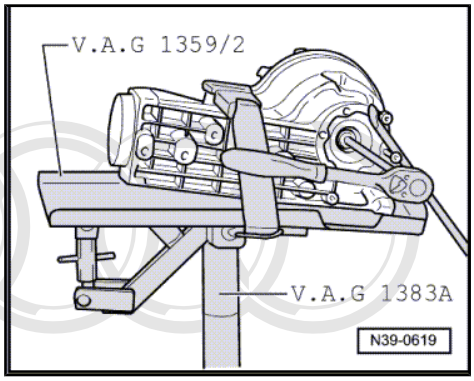

- Remove securing bolt for flange shaft; to do this screw two bolts into the flange and counterhold flange shaft using a lever.
- Mark flange shafts (left and right) and pull out.
- Remove bolts securing cover for rear final drive, and take off cover.
- Pull out differential and remove.

Installing

Perform installation in reverse sequence of removal. Note the following:

- Renew O-ring on cover for rear final drive; lubricate with oil when installing.
- Fit cover for rear final drive on final drive housing and tighten bolts in diagonal sequence ⇒ Item 6 (page 61) .
- Pack space between sealing lip and dust lip of oil seals half-full with sealing grease -G 052 128 A1- .

Protected by copyright. Copying for private or commercial purposes, in part or in whole, is not permitted unless authorised by AUDI AG. AUDI AG does not guarantee or accept any liability with respect to the correctness of information in this document. Copyright by AUDI AG.

- Install flange shafts and tighten ⇒ Item 8 (page 61) .
- Tighten oil drain plug on rear final drive ⇒ Item 12 (page 61) .
- Top up gear oil in rear final drive and check oil level ⇒ page 31 .

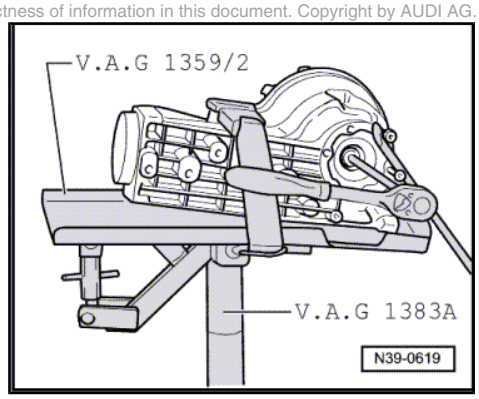

10 Exploded view - dismantling and assembling differential

Special tools and workshop equipment required

- Drift -VW 295-
- Thrust plate -VW 401-
- Thrust plate -VW 402-
- Press tool -VW 407-
- Press tool -VW 408 A-
- Press tool -VW 412-

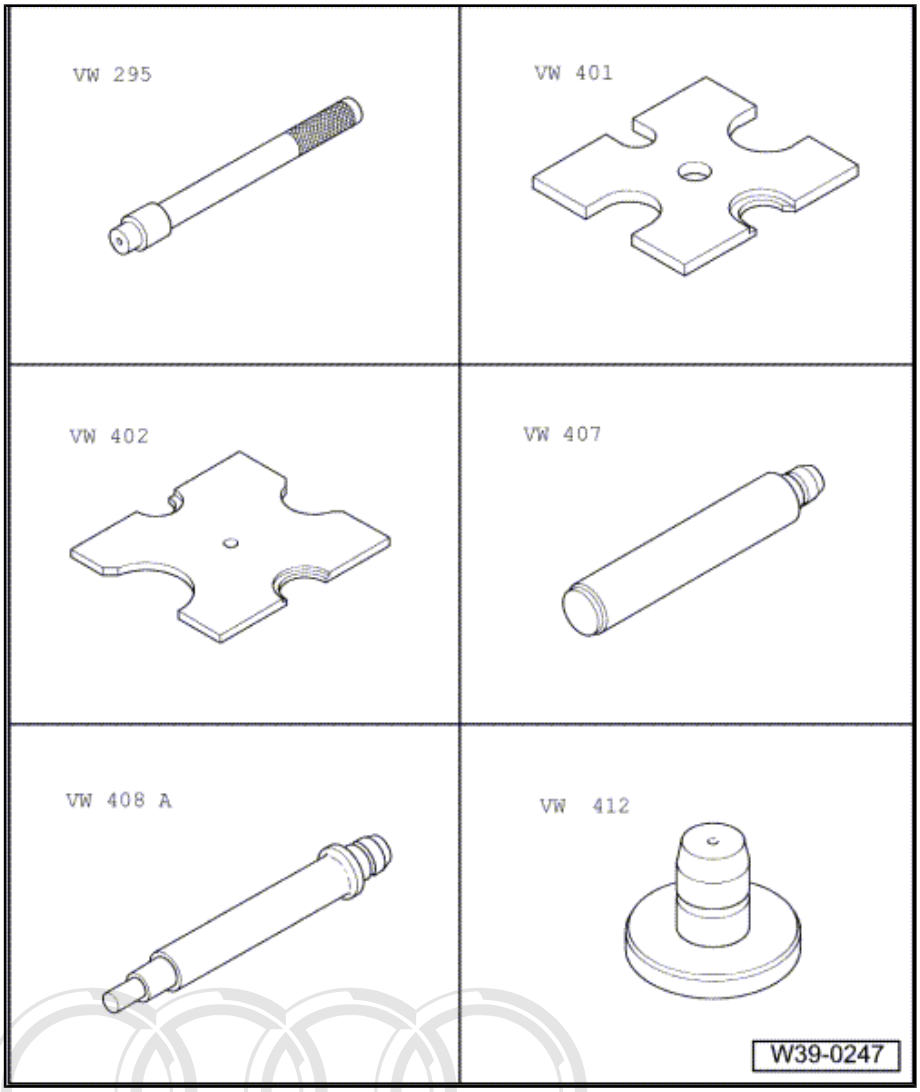

Protected by copyright. Copying for private or commercial purposes, in part or in whole, is not permitted unless authorised by AUDI AG. AUDI AG does not guarantee or accept any liability with respect to the correctness of information in this document. Copyright by AUDI AG.

- Press tool -VW 442-
- Press tool -40-21-
- Thrust plate -40-105-
- Thrust piece -2050-
- Drift -3138-
- Torque wrench - V.A.G 1332-

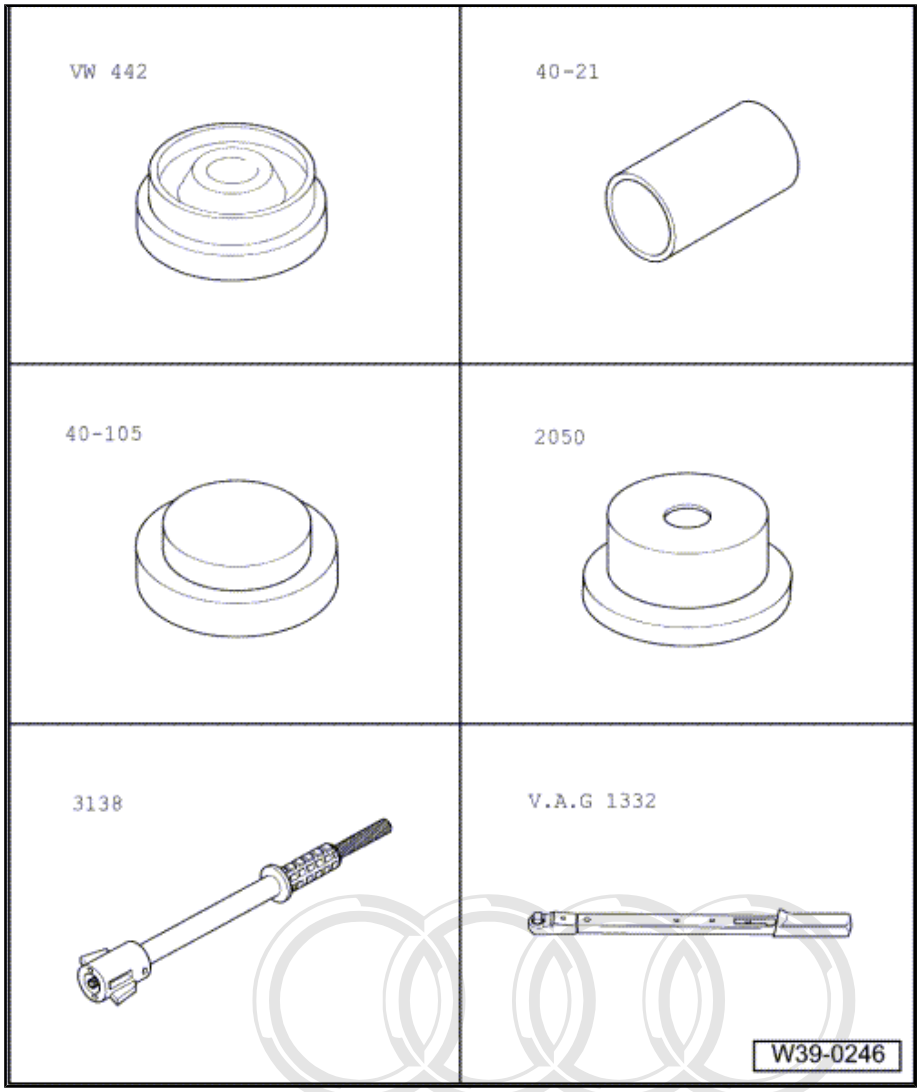

Protected by copyright. Copying for private or commercial purposes, in part or in whole, is not permitted unless authorised by AUDI AG. AUDI AG does not guarantee or accept any liability with respect to the correctness of information in this document. Copyright by AUDI AG.

- Tapered roller bearing puller -V.A.G 1582-
- Adapter -V.A.G 1582/6-
- Puller -Kukko 44/2-

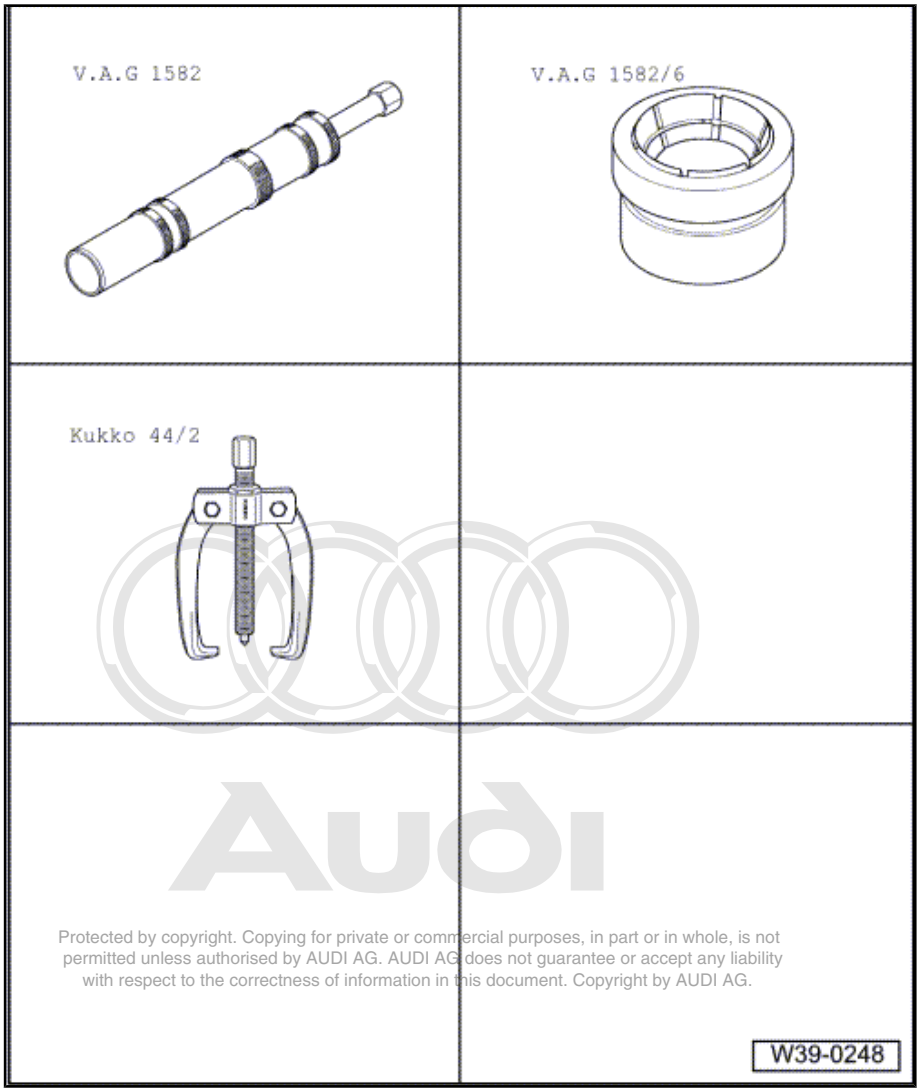

Protected by copyright. Copying for private or commercial purposes, in part or in whole, is not permitted unless authorised by AUDI AG. AUDI AG does not guarantee or accept any liability with respect to the correctness of information in this document. Copyright by AUDI AG.

Heat tapered roller bearing inner races to 100°C before installing.

Always renew both tapered roller bearings together.

The differential must be adjusted ⇒ page 93 if the tapered roller bearings, differential cage, rear final drive cover, final drive gear set or the final drive housing are renewed.

Clamp rear final drive in assembly stand ⇒ page 69

2) Adjustment work is required if these components are renewed
⇒ page 87

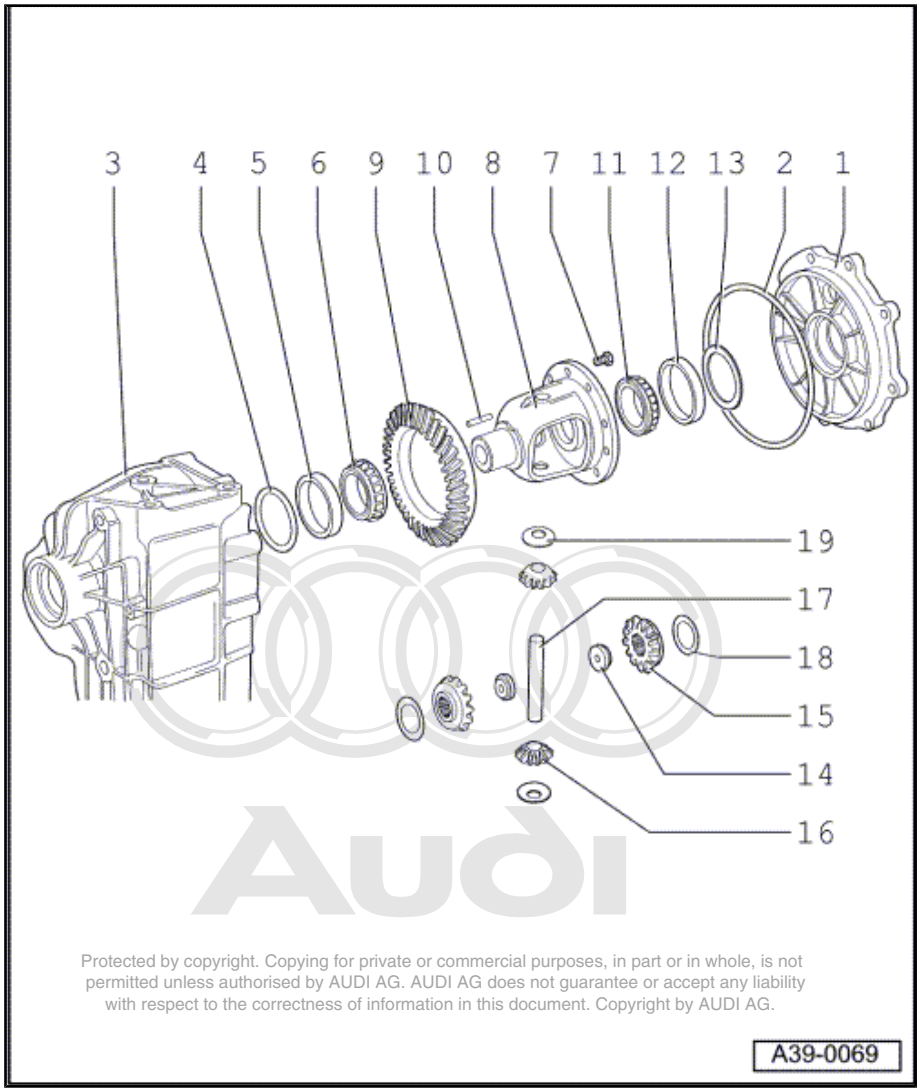

Protected by copyright. Copying for private or commercial purposes, in part or in whole, is not permitted unless authorised by AUDI AG. AUDI AG does not guarantee or accept any liability with respect to the correctness of information in this document. Copyright by AUDI AG.

1 - Cover for rear final drive[2)]

2 - O-ring

- ❑ Always renew
- ❑ Lubricate with oil when installing

3 - Rear final drive housing [2)]

4 - Shim S_1

- ❑ Note thickness
- ❑ Table of adjustments ⇒ page 87

5 - Small tapered roller bearing outer race[2)]

- ❑ Driving out ⇒ page 69
- ❑ Pressing in ⇒ page 69

6 - Small tapered roller bearing inner race[2)]

- ❑ Pulling off ⇒ page 70
- ❑ Pressing on ⇒ page 70

7 - Hexagon bolt, 60 Nm then turn 45° further

- ❑ Always renew
- ❑ Lightly tighten bolts then tighten in diagonal sequence to correct torque
- ❑ For correct version, refer to ⇒ Electronic parts catalogue

8 - Differential cage [2)]

9 - Crown wheel [2)]

- ❑ Is paired with pinion shaft (final drive gear set)
- ❑ Drive off with a drift ⇒ page 71
- ❑ Fitting on differential cage ⇒ page 72
- ❑ For correct version, refer to ⇒ Electronic parts catalogue

10 - Spring pin

- ❑ For securing differential pinion pin
- ❑ Drive in flush

11 - Large tapered roller bearing inner race[2)]

- ❑ Pulling off ⇒ page 70
- ❑ Pressing on ⇒ page 71

12 - Large tapered roller bearing outer race[2)]

- ❑ Driving out ⇒ page 71
- ❑ Pressing in ⇒ page 71

13 - Shim S_2

- ❑ Note thickness
- ❑ Table of adjustments ⇒ page 87

14 - Threaded piece

15 - Sun wheel

- ❑ Installing ⇒ page 72

- ❑ Adjusting ⇒ page 72

16 - Planet pinion

- ❑ Installing ⇒ page 72

17 - Differential pinion pin

- ❑ Drive out with drift

18 - Shim

- ❑ Determining thickness ⇒ page 72

19 - Thrust washer

- ❑ Check for cracks

Clamping rear final drive to assembly stand

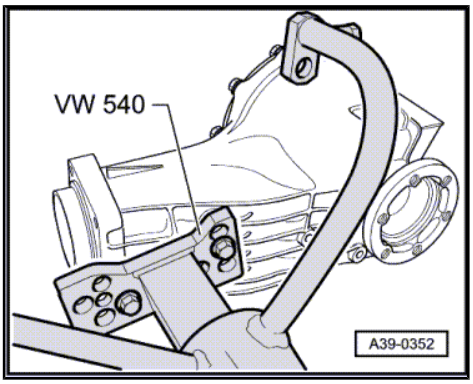

Driving small tapered roller bearing outer race out of housing

– After removing, check shims for damage.

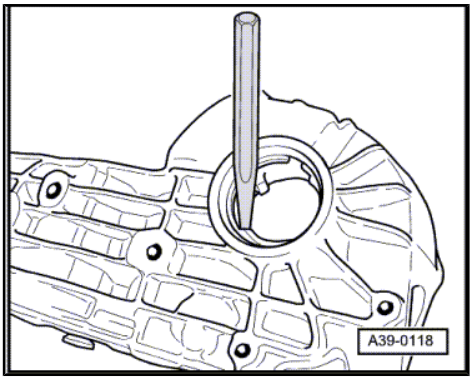

Pressing small tapered roller bearing outer race into housing (press onto stop)

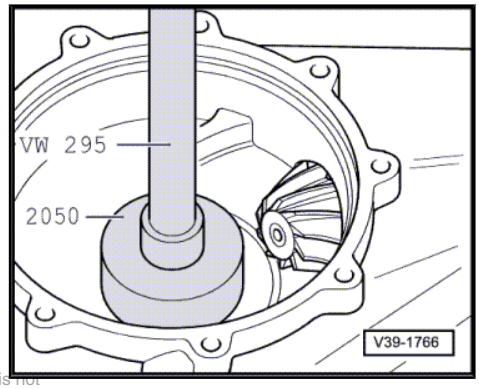

Protected by copyright. Copying for private or commercial purposes, in part or in whole, is not permitted unless authorised by AUDI AG. AUDI AG does not guarantee or accept any liability with respect to the correctness of information in this document. Copyright by AUDI AG.

Pulling off small tapered roller bearing inner race

A - Commercially available two-arm puller, e.g. puller -Kukko 44/2-

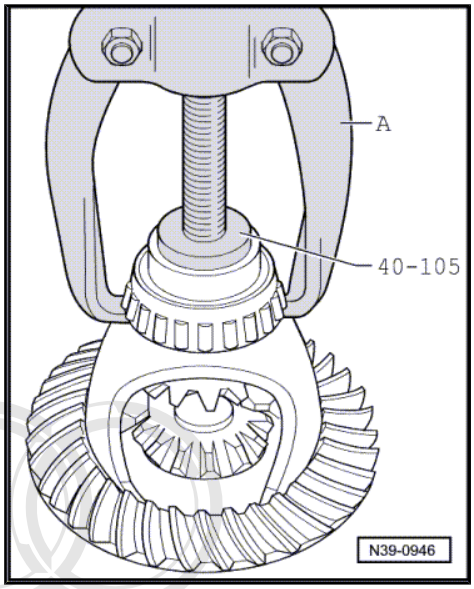

Pressing on small tapered roller bearing inner race

> ⚠ WARNING
>
> *Wear protective gloves.*

– Heat inner race to approx. 100°C before installing.

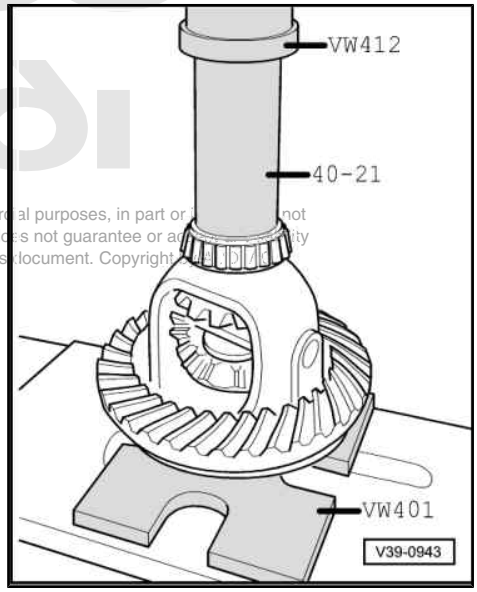

Protected by copyright. Copying for private or commercial purposes, in part or in whole, is not permitted unless authorised by AUDI AG. AUDI AG does not guarantee or accept any liability with respect to the correctness of information in this document. Copyright by AUDI AG.

Pulling off large tapered roller bearing inner race

– Before setting up the puller, place thrust plate -40-105- on differential cage.

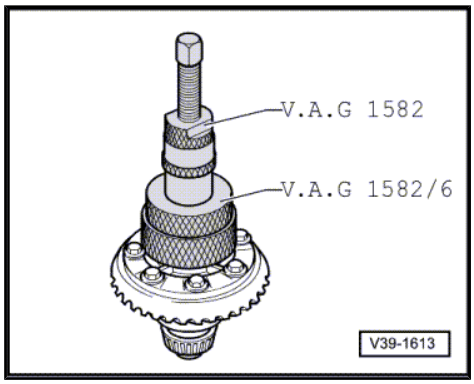

Pressing on large tapered roller bearing inner race

> ⚠ WARNING
>
> *Wear protective gloves.*

– Heat inner race to approx. 100°C before installing.

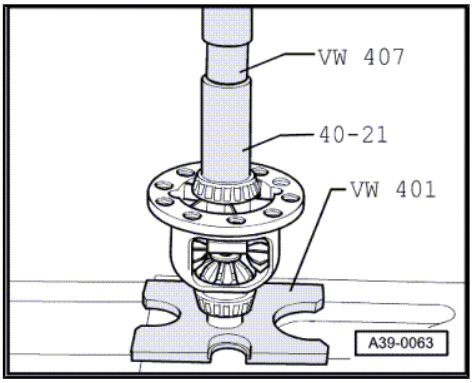

Driving tapered roller bearing outer race out of cover

– After removing, check shims for damage.

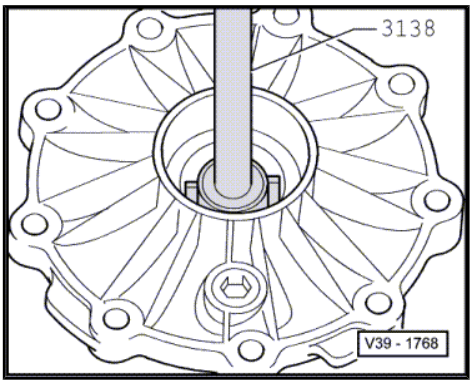

Pressing tapered roller bearing outer race into cover

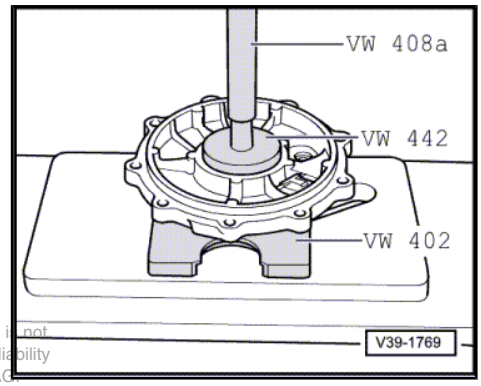

Protected by copyright. Copying for private or commercial purposes, in part or in whole, is not permitted unless authorised by AUDI AG. AUDI AG does not guarantee or accept any liability with respect to the correctness of information in this document. Copyright by AUDI AG.

Driving crown wheel off cage

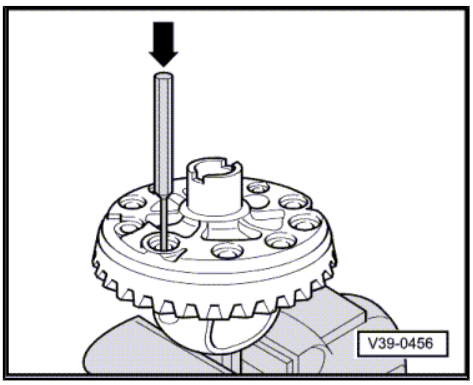

Installing crown wheel

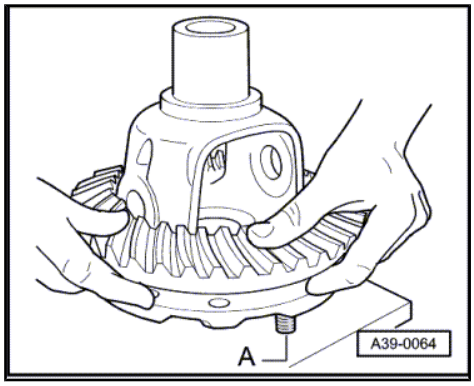

> ⚠ **WARNING**
>
> *Wear protective gloves.*

- Heat crown wheel to approx. 100°C and install.
- When fitting crown wheel, use centralising pins -A- (shop-made tool) to locate.

Installing differential bevel gears

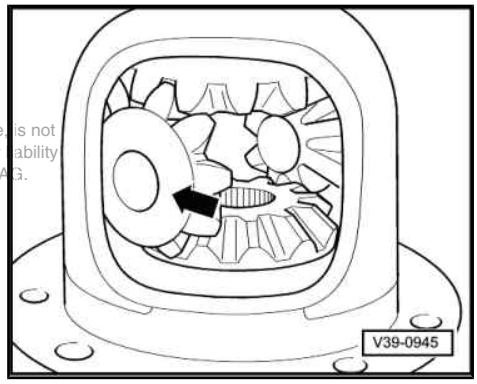

- Shim thicknesses must be re-determined if sun wheels have been renewed ⇒ page 72 .
- Install sun wheels with correct shims (as measured).
- Insert planet pinions (spaced 180° apart) and pivot into position -arrow-.
- Fit and align thrust washers.
- Insert threaded pieces, ensuring they are seated correctly.
- Drive differential pinion pin into final position and secure.

Protected by copyright. Copying for private or commercial purposes, in part or in whole, is not permitted unless authorised by AUDI AG. AUDI AG does not guarantee or accept any liability with respect to the correctness of information in this document. Copyright by AUDI AG.

Adjusting differential bevel gears

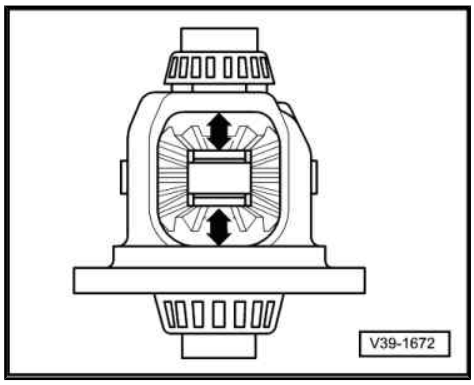

- Insert sun wheels with 0.5 mm thick shims.
- Insert planet pinions with thrust washers (spaced at 180°).

Ensure that the thrust washers are not interchanged from this point onwards.

- Drive in differential pinion pin.
- Press planet pinions outwards.
- Press sun wheels in direction of -arrows- and check the amount of play.
- Determine the thickest shim that can still just be fitted for the sun wheels on each side.
- Select shims of equal thickness.

Table of shims

Shim thickness (mm)		
0.50	0.70	0.90
0.60	0.80	1.00

Select correct shims from ⇒ Electronic parts catalogue .

If there is no measurable play and the bevel gears can just still be turned, the adjustment is acceptable.

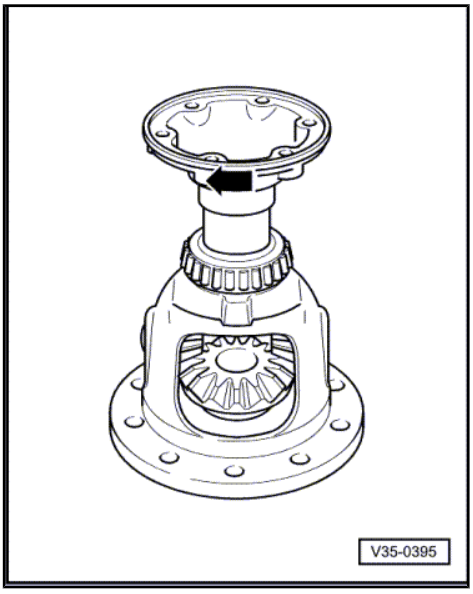

Protected by copyright. Copying for private or commercial purposes, in part or in whole, is not permitted unless authorised by AUDI AG. AUDI AG does not guarantee or accept any liability with respect to the correctness of information in this document. Copyright by AUDI AG.

11 Exploded view - removing and installing pinion shaft; dismantling and assembling pinion shaft

Always renew both tapered roller bearings together.

Install new tapered roller bearings as supplied; do not lubricate additionally with oil.

Clamp rear final drive in assembly stand ⇒ page 79

3) Adjustment work is required if these components are renewed
⇒ page 87

Protected by copyright. Copying for private or commercial purposes, in part or in whole, is not permitted unless authorised by AUDI AG. AUDI AG does not guarantee or accept any liability with respect to the correctness of information in this document. Copyright by AUDI AG.

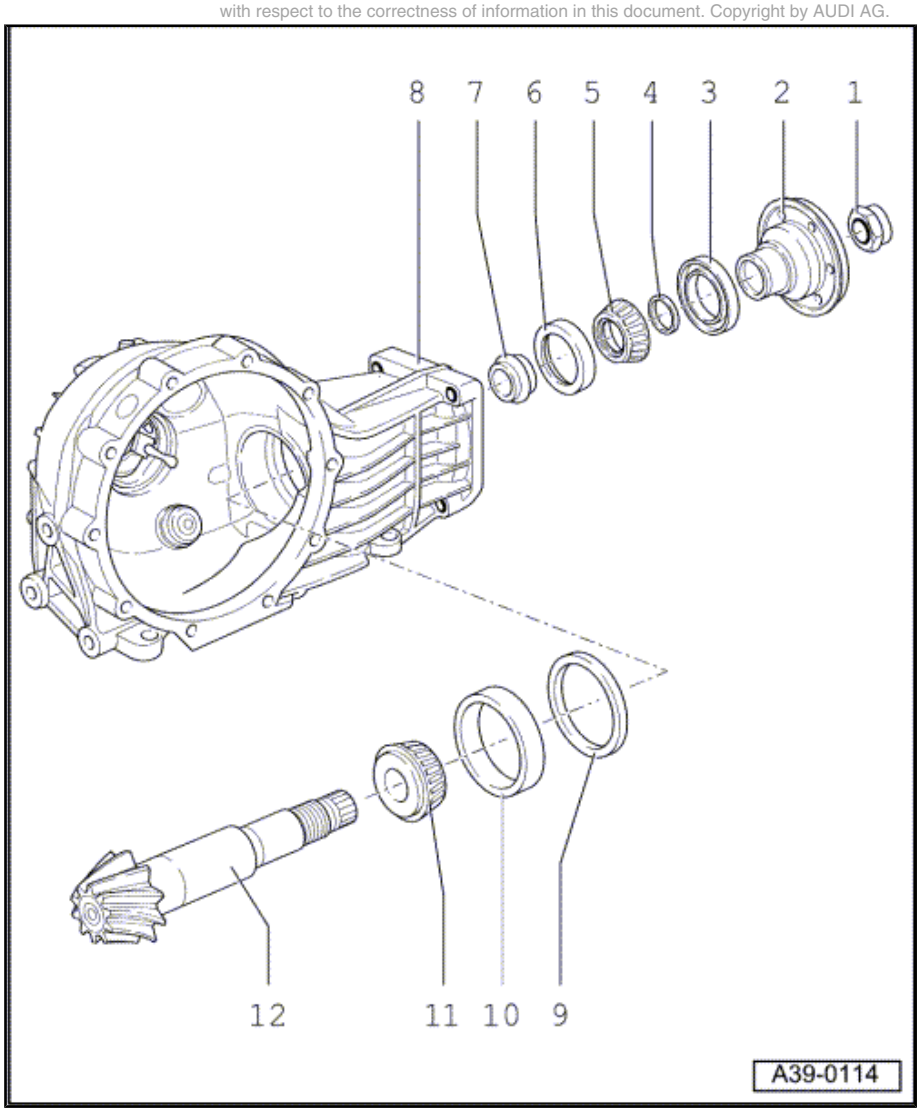

1 - Nut
- ❑ Removing ⇒ page 80
- ❑ Installing ⇒ page 83
- ❑ Measuring friction torque ⇒ page 83
- ❑ Securing ⇒ page 84

2 - Flange for propshaft
- ❑ Pulling off ⇒ page 80
- ❑ Installing ⇒ page 83

3 - Oil seal
- ❑ Pulling out ⇒ page 80
- ❑ Driving in ⇒ page 83

4 - O-ring
- ❑ Always renew
- ❑ Lubricate with gear oil when installing ⇒ page 82

5 - Small tapered roller bearing inner race[3)]
- ❑ Pressing out pinion shaft ⇒ page 80
- ❑ Installing ⇒ page 82

6 - Small tapered roller bearing outer race[3)]
- ❑ Pulling out ⇒ page 81
- ❑ Pressing in ⇒ page 82

7 - Spacer sleeve[3)]
- ❑ Always renew

8 - Rear final drive housing [3)]

9 - Shim S_3
- ❑ Note thickness
- ❑ Table of adjustments ⇒ page 87

10 - Large tapered roller bearing outer race[3)]
- ❑ Driving out ⇒ page 81
- ❑ Drawing in ⇒ page 82

11 - Large tapered roller bearing inner race[3)]
- ❑ Pressing off ⇒ page 81
- ❑ Pressing on ⇒ page 81

12 - Pinion shaft[3)]

- ❑ Paired with crown wheel
- ❑ Renew together if necessary

11.1 Removing and installing pinion shaft; dismantling and assembling pinion shaft

Special tools and workshop equipment required

- ♦ Drive flange installing tool -VW 391-
- ♦ Thrust plate -VW 401-
- ♦ Thrust plate -VW 402-
- ♦ Press tool -VW 407-
- ♦ Press tool -VW 408 A-
- ♦ Press tool -VW 412-

Protected by copyright. Copying for private or commercial purposes, in part or in whole, is not permitted unless authorised by AUDI AG. AUDI AG does not guarantee or accept any liability with respect to the correctness of information in this document. Copyright by AUDI AG.

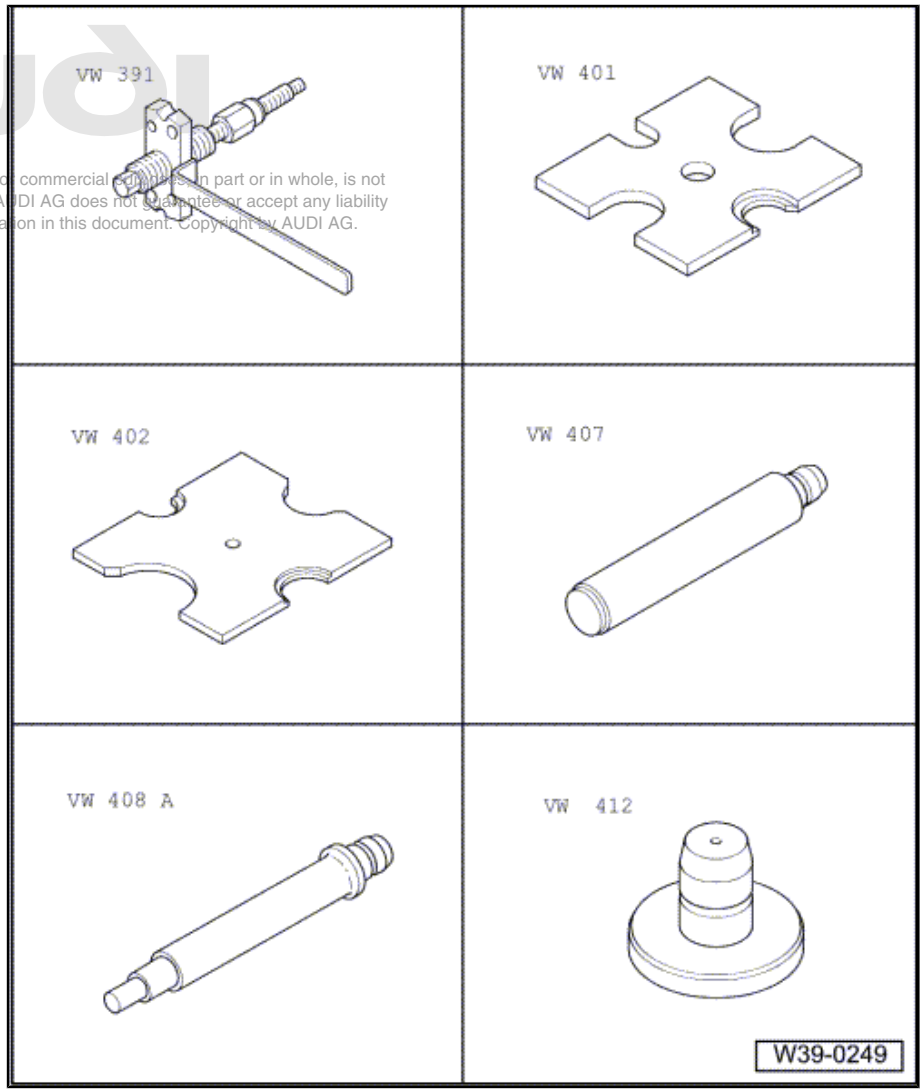

- Support rails -VW 457-
- Removing tool -VW 460-
- Assembly ring -VW 470/1-
- Tube -VW 519-
- Engine and gearbox support -VW 540-
- Thrust plate -30-205-

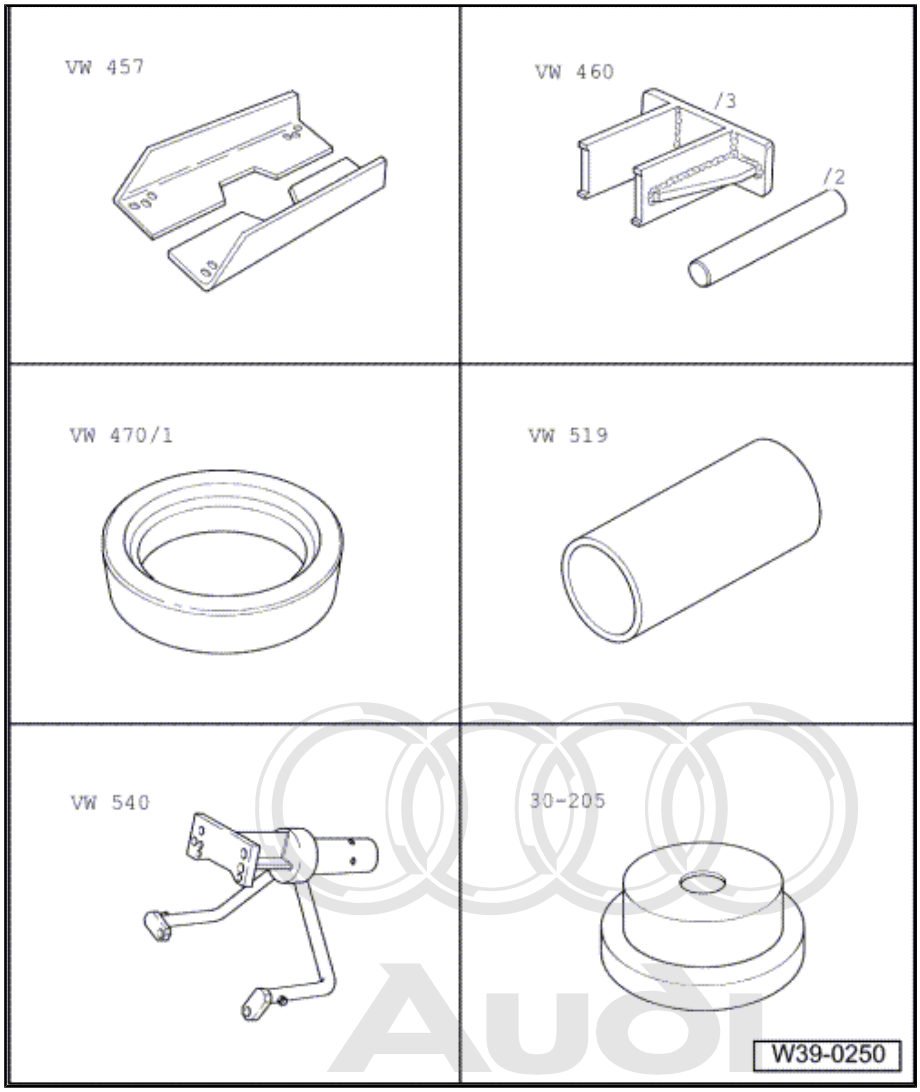

Protected by copyright. Copying for private or commercial purposes, in part or in whole, is not permitted unless authorised by AUDI AG. AUDI AG does not guarantee or accept any liability with respect to the correctness of information in this document. Copyright by AUDI AG.

- Installing ring -2003/3-
- Thrust plate -3005-
- Counterhold tool -3028-
- Thrust pad -3062-
- Drift -3138-
- Drift sleeve -3143-

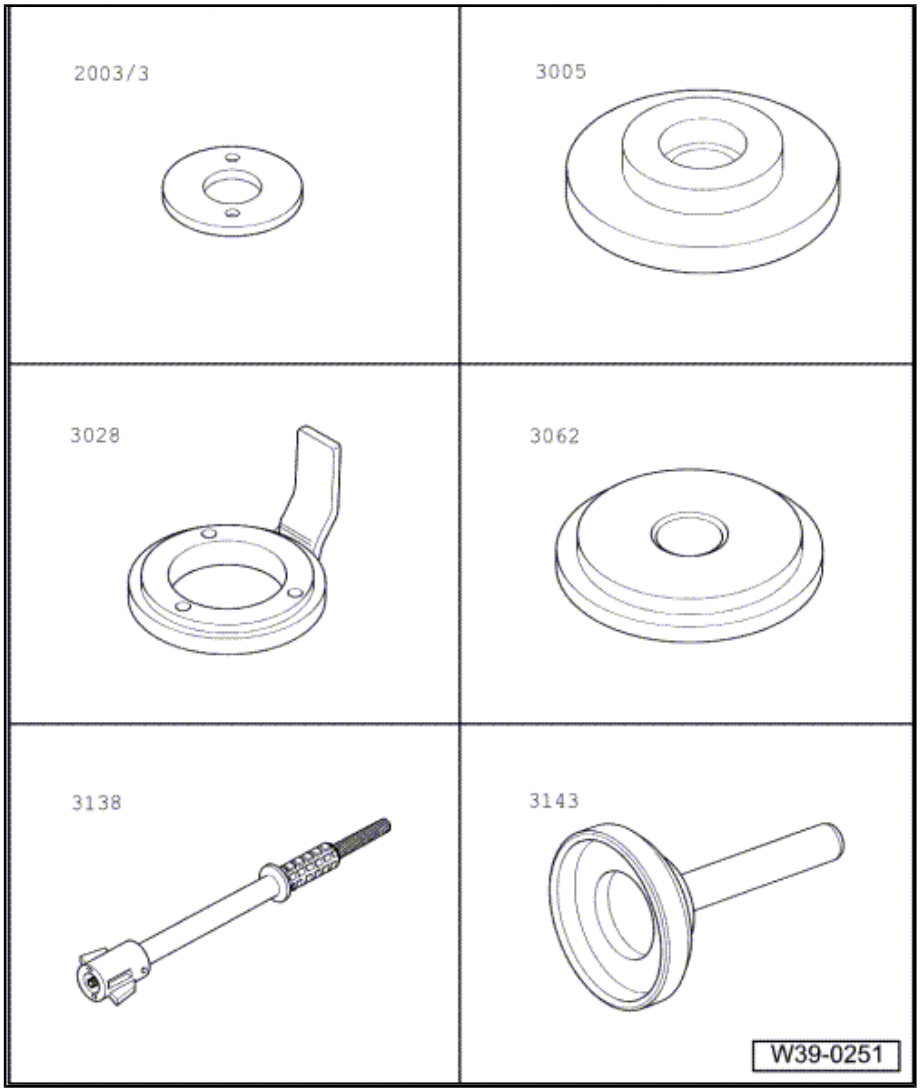

Protected by copyright. Copying for private or commercial purposes, in part or in whole, is not permitted unless authorised by AUDI AG. AUDI AG does not guarantee or accept any liability with respect to the correctness of information in this document. Copyright by AUDI AG.

- Multi-purpose tool - VW 771-
- Punch -3026-
- Assembly tool -3253-
- Engine and gearbox jack - V.A.G 1383 A- with universal gearbox support - V.A.G 1359/2-

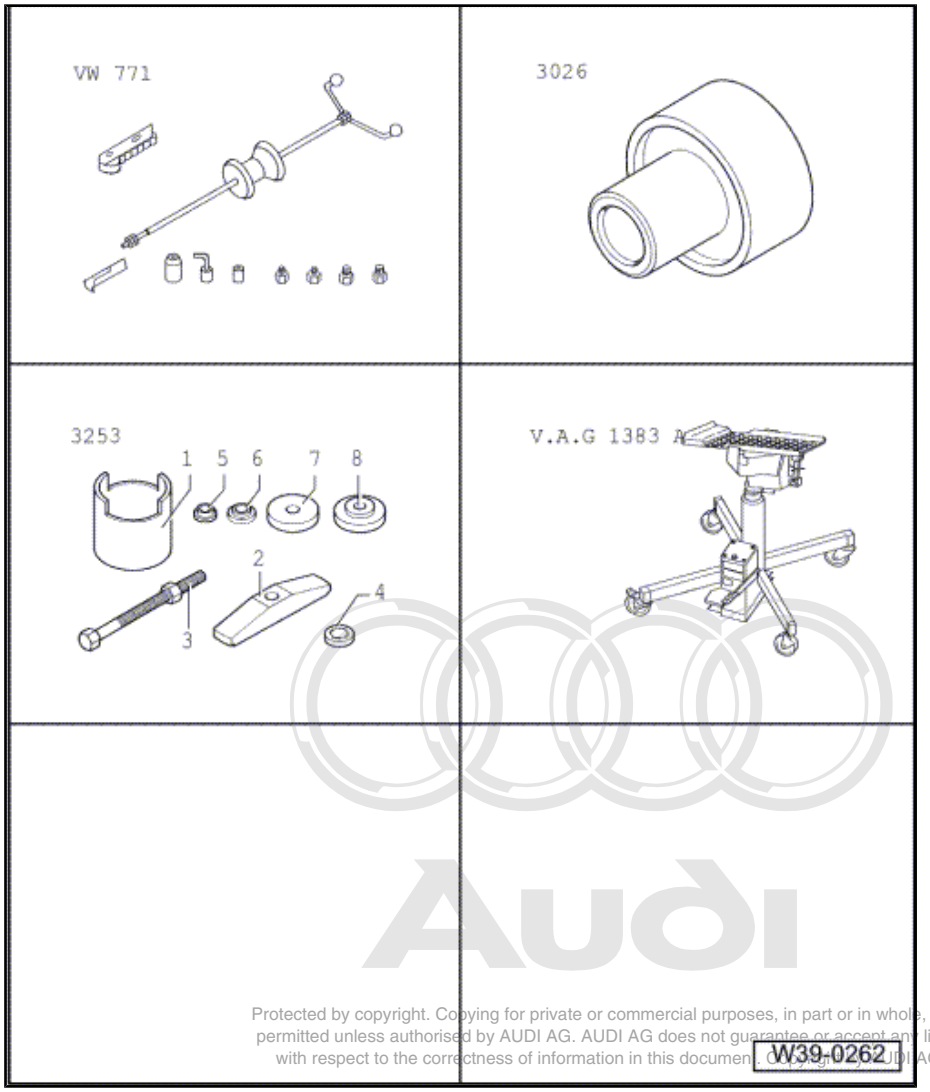

Protected by copyright. Copying for private or commercial purposes, in part or in whole, is not permitted unless authorised by AUDI AG. AUDI AG does not guarantee or accept any liability with respect to the correctness of information in this document. Copyright by AUDI AG.

- Drift -VW 295-
- Friction gauge -VAS 6222-
- Splitter -Kukko 17/2-
- Internal puller -Kukko 21/7-
- Counter-support -Kukko 22/2-
- Sealing grease - G 052 128 A1-
- Socket (long) -SW 36-
- 2 x Hexagon bolts M 8 x 30

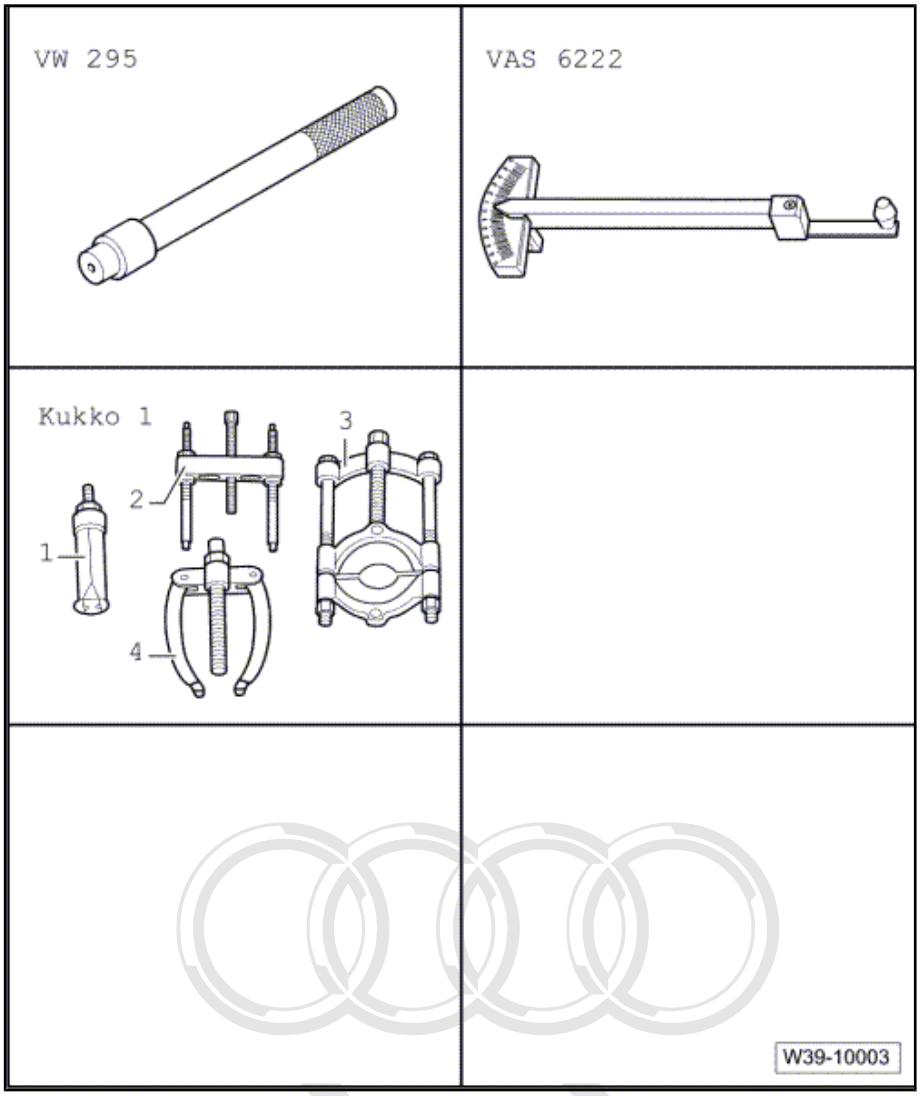

Clamping rear final drive to assembly stand

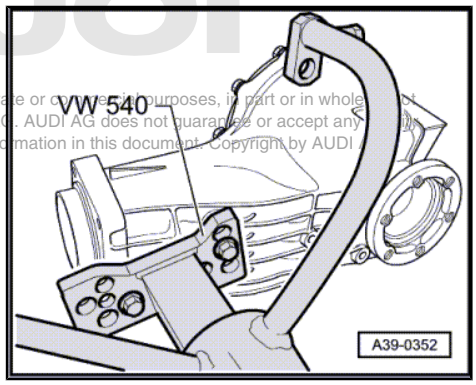

Protected by copyright. Copying for private or commercial purposes, in part or in whole, is not permitted unless authorised by AUDI AG. AUDI AG does not guarantee or accept any liability with respect to the correctness of information in this document. Copyright by AUDI AG

Removing nut for pinion shaft

A - Screw in 2 hexagon bolts M 8 x 30 .

B - Socket (long), 36 mm

– When loosening nut, rear final drive must be supported with engine and gearbox jack -V.A.G 1383 A- and universal gearbox support -V.A.G 1359/2- .

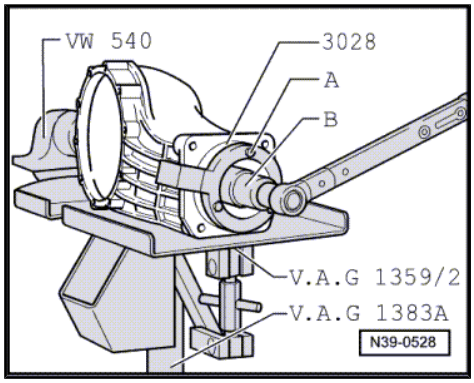

Pulling off flange

A - Screw 2 hexagon bolts M 8 x 30 into flange.

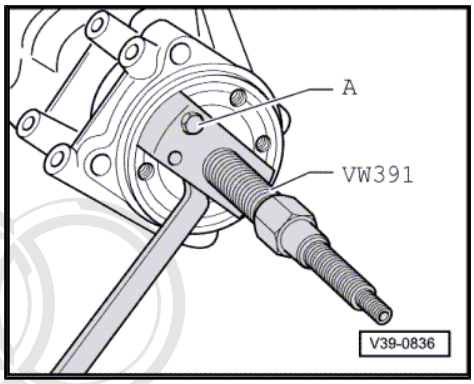

Pulling out oil seal for propshaft flange

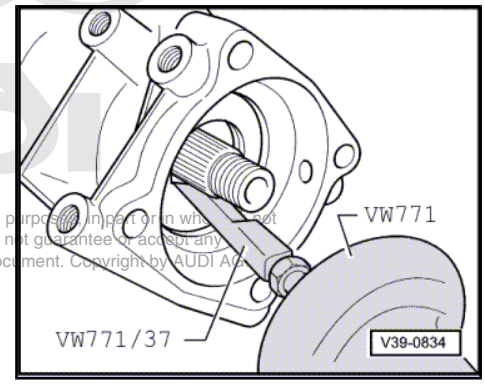

Protected by copyright. Copying for private or commercial purposes, in part or in whole, is not permitted unless authorised by AUDI AG. AUDI AG does not guarantee or accept any liability with respect to the correctness of information in this document. Copyright by AUDI AG.

Pressing pinion shaft out of tapered roller bearing inner race

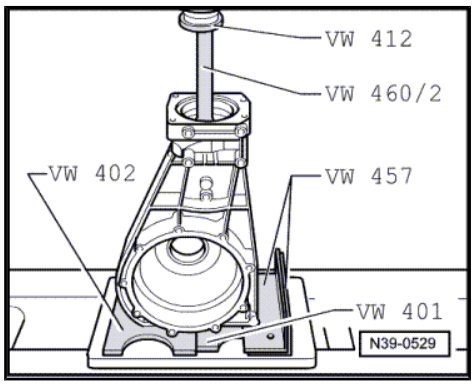

Pulling out small tapered roller bearing outer race

A - counter-support -Kukko 22/2-

B - internal puller 46 … 56 mm , e.g. -Kukko 21/7-

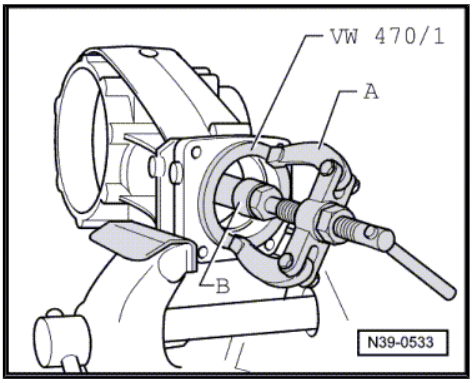

Driving out large tapered roller bearing outer race

– After removing, check shims for damage.

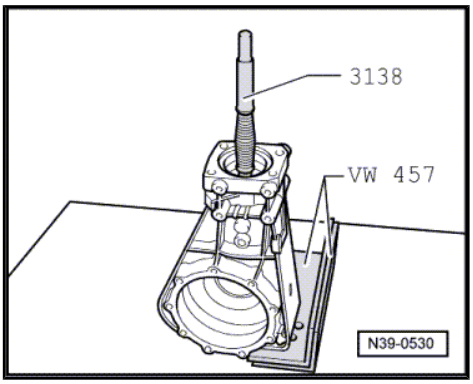

Pressing off large tapered roller bearing inner race

A - splitter 22 … 115 mm , e.g. -Kukko 17/2-

Protected by copyright. Copying for private or commercial purposes, in part or in whole, is not permitted unless authorised by AUDI AG. AUDI AG does not guarantee or accept any liability with respect to the correctness of information in this document. Copyright by AUDI AG.

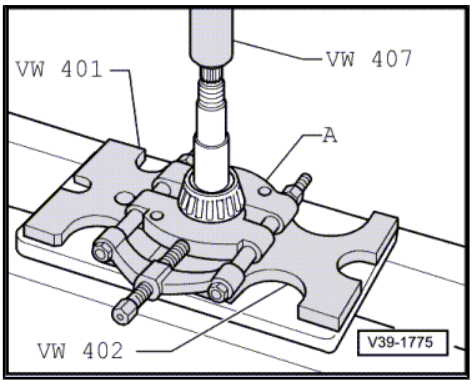

Pressing on large tapered roller bearing inner race

> ⚠ WARNING
>
> *Wear protective gloves.*

– Heat inner race to approx. 100°C before installing.

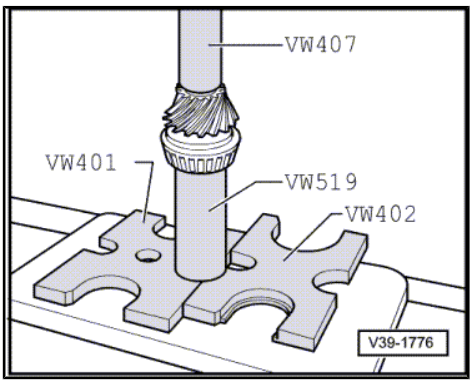

Pulling in large tapered roller bearing outer race

– Lightly oil bearing seat in rear final drive housing.

– Fit previously determined shim ”S3” for pinion shaft.

Lettering “oben” (top) on thrust plate -3253/4- faces nut of puller.

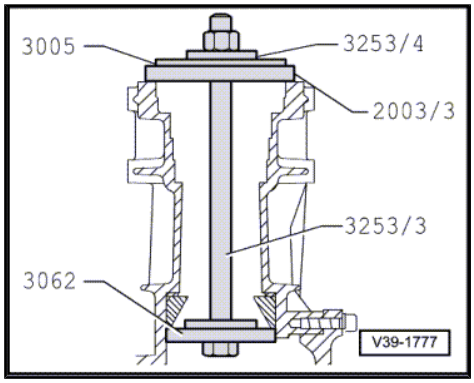

Pressing in small tapered roller bearing outer race

– Lightly oil bearing seat in rear final drive housing.

– Use drift -VW 295- and thrust plate -30-205- for pressing in outer race.

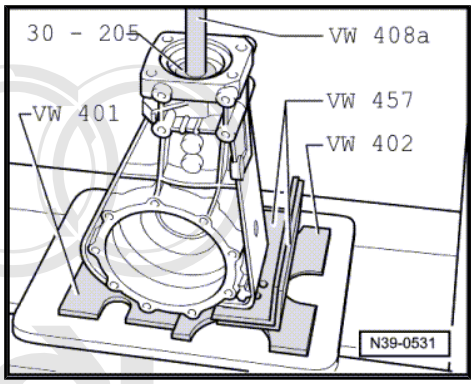

Installing small tapered roller bearing inner race

– Insert pinion shaft with new spacer sleeve.

Protected by copyright. Copying for private or commercial purposes, in part or in whole, is not permitted unless authorised by AUDI AG. AUDI AG does not give any guarantee or accept any liability with respect to the correctness of information in this document. Copyright by AUDI AG.

> ⚠ **WARNING**
>
> *Wear protective gloves.*

– Heat inner race to about 100°C.

– Press pinion shaft up and press inner race fully home onto stop with press tool -40-21- .

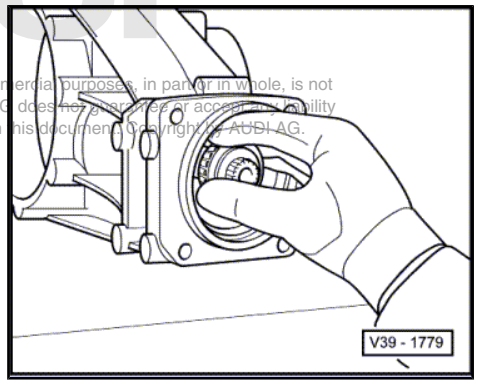

Installing O-ring

– Lubricate O-ring with gear oil when installing.

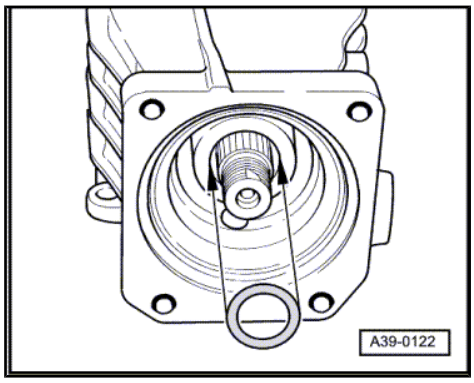

Driving in oil seal for propshaft flange

- Lightly lubricate outer circumference of oil seal with gear oil.
- Pack space between sealing lip and dust lip half-full with sealing grease -G 052 128 A1- .
- Drive in new seal onto stop in rear final drive housing (take care to keep seal straight).

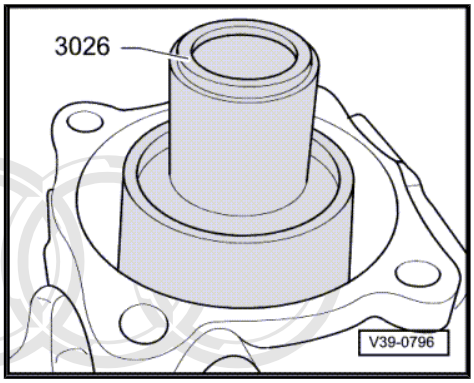

Installing flange

- Drive propshaft flange onto pinion shaft until the securing nut can be fitted.

Protected by copyright. Copying for private or commercial purposes, in part or in whole, is not permitted unless authorised by AUDI AG. AUDI AG does not guarantee or accept any liability with respect to the correctness of information in this document. Copyright by AUDI AG.

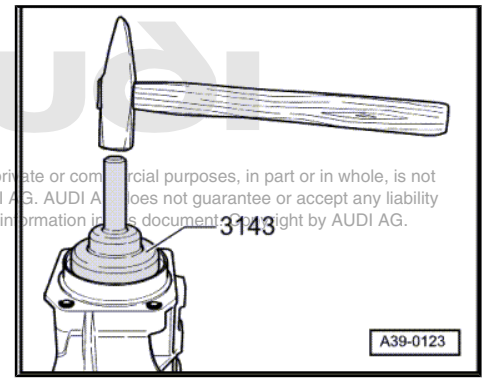

Tightening nut for pinion shaft and setting friction torque

A - Screw in 2 hexagon bolts M 8 x 30 .

B - Socket (long), 36 mm

- When tightening nut, rear final drive must be supported with engine and gearbox jack -V.A.G 1383 A- and universal gearbox support -V.A.G 1359/2- .

Only increase tightening torque slowly. Stop and and check friction torque several times. If the specified friction torque is exceeded, the spacer sleeve must be renewed and the adjustment procedure repeated. A spacer sleeve which has been compressed too much cannot be re-used.

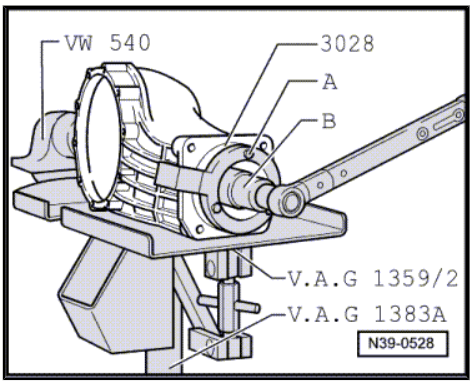

Measuring friction torque

Use bearing preload gauge -VAS 6222- and socket (long) - SW 36- for measuring friction torque.

Set friction torque as follows:

New bearings	Used bearings[4)]
150 … 200 Ncm	30 … 60 Ncm

4) run at least 50 km (30 miles)

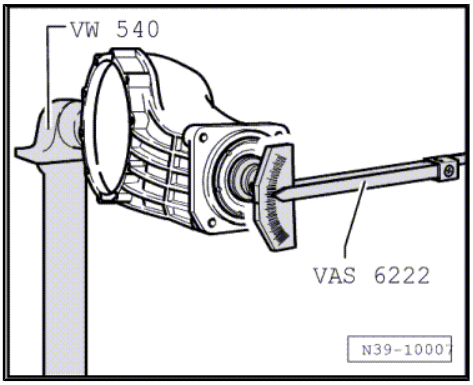

Securing nut for pinion shaft

– Secure nut for pinion shaft.

– Measure radial run-out at flange for propshaft ⇒ page 30 .

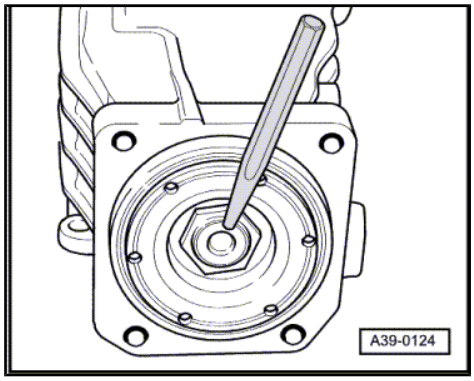

Protected by copyright. Copying for private or commercial purposes, in part or in whole, is not permitted unless authorised by AUDI AG. AUDI AG does not guarantee or accept any liability with respect to the correctness of information in this document. Copyright by AUDI AG.

12 Adjusting pinion shaft and crown wheel

Note

- *Careful adjustment of the crown wheel and pinion shaft is essential to ensure that the final drive gives long service and runs silently. During manufacture the crown wheel and pinion shaft are matched and checked on testing machines to ensure correct mesh pattern and silent running. The position for quietest running is obtained by moving the pinion shaft axially, while at the same time maintaining the backlash within the specified tolerance.*
- *The deviation, or tolerance "r", which is related to the master gauge "Ro", is marked on the outer circumference of the crown wheel.*
- *Only renew gear set (crown wheel and pinion shaft) together!*

12.1 Adjustment and marking of final drive gear set

1 - Identification "O937" denotes an Oerlikon gear set with a ratio of 37 : 9.

The gear set may also be manufactured by Klingelnberg "K937" or Gleasen "G937".

2 - -312- number of matched pair of gears

3 - Allowance "r" is based on the master gauge used on the test machine in production. The allowance "r" is always given in 1/100 mm. For example: "25" indicates r = 0.25 mm

Protected by copyright. Copying for private or commercial purposes, in part or in whole, is not permitted unless authorised by AUDI AG. AUDI AG does not guarantee or accept any liability with respect to the correctness of information in this document. Copyright by AUDI AG.

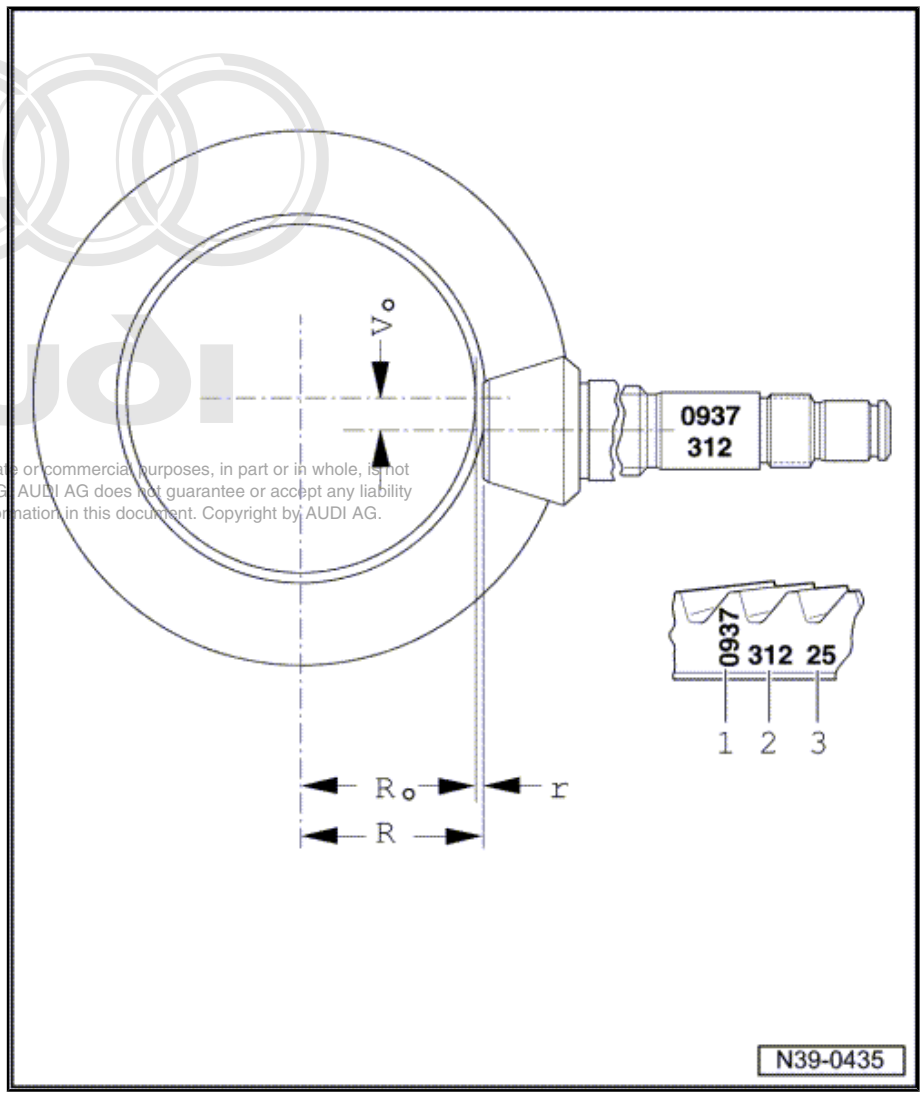

Ro - Length of master gauge used on test machine “Ro”.

Ro - Crown wheel = 57.50 mm

R - Actual distance between centre axis of crown wheel and face of pinion shaft at point with quietest running for this gear set.

Vo - Hypoid offset

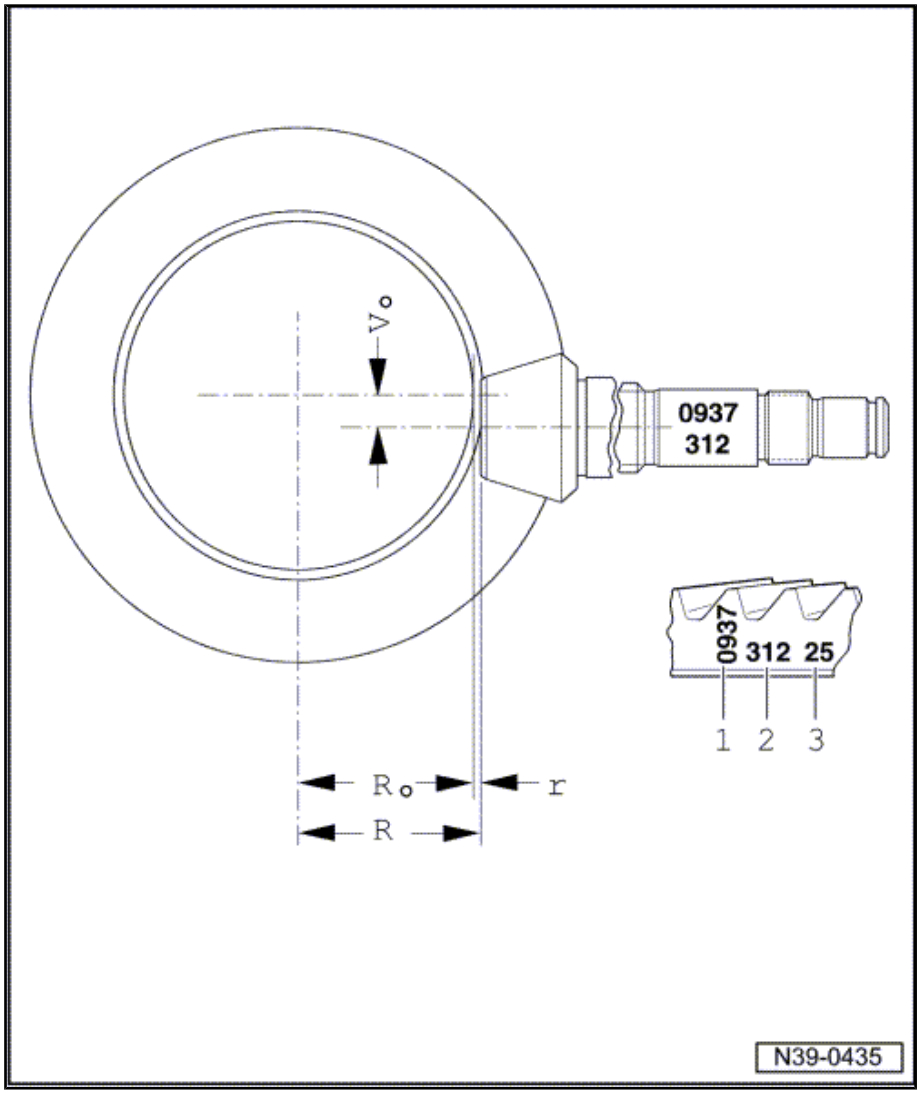

Protected by copyright. Copying for private or commercial purposes, in part or in whole, is not permitted unless authorised by AUDI AG. AUDI AG does not guarantee or accept any liability with respect to the correctness of information in this document. Copyright by AUDI AG.

12.2 Position of shims

S1 - Shim for crown wheel in cover for final drive

S2 - Shim for crown wheel in rear final drive housing

S3 - Shim for pinion shaft in rear final drive housing

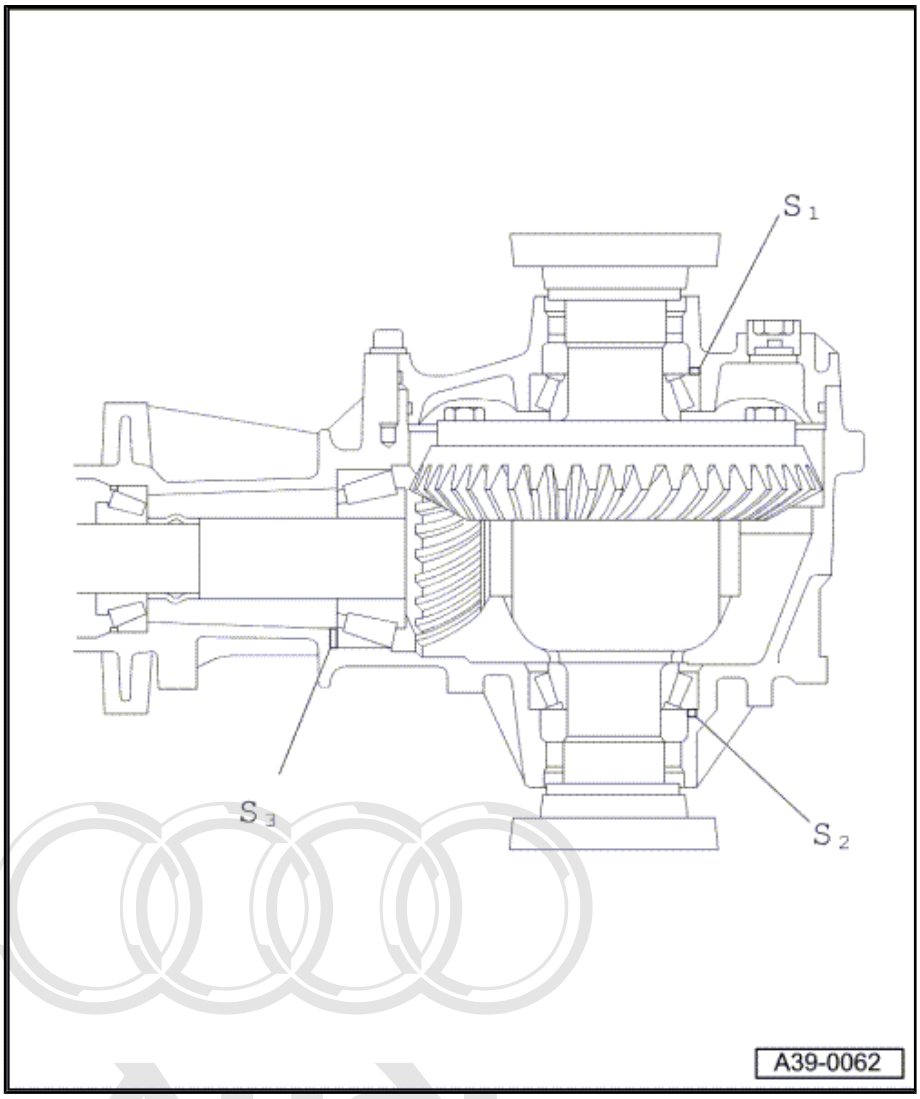

12.3 Table of adjustments

Protected by copyright. Copying for private or commercial purposes, in part or in whole, is not permitted unless authorised by AUDI AG. AUDI AG does not guarantee or accept any liability with respect to the correctness of information in this document. Copyright by AUDI AG.

- If repairs have been carried out on the rear final drive it is only necessary to re-adjust the pinion shaft or the complete gear set if components have been renewed which have a direct effect on the adjustment of the final drive. Refer to the following table to avoid unnecessary adjustment work:

Components requiring adjustment: Component renewed	Crown wheel (S_1 + S_2) ⇒ page 93	Pinion shaft S_3 via allowance “r” ⇒ page 88	Backlash 0.12 - 0.22 mm ⇒ page 97
Rear final drive housing	X	X	X
Differential cage	X		X
Tapered roller bearings for pinion shaft		X	X
Tapered roller bearings for differential	X		X

Final drive gear set	X	X	X
Cover for rear final drive	X		X

12.4 Recommended sequence for adjusting gear set

The following work sequence is recommended to save time when the crown wheel and pinion shaft have to be adjusted:

- Determine total shim thickness “S_{total}” (S_1 plus S_2) to obtain specified preload on differential tapered roller bearings.
- Determine shim thickness “S_3” required for specified position of pinion shaft.
- Distribute total shim thickness “S_{total}” (S_1 plus S_2) so that the specified backlash between crown wheel and pinion shaft is achieved.

The object of the adjustment is to reproduce the setting for quietest possible running, as obtained on the test machine in production. For good results, maximum care and cleanliness are very important when performing repairs and taking measurements.

12.5 Adjusting pinion shaft

The pinion shaft only needs to be re-adjusted according to the following instructions if the final drive gear set, the tapered roller bearings for the pinion shaft or the rear final drive housing are being renewed ⇒ page 87 .

Protected by copyright. Copying for private or commercial purposes, in part or in whole, is not permitted unless authorised by AUDI AG. AUDI AG does not guarantee or accept any liability with respect to the correctness of information in this document. Copyright by AUDI AG.

Special tools and workshop equipment required

- ♦ Universal measuring tool -VW 385-
- ♦ Engine and gearbox support -VW 540-
- ♦ Bearing preload gauge -VAS 6222-
- ♦ Dial gauge
- ♦ Socket (long) -SW 36-

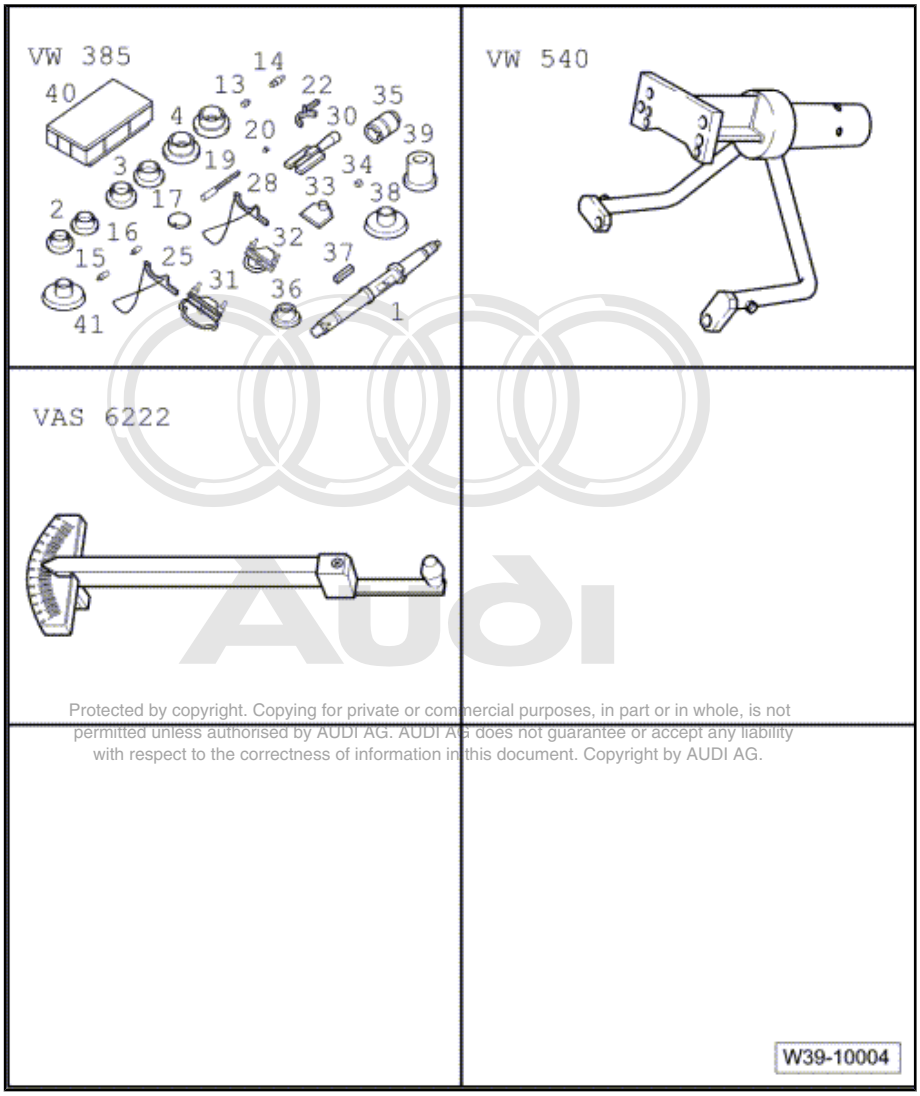

Protected by copyright. Copying for private or commercial purposes, in part or in whole, is not permitted unless authorised by AUDI AG. AUDI AG does not guarantee or accept any liability with respect to the correctness of information in this document. Copyright by AUDI AG.

Determining thickness of shim "S_3"

- Before adjusting pinion shaft, first determine total shim thickness "S_{total}" (S_1 plus S_2) required for specified preload on differential tapered roller bearings ⇒ page 93 .

(Setting preload of tapered roller bearing for pinion shaft)

– Clamp rear final drive in assembly stand ⇒ page 79

– Fit both tapered roller bearing outer races without shims into housing ⇒ page 82 .

♦ Install new tapered roller bearings as supplied; do not lubricate additionally with oil.

♦ Only install spacer sleeve for final friction torque measurement (after determining shim "S_3").

– Fit pinion shaft in housing with large tapered roller bearing inner race but without spacer sleeve.

– Heat small tapered roller bearing inner race to approx. 100°C and fit on pinion shaft.

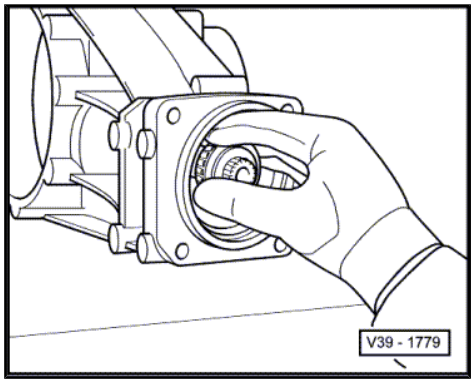

> ⚠ **WARNING**
>
> ***Wear protective gloves.***

– Fit propshaft flange and tighten hexagon nut for flange ⇒ page 83 .

Only increase tightening torque slowly. Stop and and check friction torque several times ⇒ page 90 .

Use bearing preload gauge -VAS 6222- and socket (long) - SW 36- for measuring friction torque.

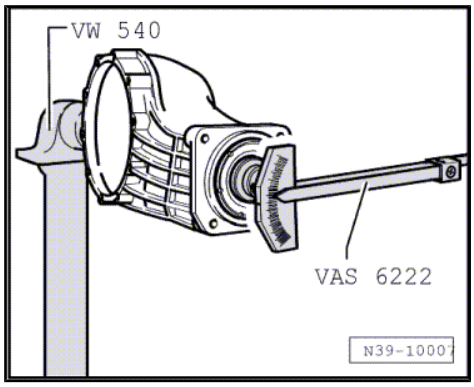

Set friction torque as follows:

New bearings	Used bearings[5)]
150 … 200 Ncm	30 … 60 Ncm

5) run at least 50 km (30 miles)

Determining dimension “e”

– Adjust setting ring of universal measuring tool -VW 385/1- to dimension “a” = 60 mm.

– Set the adjustable ring to dimension “b” = 55 mm.

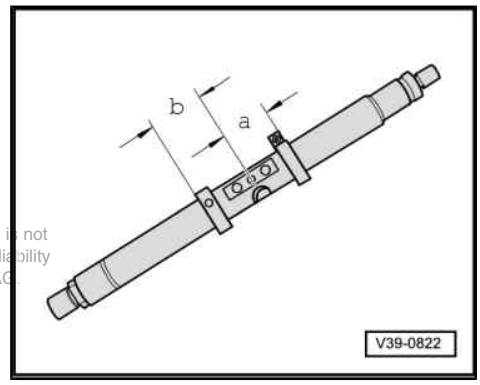

Protected by copyright. Copying for private or commercial purposes, in part or in whole, is not permitted unless authorised by AUDI AG. AUDI AG does not guarantee or accept any liability with respect to the correctness of information in this document. Copyright by AUDI AG.

– Assemble universal mandrel -VW 385/1- as shown.

♦ Dial gauge extension -VW 385/15- = 9 mm long

♦ Set universal master gauge -VW 385/30- to R_0 = 57.50 mm.

♦ Set dial gauge (3 mm measuring range) to zero with 2 mm preload.

– Turn pinion shaft at least 8 turns in both directions to settle the tapered roller bearings.

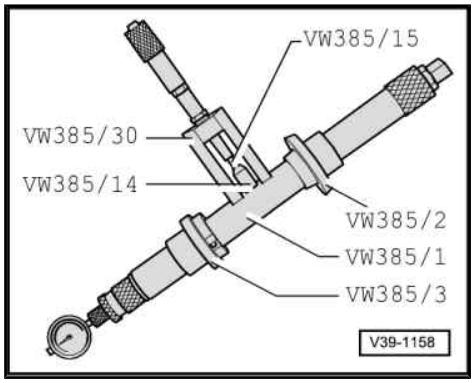

– Place end measuring plate on face of pinion shaft.

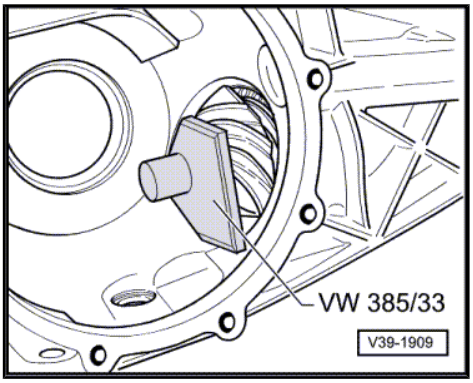

– Remove master gauge and insert measuring tool into housing.
– Fit cover for rear final drive and tighten 4 bolts.
– Using the adjustable ring, move the 2nd centring disc outwards as far as possible so that the measuring tool can still just be turned by hand.

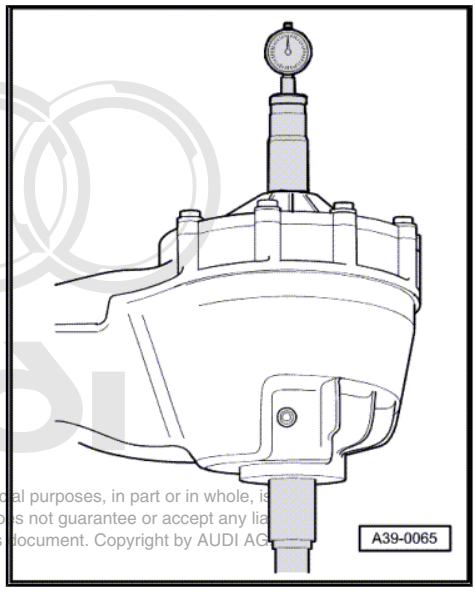

Protected by copyright. Copying for private or commercial purposes, in part or in whole, is permitted unless authorised by AUDI AG. AUDI AG does not guarantee or accept any liability with respect to the correctness of information in this document. Copyright by AUDI AG.

– Turn measuring tool until dial gauge extension contacts end measuring plate and gauge indicates maximum deflection (return point). The measured value is dimension “e” (in red scale).

♦ Example: dimension “e” = 1.60 mm

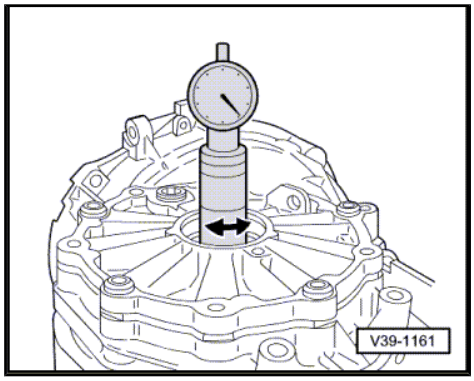

Determining thickness of shim “S_3”

“S_3” = e – r

e - Measured value (maximum deflection)
r - Allowance (marked on crown wheel in 1/100 mm)

Example:

Dial gauge reading “e”	1.60 mm
Allowance “r” marked on crown wheel	– 0.42 mm
Shim thickness “S_3”	= 1.18 mm

– Determine shim(s) as accurately as possible according to table. For Part Nos. refer to ⇒ Electronic parts catalogue .

The following shims are available for “S3”

Shim thickness (mm)		
0.95	1.20	1.45
1.00	1.25	1.50
1.05	1.30	1.55
1.10	1.35	
1.15	1.40	

– Remove universal mandrel.

– Remove pinion shaft and outer race of large tapered roller bearing and re-install together with calculated shims “S_3” and new spacer sleeve ⇒ page 74 .

– Fit inner race of small tapered roller bearing and tighten nut for pinion shaft until specified friction torque is obtained ⇒ page 83 .

Protected by copyright. Copying for private or commercial purposes, in part or in whole, is not permitted unless authorised by AUDI AG. AUDI AG does not guarantee or accept any liability with respect to the correctness of information in this document. Copyright by AUDI AG.

Only increase tightening torque slowly. Stop and and check friction torque several times ⇒ page 92 .

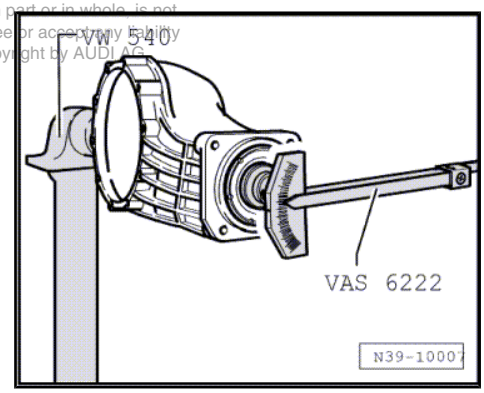

> ⚠ **Caution**
>
> ***If the specified friction torque is exceeded, the spacer sleeve must be renewed and the adjustment procedure repeated.***
>
> ***A spacer sleeve which has been compressed too much cannot be re-used.***

Set friction torque as follows:

New bearings	Used bearings[6)]
150 … 200 Ncm	30 … 60 Ncm

6) run at least 50 km (30 miles)

Checking dimension “r”

– Turn pinion shaft at least 8 turns in both directions to settle the tapered roller bearings.

Insert universal mandrel -VW 385/1- and measure dimension “r”.

If the correct shims have been selected, the dial gauge (reading anti-clockwise in the red range), should now show the allowance “r” within a tolerance of + 0.05 mm

Protected by copyright. Copying for private or commercial purposes, in part or in whole, is not permitted unless authorised by AUDI AG. AUDI AG does not guarantee or accept any liability with respect to the correctness of information in this document. Copyright by AUDI AG.

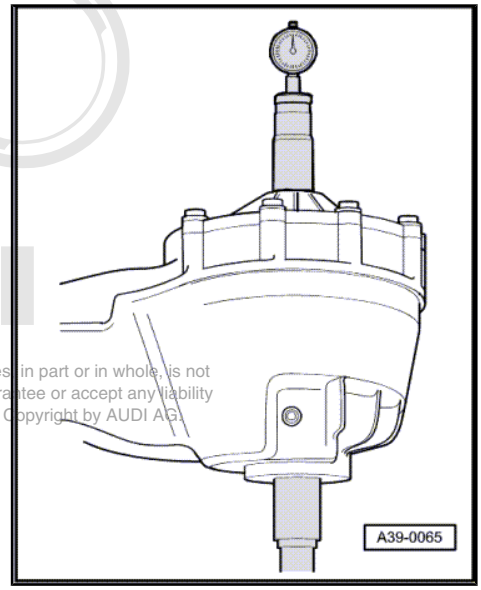

– Secure hexagon nut.

– After securing the nut for the pinion shaft, measure the radial run-out at the flange for the propshaft, and mark accordingly ⇒ page 30 .

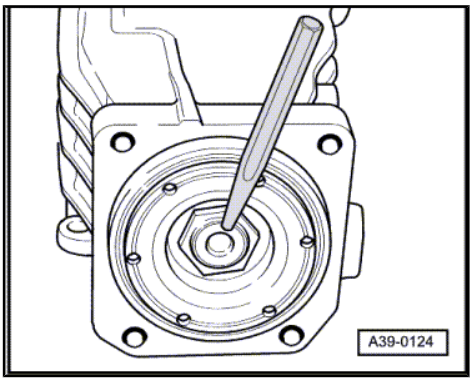

12.6 Adjusting crown wheel

(Adjusting differential)

Note

Re-adjustment of the crown wheel is required if the rear final drive housing, final drive cover, differential tapered roller bearings, differential cage or final drive gear set have been renewed.

Table of adjustments ⇒ page 87

Special tools and workshop equipment required

- End measuring plate -VW 385/17-
- Universal dial gauge bracket -VW 387-
- Measuring lever -VW 388-
- Crown wheel adjusting tool -VW 521-
- Torque wrench -V.A.G 1331-
- Dial gauge
- Hexagon bolt M 8 x 45

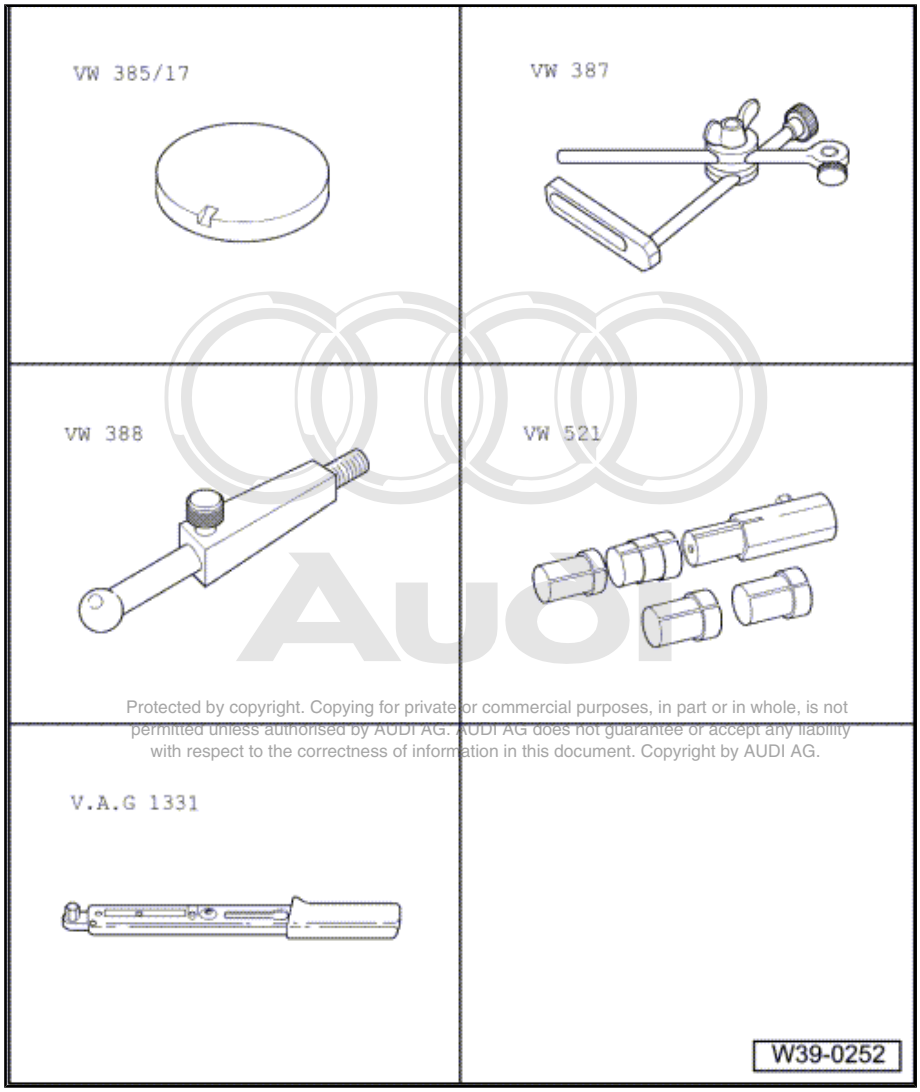

Protected by copyright. Copying for private or commercial purposes, in part or in whole, is not permitted unless authorised by AUDI AG. AUDI AG does not guarantee or accept any liability with respect to the correctness of information in this document. Copyright by AUDI AG.

Determining total shim thickness "S_{total}" for shims "S_1" plus "S_2"

(Setting preload of tapered roller bearings for differential)

- Pinion shaft is removed.
- If only the tapered roller bearings for the differential are being renewed, the crown wheel can be removed from the differential cage. The pinion shaft then does not have to be removed.
- Shims available for "S1" + "S2": refer to ⇒ Electronic parts catalogue .

– Pry out flange shaft oil seal using assembly lever.

– Remove tapered roller bearing outer races for differential and take out shims ⇒ page 65 .

– Press outer race of tapered roller bearing together with a 1.00 mm thick shim onto stop in housing (S_2 side) ⇒ page 65 .

Note

For measurement purposes a 1.0 mm thick shim "S_2" is inserted provisionally. This is referred to in the following as "S_2". "S_2*" is exchanged with the final shim "S_2" after determining backlash.*

– Press outer race for tapered roller bearing without shim "S_1" into cover for final drive.

– Fit differential in housing.

Crown wheel is on same side as cover.

– Fit cover for final drive and tighten 4 bolts to 25 Nm in diagonal sequence.

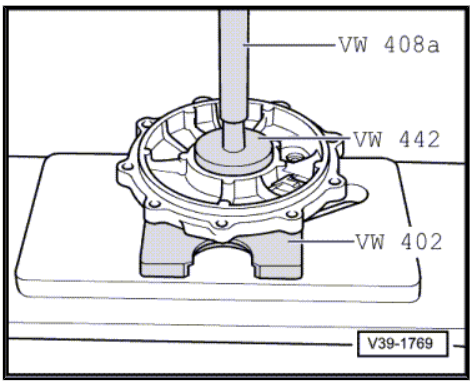

– Attach special tools to differential cage on final drive housing side.

– Turn final drive unit so that cover side faces upwards.

– Turn differential 8 turns in both directions to settle tapered roller bearings.

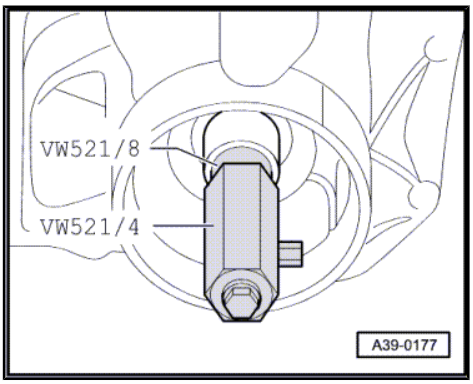

– Attach measuring equipment.

– Place measuring plate -VW 385/17- on differential.

A - Dial gauge extension -30 mm-

– Screw in hexagon bolt M 8 x 45 -B-.

– Apply dial gauge extension to centre of measuring plate - VW 385/17- .

– Set dial gauge (3 mm measuring range) to "0" with 2 mm preload.

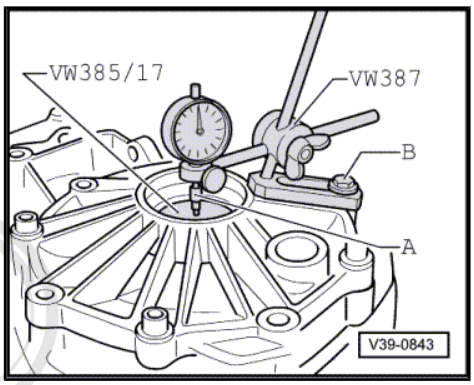

Protected by copyright. Copying for private or commercial purposes, in part or in whole, is not permitted unless authorised by AUDI AG. AUDI AG does not guarantee or accept any liability with respect to the correctness of information in this document. Copyright by AUDI AG.

– Raise differential in direction of -arrow- without turning, read play off dial gauge and note down (example: 0.50 mm).

If the measurement has to be repeated, the differential must again first be turned 8 turns in each direction to settle the tapered roller bearings.

Formula: “S_{total}” = “S_2*” + measured value + bearing preload

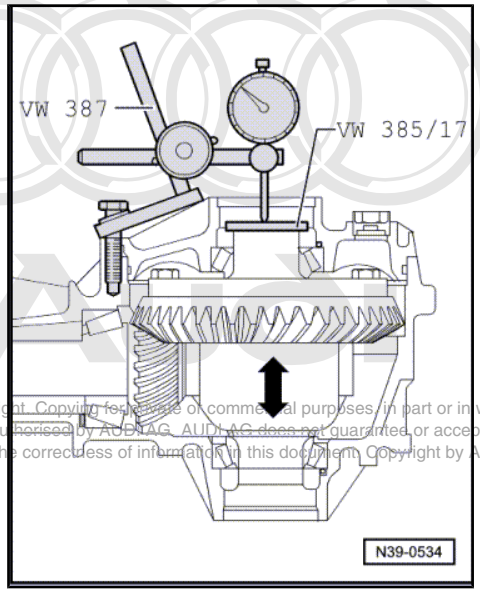

Example:

Example:	
Inserted shim “S_2*”	1.00 mm
+ Measured value	0.50 mm
+ Bearing preload (constant value)	0.30 mm
= Total shim thickness “S_{total}” for “S_1” plus “S_2”	1.80 mm

Protected by copyright. Copying for private or commercial purposes, in part or in whole, is not permitted unless authorised by AUDI AG. AUDI AG does not guarantee or accept any liability with respect to the correctness of information in this document. Copyright by AUDI AG.

Determining thickness of shim “S_1*”

Note

- *Provisional shim “S_1*” is replaced with final shim “S_1” after determining backlash.*
- *Total shim thickness "S_{total}" remains unchanged.*

Formula: “S_1*” = “S_{total}” – “S_2*”

Example:	
Total shim thickness “S_{total}” for “S1” + “S2”	1.80 mm
– Inserted shim(s) “S2*”	1.00 mm
= Thickness of shim “S1*”	0.80 mm

- Select correct shim(s) from ⇒ Electronic parts catalogue .

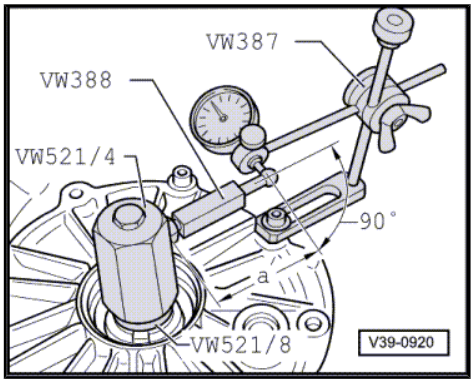

Measuring backlash

(Position of crown wheel in final drive housing)

- Pinion shaft installed with shim S_3
- Outer races for tapered roller bearings installed in final drive housing with shims S1* + S2*
- Differential installed

– Fit cover for final drive and tighten bolts to 25 Nm.

– Turn differential 5 turns in both directions to settle tapered roller bearings.

– Attach measuring equipment.

– Fit dial gauge with dial gauge extension -VW 382/10- (6 mm flat).

Set measuring lever -VW 388- to dimension “a” = 60 mm.

Measure play between teeth faces (backlash) as follows:

– Turn crown wheel until it makes contact with the face of one tooth (end of backlash travel).

– Preload dial gauge to 2 mm and set to “0”.

– Turn back crown wheel until it makes contact with opposite tooth face (backlash).

– Take backlash reading and note down measured value.

– Turn crown wheel through 90° and repeat measurements another 3 times.

Protected by copyright. Copying for private or commercial purposes, in part or in whole, is not permitted unless authorised by AUDI AG. AUDI AG does not guarantee or accept any liability whatsoever for the correctness of information in this document. Copyright by AUDI AG.

Determining average backlash

– Add the four measured values together and divide by four.

Example:	
1st measured value	0.28 mm
+ 2nd measured value	0.30 mm
+ 3rd measured value	0.30 mm
+ 4th measured value	0.28 mm
= Sum of measured values	1.16 mm

- Result: the average backlash is 1.16 mm : 4 = 0.29 mm

Note

If the individual measurements differ by more than 0.06 mm, this means that the installation of the crown wheel is not correct or that the final drive gear set itself is defective. Check installation; renew final drive gear set if necessary.

Determining thickness of shim “S_2”

Formula: “S_2” = “S_2*” – backlash + lift

Example:	
Inserted shim(s) “S_2*”	1.00 mm
– Average backlash	0.29 mm
+ Lift (desired average value for backlash)	0.15 mm
= Thickness of shim “S_2”	0.86 mm

- For available shim(s) refer to ⇒ Electronic parts catalogue .
- The exact shim thickness required can be obtained by using the shim tolerance variations. Install two shims if necessary.

Determining thickness of shim "S_1"

Formula: "S_1" = "S_{total}" – "S_2"

Example:

Total shim thickness "S_{total}" for "S_1" plus "S_2"	1.80 mm
– Thickness of shim "S_2"	0.86 mm
= Thickness of shim "S_1"	0.94 mm

Protected by copyright. Copying for private or commercial purposes, in part or in whole, is not permitted unless authorised by AUDI AG. AUDI AG does not guarantee or accept any liability with respect to the correctness of information in this document. Copyright by AUDI AG.

- For available shim(s) refer to ⇒ Electronic parts catalogue .
- The exact shim thickness required can be obtained by using the shim tolerance variations. Install two shims if necessary.

– Install correct shims: S_1 on crown wheel side, and S_2 opposite crown wheel. If necessary use 2 shims.

Checking adjustment

– After installing shims "S_1" and "S_2", turn differential 5 turns in both directions so that the tapered roller bearings settle.

– Measure backlash four times on circumference.

- Specification: 0.12 ... 0.22 mm.

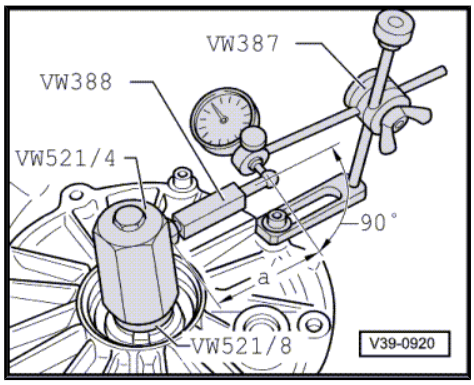

Note

♦ *Adjustment must be repeated if backlash is outside tolerance. The total shim thickness "S_{total}" must remain unchanged.*

♦ *The discrepancy between individual measured values must not exceed 0.06 mm.*