2002 ACCESSORIES/SAFETY EQUIPMENT

Acura - Air Bag Restraint Systems

DESCRIPTION & OPERATION

WARNING: Accidental air bag deployment is possible. Personal injury may result. Read and follow all WARNINGS and AIR BAG SAFETY PRECAUTIONS before working on air bag system or related components.

Supplemental Restraint System (SRS), also known as air bag system, is designed to protect driver and front passenger by activating when vehicle receives a sufficient front-end impact. System includes driver-side air bag, passenger-side air bag, driver and front passenger side-impact air bags, side-impact sensors, SRS unit (with internal safing and impact sensors) and cable reel. See **Fig. 1** .

The main circuit in SRS unit senses and judges force of impact and, if necessary, ignites inflator charges in air bag assemblies, causing air bags to inflate. If battery voltage is too low or power is disconnected due to impact, voltage regulator and back-up power circuit keeps voltage at a constant level.

Side-impact air bags are located in each front seat back. Side-impact air bags are designed to deploy when a moderate to severe side-impact occurs. Passenger side-impact air bag also includes an Occupant Position Detection System (OPDS). This system contains sensors and a control unit, located in passenger"s setback, to determine passenger seat"s occupant height and position. If OPDS control unit determines passenger seat"s occupant head is in deployment path of side-impact air bag, side-impact air bag will be disabled. If passenger side-impact air bag is disabled, side-impact indicator light will come on. If passenger setback is replaced, OPDS control unit must be initialized. See **INITIALIZING OCCUPANT POSITION DETECTION SYSTEM (OPDS) UNIT** under DIAGNOSTICS.

COMPONENT LOCATIONS

Refer to illustration for component locations. See **Fig. 1** .

cardiagn.com

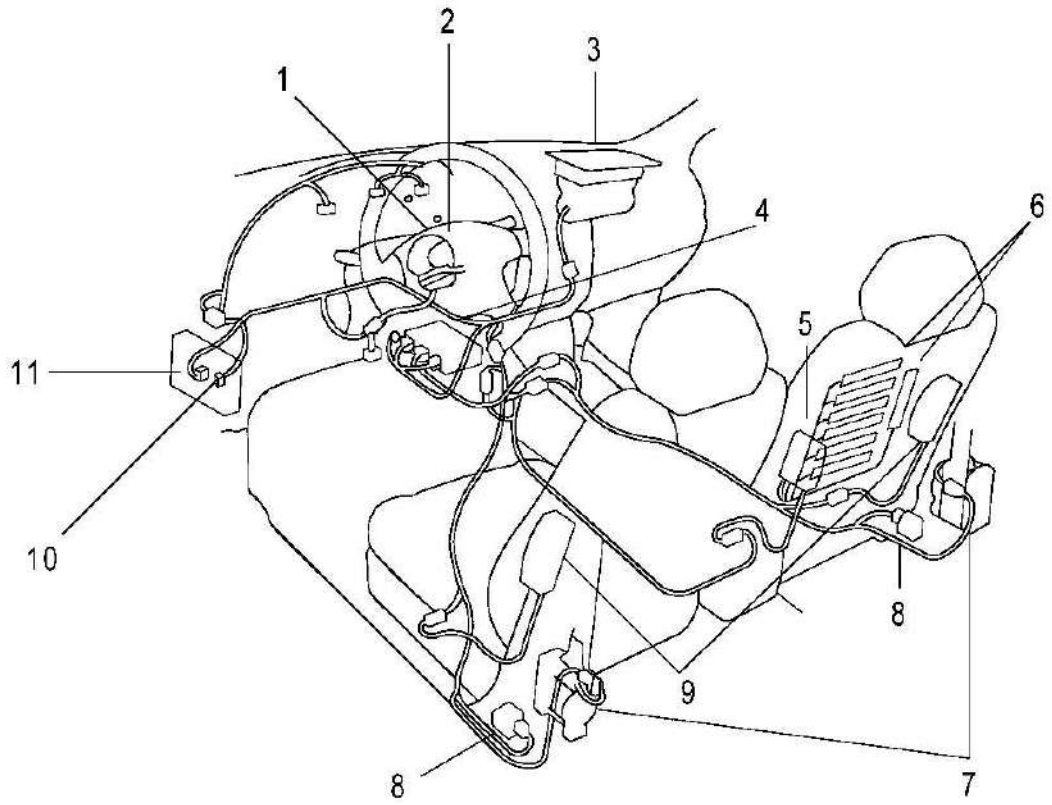

1. Driver-Side Air Bag
2. Cable Reel
3. Passenger-Side Air Bag
4. SRS Unit
5. OPDS Unit
6. OPDS Sensors
7. Seat Belt Tensioners
8. Side Impact Sensors
9. Side Impact Air Bags
10. Memory Erase Signal (MES)Connector
11. SRS Main Harness Under-Dash Fuse/Relay Box Connector

99C24481

Fig. 1: Locating Restraint System Components
Courtesy of AMERICAN HONDA MOTOR CO., INC.

SYSTEM OPERATION CHECK

When ignition is turned on, SRS indicator light should come on for about 6 seconds, and then go off. Make sure both horn buttons work. Take a test drive and make sure cruise control switches work. While vehicle is driven,

cardiagn.com

SRS indicator light should not come on or flash. If SRS indicator light does not operate as specified, system must be inspected/repaired as soon as possible. See **DIAGNOSTICS** .

AIR BAG SAFETY PRECAUTIONS

Observe these precautions when working with air bag system:

- Carefully inspect any SRS part before installing. DO NOT install any part that shows signs of being dropped or improperly handled, such as dents, cracks or deformation.
- Use only a digital multimeter to check system. Ensure multimeter output is 10 milliamp (0.01-amp) or less when switched to lowest value in ohmmeter range. A tester with higher output could damage air bag circuit or cause accidental deployment and possible injury.
- DO NOT install used SRS parts from another vehicle. When making SRS repairs, use only new parts.
- Except when indicated, always disconnect negative battery cable, and wait at least 3 minutes before making SRS repairs.
- Whenever ignition is on, or has been turned off for less than 3 minutes, be careful not to bump SRS unit. Air bags could accidentally deploy and cause damage or injury.
- Radio contains an anti-theft protection circuit. Be sure to get anti-theft code number before disconnecting battery cables.
- DO NOT try to disassemble air bags or SRS unit. There are no serviceable parts. Once an air bag has been deployed, it cannot be repaired or reused.
- Store removed air bags with pad surface up. If air bags are improperly stored face down, accidental deployment could propel unit with enough force to cause serious injury.
- Store removed air bags on secure flat surface away from any high heat source and free of any oil, grease, detergent or water.
- Store SRS unit in cool and dry place. DO NOT spill water or oil on SRS unit, and keep away from dust.
- Disconnect air bag connectors before disconnecting SRS harness connectors.
- Ensure SRS unit is installed securely.

ADJUSTMENTS

CABLE REEL CENTERING

NOTE: New replacement cable reels are pre-centered.

With cable reel installed, rotate cable reel fully clockwise. Rotate cable reel counterclockwise about 2 1/2 turns until arrow mark on cable reel label points straight up. See **Fig. 2** .

cardiagn.com

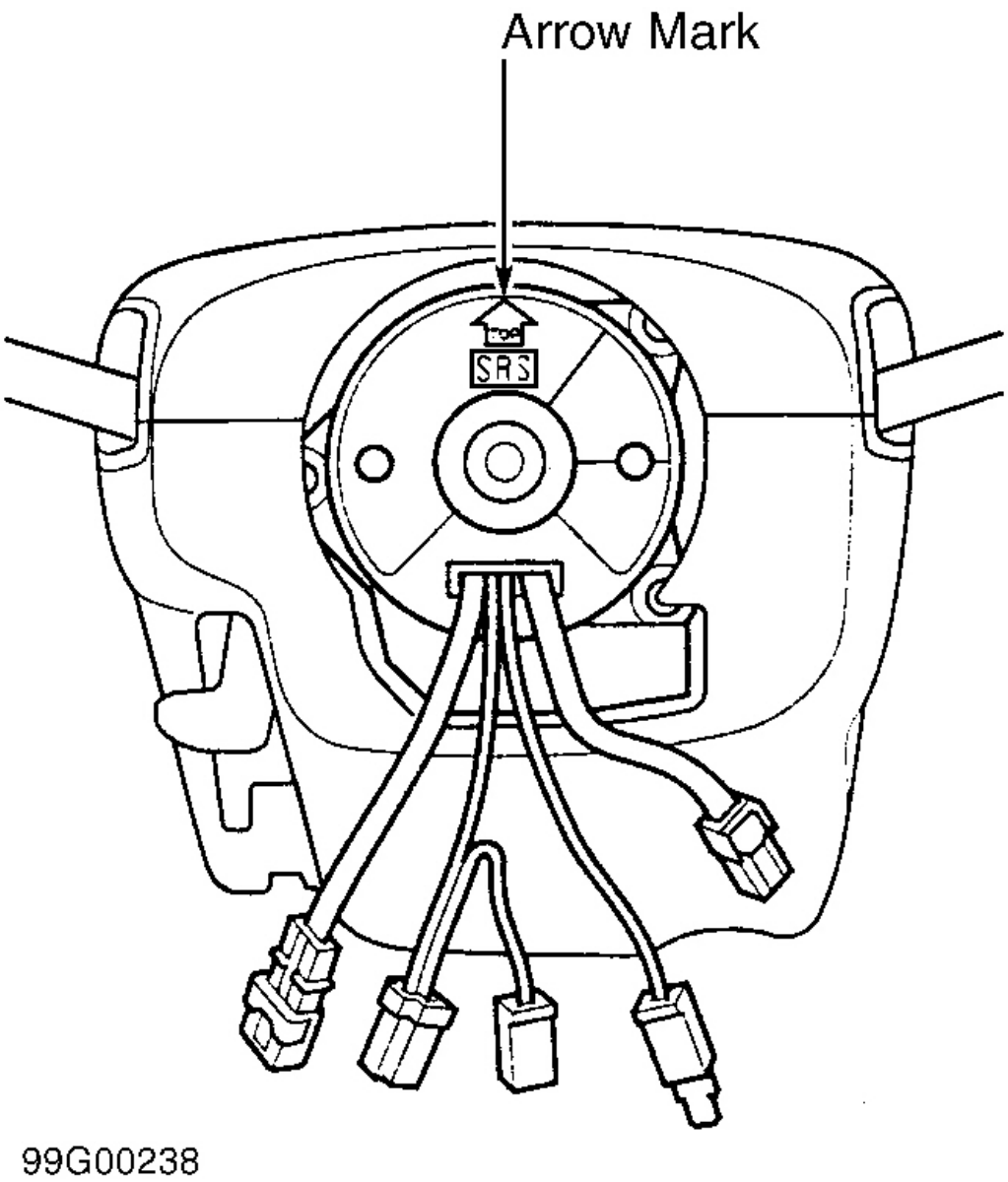

Fig. 2: Centering Cable Reel
Courtesy of AMERICAN HONDA MOTOR CO., INC.

DISABLING & ACTIVATING AIR BAG SYSTEM

WARNING: **Accidental air bag deployment is possible. Personal injury may result. Read and follow all WARNINGS and AIR BAG SAFETY PRECAUTIONS .**

cardiagn.com

NOTE: Radio contains an anti-theft protection circuit. Be sure to obtain anti-theft code number before disconnecting battery cables.

SPRING-LOADED LOCK CONNECTORS

To disconnect, pull spring-loaded sleeve toward stop while holding opposite half of connector. Then pull connector halves apart. Be sure to pull on sleeve and not on connector itself. See **Fig. 3** .

To connect, hold pawl-side connector half, and press on back of sleeve-side connector half in direction shown. As connector halves are pressed together, sleeve is pushed back by pawl. DO NOT touch sleeve. When connector halves are completely connected, pawl is released, and spring-loaded sleeve locks connector.

When backprobing spring-loaded lock connectors, remove retainer before inserting test probes from wire side. Carefully pry out retainer with flat-tip screwdriver. Retainer may be discarded after removal.

cardiagn.com

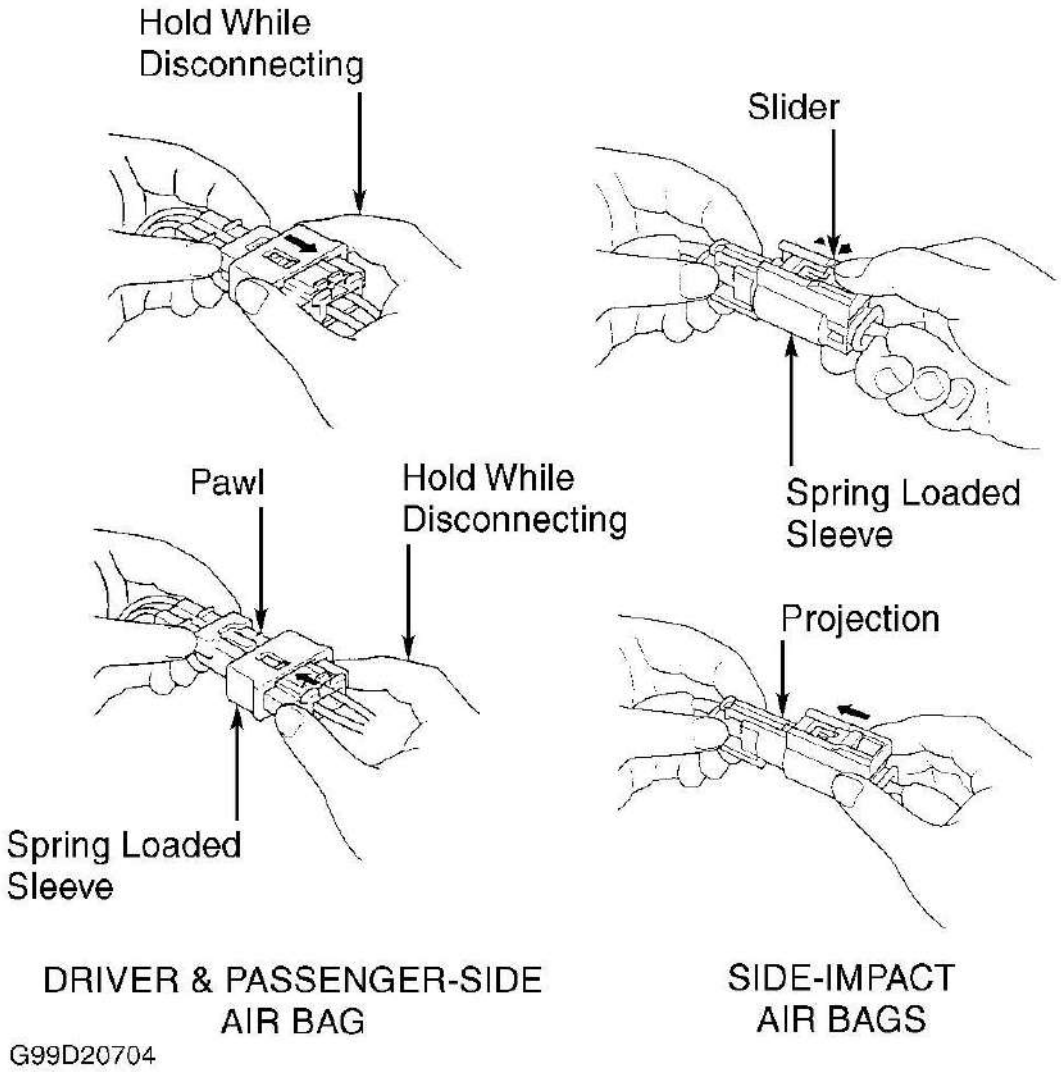

Fig. 3: Identifying Spring-loaded Lock Connectors
Courtesy of AMERICAN HONDA MOTOR CO., INC.

DISABLING SYSTEM

To disable air bag system, disconnect negative battery cable and wait 3 minutes before working on air bag system or related components.

ACTIVATING SYSTEM

To activate air bag system, reconnect negative battery cable. Perform **SYSTEM OPERATION CHECK**

cardiagn.com

DISPOSAL PROCEDURES

Before scrapping any air bags or seat belt tensioners, including those installed in a vehicle to be scrapped, they must be deployed. Treat undeployed air bags and seat belt tensioners with extreme care. Wear safety glasses and gloves when handling deployed them. Wash hands and rinse well with water after handling deployed air bag assemblies and seat belt tensioners.

If vehicle is still within warranty period, contact manufacturer for disposal instructions before deploying air bags.

AIR BAG DEPLOYMENT

WARNING: Air bag assemblies become very hot when deployed. Personal injury may result. Wait at least 30 minutes before handling deployed air bag assemblies.
Flying debris is possible. Personal injury may result. Ensure air bag assemblies are securely mounted to vehicle.

NOTE: If vehicle is to be scrapped, perform on-vehicle air bag deployment procedure.

On-vehicle

1. Before proceeding, see **AIR BAG SAFETY PRECAUTIONS** . Disconnect negative battery cable. Ensure proper operation of Deployment Tool (07HAZ-SG00500) by connecting a 12-volt battery per instructions supplied with tool.
2. To deploy driver-side air bag, remove access panel from bottom of steering wheel and disconnect driver-side air bag 2-pin connector from cable reel connector. To deploy passenger-side air bag, remove glove box and disconnect passenger-side air bag 4-pin connector from SRS main harness.
3. To deploy side-impact air bag, disconnect side-impact air bag 2-pin connector from SRS floor harness. To deploy seat belt tensioner, remove B-pillar trim panel and disconnect seat belt tensioner connector. Pull seat belt webbing out all the way and cut it off.
4. To deploy air bags and seat belt tensioners, cut off air bag connector and strip back 1" of insulation from wire ends. On passenger-side air bag, twist each pair of like colored wires together and connect one alligator clip to each pair. Connect Yellow alligator clips of deployment tool to uninsulated wire ends. Place deployment tool at least 30' (10 m) feet away from air bag.
5. Connect a 12-volt battery to deployment tool. If Red light on deployment tool comes on, go to next step. If Green light on deployment tool comes on, ignitor circuit is faulty. See **DAMAGED AIR BAG SPECIAL PROCEDURE** .
6. Stand at least 30' (10 m) away from air bag. Push deployment switch, being prepared for rapid inflation of air bag and loud noise. If air bag and seat belt tensioner deploys, wait 30 minutes to allow air bag to cool before removing and disposing of complete air bag assembly. Place in a sturdy plastic bag and seal securely.
7. If air bag or seat belt tensioner does not deploy, ignitor circuit is faulty. See **DAMAGED AIR BAG SPECIAL PROCEDURE** .

cardiagn.com

Off-vehicle

1. Before proceeding, see **AIR BAG SAFETY PRECAUTIONS** . Ensure proper operation of Deployment Tool (07HAZ-SG00500) by connecting a 12-volt battery per instructions supplied with tool.
2. Position air bag assembly deployment side up, outdoors on flat ground and at least 30' (10 m) from people or obstacles. Cut off air bag connector, and strip back 1" of insulation from wire ends. Connect Yellow alligator clips of deployment tool to uninsulated wire ends. See **Fig. 5** . Place tool at least 30' (10 m) away from air bag.
3. Connect a 12-volt battery to deployment tool. If Red light on deployment tool comes on, go to next step. If Green light on deployment tool comes on, air bag ignitor circuit is faulty. See **DAMAGED AIR BAG SPECIAL PROCEDURE** .
4. Push deployment switch, being prepared for rapid inflation of air bag and loud noise. If air bag deploys, wait 30 minutes to allow air bag to cool before removing and disposing of complete air bag assembly. Place in a sturdy plastic bag and seal securely.
5. If air bag does not deploy, ignitor circuit is faulty. See **DAMAGED AIR BAG SPECIAL PROCEDURE** .

cardiagn.com

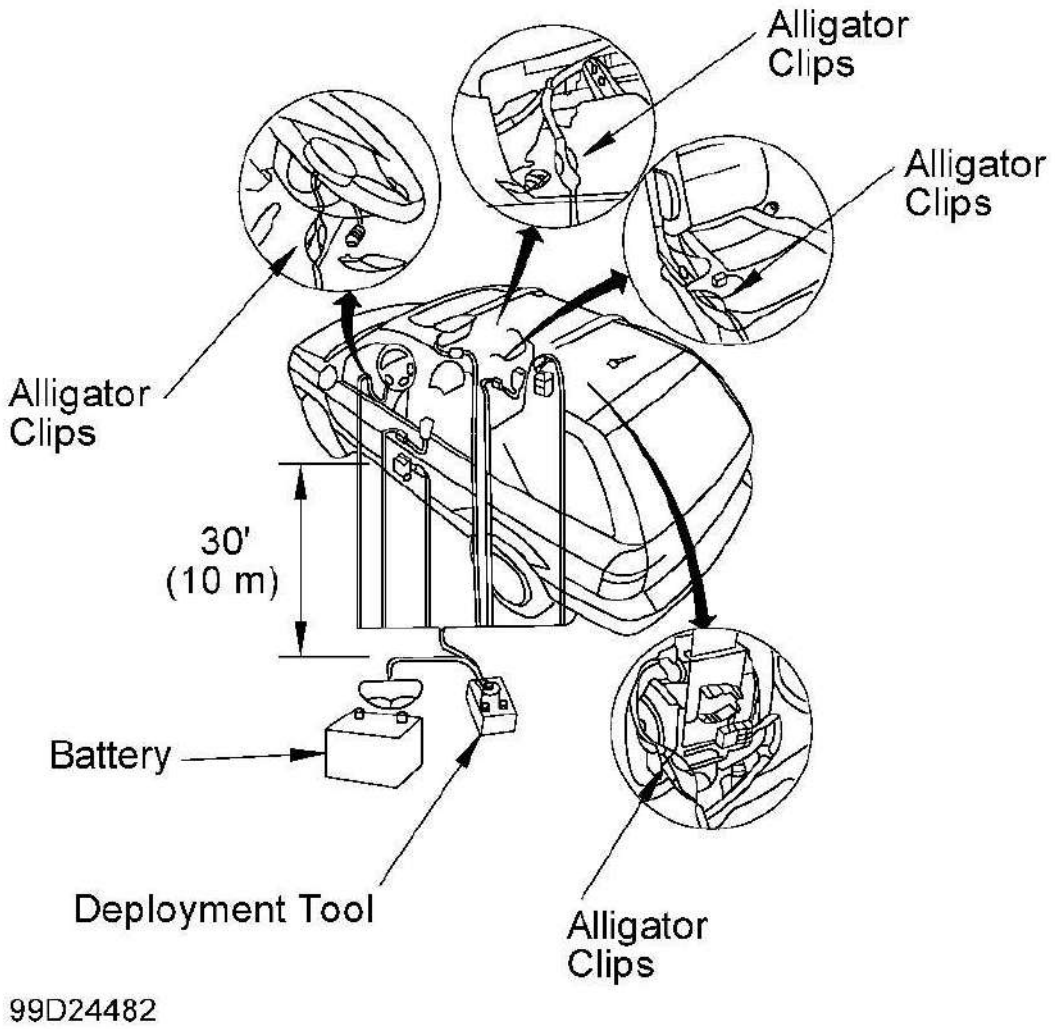

Fig. 4: Deploying Installed Air Bag
Courtesy of AMERICAN HONDA MOTOR CO., INC.

cardiagn.com

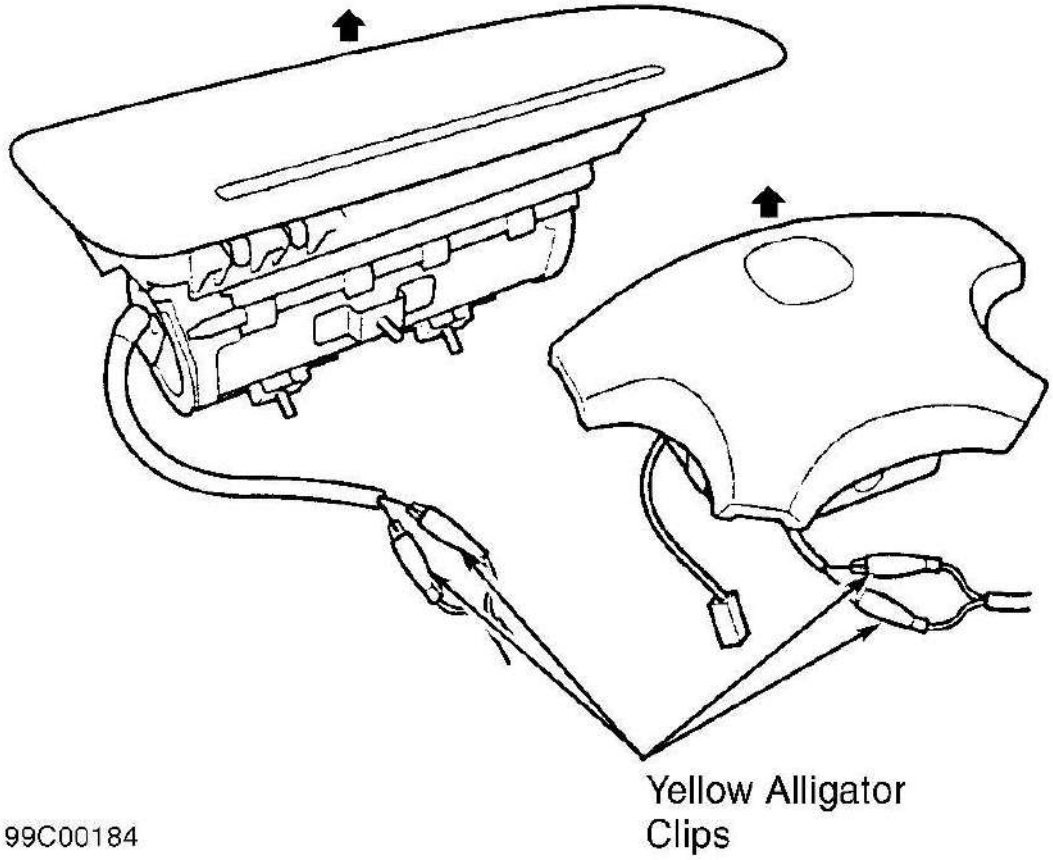

Fig. 5: Deploying Removed Air Bag
Courtesy of AMERICAN HONDA MOTOR CO., INC.

DAMAGED AIR BAG SPECIAL PROCEDURE

WARNING: **Accidental air bag deployment is possible. Personal injury may result. An undeployed air bag should be considered a potentially explosive device that can cause serious injury.**

1. If air bag or pretensioner is installed in vehicle, follow appropriate removal procedure. See . Remove connector and short together inflator by twisting wires together.
2. Package air bag in exactly same packaging that replacement part came in. Mark outside of box "DAMAGED AIR BAG NOT DEPLOYED" so it is not confused in parts stock. Contact manufacturer for instructions on returning air bag for disposal.

POST-COLLISION INSPECTION

cardiagn.com

When a vehicle has been involved in a collision, certain components of the passive restraint system must be inspected or replaced. See **AIR BAG/SRS COMPONENT INSPECTION & REPLACEMENT TABLES** article in the GENERAL INFORMATION section.

REMOVAL & INSTALLATION

WARNING: Accidental air bag deployment is possible. Personal injury may result. Read and follow all WARNINGS and AIR BAG SAFETY PRECAUTIONS before working on air bag system or related components.

NOTE: Before disconnecting any harness connector, see HARNESS CONNECTOR PRECAUTIONS under DIAGNOSTIC TESTS.

CABLE REEL

Removal

1. Before proceeding, see **AIR BAG SAFETY PRECAUTIONS** . Disable air bag system. See **DISABLING SYSTEM** under DISABLING & ACTIVATING AIR BAG SYSTEM. Ensure front wheels are in straight-ahead position. Remove driver-side air bag. See **DRIVER-SIDE AIR BAG** .
2. Disconnect connectors from radio remote and cruise control switches. Remove steering wheel nut. Remove steering wheel using appropriate steering wheel puller. Remove instrument panel lower cover. Remove upper and lower steering column covers. See **Fig. 6** . Disconnect instrument panel harness 4-pin and cable reel 2-pin connectors. See **Fig. 7** . Remove cable reel from column.

Installation

To install, reverse removal procedure. Ensure front wheels are in straight-ahead position. Install cancel sleeve so projections are aligned vertically. See **Fig. 8** . Center cable reel if necessary. See **CABLE REEL CENTERING** under ADJUSTMENTS. Tighten steering wheel nut to specification. See **TORQUE SPECIFICATIONS** . Activate air bag system. See **ACTIVATING SYSTEM** under DISABLING & ACTIVATING AIR BAG SYSTEM.

cardiagn.com

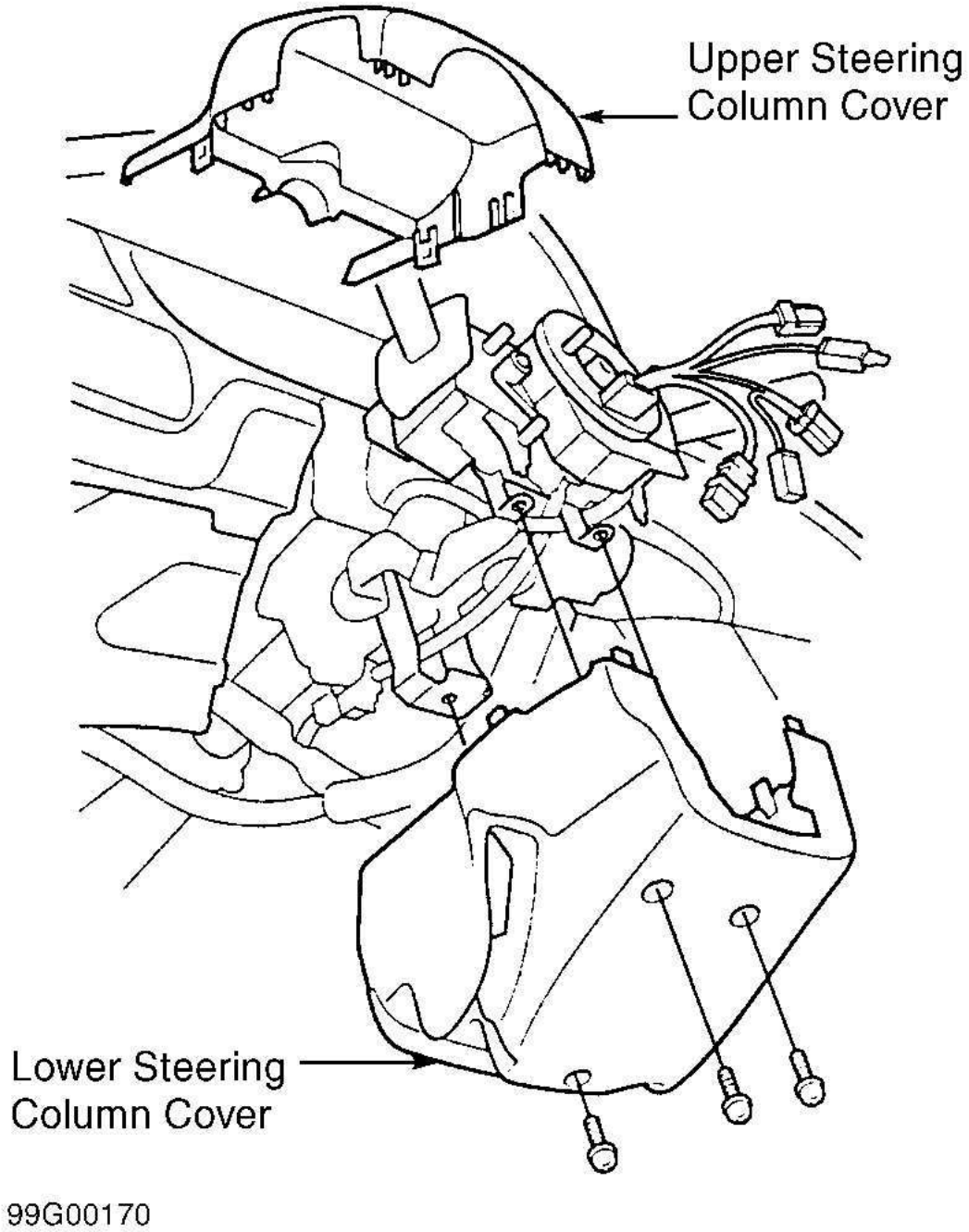

Fig. 6: Removing Steering Column Covers
Courtesy of AMERICAN HONDA MOTOR CO., INC.

cardiagn.com

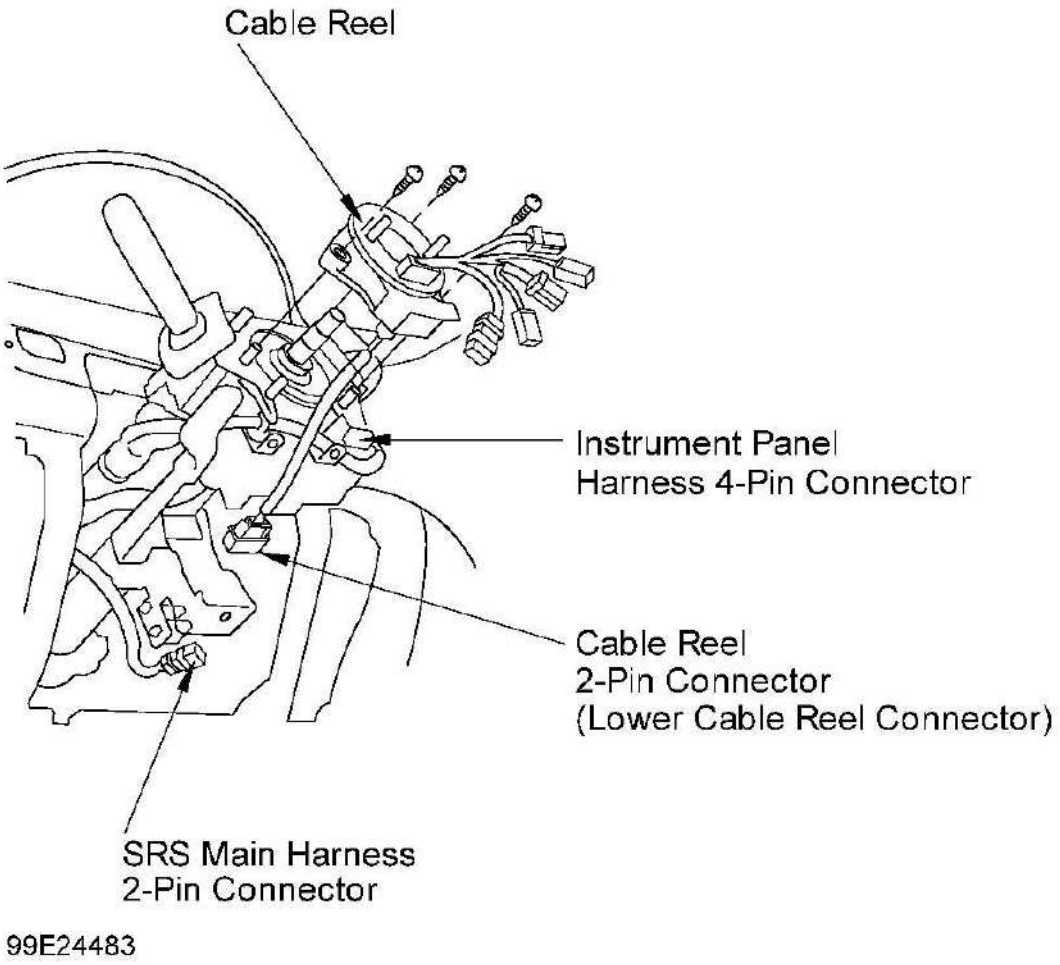

Fig. 7: Identifying Cable Reel
Courtesy of AMERICAN HONDA MOTOR CO., INC.

cardiagn.com

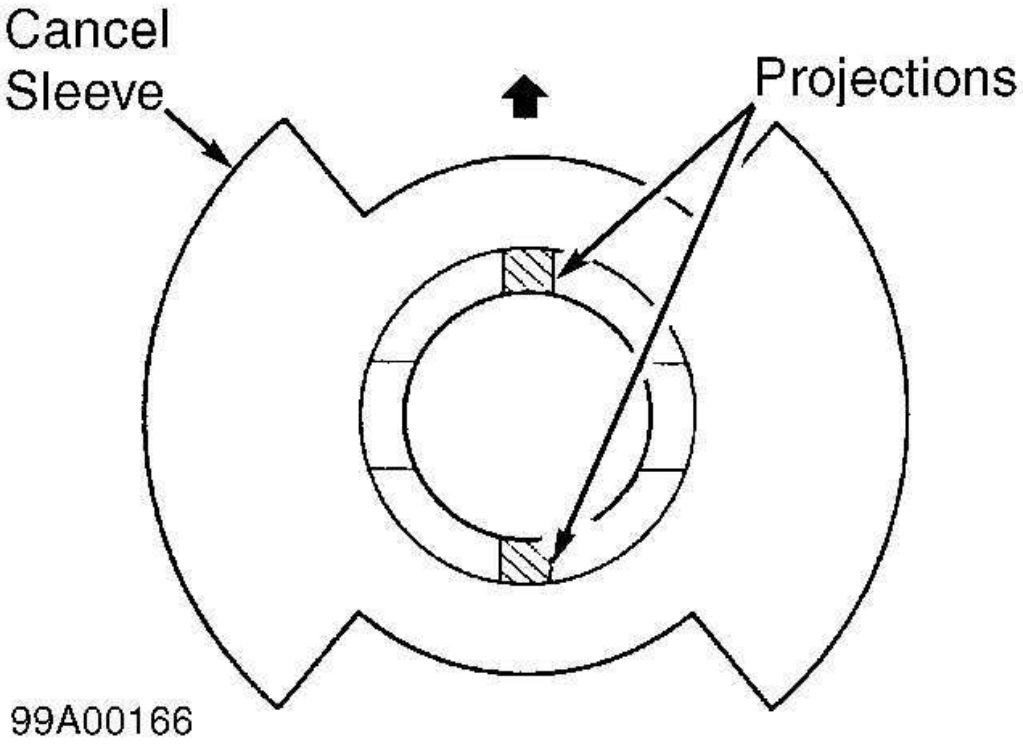

Fig. 8: Aligning Cancel Sleeve & Cable Reel
Courtesy of AMERICAN HONDA MOTOR CO., INC.

DRIVER-SIDE AIR BAG

Removal & Installation

1. Before proceeding, see **AIR BAG SAFETY PRECAUTIONS** . Disable air bag system. See **DISABLING SYSTEM** under DISABLING & ACTIVATING AIR BAG SYSTEM. Remove access panel from bottom of steering wheel. Disconnect air bag connector from cable reel connector. See **Fig. 9** . Remove Torx bolt covers. Using Torx T30 bit, remove Torx bolts securing air bag assembly to steering wheel. See **Fig. 10** . Remove air bag assembly. Disconnect horn connector.
2. To install, reverse removal procedure. Tighten NEW Torx bolts to specification. See **TORQUE SPECIFICATIONS** . Activate air bag system. See **ACTIVATING SYSTEM** under DISABLING & ACTIVATING AIR BAG SYSTEM.

cardiagn.com

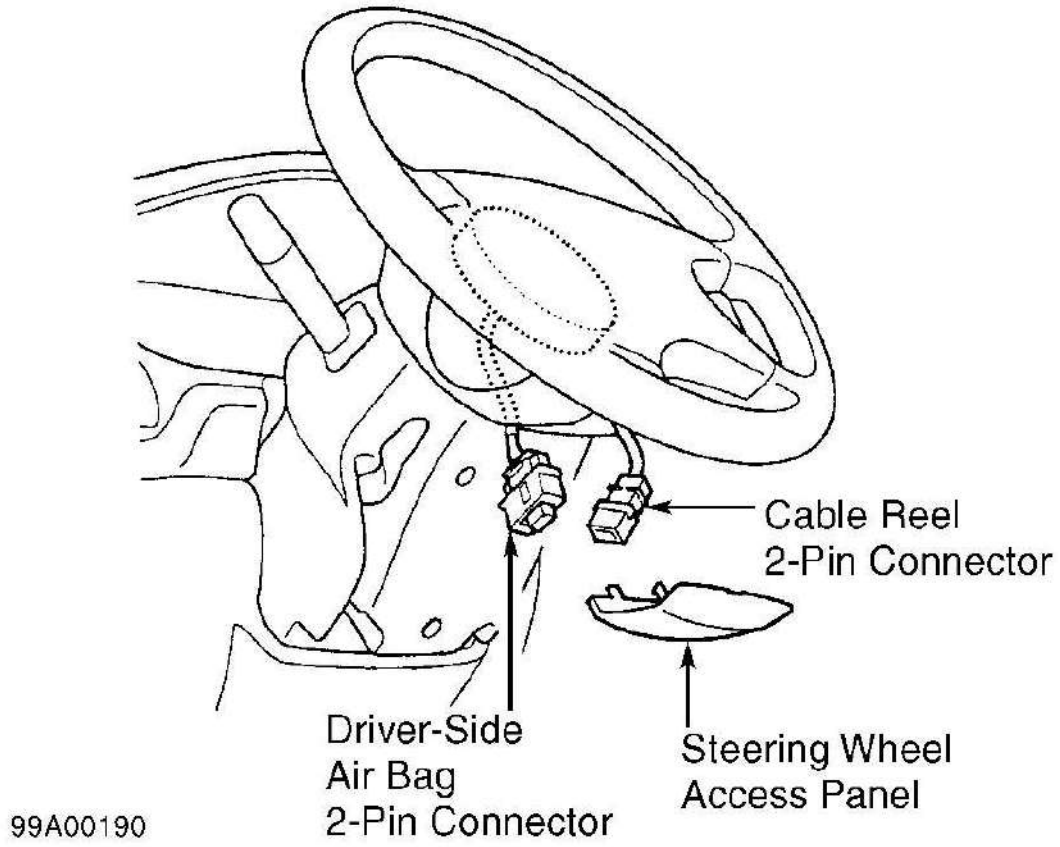

Fig. 9: Disconnecting Driver-side Air Bag
Courtesy of AMERICAN HONDA MOTOR CO., INC.

cardiagn.com

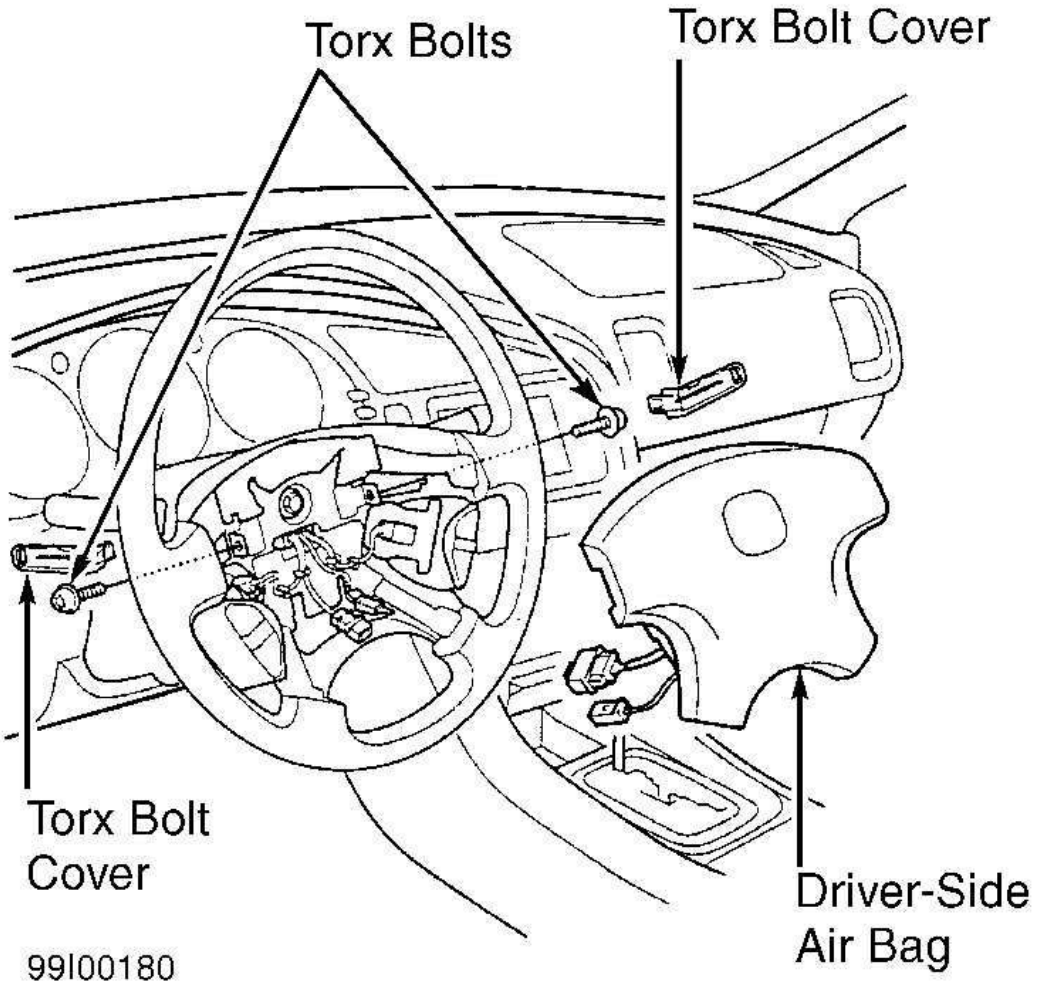

Fig. 10: Removing Driver-side Air Bag Assembly
Courtesy of AMERICAN HONDA MOTOR CO., INC.

PASSENGER-SIDE AIR BAG

Removal & Installation

1. Before proceeding, see **AIR BAG SAFETY PRECAUTIONS** . Disable air bag system. See **DISABLING SYSTEM** under DISABLING & ACTIVATING AIR BAG SYSTEM. Remove glove box. Remove 4-pin connector from holder, then disconnect air bag connector from SRS main harness connector. See **Fig. 11** . Remove harness clamp. Remove air bag mounting nuts from bracket. See **Fig. 12** . Cover air bag lid and instrument panel with cloth, and pry carefully with screwdriver to lift passenger-side air bag out of instrument panel.
2. To install, reverse removal procedure. Tighten passenger-side air bag mounting nuts to specification. See

cardiagn.com

TORQUE SPECIFICATIONS . Activate air bag system. See **ACTIVATING SYSTEM** under DISABLING & ACTIVATING AIR BAG SYSTEM.

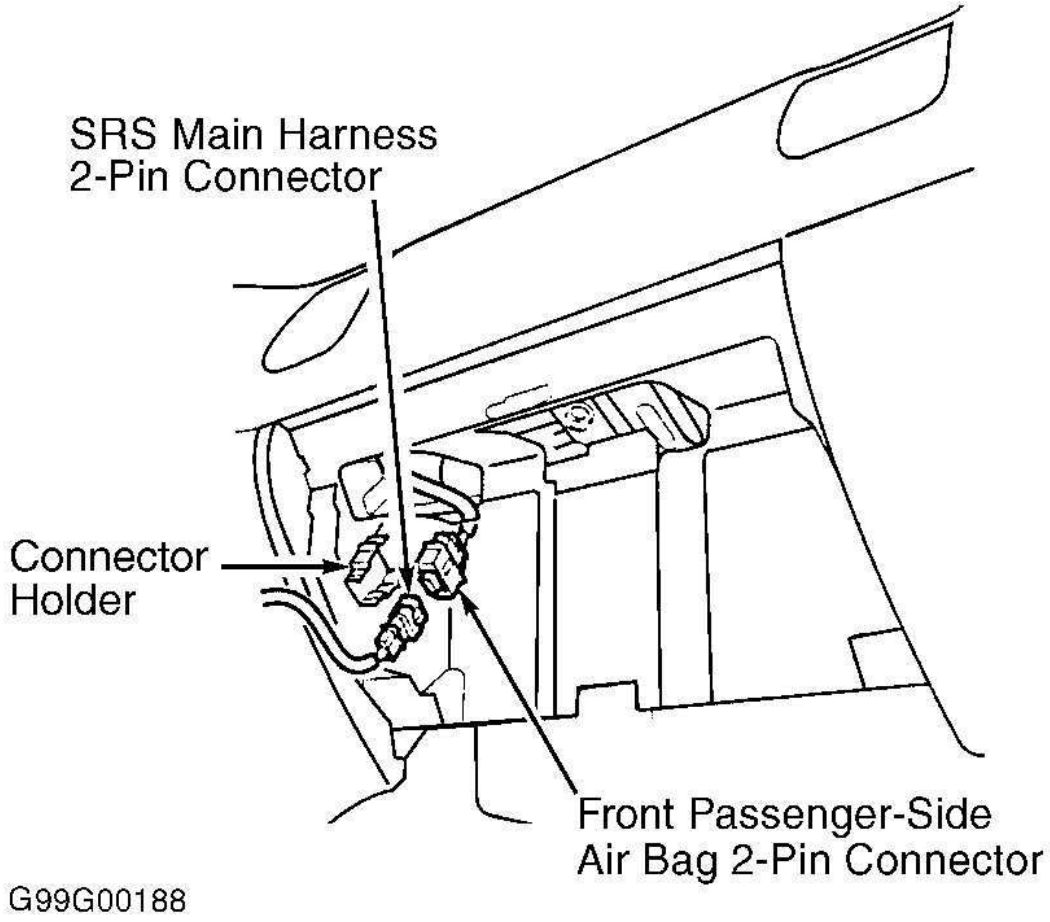

Fig. 11: Disconnecting Passenger-side Air Bag
Courtesy of AMERICAN HONDA MOTOR CO., INC.

cardiagn.com

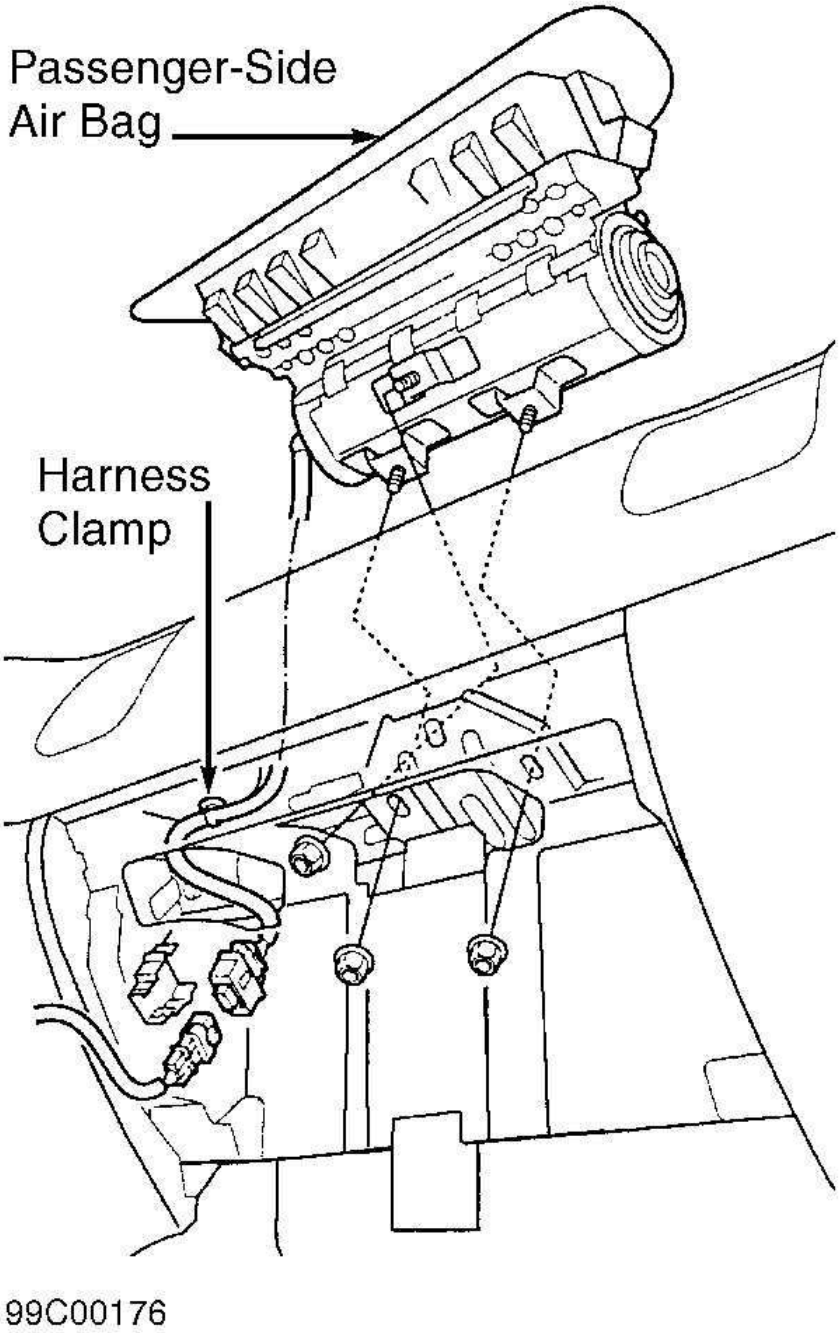

Fig. 12: Removing Passenger-side Air Bag
Courtesy of AMERICAN HONDA MOTOR CO., INC.

SEAT BELT TENSIONERS

cardiagn.com

Removal & Installation

1. Before proceeding, see **AIR BAG SAFETY PRECAUTIONS** . Disable air bag system. See **DISABLING SYSTEM** under DISABLING & ACTIVATING AIR BAG SYSTEM. Remove appropriate B-pillar trim panel. Disconnect side wire harness 2-pin connector from seat belt tensioner connector. See **Fig. 13** . Remove shoulder harness anchor bolts. Remove seat belt tensioner mounting bolts and tensioner.
2. To install, reverse removal procedure. seat belt tensioner mounting bolts to specification. See **TORQUE SPECIFICATIONS** . Activate air bag system. See **ACTIVATING SYSTEM** under DISABLING & ACTIVATING AIR BAG SYSTEM.

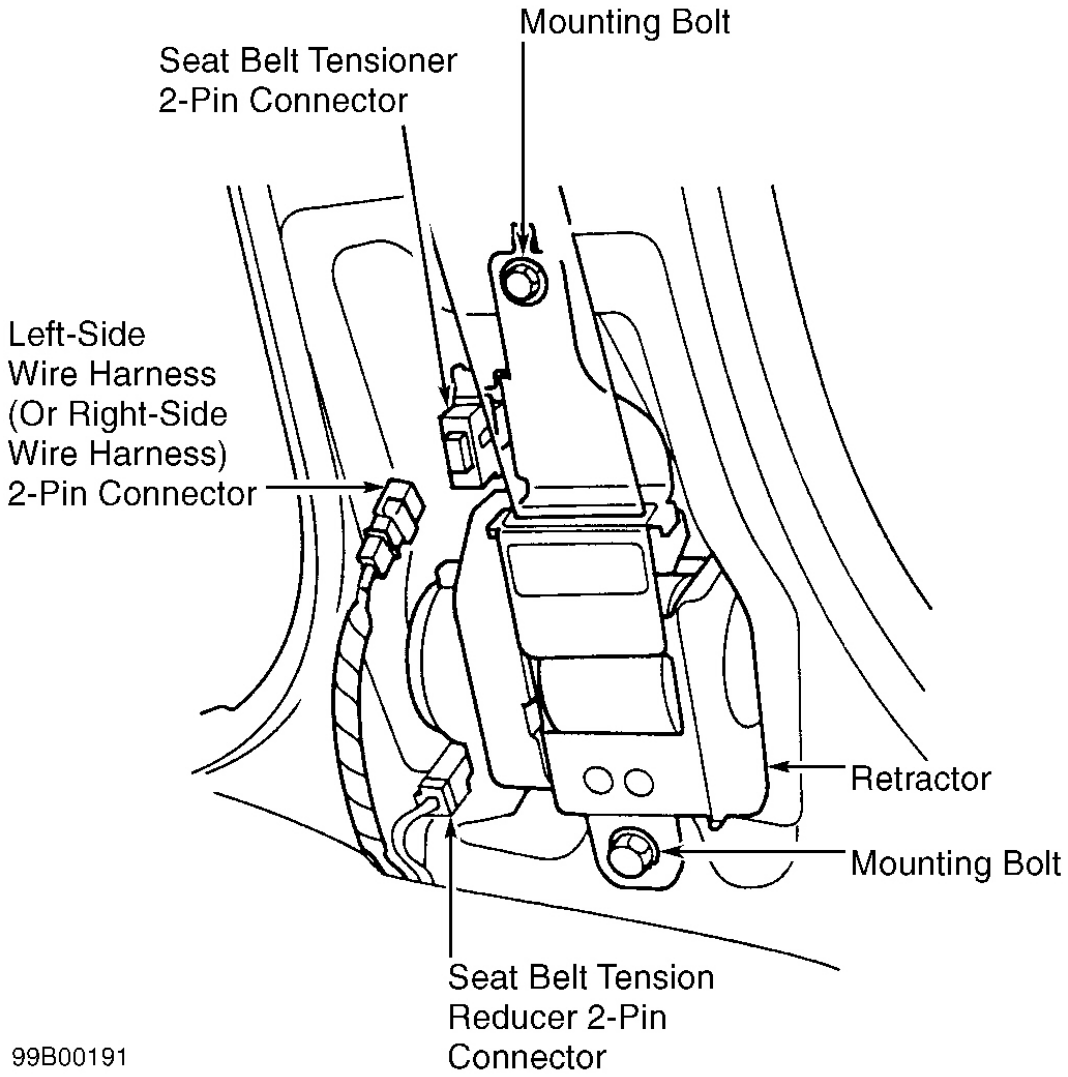

Fig. 13: Removing & Installing Seat Belt Tensioner
Courtesy of AMERICAN HONDA MOTOR CO., INC.

cardiagn.com

SIDE-IMPACT AIR BAGS

Removal & Installation

1. Before proceeding, see **AIR BAG SAFETY PRECAUTIONS** . Disable air bag system. See **DISABLING SYSTEM** under DISABLING & ACTIVATING AIR BAG SYSTEM. Disconnect side-impact air bag connector from SRS floor harness connector. See **Fig. 14** . Remove seat assembly and seat back cover. Remove mounting nuts and side-impact air bag. See **Fig. 15** .
2. To install, reverse removal procedure. Tighten side-impact air bag mounting nuts specification. See **TORQUE SPECIFICATIONS** . to 87 INCH lbs. (9.8 N.m). See **Fig. 15** . Activate air bag system. See **ACTIVATING SYSTEM** under DISABLING & ACTIVATING AIR BAG SYSTEM.

cardiagn.com

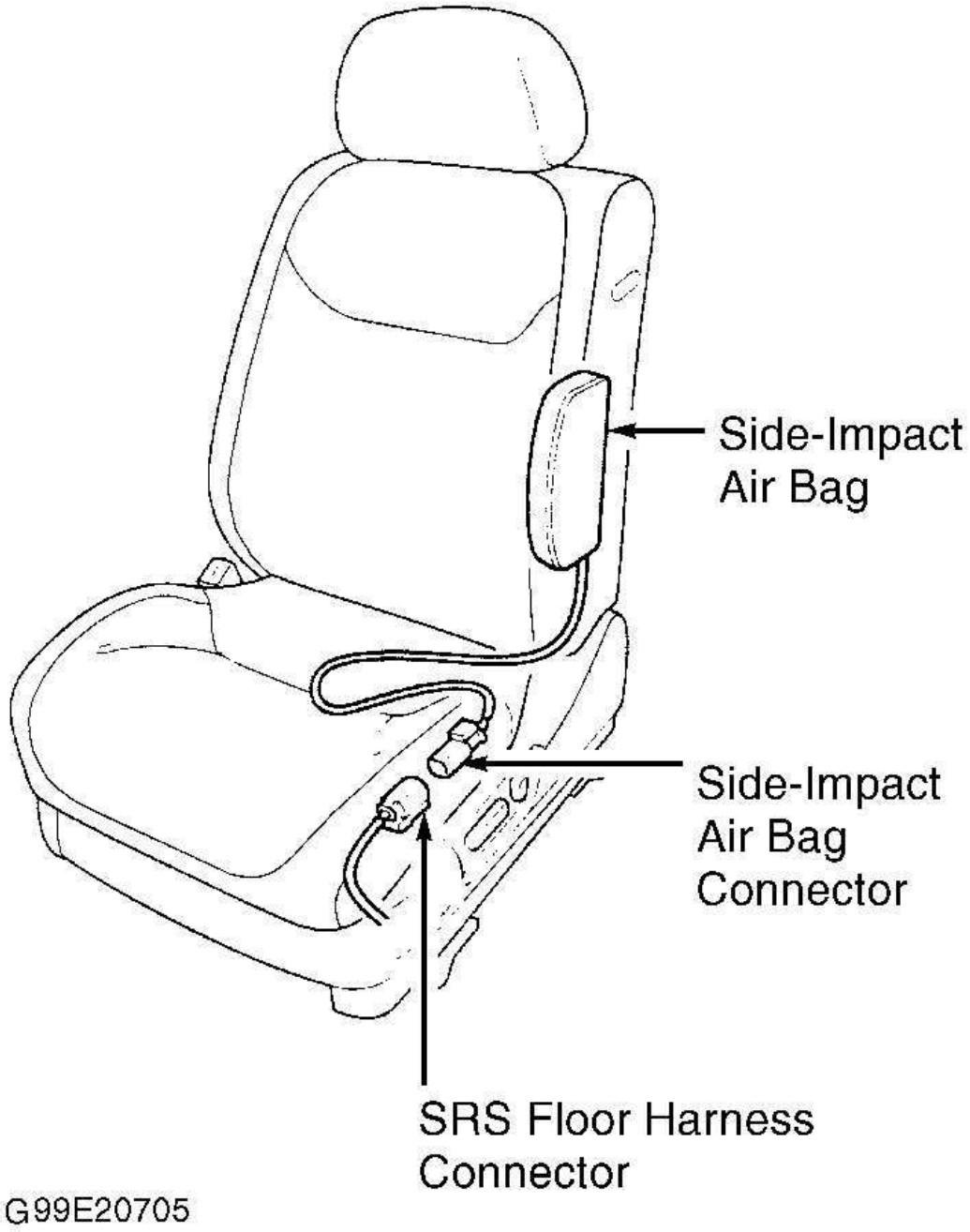

Fig. 14: Disconnecting Side-impact Air Bags
Courtesy of AMERICAN HONDA MOTOR CO., INC.

cardiagn.com

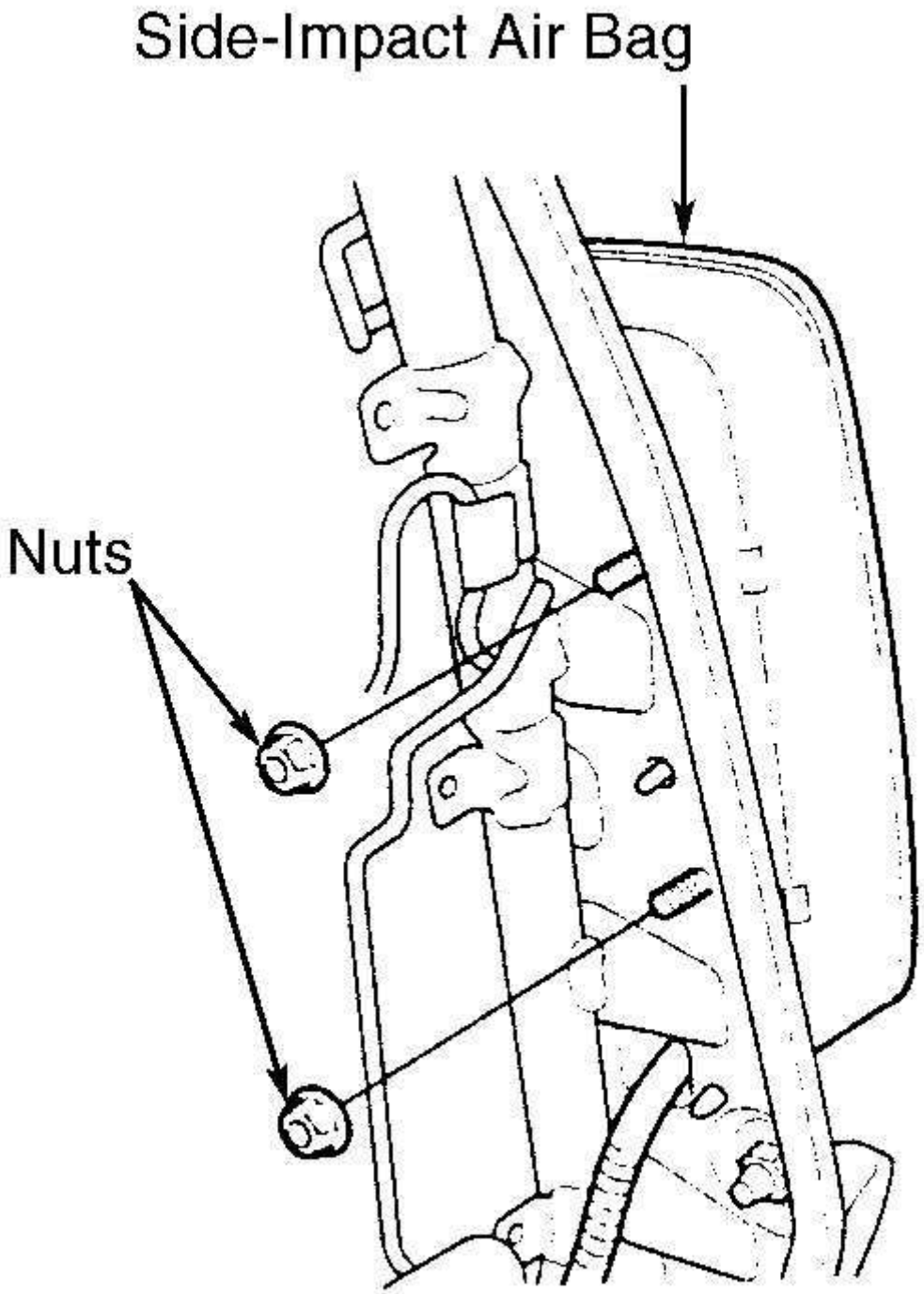

G99G20707

cardiagn.com

Fig. 15: Removing Side-impact Air Bag Assembly
Courtesy of AMERICAN HONDA MOTOR CO., INC.

SIDE-IMPACT SENSORS

Removal & Installation

WARNING: Accidental air bag deployment is possible. Personal injury may result. Disconnect side-impact air bag connector from SRS floor harness connector before disconnecting side-impact sensor connector. Avoid turning ignition on and connecting battery.

1. Before proceeding, see **AIR BAG SAFETY PRECAUTIONS** . Disable air bag system. See **DISABLING SYSTEM** under DISABLING & ACTIVATING AIR BAG SYSTEM. Remove seat assembly and lower B-pillar trim panel. Turn up carpet and disconnect SRS floor harness connector from side-impact sensor. Using T30 Torx bit, remove side-impact sensor mounting bolt. See **Fig. 16** . Remove side-impact sensor.
2. To install, reverse removal procedure. Tighten NEW side-impact sensor mounting bolt to specification. See **TORQUE SPECIFICATIONS** . Activate air bag system. See **ACTIVATING SYSTEM** under DISABLING & ACTIVATING AIR BAG SYSTEM.

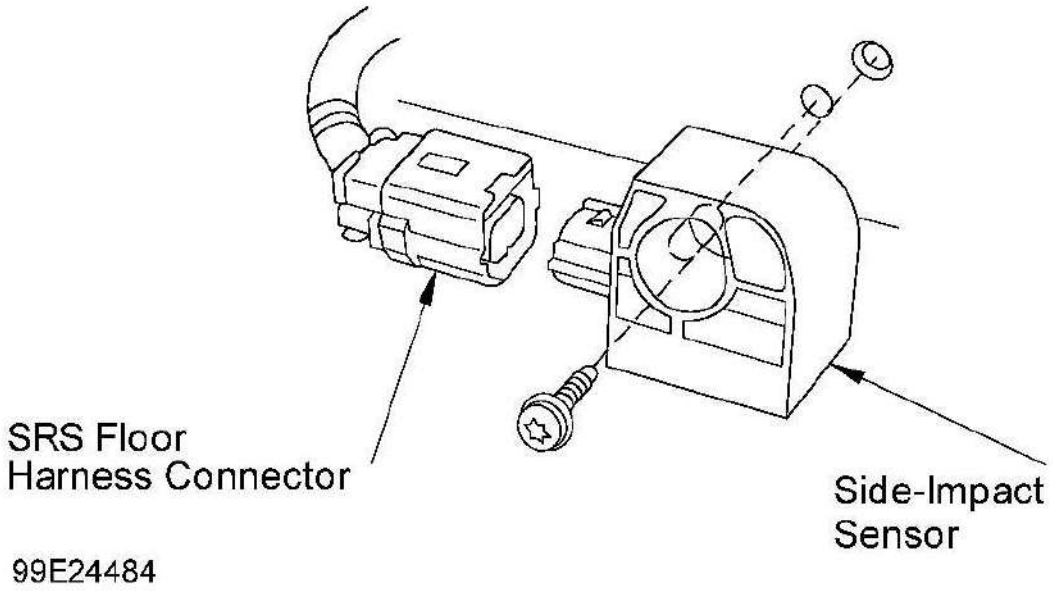

Fig. 16: Removing Side-impact Sensor
Courtesy of AMERICAN HONDA MOTOR CO., INC.

SRS UNIT

cardiagn.com

Removal

1. Before proceeding, see **AIR BAG SAFETY PRECAUTIONS** . Disable air bag system. See **DISABLING SYSTEM** under DISABLING & ACTIVATING AIR BAG SYSTEM. Disconnect driver-side air bag connector. See **DRIVER-SIDE AIR BAG** . Disconnect passenger-side air bag connector. See **PASSENGER-SIDE AIR BAG** . Disconnect left and right side-impact air bag connectors. See **SIDE-IMPACT AIR BAGS** . Disconnect left and right seat belt tensioner connectors. See **SEAT BELT TENSIONERS** .
2. Detach clips by hand and remove center panel lower trim. See **Fig. 17** . Pull up on cup holder and remove. Remove shift indicator trim ring. Gently detach clips and remove console panel. Disconnect seat heater switches. Detach clips and release hooks, then remove left and right console side trims. See **Fig. 18** . Gently pull out console rear trim to detach clips and release hooks.
3. Disconnect rear A/C-heater control panel connector. Remove console mounting bolts and screws, pull center console back to detach clips and lift console from vehicle. Pull down carper exposing SRS unit. Remove SRS unit mounting bolts, disconnect harness connectors and remove SRS unit.

Installation

To install, reverse removal procedure. Tighten NEW SRS unit mounting bolts to specification. See **TORQUE SPECIFICATIONS** . Activate air bag system. See **ACTIVATING SYSTEM** under DISABLING & ACTIVATING AIR BAG SYSTEM.

cardiagn.com

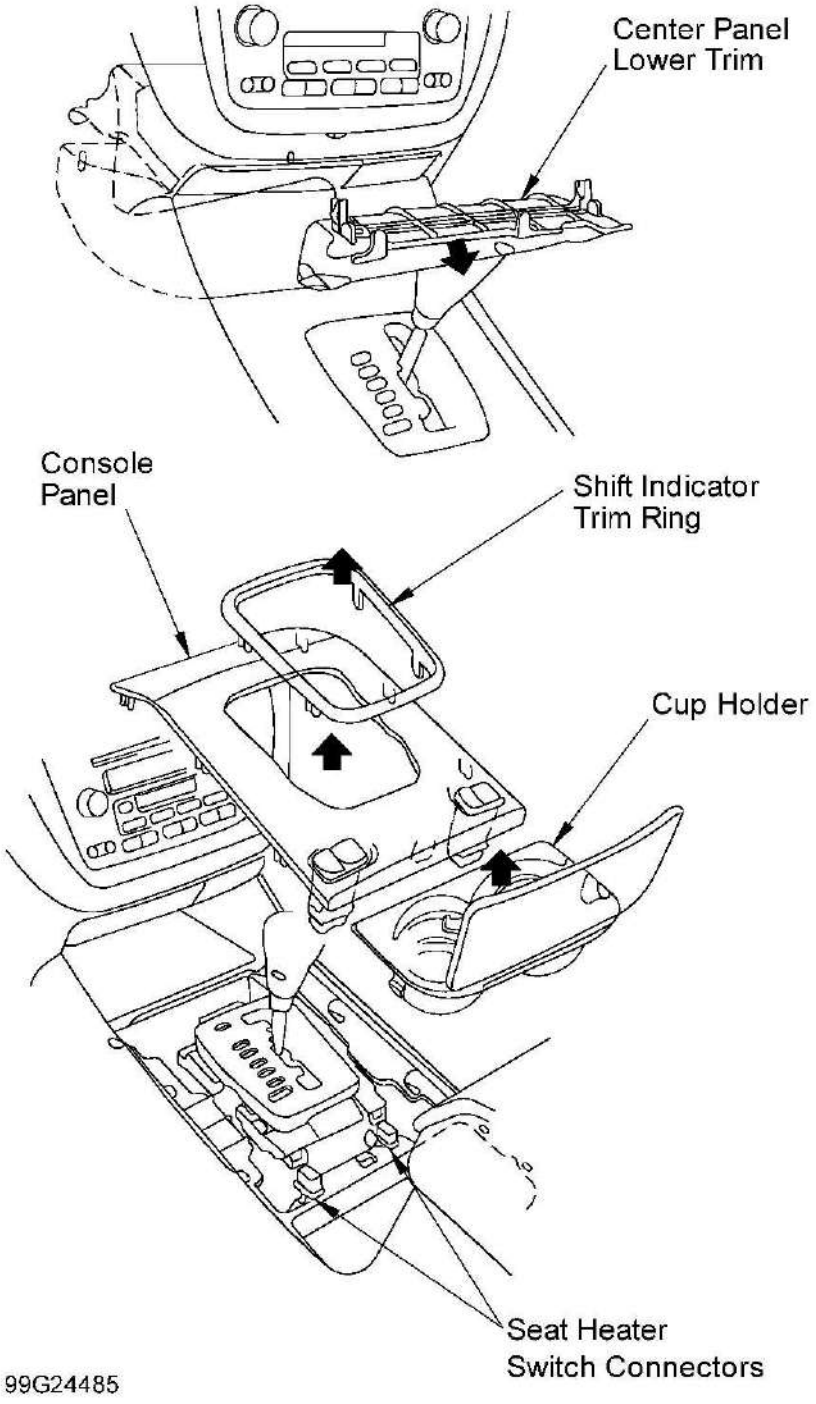

Fig. 17: Identifying Center Console (1 Of 2)
Courtesy of AMERICAN HONDA MOTOR CO., INC.

cardiagn.com

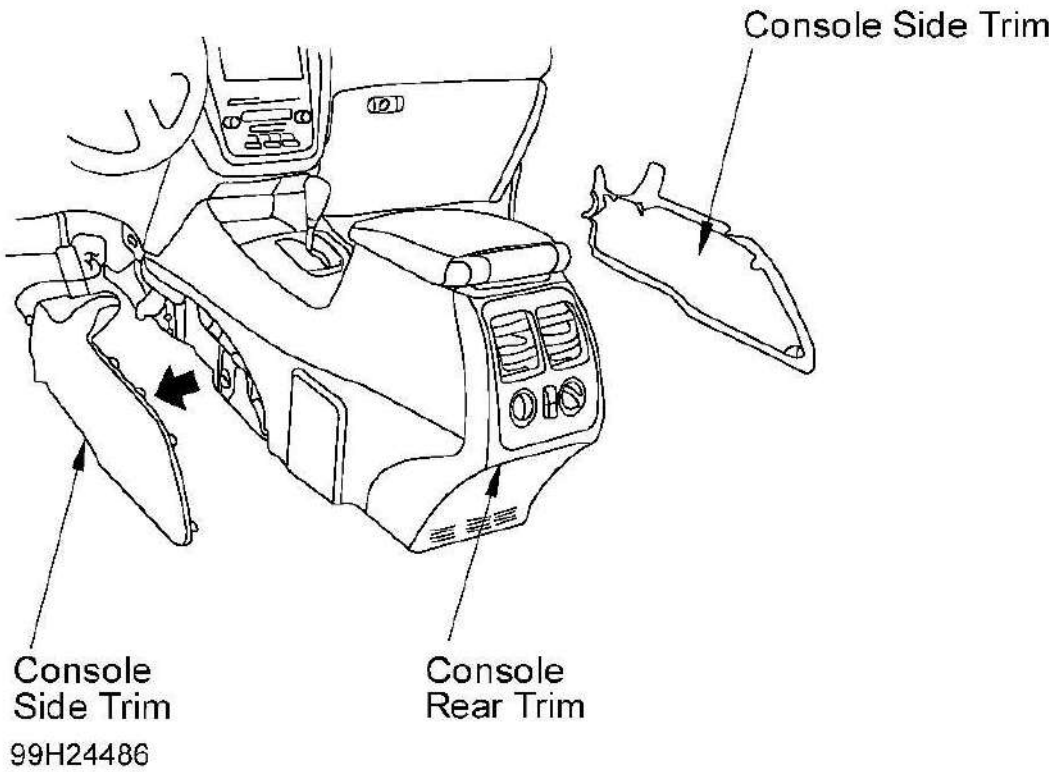

Fig. 18: Identifying Center Console (2 Of 2)
Courtesy of AMERICAN HONDA MOTOR CO., INC.

DIAGNOSTICS

WARNING: **Accidental air bag deployment is possible. Personal injury may result. Read and follow all WARNINGS and AIR BAG SAFETY PRECAUTIONS before working on air bag system or related components.**
Accidental air bag deployment is possible. Personal injury may result. Use only digital multimeter with 10 milliamp or less output rating in smallest ohmmeter range.

NOTE: **Avoid touching tester probe to SRS unit of harness connector terminals. Avoid connecting terminals with a jumper wire. Use Backprobe Adapter (07TAZ-001020A) and SCS Service Connector (07PAZ-0010100).**
Before disconnecting any harness connector, see HARNESS CONNECTOR PRECAUTIONS under DIAGNOSTIC TESTS.

SELF-DIAGNOSTIC SYSTEM

cardiagn.com

SRS includes a self-diagnostic function that checks system for faults in SRS components and related wiring. A fault exists if SRS indicator light on instrument cluster continues to glow more than 6 seconds after ignition is turned on, or glows or flashes while vehicle is driven. See **Fig. 19** .

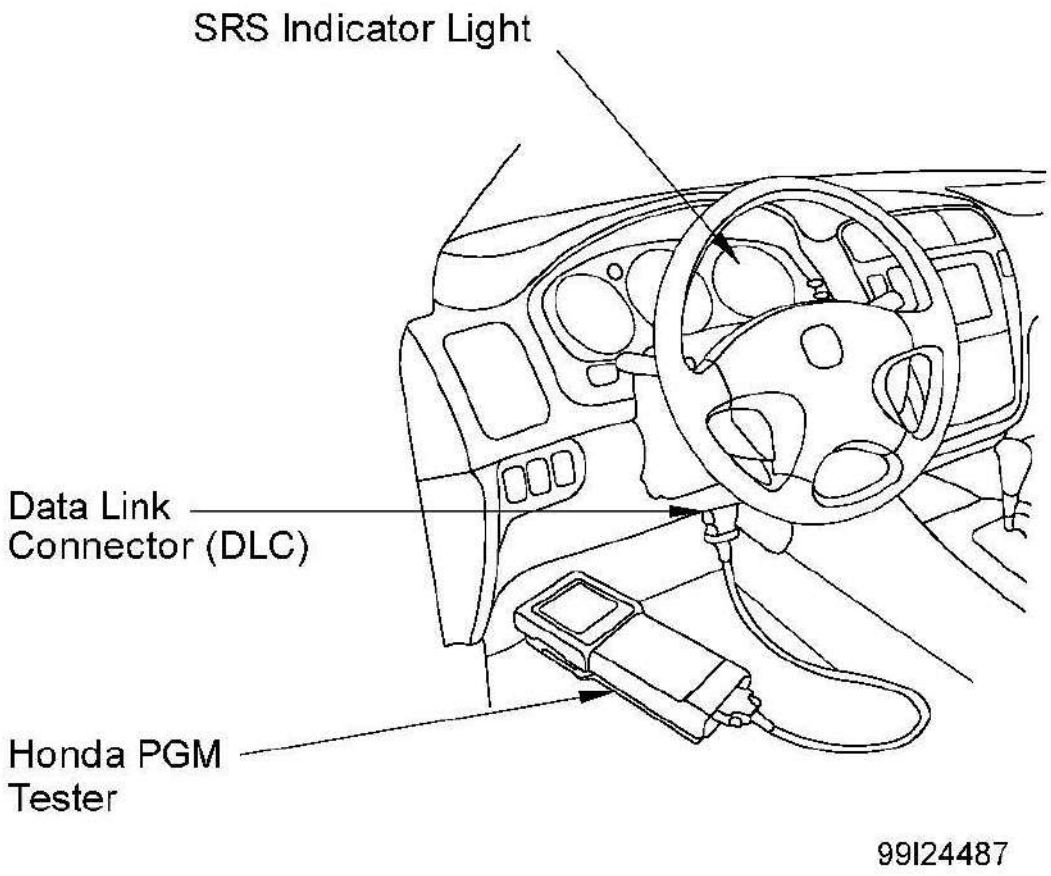

Fig. 19: Connecting Honda PGM Tester
Courtesy of AMERICAN HONDA MOTOR CO., INC.

DIAGNOSTIC TROUBLE CODE (DTC)

When SRS indicator light is on, read DTC directly by connecting a Honda PGM Tester to 16-pin data link connector, or by connecting an SCS Service Connector to service check connector and reading SRS indicator light flashes.

RETRIEVING DTC USING HONDA PGM TESTER METHOD

Connect Honda PGM Tester to 16-pin data link connector and follow tester prompts to read DTCs. See **Fig. 19** . If tester indicates no DTC, 9-1 or 9-2, confirm using SCS service connector.

cardiagn.com

RETRIEVING DTC USING SRS INDICATOR LIGHT METHOD

1. Connect Honda PGM Tester to 16-pin data link connector and follow tester prompts in "SCS" menu. See **Fig. 19** .
2. Turn ignition on. SRS indicator light will come on for about 6 seconds and go off. DTC will be indicated next. DTC consists of a main code and a sub-code. Up to 3 different malfunctions can be indicated. In case of a continuous failure, DTC will be indicated repeatedly. In case of an intermittent failure, SRS indicator light will indicate DTC once, then it will stay on. If both a continuous and an intermittent failure occur, only DTC of continuous failure will be indicated. In case system is normal (no DTC), SRS indicator light will stay on.
3. Read DTC. Turn ignition off and wait 10 seconds. Disconnect Honda PGM tester.

TROUBLESHOOTING INTERMITTENT FAILURES

NOTE: If malfunction occurs, but does not recur, it will be stored in DTC memory as an intermittent failure, and SRS indicator light will come on.

1. Retrieve DTCs. Erase DTC memory. With vehicle in Neutral, start engine and let idle. SRS indicator light will come on for about 6 seconds and then go off. Shake wire harness and connector. Test drive vehicle (quick acceleration, quick braking, cornering), and turn steering wheel fully left and right, holding 5-10 seconds to determine cause of intermittent failure.
2. If problem recurs, SRS indicator light will stay on. If intermittent failure is not duplicated, system is okay at this time.

ERASING DIAGNOSTIC TROUBLE CODE MEMORY

Erase DTC memory with Honda PGM Tester connected to data link 16-pin connector, or by connecting an SCS Service Connector (07PAZ-0010100) to Memory Erase Signal (MES) connector.

ERASING DTC MEMORY USING HONDA PGM TESTER

Connect Honda PGM Tester to 16-pin data link connector and follow tester prompts to erase DTC. See **Fig. 19** .

ERASING DTC MEMORY USING SCS SERVICE CONNECTOR

NOTE: Avoid using jumper wire in place of SCS service connector. Jumper wire may be difficult to connect and disconnect quickly enough.

1. Turn ignition off. Connect SCS Service Connector (07PAZ-0010100) to Memory Erase Signal (MES) connector. See **Fig. 20** .
2. Turn ignition on. SRS indicator light will come on for about 6 seconds then go off.
3. Disconnect SCS service connector from MES connector within 4 seconds after SRS indicator light goes off. SRS indicator light will come on again.
4. Reconnect SCS service connector to MES connector within 4 seconds after SRS indicator light comes on.

cardiagn.com

SRS indicator light will go off.

5. Disconnect SCS service connector from MES connector within 4 seconds. SRS indicator light will indicate that memory is erased by blinking 2 times.
6. Turn ignition off, and wait 10 seconds before proceeding with troubleshooting.

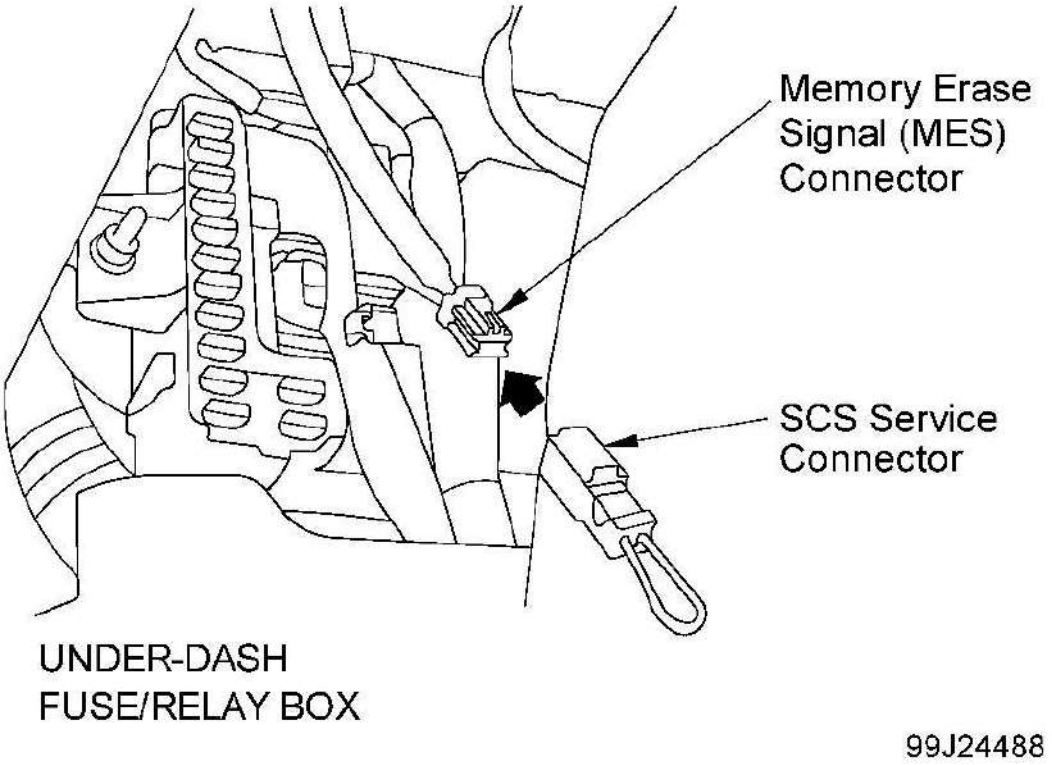

Fig. 20: Connecting SCS Service Check Connector
Courtesy of AMERICAN HONDA MOTOR CO., INC.

INITIALIZING OCCUPANT POSITION DETECTION SYSTEM (OPDS) UNIT

NOTE: Avoid using jumper wire in place of SCS short connector. Jumper wire may be difficult to connect and disconnect quickly enough.

1. Turn ignition off. Connect Honda PGM Tester to 16-pin data link connector and follow tester prompts in "SCS" menu. See **Fig. 19** . Connect SCS Service Connector (07PAZ-0010100) to Memory Erase Signal (MES) connector. See **Fig. 20** .
2. Turn ignition on. SRS indicator light will come on for about 6 seconds then go off.
3. Disconnect SCS service connector from MES connector within 4 seconds after SRS indicator light goes off. SRS indicator light will come on again.

cardiagn.com

4. Reconnect SCS service connector to MES connector within 4 seconds after SRS indicator light comes on. SRS indicator light will go off.
5. Disconnect SCS service connector from MES connector within 4 seconds. SRS indicator light will indicate that OPDS unit is initialized by blinking 2 times. If light doesn"t blink and stays on, repeat procedure. If light blinks 2 times and stays on, read DTC and proceed with troubleshooting. Turn ignition off, and wait 10 seconds.

DIAGNOSTIC TROUBLE CODES (DTCS)

Trouble Code	Possible Cause
SRS indicator light does not come on	Faulty SRS indicator light circuit
SRS indicator light stays on	Faulty SRS indicator light circuit
1-1	Open or increased resistance in driver-side air bag inflator
1-3	Short to another wire or decreased resistance in driver-side air bag inflator
1-4	Short to power in driver-side air bag inflator
1-5	Short to ground in driver-side air bag inflator
2-1	Open or increased resistance in passenger-side air bag inflator
2-3	Short to another wire or decreased resistance in passenger-side air bag inflator
2-4	Short to power in passenger-side air bag inflator
2-5	Short to ground in passenger-side air bag inflator
3-1	Open or increased resistance in driver-side seat belt tensioner
3-3	Short to another wire in driver-side seat Belt tensioner or decreased resistance
3-4	Short to power in driver-side seat belt tensioner
3-5	Short to ground in driver-side seat belt tensioner
4-1	Open or increased resistance in passenger-side seat belt tensioner
4-3	Short to another wire in passenger-side seat Belt tensioner or decreased resistance
4-4	Short to power in passenger-side seat belt tensioner
4-5	Short to ground in passenger-side seat belt tensioner
5-1	Internal failure of SRS unit-replace
5-2	Internal failure of SRS unit-replace
5-4	Internal failure of SRS unit-replace
5-5	Internal failure of SRS unit-replace
5-8	Internal failure of SRS unit-replace
6-1	Internal failure of SRS unit-replace
6-2	Internal failure of SRS unit-replace
6-3	Internal failure of SRS unit-replace
6-4	Internal failure of SRS unit-replace
6-5	Internal failure of SRS unit-replace
6-6	Internal failure of SRS unit-replace

cardiagn.com

6-7	Internal failure of SRS unit-replace
6-8	Internal failure of SRS unit-replace
7-1	Internal failure of SRS unit-replace
7-2	Internal failure of SRS unit-replace
7-3	Internal failure of SRS unit-replace
8-1	Internal failure of SRS unit-replace
8-2	Internal failure of SRS unit-replace
8-5	Internal failure of SRS unit-replace
8-6	Internal failure of SRS unit-replace
8-7	Internal failure of SRS unit-replace
8-8	Internal failure of SRS unit-replace
9-1(1)	Internal SRS unit failure
9-2(2)	Internal SRS unit failure
9-3	Faulty driver-side seat belt switch
9-4	Faulty passenger-side seat belt switch
10-1	Driver & passenger-side air bag deployed-replace
10-2	Driver-side-impact air bag deployed-replace
10-3	Driver & passenger-side air bags & driver side-impact Air bag deployed-replace
10-4	Passenger side-impact Air bag deployed-replace
10-5	Driver & passenger-side air bags & passenger side-impact Air bag deployed-replace
10-6	Driver & passenger side-impact Air bags deployed-replace
10-7	Driver & passenger-side air bags & driver & passenger side-impact air bags deployed-replace
11-1	Open or Increased resistance in driver side-impact air bag inflator
11-3	Short to another wire or decreased resistance in driver side-impact air bag inflator
11-4	Short to power in driver Side-impact air bag inflator
11-5	Short to ground in driver Side-impact air bag inflator
12-1	Open or Increased resistance in passenger side-impact air bag inflator
12-3	Short to another wire or Decreased resistance in passenger side-impact air bag inflator
12-4	Short to power in passenger side-impact air bag inflator
12-5	Short to ground in passenger side-impact air bag inflator
13-1 & **13-2**	Faulty driver side-impact sensor
13-3	Faulty SRS floor harness or driver side-impact sensor
13-4	Faulty power supply to driver Side-impact sensor-replace floor harness
13-5	Internal failure of SRS unit-replace

cardiagn.com

14-1 & **14-2**	Faulty passenger side-impact sensor
14-3	Faulty SRS floor harness or passenger side-impact sensor
14-4	Faulty power supply to passenger side-impact sensor-replace floor harness
14-5	Internal failure of SRS unit-replace
15-1	Faulty OPDS unit
15-2	Faulty side air bag indicator light
15-3	Faulty OPDS sensor

(1) If intermittent, code could result from an internal failure of SRS unit or faulty indicator light circuit. See **TROUBLESHOOTING INTERMITTENT FAILURES** .

(2) If intermittent, code could result from an internal failure of power supply (VB line). See **TROUBLESHOOTING INTERMITTENT FAILURES** .

DIAGNOSTIC TESTS

HARNESS CONNECTOR PRECAUTIONS

Before beginning the following procedures, disconnect negative battery cable and wait 3 minutes.

- Before disconnecting SRS main harness 18-pin connector from SRS unit, disconnect driver-side air bag connector, passenger-side air bag and left and right seat belt tensioners.
- Before disconnect SRS side harness 14-pin connector from SRS unit, disconnect left and right side air bag connectors, located under each front seat.
- Before disconnecting lower cable reel connector, disconnect driver-side air bag connector.
- Before disconnect SRS side harness 4-pin connector, disconnect left and right seat belt tensioner connectors.
- Before disconnect SRS side harness 2-pin connector, disconnect right side air bag connector.

SRS INDICATOR LIGHT DOES NOT COME ON

WARNING: **Accidental air bag deployment is possible. Personal injury may result. Avoid bumping SRS unit if ignition is on, or has been turned off for less than 3 minutes.**
If service connector is connected sooner than 10 seconds after ignition is turned off, SRS unit will not be completely reset and will not output DTCs.

1. Before proceeding, see **AIR BAG SAFETY PRECAUTIONS** . Turn ignition on, and check whether other indicator lights come on or not (brake system, etc.). If other indicator lights operate, go to step 5 . If other indicator lights do not operate, go to next step.
2. Turn ignition off. Access gauge assembly and disconnect gauge assembly 14-pin connector. See **Fig. 21** . Measure resistance between ground and gauge assembly 14-pin connector terminals No. 9 and 10 (Black wire) individually. If resistance is 0-1.0 ohms, go to next step. If resistance is not 0-1.0 ohms, check for open in black wire or faulty ground terminal. See **WIRING DIAGRAMS** . If ground terminal is okay,

cardiagn.com

replace appropriate wire harness.

3. Disconnect gauge assembly 18-pin connector. See **Fig. 21** . Connect voltmeter between ground and gauge assembly 18-pin connector terminal No. 17. (Blue wire). Turn ignition on and observe voltmeter. Voltage should be 8.5 volts or less. If voltage is not as specified, go to next step. If voltage is as specified, check for blown SRS indicator bulb of faulty circuit in gauge assembly. Repair or replace as necessary.
4. Turn ignition off. Disconnect SRS unit 8-pin connector. See **SRS UNIT** under REMOVAL & INSTALLATION. Connect voltmeter between ground and gauge assembly 18-pin connector terminal No. 17. (Blue wire). Turn ignition on. If voltage is less than 0.5 volt, replace SRS unit. If voltage is more than 0.5 volt, check for short to power in Blue wire. Replace appropriate wire harness.
5. Turn ignition off. Check fuse No. 9 (10-amp) in under-dash fuse/relay box. If fuse is blown, go to step 7 . If fuse is okay, Access gauge assembly and disconnect gauge assembly 14-pin connector. See **Fig. 21** . connect voltmeter between ground and gauge assembly 14-pin connector terminal No. 7 (Yellow wire). Turn ignition on add observe voltmeter and go to next step.
6. If battery voltage is present, check for faulty SRS indicator circuit in gauge assembly or poor contact at gauge assembly 14-pin connector and gauge assembly. If connections are okay, replace gauge assembly. If battery is not present, check for open in driver-side under-dash fuse/relay box fuse No 9 line. open in Yellow wire of gauge assembly wire harness. or in left side wire harness. If driver-side under-dash fuse/relay box is okay, replace appropriate wire harness.
7. Replace fuse No. 9. Turn ignition on and recheck SRS indicator light. If indicator light comes on, system is okay at this time. If indicator light does not come on, check for short to ground in driver-side under-dash fuse/relay box fuse No.9 line. Repair or replace as necessary.

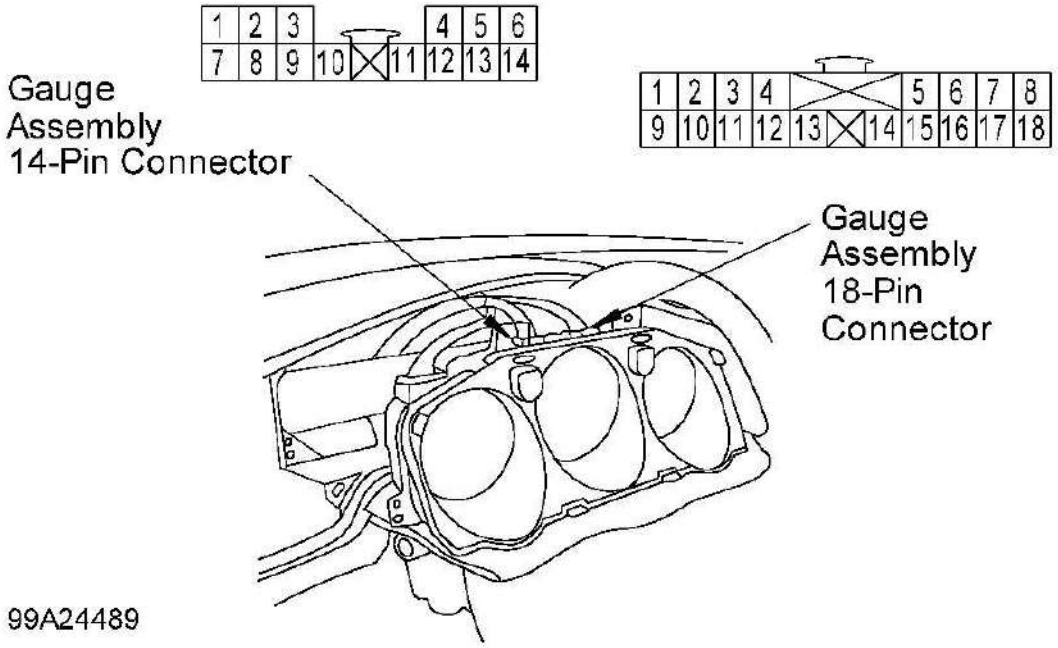

Fig. 21: Identifying Gauge Assembly Connector Terminals

cardiagn.com

Courtesy of AMERICAN HONDA MOTOR CO., INC.

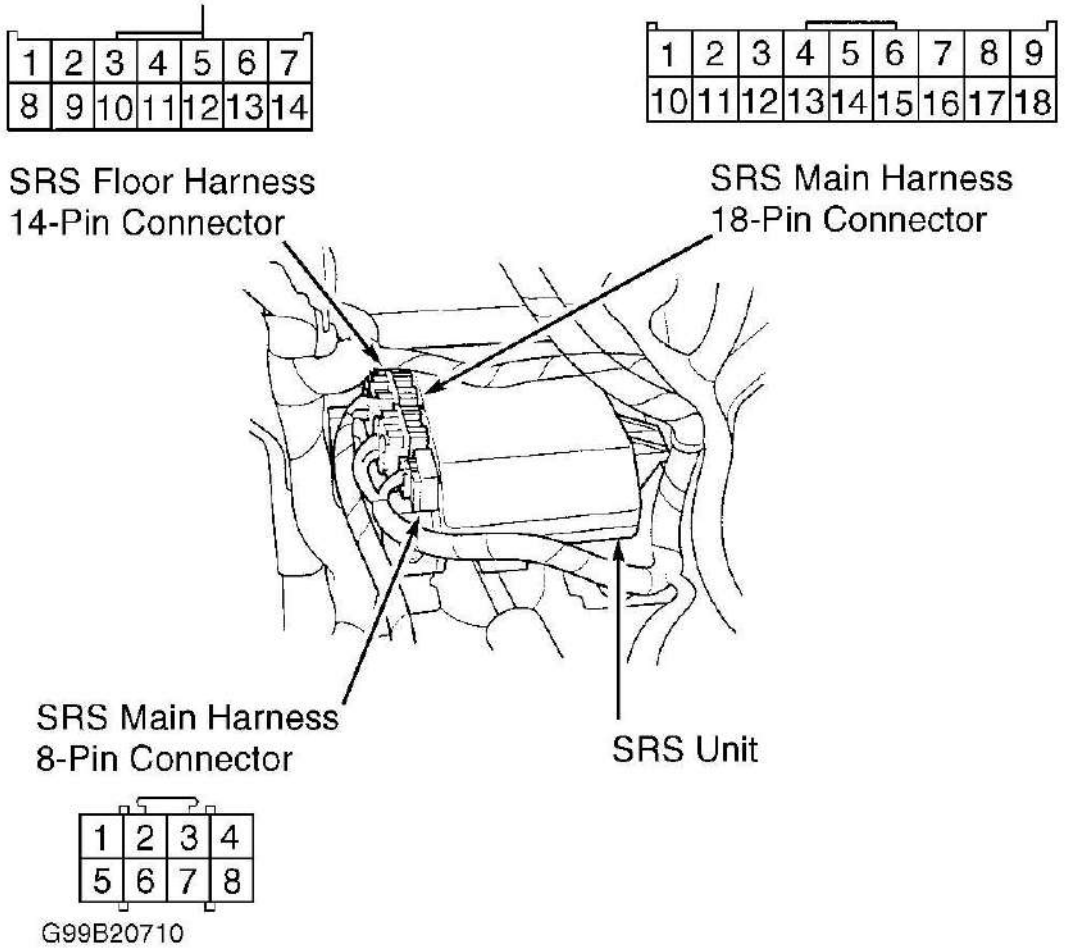

Fig. 22: Identifying SRS Unit Connector Terminals
Courtesy of AMERICAN HONDA MOTOR CO., INC.

SRS INDICATOR LIGHT STAYS ON

WARNING: **Accidental air bag deployment is possible. Personal injury may result. Avoid bumping SRS unit if ignition is on, or has been turned off for less than 3 minutes.**

1. Before proceeding, see **AIR BAG SAFETY PRECAUTIONS** . Using SCS service wire method, erase DTC memory. See **ERASING DTC MEMORY USING SCS SERVICE CONNECTOR** under DIAGNOSTICS. If SRS indicator light goes off while erasing DTC memory, go to step 9 . If SRS indicator light does not go off while erasing DTC memory, go to next step.
2. Turn ignition off. Check fuse No. 2 (10-amp) in under-dash fuse/relay box. If fuse is okay, go to step 5 .

cardiagn.com

If fuse is blown, replace fuse. Turn ignition on, wait 30 seconds, then turn ignition off. Check fuse No. 2. If fuse is okay, system is functioning properly at this time. If fuse is blown, go to next step.

3. Disable air bag system. See **DISABLING SYSTEM** under DISABLING & ACTIVATING AIR BAG SYSTEM. Disconnect driver-side air bag. See **DRIVER-SIDE AIR BAG** under REMOVAL & INSTALLATION. Disconnect passenger-side air bag. See **PASSENGER-SIDE AIR BAG** under REMOVAL & INSTALLATION. Disconnect left and right seat belt tensioners. See **SEAT BELT TENSIONERS** under REMOVAL & INSTALLATION. Disconnect SRS unit 18-pin connector. See **SRS UNIT** under REMOVAL & INSTALLATION. Activate air bag system. Turn ignition on, wait 30 seconds, then turn ignition off. Check fuse No. 2 (10-amp) in under-dash fuse/relay box. If fuse is okay, replace SRS unit. If fuse is blown, go to next step.
4. Replace fuse No. 2 (10-amp) in under-dash fuse/relay box. Disconnect SRS main harness 2-pin connector from driver-side under-dash fuse/relay box. See **Fig. 23** . Turn ignition on, wait 30 seconds, then turn ignition off. Check fuse No. 2 (10-amp) in under-dash fuse/relay box. If fuse is okay, replace SRS main harness. If fuse is blown, check for short to ground in driver-side under-dash fuse/relay box fuse No. 2 line. Repair or replace fuse/relay box as necessary.
5. Disable air bag system. See **DISABLING SYSTEM** under DISABLING & ACTIVATING AIR BAG SYSTEM. Disconnect driver-side air bag, passenger-side air bag, left and right seat belt tensioners and SRS unit 18-pin connector. See **REMOVAL & INSTALLATION** . Reconnect negative battery cable. Turn ignition on. Measure voltage between ground and SRS unit 18-pin connector terminal No. 4 (Black/White or Green wire). If battery voltage is present, go to step 7 . If battery voltage is not present, go to next step.
6. Turn ignition off. Disconnect SRS main harness 2-pin connector from driver-side under-dash fuse/relay box. See **Fig. 23** . Disconnect SRS unit 8-pin connector. Measure resistance of Black/White or Green wire between SRS unit 18-pin connector terminal No. 4 and SRS main harness 2-pin connector. See **Fig. 22** . See **WIRING DIAGRAMS** . If resistance is 0-1.0 ohm, check for open in Black/White or Green wire and connections. If connections are okay, replace driver-side under-dash fuse/relay box. If resistance is not 0-1.0ohm, replace SRS main harness.
7. Turn ignition off. Disconnect SRS unit 8-pin connector. Connect fused jumper wire between SRS unit 8-pin connector terminal No. 5 (Blue or Green wire) and SRS unit 18-pin connector terminal No. 4 (Black/White or Green wire). Turn ignition on and observe SRS indicator. If SRS indicator goes off, replace SRS unit. If SRS indicator does not go off, go to next step.
8. Turn ignition off and remove jumper wire. Check fuse No. 2 (10-amp). If fuse is blown, go to next step. If fuse is okay, turn ignition off. Disconnect instrument panel wire harness 18-pin connector from gauge assembly. See **Fig. 21** . Measure resistance of Blur wire between instrument panel wire harness 18-pin connector terminal No. 17 and SRS main harness 8-pin connector terminal No. 5. See **Fig. 21** & **Fig. 22** . If resistance is less than one ohm, replace gauge assembly. If resistance is one ohm or more, replace SRS main wire harness.
9. Disconnect SRS unit 8-pin connector. Connect Honda PGM Tester to DLC and follow tester prompts to SCS menu. Measure resistance between ground and SRS unit 8-pin connector terminal No. 6 (Brown wire). If resistance is 0-1.0 ohm, replace SRS unit. If resistance is not 0-1.0 ohm, repair open in Brown wire.

cardiagn.com

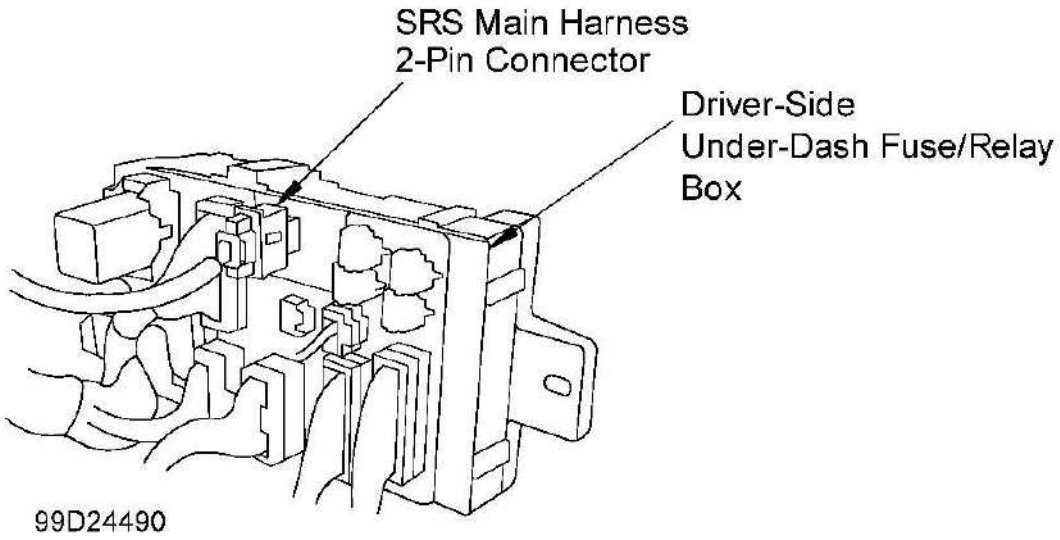

Fig. 23: Locating SRS Main Harness 2-pin Connector
Courtesy of AMERICAN HONDA MOTOR CO., INC.

DTC 1-1

WARNING: **Accidental air bag deployment is possible. Personal injury may result. Avoid bumping SRS unit if ignition is on, or has been turned off for less than 3 minutes.**

1. Before proceeding, see **AIR BAG SAFETY PRECAUTIONS** . Erase DTC memory. See **ERASING DIAGNOSTIC TROUBLE CODE MEMORY** . Turn ignition on. If indicator light stays on, go to next step. If light goes off after about 6 seconds, system is okay at this time. See **TROUBLESHOOTING INTERMITTENT FAILURES** under DIAGNOSTICS.
2. Turn ignition off. Disconnect negative battery cable, and wait at least 3 minutes. Disconnect driver-side air bag connector from cable reel connector. See **Fig. 24** . DO NOT disconnect passenger-side air bag connector. Connect SRS Simulator Lead "C" (07TAZ-SZ5011A) and SRS Inflator Simulator (07SAZ-TB4011A) to cable reel connector. Reconnect negative battery cable. Erase DTC memory. Retrieve DTCs. If DTC 1-1 is indicated, go to next step. If DTC 1-1 is not indicated, replace driver-side air bag assembly. See **DRIVER-SIDE AIR BAG** under REMOVAL & INSTALLATION.
3. Turn ignition off. Disconnect negative battery cable, and wait at least 3 minutes. Disconnect SRS simulator lead "C" and SRS inflator simulator from cable reel connector. Remove instrument panel lower cover, and disconnect cable reel connector from SRS main harness. See **Fig. 25** . Connect SRS simulator lead "C" and SRS inflator simulator to SRS main harness connector. Reconnect negative battery cable. Erase DTC memory. Retrieve DTCs. If DTC 1-1 is indicated, go to next step. If DTC 1-1 is not indicated, replace cable reel. See **CABLE REEL** under REMOVAL & INSTALLATION.
4. Disconnect negative battery cable, and wait at least 3 minutes. Disconnect passenger-side air bag 4-pin connector. See **Fig. 26** . Disconnect left and right seat belt tensioners. Disconnect SRS main harness 18-

cardiagn.com

pin connector from SRS unit. See **Fig. 22** . DO NOT disconnect SRS simulator lead "C" and SRS inflator simulator from SRS main harness connector. Check resistance between SRS main harness 18-pin connector terminals No. 7 (Green wire) and No. 16 (Brown wire). If resistance is 2-3 ohms, go to next step. If resistance is not 2-3 ohms, replace SRS main harness.

5. Check for poor contact at SRS main harness 18-pin connector. If connector is okay, replace SRS unit. See **SRS UNIT** under REMOVAL & INSTALLATION.

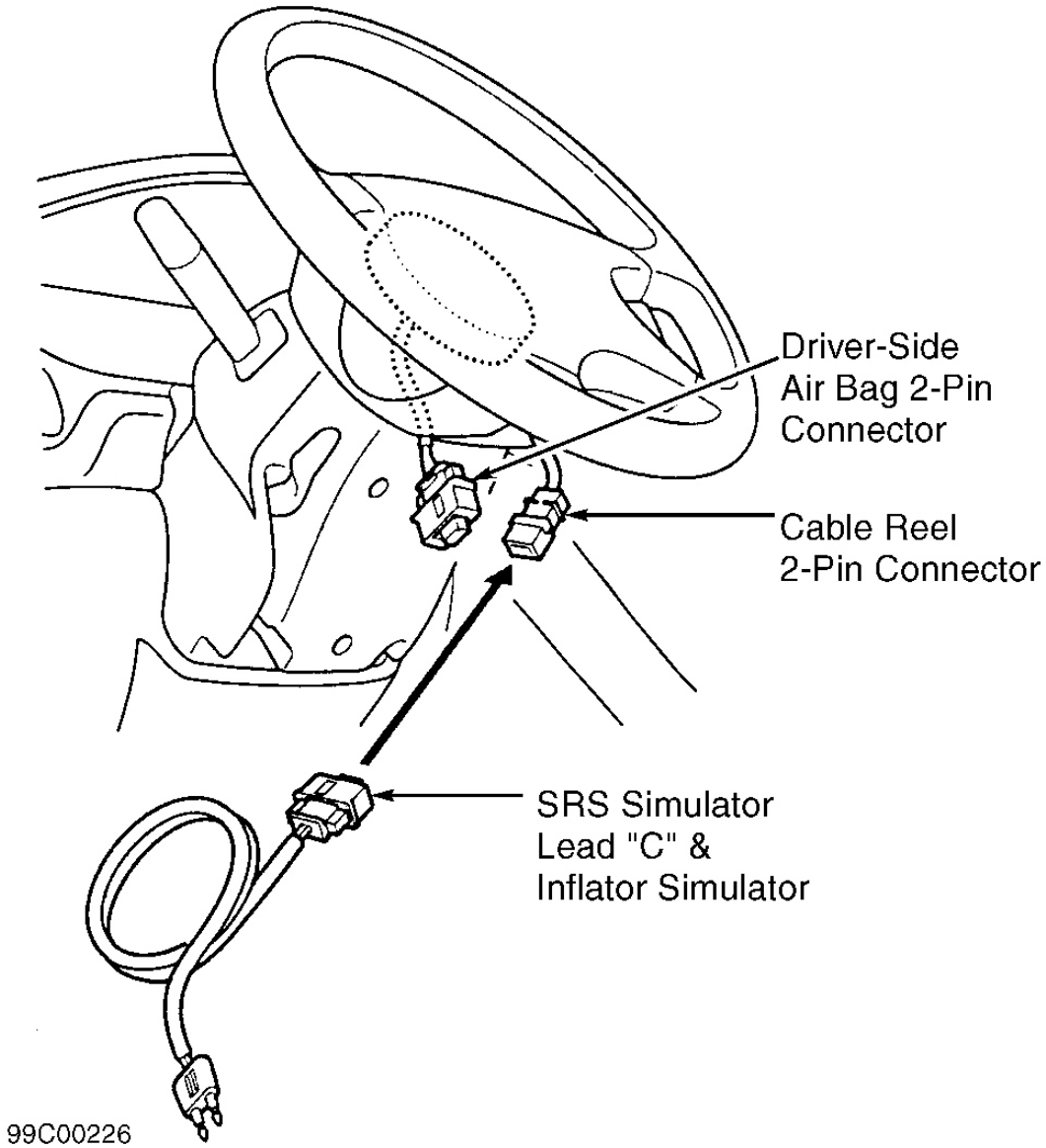

Fig. 24: Connecting SRS Inflator Simulator & Lead To Cable Reel
Courtesy of AMERICAN HONDA MOTOR CO., INC.

cardiagn.com

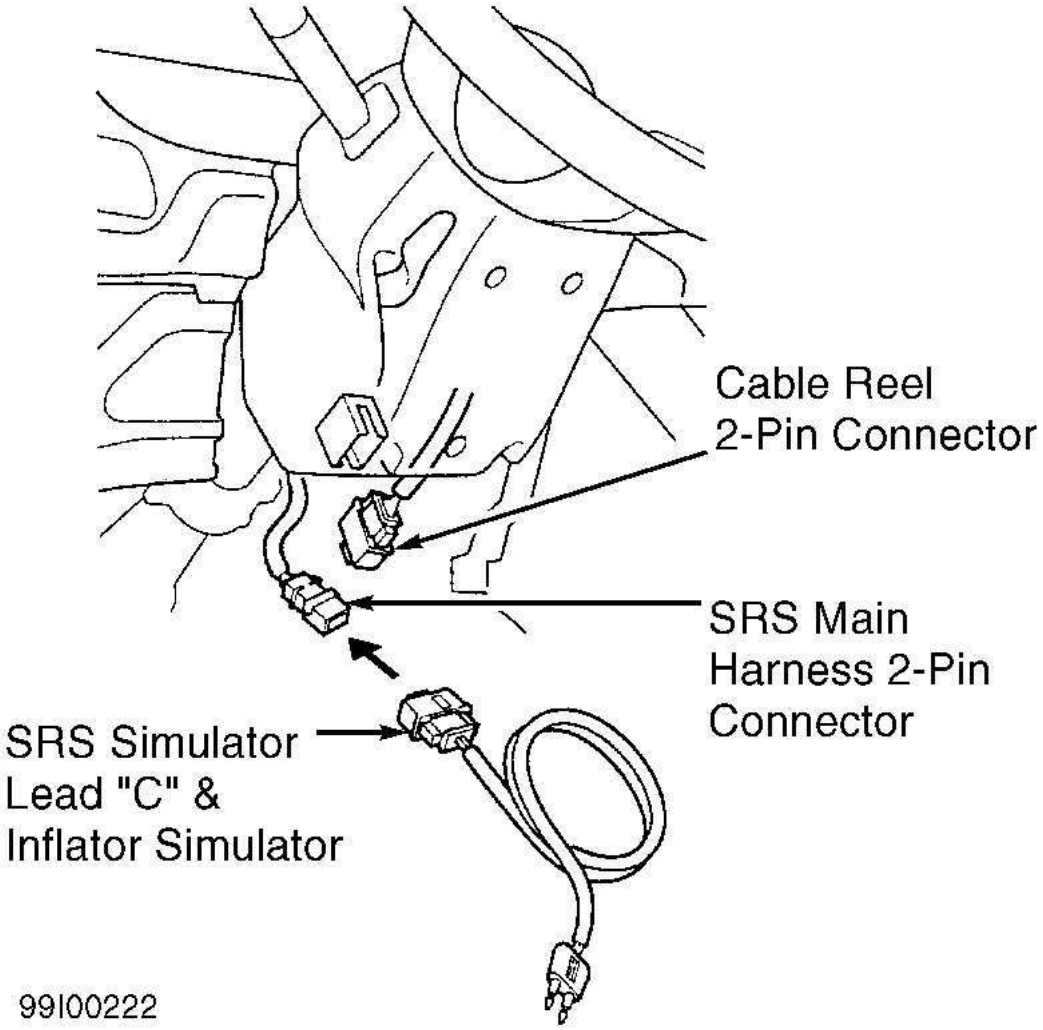

Fig. 25: Connecting SRS Inflator Simulator & Lead To SRS Main Harness (Driver-side Air Bag)
Courtesy of AMERICAN HONDA MOTOR CO., INC.

cardiagn.com

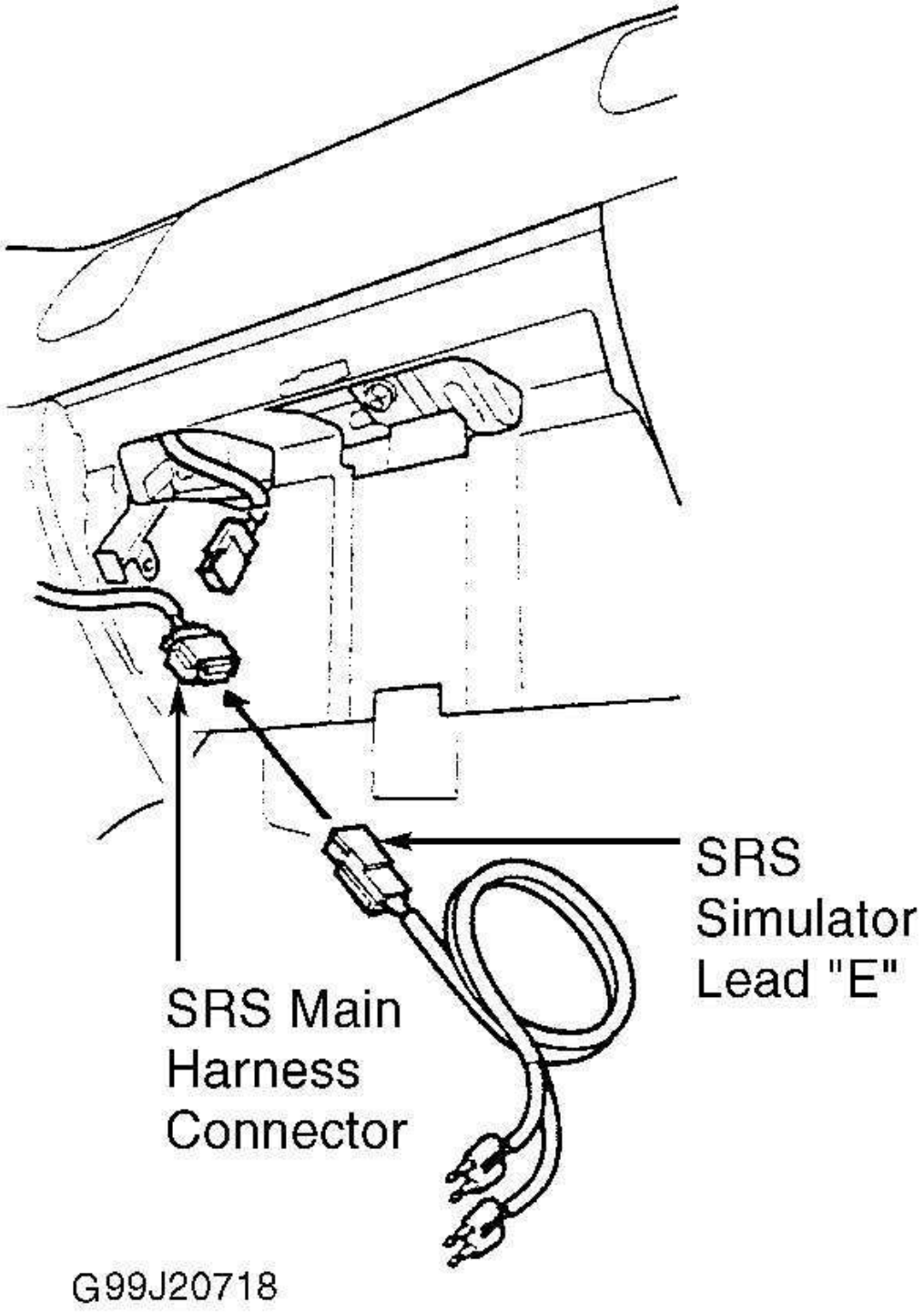

cardiagn.com

Fig. 26: Connecting SRS Inflator Simulator & Lead To SRS Main Harness (Passenger-side Air Bag)
Courtesy of AMERICAN HONDA MOTOR CO., INC.

DTC 1-3

> WARNING: **Accidental air bag deployment is possible. Personal injury may result. Avoid bumping SRS unit if ignition is on, or has been turned off for less than 3 minutes.**

1. Before proceeding, see **AIR BAG SAFETY PRECAUTIONS** . Erase DTC memory. Turn ignition on. If indicator light stays on, go to next step. If light goes off after about 6 seconds, system is okay at this time. See **TROUBLESHOOTING INTERMITTENT FAILURES** under DIAGNOSTICS.
2. Turn ignition off. Disconnect negative battery cable, and wait at least 3 minutes. Disconnect driver-side air bag connector from cable reel connector. See **Fig. 24** . Connect SRS Simulator Lead "C" (07TAZ-SZ5011A) and SRS Inflator Simulator (07SAZ-TB4011A) to cable reel connector. Reconnect negative battery cable. Erase DTC memory. Retrieve DTCs. If DTC 1-3 is indicated, go to next step. If DTC 1-3 is not indicated, replace driver-side air bag assembly. See **DRIVER-SIDE AIR BAG** under REMOVAL & INSTALLATION.
3. Disconnect negative battery cable. Wait at least 3 minutes. Disconnect SRS simulator lead "C" and SRS inflator simulator from cable reel connector. Remove instrument panel lower cover, and disconnect cable reel connector from SRS main harness. See **Fig. 25** . Connect SRS simulator lead "C" and SRS inflator simulator to SRS main harness connector. Reconnect negative battery cable. Erase DTC memory. Retrieve DTCs. If DTC 1-3 is indicated, go to next step. If DTC 1-3 is not indicated, replace cable reel. See **CABLE REEL** under REMOVAL & INSTALLATION.
4. Disconnect negative battery cable. Wait at least 3 minutes. Disconnect passenger-side air bag 4-pin connector. See **Fig. 26** . Disconnect left and right seat belt tensioners. Disconnect SRS simulator lead "C" and SRS inflator simulator from SRS harness connector. See **Fig. 25** . Disconnect SRS main harness 18-pin connector from SRS unit. See **Fig. 22** . Check resistance between SRS main harness 18-pin connector terminals No. 7 and 16. If resistance is one megohm or more, replace SRS unit. See **SRS UNIT** under REMOVAL & INSTALLATION. If resistance is less than one megohm, replace SRS main harness.

DTC 1-4

> WARNING: **Accidental air bag deployment is possible. Personal injury may result. Avoid bumping SRS unit if ignition is on, or has been turned off for less than 3 minutes.**

1. Before proceeding, see **AIR BAG SAFETY PRECAUTIONS** . Erase DTC memory. Turn ignition on. If indicator light stays on, go to next step. If light goes off after about 6 seconds, system is okay at this time. See **TROUBLESHOOTING INTERMITTENT FAILURES** under DIAGNOSTICS.
2. Disconnect negative battery cable, and wait at least 3 minutes. Disconnect driver-side air bag connector from cable reel connector. See **Fig. 24** . DO NOT disconnect passenger-side air bag connector. Connect SRS Simulator Lead "C" (07TAZ-SZ5011A) and SRS Inflator Simulator (07SAZ-TB4011A) to cable reel connector. Reconnect negative battery cable. Erase DTC memory. Retrieve DTCs. See **DIAGNOSTIC TROUBLE CODE (DTC)** . If DTC 1-4 is indicated, go to next step. If DTC 1-4 is not indicated, replace

cardiagn.com

driver-side air bag assembly. See **DRIVER-SIDE AIR BAG** under REMOVAL & INSTALLATION.

3. Disconnect negative battery cable. Wait at least 3 minutes. Disconnect SRS simulator lead "C" and SRS inflator simulator from cable reel connector. Remove instrument panel lower cover, and disconnect cable reel connector from SRS main harness. See **Fig. 25** . Connect SRS simulator lead "C" and SRS inflator simulator to SRS main harness connector. Reconnect negative battery cable. Erase DTC memory. Retrieve DTCs. If DTC 1-4 is indicated, go to next step. If DTC 1-4 is not indicated, replace cable reel. See **CABLE REEL** under REMOVAL & INSTALLATION.
4. Disconnect negative battery cable. Wait at least 3 minutes. Disconnect passenger-side air bag 4-pin connector from SRS main harness connector. See **Fig. 26** . Disconnect left and right seat belt tensioners. Disconnect SRS main harness 18-pin connector from SRS unit. See **Fig. 22** . Reconnect negative battery cable. Connect a voltmeter between SRS main harness 18-pin connector terminal No. 7 and ground. Turn ignition on and measure voltage. Turn ignition off. Connect a voltmeter between SRS main harness 18-pin connector terminal No. 16 and ground. Turn ignition on and measure voltage. If voltages are 0.5 volt or less, replace SRS unit. See **SRS UNIT** under REMOVAL & INSTALLATION. If voltages are more than 0.5 volt, replace SRS main harness.

DTC 1-5

WARNING: **Accidental air bag deployment is possible. Personal injury may result. Avoid bumping SRS unit if ignition is on, or has been turned off for less than 3 minutes.**

1. Before proceeding, see **AIR BAG SAFETY PRECAUTIONS** . Erase DTC memory. Turn ignition on. If indicator light stays on, go to next step. If light goes off after about 6 seconds, system is okay at this time. See **TROUBLESHOOTING INTERMITTENT FAILURES** under DIAGNOSTICS.
2. Disconnect negative battery cable, and wait at least 3 minutes. Disconnect driver-side air bag connector from cable reel connector. See **Fig. 24** . Connect SRS Simulator Lead "C" (07TAZ-SZ5011A) and SRS Inflator Simulator (07SAZ-TB4011A) to cable reel 2-pin connector. Reconnect negative battery cable. Erase DTC memory. Retrieve DTCs. If DTC 1-5 is indicated, go to next step. If DTC 1-5 is not indicated, replace driver-side air bag assembly. See **DRIVER-SIDE AIR BAG** under REMOVAL & INSTALLATION.
3. Disconnect negative battery cable. Wait at least 3 minutes. Disconnect SRS simulator lead "C" and SRS inflator simulator from cable reel connector. Remove instrument panel lower cover, and disconnect cable reel connector from SRS main harness. See **Fig. 25** . Connect SRS simulator lead "C" and SRS inflator simulator to SRS main harness 2-pin connector. Reconnect negative battery cable. Erase DTC memory. Retrieve DTCs. If DTC 1-5 is indicated, go to next step. If DTC 1-5 is not indicated, replace cable reel. See **CABLE REEL** under REMOVAL & INSTALLATION.
4. Disconnect negative battery cable. Wait at least 3 minutes. Disconnect passenger-side air bag 4-pin connector from SRS main harness connector. See **Fig. 26** . Disconnect left and right seat belt tensioners. Disconnect SRS main harness 18-pin connector from SRS unit. See **Fig. 22** . Check resistance between SRS main harness 18-pin connector terminal No. 7 and ground, and between SRS main harness 18-pin connector terminal No. 16 and ground. If resistance is less than one megohm, replace SRS main harness. If resistance is one megohm or more, replace SRS unit. See **SRS UNIT** under REMOVAL & INSTALLATION.

DTC 2-1

cardiagn.com

WARNING: Accidental air bag deployment is possible. Personal injury may result. Avoid bumping SRS unit if ignition is on, or has been turned off for less than 3 minutes.

1. Before proceeding, see **AIR BAG SAFETY PRECAUTIONS** . Erase DTC memory. Turn ignition on. If indicator light stays on, go to next step. If light goes off after about 6 seconds, system is okay at this time. See **TROUBLESHOOTING INTERMITTENT FAILURES** under DIAGNOSTICS.
2. Disconnect negative battery cable, and wait at least 3 minutes. Disconnect passenger-side air bag connector from SRS main harness. See **Fig. 26** . Connect SRS Simulator Lead "E" (07XAZ-SZ30100) and SRS Inflator Simulator (07SAZ-TB4011A) to SRS main harness connector. Reconnect negative battery cable. Erase DTC memory. Retrieve DTCs. If DTC 2-1 is indicated, go to next step. If DTC 2-1 is not indicated, replace passenger-side air bag assembly. See **DRIVER-SIDE AIR BAG** under REMOVAL & INSTALLATION.
3. Disconnect negative battery cable. Wait at least 3 minutes. Disconnect driver-side air bag connector from cable reel connector. See **Fig. 24** . Disconnect left and right seat belt tensioners. Disconnect SRS main harness 18-pin connector from SRS unit. See **Fig. 22** . Measure resistance between SRS main harness 18-pin connector terminals No. 5 and 14 and terminals No. 6 and 15. If resistance is 2-3 ohms, check for poor contact at SRS main harness 18-pin connector. If connector is okay, replace SRS unit. See **SRS UNIT** under REMOVAL & INSTALLATION. If resistance is not 2-3 ohms, replace SRS main harness.

DTC 2-3

WARNING: Accidental air bag deployment is possible. Personal injury may result. Avoid bumping SRS unit if ignition is on, or has been turned off for less than 3 minutes.

1. Before proceeding, see **AIR BAG SAFETY PRECAUTIONS** . Erase DTC memory. Turn ignition on. If indicator light stays on, go to next step. If light goes off after about 6 seconds, system is okay at this time. See **TROUBLESHOOTING INTERMITTENT FAILURES** under DIAGNOSTICS.
2. Disconnect negative battery cable, and wait at least 3 minutes. Disconnect passenger-side air bag connector from SRS main harness. See **Fig. 26** . Connect SRS Simulator Lead "E" (07XAZ-SZ30100) and SRS Inflator Simulator (07SAZ-TB4011A) to SRS main harness connector. Reconnect negative battery cable. Erase DTC memory. Retrieve DTCs. If DTC 2-3 is indicated, go to next step. If DTC 2-3 is not indicated, replace passenger-side air bag assembly. See **DRIVER-SIDE AIR BAG** under REMOVAL & INSTALLATION.
3. Disconnect negative battery cable. Wait at least 3 minutes. Disconnect SRS simulator lead "E" and SRS inflator simulator from SRS main harness connector. Disconnect driver-side air bag connector from cable reel connector. See **Fig. 24** . Disconnect left and right seat belt tensioners. Disconnect SRS main harness 18-pin connector from SRS unit. See **Fig. 22** . Measure resistance between SRS main harness 18-pin connector terminals No. 5 and 14 and terminals No. 6 and 15. If resistance is one megohm or more, replace SRS unit. See **SRS UNIT** under REMOVAL & INSTALLATION. If resistance is less than one megohm, replace SRS main harness.

DTC 2-4

cardiagn.com

WARNING: Accidental air bag deployment is possible. Personal injury may result. Avoid bumping SRS unit if ignition is on, or has been turned off for less than 3 minutes.

1. Before proceeding, see **AIR BAG SAFETY PRECAUTIONS** . Erase DTC memory. Turn ignition on. If indicator light stays on, go to next step. If light goes off after about 6 seconds, system is okay at this time. See **TROUBLESHOOTING INTERMITTENT FAILURES** under DIAGNOSTICS.
2. Disconnect negative battery cable, and wait at least 3 minutes. Disconnect passenger-side air bag connector from SRS main harness. See **Fig. 26** . Connect SRS Simulator Lead "E" (07XAZ-SZ30100) and SRS Inflator Simulator (07SAZ-TB4011A) to SRS main harness connector. Reconnect negative battery cable. Erase DTC memory. Retrieve DTCs. If DTC 2-4 is indicated, go to next step. If DTC 2-4 is not indicated, replace passenger-side air bag assembly. See **DRIVER-SIDE AIR BAG** under REMOVAL & INSTALLATION.
3. Disconnect negative battery cable. Wait at least 3 minutes. Disconnect driver-side air bag connector from cable reel connector. See **Fig. 24** . Disconnect left and right seat belt tensioners. Disconnect SRS main harness 18-pin connector from SRS unit. See **Fig. 22** . Reconnect negative battery cable. Turn ignition on. Measure voltage between ground and SRS main harness 18-pin connector terminals No. 5, 6, 14, and 15. If voltages are more than 0.5 volt, replace SRS main harness. If voltages are 0.5 volt or less, replace SRS unit. See **SRS UNIT** under REMOVAL & INSTALLATION.

DTC 2-5

WARNING: Accidental air bag deployment is possible. Personal injury may result. Avoid bumping SRS unit if ignition is on, or has been turned off for less than 3 minutes.

1. Before proceeding, see **AIR BAG SAFETY PRECAUTIONS** . Erase DTC memory. Turn ignition on. If indicator light stays on, go to next step. If light goes off after about 6 seconds, system is okay at this time. See **TROUBLESHOOTING INTERMITTENT FAILURES** under DIAGNOSTICS.
2. Disconnect negative battery cable, and wait at least 3 minutes. Disconnect passenger-side air bag connector from SRS main harness. See **Fig. 26** . Connect SRS Simulator Lead "E" (07XAZ-SZ30100) and SRS Inflator Simulator (07SAZ-TB4011A) to SRS main harness connector. Reconnect negative battery cable. Erase DTC memory. Retrieve DTCs. If DTC 2-5 is indicated, go to next step. If DTC 2-5 is not indicated, replace passenger-side air bag assembly. See **DRIVER-SIDE AIR BAG** under REMOVAL & INSTALLATION.
3. Disconnect negative battery cable. Wait at least 3 minutes. Disconnect driver-side air bag connector from cable reel connector. See **Fig. 24** . Disconnect left and right seat belt tensioners. Disconnect SRS main harness 18-pin connector from SRS unit. See **Fig. 22** . Measure voltage between ground and SRS main harness 18-pin connector terminals No. 5, 6, 14, and 15. If resistances are less than one megohm, replace SRS main harness. If resistances are one megohm or more, replace SRS unit. See **SRS UNIT** under REMOVAL & INSTALLATION.

DTC 3-1

WARNING: Accidental air bag deployment is possible. Personal injury may result.

cardiagn.com

Avoid bumping SRS unit if ignition is on, or has been turned off for less than 3 minutes.

1. Before proceeding, see **AIR BAG SAFETY PRECAUTIONS** . Erase DTC memory. Turn ignition on. If indicator light stays on, go to next step. If light goes off after about 6 seconds, system is okay at this time. See **TROUBLESHOOTING INTERMITTENT FAILURES** under DIAGNOSTICS.
2. Disconnect driver-side seat belt tensioner. DO NOT disconnect passenger-side seat belt tensioner connector. Connect SRS Simulator Lead "C" (07TAZ-SZ5011A) and SRS Inflator Simulator (07SAZ-TB4011A) to left SRS side wire harness connector. See **Fig. 27** . Reconnect negative battery cable. Erase DTC memory. Retrieve DTCs. If DTC 3-1 is indicated, go to next step. If DTC 3-1 is not indicated, replace driver-side seat belt tensioner. See **SEAT BELT TENSIONERS** under REMOVAL & INSTALLATION.
3. Disconnect negative battery cable and wait 3 minutes. Disconnect SRS side harness 4-pin connector (located under center console, between SRS unit and rear blower motor, clipped to instrument panel support) from SRS main harness 4-pin connector. See **Fig. 28** . Connect SRS Simulator Lead "D" (07XAZ-SZ30100) and SRS Inflator Simulator (07SAZ-TB4011A) to SRS main harness 4-pin connector. Reconnect negative battery cable. Erase DTC memory. Retrieve DTCs. If DTC 3-1 is indicated, go to next step. If DTC 3-1 is not indicated, replace left SRS side harness.
4. Disable driver and passenger-side air bags, driver and passenger side-impact air bags and passenger-side seat belt tensioner. See **DISABLING & ACTIVATING AIR BAG SYSTEM** . Disconnect SRS main harness 18-pin connector from SRS unit. See **Fig. 22** . DO NOT disconnect SRS simulator lead "D" and SRS inflator simulator from SRS main harness 4-pin connector. Measure resistance between SRS main harness 18-pin connector terminals No. 8 and 17. If resistance is not 2-3 ohms, replace SRS main harness. If resistance is 2-3 ohms, check for poor contact at SRS main harness 18-pin connector. If connector is okay, replace SRS unit. See **SRS UNIT** under REMOVAL & INSTALLATION.

cardiagn.com

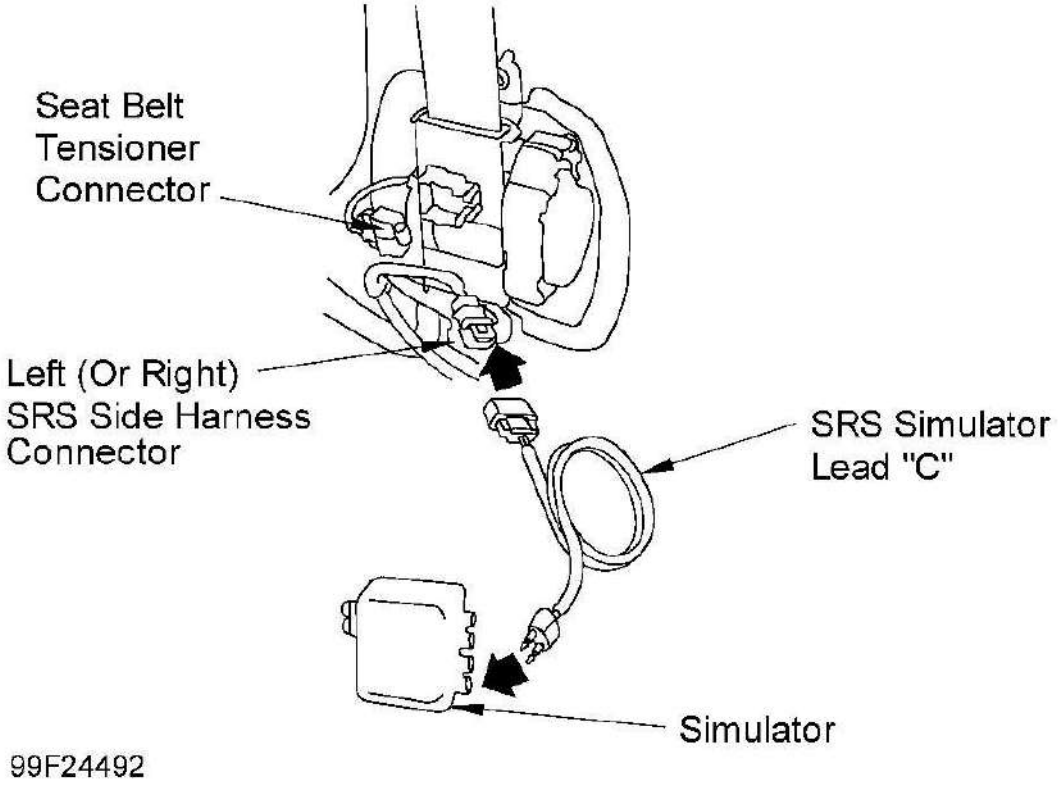

Fig. 27: Locating Seat Belt Tensioner & Side Wire Harness Connectors
Courtesy of AMERICAN HONDA MOTOR CO., INC.

cardiagn.com

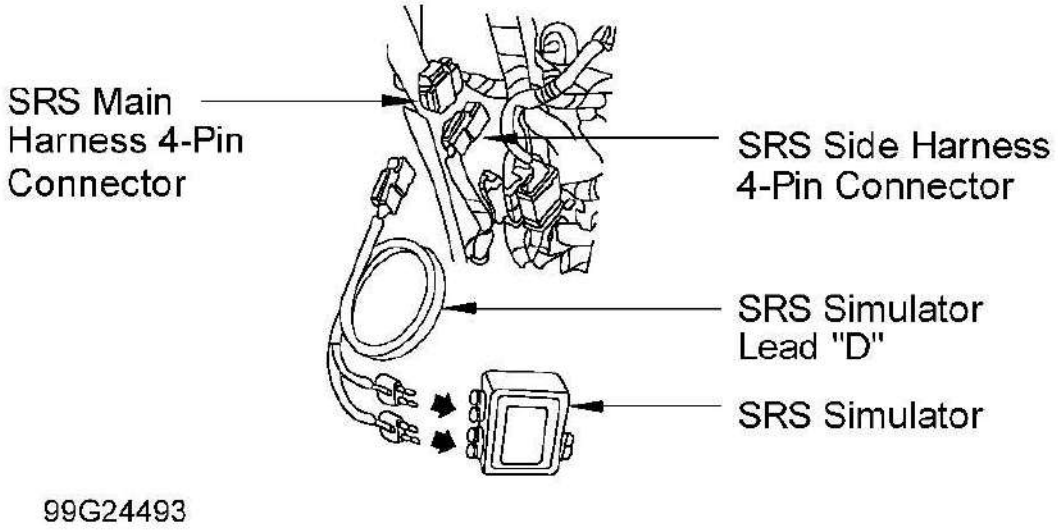

Fig. 28: Locating Left Side Wire Harness Connector
Courtesy of AMERICAN HONDA MOTOR CO., INC.

DTC 3-3

WARNING: **Accidental air bag deployment is possible. Personal injury may result. Avoid bumping SRS unit if ignition is on, or has been turned off for less than 3 minutes.**

1. Before proceeding, see **AIR BAG SAFETY PRECAUTIONS** . Erase DTC memory. Turn ignition on. If indicator light stays on, go to next step. If light goes off after about 6 seconds, system is okay at this time. See **TROUBLESHOOTING INTERMITTENT FAILURES** under DIAGNOSTICS.
2. Disconnect driver-side seat belt tensioner. DO NOT disconnect passenger-side seat belt tensioner connector. Connect SRS Simulator Lead "C" (07TAZ-SZ5011A) and SRS Inflator Simulator (07SAZ-TB4011A) to left SRS side wire harness connector. See **Fig. 27** . Reconnect negative battery cable. Erase DTC memory. Retrieve DTCs. If DTC 3-3 is indicated, go to next step. If DTC 3-3 is not indicated, replace driver-side seat belt tensioner. See **SEAT BELT TENSIONERS** under REMOVAL & INSTALLATION.
3. Disconnect negative battery cable and wait 3 minutes. Disconnect SRS main harness 4-pin connector from left SRS side wire harness connector. See **Fig. 28** . Connect SRS Simulator Lead "D" (07XAZ-SZ30100) and SRS inflator simulator to SRS main harness 4-pin connector. Reconnect negative battery cable. Erase DTC memory. Retrieve DTCs. If DTC 3-3 is indicated, go to next step. If DTC 3-3 is not indicated, replace left side wire harness.
4. Disable driver and passenger-side air bags, driver and passenger side-impact air bags and passenger-side seat belt tensioner. See **DISABLING & ACTIVATING AIR BAG SYSTEM** . Disconnect SRS main harness 18-pin connector from SRS unit. See **Fig. 22** . Disconnect SRS simulator lead "D" and SRS

cardiagn.com

inflator simulator from SRS main harness 4-pin connector. Measure resistance between SRS main harness 18-pin connector terminals No. 8 and 17. If resistance is one megohm or greater, replace SRS unit. See **SRS UNIT** under REMOVAL & INSTALLATION. If resistance is less than one megohm, replace SRS main harness.

DTC 3-4

WARNING: **Accidental air bag deployment is possible. Personal injury may result. Avoid bumping SRS unit if ignition is on, or has been turned off for less than 3 minutes.**

1. Before proceeding, see **AIR BAG SAFETY PRECAUTIONS** . Erase DTC memory. Turn ignition on. If indicator light stays on, go to next step. If light goes off after about 6 seconds, system is okay at this time. See **TROUBLESHOOTING INTERMITTENT FAILURES** under DIAGNOSTICS.
2. Disconnect driver-side seat belt tensioner. DO NOT disconnect passenger-side seat belt tensioner connector. Connect SRS Simulator Lead "C" (07TAZ-SZ5011A) and SRS Inflator Simulator (07SAZ-TB4011A) to left SRS side wire harness connector. See **Fig. 27** . Reconnect negative battery cable. Erase DTC memory. Retrieve DTCs. If DTC 3-4 is indicated, go to next step. If DTC 3-4 is not indicated, replace driver-side seat belt tensioner. See **SEAT BELT TENSIONERS** under REMOVAL & INSTALLATION.
3. Disconnect negative battery cable and wait 3 minutes. Disconnect SRS main harness 4-pin connector from left SRS side wire harness connector. See **Fig. 28** . Connect SRS Simulator Lead "D" (07XAZ-SZ30100) and SRS inflator simulator to SRS floor harness 4-pin connector. Reconnect negative battery cable. Erase DTC memory. Retrieve DTCs. If DTC 3-4 is indicated, go to next step. If DTC 3-4 is not indicated, replace left side wire harness.
4. Disable driver and passenger-side air bags, driver and passenger side-impact air bags and passenger-side seat belt tensioner. See **DISABLING & ACTIVATING AIR BAG SYSTEM** . Disconnect SRS main harness 18-pin connector from SRS unit. See **Fig. 22** . reconnect negative battery cable. Measure voltage between ground and SRS main harness 18-pin connector terminals No. 8 and 17. If voltage is 0.5 volt or less, replace SRS unit. See **SRS UNIT** under REMOVAL & INSTALLATION. If voltage is 0.5 volt or greater, replace SRS main harness.

DTC 3-5

WARNING: **Accidental air bag deployment is possible. Personal injury may result. Avoid bumping SRS unit if ignition is on, or has been turned off for less than 3 minutes.**

1. Before proceeding, see **AIR BAG SAFETY PRECAUTIONS** . Erase DTC memory. Turn ignition on. If indicator light stays on, go to next step. If light goes off after about 6 seconds, system is okay at this time. See **TROUBLESHOOTING INTERMITTENT FAILURES** under DIAGNOSTICS.
2. Disconnect driver-side seat belt tensioner. DO NOT disconnect passenger-side seat belt tensioner connector. Connect SRS Simulator Lead "C" (07TAZ-SZ5011A) and SRS Inflator Simulator (07SAZ-TB4011A) to left SRS side wire harness connector. See **Fig. 27** . Reconnect negative battery cable. Erase DTC memory. Retrieve DTCs. If DTC 3-5 is indicated, go to next step. If DTC 3-5 is not indicated,

cardiagn.com

replace driver-side seat belt tensioner. See **SEAT BELT TENSIONERS** under REMOVAL & INSTALLATION.

3. Disconnect negative battery cable and wait 3 minutes. Disconnect SRS main harness 4-pin connector from left SRS side wire harness connector. See **Fig. 28** . Connect SRS Simulator Lead "D" (07XAZ-SZ30100) and SRS inflator simulator to SRS main harness 4-pin connector. Reconnect negative battery cable. Erase DTC memory. Retrieve DTCs. If DTC 3-5 is indicated, go to next step. If DTC 3-5 is not indicated, replace left side wire harness.
4. Disable driver and passenger-side air bags, driver and passenger side-impact air bags and passenger-side seat belt tensioner. See **DISABLING & ACTIVATING AIR BAG SYSTEM** . Disconnect SRS main harness 18-pin connector from SRS unit. See **Fig. 22** . Disconnect SRS simulator lead "D" and SRS inflator simulator from SRS main harness 4-pin connector. Measure resistance between ground and SRS main harness 18-pin connector terminals No. 8 and 17. If resistance is one megohm or greater, replace SRS unit. See **SRS UNIT** under REMOVAL & INSTALLATION. If resistance is less than one megohm, replace SRS main harness

DTC 4-1

WARNING: **Accidental air bag deployment is possible. Personal injury may result. Avoid bumping SRS unit if ignition is on, or has been turned off for less than 3 minutes.**

1. Before proceeding, see **AIR BAG SAFETY PRECAUTIONS** . Erase DTC memory. Turn ignition on. If indicator light stays on, go to next step. If light goes off after about 6 seconds, system is okay at this time. See **TROUBLESHOOTING INTERMITTENT FAILURES** under DIAGNOSTICS.
2. Disconnect passenger-side seat belt tensioner. DO NOT disconnect driver-side seat belt tensioner connector. Connect SRS Simulator Lead "C" (07TAZ-SZ5011A) and SRS Inflator Simulator (07SAZ-TB4011A) to right side wire harness 2-pin connector. See **Fig. 27** . Reconnect negative battery cable. Erase DTC memory. Retrieve DTCs. If DTC 4-1 is indicated, go to next step. If DTC 4-1 is not indicated, replace passenger-side seat belt tensioner. See **SEAT BELT TENSIONERS** under REMOVAL & INSTALLATION.
3. Disconnect negative battery cable and wait 3 minutes. Disconnect SRS side sub harness 4-pin connector (located under center console, between SRS unit and rear blower motor, clipped to floor bracket) from right side wire harness 4-pin connector. See **Fig. 29** . Connect SRS Simulator Lead "D" (07XAZ-SZ30100) and SRS Inflator Simulator (07SAZ-TB4011A) to SRS side harness 4-pin connector. Reconnect negative battery cable. Erase DTC memory. Retrieve DTCs. If DTC 4-1 is indicated, go to next step. If DTC 4-1 is not indicated, replace right SRS side sub wire harness.
4. Disconnect negative battery cable and wait 3 minutes. Disconnect simulator and simulator lead. Disconnect SRS side harness 4-pin connector (located under center console, between SRS unit and rear blower motor, clipped to instrument panel support) from SRS main wire harness 4-pin connector. See **Fig. 30** . Connect SRS Simulator Lead "D" (07XAZ-SZ30100) and SRS Inflator Simulator (07SAZ-TB4011A) to SRS main harness 4-pin connector. Reconnect negative battery cable. Erase DTC memory. Retrieve DTCs. If DTC 4-1 is indicated, go to next step. If DTC 4-1 is not indicated, replace right SRS side wire harness.
5. Disconnect negative battery cable and wait 3 minutes. Disconnect driver-side and passenger-side air bags and driver-side seat belt tensioner. Disconnect SRS main harness 18-pin connector from SRS unit. See

cardiagn.com

Fig. 22 . DO NOT disconnect SRS simulator lead "D" and SRS inflator simulator from SRS main harness 4-pin connector. Measure resistance between SRS unit 18-pin connector terminals No. 9 and 18. If resistance is not 2-3 ohms, replace SRS main harness. If resistance is 2-3 ohms, check for poor contact at SRS main harness 18-pin connector. If connector is okay, replace SRS unit. See **SRS UNIT** under REMOVAL & INSTALLATION.

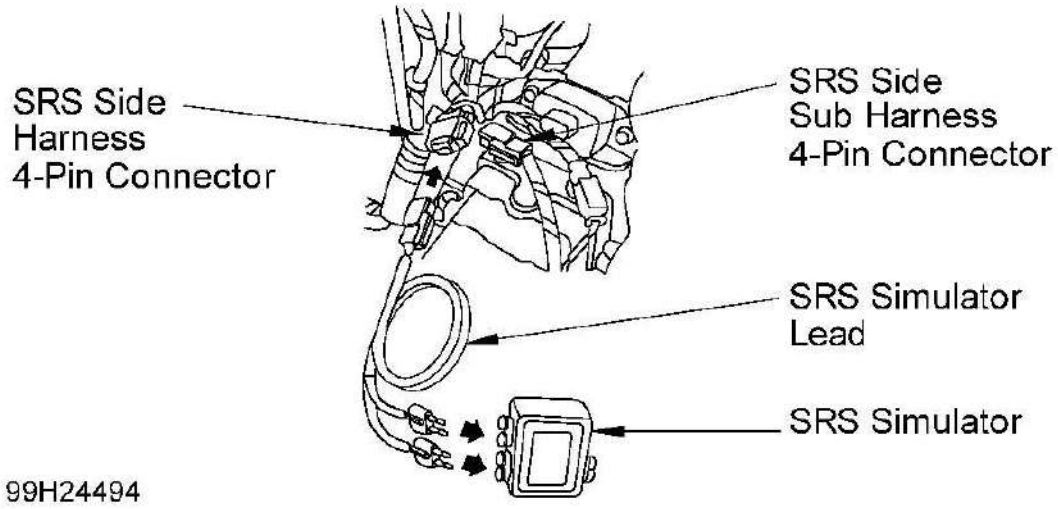

Fig. 29: Locating Right Side Sub Wire Harness
Courtesy of AMERICAN HONDA MOTOR CO., INC.

cardiagn.com

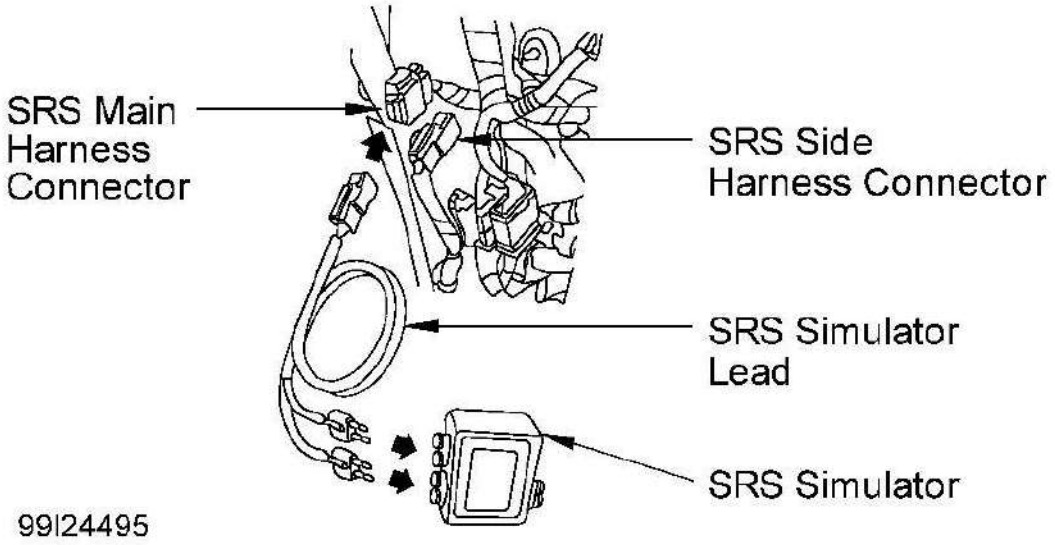

Fig. 30: Locating Right Side Wire Harness
Courtesy of AMERICAN HONDA MOTOR CO., INC.

DTC 4-3

WARNING: **Accidental air bag deployment is possible. Personal injury may result. Avoid bumping SRS unit if ignition is on, or has been turned off for less than 3 minutes.**

1. Before proceeding, see **AIR BAG SAFETY PRECAUTIONS** . Erase DTC memory. Turn ignition on. If indicator light stays on, go to next step. If light goes off after about 6 seconds, system is okay at this time. See **TROUBLESHOOTING INTERMITTENT FAILURES** under DIAGNOSTICS.
2. Disconnect passenger-side seat belt tensioner. DO NOT disconnect driver-side seat belt tensioner connector. Connect SRS Simulator Lead "C" (07TAZ-SZ5011A) and SRS Inflator Simulator (07SAZ-TB4011A) to right side wire harness 2-pin connector. See **Fig. 27** . Reconnect negative battery cable. Erase DTC memory. Retrieve DTCs. If DTC 4-3 is indicated, go to next step. If DTC 4-3 is not indicated, replace passenger-side seat belt tensioner. See **SEAT BELT TENSIONERS** under REMOVAL & INSTALLATION.
3. Disconnect negative battery cable and wait 3 minutes. Disconnect SRS side sub harness 4-pin connector (located under center console, between SRS unit and rear blower motor, clipped to floor bracket) from right side wire harness 4-pin connector. See **Fig. 29** . Connect SRS Simulator Lead "D" (07XAZ-SZ30100) and SRS Inflator Simulator (07SAZ-TB4011A) to SRS side harness 4-pin connector. Reconnect negative battery cable. Erase DTC memory. Retrieve DTCs. If DTC 4-3 is indicated, go to next step. If DTC 4-3 is not indicated, replace right SRS side sub wire harness.
4. Disconnect negative battery cable and wait 3 minutes. Disconnect simulator and simulator lead. Disconnect SRS side harness 4-pin connector (located under center console, between SRS unit and rear

cardiagn.com

blower motor, clipped to instrument panel support) from SRS main wire harness 4-pin connector. See **Fig. 30** . Connect SRS Simulator Lead "D" (07XAZ-SZ30100) and SRS Inflator Simulator (07SAZ-TB4011A) to SRS main harness 4-pin connector. Reconnect negative battery cable. Erase DTC memory. Retrieve DTCs. If DTC 4-3 is indicated, go to next step. If DTC 4-3 is not indicated, replace right SRS side wire harness.

5. Disconnect negative battery cable and wait 3 minutes. Disconnect driver-side and passenger-side air bags and driver-side seat belt tensioner. Disconnect SRS main harness 18-pin connector from SRS unit. See **Fig. 22** . Disconnect SRS simulator lead "D" and SRS inflator simulator from SRS main harness 4-pin connector. Measure resistance between SRS unit 18-pin connector terminals No. 9 and 18. If resistance is less than one megohm, replace SRS main harness. If resistance is more than one megohm, replace SRS unit. See **SRS UNIT** under REMOVAL & INSTALLATION.

DTC 4-4

WARNING: **Accidental air bag deployment is possible. Personal injury may result. Avoid bumping SRS unit if ignition is on, or has been turned off for less than 3 minutes.**

1. Before proceeding, see **AIR BAG SAFETY PRECAUTIONS** . Erase DTC memory. Turn ignition on. If indicator light stays on, go to next step. If light goes off after about 6 seconds, system is okay at this time. See **TROUBLESHOOTING INTERMITTENT FAILURES** under DIAGNOSTICS.
2. Disconnect passenger-side seat belt tensioner. DO NOT disconnect driver-side seat belt tensioner connector. Connect SRS Simulator Lead "C" (07TAZ-SZ5011A) and SRS Inflator Simulator (07SAZ-TB4011A) to right side wire harness 2-pin connector. See **Fig. 27** . Reconnect negative battery cable. Erase DTC memory. Retrieve DTCs. If DTC 4-4 is indicated, go to next step. If DTC 4-4 is not indicated, replace passenger-side seat belt tensioner. See **SEAT BELT TENSIONERS** under REMOVAL & INSTALLATION.
3. Disconnect negative battery cable and wait 3 minutes. Disconnect SRS side sub harness 4-pin connector (located under center console, between SRS unit and rear blower motor, clipped to floor bracket) from right side wire harness 4-pin connector. See **Fig. 29** . Connect SRS Simulator Lead "D" (07XAZ-SZ30100) and SRS Inflator Simulator (07SAZ-TB4011A) to SRS side harness 4-pin connector. Reconnect negative battery cable. Erase DTC memory. Retrieve DTCs. If DTC 4-4 is indicated, go to next step. If DTC 4-4 is not indicated, replace right SRS side sub wire harness.
4. Disconnect negative battery cable and wait 3 minutes. Disconnect simulator and simulator lead. Disconnect SRS side harness 4-pin connector (located under center console, between SRS unit and rear blower motor, clipped to instrument panel support) from SRS main wire harness 4-pin connector. See **Fig. 30** . Connect SRS Simulator Lead "D" (07XAZ-SZ30100) and SRS Inflator Simulator (07SAZ-TB4011A) to SRS main harness 4-pin connector. Reconnect negative battery cable. Erase DTC memory. Retrieve DTCs. If DTC 4-4 is indicated, go to next step. If DTC 4-4 is not indicated, replace right SRS side wire harness.
5. Disconnect negative battery cable and wait 3 minutes. Disconnect driver-side and passenger-side air bags and driver-side seat belt tensioner. Disconnect SRS main harness 18-pin connector from SRS unit. See **Fig. 22** . Disconnect SRS simulator lead "D" and SRS inflator simulator from SRS main harness 4-pin connector. Reconnect negative battery cable. Measure voltage between ground and SRS unit 18-pin connector terminals No. 9 and 18. If voltage is more than 0.5 volt, replace SRS main harness. If voltage is less than 0.5 volt, replace SRS unit. See **SRS UNIT** under REMOVAL & INSTALLATION.

cardiagn.com

DTC 4-5

WARNING: **Accidental air bag deployment is possible. Personal injury may result. Avoid bumping SRS unit if ignition is on, or has been turned off for less than 3 minutes.**

1. Before proceeding, see **AIR BAG SAFETY PRECAUTIONS** . Erase DTC memory. Turn ignition on. If indicator light stays on, go to next step. If light goes off after about 6 seconds, system is okay at this time. See **TROUBLESHOOTING INTERMITTENT FAILURES** under DIAGNOSTICS.
2. Disconnect passenger-side seat belt tensioner. DO NOT disconnect driver-side seat belt tensioner connector. Connect SRS Simulator Lead "C" (07TAZ-SZ5011A) and SRS Inflator Simulator (07SAZ-TB4011A) to right side wire harness 2-pin connector. See **Fig. 27** . Reconnect negative battery cable. Erase DTC memory. Retrieve DTCs. If DTC 4-5 is indicated, go to next step. If DTC 4-5 is not indicated, replace passenger-side seat belt tensioner. See **SEAT BELT TENSIONERS** under REMOVAL & INSTALLATION.
3. Disconnect negative battery cable and wait 3 minutes. Disconnect SRS side sub harness 4-pin connector (located under center console, between SRS unit and rear blower motor, clipped to floor bracket) from right side wire harness 4-pin connector. See **Fig. 29** . Connect SRS Simulator Lead "D" (07XAZ-SZ30100) and SRS Inflator Simulator (07SAZ-TB4011A) to SRS side harness 4-pin connector. Reconnect negative battery cable. Erase DTC memory. Retrieve DTCs. If DTC 4-5 is indicated, go to next step. If DTC 4-5 is not indicated, replace right SRS side sub wire harness.
4. Disconnect negative battery cable and wait 3 minutes. Disconnect simulator and simulator lead. Disconnect SRS side harness 4-pin connector (located under center console, between SRS unit and rear blower motor, clipped to instrument panel support) from SRS main wire harness 4-pin connector. See **Fig. 30** . Connect SRS Simulator Lead "D" (07XAZ-SZ30100) and SRS Inflator Simulator (07SAZ-TB4011A) to SRS main harness 4-pin connector. Reconnect negative battery cable. Erase DTC memory. Retrieve DTCs. If DTC 4-5 is indicated, go to next step. If DTC 4-5 is not indicated, replace right SRS side wire harness.
5. Disconnect negative battery cable and wait 3 minutes. Disconnect driver-side and passenger-side air bags and driver-side seat belt tensioner. Disconnect SRS main harness 18-pin connector from SRS unit. See **Fig. 22** . Disconnect SRS simulator lead "D" and SRS inflator simulator from SRS main harness 4-pin connector. Measure resistance between ground and SRS unit 18-pin connector terminals No. 9 and 18. If resistance is less than one megohm, replace SRS main harness. If resistance is more than one megohm, replace SRS unit. See **SRS UNIT** under REMOVAL & INSTALLATION.

DTC 9-3

WARNING: **Accidental air bag deployment is possible. Personal injury may result. Avoid bumping SRS unit if ignition is on, or has been turned off for less than 3 minutes.**

1. Before proceeding, see **AIR BAG SAFETY PRECAUTIONS** . Erase DTC memory. Turn ignition on then buckle and unbuckle driver-side seat belt several times. Retrieve DTCs. If DTC 9-3 is indicated, go to next step. If DTC 9-3 is not indicated, system is okay at this time. See **TROUBLESHOOTING INTERMITTENT FAILURES** under DIAGNOSTICS.

cardiagn.com

2. Turn ignition off. Check fuse No. 9 (10-amp) in driver's under-dash fuse/relay box. If fuse is okay, go to next step. If fuse is blown, replace fuse and recheck. If fuse blows again locate and repair short to ground in fused circuit. See **WIRING DIAGRAMS** . Erase DTC memory.
3. Turn ignition off. Buckle driver-side seat belt. Disconnect driver-side seat belt buckle switch 3-pin connector, located under seat. See **Fig. 31** . Measure resistance between Black wire and Blue/Red wire on seat belt buckle switch side of seat belt buckle switch 3-pin connector. Resistance should be 0-1.0 ohm. Measure resistance between Black wire and Red/Blue wire on seat belt buckle switch side of seat belt buckle switch 3-pin connector. Resistance should be more than one megohm. If resistances are as specified, go to next step. If resistances are not as specified, replace seat belt buckle assembly.
4. Unbuckle driver-side seat belt. Measure resistance between Black wire and Red/Blue wire on seat belt buckle switch side of seat belt buckle switch 3-pin connector. Resistance should be 0-1.0 ohm. Measure resistance between Black wire and Blue/Red wire on seat belt buckle switch side of seat belt buckle switch 3-pin connector. Resistance should be more than one megohm. If resistances are as specified, go to next step. If resistances are not as specified, replace seat belt buckle assembly.
5. Measure resistance between ground and Black wire on seat harness side of seat belt buckle switch 3-pin connector. If resistance is 0-1.0 ohm, go to next step. If resistance is not 0-1.0 ohm, repair open or poor ground in Black wire. See **WIRING DIAGRAMS** .
6. Turn ignition on. If seat belt reminder is on, go to step 8 . If seat belt reminder is not on, connect fused jumper wire between ground and Red/Blue wire on seat harness side of seat belt buckle switch 3-pin connector. If seat belt reminder is on, go to next step. If seat belt reminder is not on, repair open in Red/Blue wire between seat belt buckle switch 3-pin connector and SRS unit. Also check reminder light bulb and instrument cluster circuit board. See **WIRING DIAGRAMS** .
7. Turn ignition off. Disconnect negative battery cable. Wait at least 3 minutes. Access and disconnect SRS unit connectors. See **SRS UNIT** under REMOVAL & INSTALLATION. Reconnect negative battery cable. Connect fused jumper wire between ground and SRS unit 8-pin connector, terminal No 4 (Red/Blue or Green wire). See **Fig. 22** . Turn ignition on. If seat belt reminder in on, go to step 9 . If seat belt reminder is not on, locate open in SRS main wiring harness or instrument panel wire harness. Replace appropriate harness. See **WIRING DIAGRAMS** .
8. Turn ignition off. Disconnect negative battery cable. Wait at least 3 minutes. Access and disconnect SRS unit connectors. See **SRS UNIT** under REMOVAL & INSTALLATION. Reconnect negative battery cable. Turn ignition on. If seat belt reminder is on, check for short in seat harness, SRS main harness, instrument panel harness, or instrument cluster. Replace appropriate harness. See **WIRING DIAGRAMS** . If seat belt reminder is not on, replace SRS unit.
9. Measure voltage between ground and Blue/Red wire on seat harness side of seat belt buckle switch 3-pin connector. If battery voltage is present, go to next step. If battery voltage is not present, go to step 11 .
10. Measure voltage between ground and SRS unit 8-pin connector, terminal No 8 (Blue/Red or Green wire). See **Fig. 22** . If battery voltage is present, replace SRS unit. If battery voltage is not present, check for open in seat wire harness or side wire harness. Replace appropriate harness. See **WIRING DIAGRAMS** .
11. Measure voltage between ground and SRS unit 8-pin connector, terminal No 8 (Blue/Red or Green wire). See **Fig. 22** . If battery voltage is present, check for open in seat wire harness or side wire harness. Replace appropriate harness. See **WIRING DIAGRAMS** . If battery voltage is not present, go to next step.
12. Turn ignition off. Disconnect tensioner reducer solenoid, located on bottom seat belt tensioner. Check for continuity between ground and Blue/Red wire of tension reducer solenoid 2-pin connector. If continuity

cardiagn.com

exists, check for short to ground in Blue/Red wire in SRS main harness, seat harness, or instrument panel harness. Replace appropriate harness. Is continuity does not exist, go to next step.

13. Turn ignition on. Measure voltage between ground and Yellow wire of tension reducer solenoid 2-pin connector. If battery voltage is present, check for open in tension reducer solenoid or side wire harness. Replace harness or solenoid as necessary. If battery voltage is not present, check for open in side wire harness or under-dash fuse/relay box. Repair or replace as necessary.

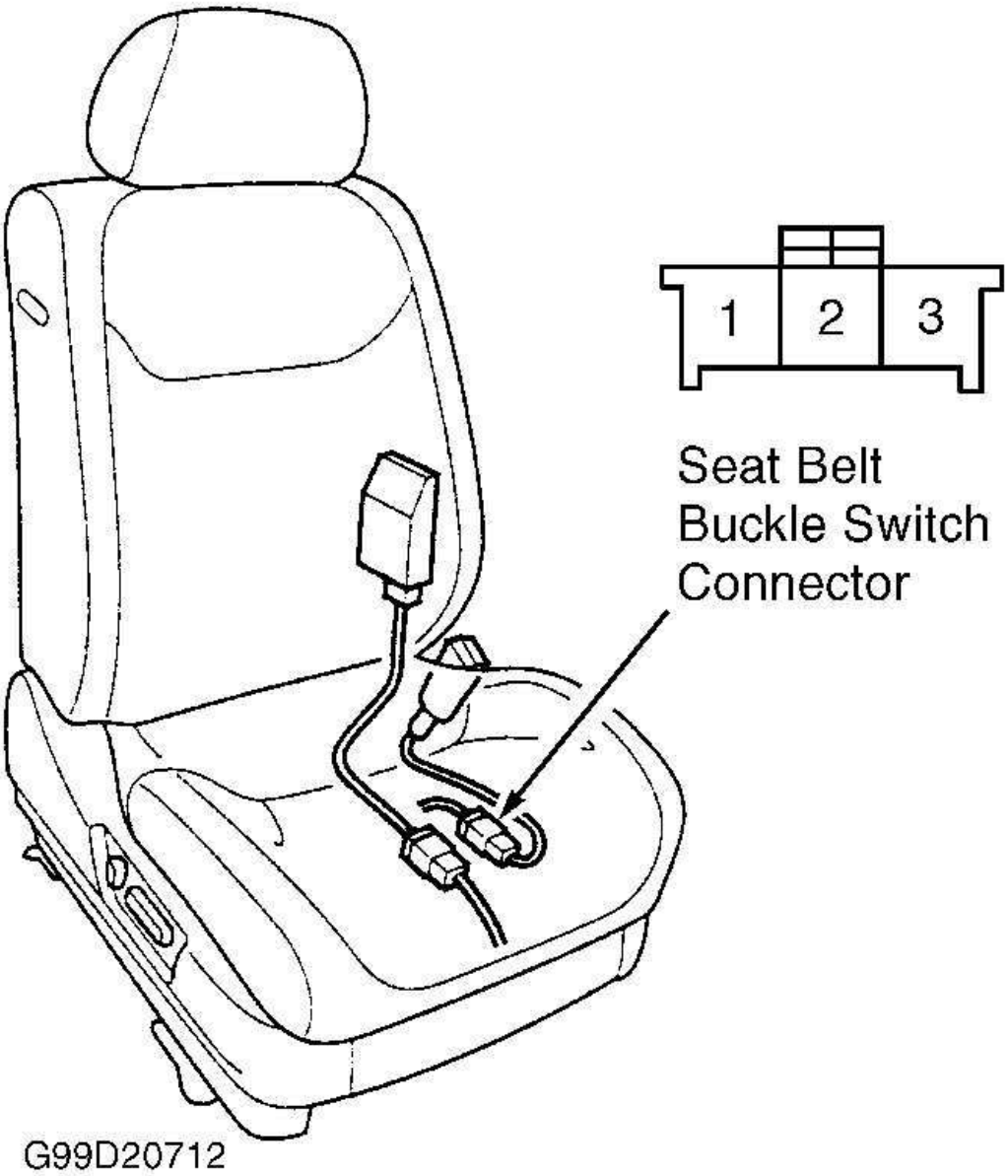

cardiagn.com

Fig. 31: Identifying Seat Belt Buckle Switch Connector
Courtesy of AMERICAN HONDA MOTOR CO., INC.

DTC 9-4

WARNING: **Accidental air bag deployment is possible. Personal injury may result. Avoid bumping SRS unit if ignition is on, or has been turned off for less than 3 minutes.**

1. Before proceeding, see **AIR BAG SAFETY PRECAUTIONS** . Erase DTC memory. Turn ignition on then buckle and unbuckle driver-side seat belt several times. Retrieve DTCs. If DTC 9-4 is indicated, go to next step. If DTC 9-4 is not indicated, system is okay at this time. See **TROUBLESHOOTING INTERMITTENT FAILURES** under DIAGNOSTICS.
2. Turn ignition off. Check fuse No. 9 (10-amp) in under-dash fuse/relay box. If fuse is okay, go to next step. If fuse is blown, replace fuse and recheck. If fuse blows again locate and repair short to ground in fused circuit. See **WIRING DIAGRAMS** . Erase DTC memory.
3. Turn ignition off. Buckle passenger-side seat belt. Disconnect passenger-side seat belt buckle switch 3-pin connector, located under seat. See **Fig. 31** . Measure resistance between Black wire and Blue/White wire on seat belt buckle switch side of seat belt buckle switch 3-pin connector. Resistance should be 0-1.0 ohm. Measure resistance between Black wire and Blue/Green wire on seat belt buckle switch side of seat belt buckle switch 3-pin connector. Resistance should be more than one megohm. If resistances are as specified, go to next step. If resistances are not as specified, replace seat belt buckle assembly. Clear DTC memory.
4. Unbuckle passenger-side seat belt. Measure resistance between Black wire and Blue/Green wire on seat belt buckle switch side of seat belt buckle switch 3-pin connector. Resistance should be 0-1.0 ohm. Measure resistance between Black wire and Blue/White wire on seat belt buckle switch side of seat belt buckle switch 3-pin connector. Resistance should be more than one megohm. If resistances are as specified, go to next step. If resistances are not as specified, replace seat belt buckle assembly.
5. Measure resistance between ground and Black wire on seat harness side of seat belt buckle switch 3-pin connector. If resistance is 0-1.0 ohm, go to next step. If resistance is not 0-1.0 ohm, repair open or poor ground in Black wire. See **WIRING DIAGRAMS** .
6. Turn ignition on. Measure voltage between ground and Blue/Green wire on seat harness side of seat belt buckle switch 3-pin connector. If battery voltage is present, go to next step. If battery voltage is not present, go to step 11 .
7. Measure voltage between ground and Blue/White wire on seat harness side of seat belt buckle switch 3-pin connector. If battery voltage is present, go to next step. If battery voltage is not present, go to step 9 .
8. Turn ignition off. Disconnect negative battery cable. Wait at least 3 minutes. Access and disconnect SRS unit connectors. See **SRS UNIT** under REMOVAL & INSTALLATION. Reconnect negative battery cable. Turn ignition on. Measure voltage between ground and SRS unit 8-pin connector, terminal No 7 (Blue/White or Green wire). See **Fig. 22** . If battery voltage is present, replace SRS unit If battery voltage is not present, check for open in seat wire harness or side wire harness. Replace appropriate harness. See **WIRING DIAGRAMS** .
9. Turn ignition off. Disconnect tensioner reducer solenoid, located on bottom seat belt tensioner. Measure voltage between ground and Yellow wire of tension reducer solenoid 2-pin connector. If battery is not present, check for open in side wire harness, under-dash fuse/relay box or instrument panel harness.

cardiagn.com

Replace appropriate harness. If battery voltage is present, go to next step

10. Turn ignition off. Disconnect negative battery cable. Wait at least 3 minutes. Access and disconnect SRS unit connectors. See **SRS UNIT** under REMOVAL & INSTALLATION. Check for continuity between ground and Blue/White wire of tension reducer solenoid 2-pin connector. If continuity exists, check for short in seat harness, side harness, instrument panel harness or SRS main harness. Replace appropriate harness. See **WIRING DIAGRAMS** . If continuity does not exist, check for open in side harness, under-dash fuse/relay box or instrument panel harness. Replace appropriate harness.
11. Turn ignition off. Disconnect negative battery cable. Wait at least 3 minutes. Access and disconnect SRS unit connectors. See **SRS UNIT** under REMOVAL & INSTALLATION. Check for continuity of Blue/Green wire between SRS unit 8-pin connector, terminal No. 3 and seat harness side of seat belt buckle switch 3-pin connector. See **Fig. 22** . If continuity exists, go to next step. If continuity does not exist, check for open in SRS main harness, instrument panel harness, side harness or seat harness. Replace appropriate harness.
12. Check for continuity between ground and SRS unit 8-pin connector, terminal No. 3. If continuity exists, check for short in SRS main harness, instrument panel harness, side harness or seat harness. Replace appropriate harness. If continuity does not exist, replace SRS unit.

DTC 11-1

WARNING: **Accidental air bag deployment is possible. Personal injury may result. Avoid bumping SRS unit if ignition is on, or has been turned off for less than 3 minutes.**

1. Before proceeding, see **AIR BAG SAFETY PRECAUTIONS** . Erase DTC memory. Turn ignition on. If indicator light stays on, go to next step. If light goes off after about 6 seconds, system is okay at this time. See **TROUBLESHOOTING INTERMITTENT FAILURES** under DIAGNOSTICS.
2. Disconnect driver side-impact air bag. Connect SRS Simulator Lead "D" (07XAZ-S1A0200) and SRS Inflator Simulator (07SAZ-TB4011A) to SRS floor harness 2-pin connector. See **Fig. 32** . Reconnect negative battery cable. Erase DTC memory. Retrieve DTCs. If DTC 11-12 is indicated, go to next step. If DTC 11-1 is not indicated, replace driver side-impact air bag assembly. See **DRIVER-SIDE AIR BAG** under REMOVAL & INSTALLATION.
3. Disconnect passenger side-impact air bag. Disconnect SRS floor harness 14-pin connector from SRS unit. See **Fig. 22** . Measure resistance between SRS floor harness 14-pin connector terminals No. 4 and 13. If resistance is 2-3 ohms, Check for poor contact at SRS floor harness 14-pin connector. If connector is okay, replace SRS unit. See **SRS UNIT** under REMOVAL & INSTALLATION. If resistance is not 2-3 ohms, replace SRS floor harness.

cardiagn.com

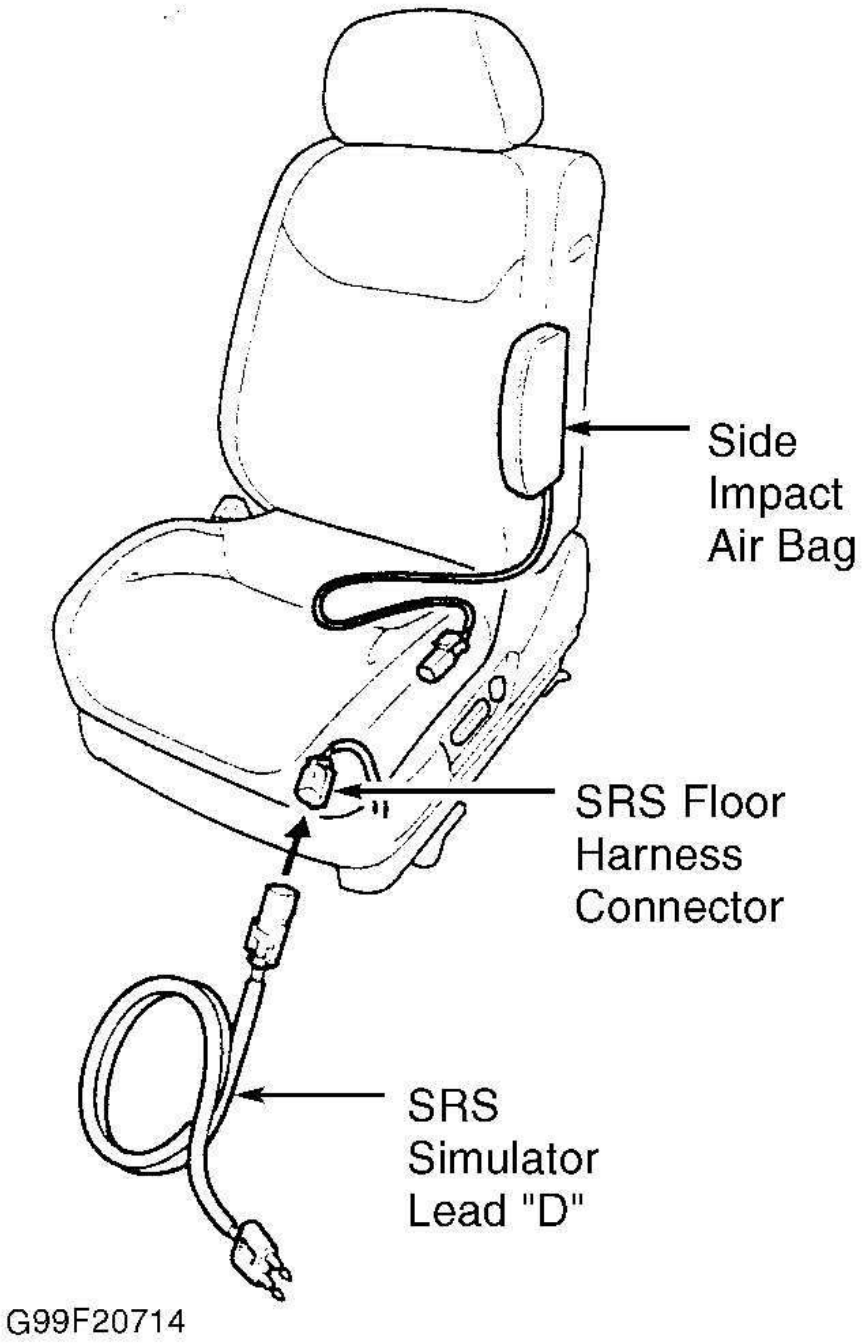

Fig. 32: Connecting SRS Inflator Simulator & Lead To SRS Main Harness (Side-impact Air Bag)
Courtesy of AMERICAN HONDA MOTOR CO., INC.

DTC 11-3

cardiagn.com

WARNING: Accidental air bag deployment is possible. Personal injury may result. Avoid bumping SRS unit if ignition is on, or has been turned off for less than 3 minutes.

1. Before proceeding, see **AIR BAG SAFETY PRECAUTIONS** . Erase DTC memory. Turn ignition on. If indicator light stays on, go to next step. If light goes off after about 6 seconds, system is okay at this time. See **TROUBLESHOOTING INTERMITTENT FAILURES** under DIAGNOSTICS.
2. Disconnect driver side-impact air bag. Connect SRS Simulator Lead "D" (07XAZ-S1A0200) and SRS Inflator Simulator (07SAZ-TB4011A) to SRS floor harness 2-pin connector. See **Fig. 32** . Reconnect negative battery cable. Erase DTC memory. Retrieve DTCs. If DTC 11-3 is indicated, go to next step. If DTC 11-3 is not indicated, replace driver side-impact air bag assembly. See **DRIVER-SIDE AIR BAG** under REMOVAL & INSTALLATION.
3. Disconnect passenger side-impact air bag and both seat belt tensioners. Disconnect SRS unit harness 14-pin connector from SRS unit. See **Fig. 22** . Disconnect SRS simulator lead "D" and SRS inflator simulator from SRS floor harness 2-pin connector. Measure resistance between SRS floor harness 14-pin connector terminals No. 4 and 13. If resistance is one megohm or more, replace SRS unit. See **SRS UNIT** under REMOVAL & INSTALLATION. If resistance is less than one megohm, replace SRS floor harness.

DTC 11-4

WARNING: Accidental air bag deployment is possible. Personal injury may result. Avoid bumping SRS unit if ignition is on, or has been turned off for less than 3 minutes.

1. Before proceeding, see **AIR BAG SAFETY PRECAUTIONS** . Erase DTC memory. Turn ignition on. If indicator light stays on, go to next step. If light goes off after about 6 seconds, system is okay at this time. See **TROUBLESHOOTING INTERMITTENT FAILURES** under DIAGNOSTICS.
2. disconnect driver side-impact air bag. Connect SRS Simulator Lead "D" (07XAZ-S1A0200) and SRS Inflator Simulator (07SAZ-TB4011A) to SRS floor harness 2-pin connector. See **Fig. 32** . Reconnect negative battery cable. Erase DTC memory. Retrieve DTCs. If DTC 11-4 is indicated, go to next step. If DTC 11-4 is not indicated, replace driver side-impact air bag assembly. See **DRIVER-SIDE AIR BAG** under REMOVAL & INSTALLATION.
3. Disable passenger side-impact air bag and both seat belt tensioners. See **DISABLING & ACTIVATING AIR BAG SYSTEM** . Disconnect SRS floor harness 14-pin connector from SRS unit. See **Fig. 22** . Measure resistance between SRS floor harness 14-pin connector terminal No. 13 and terminals No. 6 and 7. If resistance is one megohm or more, replace SRS unit. See **SRS UNIT** under REMOVAL & INSTALLATION. If resistance is less than one megohm, replace SRS floor harness.

DTC 11-5

WARNING: Accidental air bag deployment is possible. Personal injury may result. Avoid bumping SRS unit if ignition is on, or has been turned off for less than 3 minutes.

cardiagn.com

1. Before proceeding, see **AIR BAG SAFETY PRECAUTIONS** . Erase DTC memory. Turn ignition on. If indicator light stays on, go to next step. If light goes off after about 6 seconds, system is okay at this time. See **TROUBLESHOOTING INTERMITTENT FAILURES** under DIAGNOSTICS.
2. Disconnect driver side-impact air bag. Connect SRS Simulator Lead "D" (07XAZ-S1A0200) and SRS Inflator Simulator (07SAZ-TB4011A) to SRS floor harness 2-pin connector. See **Fig. 32** . Reconnect negative battery cable. Erase DTC memory. Retrieve DTCs. If DTC 11-5 is indicated, go to next step. If DTC 11-5 is not indicated, replace driver side-impact air bag assembly. See **DRIVER-SIDE AIR BAG** under REMOVAL & INSTALLATION.
3. Disconnect passenger side-impact air bag and both seat belt tensioners. Disconnect SRS floor harness 14-pin connector from SRS unit. See **Fig. 22** . Measure resistance between SRS floor harness 14-pin connector terminal No. 13 and terminals No. 11, 12 and ground. If resistance is one megohm or more, replace SRS unit. See **SRS UNIT** under REMOVAL & INSTALLATION. If resistance is less than one megohm, replace SRS floor harness.

DTC 12-1

WARNING: **Accidental air bag deployment is possible. Personal injury may result. Avoid bumping SRS unit if ignition is on, or has been turned off for less than 3 minutes.**

1. Before proceeding, see **AIR BAG SAFETY PRECAUTIONS** . Erase DTC memory. Turn ignition on. If indicator light stays on, go to next step. If light goes off after about 6 seconds, system is okay at this time. See **TROUBLESHOOTING INTERMITTENT FAILURES** under DIAGNOSTICS.
2. Disconnect passenger side-impact air bag. Connect SRS Simulator Lead "D" (07XAZ-S1A0200) and SRS Inflator Simulator (07SAZ-TB4011A) to SRS floor harness 2-pin connector. See **Fig. 32** . Reconnect negative battery cable. Erase DTC memory. Retrieve DTCs. If DTC 12-1 is indicated, go to next step. If DTC 12-1 is not indicated, replace passenger side-impact air bag assembly. See **DRIVER-SIDE AIR BAG** under REMOVAL & INSTALLATION.
3. Disconnect driver side-impact air bag and both seat belt tensioners. Disconnect SRS floor harness 14-pin connector from SRS unit. See **Fig. 22** . Measure resistance between SRS floor harness 14-pin connector terminals No. 5 and 14. If resistance is 2-3 ohms, go to next step. If resistance is not 2-3 ohms, replace SRS floor harness.
4. Check for poor contact at SRS floor harness 14-pin connector. If connector is okay, replace SRS unit. See **SRS UNIT** under REMOVAL & INSTALLATION.

DTC 12-3

WARNING: **Accidental air bag deployment is possible. Personal injury may result. Avoid bumping SRS unit if ignition is on, or has been turned off for less than 3 minutes.**

1. Before proceeding, see **AIR BAG SAFETY PRECAUTIONS** . Erase DTC memory. Turn ignition on. If indicator light stays on, go to next step. If light goes off after about 6 seconds, system is okay at this time. See **TROUBLESHOOTING INTERMITTENT FAILURES** under DIAGNOSTICS.
2. Disconnect passenger side-impact air bag. Connect SRS Simulator Lead "D" (07XAZ-S1A0200) and

cardiagn.com

SRS Inflator Simulator (07SAZ-TB4011A) to SRS floor harness 2-pin connector. See **Fig. 32** . Reconnect negative battery cable. Erase DTC memory. Retrieve DTCs. If DTC 12-3 is indicated, go to next step. If DTC 12-3 is not indicated, replace passenger side-impact air bag assembly. See **DRIVER-SIDE AIR BAG** under REMOVAL & INSTALLATION.

3. Disconnect driver side-impact air bag and both seat belt tensioners. Disconnect SRS floor harness 14-pin connector from SRS unit. See **Fig. 22** . Disconnect SRS simulator lead "D" and SRS inflator simulator from SRS floor harness 2-pin connector. Measure resistance between SRS floor harness 14-pin connector terminals No. 5 and 14. If resistance is one megohm or more, replace SRS unit. See **SRS UNIT** under REMOVAL & INSTALLATION. If resistance is less than one megohm, replace SRS floor harness.

DTC 12-4

WARNING: **Accidental air bag deployment is possible. Personal injury may result. Avoid bumping SRS unit if ignition is on, or has been turned off for less than 3 minutes.**

1. Before proceeding, see **AIR BAG SAFETY PRECAUTIONS** . Erase DTC memory. Turn ignition on. If indicator light stays on, go to next step. If light goes off after about 6 seconds, system is okay at this time. See **TROUBLESHOOTING INTERMITTENT FAILURES** under DIAGNOSTICS.
2. Disconnect passenger side-impact air bag. Connect SRS Simulator Lead "D" (07XAZ-S1A0200) and SRS Inflator Simulator (07SAZ-TB4011A) to SRS floor harness 2-pin connector. See **Fig. 32** . Reconnect negative battery cable. Erase DTC memory. Retrieve DTCs. If DTC 12-4 is indicated, go to next step. If DTC 12-4 is not indicated, replace passenger side-impact air bag assembly. See **DRIVER-SIDE AIR BAG** under REMOVAL & INSTALLATION.
3. Disconnect driver side-impact air bag and both seat belt tensioners. Disconnect SRS floor harness 14-pin connector from SRS unit. See **Fig. 22** . Measure resistance between SRS floor harness 14-pin connector terminal No. 14 and terminals No. 6 and 7. If resistance is one megohm or more, replace SRS unit. See **SRS UNIT** under REMOVAL & INSTALLATION. If resistance is less than one megohm, replace SRS floor harness.

DTC 12-5

WARNING: **Accidental air bag deployment is possible. Personal injury may result. Avoid bumping SRS unit if ignition is on, or has been turned off for less than 3 minutes.**

1. Before proceeding, see **AIR BAG SAFETY PRECAUTIONS** . Erase DTC memory. Turn ignition on. If indicator light stays on, go to next step. If light goes off after about 6 seconds, system is okay at this time. See **TROUBLESHOOTING INTERMITTENT FAILURES** under DIAGNOSTICS.
2. Disconnect passenger side-impact air bag. Connect SRS Simulator Lead "D" (07XAZ-S1A0200) and SRS Inflator Simulator (07SAZ-TB4011A) to SRS floor harness 2-pin connector. See **Fig. 32** . Reconnect negative battery cable. Erase DTC memory. Retrieve DTCs. If DTC 12-5 is indicated, go to next step. If DTC 12-5 is not indicated, replace passenger side-impact air bag assembly. See **DRIVER-SIDE AIR BAG** under REMOVAL & INSTALLATION.
3. Disconnect driver side-impact air bag and both seat belt tensioners. Disconnect SRS floor harness 14-pin

cardiagn.com

connector from SRS unit. See **Fig. 22** . Measure resistance between SRS floor harness 14-pin connector terminal No. 14 and terminals No. 11, 12 and ground. If resistance is one megohm or more, replace SRS unit. See **SRS UNIT** under REMOVAL & INSTALLATION. If resistance is less than one megohm, replace SRS floor harness.

DTC 13-1 & 13-2

WARNING: **Accidental air bag deployment is possible. Personal injury may result. Avoid bumping SRS unit if ignition is on, or has been turned off for less than 3 minutes.**

Before proceeding, see **AIR BAG SAFETY PRECAUTIONS** . Erase DTC memory. Turn ignition on. If indicator light stays on, replace driver side-impact sensor. See **SIDE-IMPACT SENSORS** under REMOVAL & INSTALLATION. If light goes off after about 6 seconds, system is okay at this time. See **TROUBLESHOOTING INTERMITTENT FAILURES** under DIAGNOSTICS.

DTC 13-3

WARNING: **Accidental air bag deployment is possible. Personal injury may result. Avoid bumping SRS unit if ignition is on, or has been turned off for less than 3 minutes.**

1. Before proceeding, see **AIR BAG SAFETY PRECAUTIONS** . Erase DTC memory. Turn ignition on. If indicator light stays on, go to next step. If light goes off after about 6 seconds, system is okay at this time. See **TROUBLESHOOTING INTERMITTENT FAILURES** under DIAGNOSTICS.
2. Disconnect driver side-impact air bag. Check for poor contact between SRS floor harness 4-pin connector and driver side-impact sensor. If connection is faulty, reconnect or replace driver side-impact sensor. If connection is okay, replace SRS floor harness. If problem persists, replace driver side-impact sensor.

DTC 14-1 & 14-2

WARNING: **Accidental air bag deployment is possible. Personal injury may result. Avoid bumping SRS unit if ignition is on, or has been turned off for less than 3 minutes.**

Before proceeding, see **AIR BAG SAFETY PRECAUTIONS** . Erase DTC memory. Turn ignition on. If indicator light stays on, replace passenger side-impact sensor. See **SIDE-IMPACT SENSORS** under REMOVAL & INSTALLATION. If light goes off after about 6 seconds, system is okay at this time. See **TROUBLESHOOTING INTERMITTENT FAILURES** under DIAGNOSTICS.

DTC 14-3

WARNING: **Accidental air bag deployment is possible. Personal injury may result. Avoid bumping SRS unit if ignition is on, or has been turned off for less than 3 minutes.**

cardiagn.com

1. Before proceeding, see **AIR BAG SAFETY PRECAUTIONS** . Erase DTC memory. Turn ignition on. If indicator light stays on, go to next step. If light goes off after about 6 seconds, system is okay at this time. See **TROUBLESHOOTING INTERMITTENT FAILURES** under DIAGNOSTICS.
2. Disconnect driver side-impact air bag. Check for poor contact between SRS floor harness 4-pin connector and passenger side-impact sensor. If connection is faulty, reconnect or replace passenger side-impact sensor. If connection is okay, replace SRS floor harness. If problem persists, replace passenger side-impact sensor. See **SIDE-IMPACT SENSORS** under REMOVAL & INSTALLATION.

DTC 15-1

WARNING: **Accidental air bag deployment is possible. Personal injury may result. Avoid bumping SRS unit if ignition is on, or has been turned off for less than 3 minutes.**

1. Before proceeding, see **AIR BAG SAFETY PRECAUTIONS** . Make sure passenger seat is empty. Initialize OPDS unit. See **INITIALIZING OCCUPANT POSITION DETECTION SYSTEM (OPDS) UNIT** under DIAGNOSTICS. Erase DTC memory. Retrieve DTCs. If DTC 15-1 is indicated, go to next step. If DTC 15-1 is not indicated, system is okay at this time. See **TROUBLESHOOTING INTERMITTENT FAILURES** under DIAGNOSTICS.
2. Check fuse No. 7 (7.5-amp) in driver's under-dash fuse/relay box. If fuse is okay, go to next step. If fuse is blown, go to step 5 .
3. Disconnect OPDS unit wire harness 8-pin connector from OPDS unit. See **Fig. 33** . Turn ignition on. Measure voltage between OPDS unit wire harness 8-pin connector terminal No. 4 (Yellow/Green wire) and ground. If battery voltage exists, go to step 7 . If battery voltage does not exist, go to next step.
4. Turn ignition off. Disconnect left floor wire harness 12-pin (or 2-pin without touring package) connector from instrument panel 12-pin wire harness. See **Fig. 34** . Turn ignition on. Measure voltage between instrument panel wire harness 12-pin connector terminal No. 6 (No. 2 for 2-pin connector) and ground. If battery voltage does not exist, replace instrument panel wire harness. If battery voltage exists, check for open in OPDS unit harness. If OPDS unit harness is okay, replace left floor harness.
5. Replace fuse No. 7 (7.5-amp) in under-dash fuse/relay box. Turn ignition on for 30 seconds, then turn off. Check fuse No. 7. If fuse is okay, system is functioning normally. If fuse is blown, go to next step.
6. Replace fuse No. 7 (7.5-amp) in under-dash fuse/relay box. Disconnect OPDS unit wire harness 8-pin connector from OPDS unit. See **Fig. 33** . Turn ignition on for 30 seconds, then turn ignition off. Check fuse No. 7. If fuse is okay, replace OPDS unit. If fuse is blown, check for short to ground in fuse No. 7 (7.5-amp) circuit (Yellow/Green wire). Repair as necessary. See **WIRING DIAGRAMS** .
7. Turn ignition off. Measure resistance between OPDS unit wire harness 8-pin connector terminal No. 8 and ground. See **Fig. 33** . If resistance is one ohm or less, go to next step. If resistance is more than one ohm, check for open in OPDS unit harness. If OPDS unit harness is okay, replace right side wire harness.
8. Disconnect negative battery cable. Wait at least 3 minutes. Disconnect left and right side-impact air bags connectors, located under each front seat. Disconnect SRS floor harness 14-pin connector from SRS unit. See **Fig. 22** . Measure resistance between SRS floor harness 14-pin connector terminal No. 1 and ground. If resistance is one megohm or more, go to next step. If resistance is less than one megohm, check for short to ground side harness or OPDS unit harness. Replace harnesses as necessary.
9. Measure resistance between SRS floor harness 14-pin connector terminal No. 1 and OPDS unit wire

cardiagn.com

harness 8-pin connector terminal No. 7. See **Fig. 22** & **Fig. 33** . If resistance is one ohm or less, go to next step. If resistance is more than one ohm, check for open in left floor harness, side wire harness or OPDS unit harness. Replace harnesses as necessary.

10. Disconnect SRS main harness 2-pin connector from driver-side under-dash fuse/relay box. See **Fig. 23** . Reconnect negative battery cable. Turn ignition on. Measure voltage between SRS floor harness 14-pin connector terminal No. 1 and ground. If voltage is 0.5 volts or less, replace OPDS unit. If voltage is more than 0.5 volts, check for faulty OPDS unit or seat sensor/seat back foam. Replace component as necessary and initialize system. See **INITIALIZING OCCUPANT POSITION DETECTION SYSTEM (OPDS) UNIT** under DIAGNOSTICS.

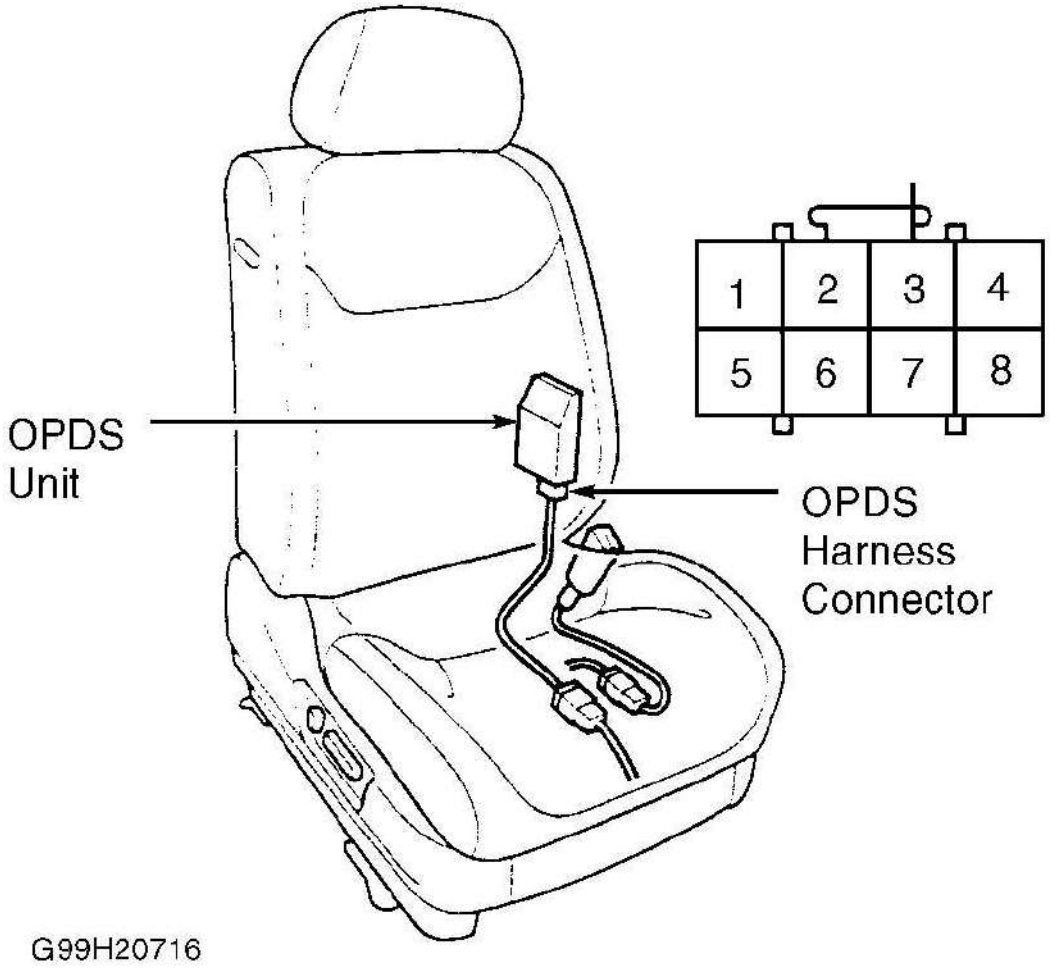

Fig. 33: Identifying OPDS Unit Connector Terminals
Courtesy of AMERICAN HONDA MOTOR CO., INC.

cardiagn.com

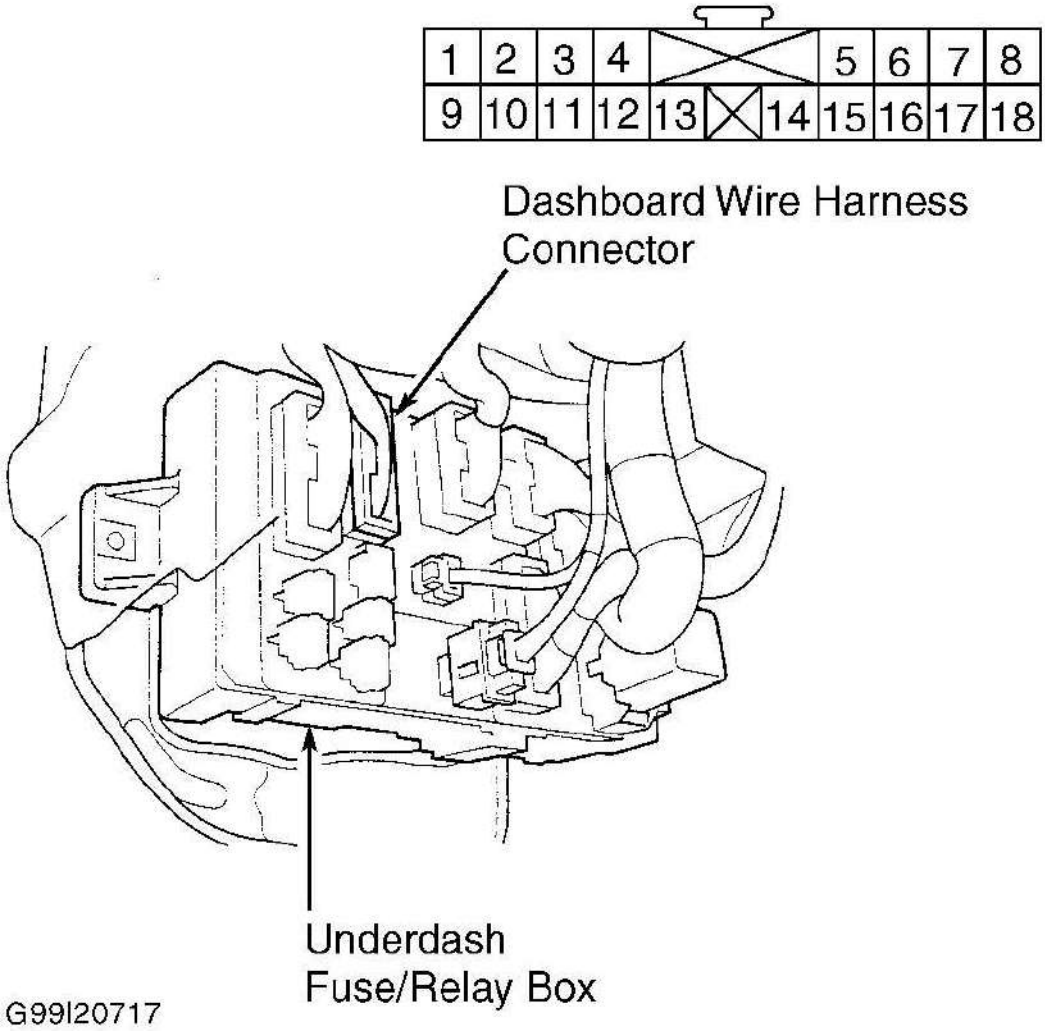

Fig. 34: Identifying Instrument Panel Wire Harness Connector
Courtesy of AMERICAN HONDA MOTOR CO., INC.

DTC 15-2

WARNING: **Accidental air bag deployment is possible. Personal injury may result. Avoid bumping SRS unit if ignition is on, or has been turned off for less than 3 minutes.**

1. Before proceeding, see **AIR BAG SAFETY PRECAUTIONS** . Erase DTC memory. Turn ignition on. If indicator light stays on, go to next step. If light goes off after about 6 seconds, system is okay at this time. See **TROUBLESHOOTING INTERMITTENT FAILURES** under DIAGNOSTICS.
2. Ensure nothing is sitting on front passenger seat. Turn ignition on, and observe side air bag indicator

cardiagn.com

light. If indicator light does not come on, go to next step. If indicator light comes on, ensure side air bag indicator light comes on for 5 seconds then goes off. If side air bag indicator light goes off, replace OPDS unit. If problem, persists, replace SRS unit. If side air bag indicator light does not go off, go to step 11 .

3. Turn ignition off. Check fuse No. 9 (10-amp) in driver's under-dash fuse/relay box. If fuse is blown, repair short in fuse No. 9 circuit and recheck system operation. If fuse is okay, check side-impact indicator light bulb. If bulb is okay, go to next step. If bulb is blown, replace bulb.
4. Disconnect OPDS unit wire harness 8-pin connector from OPDS unit. See **Fig. 33** . Turn ignition on. Measure voltage between OPDS unit wire harness 8-pin connector terminal No. 3 and ground. If battery voltage exists, go to next step. If battery voltage does not exist, go to step 8 .
5. Turn ignition off. Disconnect instrument panel wire harness 14-pin connector from instrument cluster. Turn ignition on. Measure voltage between OPDS unit wire harness 8-pin connector terminal No. 3 and ground. See **Fig. 33** . If voltage is more than 0.5 volt, go to next step. If voltage is 0.5 volt or less, replace OPDS unit.
6. Turn ignition off. Disconnect instrument panel wire harness 18-pin connector from gauge assembly. See **Fig. 21** . Turn ignition on. Measure voltage between OPDS unit wire harness 8-pin connector terminal No. 3 and ground. If voltage is less than 0.5 volt, replace gauge assembly. If voltage is more than 0.5 volt, go to next step.
7. Turn ignition off. Disconnect left floor wire harness 12-pin (or 2-pin without touring package) connector from instrument panel 12-pin wire harness. See **Fig. 34** . Turn ignition on. Measure voltage between OPDS unit wire harness 8-pin connector terminal No. 3 and ground. If voltage is less than 0.5 volt, replace left floor wire harness. If voltage is more than 0.5 volt, replace instrument panel wire harness.
8. Turn ignition off. Backprobe instrument panel wire harness 18-pin connector terminal No. 13 using Backprobe Adapter (07TAZ-001020A). DO NOT disconnect connector from gauge assembly. Turn ignition on. Measure voltage between gauge assembly 18-pin connector terminal No. 13 and ground. See **Fig. 21** . If battery voltage does not exist, go to step 10 . If battery voltage exists, go to next step.
9. Turn ignition off. Disconnect left floor wire harness 12-pin (or 2-pin without touring package) connector from instrument panel 12-pin wire harness. See **Fig. 34** . Turn ignition on. Measure voltage between instrument panel wire harness 12-pin connector terminal No. 1 (No. 1 for 2-pin connector) and ground. If battery voltage does not exist, replace instrument panel wire harness. If battery voltage exists, instrument panel, wire harness.
10. Turn ignition off. Disconnect instrument panel wire harness 14-pin connector from gauge assembly. See **Fig. 21** . Turn ignition on. Measure voltage between gauge assembly 14-pin connector terminal No. 7 and ground. If battery voltage exists, replace gauge assembly. If battery voltage does not exist, replace instrument panel wire harness.
11. Disconnect OPDS unit wire harness 8-pin connector from OPDS unit. See **Fig. 33** . Turn ignition on. If side air bag indicator comes on, go to next step. If side air bag indicator does not come on, replace OPDS unit.
12. Turn ignition off. Disconnect gauge assembly 18-pin connector from gauge assembly. See **Fig. 21** . Measure resistance between gauge assembly 18-pin connector terminal No. 13 and ground. If resistance is more than one megohm, replace gauge assembly. If resistance is less than one megohm, check for short to ground in instrument panel wire harness or OPDS unit harness. Replace appropriate wire harness.

DTC 15-3

cardiagn.com

WARNING: Accidental air bag deployment is possible. Personal injury may result. Avoid bumping SRS unit if ignition is on, or has been turned off for less than 3 minutes.

Before proceeding, see **AIR BAG SAFETY PRECAUTIONS** . Check connection between OPDS sensor harness connector and OPDS unit connector. See **Fig. 33** . If connection is faulty, reconnect or replace OPDS sensor harness. If connections are okay, replace OPDS sensor. If problem persists, replace OPDS unit and/or SRS unit. See **SRS UNIT** under REMOVAL & INSTALLATION.

WIRE REPAIR

NOTE: SRS wiring can be identified by special Yellow outer protective covering.

DO NOT repair any SRS wiring or harness connectors. If SRS wiring or harness connectors are faulty, replace complete wire harness.

TORQUE SPECIFICATIONS

TORQUE SPECIFICATIONS

Application	Ft. Lbs. (N.m)
Seat belt tensioner mounting bolts	24 (32)
Side-impact air bag mounting nuts	16 (22)
Shoulder harness anchor bolt	24 (32)
Steering wheel nut	28 (38)
	INCH Lbs. (N.m)
Driver-side air bag mounting Torx bolts	87 (9.8)
Passenger-side air bag mounting nuts	87 (9.8)
Side-impact sensor mounting Torx bolts	87 (9.8)
SRS unit mounting bolts	87 (9.8)

WIRING DIAGRAMS

cardiagn.com

2002 Acura MDX

2002 ACCESSORIES/SAFETY EQUIPMENT Acura - Air Bag Restraint Systems

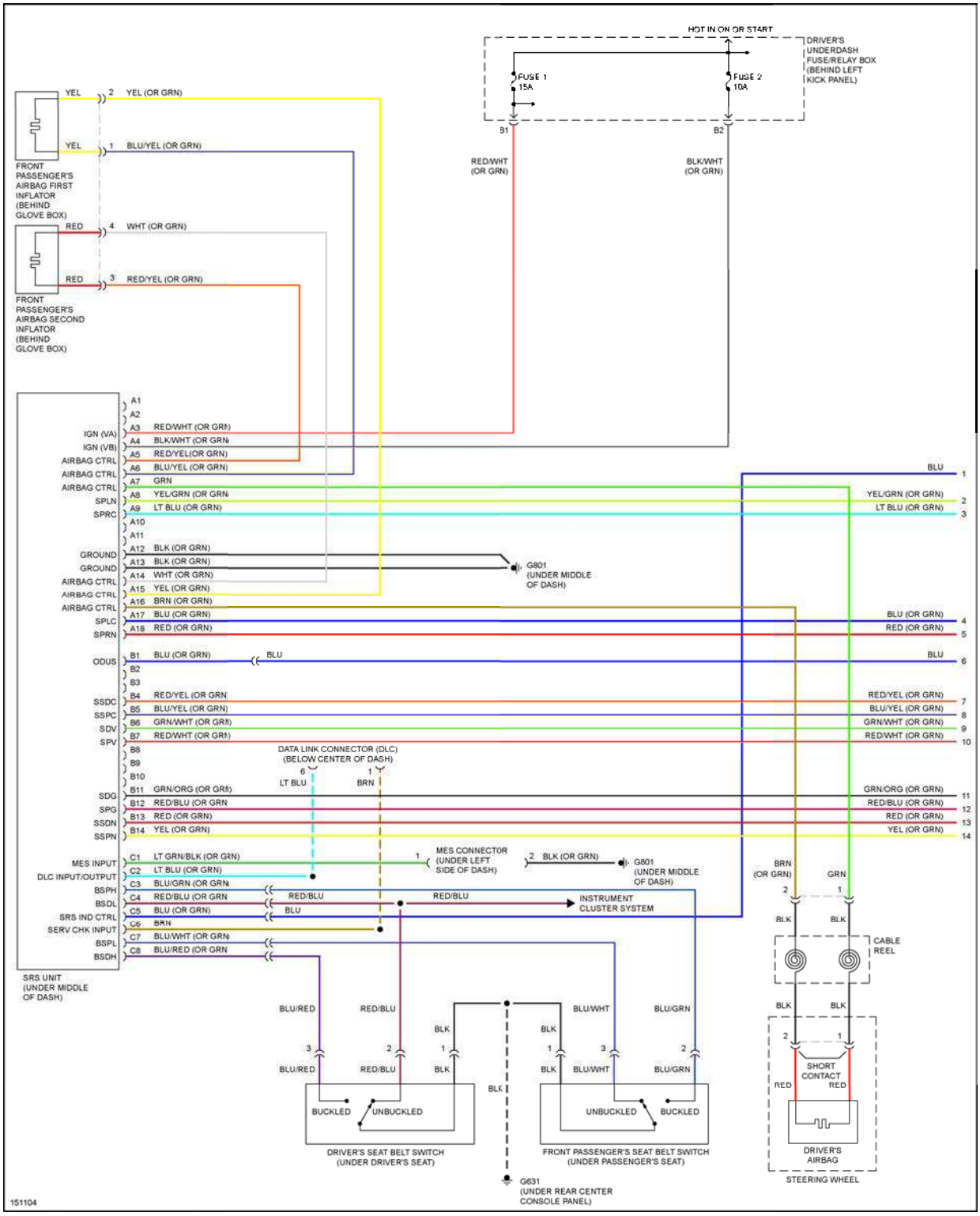

cardiagn.com

Fig. 35: Air Bag System Wiring Diagram (MDX-1 Of 2)

cardiagn.com

2002 Acura MDX

2002 ACCESSORIES/SAFETY EQUIPMENT Acura - Air Bag Restraint Systems

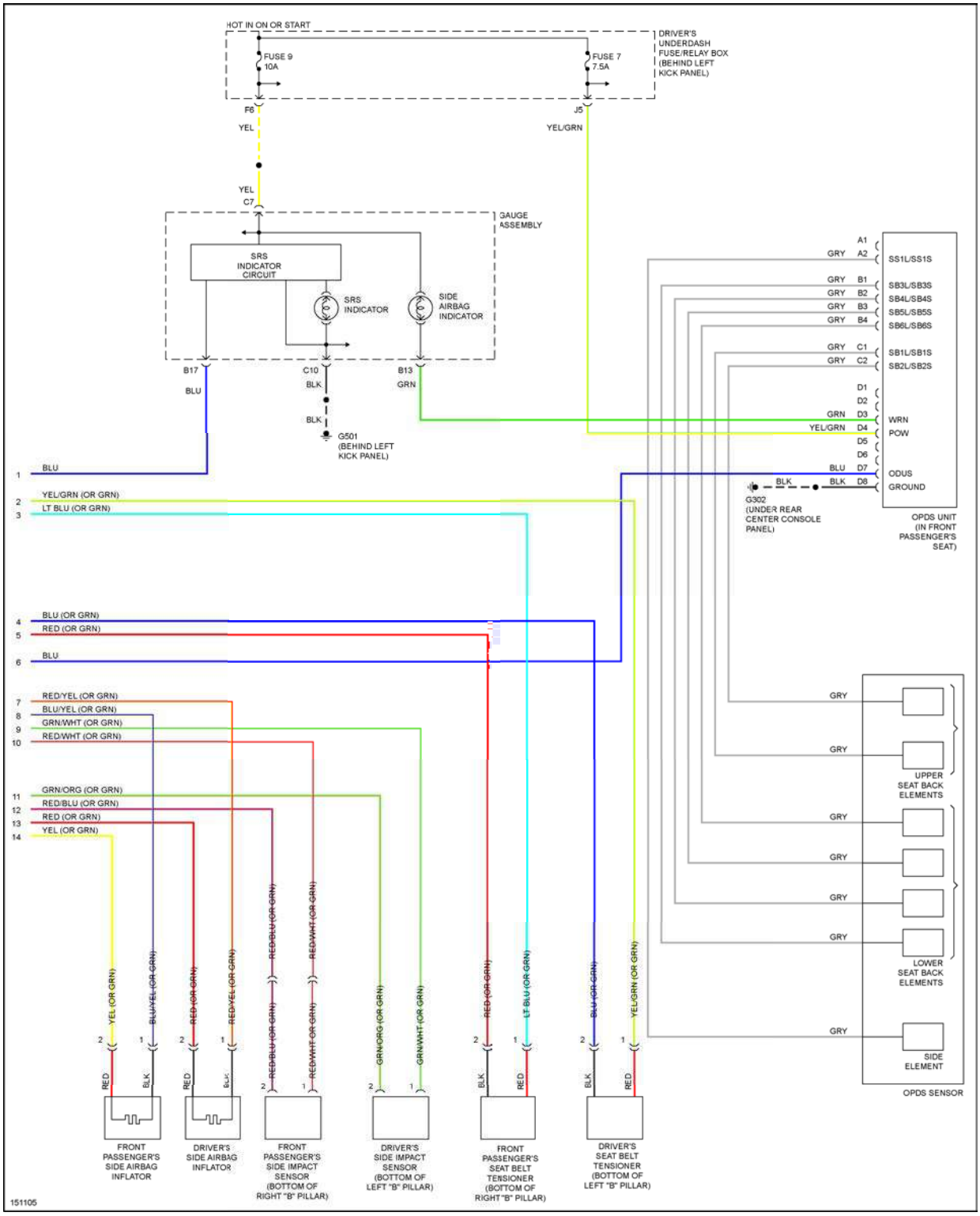

cardiagn.com

Fig. 36: Air Bag System Wiring Diagram (MDX-2 Of 2)

cardiagn.com