SPECIFICATIONS

FASTENER TIGHTENING SPECIFICATIONS

Fastener Tightening Specifications

Application	Specification	
	Metric	English
Adjuster Plug Lock Nut	68 N.m	50 lb ft
Crossmember Mounting Nuts	110 N.m	81 lb ft
Cylinder Line End Fittings	27 N.m	20 lb ft
Cylinder Line Valve End Fittings	17 N.m	13 lb in
Inner Tie Rod	100 N.m	74 lb ft
Outer Tie Rod End Stud Nut to Knuckle		
• First Pass	20 N.m	15 lb ft
• Second Pass	160 degrees	
• Final Pass	45 N.m	33 lb ft
Power Steering Gear Mounting Bolt Nuts to Crossmember	100 N.m	74 lb ft
Power Steering Hose Fittings	27 N.m	20 lb ft
Power Steering Pump Mounting Bolts	25 N.m	18 lb ft
Power Steering Reservoir Bracket Bolts to Engine	50 N.m	37 lb ft
Power Steering Return Hose Mounting Bolts	11 N.m	97 lb in

POWER STEERING PUMP SPECIFICATIONS

Power Steering Pump Specifications

Vehicle	Engine Code	Engine Size	High Flow		Pressure Relief	
			LPM	GPM	kPa	PSI
Y Car	LS1	5.7L	9.1/10.6	2.4/2.8	8619/9308	1250/1350

COMPONENT LOCATOR

POWER STEERING GEAR DISASSEMBLED VIEW (MAGNASTEER)

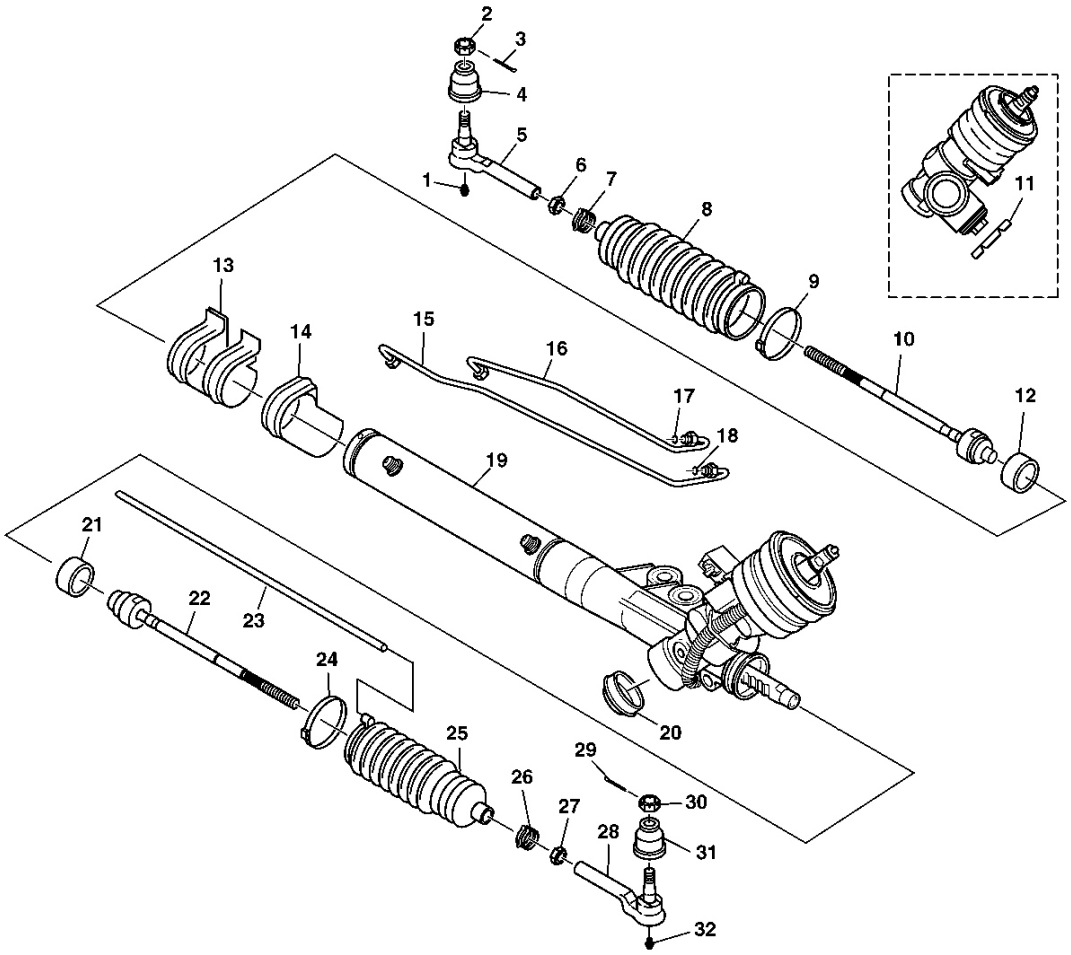

Fig. 1: Magnasteer Power Steering Gear Component View
Courtesy of GENERAL MOTORS CORP.

Callouts For Fig. 1

Callout	Component Name
1	Lubrication Fitting
2	Hexagon Slotted Nut
3	Cotter Pin
4	Tie Rod Seal
5	Outer Tie Rod
6	Hexagon Jam Nut
7	Tie Rod End Clamp
8	Rack and Pinion Boot
9	Large Boot Retaining Clamp
10	Inner Tie Rod

11	Adjuster Plug Lock Nut
12	Shock Dampener Ring
13	Mounting Bracket Assembly
14	Mounting Grommet
15	Cylinder Line (LH)
16	Cylinder Line (RH)
17	O-ring Seal
18	O-ring Seal
19	Rack and Pinion Gear Assembly (Partial)
20	Dust Cover
21	Shock Dampener Ring
22	Inner Tie Rod
23	Breather Tube
24	Large Boot Retaining Clamp
25	Rack and Pinion Boot
26	Tie Rod End Clamp
27	Hexagon Jam Nut
28	Outer Tie Rod
29	Cotter Pin
30	Hexagon Slotted Nut
31	Tie Rod Seal
32	Lubrication Fitting

DIAGNOSTIC INFORMATION AND PROCEDURES

DIAGNOSTIC STARTING POINT - POWER STEERING SYSTEM (W/O ELECTRO-HYDRAULIC STEERING)

Begin the system diagnosis by reviewing the system Description and Operation. Reviewing the Description and Operation information will help you determine the correct symptom diagnostic procedure when a malfunction exists. Reviewing the Description and Operation information will also help you determine if the condition described by the customer is normal operation. Refer to **Symptoms - Power Steering System** in order to identify the correct procedure for diagnosing the system and where the procedure is located.

SYMPTOMS - POWER STEERING SYSTEM

IMPORTANT: The following steps must be completed before using the symptom tables.

1. Determine if the vehicle is equipped with an electrically assisted variable effort system. Perform electrical diagnosis before proceeding with mechanical diagnosis. Refer to **Diagnostic Starting Point - Variable Effort Steering** in Variable Effort Steering.
2. Review the system description and operation in order to familiarize yourself with the system functions.

Refer to **Power Steering System Description and Operation (w/o Electro-Hydraulic Steering)** .

Visual/Physical Inspection

- Inspect for aftermarket devices which could affect the operation of the power steering system.
- Inspect the easily accessible or visible system components for obvious damage or conditions which could cause the symptom.
- Inspect the power steering reservoir for the proper power steering fluid level and condition.

Refer to a symptom diagnostic procedure from the following list in order to diagnose the symptom:

- **Power Steering Fluid Leaks**
- **Rattle, Clunk, or Shudder Noise from the Power Steering System**
- **Whine or Growl Noise from the Power Steering System**
- **Steering Effort Hard in One or Both Directions**
- **Steering Effort Too Easy in One or Both Directions**

POWER STEERING SYSTEM TEST PROCEDURE

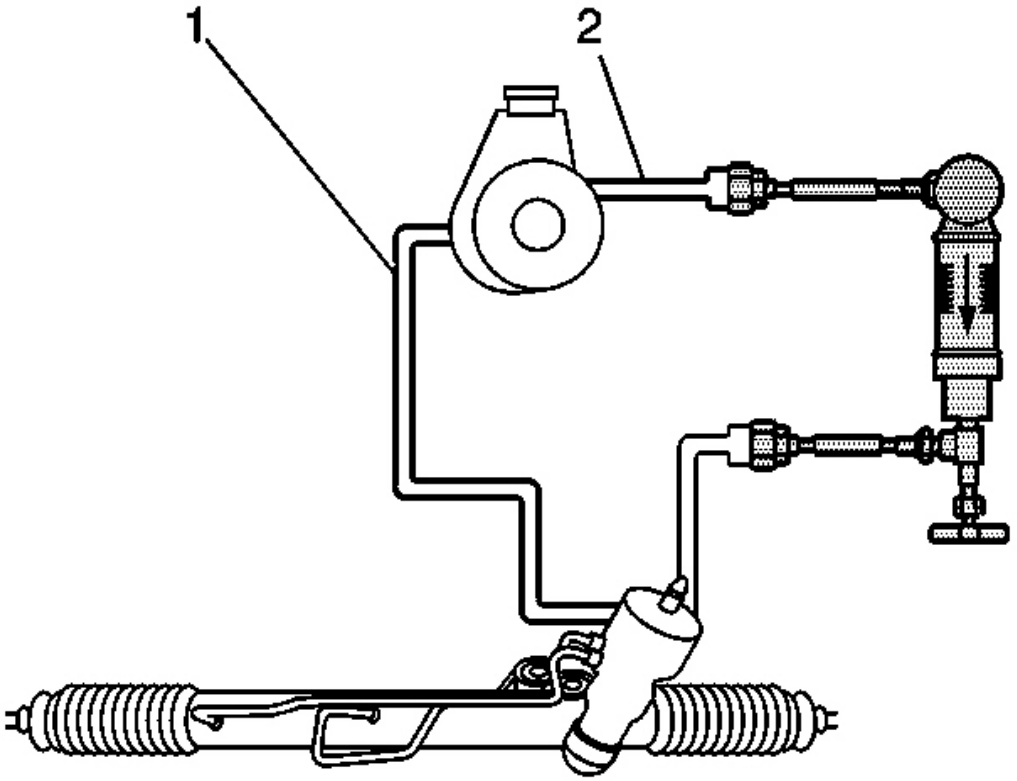

Fig. 2: Rack And Pinion System Component View
Courtesy of GENERAL MOTORS CORP.

Callouts For Fig. 2

Callout	Component Name
1	Power Steering Return Hose
2	Power Steering Pressure Hose

Test Description

The numbers below refer to the step numbers on the diagnostic table.

5: This step tests the system for restrictions.
7: This step tests the following components for the following conditions:
- The pump for internal leaks
- The power steering pipes for kinks

8: This step tests the ability of the pump to regulate flow at maximum pressure.

10: This step tests the ability of the pump to regulate flow under normal operating conditions.

12: This step tests the internal components of the pump and the gear.

Power Steering System Test Procedure

Step	Action	Value (s)	Yes	No
DEFINITION: The Power Steering System Test Procedure will perform the following functions: • Test the operation of the hydraulic power steering system. • Test the operation of the power steering pump and power steering gear. • Identify restrictions in the system.				
1	Inspect the power steering fluid for the following indications of contamination: • Milky fluid - water • Brown fluid - burnt • Debris in fluid - plastic or dirt Is the fluid free of contamination?	-	Go to **Step 3**	Go to **Step 2**
2	Flush the power steering system. Refer to **Flushing the Power Steering System** . Did you complete the procedure?	-	Go to **Step 3**	-
3	**IMPORTANT:** **In order to accurately diagnose the system, the malfunction must be present during the test procedure.** Attempt to duplicate the condition.Is the condition present?	-	Go to **Step 4**	System OK
4	1. Turn the ignition switch to the OFF position. 2. Place a drain pan under the vehicle in order to catch any power steering fluid. 3. Disconnect the power steering pressure pipe/hose from the power steering pump or the power steering gear as necessary. 4. Install the **J 44721** Power Steering System Analyzer. See **Special Tools and Equipment** . 5. Fill the power steering system. Refer to **Checking and Adding Power Steering Fluid** . Did you complete the installation?	-	Go to **Step 5**	-
	1. Fully open the **J 44721** valve. See **Special Tools and Equipment** . 2. Start the engine.			

5	**NOTE:** **Refer to <u>Steering Wheel in the Full Turn Position Notice</u> in Cautions and Notices.** 3. Turn the steering wheel and BRIEFLY hold the steering wheel against the steering stop in order to release any trapped air from the system. 4. Inspect and ensure that all of the power steering pipe/hose connections are not leaking. 5. Observe the pressure reading. Is the pressure reading greater than the specified value?	1585 kPa (230 psi)	Go to **Step 6**	Go to **Step 7**
6	**IMPORTANT:** **A restriction may be present in the power steering system. Turn off the engine IMMEDIATELY.** Locate and repair the restriction.Did you complete the repair?	-	Go to **Step 15**	-
7	1. Allow the engine to run until the engine reaches full operating temperature. 2. Record the pressure reading and flow reading. 3. Partially close the **J 44721** valve until the system pressure reaches the specified value, then record the FLOW reading. See **<u>Special Tools and Equipment</u>** . 4. Subtract second flow reading from the first flow reading. Is the flow DECREASE greater than 3.8 L (1 gal) per minute?	4827 kPa (700 psi)	Go to **Step 13**	Go to **Step 8**
8	**IMPORTANT:** **Do not leave the valve closed for more than 5 seconds, or internal pump damage could accrue.** Fully close then open the **J 44721** valve 3 times. See **<u>Special Tools and Equipment</u>** . Record all of the high pressure readings. Refer to **<u>Power Steering Pump Specifications</u>** for power steering system pressure relief specifications.Are the three high pressure readings within specifications?	-	Go to **Step 9**	Go to **Step 13**
9	Are the three high pressure readings within 245 kPa (50 psi) of each other?	-	Go to **Step 10**	Go to **Step 13**
10	1. Increase the engine speed to approximately 1500 RPM. 2. Record the flow reading. Refer to **<u>Power Steering Pump Specifications</u>** for power steering system pressure specifications. Is the actual flow reading within specifications?	-	Go to **Step 11**	Go to **Step 13**
11	Is the difference between the actual flow reading and the maximum flow specification more than 3.8 L (1 gal) per minute?	-	Go to **Step 13**	Go to **Step 12**

12	**NOTE:** **Refer to Steering Wheel in the Full Turn Position Notice in Cautions and Notices.** Turn the steering wheel from steering stop to steering stop and record the FLOW readings at each stop.Is the flow LOWER than 3.8 L (1 gal) per minute?	-	Go to **Step 15**	Go to **Step 14**
13	Replace the power steering pump. Refer to **Power Steering Pump Replacement** . Did you complete the replacement?	-	Go to **Step 15**	-
14	The power steering gear is leaking across the piston or bypassing the valve circuit. Replace the power steering gear. Refer to **Power Steering Gear Replacement** . Did you complete the replacement?	-	Go to **Step 15**	-
15	Test the power steering system for the original condition. Does the original condition still exist?	-	Go to **Step 5**	Go to **Step 16**
16	1. Disconnect and remove the **J 44721** from the vehicle. See **Special Tools and Equipment** . 2. Connect the vehicle power steering pipes/hoses. 3. Bleed the power steering system and add fluid as necessary. Refer to **Bleeding the Power Steering System** . Did you complete the repair?	-	System OK	-

POWER STEERING FLUID LEAKS

Power Steering Fluid Leaks

Step	Action	Yes	No
1	Did you review the Power Steering System General Description and perform the necessary inspections?	Go to **Step 2**	Go to **Symptoms - Power Steering System**
2	Verify that power steering fluid leaks are present. Is the power steering system leaking?	Go to **Step 3**	System OK
3	Inspect the power steering system fittings. Are the fittings leaking?	Go to **Step 8**	Go to **Step 4**
4	Inspect the power steering hoses. Are the hoses leaking?	Go to **Step 9**	Go to **Step 5**
5	Inspect the power steering sensors. Are the sensors leaking?	Go to **Step 10**	Go to **Step 6**
6	Inspect the power steering pump and the reservoir for leaks. Is the power steering pump or reservoir leaking?	Go to **Step 11**	Go to **Step 7**
7	Inspect the power steering gear for leaks. Is the power steering gear leaking?	Go to **Step 12**	Go to **Step 8**
	Tighten the fittings. Refer to **Fastener Tightening**		

8	**Specifications** . Did you complete the repair?	Go to **Step 13**	-
9	Replace the power steering hoses. Refer to the appropriate procedure(s): • **Power Steering Reservoir Outlet Pipe/Hose Replacement** • **Power Steering Pressure Pipe/Hose Replacement** • **Power Steering Return Hose Replacement** Did you complete the repair?	Go to **Step 13**	-
10	Replace the power steering sensors. Did you complete the repair?	Go to **Step 13**	-
11	Replace the power steering pump or reservoir. Refer to **Power Steering Pump Replacement** or **Remote Power Steering Fluid Reservoir Replacement** . Did you complete the repair?	Go to **Step 13**	-
12	Replace the power steering gear. Refer to **Power Steering Gear Replacement** . Did you complete the repair?	Go to **Step 13**	-
13	Operate the system in order to verify the repair. Did you correct the condition?	System OK	Go to **Step 3**

RATTLE, CLUNK, OR SHUDDER NOISE FROM THE POWER STEERING SYSTEM

Rattle, Clunk, or Shudder Noise from the Power Steering System

Step	Action	Yes	No
1	Did you review the Power Steering System General Description and perform the necessary inspections?	Go to **Step 2**	Go to **Symptoms - Power Steering System**
2	Verify that a rattle, clunk or shudder noise is present. Is a rattle, clunk or shudder noise present?	Go to **Step 3**	System OK
3	Inspect the power steering hoses for proper routing and clearance. Is the routing or clearance of the power steering hoses incorrect?	Go to **Step 12**	Go to **Step 4**
4	Inspect the engine drive belt for cracking or excessive wear. Refer to **Drive Belt Replacement - Accessory** in Engine Mechanical-5.7L. Is the drive belt cracked or excessively worn?	Go to **Step 13**	Go to **Step 5**
5	Inspect the power steering pump pulley for damage. Is the power steering pump pulley damaged?	Go to **Step 14**	Go to **Step 6**
6	Inspect the power steering pump and the power steering mounting bracket/brace for the proper installation. Refer to **Power Steering Pump Replacement** .	Go to	

	Is the power steering pump installation incorrect?	**Step 15**	Go to **Step 7**
7	Inspect the power steering gear for the proper installation. Refer to **Power Steering Gear Replacement** . Is the power steering gear installation incorrect?	Go to **Step 16**	Go to **Step 8**
8	Inspect the steering gear bearing preload for the proper adjustment. Refer to **Rack and Pinion Gear Rack Bearing Preload Adjustment - Off Vehicle (MAGNASTEER)** . Is the steering gear bearing preload adjustment incorrect?	Go to **Step 17**	Go to **Step 9**
9	Inspect the steering linkage. Is the steering linkage worn?	Go to **Step 18**	Go to **Step 10**
10	Inspect the suspension. Is the suspension worn?	Go to **Step 19**	Go to **Step 11**
11	Inspect the intermediate shaft. Is the intermediate shaft worn?	Go to **Step 20**	Go to **Step 3**
12	Adjust or replace the hoses. Refer to the appropriate procedure(s): • **Power Steering Reservoir Outlet Pipe/Hose Replacement** • **Power Steering Pressure Pipe/Hose Replacement** • **Power Steering Return Hose Replacement** Did you complete the repair?	Go to **Step 21**	-
13	Replace the engine drive belt. Refer to **Drive Belt Replacement - Accessory** in Engine Mechanical-5.7L. Did you complete the repair?	Go to **Step 21**	-
14	Replace the power steering pump pulley. Refer to **Power Steering Pulley Replacement** . Did you complete the repair?	Go to **Step 21**	-
15	Install the power steering pump correctly. Refer to **Power Steering Pump Replacement** . Did you complete the repair?	Go to **Step 21**	-
16	Install the power steering gear correctly. Refer to **Power Steering Gear Replacement** . Did you complete the repair?	Go to **Step 21**	-
17	Adjust the steering gear bearing preload. Refer to **Rack and Pinion Gear Rack Bearing Preload Adjustment - Off Vehicle (MAGNASTEER)** . Did you complete the repair?	Go to **Step 21**	-
18	Replace the worn steering linkage. Did you complete the repair?	Go to **Step 21**	-
19	Replace the worn suspension components. Refer to **Diagnostic Starting Point - Suspension General Diagnosis** . Did you complete the repair?	Go to **Step 21**	-
	Replace the intermediate shaft. Refer to **Intermediate Steering**		

20	**Shaft Replacement** in Steering Wheel and Column. Did you complete the repair?	Go to **Step 21**	-
21	Operate the system in order to verify the repair. Did you correct the condition?	System OK	Go to **Step 3**

WHINE OR GROWL NOISE FROM THE POWER STEERING SYSTEM

Whine or Growl Noise from the Power Steering System

Step	Action	Yes	No
1	Did you review the Power Steering System Description and perform the necessary inspections?	Go to **Step 2**	Go to **Symptoms - Power Steering System**
2	Verify that a whine or growl noise is present. Is a whine or growl noise present?	Go to **Step 3**	System OK
3	Perform the power steering test procedure in order to diagnose a hydraulic condition and repair or replace a component. Refer to **Power Steering System Test Procedure** . Did you repair or replace a power steering system component?	Go to **Step 10**	Go to **Step 4**
4	Using the **J 39570** Chassis Ear, inspect the power steering gear for a whine or growl noise. Is the noise present at the power steering gear?	Go to **Step 7**	Go to **Step 5**
5	Using the **J 39570** , inspect the power steering pump for a whine or growl noise. Is the noise present at the power steering pump?	Go to **Step 8**	Go to **Step 6**
6	Using the **J 39570** , inspect the power steering hoses for a whine or growl noise. Is the noise present at the power steering hoses?	Go to **Step 9**	Go to **Step 2**
7	Replace the power steering gear. Refer to **Power Steering Gear Replacement** . Did you complete the repair?	Go to **Step 10**	-
8	Replace the power steering pump. Refer to **Power Steering Pump Replacement** . Did you complete the repair?	Go to **Step 10**	-
9	Adjust the routing of the power steering hoses. Did you complete the repair?	Go to **Step 10**	-
10	Operate the system in order to verify the repair. Did you correct the condition?	System OK	Go to **Step 3**

STEERING EFFORT HARD IN ONE OR BOTH DIRECTIONS

Steering Effort Hard in One or Both Directions

Step	Action	Yes	No
1	Did you review the Power Steering System General Description and perform the necessary inspections?	Go to **Step 2**	Go to **Symptoms - Power Steering System**

2	Verify that the steering effort is hard in one or both directions. Does the system operate normally?	System OK	Go to **Step 3**
3	Perform the power steering test procedure. Refer to **Power Steering System Test Procedure** . Did you complete the procedure?	Go to **Step 4**	-
4	Operate the system in order to verify the repair. Did you correct the condition?	System OK	Go to **Step 3**

STEERING EFFORT TOO EASY IN ONE OR BOTH DIRECTIONS

Steering Effort Too Easy in One or Both Directions

Step	Action	Yes	No
1	Did you review the Power Steering System Description and perform the necessary inspections?	Go to **Step 2**	Go to **Symptoms - Power Steering System**
2	Verify that the steering effort is too easy in one or both directions. Does the system operate normally?	System OK	Go to **Step 3**
3	Perform the power steering test procedure. Refer to **Power Steering System Test Procedure** . Did you complete the procedure?	Go to **Step 4**	-
4	Operate the system in order to verify the repair. Did you correct the condition?	System OK	Go to **Step 3**

REPAIR INSTRUCTIONS

BLEEDING THE POWER STEERING SYSTEM

Tools Required

- **J 35555** Metal Mityvac. See **Special Tools and Equipment** .
- **J 43485** Power Steering Bleeder Adapter. See **Special Tools and Equipment** .

IMPORTANT: Hoses touching the frame, body, or engine may cause system noise.

1. Verify that the hoses do not touch any other part of the vehicle.

IMPORTANT: Loose connections may not leak, but could allow air into the steering system.

2. Verify that all hose connections are tight.

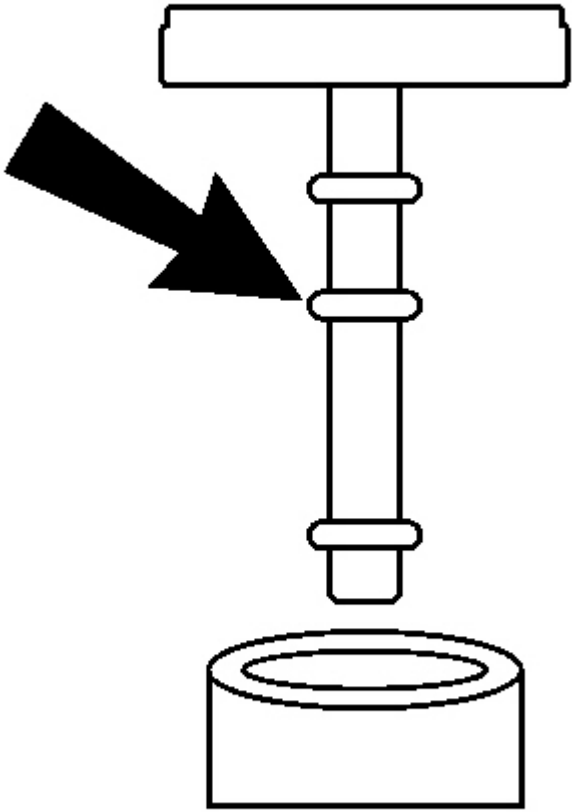

Fig. 3: Removing Pump Reservoir Cap
Courtesy of GENERAL MOTORS CORP.

NOTE: **If the power steering system has been serviced, an accurate fluid level reading cannot be obtained unless air is bled from the steering system. The air in the fluid may cause pump cavitation noise and may cause pump damage over a period of time.**

IMPORTANT: Maintain the fluid level throughout the bleed procedure.

3. Remove the pump reservoir cap.

IMPORTANT: Use clean, new power steering fluid only.

4. Fill the pump reservoir with fluid to the FULL COLD level.

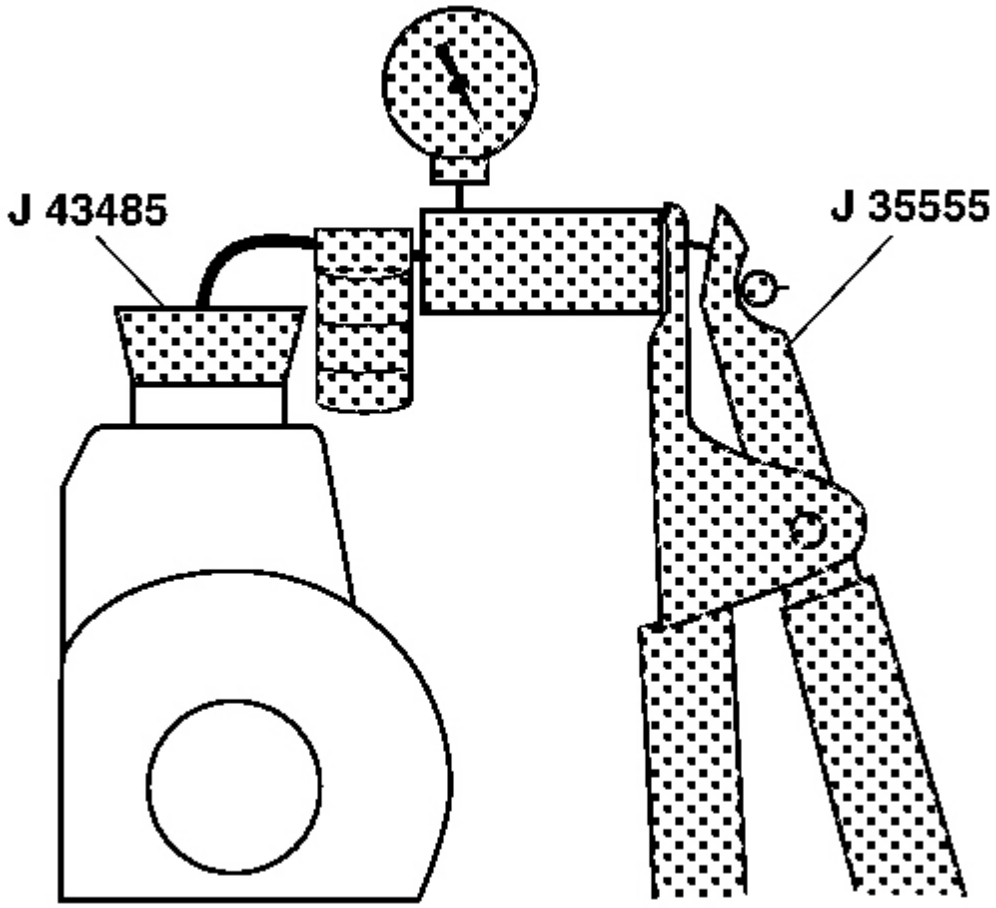

Fig. 4: Pump Reservoir Filler Neck, J 43485 & J 35555
Courtesy of GENERAL MOTORS CORP.

5. Attach the **J 43485** to the**J 35555** or equivalent. See **Special Tools and Equipment** .
6. Place the **J 43485** on or in the pump reservoir filler neck. See **Special Tools and Equipment** .
7. Apply a vacuum of 68 kPa (20 in Hg) maximum.
8. Wait 5 minutes.

   Typical vacuum drop is 7-10 kPa (2-3 in Hg). If the vacuum does not remain steady, refer to Excessive Vacuum Drop Diagnosis at the end of this procedure.

9. Remove the **J 43485** and the**J 35555** . See **Special Tools and Equipment** .

10. Reinstall the pump reservoir cap.
11. Start the engine. Allow the engine to idle.
12. Turn off the engine.
13. Verify the fluid level. Repeat steps 11-13 until the fluid stabilizes.

IMPORTANT: Do not turn steering wheel to lock.

14. Start the engine. Allow the engine to idle.
15. Turn the steering wheel 180-360 degrees in both directions 5 times.
16. Switch the ignition off.

NOTE: When adding fluid or making a complete fluid change, always use the proper power steering fluid. Failure to use the proper fluid will cause hose and seal damage and fluid leaks.

17. Verify the fluid level.

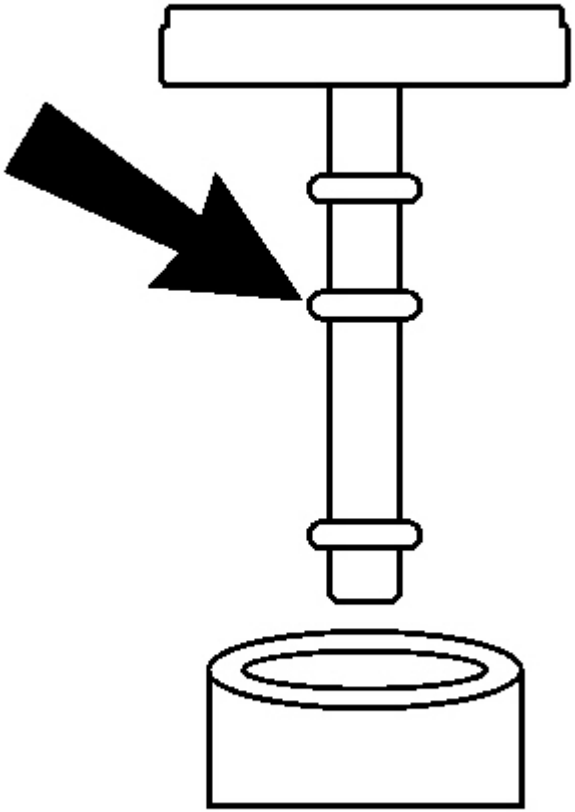

Fig. 5: Removing Pump Reservoir Cap
Courtesy of GENERAL MOTORS CORP.

18. Remove the pump reservoir cap.

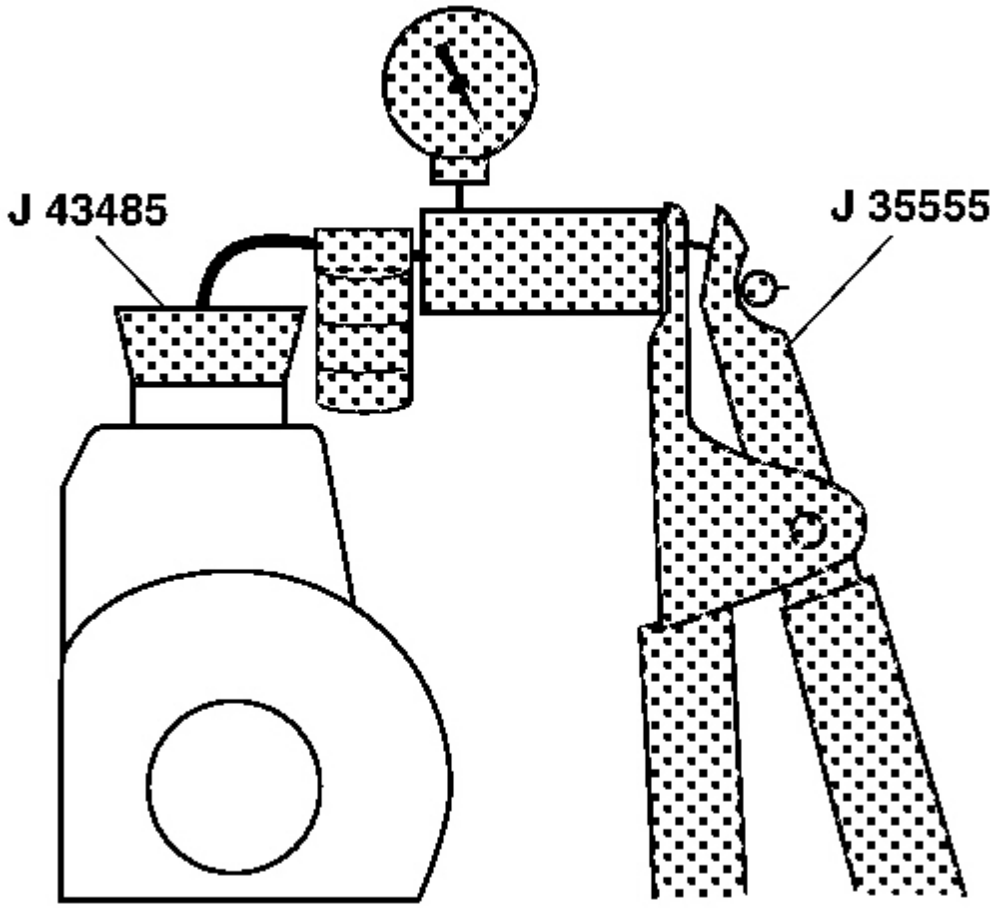

Fig. 6: Pump Reservoir Filler Neck, J 43485 & J 35555
Courtesy of GENERAL MOTORS CORP.

19. Attach the **J 43485** to the**J 35555** or equivalent. See **Special Tools and Equipment** .
20. Place the **J 43485** on or in the pump reservoir filler neck. See **Special Tools and Equipment** .
21. Apply a vacuum of 68 kPa (20 in Hg) maximum.
22. Wait 5 minutes.
23. Remove the **J 43485** and the**J 35555** . See **Special Tools and Equipment** .
24. Verify the fluid level.

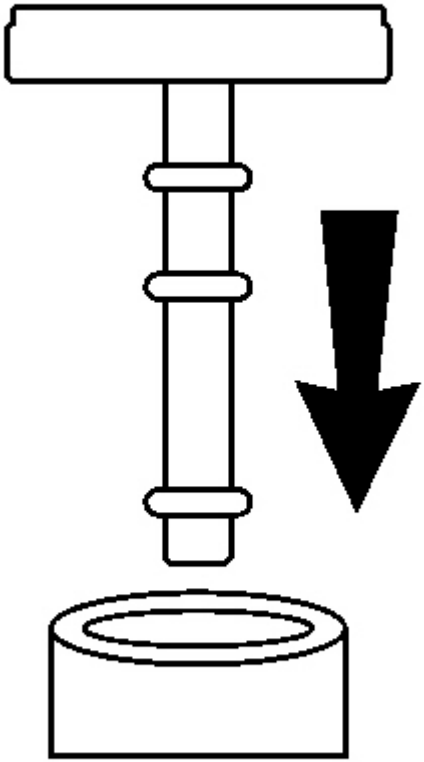

Fig. 7: Installing Pump Reservoir Cap
Courtesy of GENERAL MOTORS CORP.

25. Reinstall the pump reservoir cap.

Excessive Vacuum Drop Diagnosis

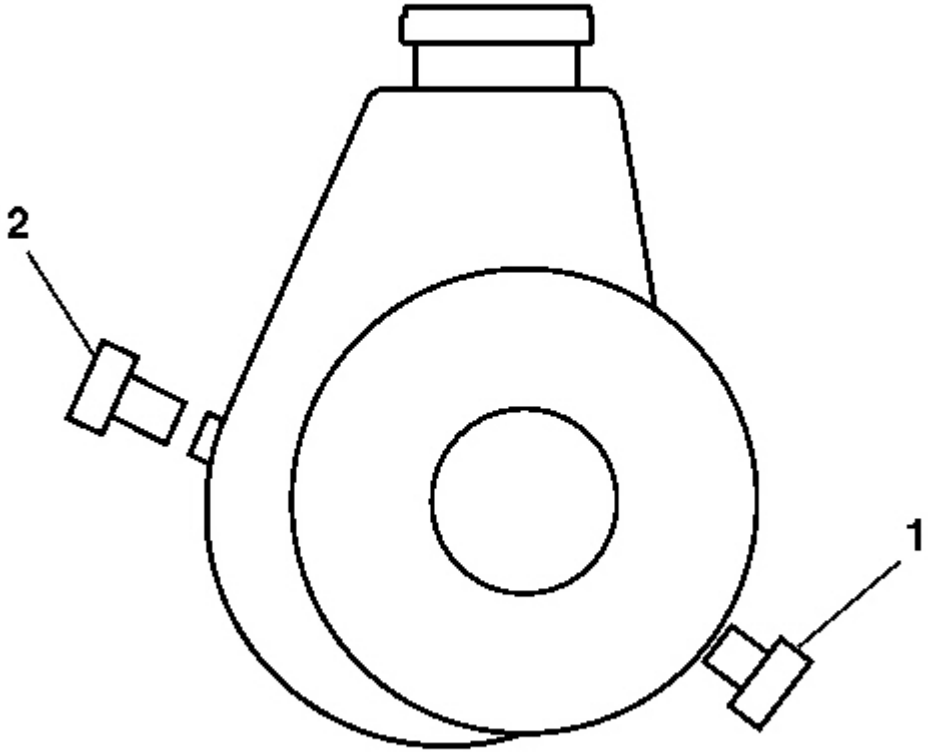

Fig. 8: Installing Plugs Into Pressure & Return Port
Courtesy of GENERAL MOTORS CORP.

1. If the vacuum continues to drop, remove the pressure and return hose from the pump.
2. Install the plugs (1,2) supplied with the **J 43485** into the pressure and return port. See **Special Tools and Equipment** .

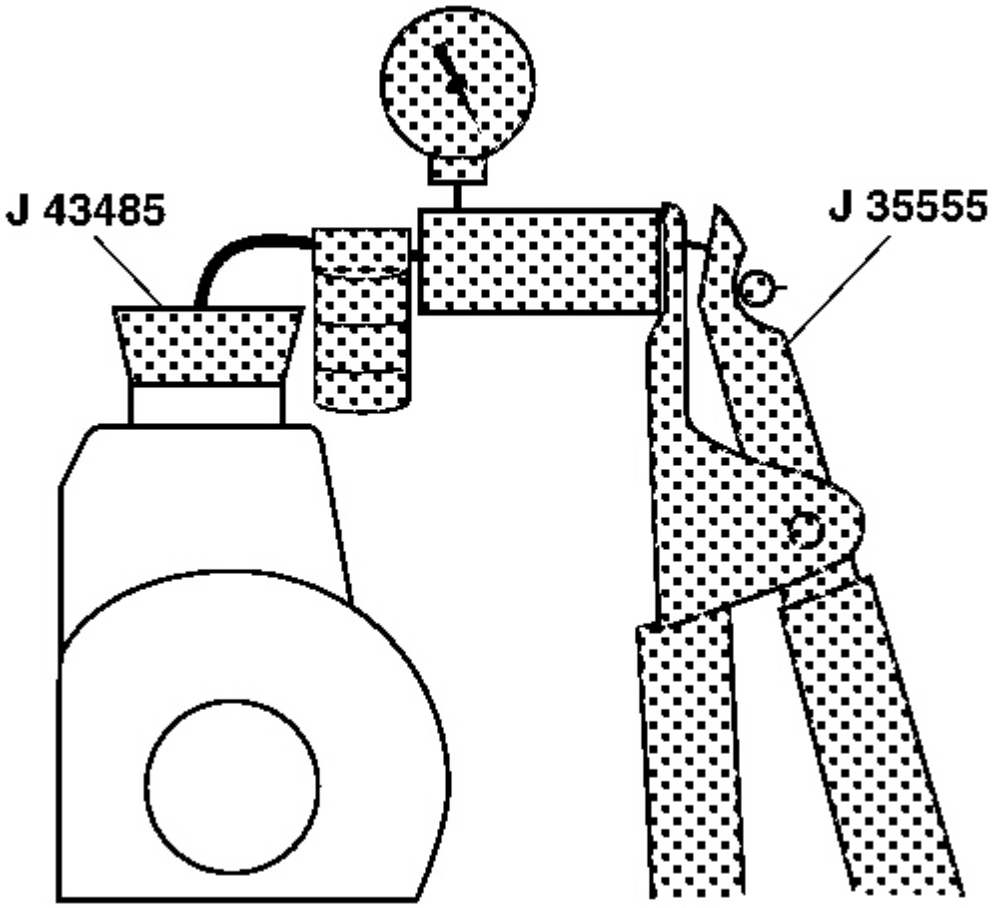

Fig. 9: Pump Reservoir Filler Neck, J 43485 & J 35555
Courtesy of GENERAL MOTORS CORP.

3. Attach the **J 43485** to the**J 35555** or equivalent. See **Special Tools and Equipment** .
4. Place the **J 43485** on or in the pump reservoir filler neck. See **Special Tools and Equipment** .
5. Apply a vacuum of 68 kPa (20 in Hg) maximum.
6. If the vacuum drops again, repair or replace the pump. If the vacuum holds steady, continue to check the other parts of the steering system.

IMPORTANT: Fluid must be free from bubbles and foam. Be aware of periodic bubbles that indicate a loose connection or leaking O-ring seal in the return hose or the pressure hose.

Fluid must be free from discoloration.

7. Observe the fluid.
8. If condition persists, replace the following parts:
    - The return hose clamps
    - The return hose O-rings
    - The pressure hose O-rings
    - The gear cylinder line O-rings
    - The reservoir to pump O-ring
9. Repeat the bleed procedure from the beginning.
10. Drive the vehicle approximately 16 km (10 mi) in order to warm the system to operating temperature. Evaluate vehicle on a smooth flat surface.
11. Verify the following conditions:
    - There is smooth power assist.
    - The vehicle operates quietly.
    - The pump maintains the proper fluid level.
    - There is not any leaking in the steering system.
    - The fluid is free of foam or discoloration.

CHECKING AND ADDING POWER STEERING FLUID

NOTE: **When adding fluid or making a complete fluid change, always use the proper power steering fluid. Failure to use the proper fluid will cause hose and seal damage and fluid leaks.**

1. Clean the area surrounding the reservoir cap.
2. Remove the reservoir cap.
3. Inspect the power steering pump fluid level at regular intervals. Use the appropriate procedure below.

   Add fluid when required. Refer to **Fluid and Lubricant Recommendations** in Maintenance and Lubrication.

   Fluid Is Hot

   1. Run the engine until the fluid reaches about 80° C (170° F).
   2. Turn the engine OFF.
   3. Remove the reservoir cap.
   4. Inspect the fluid level on the capstick.
   5. Ensure that the fluid level is at the HOT/FULL mark on the capstick.
4. If the fluid level is low, add power steering fluid to the proper level.

5. Install the reservoir cap.
6. When checking the fluid level after servicing the steering system, bleed the air from the system. Refer to **Bleeding the Power Steering System** .

FLUSHING THE POWER STEERING SYSTEM

IMPORTANT: Do not reuse any drained power steering fluid regardless of appearance or condition.

1. Turn off the engine.
2. Raise the front end of the vehicle off the ground until the tires and wheels turn freely. Refer to **Lifting and Jacking the Vehicle** in General Information.
3. Place a large container under the fluid return hose in order to collect the draining fluid.
4. Remove the fluid return hose at the power steering pump reservoir inlet connection.
5. Plug the reservoir return hose inlet connection on the power steering pump.

IMPORTANT:

- **This step may require 4 L (4 qt) of power steering fluid until the draining fluid appears clear.**
- **Do not run the engine without the power steering fluid level at FULL COLD.**

6. Run the engine at idle while an assistant maintains the fluid level at FULL COLD in the reservoir using new approved power steering fluid.
7. Turn off the engine.
8. Turn the steering wheel fully to the left and to the right.
9. Remove the plug from the pump reservoir inlet connection.
10. Install the fluid return hose to the pump reservoir.
11. Maintain the fluid level at FULL COLD.
12. Operate the engine at idle for approximately 15 minutes.
13. Repeat steps 3-5.
14. Inspect the power steering fluid for the following indications of contamination:
    - Milky fluid - water
    - Brown fluid - burnt
    - Plastic debris or dirt chunks
15. If the fluid is contaminated, repeat steps 6-12 in order to complete a third flush.
16. Remove the plug from the pump reservoir inlet connection.
17. Install the fluid return hose to the pump reservoir.
18. Clean any spilled fluid.
19. Bleed the power steering system. Refer to **Bleeding the Power Steering System**

REMOTE POWER STEERING FLUID RESERVOIR REPLACEMENT

Removal Procedure

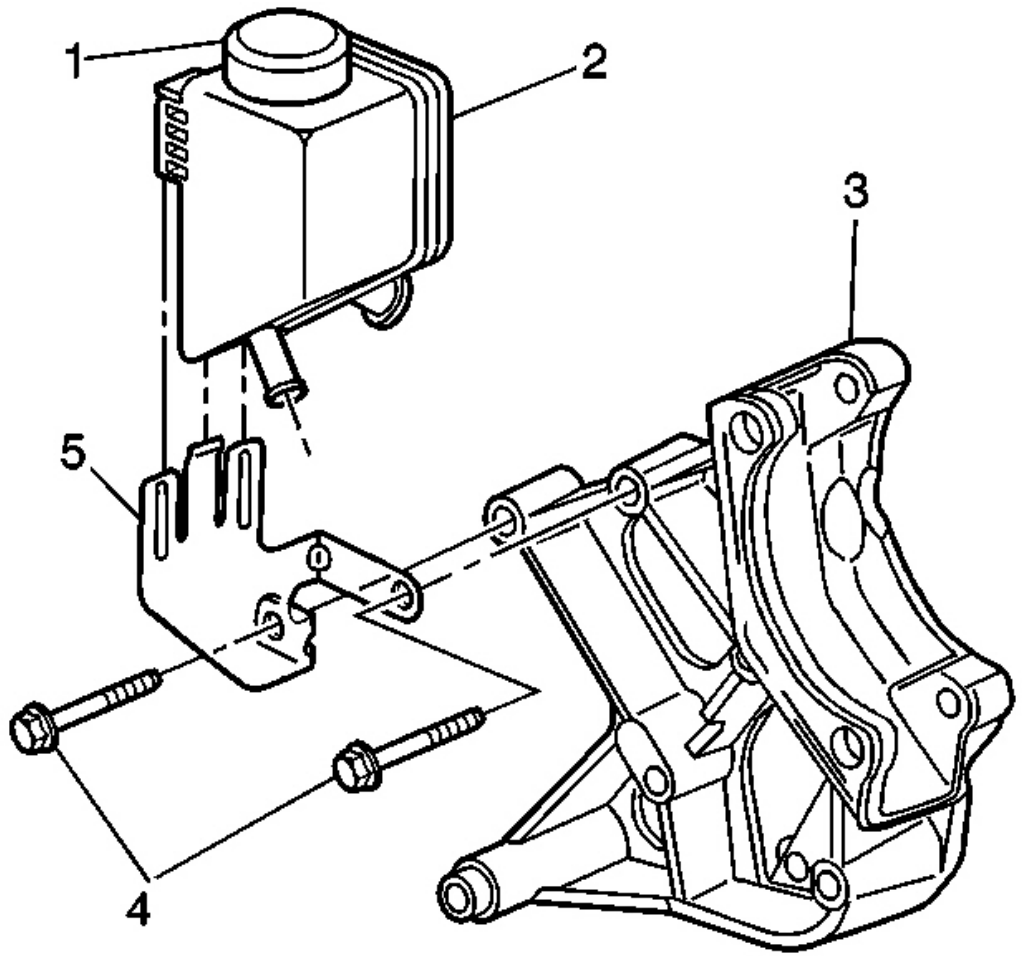

Fig. 10: Power Steering Fluid Reservoir, Capstick, Bracket & Bolts
Courtesy of GENERAL MOTORS CORP.

1. Place a drain pan under the vehicle.
2. Remove the capstick (1) from the power steering fluid reservoir (2).
3. Remove the power steering fluid reservoir (2) from the power steering fluid reservoir bracket (5).
4. Remove the following components from the power steering fluid reservoir (2):
    - The power steering reservoir outlet pipe/hose. Refer to **Power Steering Reservoir Outlet Pipe/Hose Replacement** .

- The power steering return hose. Refer to **Power Steering Return Hose Replacement** .

5. Remove the power steering fluid reservoir (2) from the vehicle.

Installation Procedure

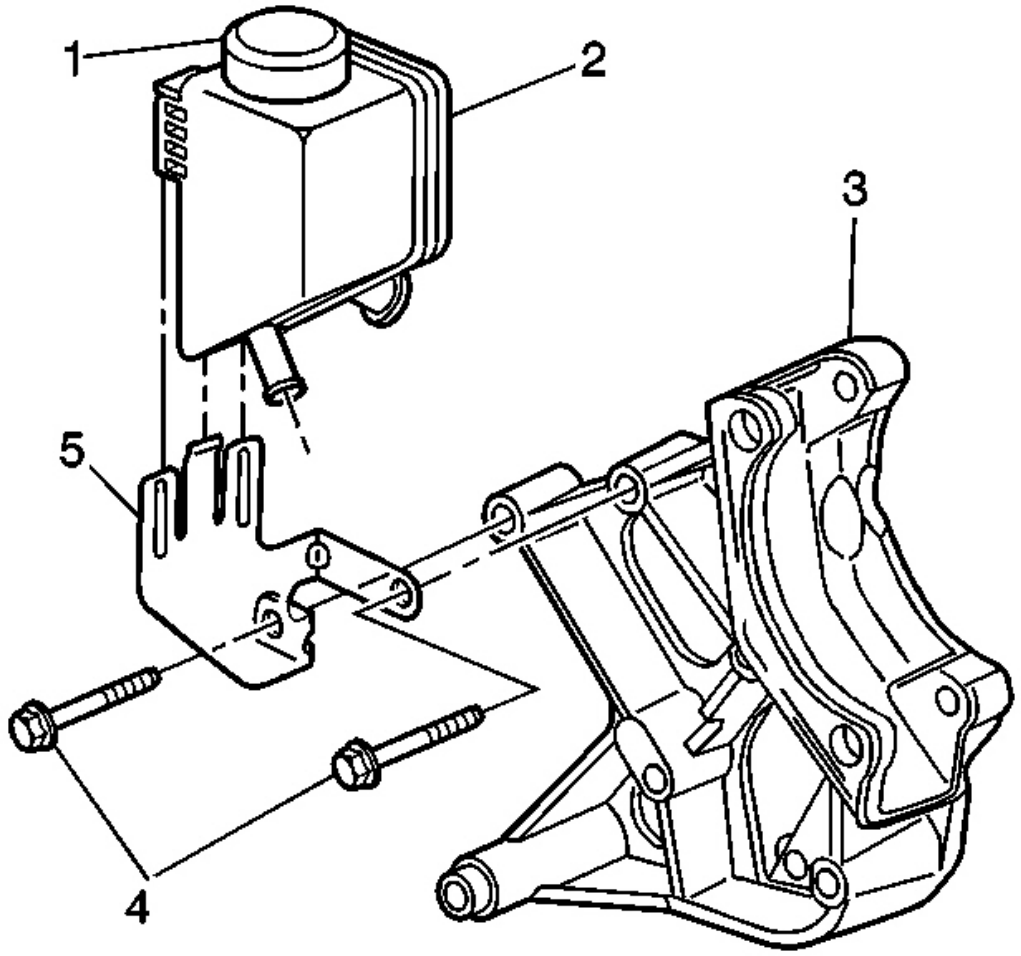

Fig. 11: Power Steering Fluid Reservoir, Capstick, Bracket & Bolts
Courtesy of GENERAL MOTORS CORP.

1. Install the power steering fluid reservoir (2) to the vehicle.

IMPORTANT: Make sure that the alignment mark on the power steering return hose is installed at the bottom of the power steering reservoir.

2. Install the following components to the power steering fluid reservoir (2):
   - The power steering reservoir outlet pipe/hose. Refer to **Power Steering Reservoir Outlet Pipe/Hose Replacement** .
   - The power steering return hose. Refer to **Power Steering Return Hose Replacement** .
3. Install the power steering fluid reservoir (2) to the power steering fluid reservoir bracket (5).
4. Bleed the power steering system. Refer to **Bleeding the Power Steering System** .

REMOTE PS FLUID RESERVOIR BRACKET REPLACEMENT

Removal Procedure

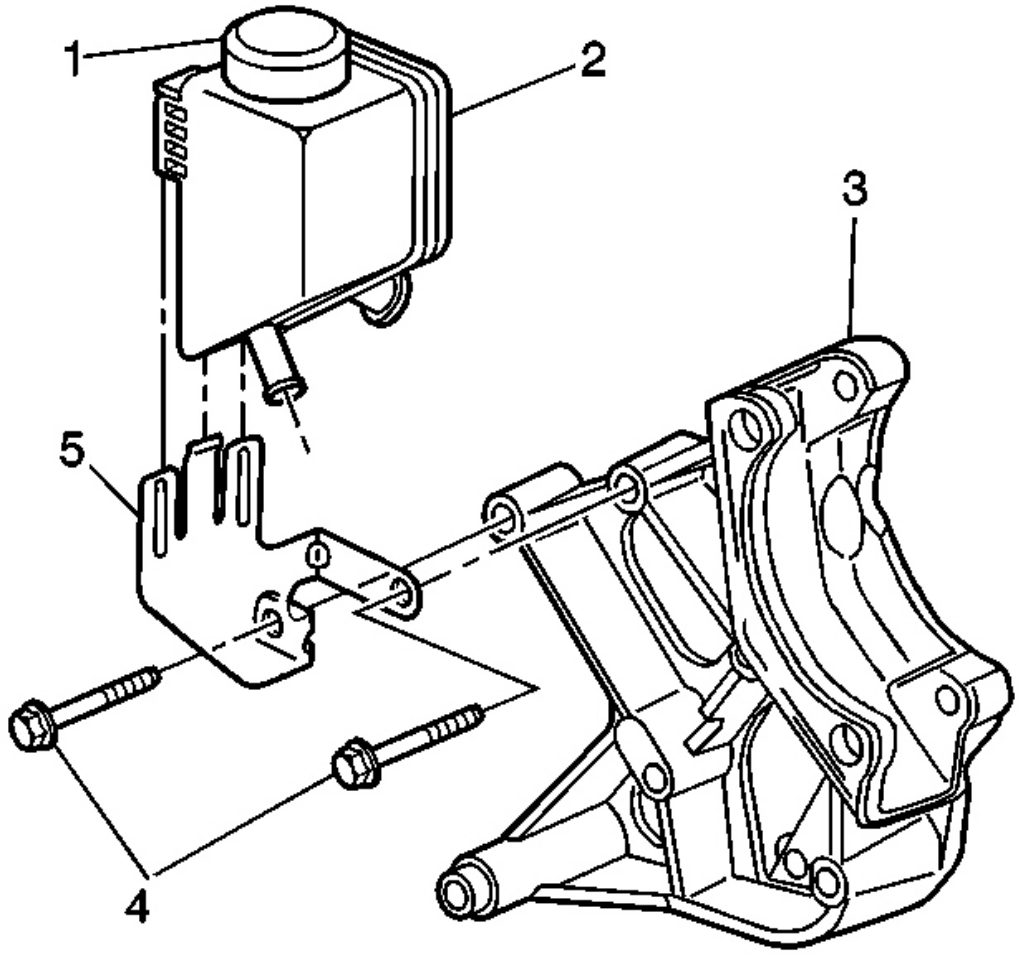

Fig. 12: Power Steering Fluid Reservoir, Capstick, Bracket & Bolts

Courtesy of GENERAL MOTORS CORP.

1. Remove the power steering fluid reservoir. Refer to **Remote Power Steering Fluid Reservoir Replacement** .
2. Remove the bolts (4) from the power steering fluid reservoir bracket (5).
3. Remove the power steering fluid reservoir bracket (5) from the vehicle.

Installation Procedure

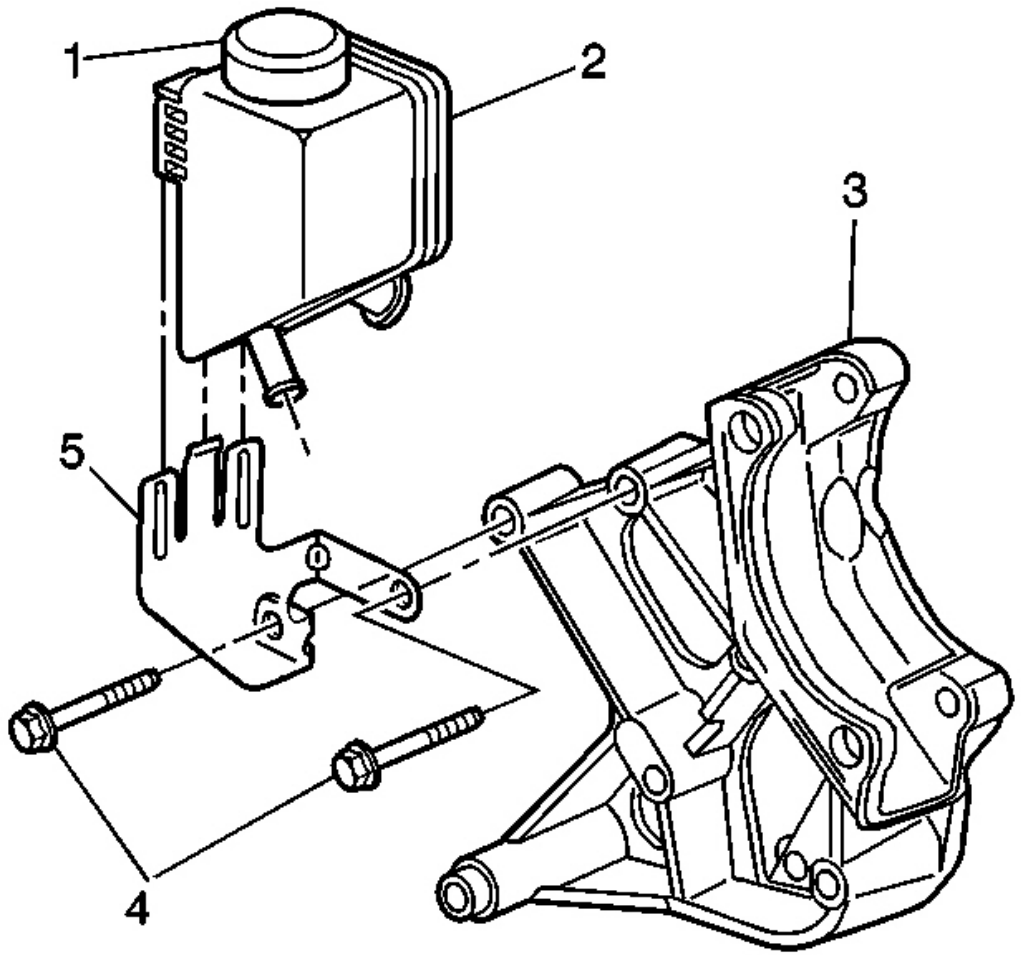

Fig. 13: Power Steering Fluid Reservoir, Capstick, Bracket & Bolts
Courtesy of GENERAL MOTORS CORP.

1. Install the power steering fluid reservoir bracket (5) into the vehicle.

NOTE: Refer to Fastener Notice in Cautions and Notices.

2. Install the bolts (4) to the power steering fluid reservoir bracket (5).

   Tighten: Tighten the bolts to 50 N.m (37 lb ft).

3. Install the power steering fluid reservoir. Refer to **Remote Power Steering Fluid Reservoir Replacement** .
4. Bleed the power steering system. Refer to **Bleeding the Power Steering System** .

POWER STEERING PULLEY REPLACEMENT

Tools Required

- **J 25033-C** Power Steering Pump Pulley Installer
- **J 25034-C** Power Steering Pump Pulley Remover

Removal Procedure

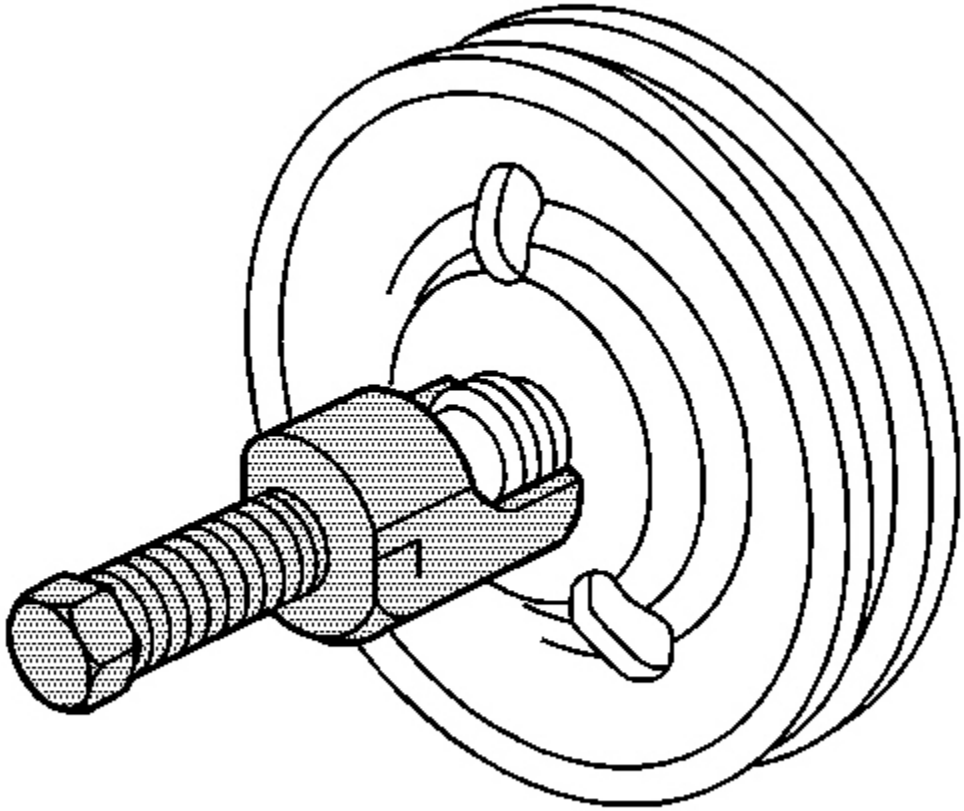

Fig. 14: Power Steering Pump Pulley & J 25034-C
Courtesy of GENERAL MOTORS CORP.

1. Remove the Brake Pressure Modulator Valve (BPMV). Refer to **Brake Pressure Modulator Valve (BPMV) Replacement** in Antilock Brake System.
2. Remove the Brake Pressure Modulator Valve (BPMV) bracket. Refer to **Brake Pressure Modulator Valve (BPMV) Bracket Replacement** in Antilock Brake System.
3. Remove the accessory drive belt. Refer to **Drive Belt Replacement - Accessory** in Engine Mechanical-5.7L.
4. Install the **J 25034-C** on the power steering pump pulley and remove the pulley.

Installation Procedure

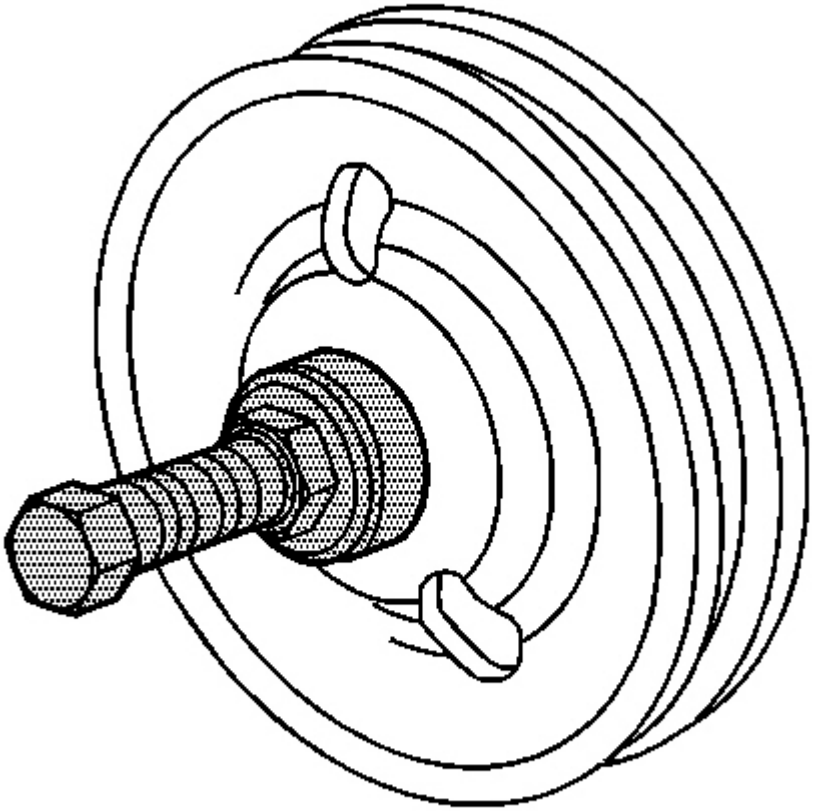

Fig. 15: Power Steering Pump Pulley & J 25033-C
Courtesy of GENERAL MOTORS CORP.

IMPORTANT: The pulley must be installed onto pump shaft so that the pulley hub is flush with the pump shaft.

1. Using **J 25033-C** install the power steering pump pulley onto the power steering pump.
2. Install the accessory drive belt. Refer to **Drive Belt Replacement - Accessory** in Engine Mechanical-5.7L.
3. Install the Brake Pressure Modulator Valve (BPMV) bracket. Refer to **Brake Pressure Modulator Valve (BPMV) Bracket Replacement** in Antilock Brake System.
4. Install the Brake Pressure Modulator Valve (BPMV). Refer to **Brake Pressure Modulator Valve (BPMV) Replacement** in Antilock Brake System.

POWER STEERING PUMP REPLACEMENT

Removal Procedure

1. Remove the Brake Pressure Modulator Valve (BPMV). Refer to **Brake Pressure Modulator Valve (BPMV) Replacement** in Antilock Brake System.
2. Remove the Brake Pressure Modulator Valve (BPMV) bracket. Refer to **Brake Pressure Modulator Valve (BPMV) Bracket Replacement** in Antilock Brake System.
3. Remove the power steering fluid reservoir. Refer to **Remote Power Steering Fluid Reservoir Replacement** .
4. Remove the power steering pump pulley. Refer to **Power Steering Pulley Replacement** .
5. Remove the power steering reservoir outlet pipe/hose from the power steering pump. Refer to **Power Steering Reservoir Outlet Pipe/Hose Replacement** .
6. Remove the power steering pressure hose from the power steering pump. Refer to **Power Steering Pressure Pipe/Hose Replacement** .

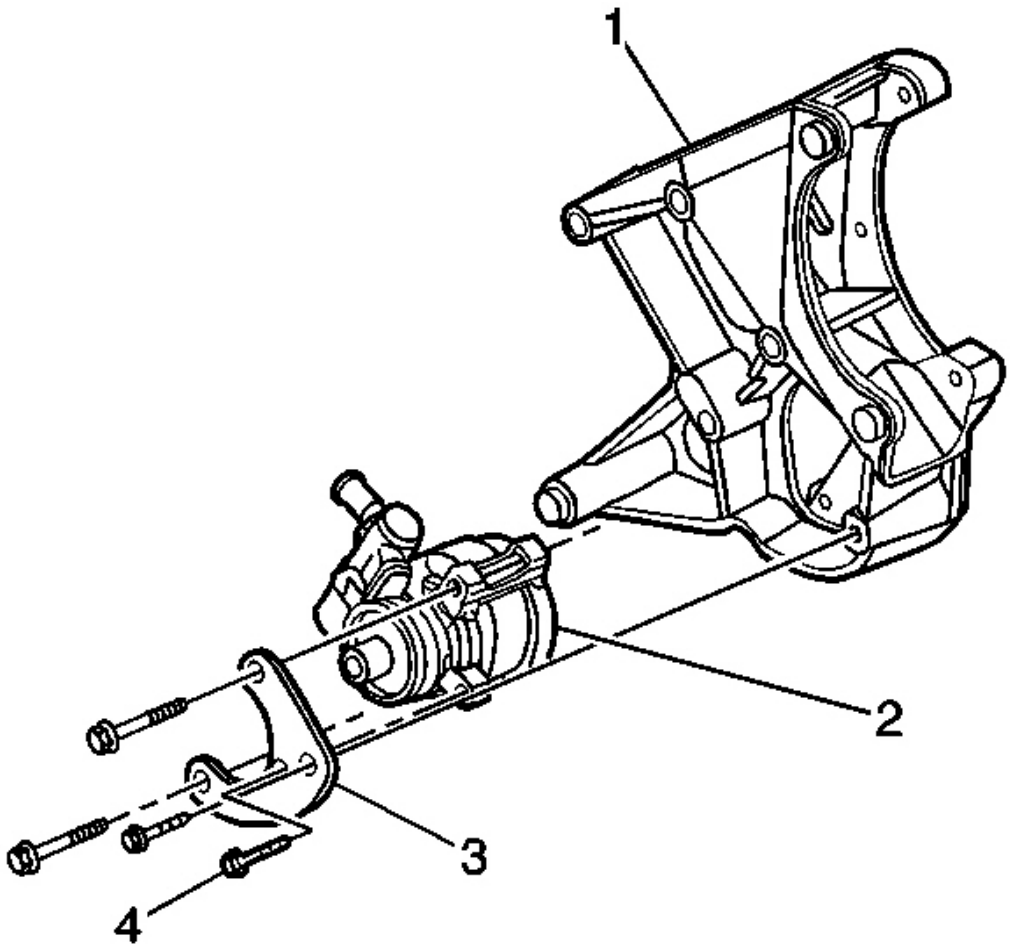

Fig. 16: Power Steering Pump Rear Bracket, Power Steering Pump & Mounting Bolts
Courtesy of GENERAL MOTORS CORP.

7. Remove the power steering pump mounting bolts (3) from the power steering pump (2).
8. Remove the following components from the power steering pump rear bracket (1):
    - The power steering pump front bracket (3).
    - The power steering pump (2).

Installation Procedure

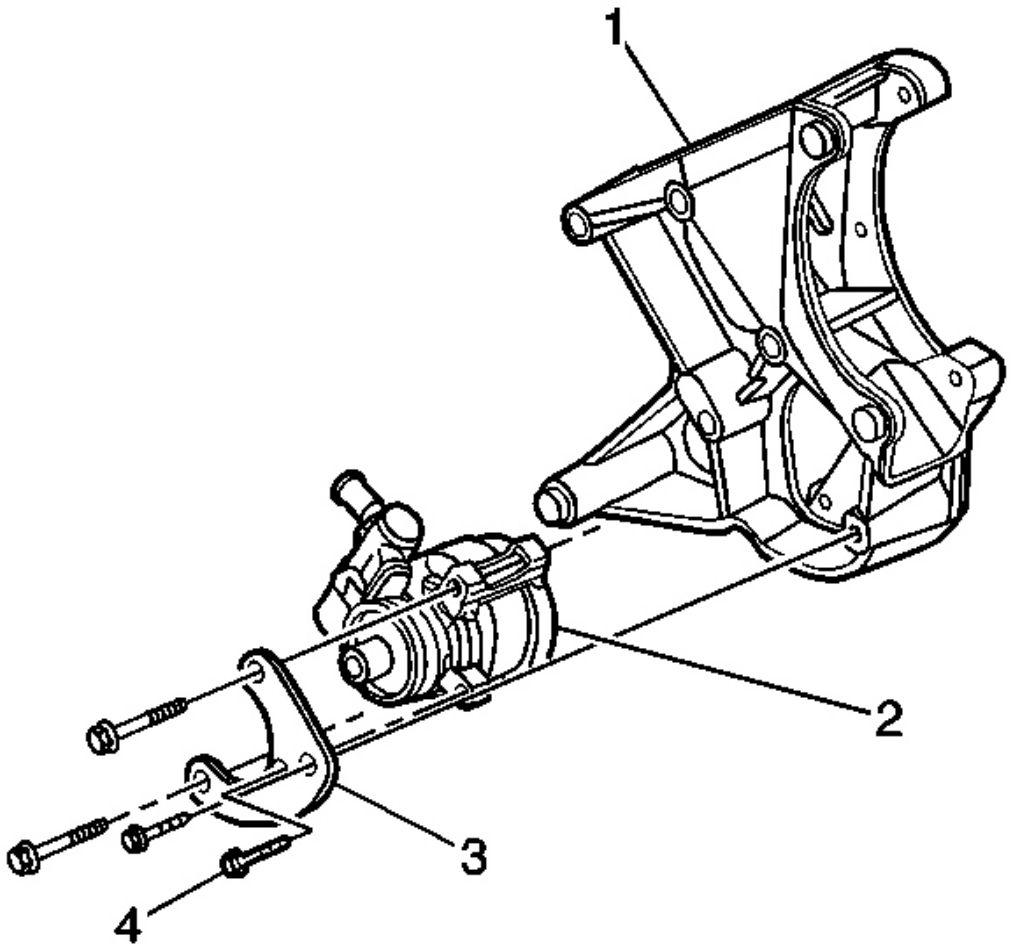

Fig. 17: Power Steering Pump Rear Bracket, Power Steering Pump & Mounting Bolts
Courtesy of GENERAL MOTORS CORP.

1. Install the following components to the power steering pump rear bracket (1):
   - The power steering pump (2).
   - The power steering pump front bracket (3).

NOTE: **Refer to Fastener Notice in Cautions and Notices.**

2. Install the power steering pump mounting bolts (4) to the power steering pump (2).

   Tighten: Tighten the bolts to 25 N.m (18 lb ft).

3. Install the power steering reservoir outlet pipe/hose to the power steering pump. Refer to **Power Steering Reservoir Outlet Pipe/Hose Replacement** .
4. Install the power steering pressure hose to the power steering pump. Refer to **Power Steering Pressure Pipe/Hose Replacement** .
5. Install the power steering pump pulley. Refer to **Power Steering Pulley Replacement** .
6. Install the power steering fluid reservoir. Refer to **Remote Power Steering Fluid Reservoir Replacement** .
7. Install the Brake Pressure Modulator Valve (BPMV) bracket. Refer to **Brake Pressure Modulator Valve (BPMV) Bracket Replacement** in Antilock Brake System.
8. Install the Brake Pressure Modulator Valve (BPMV). Refer to **Brake Pressure Modulator Valve (BPMV) Replacement** in Antilock Brake System.
9. Bleed the power steering system. Refer to **Bleeding the Power Steering System** .

TIE ROD REPLACEMENT - INNER - ON VEHICLE

Tools Required

J 34028 Inner Tie Rod Wrench. See **Special Tools and Equipment** .

Removal Procedure

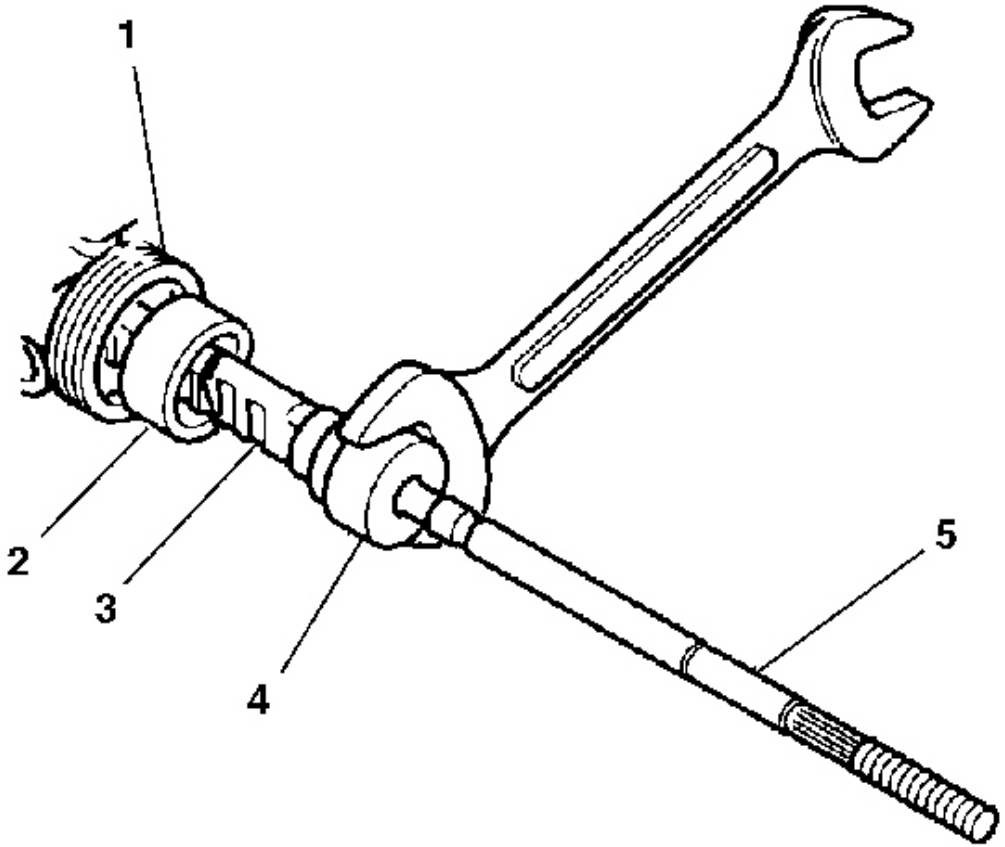

Fig. 18: Inner Tie Rod, Shock Dampener & Rack Assembly
Courtesy of GENERAL MOTORS CORP.

1. Raise the vehicle. Support the vehicle with suitable safety stands.
2. Remove the tire and wheel assembly from the vehicle. Refer to **Tire and Wheel Removal and Installation** in Tires and Wheels.
3. Remove the rack and pinion boot. Refer to **Rack and Pinion Boot Replacement - On Vehicle** .

NOTE: **Do not change the rack bearing preload adjustment before removing the inner tie rod from the steering rack. This could cause damage to the pinion or the steering rack or both.**

4. Remove the shock dampener (2) from the inner tie rod (5).
5. Slide the shock dampener (2) back onto the rack (1).

IMPORTANT: Do not hold the steering rack while removing the inner tie rod if the preload adjustment has not been changed.

6. Remove the inner tie rod (5) from the rack assembly (1) as follows:
   - Place a wrench on the flats of the inner tie rod housing (4)
   - Rotate the inner tie rod housing (4) counterclockwise until the inner tie rod (5) separates from the rack.

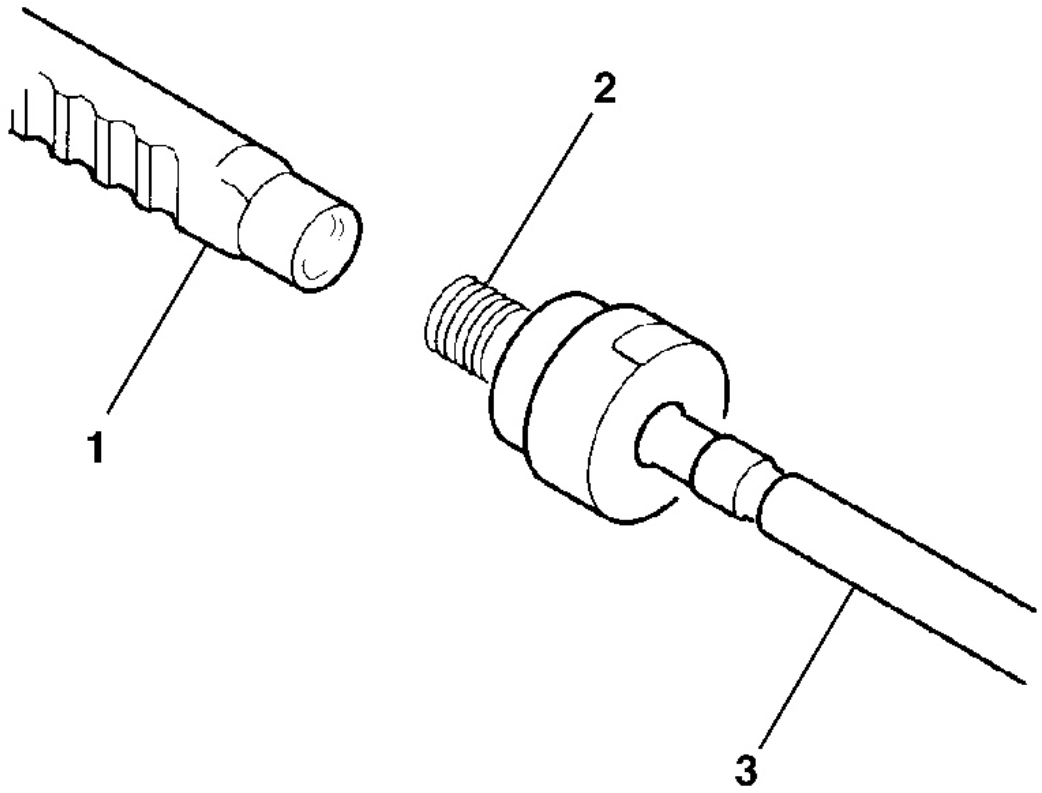

Fig. 19: Rack, Inner Tie Rod & Threads
Courtesy of GENERAL MOTORS CORP.

7. Remove the old Loctite(R) from the threads (2) of the rack (1) and the inner tie rod (3).

Installation Procedure

IMPORTANT: Make sure the shock dampener is on the rack before installing the inner tie rod.
The threads must be clean prior to the Loctite(R) application. Check the

Loctite(R) (or equivalent) container for expiration date. Use only enough Loctite(R) to evenly coat the threads.

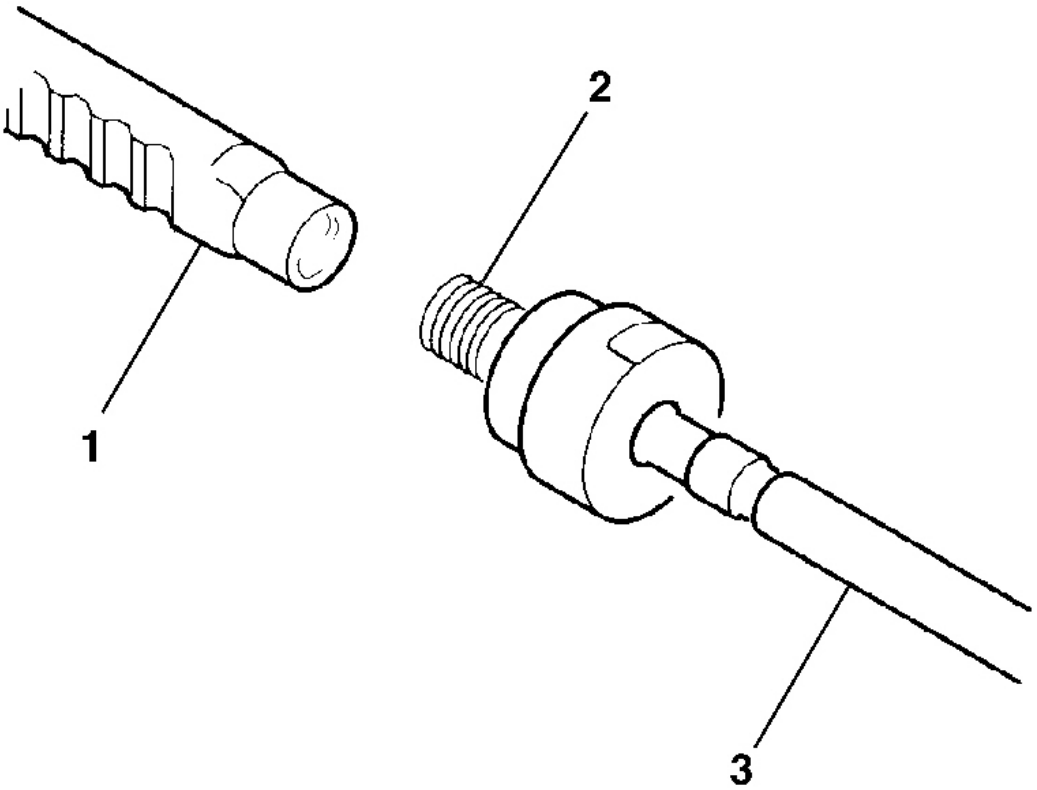

Fig. 20: Rack, Inner Tie Rod & Threads
Courtesy of GENERAL MOTORS CORP.

1. Apply Loctite(R) 262 (or equivalent) to the inner tie rod threads (2).
2. Install the inner tie rod (3) to the rack and pinion (1).

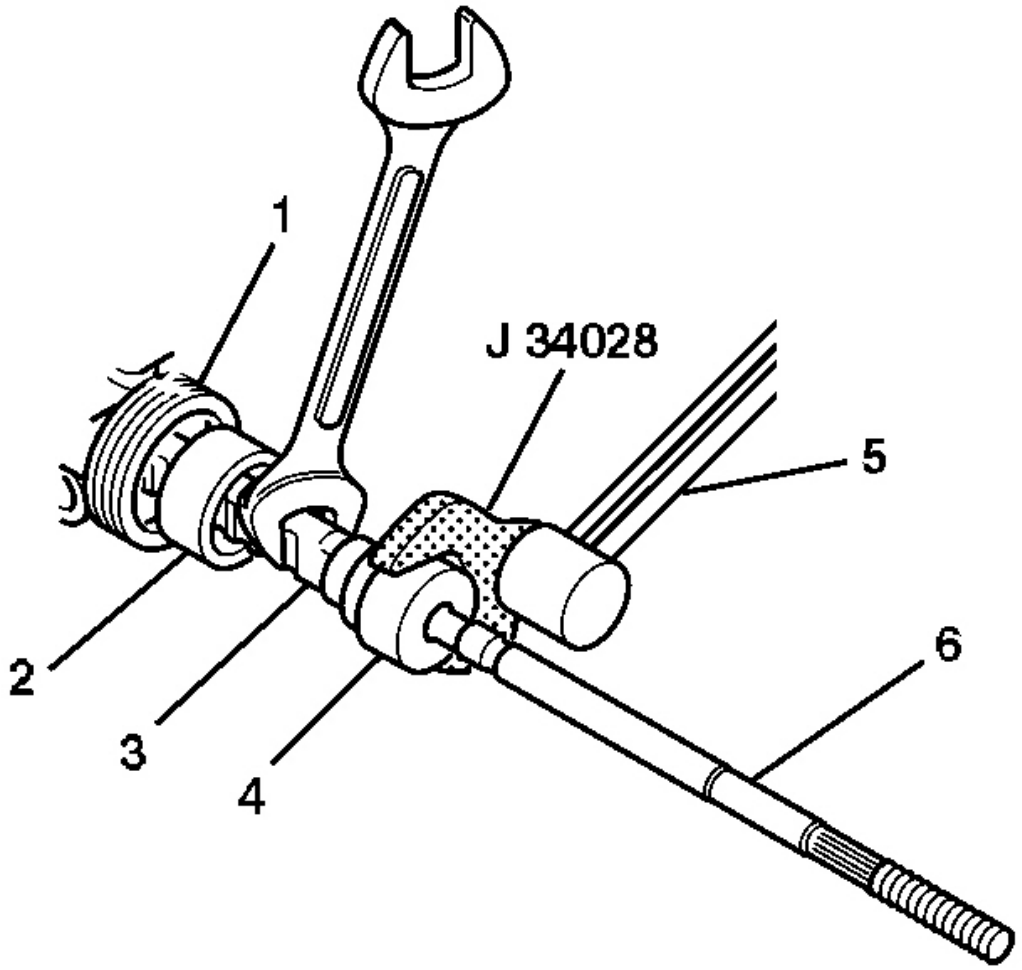

Fig. 21: Inner Tie Rod, Torque Wrench, Rack & J 34028
Courtesy of GENERAL MOTORS CORP.

NOTE: Refer to Fastener Notice in Cautions and Notices.

3. Install a torque wrench (5) to the **J 34028** to tighten the inner tie rod. See **Special Tools and Equipment** .

   Hold the rack (3) while tightening the tie rod (4) as shown.

   Tighten: Tighten the inner tie rod (6) to 100 N.m (74 lb ft).

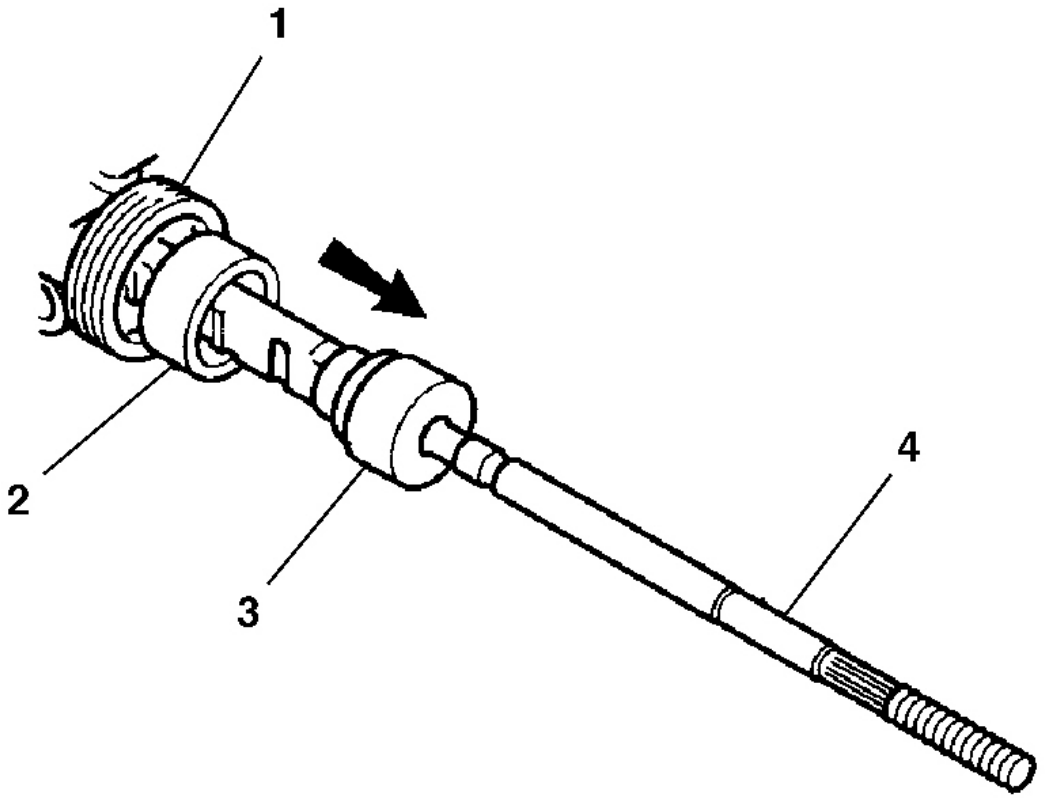

Fig. 22: Shock Dampener & Inner Tie Rod Housing
Courtesy of GENERAL MOTORS CORP.

4. Slide the shock dampener (2) over the inner tie rod housing (3) until the front lip of the shock dampener bottoms out against the inner tie rod housing.
5. Install the rack and pinion boot. Refer to **Rack and Pinion Boot Replacement - On Vehicle** .
6. Install the tire and wheel assembly to the vehicle. Refer to **Tire and Wheel Removal and Installation** in Tires and Wheels.
7. Remove the safety stands.
8. Lower the vehicle.
9. Check the wheel alignment. Refer to **Measuring Wheel Alignment** in Wheel Alignment.

RACK AND PINION OUTER TIE ROD END REPLACEMENT

Tools Required

J 42188 Ball Joint Separator

Removal Procedure

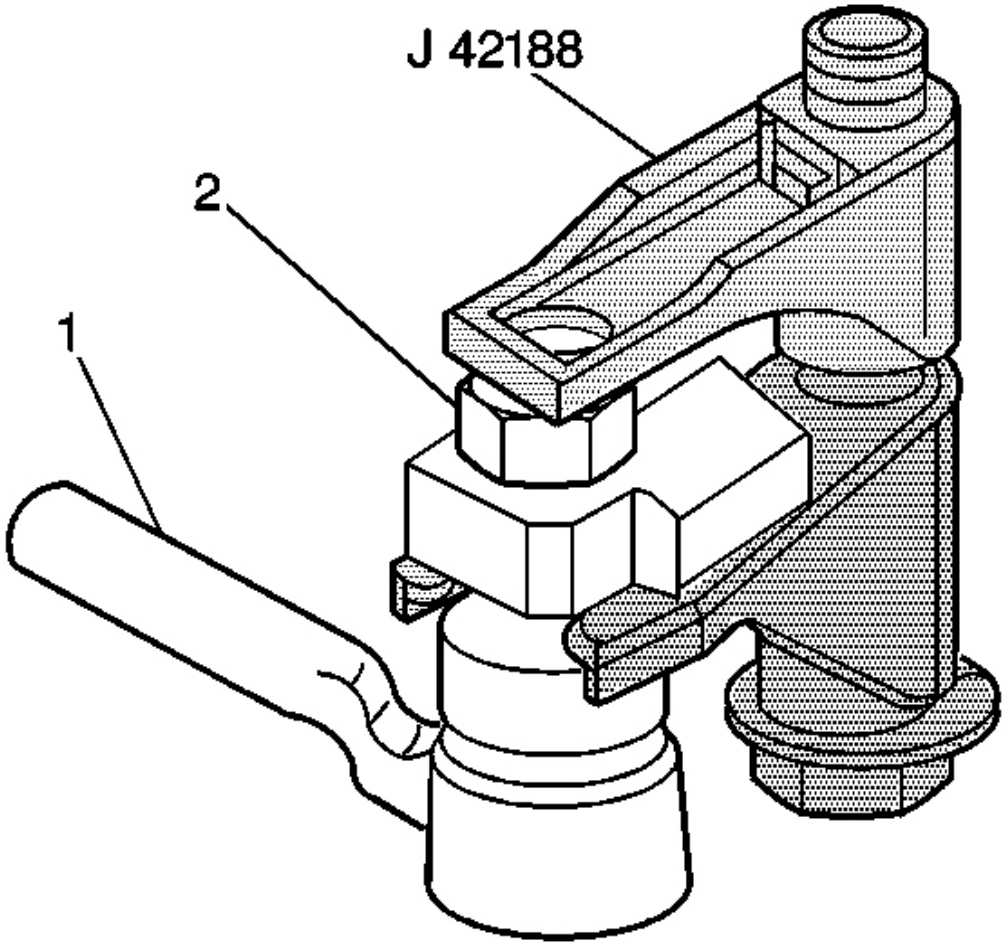

Fig. 23: Outer Tie Rod End Stud Nut & J 42188
Courtesy of GENERAL MOTORS CORP.

1. Raise and suitably support the vehicle. Refer to **Lifting and Jacking the Vehicle** in General Information.
2. Remove the tire and wheel assemblies. Refer to **Tire and Wheel Removal and Installation** in Tires and Wheels.
3. Loosen, do not remove, the outer tie rod end stud nut (2) from the outer tie rod end ball stud.
4. Install **J 42188** between the steering knuckle and the outer tie rod end stud.
5. Tighten the nut on **J 42188** until the steering knuckle and the outer tie rod end stud separate.
6. Remove **J 42188** and the outer tie rod end stud nut.

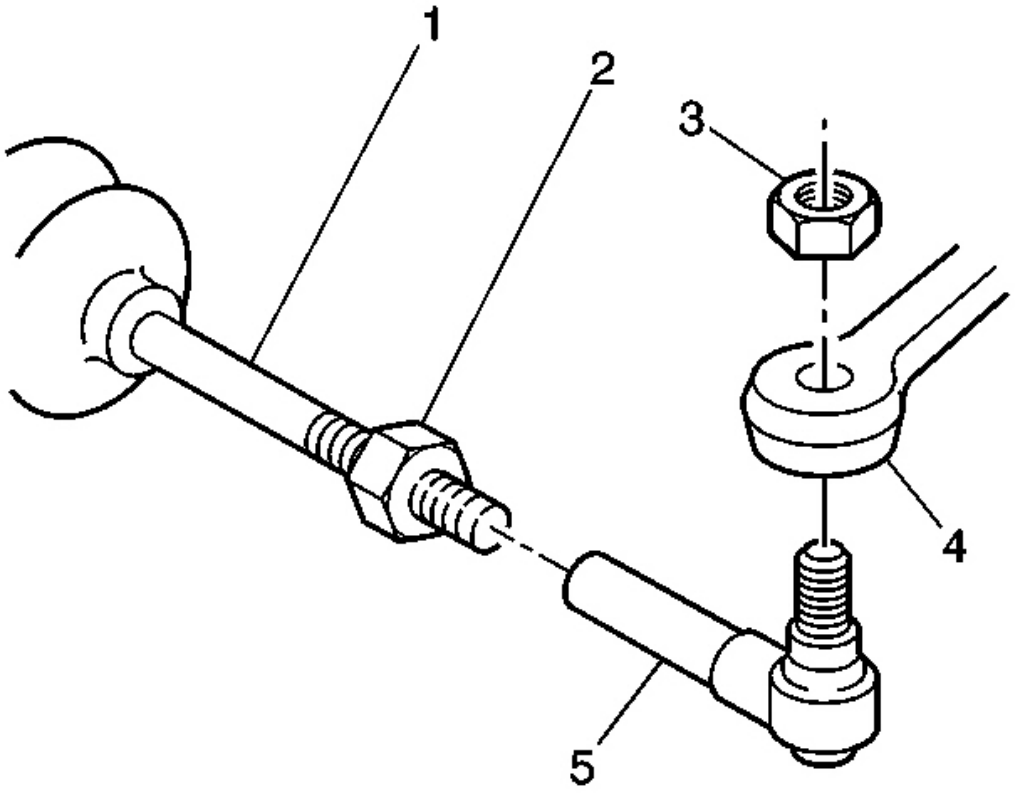

Fig. 24: Outer Tie Rod End Stud, Inner Tie Rod, Steering Knuckle & Jam Nut
Courtesy of GENERAL MOTORS CORP.

7. Remove the outer tie rod end stud (5) from the steering knuckle (4).
8. Loosen the jam nut (2) on the inner tie rod assembly.
9. Remove the outer tie rod end (5) from the inner tie rod assembly (1).

Installation Procedure

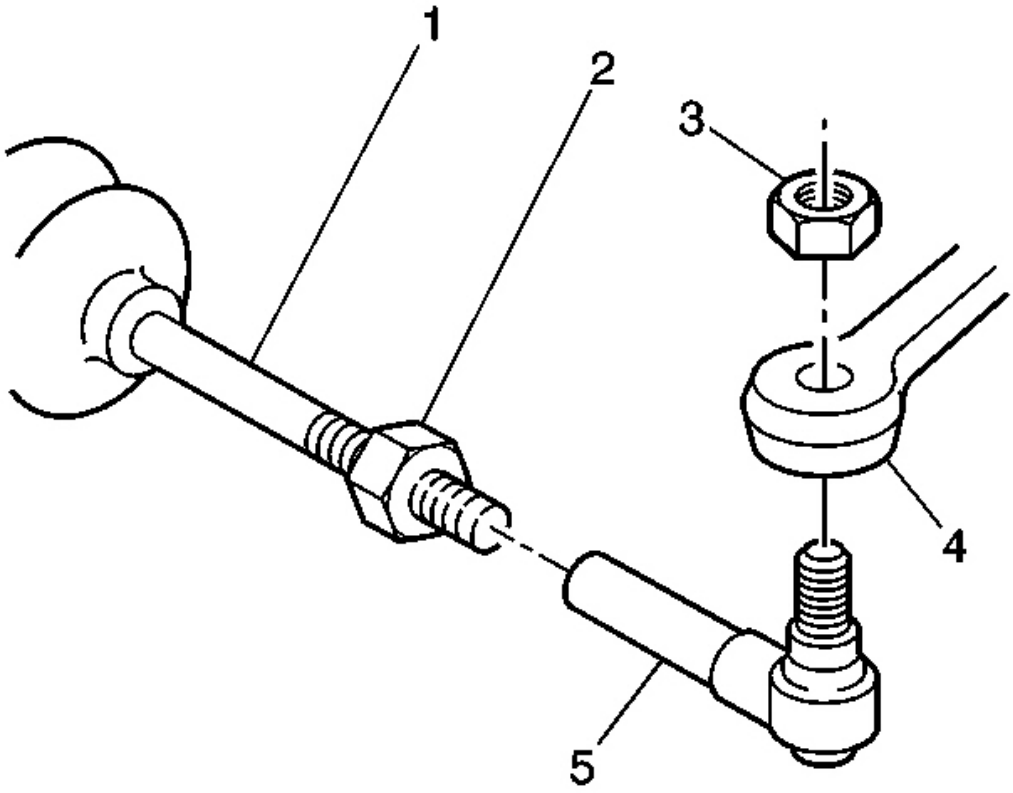

Fig. 25: Outer Tie Rod End Stud, Inner Tie Rod, Steering Knuckle & Jam Nut
Courtesy of GENERAL MOTORS CORP.

1. Install the outer tie rod end (5) to the inner tie rod assembly (1). Do not tighten the jam nut.
2. Install the outer tie rod end stud (5) to the steering knuckle (4).

NOTE: Refer to Fastener Notice in Cautions and Notices.

3. Install the outer tie rod end stud nut (3) to the outer tie rod end stud (5).

Tighten:

1. Tighten the outer tie rod end stud nut to 20 N.m (15 lb ft) to seat the stud.
2. Turn the nut an additional 160 degrees.
3. Check for the outer tie rod end stud nut for a minimum final torque of 45 N.m (33 lb ft).

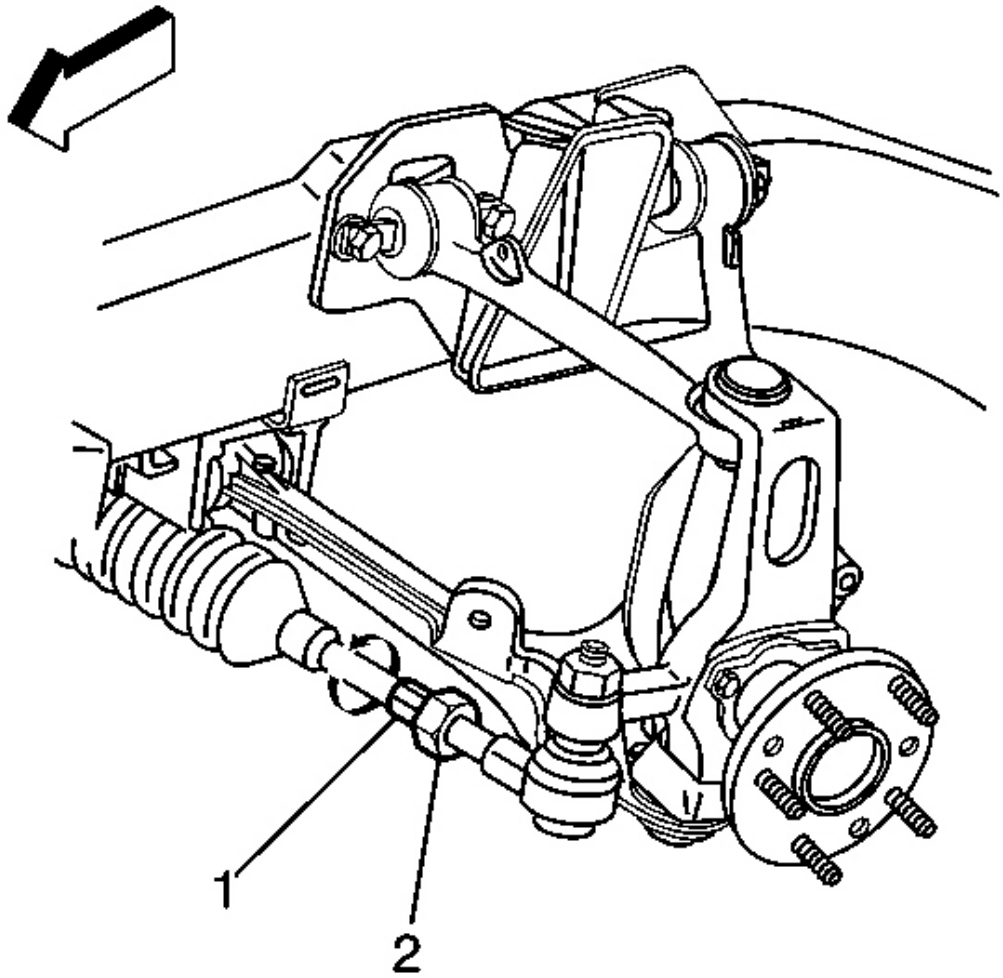

Fig. 26: Wheel Toe, Rack & Pinion Boot
Courtesy of GENERAL MOTORS CORP.

4. Install the tire and wheel assemblies. Refer to **Tire and Wheel Removal and Installation** .
5. Lower the vehicle.

IMPORTANT: Do not twist the rack and pinion boot during toe adjustment.

6. Adjust the wheel toe. Refer to **Front Toe Adjustment** in Wheel Alignment.

RACK AND PINION BOOT REPLACEMENT - ON VEHICLE

Tools Required

J 22610 Keystone Clamp Pliers

Removal Procedure

1. Remove the outer tie rod. Refer to **Rack and Pinion Outer Tie Rod End Replacement** .

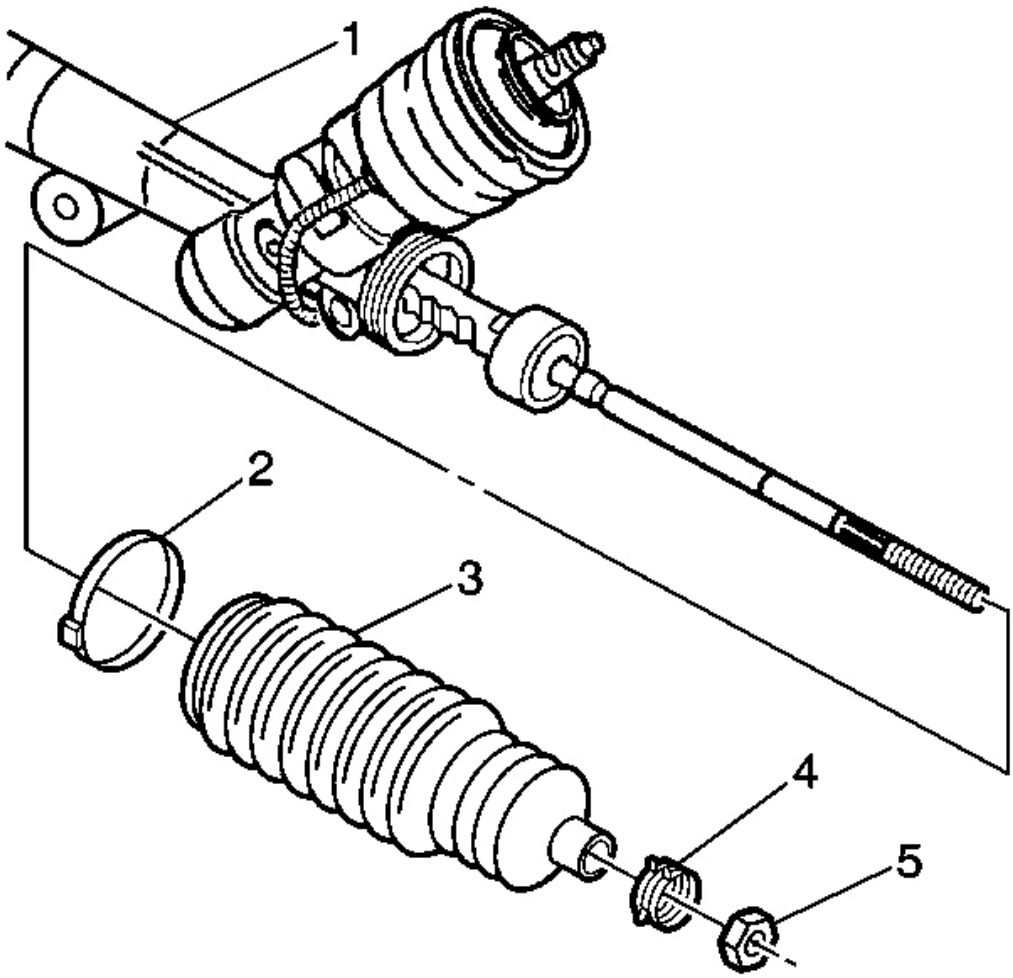

Fig. 27: Tie Rod Clamp, Nut, Rack & Pinion Boot
Courtesy of GENERAL MOTORS CORP.

2. Remove the nut (5) from the inner tie rod assembly.
3. Remove the tie rod clamp (4).

4. Use side cutters to remove the boot clamp (2).
5. Discard the boot clamp.
6. Remove the rack and pinion boot (3).

Installation Procedure

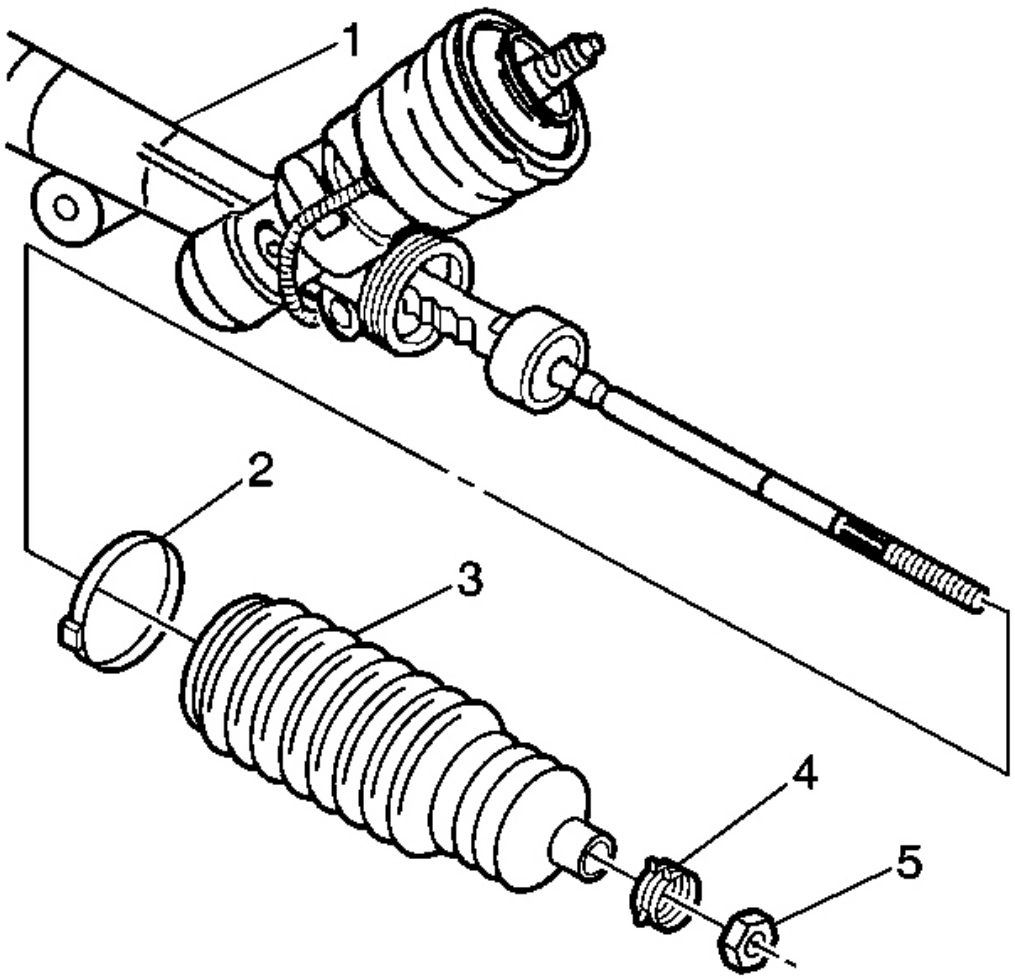

Fig. 28: Tie Rod Clamp, Nut, Rack & Pinion Boot
Courtesy of GENERAL MOTORS CORP.

1. Install the new boot clamp (2) onto the rack and pinion boot (3).

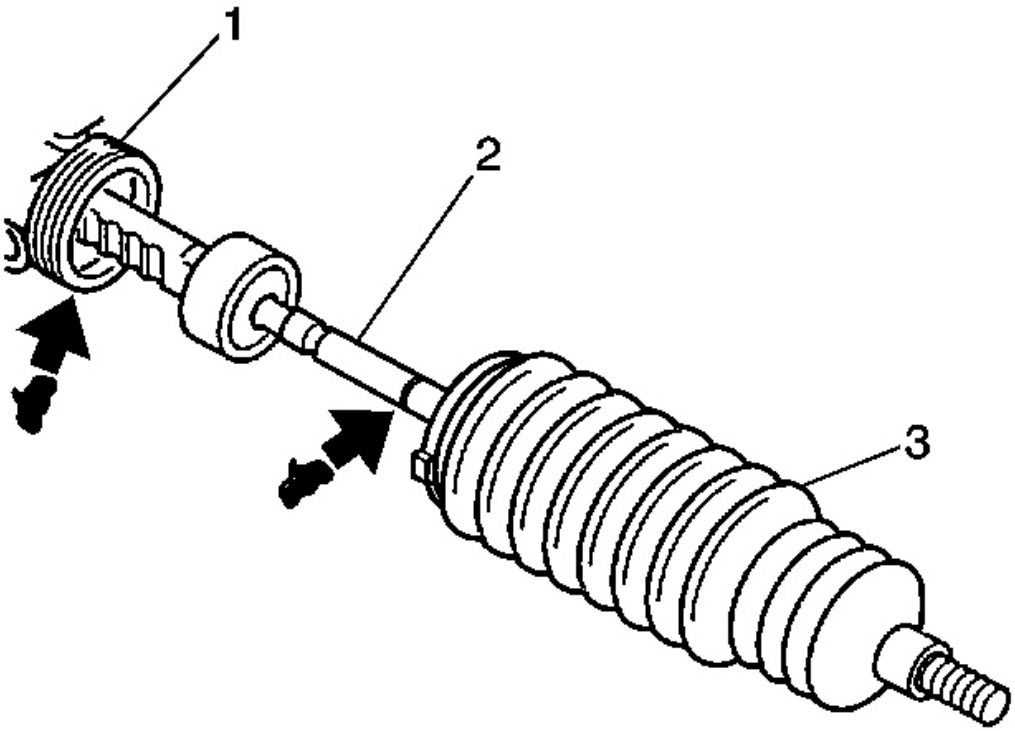

Fig. 29: Inner Rod, Gear Assembly & Boot
Courtesy of GENERAL MOTORS CORP.

2. Apply grease to the inner rod (2) and apply grease to the gear assembly (1) prior to the boot (3) installation.

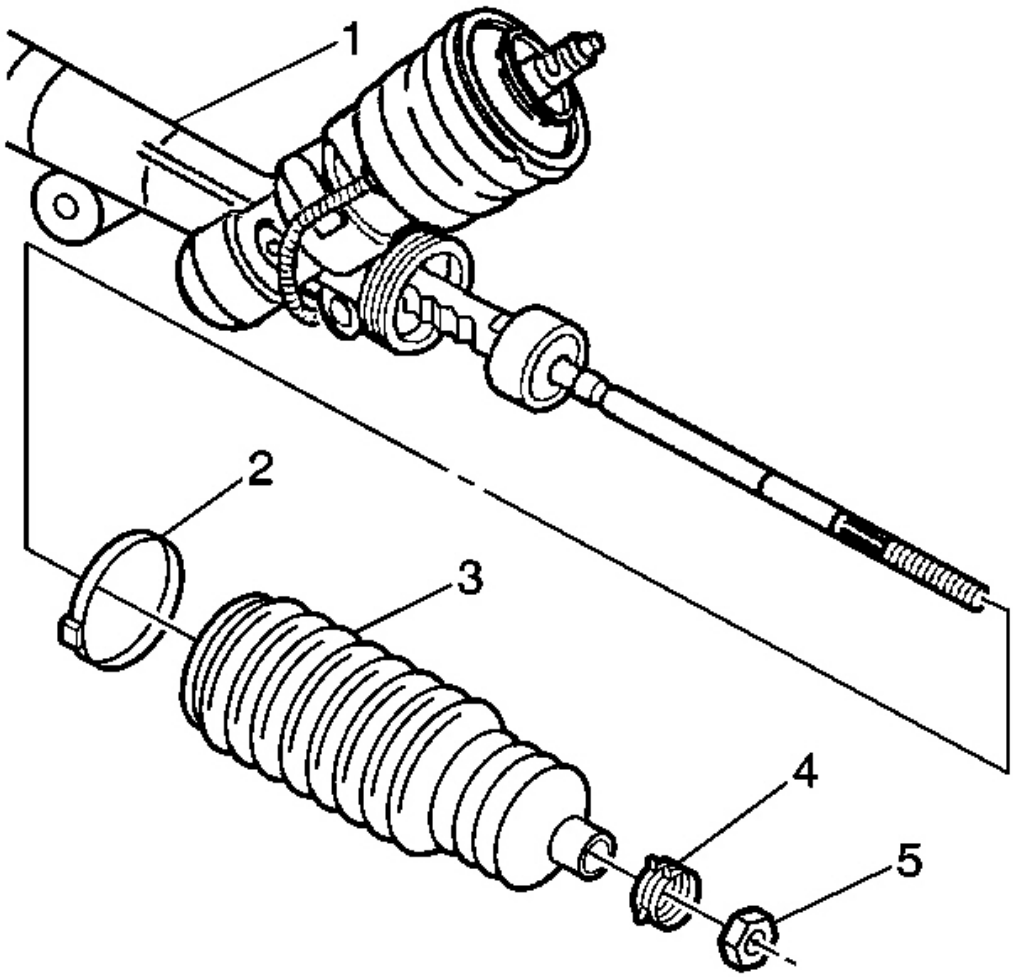

Fig. 30: Tie Rod Clamp, Nut, Rack & Pinion Boot
Courtesy of GENERAL MOTORS CORP.

IMPORTANT: The rack and pinion boot must not be twisted or out of shape in any way. An improperly shaped boot must be shaped by hand before installing the boot clamp.

3. Install the boot (3) onto the inner tie rod assembly.
4. Install the boot (3) onto the gear assembly (1) until the boot is seated in the gear assembly groove.

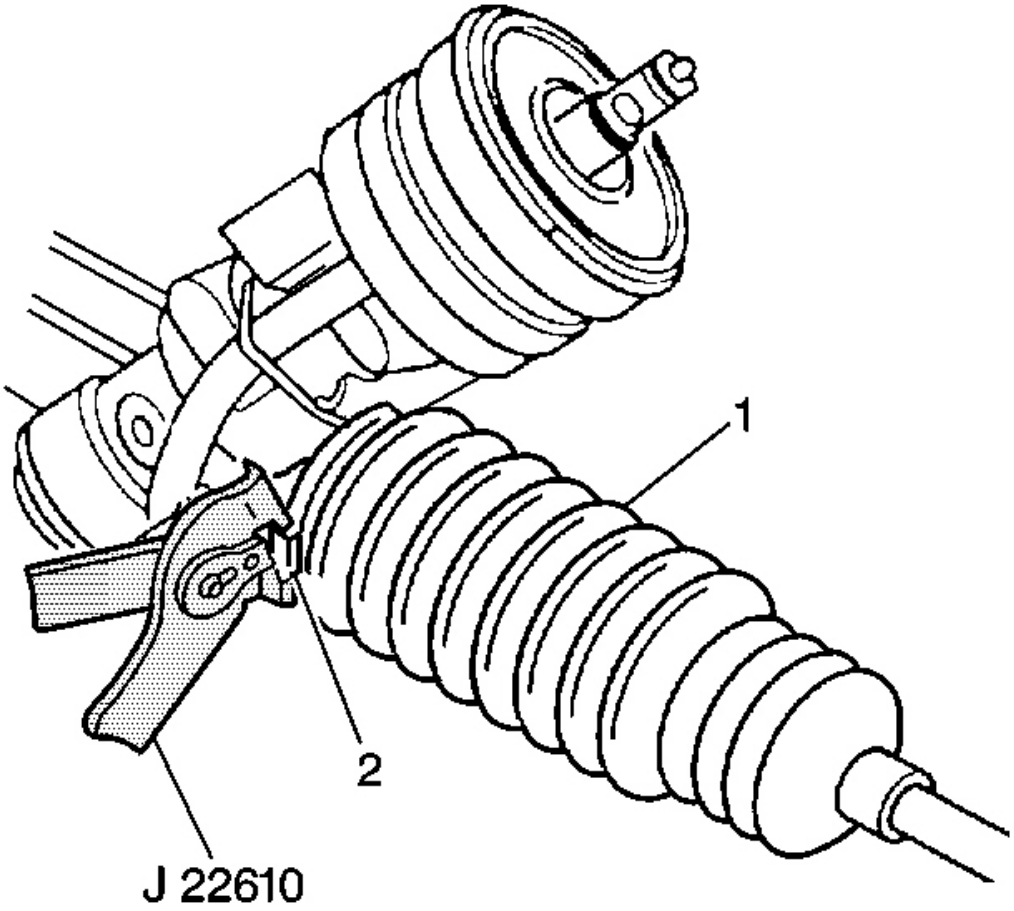

Fig. 31: Boot Clamp & J 22610
Courtesy of GENERAL MOTORS CORP.

5. Install the boot clamp on the boot (1) using tool **J 22610** (2).
6. Crimp the boot clamp (2).
7. Install the tie rod end clamp on the boot using pliers.
8. Install the jam nut to the inner tie rod assembly.
9. Install the outer tie rod. Refer to **Rack and Pinion Outer Tie Rod End Replacement** .

POWER STEERING RESERVOIR OUTLET PIPE/HOSE REPLACEMENT

Removal Procedure

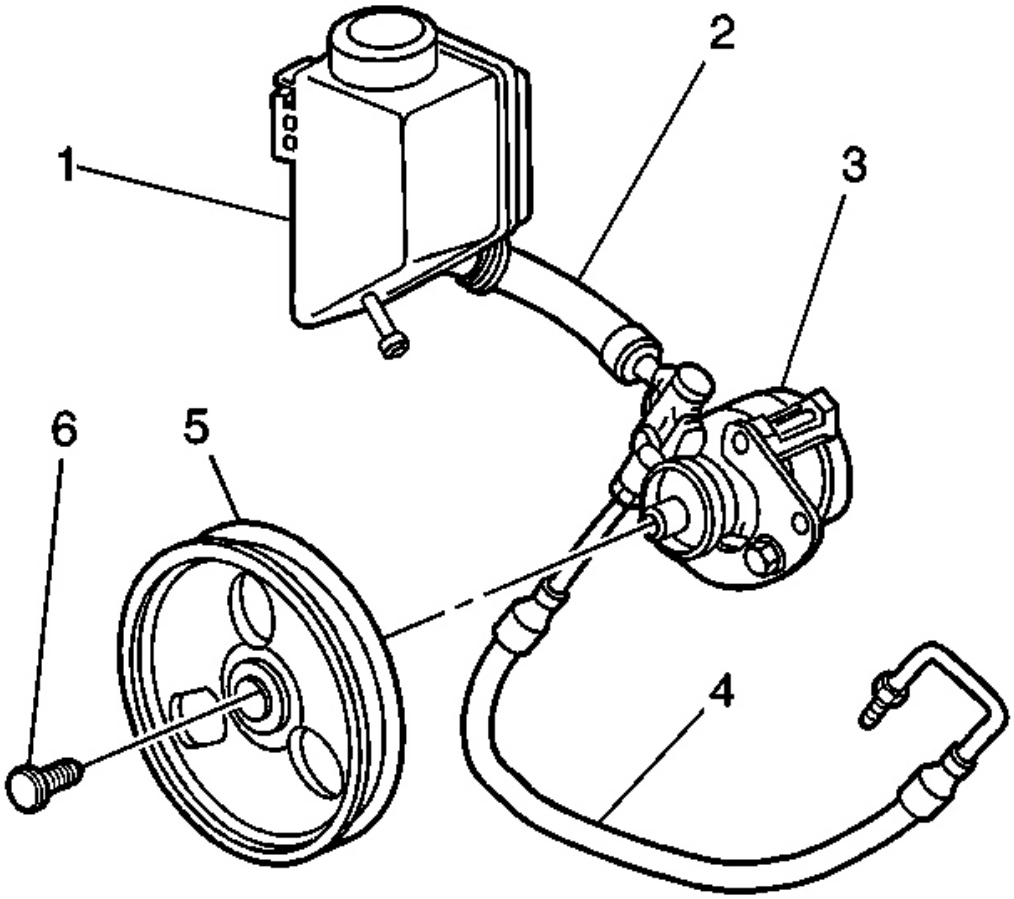

Fig. 32: Power Steering Pump, Power Steering Reservoir, Clamp Retaining The Outlet Hose
Courtesy of GENERAL MOTORS CORP.

1. Place a drain pan under the vehicle.
2. Remove the clamp retaining the outlet hose (2) to the power steering pump (3).
3. Remove the clamp retaining the outlet hose to the power steering reservoir (1).
4. Remove the outlet hose from the vehicle.

Installation Procedure

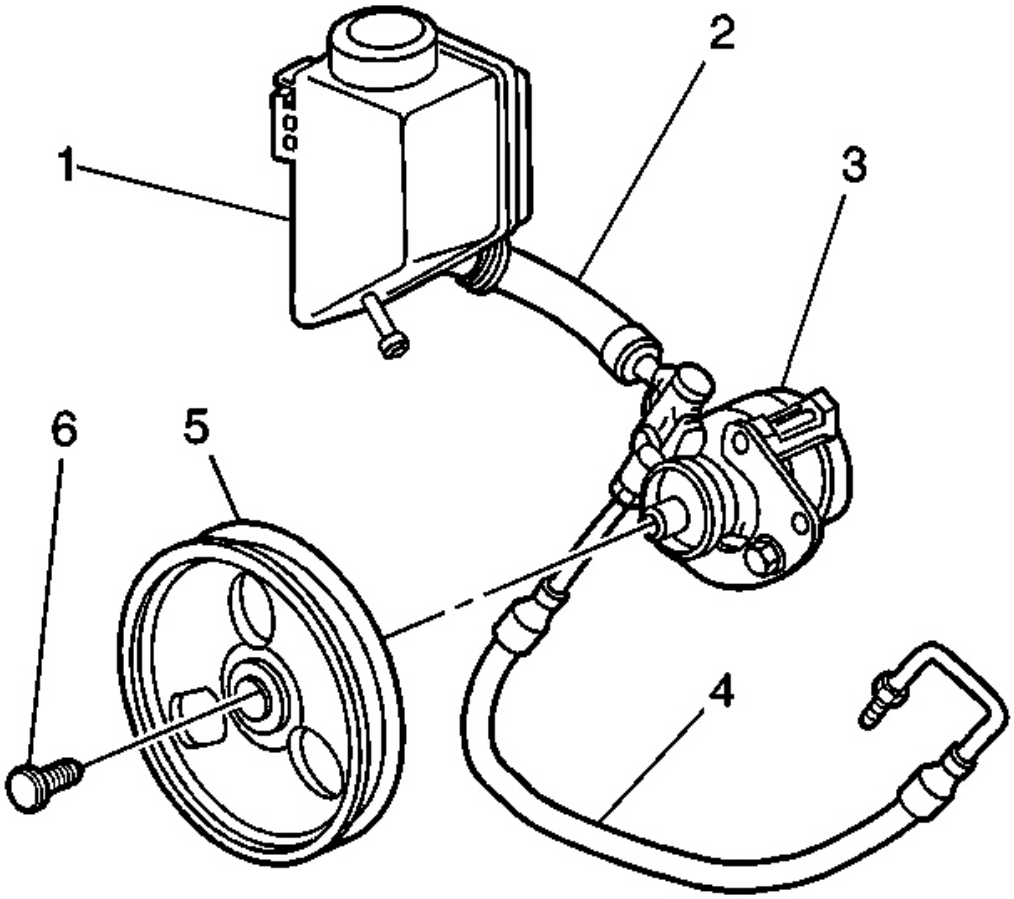

Fig. 33: Power Steering Pump, Power Steering Reservoir, Clamp Retaining The Outlet Hose
Courtesy of GENERAL MOTORS CORP.

1. Install the outlet hose (2) to the power steering reservoir (1).
2. Install the outlet hose to the power steering pump (3).
3. Install the outlet hose retaining clamps.
4. Bleed the power steering system. Refer to **Bleeding the Power Steering System** .

POWER STEERING PRESSURE PIPE/HOSE REPLACEMENT

Removal Procedure

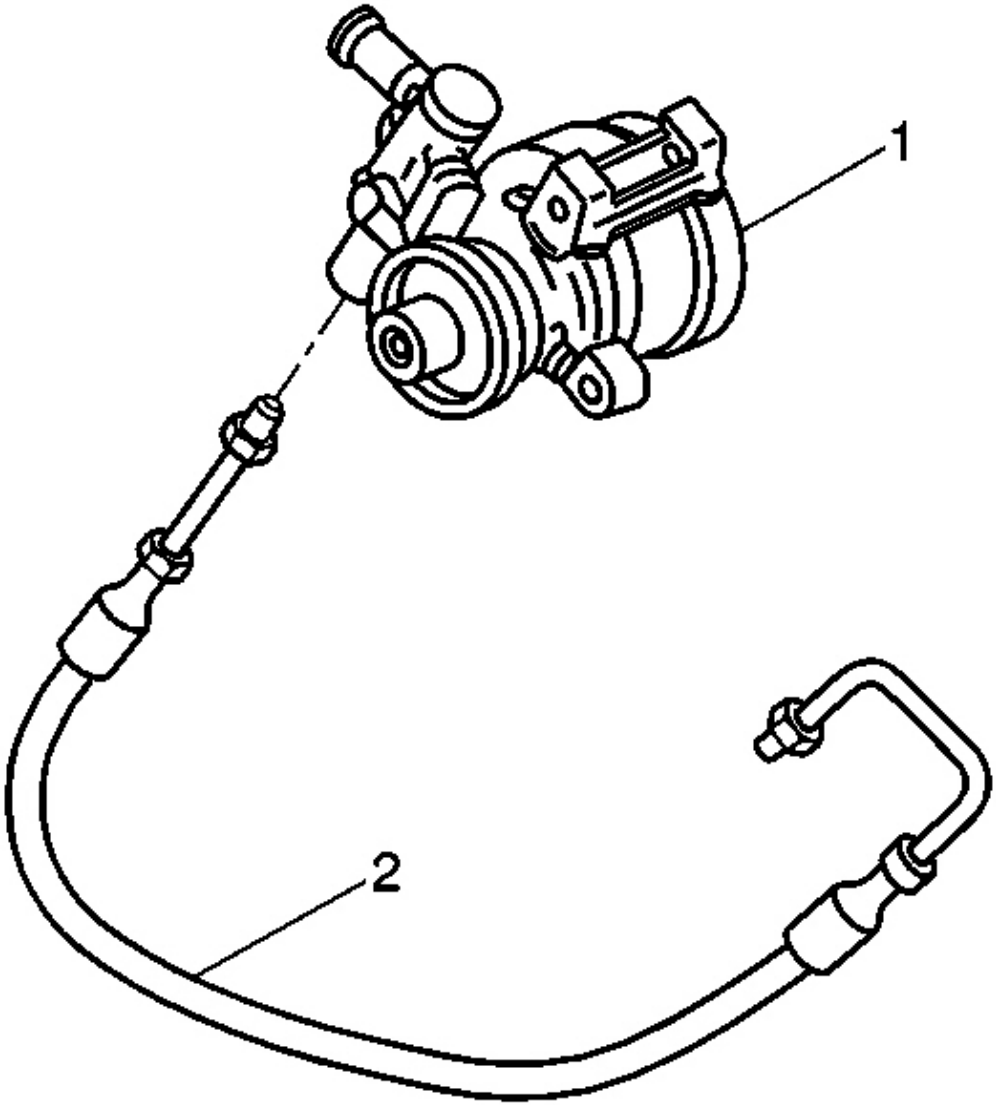

Fig. 34: Power Steering Pump & Power Steering Pressure Hose
Courtesy of GENERAL MOTORS CORP.

1. Raise the vehicle on a hoist. Refer to **Lifting and Jacking the Vehicle** in General Information.
2. Remove the power steering pressure hose (2) from the power steering pump (1).
3. Remove the power steering pressure hose (2) from the power steering gear.
4. Remove the power steering pressure hose (2) from the vehicle.

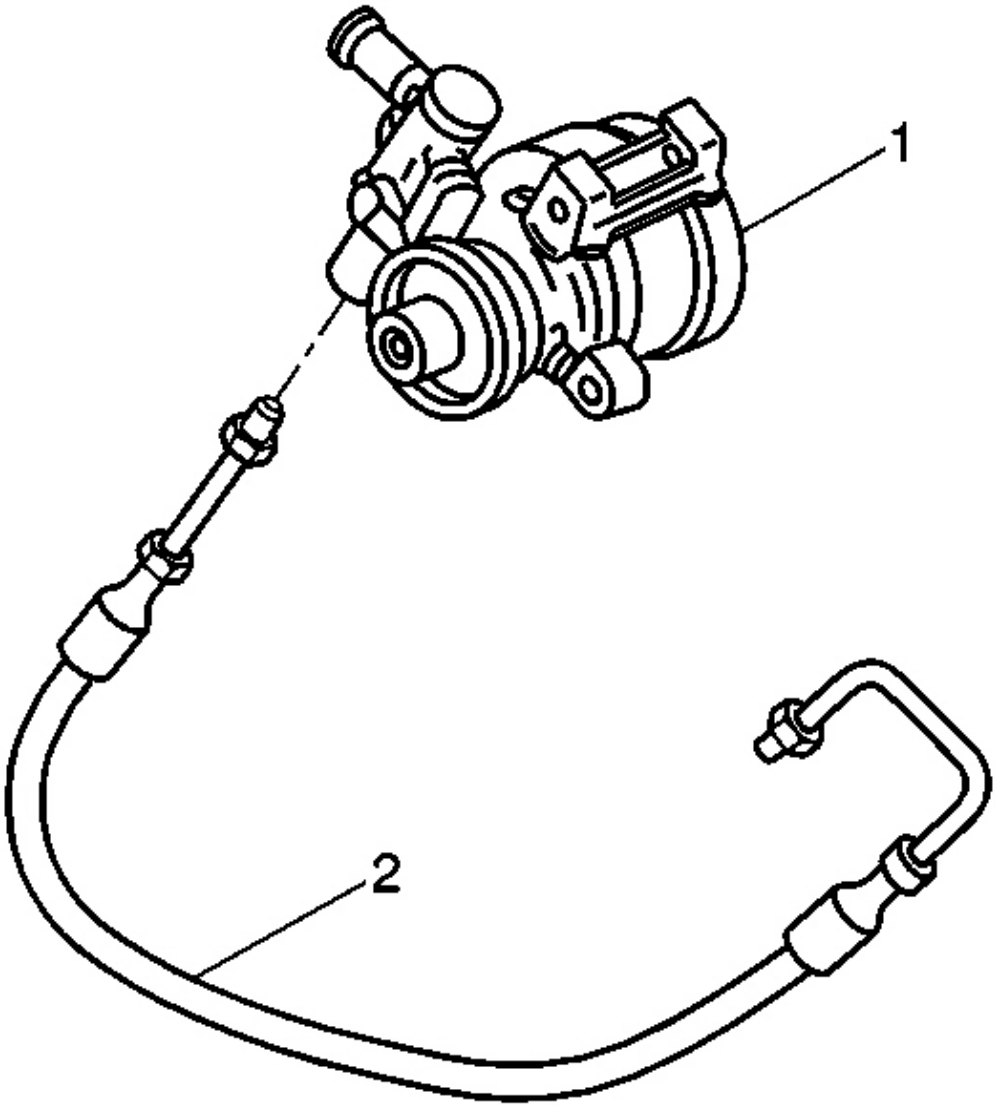

Fig. 35: Power Steering Pump & Power Steering Pressure Hose
Courtesy of GENERAL MOTORS CORP.

1. Install the power steering pressure hose (2) to the vehicle.

NOTE: Refer to Fastener Notice in Cautions and Notices.

2. Install the power steering pressure hose (2) to the power steering gear.

   Tighten: Tighten the fitting to 27 N.m (20 lb ft).

3. Install the power steering pressure hose (2) to the power steering pump (1).

   Tighten: Tighten the fitting to 27 N.m (20 lb ft).

4. Lower the vehicle.
5. Bleed the power steering system. Refer to **Bleeding the Power Steering System** .

POWER STEERING RETURN HOSE REPLACEMENT

Removal Procedure

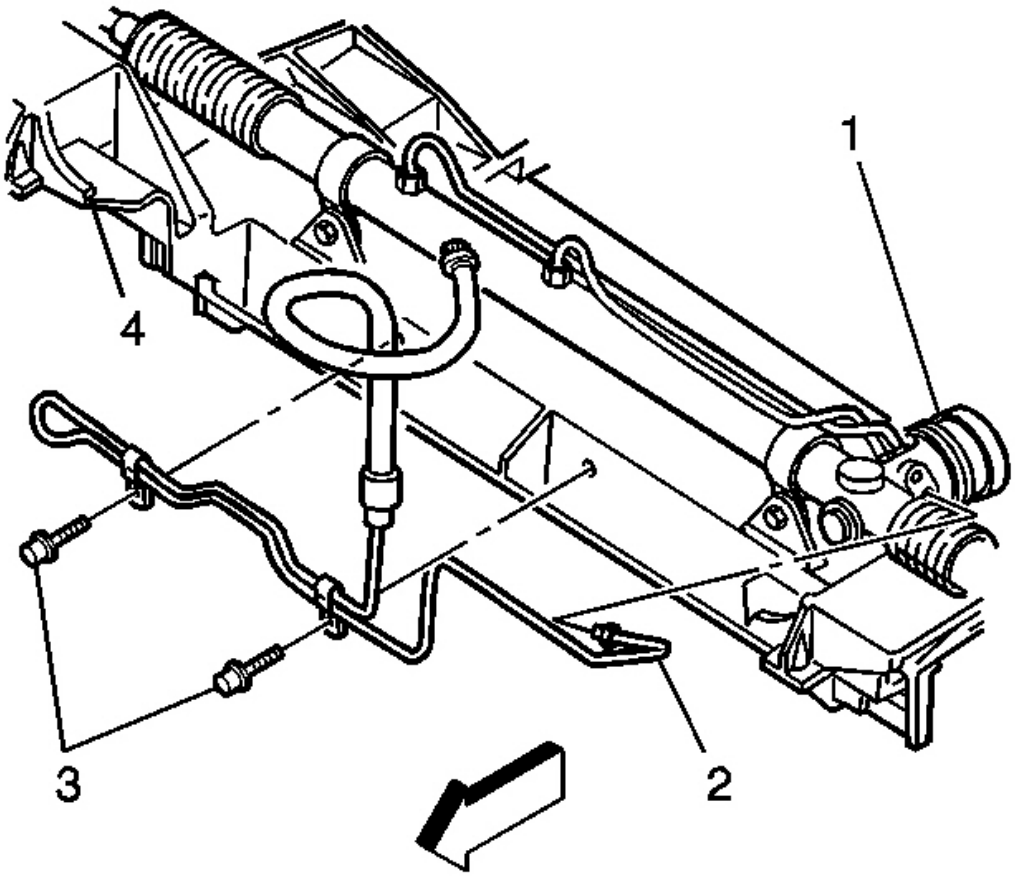

Fig. 36: Power Steering Return Hose, Power Steering Gear & Bolts
Courtesy of GENERAL MOTORS CORP.

1. Remove the power steering return hose (2) from the power steering fluid reservoir.
2. Raise the vehicle on a hoist. Refer to **Lifting and Jacking the Vehicle** in General Information.
3. Remove the power steering return hose (2) from the power steering gear (1).
4. Remove the power steering return hose mounting bolts (3) from the crossmember (4).
5. Remove the power steering return hose (2) from the vehicle.

Installation Procedure

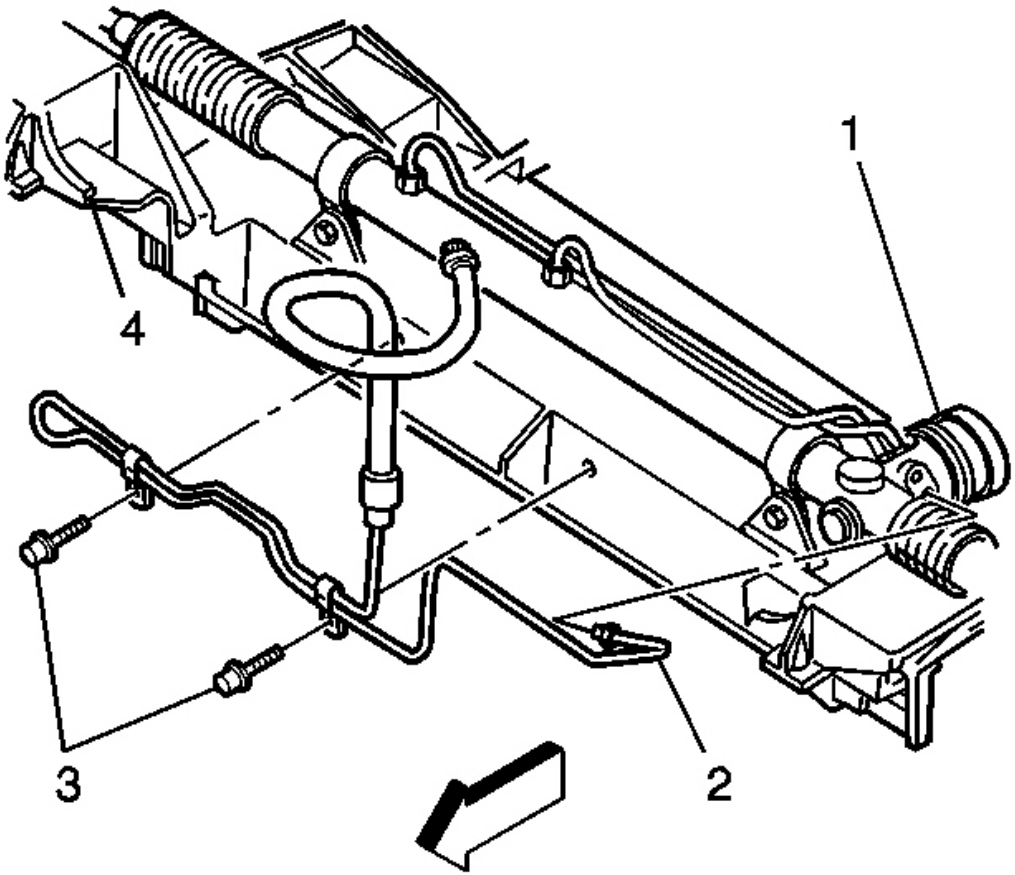

Fig. 37: Power Steering Return Hose, Power Steering Gear & Bolts
Courtesy of GENERAL MOTORS CORP.

1. Install the power steering return hose (2) into the vehicle.

NOTE: Refer to Fastener Notice in Cautions and Notices.

2. Install the power steering return hose mounting bolts (3) to the crossmember (4).

   Tighten: Tighten the bolts to 11 N.m (97 lb in).

3. Install the power steering return hose (2) to the power steering gear (1).

   Tighten: Tighten the fitting to 27 N.m (20 lb ft).

4. Lower the vehicle.
5. Install the power steering return hose (2) to the power steering fluid reservoir.
6. Bleed the power steering system. Refer to **Bleeding the Power Steering System** .

POWER STEERING GEAR REPLACEMENT

Tools Required

J 33432-A Leaf Spring Compressor

Removal Procedure

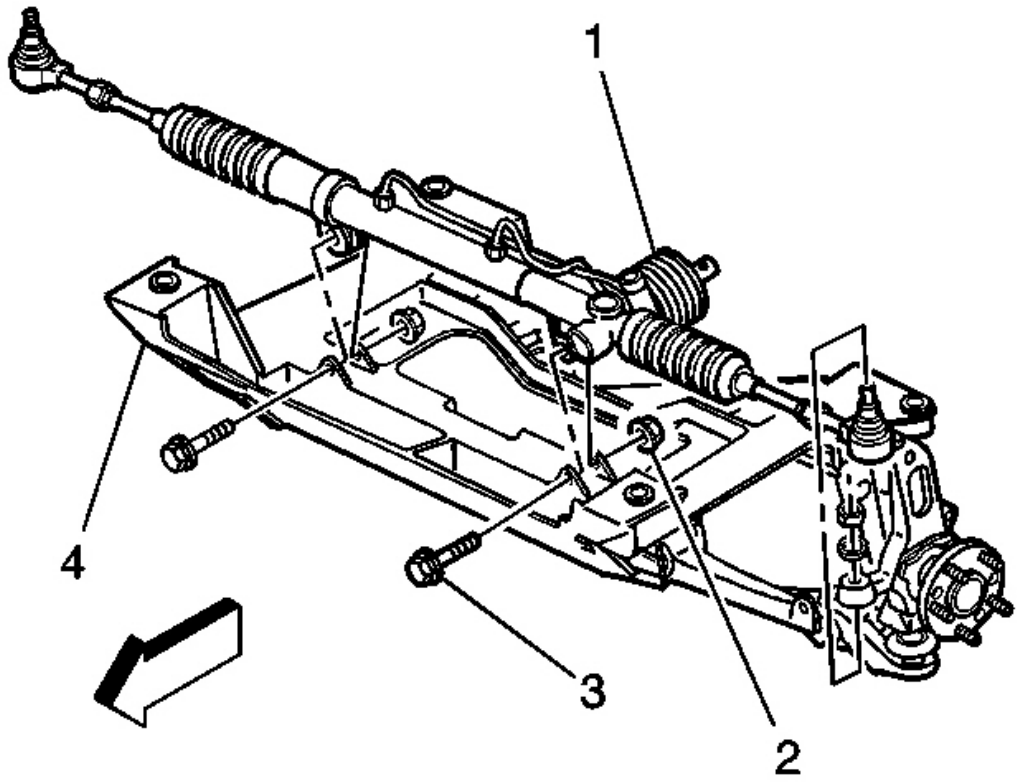

Fig. 38: Brake Lines, Power Steering Gear, Mounting Bolts & Nuts
Courtesy of GENERAL MOTORS CORP.

1. Raise and support the vehicle. Refer to **Lifting and Jacking the Vehicle** in General Information.
2. Remove the tires and wheels. Refer to **Tire and Wheel Removal and Installation** in Tires and Wheels.
3. Disconnect the tie rod ends from the steering knuckles. Refer to **Rack and Pinion Outer Tie Rod End Replacement** .
4. Disconnect the intermediate shaft from the power steering gear. Refer to **Intermediate Steering Shaft Replacement** in Steering Wheel and Column.
5. Remove the stabilizer shaft. Refer to **Stabilizer Shaft Replacement** in Front Suspension.
6. Remove the power steering pressure and return hoses from the power steering gear.
7. Remove the power steering line hold-downs from the crossmember.
8. Remove the brake pressure modulator valve (BPMV) bracket. Refer to **Brake Pressure Modulator Valve (BPMV) Bracket Replacement** in Antilock Brake System.
9. Remove the 2 front crossmember mounting nuts.
10. Using hand tools only, LOOSEN, Do Not Remove, the 2 rear crossmember mounting nuts 10 mm (0.394

in).

11. Disconnect the height sensor arm to the control arm.
12. Use a utility stand to support the front of the crossmember.
13. Using the **J 33432-A** , by compressing the coil spring, it will allow the crossmember to lower enough to properly remove the gear.
14. Remove the lower shock mounting bolts.
15. Remove the brake pipe bracket for the left front brake caliper from the crossmember.
16. Remove the plastic brake pipe hold-down for the right front brake pipe.
17. Remove the power steering gear mounting bolts (3) and nuts (2).
18. Maneuver the power steering gear around the brake lines (1) from the vehicle through the left wheelhouse opening.

Installation Procedure

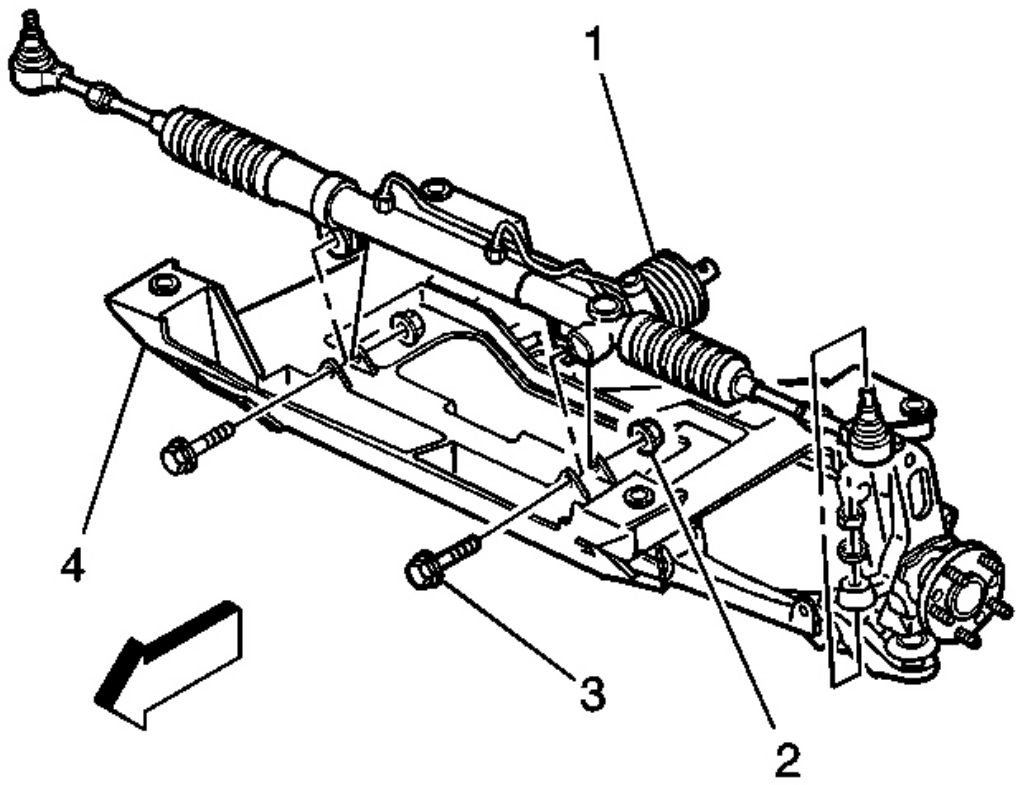

Fig. 39: Brake Lines, Power Steering Gear, Mounting Bolts & Nuts
Courtesy of GENERAL MOTORS CORP.

1. Install the power steering gear (1) into the vehicle through the left wheelhouse opening.

   NOTE: Refer to Fastener Notice in Cautions and Notices.

2. Install the power steering gear mounting bolts (3) and nuts (2).

   Tighten: Tighten the nuts to 100 N.m (74 lb ft).

3. Install the lower shock mounting bolts. Refer to **Shock Absorber Replacement (w/o F55)** or **Shock Absorber Replacement (W/F55)** in Front Suspension.
4. Raise the crossmember by the utility stand and remove **J 33432-A** .
5. Install all of the crossmember mounting nuts.

   Tighten: Tighten the nuts, using hand tools only, to 110 N.m (81 lb ft).

6. Install the brake pipe bracket for the left front brake caliper to the crossmember.
7. Install the plastic brake pipe hold-down for the right front brake pipe.
8. Install the brake BPMV bracket. Refer to **Brake Pressure Modulator Valve (BPMV) Bracket Replacement** in Antilock Brake System.
9. Install the power steering pressure hose to the power steering gear.

   Tighten: Tighten the fittings to 27 N.m (20 lb ft).

10. Install the power steering return hose to the power steering gear.

    Tighten: Tighten the fittings to 27 N.m (29 lb ft).

11. Install the power steering hold-downs to the crossmember.
12. Install the stabilizer shaft to the crossmember. Refer to **Stabilizer Shaft Replacement** in Front Suspension.
13. Connect the intermediate shaft to the power steering gear. Refer to **Intermediate Steering Shaft Replacement** in Steering Wheel and Column.
14. Connect the height sensor arm to the control arm.
15. Connect the tie rod ends to the steering knuckles. Refer to **Rack and Pinion Outer Tie Rod End Replacement** .
16. Install the tires and wheels. Refer to **Tire and Wheel Removal and Installation** in Tires and Wheels.
17. Lower the vehicle.
18. Bleed the power steering system. Refer to **Bleeding the Power Steering System** .
19. Adjust the front wheel toe. Refer to **Front Toe Adjustment** in Wheel Alignment.

RACK AND PINION GEAR RACK BEARING PRELOAD ADJUSTMENT - OFF VEHICLE (MAGNASTEER)

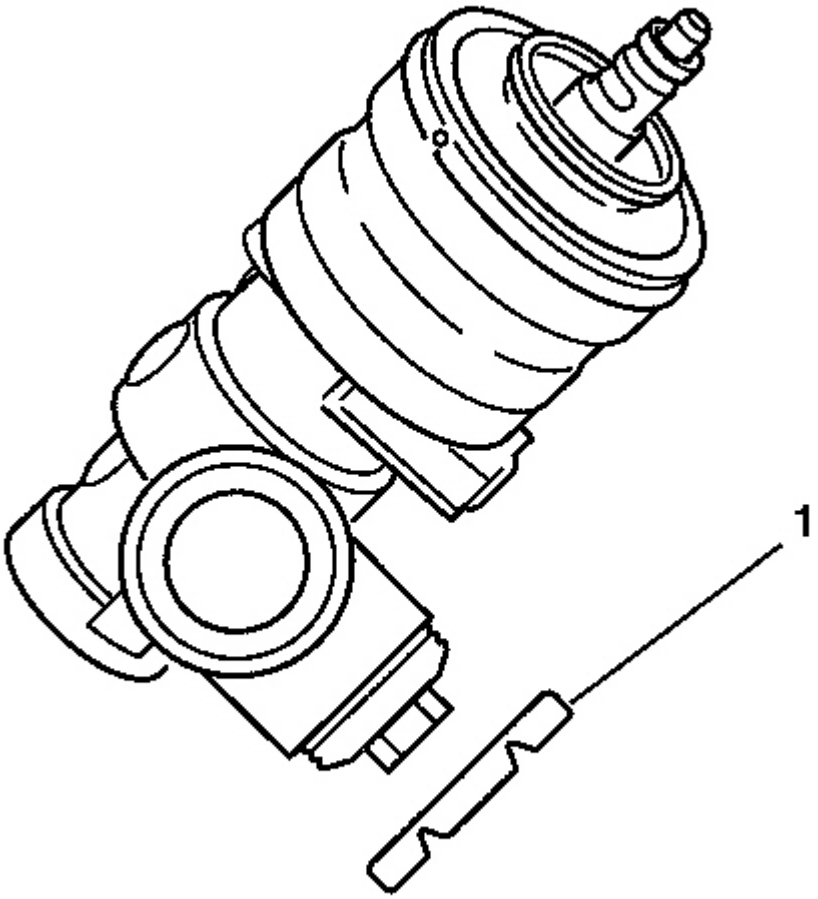

Fig. 40: Adjuster Plug Lock Nut
Courtesy of GENERAL MOTORS CORP.

1. Loosen the adjuster plug lock nut (1).
2. Turn the adjuster plug clockwise until the adjuster plug bottoms in the gear assembly.
3. Turn the adjuster plug back 50 degrees to 70 degrees (approximately one flat).

NOTE: **Refer to Fastener Notice in Cautions and Notices.**

4. Install the adjuster plug lock nut (1) to the adjuster plug.

   Tighten: Hold the adjuster plug stationary while tightening the adjuster plug lock nut (1) to 68 N.m (50 lb ft).

RACK AND PINION BOOT REPLACEMENT - OFF VEHICLE

Tools Required

J 22610 Keystone Clamp Pliers

Disassembly Procedure

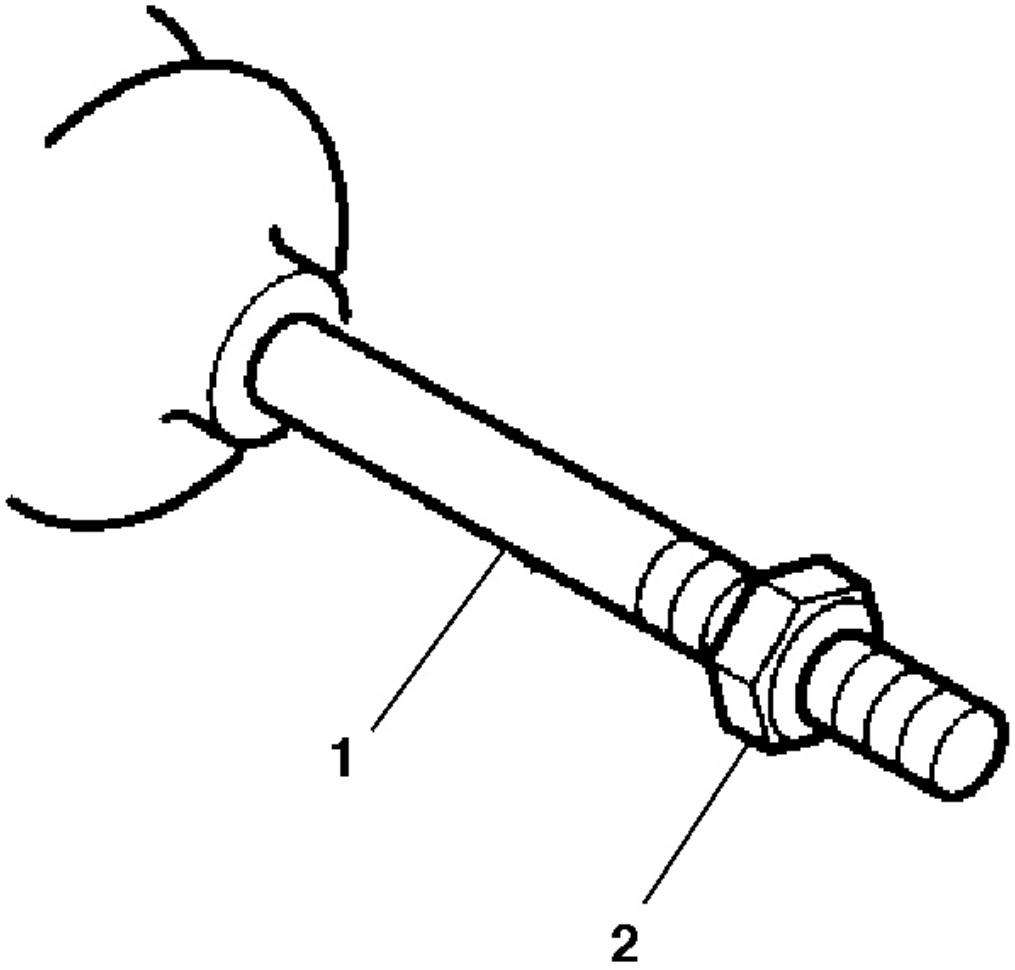

Fig. 41: Jam Nut & Inner Tie Rod Assembly
Courtesy of GENERAL MOTORS CORP.

1. To remove the outer tie rod; refer to **Rack and Pinion Outer Tie Rod End Replacement** .
2. Remove the hex jam nut (2) from the inner tie rod assembly (1).

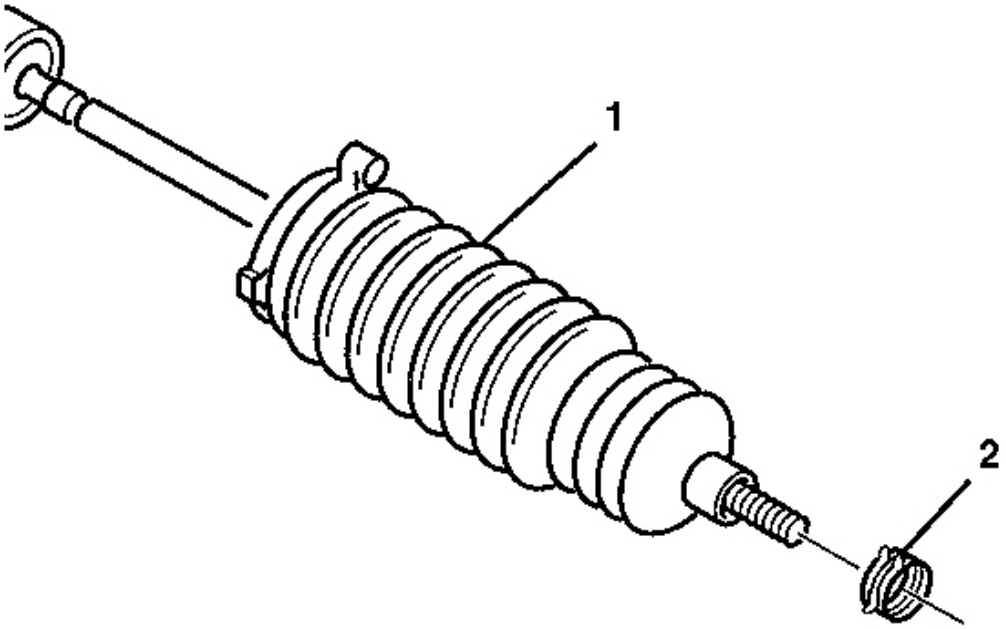

Fig. 42: Tie Rod End Clamp, Rack & Pinion Boot
Courtesy of GENERAL MOTORS CORP.

3. Remove the tie rod end clamp (2) from the rack and pinion boot (1).

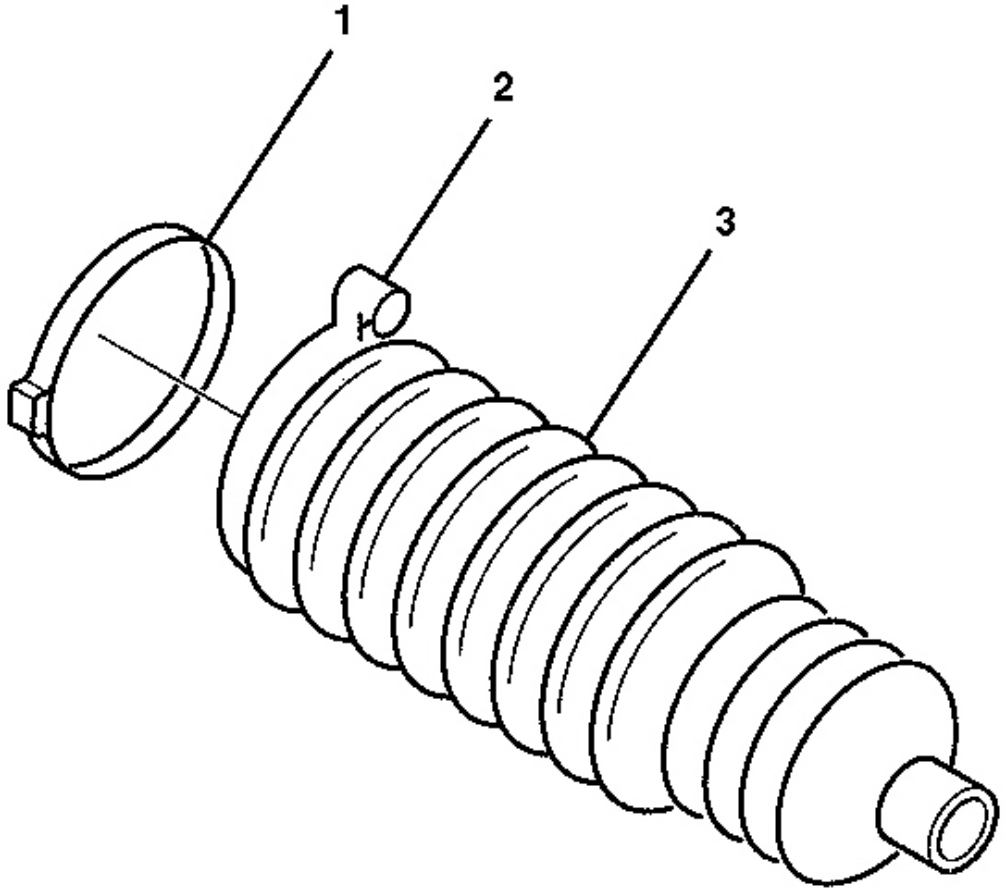

Fig. 43: Boot Clamp, Rack & Pinion Boot With Side Cutters
Courtesy of GENERAL MOTORS CORP.

4. Remove the boot clamp (1) from the rack and pinion boot with side cutters.
5. Discard the boot clamp (1).

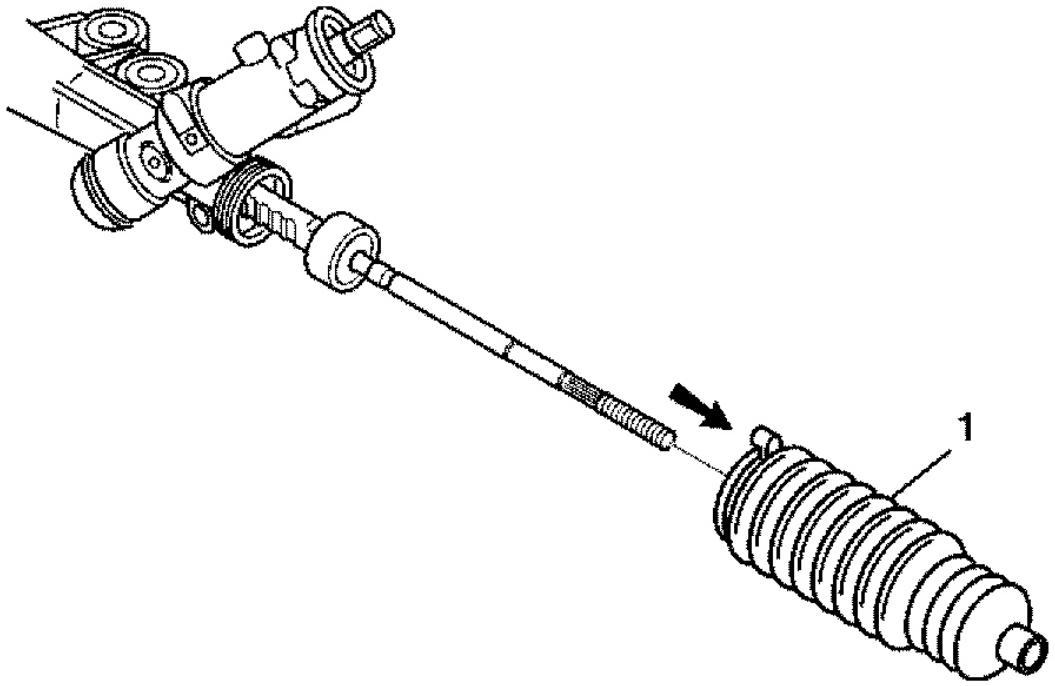

Fig. 44: Pinion Gear Assembly, Rack & Pinion Boot
Courtesy of GENERAL MOTORS CORP.

6. Remove the rack and pinion boot (1) from the rack and pinion gear assembly.

Assembly Procedure

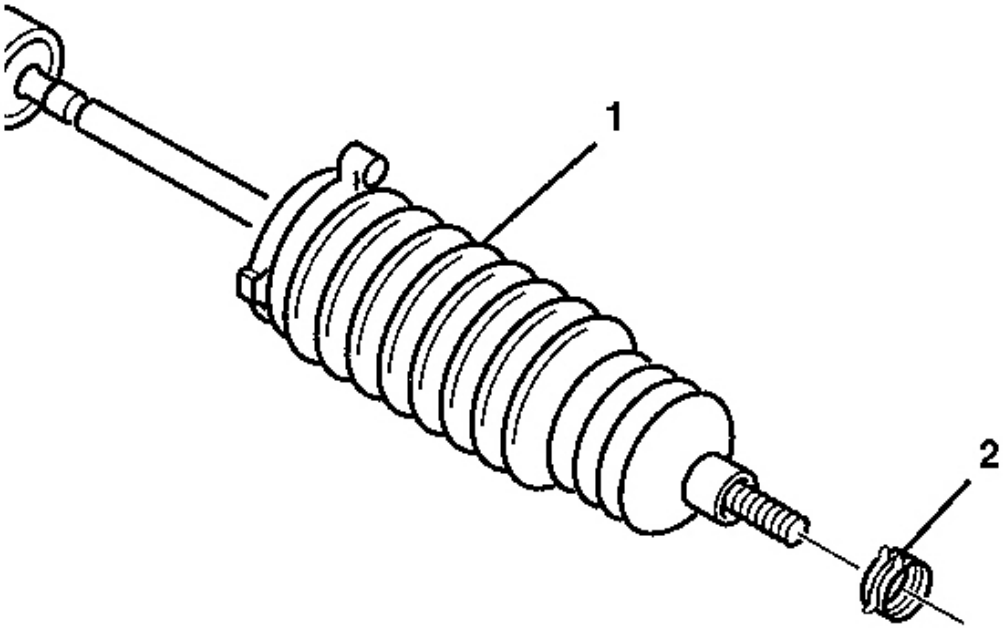

Fig. 45: Tie Rod End Clamp, Rack & Pinion Boot
Courtesy of GENERAL MOTORS CORP.

1. Install the new boot clamp (2) onto the rack and pinion boot (1).

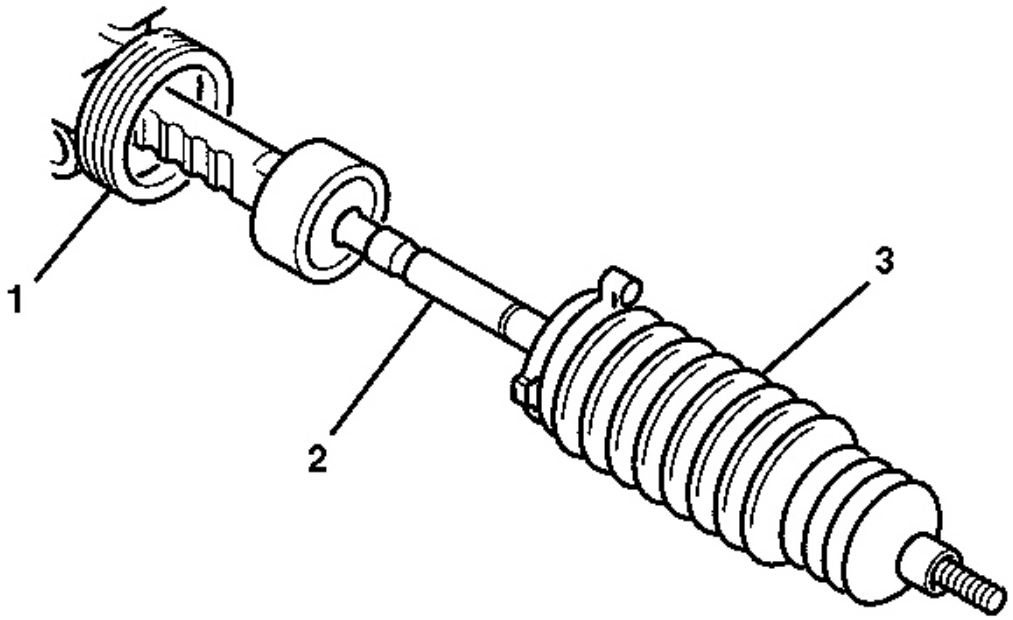

Fig. 46: Inner Tie Rod, Rack And Pinion Gear & Rack And Pinion Boot
Courtesy of GENERAL MOTORS CORP.

2. Prior to rack and pinion boot installation, apply grease to the inner tie rod assembly (2) and the rack and pinion gear assembly (1).
3. Install the rack and pinion boot (3) onto the inner tie rod assembly (2).

IMPORTANT: The rack and pinion boot (3) must not be twisted, puckered or out of shape in any way. If the rack and pinion boot (3) is not shaped properly, adjust the rack and pinion boot (3) by hand before installing the boot clamp.

4. Install the rack and pinion boot onto the gear assembly (1) until the rack and pinion boot (3) is seated in the gear assembly groove.

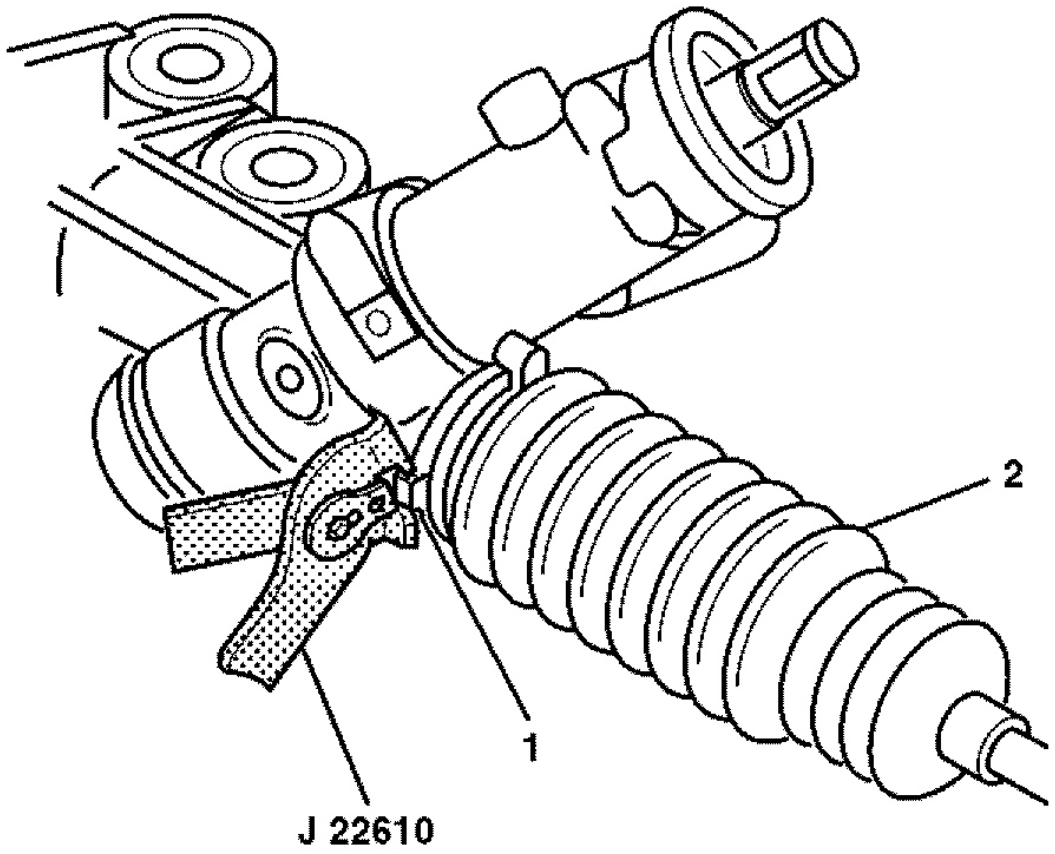

Fig. 47: Rack And Pinion Boot, Boot Clamp & J 22610
Courtesy of GENERAL MOTORS CORP.

5. Install the boot clamp (1) on the rack and pinion boot (2) with J 22610 .
6. Crimp the boot clamp (1).
7. Pinch the pliers together on the rack and pinion boot (2) in order to install the tie rod end clamp.

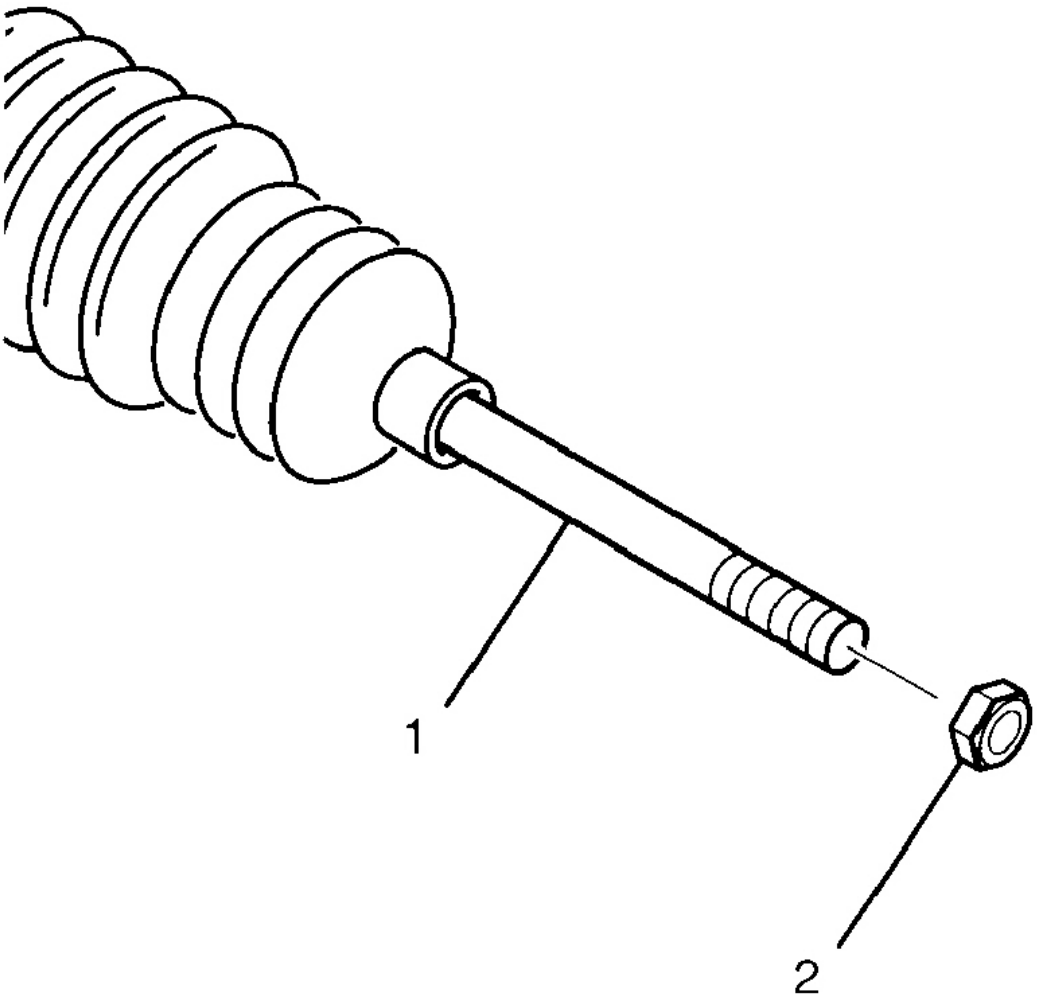

Fig. 48: Inner Tie Rod & Hex Jam Nut
Courtesy of GENERAL MOTORS CORP.

8. Install the hex jam nut (2) to the inner tie rod assembly (1).
9. To assemble the outer tie rod assembly; refer to **Rack and Pinion Outer Tie Rod End Replacement** .

TIE ROD REPLACEMENT - INNER (MAGNASTEER)

Tools Required

J 34028 Inner Tie Rod Wrench. See **Special Tools and Equipment** .

Disassembly Procedure

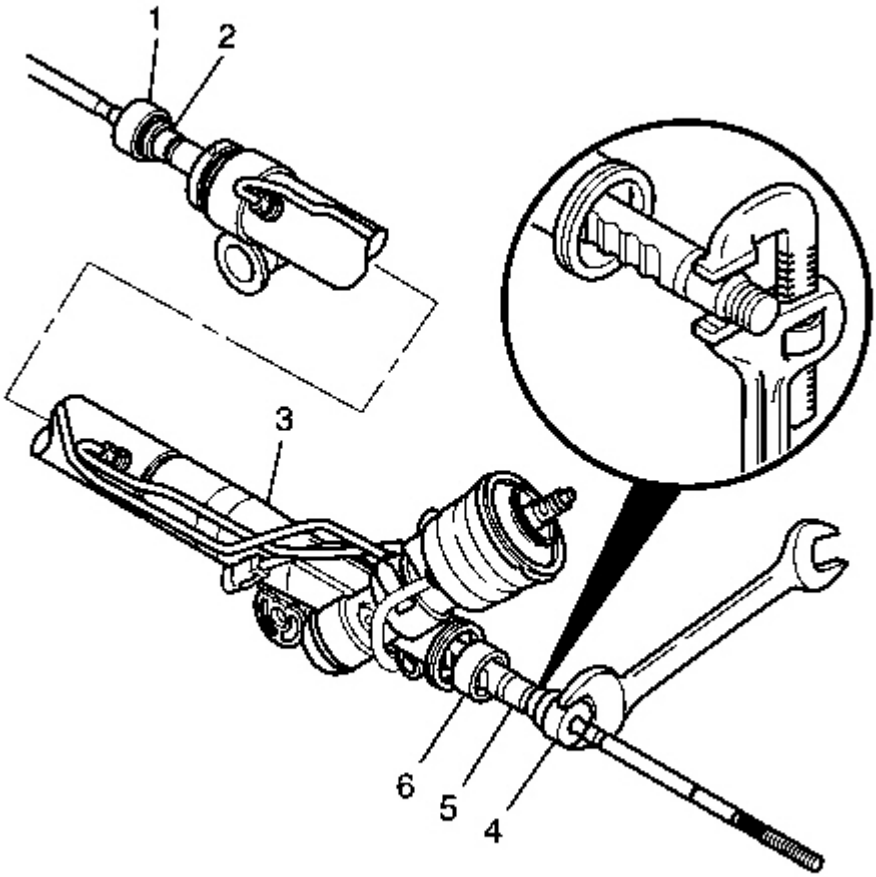

Fig. 49: Left Inner Tie Rod Housing, Shock Dampener & Rack
Courtesy of GENERAL MOTORS CORP.

1. To remove the rack and pinion boot. Refer to **Rack and Pinion Boot Replacement - Off Vehicle** .
2. Place the gear in a vise.

NOTE: **Do not change the steering gear preload adjustment before moving the inner tie rod from the steering gear. Changing the steering gear preload adjustment before moving the inner tie rod could result in damage to the pinion and the steering gear.**

3. Remove the shock dampener (6) from the inner tie rod housing (4).
4. Slide the shock dampener (6) back on the rack (5).

NOTE: **The pipe wrench must be placed at the valve end of the steering gear and positioned up against the inner tie rod housing. Placing the pipe wrench in any other location will cause damage to the steering gear.**

5. Place a pipe wrench on the rack (5) next to the inner tie rod housing (4).
6. Place a wrench on the flats of the inner tie rod housing (4).
7. Rotate the inner tie rod housing (4) counterclockwise, while holding the rack stationary, until the inner tie rod separates from the rack (5).

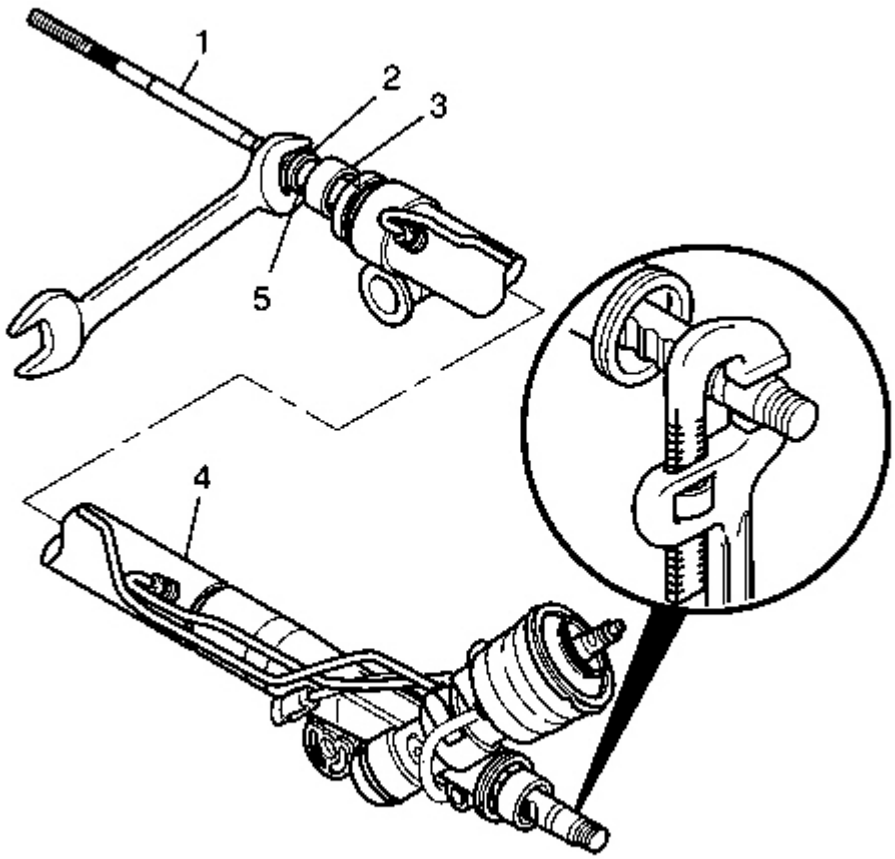

Fig. 50: Right Inner Tie Rod Housing, Shock Dampener
Courtesy of GENERAL MOTORS CORP.

8. Remove the shock dampener (3) from the inner tie rod housing (2).
9. Slide the shock dampener (3) back on the rack (5).

NOTE: **Refer to Pipe Wrench Positioning Notice in Cautions and Notices.**

10. Place a pipe wrench on the rack.
11. Place a wrench on the flats of the inner tie rod housing (2).
12. Rotate the inner tie rod housing (2) counterclockwise, while holding the rack stationary, until the inner tie rod (1) separates from the rack (5).

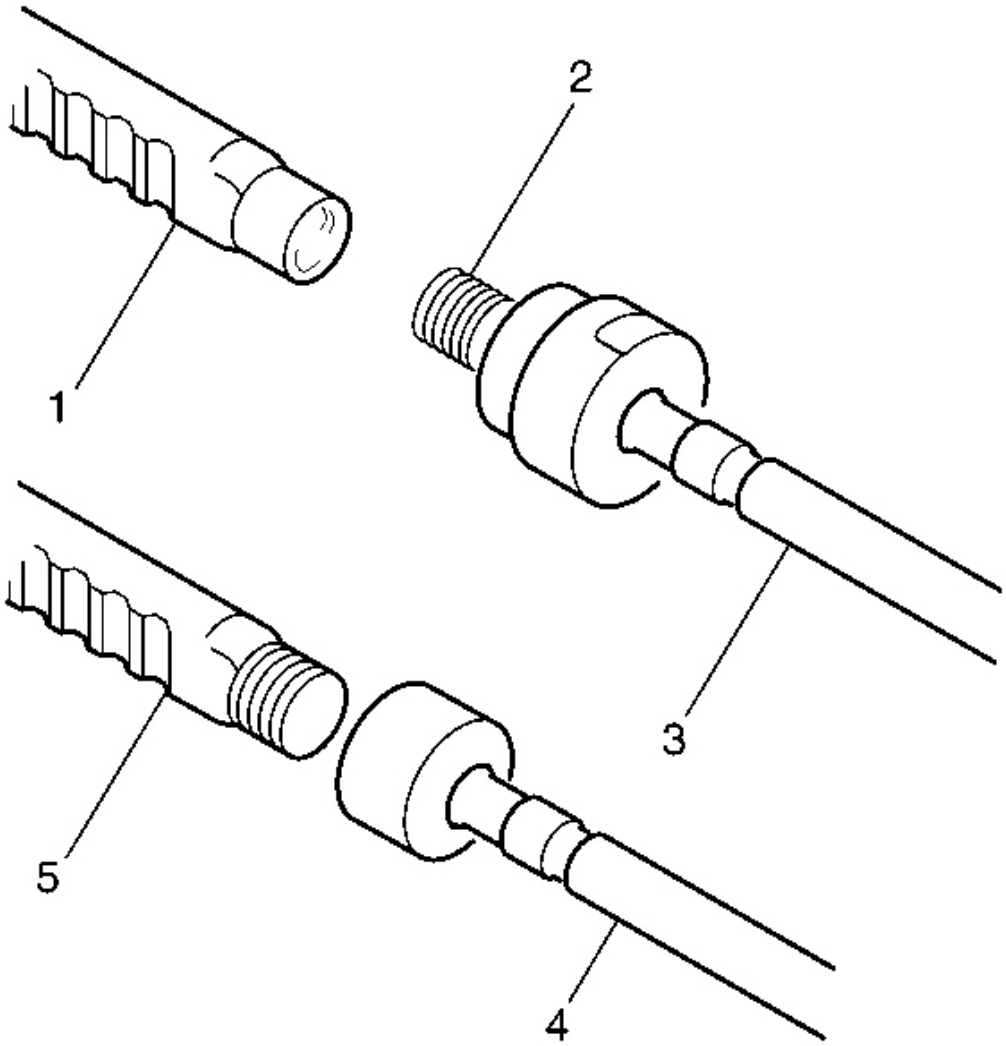

Fig. 51: Male/Female Inner Tie Rod, Rack & Threads
Courtesy of GENERAL MOTORS CORP.

13. If female rack (1) and male inner tie rod (3), remove the old LOCTITE(R) from the threads (2) of the inner tie rod (3) and the rack (1).

    If male rack (5) and female inner tie rod (4) LOCTITE(R) will not be present.

Assembly Procedure

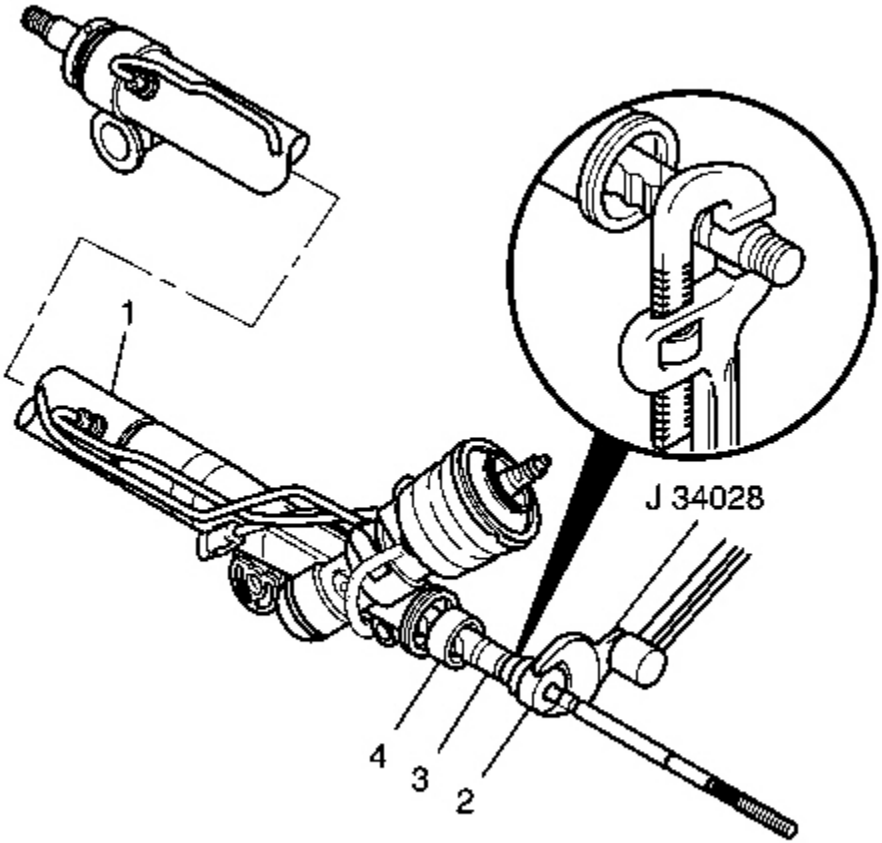

Fig. 52: Right Inner Tie Rod Housing, Shock Dampener & J 34028
Courtesy of GENERAL MOTORS CORP.

1. Slide the shock dampener (4) forward onto the rack (3).

IMPORTANT: Threads must be clean prior to LOCTITE(R) application. Check LOCTITE (R), or equivalent, container for expiration date. Use only enough LOCTITE(R) to evenly coat threads.

If male rack (3) and female inner tie rod (2) do not apply LOCTITE(R).

2. If female rack (3) and male inner tie rod (2), apply LOCTITE(R) 262, or equivalent, to the inner tie rod threads.
3. Attach the inner tie rod onto the rack (3).

NOTE: Refer to Pipe Wrench Positioning Notice in Cautions and Notices.

4. Place a pipe wrench on the rack (3) next to the inner tie rod housing (2).

NOTE: Refer to Fastener Notice in Cautions and Notices.

5. Place a torque wrench and **J 34028** on the flats of the inner tie rod housing (2). See **Special Tools and Equipment** .

   Tighten: Tighten the inner tie rod to 100 N.m (74 lb ft).

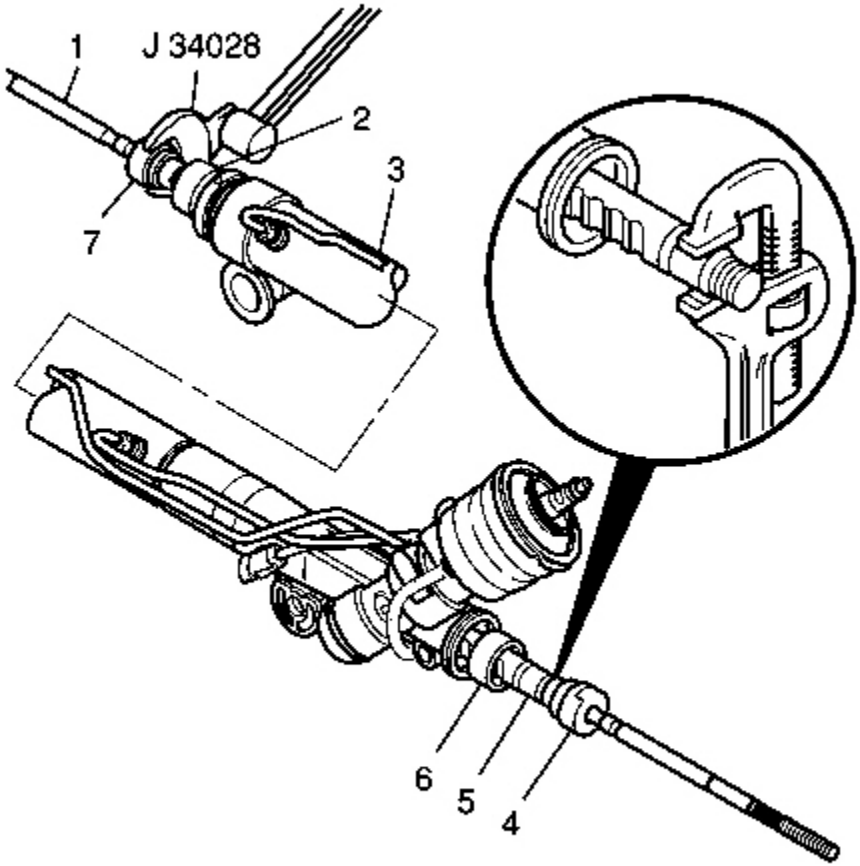

Fig. 53: Left Inner Tie Rod Housing, Shock Dampener & J 34028
Courtesy of GENERAL MOTORS CORP.

6. Slide the shock dampener (2) forward onto the rack.

IMPORTANT: Threads must be clean prior to LOCTITE(R) application. Check LOCTITE (R), or equivalent, container for expiration date. Use only enough LOCTITE(R) to evenly coat threads.
If male rack and female inner tie rod (1) do not apply LOCTITE(R).

7. If female rack and male inner tie rod (1), apply LOCTITE(R) 262, or equivalent, to the inner tie rod threads.
8. Attach the inner tie rod (1) onto the rack.

NOTE: **Refer to Pipe Wrench Positioning Notice in Cautions and Notices.**

9. Place a pipe wrench on the rack next to the inner tie rod housing (4).
10. Place a torque wrench and **J 34028** on the flats of the inner tie rod housing (7). See **Special Tools and Equipment** .

    Tighten: Tighten the inner tie rod to 100 N.m (74 lb ft).

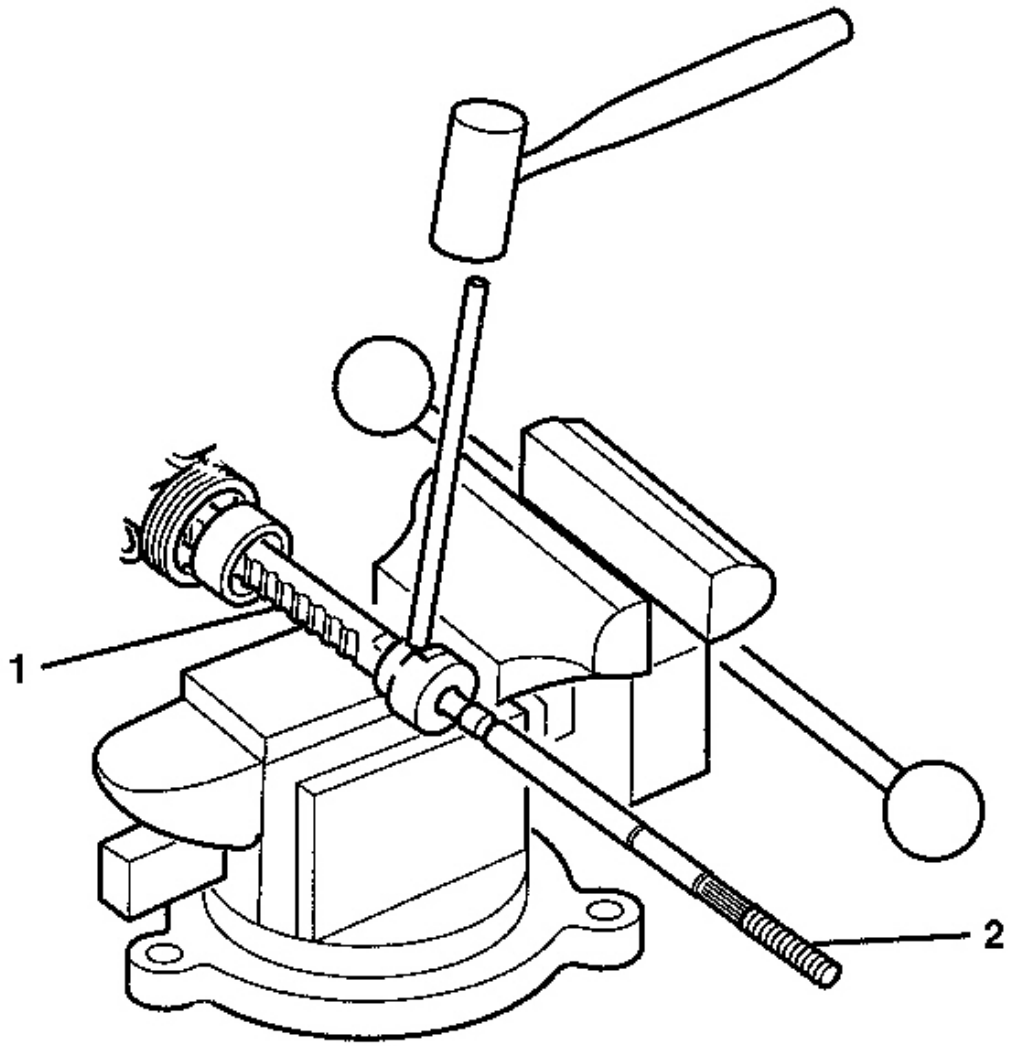

Fig. 54: Staking Inner Tie Rod Assembly & Male Rack
Courtesy of GENERAL MOTORS CORP.

11. Place the inner tie rod assembly (2) in a vise.

IMPORTANT: If female rack (1) and male inner tie rod (2) do not stake. If male rack (1) and female inner tie rod (2) you must stake.

12. Stake both sides of the female inner tie rod assembly housing to the male rack (1).

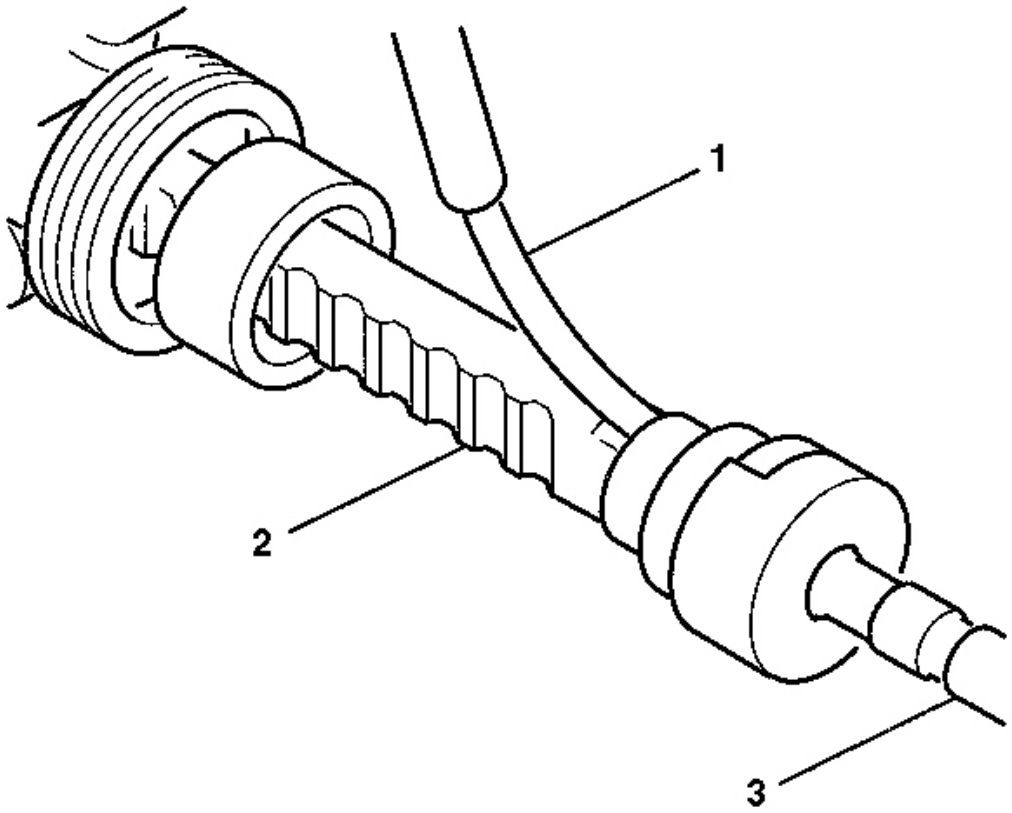

Fig. 55: Inserting A 0.25 Mm Gauge Between Rack & Inner Tie Rod Housing
Courtesy of GENERAL MOTORS CORP.

13. Insert a 0.25 mm gauge (1) between the rack (2) and the inner tie rod housing in order to check both stakes. The feeler gauge (1) must not pass between the rack and the housing stake.

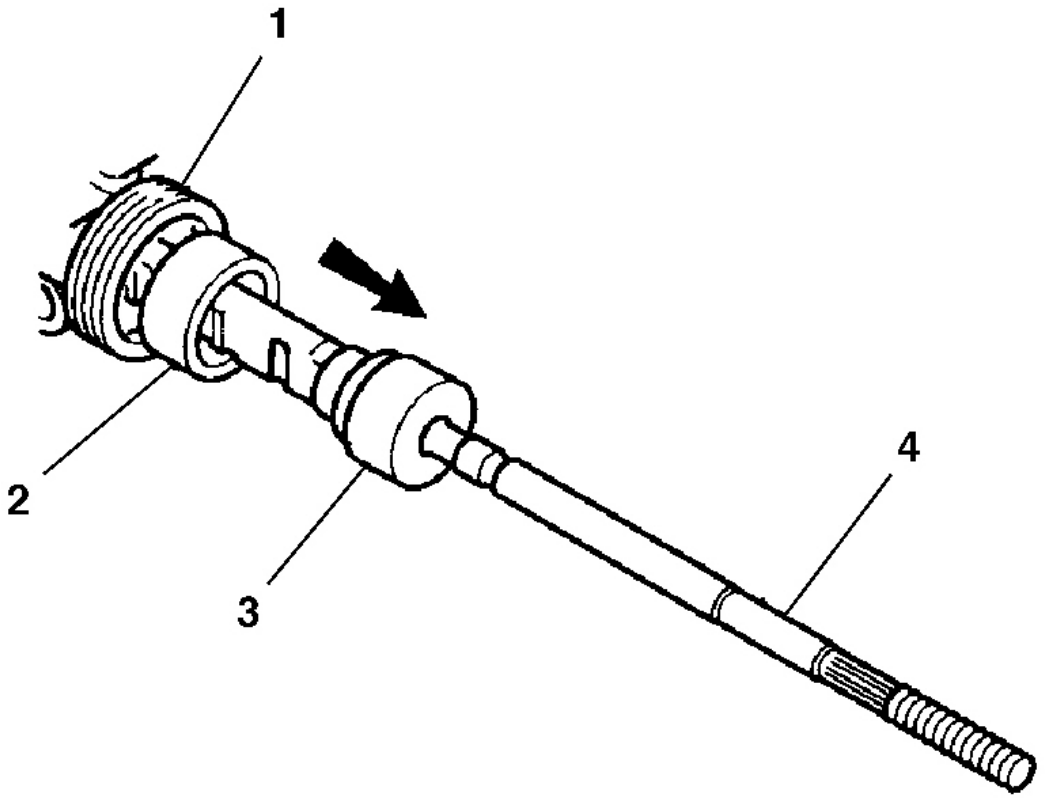

Fig. 56: Shock Dampener & Inner Tie Rod Housing
Courtesy of GENERAL MOTORS CORP.

14. Slide the shock dampener (2) over the inner tie rod housing (3) until the front lip of the shock dampener (2) bottoms against the inner tie rod housing (3).
15. To assemble the rack and pinion boot. Refer to **Rack and Pinion Boot Replacement - Off Vehicle** .

STEERING GEAR CYLINDER PIPE ASSEMBLIES/O-RING SEALS REPLACEMENT - OFF VEHICLE (MAGNASTEER)

Disassembly Procedure

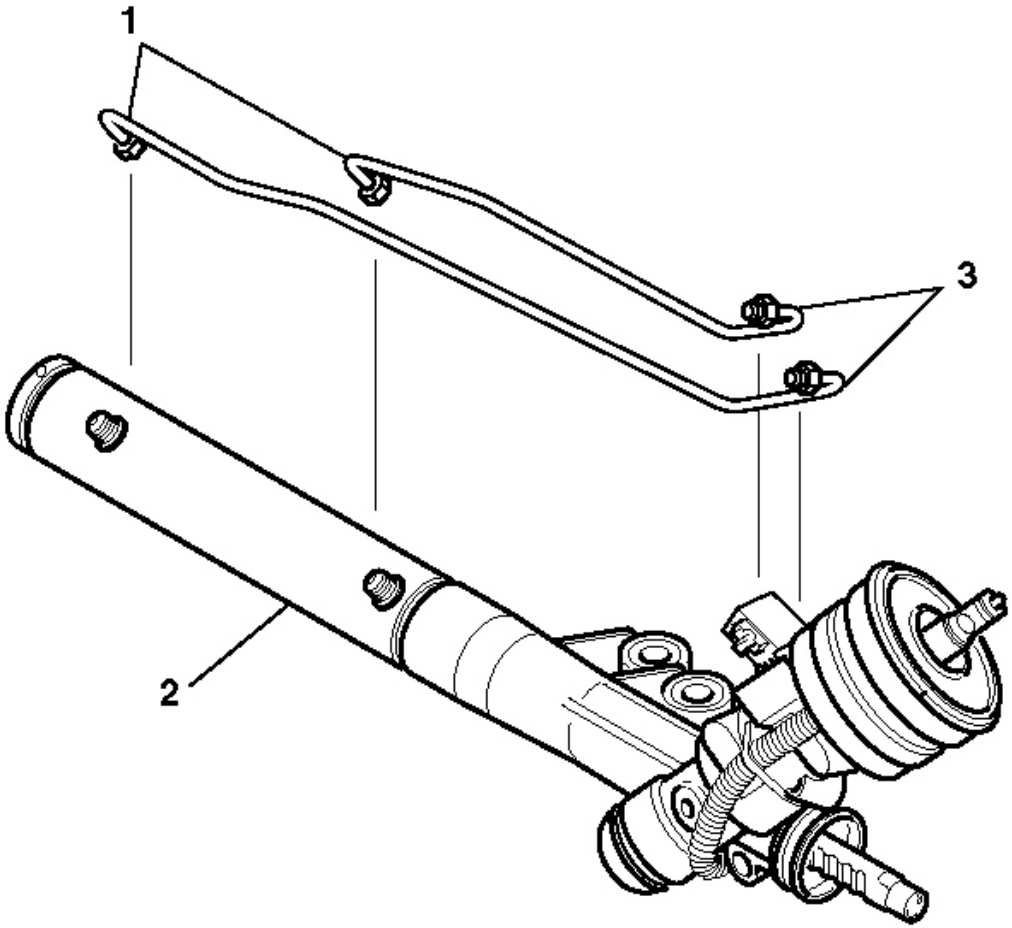

Fig. 57: Cylinder Line Fittings & Gear Assembly
Courtesy of GENERAL MOTORS CORP.

1. Loosen both cylinder line fittings (1) on the cylinder end of the gear assembly.
2. Loosen both fittings on the cylinder line assemblies (3) at the valve end of the gear assembly.

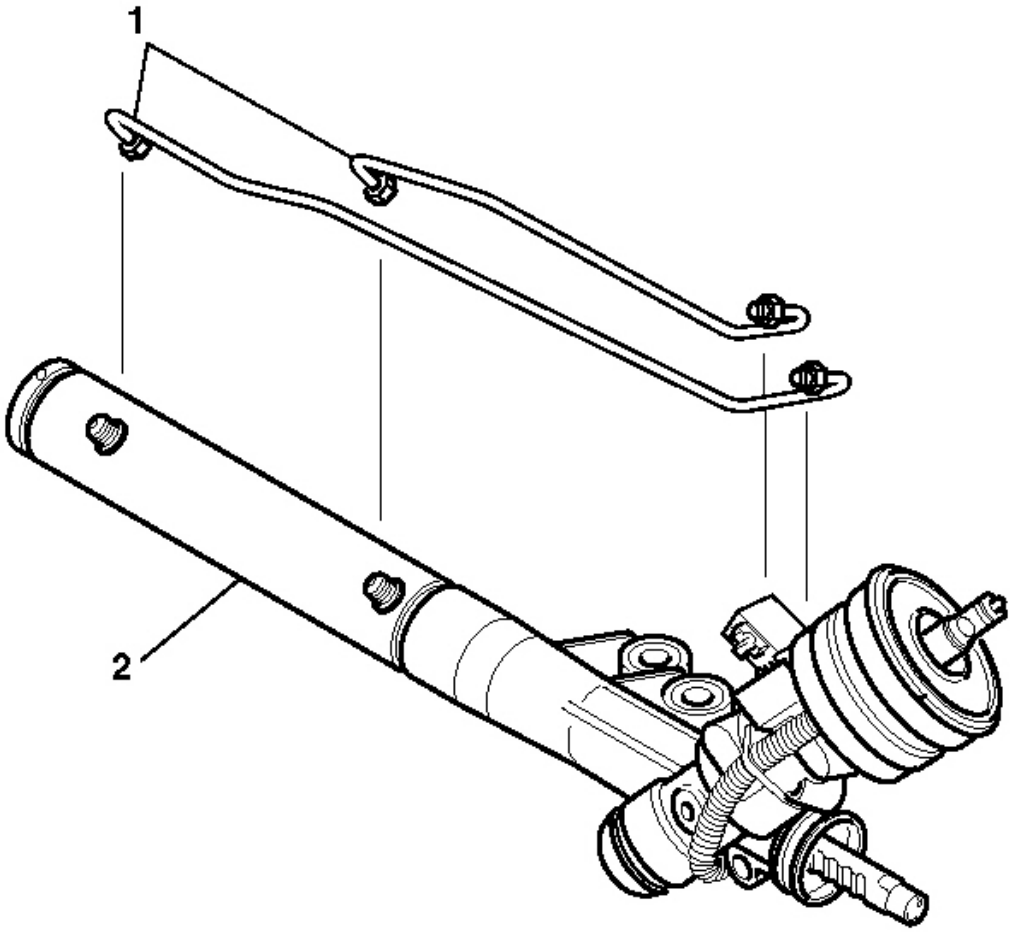

Fig. 58: Cylinder Line Assemblies, Rack & Pinion Gear Assembly
Courtesy of GENERAL MOTORS CORP.

3. Remove both cylinder line assemblies (1) from the rack and pinion gear assembly (2).

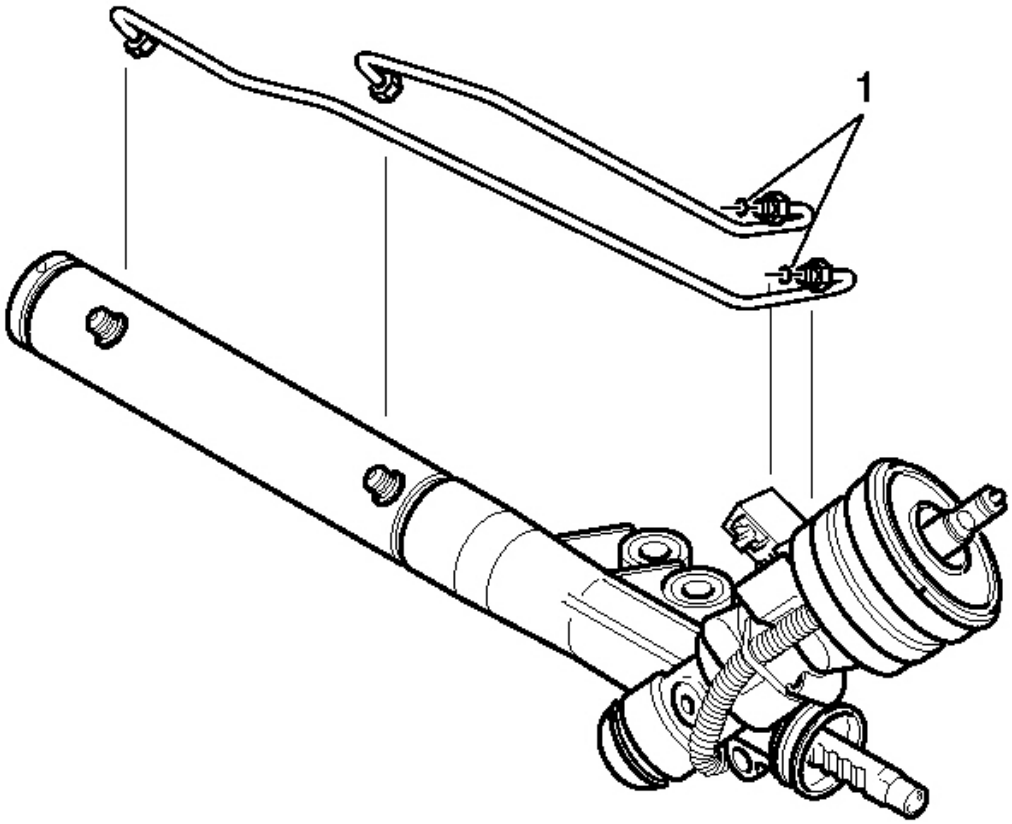

Fig. 59: Valve End Of Line & O-Ring Seals
Courtesy of GENERAL MOTORS CORP.

4. Remove the O-ring seals (1) from the valve end of line.
5. Discard the O-ring seals (1).

Assembly Procedure

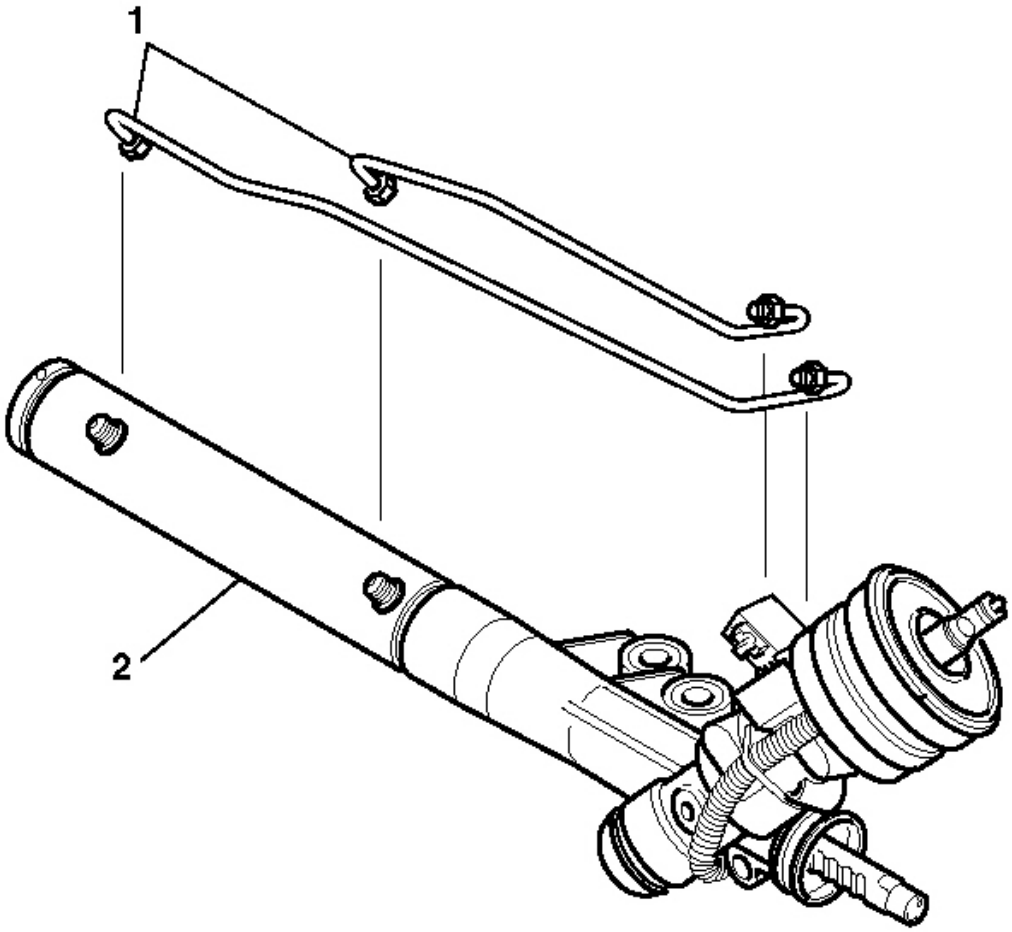

Fig. 60: Cylinder Line Assemblies, Rack & Pinion Gear Assembly
Courtesy of GENERAL MOTORS CORP.

1. Inspect the cylinder lines (1) for the following items:
    - Cracks
    - Dents
    - Damage to the threads
2. Replace the parts as needed.

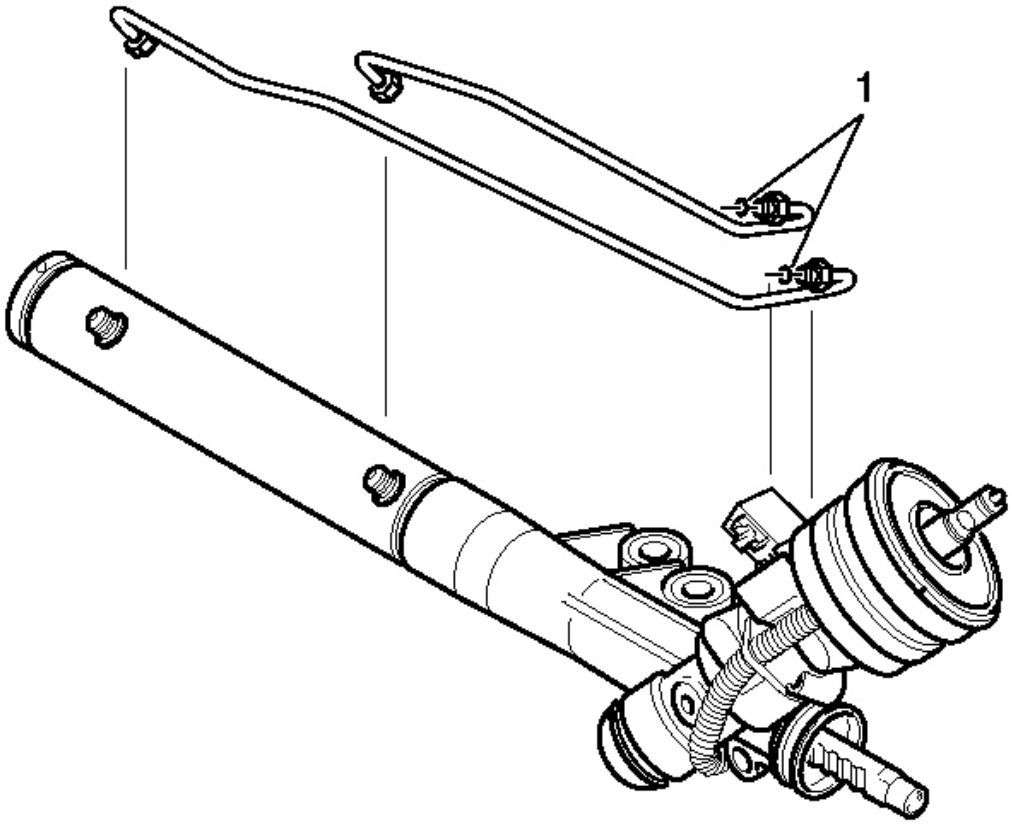

Fig. 61: Valve End Of Line & O-Ring Seals
Courtesy of GENERAL MOTORS CORP.

IMPORTANT: Carefully align the threads on all of the fittings. Finger tighten the fittings in order to avoid stripping and cross-threading the fittings.

3. Install the new O-ring seals (1) to the valve end of the cylinder lines.

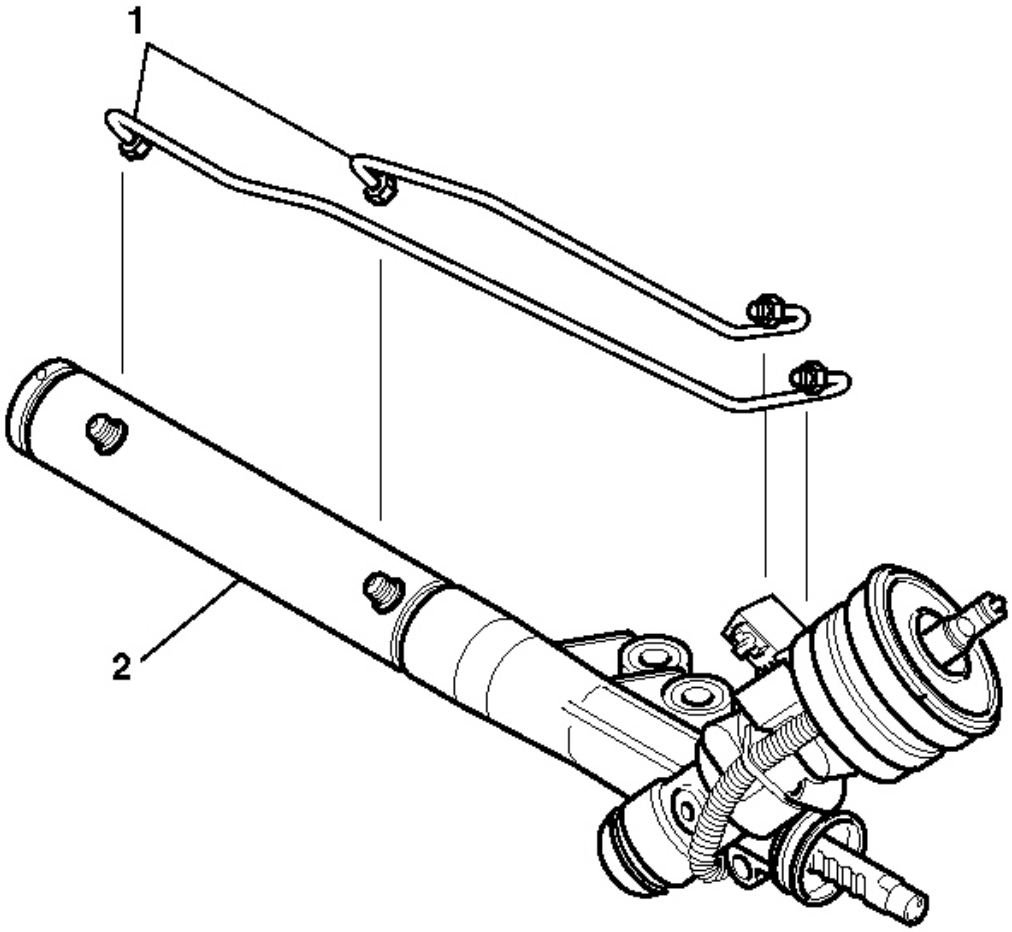

Fig. 62: Cylinder Line Assemblies, Rack & Pinion Gear Assembly
Courtesy of GENERAL MOTORS CORP.

NOTE: **Refer to Fastener Notice in Cautions and Notices.**

IMPORTANT: **Flush and bleed power steering system hoses, reservoir and cooler lines with power steering fluid GM P/N 1050017, Canadian P/N 992646 (or equivalent meeting GM Specification number 9985010). Refer to Bleeding the Power Steering System .**

4. Install the cylinder line assemblies (1) to the gear assembly (2).

Tighten

- Tighten the valve end fittings to 17 N.m (13 lb ft).
- Tighten the cylinder end fittings to 27 N.m (20 lb ft).

DESCRIPTION AND OPERATION

POWER STEERING SYSTEM DESCRIPTION AND OPERATION (W/O ELECTRO-HYDRAULIC STEERING)

The hydraulic power steering pump is a constant displacement vane-type pump that provides hydraulic pressure and flow for the power steering gear. The hydraulic power steering pumps are either belt-driven or direct-drive, cam-driven.

The power steering fluid reservoir holds the power steering fluid and may be integral with the power steering pump or remotely located. The following locations are typical locations for the remote reservoir:

- Mounted to the front of the dash panel
- Mounted to the inner fender
- Mounted to a bracket on the engine

The 2 basic types of power steering gears are listed below:

- A recirculating ball system
- A rack and pinion system

In the recirculating ball system, a worm gear converts steering wheel movement to movement of a sector shaft. A pitman arm attached to the bottom of the sector shaft actually moves one tie rod and an intermediate rod move the other tie rod.

In the rack and pinion system, the rack and the pinion are the 2 components that convert steering wheel rotation to lateral movement. The steering shaft is attached to the pinion in the steering gear. The pinion rotates with the steering wheel. Gear teeth on the pinion mesh with the gear teeth on the rack. The rotating pinion moves the rack from side to side. The lateral action of the rack pushes and pulls the tie rods in order to change the direction of the vehicle's front wheels.

The power steering pressure hose connects the power steering pump union fitting to the power steering gear and allows pressurized power steering fluid to flow from the pump to the gear.

The power steering return hose returns fluid from the power steering gear back to the power steering fluid reservoir. The power steering return line may contain an integral fin-type or line-type power steering fluid cooler.

In a typical power steering system, a pump generates hydraulic pressure, causing fluid to flow, via the pressure hose, to the steering gear valve assembly. The steering gear valve assembly regulates the incoming fluid to the right and left chambers in order to assist in right and left turns.

Turning the steering wheel activates the valve assembly, which applies greater fluid pressure and flow to 1 side of the steering gear piston, and lower pressure and flow to the other side of the piston. The pressure assists the movement of the gear piston. Tie rods transfer this force to the front wheels, which turn the vehicle right or left.

SPECIAL TOOLS AND EQUIPMENT

SPECIAL TOOLS

Special Tools

Illustration	Tool Number/ Description
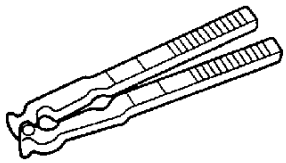	J 22610 Keystone Clamp Pliers
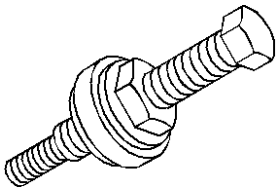	J 25033-C Power Steering Pump Pulley Installer
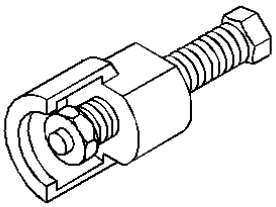	J 25034-C Power Steering Pump Pulley Remover
	J 34028 Inner Tie Rod Wrench

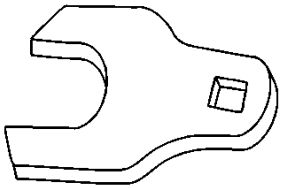	
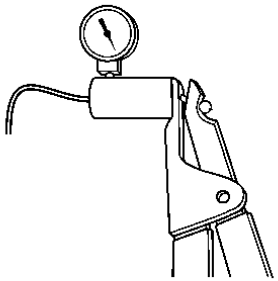	J 35555 Mity Vac
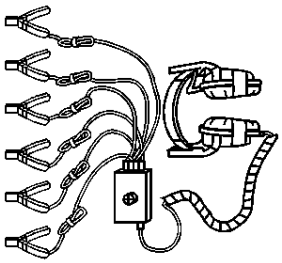	J 39570 Chassis Ear
	J 42188 Ball Joint Separator

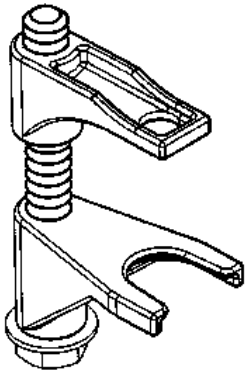	
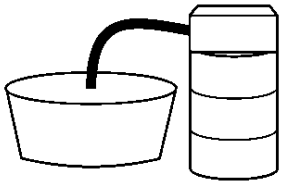	J 43485 Power Steering Bleeder Adapter
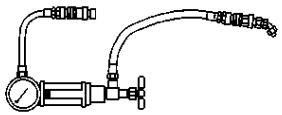	J 44721 Power Steering Analyzer