2003-06 ENGINE PERFORMANCE

VTEC - MDX

COMPONENT LOCATION INDEX

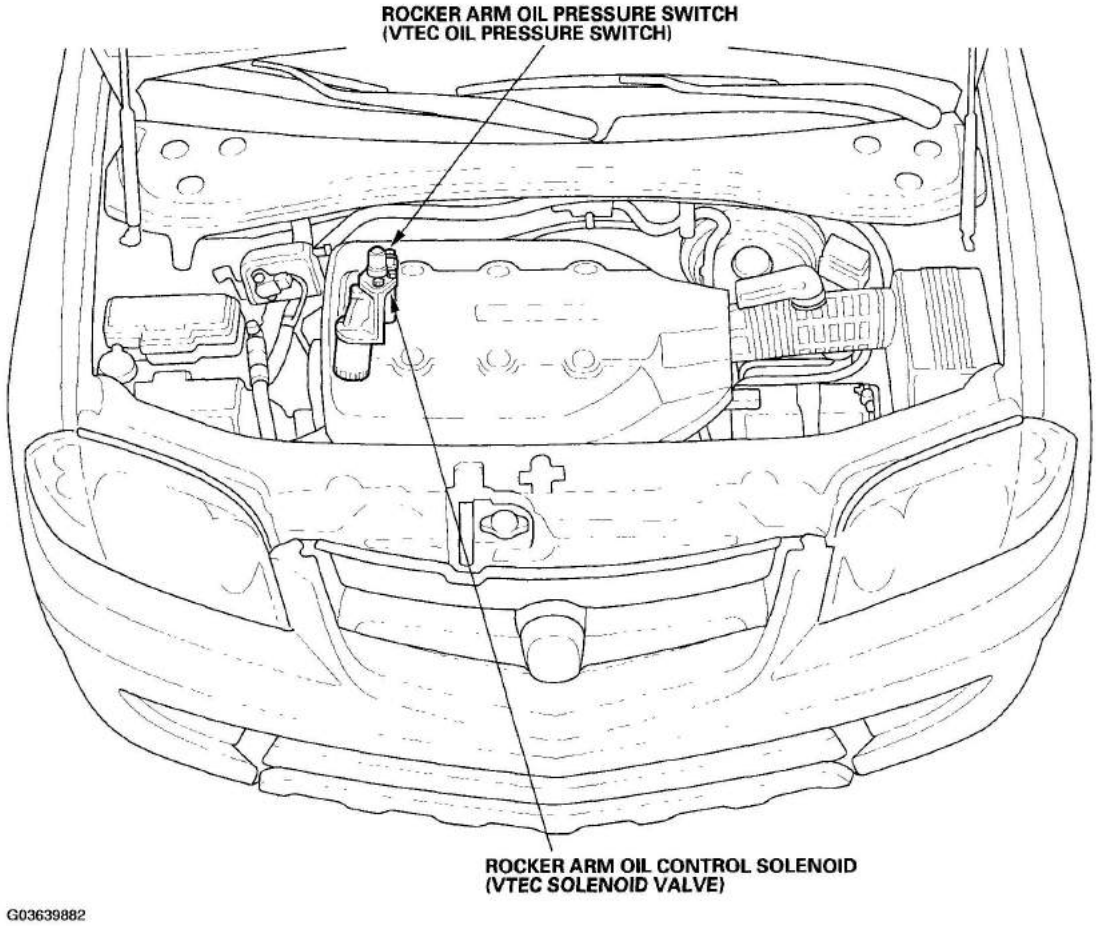

Fig. 1: Locating VTEC Components
Courtesy of AMERICAN HONDA MOTOR CO., INC.

DTC CODES

DTC CHART

DTC	Description
DTC P2646	Rocker Arm Oil Pressure Switch (VTEC Oil Pressure Switch) Circuit Low Voltage
DTC P2647	Rocker Arm Oil Pressure Switch (VTEC Oil Pressure Switch) Circuit High Voltage

cardiagn.com

DTC P2648	Rocker Arm Oil Control Solenoid (VTEC Solenoid Valve) Circuit Low Voltage
DTC P2649	Rocker Arm Oil Control Solenoid (VTEC Solenoid Valve) Circuit High Voltage

DTC TROUBLESHOOTING

DTC P2646: ROCKER ARM OIL PRESSURE SWITCH (VTEC OIL PRESSURE SWITCH) CIRCUIT LOW VOLTAGE

Special Tools Required

- Pressure gauge adapter 07NAJ-P07010A
- A/T low pressure gauge w/panel 07406-0070300
- A/T pressure hose 07406-0020201
- A/T pressure hose, 2,210 mm 07MAJ-PY4011A
- A/T pressure adapter 07MAJ-PY40120
- Oil pressure hose 07ZAJ-S5A0200

NOTE: Before you troubleshoot, record all freeze data and any on-board snapshot, and review the general troubleshooting information (see GENERAL TROUBLESHOOTING INFORMATION).

1. Check the engine oil level.

   Is the level OK?

   YES - Go to step 2.

   NO - Adjust the engine oil to the proper level, then go to step 20 .
2. Turn the ignition switch ON (II).
3. Clear the DTC with the HDS.
4. Do the VTEC TEST in the INSPECTION MENU with the HDS.

   Is the VTEC SYSTEM OK?

   YES - Intermittent failure, system is OK at this time. Check for poor connections or loose terminals at the rocker arm oil pressure switch (VTEC oil pressure switch), the rocker arm oil control solenoid (VTEC solenoid valve), and the PCM.

   NO - Go to step 5.
5. Turn the ignition switch OFF.
6. Disconnect the rocker arm oil pressure switch (VTEC oil pressure switch) 2P connector.
7. Turn the ignition switch ON (II).

cardiagn.com

8. Check the rocker arm oil pressure switch (VTEC oil pressure switch) in the DATA LIST with the HDS.

   Is the rocker arm oil pressure switch (VTEC oil pressure switch) ON?

   YES - Go to step 9.
   NO - Go to step 13 .
9. Turn the ignition switch OFF.
10. Remove the rocker arm oil pressure switch (VTEC oil pressure switch) (A) and install the special tools as shown in **Fig. 2** , then install the rocker arm oil pressure switch (VTEC oil pressure switch) to the oil pressure gauge adapter (B).

NOTE: **Install the part in the reverse order of removal with a new O-ring.**

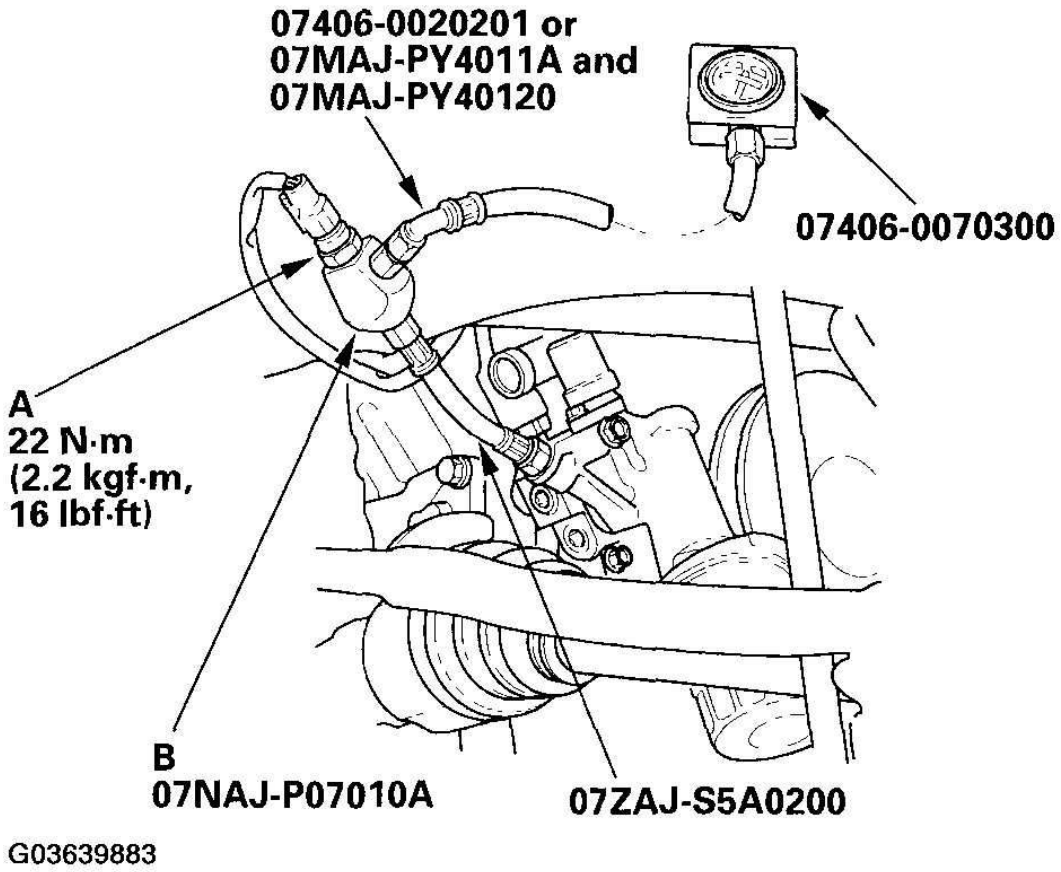

Fig. 2: Removing Rocker Arm Oil Pressure Switch (VTEC Oil Pressure Switch
Courtesy of AMERICAN HONDA MOTOR CO., INC.

11. Start the engine.

cardiagn.com

12. Do the VTEC TEST in the INSPECTION MENU with the HDS.
13. Check the oil pressure.

Is the oil pressure below 49 kPa (0.5 kgf/cm^2 , 7 psi)?

YES - Inspect the VTEC system oil line. If it is OK. Replace the rocker arm oil control solenoid (VTEC solenoid valve) (see **ROCKER ARM OIL CONTROL SOLENOID (VTEC SOLENOID VALVE) REPLACEMENT**), then go to step 21 .

NO - Go to step 14.

14. Turn the ignition switch OFF.
15. Jump the SCS line with the HDS.
16. Disconnect the rocker arm oil pressure switch (VTEC oil pressure switch) 2P connector.
17. Disconnect PCM connector A (73P).
18. Check for continuity between PCM connector terminal A43 and body ground.

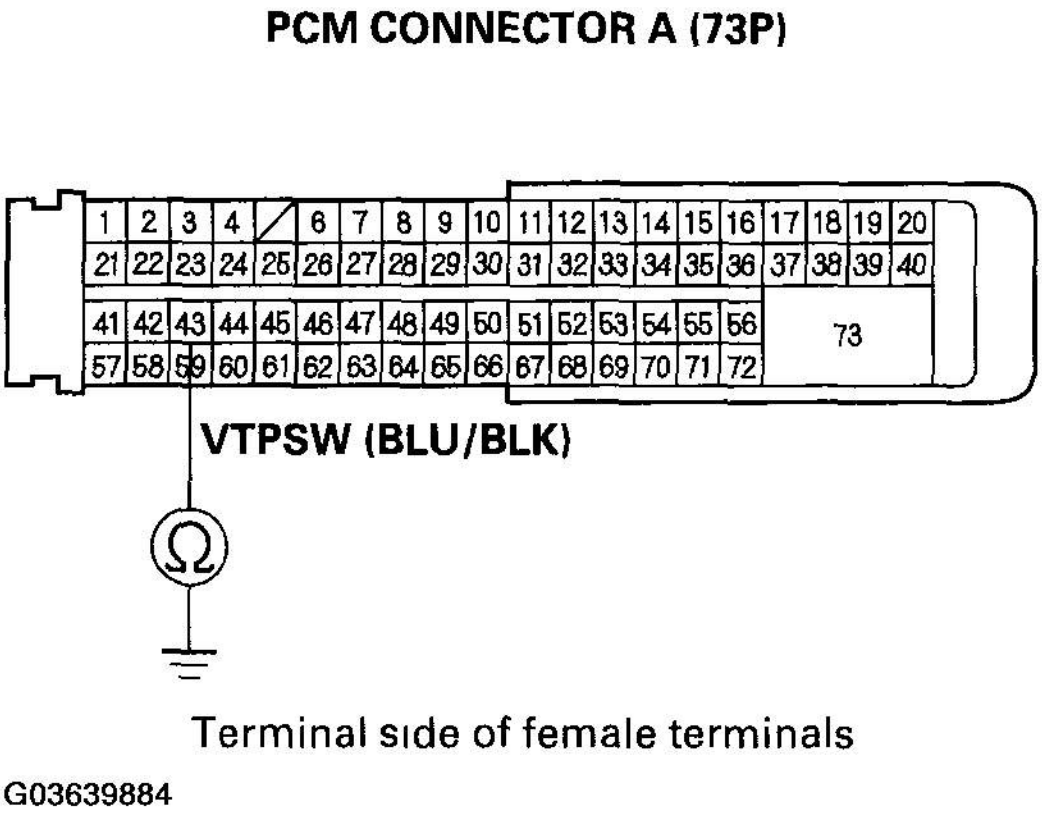

Fig. 3: Checking Continuity Between PCM Connector Terminal A43 And Body Ground
Courtesy of AMERICAN HONDA MOTOR CO., INC.

cardiagn.com

Is there continuity?

YES - Repair short in the wire between the PCM (A43) and the rocker arm oil pressure switch (VTEC oil pressure switch), then go to step 19.

NO - Go to step 27 .

19. Reconnect the rocker arm oil pressure switch (VTEC oil pressure switch) 2P connector.
20. Reconnect PCM connector A (73P).
21. Turn the ignition switch ON (II).
22. Reset the PCM with the HDS.
23. Do the PCM idle learn procedure (see **PCM IDLE LEARN PROCEDURE**).
24. Test-drive under these conditions:

Accelerate in 1 position to an engine speed over 4,700 rpm. Hold the speed for at least 2 seconds.

25. Check for Temporary DTCs or DTCs with the HDS.

Are any Temporary DTCs or DTCs indicated?

YES - If DTC P2646 is indicated, check for poor connections or loose terminals at the rocker arm oil pressure switch (VTEC oil pressure switch), the rocker arm oil control solenoid (VTEC solenoid valve) and the PCM, then go to step 1 . If any other Temporary DTCs or DTCs are indicated, go to the indicated DTCs troubleshooting.

NO - Go to step 26.

26. Monitor the OBD STATUS for DTC P2646 in the DTCs MENU with the HDS.

Does the screen indicate PASSED?

YES - Troubleshooting is completed.

NO - If the screen indicates FAILED, then go to step 1 and recheck. If the screen indicates NOT COMPLETED, go to step 24 and recheck.

27. Update the PCM if it does not have the latest software, or substitute a known-good PCM (see **PCM UPDATING AND SUBSTITUTION FOR TESTING**).
28. Do the PCM idle learn procedure (see **PCM IDLE LEARN PROCEDURE**).
29. Test-drive under these conditions:

Accelerate in 1 position to an engine speed over 4,700 rpm. Hold the speed for at least 2 seconds.

30. Check for Temporary DTCs or DTCs with the HDS.

Are any Temporary DTCs or DTCs indicated?

YES - If DTC P2646 is indicated, check for poor connections or loose terminals at the rocker arm oil pressure switch (VTEC oil pressure switch), the rocker arm oil control solenoid (VTEC solenoid

cardiagn.com

valve) and the PCM, then go to step 1 . If any other Temporary DTCs or DTCs are indicated, go to the indicated DTCs troubleshooting.

NO - If the PCM was updated, troubleshooting is complete. If the PCM was substituted, replace the original PCM (see **PCM REPLACEMENT**).

DTC P2647: ROCKER ARM OIL PRESSURE SWITCH (VTEC OIL PRESSURE SWITCH) CIRCUIT HIGH VOLTAGE

NOTE: Before you troubleshoot, record all freeze data and any on-board snapshot, and review the general troubleshooting information (see GENERAL TROUBLESHOOTING INFORMATION).

1. Check the engine oil level.

   Is the level OK?

   YES - Go to step 2.

   NO - Adjust the engine oil to the proper level, then go to step 14 .
2. Turn the ignition switch ON (II).
3. Clear the DTC with the HDS.
4. Do the VTEC TEST in the INSPECTION MENU with the HDS.

   Is the result OK?

   YES - Intermittent failure, sytem is OK at this time. Check for poor connections or loose terminals at the rocker arm oil pressure switch (VTEC oil pressure switch) and the PCM.

   NO - Go to step 5.
5. Check the result of step 4 .
   - VTEC Switch Failure
   - VTEC Switch Open
   - VTEC Switch SIG Line Open
   - VTEC Switch GND Line Open

   Does the test result indicate one of these failures?

   YES - Go to step 6.

   NO - Check for poor connections or loose terminals at the rocker arm oil pressure switch (VTEC oil pressure switch). If it is OK, replace the rocker arm oil control solenoid (VTEC solenoid valve) (see **ROCKER ARM OIL CONTROL SOLENOID (VTEC SOLENOID VALVE) REPLACEMENT**), then go to step 14 .
6. Turn the ignition switch OFF.
7. Disconnect the rocker arm oil pressure switch (VTEC oil pressure switch) 2P connector.

cardiagn.com

8. At the rocker arm oil pressure switch (VTEC oil pressure switch), check for continuity between rocker arm oil pressure switch (VTEC oil pressure switch) 2P connector terminals No. 1 and No. 2.

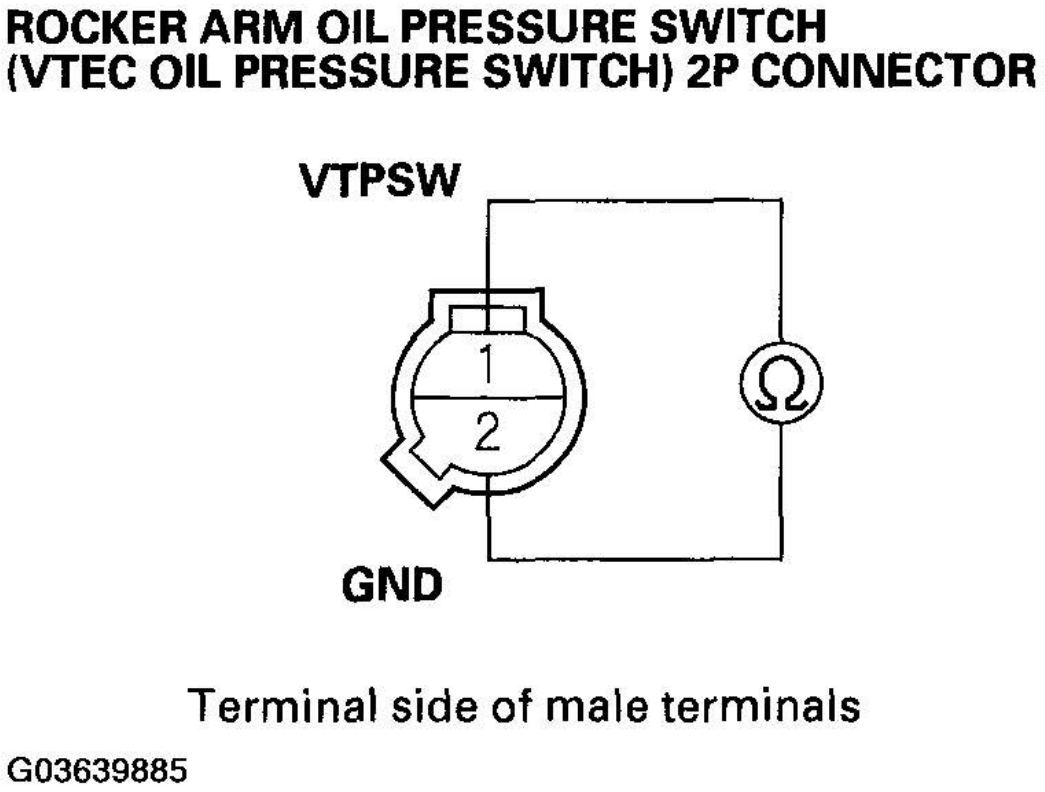

Fig. 4: Checking Continuity Between Rocker Arm Oil Pressure Switch (VTEC Oil Pressure Switch) 2P Connector Terminals 1 And 2
Courtesy of AMERICAN HONDA MOTOR CO., INC.

Is there continuity?

YES - Go to step 9.

NO - Replace the rocker arm oil pressure switch (VTEC oil pressure switch) (see **ROCKER ARM OIL PRESSURE SWITCH (VTEC OIL PRESSURE SWITCH) REMOVAL/INSTALLATION**), then go to step 13 .

9. Turn the ignition switch ON (II).
10. Measure voltage between rocker arm oil pressure switch (VTEC oil pressure switch) 2P connector terminal No. 1 and body ground.

cardiagn.com

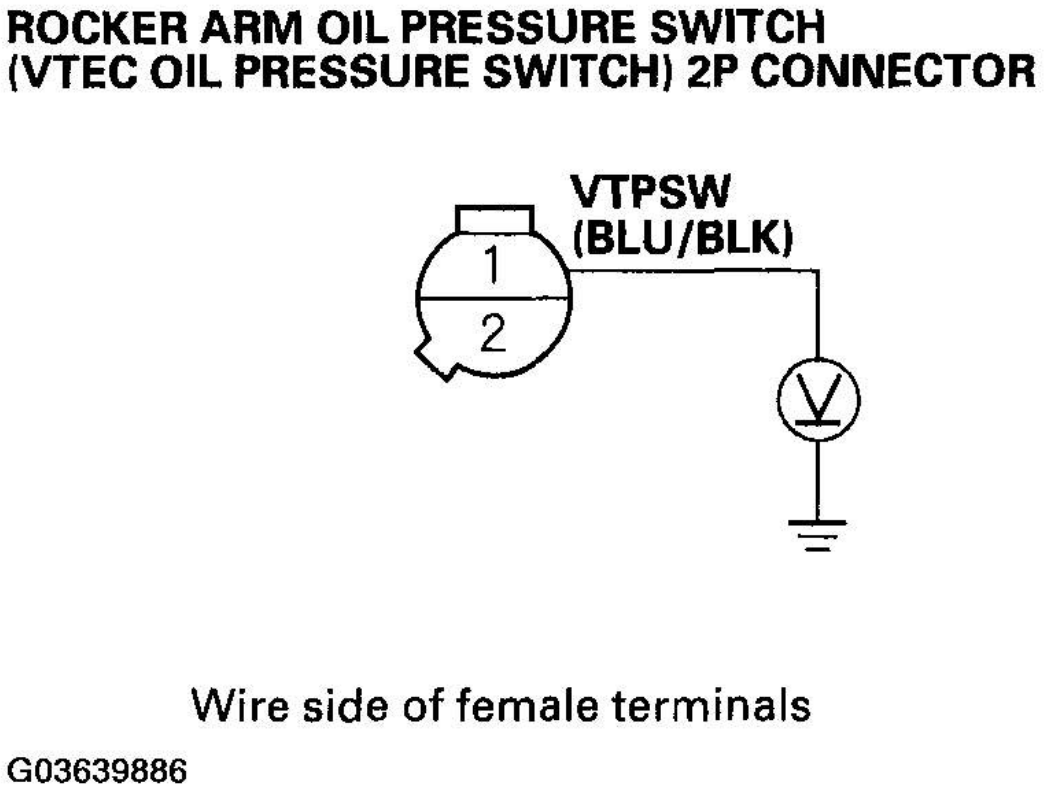

Fig. 5: Measuring Voltage Between Rocker Arm Oil Pressure Switch (VTEC Oil Pressure Switch) 2P Connector Terminal 1 And Body Ground
Courtesy of AMERICAN HONDA MOTOR CO., INC.

Is there battery voltage?

YES - Repair open in the wire between the rocker arm oil pressure switch (VTEC oil pressure switch) and G101, then go to step 13 .

NO - Go to step 11.

11. Turn the ignition switch OFF.
12. Jump the SCS line with the HDS.
13. Disconnect PCM connector A (73P).
14. Connect rocker arm oil pressure switch (VTEC oil pressure switch) 2P connector terminal No. 1 to body ground with a jumper wire.

cardiagn.com

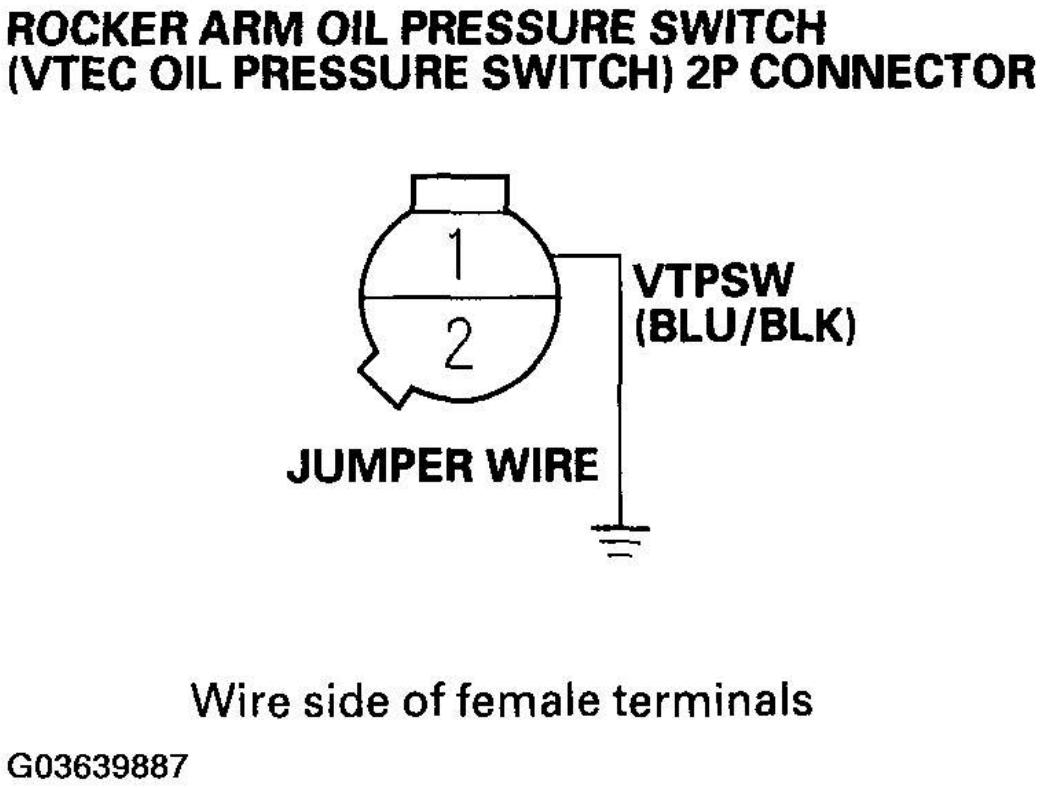

Fig. 6: Connecting Rocker Arm Oil Pressure Switch (VTEC Oil Pressure Switch) 2P Connector Terminal 1 To Body Ground With Jumper Wire
Courtesy of AMERICAN HONDA MOTOR CO., INC.

15. Check for continuity between PCM connector terminal A43 and body ground.

cardiagn.com

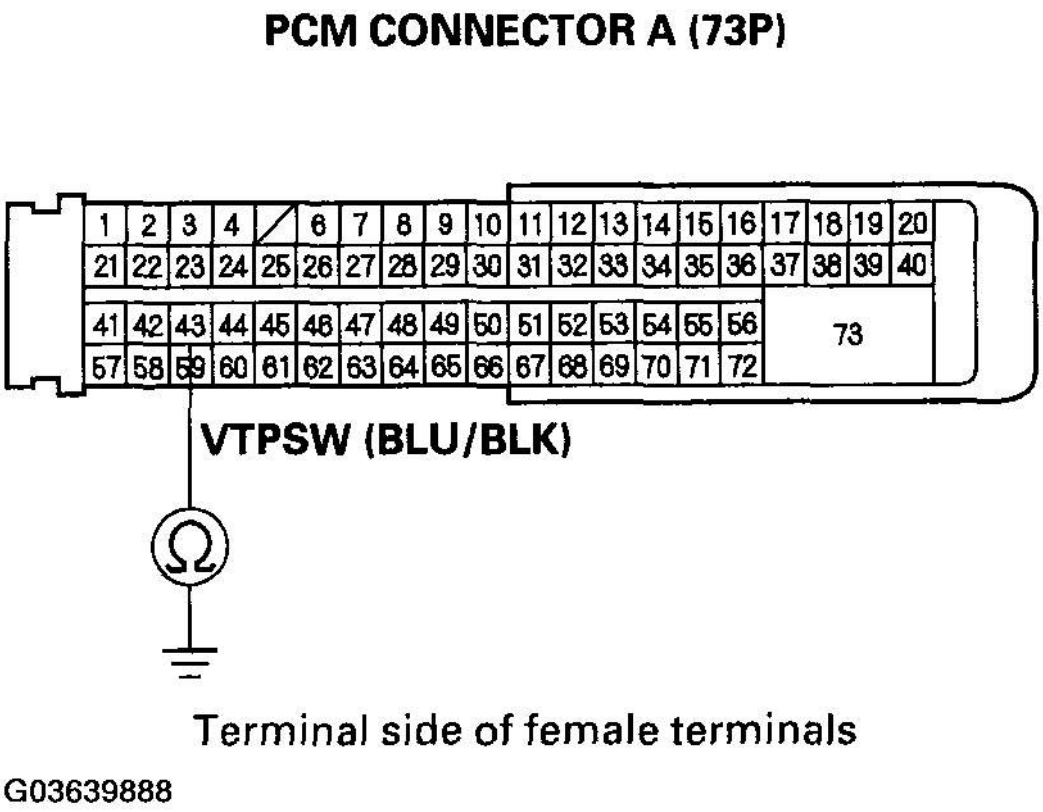

Fig. 7: Checking Continuity Between PCM Connector Terminal A43 And Body Ground
Courtesy of AMERICAN HONDA MOTOR CO., INC.

Is there continuity?

YES - Go to step 23 .

NO - Repair open in the wire between the PCM (A43) and the rocker arm oil pressure switch (VTEC oil pressure switch), then go to step 16.

16. Reconnect PCM connector A (73P).
17. Reconnect the rocker arm oil pressure switch (VTEC oil pressure switch) 2P connector.
18. Turn the ignition switch ON (II).
19. Reset the PCM with the HDS.
20. Do the PCM idle learn procedure (see **PCM IDLE LEARN PROCEDURE**).
21. Check for Temporary DTCs or DTCs with the HDS.

Are any Temporary DTCs or DTCs indicated?

cardiagn.com

YES - If DTC P2647 is indicated, check for poor connections or loose terminals at the rocker arm oil pressure switch (VTEC oil pressure switch) and the PCM, then go to step 1 . If any other Temporary DTCs or DTCs are indicated, go to the indicated DTCs troubleshooting.

NO - Go to step 22.

22. Monitor the OBD STATUS for DTC P2647 in the DTCs MENU with the HDS.

Does the screen indicate PASSED?

YES - Troubleshooting is complete.

NO - If the screen indicates FAILED, then go to step 1 and recheck. If the screen indicates NOT COMPLETED, go to step 20 and recheck.

23. Update the PCM if it does not have the latest software, or substitute a known-good PCM (see **PCM UPDATING AND SUBSTITUTION FOR TESTING**).
24. Check for Temporary DTCs or DTCs with the HDS.

Are any Temporary DTCs or DTCs indicated?

YES - If DTC P2647 is indicated, check for poor connections or loose terminals at the rocker arm oil pressure switch (VTEC oil pressure switch) and the PCM, then go to step 1 . If any other Temporary DTCs or DTCs are indicated, go to the indicated DTCs troubleshooting.

NO - If the PCM was updated, troubleshooting is complete. If the PCM was substituted, replace the original PCM (see **PCM REPLACEMENT**).

DTC P2648: ROCKER ARM OIL CONTROL SOLENOID (VTEC SOLENOID VALVE) CIRCUIT LOW VOLTAGE

NOTE: Before you troubleshoot, record all freeze data and any on-board snapshot, and review the general troubleshooting information (see GENERAL TROUBLESHOOTING INFORMATION).

1. Turn the ignition switch ON (II).
2. Clear the DTC with the HDS.
3. Do the VTEC TEST in the INSPECTION MENU with the HDS.

Is VTEC SYSTEM OK?

YES - Intermittent failure, system is OK at this time. Check for poor connections or loose terminals at the rocker arm oil control solenoid (VTEC solenoid valve) and the PCM.

NO - Go to step 4.

4. Turn the ignition switch OFF.
5. Disconnect the rocker arm oil control solenoid (VTEC solenoid valve) 1P connector.
6. Measure resistance between the rocker arm oil control solenoid (VTEC solenoid valve) 1P connector terminal and solenoid valve body.

cardiagn.com

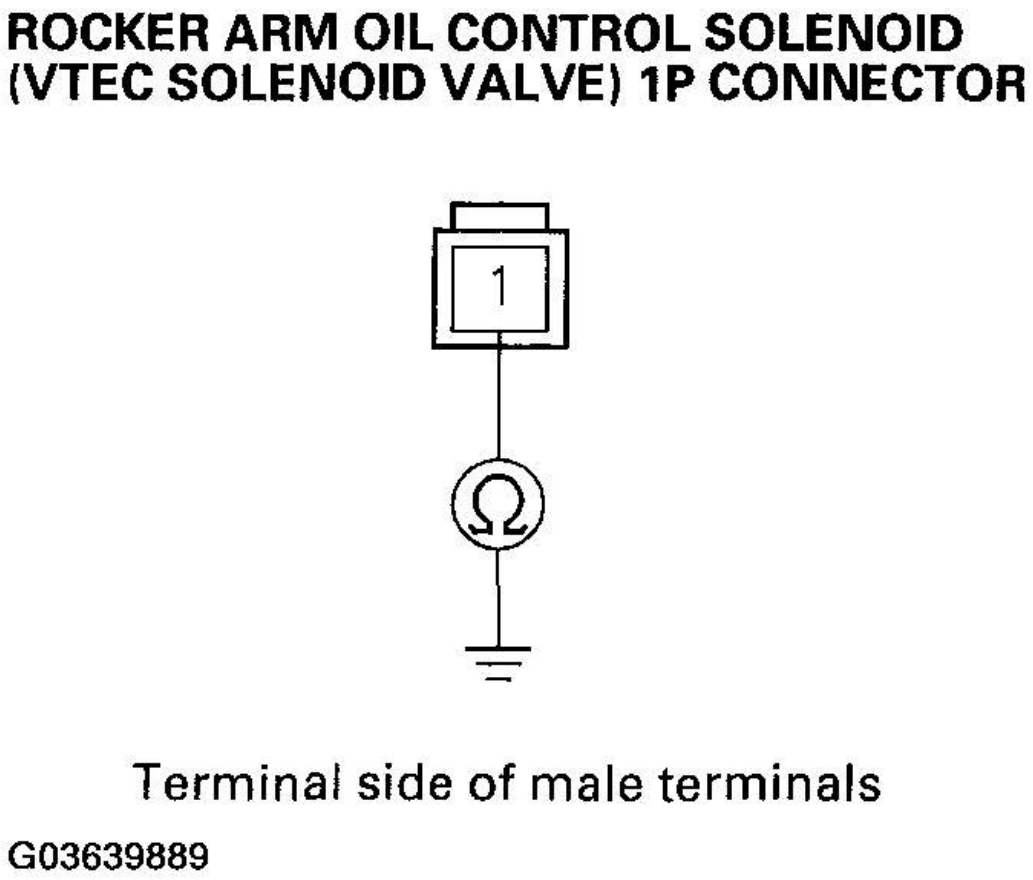

Fig. 8: Measuring Resistance Between Rocker Arm Oil Control Solenoid (VTEC Solenoid Valve) 1P Connector Terminal And Solenoid Valve Body
Courtesy of AMERICAN HONDA MOTOR CO., INC.

Is there 14 - 30 ohm?

YES - Go to step 7.

NO - Replace the rocker arm oil control solenoid (VTEC solenoid valve), then go to step 11 .

7. Jump the SCS line with the HDS.
8. Disconnect PCM connector A (73P).
9. Check for continuity between PCM connector terminal A17 and body ground.

cardiagn.com

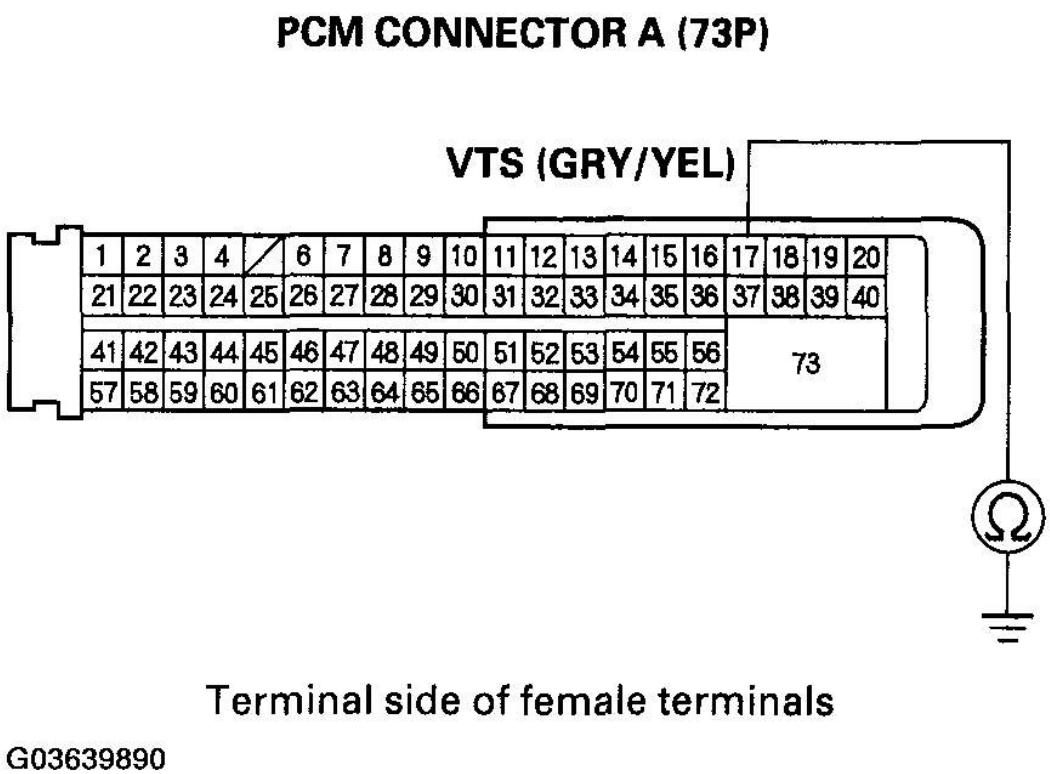

Fig. 9: Checking Continuity Between PCM Connector Terminal A17 And Body Ground
Courtesy of AMERICAN HONDA MOTOR CO., INC.

Is there continuity?

YES - Repair short in the wire between the PCM (A17) and the rocker arm oil control solenoid (VTEC solenoid valve), then go to step 10.

NO - Go to step 18 .

10. Reconnect PCM connector A (73P).
11. Reconnect the rocker arm oil control solenoid (VTEC solenoid valve) 1P connector.
12. Turn the ignition switch ON (II).
13. Reset the PCM with the HDS.
14. Do the PCM idle learn procedure (see **PCM IDLE LEARN PROCEDURE**).
15. Test-drive under these conditions:

    Accelerate in 1 position to an engine speed over 4,700 rpm. Hold the speed for at least 2 seconds.

16. Check for Temporary DTCs or DTCs with the HDS.

cardiagn.com

Are any Temporary DTCs or DTCs indicated?

YES - If DTC P2648 is indicated, check for poor connections or loose terminals at the rocker arm oil control solenoid (VTEC solenoid valve) and the PCM, then go to step 1 . If any other Temporary DTCs or DTCs indicated, go to the indicated DTCs troubleshooting.

NO - Go to step 17.

17. Monitor the OBD STATUS for DTC P2648 in the DTCs MENU with the HDS.

Does the screen indicate PASSED?

YES - Troubleshooting is complete.

NO - If the screen indicates FAILED, then go to step 1 and recheck. If the screen indicates NOT COMPLETED, go to step 15 and recheck.

18. Update the PCM if it does not have the latest software, or substitute a known-good PCM (see **PCM UPDATING AND SUBSTITUTION FOR TESTING**).
19. Do the PCM idle learn procedure (see **PCM IDLE LEARN PROCEDURE**).
20. Test-drive under these conditions:

Accelerate in 1 position to an engine speed over 4,700 rpm. Hold the speed for at least 2 seconds.

21. Check for Temporary DTCs or DTCs with the HDS.

Are any Temporary DTCs or DTCs indicated?

YES - If DTC P2648 is indicated, check for poor connections or loose terminals at the rocker arm oil control solenoid (VTEC solenoid valve) and the PCM, then go to step 1 . If any other Temporary DTCs or DTCs are indicated, go to the indicated DTCs troubleshooting.

NO - If the PCM was updated, troubleshooting is complete. If the PCM was substituted, replace the original PCM (see **PCM REPLACEMENT**).

DTC P2649: ROCKER ARM OIL CONTROL SOLENOID (VTEC SOLENOID VALVE) CIRCUIT HIGH VOLTAGE

NOTE: Before you troubleshoot, record all freeze data and any on-board snapshot, and review the general troubleshooting information (see GENERAL TROUBLESHOOTING INFORMATION).

1. Turn the ignition switch ON (II).
2. Clear the DTC with the HDS.
3. Start the engine. Hold the engine speed at 3,000 rpm without load (in Park or neutral) until the radiator fan comes on, then let it idle.
4. Check for DTCs in the DTCs MENU with the HDS.

Is DTC P2649 indicated?

cardiagn.com

YES - Go to step 5.

NO - Intermittent failure, system is OK at this time. Check for poor connections or loose terminals at the rocker arm oil control solenoid (VTEC solenoid valve) and the PCM.

5. Turn the ignition switch OFF.
6. Disconnect the rocker arm oil control solenoid (VTEC solenoid valve) 1P connector.
7. Measure resistance between the rocker arm oil control solenoid (VTEC solenoid valve) 1P connector terminal and the solenoid valve body.

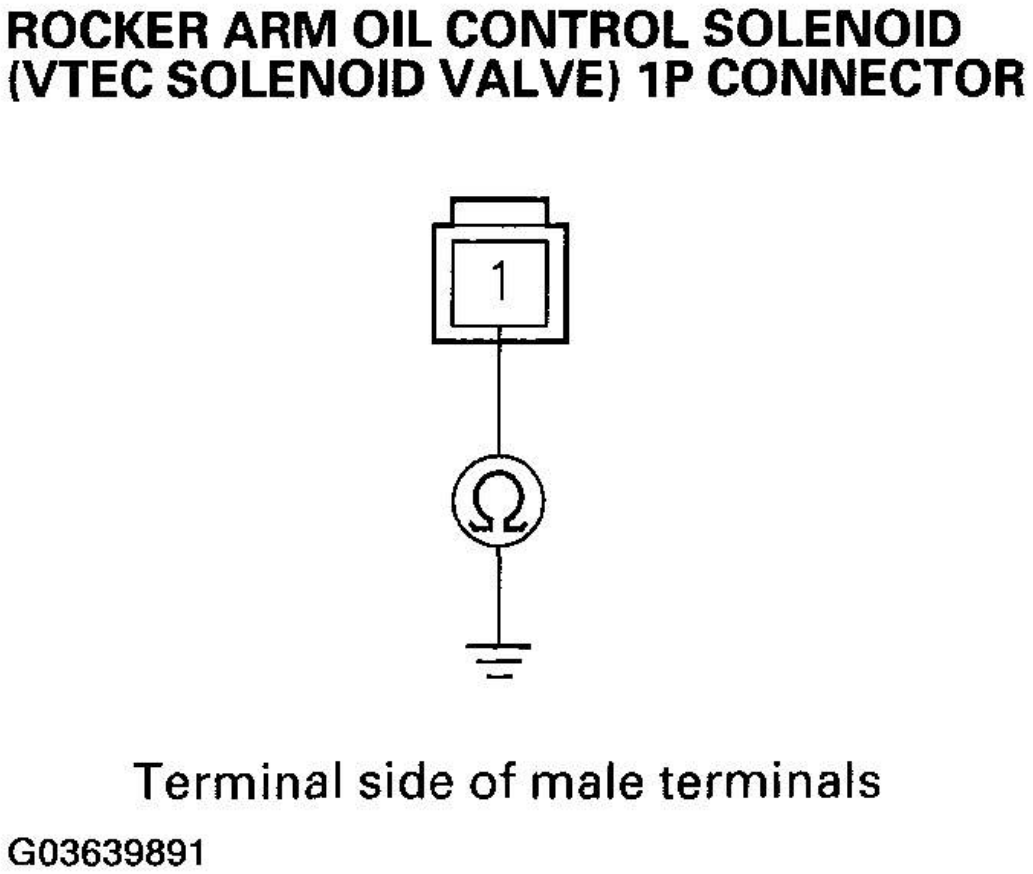

Fig. 10: Measuring Resistance Between Rocker Arm Oil Control Solenoid (VTEC Solenoid Valve) 1P Connector Terminal And Solenoid Valve Body
Courtesy of AMERICAN HONDA MOTOR CO., INC.

Is there 14 - 30 ohm?

YES - Go to step 8.

cardiagn.com

NO - Replace the rocker arm oil control solenoid (VTEC solenoid valve) (see **ROCKER ARM OIL CONTROL SOLENOID (VTEC SOLENOID VALVE) REPLACEMENT**), then go to step 14 .

8. Jump the SCS line with the HDS.
9. Disconnect PCM connector A (73P).
10. Connect the rocker arm oil control solenoid (VTEC solenoid valve) 1P connector terminal to body ground with a jumper wire.

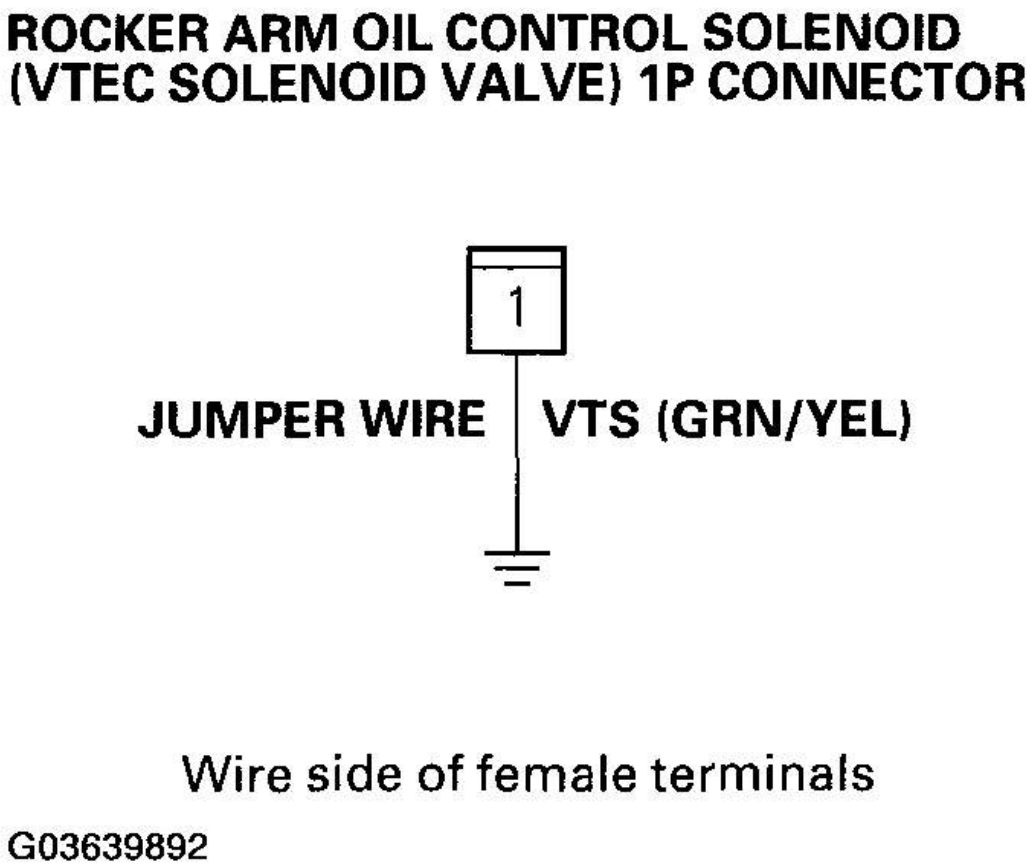

Fig. 11: Connecting Rocker Arm Oil Control Solenoid (VTEC Solenoid Valve) 1P Connector Terminal To Body Ground With Jumper Wire
Courtesy of AMERICAN HONDA MOTOR CO., INC.

11. Check for continuity between PCM connector terminal A17 and body ground.

cardiagn.com

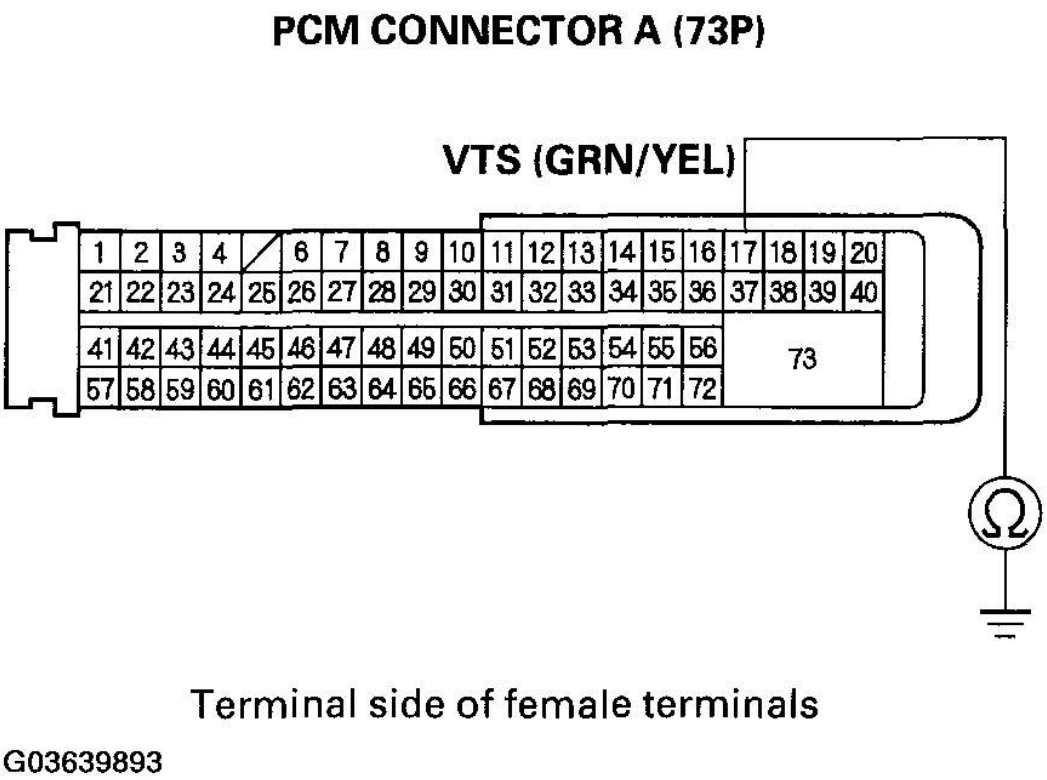

Fig. 12: Checking Continuity Between PCM Connector Terminal A17 And Body Ground
Courtesy of AMERICAN HONDA MOTOR CO., INC.

Is there continuity?

YES - Go to step 20 .

NO - Repair open in the wire between the PCM (A17) and the rocker arm oil control solenoid (VTEC solenoid valve), then go to step 12.

12. Reconnect PCM connector A (73P).
13. Reconnect the rocker arm oil control solenoid (VTEC solenoid valve) 1P connector.
14. Turn the ignition switch ON (II).
15. Reset the PCM with the HDS.
16. Do the PCM idle learn procedure (see **PCM IDLE LEARN PROCEDURE**).
17. Start the engine. Hold the engine speed at 3,000 rpm without load (in Park or neutral) until the radiator fan comes on, then let it idle.
18. Check for Temporary DTCs or DTCs with the HDS.

Are any Temporary DTCs or DTCs indicated?

cardiagn.com

YES - If DTC P2649 is indicated, check for poor connections or loose terminals at the rocker arm oil control solenoid (VTEC solenoid valve) and the PCM, then go to step 1 . If any other Temporary DTCs or DTCs indicated, go to the indicated DTCs troubleshooting.

NO - Go to step 19.

19. Monitor the OBD STATUS for DTC P2649 in the DTCs MENU with the HDS.

Does the screen indicate PASSED?

YES - Troubleshooting is complete.

NO - If the screen indicates FAILED, then go to step 1 and recheck. If the screen indicates NOT COMPLETED, go to step 18 and recheck.

20. Update the PCM if it does not have the latest software, or substitute a known-good PCM (see **PCM UPDATING AND SUBSTITUTION FOR TESTING**).
21. Do the PCM idle learn procedure (see **PCM IDLE LEARN PROCEDURE**).
22. Start the engine. Hold the engine speed at 3,000 rpm without load (in Park or neutral) until the radiator fan comes on, then let it idle.
23. Check for Temporary DTCs or DTCs with the HDS.

Are any Temporary DTCs or DTCs indicated?

YES - If DTC P2647 is indicated, check for poor connections or loose terminals at the rocker arm oil control solenoid (VTEC solenoid valve) and the PCM, then go to step 1 . If any other Temporary DTCs or DTCs are indicated, go to the indicated DTCs troubleshooting.

NO - If the PCM was updated, troubleshooting is complete. If the PCM was substituted, replace the original PCM (see **PCM REPLACEMENT**).

ROCKER ARM OIL CONTROL SOLENOID (VTEC SOLENOID VALVE) TEST

1. Disconnect the rocker arm oil control solenoid (VTEC solenoid valve) 1P connector.
2. Measure resistance between the rocker arm oil control solenoid (VTEC solenoid valve) 1P connector terminal (A) and body ground.
   - If the resistance is as specified, go to step 3.
   - If the resistance is not as specified, replace the rocker arm oil control solenoid (VTEC solenoid valve).

   Resistance: 14 - 30 ohm

cardiagn.com

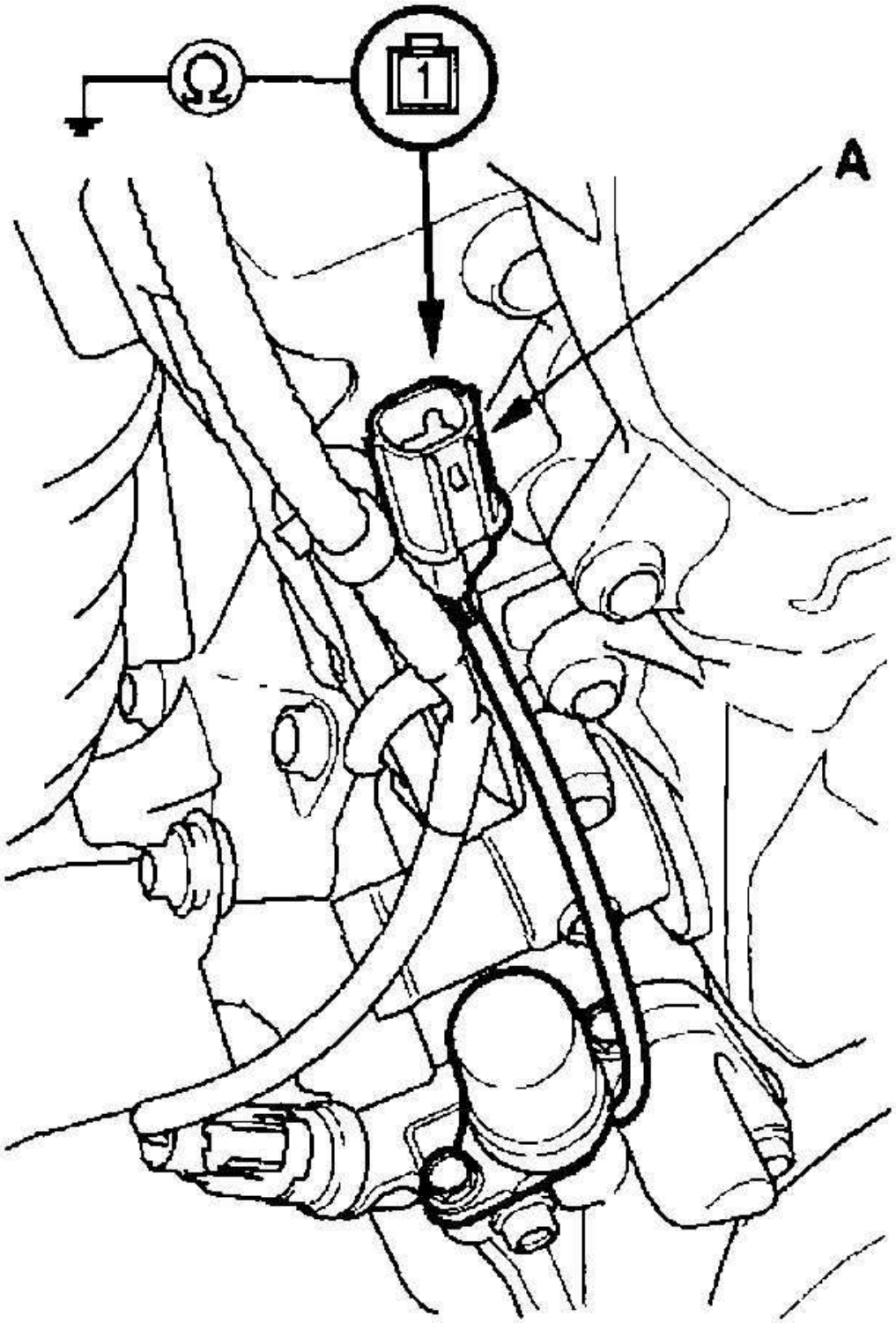

G03639894

cardiagn.com

Fig. 13: Measuring Resistance Between Rocker Arm Oil Control Solenoid (VTEC Solenoid Valve) 1P Connector Terminal And Body Ground
Courtesy of AMERICAN HONDA MOTOR CO., INC.

3. Remove the rocker arm oil control solenoid (VTEC solenoid valve)/oil filter assembly (A) from the oil pump, and check the rocker arm oil control solenoid (VTEC solenoid valve) filter (B) for clogging. If there is clogging, replace the rocker arm oil control solenoid (VTEC solenoid valve) filter, the engine oil filter, and the engine oil.

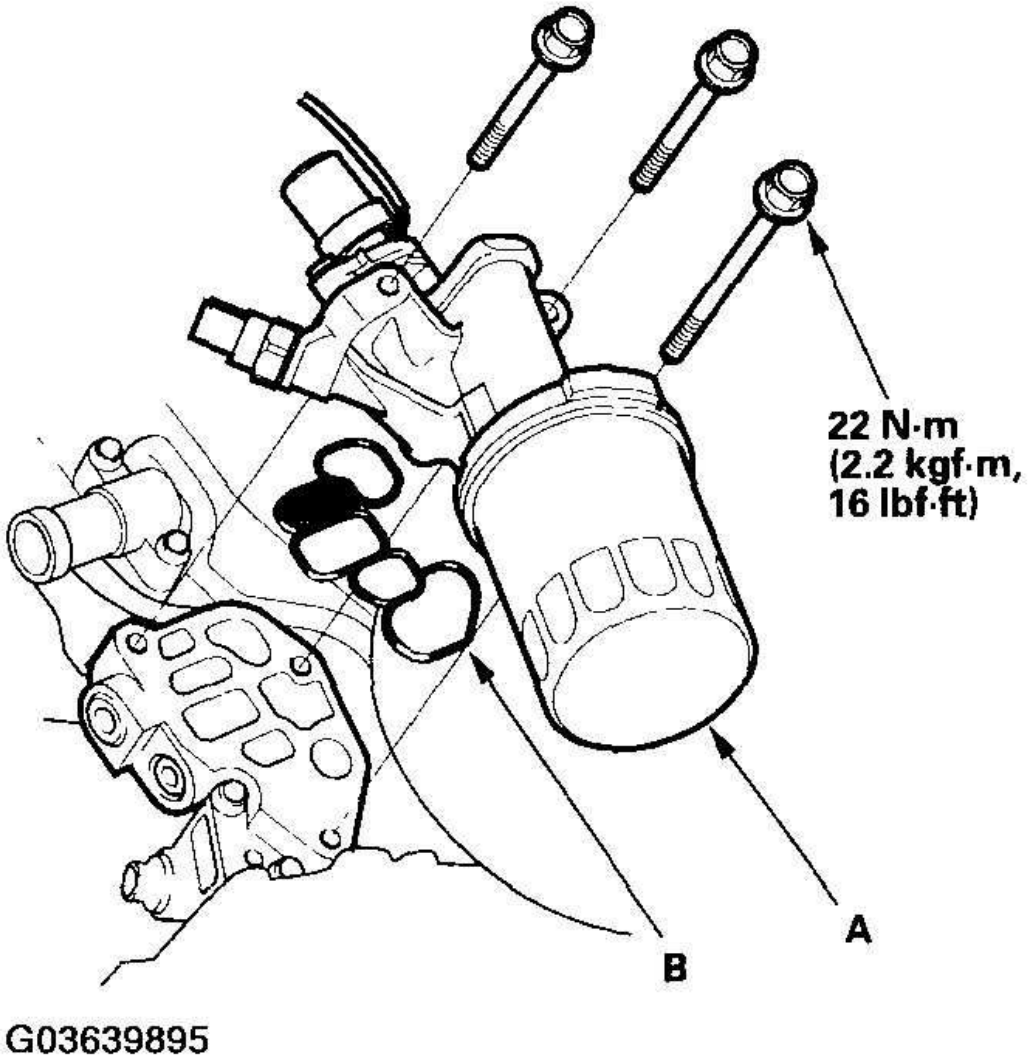

Fig. 14: Removing Rocker Arm Oil Control Solenoid (VTEC Solenoid Valve)/Oil Filter Assembly
Courtesy of AMERICAN HONDA MOTOR CO., INC.

cardiagn.com

4. If the filter is not clogged, remove the rocker arm oil control solenoid (VTEC solenoid valve) 1P connector (A) and push the valve (B) with your finger to check its movement. If valve movement is normal, check the engine oil pressure. If the valve binds or sticks, replace it.

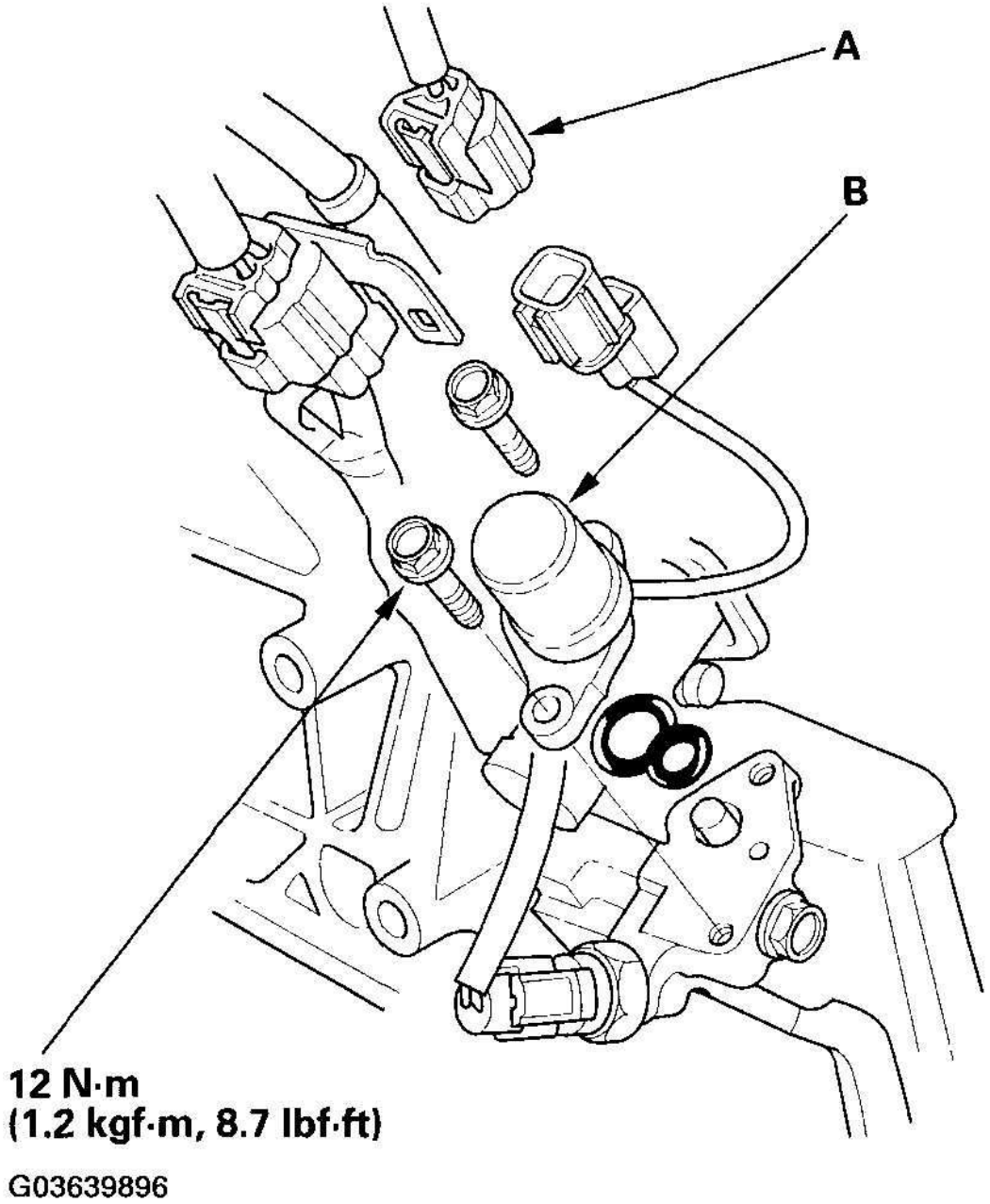

Fig. 15: Removing Rocker Arm Oil Control Solenoid (VTEC Solenoid Valve) 1P Connector
Courtesy of AMERICAN HONDA MOTOR CO., INC.

cardiagn.com

ROCKER ARM OIL CONTROL SOLENOID (VTEC SOLENOID VALVE) REPLACEMENT

1. Disconnect the rocker arm oil control solenoid (VTEC solenoid valve) 1P connector (A).

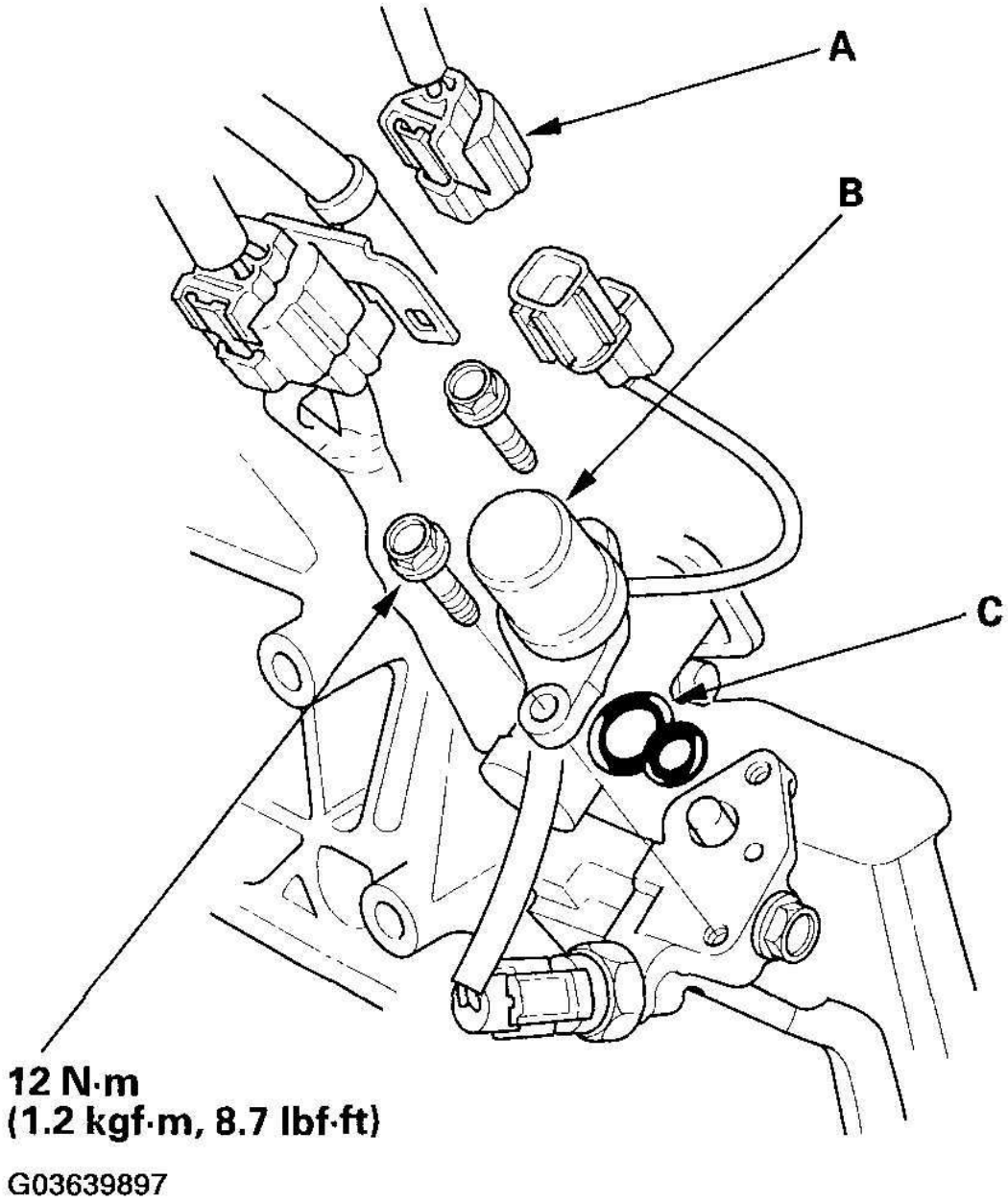

Fig. 16: Disconnecting Rocker Arm Oil Control Solenoid (VTEC Solenoid Valve) 1P Connector
Courtesy of AMERICAN HONDA MOTOR CO., INC.

cardiagn.com

2. Remove the rocker arm oil control solenoid (VTEC solenoid valve) (B).
3. Install the parts in the reverse order of removal with a new O-ring (C).

ROCKER ARM OIL PRESSURE SWITCH (VTEC OIL PRESSURE SWITCH) REMOVAL/INSTALLATION

1. Disconnect the rocker arm oil pressure switch (VTEC oil pressure switch) 2P connector (A), then remove the rocker arm oil pressure switch (VTEC oil pressure switch) (B).

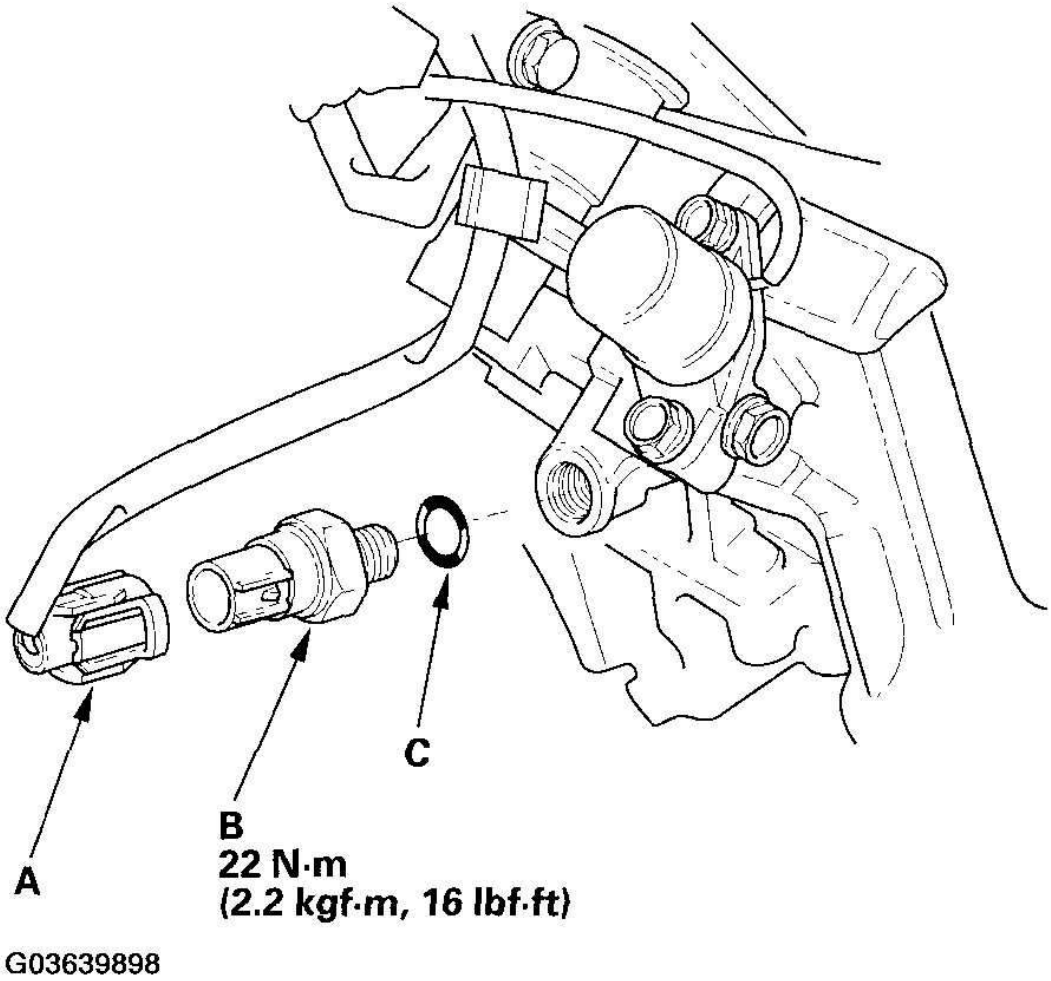

Fig. 17: Disconnecting Rocker Arm Oil Pressure Switch (VTEC Oil Pressure Switch) 2P Connector
Courtesy of AMERICAN HONDA MOTOR CO., INC.

2. Install the switch in the reverse order of removal with a new O-ring (C).

cardiagn.com